HOW TO USE THIS MANUAL

GENERAL INFORMATION

1. GENERAL DESCRIPTION

(a) This manual is written in accordance with SAE J2008.
  (1) Diagnosis
  (2) Removing/Installing, Replacing, Disassembling/ Reassembling, Checking and Adjusting
  (3) Final Inspection

(b) The following procedures are omitted from this manual. However, these procedures must be performed.
  (1) Use a jack or lift to perform operations
  (2) Clean all removed parts
  (3) Perform a visual check

2. INDEX

(a) An alphabetical INDEX section is provided at the end of the manual as a reference to help you find the item to be repaired.

3. PREPARATION

(a) Use of Special Service Tools (SST) and Special Service Materials (SSM) may be required, depending on the repair procedure. Be sure to use SST and SSM when they are required and follow the working procedure properly. A list of SST and SSM is in the "Preparation" section of this manual.

4. REPAIR PROCEDURES

(a) A component illustration is placed under the title where necessary.

(b) Non-reusable parts, grease application areas, precoated parts and torque specifications are noted in the component illustrations.
Following illustration is example

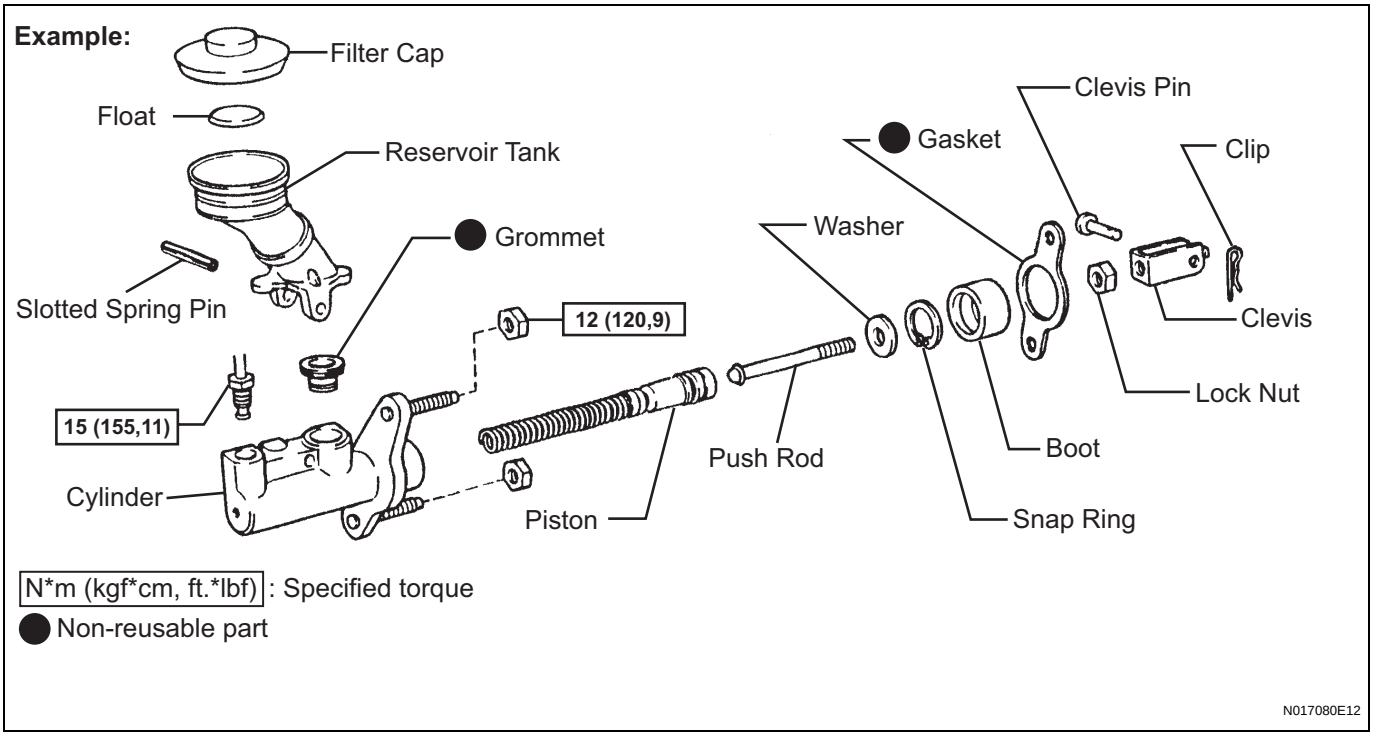

(c) Torque specifications, grease application areas and non-reusable parts are emphasized in the procedures.
HINT:
There are cases where such information can only be explained by using an illustration. In these cases, torque, oil and other information are described in the illustration.

(d) Only items with key points are described in the text. What to do and other details are explained using illustrations next to the text. Both the text and illustrations are accompanied by standard values and notices.

Illustration	What to do and where to do
Task heading	What work will be performed
Explanation text	How to perform the task Also has information such as specifications and warnings, which are written in boldface text

(e) Illustrations of similar vehicle models are sometimes used. In these cases, minor details may be different from the actual vehicle.

(f) Procedures are presented in a step-by-step format.

5. SERVICE SPECIFICATIONS

(a) SPECIFICATIONS are presented in boldface text throughout the manual. The specifications are also found in the "Service Specifications" section for reference.

6. TERMS DEFINITION

CAUTION	Possibility of injury to you or other people.
NOTICE	Possibility of damage to components being repaired.
HINT	Provides additional information to help you perform repairs.

7. INTERNATIONAL SYSTEM OF UNITS

(a) The units used in this manual comply with the International System of Units (SI UNIT) standard. Units from the metric system and the English system are also provided.
Example is as follow.
Torque: 30 N*m (310 kgf*cm, 22 ft.*lbf)

IN

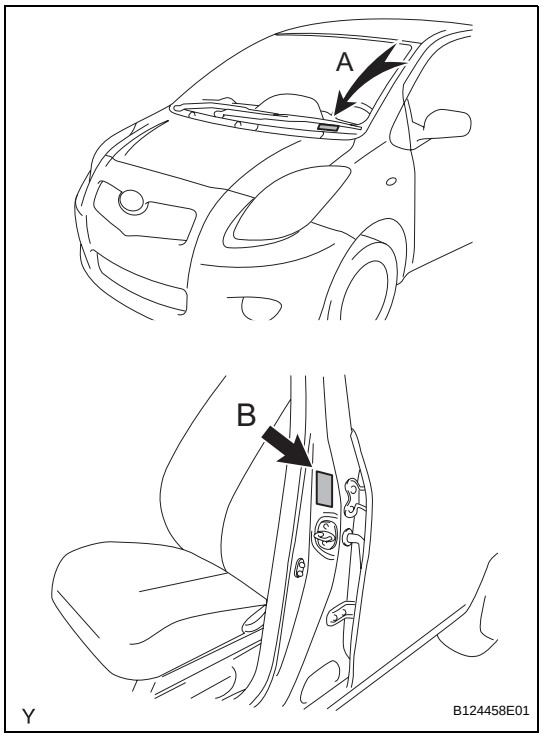

IDENTIFICATION INFORMATION

VEHICLE IDENTIFICATION AND SERIAL NUMBERS

1. VEHICLE IDENTIFICATION NUMBER

(a) The vehicle identification number is stamped on the vehicle body and on the certification label, as shown in the illustration.

A:
Vehicle Identification Number

B:
Certification Label

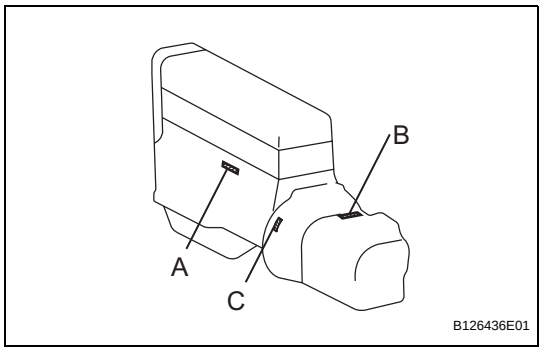

2. ENGINE SERIAL NUMBER AND TRANSAXLE SERIAL NUMBER

(a) The engine serial number is stamped on the cylinder block of the engine and the transaxle serial number is stamped on the housing as shown in the illustration.

A:
1NZ-FE

B:
U340E

C:
C50

REPAIR INSTRUCTION

PRECAUTION

1. BASIC REPAIR HINT

(a) HINTS ON OPERATIONS

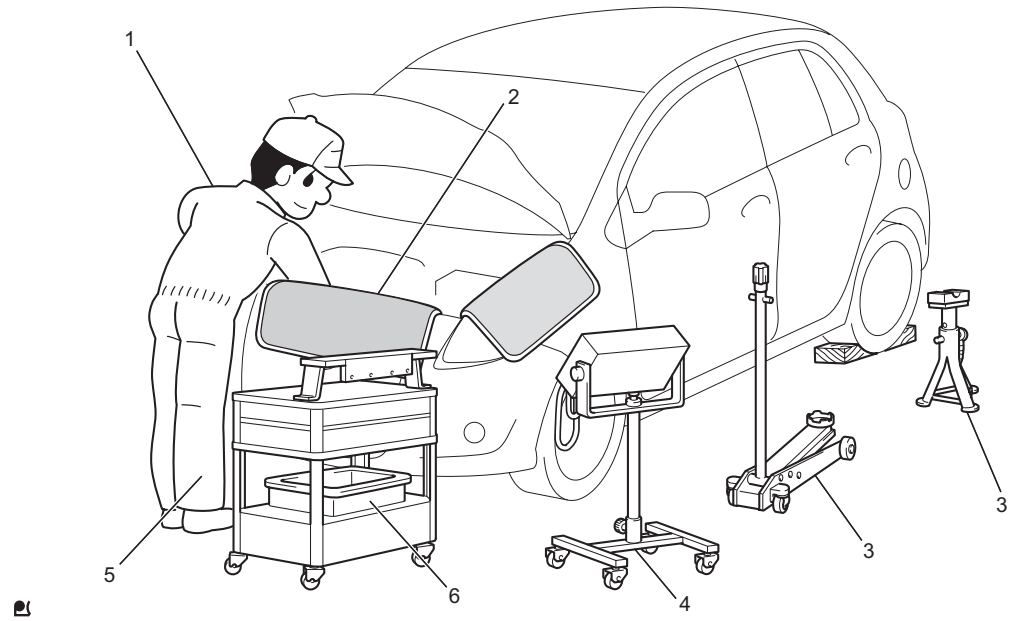

1	Attire	• Always wear a clean uniform. • Hat and safety shoes must be worn.
2	Vehicle protection	Prepare a grille cover, fender cover, seat cover and floor mat before starting the operation.
3	Safe operation	• When working with 2 or more persons, be sure to check safety for one another. • When working with the engine running, make sure to provide ventilation for exhaust fumes in the workshop. • If working on high temperature, high pressure, rotating, moving, or vibrating parts, wear appropriate safety equipment and take extra care not to injure yourself or others. • When jacking up the vehicle, be sure to support the specified location with a safety stand. • When lifting up the vehicle, use appropriate safety equipment.
4	Preparation of tools and measuring gauge	Before starting operation, prepare a tool stand, SST, gauge, oil and parts for replacement.
5	Removal and installation, disassembly and assembly operations	• Diagnose with a thorough understanding of proper procedures and of the reported problem. • Before removing the parts, check the general condition of the assembly and for deformation and damage. • When the assembly is complicated, take notes. For example, note the total number of electrical connections, bolts, or hoses removed. Add matchmarks to insure reassembly of components in the original positions. Temporarily mark hoses and their fittings if needed. • Clean and wash the removed parts if necessary and assemble them after a thorough check.
6	Removed parts	• Place the removed parts in a separate box to avoid mixing them up with the new parts or contaminating the new parts. • For non-reusable parts such as gaskets, O-rings, and self-locking nuts, replace them with new ones as instructed in this manual. • Retain the removed parts for customer inspection, if requested.

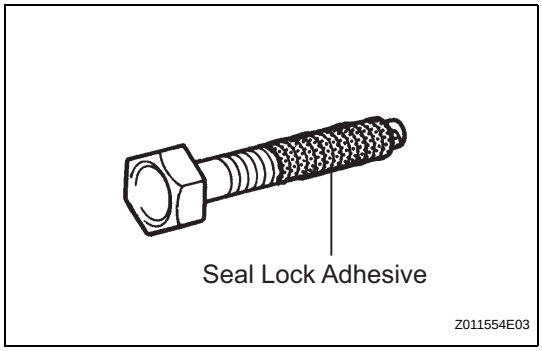

(b) JACKING UP AND SUPPORTING VEHICLE
(1) Care must be taken when jacking up and supporting the vehicle. Be sure to lift and support the vehicle at the proper locations.

(c) PRECOATED PARTS
(1) Precoated parts are bolts and nuts that are coated with a seal lock adhesive at the factory.
(2) If a precoated part is retightened, loosened or moved in any way, it must be recoated with the specified adhesive.
(3) When reusing a precoated part, clean off the old adhesive and dry the part with compressed air. Then apply new seal lock adhesive appropriate to that part.
(4) Some seal lock agents harden slowly. You may have to wait for the seal lock adhesive to harden.

(d) GASKETS
(1) When necessary, use a sealer on gaskets to prevent leaks.

(e) BOLTS, NUTS AND SCREWS
(1) Carefully follow all the specifications for tightening torques. Always use a torque wrench.

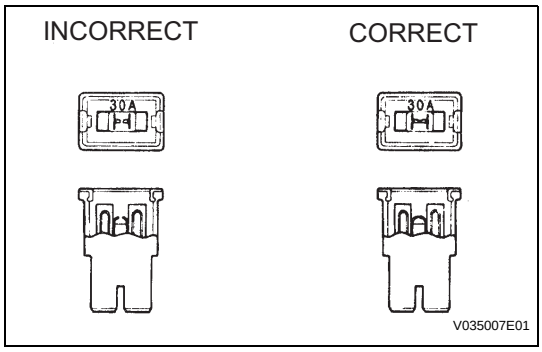

(f) FUSES
(1) When inspecting a fuse, check that the wire of the fuse is not broken.
(2) When replacing fuses, be sure that the new fuse has the correct amperage rating. Do not exceed the rating or use one with a lower rating.

Illustration	Symbol	Part Name	Abbreviation
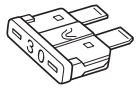 N	N	FUSE	FUSE

Illustration	Symbol	Part Name	Abbreviation
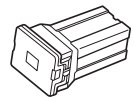 N	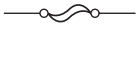 N	MEDIUM CURRENT FUSE	M-FUSE
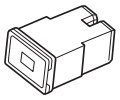 N	 N	HIGH CURRENT FUSE	H-FUSE
 N	 N	FUSIBLE LINK	FL
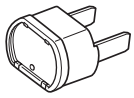 N	 N	CIRCUIT BREAKER	CB

(g) CLIPS

(1) The removal and installation methods of typical clips used for vehicle body parts are shown in the table below.

HINT:

If clips are damaged during a procedure, always replace the damaged clip with a new clip.

IN

Shape (Example)	Illustration	Procedures
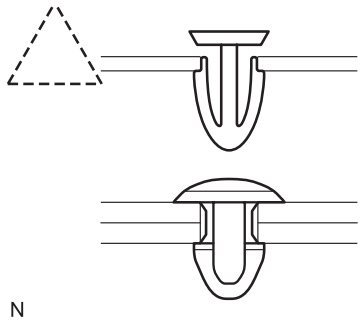 N	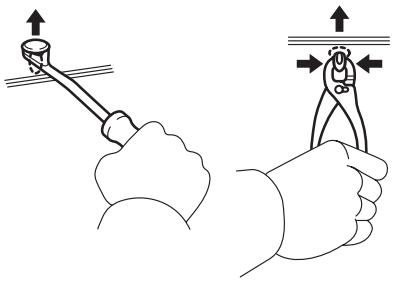 N	1. Remove clips with clip remover or pliers.
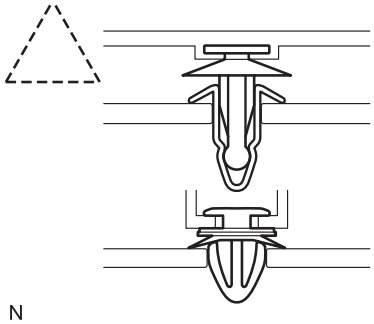 N	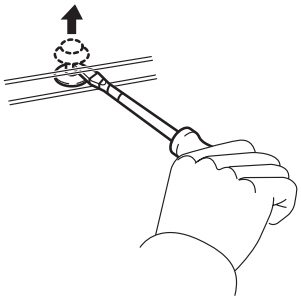 N	1. Remove the clips with clip remover or screwdriver.
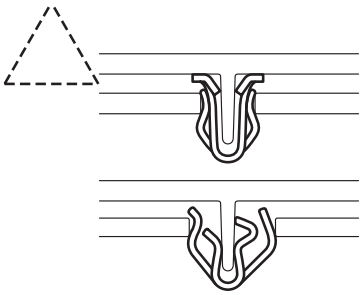 N	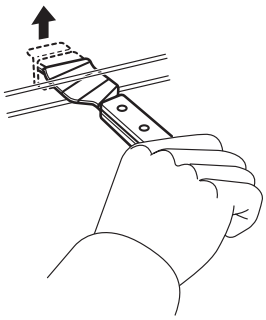 N	1. Remove clips with wide scraper to prevent panel damage.
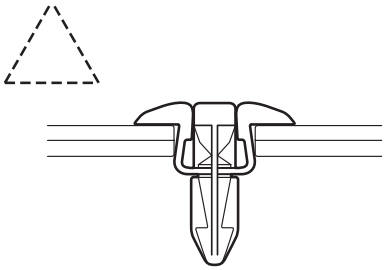 N	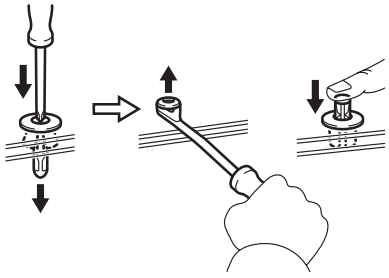 N	1. Remove clips by pushing center pin through and prying out the shell.

Shape (Example)	Illustration	Procedures
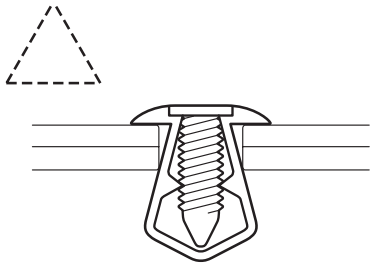 N	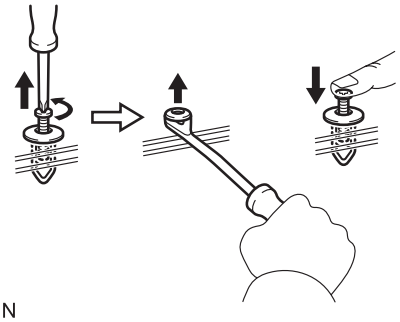 N	1. Remove clips by unscrewing the center pin and prying out the shell.
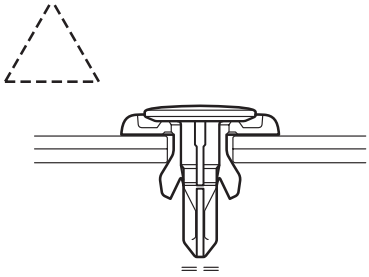 N	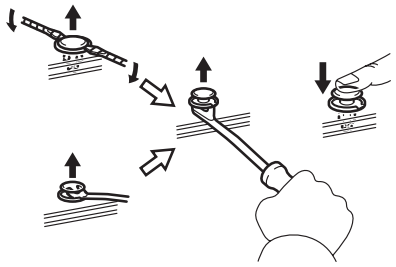 N	1. Remove clips by prying out the pin and then prying out the shell.

(h) CLAWS

(1) The removal and installation methods of typical claws used for vehicle body parts are shown in the table below.

HINT:

If claws are damaged during a procedure, always replace the damaged claws with new caps or covers.

Shape (Example)	Illustration	Procedures
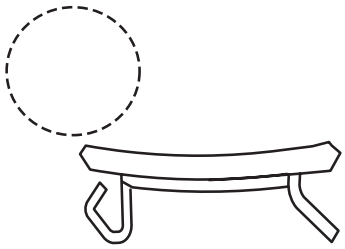	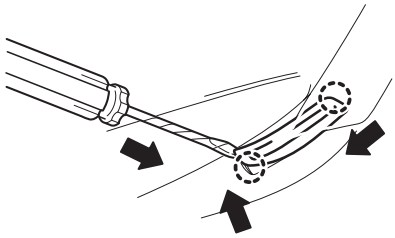	1. Using a screwdriver, detach the claws and remove the cap or covers.
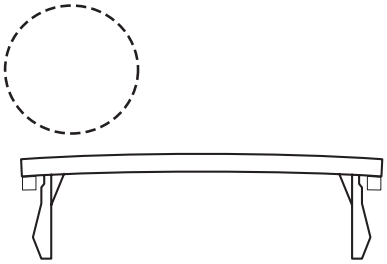	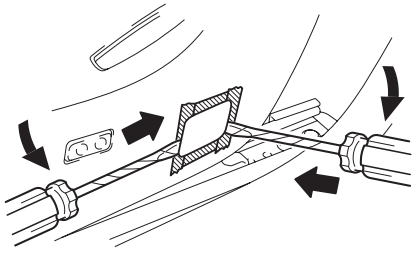	1. Using a screwdriver, detach the claws and remove the cap or covers.

IN

Shape (Example)	Illustration	Procedures
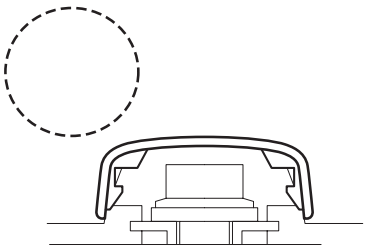	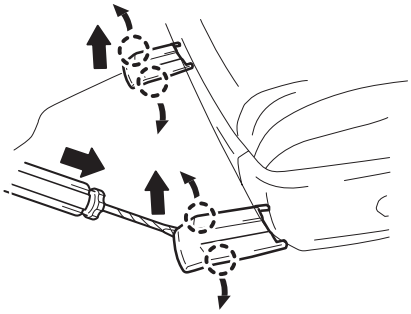	1. Using a screwdriver, detach the claws and remove the cap or covers.

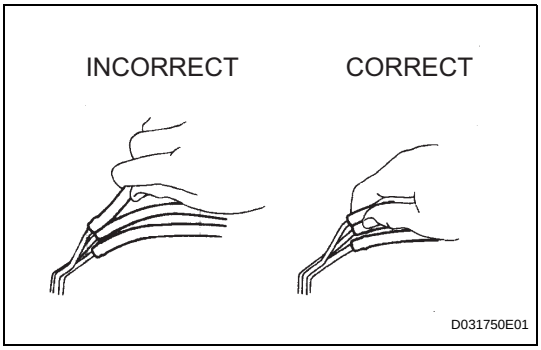

(i) REMOVAL AND INSTALLATION OF VACUUM HOSES

(1) To disconnect a vacuum hose, pull and twist from the end of the hose. Do not pull from the middle of the hose as this may cause damage.

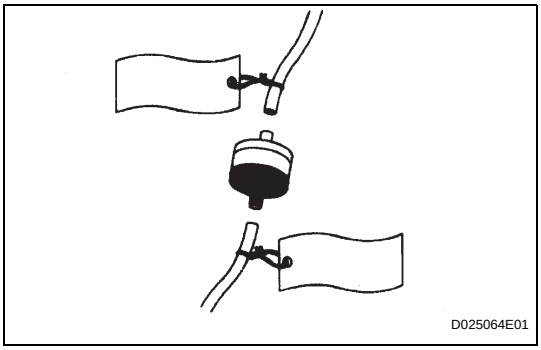

(2) When disconnecting vacuum hoses, use tags to identify where they should be reconnected.

(3) After completing any hose related repairs, double check that the vacuum hoses are properly connected. The label under the hood shows the proper layout.

(4) When using a vacuum gauge, never force the hose onto a connector that is too large. If a hose has been stretched, it may leak air. Use a step-down adapter if necessary.

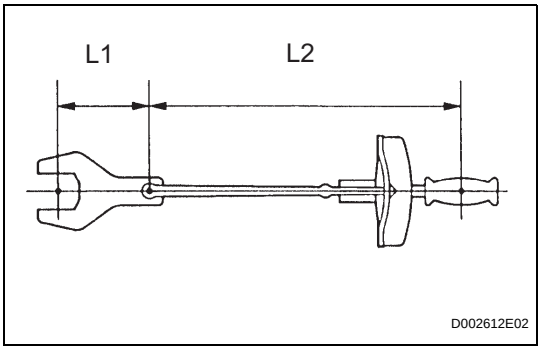

(j) TORQUE WHEN USING TORQUE WRENCH WITH EXTENSION TOOL

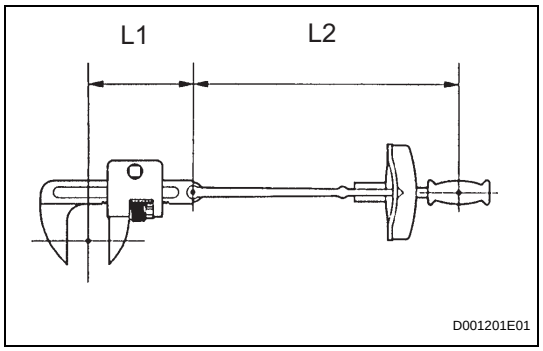

(1) Use the formula below to calculate special torque values for situations where SST or an extension tool is combined with the torque wrench.

Formula:

T' = L2/(L1 + L2) * T

T'	**Reading of torque wrench {N*m (kgf*cm, ft.*lbf)}**
T	**Torque {N*m (kgf*cm, ft.*lbf)}**
L1	**Length of SST or extension tool {cm (in.)}**
L2	**Length of torque wrench {cm (in.)}**

NOTICE:

If an extension tool or SST is combined with a torque wrench and the wrench is used to tighten to a torque specification in this manual, the actual torque will be excessive and parts will be damaged.

2. FOR VEHICLES EQUIPPED WITH SRS AIRBAG AND SEAT BELT PRETENSIONER

The YARIS is equipped with a Supplemental Restraint System (SRS).

CAUTION:

Failure to carry out the service operations in the correct sequence could cause the SRS to unexpectedly deploy during servicing and lead to serious injury. Furthermore, if a mistake is made when servicing SRS, it is possible that the SRS may fail to operate properly. Before servicing (including removal or installation of parts, inspection or replacement), be sure to read the following section carefully.

(a) GENERAL NOTICE

(1) As malfunctions of the SRS are difficult to confirm, the Diagnostic Trouble Codes (DTCs) become the most important source of information when troubleshooting. When troubleshooting the SRS, always check the DTCs before disconnecting the battery.

(2) Work must be started at least 90 seconds after the engine switch is turned off and after the cable is disconnected from the negative (-) battery terminal.
The SRS is equipped with a back-up power source. If work is started within 90 seconds after turning the engine switch off and disconnecting the cable from the negative (-) battery terminal, the SRS may deploy.
When the cable is disconnected from the negative (-) battery terminal, clock and audio system memory is erased. Before starting work, make a note of the settings of each memory system. When work is finished, reset the clock and audio system as before.
CAUTION:
Never use a back-up power source (battery or other) to avoid erasing system memory. The back-up power source may inadvertently power the SRS and cause it to deploy.

(3) In minor collisions where the SRS does not deploy, the steering pad, front passenger airbag assembly, curtain shield airbag assembly, front seat airbag assembly and front seat outer belt assembly should be inspected before further use of the vehicle.

(4) Never use SRS parts from another vehicle. When replacing parts, use new parts.

(5) Before repairs, remove the airbag sensor assemblies if impacts are likely to be applied to the sensor during repairs.

(6) Never disassemble and attempt to repair all airbag sensor assemblies, all airbag assemblies.
1. Steering pad
2. Front passenger airbag assembly
3. Curtain shield airbag assembly
4. Front seat airbag assembly
5. Front seat outer belt assembly

(7) Replace the airbag sensor assemblies and the airbag assemblies if: 1) damage has occurred from being dropped, or 2) cracks, dents or other defects in the case, bracket or connector are present.

(8) Do not directly expose the airbag sensor assembly or airbag assembly to hot air or flames.

(9) Use a voltmeter / ohmmeter with high impedance (minimum=10 kΩ) for troubleshooting electrical circuits.

(10) Information labels are attached to the SRS components. Follow the instructions on the labels.

(11) After work on the SRS is completed, check the SRS warning light.

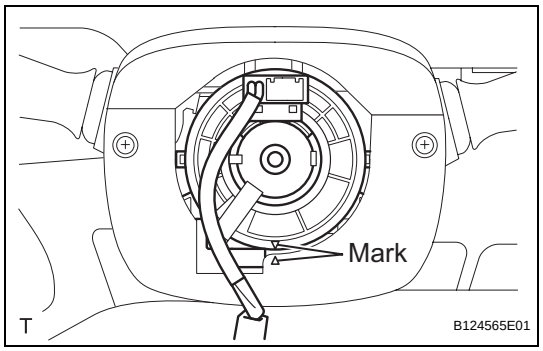

(b) SPIRAL CABLE

(1) The steering wheel must be fitted correctly to the steering column with the spiral cable at the neutral position, as cable disconnection and other problems may occur. Refer to the information about correct installation of the steering wheel.

(c) STEERING PAD

(1) Always place a removed or new steering pad surface upward as shown in the illustration. Placing the horn button with the pad surface facing down could cause a serious accident if the airbag inflates. Also, do not place anything on top of the horn button.

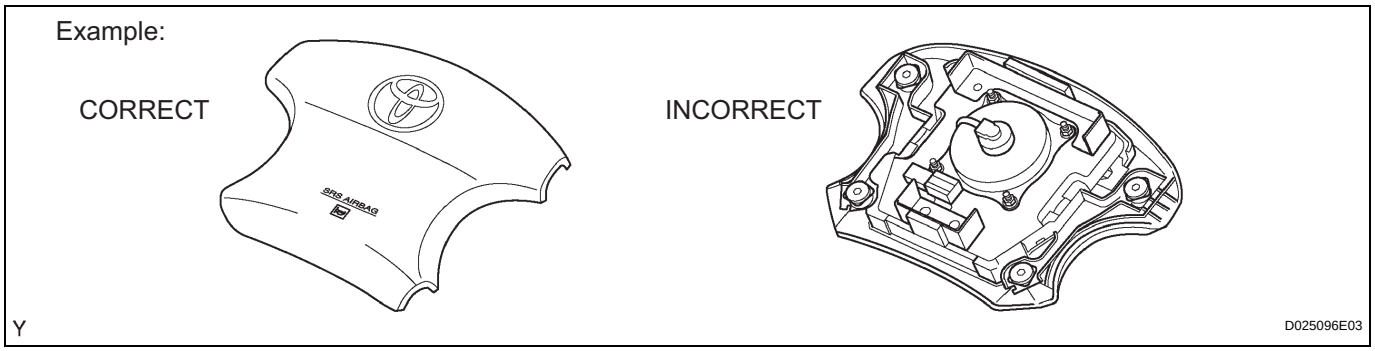

(2) Never measure the resistance of the airbag squib. This may cause the airbag to inflate, which could cause serious injury.

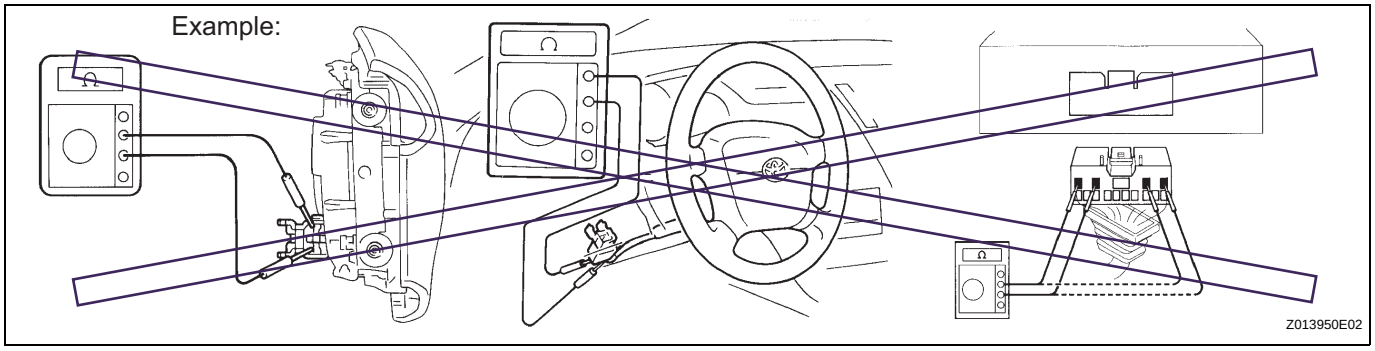

(3) Grease or detergents of any kind should not be applied to the horn button.

(4) Store the horn button assembly in an area where the ambient temperature is below 93°C (200°F), the humidity is not high and there is no electrical noise.

(5) When using electric welding anywhere on the vehicle, disconnect the airbag ECU connectors (4 pins). These connectors contain shorting springs. This feature reduces the possibility of the airbag deploying due to currents entering the squib wiring.

IN

(6) When disposing of the vehicle or the horn button assembly by itself, the airbag should be deployed using SST before disposal. Activate the airbag in a safe place away from electrical noise.

(d) FRONT PASSENGER AIRBAG ASSEMBLY

(1) Always place a removed or new front passenger airbag assembly with the pad surface facing upward as shown in the illustration. Placing the airbag assembly with the airbag inflation direction facing down could cause a serious accident if the airbag inflates.

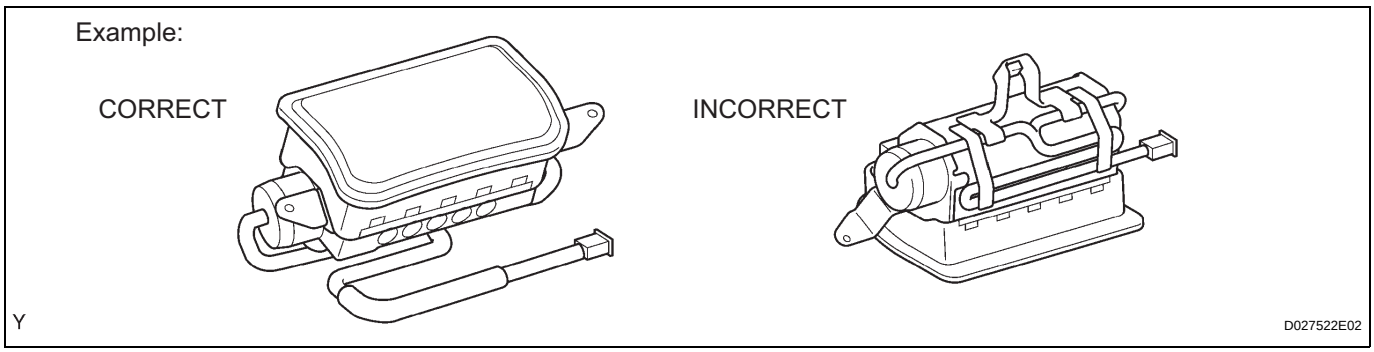

(2) Never measure the resistance of the airbag squib. This may cause the airbag to inflate, which could cause serious injury.

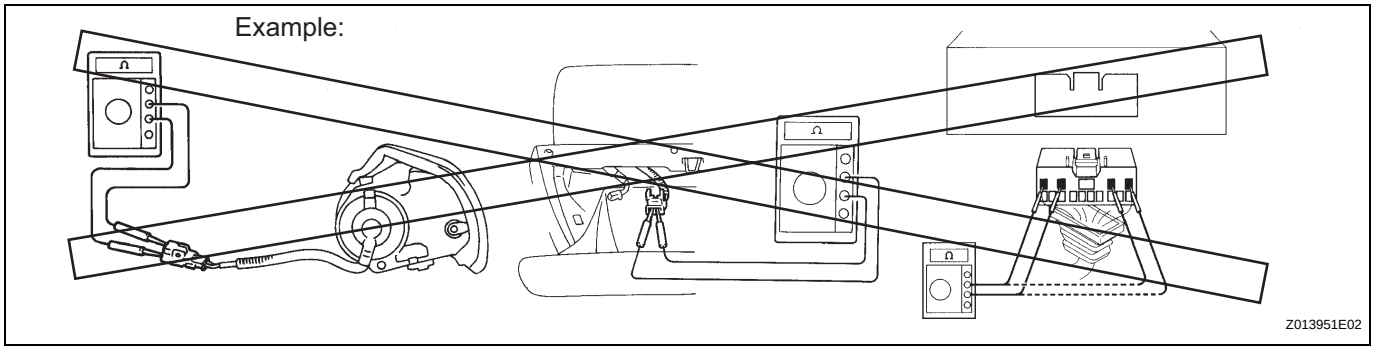

(3) Grease or detergents of any kind should not be applied to the front passenger airbag assembly.

(4) Store the airbag assembly in an area where the ambient temperature is below 93°C(200°F), the humidity is not high and there is no electrical noise.

(5) When using electric welding anywhere on the vehicle, disconnect the airbag ECU connectors (4 pins). These connectors contain shorting springs. This feature reduces the possibility of the airbag deploying due to currents entering the squib wiring.

(6) When disposing of the vehicle or the airbag assembly unit by itself, the airbag should be deployed using SST before disposal. Activate in a safe place, away from electrical noise.

(e) CURTAIN SHIELD AIRBAG ASSEMBLY

(1) Always place a removed or new curtain shield airbag assembly in a clear plastic bag, and keep it in a safe place.

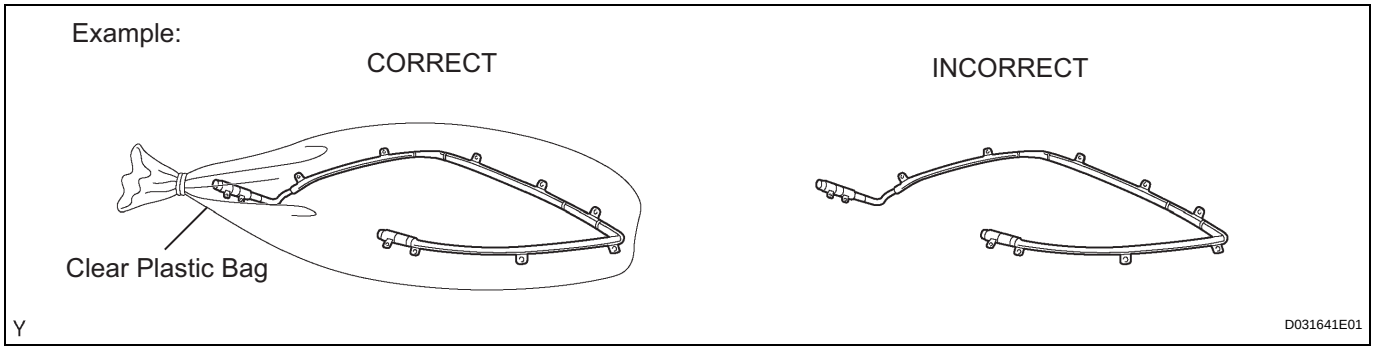

CAUTION:
The plastic bag is not reusable.
NOTICE:
Never disassemble the curtain shield airbag assembly.

(2) Never measure the resistance of the airbag squib. This may cause the airbag to inflate, which could cause serious injury.

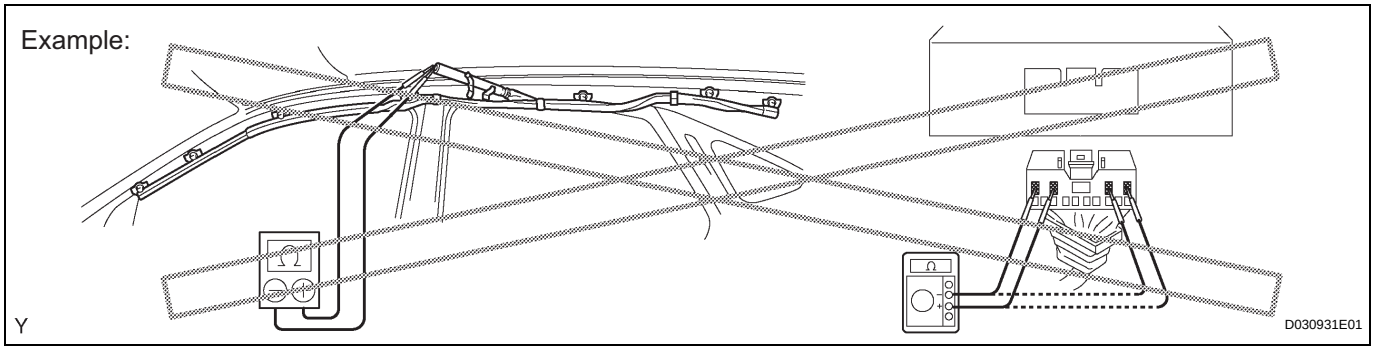

(3) Grease or detergents of any kind should not be applied to the curtain shield airbag assembly.

(4) Store the airbag assembly in an area where the ambient temperature is below 93°C (200°F), the humidity is not high and there is no electrical noise.

(5) When using electric welding anywhere on the vehicle, disconnect the airbag ECU connectors (4 pins). These connectors contain shorting springs. This feature reduces the possibility of the airbag deploying due to currents entering the squib wiring.

(6) When disposing of a vehicle or the airbag assembly unit by itself, the airbag should be deployed using SST before disposal. Activate in a safe place, away from electrical noise.

(f) FRONT SEAT AIRBAG ASSEMBLY

(1) Always place removed or new front seat airbag assembly with the airbag inflation direction facing up.

(2) Never measure the resistance of the airbag squib. This may cause the airbag to inflate, which could cause serious injury.

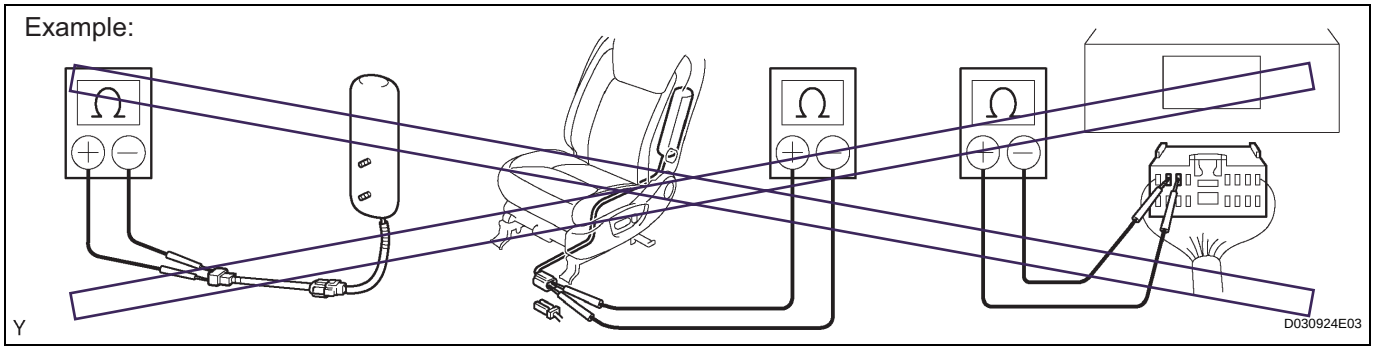

(3) Grease or detergents of any kind should not be applied to the front seat airbag assembly.
(4) Store the airbag assembly in an area where the ambient temperature is below 93°C (200°F), the humidity is not high and there is no electrical noise.
(5) When using electric welding anywhere on the vehicle, disconnect the airbag ECU connectors (2 pins). These connectors contain shorting springs. This feature reduces the possibility of the airbag deploying due to currents entering the squib wiring.
(6) When disposing of a vehicle or the airbag assembly unit by itself, the airbag should be deployed using SST before disposal. Activate in a safe place, away from electrical noise.

(g) FRONT SEAT OUTER BELT ASSEMBLY (SEAT BELT PRETENSIONER)
(1) Never measure the resistance of the seat outer belt. This may cause the pretensioner of the seat belt to activate, which could cause serious injury.

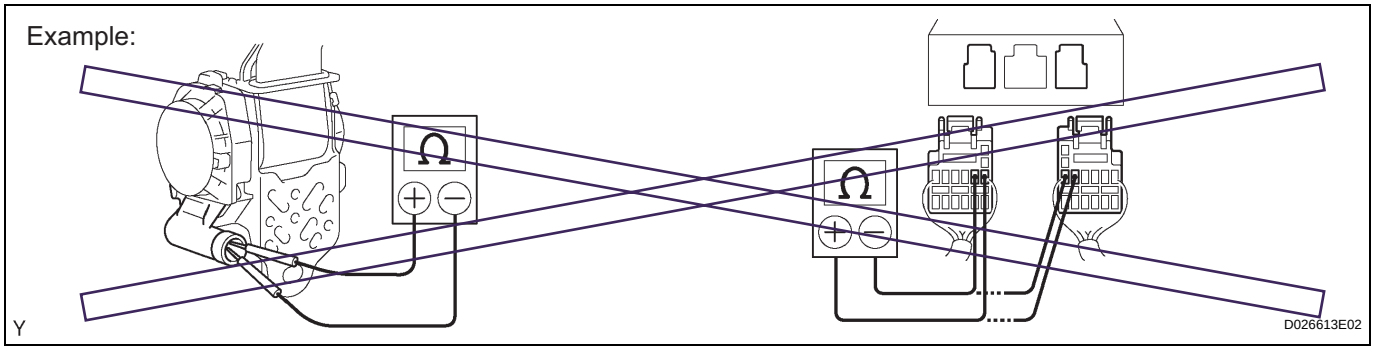

(2) Never disassemble the seat outer belt.
(3) Never install the seat outer belt on another vehicle.
(4) Store the seat outer belt in an area where the ambient temperature is below 80°C (176°F), the humidity is not high and there is no electrical noise.

(5) When using electric welding anywhere on the vehicle, disconnect the airbag ECU connectors (2 pins). These connectors contain shorting springs. This feature reduces the possibility of the airbag deploying due to currents entering the squib wiring.
(6) When disposing of a vehicle or the seat outer belt unit by itself, the seat outer belt should be activated before disposal. Activate in a safe place, away from electrical noise.
(7) As the seat outer belt is hot after being activated, allow some time for it to cool down sufficiently before disposal. Never apply water to try to cool down the seat outer belt.
(8) Grease, detergents, oil or water should not be applied to the front seat outer belt.

(h) AIRBAG SENSOR ASSEMBLY
(1) Never reuse an airbag sensor assembly that has been involved in a collision where the SRS has deployed.
(2) The connectors to the airbag sensor assembly should be connected or disconnected with the sensor placed on the floor. If the connectors are connected or disconnected while the airbag sensor assembly is not placed on the floor, the SRS may activate.
(3) Work must be started at least 90 seconds after the engine switch is turned off and the cable is disconnected from the negative (-) battery terminal, even if only loosening the set bolts of the airbag sensor assembly.

(i) WIRE HARNESS AND CONNECTOR
(1) The SRS wire harness is integrated with the instrument panel wire harness assembly. All the connectors in the system are a standard yellow color. If the SRS wire harness becomes disconnected or the connector becomes broken, repair or replace it.

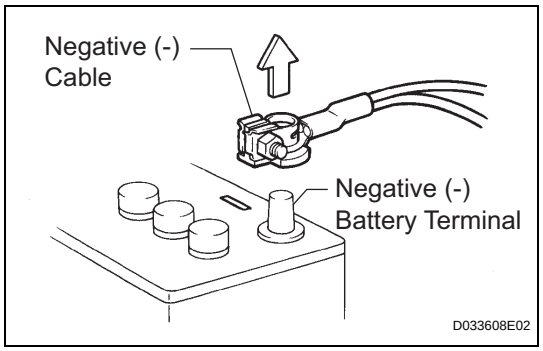

3. ELECTRONIC CONTROL

(a) REMOVAL AND INSTALLATION OF BATTERY TERMINAL

NOTICE:

Certain systems need to be initialized after disconnecting and reconnecting the cable from the negative (-) battery terminal.

(1) Before performing electronic work, disconnect the cable from the negative (-) battery terminal to prevent component and wire damage caused by accidental short circuits.
(2) When disconnecting the cable, turn the engine switch and headlight dimmer switch OFF and loosen the cable nut completely. Perform these operations without twisting or prying the cable. Then disconnect the cable.

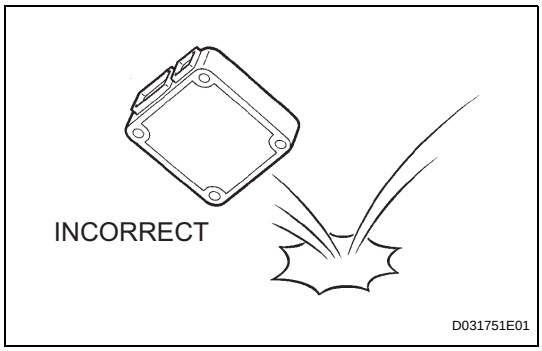

(3) Clock settings, radio settings, audio system memory, DTCs and other data are erased when the cable is disconnected from the negative (-) battery terminal. Write down any necessary data before disconnecting the cable.

(b) HANDLING OF ELECTRONIC PARTS
(1) Do not open the cover or case of the ECU unless absolutely necessary. If the IC terminals are touched, the IC may be rendered inoperative by static electricity.
(2) Do not pull the wires when disconnecting electronic connectors. Pull the connector itself.
(3) Be careful not to drop electronic components, such as sensors or relays. If they are dropped on a hard surface, they should be replaced.
(4) When cleaning the engine with steam, protect the electronic components, air filter and emission-related components from water.
(5) Never use an impact wrench to remove or install temperature switches or temperature sensors.
(6) When measuring the resistance of a wire connector, insert the tester probe carefully to prevent terminals from bending.

4. REMOVAL AND INSTALLATION OF FUEL CONTROL PARTS

(a) PLACE FOR REMOVING AND INSTALLING FUEL SYSTEM PARTS
(1) Work in a location with good air ventilation that does not have welders, grinders, drills, electric motors, stoves, or any other ignition sources.
(2) Never work in a pit or near a pit as vaporized fuel will collect in those places.

(b) REMOVING AND INSTALLING FUEL SYSTEM PARTS
(1) Prepare a fire extinguisher before starting the operation.
(2) To prevent static electricity, install a ground wire to the fuel changer, vehicle and fuel tank, and do not spray the surrounding area with water. Be careful when performing work in this area, as the work surface will become slippery. Do not clean up gasoline spills with water, as this may cause the gasoline to spread, and possibly create a fire hazard.
(3) Avoid using electric motors, working lights and other electric equipment that can cause sparks or high temperatures.
(4) Avoid using iron hammers as they may create sparks.
(5) Dispose of fuel-contaminated cloth separately using a fire resistant container.

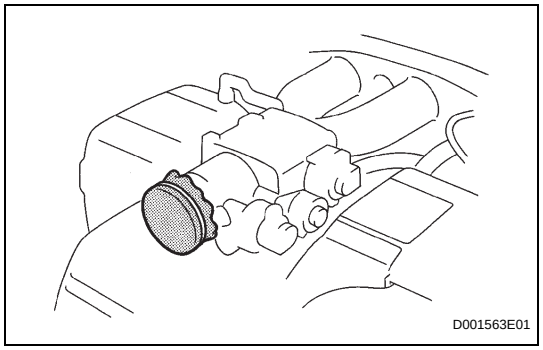
D001563E01

5. REMOVAL AND INSTALLATION OF ENGINE INTAKE PARTS

(a) If any metal particles enter inlet system parts, this may damage the engine.
(b) When removing and installing inlet system parts, cover the openings of the removed parts and engine openings. Use gummed tape or other suitable materials.
(c) When installing inlet system parts, check that no metal particles have entered the engine or the installed parts.

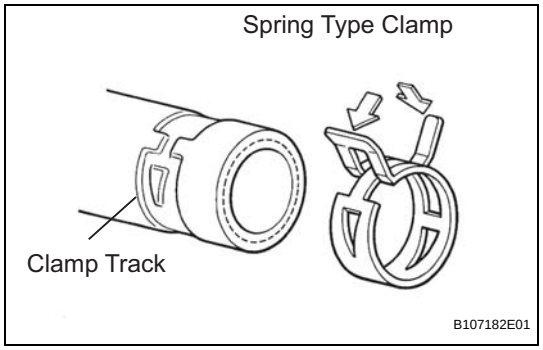

B107182E01

6. HANDLING OF HOSE CLAMPS

(a) Before removing the hose, check the clamp position so that it can be reinstalled in the same position.
(b) Replace any deformed or dented clamps with new ones.
(c) When reusing a hose, attach the clamp on the clamp track portion of the hose.
(d) For a spring type clamp, you may want to spread the tabs slightly after installation by pushing in the direction of the arrows as shown in the illustration.

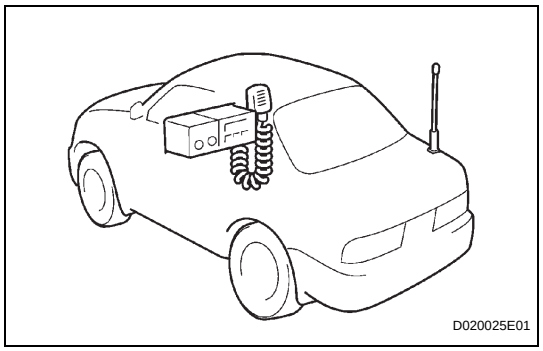
D020025E01

7. FOR VEHICLES EQUIPPED WITH MOBILE COMMUNICATION SYSTEMS

(a) Install the antenna far away from the ECU and sensors of the vehicle electronic systems as possible.
(b) Install an antenna feeder at least 20 cm (7.87 in.) away from the ECU and sensors of the vehicle electronic systems. For details about ECU and sensors locations, refer to the section on the applicable components.
(c) Keep the antenna and feeder separate from other wirings as much as possible. This will prevent signals from the communication equipment from affecting vehicle equipment and vice-versa.
(d) Check that the antenna and feeder are correctly adjusted.
(e) Do not install any high-powered mobile communication system.

8. FOR VEHICLES EQUIPPED WITH CATALYTIC CONVERTER

CAUTION:

If a large amount of unburned gasoline or gasoline vapors flow into the converter, it may cause overheating and create a fire hazard. To prevent this, observe the following precautions.

(a) Use only unleaded gasoline.
(b) Avoid idling the engine for more than 20 minutes.
(c) Avoid performing unnecessary spark jump tests.
  (1) Perform a spark jump test only when absolutely necessary. Perform this test as rapidly as possible.
  (2) While testing, never race the engine.

IN

(d) Avoid a prolonged engine compression measurement. Engine compression measurements must be performed as rapidly as possible.
(e) Do not run the engine when the fuel tank is nearly empty. This may cause the engine to misfire and create an extra load on the converter.

VEHICLE LIFT AND SUPPORT LOCATIONS

1. NOTICE ABOUT VEHICLE CONDITION WHEN JACKING UP THE VEHICLE

(a) The vehicle must be unloaded before jacking up/lifting up the vehicle. Never jack up/lift up a heavily loaded vehicle.

(b) When removing heavy parts such as the engine and transaxle, the center of gravity of the vehicle may shift. To stabilize the vehicle, place a balance weight in a location where it will not roll or shift, or use a mission jack to hold the jacking support.

2. NOTICE FOR USING 4 POST LIFT

(a) Follow the safety procedures outlined in the lift instruction manual.

(b) Use precautionary measures to prevent the free wheel beam from damaging tires or wheels.

(c) Using a wheel stopper, secure the vehicle.

3. NOTICE FOR USING JACK AND SAFETY STAND

(a) Work in a flat area and use a wheel stopper at all times.

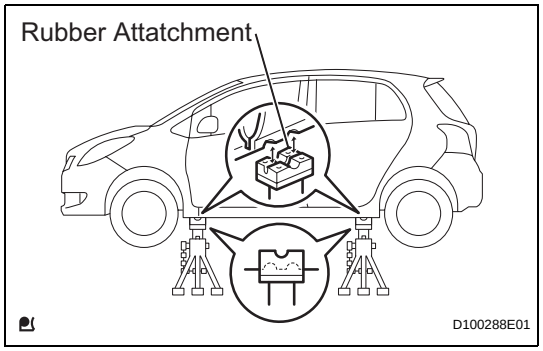

(b) Use safety stand with a rubber attachment, as shown in the illustration.

(c) Apply the jack and rigid rack to the specified location on the vehicle. The jack should not be used without the rigid rack.

(d) When jacking up the front wheels, release the parking brake and place wheel stoppers only behind the rear wheels. When jacking up the rear wheels, place wheel stoppers only in front of the front wheels.

(e) When jacking up only the front wheels or only the rear wheels, place wheel stoppers on both sides of the wheels touching the ground.

(f) When lowering a vehicle with its front wheels jacked up, release the parking brake and place wheel stoppers only in front of the rear wheels. When lowering a vehicle with its rear wheels jacked up, place wheel stoppers only behind the front wheels.

NOTICE:

Use the correct jack-up points. Do not use any other part of the vehicle as a jack-up point.

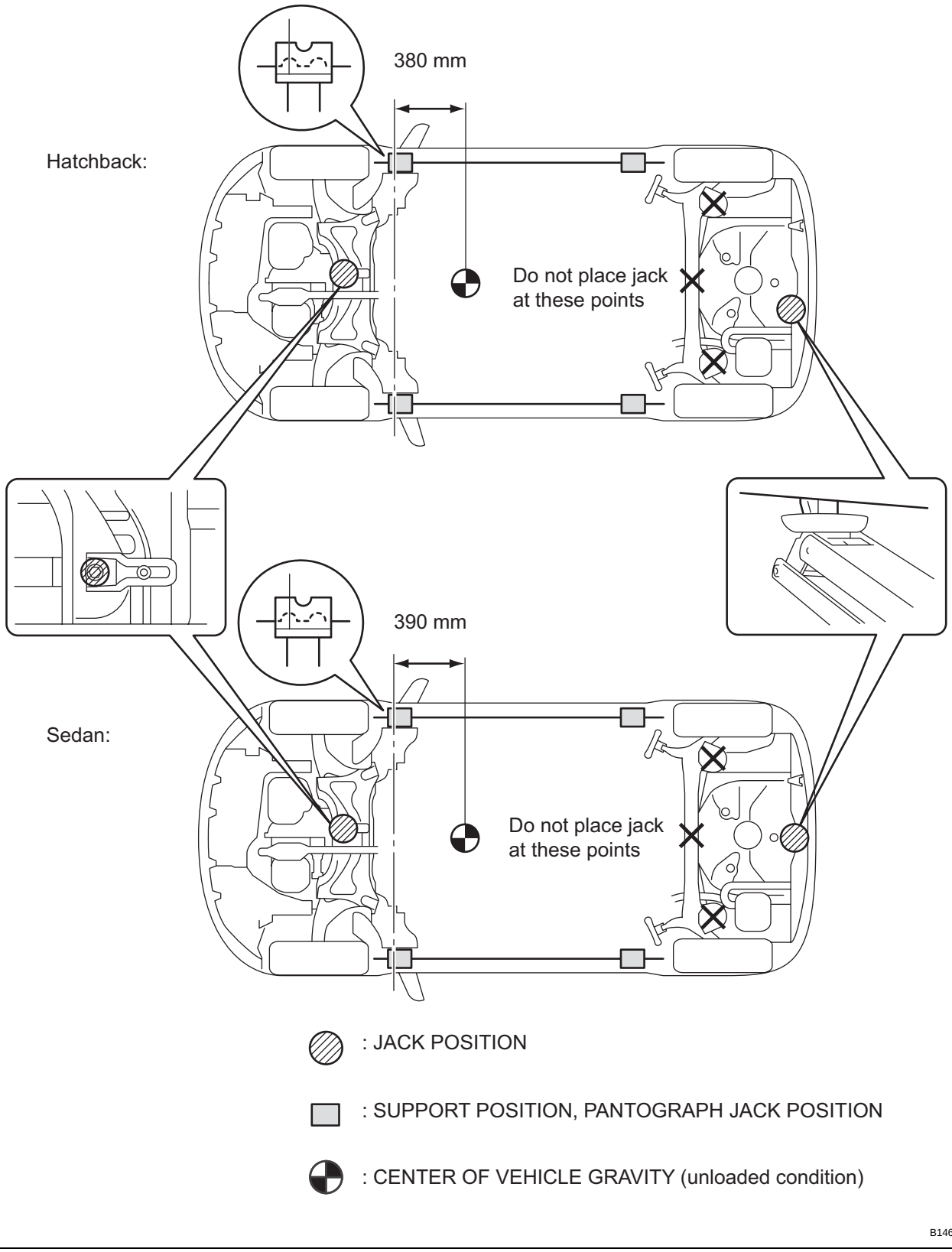

4. NOTICE FOR USING SWING ARM TYPE LIFT

(a) Follow the safety procedures outlined in its instruction manual.

(b) Use cradle with a rubber attachment as shown in the illustration.

(c) When using the lift, its center should be as close to the vehicle's center of gravity as possible. (L becomes short.)

(d) Set the vehicle on the cradle as level as possible. Then match the groove of the cradle to the safety stand support location.
NOTICE:
Do not raise the vehicle too high because the vehicle may become unstable.

(e) Be sure to lock the swing arm during the operation.

(f) Lift the vehicle up off the ground and shake it to make sure that it is stable.

5. NOTICE FOR USING PLATE TYPE LIFT

(a) Follow safety procedures outlined in its instruction manual.

(b) Use a plate lift attachment.

(c) Refer to the table below to determine how to properly set the vehicle.

Right and left set position	• Place the vehicle over the center of the lift.
Front and rear set position	• Align the bottom edge of the attachments with the cushion gum ends of the plate (A and C). • Align the upper edge of one of the attachments (B) with the rocker flange front side notch.

(d) Lift the vehicle up off the ground, and shake it to make sure that the it is stable.

IN

Swing Arm Type Lift

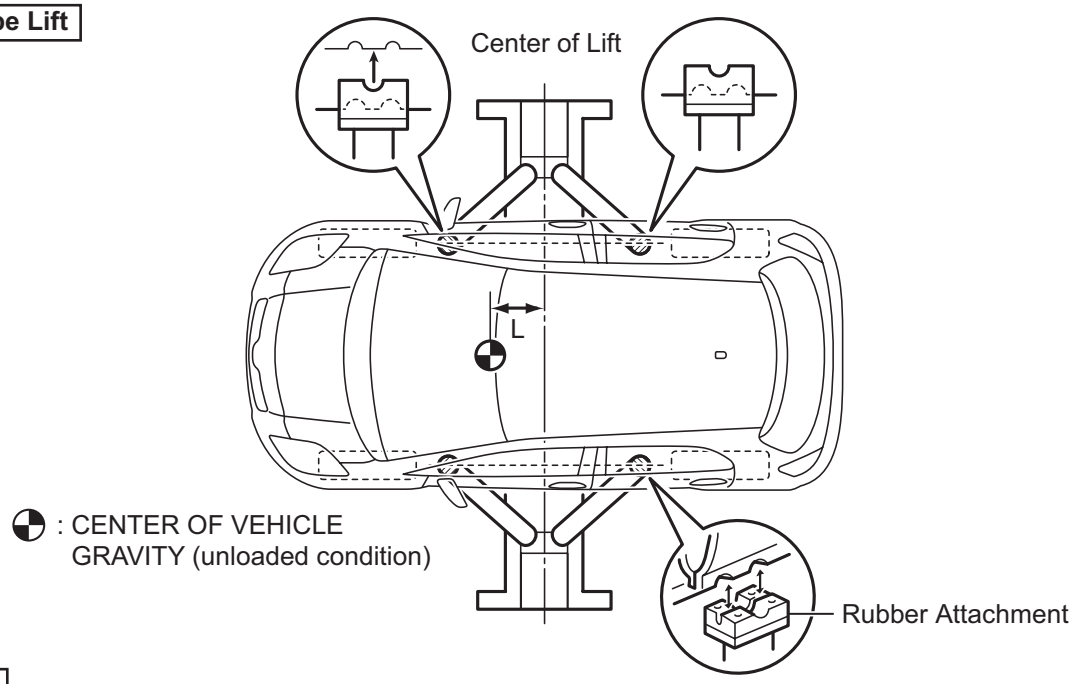

Plate Type Lift

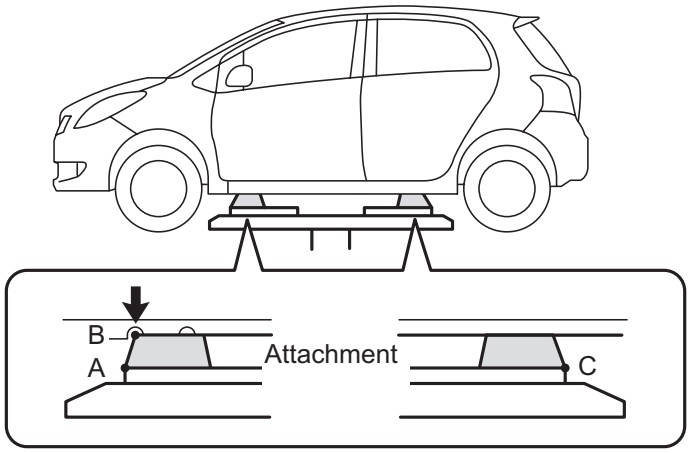

Attachment Dimensions

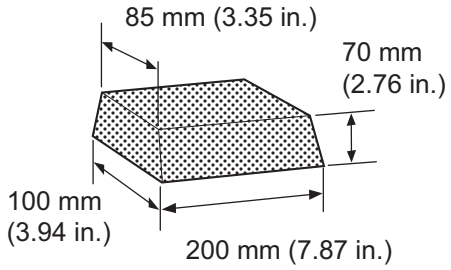

B124567E01

CUSTOMIZE PARAMETERS

HINT:
The following can be customized.

NOTICE:

- **When the customer requests a change in a function, first make sure that the function can be customized.**
- **Be sure to make a note of the current settings before customizing.**
- **When troubleshooting a function, first make sure that the function is set to the default setting.**

1. THEFT DETERRENT SYSTEM

Theft Deterrent System

Display (Item)	Default	Contents	Setting
PASSIVE MODE (Passive Arming Mode)	OFF	In passive arming mode, theft deterrent system switched from arming preparation state to armed state 30 seconds after both of following operations performed. • Key removed from ignition key cylinder • All doors closed (not locked) In passive arming mode, if following operations are not performed within 14 seconds of door being opened while in armed state, theft deterrent system determines that condition as theft and switches to alarm arming sounding state. • Battery reconnected • Key inserted into ignition key cylinder and ignition switch turned from OFF to ON • Any door unlocked using key	ON/OFF
WARNING (HORN) (Warning horn)	ON	Allows vehicle horn and security horn to be used as warning devices	ON/OFF
ENTRY DELAY (Entry delay time)	14 seconds	Changes entry delay time (time before warning starts) for passive arming mode	0 /14 /30 (seconds)

HINT:
Sensitivity adjustments are difficult to confirm. Check by driving the customer's vehicle.

2. LIGHTING SYSTEM

Illuminated Entry

Display (Item)	Default	Contents	Setting
LIGHTING TIME (Lighting Time)	15 seconds	Changes illumination duration after door closure. (It will quickly fade out in case of turning the ignition switch ON.)	7.5 seconds / 15 seconds / 30seconds
I/L ON /ACC OFF (Room light illuminates when ignition switch turned off)	ON	Illuminates light when ignition switch turned on (ACC). (Room light illuminated when interior light switch in DOOR position)	ON / OFF
I/L ON / UNLOCK (Room light illuminates when door key unlocked.)	ON	Function to light up the room light, when unlocking with the door key cylinder. (Room light illuminated when interior light switch in DOOR position)	ON/OFF

HINT:
Sensitivity adjustments are difficult to confirm. Check by driving the customer's vehicle.

3. POWER DOOR LOCK CONTROL SYSTEM

Power Door Lock Control System

Display (Item)	Default	Contents	Setting
UNLK/KEY TWICE	ON	Unlocks only driver side door when driver side door key cylinder turned to unlocks once, and unlocks all doors when turned to unlock twice. For OFF setting, turning it once unlocks all doors	ON / OFF

4. WIRELESS DOOR LOCK CONTROL SYSTEM

Wireless Door Lock Control System

Display (Item)	Default	Contents	Setting
HAZARD ANS BACK	ON	When wireless lock switch on transmitter pressed, illuminates all hazard warning lights once. When unlock switch pressed, all hazard warning lights illuminate twice	ON / OFF
WIRELESS OPER	ON	ON /OFF of wireless door lock function	ON / OFF
ALARM FUNCTION	ON	Operates security alarm when panic switch on transmitter continuously pressed for 1 second	ON / OFF
UNLOCK/2 OPER	All door	Function that unlocks driver side door when unlock switch on transmitter is pressed once, and unlocks all doors when pressed twice. if setting is OFF, pressing unlock switch once makes all doors unlock.	ON / OFF
AUTO LOCK DELAY	30 seconds	Time until relocking after unlocking with wireless door lock function	60 seconds / 30 seconds

5. GAUGE SYSTEM

Combination Meter Assembly

Display (Item)	Default	Contents	Setting
KEY REMIND SOUND	NORMAL	Changes key reminder buzzer intervals	FAST / NORMAL / SLOW
LIGHT REMIND	ON	Turns key reminder light ON and OFF	ON / OFF
SEAT BELT WARN	D/P ON	Turns seat belt warning buzzer ON and OFF	D/P ON / D ON / P ON / D/P OFF
UNITS BY REGION	Different every region	Changes drive monitor display units	KM/L JP / KM/L / ML/G US / ML/G UK / KM/G

HOW TO TROUBLESHOOT ECU CONTROLLED SYSTEMS

GENERAL INFORMATION

A large number of ECU controlled systems are used in the YARIS. In general, ECU controlled systems are considered to be very intricate, requiring a high level of technical knowledge to troubleshoot. However, most problem checking procedures only involve inspecting the ECU controlled system's circuits one by one. An adequate understanding of the system and a basic knowledge of electricity is enough to perform effective troubleshooting, accurate diagnoses and necessary repairs.

FOR USING INTELLIGENT TESTER

- Before using the intelligent tester, read the tester operator's manual thoroughly.
- If the tester cannot communicate with the ECU controlled systems when the tester is connected to the DLC3 with the engine switch on (IG) and the tester turned ON, there is a problem on the vehicle side or tester side.
  (a) If communication is normal when the tester is connected to another vehicle, inspect the diagnosis data link line (Bus (+) line) or ECU power circuit of the vehicle.
  (b) If communication is still not possible when the tester is connected to another vehicle, the problem is probably in the tester itself. Perform the Self Test procedures outlined in the tester operator's manual.

HOW TO PROCEED WITH TROUBLESHOOTING

1. OPERATION FLOW

HINT:

Perform troubleshooting in accordance with the procedures below. The following is an outline of basic troubleshooting procedures. Confirm the troubleshooting procedures for the circuit you are working on before beginning troubleshooting.

1	VEHICLE BROUGHT TO WORKSHOP

NEXT

2	INSPECT BATTERY VOLTAGE

Standard voltage:

11 to 14 V

If the voltage is below 11 V, recharge or replace the battery before proceeding.

NEXT

3	SYMPTOM CONFIRMATION AND DTC (AND FREEZE FRAME DATA) CHECK

(a) Visually check the wire harnesses, connectors and fuses for open and short circuits.

(b) Warm up the engine to the normal operating temperature.

(c) Confirm the problem symptoms and conditions, and check for DTCs

Result

Result	Proceed to
DTC is output	A
DTC is not output	B

B → **Go to step 6**

A

4	DTC CHART

(a) Check the results obtained in step 4. Then find the output DTC in the DTC chart. Look at the "Trouble Area" column for a list of potentially malfunctioning circuits and / or parts.

NEXT → **Go to step 7**

5	PROBLEM SYMPTOMS CHART

(a) Check the results obtained in step 4. Then find the problem symptoms in the problem symptoms table. Look at the "Suspected Area" column for a list of potentially malfunctioning circuits and / or parts.

NEXT

6	CIRCUIT INSPECTION OR PARTS INSPECTION

(a) Confirm the malfunctioning circuit or part.

NEXT

7	ADJUST, REPAIR OR REPLACE

(a) Adjust, repair or replace the malfunctioning circuit or parts.

NEXT

8	CONFIRMATION TEST

(a) After the adjustment, repairs or replacement, confirm that the malfunction no longer exists. If the malfunction does not reoccur, perform a confirmation test under the same conditions and in the same environment as when the malfunction occurred the first time.

NEXT

END

2. CUSTOMER PROBLEM ANALYSIS

HINT:

- In troubleshooting, confirm that the problem symptoms have been accurately identified. Preconceptions should be discarded in order to make an accurate judgment. To clearly understand what the problem symptoms are, it is extremely important to ask the customer about the problem and the conditions at the time the malfunction occurred.
- Gather as much information as possible for reference. Past problems that seem unrelated may also help in some cases.
- The following 5 items are important points in the problem analysis:

What	Vehicle model, system name
When	Date, time, occurrence frequency
Where	Road conditions

Under what conditions?	Running conditions, driving conditions, weather conditions
How did it happen?	Problem symptoms

3. SYMPTOM CONFIRMATION AND DIAGNOSTIC TROUBLE CODE

HINT:

The diagnostic system in the YARIS has various functions.

- The first function is the Diagnostic Trouble Code (DTC) check. A DTC is a code stored in the ECU memory whenever a malfunction in the signal circuits to the ECU occurs. In a DTC check, a previous malfunction's DTC can be checked by a technician during troubleshooting.
- Another function is the Input Signal Check, which checks if the signals from various switches are sent to the ECU correctly. By using these functions, the problem areas can be narrowed down and troubleshooting is more effective. Diagnostic functions are incorporated in the following system in the YARIS.

System	DTC Check (Normal Mode)	DTC Check (Check Mode)	Freeze-frame Data	Sensor Check/ Test Mode (Input Signal Check)	Data List	Active Test	Customize Parameter
1NZ-FE SFI SYSTEM	○	○	○	-	○	○	-
U340E AUTOMATIC TRANSAXLE SYSTEM	○	○	-	-	○	○	-
ANTI-LOCK BRAKE SYSTEM	○	-	○	○	○	○	-
ELECTRONIC POWER STEERING SYSTEM	○	-	-	-	○	-	-
AIR CONDITIONING SYSTEM	○	-	-	-	○	○	-
AIRBAG SYSTEM	○	○	-	-	○	-	-
OCCUPANT CLASSIFICATION SYSTEM	○	○	-	-	○	-	-
SEAT BELT WARNING SYSTEM	-	-	-	-	○	○	○
THEFT DETERRENT SYSTEM	○	-	-	-	○	○	○
ENGINE IMMOBILISER SYSTEM	○	-	-	-	○	○	-
CRUISE CONTROL SYSTEM	○	-	-	-	○	-	-

System	DTC Check (Normal Mode)	DTC Check (Check Mode)	Freeze-frame Data	Sensor Check/ Test Mode (Input Signal Check)	Data List	Active Test	Customize Parameter
LIGHTING SYSTEM	-	-	-	-	○	○	○
POWER DOOR LOCK CONTROL SYSTEM	-	-	-	-	○	○	○
WIRELESS DOOR LOCK CONTROL SYSTEM	○	-	-	-	○	○	○
KEY REMINDER WARNING SYSTEM	-	-	-	-	○	-	○
METER / GAUGE SYSTEM	○	-	-	-	○	○	○
CAN COMMUNICATION SYSTEM	○	-	-	-	-	-	-

- In the DTC check, it is very important to determine whether the problem indicated by the DTC is either: 1) still occurring, or 2) occurred in the past but has since returned to normal. In addition, the DTC should be compared to the problem symptom to see if they are related. For this reason, DTCs should be checked before and after confirmation of symptoms (i.e., whether or not problem symptoms exist) to determine current system conditions, as shown in the flowchart below.
- Never skip the DTC check. Failing to check DTCs may, depending on the case, result in unnecessary troubleshooting for systems operating normally or lead to repairs not related to the problem. Follow the procedures listed in the flowchart in the correct order.
- The following flowchart show how to proceed with troubleshooting using the DTC check. Directions from the flowchart will indicate how to proceed either to DTC troubleshooting or to the troubleshooting of each problem symptom.

1	**DTC CHECK**

NEXT

2	**MAKE A NOTE OF DTCS DISPLAYED AND THEN CLEAR THE MEMORY**

NEXT

3	SYMPTOM CONFIRMATION

Result:

Result	Proceed to
No symptoms exist	A
Symptoms exist	B

a → **Go to step 5**

b

4	SIMULATION TEST USING THE SYMPTOM SIMULATION METHODS

NEXT

5	DTC CHECK

Result:

Result	Proceed to
DTC is not output	A
DTC is output	B

B → **Troubleshooting of problem indicated by DTC**

A

6	SYMPTOM CONFIRMATION

Result:

Result	Proceed to
Symptoms exist	A
No symptoms exist	B

If a DTC was displayed in the initial DTC check, the problem may have occurred in a wire harness or connector in that circuit in the past. Check the wire harness and connectors.
IN-34

B → **System normal**

A

TROUBLESHOOTING OF EACH PROBLEM SYMPTOM

The problem is still occurring in a place other than the diagnostic circuit (the DTC displayed first is either for a past problem or a secondary problem).

IN

4. SYMPTOM SIMULATION

HINT:

The most difficult case in troubleshooting is when no problem symptoms occur. In such a case, a thorough problem analysis must be carried out. A simulation of the same or similar conditions and environment in which the problem occurred in the customer's vehicle should be carried out. No matter how much skill or experience a technician has, troubleshooting without confirming the problem symptoms will lead to important repairs being overlooked and mistakes or delays.

For example:

With a problem that only occurs when the engine is cold or as a result of vibration caused by the road during driving, the problem can never be determined if the symptoms are being checked on a stationary vehicle or a vehicle with a warmed-up engine. Vibration, heat or water penetration (moisture) is difficult to reproduce. The symptom simulation tests below are effective substitutes for the conditions and can be applied on a stationary vehicle. Important points in the symptom simulation test: In the symptom simulation test, the problem symptoms as well as the problem area or parts must be confirmed. First, narrow down the possible problem circuits according to the symptoms. Then, connect the tester and carry out the symptom simulation test, judging whether the circuit being tested is defective or normal. Also, confirm the problem symptoms at the same time. Refer to the problem symptoms table for each system to narrow down the possible causes.

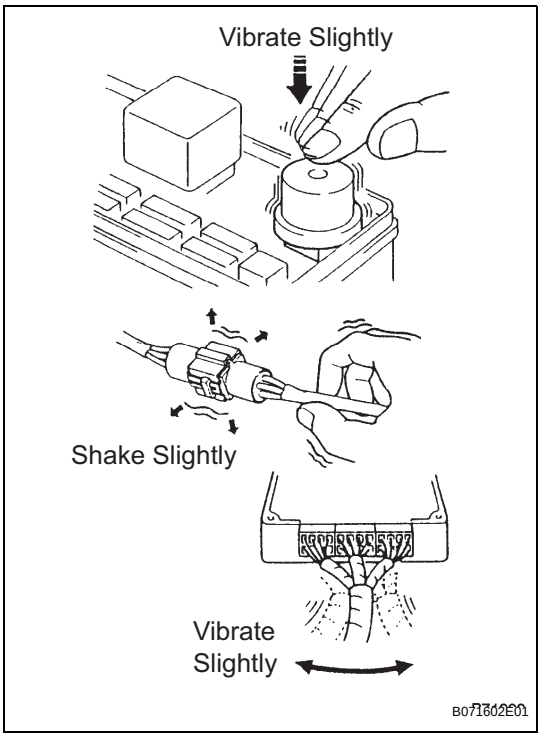

(a) VIBRATION METHOD: When malfunction seems to occur as a result of vibration.

(1) PART AND SENSOR

Apply slight vibration with a finger to the part of the sensor suspected to be the cause of the problem, and check whether or not the malfunction occurs.

NOTICE:

Applying strong vibration to relays may open relays

(2) CONNECTORS

Slightly shake the connector vertically and horizontally.

(3) WIRE HARNESS

Slightly shake the wire harness vertically and horizontally.

HINT:

The connector joint and fulcrum of the vibration are the major areas that should be checked thoroughly.

(b) HEAT METHOD: When a malfunction seems to occur when the area in question is heated.
(1) Heat the component that is the possible cause of the malfunction with a hair dryer or similar device. Check if the malfunction occurs.
NOTICE:
- **Do not heat to more than 60°C (140°F). Exceeding this temperature may damage components.**
- **Do not apply heat directly to the parts in the ECU.**

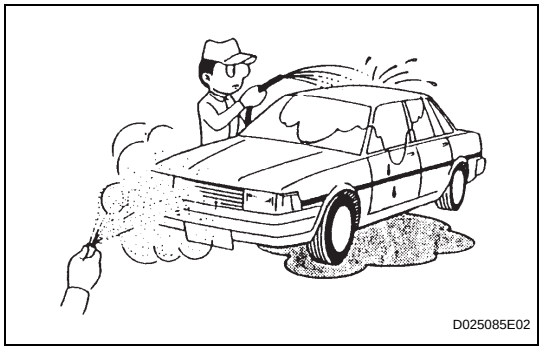
D025085E02

(c) WATER SPRINKLING METHOD: When a malfunction seems to occur on a rainy day or in high-humidity.
(1) Sprinkle water onto the vehicle and check if the malfunction occurs.
NOTICE:
- **Never sprinkle water directly into the engine compartment. Indirectly change the temperature and humidity by spraying water onto the front of the radiator.**
- **Never apply water directly onto the electronic components.**

HINT:
If the vehicle has or had a water leakage problem, the leakage may have damaged the ECU or connections. Look for evidence of corrosion or short circuits. Proceed with caution during water tests.

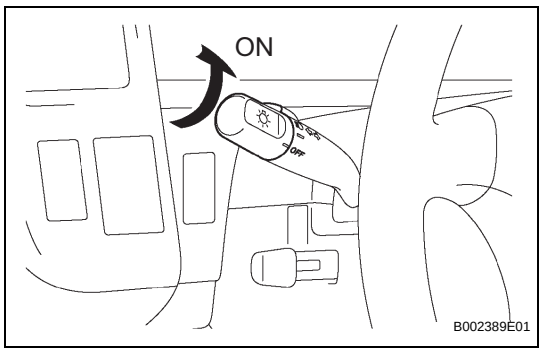

B002389E01

(d) HIGH ELECTRICAL LOAD METHOD: When a malfunction seems to occur when electrical load is excessive.
(1) Turn on the heater blower, headlight, rear window defogger and all other electrical loads. Check if the malfunction reoccurs.

5. DIAGNOSTIC TROUBLE CODE CHART

Look for output Diagnostic Trouble Codes (DTCs) (from the DTC checks) in the appropriate section's Diagnostic Trouble Code Chart. Use the chart to determine the trouble area and the proper inspection procedure. A description of each of the chart's columns are below.

Item	Description
DTC No.	Indicates the diagnostic trouble code
Detection Item	Indicates the system or details of the problem
Trouble Area	Indicates the suspect areas of the problem
See Page	Indicates the page where the inspection procedures for each circuit is to be found, or gives instruction for checking and repairs.

6. PROBLEM SYMPTOMS TABLE

When a "Normal" code is output during a DTC check but the problem is still occurring, use the Problem Symptoms Table. The suspected areas (circuits or parts) for each problem symptoms are in the table. The suspected areas are listed in order of probability. A description of each of the chart's columns are below.

HINT:

In some cases, the problem is not detected by the diagnostic system even though a problem symptom is present. It is possible that the problem is occurring outside the detection range of the diagnostic system, or that the problem is occurring in a completely different system.

Item	Description
Problem Symptom	-
Circuit Inspection, Inspection Order	Indicates the order in which the circuits need to be checked
Circuit or Part Name	Indicates the circuit or part which needs to be checked
See Page	Indicates the page where the flowchart for each circuit is located

7. CIRCUIT INSPECTION

A description of the main areas of each circuit inspection is below.

Item	Description
Circuit Description	The major role, operation of the circuit and its component parts are explained.
Diagnostic Trouble Code No. and Detection item	Indicates the diagnostic trouble codes, diagnostic trouble code settings and suspected areas for a problem
Wiring diagram	This shows a wiring diagram of the circuit. Use this diagram together with ELECTRICAL WIRING DIAGRAM to thoroughly understand the circuit. Wire colors are indicated by an alphabetical code. B = Black L = Blue R = Red BR = Brown LG = Light Green V = Violet G = Green O = Orange W = White GR = Gray P = Pink Y = Yellow SB = Sky Blue The first letter indicates the basic wire color and the second letter indicates the color of the stripe.
Inspection Procedures	Use the inspection procedures to determine if the circuit is normal or abnormal. If abnormal, use the inspection procedures to determine whether the problem is located in the sensors, actuators, wire harnesses or ECU.
Indicates the condition of the connector of the ECU during the check	Connector being checked is connected. Connections of tester are indicated by (+) or (-) after the terminal name. Connector being checked is disconnected. The inspections between a connector and body ground, information about the body ground is not shown in the illustration.

ELECTRONIC CIRCUIT INSPECTION PROCEDURE

1. BASIC INSPECTION

(a) WHEN MEASURING RESISTANCE OF ELECTRONIC PARTS

(1) Unless otherwise stated, all resistance measurements should be made at an ambient temperature of 20°C (68°F). Resistance measurements may be inaccurate if measured at high temperatures, i.e. immediately after the vehicle has been running. Measurements should be made after the engine has cooled down.

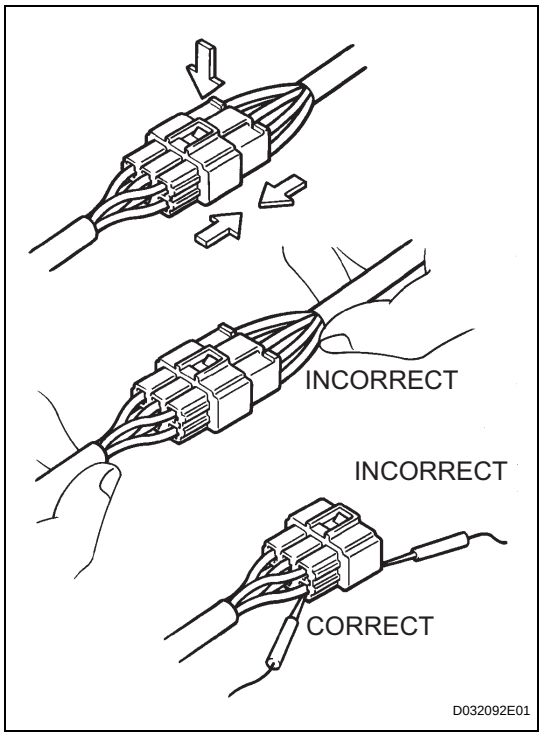

(b) HANDLING CONNECTORS

(1) When disconnecting a connector, first squeeze the mating halves tightly together to release the lock, and then press the lock claw and separate the connector.

(2) When disconnecting a connector, do not pull on the harnesses. Grasp the connector directly and separate it.

(3) Before connecting a connector, check that there are no deformed, damaged, loose or missing terminals.

(4) When connecting a connector, press firmly until it locks with a "click" sound.

(5) If checking a connector with a TOYOTA electrical tester, check the connector from the backside (harness side) using a mini test lead.

NOTICE:

- **As a waterproof connector cannot be checked from the backside, check it by connecting a sub-harness.**
- **Do not damage the terminals by moving the inserted tester needle.**

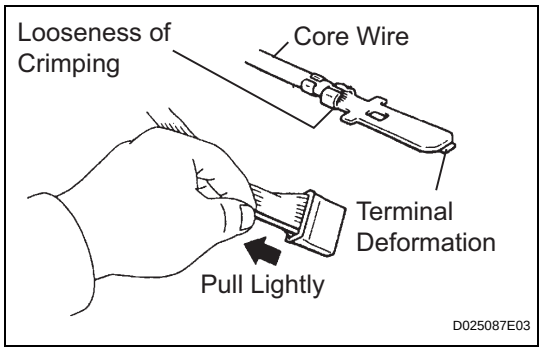

(c) CHECKING CONNECTORS

(1) Checking when a connector is disconnected: Squeeze the connector together to confirm that they are fully connected and locked.

(2) Checking when a connector is disconnected: Check by pulling the wire harness lightly from the backside of the connector. Look for unlatched terminals, missing terminals, loose crimps or broken conductor wires. Check visually for corrosion, metallic or foreign matter and water, and bent, rusted, overheated, contaminated, or deformed terminals.

NOTICE:

When testing a gold-plated female terminal, always use a gold-plated male terminal.

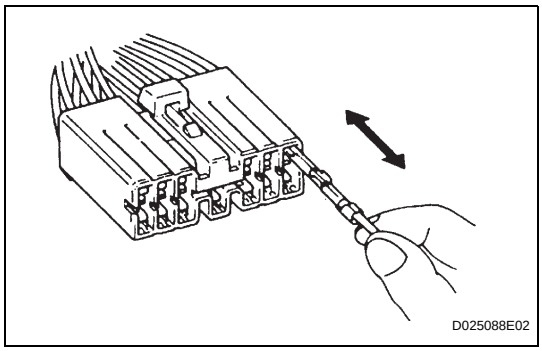

(3) Checking the contact pressure of the terminal:
Prepare a spare male terminal. Insert it into a female terminal, and check for ample tension when inserting and after full engagement.
NOTICE:
When testing a gold-plated female terminal, always use a gold-plated male terminal.

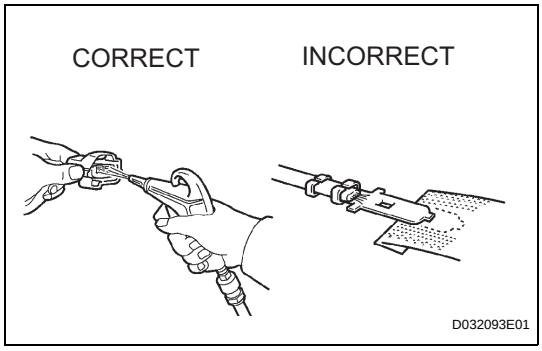

(d) REPAIR METHOD OF CONNECTOR TERMINAL
(1) If there is any foreign matter on the terminal, clean the contact point using an air gun or cloth. Never rub the contact point using sandpaper as the plating may come off.
(2) If there is abnormal contact pressure, replace the female terminal. If the male terminal is gold-plated (gold color), use a gold-plated female terminal; if it is silver-plated (silver color), use a silver-plated female terminal.
(3) Damaged, deformed, or corroded terminals should be replaced. If the terminal does not lock into the housing, the housing may have to be replaced.

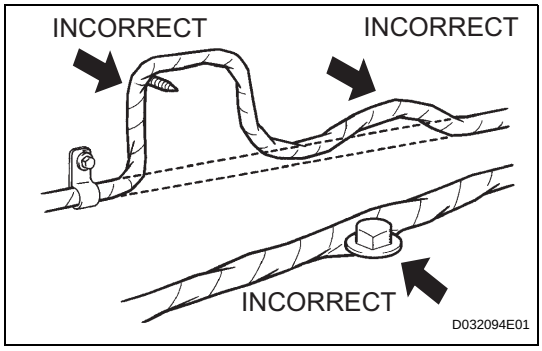

(e) HANDLING OF WIRE HARNESS
(1) If removing a wire harness, check the wiring and clamping before proceeding so that it can be restored in the same way.
(2) Never twist, pull or slacken the wire harness more than necessary.
(3) The wire harness should never come into contact with a high temperature part, or rotating, moving, vibrating or sharp-edged parts. Avoid contact with panel edges, screw tips and other sharp items.
(4) When installing parts, never pinch the wire harness.
(5) Never cut or break the cover of the wire harness. If it is cut or broken, replace it or repair it with vinyl tape.

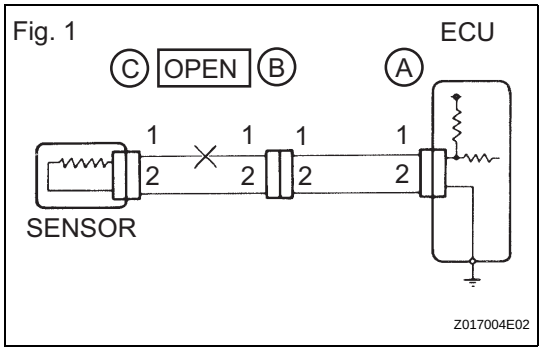

2. CHECK FOR OPEN CIRCUIT

(a) For an open circuit in the wire harness in Fig. 1, check the resistance or voltage, as described below.

Fig. 2

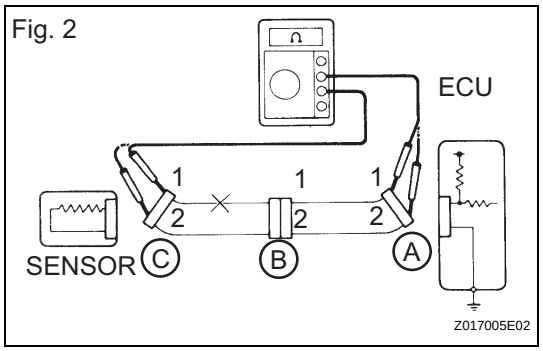

(b) Check the resistance.

(1) Disconnect connectors A and C and measure the resistance between them.

Standard resistance (Fig. 2)

Tester Connection	Specified Condition
Connector A terminal 1 - Connector C terminal 1	10 kΩ or higher
Connector A terminal 2 - Connector C terminal 2	Below 1 Ω

HINT:

Measure the resistance while lightly shaking the wire harness vertically and horizontally. If the results match the examples above, an open circuit exists between terminal 1 of connector A and terminal 1 of connector C.

Fig. 3

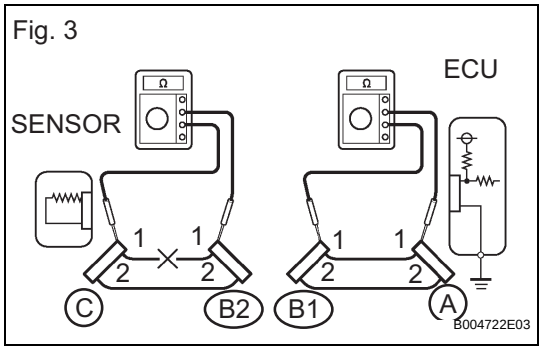

(2) Disconnect connector B and measure the resistance between the connectors.

Standard resistance (Fig. 3)

Tester Connection	Specified Condition
Connector A terminal 1 - Connector B1 terminal 1	Below 1 Ω
Connector B2 terminal 2 - Connector C terminal 2	10 kΩ or higher

If the results match the examples above, an open circuit exists between terminal 1 of connector B2 and terminal 1 of connector C.

Fig. 4

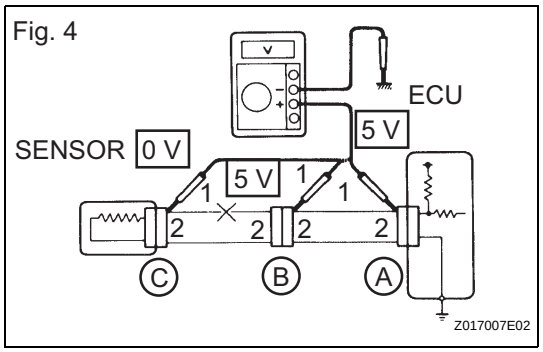

(c) Check the voltage.

(1) In a circuit in which voltage is applied to the ECU connector terminal, an open circuit can be checked by conducting a voltage check. With each connector still connected, measure the voltage between the body ground and these terminals (in this order): 1) terminal 1 of connector A, 2) terminal 1 of connector B, and 3) terminal 1 of connector C.

Standard voltage (Fig. 4)

Tester Connection	Specified Condition
Connector A terminal 1 - Body ground	5 V
Connector B terminal 1 - Body ground	5 V
Connector C terminal 1 - Body ground	Below 1 V

If the results match the examples above, an open circuit exists in the wire harness between terminal 1 of connector B and terminal 1 of connector C.

IN

Fig. 5

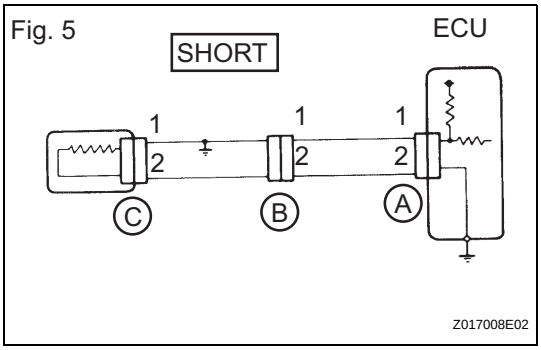

Fig. 6

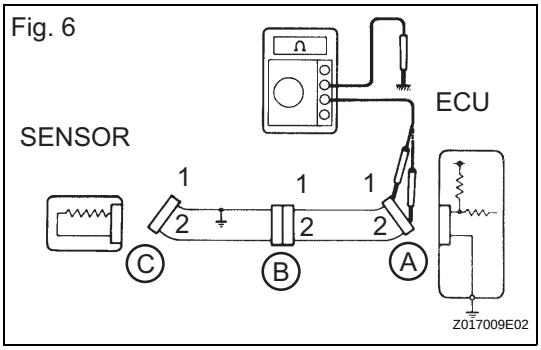

Fig. 7

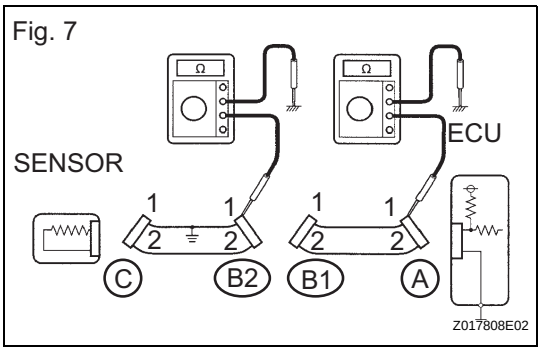

3. CHECK FOR SHORT CIRCUIT

(a) If the wire harness is ground shorted (Fig. 5), locate the section by conducting a resistance check with the body ground (below).

(b) Check the resistance with the body ground.

(1) Disconnect connectors A and C and measure the resistance.

Standard resistance (Fig. 6)

Tester Connection	Specified Condition
Connector A terminal 1 - Body ground	Below 1 Ω
Connector A terminal 2 - Body ground	10 kΩ or higher

HINT:

Measure the resistance while lightly shaking the wire harness vertically and horizontally. If your results match the examples above, an open circuit exists between terminal 1 of connector A and terminal 1 of connector C.

(2) Disconnect connector B and measure the resistance.

Standard resistance (Fig. 7)

Tester Connection	Specified Condition
Connector A terminal 1 - Body ground	10 kΩ or higher
Connector B2 terminal 2 - Body ground	Below 1 Ω

If the results match the examples above, a short circuit exists between terminal 1 of connector B2 and terminal 1 of connector C.

4. CHECK AND REPLACE ECU

NOTICE:

- **The connector should not be disconnected from the ECU. Perform the inspection from the backside of the connector on the wire harness side.**
- **When no measuring condition is specified, perform the inspection with the engine stopped and the ignition switch ON.**
- **Check that the connectors are fully seated. Check for loose, corroded or broken wires.**

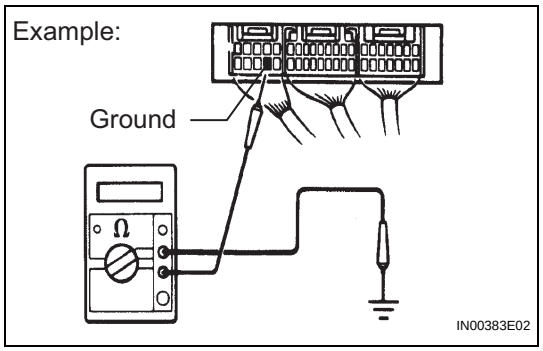

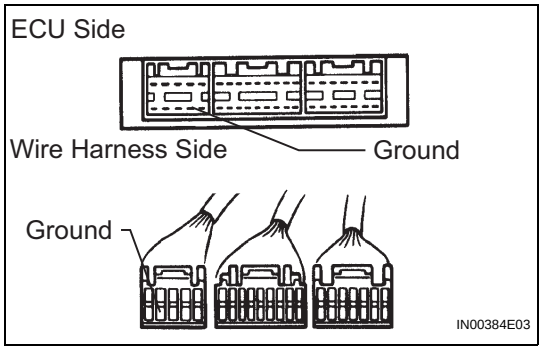

(a) First, check the ECU ground circuit. If it is faulty, repair it. If it is normal, the ECU could be faulty. Temporarily replace the ECU with a normally functioning one and check if the symptoms occur. If the trouble symptoms disappear, replace the original ECU.

(1) Measure the resistance between the ECU ground terminal and body ground.
Standard resistance:
Below 1 Ω

(2) Disconnect the ECU connector. Check the ground terminal on the ECU side and wire harness side for bending, corrosion or foreign matter. Lastly, check the contact pressure of the female terminals.

IN

TERMS

ABBREVIATIONS USED IN MANUAL

Abbreviations	Meaning
ABS	Anti-Lock Brake System
A/C	Air Conditioner
AC	Alternating Current
ACC	Accessory
ACIS	Acoustic Control Induction System
ACM	Active Control Engine Mount
ACSD	Automatic Cold Start Device
A.D.D	Automatic Disconnecting Differential
A/F	Air-Fuel Ratio
AHC	Active Height Control Suspension
ALR	Automatic Locking Retractor
ALT	Alternator
AMP	Amplifier
ANT	Antenna
APPROX.	Approximately
ASSY	Assembly
A/T, ATM	Automatic Transmission (Transaxle)
ATF	Automatic Transmission Fluid
AUTO	Automatic
AUX	Auxiliary
AVG	Average
AVS	Adaptive Variable Suspension
B+	Battery Voltage
BA	Brake Assist
BACS	Boost Altitude Compensation System
BAT	Battery
BDC	Bottom Dead Center
B/L	Bi-Level
B/S	Bore-Stroke Ratio
BTDC	Before Top Dead Center
BVSV	Bimetallic Vacuum Switching Valve
CAN	Controller Area Network
CB	Circuit Breaker
CCo	Catalytic Converter For Oxidation
CCV	Canister Closed Valve
CD	Compact Disc
CF	Cornering Force
CG	Center Of Gravity
CH	Channel
CKD	Complete Knock Down
COMB.	Combination
CPE	Coupe
CPS	Combustion Pressure Sensor
CPU	Central Processing Unit
CRS	Child Restraint System
CTR	Center

Abbreviations	Meaning
C/V	Check Valve
CV	Control Valve
CW	Curb Weight
DC	Direct Current
DEF	Defogger
DFL	Deflector
DIFF.	Differential
DIFF. LOCK	Differential Lock
D/INJ	Direct Injection
DLC	Data Link Connector
DLI	Distributorless Ignition
DOHC	Double Overhead Camshaft
DP	Dash Pot
DS	Dead Soak
DSP	Digital Signal Processor
DTC	Diagnostic Trouble Code
DVD	Digital Versatible Disc
EBD	Electric Brake Force Distribution
EC	Electrochromic
ECAM	Engine Control And Measurement System
ECD	Electronically Controlled Diesel
ECDY	Eddy Current Dynamometer
ECT	Electronic Controlled Automatic Transmission
ECU	Electronic Control Unit
ED	Electro-Deposited Coating
EDU	Electronic Driving Unit
EDIC	Electric Diesel Injection Control
EFI	Electronic Fuel Injection
E/G	Engine
EGR	Exhaust Gas Recirculation
EGR-VM	EGR-Vacuum Modulator
ELR	Emergency Locking Retractor
EPS	Electric Power Steering
ENG	Engine
ES	Easy & Smooth
ESA	Electronic Spark Advance
ETCS-i	Electronic Throttle Control System-intelligent
EVAP	Evaporative Emission Control
EVP	Evaporator
E-VRV	Electric Vacuum Regulating Valve
EX	Exhaust
FE	Fuel Economy
FF	Front-Engine-Front-Wheel-Drive
F/G	Fuel Gauge
FIPG	Formed In Place Gasket
FL	Fusible Link
F/P	Fuel Pump
FPU	Fuel Pressure Up
FR	Front

Abbreviations	Meaning
F/W	Flywheel
FW/D	Flywheel Damper
FWD	Front-Wheel-Drive
GAS	Gasoline
GND	Ground
GPS	Global Positioning System
GSA	Gear Shift Actuator
HAC	High Altitude Compensator
H/B	Hatchback
H-FUSE	High Current Fuse
HI	High
HID	High Intensity Discharge (Headlight)
HPU	Hydraulic Power Unit
HSG	Housing
HT	Hard Top
HV	Hybrid Vehicle
HWS	Heated Windshield System
IC	Integrated Circuit
IDI	Indirect Diesel Injection
IFS	Independent Front Suspension
IG	Ignition
IIA	Integrated Ignition Assembly
IN	Intake (Manifold, Valve)
INT	Intermittent
I/P	Instrument Panel
IRS	Independent Rear Suspension
ISC	Idle Speed Control
J/B	Junction Block
J/C	Junction Connector
KD	Kick-Down
LAN	Local Area Network
LB	Liftback
LCD	Liquid Crystal Display
LED	Light Emitting Diode
LH	Left-Hand
LHD	Left-Hand Drive
L/H/W	Length, Height, Width
LIN	Local Interconnect Network
LLC	Long-Life Coolant
LNG	Liquefied Natural Gas
LO	Low
LPG	Liquefied Petroleum Gas
LSD	Limited Slip Differential
LSP & BV	Load Sensing Proportioning and Bypass Valve
LSPV	Load Sensing Proportioning Valve
MAP	Manifold Absolute Pressure
MAX.	Maximum
MIC	Microphone
MIL	Malfunction Indicator Light

Abbreviations	Meaning
MIN.	Minimum
MG1	Motor Generator No. 1
MG2	Motor Generator No. 2
MMT	Multi-mode Manual Transmission
MP	Multipurpose
MPI	Multipoint Electronic Injection
MPX	Multiplex Communication System
M/T, MTM	Manual Transmission (Transaxle)
MT	Mount
MTG	Mounting
N	Neutral
NA	Natural Aspiration
NO.	Number
O2S	Oxygen Sensor
OC	Oxidation Catalyst
OCV	Oil Control Valve
O/D	Overdrive
OEM	Original Equipment Manufacturing
OHC	Overhead Camshaft
OHV	Overhead Valve
OPT	Option
ORVR	On-board Refueling Vapor Recovery
O/S	Oversize
P & BV	Proportioning and Bypass Valve
PBD	Power Back Door
PCS	Power Control System
PCV	Positive Crankcase Ventilation
PKB	Parking Brake
PPS	Progressive Power Steering
PROM	Programmable Read Only Memory
PS	Power Steering
PSD	Power Slide Door
PTC	Positive Temperature Coefficient
PTO	Power Take-Off
PZEV	Partial Zero Emission Vehicle
P/W	Power Window
R & P	Rack and Pinion
RAM	Random Access Memory
R/B	Relay Block
RBS	Recirculating Ball Type Steering
REAS	Relative Absorber System
R/F	Reinforcement
RFS	Rigid Front Suspension
RH	Right-Hand
RHD	Right-Hand Drive
RLY	Relay
ROM	Read Only Memory
RR	Rear
RRS	Rigid Rear Suspension

Abbreviations	Meaning
RSE	Rear Seat Entertainment
RWD	Rear-Wheel Drive
SC	Supercharger
SCV	Swirl Control Valve
SDN	Sedan
SEN	Sensor
SICS	Starting Injection Control System
SOC	State Of Charge
SOHC	Single Overhead Camshaft
SPEC	Specification
SPI	Single Point Injection
SRS	Supplemental Restraint System
SSM	Special Service Materials
SST	Special Service Tools
STD	Standard
STJ	Cold-Start Fuel Injection
SW	Switch
SYS	System
T/A	Transaxle
TACH	Tachometer
TBI	Throttle Body Electronic Fuel Injection
TC	Turbocharger
TCCS	TOYOTA Computer-Controlled System
TCV	Timing Control Valve
TDC	Top Dead Center
TEMP.	Temperature
TFT	TOYOTA Free-Tronic
TIS	Total Information System For Vehicle Development
T/M	Transmission
TMC	TOYOTA Motor Corporation
TMMIN	PT. TOYOTA Motor Manufacturing Indonesia
TMMK	TOYOTA Motor Manufacturing Kentucky, Inc.
TMT	TOYOTA Motor Thailand Co. Ltd.
TRAC/TRC	Traction Control System
TURBO	Turbocharge
TWC	Three-Way Catalyst
U/D	Underdrive
U/S	Undersize
VCV	Vacuum Control Valve
VENT	Ventilator
VIM	Vehicle Interface Module
VGRS	Variable Gear Ratio Steering
VIN	Vehicle Identification Number
VPS	Variable Power Steering
VSC	Vehicle Stability Control
VSV	Vacuum Switching Valve
VTV	Vacuum Transmitting Valve
VVT-i	Variable Valve Timing-intelligent
W/	With

Abbreviations	Meaning
WGN	Wagon
W/H	Wire Harness
W/O	Without
1ST	First
2ND	Second
2WD	Two Wheel Drive Vehicle (4 x 2)
3RD	Third
4TH	Fourth
4WD	Four Wheel Drive Vehicle (4 x 4)
4WS	Four Wheel Steering System
5TH	Fifth

IN

GLOSSARY OF SAE AND TOYOTA TERMS

This glossary lists all SAE-J1930 terms and abbreviations used in this manual in compliance with SAE recommendations, as well as their TOYOTA equivalents.

SAE ABBREVIATIONS	SAE TERMS	TOYOTA TERMS ( )-ABBREVIATIONS
A/C	Air Conditioning	Air Conditioner
ACL	Air Cleaner	Air Cleaner, A/CL
AIR	Secondary Air Injection	Air Injection (AI)
AP	Accelerator Pedal	-
B+	Battery Positive Voltage	+B, Battery Voltage
BARO	Barometric Pressure	HAC
CAC	Charge Air Cooler	Intercooler
CARB	Carburetor	Carburetor
CFI	Continuous Fuel Injection	-
CKP	Crankshaft Position	Crank Angle
CL	Closed Loop	Closed Loop
CMP	Camshaft Position	Cam Angle
CPP	Clutch Pedal Position	-
CTOX	Continuous Trap Oxidizer	-
CTP	Closed Throttle Position	LL ON, Idle ON
DFI	Direct Fuel Injection	Direct Injection (DI./INJ)
DI	Distributor Ignition	-
DLC3	Data Link Connector 3	OBD II Diagnostic Connector
DTC	Diagnostic Trouble Code	Diagnostic Trouble Code
DTM	Diagnostic Test Mode	-
ECL	Engine Coolant Level	-
ECM	Engine Control Module	Engine ECU (Electronic Control Unit)
ECT	Engine Coolant Temperature	Coolant Temperature, Water Temperature (THW)
EEPROM	Electrically Erasable Programmable Read Only Memory	Electrically Erasable Programmable Read Only Memory (EEPROM), Erasable Programmable Read Only Memory (EPROM)
EFE	Early Fuel Evaporation	Cold Mixture Heater (CMH), Heat Control Valve (HCV)
EGR	Exhaust Gas Recirculation	Exhaust Gas Recirculation (EGR)
EI	Electronic Ignition	Distributorless Ignition (DLI)
EM	Engine Modification	Engine Modification (EM)
EPROM	Erasable Programmable Read Only Memory	Programmable Read Only Memory (PROM)
EVAP	Evaporative Emission	Evaporative Emission Control (EVAP)
FC	Fan Control	-
FEEPROM	Flash Electrically Erasable Programmable Read Only Memory	-
FEPROM	Flash Erasable Programmable Read Only Memory	-
FF	Flexible Fuel	-
FP	Fuel Pump	Fuel Pump
GEN	Generator	Alternator
GND	Ground	Ground (GND)
HO2S	Heated Oxygen Sensor	Heated Oxygen Sensor (HO_2S)
IAC	Idle Air Control	Idle Speed Control (ISC)
IAT	Intake Air Temperature	Intake or Inlet Air Temperature
ICM	Ignition Control Module	-

SAE ABBREVIATIONS	SAE TERMS	TOYOTA TERMS ( )-ABBREVIATIONS
IFI	Indirect Fuel Injection	Indirect Injection (IDL)
IFS	Inertia Fuel-Shutoff	-
ISC	Idle Speed Control	-
KS	Knock Sensor	Knock Sensor
MAF	Mass Airflow	Air Flow Meter
MAP	Manifold Absolute Pressure	Manifold Pressure Intake Vacuum
MC	Mixture Control	Electric Bleed Air Control Valve (EBCV) Mixture Control Valve (MCV) Electric Air Control Valve (EACV)
MDP	Manifold Differential Pressure	-
MFI	Multiport Fuel Injection	Electronic Fuel Injection (EFI)
MIL	Malfunction Indicator Light	Check Engine Light
MST	Manifold Surface Temperature	-
MVZ	Manifold Vacuum Zone	-
NVRAM	Non-Volatile Random Access Memory	-
O2S	Oxygen Sensor	Oxygen Sensor, O_2 Sensor (O_2S)
OBD	On-Board Diagnostic	On-Board Diagnostic System (OBD)
OC	Oxidation Catalytic Converter	Oxidation Catalytic Convert (OC), CCo
OL	Open Loop	Open Loop
PAIR	Pulsed Secondary Air Injection	Air Suction (AS)
PCM	Powertrain Control Module	-
PNP	Park/Neutral Position	-
PROM	Programmable Read Only Memory	-
PSP	Power Steering Pressure	-
PTOX	Periodic Trap Oxidizer	Diesel Particulate Filter (DPF) Diesel Particulate Trap (DPT)
RAM	Random Access Memory	Random Access Memory (RAM)
RM	Relay Module	-
ROM	Read Only Memory	Read Only Memory (ROM)
RPM	Engine Speed	Engine Speed
SC	Supercharger	Supercharger
SCB	Supercharger Bypass	E-ABV
SFI	Sequential Multiport Fuel Injection	Electronic Fuel Injection (EFI), Sequential Injection
SPL	Smoke Puff Limiter	-
SRI	Service Reminder Indicator	-
SRT	System Readiness Test	-
ST	Scan Tool	-
TB	Throttle Body	Throttle Body
TBI	Throttle Body Fuel Injection	Single Point Injection Central Fuel Injection (Ci)
TC	Turbocharger	Turbocharger
TCC	Torque Converter Clutch	Torque Converter
TCM	Transmission Control Module	Transmission ECU, ECT ECU
TP	Throttle Position	Throttle Position
TR	Transmission Range	-
TVV	Thermal Vacuum Valve	Bimetallic Vacuum Switching Valve (BVSV) Thermostatic Vacuum Switching Valve (TVSV)
TWC	Three-Way Catalytic Converter	Three-Way Catalytic (TWC) Manifold Converter CC_{RO}

SAE ABBREVIATIONS	SAE TERMS	TOYOTA TERMS ( )-ABBREVIATIONS
TWC+OC	Three-Way + Oxidation Catalytic Converter	CC_R + CCo
VAF	Volume Airflow	Air Flow Meter
VR	Voltage Regulator	Voltage Regulator
VSS	Vehicle Speed Sensor	Vehicle Speed Sensor
WOT	Wide Open Throttle	Full Throttle
WU-OC	Warm Up Oxidation Catalytic Converter	-
WU-TWC	Warm Up Three-Way Catalytic Converter	-
3GR	Third Gear	-
4GR	Fourth Gear	-

1NZ-FE ENGINE CONTROL SYSTEM

SST

	09817-33190	Sensor Socket Wrench	

RECOMMENDED TOOLS

	09082-00040	TOYOTA Electrical Tester	
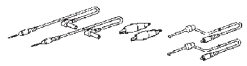	(09083-00150)	Test Lead Set	

EQUIPMENT

Torque wrench	
Ohmmeter	
Heater	
Thermometer	

1NZ-FE ENGINE MECHANICAL

SST

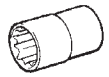	09011-38121	12 mm Socket Wrench for 12 Pointed Head	
	09023-38400	Union Nut Wrench 14mm	
	09032-00100	Oil Pan Seal Cutter	
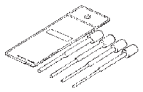	09201-10000	Valve Guide Bushing Remover & Replacer Set	
	(09201-01050)	Valve Guide Bushing Remover & Replacer 5	
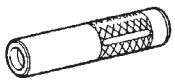	09201-41020	Valve Stem Oil Seal Replacer	
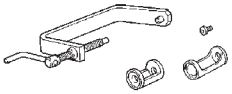	09202-70020	Valve Spring Compressor	
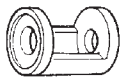	(09202-00010)	Attachment	
	09205-16010	Cylinder Head Bolt Wrench	
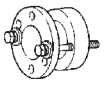	09213-14010	Crankshaft Pulley Holding Tool	
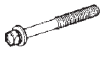	(91651-60865)	Bolt	

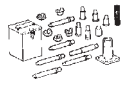	09221-25026	Piston Pin Remover & Replacer	
	(09221-00021)	Body	
	(09221-00030)	Spring	
	(09221-00141)	Guide H	
	(09221-00150)	Bushing D	
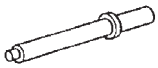	(09221-00190)	Guide K	
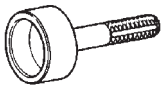	09223-56010	Crankshaft Rear Oil Seal Replacer	
	09228-06501	Oil Filter Wrench	
	09330-00021	Companion Flange Holding Tool	
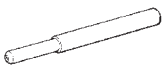	09670-00010	Front Crossmember Guide Tool	
	09817-33190	Sensor Socket Wrench	
	09843-18040	Diagnosis Check Wire No.2	

PP

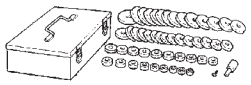	09950-60010	Replacer Set	
	(09951-00250)	Replacer 25	
	(09951-00380)	Replacer 38	
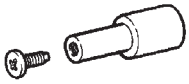	(09952-06010)	Adapter	
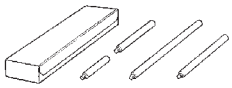	09950-70010	Handle Set	
	(09951-07100)	Handle 100	
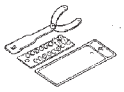	09960-10010	Variable Pin Wrench Set	
	(09962-01000)	Variable Pin Wrench Arm Assembly	
	(09963-00700)	Pin 7	
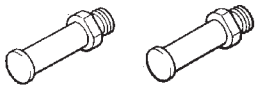	(09963-01000)	Pin 10	

RECOMMENDED TOOLS

	09011-12301	Socket Wrench 30 mm	
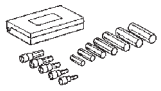	09040-00011	Hexagon Wrench Set	
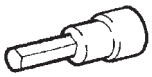	(09043-20080)	Socket Hexagon Wrench 8	
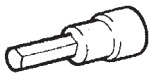	(09043-20100)	Socket Hexagon Wrench 10	
	09216-00021	Belt Tension Gauge	

PP

EQUIPMENT

Alignment tester	
Angle gauge	
Bar	
Caliper gauge	
CO/HC meter	
Compression gauge	
Connecting rod aligner	
Cylinder gauge	
Dial indicator	
Feeler gauge	
Heater	
Micrometer	
Piston ring compressor	
Piston ring expander	
Plastic hammer	
Plastigage	
Straight edge	
Reamer	
Slide caliper	
Tachometer	
Timing light	
Torque wrench	
Valve seat cutter	
V-block	
Vernier caliper	
Wooden block	
Thermometer	
Spring tester	
Engine lifter	
Engine sling device	
Chain block	
Wire brush	
Chisel	
Hammer	
Radiator cap tester	

SSM

	08826-00080	Seal Packing Black or equivalent (FIPG)	
	08826-00100	Seal Packing 1282B, THREE BOND 1282B or equivalent (FIPG)	
	08833-00070	Adhesive 1324, THREE BOND 1324 or equivalent	

1NZ-FE FUEL

SST

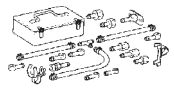	09268-41047	Injection Measuring Tool Set	
	(09268-41500)	Fuel Tube Connector	
	(90467-13001)	Clip	
	(95336-08070)	Hose	
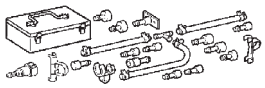	09268-41048	Injection Measuring Tool Set	
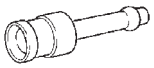	(09268-41110)	Adaptor	
	(09268-41310)	Clamp	
	(09268-41500)	Fuel Tube Connector	
	(90467-13001)	Clip	
	(95336-08070)	Hose	
	09268-45014	EFI Fuel Pressure Gauge	

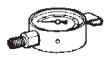	(09268-41200)	Gauge	
	(09268-41220)	Hose	
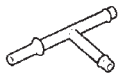	(09268-41250)	T Joint	
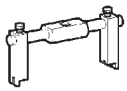	09808-14020	Retainer Tool,Fuel Pump	
	(09808-01410)	Holder	
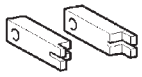	(09808-01420)	Claw	
	(09808-01430)	Bolt	
	09842-30080	Wire H EFI Inspection	

RECOMMENDED TOOLS

	09082-00040	TOYOTA Electrical Tester	
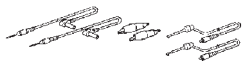	(09083-00150)	Test Lead Set	

EQUIPMENT

Stop watch	
Measuring flask	
Ohmmeter	
Torque wrench	

SSM

	08826-00080	Seal Packing Black or equivalent (FIPG)	

1NZ-FE EMISSION CONTROL

SST

	09224-00010	O2 Sensor Wrench	

RECOMMENDED TOOLS

	09082-00040	TOYOTA Electrical Tester	
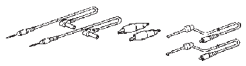	(09083-00150)	Test Lead Set	

EQUIPMENT

Ohmmeter	
Torque wrench	
Service wire harness	

1NZ-FE EXHAUST

EQUIPMENT

Torque wrench	
Vernier calipers	
Wooden block	

1NZ-FE COOLING

SST

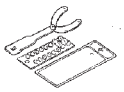	09960-10010	Variable Pin Wrench Set	
	(09962-01000)	Variable Pin Wrench Arm Assembly	
	(09963-00700)	Pin 7	

EQUIPMENT

Heater	
Slide caliper	
Thermometer	
Torque wrench	
Ohmmeter	
Radiator cap tester	
Ammeter	
Protective tape	

COOLANT

Item		Capacity	Classification
Engine Coolant	M/T	4.8 liters (5.1 USqts, 4.5 lmp. qts)	Use only Toyota Super Long Life Coolant or similar high quality ethylene glycol based non-silicate, non-amine, non-nitrite, and non-borate engine coolant with long-life hybrid organic acid technology (coolant with long-life hybrid organic acid technology consists of a combination of low phosphates and organic acids).
	A/T	4.7 liters (5.0 USqts, 4.4 lmp. qts)	

1NZ-FE LUBRICATION

SST

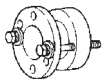	09213-14010	Crankshaft Pulley Holding Tool	
	(91651-60865)	Bolt	
	09228-06501	Oil Filter Wrench	
	09330-00021	Companion Flange Holding Tool	
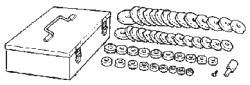	09950-60010	Replacer Set	
	(09951-00250)	Replacer 25	
	(09951-00410)	Replacer 41	
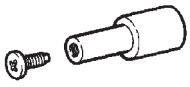	(09952-06010)	Adapter	
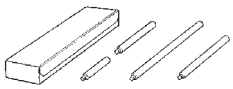	09950-70010	Handle Set	
	(09951-07100)	Handle 100	

PP

EQUIPMENT

Deep socket wrench 24 mm	
Oil pressure gauge	
Torque wrench	
Wooden block	
Feeler gauge	

LUBRICANT

Item	Capacity
With oil filter change	3.7 liters (3.9 US qts, 3.4 lmp. qts)
Without oil filter change	3.4 liters (3.6 US qts, 3.1 lmp. qts)
Dry fill	4.1 liters (4.3 US qts, 3.8 lmp. qts)

SSM

	08826-00080	Seal Packing Black or equivalent (FIPG)	
	08826-00100	Seal Packing 1282B, THREE BOND 1282B or equivalent (FIPG)	
	08833-00070	Adhesive 1324, THREE BOND 1324 or equivalent	

1NZ-FE IGNITION

RECOMMENDED TOOLS

	09082-00040	TOYOTA Electrical Tester	
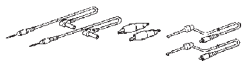	(09083-00150)	Test Lead Set	

EQUIPMENT

Torque wrench	
Ohmmeter	
Spark plug cleaner	

1NZ-FE STARTING

RECOMMENDED TOOLS

	09082-00040	TOYOTA ElectricalTester	
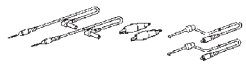	(09083-00150)	Test Lead Set	
	09904-00010	Expander Set	for 1.6kw Type

EQUIPMENT

for 0.8 kW Type

Torque wrench	
Ammeter (A)	
Ohmmeter	
Service wire harness	
V-block	
Dial indicator	
Vernier calipers	
Vise	
Sand paper (No.400)	
Plastic hammer	

for 1.6 kW Type

Torque wrench	
Ammeter (A)	
Ohmmeter	
Service wire harness	
Vernier calipers	
Vise	
Sand paper (No.400)	

1NZ-FE CHARGING

SST

	09286-46011	Injection Pump Spline Shaft Puller	
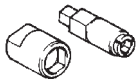	09820-63010	Alternator Pulley Set Nut Wrench Set	
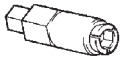	(09820-06010)	Alternator Rotor Shaft Wrench	
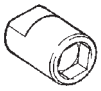	(09820-06020)	Alternator Pulley Set Nut 22 mm Wrench	

RECOMMENDED TOOLS

	09082-00040	TOYOTA Electrical Tester	
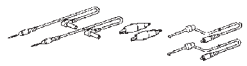	(09083-00150)	Test Lead Set	

EQUIPMENT

Torque wrench	
Ammeter (A)	
Ohmmeter	
Volt meter	
Service wire harness	
Vernier caliper	
Vise	

U340E AUTOMATIC TRANSAXLE

SST

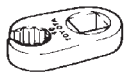	09023-12701	Union Nut Wrench 17mm	
	09221-25026	Piston Pin Remover & Replacer	
	(09221-00071)	Guide A	
	09223-15030	Oil Seal & Bearing Replacer	
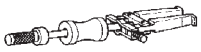	09308-00010	Oil Seal Puller	
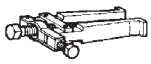	09308-10010	Oil Seal Puller	
	09320-89010	Transfer Clutch Spring Compressor	
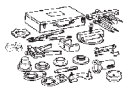	09350-32014	TOYOTA Automatic Transmission Tool Set	
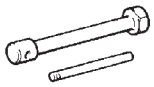	(09351-32010)	One-way Clutch Test Tool	
	(09351-32020)	Stator Stopper	
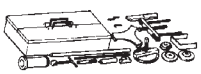	09350-36010	TOYOTA Automatic Transmission Tool Set	

	(09350-06110)	No.1 Measure Terminal	
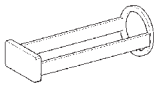	09387-00020	Direct Clutch Wrench	
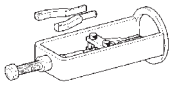	09387-00041	Bearing Puller Assembly	
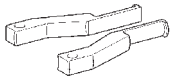	(09387-01021)	Claw No.2	
	(09387-02010)	Oil Seal Replacer	
	(09387-02020)	One-way Clutch Test Tool Set	
	09387-00060	Second Brake Wrench	
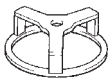	09387-00070	First & Reverse Brake Wrench	
	09387-00120	Counter Drive Gear Nut Wrench	
	09527-17011	Rear Axle Shaft Bearing Remover	
	09554-14010	Differential Oil Seal Replacer	
	09612-65014	Steering Worm Bearing Puller	

PP

PP

	(09612-01010)	Claw A	
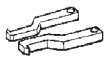	(09612-01040)	Claw D	
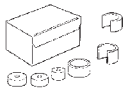	09710-20011	Front Suspension Bushing Tool Set	
	(09710-06071)	Replacer	
	09726-27012	Front Suspension Arm Bushing Remover & Replacer	
	(09726-02041)	Replacer	
	09726-40010	Lower Control Shaft Bearing Replacer	
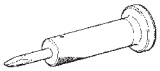	09930-00010	Drive Shaft Nut Chisel	
	09950-40011	Puller B Set	
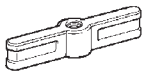	(09951-04010)	Hanger 150	
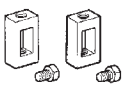	(09952-04010)	Slide Arm	
	(09953-04020)	Center Bolt 150	

	(09953-04030)	Center Bolt 200	
	(09954-04010)	Arm 25	
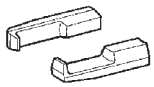	(09955-04061)	Claw No.6	
	(09957-04010)	Attachment	
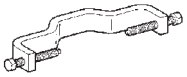	(09958-04011)	Holder	
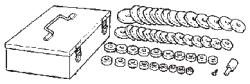	09950-60010	Replacer Set	
	(09951-00190)	Replacer 19	
	(09951-00220)	Replacer 22	
	(09951-00320)	Replacer 32	
	(09951-00350)	Replacer 35	
	(09951-00390)	Replacer 39	
	(09951-00400)	Replacer 40	

	(09951-00430)	Replacer 43	
	(09951-00460)	Replacer 46	
	(09951-00480)	Replacer 48	
	(09951-00530)	Replacer 53	
	(09951-00550)	Replacer 55	
	(09951-00610)	Replacer 61	
	(09951-00650)	Replacer 65	
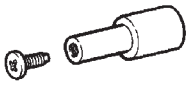	(09952-06010)	Adapter	
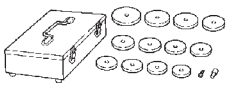	09950-60020	Replacer Set No.2	
	(09951-00680)	Replacer 68	
	(09951-00720)	Replacer 72	
	(09951-00790)	Replacer 79	

	(09951-00890)	Replacer 89	
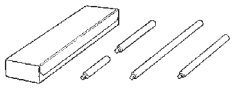	09950-70010	Handle Set	
	(09951-07100)	Handle 100	
	(09951-07150)	Handle 150	
	(09951-07200)	Handle 200	

RECOMMENDED TOOLS

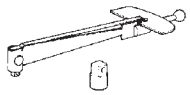	09025-00010	Torque Wrench (30 kgf-cm)	
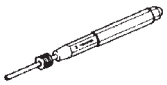	09031-00030	Pin Punch	
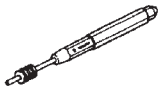	09031-00040	Pin Punch .	
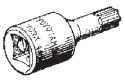	09042-00010	Torx Socket T30	
	09082-00040	TOYOTA Electrical Tester	
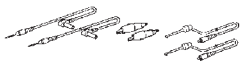	(09083-00150)	Test Lead Set	
	09090-04020	Engine Sling Device	
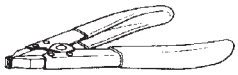	09905-00012	Snap Ring No.1 Expander	

EQUIPMENT

Dial indicator with magnetic base	
Feeler gauge	
Vernier calipers	
Torque wrench	
Plastic hammer	
Straight edge	

LUBRICANT

Item	Capacity	Classification
Automatic transaxle fluid (Drain and refill)	2.9 liters (3.1 US qts, 2.6 Imp. qts)	Toyota Genuine ATF WS

SSM

	Toyota Genuine Seal Packing 1281, Three Bond 1281 or Equivalent

CLUTCH

SST

	09023-00101	Union Nut Wrench 10 mm	
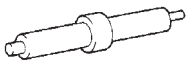	09301-00110	Clutch Guide Tool	
	09333-00013	Universal Joint Bearing Remover & Replacer	

EQUIPMENT

Torque wrench	
Vernier calipers	
Dial gauge	
Dial indicator	

LUBRICANT

Item	Capacity	Classification
Brake fluid	-	SAE J1703 or FMVSS No. 116 DOT 3

C50 MANUAL TRANSAXLE

SST

PP

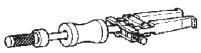	09308-00010	Oil Seal Puller	
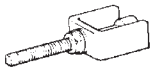	09309-12020	5th Driven Gear Replacer	
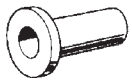	09309-36010	Transmission Rear Bearing Replacer	
	09309-37010	Transmission Bearing Replacer	
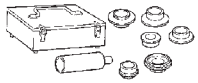	09316-60011	Transmission & Transfer Bearing Replacer	
	(09316-00011)	Replacer Pipe	
	(09316-00021)	Replacer A	
	(09316-00031)	Replacer B	
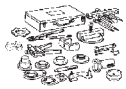	09350-32014	TOYOTA Automatic Transmission Tool Set	
	(09351-32120)	Overdrive Bearing Replacer	
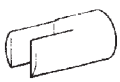	09564-32011	Differential Preload Adaptor	

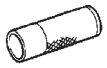	09608-04031	Front Hub Inner Bearing Cone Replacer	
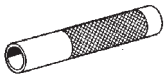	09612-22011	Tilt Handle Bearing Replacer	
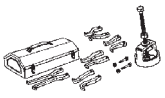	09612-65014	Steering Worm Bearing Puller	
	(09612-01040)	Claw D	
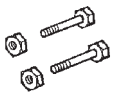	(09612-01050)	Hanger Pin with Nut	
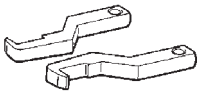	(09612-01060)	Claw E	
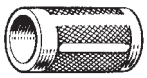	09636-20010	Upper Ball Joint Dust Cover Replacer	
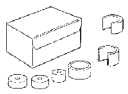	09710-20011	Front Suspension Bushing Tool Set	
	(09710-06071)	Replacer	
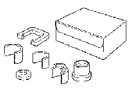	09710-26011	Front Suspension Bushing Tool Set	
	(09710-05061)	Replacer	
	09817-16011	Back-up Light Switch Tool	

PP

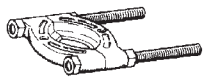	09950-00020	Bearing Remover	
	09950-00030	Bearing Remover Attachment	
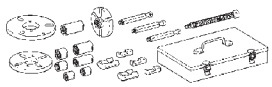	09950-30012	Puller A Set	
	(09951-03010)	Upper Plate	
	(09953-03010)	Center Bolt	
	(09954-03010)	Arm	
	(09955-03021)	Claw No.2	
	09950-40011	Puller B Set	
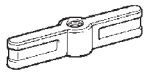	(09951-04010)	Hanger 150	
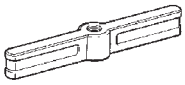	(09951-04020)	Hanger 200	
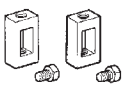	(09952-04010)	Slide Arm	
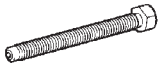	(09953-04020)	Center Bolt 150	

	(09953-04030)	Center Bolt 200	
	(09954-04010)	Arm 25	
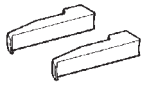	(09955-04011)	Claw No.1	
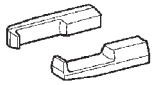	(09955-04061)	Claw No.6	
	(09957-04010)	Attachment	
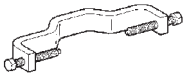	(09958-04011)	Holder	
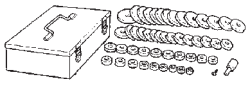	09950-60010	Replacer Set	
	(09951-00180)	Replacer 18	
	(09951-00220)	Replacer 22	
	(09951-00240)	Replacer 24	
	(09951-00280)	Replacer 28	
	(09951-00360)	Replacer 36	

PP

	(09951-00370)	Replacer 37	
	(09951-00420)	Replacer 42	
	(09951-00530)	Replacer 53	
	(09951-00550)	Replacer 55	
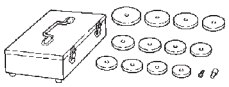	09950-60020	Replacer Set No.2	
	(09951-00680)	Replacer 68	
	(09951-00710)	Replacer 71	
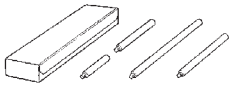	09950-70010	Handle Set	
	(09951-07100)	Handle 100	
	(09951-07150)	Handle 150	
	(09951-07200)	Handle 200	

RECOMMENDED TOOLS

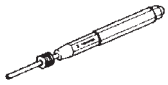	09031-00030	Pin Punch	
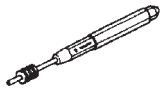	09031-00040	Pin Punch .	
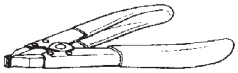	09905-00012	Snap Ring No.1 Expander	

EQUIPMENT

Dial indicator	
Feeler gauge	
Micrometer	
Vernier calipers	
Caliper gauge	
Cylinder gauge	
Torque wrench	
Dial gauge	
Chisel	
Heater	

LUBRICANT

Item	Capacity	Classification
Manual transaxle oil	1.9 liters (2.0 US qts, 1.7 lmp. qts)	API GL-4 SAE 75W

SSM

	08826-00090	Seal Packing 1281, THREE BOND 1281 or equivalent (FIPG)	
	08833-00080	Adhesive 1344 THREE BOND 1344 LOCTITE 242 or equivalent	

DRIVE SHAFT

SST

	09520-01010	Drive Shaft Remover Attachment	
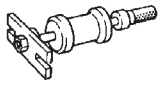	09520-24010	Differential Side Gear Shaft Puller	
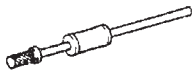	(09520-32040)	Shocker Set	
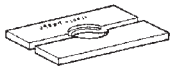	09527-10011	Rear Axle Shaft Bearing Remover	
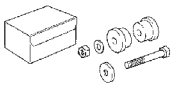	09608-16042	Front Hub Bearing Adjusting Tool	
	(09608-02021)	Bolt & Nut	
	(09608-02041)	Retainer	
	09628-00011	Ball Joint Puller	
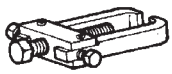	09628-62011	Boll Joint Puller	
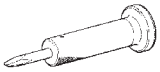	09930-00010	Drive Shaft Nut Chisel	
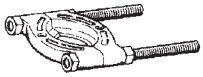	09950-00020	Bearing Remover	

RECOMMENDED TOOLS

	09011-12301	Socket Wrench 30 mm	
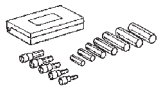	09040-00011	Hexagon Wrench Set	
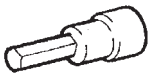	(09043-20060)	Socket Hexagon Wrench 6	
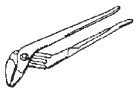	09130-00150	Water Pump Pliers	
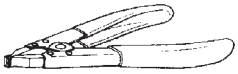	09905-00012	Snap Ring No.1 Expander	

EQUIPMENT

Torque wrench	

LUBRICANT

Item	Capacity
Front drive shaft outboard joint grease	125 to 135 g (4.4 to 4.8 oz.)
Front drive shaft inboard joint grease	125 to 135 g (4.4 to 4.8 oz.)

AXLE

SST

	09223-15020	Oil Seal & Bearing Replacer	
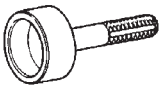	09223-56010	Crankshaft Rear Oil Seal Replacer	
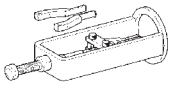	09387-00041	Bearing Puller Assembly	
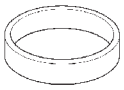	(09387-02010)	Oil Seal Replacer	
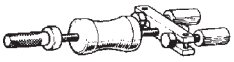	09520-00031	Rear Axle Shaft Puller	
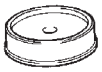	09608-32010	Steering Knuckle Oil Seal Replacer	
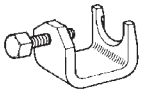	09628-10011	Ball Joint Puller	
	09950-40011	Puller B Set	
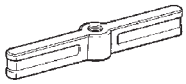	(09951-04020)	Hanger 200	
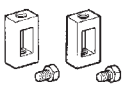	(09952-04010)	Slide Arm	
	(09953-04020)	Center Bolt 150	

	(09954-04010)	Arm 25	
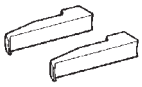	(09955-04011)	Claw No.1	
	(09957-04010)	Attachment	
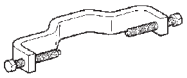	(09958-04011)	Holder	
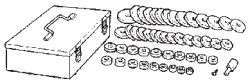	09950-60010	Replacer Set	
	(09951-00370)	Replacer 37	
	(09951-00500)	Replacer 50	
	(09951-00630)	Replacer 63	
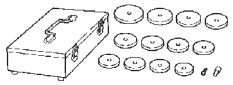	09950-60020	Replacer Set No.2	
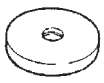	(09951-00710)	Replacer 71	
	09950-70010	Handle Set	
	(09951-07100)	Handle 100	

PP

RECOMMENDED TOOLS

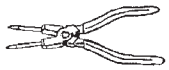	09905-00013	Snap Ring Pliers	

EQUIPMENT

Dial indicator with magnetic base	
Torque wrench	

SUSPENSION

SST

	09023-00100	Union Nut Wrench 10 mm	
	09023-00101	Union Nut Wrench 10 mm	
	09223-15020	Oil Seal & Bearing Replacer	
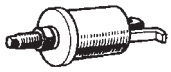	09612-30012	Steering Worm Bearing Puller	
	09628-00011	Ball Joint Puller	
	09727-30021	Coil Spring Compressor	
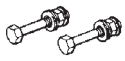	(09727-00010)	Bolt Set	
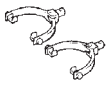	(09727-00021)	Arm Set	
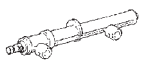	(09727-00031)	Compressor	
	09950-40011	Puller B Set	
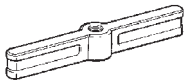	(09951-04020)	Hanger 200	

PP

PP

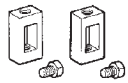	(09952-04010)	Slide Arm	
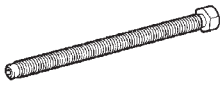	(09953-04030)	Center Bolt 200	
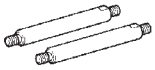	(09954-04020)	Arm 100	
	(09954-04030)	Arm 150	
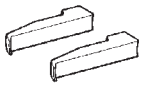	(09955-04011)	Claw No.1	
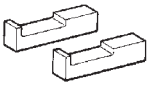	(09955-04051)	Claw No.5	
	(09957-04010)	Attachment	
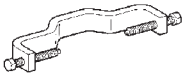	(09958-04011)	Holder	
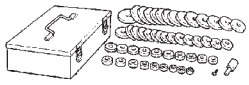	09950-60010	Replacer Set	
	(09951-00590)	Replacer 59	
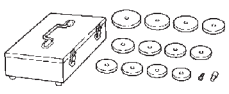	09950-60020	Replacer Set No.2	
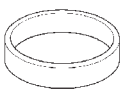	(09387-02010)	Oil Seal Replacer	

	(09951-00810)	Replacer 81	

RECOMMENDED TOOLS

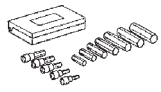	09040-00011	Hexagon Wrench Set	
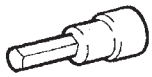	(09043-20060)	Socket Hexagon Wrench 6	

EQUIPMENT

Alignment tester	
Angle gauge	
Camber-caster-kingpin gauge	
Tire pressure gauge	
Toe-in gauge	
Wheel balancer	
Dial indicator with magnetic base	
Torque wrench	
Drill	

TIRE AND WHEEL

EQUIPMENT

Dial indicator with magnetic base	
Tire pressure gauge	
Wheel balancer	

BRAKE CONTROL

SST

	09023-00100	Union Nut Wrench 10 mm	
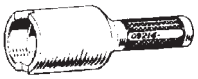	09214-76011	Crankshaft Pulley Replacer	
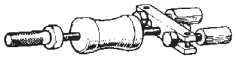	09520-00031	Rear Axle Shaft Puller	
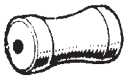	(09520-00040)	Shocker	
	09521-00020	Drive Shaft Boot Clamping Tool	
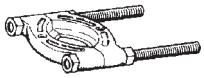	09950-00020	Bearing Remover	

RECOMMENDED TOOLS

	09082-00040	TOYOTA Electrical Tester	
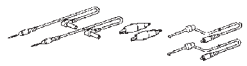	(09083-00150)	Test Lead Set	

EQUIPMENT

Torque wrench	

BRAKE

SST

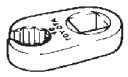	09023-00100	Union Nut Wrench 10 mm	
	09703-30010	Brake Shoe Return Spring Tool	
	09709-29018	LSPV Gauge Set	
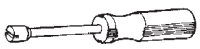	09718-00010	Shoe Hold Down Spring Driver	
	09737-00013	Brake Booster Push Rod Gauge	
	09737-00020	Brake Booster Push Rod Wrench	

RECOMMENDED TOOLS

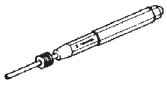	09031-00030	Pin Punch	

EQUIPMENT

Torque wrench	
Ruler	
Micrometer	
Dial indicator with magnetic base	
Brake drum gauge	
Slide caliper	

LUBRICANT

Item	Capacity	Classification
Brake fluid	-	SAE J1703 or FMVSS No. 116 DOT3

PARKING BRAKE

EQUIPMENT

Torque wrench	
Ohmmeter	

STEERING COLUMN

SST

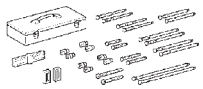	09950-50013	Puller C Set	
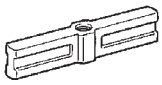	(09951-05010)	Hanger 150	
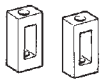	(09952-05010)	Slide Arm	
	(09953-05020)	Center Bolt 150	
	(09954-05021)	Claw No.2	

RECOMMENDED TOOLS

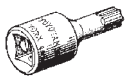	09042-00010	Torx Socket T30	

EQUIPMENT

Torque wench	
Drill	

POWER STEERING

SST

	09670-00010	Front Crossmember Guide Tool	
	09670-00011	Front Crossmember Guide Tool	

RECOMMENDED TOOLS

	09082-00040	TOYOTA Electrical Tester	
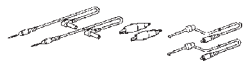	(09083-00150)	Test Lead Set	

EQUIPMENT

Torque wrench	

AIR CONDITIONING

SST

	07110-58060	Air Conditioner Service Tool Set	-
	(07117-58080)	Quick Disconnect Adapter	-
	(07117-58090)	Quick Disconnect Adapter	-
	(07117-78050)	Refrigerant Charging Gauge	-
	(07117-88060)	Refrigerant Charging Hose	-
	(07117-88070)	Refrigerant Charging Hose	-
	(07117-88080)	Refrigerant Charging Hose	-

RECOMMENDED TOOLS

	09082-00040	TOYOTA Electrical Tester	-
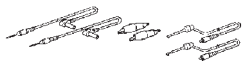	(09083-00150)	Test Lead Set	-

EQUIPMENT

Hexagon wrench 4mm	
Hexagon wrench 14mm	
Ohmmeter	
Vinyl tape	
Torque wrench	
Service wire harness	

LUBRICANT

Item	Capacity	Classification
Compressor oil	-	ND-OIL8 or the equivalent
When replacing cooler evaporator sub-assembly	40 cc (1.35 fl. oz.)	ND-OIL8 or the equivalent
When replacing condenser	40 cc (1.35 fl. oz.)	ND-OIL8 or the equivalent

SUPPLEMENTAL RESTRAINT SYSTEM

SST

	09082-00030	TOYOTA Electrical Tester.	
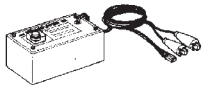	09082-00700	SRS Airbag Deployment Tool	
	09082-00760	Airbag Deployment Wire Sub-harness No.4	
	09082-00780	Airbag Deployment Wire Sub-harness No.6	
	09082-00802	Airbag Deployment Wire Sub-Harness No. 8	
	(09082-10801)	Wire A	
	(09082-20801)	Wire B	
	(09082-30801)	Wire C	
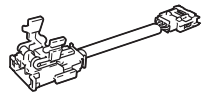	09082-00810	Airbag Deployment Wire Sub-Harness No. 9	
	09843-18060	SRS Check Wire	

RECOMMENDED TOOLS

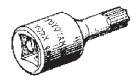	09042-00010	Torx Socket T30	
	09082-00040	TOYOTA Electrical Tester	
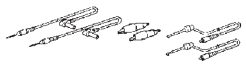	(09083-00150)	Test Lead Set	

EQUIPMENT

Battery	
Bolt	
Knife	
Ohmmeter	
Plastic bag	
Service-purpose wire harness	
Shop rag or pice of cloth	
Tire	
Tire with disk wheel	
Torque wrench	
Service wire harness	

SEAT BELT

SST

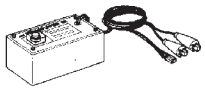	09082-00700	SRS Airbag Deployment Tool	
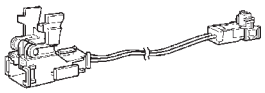	09082-00770	Airbag Deployment Wire Sub-harness No.5	

RECOMMENDED TOOLS

	09082-00040	TOYOTA Electrical Tester	
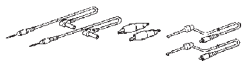	(09083-00150)	Test Lead Set	

EQUIPMENT

Battery	
Knife	
Ohmmeter	
Plastic bag	
Protective tape	
Service-purpose wire harness	
Service wire harness	
Tire with wheel	
Torque wrench	

THEFT DETERRENT SYSTEM

RECOMMENDED TOOLS

	09082-00040	TOYOTA Electrical Tester	
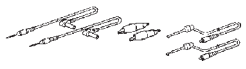	(09083-00150)	Test Lead Set	

EQUIPMENT

Ohmmeter	
Torque wrench	

ENGINE IMMOBILISER

RECOMMENDED TOOLS

	09082-00040	TOYOTA Electrical Tester	
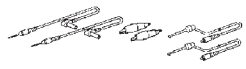	(09083-00150)	Test Lead Set	

CRUISE CONTROL

RECOMMENDED TOOLS

	09082-00040	TOYOTA Electrical Tester	
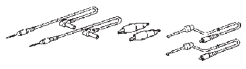	(09083-00150)	Test Lead Set	

EQUIPMENT

Torque wrench	

LIGHTING

RECOMMENDED TOOLS

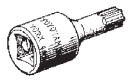	09042-00010	Torx Socket T30	
	09082-00040	TOYOTA Electrical Tester	
	(09083-00150)	Test Lead Set	

EQUIPMENT

Battery	
Ohmmeter	
Voltmeter	
Protective tape	
Service wire harness	
Torque wrench	

WIPER AND WASHER

RECOMMENDED TOOLS

	09082-00040	TOYOTA Electrical Tester	
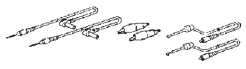	(09083-00150)	Test Lead Set	

EQUIPMENT

Battery	
Ohmmeter	
Protective tape	
Brush	
Service wire harness	
Torque wrench	

DOOR LOCK

RECOMMENDED TOOLS

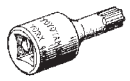	09042-00010	Torx Socket T30	
	09082-00040	TOYOTA Electrical Tester	
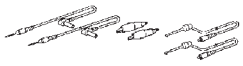	(09083-00150)	Test Lead Set	

EQUIPMENT

Ohmmeter	
Protective tape	
Service wire harness	
MP grease	
Torque wrench	

SSM

	08833-00070	Adhesive 1324, THREE BOND 1324 or equivalent	

METER

RECOMMENDED TOOLS

	09082-00040	TOYOTA Electrical Tester	-
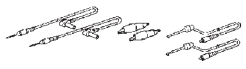	(09083-00150)	Test Lead Set	-

EQUIPMENT

Ohmmeter	
Torque wrench	
Tape	To avoid surface damage

AUDIO / VISUAL

RECOMMENDED TOOLS

PP

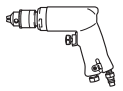	09050-00032	Air Drill	
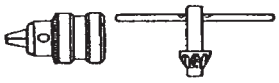	(09050-00210)	Chuck Set	
	(09050-00220)	Handle	
	(09050-02010)	Dust Cap	
	(09050-02020)	Nose Piece No.1	
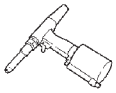	09050-20010	Air Riveter	
	09060-60350	Rivet Cutter	
	09082-00040	TOYOTA Electrical Tester	
	(09083-00150)	Test Lead Set	

EQUIPMENT

Masking tape	
Fine tip brush	
Grease	
Ohmmeter	
Protective tape	
Torque wrench	
Wax or silicone remover	

HORN

RECOMMENDED TOOLS

	09082-00040	TOYOTA Electrical Tester	
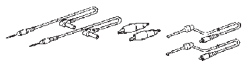	(09083-00150)	Test Lead Set	

EQUIPMENT

Battery	
Ohmmeter	
Protective tape	
Service wire harness	
Torque wrench	

OTHER SYSTEM

EQUIPMENT

Torque wrench	

WINDSHIELD / WINDOWGLASS

RECOMMENDED TOOLS

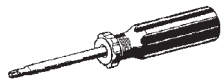	09041-00020	Torx Driver T25	
	09082-00040	TOYOTA Electrical Tester	
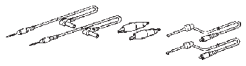	(09083-00150)	Test Lead Set	

EQUIPMENT

Protective tape	
Ammeter	
Ohmmeter	
Knife	
Piano wire	
Sealer gun	
Suction cup	
Wooden block	
Brush	
Sponge	
Voltmeter	
MP grease	
Torque wrench	

SSM

	08850-00801	Windshield Glass Adhesive Set or equivalent	

MIRROR

RECOMMENDED TOOLS

	09070-20010	Moulding Remover	

EQUIPMENT

Ohmmeter	
Protective tape	
Torque wrench	

INSTRUMENT PANEL

EQUIPMENT

Torque wrench	
Tape	To avoid surface damage

SEAT

RECOMMENDED TOOLS

	09042-00050	Torx Socket T45	
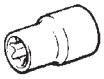	09044-00020	Torx Socket E10	

EQUIPMENT

Clip remover	
Hog ring pliers	
Protective tape	
Torque wrench	

ENGINE HOOD / DOOR

SST

	09812-00010	Door Hinge Set Bolt Wrench	

RECOMMENDED TOOLS

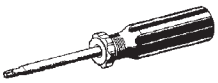	09041-00020	Torx Driver T25	
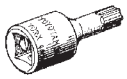	09042-00010	Torx Socket T30	
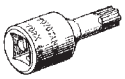	09042-00020	Torx Socket T40	

EQUIPMENT

Protective tape	
MP grease	
Torque wrench	

SSM

	08833-00070	Adhesive 1324, THREE BOND 1324 or equivalent	
	08850-00065	Butyl Tape Set	

EXTERIOR

RECOMMENDED TOOLS

	09070-20010	Moulding Remover	

EQUIPMENT

Clip remover	
Double-sided adhesive tape	
Infrared light	
Protective tape	
Shop rag or piece of cloth	
Squeegee	
Torque wrench	

INTERIOR

RECOMMENDED TOOLS

	09070-20010	Moulding Remover	

EQUIPMENT

Clip remover	
Protective cover	
Protective tape	
Tape	
Torque wrench	

CAN COMMUNICATION

RECOMMENDED TOOLS

	09082-00040	TOYOTA Electrical Tester	
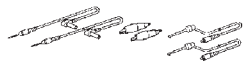	(09083-00150)	Test Lead Set	

STANDARD BOLT

HOW TO DETERMINE BOLT STRENGTH

Bolt Type

Hexagon Head Bolt			Stud Bolt	Weld Bolt	Class
Normal Recess Bolt		Deep Recess Bolt			
	 No Mark	 No Mark	 No Mark	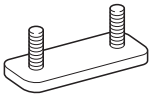	4T
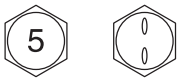					5T
	 w/ Washer	 w/ Washer			6T
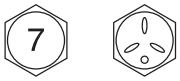		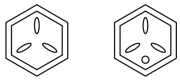			7T
					8T
					9T
					10T
					11T

SS

SPECIFIED TORQUE FOR STANDARD BOLTS

Class	Diameter (mm)	Pitch (mm)	Specified torque					
			Hexagon head bolt			Hexagon flange bolt		
			N*m	kgf*cm	ft.*lbf	N*m	kgf*cm	ft.*lbf
4T	6	1	5	55	48 in.*lbf	6	60	52 in.*lbf
	8	1.25	12.5	130	9	14	145	10
	10	1.25	26	260	19	29	290	21
	12	1.25	47	480	35	53	540	39
	14	1.5	74	760	55	84	850	61
	16	1.5	115	1,150	83	-	-	-
5T	6	1	6.5	65	56 in.*lbf	7.5	75	65 in.*lbf
	8	1.25	15.5	160	12	17.5	175	13
	10	1.25	32	330	24	36	360	26
	12	1.25	59	600	43	65	670	48
	14	1.5	91	930	67	100	1,050	76
	16	1.5	140	1,400	101	-	-	-
6T	6	1	8	80	69 in.*lbf	9	90	78 in.*lbf
	8	1.25	19	195	14	21	210	15
	10	1.25	39	400	29	44	440	32
	12	1.25	71	730	53	80	810	59
	14	1.5	110	1,100	80	125	1,250	90
	16	1.5	170	1,750	127	-	-	-
7T	6	1	10.5	110	8	12	120	9
	8	1.25	25	260	19	28	290	21
	10	1.25	52	530	38	58	590	43
	12	1.25	95	970	70	105	1,050	76
	14	1.5	145	1,500	108	165	1,700	123
	16	1.5	230	2,300	166	-	-	-
8T	8	1.25	29	300	22	33	330	24
	10	1.25	61	620	45	68	690	50
	12	1.25	110	1,100	80	120	1,250	90
9T	8	1.25	34	340	25	37	380	27
	10	1.25	70	710	51	78	790	57
	12	1.25	125	1,300	94	140	1,450	105
10T	8	1.25	38	390	28	42	430	31
	10	1.25	78	800	58	88	890	64
	12	1.25	140	1,450	105	155	1,600	116
11T	8	1.25	42	430	31	47	480	35
	10	1.25	87	890	64	97	990	72
	12	1.25	155	1,600	116	175	1,800	130

HOW TO DETERMINE NUT STRENGTH

Nut Type

Present Standard Hexagon Nut	Old Standard Hexagon Nut		Class
	Cold Forging Nut	Cutting Processed Nut	
No Mark 			4N
No Mark (w/ Washer) 	No Mark (w/ Washer) 	No Mark 	5N (4T)
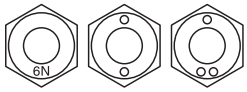			6N
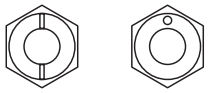 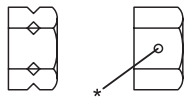			7N (5T)
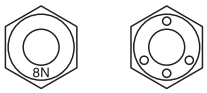			8N
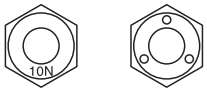	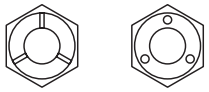	No Mark 	10N (7T)
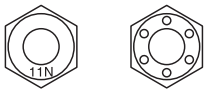			11N
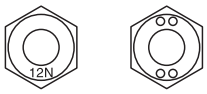			12N

HINT:

- *: Nut with 1 or more marks on one side surface of the nut.
- Use the nut with the same number of the nut strength classification or greater than the bolt strength classification number when tightening parts with a bolt and nut.

Example:

- Bolt = 4T
- Nut = 4N or more

1NZ-FE ENGINE CONTROL SYSTEM

SERVICE DATA

Camshaft timing oil control valve assembly	Standard resistance	6.9 to 7.9 Ω at 20 °C (68°F)
Camshaft position sensor	Standard resistance	1,630 to 2,740 Ω at cold 2,065 to 3,225 Ω at hot
Crankshaft position sensor	Standard resistance	985 to 1,600 Ω at cold 1,265 to 1,890 Ω at hot
Engine coolant temperature sensor	Standard resistance	2.32 to 2.59 kΩ Approximately 20°C (68°F) 0.310 to 0.326 kΩ Approximately 80°C (176°F)
Throttle with motor body assembly	Standard resistance 1 (M-) - 2 (M+)	0.3 to 100 Ω at 20°C (68°F)
EFI (20A) fuse	Standard resistance 1 - 2	Below 1 Ω
Knock sensor	Standard resistance	120 to 280 kΩ at 20°C (68°F)
Integration relay	A1 - C1	Below 1 Ω
	A1 - A4	10 kΩ or higher
	A4-C1	10 kΩ or higher
	A1 - A4	Below 1 Ω (Apply battery voltage between terminals A2 and A3)
	A4 - C1	Below 1 Ω (Apply battery voltage between terminals A2 and A3)
Accelerator pedal position No. 1 standard voltage	Standard resistance Accelerator pedal released Accelerator pedal depressed	0.5 to 1.1 V 2.6 to 4.5 V
Accelerator pedal position No. 2 standard voltage	Standard resistance Accelerator pedal released Accelerator pedal depressed	1.2 to 2.0 V 3.4 to 5.0 V

TORQUE SPECIFICATIONS

Part tightened	N*m	kgf*cm	ft.*lbf
Camshaft timing oil control valve assembly x Cylinder head assembly	7.5	76	66 in.*lbf
Fan belt adjusting bar x Oil pump assembly	11	112	8.1
Camshaft position sensor x Cylinder head assembly	8.0	82	71in.*lbf
Crankshaft position sensor x Oil pump assembly	7.5	76	66 in.*lbf
Engine coolant temperature sensor x Cylinder head assembly	20	204	15
Throttle with motor body assembly x Intake manifold	9.0	92	80 in.*lbf
Water filler sub-assembly x Throttle with motor body assembly	7.5	76	66 in.*lbf
Throttle with motor body assembly x Wire harness with bracket	9.0	92	80 in.*lbf
Air cleaner cap sub-assembly x Air cleaner hose No. 1	3.0	31	27 in.*lbf
Knock sensor x Cylinder block assembly	20	204	15
Intake manifold x Cylinder block assembly	30	304	22
ECM x body	8.0	82	71
Accelerator pedal assembly x body	5.4	55	48
Battery negative terminal x Battery negative cable	5.4	55	48

1NZ-FE ENGINE MECHANICAL

SERVICE DATA

New V belt deflection		7.0 to 8.5 mm (0.28 to 0.33 in.)
Used V belt deflection		11.0 to 13.0 mm (0.43 to 0.51 in.)
New V belt tension		539 to 637 N (55 to 65 kgf, 121 to 143 lb)
Used V belt tension		245 to 392 N (25 to 40 kgf, 55 to 88 lb)
Ignition timing		8 to 12 °BTDC
Idle speed	Manual transaxle Automatic transaxle	600 +- 50 rpm 700 +- 50 rpm
Compression pressure		1,471 kPa (15.0 kgf/cm 2213 psi)
Minimum pressure		1,079 kPa (11.0 kgf/cm 2156 psi)
Difference between each cylinder		98 kPa (1.0 kgf/cm 214 psi)
Valve clearance (cold)	Intake Exhaust	0.15 to 0.25 mm (0.006 to 0.010 in.) 0.25 to 0.35 mm (0.010 to 0.014 in.)
Chain elongation	Maximum	123.2 mm (4.850 in.)
Camshaft timing gear diameter (w/ chain)	Minimum	96.2 mm (3.787 in.)
Camshaft timing sprocket diameter (w/ chain)	Minimum	96.2 mm (3.787 in.)
Chain tensioner slipper thickness	Maximum	1.0 mm (0.039 in.)
Chain vibration damper thickness	Maximum	1.0 mm (0.039 in.)
Cylinder head set bolt length	Standard Maximum	143.5 mm (5.6496 in.) 144.2 mm (5.6772 in.)
Cylinder head warpage	Maximum cylinder block surface Intake manifold surface Exhaust manifold surface	0.05 mm (0.0020 in.) 0.10 mm (0.0039 in.) 0.10 mm (0.0039 in.)
Intake valve overall length	Standard Minimum	89.25 mm (3.5138 in.) 88.75 mm (3.4941 in.)
Intake valve stem diameter		4.970 to 4.985 mm (0.1957 to 0.1963 in.)
Intake valve margin thickness	Standard Minimum	1.0 mm (0.039 in.) 0.5 mm (0.020 in.)
Exhaust valve overall length	Standard Minimum	87.90 mm (3.4606 in.) 87.40 mm (3.4409 in.)
Exhaust valve stem diameter		4.965 to 4.980 mm (0.1955 to 0.1961 in.)
Exhaust valve margin thickness	Standard Minimum	1.15 mm (0.045 in.) 0.5 mm (0.020 in.)
Valve spring free length		45.05 to 45.15 mm (1.774 to 1.778 in.)
Valve spring deviation	Maximum	1.6 mm (0.063 in.)
Valve spring angle (reference)	Maximum	2°
Valve spring installed tension at 32.5 mm (1.280 in.)		149 to 165 N (15.2 to 16.8 kgf, 33.5 to 37.1 lbf)
Valve spring working tension at 23.9 mm (0.941 in.)	Maximum	286 to 316N (29.1 to 32.2 kgf, 64.2 to 71.0 lbf)
Bushing inside diameter		5.010 to 5.030 mm (0.1972 to 0.1980 in.)
Valve guide bushing oil clearance	Standard intake Standard exhaust	0.025. to 0.060 mm (0.0010 to 0.0024 in.) 0.030. to 0.065 mm (0.0012 to 0.0026 in.)
	Maximum intake Maximum exhaust	0.08 mm (0.0032 in.) 0.10 mm (0.039 in.)
Valve guide bush diameter	Standard O/S	9.685 to 9.706 mm (0.3813 to 0.3821 in.) 9.735 to 9.755 mm (0.3833 to 0.3841 in.)
Bushing Protrusion height		9.0 to 9.4 mm (0.354 to 0.370 in.)
Lifter diameter		30.966 to 30.976 mm (1.291 to 1.2195 in.)

Lifter bore diameter		31.000 to 31.025 mm (1.2205 to 1.2215 in.)
Lifter oil clearance	Standard Maximum	0.024 to 0.059 mm (0.0009 to 0.0023 in.) 0.1 mm (0.0039 in.)
Camshaft circle runout	Maximum	0.03 mm (0.0012 in.)
Camshaft cam lobe height	Standard Minimum	44.617 to 44.717 mm (1.7566 to 1.7605 in.) 43.16 mm (1.6992 in.)
Camshaft No. 1 journal diameter		34.449 to 34.465 mm (1.3563 to 1.3569 in.)
Camshaft other journals diameter		22.949 to 22.965 mm (0.9035 to 0.9041 in.)
No. 2 camshaft circle runout	Maximum	0.03 mm (0.0012 in.)
No. 2 camshaft cam lobe height	Standard Minimum	44.666 to 44.766 mm (1.7585 to 1.7624 in.) 44.52 mm (1.7528 in.)
No. 2 camshaft No. 1 journal diameter		34.449 to 34.465 mm (1.3563 to 1.3569 in.)
No. 2 camshaft other journal diameter		22.949 to 22.965 mm (0.9035 to 0.9041 in.)
Camshaft thrust clearance	Standard Maximum	0.040 to 0.095 mm (0.0016 to 0.0037 in.) 0.11 mm (0.0043 in.)
Camshaft oil clearance	Standard Maximum	0.035 to 0.072mm (0.0014 to 0.0028 in.) 0.08 mm (0.0031 in.)
Camshaft bearing cap setting ring pin protrusion height		8.5 to 9.5 mm (0.335 to 0.374 in.)
Connection rod thrust clearance	Standard Maximum	0.16 to 0.36 mm (0.0063 to 0.0142 in.) 0.36 mm (0.0142 in.)
Connecting rod oil clearance	Standard Maximum	0.012 to 0.038 mm (0.00047 to 0.0015 in.) 0.058 mm (0.0028 in.)
Crankshaft thrust clearance	Standard Maximum	0.09 to 0.19 mm (0.0035 to 0.0075 in.) 0.03 mm (0.0118 in.)
Cylinder block warpage	Maximum	0.05 mm (0.0020 in.)
Cylinder bore diameter	Standard Difference limit	75.000 to 75.013 mm (2.9528 to 2.9533 in.) 0.10 mm (0.0039 in.)
Piston diameter		74.935 to 74.945 mm (2.9502 to 2.9506 in.)
Piston pin hole diameter at 20°C (68°F)		18.013 to 18.016 mm (0.7092 to 0.7093 in.)
Piston pin diameter		18.001 to 18.004 mm (0.7087 to 0.7088 in.)
Piston pin oil clearance	Standard Maximum	0.009 to 0.015 mm (0.0004 to 0.0006 in.) 0.050 mm (0.0020 in.)
Piston clearance	Standard	0.045 to 0.068 mm (0.0018 to 0.0027 in.)
Connecting misalignment	Maximum	0.05 mm (0.0020 in.) per 100 mm (3.94 in.)
Connecting rod twist	Maximum	0.05 mm (0.0020 in.) per 100 mm (3.94 in.)
Piston ring groove clearance	No. 1 No. 2	0.03 to 0.07 mm (0.0012 to 0.0028 in.) 0.02 to 0.06 mm (0.0008 to 0.0024 in.)
Piston ring end gap	Standard No. 1 No. 2 Oil (Side rail) Maximum No. 1 No. 2 Oil (Side rail)	0.25 to 0.35 mm (0.0098 to 0.0138 in.) 0.35 to 0.50 mm (0.0138 to 0.0197 in.) 0.10 to 0.35 mm (0.0039 to 0.0138 in.) 0.91 mm (0.0358 in.) 1.60 mm (0.0417 in.) 0.82 mm (0.0323 in.)
Connecting rod bolt diameter	Standard Maximum	6.6 to 6.7 mm (0.260 to 0.264 in.) 6.4 mm (0.252 in.)
Crankshaft circle runout	Maximum	0.03 mm (0.0012 in.)
Crankshaft main journal diameter		45.988 to 46.000 mm (1.8106 to 1.8110 in.)
Crankshaft main journal taper and out-of-round	Maximum	0.02 mm (0.0008 in.)
Crank pin diameter		39.992 to 40.000 mm (1.5745 to 1.5748 in.)
Crank pin taper and out-of- round	Maximum	0.02 mm (0.0008 in.)
Crankshaft timing sprocket diameter (w/ chain)	Standard Minimum	51.72 mm (2.0362 in.) 50.5 mm (1.988 in.)
Crankshaft bearing cap set bolt diameter	Standard Minimum	7.3 to 7.5 mm (0.287 to 0.295 in.) 7.2 mm (0.283 in.)

Crankshaft oil clearance	Standard Maximum	0.01 to 0.023 mm (0.0004 to 0.0009 in.) 0.07 mm (0.0028 in.)

TORQUE SPECIFICATIONS

Part tightened		N*m	kgf*cm	ft.*lbf
Spark plugs x Cylinder head assembly		18	184	13
Camshaft bearing cap No. 2 x Cylinder head assembly		13	129	9.4
Camshaft bearing cap No. 1 x Cylinder head assembly		23	235	17
Camshaft No. 2 x Camshaft timing sprocket		64	653	47
Screw plug x Oil pump assembly		5	153	11
Chain vibration damper No. 1 x Cylinder head & block		9.0	92	80 in.*lbf
Chain tensioner slipper x Cylinder block assembly		9.0	92	80 in.*lbf
Camshaft timing gear assembly x Camshaft		64	653	47
Stud bolt x Cylinder head assembly	Bolt A	10	102	7.4
	Bolt B	4.0	41	35 in.*lbf
	Bolt C	10	102	7.4
	Bolt D	9.0	92	80 in.*lbf
Taper screw plug x Cylinder head assembly		30	306	22
Taper screw plug x Cylinder head assembly		44	449	33
Fuel delivery pipe subassembly x Cylinder head assembly	Bolt A Bolt B	19 9.0	194 92	14 80 in.*lbf
Cylinder head assembly x Harness bracket		13	131	9.5
Engine coolant temperature sensor x Cylinder head assembly		20	204	15
Camshaft position sensor x Cylinder head assembly		8.0	82	71 in.*lbf
Booster vacuum tube x Cylinder head assembly		9.0	92	80 in.*lbf
Exhaust manifold x Cylinder head assembly		27	275	20
Exhaust manifold heat insulator No. 1 x Exhaust manifold		8.0	82	71 in.*lbf
Cylinder head assembly x Cylinder block assembly	1st 2nd 3rd	29 Turn 90° Turn 90°	300 Turn 90° Turn 90°	22 Turn 90° Turn 90°
Manifold support bracket x Cylinder block & exhaust manifold		44	449	33
Exhaust front pipe assembly x Exhaust manifold		43	439	32
Cylinder head assembly x Wire harness		13	133	10
Cylinder head assembly x Water by-pass pipe No. 1		90	92	80 in.*lbf
Oil level gauge guide x Cylinder block assembly		90	92	80 in.*lbf
Intake manifold x Cylinder head assembly		30	306	22
Water filler sub-assembly x Throttle with motor body assembly		7.5	76	66 in.*lbf
Cylinder block assembly x Crankshaft bearing cap		22	224	16
Stud bolts x Cylinder block assembly	Bolt A Bolt B Bolt C Bolt D	5.0 5.0 11 5.0	51 51 112 51	44 in.*lbf 44 in.*lbf 8.1 44 in.*lbf
Connecting rod assembly x Connecting rod cap		15	153	11
Oil pan sub-assembly x Stud bolt		5.0	51	44 in.*lbf
Cylinder block assembly x Oil pan sub-assembly		24	245	18
Oil pan sub-assembly x Oil strainer		11	112	8.1
Oil pan sub-assembly x Oil pan sub-assembly No. 2		9.0	92	80 in.*lbf
Oil pan sub-assembly No. 2 x Drain plug		38	382	28
Oil pan sub-assembly x Oil filter union		30	306	22
Cylinder head assembly x Camshaft position sensor		8.0	82	71 in.*lbf
Cylinder block assembly x Chain tensioner assembly No. 1		9.0	92	80 in.*lbf
oil pump assembly x Cylinder head & block	Bolt A Bolt B Bolt C Nut D Bolt E	32 11 11 24 24	326 112 112 245 245	24 8.1 8.1 18 18

Part tightened		N*m	kgf*cm	ft.*lbf
Oil pump assembly x Water pump assembly		11	112	8.1
Transverse engine mounting bracket x Cylinder head & block		55	561	41
Water pump assembly x Pump pulley		15	153	11
Crankshaft damper sub-assembly x Crankshaft		128	1305	95
Camshaft timing oil control valve x Cylinder head assembly		7.5	76	66 in.*lbf
Cylinder head cover sub-assembly x Cylinder head assembly		10	102	7.0
Ventilation valve sub-assembly x Cylinder head cover sub-assembly		27	275	20
Crankshaft position sensor x Oil pump assembly		7.5	76	66 in.*lbf
Water inlet x Cylinder block assembly		9.0	92	80 in.*lbf
Oil pressure switch x Cylinder block assembly		15	153	11
Knock sensor x Cylinder block assembly		20	204	15
Front wheel hub nut		103	1050	912
Battery terminal x Cable		5.4	55	48 in.*lbf
Battery x Battery clamp		3.5	36	31 in.*lbf
Cowl top panel outer x Body		6.5	66	57 in.*lbf
Air cleaner hose No.1 x Throttle with motor body assembly		4.0	41	35 in.*lbf
Air cleaner case with air cleaner inlet No.1 x Air cleaner bracket		7.8	80	69 in.*lbf
Air cleaner bracket x Body		19	194	14
Battery carrier x Body		17	173	13
Drive plate and torque converter clutch setting bolt x Drive plate and ring gear sub-assembly		27	275	20
Front suspension crossmember x Body	Bolt A	70	714	52
	Bolt B	160	1631	118
	Bolt C	95	969	70
Engine mounting insulator RH x Body (for Hatchback)	Bolt A	45	459	33
	Bolt B	52	530	38
Engine mounting insulator RH x Body (for Sedan)		52	530	38
Engine mounting insulator LH x Engine mounting bracket LH		52	530	38
Front suspension crossmember sub-assembly x Engine moving control rod		120	1224	89
Oxygen sensor wiring bracket x Cylinder head sub-assembly		60	612	44
Radio setting condenser x Cylinder head sub-assembly		40	408	30
Water filler sub-assembly x Radiator sub-assembly		7.5	76	66 in.*lbf
Flywheel sub-assembly x Crankshaft	1 st	49	500	38
	2 nd	Turn 90°	Turn 90°	Turn 90°
Automatic transaxle assembly x Engine block sub-assembly		30	301	22
Drive plate and ring gear sub-assembly x Crankshaft		88	900	65
Water by-pass pipe No.1 x Cylinder head sub-assembly and block sub-assembly		9.0	92	80 in.*lbf
Booster vacuum tube x Cylinder head sub-assembly		9.0	92	80 in.*lbf
Wire harness clamp bracket x Cylinder head sub-assembly		10	102	89 in.*lbf
Drive shaft heat insulator sub-assembly x Cylinder block sub-assembly		18	183	13

1NZ-FE FUEL

SERVICE DATA

Fuel pressure	Standard fuel pressure	304 to 343 kPa (3.1 to 3.5 kgf/cm^2, 44.1 to 49.7 psi)
Fuel pressure : at fuel while the engine idles	Standard fuel pressure	304 to 343 kPa (3.1 to 3.5 kgf/cm^2, 44.1 to 49.7 psi)
Fuel pressure : at fuel pressure remains for 5 minutes after engine has stopped	Standard fuel pressure	147 kPa (1.5 kgf/cm^2, 21 psi) or more
Fuel injector assembly	Standard resistance	11.6 to 12.4 Ωat 20°C (68°F)
	Injection volume	47 to 58 cm^3(2.9 to 3.5 cu in.) per 15 seconds Connect
	Difference between each injector	11 cm^3(0.6 cu in.) or less
	Fuel drop	1 drop or less every 12 minutes
Fuel pump	Standard resistance	0.2 to 3.0 Ω at 20°C (68°F)

TORQUE SPECIFICATIONS

Part tightened		N*m	kgf*cm	ft.*lbf
Fuel delivery pipe sub-assembly x Cylinder head assembly	bolt A bolt B	19 9.0	194 92	14 80 in.*lbf
Cylinder head cover sub-assembly x Cylinder head assembly		10	102	7.0
Cylinder head cover sub-assembly x Wire harness bracket		13	133	9.6
Fuel tank assembly x Floor panel		14	146	10
Fuel tank cover vent case sub-assembly x Floor panel		5.4	55	48 in.*lbf
Front heat insulator No. 4 x Floor panel		5.4	55	48 in.*lbf
Battery negative battery x Battery negative cable		5.4	55	48 in.*lbf

1NZ-FE EMISSION CONTROL

SERVICE DATA

VSV	Standard resistance 1 - 2	23 to 26 Ω at 20°C (68°F)
Air fuel ratio sensor	Standard resistance 1 - 2 1 - 4	1.8 to 3.4 Ω at 20°C (68°F) 10 kΩ or higher
Heated oxygen sensor	Standard resistance 1 - 2 1 - 4	11 to 16 Ω at 20°C (68°F) 10 kΩ or higher

TORQUE SPECIFICATIONS

Part Tightened	N*m	kgf*cm	ft.*lbf
Canister x Floor assembly	19	194	14
Ventilation valve x Cylinder head cover sub-assembly	27	275	20
Air fuel ratio sensor x Exhaust manifold assembly	44	449	32
Heated oxygen sensor x Front exhaust pipe	44	449	32
Battery negative terminal x Battery negative cable	5.4	55	48 in.*lbf

1NZ-FE EXHAUST

SERVICE DATA

Compression spring	Minimum length Front side	40.5 mm (1.594 in.)
	Minimum length Rear side	38.5 mm (1.516 in.))

TORQUE SPECIFICATIONS

Part Tightened	N*m	kgf*cm	ft.*lbf
Exhaust front pipe assembly x Exhaust manifold	43	439	32
Heated oxygen sensor (for sensor 2) x Exhaust front pipe assembly	44	449	32
Battery negative terminal x Battery negative cable	5.4	55	48 in.*lbf

1NZ-FE COOLING

SERVICE DATA

Thermostat	Valve opening temperature	80 to 84°C (176 to 183°F)
	Valve lift	8.5 mm (0.335 in.) or more at 95°C (203°F)
Cooling fan relay No.2	Standard resistance B5 - B8	10 kΩ or higher
	Standard resistance B5 - B8	Below 1 Ω (Apply battery voltage between terminals B6 and B7)
Cooling fan motor	w/ A/C	7.3 to 9.3A (at 12V)
	w/o A/C	5.2 to 8.2A (at 12V)
Cooling fan relay	3-4	Below 1Ω
	3-4(When battery voltage applied to terminals 1 and 2)	10KΩ or higher
	3-5	10KΩ or higher
	3-5 (When battery voltage applied to terminals 1 and 2)	Below 1Ω
Radiator cap sub-assembly	Standard valve (for brand new cap)	93.3 to 122.7 kpa (0.95 to 1.25 kgf/cm^2, 13.5 to 17.8 psi)
	Minimum standard valve (after using cap)	78.5 kpa (0.8 kgf/cm^2, 11.4 psi)
Cooling fan resistor	at 20°C (68°F)	1.17 to 1.43 Ω

TORQUE SPECIFICATIONS

Part tightened	N*m	kgf*cm	ft.*lbf
Water pump assembly x Oil pump assembly	11	112	8.1
Water pump pulley x Water pump assembly	15	153	11
Water inlet x Radiator hose	9.0	92	80 in.*lbf
Negative battery terminal x Cable	5.4	55	48 in.*lbf
Air cleaner hose No.1 x Throttle with motor body assembly	4.0	41	35 in.*lbf
Air cleaner case with air cleaner inlet No.1 x Air cleaner bracket	7.8	80	69 in.*lbf
Hood lock assembly x Radiator support sub-assembly upper	7.5	76	66 in.*lbf
Radiator support sub-assembly upper x Body	5.5	56	49 in.*lbf
Cooling fan resistor x Body	5.1	52	45 in.*lbf

1NZ-FE LUBRICATION

SERVICE DATA

oil pressure	Standard oil pressure	29 kPa (0.3 kgf/cm^2, 4.3 psi) or more at idling 150 to 550 kPa (1.5 to 5.6 kgf/cm^2, 22 to 80 psi) or more at 3,000 rpm
Oil pump rotor set	Standard tip clearance Maximum tip clearance Standard body clearance Maximum body clearance	0.060 to 0.180 mm (0.0024 to 0.0071 in.) 0.28 mm (0.0110 in.) 0.250 to 0.325 mm (0.0098 to 0.0128 in.) 0.425 mm (0.0167 in.)

TORQUE SPECIFICATIONS

Part tightened		N*m	kgf*cm	ft.*lbf
Oil pressure switch x Cylinder block assembly		15	153	11
Oil pump cover x Oil pump relief valve plug		25	255	18
oil pump cover x Oil pump assembly	Bolt Screw	8.8 10	90 105	78 in.*lbf 7.6
Oil pump assembly x Cylinder head & block	Bolt A Bolt B Bolt C Nut D Bolt E	32 11 11 24 24	326 112 112 245 245	24 8.1 8.1 18 18
Transverse engine engine mounting bracket x Cylinder block assembly		5	561	41
Crankshaft damper sub-assembly x Crankshaft		128	1,305	95
Engine mounting insulator sub-assembly RH x Transverse engine engine mounting bracket & Body (for Hatchback)	Bolt A Bolt B Nut	45 52 52	459 530 530	33 38 38
Engine mounting insulator sub-assembly RH x Transverse engine engine mounting bracket & Body (for Sedan)		52	530	38
Oil pan drain plug		37.5	382	27.6
Oil filter sub-assembly		13	133	9.5
Oil pan drain plug		37.5	382	27.6
Oil filter sub-assembly		13	133	9.5

1NZ-FE IGNITION

SERVICE DATA

Spark plug	Standard resistance	10 M Ωor more
	Recommended spark plug	SK16R 11 DENSO made IFR5A 11 NGK made
	Maximum electrode gap	1.3 mm (0.051 in.) for used spark plug
	Electrode gap	1.0 to 1.1mm (0.039 to 0.043 in.) for new spark plug

TORQUE SPECIFICATIONS

Part tightened	N*m	kgf*cm	ft.*lbf
Spark plugs x Cylinder head assembly	18	184	13
Ignition coil x Cylinder head cover	9.0	92	80 in.*lbf
Cylinder head cover No. 2 x Cylinder head cover	7.0	71	62 in.*lbf

1NZ-FE STARTING

SERVICE DATA

for 0.8 kW

Starter assembly	Standard current	90 A or less at 11.5 V
Starter relay	Standard resistance 3 - 5	Below 1 Ω(when battery voltage applied to terminals 1 and 2)
		10 kΩ or higher
ACC cut relay	Standard resistance 3 - 4	Below 1 Ω
		10 kΩ or higher (when battery voltage applied to terminals 1 and 2)
	Standard resistance 3 - 5	Below 1 Ω(when battery voltage applied to terminals 1 and 2)
		10 kΩ or higher
AM2 fuse	Standard resistance 1 - 2	Below 1 Ω
IG2 relay	Standard resistance B1 - C1	Below 1 Ω
	Standard resistance B4 - C1	10 kΩ or higher
		Below 1 Ω (Apply battery voltage between terminals B2 and B3)
Ignition relay	Standard resistance 3 - 5	Below 1 Ω(when battery voltage applied to terminals 1 and 2)
		10 kΩ or higher
Ignition or starter switch assembly.	Standard resistance Between all terminals	10 kΩ or higher (LOCK)
	Standard resistance 2 - 4	Below 1 Ω (ACC)
	Standard resistance 1 - 2 - 4	Below 1 Ω (ON)
	Standard resistance 5 - 6	
	Standard resistance 1 - 3 - 4	Below 1 Ω (START)
	Standard resistance 5 - 6 - 7	
Starter armature assembly resistance	Segments	Below 1 Ω
	Commutator - Armature coil	10kΩ or higher
Starter armature assembly commutator circumference runout	Maximum runout	0.05 mm (0.0020 in.)
Starter armature assembly commutator diameter	Standard diameter	28.0 mm (1.1024 in.)
	Minimum diameter	27.0 mm (1.0630 in.)
Starter armature assembly undercut portion	Standard undercut depth	0.6 mm (0.0236 in.)
	Minimum undercut depth	0.2 mm (0.0079 in.)
Starter yoke assembly resistance	Terminal C - Field coil brush lead	Below 1 Ω
	Brush lead - starter yoke	10 kΩ or higher
Brush length	Standard length	14 mm (0.5511 in.)
	Minimum length	9 mm (0.3543 in.)
Starter brush holder assembly resistance	Standard resistance	10kΩ or higher
Magnet starter switch assembly resistance	Terminal C - Terminal 50	Below 1 Ω
	Terminal 50 - Magnet starter switch assembly	Below 2 Ω

for 1.6 kW

Starter assembly	Standard current	90 A or less at 11.5 V

Starter relay	Standard resistance 3 - 5	Below 1 Ω(when battery voltage applied to terminals 1 and 2)
		10 kΩ or higher
ACC cut relay	Standard resistance 3 - 4	Below 1 Ω
		10 kΩ or higher (when battery voltage applied to terminals 1 and 2)
	Standard resistance 3 - 5	Below 1 Ω(when battery voltage applied to terminals 1 and 2)
		10 kΩ or higher
AM2 fuse	Standard resistance 1 - 2	Below 1 Ω
IG2 relay	Standard resistance B1 - C1	Below 1 Ω
	Standard resistance B1 - B4	10 kΩ or higher
	Standard resistance B4 - C1	10 kΩ or higher
	Standard resistance B2 - B3	Below 1 Ω
	Standard resistance B1 - B4	Below 1 Ω (Apply battery voltage between terminals B2 and B3)
	Standard resistance B4 - C1	Below 1 Ω (Apply battery voltage between terminals B2 and B3)
	Standard resistance 3 - 5	Below 1 Ω(when battery voltage applied to terminals 1 and 2)
		10 kΩ or higher
Ignition or starter switch assembly.	Standard resistance Between all terminals	10 kΩ or higher (LOCK)
	Standard resistance 2 - 4	Below 1 Ω (ACC)
	Standard resistance 1-2-4	Below 1 Ω (ON)
	Standard resistance 5 - 6	
	Standard resistance 1 - 3 - 4	Below 1 Ω (START)
	Standard resistance 5 - 6 - 7	
Starter armature assembly resistance	Segments	1 kΩ ro lower
	Commutator - Armature coil	10 kΩ or higher
Starter armature assembly commutator length	Standard length	3.1 mm (0.122 in.)
	Maximum length	3.8mm (0.150 in.)
Starter commutator end frame assembly brush length	Standard length	9.0 mm (0.354 in.)
	Maximum length	4.0 mm (0.158 in.)
Starter commutator end frame assembly	Standard resistance	10 kΩ or higher
	Terminal C - Terminal 50	1 Ω or lower
Magnet switch body resistance	Terminal 50 - Magnet switch body	1 Ω or lower

TORQUE SPECIFICATIONS

for 0.8 kW Type

Part Tightened	N*m	kgf*cm	ft.*lbf
Starter assembly x Transaxle housing	37	377	27
Starter assembly x Terminal 30	9.8	100	7.2
Negative battery terminal x Negative battery cable	5.4	55	48 in.*lbf
Starter brush holder assembly x Commutator end frame	1.5	15	13 in.*lbf
Starter yoke assembly x Commutator end frame	5.9	60	52 in.*lbf
Magnet starter switch assembly x Starter housing	8.3	85	73 in.*lbf
Terminal C x Lead wire	9.8	100	87 in.*lbf

for 1.6kW Type

Part Tightened	N*m	kgf*cm	ft.*lbf
Starter assembly x Transaxle housing	37	377	27
Starter assembly x Terminal 30	9.8	100	7.2
Negative battery terminal x Negative battery cable	5.4	55	48 in.*lbf
Starter yoke assembly x Starter commutator end frame assembly	6	61	53 in.*lbf
Magnet switch body x Starter drive housing assembly	7.5	76	66 in.*lbf
Terminal C x Lead wire	10	102	7.4

1NZ-FE CHARGING

SERVICE DATA

Battery	Standard specific gravity:	1.25 to 1.29 at 20°C (68°F)
Charging circuit without load	Standard amperage	10 A or less
	Standard voltage	13.2 to 14.8 V
Charging circuit with load	Standard amperage	30 A or more
Generator brush holder assembly brush exposed length	Standard exposed length	9.5 to 11.5mm (0.374 to 0.453 in.)
	Minimum exposed length	1.5mm (0.059 in.)
Generator regulator assembly resistance	F-B	When the positive and negative poles between terminals F and B are exchanged, there is continuity in one direction but no continuity in the other direction.
	F-E	When the positive and negative poles between terminals F and E are exchanged, there is continuity in one direction but no continuity in the other direction.
Generator drive end frame resistance	Coil wires	Below 1Ω
	Coil wire and body	10kΩ or higher
Generator holder with rectifier resistance	P1, P2, P3 -B	When the positive and negative poles among terminals P1, P2, P3 and B are exchanged, there is continuity in one direction but on continuity in the other direction.
	P1, P2, P3 -E	When the positive and negative poles among terminals P1, P2, P3 and E are exchanged, there is continuity in one direction but on continuity in the other direction.
Generator rotor assembly resistance	Slip rings	1.7 to 2.1Ω at 20°C (68°F)
	Slip ring and rotor	10kΩ or higher
Generator rotor assembly slip ring diameter	Standard diameter	14.2 to 14.4mm (0.559 to 0.564 in.)
	Minimum diameter	12.8 mm (0.5.4 in.)

TORQUE SPECIFICATIONS

Part Tightened		N*m	kgf*cm	ft.*lbf
Fan belt adjusting slider x Cylinder head assembly		11	112	8.1
Generator assembly x Wire harness clamp		9.8	100	7.2
Generator assembly x Cylinder block sub-assembly		54	551	40
Generator assembly x Fan belt adjusting slide		19	189	14
Negative battery terminal x Negative battery cable		5.4	55	48
Generator pulley x Generator rotor assembly		133	1356	98
Generator brush holder assembly x Generator holder with rectifier		2	20	17 in.*lbf
Rear end cover x Generator rectifier end frame		4.4	45	39 in.*lbf
Rectifier plate x Rear end cover	for nut	4.4	45	39 in.*lbf
	for bolt	3.8	39	34 in.*lbf
Terminal insulator x Generator regulator assembly		4.1	42	36 in.*lbf
Generator regulator assembly x Generator rectifier end frame		2	20	17 in.*lbf
Generator holder with rectifier x Generator rectifier end frame		2	20	17 in.*lbf
Generator rectifier end frame x Generator drive end frame		4.5	46	40 in.*lbf

U340E AUTOMATIC TRANSAXLE

SERVICE DATA

AUTOMATIC TRANSAXLE

Line pressure (Wheel locked)		
Engine idling	D position	372 to 412 kPa (3.8 to 4.2 kgf/cm^2, 54 to 60 psi)
	R position	553 to 623 kPa (5.6 to 6.4 kgf/cm^2, 80 to 90 psi)
AT stall (Throttle valve fully opened)	D position	1,126 to 1,226 kPa (11.5 to 12.5 kgf/cm^2, 163 to 178 psi)
	R position	1,664 to 1,864 kPa (17.0 to 19.0 kgf/cm^2, 241 to 270 psi)
Engine stall revolution	D position	1,850 to 2,450 rpm
Time lag	N → D position	Less than 1.2 seconds
	N → R position	Less than 1.5 seconds
Engine idle speed (A/C OFF)	N position	650 to 750 rpm
Shift schedule (Tire size: 175/65R14)		
Throttle valve fully opened	1 → 2	30 to 33 mph (48 to 53 km/h)
	2 → 3	57 to 62 mph (91 to 99 km/h)
	3 → 4	88 to 94 mph (142 to 151 km/h)
	4 → 3	85 to 90 mph (137 to 145 km/h)
	3 → 2	53 to 58 mph (86 to 93 km/h)
	2 → 1	25 to 27 mph (40 to 44 km/h)
Throttle valve fully closed	3 → 4	24 to 27 mph (39 to 43 km/h)
	4 → 3	18 to 21 mph (29 to 33 km/h)
2 position		
Throttle valve fully opened	1 → 2	30 to 33 mph (48 to 53 km/h)
	3 → 2	53 to 58 mph (86 to 93 km/h)
	2 → 1	25 to 27 mph (40 to 44 km/h)
L position		
Throttle valve fully opened	3 → 2	53 to 58 mph (86 to 93 km/h)
	2 → 1	27 to 30 mph (43 to 47 km/h)
Lock-up point (Throttle valve opening 5 %)		
D position		
4th gear	Lock-up ON	33 to 35 mph (53 to 57 km/h)
	Lock-up OFF	31 to 34 mph (50 to 54 km/h)
3 position		
3rd gear	Lock-up ON	57 to 62 mph (91 to 99 km/h)
	Lock-up OFF	53 to 58 mph (86 to 93 km/h)
Flex lock-up point (Throttle valve opening 5 %) D position		
4th gear	Lock-up ON	24 to 27 mph (39 to 43 km/h)
	Lock-up OFF	23 to 26 mph (37 to 42 km/h)
3rd gear	Lock-up ON	17 to 20 mph (28 to 32 km/h)
	Lock-up OFF	17 to 19 mph (27 to 31 km/h)
Shift schedule (Tire size: 185/60R15)		
D position		

Throttle valve fully opened	1 → 2	30 to 34 mph (49 to 55 km/h)
	2 → 3	58 to 63 mph (93 to 101 km/h)
	3 → 4	91 to 96 mph (146 to 154 km/h)
	4 → 3	88 to 93 mph (141 to 149 km/h)
	3 → 2	55 to 59 mph (88 to 95 km/h)
	2 → 1	25 to 28 mph (41 to 45 km/h)
Throttle valve fully closed	3 → 4	25 to 27 mph (40 to 44 km/h)
	4 → 3	18 to 21 mph (29 to 33 km/h)
2 position		
Throttle valve fully opened	1 → 2	30 to 34 mph (49 to 55 km/h)
	3 → 2	55 to 59 mph (88 to 95 km/h)
	2 → 1	25 to 28 mph (41 to 45 km/h)
L position		
Throttle valve fully opened	3 → 2	55 to 59 mph (88 to 95 km/h)
	2 → 1	27 to 30 mph (44 to 48 km/h)
Lock-up point (Throttle valve opening 5 %)		
D position		
4th gear	Lock-up ON	34 to 36 mph (54 to 58 km/h)
	Lock-up OFF	32 to 35 mph (51 to 56 km/h)
3 position		
3rd gear	Lock-up ON	58 to 63 mph (93 to 101 km/h)
	Lock-up OFF	55 to 59 mph (88 to 95 km/h)
Flex lock-up point (Throttle valve opening 5 %) D position		
4th gear	Lock-up ON	25 to 27 mph (40 to 44 km/h)
	Lock-up OFF	24 to 27 mph (38 to 43 km/h)
3rd gear	Lock-up ON	18 to 21 mph (29 to 33 km/h)
	Lock-up OFF	17 to 19 mph (27 to 31 km/h)

Transmission revolution sensor resistance	Standard	560 to 680 Ω 20°C (68°F)
Park/neutral position switch resistance	Standard P (2 - 6 AND 4 - 5) Except P (2 - 6 AND 4 - 5) R (2 - 1) Except R (2 - 1) N (2 - 9 AND 4 - 5) Except N (2 - 9 AND 4 - 5) D and 3 (2 - 7) Except D and 3 (2 - 7) 2 (2 - 3) Except 2 (2 - 3) L (2 - 8) Except L (2 - 8)	- Below 1 Ω 10 kΩ or higher Below 1 Ω 10 kΩ or higher Below 1 Ω 10 kΩ or higher Below 1 Ω 10 kΩ or higher Below 1 Ω 10 kΩ or higher Below 1 Ω 10 kΩ or higher
Transmission wire resistance	Standard 1 (OT+) - 6 (OT-) 10°C (50°F) 110°C (230°F)	- - 6.4 kΩ 0.2 kΩ
Front transaxle case oil seal	Drive in depth	1.5 to 2.5 mm (0.059 to 0.098 in.)
Transaxle case oil seal	Drive in depth	5.4 to 6.4 mm (0.213 to 0.252 in.)
Drive plate runout	Maximum	0.20 mm (0.0079 in.)
Input shaft end play	Standard	0.37 to 1.29 mm (0.0146 to 0.0508 in.)
Intermediate shaft clearance	Standard	0.204 to 0.966 mm (0.008 to 0.038 in.)
1st and reverse brake return spring free length	Standard	13.96 mm (0.5496 in.)

Differential case tapered roller bearing preload	New bearing Used bearing	0.98 to 1.57 N*m (10.0 to 16.0 kgf*cm, 8.7 to 13.9 in.*lbf) 0.49 to 0.78 N*m (5.0 to 8.0 kgf*cm, 4.3 to 6.9 in.*lbf)
Transaxle case side adjusting shim	Mark 01 Mark 02 Mark 03 Mark 04 Mark 05 Mark 06 Mark 07 Mark 08 Mark 09 Mark 10 Mark 11 Mark 12 Mark 13 Mark 14 Mark 15 Mark 16 Mark 17 Mark 18 Mark 19	1.90 mm (0.0748 in.) 1.95 mm (0.0768 in.) 2.00 mm (0.0787 in.) 2.05 mm (0.0807 in.) 2.10 mm (0.0827 in.) 2.15 mm (0.0846 in.) 2.20 mm (0.0866 in.) 2.25 mm (0.0885 in.) 2.30 mm (0.0906 in.) 2.35 mm (0.0925 in.) 2.40 mm (0.0945 in.) 2.45 mm (0.0965 in.) 2.50 mm (0.0984 in.) 2.55 mm (0.1004 in.) 2.60 mm (0.1024 in.) 2.65 mm (0.1043 in.) 2.70 mm (0.1063 in.) 2.75 mm (0.1082 in.) 2.80 mm (0.1102 in.)
Manual valve lever shaft oil seal	Drive in depth	-0.5 to 0.5 mm (-0.020 to 0.020 in.)
Differential drive pinion plug clearance	Standard	2.5 to 2.6 mm (0.0984 to 0.1023 in.)
1st and reverse brake pack clearance	Standard	0.806 to 1.206 mm (0.0317 to 0.0475 in.)
1st and reverse brake flange thickness	Mark - Mark 1 Mark 2 Mark 3	3.4 mm (0.134 in.) 3.6 mm (0.142 in.) 3.8 mm (0.150 in.) 4.0 mm (0.157 in.)
2nd brake pack clearance	Standard	0.847 to 1.247 mm (0.0333 to 0.0491 in.)
2nd brake flange thickness	Mark - Mark 1 Mark 2 Mark 3	3.0 mm (0.118 in.) 3.2 mm (0.126 in.) 3.4 mm (0.134 in.) 3.6 mm (0.142 in.)
2nd coast and overdrive brake pack clearance	Standard	2.091 to 2.491 mm (0.0823 to 0.0981 in.)
2nd coast and overdrive brake flange thickness	Mark 4 Mark 5 Mark 6 Mark 7	4.0 mm (0.1575 in.) 4.2 mm (0.1654 in.) 4.4 mm (0.1732 in.) 4.6 mm (0.1811 in.)
C-2 accumulator spring	Free length Outer diameter	66.90 mm (2.6339 in.) 17.20 mm (0.6772 in.)
C-3 accumulator spring	Free length Outer diameter	80.20 mm (3.1575 in.) 18.70 mm (0.7362 in.)
B-2 accumulator spring	Free length Outer diameter	66.90 mm (2.6339 in.) 15.50 mm (0.6102 in.)
Stator shaft inside diameter	Standard Maximum	21.500 to 21.526 mm (0.84646 to 0.84748 in.) 21.526 mm (0.84748 in.)
Oil pump gear clearance (Driven gear to drive gear clearance)	Standard Maximum	0.07 to 0.15 mm (0.0028 to 0.0059 in.) 0.15 mm (0.0059 in.)
Oil pump gear clearance (Driven gear to oil pump body clearance)	Standard Maximum	0.10 to 0.15 mm (0.0039 to 0.0059 in.) 0.15 mm (0.0059 in.)
Oil pump clearance (Side clearance)	Standard Maximum	0.02 to 0.05 mm (0.0008 to 0.0020 in.) 0.05 mm (0.0020 in.)
Front oil pump body inside diameter	Standard Maximum	38.113 to 38.138 mm (1.5005 to 1.50149 in.) 38.138 mm (1.50149 in.)
Front oil pump oil seal	Drive in depth	-0.15 to 0.15 mm (-0.006 to 0.006 in.)
Forward clutch return spring free length	Standard	21.69 mm (0.8540 in.)
Forward clutch pack clearance	Standard	1.406 to 1.806 mm (0.05535 to 0.07110 in.)

Forward clutch flange thickness	Mark - Mark 1 Mark 2 Mark 3	3.0 mm (0.118 in.) 3.2 mm (0.126 in.) 3.4 mm (0.134 in.) 3.6 mm (0.142 in.)
2nd brake piston return spring free length	Standard	14.65 mm (0.5768 in.)
Direct clutch return spring free length	Standard	32.9 mm (1.2953 in.)
Reverse clutch pack clearance	Standard	0.86 to 1.26 mm (0.0339 to 0.0496 in.)
Reverse clutch flange thickness	Mark - Mark 1 Mark 2 Mark 3	3.0 mm (0.118 in.) 3.2 mm (0.126 in.) 3.4 mm (0.134 in.) 3.6 mm (0.142 in.)
Direct clutch pack clearance	Standard	0.62 to 1.02 mm (0.0244 to 0.0402 in.)
Direct clutch flange thickness	Mark - Mark 1 Mark 2 Mark 3	3.0 mm (0.118 in.) 3.2 mm (0.126 in.) 3.4 mm (0.134 in.) 3.6 mm (0.142 in.)
Overdrive brake return spring free length	Standard	17.88 mm (0.7039 in.)
Transaxle rear cover needle roller bearing depth	Standard	25.2 mm (0.992 in.)
Shift solenoid valve S1 resistance	Standard	11 to 15 Ω at 20°C (68°F)
Shift solenoid valve S2 resistance	Standard	11 to 15 Ω at 20°C (68°F)
Shift solenoid valve ST resistance	Standard	11 to 15 Ω at 20°C (68°F)
Shift solenoid valve SLT resistance	Standard	5.0 to 5.6 Ω at 20°C (68°F)
Shift solenoid valve SLU resistance	Standard	5.0 to 5.6 Ω at 20°C (68°F)
Side gear backlash	Standard	0.05 to 0.20 mm (0.0020 to 0.0079 in.)
Thrust washer thickness		0.95 mm (0.0374 in.) 1.00 mm (0.0394 in.) 1.05 mm (0.0413 in.) 1.10 mm (0.0433 in.) 1.15 mm (0.0453 in.) 1.20 mm (0.0472 in.)

SS

TORQUE SPECIFICATIONS

Part Tightened	N*m	kgf*cm	ft.*lbf
Speedometer sensor x Automatic transaxle	7.0	71	62 in.*lbf
Transmission revolution sensor x Automatic transaxle	5.4	55	48 in.*lbf
Park/neutral position switch assembly x Automatic transaxle	5.4	55	48 in.*lbf
Lock plate x Park/neutral position switch assembly	6.9	70	61 in.*lbf
Control shaft lever x Park/neutral position switch assembly	13	130	9
Transmission control cable assembly x Control shaft lever	12	122	9
Battery negative terminal x Battery	5.4	55	48 in.*lbf
Drain plug x Automatic transaxle oil pan sub-assembly	49	500	36
Transmission wire x Automatic transaxle case	5.4	55	48 in.*lbf
Transmission valve body assembly x Automatic transaxle	11	110	8
Manual detente spring sub-assembly x Transmission valve body assembly	11	110	8
Valve body oil strainer sub-assembly x Transmission valve body assembly	11	110	8
Automatic transaxle oil pan sub-assembly x Automatic transaxle case	7.8	80	69
Transmission control cable assembly x Body	5.0	51	44 in.*lbf
Front No. 1 floor heat insulator	5.5	56	49 in.*lbf
Floor shift assembly x Body	12	122	9
Front wheel	103	1,050	76
Transmission oil filler tube sub-assembly x Automatic transaxle	5.5	56	49 in.*lbf
No. 2 oil cooler tube clamp x Transmission oil filler tube sub-assembly	5.5	56	49 in.*lbf
Inlet No. 1 oil cooler tube x Automatic transaxle	34	347	25
Outlet No. 1 oil cooler tube x Automatic transaxle	34	347	25
No. 1 transmission control cable bracket x Automatic transaxle	12	122	9
Automatic transaxle assembly x Engine	30	306	22
Torque converter set bolt x Drive plate	27	280	20
Engine mounting bracket LH x Automatic transaxle	64	653	47
Engine mounting insulator LH x Engine mounting bracket LH	52	530	38
Engine moving control rod bracket x Automatic transaxle	39	398	29
Engine moving control rod x Engine moving control rod bracket	120	1,224	89
Wire harness clamp bracket x Automatic transaxle	5.0	51	44 in.*lbf
No. 3 engine wire x Automatic transaxle	7.4	75	65 in.*lbf
Transaxle housing x Transaxle case (Bolt A)	29	300	22
Transaxle housing x Transaxle case (Bolt B)	22	225	16
Bearing lock plate x Transaxle housing	11	115	8
Parking lock pawl bracket x Transaxle case	20	205	15
Rear transaxle cover assembly x Transaxle case	25	250	18
Oil pump assembly x Transaxle housing	22	225	16
No. 1 transaxle case plug x Automatic transaxle	7.4	75	65 in.*lbf
Screw plug x Automatic transaxle	7.4	75	65 in.*lbf
Oil cooler tube union x Automatic transaxle	27	275	20
Stator shaft assembly x Front oil pump body	9.8	100	7
Rear transaxle cover plug x Rear transaxle cover	7.4	75	65 in.*lbf
Shift solenoid valve x Valve body	11	110	8
Differential case x Front differential ring gear	88	900	65

CLUTCH

SERVICE DATA

Pedal height from dash panel	-	133.0 to 143.0 mm (5.236 to 5.630 in.)
Pedal free play	-	5.0 to 15.0 mm (0.197 to 0.591 in.)
Push rod play at pedal top	-	1.0 to 5.0 mm (0.039 to 0.197 in.)
Clutch release point from pedal full stroke end position	-	25 mm (0.98 in.) or more
Clutch disc rivet depth	Maximum	0.3 mm (0.012 in.)
Clutch disc runout	Minimum	0.8 mm (0.031 in.)
Diaphragm spring fingerwear	Maximum depth Maximum width	0.5 mm (0.020 in.) 6.0 mm (0.236 in.)
Flywheel runout	Maximum	0.1 mm (0.004 in.)
Diaphragm spring tip non-alignment	Maximum depth	0.5 mm (0.020 in.)

TORQUE SPECIFICATIONS

Part tightened	N*m	kgf*cm	ft.*lbf
Clutch pedal stopper bolt x Lock nut	16	160	12
Clutch master cylinder push rod clevis lock nut	12	120	8.7
Clutch pedal sub-assembly x Clutch pedal support	37	375	27
Clutch start switch assembly x Clutch pedal support	16	160	12
Clutch pedal support x Body	24	241	17
Clutch master cylinder x Clutch pedal support	9.0	92	80 in.*lbf
Clutch master cylinder to flexible hose tube x Clutch master cylinder	15	153	11
Release cylinder bleeder plug x Clutch release cylinder	8.3	85	73 in.*lbf
Clutch release cylinder x Manual transaxle case	12	120	8.7
Clutch release cylinder to flexible hose tube x Clutch release cylinder	15	153	11
Clutch cover assembly x Flywheel sub-assembly	19	195	14
Release fork support x Manual transaxle	37	375	27

C50 MANUAL TRANSAXLE

SERVICE DATA

5th gear thrust clearance	Standard Maximum	0.10 to 0.55 mm (0.0039 to 0.0217 in.) 0.55 mm (0.0217 in.)
5th gear radial clearance	KOYO made Standard Maximum NSK made Standard Maximum	0.015 to 0.058 mm (0.0006 to 0.0023 in.) 0.058 mm (0.0023 in.) 0.015 to 0.056 mm (0.0006 to 0.0022 in.) 0.056 mm (0.0022 in.)
Synchronizer ring No. 3 back and 5th gear spline end clearance	Minimum	0.75 mm (0.0295 in.)
Transmission hub sleeve No. 3 and gear shift fork No. 3 clearance	Standard	0.3 to 0.5 mm (0.012 to 0.020 in.)
5th gear inner diameter	Standard Maximum	29.915 to 29.931 mm (1.1778 to 1.1783 in.) 29.931 mm (1.1783 in.)
Reverse idler gear inner diameter	Standard Maximum	18.040 to 18.058 mm (0.7102 to 0.7109 in.) 18.058 mm (0.7109 in.)
Reverse idler gear outer diameter	Standard Minimum	17.966 to 17.984 mm (0.7073 to 0.7080 in.) 17.966 mm (0.7073 in.)
Front transaxle case oil seal drive in depth	-	15.6 mm to 16.0 mm (0.6141 to 0.6299 in.)
Input shaft front bearing drive in depth	-	0 to 0.3 mm (0 to 0.0118 in.)
Shift and select lever shaft needle roller bearing drive in depth	-	0 to 0.5 mm (0 to 0.020 in.)
Shift and select lever shaft oil seal drive in depth	-	9.7 to 10.3 mm (0.382 to 0.406 in.)
Front differential case tapered roller bearing preload	New bearing Used bearing	0.78 to 1.57 N*m (7.95 to 16.0 kgf*cm, 6.9 to 13.89 in.*lbf) 0.49 to 0.98 N*m (5.0 to 10.0 kgf*cm, 4.34 to 8.67 in.*lbf)
Front differential case shim thickness	AA BB CC DD EE FF GG HH JJ KK LL MM NN PP QQ RR SS TT UU	2.10 mm (0.0827 in.) 2.15 mm (0.0846 in.) 2.20 mm (0.0866 in.) 2.25 mm (0.0886 in.) 2.30 mm (0.0906 in.) 2.35 mm (0.0925 in.) 2.40 mm (0.0945 in.) 2.45 mm (0.0965 in.) 2.50 mm (0.0984 in.) 2.55 mm (0.1004 in.) 2.60 mm (0.1024 in.) 2.65 mm (0.1043 in.) 2.70 mm (0.1063 in.) 2.75 mm (0.1083 in.) 2.80 mm (0.1102 in.) 2.85 mm (0.1122 in.) 2.90 mm (0.1142 in.) 2.95 mm (0.1161 in.) 3.00 mm (0.1181 in.)
Transmission case oil seal drive in depth	-	9.6 to 10.2 mm (0.378 to 0.402 in.)
Transaxle case oil seal drive in depth	-	1.6 to 2.2 mm (0.063 to 0.087 in.)
Reverse restrict pin slotted pin drive in depth	-	15.5 to 16.5 mm (0.6102 to 0.6496 in.)
Transmission clutch hub No. 3 snap ring thickness	A B C D E F G	2.25 mm (0.0886 in.) 2.31 mm (0.0909 in.) 2.37 mm (0.0933 in.) 2.43 mm (0.0957 in.) 2.49 mm (0.0980 in.) 2.55 mm (0.1004 in.) 2.61 mm (0.1028 in.)
Control shaft cover oil seal drive in depth	-	0.2 to 1.2 mm (0.0079 to 0.0472 in.)
4th gear thrust clearance	Standard Maximum	0.1 to 0.55 mm (0.0039 to 0.0217 in.) 0.55 mm (0.0217 in.)

3rd gear thrust clearance	Standard Maximum	0.1 to 0.35 mm (0.0039 to 0.0138 in.) 0.35 mm (0.0138 in.)
4th gear radial clearance	Standard Maximum	0.009 to .050 mm (0.0004 to 0.0020 in.) 0.050 mm (0.0023 in.)
3rd gear radial clearance	KOYO made Standard Maximum NSK made Standard Maximum	0.015 to 0.058 mm (0.0006 to 0.0023 in.) 0.058 mm (0.0023 in.) 0.015 to 0.056 mm (0.0006 to 0.0022 in.) 0.056 mm (0.0022 in.)
Input shaft runout	Maximum	0.015 mm (0.0006 in.)
Input shaft outer diameter	Standard Part A Part B Part C Part D Minimum Part A Part B Part C Part D	24.885 to 24.900 mm (0.9797 to 0.9803 in.) 28.991 to 29.006 mm (1.1414 to 1.1420 in.) 30.985 to 31.000 mm (1.2198 to 1.2204 in.) 24.985 to 25.000 mm (0.9836 to 0.9842 in.) 24.885 mm (0.9797 in.) 28.991 mm (1.1414 in.) 30.985 mm (1.2198 in.) 24.985 mm (0.9836 in.)
4th gear inside diameter	Standard Maximum	34.015 to 34.031 mm (1.3391 to 1.3398 in.) 34.031 mm (1.3398 in.)
3rd gear inside diameter	Standard Maximum	36.015 to 36.031 mm (1.4179 to 1.4185 in.) 36.031 mm (1.4185 in.)
3rd gear synchronizer ring back and 3rd gear spline end clearance	Standard Minimum	0.75 to 1.65 mm (0.0295 to 0.0649 in.) 0.75 mm (0.0295 in.)
4th gear synchronizer ring back and 4th gear spline end clearance	Standard Minimum	0.75 to 1.65 mm (0.0295 to 0.0649 in.) 0.75 mm (0.0295 in.)
Gear shift fork No. 2 claw and glove of the transmission hub sleeve No. 2 clearance	-	0.15 to 0.35 mm (0.0059 to 0.0137 in.)
Transmission clutch hub No. 2 snap ring thickness	0 1 2 3 4 5	2.30 mm (0.0906 in.) 2.36 mm (0.0929 in.) 2.42 mm (0.0953 in.) 2.48 mm (0.0976 in.) 2.54 mm (0.1000 in.) 2.60 mm (0.1024 in.)
Input shaft rear bearing shaft snap ring clearance	-	0.1 mm (0.0039 in.) or less
Input shaft rear bearing shaft snap ring thickness	A B C D E F	2.29 mm (0.0901 in.) 2.35 mm (0.0925 in.) 2.41 mm (0.0948 in.) 2.47 mm (0.0972 in.) 2.53 mm (0.0996 in.) 2.59 mm (0.1019 in.)
1st gear thrust clearance	Standard Maximum	0.10 to 0.40 mm (0.0039 to 0.0157 in.) 0.40 mm (0.0157 in.)
2nd gear thrust clearance	Standard Maximum	0.10 to 0.55 mm (0.0039 to 0.0217 in.) 0.55 mm (0.0217 in.)
1st gear radial clearance	KOYO made Standard Maximum NSK made Standard Maximum	0.015 to 0.058 mm (0.0006 to 0.0023 in.) 0.058 mm (0.0023 in.) 0.015 to 0.056 mm (0.0006 to 0.0022 in.) 0.056 mm (0.0022 in.)
2nd gear radial clearance	KOYO made Standard Maximum NSK made Standard Maximum	0.015 to 0.058 mm (0.0006 to 0.0023 in.) 0.058 mm (0.0023 in.) 0.015 to 0.056 mm (0.0006 to 0.0022 in.) 0.056 mm (0.0022 in.)
Output shaft runout	Maximum	0.015 mm (0.0006 in.)
Output shaft outer diameter	Part A Part B Part C	31.985 to 32.000 mm (1.2592 to 1.2598 in.) 37.985 to 38.000 mm (1.4955 to 1.4961 in.) 32.985 to 33.000 mm (1.2986 to 1.2992 in.)
2nd gear inside diameter	Standard Maximum	38.015 to 38.031 mm (1.4967 to 1.4972 in.) 38.031 mm (1.4972 in.)
1st gear inside diameter	Standard Maximum	44.015 to 44.031 mm (1.7328 to 1.7335 in.) 44.031 mm (1.7335 in.)

1st gear thrust washer thickness	Standard Minimum	5.975 to 6.025 mm (0.2352 to 0.2372 in.) 5.975 mm (0.2352 in.)
Synchronizer ring set No. 2 back and 2nd gear spline end clearance	Standard Minimum	0.70 to 1.3 mm (0.0276 to 0.0512 in.) 0.70 mm (0.0276 in.)
Synchronizer ring set No. 1 back and 1st gear spline end clearance	Standard Minimum	0.75 to 1.65 mm (0.0295 to 0.0650 in.) 0.75 mm (0.0295 in.)
Reverse gear glove and reverse gear shift fork claw clearance	-	0.15 to 0.35 mm (0.0059 to 0.0138 in.)
Clutch hub No. 1 shaft snap ring clearance	-	0.1 mm (0.039 in.) or less
Clutch hub No. 1 shaft snap ring thickness	A B C D E F	2.50 mm (0.0984 in.) 2.56 mm (0.1008 in.) 2.62 mm (0.1031 in.) 2.68 mm (0.1055 in.) 2.74 mm (0.1079 in.) 2.80 mm (0.1102 in.)
Shift lever slotted pin (for select inner lever) drive in depth	-	3.0 to 4.0 mm (0.1181 to 01575 in.)
Shift lever slotted pin (for shift lever inner No. 1) drive in depth	-	-0.5 to 0.5 mm (-0.197 to 0.0197 in.)
Shift lever slotted pin (for shift lever inner No. 2) drive in depth	-	1.0 to 2.0 mm (0.0394 to 0.0787 in.)
Front differential side gear backlash	-	0.05 to 0.20 mm (0.0020 to 0.0079 in.)
Front differential pinion thrust washer	Minimum	0.94 mm (0.03701 in.)
Front differential pinion shaft No. 1 outer diameter	Minimum	16.982 mm (0.6685 in.)

TORQUE SPECIFICATIONS

Part tightened	N*m	kgf*cm	ft.*lbf
Filler plug x Manual transmission case	39	400	29
Floor shift lever assembly x Body	12	122	8.9
Transmission control cable x Body	5.0	51	44 in.*lbf
Front floor heat insulator x Body	5.5	56	49 in.*lbf
Engine hanger x Cylinder head	40	408	29
Manual transaxle assembly x Engine	33	336	24
Transverse engine engine mounting bracket x Transmission case cover	64	653	47
Transverse engine engine mounting insulator x Body	52	530	38
Transverse engine engine mounting control bracket x Transaxle case	39	398	29
Wire harness x Transmission case	26	260	19
Control cable bracket x Transaxle case	25	255	18
Clutch release cylinder x Transaxle case	12	120	8.7
Clutch pipe x Transmission case	12	122	8.9
Battery carrier x Body	17	175	13
Air cleaner bracket x Body	19	194	14
Bearing lock plate x Transaxle case	11	115	8.3
Oil receiver pipe No.1 x Transmission case	17	175	13
Oil receiver pipe No.2 x Transmission case	17	175	13
Reverse restrict pin plug x transmission case	13	130	9.3
Transaxle case receiver x Transaxle case	11	115	8.3
Gear shift fork No. 1 x Gear shift fork shaft No. 1	16	160	12
Gear shift fork No. 2 x Gear shift fork shaft No. 2	16	160	12
Gear shift head No. 1 x Gear shift fork shaft No. 2	16	160	12
Reverse shift arm bracket x Transaxle case	17	175	13
Transmission case x Transaxle case	29	300	22
Reverse idler gear shaft bolt x Transmission case	29	300	22
Lock ball assembly No. 2 x Transmission case	29	300	22
Shift detent ball plug x Transmission case	22	224	16
Shift detent ball plug x Transaxle case	22	224	16
Bearing retainer rear x Transmission case	27	280	20
Gear shift fork No. 3 x Gear shift fork shaft No. 3	16	160	12
Transmission output shaft rear set nut x Output shaft	118	1,200	87
Transmission case cover x Transmission case	18	185	14
Control shaft cover x Transmission case	20	200	14
Shift gate pin x Transmission case	11	112	8.1
Lock ball assembly No. 1 x Transmission case	29	300	22
Shift lever damper x Shift and select lever shaft assembly	12	120	8.7
Floor shift control shift lever x Shift and select lever shaft assembly	12	120	8.7
Selecting bell crank assembly x Transmission case for bolt	25	250	18
Selecting bell crank assembly x Transmission case for nut	12	120	8.7
Back-up light switch x Transmission case	40	410	30
Speedometer driven hole cover x Transaxle case	11	115	8.3
Front differential ring gear x Front differential case	77	790	57

DRIVE SHAFT

TORQUE SPECIFICATIONS

Part Tightened	N*m	kgf*cm	ft.*lbf
Automatic transmission case protector x Automatic transaxle	23	235	17
Front lower suspension arm x Steering knuckle	98	1,000	72
Front stabilizer link assembly x Front shock absorber assembly	74	755	55
Tie rod end sub-assembly x Steering knuckle	49	500	36
Front speed sensor x Steering knuckle	8.5	87	75 in.*lbf
Front speed sensor x Front flexible hose	29	300	22
Front axle hub nut x Front drive shaft	216	2,203	160
Front wheel	103	1,050	76
Battery negative terminal x Battery	5.4	55	48 in.*lbf

AXLE

SERVICE DATA

Front axle hub bearing backlash	Maximum	0.05 mm (0.0020 in.)
Front axle hub bearing runout	Maximum	0.05 mm (0.0020 in.)
Rear axle hub and bearing backlash	Maximum	0.05 mm (0.0020 in.)
Rear axle hub and bearing runout	Maximum	0.07 mm (0.0028 in.)

TORQUE SPECIFICATIONS

Part Tightened	N*m	kgf*cm	ft.*lbf
Front wheel	103	1,050	76
Rear wheel	103	1,050	76
Steering knuckle x Front shock absorber assembly	164	1,672	121
Front disk brake caliper assembly x Steering knuckle	107	1,089	79
Rear axle hub and bearing assembly x Rear axle beam	90	918	67
Battery negative terminal x Battery	5.4	55	48 in.*lbf

SUSPENSION

SERVICE DATA

Hatchback (Except Rough Road Package)

Front suspension			
Vehicle height		A-B C-D	88 mm (3.46 in.) 20 mm (0.79 in.)
Toe-in		A+B C-D Rack end length difference	0°09' +- 0°13' (0.15°+- 0.22°) 1.5 +- 2.0 mm (0.06 +- 0.08 in.) 1.5 mm (0.059 in.) or less
Wheel turning angle		Inside wheel Outside wheel (Reference)	40°57' +- 2°(40.95°+- 2°) 35°17' (35.29°)
Camber			-0°10' +- 45' (-0.17°+- 0.75°)
Caster			4°46' +- 45' (4.77°+- 0.75°)
Steering Axis Inclination (Reference)			11°18' (11.30°)
Front suspension lower arm		Lower ball joint turning torque	0.78 to 3.43 N*m (8 to 35 kgf*cm, 6.9 to 30 in.*lbf)
Front stabilizer link assembly		Front stabilizer link turning torque	1.0 N*m (10 kgf*cm, 8.9 in.*lbf) or less
Rear suspension			
Toe-in	175/65R14	A+B C-D	0°17' +- 0°20' (0.28°+- 0.33°) 2.8 +- 3.0 mm (0.11 +- 0.12 in.)
	185/60R15	A+B C-D	0°17' +- 0°20' (0.28°+- 0.33°) 2.9 +- 3.0 mm (0.11 +- 0.12 in.)
Camber			-0°57' +- 45' (-0.95°+- 0.75°)

Hatchback (Rough Road Package)

Front suspension		
Vehicle height	A-B C-D	68 mm (2.68 in.) 0 mm (0 in.)
Toe-in	A+B C-D Rack end length difference	0°09' +- 0°13' (0.15°+- 0.22°) 1.5 +- 2.0 mm (0.06 +- 0.08 in.) 1.5 mm (0.059 in.) or less
Wheel turning angle	Inside wheel Outside wheel (Reference)	41°22' +- 2°(41.37°+- 2°) 35°45' (35.75°)
Camber		0°06' +- 45' (0.10°+- 0.75°)
Caster		4°27' +- 45' (4.45°+- 0.75°)
Steering Axis Inclination (Reference)		10°47' (10.78°)
Front suspension lower arm	Lower ball joint turning torque	0.78 to 3.43 N*m (8 to 35 kgf*cm, 6.9 to 30 in.*lbf)
Front stabilizer link assembly	Front stabilizer link turning torque	1.0 N*m (10 kgf*cm, 8.9 in.*lbf) or less
Rear suspension		
Toe-in	A+B C-D	0°13' +- 0°20' (0.22°+- 0.33°) 2.2 +- 3.0 mm (0.09 +- 0.12 in.)
Camber		-0°54' +- 45' (-0.90°+- 0.75°)

Sedan (Except Rough Road Package)

Front suspension			
Vehicle height		A-B C-D	87 mm (3.43 in.) 16 mm (0.63 in.)
Toe-in		A+B C-D Rack end length difference	0°12' +- 0°06' (0.20°+- 0.10°) 2.0 +- 2.0 mm (0.08 +- 0.08 in.) 1.5 mm (0.059 in.) or less
Wheel turning angle		Inside wheel Outside wheel (Reference)	40°57' +- 2°(40.95°+- 2°) 35°17' (35.29°)
Camber			-0°10' +- 45' (-0.17°+- 0.75°)
Caster			4°39' +- 45' (4.65°+- 0.75°)

Steering Axis Inclination (Reference)			11°16' (11.27°)
Front suspension lower arm		Lower ball joint turning torque	0.78 to 3.43 N*m (8 to 35 kgf*cm, 6.9 to 30 in.*lbf)
Front stabilizer link assembly		Front stabilizer link turning torque	1.0 N*m (10 kgf*cm, 8.9 in.*lbf) or less
Rear suspension			
Toe-in	175/65R14	A+B C-D	0°17' +- 0°20' (0.28°+- 0.33°) 2.8 +- 3.0 mm (0.11 +- 0.12 in.)
	185/60R15	A+B C-D	0°17' +- 0°20' (0.28°+- 0.33°) 2.9 +- 3.0 mm (0.11 +- 0.12 in.)
Camber			-0°56' +- 45' (-0.93°+- 0.75°)

Sedan (Rough Road Package)

Front suspension			
Vehicle height		A-B C-D	67 mm (2.64 in.) -2 mm (-0.08 in.)
Toe-in		A+B C-D Rack end length difference	0°12' +- 0°06' (0.20°+- 0.10°) 2.0 +- 2.0 mm (0.08 +- 0.08 in.) 1.5 mm (0.059 in.) or less
Wheel turning angle		Inside wheel Outside wheel (Reference)	41°22' +- 2°(41.37°+- 2°) 35°45' (35.75°)
Camber			0°06' +- 45' (0.10°+- 0.75°)
Caster			4°23' +- 45' (4.38°+- 0.75°)
Steering Axis Inclination (Reference)			10°47' (10.78°)
Front suspension lower arm		Lower ball joint turning torque	0.78 to 3.43 N*m (8 to 35 kgf*cm, 6.9 to 30 in.*lbf)
Front stabilizer link assembly		Front stabilizer link turning torque	1.0 N*m (10 kgf*cm, 8.9 in.*lbf) or less
Rear suspension			
Toe-in	175/65R14	A+B C-D	0°13' +- 0°20' (0.22°+- 0.33°) 2.1 +- 3.0 mm (0.08 +- 0.12 in.)
	185/60R15	A+B C-D	0°13' +- 0°20' (0.22°+- 0.33°) 2.2 +- 3.0 mm (0.09 +- 0.12 in.)
Camber			-0°54' +- 45' (-0.90°+- 0.75°)

TORQUE SPECIFICATIONS

Part Tightened	N*m	kgf*cm	ft.*lbf
Tie rod end lock nut	75	760	55
Front shock absorber assembly x Steering knuckle	164	1,672	121
Front speed sensor x Front flexible hose	29	300	22
Front wheel	103	1,050	76
Front support to front shock absorber nut x Front shock absorber assembly	33	340	25
Front flexible hose x Front shock absorber assembly	29	300	22
Front stabilizer link assembly x Front shock absorber assembly	74	755	55
Front shock absorber with coil spring x Body	55	561	41
Battery negative terminal x Battery	5.4	55	48 in.*lbf
Front lower suspension arm x Steering knuckle	98	1,000	72
Front lower suspension arm x Front suspension crossmember sub-assembly	137	1,397	101
Front lower suspension arm x Body	160	1,631	118
Front stabilizer bracket x Front suspension crossmember sub-assembly	47	479	35
Rear flexible hose x Rear brake tube	14 (15)	143 (155)	10 (11)
Skid control sensor wire x Rear axle beam	6.0	61	53 in.*lbf
Rear wheel	103	1,050	76
Rear support to rear shock absorber nut x Rear shock absorber	25	250	18
Rear shock absorber x Rear axle beam	49	500	36
Parking brake cable x Rear axle beam	6.0	61	53 in.*lbf
Rear brake tube x Rear axle beam	5.0	51	44 in.*lbf
Rear axle beam x Body	90	918	67

( ): for use without SST

TIRE AND WHEEL

SERVICE DATA

Tire runout	1.4 mm (0.055 in.) or less
Imbalance after adjustment	8 g (0.018 lb) or less

Hatchback (Cold tire inflation pressure)

Destination	Tire Size	Vehicle Speed	Front kPa (kgf/cm^2, psi)	Rear kPa (kgf/cm^2, psi)
North America	P175/65R14 81S P185/60R15 84T	Driving below 160 km/h (100 mph)	220 (2.2, 32)	220 (2.2, 32)
		Driving over 160 km/h (100 mph)	240 (2.4, 35)	240 (2.4, 35)
Mexico	185/60R15 84H	Driving below 160 km/h (100 mph)	220 (2.2, 32)	220 (2.2, 32)
		Driving over 160 km/h (100 mph)	230 (2.3, 33)	230 (2.3, 33)

Sedan (Cold tire inflation pressure)

Destination	Tire Size	Vehicle Speed	Front kPa (kgf/cm^2, psi)	Rear kPa (kgf/cm^2, psi)
North America	P175/65R14 81S P185/60R15 84T	Driving below 160 km/h (100 mph)	220 (2.2, 32)	220 (2.2, 32)
		Driving over 160 km/h (100 mph)	240 (2.4, 35)	240 (2.4, 35)
Mexico	175/65R14 82T 185/60R15 84H	Driving below 160 km/h (100 mph)	220 (2.2, 32)	220 (2.2, 32)
		Driving over 160 km/h (100 mph)	230 (2.3, 33)	230 (2.3, 33)

BRAKE CONTROL

TORQUE SPECIFICATIONS

Part Tightened	N*m	kgf*cm	ft.*lbf
Brake actuator bracket assembly x Brake actuator	5.4	55	48 in.*lbf
Brake actuator x Body	19	194	14
Brake tube x Brake actuator	14 (15)	143 (155)	10 (11)
Brake tube x Brake master cylinder	14 (15)	143 (155)	10 (11)
Brake tube x No. 1 brake tube way	14 (15)	143 (155)	10 (11)
Brake tube x Front flexible hose	14 (15)	143 (155)	10 (11)
Front speed sensor x Steering knuckle	8.5	87	75 in.*lbf
Front speed sensor x Front flexible hose	29	300	22
Front speed sensor x Body	6.0	61	53 in.*lbf
Front wheel	103	1,050	76
Battery negative terminal x Battery	5.4	55	48 in.*lbf
Rear wheel	103	1,050	76

( ): for use without SST

BRAKE

SERVICE DATA

Proportioning valve	Front brake caliper pressure 1,500 kPa (15.3 kgf/cm^2, 218 psi) 5,000 kPa (51.0 kgf/cm^2, 725 psi) 8,000 kPa (81.6 kgf/cm^2, 1,160 psi)	Rear wheel cylinder pressure 1,500 kPa (15.3 kgf/cm^2, 218 psi) 2,350 kPa (24.0 kgf/cm^2, 341 psi) 3,100 kPa (31.6 kgf/cm^2, 450 psi)
Brake pedal height (from floor)	w/ ABS w/o ABS	107.3 to 117.3 mm (4.224 to 4.618 in.) 107.8 to 117.8 mm (4.244 to 4.638 in.)
Stop light switch clearance		0.5 to 2.6 mm (0.020 to 0.102 in.)
Brake pedal free play		1.0 to 6.0 mm (0.039 to 0.236 in.)
Brake pedal reserve distance (from floor) at 294 N (30 kgf, 66.1 lbf)	w/ ABS w/o ABS	More than 73 mm (2.87 in.) More than 70 mm (2.75 in.)
Brake booster push rod to piston clearance		-0.21 to 0 mm (-0.0083 to 0 in.)
Front disc brake pad lining thickness	Standard Minimum	12.0 mm (0.472 in.) 1.0 mm (0.039 in.)
Front disc thickness	Standard Minimum	22.0 mm (0.866 in.) 19.0 mm (0.748 in.)
Front disc runout	Maximum	0.05 mm (0.0020 in.)
Rear brake drum inside diameter	Standard Maximum	200 mm (7.874 in.) 201 mm (7.913 in.)
Rear drum brake shoe lining thickness	Standard Minimum	4.0 mm (0.157 in.) 1.0 mm (0.039 in.)
Rear brake shoe and drum clearance		0.6 mm (0.024 in.)

TORQUE SPECIFICATIONS

Part Tightened	N*m	kgf*cm	ft.*lbf
Push rod lock nut x Brake booster push rod	26	265	19
Brake tube x Brake master cylinder	14 (15)	143 (155)	10 (11)
Front disc brake bleeder plug x Disc brake cylinder assembly	8.3	85	73 in.*lbf
Rear drum brake bleeder plug x Rear wheel brake cylinder assembly	8.3	85	73 in.*lbf
Brake pedal x Brake pedal support	37	375	27
Brake pedal support x Instrument panel reinforcement assembly	24	241	17
Brake pedal support x Brake booster	9.0	92	80 in.*lbf
Battery negative terminal x Battery	5.4	55	48 in.*lbf
Piston stopper bolt x Master cylinder body	10	102	7
Brake master cylinder x Brake booster	13	127	9
Brake tube x Brake tube way	14 (15)	143 (155)	10 (11)
Brake tube x Proportioning valve	14 (15)	143 (155)	10 (11)
Front wheel	103	1,050	76
Front disc brake cylinder mounting x Steering knuckle	107	1,089	79
Disc brake cylinder assembly x Front disc brake cylinder mounting	34	347	25
Front flexible hose x Disc brake cylinder assembly	30	310	22
Front flexible hose x Front speed sensor	29	300	22
Front flexible hose x Front shock absorber assembly	29	300	22
Front flexible hose x Brake tube	14 (15)	143 (155)	10 (11)
Rear wheel	103	1,050	76
Rear wheel brake cylinder assembly x Backing plate	9.8	100	7
Brake tube x Rear wheel brake cylinder assembly	14 (15)	143 (155)	10 (11)
Rear flexible hose x Brake tube	14 (15)	143 (155)	10 (11)
Proportioning valve x Proportioning valve bracket	5.4	55	48 in.*lbf
Proportioning valve bracket x Body	19	194	14

( ): for use without SST

PARKING BRAKE

SERVICE DATA

Parking brake lever travel at 200 N (20 kgf, 45 lbf)		6 to 9 clicks
Parking brake switch	Released Pushed in	Below 1 Ω 10 kΩ or higher

TORQUE SPECIFICATIONS

Part Tightened	N*m	kgf*cm	ft.*lbf
Rear wheel	103	1,050	76
Lock nut x Parking brake pull rod sub-assembly	5.4	55	48 in.*lbf
Parking brake switch x Parking brake lever	0.9	9	8 in.*lbf
Parking brake lever x Body	13	127	9
Battery negative terminal x Battery	5.4	55	48 in.*lbf
Parking brake cable x Backing plate	8.0	82	71 in.*lbf
Parking brake cable	6.0	61	53 in.*lbf
Front No. 4 floor heat insulator x Body	5.5	56	49 in.*lbf

STEERING COLUMN

SERVICE DATA

Steering wheel free play	Maximum	30 mm (1.18 in.)

TORQUE SPECIFICATIONS

Part tightened	N*m	kgf*cm	ft.*lbf
Steering wheel assembly x Steering column assembly	50	510	37
Steering sliding yoke sub-assembly x Steering gear assembly	28	290	21
Steering sliding yoke sub-assembly x Steering intermediate shaft assembly No. 2	28	290	21
Steering intermediate shaft assembly No. 2 x Steering column assembly	28	290	21
Brake pedal x Brake pedal support sub-assembly	37	375	27
Steering column x Instrument panel reinforcement assembly	25	255	18
Steering wheel assembly x Steering column assembly	50	510	37

POWER STEERING

SERVICE DATA

Steering wheel		
Steering effort	Reference	5.5 N*m (56 kgf*cm, 49 in.*lbf)
Steering wheel free play	Maximum	30 mm ('1.18 in.)

TORQUE SPECIFICATIONS

Part Tightened		N*m	kgf*cm	ft.*lbf
Steering sliding yoke sub-assembly x Steering intermediate shaft assembly No, 2		28	290	21
Steering sliding yoke sub-assembly x Power steering gear		28	290	21
Engine mounting x Engine moving control rod		120	1,224	89
Front suspension crossmember sub-assembly x Body	Bolt A Bolt B Bolt C	70 160 95	714 1,631 969	52 118 70
Power steering gear x Front suspension crossmember sub-assembly		96	979	71
Power steering ECU x Instrument panel reinforcement assembly		5.0	51	44 in.*lbf

AIR CONDITIONING

SERVICE DATA

Refrigerant charge volume	330 to 390 g (11.64 to 13.76 oz.)
PTC heater assembly	1 - 2 : Below 1Ω 2 - 3 : Below 1Ω 1 - 3 : Below 1Ω
Blower resistor	1 - 4 : 3.12 to 3.60 Ω 3 - 4 : 1.45 to 1.67 Ω 2 - 4 : 0.52 to 0.60 Ω
Compressor and pulley	10.1 to 11.1 Ω at 25 °C (77°F)
Heater blower motor relay	3 - 4 : Below 1Ω 3 - 4 : 10kΩ or higher (Apply battery voltage to terminals 1 and 2) 3 - 5 : 10kΩ or higher 3 - 5 : Below 1Ω(Apply battery voltage to terminals 1 and 2)
PTC heater relay	3 - 5 : 10kΩ or higher 3 - 5 : Below 1Ω(Apply battery voltage to terminals 1 and 2)

for Manual transaxle

Idling speed Switch A/C OFF	550 to 650 rpm
Idling speed Switch A/C ON (A/C Lo → Hi)	700 → 850 rpm

for Automatic transaxle

Idling speed Switch A/C OFF	650 to 750 rpm
Idling speed Switch A/C ON (A/C Lo → Hi)	700 → 850 rpm

TORQUE SPECIFICATIONS

Part Tightened	N*m	kgf*cm	ft.*lbf
Negative battery terminal x Battery	5.4	55	48 in.*lbf

AIR CONDITIONING UNIT

Part Tightened	N*m	kgf*cm	ft.*lbf
Cooler expansion valve x NO. 1 Cooler evaporator sub-assembly	3.5	36	31 in.*lbf
Air conditioning unit x Body	9.8	100	87 in.*lbf
Air conditioning unit x Instrument panel reinforcement	4.0	41	35 in.*lbf
Ground wire x Instrument panel reinforcement	3.2	33	28 in.*lbf
Ground wire x Instrument panel brace sub-assembly	8.0	82	71 in.*lbf
Connector holder x Instrument panel reinforcement	3.2	33	28 in.*lbf
Main body ECU x Instrument panel reinforcement	3.2	33	28 in.*lbf
Instrument panel brace sub-assembly x Instrument panel reinforcement : for bolt	9.8	100	87 in.*lbf
Instrument panel brace sub-assembly x Instrument panel reinforcement : for nut	9.8	100	87 in.*lbf
Instrument panel brace sub-assembly x Air conditioning unit : for screw	9.8	100	87 in.*lbf
Steering sliding yoke sub-assembly x Steering column assembly : for bolt B	28	286	21
Steering sliding yoke sub-assembly x Power Steering assembly : for bolt A	28	286	21
Suction tube and liquid tube x Cooler expansion valve	9.8	100	87 in.*lbf

COMPRESSOR AND PULLEY

Part Tightened	N*m	kgf*cm	ft.*lbf
Compressor and pulley x Oil pan sub-assembly	25	255	18
NO. 1 cooler refrigerant discharge hose x Compressor and pulley	9.8	100	87 in.*lbf
NO. 1 cooler refrigerant suction hose x Compressor and pulley	9.8	100	87 in.*lbf

CONDENSER

Part Tightened	N*m	kgf*cm	ft.*lbf
Cooler dryer x Condenser	2.9	30	25 in.*lbf
Liquid tube assembly A x Condenser	5.4	55	48 in.*lbf
NO. 1 cooler discharge hose x Condenser	5.4	55	48 in.*lbf

SUPPLEMENTAL RESTRAINT SYSTEM

SERVICE DATA

Spiral cable Standard	A1(D-) - D2(D-) A2(D+) - D1(D+) B1(D2-) - D3(D2-) A2(D2+) - D4(D2+)	Below 1 Ω Below 1 Ω Below 1 Ω Below 1 Ω

TORQUE SPECIFICATIONS

Hatchback:

Part Tightened		N*m	kgf*cm	ft.*lbf
Steering pad x Steering wheel assembly		8.8	90	78 in.*lbf
Steering wheel assembly x Steering column assembly		50	510	37
Driver side knee airbag assembly x Instrument panel reinforcement		10	102	7
Front passenger airbag assembly x Instrument panel reinforcement		20	204	15
Roof side rail bracket x Body		9.8	100	7
Curtain shield airbag bracket x Body		9.8	100	7
Curtain shield airbag x Body	Bolt A Bolt D	14 9.8	145 100	10 7
Center airbag sensor assembly x Body		18	180	13
Front airbag sensor x Body		9.0	90	80 in.*lbf
Side airbag sensor x Body		9.0	90	80 in.*lbf
Rear airbag sensor x Body		9.0	90	80 in.*lbf

Sedan:

Part Tightened	N*m	kgf*cm	ft.*lbf
Steering pad x Steering wheel assembly	8.8	90	78 in.*lbf
Steering wheel assembly x Steering column assembly	50	510	37
Driver side knee airbag assembly x Instrument panel reinforcement	10	102	7
Front passenger airbag assembly x Instrument panel reinforcement	20	204	15
Roof side rail bracket x Body	14	143	10
Curtain shield airbag bracket x Body	14	143	10
Curtain shield airbag x Body	14	143	10
Center airbag sensor assembly x Body	18	180	13
Front airbag sensor x Body	9.0	90	80 in.*lbf
Side airbag sensor x Body	9.0	90	80 in.*lbf
Rear airbag sensor x Body	9.0	90	80 in.*lbf

SEAT BELT

SERVICE DATA

FRONT SEAT INNER BELT ASSEMBLY (for Sedan):

Item	Position	Tester Connection	Condition	Specified Condition
Standard resistance	Driver side	3 - 4	Tongue plate fastened	10 kΩ or higher
			Tongue plate released	Below 1 Ω
	Front passenger side	1 - 2	Tongue plate fastened	10 kΩ or higher
			Tongue plate released	Below 1 Ω

FRONT SEAT INNER BELT ASSEMBLY (for Hatchback):

Item	Position	Tester Connection	Condition	Specified Condition
Standard resistance	Driver side	3 - 4	Tongue plate fastened	10 kΩ or higher
			Tongue plate released	Below 1 Ω
	Front passenger side	1 - 2	Tongue plate fastened	10 kΩ or higher
			Tongue plate released	Below 1 Ω

TORQUE SPECIFICATIONS

FRONT PASSENGER SEAT BELT WARNING LIGHT (for Sedan):

Part Tightened	N*m	kgf*cm	ft.*lbf
Negative battery terminal x Battery	5.4	55	48 in.*lbf

FRONT PASSENGER SEAT BELT WARNING LIGHT (for Hatchback):

Part Tightened	N*m	kgf*cm	ft.*lbf
Negative battery terminal x Battery	5.4	55	48 in.*lbf

FRONT SEAT INNER BELT ASSEMBLY (for Sedan):

Part Tightened	N*m	kgf*cm	ft.*lbf
Front seat inner belt assembly x Front seat adjuster frame assembly	42	43	31
Negative battery terminal x Battery	5.4	55	48 in.*lbf

FRONT SEAT INNER BELT ASSEMBLY (for Hatchback):

Part Tightened	N*m	kgf*cm	ft.*lbf
Front seat inner belt assembly x Front seat adjuster frame assembly	42	43	31
Negative battery terminal x Battery	5.4	55	48 in.*lbf

FRONT SEAT OUTER BELT ASSEMBLY (for Sedan):

Part Tightened	N*m	kgf*cm	ft.*lbf
Front shoulder belt anchor adjuster assembly x Body	42	43	31
Front seat outer belt assembly (for Retractor Upper) x Body	4.9	50	43 in.*lbf
Front seat outer belt assembly (for Retractor Lower) x Body	42	430	31
Front seat outer belt assembly (for Through Anchor) x Body	42	430	31
Front seat outer belt assembly (for Anchor Plate) x Body	42	430	31
Negative battery terminal x Battery	5.4	55	48 in.*lbf

FRONT SEAT OUTER BELT ASSEMBLY (for Hatchback 5 Door):

Part Tightened	N*m	kgf*cm	ft.*lbf
Front shoulder belt anchor adjuster assembly x Body	42	43	31
Front seat outer belt assembly (for Retractor Upper) x Body	4.9	50	43 in.*lbf
Front seat outer belt assembly (for Retractor Lower) x Body	42	430	31
Front seat outer belt assembly (for Through Anchor) x Body	42	430	31
Front seat outer belt assembly (for Anchor Plate) x Body	42	430	31
Negative battery terminal x Battery	5.4	55	48 in.*lbf

FRONT SEAT OUTER BELT ASSEMBLY (for Hatchback 3 Door):

Part Tightened	N*m	kgf*cm	ft.*lbf
Front seat outer belt assembly (for Retractor Upper) x Body	4.9	50	43 in.*lbf
Front seat outer belt assembly (for Retractor Lower) x Body	42	430	31
Front seat outer belt assembly (for Through Anchor) x Body	42	430	31
Front seat outer belt assembly (for Anchor Plate) x Body	42	430	31
Negative battery terminal x Battery	5.4	55	48 in.*lbf

REAR SEAT INNER BELT ASSEMBLY (for Sedan):

Part Tightened	N*m	kgf*cm	ft.*lbf
Rear seat inner belt assembly x Body	42	430	31

REAR SEAT INNER BELT ASSEMBLY (for Hatchback LH Side):

Part Tightened	N*m	kgf*cm	ft.*lbf
Rear seat inner belt assembly x Rear seat back frame sub-assembly (for 60/40 Split Seat Type)	42	430	31
Rear seat inner belt assembly x Body (for Hold Down Seat Type)	42	430	31

Part Tightened	N*m	kgf*cm	ft.*lbf
Rear seat cushion assembly x Body (for 60/40 Split Seat Type)	37	375	27

REAR SEAT INNER BELT ASSEMBLY (for Hatchback RH Side):

Part Tightened	N*m	kgf*cm	ft.*lbf
Rear seat inner belt assembly x Rear seat back frame sub-assembly (for 60/40 Split Seat Type)	42	430	31
Rear seat inner belt assembly x Body (for Hold Down Seat Type)	42	430	31

REAR SEAT OUTER BELT ASSEMBLY (for Sedan):

Part Tightened	N*m	kgf*cm	ft.*lbf
Rear seat outer belt assembly (for Retractor) x Body	42	430	31
Rear seat outer belt assembly (for Anchor Plate) x Body	42	430	31

REAR SEAT OUTER BELT ASSEMBLY (for 5 Hatchback Door):

Part Tightened	N*m	kgf*cm	ft.*lbf
Rear seat outer belt assembly (for Retractor) x Body	42	430	31
Rear seat outer belt assembly (for Through Anchor) x Body	42	430	31
Rear seat outer belt assembly (for Anchor Plate) x Body	42	430	31
Negative battery terminal x Battery (for LH Side)	5.4	55	48 in.*lbf

REAR SEAT OUTER BELT ASSEMBLY (for Hatchback 3 Door):

Part Tightened	N*m	kgf*cm	ft.*lbf
Rear seat outer belt assembly (for Retractor) x Body	42	430	31
Rear seat outer belt assembly (for Through Anchor) x Body	42	430	31
Rear seat outer belt assembly (for Anchor Plate) x Body	42	430	31
Negative battery terminal x Battery (for LH Side)	5.4	55	48 in.*lbf

REAR CENTER SEAT INNER BELT ASSEMBLY (for Sedan):

Part Tightened	N*m	kgf*cm	ft.*lbf
Rear center seat inner belt assembly x Body	42	430	31

REAR CENTER SEAT INNER BELT ASSEMBLY (for Hatchback LH Side):

Part Tightened	N*m	kgf*cm	ft.*lbf
Rear center seat inner belt assembly x Rear seat back frame sub-assembly (for 60/40 Split Seat Type)	42	430	31
Rear center seat inner belt assembly x Body (for Hold Down Seat Type)	42	430	31
Rear seat cushion assembly x Body (for 60/40 Split Seat Type)	37	375	27

REAR CENTER SEAT INNER BELT ASSEMBLY (for Hatchback RH Side):

Part Tightened	N*m	kgf*cm	ft.*lbf
Rear center seat inner belt assembly x Rear seat back frame sub-assembly (for 60/40 Split Seat Type)	42	430	31
Rear center seat inner belt assembly x Body (for Hold Down Seat Type)	42	430	31

REAR CENTER SEAT OUTER BELT ASSEMBLY (for Sedan):

Part Tightened	N*m	kgf*cm	ft.*lbf
Rear center seat outer belt assembly (for Retractor) x Body	42	430	31
Rear center seat outer belt assembly (for Anchor Plate) x Body (for Hold Down Seat Type)	42	430	31

REAR CENTER SEAT OUTER BELT ASSEMBLY (for 5 Hatchback Door):

Part Tightened	N*m	kgf*cm	ft.*lbf
Rear center seat outer belt assembly (for Retractor) x Body	42	430	31
Rear center seat outer belt assembly (for Bracket) x Body	42	430	31
Rear center seat outer belt assembly (for Through Anchor) x Body	42	430	31

Part Tightened	N*m	kgf*cm	ft.*lbf
Negative battery terminal x Battery (for LH Side)	5.4	55	48 in.*lbf

REAR CENTER SEAT OUTER BELT ASSEMBLY (for Hatchback 3 Door):

Part Tightened	N*m	kgf*cm	ft.*lbf
Negative battery terminal x Battery (for LH Side)	5.4	55	48 in.*lbf

THEFT DETERRENT SYSTEM

TORQUE SPECIFICATIONS

Part Tightened	N*m	kgf*cm	ft.*lbf
Hood lock assembly x Radiator support	7.5	76	66 in.*lbf
Security horn x Body	8.0	82	71 in.*lbf
Luggage compartment lock cylinder x Back door panel	4.9	50	43 in.*lbf
Negative battery terminal x Battery	5.4	55	48 in.*lbf

CRUISE CONTROL

TORQUE SPECIFICATIONS

Part Tightened	N*m	kgf*cm	ft.*lbft.*lbf
Cruise control main switch x Steering wheel	2.4	24	21 in.*lbf
Clutch switch assembly x Clutch pedal	16	160	12
Negative battery terminal x Battery	5.4	55	48 in.*lbf

LIGHTING

SERVICE DATA

Turn signal flasher relay	7 - Body ground: Below 1Ω
Headlight relay	3 - 5: 10 kΩ higher 3 - 5: Below 1 Ω (Battery voltage applied to terminals 1 and 2)
Fog light relay (for Sedan)	3 - 5: 10 kΩ higher 3 - 5: Below 1 Ω (Battery voltage applied to terminals 1 and 2)
Fog light relay (for Hatchback)	3 - 5: 10 kΩ higher 3 - 5: Below 1 Ω (Battery voltage applied to terminals 1 and 2)

TORQUE SPECIFICATIONS

HEADLIGHT ASSEMBLY (for Sedan):

Part Tightened	N*m	kgf*cm	ft.*lbf
Headlight assembly x Body	5.9	60	52 in.*lbf
Negative battery terminal x Battery	5.4	55	48 in.*lbf

HEADLIGHT ASSEMBLY (for Hatchback):

Part Tightened	N*m	kgf*cm	ft.*lbf
Negative battery terminal x Battery	5.4	55	48 in.*lbf

SIDE TURN SIGNAL LIGHT ASSEMBLY (for Hatchback):

Part Tightened	N*m	kgf*cm	ft.*lbf
Negative battery terminal x Battery	5.4	55	48 in.*lbf

FOG LIGHT ASSEMBLY (for Sedan):

Part Tightened	N*m	kgf*cm	ft.*lbf
Negative battery terminal x Battery	5.4	55	48 in.*lbf

FOG LIGHT ASSEMBLY (for Hatchback):

Part Tightened	N*m	kgf*cm	ft.*lbf
Negative battery terminal x Battery	5.4	55	48 in.*lbf

REAR COMBINATION LIGHT ASSEMBLY (for Sedan):

Part Tightened	N*m	kgf*cm	ft.*lbf
Rear combination light assembly x Body	4.9	50	43 in.*lbf
Negative battery terminal x Battery	5.4	55	48 in.*lbf

REAR COMBINATION LIGHT ASSEMBLY (for Hatchback):

Part Tightened	N*m	kgf*cm	ft.*lbf
Rear combination light assembly x Body	5.4	55	48 in.*lbf
Negative battery terminal x Battery	5.4	55	48 in.*lbf

LICENSE LIGHT ASSEMBLY (for Sedan):

Part Tightened	N*m	kgf*cm	ft.*lbf
Luggage compartment door outside garnish x Back door panel	4.9	50	43 in.*lbf
Luggage compartment door lock cylinder x Back door panel	4.9	50	43 in.*lbf
Negative battery terminal x Battery	5.4	55	48 in.*lbf

LICENSE LIGHT ASSEMBLY (for Hatchback):

Part Tightened	N*m	kgf*cm	ft.*lbf
Negative battery terminal x Battery	5.4	55	48 in.*lbf

HIGH MOUNTED STOP LIGHT ASSEMBLY (for Sedan with Rear Spoiler):

Part Tightened	N*m	kgf*cm	ft.*lbf
Negative battery terminal x Battery	5.4	55	48 in.*lbf

HIGH MOUNTED STOP LIGHT ASSEMBLY (for Sedan without Rear Spoiler):

Part Tightened	N*m	kgf*cm	ft.*lbf
Negative battery terminal x Battery	5.4	55	48 in.*lbf

HIGH MOUNTED STOP LIGHT ASSEMBLY (for Hatchback):

Part Tightened	N*m	kgf*cm	ft.*lbf
Negative battery terminal x Battery	5.4	55	48 in.*lbf

MAP LIGHT:

Part Tightened	N*m	kgf*cm	ft.*lbf
Negative battery terminal x Battery	5.4	55	48 in.*lbf

ROOM LIGHT:

Part Tightened	N*m	kgf*cm	ft.*lbf
Negative battery terminal x Battery	5.4	55	48 in.*lbf

LUGGAGE COMPARTMENT ROOM LIGHT (for Sedan):

Part Tightened	N*m	kgf*cm	ft.*lbf
Negative battery terminal x Battery	5.4	55	48 in.*lbf

LUGGAGE COMPARTMENT ROOM LIGHT (for Hatchback):

Part Tightened	N*m	kgf*cm	ft.*lbf
Negative battery terminal x Battery	5.4	55	48 in.*lbf

HEADLIGHT DIMMER SWITCH:

Part Tightened	N*m	kgf*cm	ft.*lbf
Negative battery terminal x Battery	5.4	55	48 in.*lbf

HAZARD WARNING SWITCH (for Sedan):

Part Tightened	N*m	kgf*cm	ft.*lbf
Negative battery terminal x Battery	5.4	55	48 in.*lbf

HAZARD WARNING SWITCH (for Hatchback):

Part Tightened	N*m	kgf*cm	ft.*lbf
Negative battery terminal x Battery	5.4	55	48 in.*lbf

STOP LIGHT SWITCH (for Sedan):

Part Tightened	N*m	kgf*cm	ft.*lbf
Negative battery terminal x Battery	5.4	55	48 in.*lbf

STOP LIGHT SWITCH (for Hatchback):

Part Tightened	N*m	kgf*cm	ft.*lbf
Negative battery terminal x Battery	5.4	55	48 in.*lbf

FRONT DOOR COURTESY SWITCH (for Sedan):

Part Tightened	N*m	kgf*cm	ft.*lbf
Front door courtesy switch x Body	3.7	38	33 in.*lbf
Negative battery terminal x Battery	5.4	55	48 in.*lbf

FRONT DOOR COURTESY SWITCH (for Hatchback):

Part Tightened	N*m	kgf*cm	ft.*lbf
Front door courtesy switch x Body	3.7	38	33 in.*lbf
Negative battery terminal x Battery	5.4	55	48 in.*lbf

REAR DOOR COURTESY SWITCH:

Part Tightened	N*m	kgf*cm	ft.*lbf
Rear door courtesy switch x Body	3.7	38	33 in.*lbf
Negative battery terminal x Battery	5.4	55	48 in.*lbf

BACK DOOR COURTESY SWITCH (for Sedan):

Part Tightened	N*m	kgf*cm	ft.*lbf
Luggage compartment door lock assembly x Back door panel	7.5	76	66 in.*lbf
Negative battery terminal x Battery	5.4	55	48 in.*lbf

BACK DOOR COURTESY SWITCH (for Hatchback):

Part Tightened	N*m	kgf*cm	ft.*lbf
Back door lock assembly x Back door panel	7.5	76	66 in.*lbf
Negative battery terminal x Battery	5.4	55	48 in.*lbf

FOG LIGHT RELAY (for Sedan):

Part Tightened	N*m	kgf*cm	ft.*lbf
Negative battery terminal x Battery	5.4	55	48 in.*lbf

FOG LIGHT RELAY (for Hatchback):

Part Tightened	N*m	kgf*cm	ft.*lbf
Negative battery terminal x Battery	5.4	55	48 in.*lbf

WIPER AND WASHER

TORQUE SPECIFICATIONS

FRONT WIPER MOTOR (for Sedan):

Part Tightened	N*m	kgf*cm	ft.*lbf
Front wiper motor x Front wiper link	5.5	56	49 in.*lbf
Front wiper motor and link x Cowl top panel outer	5.5	56	49 in.*lbf
Front wiper arm and blade assembly x Front wiper motor and link	26	265	19
Negative battery terminal x Battery	5.4	55	48 in.*lbf

FRONT WIPER MOTOR (for Hatchback):

Part Tightened	N*m	kgf*cm	ft.*lbf
Front wiper motor x Front wiper link	5.4	55	48 in.*lbf
Front wiper motor and link x Cowl top panel outer	5.5	56	49 in.*lbf
Front wiper arm and blade assembly x Front wiper motor and link	26	265	19
Negative battery terminal x Battery	5.4	55	48 in.*lbf

REAR WIPER MOTOR (for Hatchback):

Part Tightened	N*m	kgf*cm	ft.*lbf
Rear wiper motor x Back door panel	5.5	56	49 in.*lbf
Rear wiper arm and blade assembly x Rear wiper motor	5.5	56	49 in.*lbf
Negative battery terminal x Battery	5.4	55	48 in.*lbf

WIPER SWITCH (for Sedan):

Part Tightened	N*m	kgf*cm	ft.*lbf
Negative battery terminal x Battery	5.4	55	48 in.*lbf

WIPER SWITCH (for Hatchback):

Part Tightened	N*m	kgf*cm	ft.*lbf
Negative battery terminal x Battery	5.4	55	48 in.*lbf

WASHER MOTOR (for Sedan):

Part Tightened	N*m	kgf*cm	ft.*lbf
Windshield washer jar assembly x Batter	5.5	56	49 in.*lbf
Negative battery terminal x Battery	5.4	55	48 in.*lbf

WASHER MOTOR (for Hatchback):

Part Tightened	N*m	kgf*cm	ft.*lbf
Windshield washer jar assembly x Batter	5.5	56	49 in.*lbf
Negative battery terminal x Battery	5.4	55	48 in.*lbf

WASHER LEVEL WARNING SWITCH (for Sedan):

Part Tightened	N*m	kgf*cm	ft.*lbf
Windshield washer jar assembly x Batter	5.5	56	49 in.*lbf
Negative battery terminal x Battery	5.4	55	48 in.*lbf

DOOR LOCK

TORQUE SPECIFICATIONS

Part Tightened	N*m	kgf*cm	ft.*lbf
Front door lock assembly x Front door panel	5.0	51	44 in.*lbf
Rear door lock assembly x Rear door panel	5.0	51	44 in.*lbf
Back door lock actuator assembly x Back door panel	7.0	71	62 in.*lbf
Back door lock assembly x Back door panel	7.5	76	66 in.*lbf
Negative battery terminal x Battery	5.4	55	48 in.*lbf

METER

SERVICE DATA

Fuel sender gauge assembly	F (Upper End): 12.0 to 18.0 Ω E (Lower End): 405.0 to 415.0 Ω

TORQUE SPECIFICATIONS

Part Tightened	N*m	kgf*cm	ft.*lbft.*lbf
Negative battery terminal x Battery	5.4	55	48 in.*lbf

AUDIO / VISUAL

SERVICE DATA

FRONT NO. 1 SPEAKER (for Sedan):

Item	Tester Connection	Specified Condition
Standard resistance	1 - 2	Approximately 4 Ω

FRONT NO. 1 SPEAKER (for Hatchback):

Item	Tester Connection	Specified Condition
Standard resistance	1 - 2	Approximately 4 Ω

REAR SPEAKER (for Sedan):

Item	Tester Connection	Specified Condition
Standard resistance	1 - 2	Approximately 4 Ω

REAR SPEAKER (for Hatchback 5 Door):

Item	Tester Connection	Specified Condition
Standard resistance	1 - 2	Approximately 4 Ω

REAR SPEAKER (for Hatchback 3 Door):

Item	Tester Connection	Specified Condition
Standard resistance	1 - 2	Approximately 4 Ω

TORQUE SPECIFICATIONS

RADIO RECEIVER (for Sedan):

Part Tightened	N*m	kgf*cm	ft.*lbf
Negative battery terminal x Battery	5.4	55	48 in.*lbf

RADIO RECEIVER (for Hatchback):

Part Tightened	N*m	kgf*cm	ft.*lbf
Negative battery terminal x Battery	5.4	55	48 in.*lbf

FRONT NO. 1 SPEAKER (for Sedan):

Part Tightened	N*m	kgf*cm	ft.*lbf
Negative battery terminal x Battery	5.4	55	48 in.*lbf

FRONT NO. 1 SPEAKER (for Hatchback):

Part Tightened	N*m	kgf*cm	ft.*lbf
Negative battery terminal x Battery	5.4	55	48 in.*lbf

REAR SPEAKER (for Sedan):

Part Tightened	N*m	kgf*cm	ft.*lbf
Negative battery terminal x Battery	5.4	55	48 in.*lbf

REAR SPEAKER (for Hatchback 5 Door):

Part Tightened	N*m	kgf*cm	ft.*lbf
Negative battery terminal x Battery	5.4	55	48 in.*lbf

REAR SPEAKER (for Hatchback 3 Door):

Part Tightened	N*m	kgf*cm	ft.*lbf
Negative battery terminal x Battery	5.4	55	48 in.*lbf

RADIO ANTENNA CORD (for Sedan):

Part Tightened	N*m	kgf*cm	ft.*lbf
Negative battery terminal x Battery	5.4	55	48 in.*lbf

RADIO ANTENNA CORD (for Hatchback 5 Door):

Part Tightened	N*m	kgf*cm	ft.*lbf
Negative battery terminal x Battery	5.4	55	48 in.*lbf

RADIO ANTENNA CORD (for Hatchback 3 Door):

Part Tightened	N*m	kgf*cm	ft.*lbf
Negative battery terminal x Battery	5.4	55	48 in.*lbf

AMPLIFIER ANTENNA (for Sedan):

Part Tightened	N*m	kgf*cm	ft.*lbf
Negative battery terminal x Battery	5.4	55	48 in.*lbf

AMPLIFIER ANTENNA (for Hatchback 5 Door):

Part Tightened	N*m	kgf*cm	ft.*lbf
Amplifier antenna assembly x Body	4.5	46	40 in.*lbf
Negative battery terminal x Battery	5.4	55	48 in.*lbf

AMPLIFIER ANTENNA (for Hatchback 3 Door):

Part Tightened	N*m	kgf*cm	ft.*lbf
Amplifier antenna assembly x Body	4.5	46	40 in.*lbf
Negative battery terminal x Battery	5.4	55	48 in.*lbf

HORN

SERVICE DATA

HORN RELAY (for Sedan):

Item	Tester Connection	Specified Condition
Standard resistance	A8 - T6	10 kΩ or higher
		Below 1 Ω (Battery voltage applied to terminals A7 and T6)

HORN RELAY (for Hatchback):

Item	Tester Connection	Specified Condition
Standard resistance	A8 - T6	10 kΩ or higher
		Below 1 Ω (Battery voltage applied to terminals A7 and T6)

TORQUE SPECIFICATIONS

HORN RELAY (for Sedan):

Part Tightened	N*m	kgf*cm	ft.*lbf
Negative battery terminal x Battery	5.5	55	48 in.*lbf

HORN RELAY (for Hatchback):

Part Tightened	N*m	kgf*cm	ft.*lbf
Negative battery terminal x Battery	5.5	55	48 in.*lbf

LOW PITCHED HORN (for Sedan):

Part Tightened	N*m	kgf*cm	ft.*lbf
Low pitched horn assembly x Body	19.5	200	14
Negative battery terminal x Battery	5.5	55	48 in.*lbf

LOW PITCHED HORN (for Hatchback):

Part Tightened	N*m	kgf*cm	ft.*lbf
Low pitched horn assembly x Body	19.5	200	14
Negative battery terminal x Battery	5.5	55	48 in.*lbf

OTHER SYSTEM

TORQUE SPECIFICATIONS

CIGARETTE LIGHTER ASSEMBLY (for Sedan):

Part Tightened	N*m	kgf*cm	ft.*lbf
Negative battery terminal x Battery	5.4	55	48 in.*lbf

POWER OUTLET SOCKET (for Sedan):

Part Tightened	N*m	kgf*cm	ft.*lbf
Negative battery terminal x Battery	5.4	55	48 in.*lbf

POWER OUTLET SOCKET (for Hatchback):

Part Tightened	N*m	kgf*cm	ft.*lbf
Negative battery terminal x Battery	5.4	55	48 in.*lbf

WINDSHIELD / WINDOWGLASS

TORQUE SPECIFICATIONS

Part Tightened	N*m	kgf*cm	ft.*lbf
Power window regulator motor assembly front x Front door window regulator sub-assembly	5.4	55	48 in.*lbf
Power window regulator motor assembly rear x Rear door window regulator sub-assembly	5.4	55	48 in.*lbf
Negative battery terminal x Battery	5.4	55	48 in.*lbf

MIRROR

TORQUE SPECIFICATIONS

Part Tightened	N*m	kgf*cm	ft.*lbf
Outer rear view mirror assembly x Front door panel	8.0	82	71 in.*lbf
Negative battery terminal x Battery	5.4	55	48 in.*lbf

INSTRUMENT PANEL

TORQUE SPECIFICATIONS

Part Tightened	N*m	kgf*cm	ft.*lbf
Front passenger airbag assembly x Instrument panel reinforcement	20	204	15
Negative battery terminal x Battery	5.4	55	48 in.*lbf

SEAT

TORQUE SPECIFICATIONS

FRONT SEAT ASSEMBLY:

Part Tightened	N*m	kgf*cm	ft.*lbf
Front seat side airbag assembly x Front seat frame adjuster assembly	5.5	55	49 in.*lbf
Front seat assembly x Body	37	375	27
Negative battery terminal x Body	5.4	55	48 in.*lbf

REAR SEAT ASSEMBLY (for 60/40 Slide Reclining Hold Down Seat Type LH Side):

Part Tightened	N*m	kgf*cm	ft.*lbf
Rear seat track assembly x Rear seat back frame sub-assembly	33	335	24
Rear seat belt hook x Rear seat back frame sub-assembly	5.0	50	44 in.*lbf
Rear seat cushion assembly x Rear seat back frame sub-assembly (for Nut)	20	205	15
Rear seat cushion assembly x Rear seat back frame sub-assembly (for Bolt)	21	215	16
Rear seat inner belt assembly x Rear seat back adjuster sub-assembly	42	430	31
Rear center seat inner belt assembly x Rear seat back adjuster sub-assembly	42	430	31
Rear seat assembly x Body	37	375	27

REAR SEAT ASSEMBLY (for 60/40 Slide Reclining Hold Down Seat Type RH Side):

Part Tightened	N*m	kgf*cm	ft.*lbf
Rear seat track assembly x Rear seat back frame sub-assembly	33	335	24
Rear seat cushion assembly x Rear seat back frame sub-assembly	21	215	16
Rear seat inner belt assembly x Rear seat back adjuster sub-assembly	42	430	31
Rear seat assembly x Body	37	375	27

REAR SEAT ASSEMBLY (for Bench Reclining Hold Down Seat Type):

Part Tightened	N*m	kgf*cm	ft.*lbf
Rear seat leg sub-assembly x Rear seat back frame sub-assembly	42	430	31
Rear seat belt hook x Rear seat back frame sub-assembly	5.0	50	44 in.*lbf
Rear seat back assembly x Body	37	375	27

ENGINE HOOD / DOOR

TORQUE SPECIFICATIONS

Part Tightened	N*m	kgf*cm	ft.*lbf
Hood x Hood hinge	13	133	10
Hood lock x Radiator support	7.5	76	66 in.*lbf
Front door hinge assembly upper x Body	26	265	19
Front door hinge assembly upper x Front door panel	26	265	19
Front door hinge assembly lower x Body	26	265	19
Front door hinge assembly lower x Front door panel	26	265	19
Front door lock striker plate assembly x Body	23	235	17
Front door stiffener cushion x Front door panel	8.0	82	71 in.*lbf
Front door outside handle frame sub-assembly x Front door panel	4.0	41	35 in.*lbf
Front door lock assembly x Front door panel	5.0	51	44 in.*lbf
Front door outside handle cover x Front door outside handle frame sub-assembly	4.0	41	35 in.*lbf
Front door frame sub-assembly front lower x Front door panel	6.2	63	54 in.*lbf
Front door frame sub-assembly rear lower x Front door panel	6.2	63	54 in.*lbf
Front door check assembly x Front door panel	5.5	56	49 in.*lbf
Front door check assembly x Body	30	306	22
Power window regulator motor assembly front x Front door window regulator sub-assembly	5.4	55	48 in.*lbf
Front door window regulator sub-assembly x Front door panel	8.0	82	71 in.*lbf
Front door glass sub-assembly x Front door window regulator sub-assembly	8.0	82	71 in.*lbf
Rear door hinge assembly upper x Body	26	265	19
Rear door hinge assembly upper x Body	26	265	19
Rear door hinge assembly lower x Rear door panel	26	265	19
Rear door hinge assembly lower x Rear door panel	26	265	19
Rear door lock striker plate assembly x Body	23	235	17
Rear door outside handle frame sub-assembly x Rear door panel	4.0	41	35 in.*lbf
Rear door lock assembly x Rear door panel	5.0	51	44 in.*lbf
Rear door outside handle cover x Rear door outside handle frame sub-assembly	4.0	41	35 in.*lbf
Power window regulator motor assembly rear x Rear door window regulator sub-assembly	5.4	55	48 in.*lbf
Rear door window regulator sub-assembly x Rear door panel	8.0	82	71 in.*lbf
Rear door window division bar sub-assembly x Rear door panel	6.2	63	54 in.*lbf
Rear door check assembly x Rear door panel	5.5	56	49 in.*lbf
Rear door check assembly x Body	30	306	22
Back door hinge sub-assembly x Back door panel	12	122	8.9
Back door lock striker assembly x Body	12	122	8.9
Back door lock actuator assembly x Back door panel	7.0	71	62 in.*lbf
Back door lock cylinder assembly x Back door panel	7.0	71	62 in.*lbf
Luggage compartment door hinge arm sub-assembly x Back door panel	7.0	71	62 in.*lbf
Luggage compartment door striker x Body	5.5	56	49 in.*lbf
Luggage compartment lock cylinder x Back door panel	4.9	50	43 in.*lbf
Negative battery terminal x Battery	5.4	55	48 in.*lbf

EXTERIOR

TORQUE SPECIFICATIONS

FRONT BUMPER (for Sedan):

Part Tightened	N*m	kgf*cm	ft.*lbf
Front bumper arm sub-assembly x Body	40	410	30
Windshield washer jar assembly x Front bumper arm sub-assembly RH	5.5	55	49 in.*lbf
Front Bumper stone deflector bracket x Body	5.5	55	49 in.*lbf
Front bumper reinforcement sub-assembly x Front bumper arm sub-assembly	40	410	30
Front bumper reinforcement sub-assembly x Front bumper stone deflector bracket	5.5	55	49 in.*lbf
Front bumper side retainer x Body	5.0	51	44 in.*lbf
Negative battery terminal x Battery	5.4	55	48 in.*lbf

FRONT BUMPER (for Hatchback):

Part Tightened	N*m	kgf*cm	ft.*lbf
Front bumper arm sub-assembly x Body	40	410	30
Windshield washer jar assembly x Front bumper arm sub-assembly RH	5.5	55	49 in.*lbf
Front Bumper stone deflector bracket x Body	5.5	55	49 in.*lbf
Front bumper reinforcement sub-assembly x Front bumper arm sub-assembly	40	410	30
Front bumper reinforcement sub-assembly x Front bumper stone deflector bracket	5.5	55	49 in.*lbf
Negative battery terminal x Battery	5.4	55	48 in.*lbf

REAR BUMPER (for Sedan):

Part Tightened	N*m	kgf*cm	ft.*lbf
Rear bumper arm sub-assembly x Body	19	195	14
Rear bumper reinforcement x Rear bumper arm sub-assembly	19	195	14
Negative battery terminal x Battery	5.4	55	48 in.*lbf

REAR BUMPER (for Hatchback):

Part Tightened	N*m	kgf*cm	ft.*lbf
Rear bumper arm sub-assembly x Body	19	195	14
Rear bumper reinforcement x Rear bumper arm sub-assembly	19	195	14
Negative battery terminal x Battery	5.4	55	48 in.*lbf

NAME PLATE (for Sedan):

Part Tightened	N*m	kgf*cm	ft.*lbf
Negative battery terminal x Battery	5.4	55	48 in.*lbf

NAME PLATE (for Hatchback):

Part Tightened	N*m	kgf*cm	ft.*lbf
Negative battery terminal x Battery	5.4	55	48 in.*lbf

REAR SPOILER (for Sedan):

Part Tightened	N*m	kgf*cm	ft.*lbf
Negative battery terminal x Battery	5.4	55	48 in.*lbf

FRONT DOOR BELT MOULDING (for Sedan):

Part Tightened	N*m	kgf*cm	ft.*lbf
Negative battery terminal x Battery (w/ Power Window)	5.4	55	48 in.*lbf

FRONT DOOR BELT MOULDING (for Hatchback):

Part Tightened	N*m	kgf*cm	ft.*lbf
Negative battery terminal x Battery (w/ Power Window)	5.4	55	48 in.*lbf

REAR DOOR BELT MOULDING (for Hatchback):

Part Tightened	N*m	kgf*cm	ft.*lbf
Negative battery terminal x Battery (w/ Power Window)	5.4	55	48 in.*lbf

NO. 1 BLACK OUT TAPE (for Sedan):

Part Tightened	N*m	kgf*cm	ft.*lbf
Negative battery terminal x Battery (w/ Power Window)	5.4	55	48 in.*lbf

NO. 1 BLACK OUT TAPE (for Hatchback):

Part Tightened	N*m	kgf*cm	ft.*lbf
Negative battery terminal x Battery (w/ Power Window)	5.4	55	48 in.*lbf

NO. 2 BLACK OUT TAPE (for Sedan):

Part Tightened	N*m	kgf*cm	ft.*lbf
Negative battery terminal x Battery (w/ Power Window)	5.4	55	48 in.*lbf

NO. 2 BLACK OUT TAPE (for Hatchback):

Part Tightened	N*m	kgf*cm	ft.*lbf
Negative battery terminal x Battery (w/ Power Window)	5.4	55	48 in.*lbf

INTERIOR

TORQUE SPECIFICATIONS

ROOF HEADLINING (for Sedan):

Part Tightened	N*m	kgf*cm	ft.*lbf
Front seat outer belt assembly (for Through Anchor) x Front shoulder belt anchor adjuster assembly	42	430	31
Negative battery terminal x Battery	5.4	55	48 in.*lbf

ROOF HEADLINING (for Hatchback 5 Door):

Part Tightened	N*m	kgf*cm	ft.*lbf
Front seat outer belt assembly (for Through Anchor) x Front shoulder belt anchor adjuster assembly	42	430	31
Rear center seat outer belt assembly (for Through Anchor) x Body	42	430	31
Rear seat outer belt assembly (for Anchor Plate) x Body	42	430	31
Negative battery terminal x Battery	5.4	55	48 in.*lbf

ROOF HEADLINING (for Hatchback 3 Door):

Part Tightened	N*m	kgf*cm	ft.*lbf
Front seat outer belt assembly (for Through Anchor) x Body	42	430	31
Rear seat outer belt assembly (for Anchor Plate) x Body	42	430	31
Negative battery terminal x Battery	5.4	55	48 in.*lbf

OUTSIDE VEHICLE

GENERAL MAINTENANCE

Performing the following maintenance checks on the vehicle is the owner's responsibility. The owner may perform the maintenance or take the vehicle to a service center. Check the parts of the vehicle described below on a daily basis. In most cases, special tools are not required. It is recommended that the owner performs these checks. The procedures for general maintenance are as follows.

1. GENERAL NOTES

- Maintenance requirements vary depending on the country.
- Check the maintenance schedule in the owner's manual supplement.
- Following the maintenance schedule is mandatory.
- Determine the appropriate time to service the vehicle using either miles driven or months elapsed, whichever reaches the specification first.
- Maintain similar intervals between periodic maintenance, unless otherwise noted.
- Failing to check each vehicle part could lead to poor engine performance and increase exhaust emissions.

2. TIRES

(a) Check the tire inflation pressure with a gauge. Make adjustments if necessary.

(b) Check the surfaces of the tires for cuts, damage or excessive wear.

3. WHEEL NUTS

(a) Check for nuts that are loose or missing. Tighten them if necessary.

4. TIRE ROTATION (See page TW-2)

5. WINDSHIELD WIPER BLADES

(a) Check the blades for wear or cracks whenever they are unable to wipe the windshield clean. Replace them if necessary.

6. FLUID LEAKS

(a) Check under the vehicle for leaking fuel, oil, water and other fluids.

NOTICE:

If you smell gasoline fumes or notice any leaks, locate the cause and correct it.

7. DOORS AND ENGINE HOOD

(a) Check that all of the doors and the hood operate smoothly and that all the latches lock securely.

(b) When the primary latch is released, check that the engine hood secondary latch prevents the hood from opening.

INSIDE VEHICLE

GENERAL MAINTENANCE

Performing the following maintenance checks on the vehicle is the owner's responsibility. The owner may perform the maintenance or take the vehicle to a service center. Check the parts of the vehicle described below on a daily basis. In most cases, special tools are not required. It is recommended that the owner performs these checks. The procedures for general maintenance are as follows.

1. GENERAL NOTES

- Maintenance requirements vary depending on the country.
- Check the maintenance schedule in the owner's manual supplement.
- Following the maintenance schedule is mandatory.
- Determine the appropriate time to service the vehicle using either miles driven or months elapsed, whichever reaches the specification first.
- Maintain similar intervals between periodic maintenance, unless otherwise noted.
- Failing to check each vehicle part could lead to poor engine performance and increase exhaust emissions.

2. LIGHTS

(a) Check that the headlights, stop lights, taillights, turn signal lights, and other lights illuminate or blink properly. Also, check if they have enough brightness.

(b) Check that the headlights are aimed properly.

3. WARNING LIGHTS AND BUZZERS

(a) Check that all the warning lights and buzzers are working.

4. HORNS

(a) Check that the horn is working.

5. WINDSHIELD GLASS

(a) Check for scratches, pits or abrasions.

6. WINDSHIELD WIPERS AND WASHER

(a) Check that the windshield washers are aimed properly. Also, check that the center stream of washer fluid sprays on the windshield within the operating range of the wipers.

(b) Check if the wipers streak or not.

7. WINDSHIELD DEFROSTER

(a) When the heater or air conditioning is on the defroster setting, check if air comes out of the defroster outlet.

8. REAR VIEW MIRROR

(a) Check that the rear view mirror is securely mounted.

9. SUN VISORS

(a) Check that the sun visors move freely and are securely mounted.

10. STEERING WHEEL

(a) Check that the steering wheel has the proper amount of free play. Also check for steering difficulty, free play in the steering wheel and unusual noises.

11. SEATS

(a) Check that the seat adjusters, seatback recliner and other front seat controls operate smoothly.
(b) Check that all the latches lock securely in all positions.
(c) Check that the locks hold securely in all latched positions.
(d) Check that the headrests move up and down smoothly and that the locks hold securely in all latched positions.
(e) When the rear seatbacks are folded down, check that the latches lock securely.

12. SEAT BELTS

(a) Check that the seat belt system such as the buckles, retractors and anchors operate properly and smoothly.
(b) Check that the belt webbing is not cut, frayed, worn or damaged. Replace if necessary.

13. ACCELERATOR PEDAL

(a) Check that the accelerator pedal operates smoothly. In other words, check that the pedal does not have uneven pedal resistance or become stuck in certain positions.

14. BRAKE PEDAL

(a) Check that the brake pedal operates smoothly.
(b) Check that the pedal has the proper reserve distance and free play.
(c) Start the engine and check the brake booster function.

15. BRAKES

(a) In a safe place, check that the vehicle remains straight when applying the brakes.

16. PARKING BRAKE

(a) Check that the parking brake lever has the proper amount of travel (see page PB-1).
(b) On a safe incline, check that the vehicle is held securely with only the parking brake applied.

17. AUTOMATIC TRANSAXLE "PARK" MECHANISM

(a) Check the lock release button of the shift lever for proper and smooth operation.
(b) When the shift lever is in the P position and all brakes are released on a low incline, check that the vehicle is stable.

UNDER HOOD

GENERAL MAINTENANCE

1. GENERAL NOTES

- Maintenance requirements vary depending on the country.
- Check the maintenance schedule in the owner's manual supplement.
- Following the maintenance schedule is mandatory.
- Determine the appropriate time to service the vehicle using either miles driven or time elapsed, whichever reaches the specification first.
- Maintain similar intervals between periodic maintenance, unless otherwise noted.
- Failing to check each vehicle part could lead to poor engine performance and increase exhaust emissions.

2. WINDSHIELD WASHER FLUID

(a) Check that there is sufficient fluid in the tank.

3. ENGINE COOLANT LEVEL

(a) Check that the coolant level is between the "FULL" and "LOW" lines on the see-through reservoir.

4. RADIATOR AND HOSES

(a) Check that the front of the radiator is clean and not blocked by leaves, dirt or bugs.

(b) Check the hoses for cracks, kinks, rot or loose connections.

5. BATTERY ELECTROLYTE LEVEL

(a) Check that the electrolyte level of all the battery cells is between the upper and lower level lines on the case.

HINT:

If the electrolyte level is difficult to see, lightly shake the vehicle.

6. BRAKE FLUID LEVEL

(a) Check that the brake fluid levels are near the upper level lines on the see-through reservoirs.

7. ENGINE DRIVE BELT

(a) Check the drive belt for fraying, cracks, wear or oiliness.

8. ENGINE OIL LEVEL

(a) Check the level on the dipstick with the engine stopped.

9. AUTOMATIC TRANSMISSION FLUID (See page AX-93)

10. EXHAUST SYSTEM

(a) Check for unusual exhaust sounds or abnormal exhaust fumes. Inspect the cause and repair it.

ENGINE

GENERAL MAINTENANCE

1. INSPECT DRIVE BELT

2. INSPECT SPARK PLUGS (See page IG-5)

3. INSPECT AIR CLEANER FILTER

(a) Remove the air filter.

(b) Visually check that the air filter is not excessively damaged or oily. If necessary, replace the air filter.

(c) Reinstall the air filter.

(d) Clean the filter with compressed air.

HINT:

First blow from the inside of the filter thoroughly then repeat from the outside.

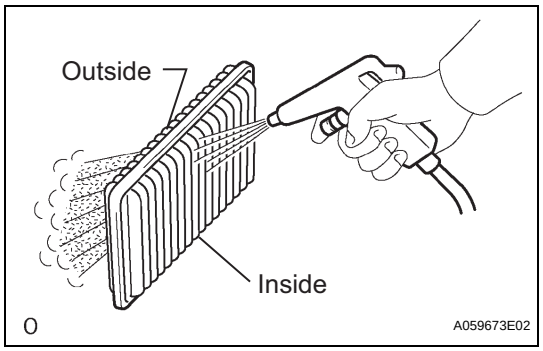

4. REPLACE AIR CLEANER FILTER

(a) Replace the air filter with a new one.

5. REPLACE ENGINE OIL AND OIL FILTER (See page LU-4)

6. REPLACE ENGINE COOLANT (See page CO-8)

7. INSPECT GASKET IN FUEL TANK CAP (See page EC-24)

8. INSPECT FUEL LINES AND CONNECTIONS, FUEL TANK VAPOR VENT SYSTEM HOSES AND FUEL TANK BANDS

(a) Visually check the fuel lines for cracks, leakage, loose connections, deformation and tank band looseness.

9. INSPECT EXHAUST PIPES AND MOUNTINGS

(a) Visually check the pipes, hangers and connections for severe corrosion, leaks or damage.

10. INSPECT VALVE CLEARANCE (See page EM-9)

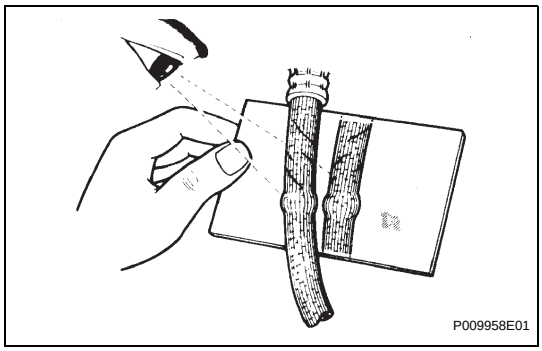

MA

BRAKE

GENERAL MAINTENANCE

1. INSPECT BRAKE LINES AND HOSES

HINT:

Work in a well-lighted area. Turn the front wheels fully to the right or left before beginning the inspection.

(a) Using a mirror, check the entire circumference and length of the brake lines and hoses for:
- Damage
- Wear
- Deformation
- Cracks
- Corrosion
- Leaks
- Bends
- Twists

(b) Check all the clamps for tightness and the connections for leakage.

(c) Check that the hoses and lines are not near sharp edges, moving parts or the exhaust system.

(d) Check that the lines are installed properly and pass through the center of the grommets.

2. INSPECT BRAKE LININGS AND DRUMS

(a) Check the brake linings and drums. Also check the brake linings of parking brake.

3. INSPECT FRONT BRAKE

(a) Check the front brake pads (see page BR-51).

(b) Check the front brake discs (see page BR-51).

4. INSPECT REAR BRAKE

(a) Check the rear brake drums (see page BR-62).

(b) Check the rear brake shoe linings (see page BR-62).

CHASSIS

GENERAL MAINTENANCE

1. INSPECT STEERING LINKAGE AND GEAR HOUSING

(a) Check the steering wheel free play.

(b) Check the steering linkage for looseness or damage.

(1) Check that the tie rod ends do not have excessive play.

(2) Check that the dust seals and boots are not damaged.

(3) Check that the boot clamps are not loose.

(4) Check that the steering gear housing is not damaged.

(5) Check that the connectors are properly connected to the steering gear housing.

2. INSPECT BALL JOINTS AND DUST COVERS

(a) Inspect the ball joints for excessive looseness.

(1) Jack up the front of the vehicle and place wooden blocks with a height of 180 to 200 mm (7.09 to 7.87 in.) under the front tires.

(2) Lower the vehicle until the front coil spring has about half its ordinary load. Place stands under the vehicle for safety.

(3) Check that the front wheels are pointing straight ahead. Use wheel chocks on all 4 wheels.

(4) Using a lever, pry up the end of the lower arm. Check the amount of play.

Maximum ball joint vertical play:
0 mm (0 in.)

If there is any play, replace the ball joint.

(b) Check the dust cover for damage.

3. INSPECT DRIVE SHAFT BOOTS

(a) Check the drive shaft boots for loose clamps, grease leakage, kinks or damage.

4. INSPECT AUTOMATIC TRANSAXLE FLUID (See page AX-93)

5. INSPECT MANUAL TRANSAXLE OIL (See page MX-2)

MA

BODY

GENERAL MAINTENANCE

1. TIGHTEN BOLTS AND NUTS

(a) Tighten the bolts and nuts on the chassis parts listed below, if necessary.
- Front axle and suspension
- Drive train
- Rear axle and suspension
- Brake system
- Engine mounting
- Other chassis parts

(b) Tighten the bolts and nuts on the body parts listed below, if necessary.
- Seat belt system
- Seats
- Doors and hood
- Body mountings
- Fuel tank
- Exhaust pipe system
- Other body parts

2. CLEAN AIR CONDITIONING FILTER

(a) Visually inspect the surface of the filter.

(b) If the filter is contaminated with foreign matter, clean or replace the filter.

3. TIRE ROTATION (See page TW-2)

SFI SYSTEM

PRECAUTION

NOTICE:

- **Perform RESET MEMORY (AT initialization) when replacing the automatic transmission assembly, engine assembly or ECM (See page AX-14).**
- **Perform REGISTRATION (VIN registration) when replacing the ECM (See page ES-13).**

HINT:

Initialization cannot be completed by only removing the battery.

DEFINITION OF TERMS

Terms	Definition
Monitor Description	Description of what ECM monitors and how detects malfunctions (monitoring purpose and details).
Related DTCs	Group of diagnostic trouble codes that are output by ECM based on same malfunction detection logic.
Typical Enabling Condition	Preconditions that allow ECM to detect malfunctions. With all preconditions satisfied, ECM sets DTC when monitored value(s) exceeds malfunction threshold(s).
Sequence of Operation	Order of monitor priority, applied if multiple sensors and components involved in single malfunction detection process. Each sensor and component monitored in turn, when previous detection operation completed.
Required Sensor/Components	Sensors and components used by ECM to detect each malfunction.
Frequency of Operation	Number of times ECM checks for each malfunction during each driving cycle. "Once per driving cycle" means ECM only performs checks for that malfunction once during single driving cycle. "Continuous" means ECM performs checks for that malfunction whenever enabling conditions met.
Duration	Minimum time for which ECM must detect continuous deviation in monitored value(s) in order to set DTC. Timing begins when Typical Enabling Conditions met.
Malfunction Thresholds	Value, beyond which, ECM determines malfunctions exist and sets DTCs.
MIL Operation	Timing of MIL illumination after defected. "Immediate" means ECM illuminates MIL as soon as malfunction detected. "2 driving cycle" means ECM illuminates MIL if same malfunction detected second time during next sequential driving cycle.

PARTS LOCATION

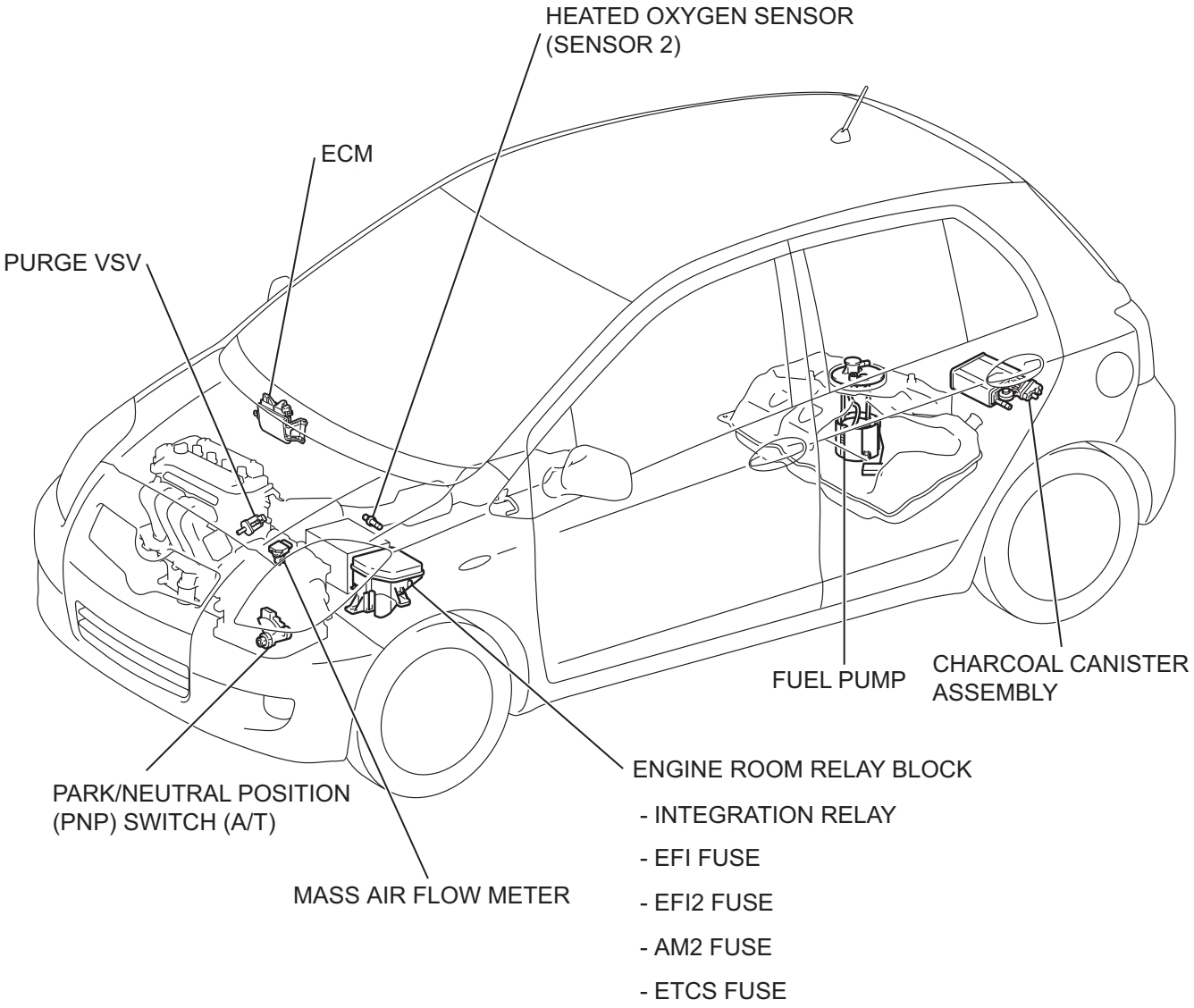

Y

A112592E01

ES

ES

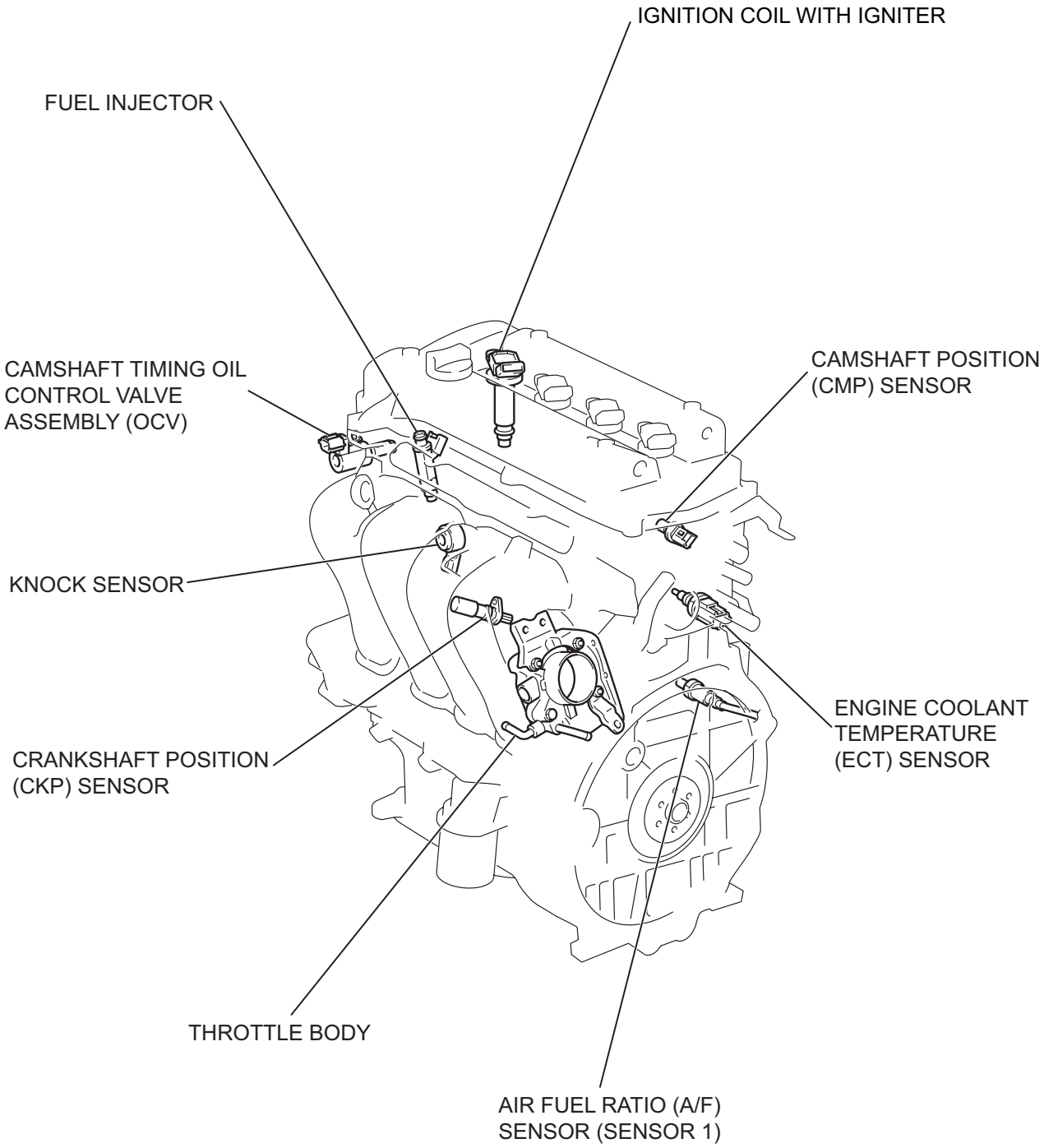
IGNITION COIL WITH IGNITER
FUEL INJECTOR
CAMSHAFT TIMING OIL CONTROL VALVE ASSEMBLY (OCV)
CAMSHAFT POSITION (CMP) SENSOR
KNOCK SENSOR
ENGINE COOLANT TEMPERATURE (ECT) SENSOR
CRANKSHAFT POSITION (CKP) SENSOR
THROTTLE BODY
AIR FUEL RATIO (A/F) SENSOR (SENSOR 1)
A115674E02

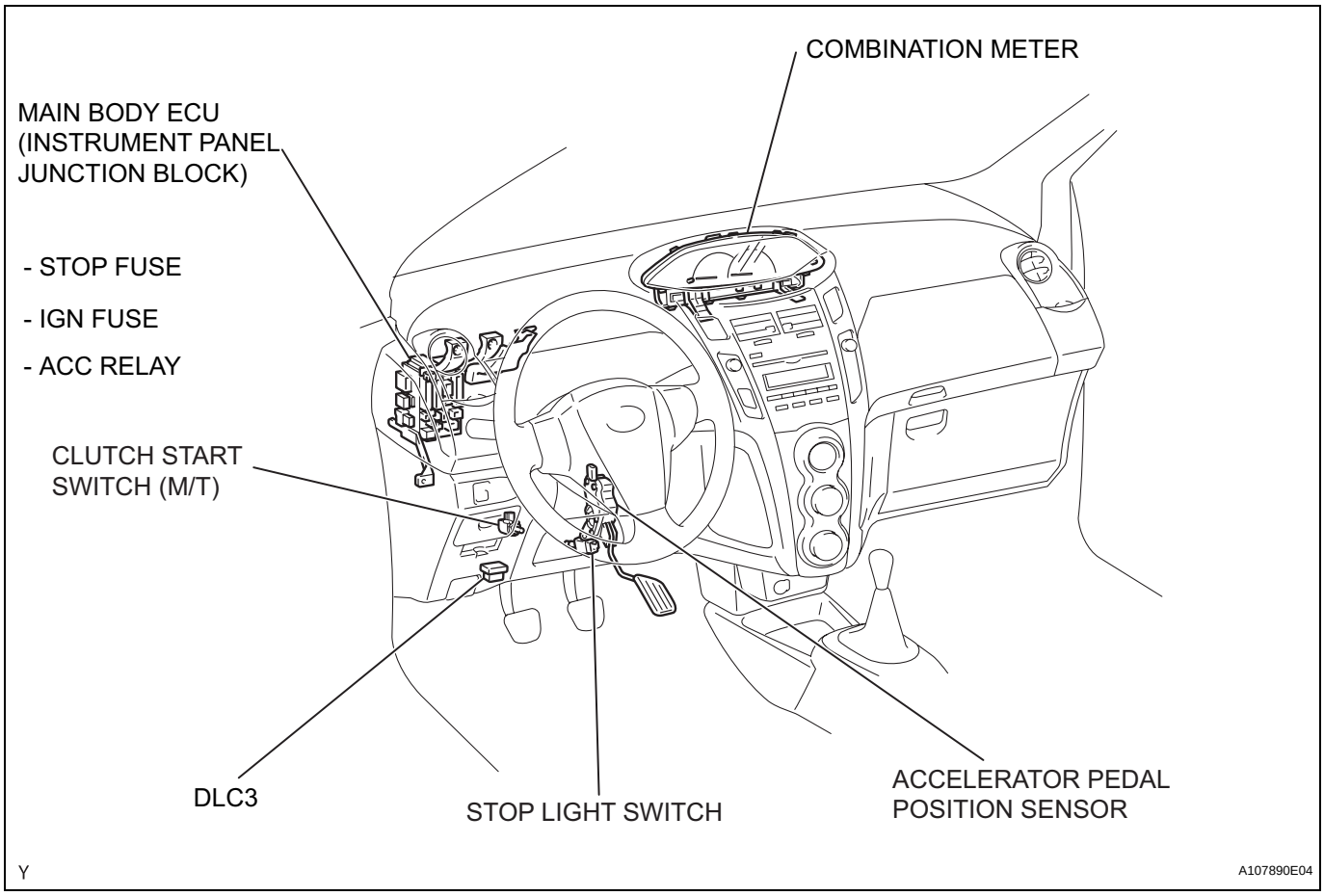
COMBINATION METER
MAIN BODY ECU
(INSTRUMENT PANEL
JUNCTION BLOCK)
- STOP FUSE
- IGN FUSE
- ACC RELAY
CLUTCH START
SWITCH (M/T)
DLC3
STOP LIGHT SWITCH
ACCELERATOR PEDAL
POSITION SENSOR
Y
A107890E04

ES

SYSTEM DIAGRAM

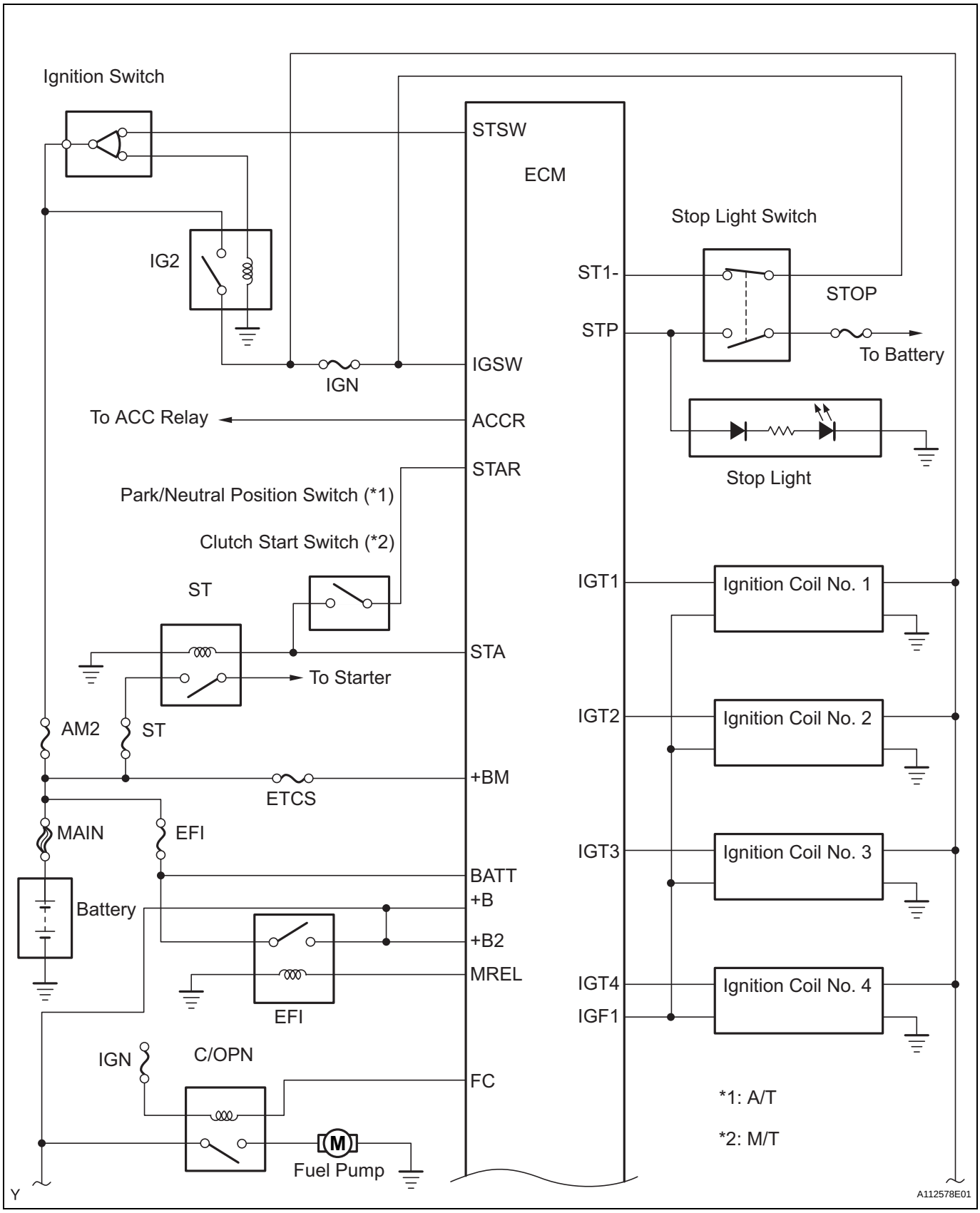

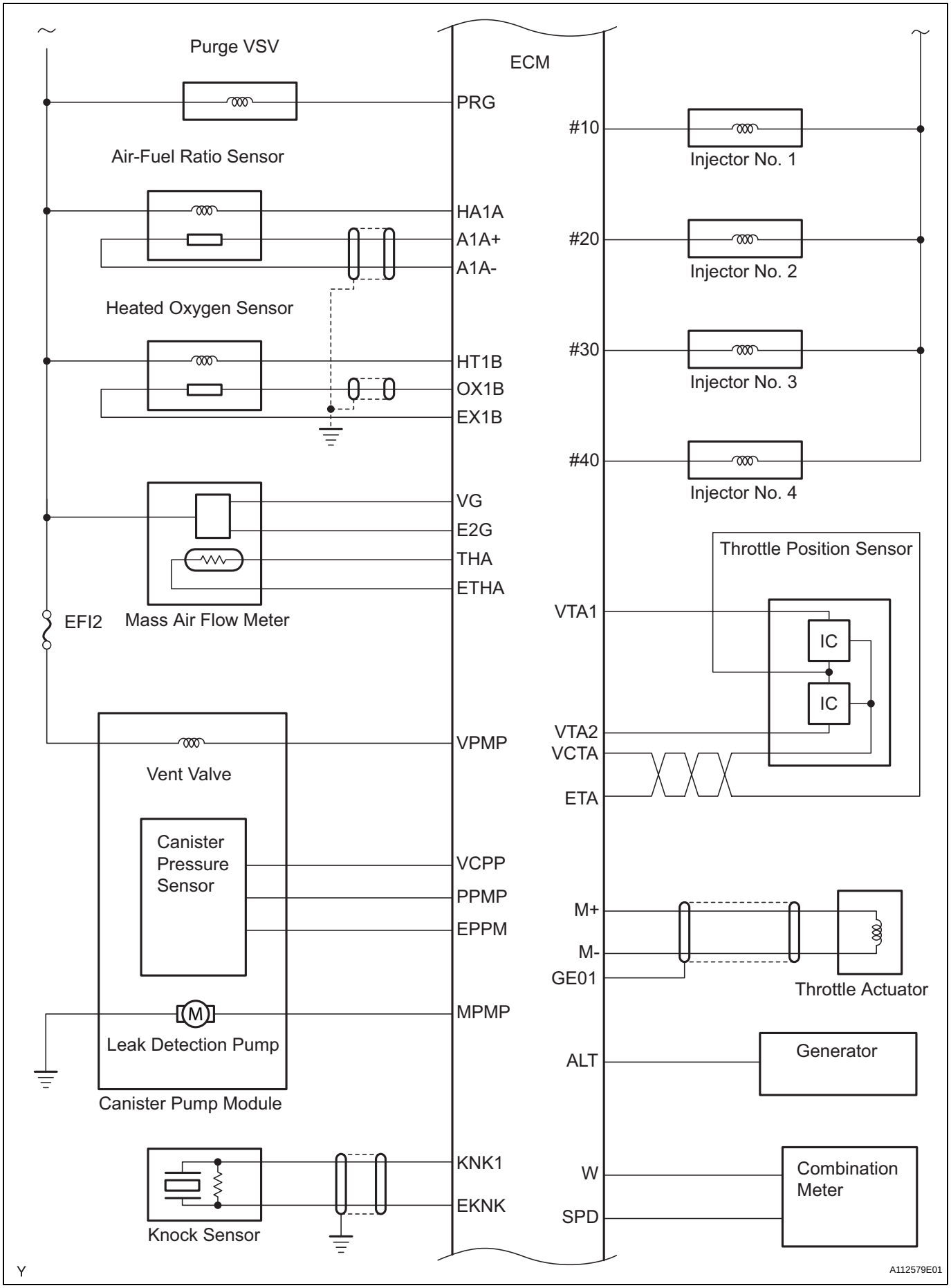
Purge VSV
ECM
PRG
#10
Injector No. 1
Air-Fuel Ratio Sensor
HA1A
A1A+
A1A-
#20
Injector No. 2
Heated Oxygen Sensor
HT1B
OX1B
EX1B
#30
Injector No. 3
#40
Injector No. 4
VG
E2G
THA
ETHA
Throttle Position Sensor
VTA1
IC
IC
EFI2
Mass Air Flow Meter
VPMP
VTA2
VCTA
ETA
Vent Valve
Canister Pressure Sensor
VCPP
PPMP
EPPM
M+
M-
GE01
Throttle Actuator
MPMP
Leak Detection Pump
ALT
Generator
Canister Pump Module
KNK1
EKNK
W
SPD
Combination Meter
Knock Sensor
Y
A112579E01

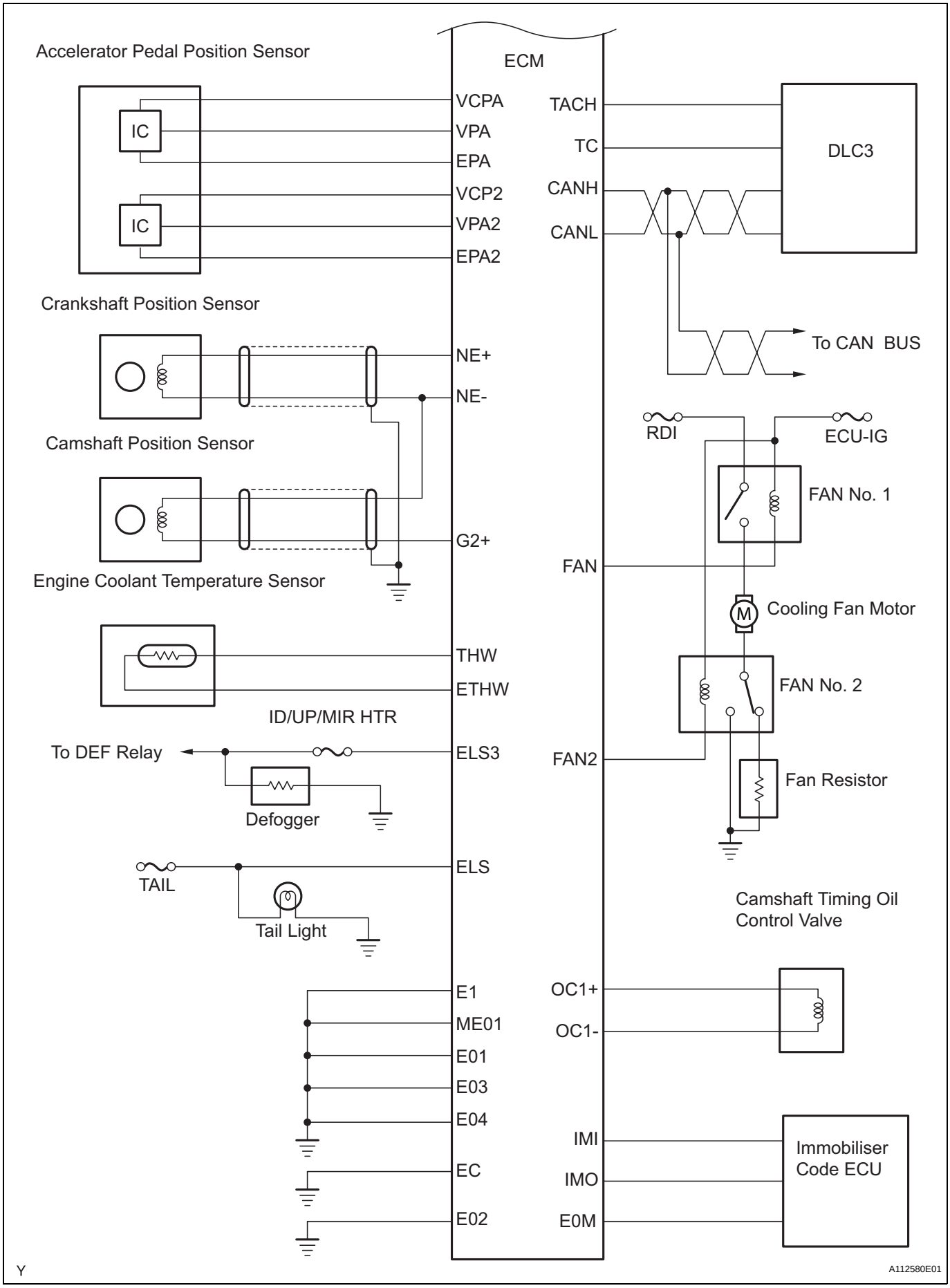
Accelerator Pedal Position Sensor
IC
IC
Crankshaft Position Sensor
Camshaft Position Sensor
Engine Coolant Temperature Sensor
ID/UP/MIR HTR
To DEF Relay
Defogger
TAIL
Tail Light
ECM
VCPA
VPA
EPA
VCP2
VPA2
EPA2
NE+
NE-
G2+
THW
ETHW
ELS3
ELS
E1
ME01
E01
E03
E04
EC
E02
TACH
TC
CANH
CANL
DLC3
To CAN BUS
RDI
ECU-IG
FAN No. 1
FAN
M
Cooling Fan Motor
FAN No. 2
FAN2
Fan Resistor
Camshaft Timing Oil Control Valve
OC1+
OC1-
IMI
IMO
E0M
Immobiliser Code ECU
Y
A112580E01

HOW TO PROCEED WITH TROUBLESHOOTING

HINT:
*: Use the intelligent tester.

1	VEHICLE BROUGHT TO WORKSHOP

NEXT

2	CUSTOMER PROBLEM ANALYSIS

NEXT

3	CONNECT INTELLIGENT TESTER TO DLC3*

HINT:
If the display indicates a communication fault in the tester, inspect the DLC3.

NEXT

4	CHECK DTC AND FREEZE FRAME DATA*

HINT:
Record or print DTCs and freeze frame data, if necessary.

NEXT

5	CLEAR DTC AND FREEZE FRAME DATA*

NEXT

6	CONDUCT VISUAL INSPECTION

NEXT

7	SET CHECK MODE DIAGNOSIS*

NEXT

8	CONFIRM PROBLEM SYMPTOMS

HINT:
If the engine does not start, perform steps 10 and 12 first.

Result	Proceed to
Malfunction does not occur	A
Malfunction occurs	B

B → GO TO STEP 10

A

9	SIMULATE SYMPTOMS

NEXT

10	CHECK DTC*

Result	Proceed to
Malfunction code	A
No code	B

B → GO TO STEP 12

A

11	REFER TO DTC CHART

NEXT

GO TO STEP 14

12	CONDUCT BASIC INSPECTION

Result	Proceed to
Malfunctioning parts not confirmed	A
Malfunctioning parts confirmed	B

B → GO TO STEP 17

A

13 **REFER TO PROBLEM SYMPTOMS TABLE**

Result	Proceed to
Malfunctioning circuit confirmed	A
Malfunctioning parts confirmed	B

B → **GO TO STEP 17**

A

14 **CHECK ECM POWER SOURCE CIRCUIT**

NEXT

15 **CONDUCT CIRCUIT INSPECTION**

Result	Proceed to
Malfunction not confirmed	A
Malfunction confirmed	B

B → **GO TO STEP 18**

A

16 **CHECK FOR INTERMITTENT PROBLEMS**

NEXT

GO TO STEP 18

17 **CONDUCT PARTS INSPECTION**

NEXT

18 **IDENTIFY PROBLEM**

NEXT

19 **ADJUST AND/OR REPAIR**

NEXT

ES

20	CONDUCT CONFIRMATION TEST

NEXT

END

CHECK FOR INTERMITTENT PROBLEMS

HINT:
Inspect the vehicle's ECM using check mode. Intermittent problems are easier to detect with an intelligent tester when the ECM is in check mode. In check mode, the ECM uses 1 trip detection logic, which is more sensitive to malfunctions than normal mode (default), which uses 2 trip detection logic.

1. Clear the DTCs (See page ES-34).
2. Switch the ECM from normal mode to check mode using an intelligent tester (See page ES-37).
3. Perform a simulation test.
4. Check and wiggle the harness(es), connector(s) and terminal(s).

BASIC INSPECTION

When a malfunction is not confirmed by the DTC check, troubleshooting should be carried out in all circuits considered to be possible causes of the problem. In many cases, by carrying out the basic engine check shown in the following flowchart, the location of the problem can be found quickly and efficiently. Therefore, using this check is essential when engine troubleshooting.

ES

1 CHECK BATTERY VOLTAGE

NOTICE:
Conduct this check with the engine stopped and ignition switch OFF.

Result	Proceed to
11 V or more	OK
Below 11 V	NG

NG → **CHARGE OR REPLACE BATTERY**

OK ↓

2 CHECK WHETHER ENGINE WILL CRANK

NG → **PROCEED TO PROBLEM SYMPTOMS TABLE**

OK ↓

3 CHECK WHETHER ENGINE STARTS

NG → **GO TO STEP 6**

OK ↓

4 CHECK AIR FILTER

(a) Visually check that the air filter is not excessively contaminated with dirt or oil.

NG → **REPLACE AIR FILTER**

OK ↓

5 CHECK IDLING SPEED

NG → **TROUBLESHOOT IDLING SPEED AND PROCEED TO NEXT STEP**

OK

6	CHECK FUEL PRESSURE

NG → TROUBLESHOOT FUEL PRESSURE AND PROCEED TO NEXT STEP

OK

7	CHECK FOR SPARK

NG → TROUBLESHOOT SPARK AND PROCEED TO NEXT STEP

OK

PROCEED TO PROBLEM SYMPTOMS TABLE

REGISTRATION

NOTICE:
The Vehicle Identification Number (VIN) must be input into the replacement ECM.
HINT:
The VIN is a 17-digit alphanumeric number. An intelligent tester is required to register the VIN.

1. DESCRIPTION

This registration section consists of three parts, Input Instructions, Read VIN and Write VIN.

(a) Input Instructions: Explains the general VIN input instructions for when using an intelligent tester.

(b) Read VIN: Explains the VIN reading process in a flowchart. This process allows the VIN stored in the ECM to be read, in order to confirm that the two VINs, provided with the vehicle and stored in the vehicle's ECM, are the same.

(c) Write VIN: Explains the VIN writing process in a flowchart. This process allows the VIN to be input into the ECM. If the ECM is changed, or the VIN and VIN do not match, the VIN can be registered, or overwritten in the ECM by following this procedure.

2. INPUT INSTRUCTIONS

(a) Intelligent tester
The arrow buttons (UP, DOWN, RIGHT and LEFT) and numerical buttons (0 to 9) are used to input the VIN.

(b) Cursor Operation
To move the cursor around the tester screen, press the RIGHT and LEFT buttons.

(c) Alphabetical Character Input
(1) Press the UP and DOWN buttons to select the desired alphabetical character.
(2) After selection, the cursor should move.

(d) Numeric Character Input
(1) Press the numerical button corresponding to the number that you want to input.
(2) After input, the cursor should move.
HINT:
Numerical characters can also be selected by using the UP and DOWN buttons.

(e) Correction
(1) When correcting the input character(s), put the cursor onto the character using the RIGHT and LEFT buttons.
(2) Select or input the correct character using the UP/DOWN buttons, or the numerical buttons.

(f) Finishing Input Operation
(1) Make sure that the input VIN matches the vehicle VIN after input.
(2) Press the ENTER button on the tester.

3. READ VIN

(a) Confirm the vehicle VIN.
(b) Connect the intelligent tester to the DLC3.
(c) Turn the ignition switch to ON.
(d) Turn the tester ON.
(e) Select the following menu items: DIAGNOSIS / ENHANCED OBD II / VIN.

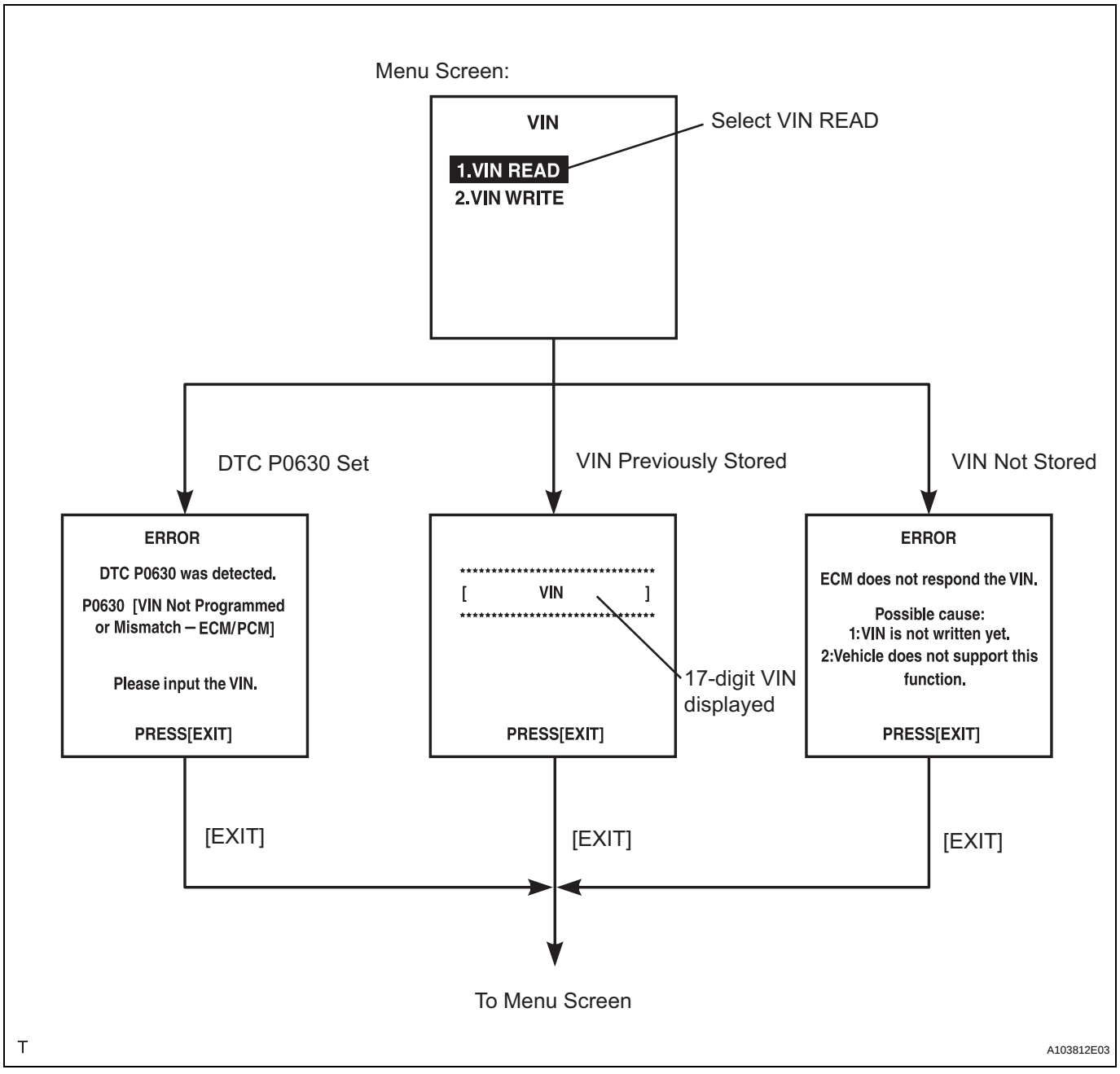

4. WRITE VIN

(a) Confirm the vehicle VIN.
(b) Connect the intelligent tester to the DLC3.
(c) Turn the ignition switch to ON.
(d) Turn the tester ON.

(e) Select the following menu items: DIAGNOSIS / ENHANCED OBD II / VIN.

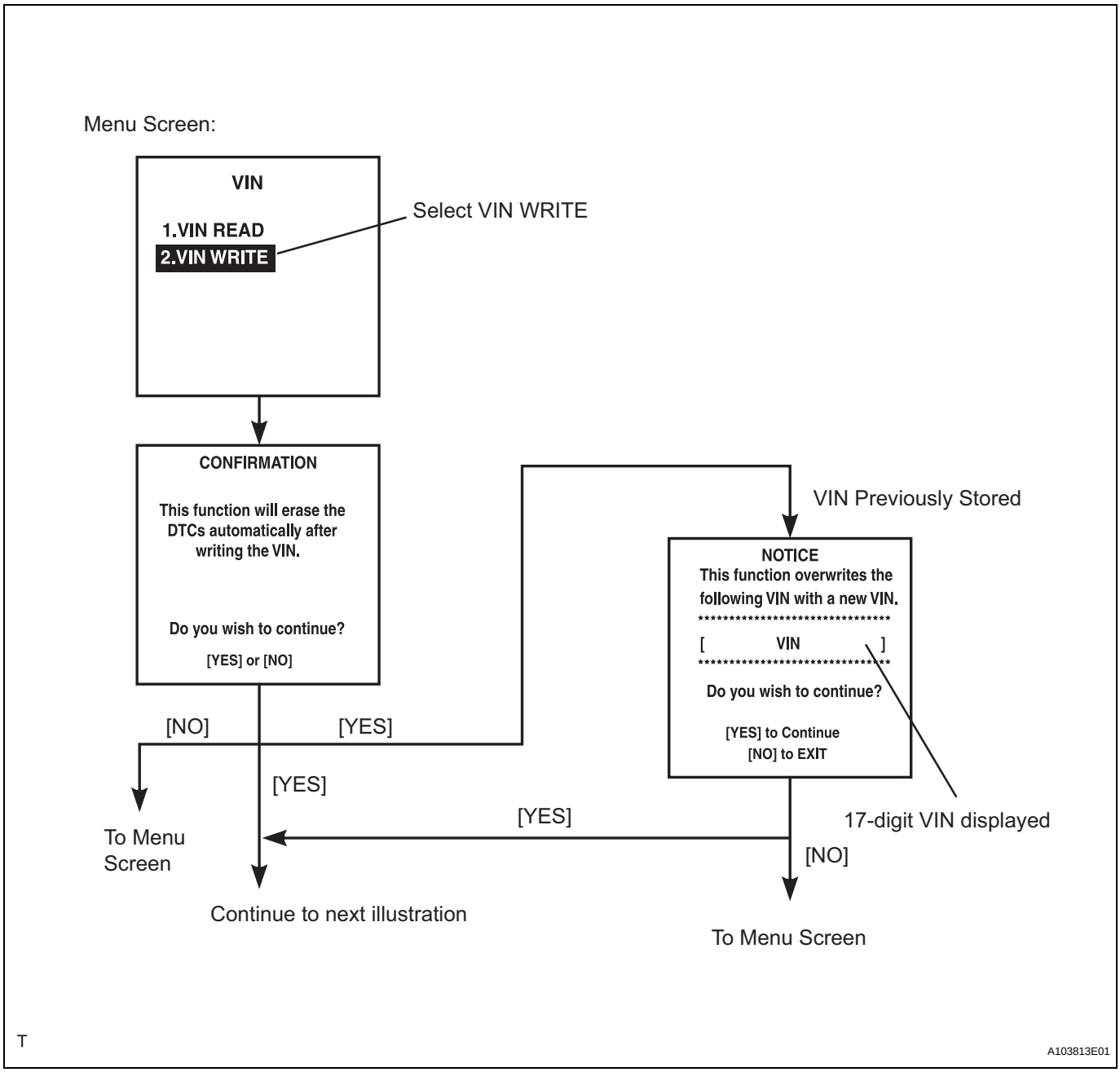

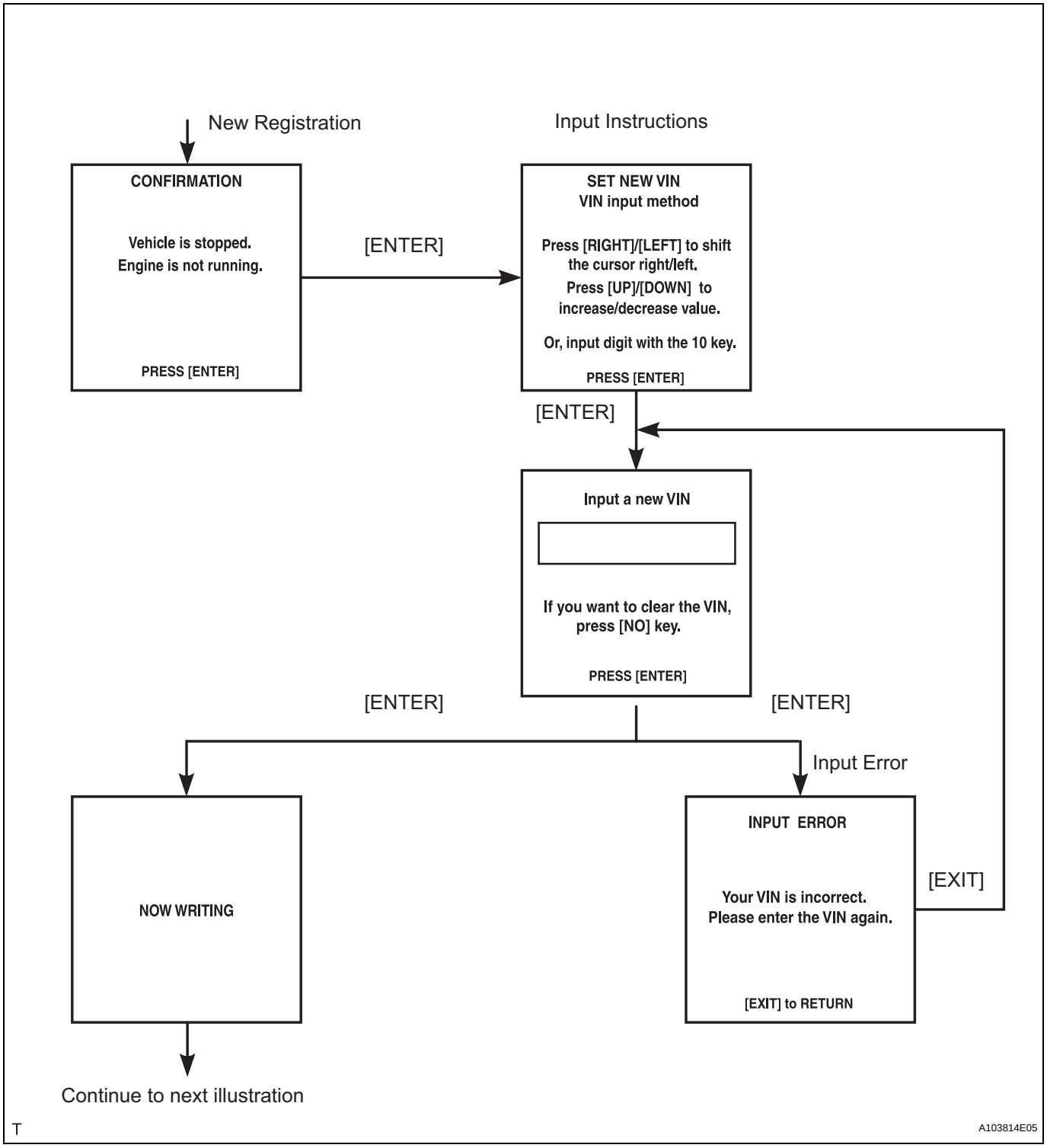
New Registration
Input Instructions
CONFIRMATION
Vehicle is stopped.
Engine is not running.
PRESS [ENTER]
[ENTER]
SET NEW VIN
VIN input method
Press [RIGHT]/[LEFT] to shift the cursor right/left.
Press [UP]/[DOWN] to increase/decrease value.
Or, input digit with the 10 key.
PRESS [ENTER]
[ENTER]
Input a new VIN
If you want to clear the VIN, press [NO] key.
PRESS [ENTER]
[ENTER]
[ENTER]
Input Error
NOW WRITING
INPUT ERROR
Your VIN is incorrect.
Please enter the VIN again.
[EXIT] to RETURN
[EXIT]
Continue to next illustration
T
A103814E05

ES

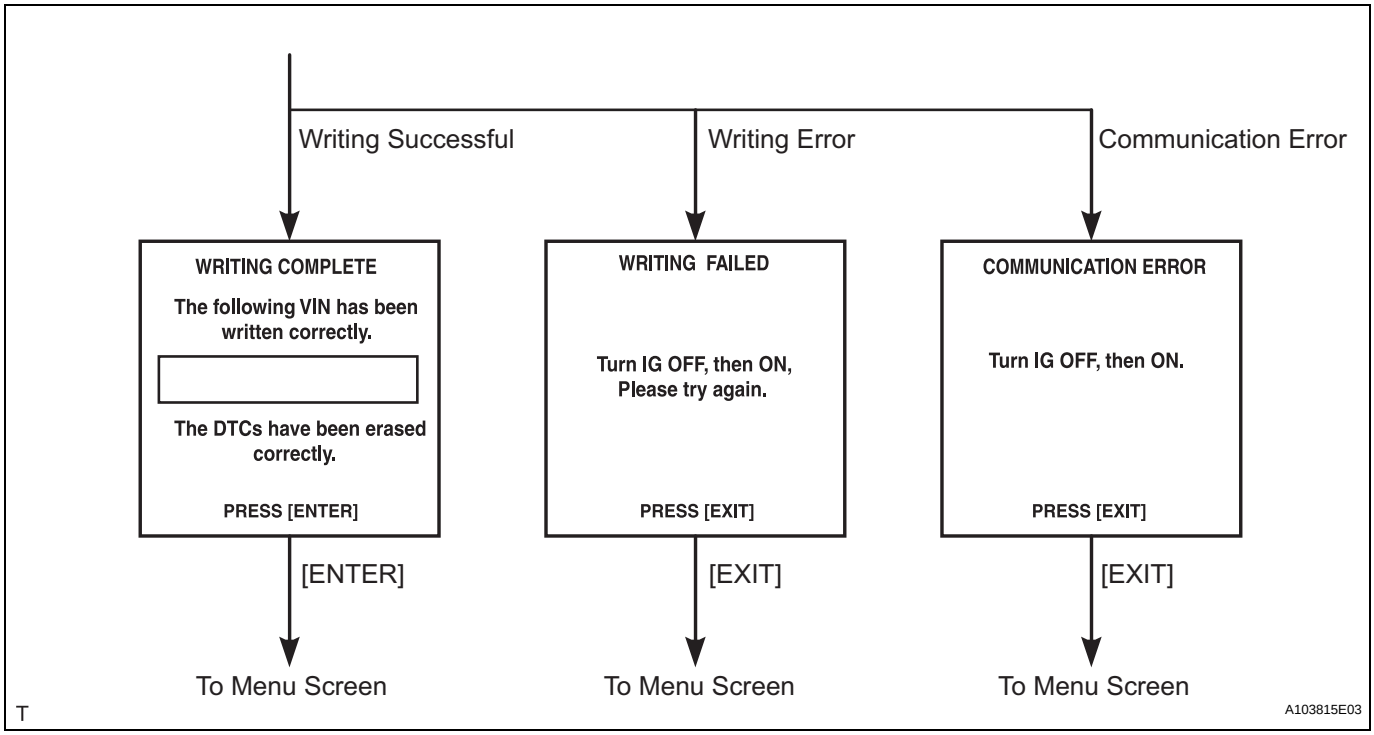
Writing Successful
Writing Error
Communication Error
WRITING COMPLETE
The following VIN has been written correctly.
The DTCs have been erased correctly.
PRESS [ENTER]
WRITING FAILED
Turn IG OFF, then ON, Please try again.
PRESS [EXIT]
COMMUNICATION ERROR
Turn IG OFF, then ON.
PRESS [EXIT]
[ENTER]
[EXIT]
[EXIT]
To Menu Screen
To Menu Screen
To Menu Screen
A103815E03

ES

CHECKING MONITOR STATUS

The purpose of the monitor result (mode 06) is to allow access to the results of on-board diagnostic monitoring tests of specific components/systems that are not continuously monitored. Examples are catalysts, evaporative emissions (EVAP) and thermostats.

The monitor result allows the OBD II scan tool to display the monitor status, test value, minimum test limit and maximum test limit. These data are displayed after the vehicle has been driven to run the monitor.

When the test value is not between the minimum and maximum test limits, the ECM (PCM) interprets this as a malfunction. If the test value is on the borderline of the test limits, the component is likely to malfunction in the near future.

Perform the following instruction to view the monitor status. Although this instruction refers to the Lexus/Toyota diagnostic tester, it can be checked using a generic OBD II scan tool. Refer to your scan tool operator's manual for specific procedural information.

1. PERFORM MONITOR DRIVE PATTERN

(a) Connect the intelligent tester to the DLC3.

(b) Turn the ignition switch and the tester ON.

(c) Clear the DTCs (See page ES-34).

(d) Run the vehicle in accordance with the applicable drive pattern described in READINESS MONITOR DRIVE PATTERN (See page ES-19). Do not turn the ignition switch OFF.

NOTE:

The test results will be lost if the ignition switch is turned OFF.

2. ACCESS MONITOR RESULT

(a) Select the following items from the intelligent tester menus: DIAGNOSIS, ENHANCED OBD II, MONITOR INFO and MONITOR RESULT. The monitor status appears after the component name.

- INCMP: The component has not been monitored yet.
- PASS: The component is functioning normally.
- FAIL: The component is malfunctioning.

(b) Confirm that the component is either PASS or FAIL.

(c) Select the component and press ENTER. The accuracy test value appears if the monitor status is either PASS or FAIL.

3. CHECK COMPONENT STATUS

(a) Compare the test value with the minimum test limit (MIN LIMIT) and maximum test limit (MAX LIMIT).

(b) If the test value is between the minimum and maximum test limits, the component is functioning normally. If not, the component is malfunctioning. The test value is usually significantly higher or lower than the test limits. If the test value is on the borderline of the test limits, the component is likely to malfunction in the near future.
HINT:
The monitor result might on rare occasions be PASS even if the malfunction indicator lamp (MIL) is illuminated. This indicates the system malfunctioned on a previous driving cycle. This might be caused by an intermittent problem.

4. MONITOR RESULT INFORMATION

If you use a generic scan tool, multiply the test value by the scaling value listed below.

A/F Sensor (Sensor 1)

Monitor ID	Test ID	Scaling	Unit	Description
$01	$8E	Multiply by 0.001	V	A/F sensor deterioration level
$01	$91	Multiply by 0.004	mA	A/F sensor current

HO2 Sensor (Sensor 2)

Monitor ID	Test ID	Scaling	Unit	Description
$02	$07	Multiply by 0.001	V	Minimum sensor voltage
$02	$08	Multiply by 0.001	V	Maximum sensor voltage
$02	$8F	Multiply by 0.0003	g	Maximum oxygen storage capacity

Catalyst

Monitor ID	Test ID	Scaling	Unit	Description
$21	$A9	Multiply by 0.0003	No dimension	Oxygen storage capacity of catalyst

EVAP

Monitor ID	Test ID	Scaling	Unit	Description
$3D	$C9	Multiply by 0.001	kPa	Test value for small leak (P0456)
$3D	$CA	Multiply by 0.001	kPa	Test value for gross leak (P0455)
$3D	$CB	Multiply by 0.001	kPa	Test value for leak detection pump stuck OFF (P2401)
$3D	$CD	Multiply by 0.001	kPa	Test value for leak detection pump stuck ON (P2402)
$3D	$CE	Multiply by 0.001	kPa	Test value for vent valve stuck OFF (P2420)
$3D	$CF	Multiply by 0.001	kPa	Test value for vent valve stuck ON (P2419)
$3D	$D0	Multiply by 0.001	kPa	Test value for reference orifice low flow (P043E)
$3D	$D1	Multiply by 0.001	kPa	Test value for reference orifice high flow (P043F)
$3D	$D4	Multiply by 0.001	kPa	Test value for purge VSV stuck closed (P0441)
$3D	$D5	Multiply by 0.001	kPa	Test value for purge VSV stuck open (P0441)
$3D	$D7	Multiply by 0.001	kPa	Test value for purge flow insufficient (P0441)

Rear Oxygen Sensor Heater

Monitor ID	Test ID	Scaling	Unit	Description
$42	$91	Multiply by 0.001	Ohm	Oxygen sensor heater resistance

Misfire

Monitor ID	Test ID	Scaling	Unit	Description
$A1	$0B	Multiply by 1	Time	Exponential Weighted Moving Average (EWMA) misfire for all cylinders: EWMA = Total misfire counts for last driving cycle * 0.1 + Last EWMA * 0.9 Misfire counts for last ten driving cycles - Total
$A1	$0C	Multiply by 1	Time	Ignition switch ON: Total misfire counts for last driving cycle Engine running: Total misfire counts for current driving cycle Misfire counts for last or current driving cycle - all cylinders
$A2	$0B	Multiply by 1	Time	Exponential Weighted Moving Average (EWMA) misfire for cylinder 1: EWMA = Total misfire counts for last driving cycle * 0.1 + Last EWMA * 0.9 Misfire counts for last ten driving cycles - Total
$A2	$0C	Multiply by 1	Time	Ignition switch ON: Total misfire counts for last driving cycle Engine running: Total misfire counts for current driving cycle Misfire counts for last or current driving cycle - cylinder 1
$A3	$0B	Multiply by 1	Time	Exponential Weighted Moving Average (EWMA) misfire for cylinder 2: EWMA = Total misfire counts for last driving cycle * 0.1 + Last EWMA * 0.9 Misfire counts for last ten driving cycles - Total
$A3	$0C	Multiply by 1	Time	Ignition switch ON: Total misfire counts for last driving cycle Engine running: Total misfire counts for current driving cycle Misfire counts for last or current driving cycle - cylinder 2
$A4	$0B	Multiply by 1	Time	Exponential Weighted Moving Average (EWMA) misfire for cylinder 3: EWMA = Total misfire counts for last driving cycle * 0.1 + Last EWMA * 0.9 Misfire counts for last ten driving cycles - Total
$A4	$0C	Multiply by 1	Time	Ignition switch ON: Total misfire counts for last driving cycle Engine running: Total misfire counts for current driving cycle Misfire counts for last or current driving cycle - cylinder 3
$A5	$0B	Multiply by 1	Time	Exponential Weighted Moving Average (EWMA) misfire for cylinder 4: EWMA = Total misfire counts for last driving cycle * 0.1 + Last EWMA * 0.9 Misfire counts for last ten driving cycles - Total
$A5	$0C	Multiply by 1	Time	Ignition switch ON: Total misfire counts for last driving cycle Engine running: Total misfire counts for current driving cycle Misfire counts for last or current driving cycle - cylinder 4

READINESS MONITOR DRIVE PATTERN

1. PURPOSE OF READINESS TESTS

- The On-Board Diagnostic (OBD II) system is designed to monitor the performance of emission related components, and indicate any detected abnormalities with DTC (Diagnostic Trouble Codes). Since various components need to be monitored during different driving conditions, the OBD II system is designed to run separate monitoring programs called Readiness Monitors.
- The intelligent tester's software must be version 9.0 or newer to view the Readiness Monitor Status. To view the status, select the following menu items: DIAGNOSIS / ENHANCED OBD II / MONITOR INFO / MONITOR STATUS.
- When the Readiness Monitor status reads COMPL (complete), the necessary conditions have been met for running the performance tests for that Readiness Monitor.
- A generic OBD ll scan tool can also be used to view the Readiness Monitor status.

HINT:

Many state Inspection and Maintenance (I/M) programs require a vehicle's Readiness Monitor status to show COMPL before beginning emission tests.

The Readiness Monitor will be reset to INCMPL (incomplete) if:

- The ECM has lost battery power or blown a fuse.
- DTCs have been cleared.
- The conditions for running the Readiness Monitor have not been met.

If the Readiness Monitor status shows INCMPL, follow the appropriate Readiness Monitor Drive Pattern to change the status to COMPL.

CAUTION:

Strictly observe posted speed limits, traffic laws, and road conditions when performing these drive patterns.

NOTICE:

These drive patterns represent the fastest method of satisfying all conditions necessary to achieve complete status for each specific Readiness Monitor.

In the event of a drive pattern being interrupted (possibly due to factors such as traffic conditions), the drive pattern can be resumed. In most cases, the Readiness Monitor will still achieve complete status upon completion of the drive pattern.

To ensure completion of the Readiness Monitors, avoid sudden changes in vehicle load and speed (driving up and down hills and/or sudden acceleration).

2. CATALYST MONITOR (ACTIVE AIR-FUEL RATIO CONTROL TYPE)

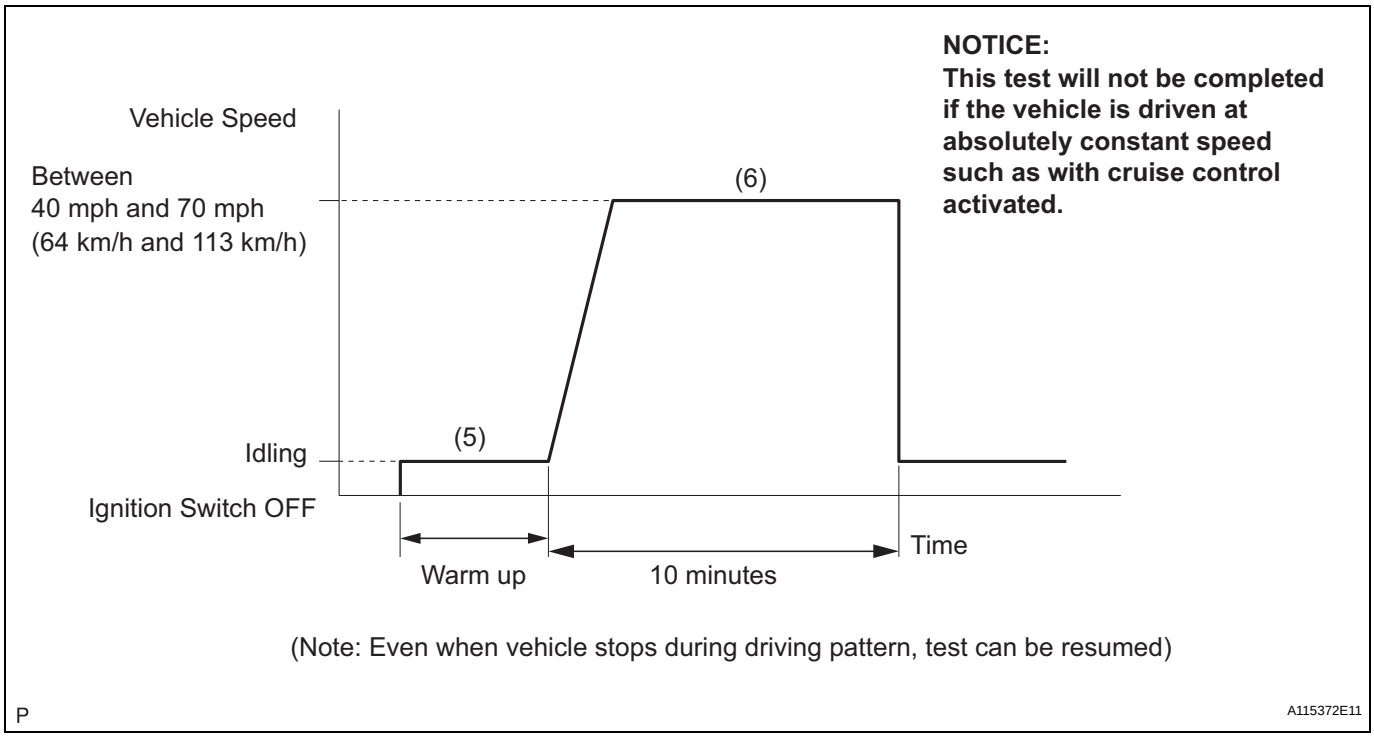

(a) Preconditions
The monitor will not run unless:
- The MIL is OFF.

(b) Drive Pattern
(1) Connect an intelligent tester to the DLC3.
(2) Turn the ignition switch to ON.
(3) Turn the tester ON.
(4) Clear DTCs (where set) (See page ES-34).
(5) Start the engine and warm it up.
(6) Drive the vehicle at between 40 mph and 70 mph (64 km/h and 113 km/h) for at least 10 minutes.

(c) Monitor Status
Check the Readiness Monitor status displayed on the tester.
If the status does not switch to COMPL (complete), extend the driving time.

3. EVAP SYSTEM MONITOR (KEY OFF TYPE)

(a) Preconditions
The monitor will not run unless:
– The fuel tank is less than 90 % full.
– The altitude is less than 8,000 ft (2,450 m).
– The vehicle is stationary.
– The engine coolant temperature is between 4.4°C and 35°C (40°F and 95°F).
– The intake air temperature is between 4.4°C and 35°C (40°F and 95°F).
– Vehicle was driven in the city area (or on free-way) for 10 minutes or more.

(b) Monitor Conditions
(1) Turn the ignition switch to OFF and wait for 6 hours.
HINT:
Do not start the engine until checking Readiness Monitor status. If the engine is started, the step described above must be repeated.

(c) Monitor Status
(1) Connect an intelligent tester to the DLC3.
(2) Turn the ignition switch to ON.
(3) Turn the tester ON.
(4) Check the Readiness Monitor status displayed on the tester.

ES

If the status does not switch to COMPL (complete), restart the engine, make sure that the preconditions have been met, and then perform the Monitor Conditions again.

4. AIR-FUEL RATIO (A/F) AND HEATED OXYGEN (HO2) SENSOR MONITORS (ACTIVE AIR-FUEL RATIO CONTROL TYPE)

Monitor Drive Pattern

ECT: 75°C (167°F) or more

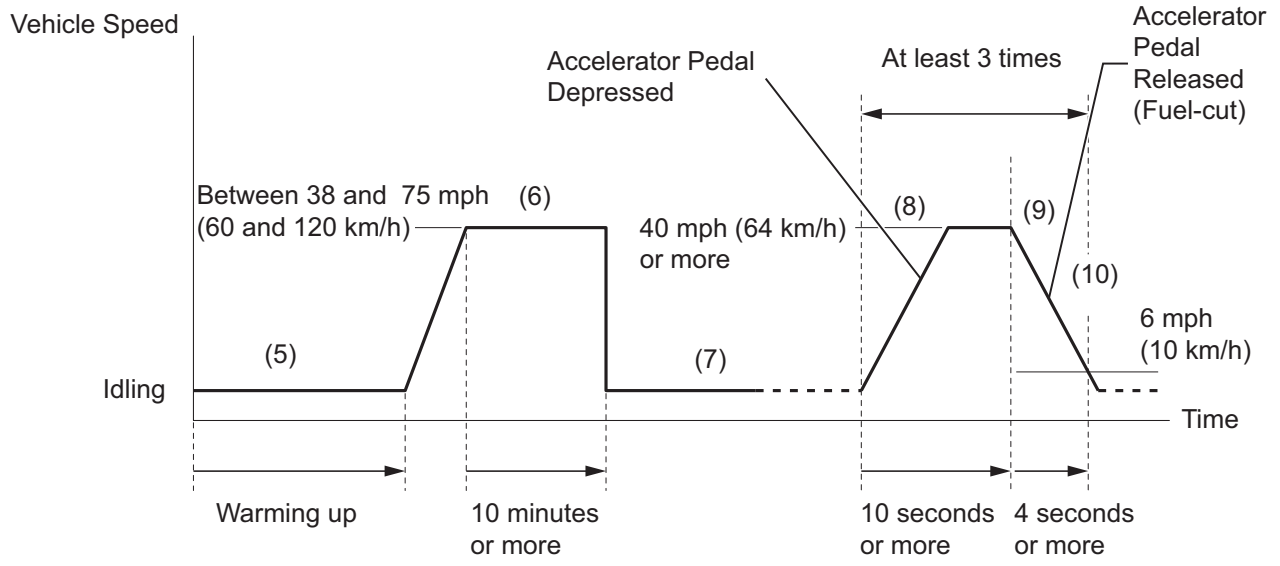

(a) Preconditions
The monitor will not run unless:
– 2 minutes or more have elapsed since the engine was started.
– The Engine Coolant Temperature (ECT) is 75°C (167°F) or more.
– Cumulative driving time at a vehicle speed of 30 mph (48 km/h) or more exceeds 6 minutes.

– Air-fuel ratio feedback control is performed.

(b) Drive Pattern for front A/F sensor and HO2 sensor
(1) Connect an intelligent tester to the DLC3.
(2) Turn the ignition switch to ON.
(3) Turn the tester ON.
(4) Clear DTCs (See page ES-34).
(5) Start the engine, and warm it up until the ECT reaches 75°C (167°F) or higher.
(6) Drive the vehicle at between 38 mph (60 km/h) and 75 mph (120 km/h) for at least 10 minutes.
(7) Change the transmission to 2nd gear.
(8) Accelerate the vehicle to 40 mph (64 km/h) or more by depressing the accelerator pedal for at least 10 seconds.
(9) Soon after performing step (8) above, release the accelerator pedal for at least 4 seconds without depressing the brake pedal, in order to execute fuel-cut control.
(10) Allow the vehicle to decelerate until the vehicle speed declines to less than 6 mph (10 km/h).
(11) Repeat steps from (8) through (10) above at least 3 times in one driving cycle.

(c) Monitor Status
(1) Check the Readiness Monitor status displayed on the tester.
(2) If the status does not switch to COMPL (complete), make sure that the preconditions have been met, and then perform steps from (5) through (11) in Drive Pattern above.

5. AIR-FUEL RATIO (A/F) AND HEATED OXYGEN (HO2) SENSOR HEATER MONITORS (FRONT A/F AND REAR HO2 SENSOR TYPE)

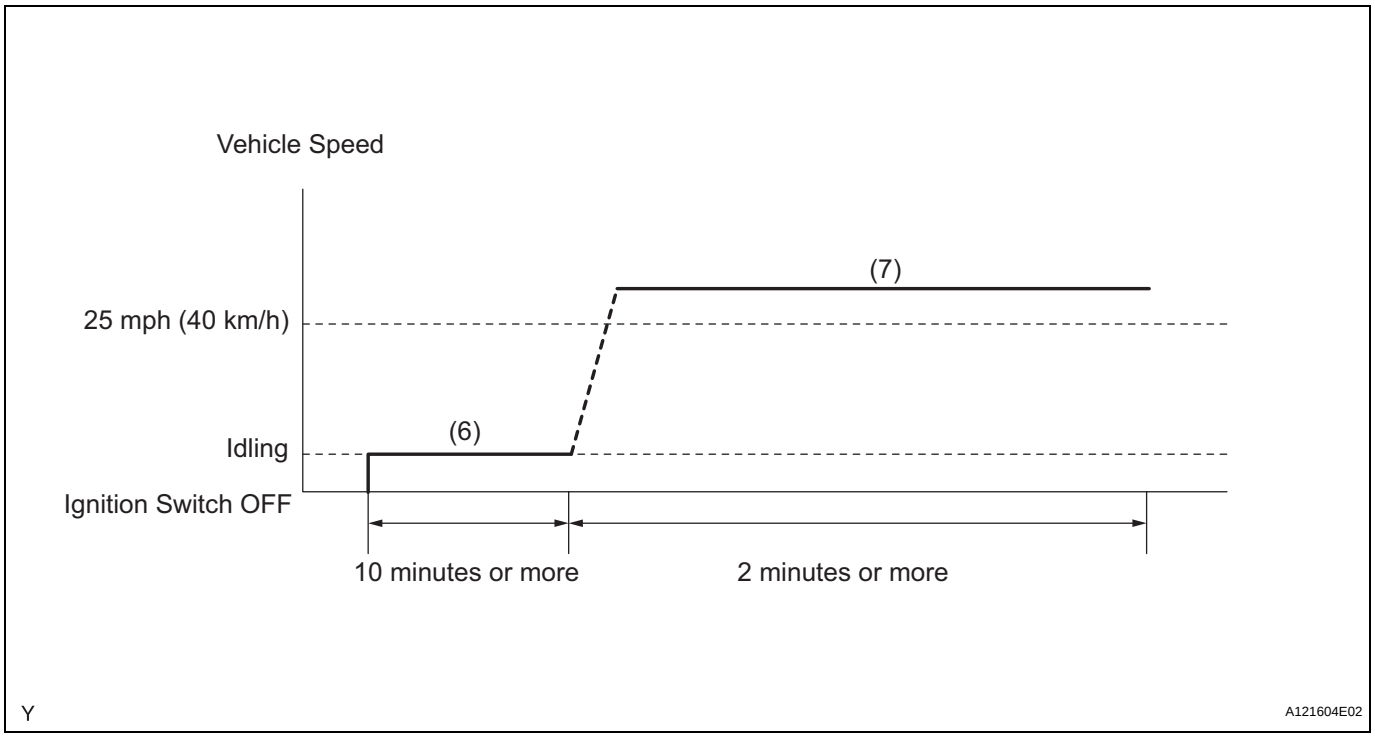

(a) Preconditions
The monitor will not run unless:
– The MIL is OFF.

(b) Drive Pattern
(1) Connect an intelligent tester to the DLC3.
(2) Turn the ignition switch to ON.
(3) Turn the tester ON.
(4) Clear DTCs (where set) (See page ES-34).
(5) Start the engine.
(6) Allow the engine to idle for 10 minutes or more.
(7) Drive the vehicle at 25 mph (40 km/h) or more for at least 2 minutes.

(c) Monitor Status
(1) Check the Readiness Monitor status displayed on the tester.
If the status does not switch to COMPL (complete), make sure that the preconditions have been met, and repeat steps through (5) to (7) described in the Drive Pattern above.

PROBLEM SYMPTOMS TABLE

HINT:
Use the table below to help determine the cause of the problem symptom. The potential causes of the symptoms are listed in order of probability in the "Suspected area" column of the table. Check each symptom by checking the suspected areas in the order they are listed. Replace parts as necessary.

SFI SYSTEM

Symptom	Suspected area	See page
Engine does not crank (Does not start)	1. Battery	CH-4
	2. Starter for standard	ST-11
	3. Starter for cold area	ST-23
	4. Cranking holding function circuit	ES-373
	5. Starter relay	ST-32
	6. Park/neutral position switch	AX-107
	7. Clutch start switch	CL-20
	8. Immobiliser System	EI-1
No initial combustion (Does not start)	1. ECM power source circuit	ES-352
	2. Crankshaft position sensor	ES-403
	3. Camshaft position sensor	ES-400
	4. Ignition system	IG-3
	5. Fuel pump control circuit	ES-365
	6. ECM	ES-26
	7. VC output circuit	ES-360
Engine cranks normally but difficult to start	1. Fuel pump control circuit	ES-365
	2. Compression	EM-3
Difficult to start with cold engine	1. Ignition system	IG-3
	2. Spark plug	IG-5
	3. Fuel pump control circuit	ES-365
	4. Injector	FU-16
Difficult to start with warm engine	1. Injector	FU-16
	2. Ignition system	IG-3
	3. Spark plug	IG-5
	4. Fuel pump control circuit	ES-365
High engine idle speed	1. Electronic throttle control system	ES-104
	2. A/C signal circuit	-
	3. ECM power source circuit	ES-352
Low engine idle speed (Poor idling)	1. Electronic throttle control system	ES-104
	2. A/C signal circuit	-
	3. Fuel pump control circuit	ES-365
	4. Air induction system	EC-3
	5. PCV hose	-

Symptom	Suspected area	See page
Rough idling	1. Compression	EM-3
	2. Spark plug	IG-5
	3. Injector	FU-16
	4. Ignition system	IG-3
	5. Fuel pump control circuit	ES-365
	6. Electronic throttle control system	ES-104
	7. Air induction system	EC-3
	8. PCV hose	-
	9. Mass air flow meter	ES-389
Idle hunting	1. Electronic throttle control system	ES-104
	2. Air induction system	EC-3
	3. ECM power source circuit	ES-352
Hesitation/ Poor acceleration	1. Fuel pump control circuit	ES-365
	2. Spark plug	IG-5
	3. Ignition system	IG-3
	4. Injector	FU-16
	5. Mass air flow meter	ES-389
	6. Electronic throttle control system	ES-104
	7. Air induction system	EC-3
	8. Compression	EM-3
Surging (Poor driveability)	1. Spark plug	IG-5
	2. Fuel pump control circuit	ES-365
	3. Ignition system	IG-3
	4. Injector	FU-16
	5. Mass air flow meter	ES-389
	6. Variable valve timing system	ES-56
	7. Compression	EM-3
Engine stalls soon after starting	1. Fuel pump control circuit	ES-365
	2. Spark plug	IG-5
	3. Ignition system	IG-3
	4. Injector	FU-16
	5. Variable valve timing system	ES-56
	6. Electronic throttle control system	ES-104
	7. Air induction system	EC-3
	8. PCV hose	-
	9. Compression	EM-3
Engine stalls only during A/C operation	1. A/C signal circuit	-
	2. ECM	ES-26
Unable/difficult to refuel	1. Refueling valve (canister)	-

TERMINALS OF ECM

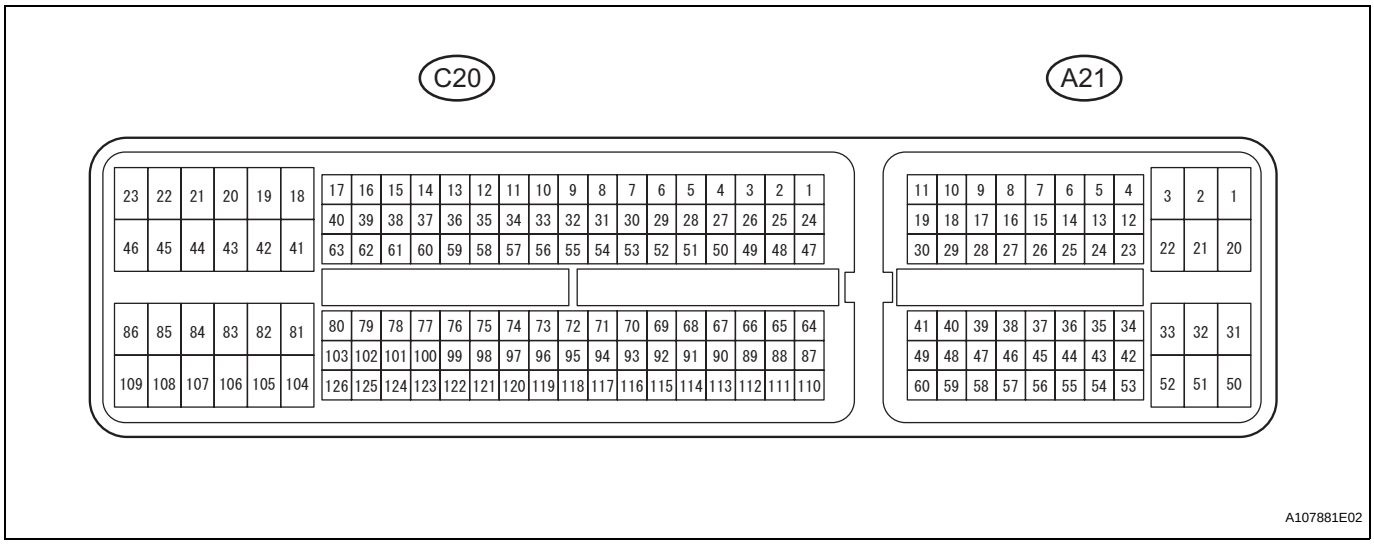

A107881E02

ES

HINT:
The standard normal voltage between each pair of ECM terminals is shown in the table below. The appropriate conditions for checking each pair of terminals are also indicated. The result of checks should be compared with the standard normal voltage for that pair of terminals, displayed in the Specified Condition column. The illustration above can be used as a reference to identify the ECM terminal locations.

Symbols (Terminal No.)	Wiring Colors	Terminal Descriptions	Conditions	Specified Conditions
BATT (A21-20) - E1 (C20-104)	Y - W	Battery (for measuring battery voltage and for ECM memory)	Always	11 to 14 V
+BM (A21-3) - ME01 (C20-43)	GR - BR	Power source of throttle actuator	Always	11 to 14 V
IGSW (A21-28) - E1 (C20-104)	R - W	Ignition switch	Ignition switch ON	11 to 14 V
+B (A21-2) - E1 (C20-104)	B - W	Power source of ECM	Ignition switch ON	11 to 14 V
+B2 (A21-1) - E1 (C20-104)	B - W	Power source of ECM	Ignition switch ON	11 to 14 V
OC1+ (C20-100) - OC1- (C20-123)	BR - R	Camshaft timing oil control valve (OCV)	Idling	Pulse generation (see waveform 1)
MREL (A21-44) - E1 (C20-104)	GR - W	EFI relay	Ignition switch ON	11 to 14 V
VG (C20-118) - E2G (C20-116)	GR - LG	Mass air flow meter	Idling, Shift lever position P or N, A/C switch OFF	0.5 to 3.0 V
THA (C20-65) - ETHA (C20-88)	P - O	Intake air temperature sensor	Idling, Intake air temperature 20°C (68°F)	0.5 to 3.4 V
THW (C20-97) - ETHW (C20-96)	L - P	Engine coolant temperature sensor	Idling, Engine coolant temperature 80°C (176°F)	0.2 to 1.0 V
VCTA (C20-67) - ETA (C20-91)	W - V	Power source of throttle position sensor (specific voltage)	Ignition switch ON	4.5 to 5.5 V
VTA1 (C20-115) - ETA (C20-91)	Y - V	Throttle position sensor (for engine control)	Ignition switch ON, Throttle valve fully closed	0.5 to 1.1 V
			Ignition switch ON, Throttle valve fully open	3.3 to 4.9 V
VTA2 (C20-114) - ETA (C20-91)	GR - V	Throttle position sensor (for sensor malfunction detection)	Ignition switch ON, Throttle valve fully closed	2.1 to 3.1 V
			Ignition switch ON, Throttle valve fully open	4.6 to 5.0 V

Symbols (Terminal No.)	Wiring Colors	Terminal Descriptions	Conditions	Specified Conditions
VPA (A21-55) - EPA (A21-59)	R - G	Accelerator pedal position sensor (for engine control)	Ignition switch ON, Accelerator pedal released	0.5 to 1.1 V
			Ignition switch ON, Accelerator pedal fully depressed	2.6 to 4.5 V
VPA2 (A21-56) - EPA2 (A21-60)	L - BR	Accelerator pedal position sensor (for sensor malfunctioning detection)	Ignition switch ON, Accelerator pedal released	1.2 to 2.0 V
			Ignition switch ON, Accelerator pedal fully depressed	3.4 to 5.0 V
VCPA (A21-57) - EPA (A21-59)	B - G	Power source of accelerator pedal position sensor (for VPA)	Ignition switch ON	4.5 to 5.5 V
VCP2 (A21-58) - EPA2 (A21-60)	W - BR	Power source of accelerator pedal position sensor (for VPA2)	Ignition switch ON	4.5 to 5.5 V
HA1A (C20-109) - E04 (C20-46)	G - W-B	A/F sensor heater	Idling	Below 3.0 V
			Ignition switch ON	11 to 14 V
A1A+ (C20-112) - E1 (C20-104)	V -W	A/F sensor	Ignition switch ON	3.3 V*
A1A- (C20-113) - E1 (C20-104)	LG - W	A/F sensor	Ignition switch ON	3.0 V*
HT1B (C20-47) - E03 (C20-86)	LG - W-B	Heated oxygen sensor heater	Idling	Below 3.0 V
			Ignition switch ON	11 to 14 V
OX1B (C20-64) - EX1B (C20-87)	G - GR	Heated oxygen sensor	Engine speed maintained at 2,500 rpm for 2 minutes after warming up sensor	Pulse generation (see waveform 2)
#10 (C20-108) - E01 (C20-45) #20 (C20-107) - E01 (C20-45) #30 (C20-106) - E01 (C20-45) #40 (C20-105) - E01 (C20-45)	SB - BR GR - BR P - BR L - BR	Injector	Ignition switch ON	11 to 14 V
			Idling	Pulse generation (see waveform 3)
KNK1 (C20-110) - EKNK (C20-111)	R - G	Knock sensor	Engine speed maintained at 4,000 after warming up engine	Pulse generation (see waveform 4)
G2+ (C20-99) - NE- (C20-121)	B - P	Camshaft position sensor	Idling	Pulse generation (see waveform 5)
NE+ (C20-122) - NE- (C20-121)	L - P	Crankshaft position sensor	Idling	Pulse generation (see waveform 5)
IGT1 (C20-85) - E1 (C20-104) IGT2 (C20-84) - E1 (C20-104) IGT3 (C20-83) - E1 (C20-104) IGT4 (C20-82) - E1 (C20-104)	W - W O - W G - W LG - W	Ignition coil (ignition signal)	Idling	Pulse generation (see waveform 6)
IGF1 (C20-81) - E1 (C20-104)	Y - W	Ignition coil (ignition confirmation signal)	Ignition switch ON	4.5 to 5.5 V
			Idling	Pulse generation (see waveform 6)
PRG (C20-49) - E01 (C20-45)	L - BR	Purge VSV	Ignition switch ON	11 to 14 V
			Idling	Pulse generation (see waveform 7)
SPD (A21-8) - E1 (C20-104)	V - W	Speed signal from combination meter	Driving at 12 mph (20 km/h)	Pulse generation (see waveform 8)
STA (A21-48) - E1 (C20-104)	BR - W	Starter signal	Cranking	11 to 14 V
STAR (C20-52) - E1 (C20-104)	O - W	Starter relay control	Ignition switch ON	Below 1.5 V
			Cranking	6.0 V or more
ACCR (A21-13) - E01 (C20-45)	G - BR	ACC (Accessory) relay control signal	Cranking	Below 1.5 V
STSW (A21-14) - E1 (C20-104)	B - W	Ignition switch signal	Ignition switch START	6.0 V or more
STP (A21-36) - E1 (C20-104)	G - W	Stop light switch	Brake pedal depressed	7.5 to 14 V
			Brake pedal released	Below 1.5 V

Symbols (Terminal No.)	Wiring Colors	Terminal Descriptions	Conditions	Specified Conditions
ST1- (A21-35) - E1 (C20-104)	Y - W	Stop light switch (opposite to STP terminal)	Ignition switch ON, Brake pedal depressed	Below 1.5 V
			Ignition switch ON, Brake pedal released	7.5 to 14 V
M+ (C20-42) - ME01 (C20-43)	G - BR	Throttle actuator	Idling with warm engine	Pulse generation (see waveform 9)
M- (C20-41) - ME01 (C20-43)	R - BR	Throttle actuator	Idling with warm engine	Pulse generation (see waveform 10)
FC (A21-7) - E01 (C20-45)	V - BR	Fuel pump control	Ignition switch ON	11 to 14 V
			Idling	Below 1.5 V
W (A21-24) - E1 (C20-104)	B - W	MIL	Ignition switch ON	Below 1.5V
			Idling	11 to 14 V
TC (A21-27) - E1 (C20-104)	P - W	Terminal TC of DLC 3	Ignition switch ON	11 to 14 V
TACH (A21-15) - E1 (C20-104)	LG - W	Engine speed	Idling	Pulse generation (see waveform 11)
VPMP (A21-42) - E1 (C20-104)	P - W	Vent valve (built into canister pump module)	Ignition switch ON	11 to 14 V
MPMP (A21-34) - E1 (C20-104)	V - W	Leak detection pump (built into canister pump module)	Leak detection pump OFF	Below 3 V
			Leak detection pump ON	11 to 14 V
VCPP (C20-70) - EPPM (C20-94)	V - O	Power source for canister pressure sensor (specific voltage)	Ignition switch ON	4.5 to 5.5 V
PPMP (C20-71) - EPPM (C20-94)	L - O	Canister pressure sensor (built into canister pump module)	Ignition switch ON	3 to 3.6 V
ELS (A21-31) - E1 (C20-104)	G - W	Electric load	Tail light switch ON	7.5 to 14 V
			Tail light switch OFF	Below 1.5 V
ELS3 (A21-33) - E1 (C20-104)	V - W	Electric load	Defogger switch ON	7.5 to 14 V
			Defogger switch OFF	Below 1.5 V
FAN (A21-21) - E1 (C20-104)	O - W	Fan No. 1 relay	Ignition switch ON	11 to 14 V
			Idling with A/C ON, or high engine coolant temperature	Below 1.5 V
FAN2 (A21-22) - E1 (C20-104)	LG - W	Fan No. 2 relay	Idling with high engine coolant temperature	Below 1.5 V
ALT (C20-50) - E1 (C20-104)	P - W	Generator	Ignition switch ON	11 to 14 V
CANH (A21-41) - E1 (C20-104)	L - W	CAN communication line	Ignition switch ON	Pulse generation (see waveform 12)
CANL (A21-49) - E1 (C20-104)	W - W	CAN communication line	Ignition switch ON	Pulse generation (see waveform 13)

HINT:
*: The ECM terminal voltage is constant regardless of the output voltage from the sensor.

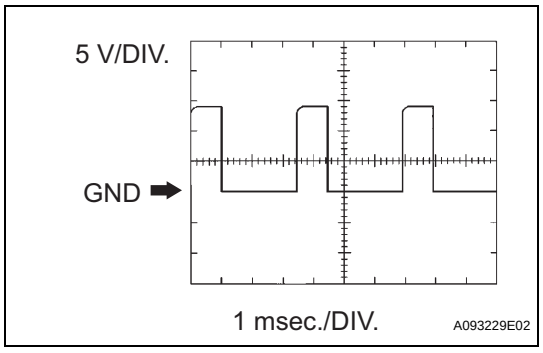

1. WAVEFORM 1
Camshaft timing oil control valve (OCV)

ECM Terminal Names	Between OC1+ and OC1-
Tester Ranges	5 V/DIV, 1 msec./DIV
Conditions	Idling

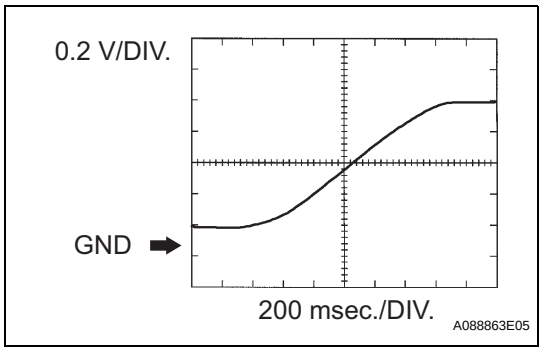

2. WAVEFORM 2
Heated oxygen sensor

ECM Terminal Names	Between OX1B and EX1B
Tester Ranges	0.2 V/DIV, 200 msec./DIV
Conditions	Engine speed maintained at 2,500 rpm for 2 minutes after warming up sensor

HINT:
In DATA LIST, item O2S B1 S2 shows the ECM input values from the heated oxygen sensor.

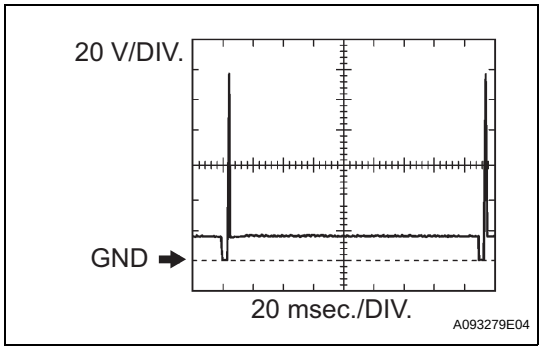

3. WAVEFORM 3
Injector No. 1 (to No. 4) injection signal

ECM Terminal Names	Between #10 (to #40) and E01
Tester Ranges	20 V/DIV, 20 msec./DIV
Conditions	Idling

HINT:
The wavelength becomes shorter as the engine rpm increases.

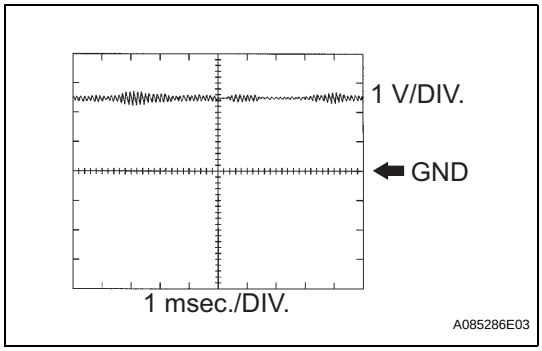

4. WAVEFORM 4
Knock sensor

ECM Terminal Names	Between KNK1 and EKNK1
Tester Ranges	1 V/DIV, 1 msec./DIV
Conditions	Engine speed maintained at 4,000 rpm after warming up engine

HINT:
- The wavelength becomes shorter as the engine rpm increases.
- The waveforms and amplitudes displayed differ slightly depending on the vehicle.

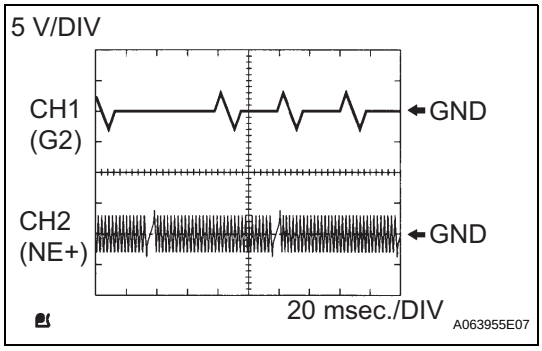

5. WAVEFORM 5
Crankshaft position sensor and Camshaft position sensor

ECM Terminal Names	CH1: Between G2+ and NE- CH2: Between NE+ and NE-
Tester Ranges	5 V/DIV, 20 msec./DIV
Conditions	Idling

HINT:
The wavelength becomes shorter as the engine rpm increases.

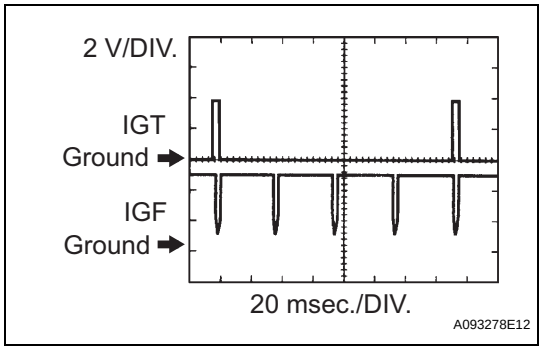

6. WAVEFORM 6
Igniter IGT signal (from ECM to igniter) and Igniter IGF signal (from igniter to ECM)

ECM Terminal Names	Between IGT (1 to 4) and E1 Between IGF1 and E1
Tester Ranges	2 V/DIV, 20 msec./DIV
Conditions	Idling

HINT:
The wavelength becomes shorter as the engine rpm increases.

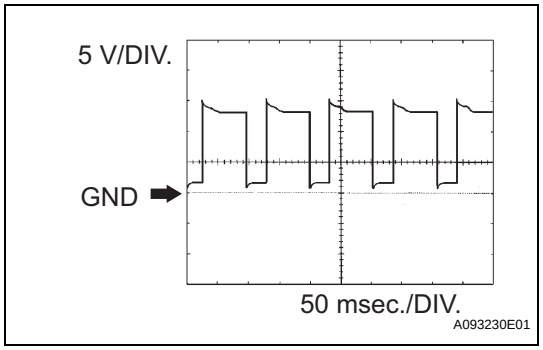

7. WAVEFORM 7
Purge VSV

ECM Terminal Names	Between PRG and E1
Tester Ranges	5 V/DIV, 50 msec./DIV
Conditions	Idling

HINT:
If the waveform is not similar to the illustration, check the waveform again after idling for 10 minutes or more.

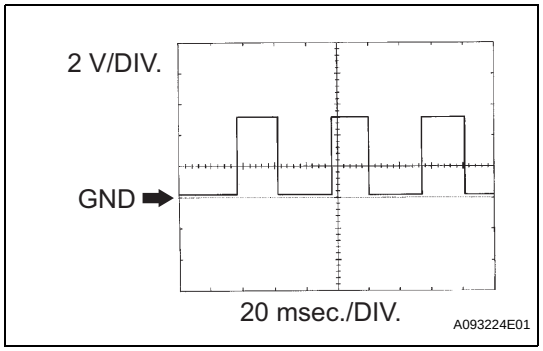

8. WAVEFORM 8
Vehicle speed signal

ECM Terminal Names	Between SPD and E1
Tester Ranges	2 V/DIV, 20 msec./DIV
Conditions	Driving at 12 mph (20 km/h)

HINT:
The wavelength becomes shorter as the vehicle speed increases.

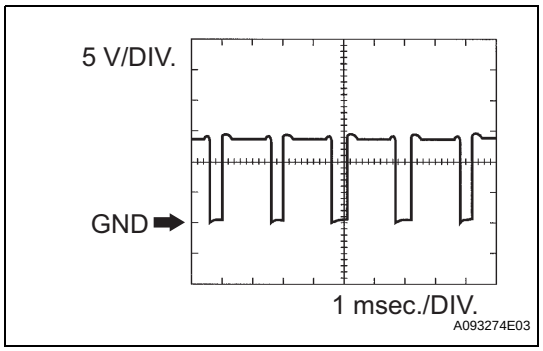

9. WAVEFORM 9
Throttle actuator positive terminal

ECM Terminal Names	Between M+ and ME01
Tester Ranges	5 V/DIV, 1 msec./DIV
Conditions	Idling with warm engine

HINT:
The duty ratio varies depending on the throttle actuator operation.

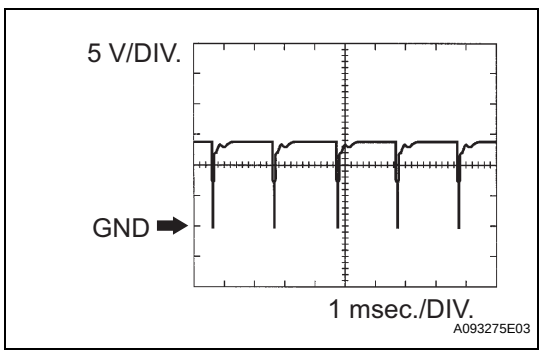

10. WAVEFORM 10
Throttle actuator negative terminal

ECM Terminal Names	Between M- and ME01
Tester Ranges	5 V/DIV, 1 msec./DIV
Conditions	Idling with warm engine

HINT:
The duty ratio varies depending on the throttle actuator operation.

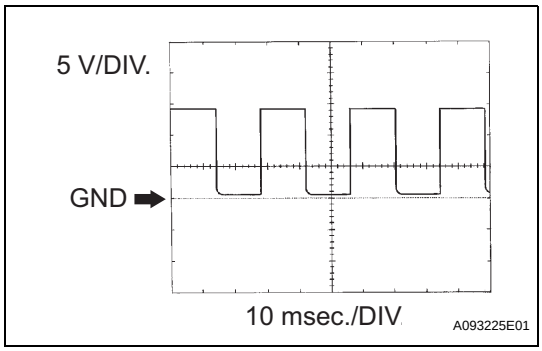

11. WAVEFORM 11
Engine speed signal

ECM Terminal Names	Between TACH and E1
Tester Ranges	5 V/DIV, 10 msec./DIV
Conditions	Idling

HINT:
The wavelength becomes shorter as the engine rpm increases.

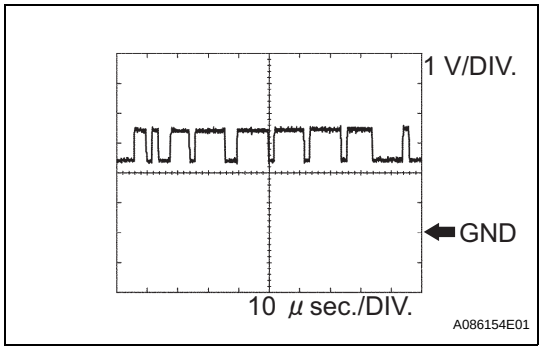

12. WAVEFORM 12
Reference: CAN communication signal

ECM Terminal Names	Between CANH and E1
Tester Ranges	1 V/DIV, 10 μs/DIV
Conditions	Engine stops and ignition switch ON

HINT:
The waveform varies depending on the CAN communication signal.

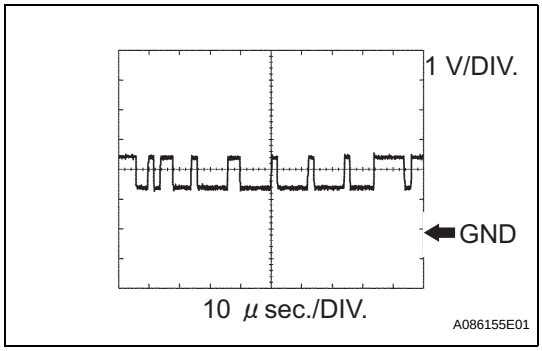

13. WAVEFORM 13
Reference: CAN communication signal

ECM Terminal Names	Between CANL and E1
Tester Ranges	1 V/DIV, 10 μs/DIV
Conditions	Engine stops and ignition switch ON

HINT:
The waveform varies depending on the CAN communication signal.

ES

DIAGNOSIS SYSTEM

1. DESCRIPTION

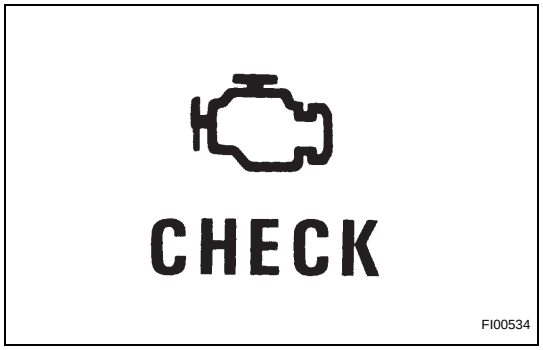

When troubleshooting OBD II (On-Board Diagnostics) vehicles, an intelligent tester (complying with SAE J1987) must be connected to the DLC3 (Data Link Connector 3) of the vehicle. Various data in the vehicle's ECM (Engine Control Module) can be then read.

OBD ll regulations require that the vehicle's on-board computer illuminate the MIL (Malfunction Indicator Lamp) on the instrument panel when the computer detects a malfunction in:

(a) The emission control system components.
(b) The power train control components (which affect vehicle emissions).
(c) The computer itself.

In addition, if the applicable DTCs (Diagnostic Trouble Codes) prescribed by SAE J2012 are not recorded on 3 consecutive trips, the MIL turns off automatically but the DTCs remain recorded in the ECM memory.

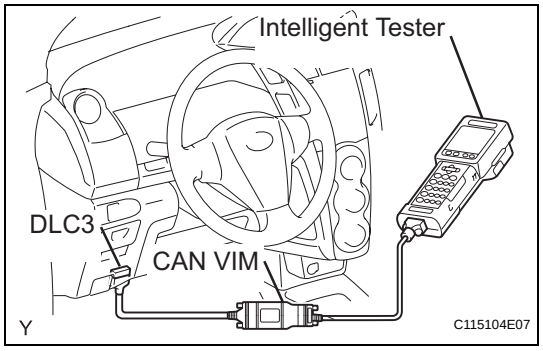

To check DTCs, connect the intelligent tester to the DLC3. The tester displays DTCs, freeze frame data, and a variety of the engine data. The DTCs and freeze frame data can be erased with the tester (See page ES-34).

In order to enhance OBD function on vehicles and develop the Off-Board diagnosis system, CAN communication is introduced in this system (CAN: Controller Area Network). It minimizes the gap between technician skills and vehicle technology. CAN is a network, which uses a pair of data transmission lines, spanning multiple computers and sensors. It allows high speed communication between the systems and simplifies the wire harness connection.

Since this system is equipped with the CAN communication, connecting the CAN VIM (VIM: Vehicle Interface Module) to the intelligent tester is necessary to display any information from the ECM. (Also the communication between the intelligent tester and the ECM uses CAN communication signals). When confirming the DTCs and any data of the ECM, connect the CAN VIM between the DLC3 and the intelligent tester.

2. NORMAL MODE AND CHECK MODE

The diagnosis system operates in normal mode during normal vehicle use. In normal mode, 2 trip detection logic is used to ensure accurate detection of malfunctions. Check mode is also available as an option for technicians. In check mode, 1 trip detection logic is used for simulating malfunction symptoms and increasing the system's ability to detect malfunctions, including intermittent problems (intelligent tester only) (See page ES-37).

ES

3. 2 TRIP DETECTION LOGIC

When a malfunction is first detected, the malfunction is temporarily stored in the ECM memory (1st trip). If the same malfunction is detected during the next subsequent drive cycle, the MIL is illuminated (2nd trip).

4. FREEZE FRAME DATA

Freeze frame data record the engine conditions (fuel system, calculated engine load, engine coolant temperature, fuel trim, engine speed, vehicle speed, etc.) when malfunctions are detected. When troubleshooting, freeze frame data can help determine if the vehicle was moving or stationary, if the engine was warmed up or not, if the air-fuel ratio was lean or rich, and other data from the time the malfunction occurred.

5. DLC3 (Data Link Connector 3)

(a) The ECM uses ISO 15765-4 for communication. The terminal arrangement of the DLC3 complies with SAE J1962 and matches the ISO 15765-4 format.

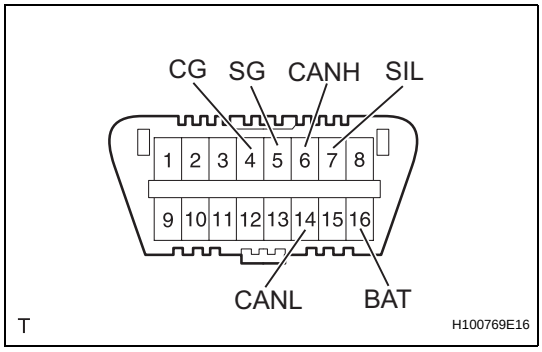

Symbol (Terminal No.)	Terminal Description	Condition	Specified Condition
SIL (7) - SG (5)	Bus "+" line	During transmission	Pulse generation
CG (4) - Body ground	Chassis ground	Always	Below 1 Ω
SG (5) - Body ground	Signal ground	Always	Below 1 Ω
BAT (16) - Body ground	Battery positive	Always	11 to 14 V
CANH (6) - CANL (14)	CAN bus line	Ignition switch off *	54 to 69 Ω
CANH (6) - CG (4)	HIGH-level CAN bus line	Ignition switch off *	200 Ω or higher
CANL (14) - CG (4)	LOW-level CAN bus line	Ignition switch off *	200 Ω or higher
CANH (6) - BAT (16)	HIGH-level CAN bus line	Ignition switch off *	6 kΩ or higher
CANL (14) - BAT (16)	LOW-level CAN bus line	Ignition switch off *	6 kΩ or higher

NOTICE:

***: Before measuring the resistance, leave the vehicle as is for at least 1 minute and do not operate the ignition switch, any other switches or the doors.**

HINT:

The DLC3 is the interface prepared for reading various data from the vehicle's ECM. After connecting the cable of an intelligent tester to the CAN VIM, turn the ignition switch to ON and turn the tester ON. If a communication failure message is displayed on the tester screen (on the tester: UNABLE TO CONNECT TO VEHICLE), a problem exists in either the vehicle or tester. In order to identify the location of the problem, connect the tester to another vehicle.

If communication is normal: Inspect the DLC3 on the original vehicle.
If communication is still not possible: The problem is probably in the tester itself. Consult the Service Department listed in the instruction manual.

6. BATTERY VOLTAGE

Standard battery voltage:

11 to 14 V

If the voltage is below 11 V, replace or recharge the battery before proceeding

7. MIL (Malfunction Indicator Lamp)

(a) The MIL is illuminated when the ignition switch is first turned on (the engine is not running).

(b) The MIL should turn OFF when the engine is started. If the MIL remains illuminated, the diagnosis system has detected a malfunction or abnormality in the system.
HINT:
If the MIL is not illuminated when the ignition switch is first turned on, check the MIL circuit (See page ES-384).

8. ALL READINESS

For the vehicle, using the intelligent tester allows readiness codes corresponding to all DTCs to be read. When diagnosis (normal or malfunctioning) has been complete, readiness codes are set. Select the following menu items: ENHANCED OBD II / MONITOR INFO on the intelligent tester.

DTC CHECK / CLEAR

NOTICE:
When the diagnosis system is changed from normal mode to check mode or vice versa, all DTCs and freeze frame data recorded in normal mode are erased. Before changing modes, always check and make a note of any DTCs and freeze frame data.

HINT:

- DTCs which are stored in the ECM can be displayed on an intelligent tester. An intelligent tester can display current and pending DTCs.
- Some DTCs are not set if the ECM does not detect the same malfunction again during a second consecutive driving cycle. However, such malfunctions, detected on only one occasion, are stored as pending DTCs.
- The pending DTCs are set when the malfunction is detected once.

1. CHECK DTC (Using an intelligent tester)

(a) Connect an intelligent tester to the DLC3.
(b) Turn the ignition switch to ON.
(c) Turn the tester ON.
(d) Select the following menu items: DIAGNOSIS / ENHANCED OBD II / DTC INFO / CURRENT CODES or PENDING CODES.
(e) Check the DTC(s) and freeze frame data, and then write them down.
(f) Check the details of the DTC(s) (See page ES-48).

2. CLEAR DTC (Using an intelligent tester)

(a) Connect the intelligent tester to the DLC3.
(b) Turn the ignition switch to ON.
(c) Turn the tester ON.
(d) Select the following menu items: DIAGNOSIS / ENHANCED OBD II / DTC INFO / CLEAR CODES.
(e) Press the YES button.

3. CLEAR DTC (Without using an intelligent tester)

(a) Perform either of the following operations.
(1) Disconnect the negative battery cable for more than 1 minute.
(2) Remove the EFI and ETCS fuses from the engine room relay block located inside the engine compartment for more than 1 minute.

FREEZE FRAME DATA

1. DESCRIPTION

Freeze frame data record the engine conditions (fuel system, calculated load, engine coolant temperature, fuel trim, engine speed, vehicle speed, etc.) when a malfunction is detected. When troubleshooting, it can help determine if the vehicle was running or stopped, the engine was warmed up or not, the air-fuel ratio was Lean or Rich, and other data from the time the malfunction occurred.

HINT:

If it is impossible to duplicate the problem even though a DTC is detected, confirm the freeze frame data.

The ECM records engine conditions in the form of freeze frame data every 0.5 seconds. Using the intelligent tester, five separate sets of freeze frame data, including the data values at the time when the DTC was set, can be checked.

– 3 data sets before the DTC was set.
– 1 data set when the DTC was set.
– 1 data set after the DTC was set.

These data sets can be used to simulate the condition of the vehicle around the time of the occurrence of the malfunction. The data may assist in identifying the cause of the malfunction, and in judging whether it was temporary or not.

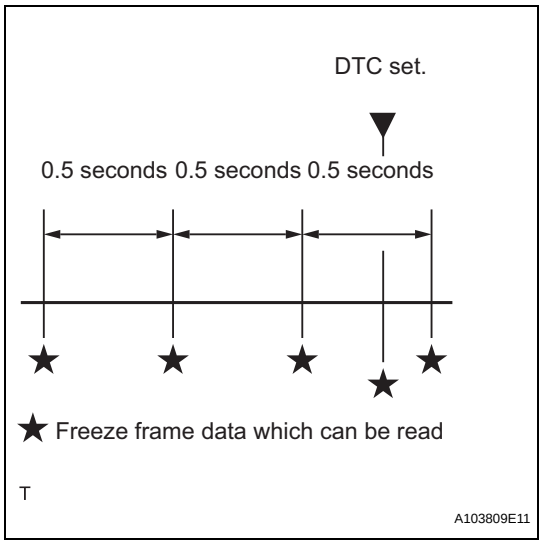

2. LIST OF FREEZE FRAME DATA

LABEL (Intelligent Tester Display)	Measure Item	Diagnostic Note
INJECTOR	Injection period of No. 1 cylinder	-
IGN ADVANCE	Ignition advance	-
CALC LOAD	Calculated load	Calculated load by ECM
VEHICLE LOAD	Vehicle load	-
MAF	Mass air flow volume	If approximately 0.0 g/sec: • Mass air flow meter power source circuit open or short • VG circuit open or short If 160.0 g/sec or more: • E2G circuit open
ENGINE SPD	Engine speed	-
VEHICLE SPD	Vehicle speed	Speed indicated on speedometer
COOLANT TEMP	Engine coolant temperature	If -40°C, sensor circuit open If 140°C or more, sensor circuit shorted
INTAKE AIR	Intake air temperature	If -40°C, sensor circuit open If 140°C or more, sensor circuit shorted
AIR-FUEL RATIO	Ratio compared to stoichiometric level	-
PURGE DENSITY	Learning value of purge density	-
EVAP PURGE FLOW	Ratio of evaporative purge flow to intake air volume	-
EVAP PURGE VSV	EVAP purge VSV duty ratio	-
KNOCK CRRT VAL	Correction learning value of knocking	-
KNOCK FB VAL	Feedback value of knocking	-

LABEL (Intelligent Tester Display)	Measure Item	Diagnostic Note
EVAP VAPOR PRES	EVAP vapor pressure	-
ACCEL POS #1	Absolute Accelerator Pedal Position (APP) No.1	-
ACCEL POS #2	Absolute APP No. 2	-
THROTTLE POS	Throttle sensor positioning	-
THROTTLE POS	Throttle position	-
THROTTLE POS #2	Throttle sensor positioning #2	-
THROTTLE MOT	Throttle motor	-
O2S B1 S2	Heated oxygen sensor output	Performing INJ VOL or A/F CONTROL function of ACTIVE TEST enables technician to check output voltage of sensor
AFS B1 S1	A/F sensor output	Performing INJ VOL or A/F CONTROL function of ACTIVE TEST enables technician to check output voltage of sensor
TOTAL FT #1	Total fuel trim	-
SHORT FT #1	Short-term fuel trim	Short-term fuel compensation used to maintain air-fuel ratio at stoichiometric air-fuel ratio
LONG FT #1	Long-term fuel trim	Overall fuel compensation carried out in long-term to compensate a continual deviation of short-term fuel trim from central valve
FUEL SYS #1	Fuel system status	• OL (Open Loop): Has not yet satisfied conditions to go closed loop • CL (Closed Loop): Using A/F sensor as feedback for fuel control • OL DRIVE: Open loop due to driving conditions (fuel enrichment) • OL FAULT: Open loop due to detected system fault • CL FAULT: Closed loop but A/F sensor, which used for fuel control malfunctioning
O2FT B1 S2	Fuel trim at heated oxygen sensor	-
AF FT B1 S1	Fuel trim at A/F sensor	-
AFS B1 S1	A/F sensor output current for sensor 1	Performing INJ VOL or A/F CONTROL function of ACTIVE TEST enables technician to check current output of sensor
CAT TEMP B1S1	Estimated catalyst temperature (sensor 1)	-
CAT TEMP B1S2	Estimated catalyst temperature (sensor 2)	-
S O2S B1 S2	Sub oxygen sensor impedance (sensor 2)	-
INI COOL TEMP	Engine coolant temperature at engine start	-
INI INTAKE TEMP	Intake air temperature at engine start	-
INJ VOL	Injection volume	-
ACC RELAY	ACC (Accessory) relay	-
STARTER RELAY	Starter relay (STA) signal	-
STARTER SIG	Starter switch (STSW) signal	-
STARTER CONTROL	Starter control (STAR) signal	-
PS SW	Power steering signal	-
PS SIGNAL	Power steering signal (history)	Signal status usually ON until ignition switch turned to OFF
CTP SW	Closed throttle position switch	-
A/C SIGNAL	A/C signal	-
PNP SW (NSW)	Park/Neutral Position (PNP) switch signal	-
ELECT LOAD SIG	Electrical load signal	-
STOP LIGHT SW	Stop light switch	-
BATTERY VOLTAGE	Battery voltage	-

LABEL (Intelligent Tester Display)	Measure Item	Diagnostic Note
EVAP (Purge) VSV	EVAP Purge VSV	-
FUEL PUMP/SPD	Fuel pump/speed status	-
VVT CTRL B1	VVT control status	-
VACUUM PUMP	Key-off EVAP system leak detection pump status	See page ES-317
EVAP VENT VAL	Key-off EVAP system vent valve status	-
FAN MOTOR	Electric fan motor	-
TC/TE1	TC and CG (TE1) terminals of DLC3	-
VVTL AIM ANGL#1	VVT aim angle	-
VVT CHNG ANGL#1	VVT angle	-
VVT OCV DUTY B1	VVT OCV operation duty	-
FC IDL	Fuel cut idle	ON: when throttle valve fully closed and engine speed over 3,500 rpm
FC TAU	Fuel cut during very light load	Fuel cut being performed under very light load to prevent engine combustion from becoming incomplete
IGNITION	Ignition counter	-
CYL #1	Cylinder #1 misfire	Only displayed during idling
CYL #2	Cylinder #2 misfire	Only displayed during idling
CYL #3	Cylinder #3 misfire	Only displayed during idling
CYL #4	Cylinder #4 misfire	Only displayed during idling
CYL ALL	All cylinders misfire	Only displayed during idling
MISFIRE RPM	Engine speed when misfire occurred	-
MISFIRE LOAD	Engine load when misfire occurred	-
MISFIRE MARGIN	Margin to detect engine misfire	-
ENG RUN TIME	Accumulated engine running time	-
TIME DTC CLEAR	Cumulative time after DTC cleared	-
DIST DTC CLEAR	Accumulated distance from DTC cleared	-
WU CYC DTC CLEAR	Warm-up cycle after DTC cleared	-

CHECK MODE PROCEDURE

HINT:
Intelligent tester only:
Compared to normal mode, check mode is more sensitive to malfunctions. Therefore, check mode can detect the malfunctions that cannot be detected by normal mode.
NOTICE:
All the stored DTCs and freeze frame data are erased if: 1) the ECM is changed from normal mode to check mode or vice versa; or 2) the ignition switch is turned from ON to ACC or OFF while in check mode. Before changing modes, always check and make a note of any DTCs and freeze frame data.

ES

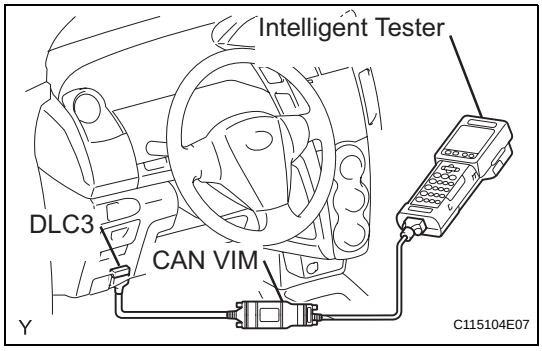

1. CHECK MODE PROCEDURE (Using an intelligent tester)

(a) Check and ensure the following conditions:
  (1) Battery positive voltage 11 V or more.
  (2) Throttle valve fully closed.
  (3) Transmission in the P or N positions.
  (4) A/C switch OFF.
(b) Turn the ignition switch to OFF.
(c) Connect the intelligent tester to the DLC3.
(d) Turn the ignition switch to ON.
(e) Turn the tester ON.
(f) Select the following menu items: DIAGNOSIS / ENHANCED OBD II / CHECK MODE.
(g) Switch the ECM from normal mode to check mode.
(h) Make sure the MIL flashes as shown in the illustration.
(i) Start the engine.
(j) Make sure the MIL turns off.
(k) Simulate the conditions of the malfunction described by the customer.
(l) Check DTCs and freeze frame data using the tester.

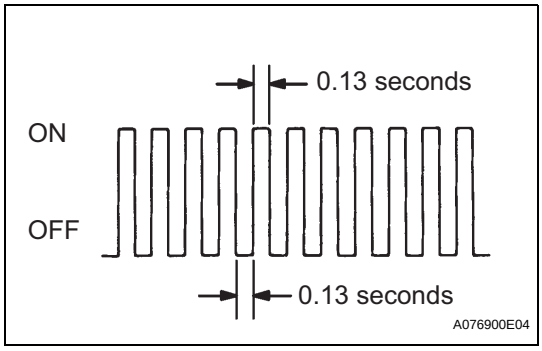

FAIL-SAFE CHART

If any of the following DTCs are set, the ECM enters fail-safe mode to allow the vehicle to be driven temporarily.

DTCs	Components	Fail-Safe Operations	Fail Safe Deactivation Conditions
P0031 and P0032	Air-Fuel Ratio (A/F) Sensor Heater	ECM turns off A/F sensor heater.	Ignition switch OFF
P0037 and P0038	Heated Oxygen (HO2) Sensor Heater	ECM turns off HO2 sensor heater.	Ignition switch OFF
P0100, P0102 and P0103	Mass Air Flow (MAF) Meter	ECM calculates ignition timing according to engine speed and throttle valve position.	Pass condition detected
P0110, P0112 and P0113	Intake Air Temperature (IAT) Sensor	ECM estimates IAT to be 20°C (68°F).	Pass condition detected
P0115, P0117 and P0118	Engine Coolant Temperature (ECT) Sensor	ECM estimates ECT to be 80°C (176°F).	Pass condition detected
P0120, P0121, P0122, P0123, P0220, P0222, P0223, P0604, P0606, P0607, P0657, P2102, P2103, P2111, P2112, P2118, P2119 and P2135	Electronic Throttle Control System (ETCS)	ECM cuts off throttle actuator current and throttle valve returned to 6° throttle position by return spring. ECM then adjusts engine output by controlling fuel injection (intermittent fuel-cut) and ignition timing in accordance with accelerator pedal opening angle to allow vehicle to continue at minimal speed*.	Pass condition detected and then ignition switch turned OFF
P0327 and P0328	Knock Sensor	ECM sets ignition timing to maximum retard.	Ignition switch OFF
P0351 to P0354	Igniter	ECM cuts fuel.	Pass condition detected
P2120, P2121, P2122, P2123, P2125, P2127, P2128 and P2138	Accelerator Pedal Position (APP) Sensor	APP sensor has 2 sensor circuits: Main and Sub. If either circuit malfunctions, ECM controls engine using other circuit. If both circuits malfunction, ECM regards accelerator pedal as being released. As result, throttle valve closed and engine idles.	Pass condition detected and then ignition switch turned OFF

*: The vehicle can be driven slowly when the accelerator pedal is depressed firmly and slowly. If the accelerator pedal is depressed quickly, the vehicle may speed up and slow down erratically.

DATA LIST / ACTIVE TEST

1. DATA LIST

HINT:

By reading the DATA LIST displayed on an intelligent tester, values can be checked, including those of the switches, sensors, and actuators, without removing any parts. Reading the DATA LIST as the first step of troubleshooting is one method of shortening diagnostic time.

NOTICE:

In the table below, the values listed under Normal Condition are for reference only. Do not depend solely on these values when determining whether or not a part is faulty.

(a) Warm up the engine.
(b) Turn the ignition switch to OFF.
(c) Connect the intelligent tester to the DLC3.
(d) Turn the ignition switch to ON.
(e) Turn the tester ON.
(f) Select the following menu items: DIAGNOSIS / ENHANCED OBD II / DATA LIST.
(g) Check the values by referring to the table below.

Intelligent Tester Display	Measurement: Range (Display)	Normal Condition*1	Diagnostic Note
INJECTOR	Injection period of No. 1 cylinder: Min.: 0 ms, Max.: 32.64 ms	1.0 to 3.0 ms: Idling	-
IGN ADVANCE	Ignition timing advance for No. 1 cylinder: Min.: -64 deg, Max.: 63.5 deg	BTDC 0 to 14 deg: Idling	-
CALC LOAD	Calculated load by ECM: Min.: 0 %, Max.: 100 %	• 10 to 30 %: Idling • 10 to 30 %: Running without load at 2,500 rpm	-
VEHICLE LOAD	Vehicle load: Min.: 0 %, Max.: 25,700 %	Actual vehicle load	-
MAF	Air flow rate from Mass Air Flow (MAF) meter: Min.: 0 g/sec, Max.: 655.35 g/sec	1 to 3 g/sec: Idling 2 to 6 g/sec: Running without load at 2,500 rpm	If value approximately 0.0 g/sec: • MAF meter power source circuit open • VG circuit open or short If value 160.0 g/sec or more: • E2G circuit open
ENGINE SPD	Engine speed: Min.: 0 rpm, Max.: 16,383.75 rpm	• 550 to 650 rpm: Idling (M/T) • 650 to 750 rpm: Idling (A/T)	-
VEHICLE SPD	Vehicle speed: Min.: 0 km/h, Max.: 255 km/h	Actual vehicle speed	Speed indicated on speedometer
COOLANT TEMP	Engine coolant temperature: Min.: -40°C, Max.: 140°C	80 to 100°C (176 to 212°F): After warming up	• If -40°C (-40°F): sensor circuit open • If 140°C (284°F) or more: sensor circuit shorted
INTAKE AIR	Intake air temperature: Min.: -40°C, Max.: 140°C	Equivalent to ambient air temperature	• If -40°C (-40°F): sensor circuit open • If 140°C (284°F) or more: sensor circuit shorted
AIR-FUEL RATIO	Ratio compared to stoichiometric level: Min.: 0, Max.: 1.999	0.8 to 1.2: Idling	• Less than 1 (0 to 0.999) = Lean • Stoichiometric air-fuel ratio = 1 • Greater than 1 (1.001 to 1.999) = Rich
PURGE DENSITY	Learning value of purge density: Min.: -50, Max.: 350	-40 to 10: Idling	-

Intelligent Tester Display	Measurement: Range (Display)	Normal Condition*1	Diagnostic Note
EVAP PURGE FLOW	Ratio of evaporative purge flow to intake air volume: Min.: 0 %, Max.: 102.4 %	0 to 10 %: Idling	-
EVAP PURGE VSV	EVAP (PURGE) VSV control duty: Min.: 0 %, Max.: 100 %	10 to 50 %: Idling	Order signal from ECM
VAPOR PRES PUMP	Vapor pressure: Min.: 33.853 kPa, Max.: 125.596 kPa	Approximately 100 kPa: Ignition switch ON	EVAP system pressure monitored by canister pressure sensor
VAPOR PRES CALC	Vapor pressure (calculated): Min.: -5.632 kPa, Max.: 7,153.264 kPa	Approximately 100 kPa: Ignition switch ON	EVAP system pressure monitored by canister pressure sensor
KNOCK CRRT VAL	Knock correction learning value: Min: -64 °CA, Max.: 1,984 °CA	0 to 20°CA: Driving at 44 mph (70 km/h)	Service data
KNOCK FB VAL	Knock feedback value: Min: -64 °CA, Max.: 1,984 °CA	-20 to 0°CA: Driving at 44 mph (70 km/h)	Service data
CLUTCH	Clutch current: Min.: 0 A, Max.: 2.49 A	-	-
EVAP VAPOR PRES	EVAP vapor pressure: Min.: 0 kPa, Max.: 327.675 kPa	Approximately 100 kPa: Ignition switch ON	EVAP system pressure monitored by canister pressure sensor
ACCEL POS #1	Absolute Accelerator Pedal Position (APP) No. 1: Min.: 0 %, Max.: 100 %	10 to 22 %: Accelerator pedal released 52 to 90 %: Accelerator pedal fully depressed	Read value with ignition switch ON (Do not start engine)
ACCEL POS #2	Absolute APP No. 2: Min.: 0 %, Max.: 100 %	24 to 40 %: Accelerator pedal released 68 to 100 %: Accelerator pedal fully depressed	Read value with ignition switch ON (Do not start engine)
ACCEL POS #1	APP sensor No. 1 voltage: Min.: 0 V, Max.: 4.98 V	-	ETCS freeze data
ACCEL POS #2	APP sensor No. 2 voltage: Min.: 0 V, Max.: 4.98 V	-	ETCS freeze data
ACCEL POS #1	APP sensor No. 1 voltage: Min.: 0 V, Max.: 5 V	0.5 to 1.1 V: Accelerator pedal released 2.6 to 4.5 V: Accelerator pedal fully depressed	Read value with ignition switch ON (Do not start engine)
ACCEL POS #2	APP sensor No. 2 voltage: Min.: 0 V, Max.: 5 V	1.2 to 2.0 V: Accelerator pedal released 3.4 to 5.0 V: Accelerator pedal fully depressed	Read value with ignition switch ON (Do not start engine)
ACCEL IDL POS	Whether or not accelerator pedal position sensor detecting idle: ON or OFF	ON: Idling	-
THRTL LEARN VAL	Throttle valve fully closed (learned value): Min.: 0 V, Max.: 5 V	0.4 to 0.8 V	-
ACCEL SSR #1 AD	APP sensor No. 1 voltage (AD): Min.: 0 V, Max.: 4.98 V	-	ETCS service data
ACCEL LRN VAL#1	Accelerator fully closed learning value No. 1: Min.: 0 deg, Max.: 124.512 deg	-	ETCS service data
ACCEL LRN VAL#2	Accelerator fully closed learning value No. 2: Min.: 0 deg, Max.: 124.512 deg	-	ETCS service data
FAIL #1	Whether or not fail safe function executed: ON or OFF	ON: ETCS has failed	-
FAIL #2	Whether or not fail safe function executed: ON or OFF	ON: ETCS has failed	-
ST1	Brake pedal signal: ON or OFF	ON: Brake pedal depressed	-

Intelligent Tester Display	Measurement: Range (Display)	Normal Condition*1	Diagnostic Note
SYS GUARD JUDGE	System guard: ON or OFF	-	ETCS service data
OPN MALFUNCTION	Open side malfunction: ON or OFF	-	ETCS service data
THROTTLE POS	Throttle position sensor: Min.: 0%, Max.: 100 %	• 10 to 22 %: Throttle fully closed • 66 to 98 %: Throttle fully open	• Calculated value based on VTA1 • Read value with ignition switch ON (Do not start engine)
THROTTL IDL POS	Whether or not throttle position sensor detecting idle: ON or OFF	ON: Idling	-
THRTL REQ POS	Throttle requirement position: Min.: 0 V, Max.: 5 V	0.5 to 1.0 V: Idling	-
THROTTLE POS	Throttle position: Min.: 0 %, Max.: 100 %	• 0 %: Throttle fully closed • 50 to 80 %: Throttle fully open	• Recognition value for throttle opening angle on ECM • Read value with ignition switch ON (Do not start engine)
THROTTLE POS #2	Throttle position No. 2 sensor: Min.: 0 %, Max.: 100 %	• 42 to 62 %: Throttle fully closed • 92 to 100 %: Throttle fully open	• Calculated value based on VTA2 • Read value with ignition switch ON (Do not start engine)
THROTTLE POS #1	Throttle position sensor No. 1 output voltage: Min.: 0 V, Max.: 4.98 V	-	ETCS freeze data
THROTTLE POS #2	Throttle position sensor No. 2 output voltage: Min.: 0 V, Max.: 4.98 V	-	ETCS freeze data
THROTTLE POS #1	Throttle position sensor No. 1 output voltage: Min.: 0 V, Max.: 5 V	• 0.5 to 1.1 V: Throttle fully closed • 3.3 to 4.9 V: Throttle fully open	Read value with ignition switch ON (Do not start engine)
THROTTLE POS #2	Throttle position sensor No. 2 output voltage: Min.: 0 V, Max.: 5 V	• 2.1 to 3.1 V: Throttle fully closed • 4.6 to 5.0 V: Throttle fully open	Read value with ignition switch ON (Do not start engine)
THRTL COMND VAL	Throttle position command value: Min.: 0 V, Max.: 4.9804 V	0.5 to 4.9 V	Read value with ignition switch ON (Do not start engine)
THROTTLE SSR #1	Throttle sensor opener position No. 1: Min.: 0 V, Max.: 4.9804 V	-	ETCS service data
THROTTLE SSR #2	Throttle sensor opener position No. 2: Min.: 0 V, Max.: 4.9804 V	-	ETCS service data
THRTL SSR #1 AD	Throttle position sensor No. 1 output voltage (AD): Min.: 0 V, Max.: 4.9804 V	0.5 to 4.9 V	Read value with ignition switch ON (Do not start engine)
THROTTLE MOT	Whether or not throttle actuator control permitted: ON or OFF	ON: Idling	Read value with ignition switch ON (Do not start engine)
THROTTLE MOT	Throttle actuator current: Min.: 0 A, Max.: 80 A	0 to 3.0 A: Idling	-
THROTTLE MOT	Throttle actuator: Min.: 0 %, Max.: 100 %	0.5 to 40 %: Idling	-
THROTTLE MOT	Throttle actuator current: Min.: 0 A, Max.: 19.92 A	0 to 3.0 A: Idling	-
THROTL OPN DUTY	Throttle actuator opening duty ratio: Min.: 0 %, Max.: 100 %	0 to 40 %: During idling	• When accelerator pedal depressed, duty ratio increased • Read value with ignition switch ON (Do not start engine)

Intelligent Tester Display	Measurement: Range (Display)	Normal Condition*1	Diagnostic Note
THROTL CLS DUTY	Throttle actuator closed duty ratio: Min.: 0 %, Max.: 100 %	0 to 40 %: During idling	• When accelerator pedal released quickly, duty ratio increased • Read value with ignition switch ON (Do not start engine)
THRTL MOT (OPN)	Throttle actuator duty ratio (open): Min.: 0 %, Max.: 100 %	0 to 40 %: During idling	ETCS service data
THRTL MOT (CLS)	Throttle actuator duty ratio (closed): Min.: 0 %, Max.: 100 %	0 to 40 %: During idling	ETCS service data
O2S B1 S2	Heated oxygen sensor output voltage for sensor 2: Min.: 0 V Max.: 1.275 V	0.1 to 0.9 V: Driving at 44 mph (70 km/h)	Performing INJ VOL or A/F CONTROL function of ACTIVE TEST enables technician to check output voltage of sensor
AFS B1 S1	A/F sensor output voltage for sensor 1: Min.: 0 V Max.: 7.999 V	2.8 to 3.8 V: Idling	Performing INJ VOL or A/F CONTROL function of ACTIVE TEST enables technician to check output voltage of sensor
TOTAL FT #1	Total fuel trim value for fuel system: Min.: -0.5, Max.: 0.496	-0.2 to 0.2	-
SHORT FT #1	Short-term fuel trim: Min.: -100 %, Max.: 99.2 %	-20 to 20 %	Short-term fuel compensation used to maintain air-fuel ratio at stoichiometric air-fuel ratio
LONG FT #1	Long-term fuel trim: Min.: -100 %, Max.: 99.2 %	-20 to 20 %	Overall fuel compensation carried out in long-term to compensate continual deviation of short-term fuel trim from central value
FUEL SYS #1	Fuel system status: OL or CL or OL DRIVE or OL FAULT or CL FAULT	CL: Idling after warming up	• OL (Open Loop): Has not yet satisfied conditions to go closed loop • CL (Closed Loop): Using A/F sensor as feedback for fuel control • OL DRIVE: Open loop due to driving conditions (fuel enrichment) • OL FAULT: Open loop due to detected system fault • CL FAULT: Closed loop but A/F sensor, which used for fuel control malfunctioning
O2FT B1 S2	Short-term fuel trim associated with sensor 2: Min.: -100 %, Max.: 99.2 %	-	-
AF FT B1 S1	Short-term fuel trim associated with sensor 1: Min.: 0, Max.: 1.999	• Value less than 1 (0.000 to 0.999) =Lean • Stoichiometric air-fuel ratio=1 • Value greater than 1 (1.001 to 1.999) = Rich	-
AFS B1 S1	A/F sensor output current for sensor 1: Min.: -128 mA, Max.: 127.99 mA	-	Performing INJ VOL or A/F CONTROL function of ACTIVE TEST enables technician to check current output of sensor
CAT TEMP B1S1	Estimated catalyst temperature (sensor 1): Min.: -40°C, Max.: 6,513.5°C	-	-
CAT TEMP B1S2	Estimated catalyst temperature (sensor 2): Min.: -40°C, Max.: 6,513.5°C	-	-

ES

Intelligent Tester Display	Measurement: Range (Display)	Normal Condition*1	Diagnostic Note
S O2S B1 S2	Sub oxygen sensor impedance (sensor 2): Min.: 0 Ω, Max.: 21,247.68 Ω	5 to 15,000 Ω: While vehicle is driving and engine is warmed up	-
INI COOL TEMP	Engine coolant temperature at engine start: Min.: -40°C, Max.: 120°C	Close to ambient air temperature	-
INI INTAKE TEMP	Intake air temperature at engine start: Min.: -40°C, Max.: 120°C	Close to ambient air temperature	-
INJ VOL	Injection volume (Cylinder 1): Min.: 0 ml, Max.: 2.048 ml	0 to 0.15 ml: Idling	Quantity of fuel injection volume for 10 times
ACC RELAY	ACC (Accessory) relay: ON or OFF	ON: Cranking	-
STARTER RELAY	Starter relay (STA) signal: ON or OFF	ON: Cranking	-
STARTER SIG	Starter switch (STSW) signal: ON or OFF	ON: Cranking	-
STARTER CONTROL	Starter control (STAR) signal: ON or OFF	ON: Cranking	-
PS SW	Power steering signal: ON or OFF	ON: Power steering operation	-
PS SIGNAL	Power steering signal (history): ON or OFF	ON: When steering wheel first turned after battery terminals connected	Signal status usually ON until battery terminals disconnected
CTP SW	Closed throttle position switch: ON or OFF	• ON: Throttle fully closed • OFF: Throttle open	-
A/C SIGNAL	A/C signal: ON or OFF	ON: A/C ON	-
PNP SW [NSW]	PNP switch status: ON or OFF	ON: P or N position	-
ELECT LOAD SIG	Electrical load signal: ON or OFF	ON: Headlights or defogger turned ON	-
STOP LIGHT SW	Stop light switch: ON or OFF	ON: Brake pedal depressed	-
+BM	Whether or not electric throttle control system power inputted: ON or OFF	ON: Ignition switch ON and system normal	-
+BM VOLTAGE	+BM voltage: Min.: 0, Max.: 19.922	11 to 14 (V): Ignition switch ON and system normal	ETCS service data
BATTERY VOLTAGE	Battery voltage: Min.: 0 V, Max.: 65.535 V	11 to 14 V: Ignition switch ON	-
ACTUATOR POWER	Actuator power supply: ON or OFF	ON: Idling	ETCS service data
ATM PRESSURE	Atmospheric pressure: Min.: 0 kPa, Max.: 255 kPa	Approximately 100 kPa: Ignition switch ON	-
EVAP (Purge) VSV	Purge VSV status: ON or OFF	-	-
FUEL PUMP / SPD	Fuel pump status: ON or OFF	ON: Engine running	Active Test support data
VVT CTRL B1	VVT control (bank 1) status: ON or OFF	-	-
VACUUM PUMP	Key-off EVAP system leak detection pump status: ON or OFF	-	Active Test support data
EVAP VENT VAL	Key-off EVAP system vent valve status: ON or OFF	-	Active Test support data
FAN MOTOR	Electric fan motor: ON or OFF	ON: Electric fan motor operating	-

Intelligent Tester Display	Measurement: Range (Display)	Normal Condition*1	Diagnostic Note
TC/TE1	TC and CG (TE1) terminal of DLC3: ON or OFF	-	Active Test support data
VVTL AIM ANGL#1*2	VVT aim angle: Min.: 0 %, Max.: 100 %	0 to 100 %	VVT duty signal value during intrusive operation
VVT CHNG ANGL#1*2	VVT angle: Min.: 0°FR, Max.: 60°FR	0 to 56° FR	Displacement angle during intrusive operation
VVT OCV DUTY B1*2	VVT OCV operation duty: Min.: 0 %, Max.: 100 %	0 to 100 %	Requested duty value for intrusive operation
FC IDL	Fuel cut idle: ON or OFF	ON: Fuel cut operation	FC IDL = "ON" when throttle valve fully closed and engine speed over 3,500 rpm
FC TAU	Fuel cut TAU (Fuel cut during very light load): ON or OFF	ON: Fuel cut operating	Fuel cut being performed under very light load to prevent engine combustion from becoming incomplete
IGNITION	Ignition counter: Min.: 0, Max.: 400	0 to 400	-
CYL #1, #2, #3, #4	Misfire of cylinder 1 to 4: Min.: 0, Max.: 255	0	-
CYL ALL	All cylinders misfire: Min.: 0, Max.: 255	0	-
MISFIRE RPM	Engine speed when misfire occur: Min.: 0 rpm, Max.: 6,375 rpm	-	-
MISFIRE LOAD	Engine load when misfire occur: Min.: 0 g/rev, Max.: 3.98 g/rev	-	-
MISFIRE MARGIN	Margin to detect engine misfire: Min.: -100 %, Max.: 99.22 %	-100 to 99.22 %	Misfire detecting margin
#CODES	Number of detected DTCs: Min.: 0, Max.: 255	-	-
CHECK MODE	Check mode: ON or OFF	ON: Check mode ON	See page ES-37
SPD TEST	Check mode result for vehicle speed sensor: COMPL or INCMPL	-	-
MISFIRE TEST	Check mode result for misfire monitor: COMPL or INCMPL	-	-
OXS1 TEST	Check mode result for HO2 sensor: COMPL or INCMPL	-	-
A/F SSR TEST B1	Check mode result for air-fuel ratio sensor: COMPL or INCMPL	-	-
MIL	MIL status: ON or OFF	ON: MIL ON	-
MIL ON RUN DIST	MIL ON Run Distance: Min.: 0 km, Max.: 65,535 km	Distance after DTC detected	-
MIL ON RUN TIME	Running time from MIL ON: Min.: 0 minute, Max.: 65,535 minutes	Equivalent to running time after MIL ON	-
ENG RUN TIME	Engine run time: Min.: 0 second, Max.: 65,535 seconds	Time after engine start	-
TIME DTC CLEAR	Time after DTC cleared: Min.: 0 minute, Max.: 65,535 minutes	Equivalent to time after DTCs erased	-
DIST DTC CLEAR	Number of warm-up cycles after DTC cleared: Min.: 0 km, Max.: 65,535 km	Equivalent to drive distance after DTCs erased	-

Intelligent Tester Display	Measurement: Range (Display)	Normal Condition*1	Diagnostic Note
WU CYC DTC CLEAR	Warm-up cycle after DTC cleared: Min.: 0, Max.: 255	-	-
OBD CERT	OBD requirement	OBD2	-
#CARB CODES	Number of emission related DTCs	-	-
COMP MON	Comprehensive component monitor: NOT AVL or AVAIL	-	-
FUEL MON	Fuel system monitor: NOT AVL or AVAIL	-	-
MISFIRE MON	Misfire monitor: NOT AVL or AVAIL	-	-
O2S (A/FS) HTR	O2S (A/FS) heater monitor: NOT AVL or AVAIL	-	-
O2S (A/FS) HTR	O2S (A/FS) heater monitor: COMPL or INCMPL	-	-
O2S (A/FS) MON	O2S (A/FS) monitor: NOT AVL or AVAIL	-	-
O2S (A/FS) MON	O2S (A/FS) monitor: COMPL or INCMPL	-	-
EVAP MON	EVAP monitor: NOT AVL or AVAIL	-	-
EVAP MON	EVAP monitor: COMPL or INCMPL	-	-
CAT MON	Catalyst monitor: NOT AVL or AVAIL	-	-
CAT MON	Catalyst monitor: COMPL or INCMPL	-	-
CCM ENA	Comprehensive component monitor: UNABLE or ENABLE	-	-
CCM CMPL	Comprehensive component monitor: COMPL or INCMPL	-	-
FUEL ENA	Fuel system monitor: UNABLE or ENABLE	-	-
FUEL CMPL	Fuel system monitor: COMPL or INCMPL	-	-
MISFIRE ENA	Misfire monitor: UNABLE or ENABLE	-	-
MISFIRE CMPL	Misfire monitor: COMPL or INCMPL	-	-
HTR ENA	O2S (A/FS) heater monitor: UNABLE or ENABLE	-	-
HTR CMPL	O2S (A/FS) heater monitor: COMPL or INCMPL	-	-
O2S (A/FS) ENA	O2S (A/FS) monitor: UNABLE or ENABLE	-	-
O2S (A/FS) CMPL	O2S (A/FS) monitor: COMPL or INCMPL	-	-
EVAP ENA	EVAP monitor: UNABLE or ENABLE	-	-
EVAP CMPL	EVAP monitor: COMPL or INCMPL	-	-
CAT ENA	Catalyst monitor: UNABLE or ENABLE	-	-
CAT CMPL	Catalyst monitor: COMPL or INCMPL	-	-
MODEL CODE	Identifying model code	NCP9#	-

Intelligent Tester Display	Measurement: Range (Display)	Normal Condition*1	Diagnostic Note
ENGINE TYPE	Identifying engine type	1NZFE	-
CYLINDER NUMBER	Identifying cylinder number: Min.: 0, Max.: 255	4	-
TRANSMISSION	Identifying transmission type	MT or ECT (4AT)	-
DESTINATION	Identifying destination	A (America)	-
MODEL YEAR	Identifying model year: Min.: 1900, Max.: 2155	200#	-
SYSTEM	Identifying engine system	GASLIN (gasoline engine)	-

HINT:

- *1: If no idling conditions are specified, the transmission gear selector lever should be in the N or P position, and the A/C switch and all accessory switches should be OFF.
- *2: DATA LIST values are only displayed when performing the following ACTIVE TESTs: VVT B1. For other ACTIVE TESTs, the DATA LIST value will be 0.

ES

2. ACTIVE TEST

HINT:

Performing an ACTIVE TEST enables components including the relays, VSV (Vacuum Switching Valve) and actuators, to be operated without removing any parts. The ACTIVE TEST can be performed with an intelligent tester. Performing an ACTIVE TEST as the first step of troubleshooting is one method of shortening diagnostic time.

DATA LIST can be displayed during ACTIVE TEST.

(a) Connect the intelligent tester to the DLC3.
(b) Turn the ignition switch to ON.
(c) Turn the tester ON.
(d) Select the following menu items: DIAGNOSIS / ENHANCED OBD II / ACTIVE TEST.
(e) Perform the ACTIVE TEST by referring to the table below.

Intelligent Tester Displays	Test Details	Control Ranges	Diagnostic Notes
INJ VOL	Change injection volume	Between -12.5 and 24.8 %	• All injectors tested at same time • Perform test at less than 3,000 rpm • Injection volume can be changed in 0.1 % graduations within control range
A/F CONTROL	Change injection volume	Decrease by 12.5 % or increase by 25 %	• Perform test at less than 3,000 rpm • A/F CONTROL enables checking and graphing of A/F (Air Fuel Ratio) sensor and Heated Oxygen (HO2) sensor voltage outputs • To conduct test, select following menu items: ACTIVE TEST / A/F CONTROL / USER DATA / AFS B1S1 and O2S B1S2, and press YES and ENTER followed by F4
EVAP VSV (ALONE)	Activate purge VSV control	ON/OFF	-
FUEL PUMP / SPD	Activate fuel pump (C/OPN Relay)	ON/OFF	Test possible when engine stopped

Intelligent Tester Displays	Test Details	Control Ranges	Diagnostic Notes
TC/TE1	Turn on and off TC and CG (TE1) connection	ON/OFF	• ON: TC and CG (TE1) connected • OFF: TC and CG (TE1) disconnected
FC IDL PROHBT	Prohibit idling fuel cut control	ON/OFF	-
COOLING FAN	Control Electric Cooling Fan	ON/OFF	-
STARTER	Starter	ON/OFF	Test possible when engine stopped
ACC CUT	Active ACC (Accessory) relay	ON/OFF	Test possible when engine stopped
ETCS OPEN SLOW	Throttle actuator	ON: Throttle valve opens slowly	Test possible when following conditions met: • Engine stopped • Shift position in P • Fully depressing accelerator pedal (APP: 59 degrees or more)
ETCS CLOSE SLOW	Throttle actuator	ON: Throttle valve closes slowly	
ETCS OPEN FAST	Throttle actuator	ON: Throttle valve opens fast	
ETCS CLOSE FAST	Throttle actuator	ON: Throttle valve closes fast	
VVT B1	Control VVT (bank 1)	-128 to 127 % This value added to present OCV control duty 100 %: Maximum advance -100 %: Maximum retard	Engine stall or rough idle when VVT actuator operated by 100 %. Test possible while vehicle stopped and engine idling
VVT CTRL B1	Turn on and off OCV (Oil Control Valve)	ON/OFF	• Engine stalls or idles roughly when OCV turned ON • Normal engine running or idling when OCV OFF • Test possible while vehicle stopped and engine idling
VACUUM PUMP	Leak detection pump	ON/OFF	-
VENT VALVE	Vent valve	ON/OFF	-
FUEL CUT #1	Cylinder #1 injector fuel cut	ON/OFF	Test possible during vehicle stopping and engine idling
FUEL CUT #2	Cylinder #2 injector fuel cut	ON/OFF	
FUEL CUT #3	Cylinder #3 injector fuel cut	ON/OFF	
FUEL CUT #4	Cylinder #4 injector fuel cut	ON/OFF	

3. SYSTEM CHECK

HINT:

Performing a SYSTEM CHECK enables the system, which consists of multiple actuators, to be operated without removing any parts. In addition, it can show whether or not any DTCs are set, and can detect potential malfunctions in the system. The SYSTEM CHECK can be performed with an intelligent tester.

(a) Connect the intelligent tester to the DLC3.
(b) Turn the ignition switch to ON
(c) Turn the tester ON.
(d) Select the following menu items: DIAGNOSIS / ENHANCED OBD II / SYSTEM CHECK.
(e) Perform the SYSTEM CHECK by referring to the table below.

Intelligent Tester Display	Test Detail	Recommended Fuel Temperature	Diagnostic Note
EVAP SYS CHECK (AUTO OPERATION)	Perform 5 steps in order to operate EVAP key-off monitor automatically	35°C (95°F) or less	• If no DTCs in PENDING CODE after performing this test, system functioning normally • Refer to EVAP system

Intelligent Tester Display	Test Detail	Recommended Fuel Temperature	Diagnostic Note
EVAP SYS CHECK (MANUAL OPERATION)	Perform 5 steps in order to operate EVAP key-off monitor manually	35°C (95°F) or less	• Used to detect malfunctioning parts • Refer to EVAP system

DIAGNOSTIC TROUBLE CODE CHART

HINT:

- *1: MIL flashes when a catalyst damaging misfire is detected.
- *2: A/T denotes Automatic Transaxle models and M/T denotes Manual Transaxle models.
- *3: Only for vehicles except those with Mexico specifications.

DTC No.	Detection Item	Trouble Areas	MIL	Memory	See page
P0010	Camshaft Position "A" Actuator Circuit (Bank 1)	- Open or short in Oil Control Valve (OCV) circuit - OCV - ECM	Comes on	DTC stored	ES-56
P0011	Camshaft Position "A" - Timing Over-Advanced or System Performance (Bank 1)	- Valve timing - OCV - OCV filter - Camshaft timing gear assembly - ECM	Comes on	DTC stored	ES-60
P0012	Camshaft Position "A" - Timing Over-Retarded (Bank 1)	- Same as DTC P0011	Comes on	DTC stored	ES-60
P0016	Crankshaft Position - Camshaft Position Correlation (Bank 1 Sensor A)	- Mechanical system (Timing chain has jumped tooth or chain stretched) - ECM	Comes on	DTC stored	ES-66
P0031	Oxygen (A/F) Sensor Heater Control Circuit Low (Bank 1 Sensor 1)	- Open in Air-Fuel Ratio (A/F) sensor heater circuit - A/F sensor heater (sensor 1) - Integration relay (EFI relay) - ECM	Comes on	DTC stored	ES-68
P0032	Oxygen (A/F) Sensor Heater Control Circuit High (Bank 1 Sensor 1)	- Short in A/F sensor heater circuit - A/F sensor heater (sensor 1) - Integration relay (EFI relay) - ECM	Comes on	DTC stored	ES-68
P0037	Oxygen Sensor Heater Control Circuit Low (Bank 1 Sensor 2)	- Open in Heated Oxygen (HO2) sensor heater circuit - HO2 sensor heater (sensor 2) - Integration relay (EFI relay) - ECM	Comes on	DTC stored	ES-74
P0038	Oxygen Sensor Heater Control Circuit High (Bank 1 Sensor 2)	- Short in HO2 sensor heater circuit - HO2 sensor heater (sensor 2) - Integration relay (EFI relay) - ECM	Comes on	DTC stored	ES-74
P0100	Mass or Volume Air Flow Circuit	- Open or short in Mass Air Flow (MAF) meter circuit - MAF meter - ECM	Comes on	DTC stored	ES-80
P0101 *3	Mass Air Flow Circuit Range / Performance Problem	- MAF meter - Air induction system - PCV hose connections	Comes on	DTC stored	ES-87
P0102	Mass or Volume Air Flow Circuit Low Input	- Open or short in MAF meter circuit - MAF meter - ECM	Comes on	DTC stored	ES-80
P0103	Mass or Volume Air Flow Circuit High Input	- Open or short in MAF meter circuit - MAF meter - ECM	Comes on	DTC stored	ES-80
P0110	Intake Air Temperature Circuit Malfunction	- Open or short in Intake Air Temperature (IAT) sensor circuit - IAT sensor (built into MAF meter) - ECM	Comes on	DTC stored	ES-90
P0112	Intake Air Temperature Circuit Low Input	- Short in IAT sensor circuit - IAT sensor (built into MAF meter) - ECM	Comes on	DTC stored	ES-90

DTC No.	Detection Item	Trouble Areas	MIL	Memory	See page
P0113	Intake Air Temperature Circuit High Input	- Open in IAT sensor circuit - IAT sensor (built into MAF meter) - ECM	Comes on	DTC stored	ES-90
P0115	Engine Coolant Temperature Circuit Malfunction	- Open or short in Engine Coolant Temperature (ECT) sensor circuit - ECT sensor - ECM	Comes on	DTC stored	ES-95
P0116 *3	Engine Coolant Temperature Circuit Range / Performance Problem	- Thermostat - ECT sensor	Comes on	DTC stored	ES-101
P0117	Engine Coolant Temperature Circuit Low Input	- Short in ECT sensor circuit - ECT sensor - ECM	Comes on	DTC stored	ES-95
P0118	Engine Coolant Temperature Circuit High Input	- Open in ECT sensor circuit - ECT sensor - ECM	Comes on	DTC stored	ES-95
P0120	Throttle Pedal Position Sensor / Switch "A" Circuit Malfunction	- Throttle Position (TP) sensor (built into throttle body) - ECM	Comes on	DTC stored	ES-104
P0121	Throttle / Pedal Position Sensor / Switch "A" Circuit Range / Performance Problem	- TP sensor (built into throttle body)	Comes on	DTC stored	ES-111
P0122	Throttle / Pedal Position Sensor / Switch "A" Circuit Low Input	- TP sensor (built into throttle body) - Short in VTA1 circuit - Open in VC circuit - ECM	Comes on	DTC stored	ES-104
P0123	Throttle / Pedal Position Sensor / Switch "A" Circuit High Input	- TP sensor (built into throttle body) - Open in VTA1 circuit - Open in E2 circuit - Short between VC and VTA1 circuits - ECM	Comes on	DTC stored	ES-104
P0125	Insufficient Coolant Temperature for Closed Loop Fuel Control	- Cooling system - ECT sensor - Thermostat	Comes on	DTC stored	ES-113
P0128	Coolant Thermostat (Coolant Temperature Below Thermostat Regulating Temperature)	- Thermostat - Cooling system - ECT sensor - ECM	Comes on	DTC stored	ES-116
P0136	Oxygen Sensor Circuit Malfunction (Bank 1 Sensor 2)	- Open or short in HO2 sensor (sensor 2) circuit - HO2 sensor (sensor 2) - HO2 sensor heater (sensor 2) - Air-Fuel Ratio (A/F) sensor (sensor 1) - Integration relay (EFI relay) - Gas leakage from exhaust system	Comes on	DTC stored	ES-119
P0137	Oxygen Sensor Circuit Low Voltage (Bank 1 Sensor 2)	- Open in HO2 sensor (sensor 2) circuit - HO2 sensor (sensor 2) - HO2 sensor heater (sensor 2) - Integration relay (EFI relay) - Gas leakage from exhaust system	Comes on	DTC stored	ES-119
P0138	Oxygen Sensor Circuit High Voltage (Bank 1 Sensor 2)	- Short in HO2 sensor (sensor 2) circuit - HO2 sensor (sensor 2) - ECM internal circuit malfunction	Comes on	DTC stored	ES-119
P0141	Oxygen Sensor Heater Circuit Malfunction (Bank 1 Sensor 2)	- Open or short in HO2 sensor heater circuit - HO2 sensor heater (sensor 2) - Integration relay (EFI relay) - ECM	Comes on	DTC stored	ES-74

DTC No.	Detection Item	Trouble Areas	MIL	Memory	See page
P0171	System Too Lean (Bank 1)	- Air induction system - Injector blockage - MAF meter - ECT sensor - Fuel pressure - Gas leakage from exhaust system - Open or short in A/F sensor (sensor 1) circuit - A/F sensor (sensor 1) - A/F sensor heater (sensor 1) - Integration relay (EFI relay) - A/F sensor heater and EFI relay circuits - PCV hose connections - PCV valve and hose - ECM	Comes on	DTC stored	ES-136
P0172	System Too Rich (Bank 1)	- Injector leakage or blockage - MAF meter - ECT sensor - Ignition system - Fuel pressure - Gas leakage from exhaust system - Open or short in A/F sensor (sensor 1) circuit - A/F sensor (sensor 1) - A/F sensor heater (sensor 1) - Integration relay (EFI relay) - A/F sensor heater and EFI relay circuits - ECM	Comes on	DTC stored	ES-136
P0220	Throttle / Pedal Position Sensor / Switch "B" Circuit	- TP sensor (built into throttle body) - ECM	Comes on	DTC stored	ES-104
P0222	Throttle / Pedal Position Sensor / Switch "B" Circuit Low Input	- TP sensor (built into throttle body) - Short in VTA2 circuit - Open in VC circuit - ECM	Comes on	DTC stored	ES-104
P0223	Throttle / Pedal Position Sensor / Switch "B" Circuit High Input	- TP sensor (built into throttle body) - Open in VTA2 circuit - Open in E2 circuit - Short between VC and VTA2 circuits - ECM	Comes on	DTC stored	ES-104
P0300	Random / Multiple Cylinder Misfire Detected	- Open or short in engine wire harness - Connector connection - Vacuum hose connection - Ignition system - Injector - Fuel pressure - MAF meter - ECT sensor - Compression pressure - Valve clearance - Valve timing - PCV valve and hose - PCV hose connections - Air induction system - ECM	Comes on/ Blinks *1	DTC stored	ES-145
P0301	Cylinder 1 Misfire Detected	- Same as DTC P0300	Comes on/ Blinks *1	DTC stored	ES-145
P0302	Cylinder 2 Misfire Detected	- Same as DTC P0300	Comes on/ Blinks *1	DTC stored	ES-145
P0303	Cylinder 3 Misfire Detected	- Same as DTC P0300	Comes on/ Blinks *1	DTC stored	ES-145
P0304	Cylinder 4 Misfire Detected	- Same as DTC P0300	Comes on/ Blinks *1	DTC stored	ES-145
P0327	Knock Sensor 1 Circuit Low Input (Bank 1 or Single Sensor)	- Short in knock sensor circuit - Knock sensor - ECM	Comes on	DTC stored	ES-157

DTC No.	Detection Item	Trouble Areas	MIL	Memory	See page
P0328	Knock Sensor 1 Circuit High Input (Bank 1 or Single Sensor)	- Open in knock sensor circuit - Knock sensor - ECM	Comes on	DTC stored	ES-157
P0335	Crankshaft Position Sensor "A" Circuit	- Open or short in Crankshaft Position (CKP) sensor circuit - CKP sensor - CKP sensor plate - ECM	Comes on	DTC stored	ES-161
P0339	Crankshaft Position Sensor "A" Circuit Intermittent	- Same as DTC P0335	-	DTC stored	ES-161
P0340	Camshaft Position Sensor "A" Circuit (Bank 1 or Single Sensor)	- Open or short in Camshaft Position (CMP) sensor circuit - CMP sensor - Camshaft - Jumped tooth of timing chain - ECM	Comes on	DTC stored	ES-167
P0351	Ignition Coil "A" Primary / Secondary Circuit	- Ignition system - Open or short in IGF1 or IGT circuit (1 to 4) between ignition coil with igniter and ECM - No. 1 to No. 4 ignition coils with igniters - ECM	Comes on	DTC stored	ES-172
P0352	Ignition Coil "B" Primary / Secondary Circuit	- Same as DTC P0351	Comes on	DTC stored	ES-172
P0353	Ignition Coil "C" Primary / Secondary Circuit	- Same as DTC P0351	Comes on	DTC stored	ES-172
P0354	Ignition Coil "D" Primary / Secondary Circuit	- Same as DTC P0351	Comes on	DTC stored	ES-172
P0420	Catalyst System Efficiency Below Threshold (Bank 1)	- Front exhaust pipe (with Three-Way Catalytic Converter) - Gas leakage from exhaust system - A/F sensor (sensor 1) - HO2 sensor (sensor 2)	Comes on	DTC stored	ES-180
P043E *3	Evaporative Emission System Reference Orifice Clog Up	- Canister pump module (Reference orifice, leak detection pump, vent valve) - Connector/wire harness (Canister pump module - ECM) - EVAP system hose (pipe from air inlet port to canister pump module, canister filter, fuel tank vent hose) - ECM	Comes on	DTC stored	ES-187
P043F *3	Evaporative Emission System Reference Orifice High Flow	- Same as DTC P043E	Comes on	DTC stored	ES-187
P0441 *3	Evaporative Emission Control System Incorrect Purge Flow	- Purge VSV - Connector/wire harness (Purge VSV - ECM) - Canister pump module - Leakage from EVAP system - Leakage from EVAP line (Purge VSV - Intake manifold) - ECM	Comes on	DTC stored	ES-192
P0450 *3	Evaporative Emission Control System Pressure Sensor / Switch	- Canister pump module - EVAP system hose (pipe from air inlet port to canister pump module, canister filter, fuel tank vent hose) - ECM	Comes on	DTC stored	ES-199
P0451 *3	Evaporative Emission Control System Pressure Sensor Range / Performance	- Canister pump module - Connector/wire harness (Canister pump module - ECM) - EVAP system hose (pipe from air inlet port to canister pump module, canister filter, fuel tank vent hose) - ECM	Comes on	DTC stored	ES-199

DTC No.	Detection Item	Trouble Areas	MIL	Memory	See page
P0452 *3	Evaporative Emission Control System Pressure Sensor / Switch Low Input	- Same as DTC P0451	Comes on	DTC stored	ES-199
P0453 *3	Evaporative Emission Control System Pressure Sensor / Switch High Input	- Same as DTC P0451	Comes on	DTC stored	ES-199
P0455 *3	Evaporative Emission Control System Leak Detected (Gross Leak)	- Fuel cap (loose) - Leakage from EVAP line (Canister - Fuel tank) - Leakage from EVAP line (Purge VSV - Canister) - Canister pump module - Leakage from fuel tank - Leakage from canister	Comes on	DTC stored	ES-209
P0456 *3	Evaporative Emission Control System Leak Detected (Very Small Leak)	- Same as DTC P0455	Comes on	DTC stored	ES-209
P0500	Vehicle Speed Sensor "A"	- Open or short in speed signal circuit - Vehicle speed sensor - Combination meter - ECM - Skid control ECU	Comes on	DTC stored	ES-213
P0504	Brake Switch "A" / "B" Correlation	- Short in stop light switch signal circuit - STOP fuse - IGN fuse - Stop light switch - ECM	-	DTC stored	ES-218
P0505	Idle Control System Malfunction	- ETCS (Electronic Throttle Control System) - Air induction system - PCV hose connections - ECM	Comes on	DTC stored	ES-222
P050A *3	Cold Start Idle Air Control System Performance	- Throttle body assembly - MAF meter - Air induction system - PCV hose connections - VVT system - Air cleaner filter element - ECM	Comes on	DTC stored	ES-226
P050B *3	Cold Start Ignition Timing Performance	- Same as DTC P050A	Comes on	DTC stored	ES-226
P0560	System Voltage	- Open in back up power source circuit - Battery - Battery terminals - EFI fuse - ECM	Comes on	DTC stored	ES-232
P0604	Internal Control Module Random Access Memory (RAM) Error	- ECM	Comes on	DTC stored	ES-236
P0606	ECM / PCM Processor	- ECM	Comes on	DTC stored	ES-236
P0607	Control Module Performance	- ECM	Comes on	DTC stored	ES-236
P0617	Starter Relay Circuit High	- Park/Neutral Position (PNP) switch (A/T *2) - Clutch start switch (M/T *2) - Starter relay circuit - Ignition switch - ECM	Comes on	DTC stored	ES-238
P0630 *3	VIN not Programmed or Mismatch - ECM / PCM	- ECM	Comes on	DTC stored	ES-244
P0657	Actuator Supply Voltage Circuit / Open	- ECM	Comes on	DTC stored	ES-236
P0724	Brake Switch "B" Circuit High	- Short in stop light switch signal circuit - Stop light switch - ECM	Comes on	DTC stored	ES-246

DTC No.	Detection Item	Trouble Areas	MIL	Memory	See page
P2102	Throttle Actuator Control Motor Circuit Low	- Open in throttle actuator circuit - Throttle actuator - ECM	Comes on	DTC stored	ES-249
P2103	Throttle Actuator Control Motor Circuit High	- Short in throttle actuator circuit - Throttle actuator - Throttle valve - Throttle body assembly - ECM	Comes on	DTC stored	ES-249
P2111	Throttle Actuator Control System - Stuck Open	- Throttle actuator - Throttle body assembly - Throttle valve	Comes on	DTC stored	ES-253
P2112	Throttle Actuator Control System - Stuck Closed	- Same as DTC P2111	Comes on	DTC stored	ES-253
P2118	Throttle Actuator Control Motor Current Range / Performance	- Open in ETCS power source circuit - Battery - Battery terminals - ETCS fuse - ECM	Comes on	DTC stored	ES-256
P2119	Throttle Actuator Control Throttle Body Range / Performance	- ETCS - ECM	Comes on	DTC stored	ES-263
P2120	Throttle / Pedal Position Sensor / Switch "D" Circuit	- Accelerator Pedal Position (APP) sensor - ECM	Comes on	DTC stored	ES-266
P2121	Throttle / Pedal Position Sensor / Switch "D" Circuit Range / Performance	- APP sensor - ECM	Comes on	DTC stored	ES-273
P2122	Throttle / Pedal Position Sensor / Switch "D" Circuit Low Input	- APP sensor - Open in VCP1 circuit - Open or ground short in VPA circuit - ECM	Comes on	DTC stored	ES-266
P2123	Throttle / Pedal Position Sensor / Switch "D" Circuit High Input	- APP sensor - Open in EPA circuit - ECM	Comes on	DTC stored	ES-266
P2125	Throttle / Pedal Position Sensor / Switch "E" Circuit	- APP sensor - ECM	Comes on	DTC stored	ES-266
P2127	Throttle / Pedal Position Sensor / Switch "E" Circuit Low Input	- APP sensor - Open in VCP2 circuit - Open or ground short in VPA2 circuit - ECM	Comes on	DTC stored	ES-266
P2128	Throttle / Pedal Position Sensor / Switch "E" Circuit High Input	- APP sensor - Open in EPA2 circuit - ECM	Comes on	DTC stored	ES-266
P2135	Throttle / Pedal Position Sensor / Switch "A" / "B" Voltage Correlation	- Short between VTA1 and VTA2 circuits - TP sensor (built into throttle body) - ECM	Comes on	DTC stored	ES-104
P2138	Throttle / Pedal Position Sensor / Switch "D" / "E" Voltage Correlation	- Short between VPA and VPA2 circuits - APP sensor - ECM	Comes on	DTC stored	ES-266
P2195 *3	Oxygen (A/F) Sensor Signal Stuck Lean (Bank 1 Sensor 1)	- Open or short in A/F sensor (sensor 1) circuit - A/F sensor (sensor 1) - A/F sensor heater (sensor 1) - Integration relay (EFI relay) - A/F sensor heater and EFI relay circuits - ECM	Comes on	DTC stored	ES-276
P2196 *3	Oxygen (A/F) Sensor Signal Stuck Rich (Bank 1 Sensor 1)	- Same as DTC P2195	Comes on	DTC stored	ES-276
P2238	Oxygen (A/F) Sensor Pumping Current Circuit Low (Bank 1 Sensor 1)	- Open or short in A/F sensor (sensor 1) circuit - A/F sensor (sensor 1) - A/F sensor heater (sensor 1) - Integration relay (EFI relay) - A/F sensor heater and EFI relay circuits - ECM	Comes on	DTC stored	ES-290

DTC No.	Detection Item	Trouble Areas	MIL	Memory	See page
P2239	Oxygen (A/F) Sensor Pumping Current Circuit High (Bank 1 Sensor 1)	- Same as DTC P2238	Comes on	DTC stored	ES-290
P2252	Oxygen (A/F) Sensor Reference Ground Circuit Low (Bank 1 Sensor 1)	- Same as DTC P2238	Comes on	DTC stored	ES-290
P2253	Oxygen (A/F) Sensor Reference Ground Circuit High (Bank 1 Sensor 1)	- Same as DTC P2238	Comes on	DTC stored	ES-290
P2401 *3	Evaporative Emission Leak Detection Pump Stuck OFF	- Canister pump module (Reference orifice, leak detection pump, vent valve) - Connector/wire harness (Canister pump module - ECM) - EVAP system hose (pipe from air inlet port to canister pump module, canister filter, fuel tank vent hose) - ECM	Comes on	DTC stored	ES-296
P2402 *3	Evaporative Emission Leak Detection Pump Stuck ON	- Same as DTC P2401	Comes on	DTC stored	ES-296
P2419 *3	Evaporative Emission System Switching Valve Control Circuit Low	- Canister pump module (Reference orifice, leak detection pump, vent valve) - Connector/wire harness (Canister pump module - ECM) - EVAP system hose (pipe from air inlet port to canister pump module, canister filter, fuel tank vent hose) - ECM	Comes on	DTC stored	ES-302
P2420 *3	Evaporative Emission System Switching Valve Control Circuit High	- Canister pump module (Reference orifice, leak detection pump, vent valve) - Connector/wire harness (Canister pump module - ECM) - ECM	Comes on	DTC stored	ES-302
P2610 *3	ECM / PCM Internal Engine Off Timer Performance	- ECM	Comes on	DTC stored	ES-308
P2A00 *3	A/F Sensor Circuit Slow Response (Bank 1 Sensor 1)	- Open or short in A/F sensor circuit - A/F sensor - ECM	Comes on	DTC stored	ES-310

DTC	P0010	Camshaft Position "A" Actuator Circuit (Bank 1)

HINT:
This DTC relates to the Oil Control Valve (OCV).

DESCRIPTION

This DTC is designed to detect opens or shorts in the camshaft oil control valve (OCV) circuit. If the OCV's duty-cycle is excessively high or low while the engine running, the ECM will illuminate the MIL and set the DTC.
The VVT (variable valve timing) system adjusts the intake valve timing to improve the driveability. The engine oil pressure turns the camshaft actuator to adjust the valve timing. The OCV is a solenoid valve and switches the engine oil line. The valve moves when the ECM applies the 12volts to the solenoid. The ECM changes the energizing time to the solenoid (duty-cycle) in accordance with the camshaft position, crankshaft position,, throttle position etc.

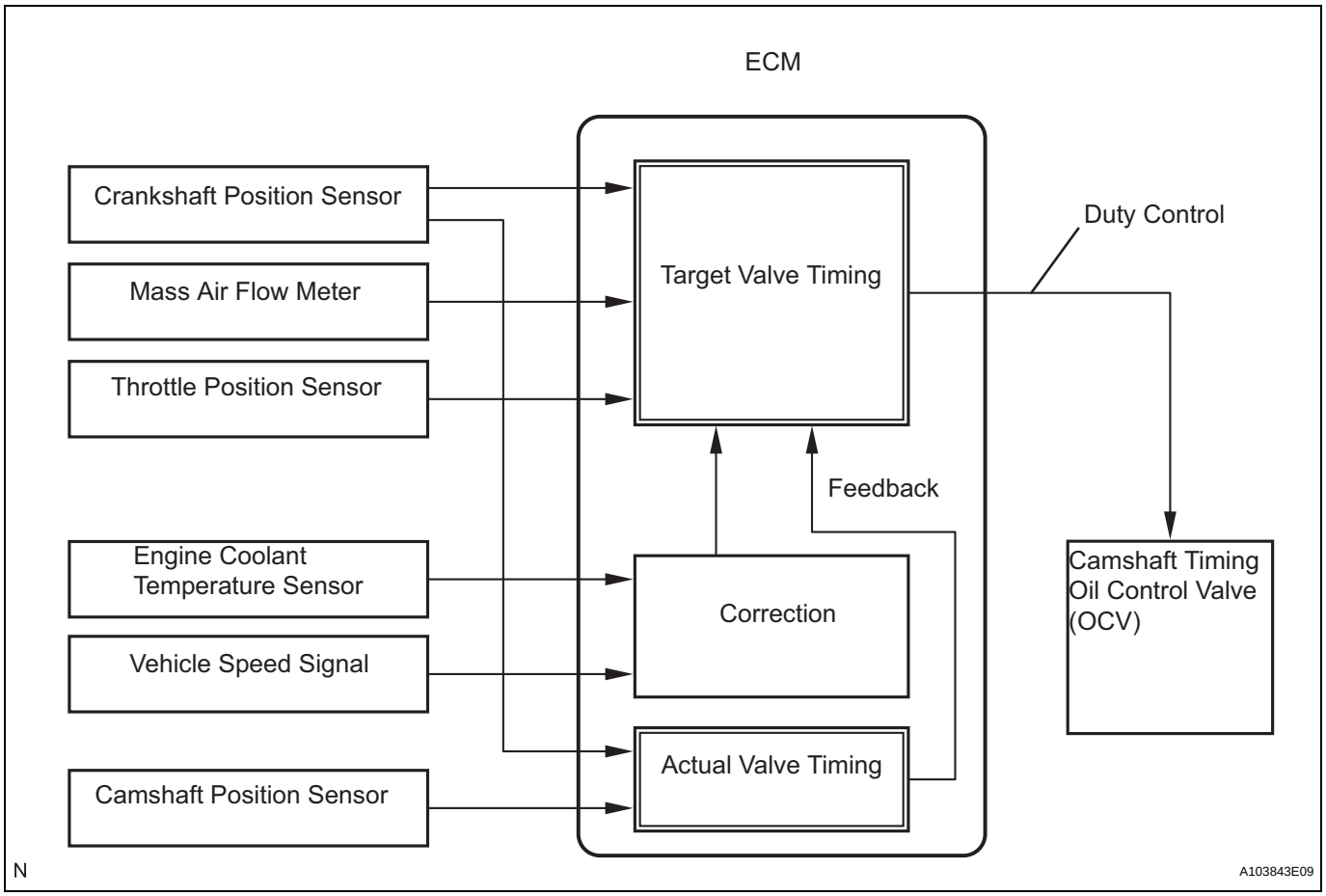

DTC No.	DTC Detection Conditions	Trouble Areas
P0010	Open or short in OCV circuit (1 trip detection logic)	• Open or short in OCV circuit • OCV • ECM

MONITOR DESCRIPTION

This DTC is designed to detect opens or shorts in the camshaft oil control valve (OCV) circuit. If the OCV's duty-cycle is excessively high or low while the engine running, the ECM will illuminate the MIL and set the DTC.

MONITOR STRATEGY

Related DTCs	P0010: VVT OCV range check
Required Sensors/Components (Main)	VVT OCV
Required Sensors/Components (Related)	-
Frequency of Operation	Continuous
Duration	1 second
MIL Operation	Immediate
Sequence of Operation	None

TYPICAL ENABLING CONDITIONS

ES

Monitor runs whenever following DTCs not present	None
Engine	Running

TYPICAL MALFUNCTION THRESHOLDS

OCV duty-cycle	3 % or less
	100 %

COMPONENT OPERATING RANGE

OCV duty-cycle	4 to 100 % when engine running

WIRING DIAGRAM



INSPECTION PROCEDURE

HINT:
Read freeze frame data using an intelligent tester. Freeze frame data record the engine condition when malfunctions are detected. When troubleshooting, freeze frame data can help determine if the vehicle was moving or stationary, if the engine was warmed up or not, if the air-fuel ratio was lean or rich, and other data, from the time the malfunction occurred.

1	**CHECK DTC (OPERATE OCV)**

(a) Connect an intelligent tester to the DLC3.

(b) Turn the ignition switch to ON and turn the tester ON.
(c) Clear DTCs after recording the freeze frame data and DTCs.
(d) Start the engine.
(e) Allow the engine to idle and check for DTCs.
(f) Check that P0010 is present.
OK:
P0010 is present.

NG → **CHECK FOR INTERMITTENT PROBLEMS**

OK

2 INSPECT CAMSHAFT TIMING OIL CONTROL VALVE ASSEMBLY

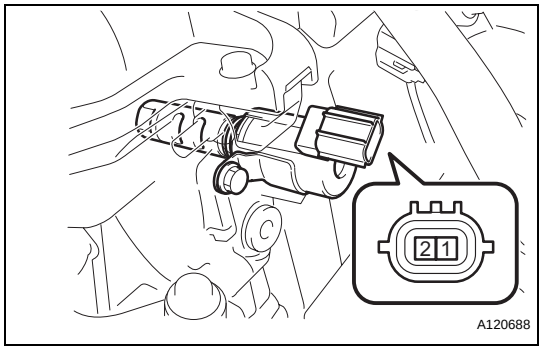

(a) Disconnect the C24 OCV connector.
(b) Measure the resistance between the terminals of the OCV.
Standard resistance:
6.9 to 7.9 Ω at 20°C (68°F)
(c) Reconnect the OCV connector.

NG → **REPLACE CAMSHAFT TIMING OIL CONTROL VALVE ASSEMBLY**

OK

3 CHECK HARNESS AND CONNECTOR (OCV - ECM)

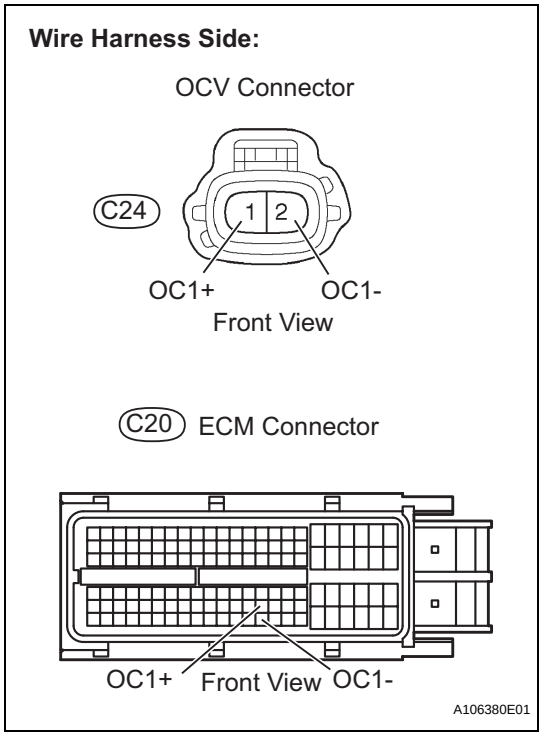

(a) Disconnect the C24 OCV connector.
(b) Disconnect the C20 ECM connector.
(c) Check the resistance.
Standard resistance (check for open)

Tester Connections	Specified Conditions
OC1+ (C24-1) - OC1+ (C20-100)	Below 1 Ω
OC1- (C24-2) - OC1- (C20-123)	

Standard resistance (check for short)

Tester Connections	Specified Conditions
OC1+ (C24-1) or OC1+ (C20-100) - Body ground	10 kΩ or higher
OC1- (C24-2) or OC1- (C20-123) - Body ground	

(d) Reconnect the OCV connector.
(e) Reconnect the ECM connector.

NG → **REPAIR OR REPLACE HARNESS OR CONNECTOR**

OK

REPLACE ECM

DTC	P0011	Camshaft Position "A" - Timing Over-Advanced or System Performance (Bank 1)

DTC	P0012	Camshaft Position "A" - Timing Over-Retarded (Bank 1)

HINT:
If DTC P0011 or P0012 is present, check the VVT (Variable Valve Timing) system.

DESCRIPTION

The VVT system includes the ECM, Oil Control Valve (OCV) and VVT controller. The ECM sends a target duty-cycle control signal to the OCV. This control signal regulates the oil pressure supplied to the VVT controller. Camshaft timing control is performed according to engine operating conditions such as the intake air volume, throttle valve position and engine coolant temperature. The ECM controls the OCV, based on the signals transmitted by several sensors. The VVT controller regulates the intake camshaft angle using oil pressure through the OCV. As a result, the relative positions of the camshaft and crankshaft are optimized, the engine torque and fuel economy improve, and the exhaust emissions decrease under overall driving conditions. The ECM detects the actual intake valve timing using signals from the camshaft and crankshaft position sensors, and performs feedback control. This is how the target intake valve timing is verified by the ECM.

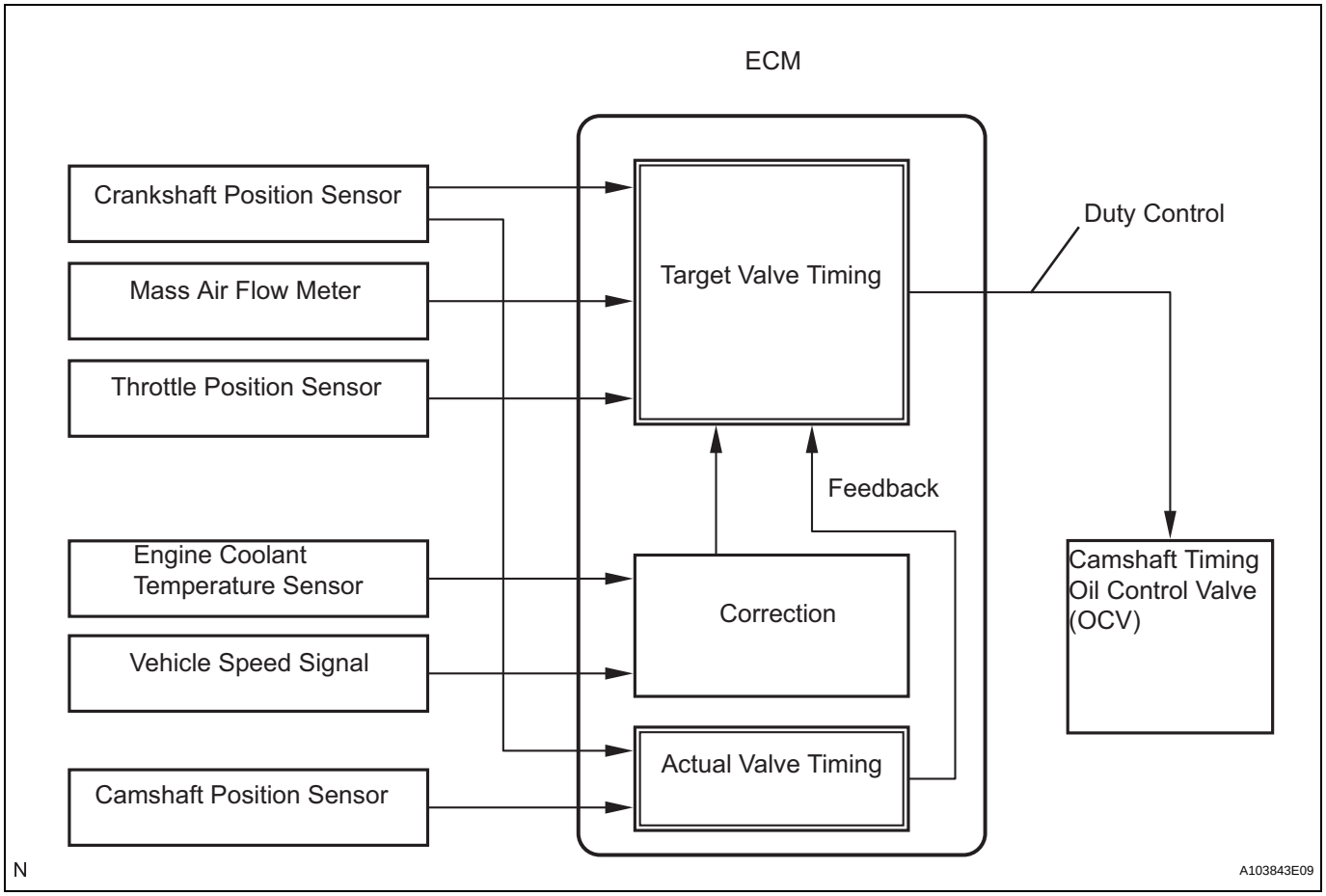

DTC No.	DTC Detection Conditions	Trouble Areas
P0011	Advanced camshaft timing: With warm engine and engine speed of between 450 rpm and 4,000 rpm, all conditions (1), (2) and (3) met (1 trip detection logic): 1. Difference between target and actual intake valve timings more than 5°CA (Crankshaft Angle) for 4.5 seconds 2. Current intake valve timing fixed (timing changes less than 5°CA in 5 seconds) 3. Variations in VVT controller timing more than 19°CA of maximum delayed timing (malfunction in advance timing)	• Valve timing • OCV • OCV filter • Camshaft timing gear assembly • ECM
P0012	Retarded camshaft timing: With warm engine and engine speed of between 450 rpm and 4,000 rpm, all conditions (1), (2) and (3) met (2 trip detection logic): 1. Difference between target and actual intake valve timings more than 5°CA (Crankshaft Angle) for 4.5 seconds 2. Current intake valve timing fixed (timing changes less than 5°CA in 5 seconds) 3. Variations in VVT controller timing 19°CA or less of maximum delayed timing (malfunction in retarded timing)	• Valve timing • OCV • OCV filter • Camshaft timing gear assembly • ECM

ES

MONITOR DESCRIPTION

The ECM optimizes the intake valve timing using the VVT (Variable Valve Timing) system to control the intake camshaft. The VVT system includes the ECM, the Oil Control Valve (OCV) and the VVT controller. The ECM sends a target duty-cycle control signal to the OCV. This control signal regulates the oil pressure supplied to the VVT controller. The VVT controller can advance or retard the intake camshaft. If the difference between the target and actual intake valve timings is large, and changes in the actual intake valve timing are small, the ECM interprets this as the VVT controller stuck malfunction and sets a DTC.

Example:

A DTC is set when the following conditions 1, 2 and 3 are met:

1. The difference between the target and actual intake valve timing is more than 5°CA (Crankshaft Angle) and the condition continues for more than 4.5 seconds.
2. It takes 5 seconds or more to change the valve timing by 5°CA.
3. After above conditions 1 and 2 are met, the OCV is forcibly activated 63 times or more.

DTC P0011 (Advanced Cam Timing) is subject to 1 trip detection logic.

DTC P0012 (Retarded Cam Timing) is subject to 2 trip detection logic.

These DTCs indicate that the VVT controller cannot operate properly due to OCV malfunctions or the presence of foreign objects in the OCV.

The monitor will run if all of the following conditions are met:

– The engine is warm (the engine coolant temperature is 75°C [167°F] or more).
– The vehicle has been driven at more than 40 mph (64 km/h) for 3 minutes.
– The engine has idled for 3 minutes.

MONITOR STRATEGY

Related DTCs	P0011: Advanced camshaft timing P0012: Retarded camshaft timing
Required Sensors/Components (Main)	VVT OCV and VVT Actuator
Required Sensors/Components (Related)	Crankshaft position sensor, camshaft position sensor and Engine coolant temperature sensor
Frequency of Operation	Once per driving cycle
Duration	Within 10 seconds
MIL Operation	Advanced camshaft timing: Immediate Retarded camshaft timing: 2 driving cycles
Sequence of Operation	None

TYPICAL ENABLING CONDITIONS

Monitor runs whenever following DTCs not present	P0100 - P0103 (MAF meter) P0115 - P0118 (ECT sensor) P0125 (Insufficient ECT for closed loop) P0335 (CKP sensor) P0340 (CMP sensor) P0351 - P0354 (Igniter)
Battery voltage	11 V or more
Engine RPM	450 to 4,000 rpm
ECT	75°C (167°F) to 100°C (212°F)

TYPICAL MALFUNCTION THRESHOLDS

All of following conditions met	-
Deviation of valve timing	More than 5°CA (Crankshaft Angle)
Valve timing	No change

If the difference between the target and actual camshaft timings is greater than the specified value, the ECM operates the VVT actuator.
Then, the ECM monitor the camshaft timing change for 5 seconds.

WIRING DIAGRAM

Refer to DTC P0010 (See page ES-57).

INSPECTION PROCEDURE

NOTICE:
DTC P0011 or P0012 may be set when foreign objects in the engine oil are caught in some parts of the system. The DTC will remain set even if the system returns to normal after a short time. Foreign objects are filtered out by the oil filter.
HINT:
Read freeze frame data using an intelligent tester. Freeze frame data record the engine condition when malfunctions are detected. When troubleshooting, freeze frame data can help determine if the vehicle was moving or stationary, if the engine was warmed up or not, if the air-fuel ratio was lean or rich, and other data, from the time the malfunction occurred.

1	CHECK ANY OTHER DTCS OUTPUT (IN ADDITION TO DTC P0011 OR P0012)

(a) Connect an intelligent tester to the DLC3.
(b) Turn the ignition switch to ON and turn the tester ON.
(c) Select the following menu items: DIAGNOSIS / ENHANCED OBD II / DTC INFO / CURRENT CODES.
(d) Read DTCs.

Result

Display (DTC Output)	Proceed To
P0011 or P0012	A
P0011 or P0012 and other DTCs	B

HINT:
If any DTCs other than P0011 or P0012 are output, troubleshoot those DTCs first.

B → GO TO DTC CHART

A

2	PERFORM ACTIVE TEST USING INTELLIGENT TESTER (OPERATE OCV)

(a) Connect the intelligent tester to the DLC3.
(b) Start the engine and turn the tester ON.
(c) Warm up the engine.
(d) On the tester, select the following menu items: DIAGNOSIS / ENHANCED OBD II / ACTIVE TEST / VVT CTRL B1.
(e) Check the engine speed while operating the Oil Control Valve (OCV) using the tester.

ES

OK

Tester Operations	Specified Conditions
OCV OFF	Normal engine speed
OCV ON	Engine idles roughly or stalls (soon after OCV switched from OFF to ON)

NG → **Go to step 4**

OK

3	CHECK WHETHER DTC OUTPUT RECURS (DTC P0011 OR P0012)

(a) Connect the intelligent tester to the DLC3.
(b) Turn the ignition switch to ON and turn the tester ON.
(c) Clear DTCs (See page ES-34).
(d) Start the engine and warm it up.
(e) Switch the ECM from normal mode to check mode using the tester.
(f) Drive the vehicle for more than 10 minutes.
(g) Read DTCs using the tester.
OK:
No DTC output.

NG → **Go to step 4**

OK

END

4 CHECK VALVE TIMING (CHECK FOR LOOSE AND JUMPED TEETH ON TIMING CHAIN)

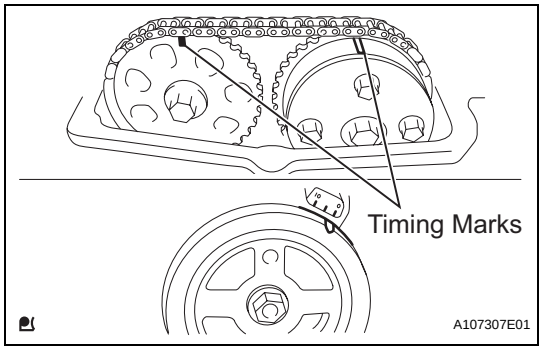

(a) Remove the cylinder head cover.
(b) Turn the crankshaft pulley, and align its groove with the timing mark "0" on the timing chain cover.
(c) Check that the timing marks on the camshaft timing sprocket and camshaft timing gear are facing upward as shown in the illustration.
If not, turn the crankshaft 1 revolution (360°), then align the marks as above.
OK:
Timing marks on camshaft timing gears are aligned as shown in the illustration.
(d) Reinstall the cylinder head cover.

NG → **ADJUST VALVE TIMING**

OK

5 INSPECT CAMSHAFT TIMING OIL CONTROL VALVE ASSEMBLY (OCV)

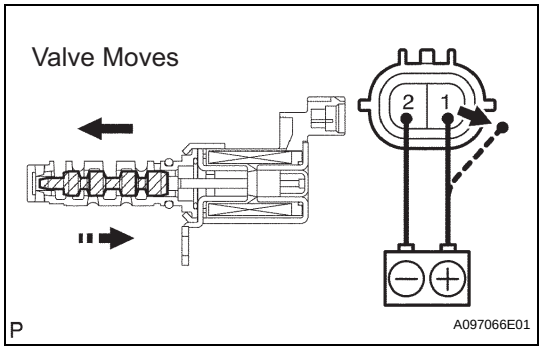

(a) Remove the OCV.
(b) Measure the resistance between the terminals of the OCV.
Standard resistance:
6.9 to 7.9 Ω at 20°C (68°F)
(c) Apply the positive battery voltage to terminal 1 and negative battery voltage to terminal 2. Check the valve operation.
OK:
Valve moves quickly.
(d) Reinstall the OCV.

NG → **REPLACE CAMSHAFT TIMING OIL CONTROL VALVE ASSEMBLY**

OK

6 INSPECT OIL CONTROL VALVE FILTER

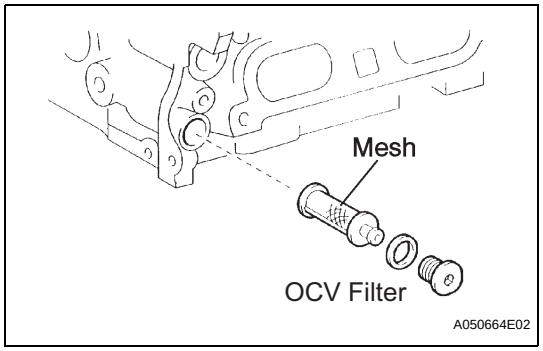

(a) Remove the generator.
(b) Remove the OCV filter.
(c) Check that the filter is not clogged.
OK:
Filter is not clogged.
(d) Reinstall the OCV filter.
(e) Reinstall the generator.

NG → **CLEAN OIL CONTROL VALVE FILTER**

ES

OK

7	REPLACE CAMSHAFT TIMING GEAR ASSEMBLY

NEXT

8	CHECK WHETHER DTC OUTPUT RECURS

(a) Connect the intelligent tester to the DLC3.
(b) Turn the ignition switch to ON and turn the tester ON.
(c) Clear DTCs (See page ES-34).
(d) Start the engine and warm it up.
(e) Switch the ECM from normal mode to check mode using the tester.
(f) Driver the vehicle for more than 10 minutes.
(g) Read output DTCs using the tester.
Standard:
No DTC output.
HINT:
DTC P0011 or P0012 is output when foreign objects in engine oil are caught in some parts of the system. These codes will stay registered even if the system returns to normal after a short time. These foreign objects are then captured by the oil filter, thus eliminating the source of the problem.

OK → **SYSTEM OK**

NG

REPLACE ECM

DTC	P0016	Crankshaft Position - Camshaft Position Correlation (Bank 1 Sensor A)

DESCRIPTION

In the VVT (Variable Valve Timing) system, the appropriate intake valve open and close timing is controlled by the ECM. The ECM performs intake valve control by performing the following: 1) controlling the camshaft and camshaft timing oil control valve, and operating the camshaft timing gear; and 2) changing the relative positions of the gaps between the camshaft and crankshaft.

DTC No.	DTC Detection Conditions	Trouble Areas
P0016	Deviation in crankshaft and camshaft position sensor signals (2 trip detection logic)	• Mechanical system (Timing chain has jumped tooth or chain stretched) • ECM

ES

MONITOR DESCRIPTION

The ECM optimizes the valve timing by using the VVT (Variable Valve Timing) system to control the intake camshaft. The VVT system includes the ECM, the Oil Control Valve (OCV) and the VVT controller.
The ECM sends a target duty-cycle control signal to the OCV. This control signal regulates the oil pressure supplied to the VVT controller. The VVT controller can advance or retard the intake camshaft.
The ECM calibrates the intake valve timing by setting the intake camshaft to the most retarded angle while the engine is idling. The ECM closes the OCV to retard the cam. The ECM stores this value as the VVT learning value. When the difference between the target and actual intake valve timings is 5°CA (Crankshaft Angle) or less, the ECM stores it.
If the VVT learning value matches the following conditions, the ECM determines the existence of a malfunction in the VVT system, and sets the DTC.

- VVT learning value: Less than 25°CA, or more than 51°CA.
- Above condition continues for 18 seconds or more.

This DTC indicates that the angle between the intake camshaft and the crankshaft is incorrect due to factors such as the timing chain having jumped a tooth.
This monitor begins to run after the engine has idled for 5 minutes.

MONITOR STRATEGY

Related DTCs	P0016: Camshaft timing misalignment at idling
Required Sensors/Components	VVT actuator
Required Sensors/Components	Camshaft position sensor, Crankshaft position sensor
Frequency of Operation	Once per driving cycle
Duration	Within 1 minute
MIL Operation	2 driving cycles
Sequence of Operation	None

TYPICAL ENABLING CONDITIONS

Monitor runs whenever following DTCs not present	P0011 (VVT system 1 - advance) P0012 (VVT system 1 - retarded) P0115 - P0118 (ECT sensor)
Engine RPM	450 to 1,000 rpm

TYPICAL MALFUNCTION THRESHOLDS

One of following conditions met	-
VVT learning value when camshaft maximum retarded	Less than 25°CA
VVT learning value when camshaft maximum retarded	More than 51°CA

WIRING DIAGRAM

Refer to DTC P0335 (See page ES-163).

INSPECTION PROCEDURE

HINT:

Read freeze frame data using an intelligent tester. Freeze frame data record the engine condition when malfunctions are detected. When troubleshooting, freeze frame data can help determine if the vehicle was moving or stationary, if the engine was warmed up or not, if the air-fuel ratio was lean or rich, and other data, from the time the malfunction occurred.

ES

1	**CHECK VALVE TIMING (CHECK FOR LOOSE AND JUMPED TOOTH OF TIMING CHAIN) (See page ES-71)**

NG → **Go to step 3**

OK

2	**REPLACE ECM**

NEXT → **Go to step 4**

3	**ADJUST VALVE TIMING**

NEXT

4	**CHECK WHETHER DTC OUTPUT RECURS**

NOTICE:

After replacing the ECM or adjusting intake valve timing, confirm that the DTC output does not recur.

(a) Connect an intelligent tester to the DLC3.
(b) Turn the ignition switch to ON.
(c) Turn the tester ON.
(d) Clear DTCs (See page ES-34).
(e) Switch the ECM from normal mode to check mode using the tester (See page ES-37).
(f) Start the engine and warm it up.
(g) Allow the engine to idle for 1 minute or more, and then drive the vehicle for 1 minute or more.
(h) Confirm that no DTC is set, using the tester.

OK:

No DTC output

NEXT

END

DTC	P0031	Oxygen (A/F) Sensor Heater Control Circuit Low (Bank 1 Sensor 1)

DTC	P0032	Oxygen (A/F) Sensor Heater Control Circuit High (Bank 1 Sensor 1)

HINT:
- Although the DTC titles say the oxygen sensor, these DTCs relate to the Air-Fuel Ratio (A/F) sensor.
- Sensor 1 refers to the sensor mounted in front of the Three-Way Catalytic Converter (TWC) and located near the engine assembly.

ES

DESCRIPTION

Refer to DTC P2195 (See page ES-276).
HINT:
- When either of these DTCs are set, the ECM enters fail-safe mode. The ECM turns off the A/F sensor heater in fail-safe mode. Fail-safe mode continues until the ignition switch is turned to OFF.
- The ECM provides a pulse width modulated control circuit to adjust the current through the heater. The A/F sensor heater circuit uses a relay on the B+ side of the circuit.

Reference (System Diagram of Sensor 1):

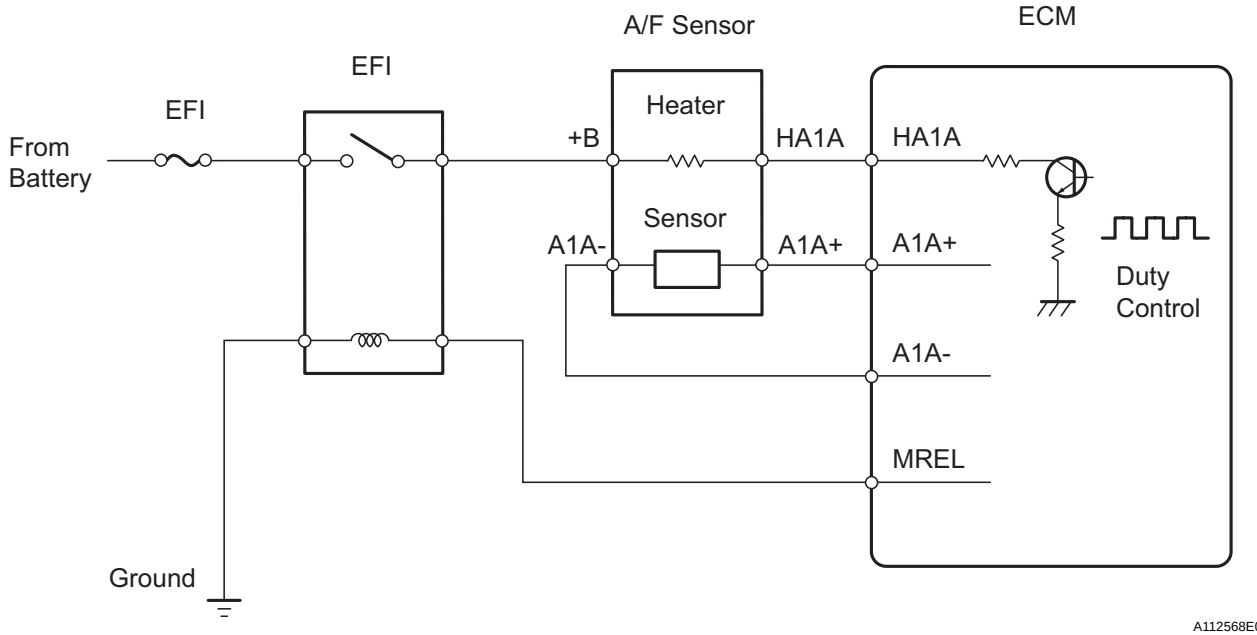

DTC No.	DTC Detection Conditions	Trouble Areas
P0031	Air-Fuel Ratio (A/F) sensor heater current less than 0.8 A (1 trip detection logic)	• Open in A/F sensor heater circuit • A/F sensor heater (sensor 1) • Integration relay (EFI relay) • ECM
P0032	Air-Fuel Ratio (A/F) sensor heater current more than 10 A (1 trip detection logic)	• Short in A/F sensor heater circuit • A/F sensor heater (sensor 1) • Integration relay (EFI relay) • ECM

MONITOR DESCRIPTION

The ECM uses information from the Air-Fuel Ratio (A/F) sensor to regulate the air-fuel ratio and keep it close to the stoichiometric level. This maximizes the ability of the Three-Way Catalytic Converter (TWC) to purify the exhaust gases.

The A/F sensor detects oxygen levels in the exhaust gas and transmits the information to the ECM. The inner surface of the sensor element is exposed to the outside air. The outer surface of the sensor element is exposed to the exhaust gas. The sensor element is made of platinum coated zirconia and includes an integrated heating element.

The zirconia element generates a small voltage when there is a large difference in the oxygen concentrations between the exhaust gas and outside air. The platinum coating amplifies this voltage generation.

The A/F sensor is more efficient when heated. When the exhaust gas temperature is low, the sensor cannot generate useful voltage signals without supplementary heating. The ECM regulates the supplementary heating using a duty-cycle approach to adjust the average current in the sensor heater element. If the heater current is outside the normal range, the signal transmitted by the A/F sensor becomes inaccurate, as a result, the ECM is unable to regulate air-fuel ratio properly.

When the current in the A/F sensor heater is outside the normal operating range, the ECM interprets this as a malfunction in the sensor heater and sets a DTC.

Example:

The ECM sets DTC P0032 when the current in the A/F sensor heater is more than 10 A. Conversely, when the heater current is less than 0.8 A, DTC P0031 is set.

MONITOR STRATEGY

Related DTCs	P0031: A/F sensor heater open/short (Low electrical current) P0032: A/F sensor heater open/short (High electrical current)
Required Sensors/Components (Main)	A/F sensor heater
Required Sensors/Components (Related)	-
Frequency of Operation	Continuous
Duration	10 seconds
MIL Operation	Immediate
Sequence of Operation	None

TYPICAL ENABLING CONDITIONS

All:

Monitor runs whenever following DTCs not present	None

P0031:

Battery voltage	10.5 V or more
A/F sensor heater duty-cycle ratio	50 % or more
Time after engine start	10 seconds or more

P0032:

Time after engine start	10 seconds or more

TYPICAL MALFUNCTION THRESHOLDS

P0031:

A/F sensor heater current	Less than 0.8 A

P0032:

A/F sensor heater current	More than 10 A

COMPONENT OPERATING RANGE

A/F sensor heater current	0.9 to 9.9 A

WIRING DIAGRAM

Refer to DTC P2195 (See page ES-280).

INSPECTION PROCEDURE

HINT:

Read freeze frame data using an intelligent tester. Freeze frame data record the engine condition when malfunctions are detected. When troubleshooting, freeze frame data can help determine if the vehicle was moving or stationary, if the engine was warmed up or not, if the air-fuel ratio was lean or rich, and other data, from the time the malfunction occurred.

ES

1 INSPECT AIR FUEL RATIO SENSOR (HEATER RESISTANCE)

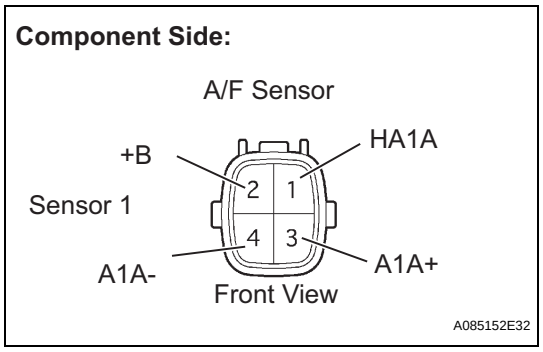

(a) Disconnect the C23 A/F sensor connector.

(b) Measure the resistance of the A/F sensor connector.

Standard resistance

Tester Connections	Specified Conditions
HA1A (1) - +B (2)	1.8 Ω to 3.4 Ω at 20°C (68°F)
HA1A (1) - A1A- (4)	10 kΩ or higher

(c) Reconnect the A/F sensor connector.

NG → **REPLACE AIR FUEL RATIO SENSOR**

OK

2 CHECK TERMINAL VOLTAGE (+B OF A/F SENSOR)

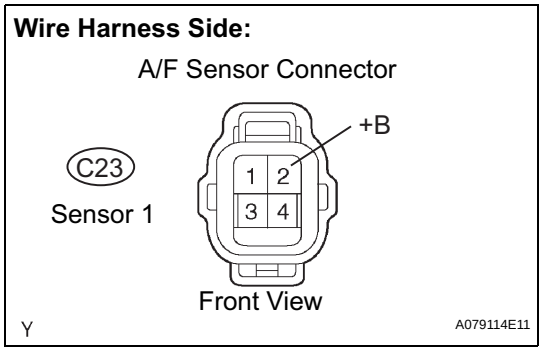

(a) Disconnect the C23 A/F sensor connector.

(b) Turn the ignition switch to ON.

(c) Measure the voltage between the terminals of the C23 A/F sensor connector and body ground.

Standard voltage

Tester Connections	Specified Conditions
+B (C23-2) - Body ground	11 to 14 V

(d) Reconnect the A/F sensor connector.

OK → **Go to step 5**

NG

3	INSPECT INTEGRATION RELAY (EFI RELAY)

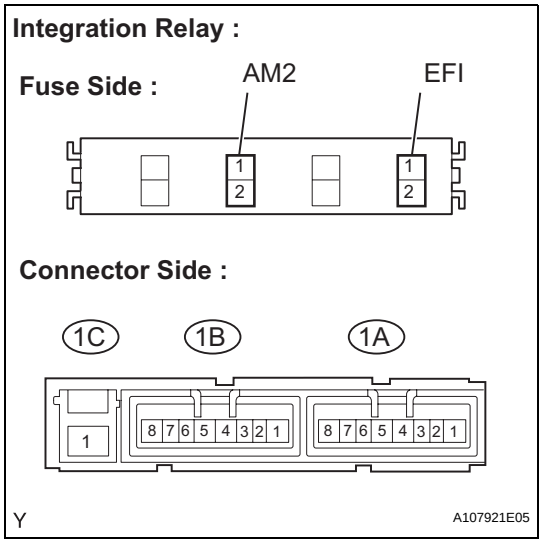

(a) Remove the integration relay from the engine room relay block.
(b) Inspect the EFI fuse.
  (1) Remove the EFI fuse from the integration relay.
  (2) Measure the EFI fuse resistance.
    Standard resistance:
      Below 1 Ω
  (3) Reinstall the EFI fuse.
(c) Inspect the EFI relay.
  (1) Measure the EFI relay resistance.
    Standard resistance

Tester Connections	Specified Conditions
1C-1 - 1A-4	10 kΩ or higher
	Below 1 Ω (Apply battery voltage between terminals 1A-2 and 1A-3)

(d) Reinstall the integration relay.

NG → **REPLACE INTEGRATION RELAY**

OK

4	CHECK HARNESS AND CONNECTOR (A/F SENSOR - EFI RELAY)

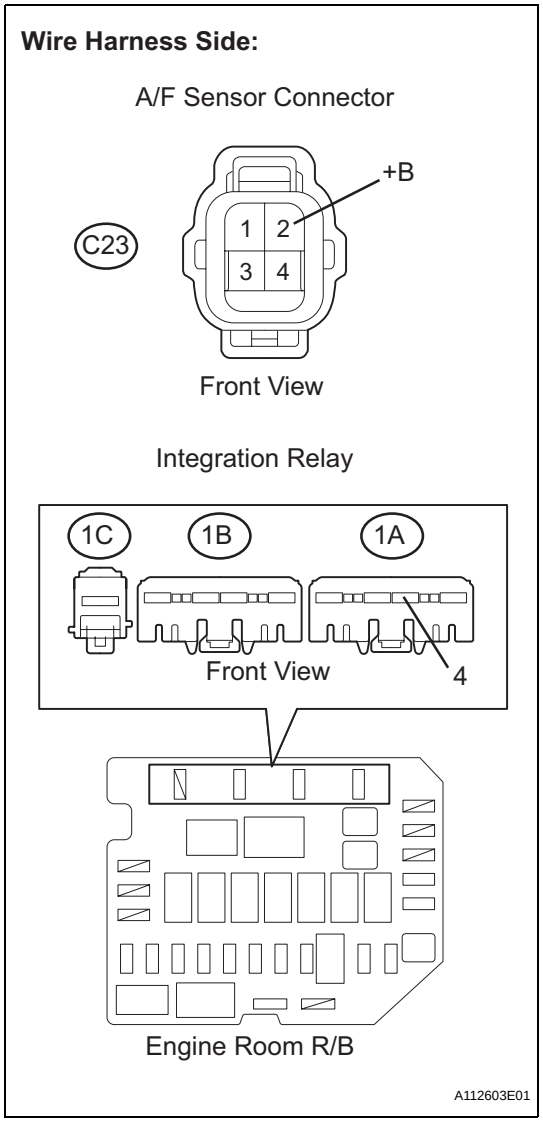

(a) Disconnect the C23 A/F sensor connector.
(b) Remove the integration relay from the engine room Relay Block (R/B).
(c) Check the resistance.

Standard resistance (Check for open)

Tester Connections	Specified Conditions
+B (C23-2) - Engine room R/B (1A-4)	Below 1 Ω

Standard resistance (Check for short)

Tester Connections	Specified Conditions
+B (C23-2) or Engine room R/B (1A-4) - Body ground	10 kΩ or higher

(d) Reconnect the A/F sensor connector.
(e) Reinstall the integration relay.

NG → **REPAIR OR REPLACE HARNESS OR CONNECTOR**

OK

CHECK ECM POWER SOURCE CIRCUIT

ES

5 CHECK HARNESS AND CONNECTOR (A/F SENSOR - ECM)

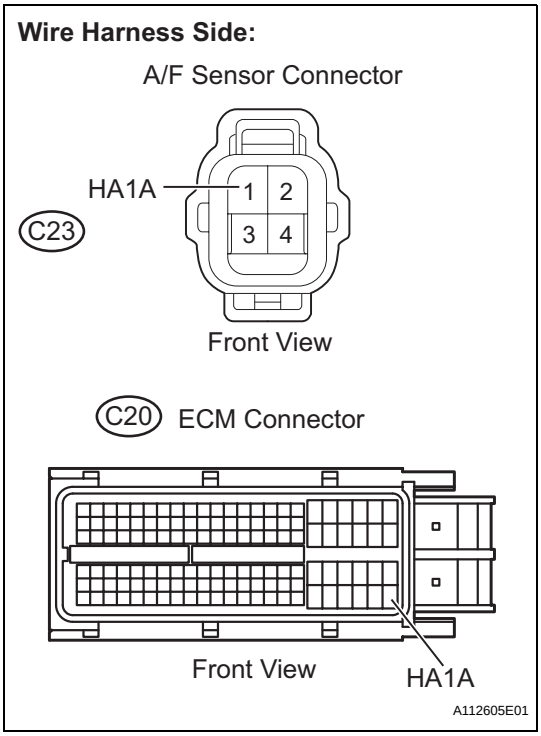

(a) Disconnect the C23 A/F sensor connector.
(b) Disconnect the C20 ECM connector.
(c) Check the resistance.

Standard resistance (Check for open)

Tester Connections	Specified Conditions
HA1A (C23-1) - HA1A (C20-109)	Below 1 Ω

Standard resistance (Check for short)

Tester Connections	Specified Conditions
HA1A (C23-1) or HA1A (C20-109) - Body ground	10 kΩ or higher

(d) Reconnect the A/F sensor connector.
(e) Reconnect the ECM connector.

NG → **REPAIR OR REPLACE HARNESS OR CONNECTOR**

OK

6 CHECK WHETHER DTC OUTPUT RECURS

(a) Connect the intelligent tester to the DLC3.
(b) Turn the ignition switch to ON.
(c) Turn the tester ON.
(d) Clear DTCs (See page ES-34).
(e) Start the engine.
(f) Allow the engine to idle for 1 minute or more.
(g) Select the following menu items: DIAGNOSIS / ENHANCED OBD II / DTC INFO / CURRENT CODES.
(h) Read DTCs.

Result

Display (DTC Output)	Proceed To
No output	A
P0031 or P0032	B

B → **REPLACE ECM**

A

CHECK FOR INTERMITTENT PROBLEMS

DTC	P0037	Oxygen Sensor Heater Control Circuit Low (Bank 1 Sensor 2)

DTC	P0038	Oxygen Sensor Heater Control Circuit High (Bank 1 Sensor 2)

DTC	P0141	Oxygen Sensor Heater Circuit Malfunction (Bank 1 Sensor 2)

HINT:
Sensor 2 refers to the sensor mounted behind the Three-Way Catalytic Converter (TWC) and located far from the engine assembly.

ES

DESCRIPTION

Refer to DTC P0136 (See page ES-119).
HINT:

- When any of these DTCs are set, the ECM enters fail-safe mode. The ECM turns off the Heated Oxygen (HO2) Sensor heater in fail-safe mode. Fail-safe mode continues until the ignition switch is turned to OFF.
- The ECM provides a pulse width modulated control circuit to adjust the current through the heater. The HO2 sensor heater circuit uses a relay on the B+ side of the circuit.

Reference (System Diagram of Sensor 2):

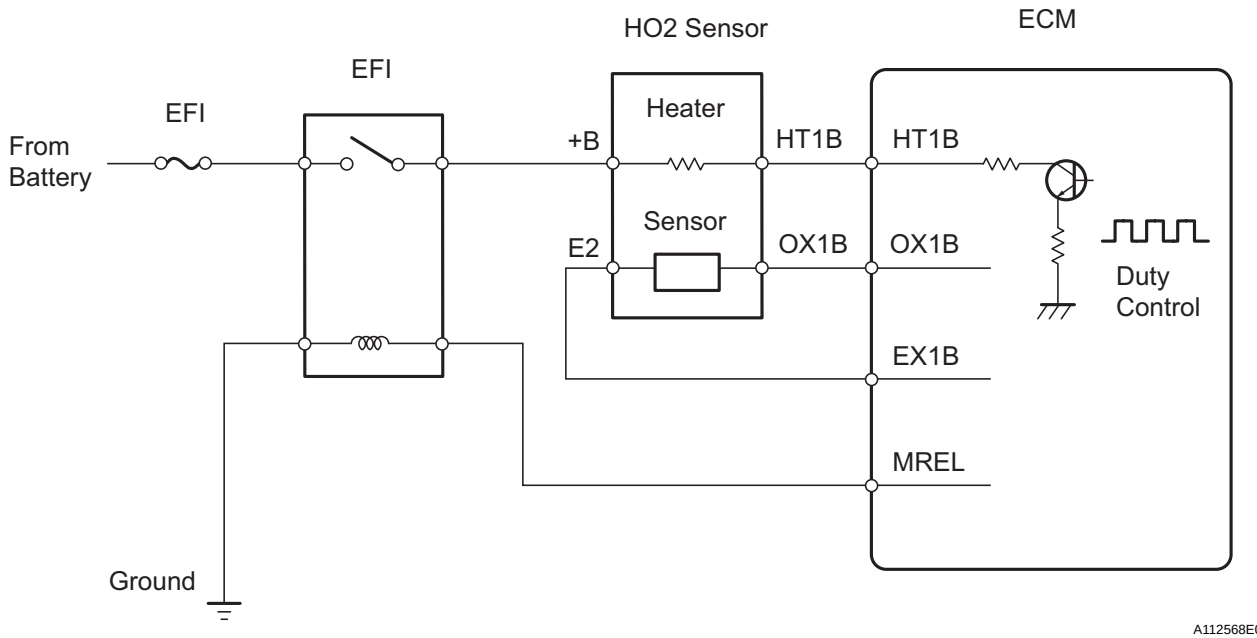

DTC No.	DTC Detection Conditions	Trouble Areas
P0037	Heated Oxygen (HO2) sensor heater current less than 0.3 A (1 trip detection logic)	• Open in HO2 sensor heater circuit • HO2 sensor heater (sensor 2) • Integration relay (EFI relay) • ECM
P0038	Heated Oxygen (HO2) sensor heater current more than 2 A (1 trip detection logic)	• Short in HO2 sensor heater circuit • HO2 sensor heater (sensor 2) • Integration relay (EFI relay) • ECM

DTC No.	DTC Detection Conditions	Trouble Areas
P0141	Cumulative heater resistance correction value exceeds threshold (2 trip detection logic)	• Open or short in HO2 sensor heater circuit • HO2 sensor heater (sensor 2) • Integration relay (EFI relay) • ECM

MONITOR DESCRIPTION

The sensing position of the Heated Oxygen (HO2) sensor has a zirconia element which is used to detect the oxygen concentration in the exhaust gas. If the zirconia element is at the appropriate temperature, and the difference between the oxygen concentrations surrounding the inside and outside surfaces of the sensor is large, the zirconia element generates voltage signals. In order to increase the oxygen concentration detecting capacity of the zirconia element, the ECM supplements the heat from the exhaust with heat from a heating element inside the sensor.

ES

Heated oxygen sensor heater range check (P0037 and P0038):

The ECM monitors the current applied to the O2 sensor heater to check the heater for malfunctions. If the current is below the threshold value, the ECM determines that there is an open circuit in the heater. If the current is above the threshold value, the ECM determines that there is a short circuit in the heater.

The ECM constantly monitors the current applied to the heater. If the ECM detects an open or short circuit, the ECM turns the MIL on and sets a DTC.

If a malfunction is detected, the ECM cuts off the current applied to the heater.

Example:

The ECM sets DTC P0038 when the current in the HO2 sensor heater is more than 2 A. Conversely, when the heater current is less than 0.3 A, DTC P0037 is set.

Heated oxygen sensor heater performance (P0141):

After the accumulated heater ON time exceeds 100 seconds, the ECM calculates the heater resistance using the battery voltage and the current applied to the heater.

If the resistance is above the threshold value, the ECM determines that there is a malfunction in the HO2 sensor heater and sets DTC P0141.

MONITOR STRATEGY

Related DTCs	P0037: Heated oxygen sensor heater range check (Low electrical current) P0038: Heated oxygen sensor heater range check (High electrical current) P0141: Heated oxygen sensor heater performance
Required Sensors/Components (Main)	Heated oxygen sensor heater
Required Sensors/Components (Related)	-
Frequency of Operation	Continuous: P0037 and P0038 Once per driving cycle: P0141
Duration	1 second: P0037 and P0038 10 seconds: P0141
MIL Operation	Immediate: P0037 and P0038 2 driving cycles: P0141
Sequence of Operation	None

TYPICAL ENABLING CONDITIONS

All:

Monitor runs whenever following DTCs not present	None

P0037:

Battery voltage	10.5 to 20 V

P0038:

Battery voltage	10.5 to 20 V

P0141 (Heater performance monitor check):

All of following conditions met:	-
Battery voltage	10.5 V or more
Fuel cut	OFF
Time after fuel cut ON to OFF	30 seconds or more
Accumulated heater ON time	100 seconds or more

TYPICAL MALFUNCTION THRESHOLDS

P0037:

Heater current	Less than 0.3 A

P0038:

Heater current	2 A or more

P0141 (Heater performance monitor check):

Accumulated heater resistance	Varies with sensor element temperature (Example: More than 23 ohm)

COMPONENT OPERATING RANGE

Heated Oxygen (HO2) sensor heater current	0.4 to 1 A (when engine idles, HO2 sensor warmed up and battery voltage 11 to 14 V)

MONITOR RESULT

Refer to CHECKING MONITOR STATUS (See page ES-17).

WIRING DIAGRAM

Refer to DTC P0136 (See page ES-126).

CONFIRMATION DRIVING PATTERN

These DTCs are detected when the engine idles for 110 seconds or more.

INSPECTION PROCEDURE

HINT:

Read freeze frame data using an intelligent tester. Freeze frame data record the engine condition when malfunctions are detected. When troubleshooting, freeze frame data can help determine if the vehicle was moving or stationary, if the engine was warmed up or not, if the air-fuel ratio was lean or rich, and other data, from the time the malfunction occurred.

1 INSPECT HEATED OXYGEN SENSOR (HEATER RESISTANCE)

Component Side :

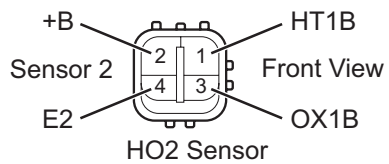

A115661E02

(a) Disconnect the D28 Heated Oxygen (HO2) sensor connector.

(b) Measure the resistance of the HO2 sensor connector.

Standard resistance

Tester Connections	Specified Conditions
HT1B (1) - +B (2)	11 to 16 Ω at 20°C (68°F)
HT1B (1) - E2 (4)	10 kΩ or higher

(c) Reconnect the HO2 sensor connector.

NG → **REPLACE HEATED OXYGEN SENSOR**

OK

2	CHECK TERMINAL VOLTAGE (+B OF HO2 SENSOR)

Wire Harness Side:

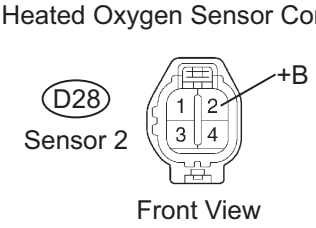

A072895E03

(a) Disconnect the D28 HO2 sensor connector.
(b) Measure the voltage between the terminals of the D28 HO2 sensor connector and body ground.
Standard voltage

Tester Connections	Specified Conditions
+B (D28-2) - Body ground	11 to 14 V

(c) Reconnect the HO2 sensor connector.

OK → **Go to step 5**

NG

3	INSPECT INTEGRATION RELAY (EFI RELAY) (See page ES-78)

NG → **REPLACE INTEGRATION RELAY**

OK

4	CHECK HARNESS AND CONNECTOR (HO2 SENSOR - EFI RELAY)

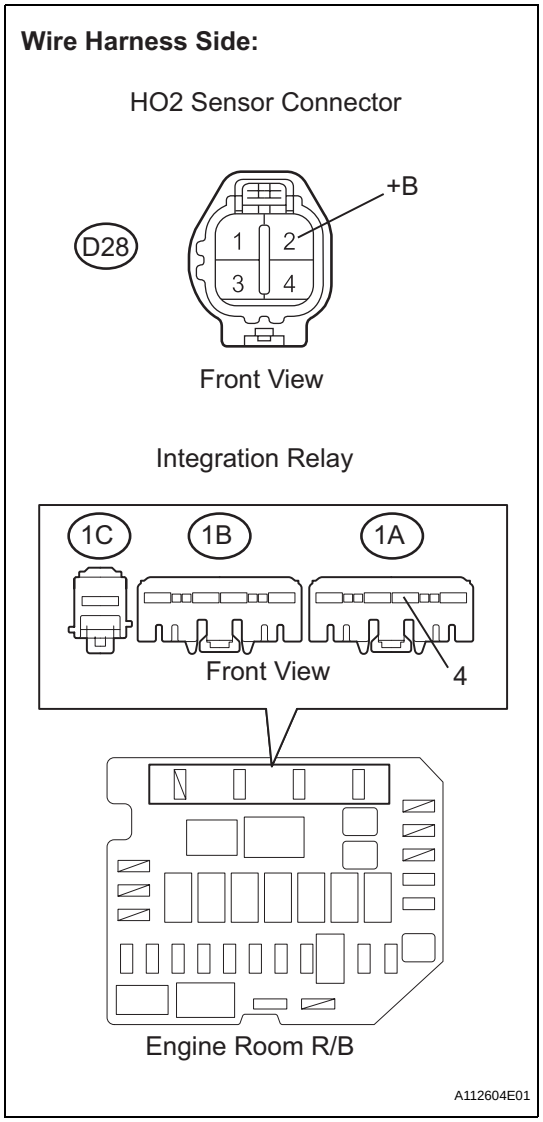

(a) Disconnect the D28 HO2 sensor connector.
(b) Remove the integration relay from the engine room Relay Block (R/B).
(c) Check the resistance.

Standard resistance (Check for open)

Tester Connections	Specified Conditions
+B (D28-2) - Engine room R/B (1A-4)	Below 1 Ω

Standard resistance (Check for short)

Tester Connections	Specified Conditions
+B (D28-2) or Engine room R/B (1A-4) - Body ground	10 kΩ or higher

(d) Reconnect the HO2 sensor connector.
(e) Reinstall the integration relay.

NG → **REPAIR OR REPLACE HARNESS OR CONNECTOR**

OK

CHECK ECM POWER SOURCE CIRCUIT

ES

5 CHECK HARNESS AND CONNECTOR (HO2 SENSOR - ECM)

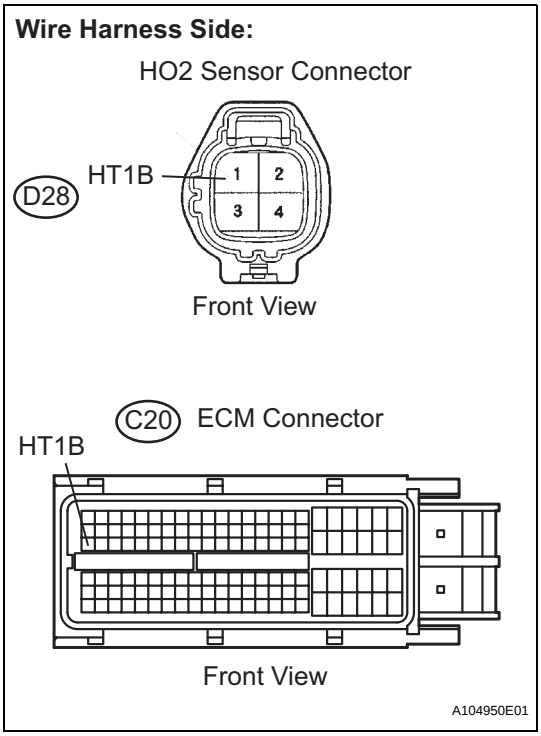

(a) Disconnect the D28 HO2 sensor connector.
(b) Disconnect the C20 ECM connector.
(c) Measure the resistance.

Standard resistance (Check for open)

Tester Connections	Specified Conditions
HT1B (D28-1) - HT1B (C20-47)	Below 1 Ω

Standard resistance (Check for short)

Tester Connections	Specified Conditions
HT1B (D28-1) or HT1B (C20-47) - Body ground	10 kΩ or higher

(d) Reconnect the HO2 sensor connector.
(e) Reconnect the ECM connector.

NG → **REPAIR OR REPLACE HARNESS OR CONNECTOR**

OK

6 CHECK WHETHER DTC OUTPUT RECURS

(a) Connect the intelligent tester to the DLC3.
(b) Turn the ignition switch to ON.
(c) Turn the tester ON.
(d) Clear DTCs (See page ES-34).
(e) Start the engine.
(f) Allow the engine to idle for 2 minutes or more.
(g) Select the following menu items: DIAGNOSIS / ENHANCED OBD II / DTC INFO / CURRENT CODES.
(h) Read DTCs.

Result

Display (DTC Output)	Proceed To
No output	A
P0037, P0038 and/or P0141	B

B → **REPLACE ECM**

A

CHECK FOR INTERMITTENT PROBLEMS

DTC	P0100	Mass or Volume Air Flow Circuit

DTC	P0102	Mass or Volume Air Flow Circuit Low Input

DTC	P0103	Mass or Volume Air Flow Circuit High Input

DESCRIPTION

The Mass Air Flow (MAF) meter is a sensor that measures the amount of air flowing through the throttle valve.

The ECM uses this information to determine the fuel injection time and to provide the appropriate air-fuel ratio.

Inside the MAF meter, there is a heated platinum wire which is exposed to the flow of intake air.

By applying a specific electrical current to the wire, the ECM heats it to a given temperature. The flow of incoming air cools both the wire and an internal thermistor, affecting their resistance. To maintain a constant current value, the ECM varies the voltage applied to these components in the MAF meter. The voltage level is proportional to the airflow through the sensor, and the ECM uses it to calculate the intake air volume.

The circuit is constructed so that the platinum hot wire and the temperature sensor create a bridge circuit, and the power transistor is controlled so that the potentials of A and B remain equal to maintain the predetermined temperature.

HINT:

When any of these DTCs are set, the ECM enters fail-safe mode. During fail-safe mode, the ignition timing is calculated by the ECM, according to the engine RPM and throttle valve position. Fail-safe mode continues until a pass condition is detected.

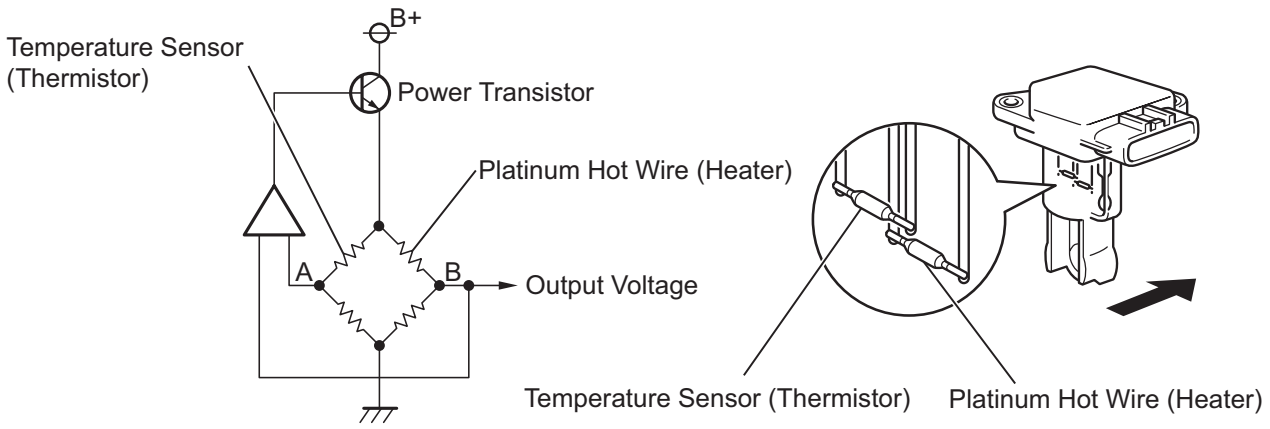

DTC No.	DTC Detection Conditions	Trouble Areas
P0100	MAF meter voltage less than 0.2 V, or more than 4.9 V for 3 seconds (1 trip detection logic)	• Open or short in MAF meter circuit • MAF meter • ECM
P0102	MAF meter voltage less than 0.2 V for 3 seconds (1 trip detection logic)	• Open or short in MAF meter circuit • MAF meter • ECM
P0103	MAF meter voltage more than 4.9 V for 3 seconds (1 trip detection logic)	• Open or short in MAF meter circuit • MAF meter • ECM

HINT:
When any of these DTCs are set, check the air-flow rate by selecting the following menu items on an intelligent tester: DIAGNOSIS / ENHANCED OBD ll / DATA LIST / PRIMARY / MAF.

Mass Air Flow Rate (g/sec)	Malfunctions
Approximately 0.0	• Open in Mass Air Flow (MAF) meter power source circuit • Open or short in VG circuit
271.0 or more	• Open in EVG circuit

MONITOR DESCRIPTION

If there is a defect in the MAF meter or an open or short circuit, the voltage level deviates from the normal operating range. The ECM interprets this deviation as a malfunction in the MAF meter and sets a DTC.
Example:
When the sensor output voltage remains less than 0.2 V, or more than 4.9 V, for more than 3 seconds, the ECM sets a DTC.
If the malfunction is not repaired successfully, a DTC is set 3 seconds after the engine is next started.

MONITOR STRATEGY

Related DTCs	P0100: MAF meter range check (Fluctuating) P0102: MAF meter range check (Low voltage) P0103: MAF meter range check (High voltage)
Required Sensors/Components (Main)	MAF meter
Required Sensors/Components (Related)	Crankshaft position sensor
Frequency of Operation	Continuous
Duration	3 seconds
MIL Operation	Immediate: Engine RPM less than 4,000 rpm 2 driving cycles: Engine RPM 4,000 rpm or more
Sequence of Operation	None

TYPICAL ENABLING CONDITIONS

Monitor runs whenever following DTCs not present	None

TYPICAL MALFUNCTION THRESHOLDS

P0100:

MAF meter voltage	Less than 0.2 V, or more than 4.9 V

P0102:

MAF meter voltage	Less than 0.2 V

P0103:

MAF meter voltage	More than 4.9 V

COMPONENT OPERATING RANGE

MAF meter voltage	Between 0.4 V and 2.2 V

WIRING DIAGRAM

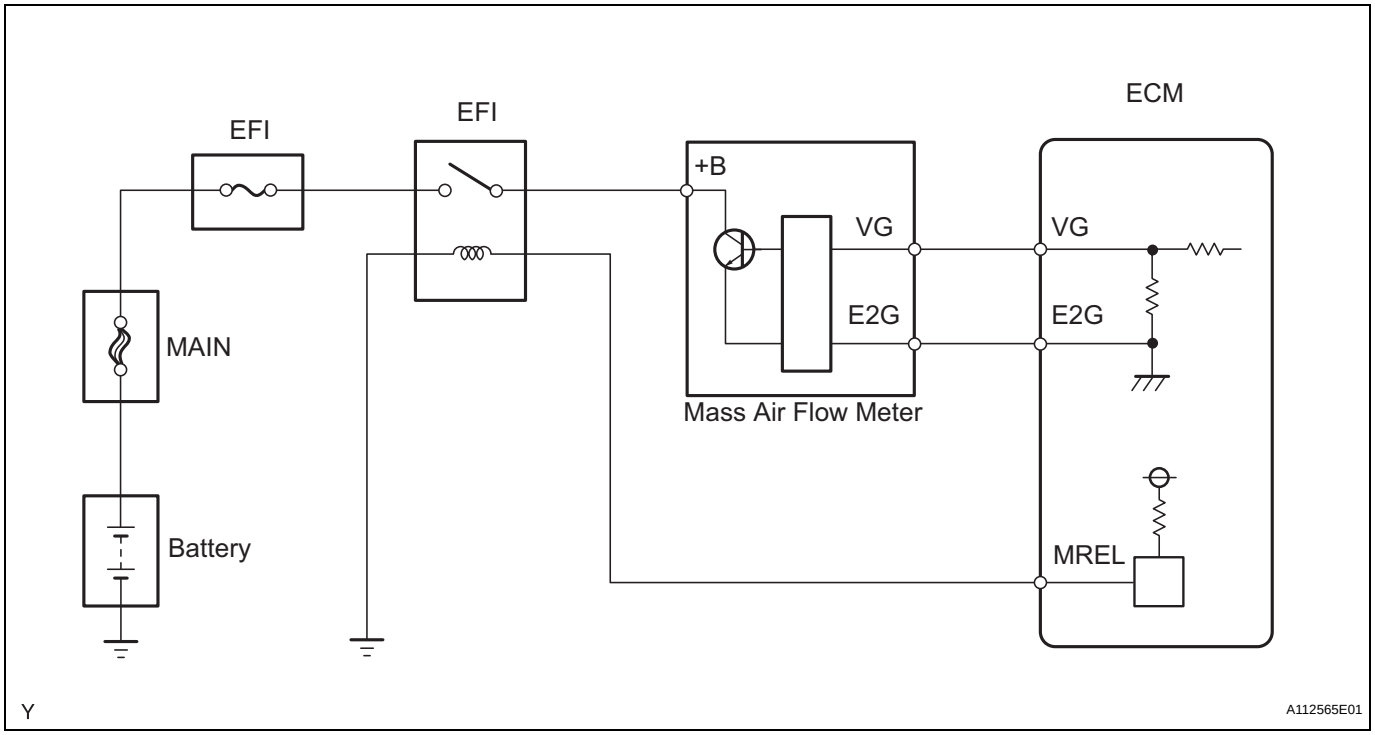

ES

INSPECTION PROCEDURE

HINT:
Read freeze frame data using an intelligent tester. Freeze frame data record the engine condition when malfunctions are detected. When troubleshooting, freeze frame data can help determine if the vehicle was moving or stationary, if the engine was warmed up or not, if the air-fuel ratio was lean or rich, and other data, from the time the malfunction occurred.

1	READ VALUE USING INTELLIGENT TESTER (MASS AIR FLOW RATE)

(a) Connect an intelligent tester to the DLC3.
(b) Start the engine.
(c) Turn the tester ON.
(d) Select the following menu items: DIAGNOSIS / ENHANCED OBD II / DATA LIST / PRIMARY / MAF.
(e) Read the values displayed on the tester.

Result

Mass Air Flow Rate (g/sec)	Proceed To
0.0	A
271.0 or more	B
Between 1.0 and 270.0 (*1)	C

*1: The value must be changed when the throttle valve is open or closed with the engine running.

B → Go to step 6

C → CHECK FOR INTERMITTENT PROBLEMS

A

2 INSPECT MASS AIR FLOW METER (POWER SOURCE VOLTAGE)

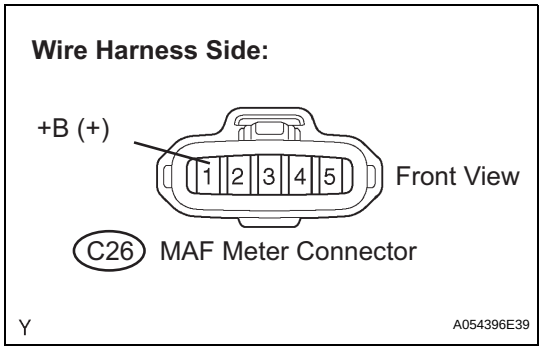

(a) Disconnect the C26 Mass Air Flow (MAF) meter connector.
(b) Turn the ignition switch to ON.
(c) Measure the voltage between the terminal of the wire harness side connector and body ground.
Standard voltage

Tester Connections	Specified Conditions
+B (C26-1) - Body ground	11 to 14 V

(d) Reconnect the MAF meter connector.

NG → **Go to step 5**

OK

3 INSPECT MASS AIR FLOW METER (VG VOLTAGE)

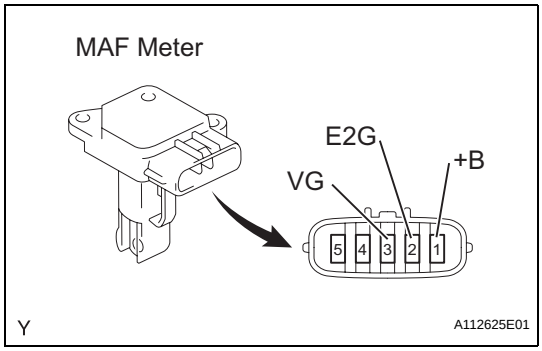

(a) Output voltage inspection.
(1) Apply battery voltage across terminals +B and E2G.
(2) Connect the positive (+) tester prove to terminal VG, and negative (-) tester prove to terminal E2G.
(3) Check the voltage.
Standard voltage

Tester Connections	Specified Conditions
VG (3) - E2G (2)	0.2 to 4.9 V

NG → **REPLACE MASS AIR FLOW METER**

OK

4	CHECK HARNESS AND CONNECTOR (MASS AIR FLOW METER - ECM)

Wire Harness Side:

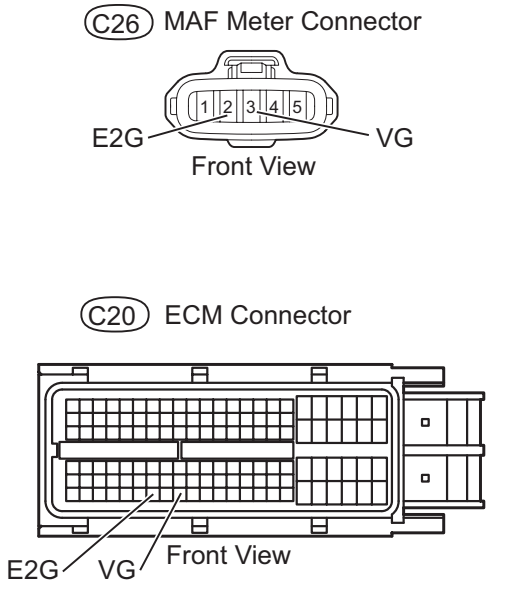

(a) Disconnect the C26 MAF meter connector.
(b) Disconnect the C20 ECM connector.
(c) Check the resistance.

Standard resistance (Check for open)

Tester Connections	Specified Conditions
VG (C26-3) - VG (C20-118)	Below 1 Ω
E2G (C26-2) - E2G (C20-116)	

Standard resistance (Check for short)

Tester Connections	Specified Conditions
VG(C26-3) or VG (C20-118) - Body ground	10 kΩ or higher

(d) Reconnect the MAF meter connector.
(e) Reconnect the ECM connector.

NG → **REPAIR OR REPLACE HARNESS OR CONNECTOR**

OK

REPLACE ECM

ES

5	CHECK HARNESS AND CONNECTOR (MASS AIR FLOW METER - INTEGRATION RELAY)

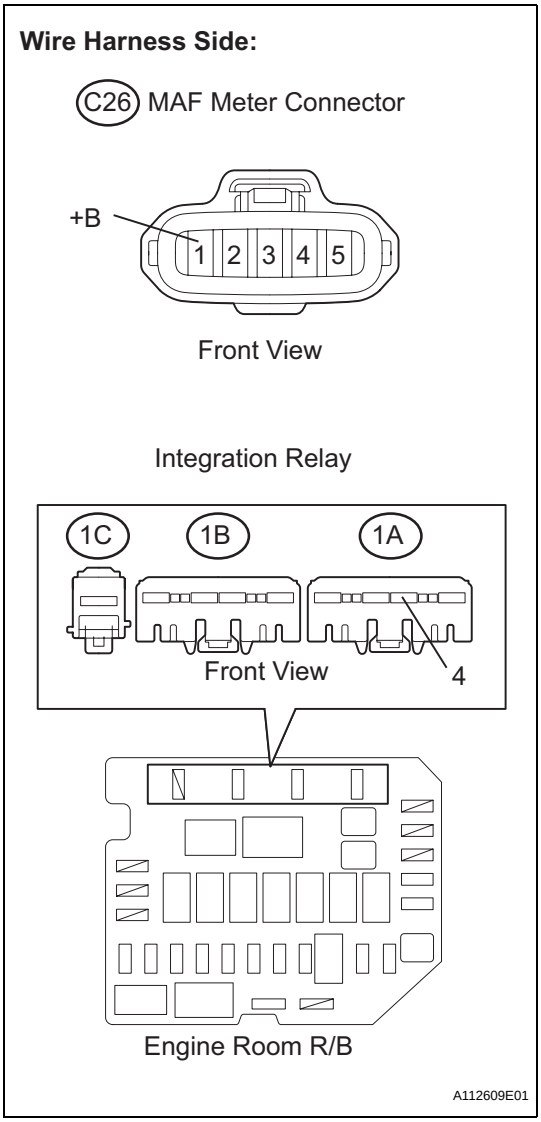

(a) Disconnect the C26 MAF meter connector.
(b) Remove the integration relay from the engine room Relay Block (R/B).
(c) Check the resistance.

Standard resistance (Check for open)

Tester Connections	Specified Conditions
+B (C26-1) - 1A-4	Below 1 Ω

Standard resistance (Check for short)

Tester Connections	Specified Conditions
+B (C26-1) or 1A-4 - Body ground	10 kΩ or higher

(d) Reconnect the MAF meter connector.
(e) Reinstall the integration relay.

NG → **REPAIR OR REPLACE HARNESS OR CONNECTOR**

OK

CHECK ECM POWER SOURCE CIRCUIT

6 CHECK HARNESS AND CONNECTOR (SENSOR GROUND)

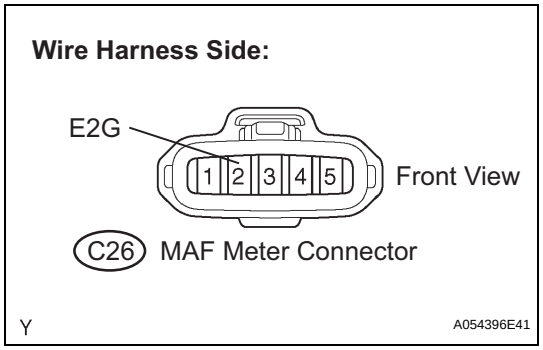

(a) Disconnect the C26 MAF meter connector.
(b) Check the resistance.
Standard resistance

Tester Connections	Specified Conditions
E2G (C26-2) - Body ground	Below 1 Ω

(c) Reconnect the MAF meter connector.

OK → **REPLACE MASS AIR FLOW METER**

NG

7 CHECK HARNESS AND CONNECTOR (MASS AIR FLOW METER - ECM)

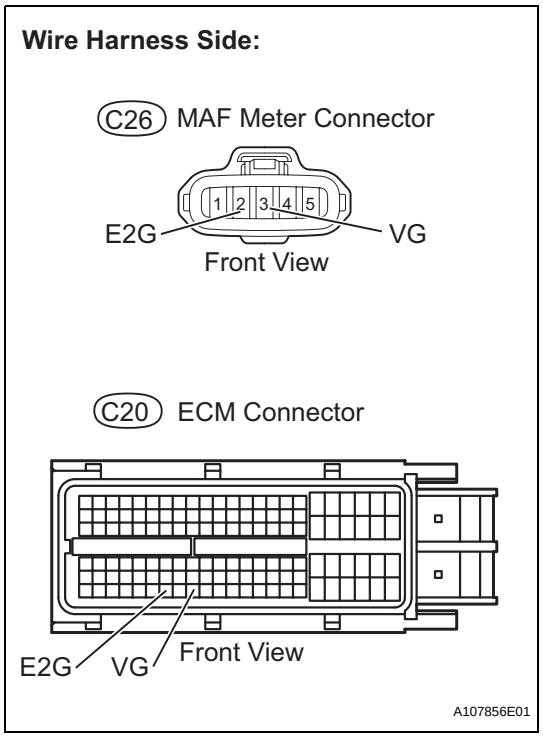

(a) Disconnect the C26 MAF meter connector.
(b) Disconnect the C20 ECM connector.
(c) Check the resistance.
Standard resistance (Check for open)

Tester Connections	Specified Conditions
VG (C26-3) - VG (C20-118)	Below 1 Ω
E2G (C26-2) - E2G (C20-116)	

Standard resistance (Check for short)

Tester Connections	Specified Conditions
VG (C26-3) or VG (C20-118) - Body ground	10 kΩ or higher

(d) Reconnect the MAF meter connector.
(e) Reconnect the ECM connector.

NG → **REPAIR OR REPLACE HARNESS OR CONNECTOR**

OK

REPLACE ECM

ES

DTC	P0101	Mass Air Flow Circuit Range / Performance Problem

DESCRIPTION

Refer to DTC P0100 (See page ES-80).

DTC No.	DTC Detection Conditions	Trouble Areas
P0101	Conditions (a), (b), (c), (d) and (e) continue for more than 10 seconds(2 trip detection logic): (a) Engine running (b) Engine coolant temperature 70°C (158°F) or higher (c) Throttle Position (TP) sensor voltage 0.24 V or more (d) Average engine load value ratio less than 0.80, or more than 1.23 (varies with estimated engine load) Average engine load value ratio = Average engine load based on MAF meter output / Average engine load estimated from driving conditions (e) Average air-fuel ratio less than -20 %, or more than 20 %	• Mass Air Flow (MAF) meter • Air induction system • PCV hose connections

ES

MONITOR DESCRIPTION

The MAF meter is a sensor that measures the amount of air flowing through the throttle valve. The ECM uses this information to determine the fuel injection time and to provide an appropriate air-fuel ratio. Inside the MAF meter, there is a heated platinum wire which is exposed to the flow of intake air. By applying a specific electrical current to the wire, the ECM heats it to a specific temperature. The flow of incoming air cools both the wire and an internal thermistor, affecting their resistance. To maintain a constant current value, the ECM varies the voltage applied to these components of the MAF meter. The voltage level is proportional to the airflow through the sensor, and the ECM uses it to calculate the intake air volume.
The ECM monitors the average engine load value ratio to check the MAF meter for malfunctions. The average engine load value ratio is obtained by comparing the average engine load calculated from the MAF meter output to the average engine load estimated from the driving conditions, such as the engine speed and the throttle opening angle. If the average engine load value ratio is below the threshold value, the ECM determines that the intake air volume is low, and if the average engine load value ratio is above the threshold value, the ECM determines that the intake air volume is high.
If this is detected in 2 consecutive driving cycles, the MIL is illuminated and a DTC is set.

MONITOR STRATEGY

Related DTCs	P0101: Mass air flow meter rationality
Required Sensors/Components (Main)	Mass air flow meter
Required Sensors/Components (Related)	Crankshaft Position (CKP) sensor, Engine Coolant Temperature (ECT) sensor and Throttle Position (TP) sensor
Frequency of Operation	Continuous
Duration	10 seconds
MIL Operation	2 driving cycles
Sequence of Operation	None

TYPICAL ENABLING CONDITIONS

Monitor runs whenever following DTCs not present	P0115 - P0118 (ECT sensor) P0120 - P0223, P2135 (TP sensor) P0125 (Insufficient ECT for closed loop) P0335 (CKP sensor) P0340 (CMP sensor)
Throttle position (TP sensor voltage)	0.24 V or more
Engine	Running
Battery voltage	10.5 V or more

Engine coolant temperature	70°C (158°F) or more
IAT sensor circuit	OK
ECT sensor circuit	OK
CKP sensor circuit	OK
TP sensor circuit	OK
Canister pressure sensor circuit	OK
EVAP leak detection pump	OK
EVAP vent valve	OK

TYPICAL MALFUNCTION THRESHOLDS

Both of following conditions 1 and 2 met	-
1. Averaged engine load value ratio	Less than 0.80, or more than 1.23 (varies with estimated engine load)
2. Averaged air-fuel ratio	Less than -20 %, or more than 20 %

ES

WIRING DIAGRAM

Refer to DTC P0100 (See page ES-82).

CONFIRMATION DRIVING PATTERN

HINT:
Performing this confirmation pattern will activate the mass air flow performance monitor.

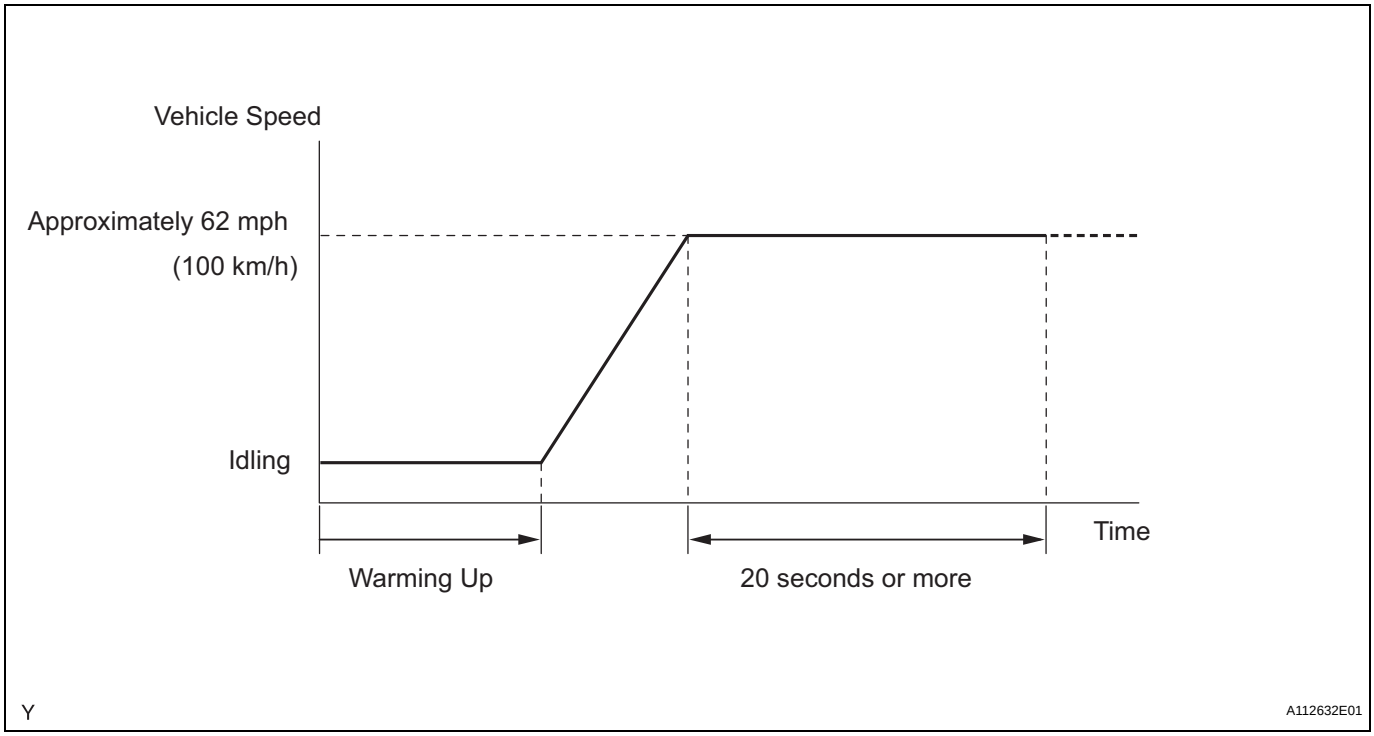

1. Connect the intelligent tester to the DLC3.
2. Turn the ignition switch to ON.
3. Turn the tester ON.
4. Clear DTCs (See page ES-34).
5. Start the engine, and warm it up until the engine coolant temperature reaches 70°C (158°F) or higher.
6. Drive the vehicle at approximately 62 mph (100 km/h) for 20 seconds or more.
7. On the tester, select the following menu items: DIAGNOSIS / ENHANCED OBD II / DTC INFO / PENDING CODES and check if any DTCs (any pending DTCs) are set.

INSPECTION PROCEDURE

HINT:
Read freeze frame data using an intelligent tester. Freeze frame data record the engine condition when malfunctions are detected. When troubleshooting, freeze frame data can help determine if the vehicle was moving or stationary, if the engine was warmed up or not, if the air-fuel ratio was lean or rich, and other data, from the time the malfunction occurred.

1 CHECK ANY OTHER DTCS OUTPUT (IN ADDITION TO DTC P0101)

(a) Connect an intelligent tester to the DLC3.
(b) Turn the ignition switch to ON.
(c) Turn the tester ON.
(d) Select the following menu items: DIAGNOSIS / ENHANCED OBD II / DTC INFO / CURRENT CODES.
(e) Read DTCs.

Result

Display (DTC Output)	Proceed To
P0101	A
P0101 and other DTCs	B

HINT:
If any DTCs other than P0101 are output, troubleshoot those DTCs first.

B → **GO TO DTC CHART**

A

2 CHECK AIR INDUCTION SYSTEM

(a) Check the air induction system for vacuum leakage.
OK:
No leakage from air induction system.

NG → **REPAIR OR REPLACE AIR INDUCTION SYSTEM**

OK

3 CHECK PCV HOSE CONNECTIONS

OK:
PCV hose is connected correctly and is not damaged.

NG → **REPAIR OR REPLACE PCV HOSE**

OK

REPLACE MASS AIR FLOW METER

DTC	P0110	Intake Air Temperature Circuit Malfunction

DTC	P0112	Intake Air Temperature Circuit Low Input

DTC	P0113	Intake Air Temperature Circuit High Input

DESCRIPTION

Fig. 1

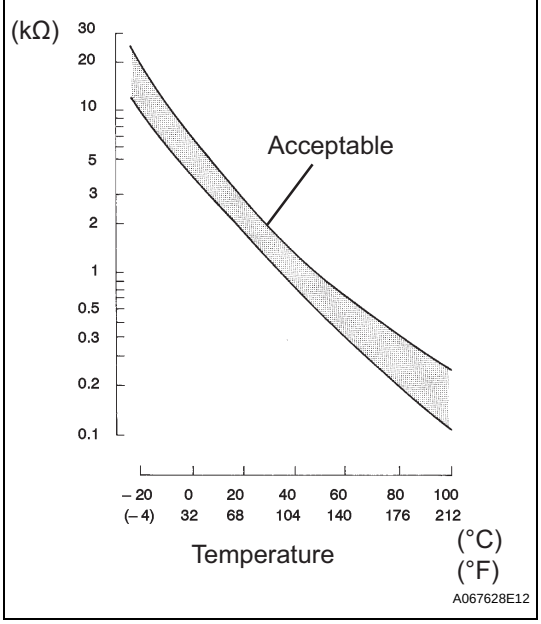

The Intake Air Temperature (IAT) sensor, mounted on the Mass Air Flow (MAF) meter, monitors the IAT. The IAT sensor has a built in thermistor with a resistance that varies according to the temperature of the intake air. When the IAT is low, the resistance of the thermistor increases. When the temperature is high, the resistance drops. These variations in resistance are transmitted to the ECM as voltage changes (see Fig. 1).

The IAT sensor is powered by a 5 V supply from the THA terminal of the ECM, via resistor R.

Resistor R and the IAT sensor are connected in series. When the resistance value of the IAT sensor changes, according to changes in the IAT, the voltage at terminal THA also varies. Based on this signal, the ECM increases the fuel injection volume when the engine is cold to improve driveability.

HINT:

When any of DTCs P0110, P0112 and P0113 are set, the ECM enters fail-safe mode. During fail-safe mode, the IAT is estimated to be 20°C (68°F) by the ECM. Fail-safe mode continues until a pass condition is detected.

DTC No.	Proceed To	DTC Detection Conditions	Trouble Areas
P0110	Step 1	Open or short in IAT sensor circuit for 0.5 seconds (1 trip detection logic)	• Open or short in IAT sensor circuit • IAT sensor (built into MAF meter) • ECM
P0112	Step 4	Short in IAT sensor circuit for 0.5 seconds (1 trip detection logic)	• Short in IAT sensor circuit • IAT sensor (built into MAF meter) • ECM
P0113	Step 2	Open in IAT sensor circuit for 0.5 seconds (1 trip detection logic)	• Open in IAT sensor circuit • IAT sensor (built into MAF meter) • ECM

HINT:
When any of these DTCs are set, check the IAT by selecting the following menu items on an intelligent tester: DIAGNOSIS / ENHANCED OBD II / DATA LIST / PRIMARY / INTAKE AIR.

Temperature Displayed	Malfunctions
-40°C (-40°F)	Open circuit
140°C (284°F) or higher	Short circuit

MONITOR DESCRIPTION

The ECM monitors the sensor voltage and uses this value to calculate the IAT. When the sensor output voltage deviates from the normal operating range, the ECM interprets this as a malfunction in the IAT sensor and sets a DTC.

ES

Example:
If the sensor output voltage is more than 4.91 V for 0.5 seconds or more, the ECM determines that there is an open in the IAT sensor circuit, and sets DTC P0113. Conversely, if the output voltage is less than 0.18 V for 0.5 seconds or more, the ECM determines that there is a short in the sensor circuit, and sets DTC P0112.
If the malfunction is not repaired successfully, a DTC is set 0.5 seconds after the engine is next started.

MONITOR STRATEGY

Related DTCs	P0110: IAT sensor range check (Fluctuating) P0112: IAT sensor range check (Low voltage) P0113: IAT sensor range check (High voltage)
Required Sensors/Components (Main)	IAT sensor
Required Sensors/Components (Related)	-
Frequency of Operation	Continuous
Duration	0.5 seconds
MIL Operation	Immediate
Sequence of Operation	None

TYPICAL ENABLING CONDITIONS

Monitor runs whenever following DTCs not present	None

TYPICAL MALFUNCTION THRESHOLDS

P0110:

IAT sensor voltage	Less than 0.18 V, or more than 4.91 V

P0112:

IAT sensor voltage [IAT]	Less than 0.18 V [More than 140°C (284°F)]

P0113:

IAT sensor voltage [IAT]	More than 4.91 V [Less than -40°C (-40°F)]

COMPONENT OPERATING RANGE

IAT sensor voltage [IAT]	0.18 to 4.91 V [-40°C to 140°C (-40°F to 284°F)]

WIRING DIAGRAM

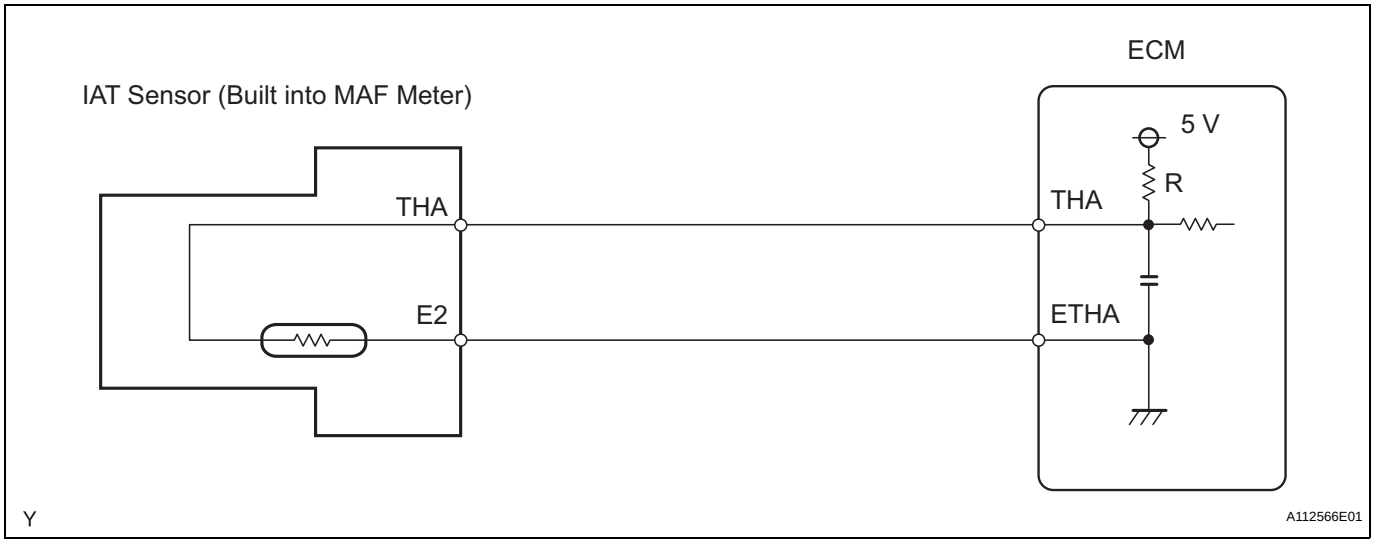

ES

INSPECTION PROCEDURE

HINT:
Read freeze frame data using an intelligent tester. Freeze frame data record the engine condition when malfunctions are detected. When troubleshooting, freeze frame data can help determine if the vehicle was moving or stationary, if the engine was warmed up or not, if the air-fuel ratio was lean or rich, and other data, from the time the malfunction occurred.

1	READ VALUE USING INTELLIGENT TESTER (INTAKE AIR TEMPERATURE)

(a) Connect an intelligent tester to the DLC3.
(b) Turn the ignition switch to ON.
(c) Turn the tester ON.
(d) Select the following menu items: DIAGNOSIS / ENHANCED OBD II / DATA LIST / PRIMARY / INTAKE AIR.
(e) Read the value displayed on the tester.
Standard:
Same as actual Intake Air Temperature (IAT).

Result

Temperature Displayed	Proceed To
-40 °C (-40°F)	A
140°C (284°F) or higher	B
Same as actual IAT	C

HINT:
- If there is an open circuit, the intelligent tester indicates -40°C (-40°F).
- If there is a short circuit, the intelligent tester indicates 140°C (284°F) or higher.

B	Go to step 4
C	CHECK FOR INTERMITTENT PROBLEMS

A

2	READ VALUE USING INTELLIGENT TESTER (CHECK FOR OPEN IN WIRE HARNESS)

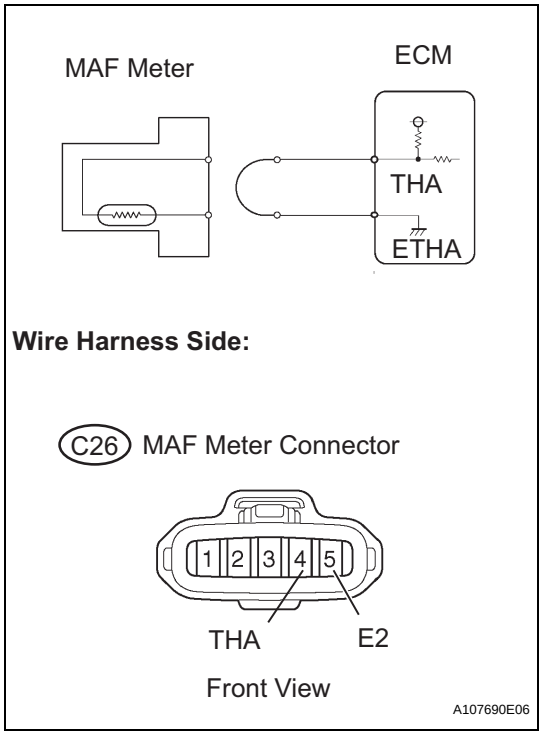

(a) Disconnect the C26 Mass Air Flow (MAF) meter connector.
(b) Connect terminals THA and E2 of the MAF meter wire harness side connector.
(c) Connect the intelligent tester to the DLC3.
(d) Turn the ignition switch to ON.
(e) Turn the tester ON.
(f) Select the following menu items: DIAGNOSIS / ENHANCED OBD II / DATA LIST / PRIMARY / INTAKE AIR.
(g) Read the value displayed on the tester.
Standard:
140°C (284°F) or higher
(h) Reconnect the MAF meter connector.

OK → **CONFIRM GOOD CONNECTION TO SENSOR. IF OK, REPLACE MASS AIR FLOW METER**

NG

3	CHECK HARNESS AND CONNECTOR (MASS AIR FLOW METER - ECM)

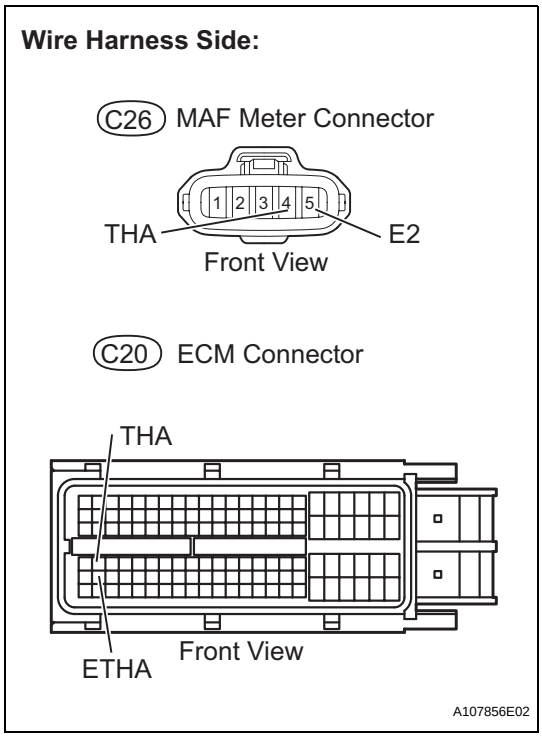

(a) Disconnect the C26 MAF meter connector.
(b) Disconnect the C20 ECM connector.
(c) Check the resistance.
Standard resistance

Tester Connections	Specified Conditions
THA (C26-4) - THA (C20-65)	Below 1 Ω
E2 (C26-5) - ETHA (C20-88)	

(d) Reconnect the MAF meter connector.
(e) Reconnect the ECM connector.

NG → **REPAIR OR REPLACE HARNESS OR CONNECTOR**

OK

CONFIRM GOOD CONNECTION TO ECM. IF OK, REPLACE ECM

4 READ VALUE USING INTELLIGENT TESTER (CHECK FOR SHORT IN WIRE HARNESS)

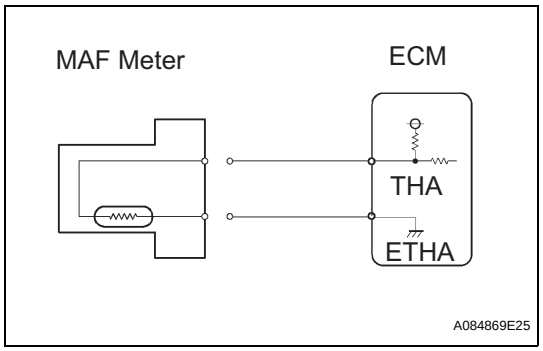

(a) Disconnect the C26 MAF meter connector.
(b) Connect the intelligent tester to the DLC3.
(c) Turn the ignition switch to ON.
(d) Turn the tester ON.
(e) Select the following menu items: DIAGNOSIS / ENHANCED OBD II / DATA LIST / PRIMARY / INTAKE AIR.
(f) Read the value displayed on the tester.
Standard:
-40°C (-40°F)
(g) Reconnect the MAF meter connector.

OK → **REPLACE MASS AIR FLOW METER**

NG

5 CHECK HARNESS AND CONNECTOR (MASS AIR FLOW METER - ECM)

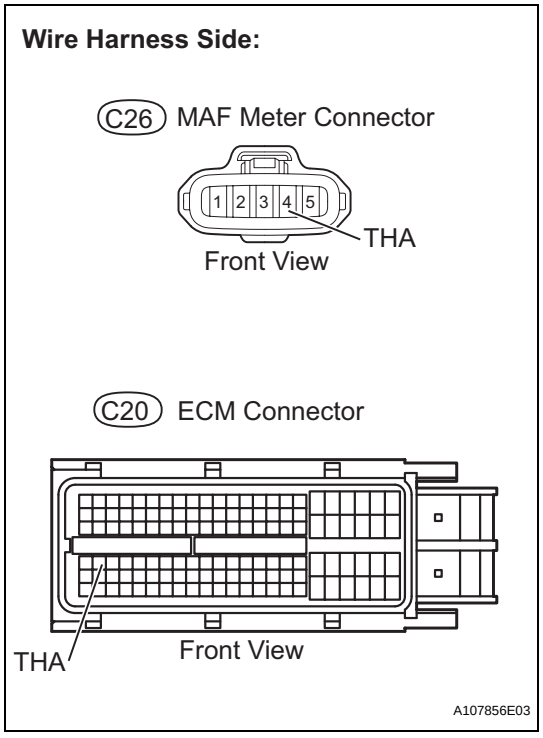

(a) Disconnect the C26 MAF meter connector.
(b) Disconnect the C20 ECM connector.
(c) Check the resistance.
Standard resistance

Tester Connections	Specified Conditions
THA (C26-4) or THA (C20-65) - Body ground	10 kΩ or higher

(d) Reconnect the MAF meter connector.
(e) Reconnect the ECM connector.

NG → **REPAIR OR REPLACE HARNESS OR CONNECTOR**

OK

REPLACE ECM

ES

DTC	P0115	Engine Coolant Temperature Circuit Malfunction

DTC	P0117	Engine Coolant Temperature Circuit Low Input

DTC	P0118	Engine Coolant Temperature Circuit High Input

DESCRIPTION

A thermistor is built into the Engine Coolant Temperature (ECT) sensor, of which the resistance value varies according to the ECT.

ES

The structure of the sensor and its connection to the ECM are the same as those of the Intake Air Temperature (IAT) sensor.

HINT:

When any of DTCs P0115, P0117 and P0118 are set, the ECM enters fail-safe mode. During fail-safe mode, the ECT is estimated to be 80°C (176°F) by the ECM. Fail-safe mode continues until a pass condition is detected.

DTC No.	Proceed To	DTC Detection Conditions	Trouble Areas
P0115	Step 1	Open or short in ECT sensor circuit for 0.5 seconds (1 trip detection logic)	• Open or short in ECT sensor circuit • ECT sensor • ECM
P0117	Step 4	Short in ECT sensor circuit for 0.5 seconds (1 trip detection logic)	• Short in ECT sensor • ECT sensor • ECM
P0118	Step 2	Open in ECT sensor circuit for 0.5 seconds (1 trip detection logic)	• Open in ECT sensor circuit • ECT sensor • ECM

HINT:

When any of these DTCs are set, check the ECT by selecting the following menu items on an intelligent tester: DIAGNOSIS / ENHANCED OBD II / DATA LIST / PRIMARY / COOLANT TEMP.

Temperature Displayed	Malfunctions
-40°C (-40°F)	Open circuit
140°C (284°F) or higher	Short circuit

MONITOR DESCRIPTION

The Engine Coolant Temperature (ECT) sensor is used to monitor the ECT. The ECT sensor has a thermistor with a resistance that varies according to the temperature of the engine coolant. When the coolant temperature is low, the resistance in the thermistor increases. When the temperature is high, the resistance drops. These variations in resistance are reflected in the output voltage from the sensor. The ECM monitors the sensor voltage and uses this value to calculate the ECT. When the sensor output voltage deviates from the normal operating range, the ECM interprets this as a fault in the ECT sensor and sets a DTC.

Example:

If the sensor output voltage is more than 4.91 V for 0.5 seconds or more, the ECM determines that there is an open in the ECT sensor circuit, and sets DTC P0118. Conversely, if the voltage output is less than 0.14 V for 0.5 seconds or more, the ECM determines that there is a short in the sensor circuit, and sets DTC P0117.

If the malfunction is not repaired successfully, a DTC is set 0.5 seconds after the engine is next started.

MONITOR STRATEGY

Related DTCs	P0115: ECT sensor range check (Fluctuating) P0117: ECT sensor range check (Low voltage) P0118: ECT sensor range check (High voltage)
Required Sensors/Components (Main)	ECT sensor
Required Sensors/Components (Related)	-
Frequency of Operation	Continuous
Duration	0.5 seconds
MIL Operation	Immediate
Sequence of Operation	None

TYPICAL ENABLING CONDITIONS

Monitor runs whenever following DTCs not present	None

TYPICAL MALFUNCTION THRESHOLDS

P0115:

ECT sensor voltage	Less than 0.14 V, or more than 4.91 V

P0117:

ECT sensor voltage [ECT]	Less than 0.14 V [More than 140°C (284°F)]

P0118:

ECT sensor voltage [ECT]	More than 4.91 V [Less than -40°C (-40°F)]

COMPONENT OPERATING RANGE

ECT sensor voltage [ECT]	0.14 to 4.91 V [-40°C to 140°C (-40°F to 284°F)]

WIRING DIAGRAM

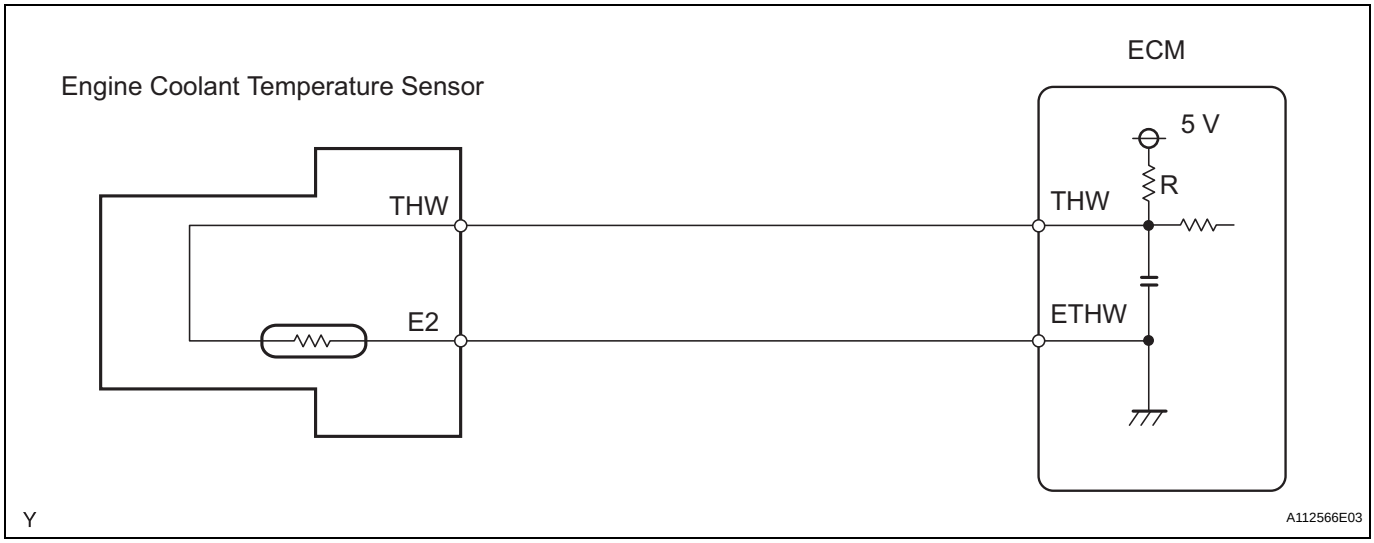

INSPECTION PROCEDURE

HINT:
Read freeze frame data using an intelligent tester. Freeze frame data record the engine condition when malfunctions are detected. When troubleshooting, freeze frame data can help determine if the vehicle was moving or stationary, if the engine was warmed up or not, if the air-fuel ratio was lean or rich, and other data, from the time the malfunction occurred.

1	READ VALUE USING INTELLIGENT TESTER (ENGINE COOLANT TEMPERATURE)

(a) Connect an intelligent tester to the DLC3.
(b) Turn the ignition switch to ON.
(c) Turn the tester ON.
(d) Select the following menu items: DIAGNOSIS / ENHANCED OBD II / DATA LIST / PRIMARY / COOLANT TEMP.
(e) Read the value displayed on the tester.
Standard:
75°C to 100°C (167°F to 212°F) with warm engine.

Result

Temperature Displayed	Proceed To
-40°C (-40°F)	A
140°C (284°F) or higher	B
75°C to 100°C (167°F to 212°F)	C

HINT:
- If there is an open circuit, the intelligent tester indicates -40°C (-40°F).
- If there is a short circuit, the intelligent tester indicates 140°C (284°F) or higher.

B → Go to step 4

C → CHECK FOR INTERMITTENT PROBLEMS

A

2	READ VALUE USING INTELLIGENT TESTER (CHECK FOR OPEN IN WIRE HARNESS)

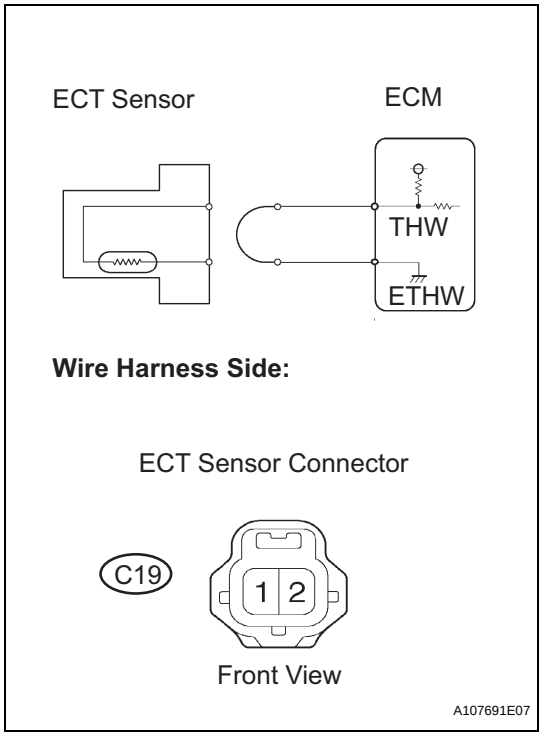

(a) Disconnect the C19 Engine Coolant Temperature (ECT) sensor connector.
(b) Connect terminals 1 and 2 of the ECT sensor connector on the wire harness side.
(c) Connect the intelligent tester to the DLC3.
(d) Turn the ignition switch to ON.
(e) Turn the tester ON.
(f) Select the following menu items: DIAGNOSIS / ENHANCED OBD II / DATA LIST / PRIMARY / COOLANT TEMP.
(g) Read the value displayed on the tester.
Standard:
140°C (284°F) or higher.
(h) Reconnect the ECT sensor connector.

OK → **CONFIRM GOOD CONNECTION TO SENSOR. IF OK, REPLACE ENGINE COOLANT TEMPERATURE SENSOR**

NG

3	CHECK HARNESS AND CONNECTOR (ENGINE COOLANT TEMPERATURE SENSOR - ECM)

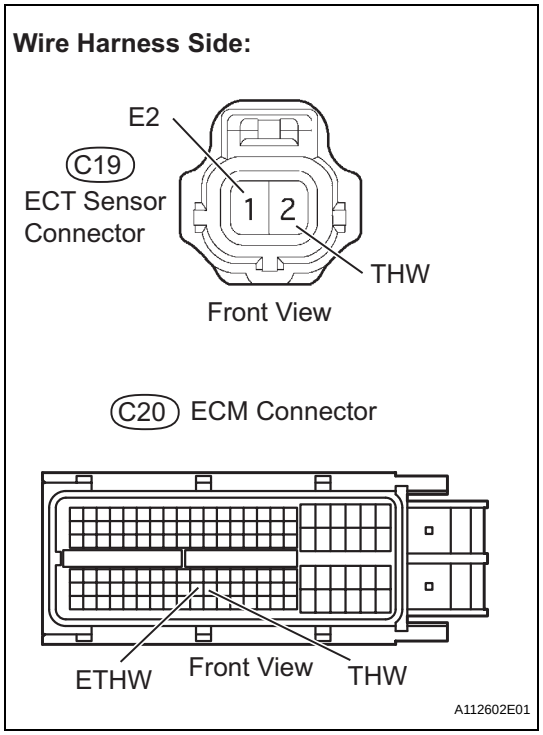

(a) Disconnect the C19 ECT sensor connector.
(b) Disconnect the C20 ECM connector.
(c) Check the resistance.
Standard resistance

Tester Connections	Specified Conditions
THW (C19-2) - THW (C20-97)	Below 1 Ω
E2 (C19-1) - ETHW (C20-96)	

(d) Reconnect the ECT sensor connector.
(e) Reconnect the ECM connector.

NG → **REPAIR OR REPLACE HARNESS OR CONNECTOR**

ES

OK

GOOD CONNECTION TO ECM. IF OK, REPLACE ECM

4	READ VALUE USING INTELLIGENT TESTER (CHECK FOR SHORT IN WIRE HARNESS)

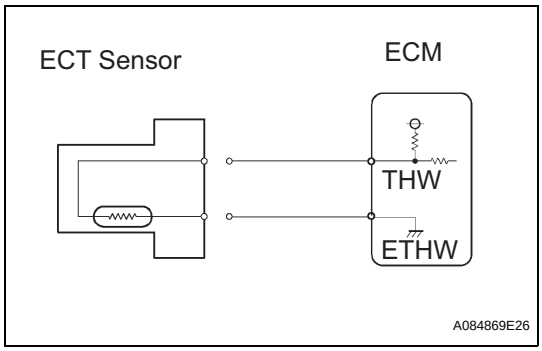

(a) Disconnect the C19 ECT sensor connector.
(b) Connect the intelligent tester to the DLC3.
(c) Turn the ignition switch to ON.
(d) Turn the tester ON.
(e) Select the following menu items: DIAGNOSIS / ENHANCED OBD II / DATA LIST / PRIMARY / COOLANT TEMP.
(f) Read the value displayed on the tester.
Standard:
-40°C (-40°F)
(g) Reconnect the ECT sensor connector.

OK → **REPLACE ENGINE COOLANT TEMPERATURE SENSOR**

NG

5	CHECK HARNESS AND CONNECTOR (ENGINE COOLANT TEMPERATURE SENSOR - ECM)

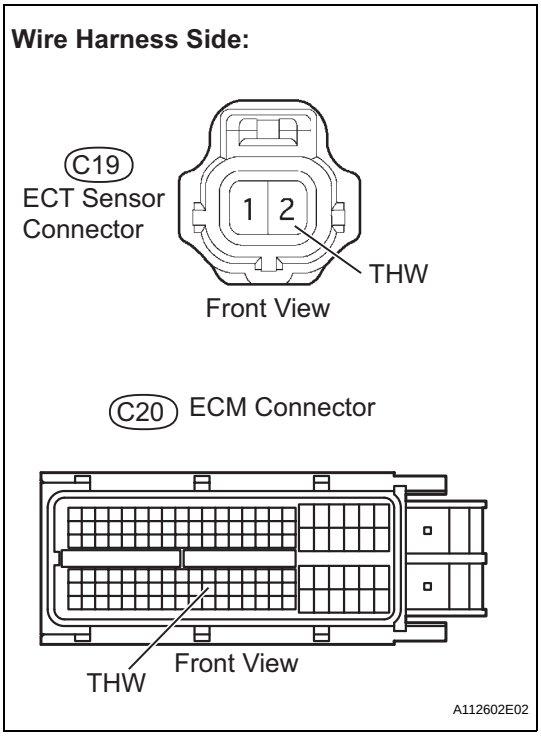

(a) Disconnect the C19 ECT sensor connector.
(b) Disconnect the C20 ECM connector.
(c) Check the resistance.
Standard resistance

Tester Connections	Specified Conditions
THW (C19-2) or THW (C20-97) - Body ground	10 kΩ or higher

(d) Reconnect the ECT sensor connector.
(e) Reconnect the ECM connector.

NG → **REPAIR OR REPLACE HARNESS OR CONNECTOR**

OK

REPLACE ECM

DTC	P0116	Engine Coolant Temperature Circuit Range / Performance Problem

DESCRIPTION

Refer to DTC P0115 (See page ES-95).

DTC No.	DTC Detection Conditions	Trouble Areas
P0116	When either of following conditions met (2 trip detection logic): • When cold engine started and engine warmed up, Engine Coolant Temperature (ECT) sensor value does not change. • After warmed up engine started, if ECT sensor value does not change when engine stopped and then next cold engine start performed, it determined that malfunction has occurred.	• Thermostat • ECT sensor

ES

MONITOR DESCRIPTION

Engine coolant temperature (ECT) sensor cold start monitor

When a cold engine start is performed and then the engine is warmed up, if the ECT sensor value does not change, it is determined that a malfunction has occurred. If this is detected in 2 consecutive driving cycles, the MIL is illuminated and a DTC is set.

ECT sensor soak monitor

After a warmed up engine is started, if the ECT sensor value does not change when the engine is stopped and then the next cold engine start is performed, it is determined that a malfunction has occurred. If this is detected in 2 consecutive driving cycles, the MIL is illuminated and a DTC is set.

MONITOR STRATEGY

Related DTCs	P0116: Engine coolant temperature (ECT) sensor cold start monitor P0116: ECT sensor soak monitor
Required Sensors/Components (Main)	ECT sensor
Required Sensors/Components (Related)	None
Frequency of Operation	Once per driving cycle
Duration	180 seconds or more
MIL Operation	2 driving cycles
Sequence of Operation	None

TYPICAL ENABLING CONDITIONS

ECT Sensor cold start monitor:

Monitor runs whenever following DTCs not present	P0100 to P0103: Mass Air Flow (MAF) meter P0110 to P0113: Intake Air Temperature (IAT) sensor
Battery voltage	10.5 V or more
Time after engine start	1 second or more
ECT at engine start	Less than 60°C (140°F)
IAT sensor circuit	OK
Soak time	5 hours or more
Accumulated MAF	498.77 g or more
Engine	Running
Fuel cut	OFF
Difference between ECT at engine start and IAT	Less than 40°C (72°F)

ECT Sensor soak monitor:

Monitor runs whenever following DTCs not present	P0100 to P0103: MAF meter P0110 to P0113: IAT sensor
Battery voltage	10.5 V or more
Engine	Running
Soak time	5 hours or more
Either (a) or (b) condition met	-
(a) ECT	60°C (140°F) or more
(b) Accumulated MAF	862.59 g or more

TYPICAL MALFUNCTION THRESHOLDS

ECT Sensor cold start monitor:

ECT sensor value change	Less than 5°C (9°F)

ECT Sensor soak monitor:

Difference between current ECT sensor value and previous ECT sensor value when engine stopped	Less than 5°C (9°F)

COMPONENT OPERATING RANGE

ECT	ECT sensor value changes in accordance with actual ECT

INSPECTION PROCEDURE

HINT:

- If any of DTCs P0115, P0117, P0118 or P0125 are set simultaneously with DTC P0116, the ECT sensor may have an open or a short circuit. Troubleshoot those DTCs first.
- Read freeze frame data using an intelligent tester. Freeze frame data record the engine condition when malfunctions are detected. When troubleshooting, freeze frame data can help determine if the vehicle was moving or stationary, if the engine was warmed up or not, if the air-fuel ratio was lean or rich, and other data, from the time the malfunction occurred.

1	**CHECK ANY OTHER DTCS OUTPUT (IN ADDITION TO DTC P0116)**

(a) Connect an intelligent tester to the DLC3.
(b) Turn the ignition switch to ON.
(c) Turn the tester ON.
(d) Select the following menu items: DIAGNOSIS / ENHANCED II / DTC INFO / CURRENT CODES.
(e) Read the DTC.

Result

Display (DTC Output)	Proceed To
P0116	A
P0116 and other DTCs	B

B → GO TO DTC CHART

A

2	**INSPECT THERMOSTAT**

(a) Remove the thermostat (See page CO-18).

(b) Check the valve opening temperature of the thermostat.
Standard:
80°C to 84°C (176°F to 183°F)
HINT:
In addition to the above check, confirm that the valve is completely closed when the temperature is below the standard.

(c) Reinstall the thermostat (See page CO-19).

NG → **REPLACE THERMOSTAT**

OK

ES

REPLACE ENGINE COOLANT TEMPERATURE SENSOR

DTC	P0120	Throttle / Pedal Position Sensor / Switch "A" Circuit Malfunction
DTC	P0122	Throttle / Pedal Position Sensor / Switch "A" Circuit Low Input
DTC	P0123	Throttle / Pedal Position Sensor / Switch "A" Circuit High Input
DTC	P0220	Throttle / Pedal Position Sensor / Switch "B" Circuit
DTC	P0222	Throttle / Pedal Position Sensor / Switch "B" Circuit Low Input
DTC	P0223	Throttle / Pedal Position Sensor / Switch "B" Circuit High Input
DTC	P2135	Throttle / Pedal Position Sensor / Switch "A" / "B" Voltage Correlation

HINT:
These DTCs relate to the Throttle Position (TP) sensor.

DESCRIPTION

The TP sensor is mounted on the throttle body, and detects the opening angle of the throttle valve. This sensor is a non-contact type, and uses Hall-effect elements, in order to yield accurate signals, even in extreme driving conditions, such as at high speeds as well as very low speeds.
The TP sensor has two sensor circuits which each transmits a signal, VTA1 and VTA2. VTA1 is used to detect the throttle valve angle and VTA2 is used to detect malfunctions in VTA1. The sensor signal voltages vary between 0 V and 5 V in proportion to the throttle valve opening angle, and are transmitted to the VTA terminals of the ECM.
As the valve closes, the sensor output voltage decreases and as the valve opens, the sensor output voltage increases. The ECM calculates the throttle valve opening angle according to these signals and controls the throttle actuator in response to driver inputs. These signals are also used in calculations such as air-fuel ratio correction, power increase correction and fuel-cut control.

ES

Throttle Position Sensor

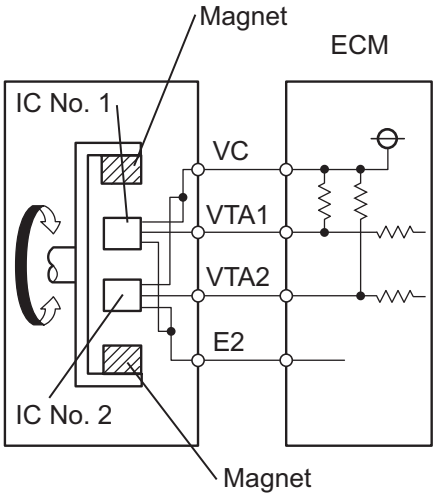

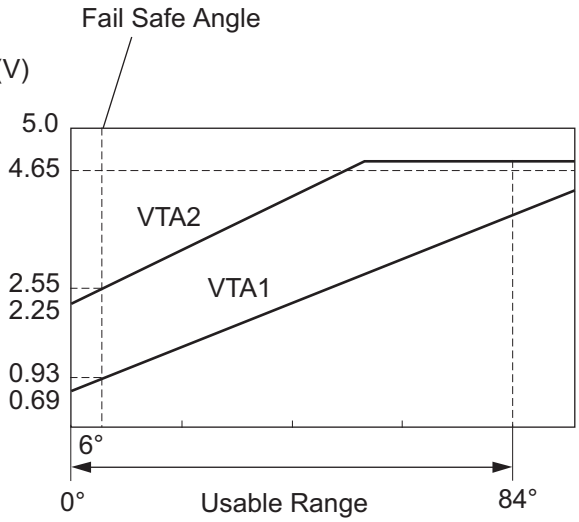

Note:

The throttle valve opening angle detected by the sensor terminal VTA1 is expressed as a percentage.

Between 10 % and 22 %: Throttle valve fully closed

Between 66 % and 98 %: Throttle valve fully open

Approximately 19 %: Fail-safe angle (6°)

Y

A122559E02

DTC No.	DTC Detection Conditions	Trouble Areas
P0120	Output voltage of VTA1 quickly fluctuates beyond lower and upper malfunction thresholds for 2 seconds when accelerator pedal depressed (1 trip detection logic)	• Throttle Position (TP) sensor (built into throttle body) • ECM
P0122	Output voltage of VTA1 0.2 V or less for 2 seconds when accelerator pedal depressed (1 trip detection logic)	• TP sensor (built into throttle body) • Short in VTA1 circuit • Open in VC circuit • ECM
P0123	Output voltage of VTA1 4.535 V or more for 2 seconds when accelerator pedal depressed (1 trip detection logic)	• TP sensor (built into throttle body) • Open in VTA1 circuit • Open in E2 circuit • Short between VC and VTA1 circuits • ECM
P0220	Output voltage of VTA2 quickly fluctuates beyond lower and upper malfunction thresholds for 2 seconds when accelerator pedal depressed (1 trip detection logic)	• TP sensor (built into throttle body) • ECM

DTC No.	DTC Detection Conditions	Trouble Areas
P0222	Output voltage of VTA2 1.75 V or less for 2 seconds when accelerator pedal depressed (1 trip detection logic)	• TP sensor (built into throttle body) • Short in VTA2 circuit • Open in VC circuit • ECM
P0223	Output voltage of VTA2 4.8 V or more, and VTA1 between 0.2 V and 2.02 V for 2 seconds when accelerator pedal depressed (1 trip detection logic)	• TP sensor (built into throttle body) • Open in VTA2 circuit • Open in E2 circuit • Short between VC and VTA2 circuits • ECM
P2135	Either condition (a) or (b) met (1 trip detection logic): (a) Difference between output voltages of VTA1 and VTA2 0.02 V or less for 0.5 seconds or more (b) Output voltage of VTA1 0.2 V or less, and VTA2 1.75 V or less, for 0.4 seconds or more	• Short between VTA1 and VTA2 circuits • TP sensor (built into throttle body) • ECM

ES

HINT:
- When any of these DTCs are set, check the throttle valve opening angle by selecting the following menu items on an intelligent tester: DIAGNOSIS / ENHANCED OBD ll / DATA LIST / ETCS / THROTTLE POS #1 AND THROTTLE POS #2.
- THROTTLE POS #1 denotes the VTA1 signal, and THROTTLE POS #2 denotes the VTA2 signal.

Reference (Normal Condition)

Tester Display	Accelerator Pedal Fully Released	Accelerator Pedal Fully Depressed
THROTTLE POS #1	**0.5 to 1.1 V**	**3.3 to 4.9 V**
THROTTLE POS #2	**2.1 to 3.1 V**	**4.6 to 5.0 V**

MONITOR DESCRIPTION

The ECM uses the Throttle Position (TP) sensor to monitor the throttle valve opening angle. There are several checks that the ECM performs to confirm the proper operation of the TP sensor.
- A specific voltage difference is expected between the sensor terminals, VTA1 and VTA2, for each throttle valve opening angle. If the difference between VTA1 and VTA2 is incorrect, the ECM interprets this as a malfunction in the sensor, and sets a DTC.
- VTA1 and VTA2 each have a specific voltage range. If VTA1 or VTA2 is outside the normal operating range, the ECM interprets this as a malfunction in the sensor, and sets a DTC.
- VTA1 and VTA2 should never be close to the same voltage level. If VTA1 is within 0.02 V of VTA2, the ECM determines that there is a short circuit in the sensor, and sets a DTC.

If the malfunction is not repaired successfully, a DTC is set 10 seconds after the engine is next started.

MONITOR STRATEGY

Related DTCs	P0120: Throttle position sensor 1 range check (Fluctuating) P0122: Throttle position sensor 1 range check (Low voltage) P0123: Throttle position sensor 1 range check (High voltage) P0220: Throttle position sensor 2 range check (Fluctuating) P0222: Throttle position sensor 2 range check (Low voltage) P0223: Throttle position sensor 2 range check (High voltage) P2135: Throttle position sensor range check (Correlation)
Required Sensors/Components (Main)	Throttle position sensor
Required Sensors/Components (Related)	-
Frequency of Operation	Continuous
Duration	2 seconds: P0120, P0122, P0123, P0220, P0222 and P0223 (Accelerator pedal ON) 10 seconds: P0120, P0122, P0123, P0220, P0222 and P0223 (Accelerator pedal OFF) 0.5 seconds: P2135 Case 1 0.4 seconds: P2135 Case 2
MIL Operation	Immediate
Sequence of Operation	None

TYPICAL ENABLING CONDITIONS

Monitor runs whenever following DTCs not present	None
Either of following condition A or B met	-
A. Ignition switch ON	0.012 seconds or more
B. Electronic throttle actuator power	ON

TYPICAL MALFUNCTION THRESHOLDS

P0120:

VTA1 voltage	0.2 V or less, or 4.535 V or more

ES

P0122:

VTA1 voltage	0.2 V or less

P0123:

VTA1 voltage	4.535 V or more

P0220:

VTA2 voltage	1.75 V or less, or 4.8 V or more

P0222:

VTA2 voltage	1.75 V or less

P0223:

VTA2 voltage when VTA1 0.2 V or more, and 2.02 V or less	4.8 V or more

P2135 Case 1:

Difference between VTA1 and VTA2 voltages	0.02 V or less

P2135 Case 2:

VTA1 voltage	0.2 V or less
VTA2 voltage	1.75 V or less

COMPONENT OPERATING RANGE

VTA1 voltage	0.69 to 4.05 V
VTA2 voltage	2.25 to 4.8 V

FAIL-SAFE

When any of these DTCs, as well as other DTCs relating to ETCS (Electronic Throttle Control System) malfunctions, are set, the ECM enters fail-safe mode. During fail-safe mode, the ECM cuts the current to the throttle actuator off, and the throttle valve is returned to a 6° throttle angle by the return spring. The ECM then adjusts the engine output by controlling the fuel injection (intermittent fuel-cut) and ignition timing, in accordance with the accelerator pedal opening angle, to allow the vehicle to continue at a minimal speed. If the accelerator pedal is depressed firmly and gently, the vehicle can be driven slowly. Fail-safe mode continues until a pass condition is detected, and the ignition switch is then turned to OFF.

WIRING DIAGRAM

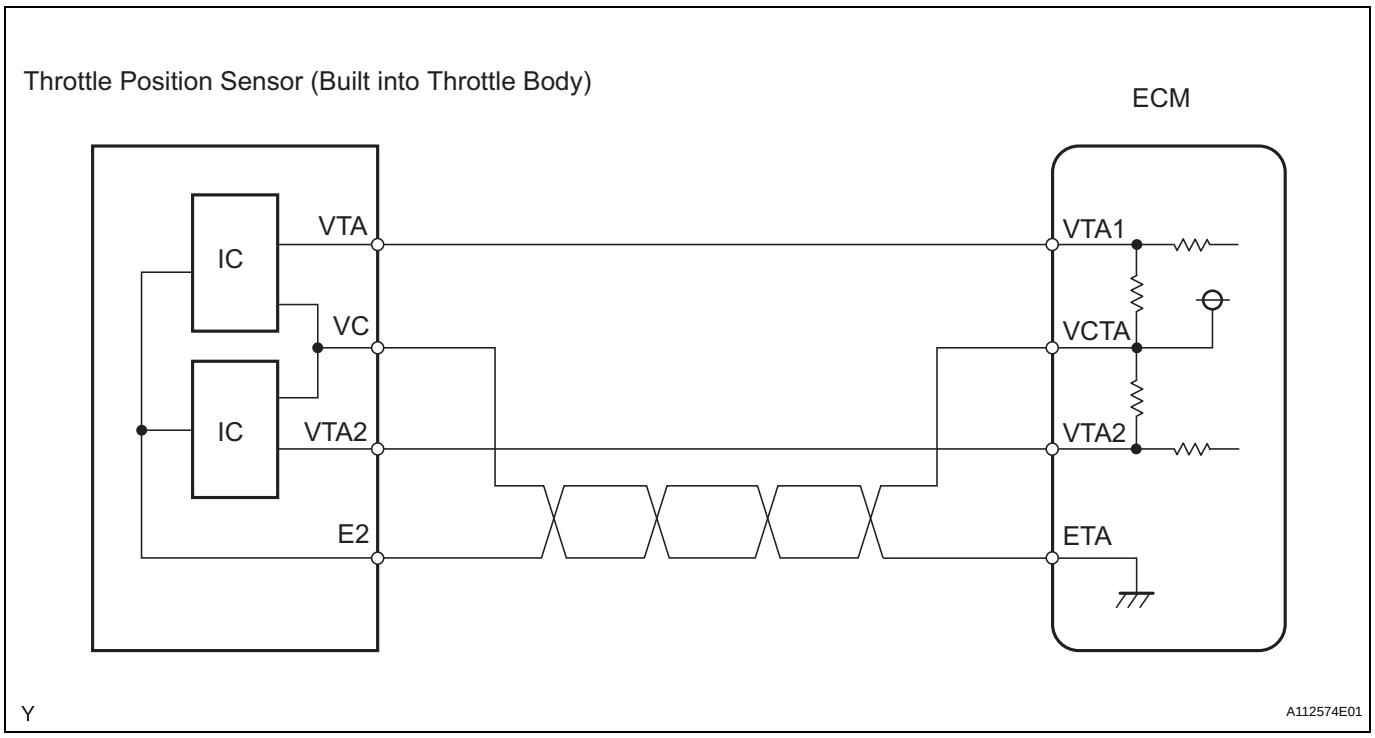

INSPECTION PROCEDURE

HINT:

Read freeze frame data using an intelligent tester. Freeze frame data record the engine condition when malfunctions are detected. When troubleshooting, freeze frame data can help determine if the vehicle was moving or stationary, if the engine was warmed up or not, if the air-fuel ratio was lean or rich, and other data, from the time the malfunction occurred.

1	READ VALUE USING INTELLIGENT TESTER (THROTTLE POS #1 AND THROTTLE POS #2)

(a) Connect an intelligent tester to the DLC3.
(b) Turn the ignition switch to ON and turn the tester ON.
(c) Select the following menu items: DIAGNOSIS / ENHANCED OBD II / DATA LIST / ETCS / THROTTLE POS #1 and THROTTLE POS #2.
(d) Check the values displayed on the tester.

Result

TP#1 (VTA1) When Accelerator Pedal Released	TP#2 (VTA2) When Accelerator Pedal Released	TP#1 (VTA1) When Accelerator Pedal Depressed	TP#2 (VTA2) When Accelerator Pedal Depressed	Trouble Areas	Proceed To
0 V to 0.2 V	0 V to 0.2 V	0 V to 0.2 V	0 V to 0.2 V	VC circuit open	A
4.5 V to 5.0 V	4.5 V to 5.0 V	4.5 V to 5.0 V	4.5 V to 5.0 V	E2 circuit open	
0 V to 0.2 V, or 4.5 V to 5.0 V	2.4 V to 3.4 V (Fail-safe)	0 V to 0.2 V, or 4.5 V to 5.0 V	2.4 V to 3.4 V (Fail-safe)	VTA1 circuit open or ground short	
0.7 V to 1.3 V (Fail-safe)	0 V to 0.2 V, or 4.5 V to 5.0 V	0.7 V to 1.3 V (Fail-safe)	0 V to 0.2 V, or 4.5 V to 5.0 V	VTA2 circuit open or ground short	
0.5 V to 1.1 V	2.1 V to 3.1 V	3.3 V to 4.9 V (Not fail-safe)	4.6 V to 5.0 V (Not fail-safe)	TP sensor circuit normal	B

HINT:
TP#1 denotes THROTTLE POS #1, and TP#2 denotes THROTTLE POS #2.

B → Go to step 5

A

2 CHECK HARNESS AND CONNECTOR (THROTTLE POSITION SENSOR - ECM)

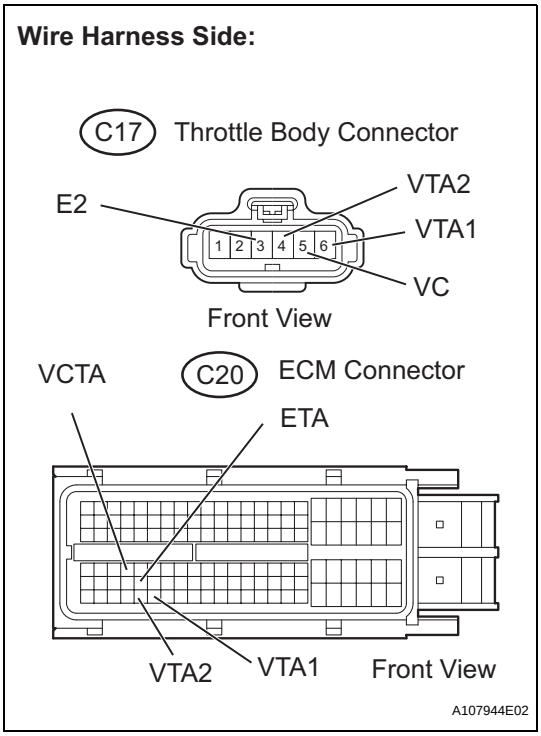

(a) Disconnect the C17 throttle body connector.
(b) Disconnect the C20 ECM connector.
(c) Check the resistance.

Standard resistance (Check for open)

Tester Connections	Specified Conditions
VC (C17-5) - VCTA (C20-67)	Below 1 Ω
VTA (C17-6) - VTA1 (C20-115)	
VTA2 (C17-4) - VTA2 (C20-114)	
E2 (C17-3) - ETA (C20-91)	

Standard resistance (Check for short)

Tester Connections	Specified Conditions
VC (C17-5) or VCTA (C20-67) - Body ground	10 kΩ or higher
VTA (C17-6) or VTA1 (C20-115) - Body ground	
VTA2 (C17-4) or VTA2 (C20-114) - Body ground	

(d) Reconnect the throttle body connector.
(e) Reconnect the ECM connector.

NG → REPAIR OR REPLACE HARNESS OR CONNECTOR

OK

3 INSPECT ECM (VC VOLTAGE)

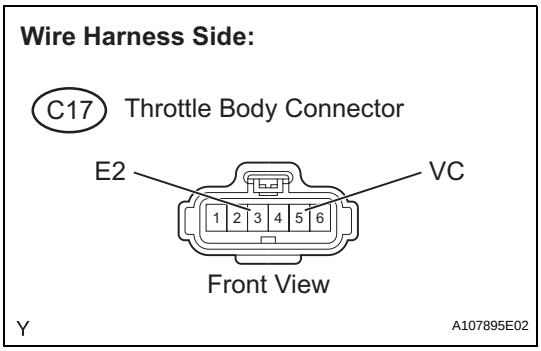

(a) Disconnect the C17 throttle body connector.
(b) Turn the ignition switch to ON.
(c) Measure the voltage between the terminals of the throttle body connector.

Standard voltage

Tester Connections	Specified Conditions
VC (C17-5) - E2 (C17-3)	4.5 to 5.5 V

(d) Reconnect the throttle body connector.

NG → REPLACE ECM

OK

4	REPLACE THROTTLE BODY ASSEMBLY

NEXT

5	CHECK WHETHER DTC OUTPUT RECURS (THROTTLE POSITION SENSOR DTCS)

(a) Connect the intelligent tester to the DLC3.
(b) Turn the ignition switch to ON and turn the tester ON.
(c) Clear DTCs (See page ES-34).
(d) Start the engine.
(e) Allow the engine to idle for 15 seconds or more.
(f) Select the following menu items: DIAGNOSIS / ENHANCED OBD II / DTC INFO / CURRENT CODES.
(g) Read DTCs.

ES

Result

Display (DTC Output)	Proceed To
P0120, P0122, P0123, P0220, P0222, P0223, and/or P2135	A
No output	B

B → SYSTEM OK

A

REPLACE ECM

DTC	P0121	Throttle / Pedal Position Sensor / Switch "A" Circuit Range / Performance Problem

HINT:
This DTC relates to the Throttle Position (TP) sensor.

DESCRIPTION

Refer to DTC P0120 (See page ES-104).

DTC No.	DTC Detection Conditions	Trouble Areas
P0121	Difference between VTA1 and VTA2 voltages less than 0.8 V, or more than 1.6 V for 2 seconds (1 trip detection logic)	TP sensor (built into throttle body)

MONITOR DESCRIPTION

The ECM uses the TP sensor to monitor the throttle valve opening angle.
This sensor transmits two signals: VTA1 and VTA2. VTA1 is used to detect the throttle opening angle and VTA2 is used to detect malfunctions in VTA1. The ECM performs several checks to confirm the proper operation of the TP sensor and VTA1.
For each throttle opening angle, a specific voltage difference is expected between the outputs of VTA1 and VTA2. If the output voltage difference between the two signals deviates from the normal operating range, the ECM interprets this as a malfunction of the TP sensor. The ECM illuminates the MIL and sets the DTC.
If the malfunction is not repaired successfully, the DTC is set 2 seconds after the engine is next started.

MONITOR STRATEGY

Related DTCs	P0121: TP sensor rationality
Required Sensors/Components (Main)	TP sensor
Required Sensors/Components (Related)	-
Frequency of Operation	Continuous
Duration	Within 2 seconds
MIL Operation	Immediate
Sequence of Operation	None

TYPICAL ENABLING CONDITIONS

Monitor runs whenever following DTCs not present	P0120 - P0223, P2135 (TP sensor)
Either of following conditions A or B set	-
A. Ignition switch	ON
B. Electric throttle motor power	ON

TYPICAL MALFUNCTION THRESHOLDS

Difference in voltage between VAT1 and VTA2 TP sensor 1 - [TP sensor 2 x 0.8 (corrected by learning value)]	Less than 0.8 V, or more than 1.6 V

FAIL-SAFE

When this DTC, as well as other DTCs relating to ETCS (Electronic Throttle Control System) malfunctions, is set, the ECM enters fail-safe mode. During fail-safe mode, the ECM cuts the current to the throttle actuator off, and the throttle valve is returned to a 6° throttle angle by the return spring. The ECM then adjusts the engine output by controlling the fuel injection (intermittent fuel-cut) and ignition timing, in accordance with the accelerator pedal opening angle, to allow the vehicle to continue at a minimal speed. If the accelerator pedal is depressed firmly and gently, the vehicle can be driven slowly. Fail-safe mode continues until a pass condition is detected, and the ignition switch is then turned to OFF.

INSPECTION PROCEDURE

HINT:

Read freeze frame data using an intelligent tester. Freeze frame data record the engine condition when malfunctions are detected. When troubleshooting, freeze frame data can help determine if the vehicle was moving or stationary, if the engine was warmed up or not, if the air-fuel ratio was lean or rich, and other data, from the time the malfunction occurred.

ES

1	CHECK ANY OTHER DTCS OUTPUT (IN ADDITION TO DTC P0121)

(a) Connect an intelligent tester to the DLC3.
(b) Turn the ignition switch to ON.
(c) Turn the tester ON.
(d) Select the following menu items: DIAGNOSIS / ENHANCED OBD II / DTC INFO / CURRENT CODES.
(e) Read DTCs.

Result

Display (DTC output)	Proceed To
P0121	A
P0121 and other DTCs	B

B → GO TO DTC CHART

A

REPLACE THROTTLE BODY ASSEMBLY

DTC	P0125	Insufficient Coolant Temperature for Closed Loop Fuel Control

DESCRIPTION

Refer to DTC P0115 (See page ES-95).

DTC No.	DTC Detection Conditions	Trouble Areas
P0125	Engine Coolant Temperature (ECT) does not reach closed-loop enabling temperature for 20 minutes (this period varies with engine start ECT) (2 trip detection logic)	• ECT sensor • Cooling system • Thermostat

ES

MONITOR DESCRIPTION

The resistance of the ECT sensor varies in proportion to the actual ECT. The ECT supplies a constant voltage to the sensor and monitors the signal output voltage of the sensor. The signal voltage output varies according to the changing resistance of the sensor. After the engine is started, the ECT is monitored through this signal. If the ECT sensor indicates that the engine is not yet warm enough for closed-loop fuel control, despite a specified period of time having elapsed since the engine was started, the ECM interprets this as a malfunction in the sensor or cooling system and sets the DTC.
Example:
The ECT is 0°C (32°F) at engine start. After about 1 minute running time, the ECT sensor still indicates that the engine is not warm enough to begin closed-loop fuel (air-fuel ratio feedback) control. The ECM interprets this as a malfunction in the sensor or cooling system and sets the DTC.

MONITOR STRATEGY

Related DTCs	P0125: Insufficient engine coolant temperature for closed-loop fuel control
Required Sensors/Components (Main)	Thermostat, cooling system
Required Sensors/Components (Related)	Engine coolant temperature sensor and mass air flow meter
Frequency of Operation	Once per driving cycle
Duration	62 seconds: Engine coolant temperature at engine start -3.3°C (26°F) or more 112 seconds: Engine coolant temperature at engine start -14.5° to -3.3°C (5.9° to 26°F) 20 minutes: Engine coolant temperature at engine start less than -14.5°C (5.9°F)
MIL Operation	2 driving cycles
Sequence of Operation	None

TYPICAL ENABLING CONDITIONS

Monitor runs whenever following DTCs not present	P0100 - P0103 (MAF meter) P0110 - P0113 (IAT sensor) P0115 - P0118 (ECT sensor)
Thermostat fail	Not detected

TYPICAL MALFUNCTION THRESHOLDS

Time until actual engine coolant temperature reaches closed-loop fuel control enabling temperature	62 seconds or more: Engine coolant temperature at engine start -3.3°C (26°F) or more 112 seconds or more: Engine coolant temperature at engine start -14.5° to -3.3°C (5.9° to 26°F) 20 minutes or more: Engine coolant temperature at engine start less than -14.5°C (5.9°F)

WIRING DIAGRAM

Refer to DTC P0115 (See page ES-96).

INSPECTION PROCEDURE

HINT:

- If any of DTCs P0115, P0116, P0117 or P0118 are set simultaneously with DTC P0125, the Engine Coolant Temperature (ECT) sensor may have an open or a short circuit. Troubleshoot those DTCs first.
- Read freeze frame data using an intelligent tester. Freeze frame data record the engine condition when malfunctions are detected. When troubleshooting, freeze frame data can help determine if the vehicle was moving or stationary, if the engine was warmed up or not, if the air-fuel ratio was lean or rich, and other data, from the time the malfunction occurred.

ES

1	CHECK ANY OTHER DTCS OUTPUT (IN ADDITION TO DTC P0125)

(a) Connect an intelligent tester to the DLC3.
(b) Turn the ignition switch to ON.
(c) Turn the tester ON.
(d) Select the following menu items: DIAGNOSIS / ENHANCED OBD II / DTC INFO / CURRENT CODES.
(e) Read DTCs.

Result

Display (DTC Output)	Proceed To
P0125	A
P0125 and other DTCs	B

HINT:
If any DTCs other than P0125 are output, troubleshoot those DTCs first.

B → GO TO DTC CHART

A

2	INSPECT THERMOSTAT

(a) Remove the thermostat (See page CO-18).
(b) Check the valve opening temperature of the thermostat.
Standard:
80°C to 84°C (176°F to 183°F)
HINT:
In addition to the above check, confirm that the valve is completely closed when the temperature is below the standard.
(c) Reinstall the thermostat (See page CO-19).

NG → REPLACE THERMOSTAT

OK

3	CHECK COOLING SYSTEM

(a) Check for defects in the cooling system that might cause the system to be too cold, such as abnormal radiator fan operation or any modifications.

NG → **REPAIR OR REPLACE COOLING SYSTEM**

OK

REPLACE ENGINE COOLANT TEMPERATURE SENSOR

DTC	P0128	Coolant Thermostat (Coolant Temperature Below Thermostat Regulating Temperature)

HINT:
This DTC relates to the thermostat.

DESCRIPTION

This DTC is set when the Engine Coolant Temperature (ECT) does not reach 75°C (167°F) despite sufficient engine warm-up time having elapsed.

DTC No.	DTC Detection Conditions	Trouble Areas
P0128	Conditions (a), (b) and (c) met for 5 seconds (2 rip detection logic): (a) Cold start (b) Engine warmed up (c) ECT less than 75°C (167°F)	• Thermostat • Cooling system • ECT sensor • ECM

ES

MONITOR DESCRIPTION

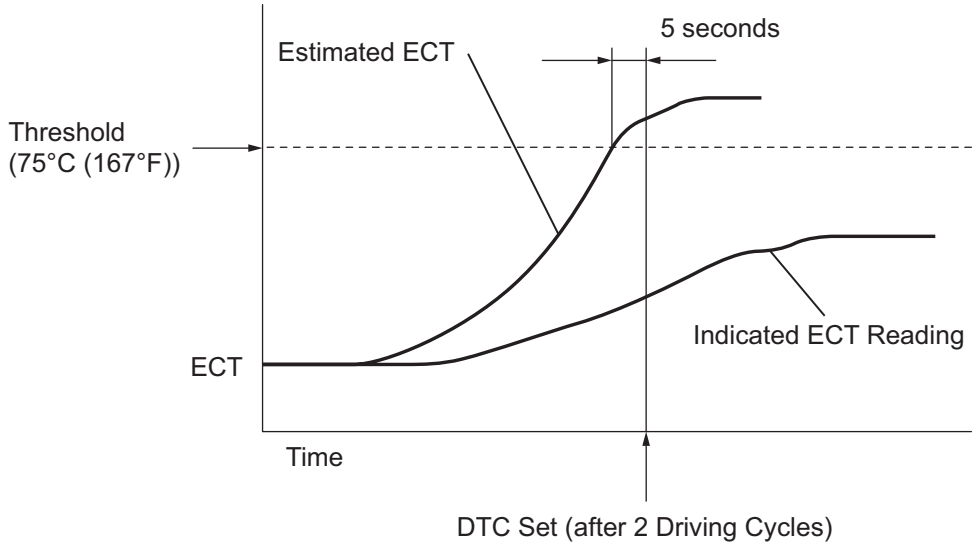

Y A121605E02

The ECM estimates the ECT based on the starting temperature, engine loads, and engine speeds. The ECM then compares the estimated temperature with the actual ECT. When the estimated ECT reaches 75°C (167°F), the ECM checks the actual ECT. If the actual ECT is less than 75°C (167°F), the ECM interprets this as a malfunction in the thermostat or the engine cooling system and sets the DTC.

MONITOR STRATEGY

Related DTCs	P0128: Coolant Thermostat
Required Sensors/Components (Main)	Thermostat

Required Sensors/Components (Related)	Engine Coolant Temperature (ECT) sensor, Intake Air Temperature (IAT) sensor, Vehicle speed sensor
Frequency of Operation	Once per driving cycle
Duration	900 seconds
MIL Operation	2 driving cycles
Sequence of Operation	None

TYPICAL ENABLING CONDITIONS

Monitor runs whenever following DTCs not present	P0010 (VVT OCV) P0011 (VVT System 1 - Advance) P0012 (VVT System 1 - Retard) P0031, P0032 (A/F sensor heater - Sensor 1) P0100 - P0103 (MAF meter) P0110 - P0113 (IAT sensor) P0115 - P0118 (ECT sensor) P0125 (Insufficient ECT for Closed Loop) P0171, P0172 (Fuel system) P0300 - P0304 (Misfire) P0335 (CKP sensor) P0340 (CMP sensor) P0351 - P0354 (Ignitor) P0500 (VSS) P2196 (A/F sensor - rationality) P2A00 (A/F sensor - slow response)
Battery voltage	11 V or more
Either of following conditions 1 or 2 met:	-
1. All of following conditions met:	-
• ECT at engine start - IAT at engine start	-15°C to 7°C (-27°F to 12.6°F)
• ECT at engine start	-10°C to 56°C (14°F to 133°F)
• IAT at engine start	-10°C to 56°C (14°F to 133°F)
2. All of following conditions met:	-
• ECT at engine start - IAT at engine start	More than 7°C (12.6 °F)
• ECT at engine start	56°C (133°F) or less
• IAT at engine start	-10°C (14°F) or more
Accumulated time at 80 mph (128 km/h) or more of vehicle speed	Less than 20 seconds

TYPICAL MALFUNCTION THRESHOLDS

Duration that both following conditions (a) and (b) met	5 seconds or more
(a) Estimated ECT	75°C (167°F) or more
(b) ECT sensor output	Below 75°C (167°F)

INSPECTION PROCEDURE

HINT:

Read freeze frame data using an intelligent tester. Freeze frame data record the engine condition when malfunctions are detected. When troubleshooting, freeze frame data can help determine if the vehicle was moving or stationary, if the engine was warmed up or not, if the air-fuel ratio was lean or rich, and other data, from the time the malfunction occurred.

1	**CHECK ANY OTHER DTCS OUTPUT (IN ADDITION TO DTC P0128)**

(a) Connect an intelligent tester to the DLC3.
(b) Turn the ignition switch to ON.
(c) Turn the tester ON.

(d) Select the following menu items: DIAGNOSIS / ENHANCED OBD II / DTC INFO / CURRENT CODES.
(e) Read DTCs.

Result

Display (DTC Output)	Proceed To
P0128	A
P0128 and other DTCs	B

HINT:
If any DTCs other than P0128 are output, troubleshoot those DTCs first.

B → **GO TO DTC CHART**

A

2 CHECK COOLING SYSTEM

(a) Check for defects in the cooling system that might cause the system to be too cold, such as abnormal radiator fan operation or any modifications.

NG → **REPAIR OR REPLACE COOLING SYSTEM**

OK

3 INSPECT THERMOSTAT

(a) Remove the thermostat (See page CO-18).
(b) Check the valve opening temperature of the thermostat.
Standard:
80°C to 84°C (176°F to 183°F)
HINT:
In addition to the above check, confirm that the valve is completely closed when the temperature is below the standard.
(c) Reinstall the thermostat (See page CO-19).

NG → **REPLACE THERMOSTAT**

OK

REPLACE ECM

ES

DTC	P0136	Oxygen Sensor Circuit Malfunction (Bank 1 Sensor 2)

DTC	P0137	Oxygen Sensor Circuit Low Voltage (Bank 1 Sensor 2)

DTC	P0138	Oxygen Sensor Circuit High Voltage (Bank 1 Sensor 2)

ES

HINT:
Sensor 2 refers to the sensor mounted behind the Three-Way Catalytic Converter (TWC) and located far from the engine assembly.

DESCRIPTION

In order to obtain a high purification rate of the carbon monoxide (CO), hydrocarbon (HC) and nitrogen oxide (NOx) components in the exhaust gas, a TWC is used. For the most efficient use of the TWC, the air-fuel ratio must be precisely controlled so that it is always close to the stoichiometric air-fuel level. For the purpose of helping the ECM to deliver accurate air-fuel ratio control, a Heated Oxygen (HO2) sensor is used.

The HO2 sensor is located behind the TWC, and detects the oxygen concentration in the exhaust gas. Since the sensor is integrated with the heater that heats the sensing portion, it is possible to detect the oxygen concentration even when the intake air volume is low (the exhaust gas temperature is low).

When the air-fuel ratio becomes lean, the oxygen concentration in the exhaust gas is rich. The HO2 sensor informs the ECM that the post-TWC air-fuel ratio is lean (low voltage, i.e. less than 0.45 V).

Conversely, when the air-fuel ratio is richer than the stoichiometric air-fuel level, the oxygen concentration in the exhaust gas becomes lean. The HO2 sensor informs the ECM that the post-TWC air-fuel ratio is rich (high voltage, i.e. more than 0.45 V). The HO2 sensor has the property of changing its output voltage drastically when the air-fuel ratio is close to the stoichiometric level.

The ECM uses the supplementary information from the HO2 sensor to determine whether the air-fuel ratio after the TWC is rich or lean, and adjusts the fuel injection time accordingly. Thus, if the HO2 sensor is working improperly due to internal malfunctions, the ECM is unable to compensate for deviations in the primary air-fuel ratio control.

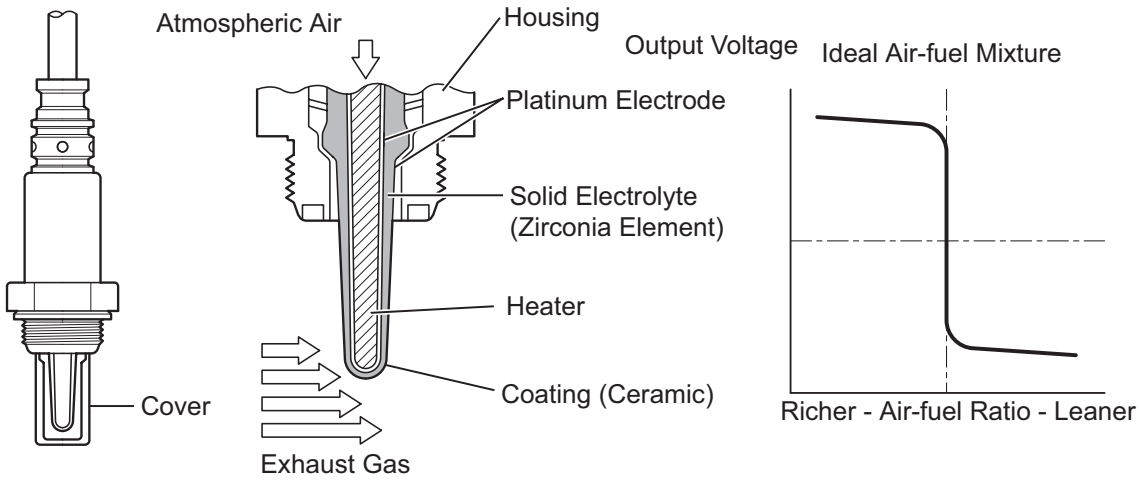

DTC No.	DTC Detection Conditions	Trouble Areas
P0136	• Abnormal voltage output: During active air-fuel ratio control, following conditions (a) and (b) met for certain period of time (2 trip detection logic): (a) Heated Oxygen (HO2) sensor voltage does not decrease to less than 0.21 V (b) HO2 sensor voltage does not increase to more than 0.59 V • Low impedance*: Sensor impedance less than 5 Ωfor more than 30 seconds when ECM presumes sensor to being warmed up and operating normally (2 trip detection logic)	• Open or short in HO2 sensor (sensor 2) circuit • HO2 sensor (sensor 2) • HO2 sensor heater (sensor 2) • Air-fuel Ratio (A/F) sensor (sensor 1) • Integration relay (EFI relay) • Gas leakage from exhaust system
P0137	• Low voltage (open): During active air-fuel ratio control, following conditions (a) and (b) met for certain period of time (2 trip detection logic): (a) HO2 sensor voltage output less than 0.21 V (b) Target air-fuel ratio rich • High impedance*: Sensor impedance 15 kΩ or more for more than 90 seconds when ECM presumes sensor to being warmed up and operating normally (2 trip detection logic)	• Open in HO2 sensor (sensor 2) circuit • HO2 sensor (sensor 2) • HO2 sensor heater (sensor 2) • Integration relay (EFI relay) • Gas leakage from exhaust system
P0138	• High voltage (short): During active air-fuel ratio control, following conditions (a) and (b) met for certain period of time (2 trip detection logic): (a) HO2 sensor voltage output 0.59 V or more (b) Target air-fuel ratio lean • Extremely high voltage (short)*: HO2 sensor voltage output exceeds 1.2 V for more than 10 seconds (2 trip detection logic)	• Short in HO2 sensor (sensor 2) circuit • HO2 sensor (sensor 2) • ECM internal circuit malfunction

*: Only for vehicles except those with Mexico specifications.

MONITOR DESCRIPTION

Active Air-Fuel Ratio Control

The ECM usually performs air-fuel ratio feedback control so that the Air-Fuel Ratio (A/F) sensor output indicates a near stoichiometric air-fuel level. This vehicle includes active air-fuel ratio control in addition to regular air-fuel ratio control. The ECM performs active air-fuel ratio control to detect any deterioration in the Three-Way Catalytic Converter (TWC) and Heated Oxygen (HO2) sensor malfunctions (refer to the diagram below).

Active air-fuel ratio control is performed for approximately 15 to 20 seconds while driving with a warm engine. During active air-fuel ratio control, the air-fuel ratio is forcibly regulated to become lean or rich by the ECM. If the ECM detects a malfunction, one of the following DTCs is set: DTC P0136 (abnormal voltage output), P0137 (open circuit) and P0138 (short circuit).

Abnormal Voltage Output of HO2 Sensor (DTC P0136)

ES

While the ECM is performing active air-fuel ratio control, the air-fuel ratio is forcibly regulated to become rich or lean. If the sensor is not functioning properly, the voltage output variation is small. For example, when the HO2 sensor voltage does not decrease to less than 0.21 V and does not increase to more than 0.59 V during active air-fuel ratio control, the ECM determines that the sensor voltage output is abnormal and sets DTC P0136.

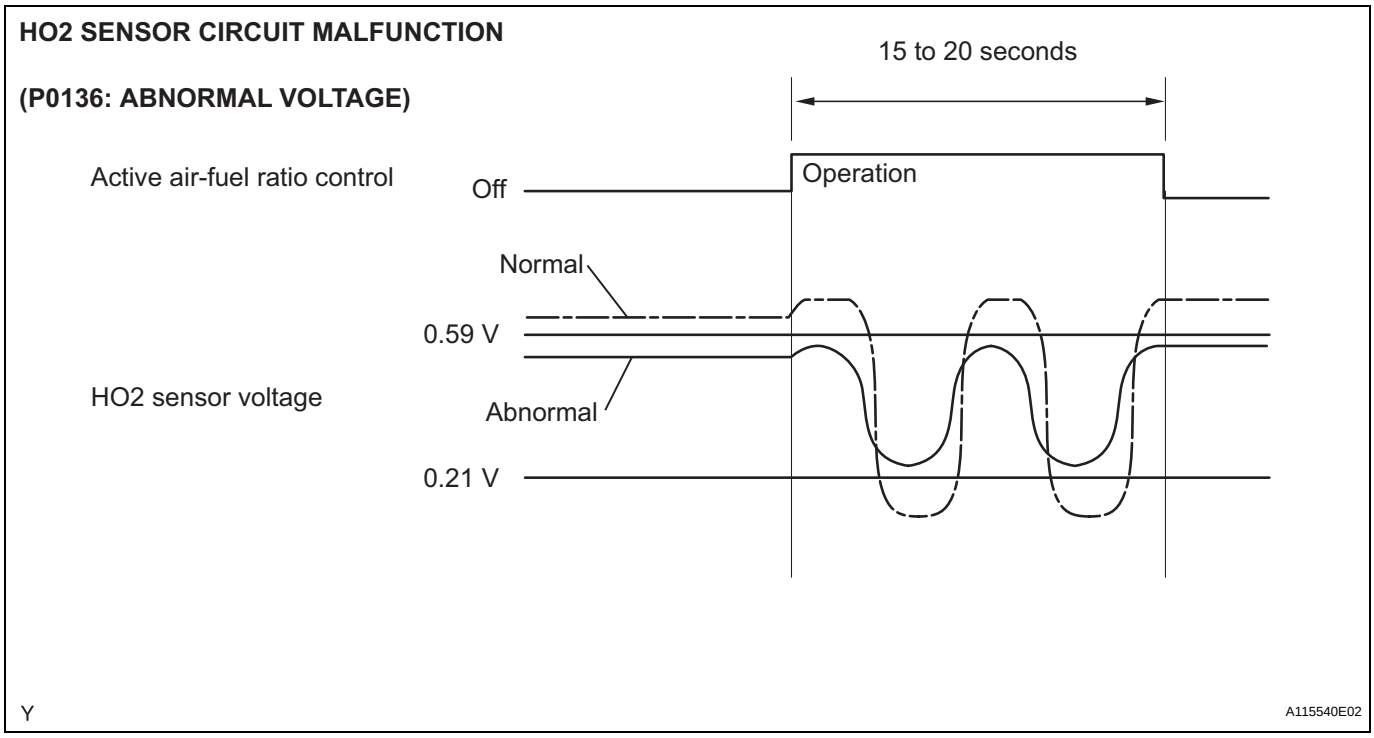

Open or Short in Heated Oxygen (HO2) Sensor Circuit (DTC P0137 or P0138)

During active air-fuel ratio control, the ECM calculates the Oxygen Storage Capacity (OSC)* of the Three-Way Catalytic Converter (TWC) by forcibly regulating the air-fuel ratio to become rich or lean. If the HO2 sensor has an open or short, or the voltage output of the sensor decreases significantly, the OSC indicates an extraordinarily high value. Even if the ECM attempts to continue regulating the air-fuel ratio to become rich or lean, the HO2 sensor output does not change.

While performing active air-fuel ratio control, when the target air-fuel ratio is rich and the HO2 sensor voltage output is 0.21 V or less (lean), the ECM interprets this as an abnormally low sensor output voltage and sets DTC P0137. When the target air-fuel ratio is lean and the voltage output is 0.59 V or more (rich) during active air-fuel ratio control, the ECM determines that the sensor voltage output is abnormally high, and sets DTC P0138.

HINT:

DTC P0138 is also set if the HO2 sensor voltage output is more than 1.2 V for 10 seconds or more.

*: The TWC has the capability to store oxygen. The OSC and the emission purification capacity of the TWC are mutually related. The ECM determines whether the catalyst has deteriorated, based on the calculated OSC value (See page ES-180).

HO2 SENSOR CIRCUIT LOW VOLTAGE

(P0137: OPEN)

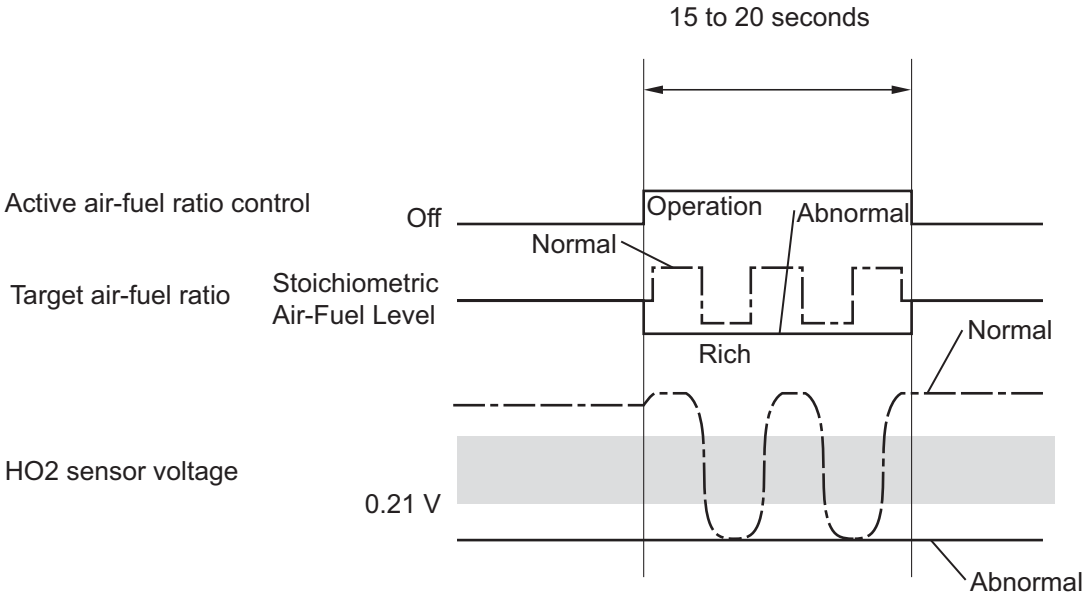

HO2 SENSOR CIRCUIT HIGH VOLTAGE

(P0138: SHORT)

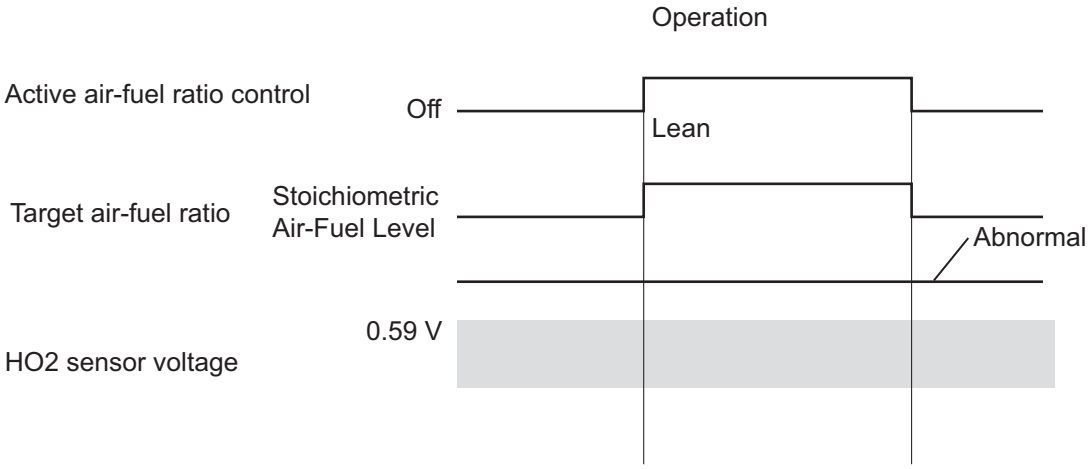

Y

A115541E02

ES

High or Low Impedance of Heated Oxygen (HO2) Sensor (DTC P0136 or P0137)

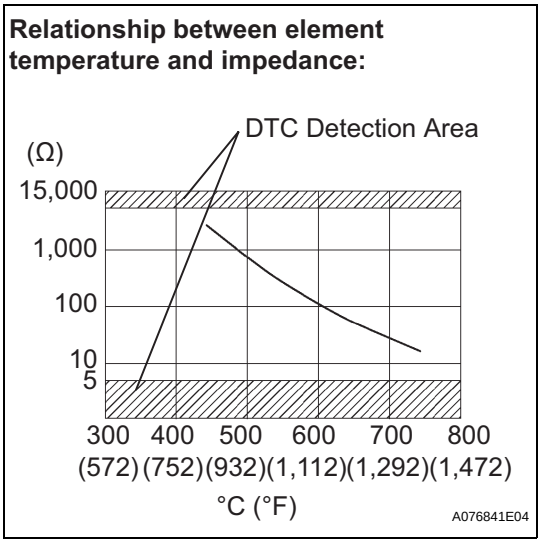

During normal air-fuel ratio feedback control, there are small variations in the exhaust gas oxygen concentration. In order to continuously monitor the slight variations in the HO2 sensor signal while the engine is running, the impedance* of the sensor is measured by the ECM. The ECM determines that there is a malfunction in the sensor when the measured impedance deviates from the standard range.

*: The effective resistance in an alternating current electrical circuit.

HINT:

- The impedance cannot be measured using an ohmmeter.
- DTC P0136 indicates the deterioration of the HO2 sensor. The ECM sets this DTC by calculating the impedance of the sensor when the typical enabling conditions are satisfied (2 driving cycle).
- DTC P0137 indicates an open or short circuit in the HO2 sensor (2 driving cycle). The ECM sets this DTC when the impedance of the sensor exceeds the threshold 15 kΩ.

MONITOR STRATEGY

Related DTCs	P0136: Heated oxygen sensor output voltage (Abnormal voltage output) P0136: Heated oxygen sensor impedance (Low) P0137: Heated oxygen sensor output voltage (Low voltage) P0137: Heated oxygen sensor impedance (High) P0138: Heated oxygen sensor output voltage (High voltage) P0138: Heated oxygen sensor output voltage (Extremely high)
Required Sensors/Components (Main)	Heated oxygen sensor
Required Sensors/Components (Related)	Crankshaft position sensor, engine coolant temperature sensor, mass air flow meter and throttle position sensor
Frequency of Operation	Once per driving cycle: Active air-fuel ratio control detection Continuous: Others
Duration	20 seconds: Active air-fuel ratio control detection 90 seconds: Heated oxygen sensor impedance (High) 30 seconds: Heated oxygen sensor impedance (Low) 10 seconds: Output voltage (Stuck high)
MIL Operation	2 driving cycles
Sequence of Operation	None

TYPICAL ENABLING CONDITIONS

All:

Monitor runs whenever following DTCs not present	P0031, 32 (A/F Sensor heater - Sensor 1) P0037, 38 (O2 Sensor heater - Sensor 2) P0100 - P0103 (MAF meter) P0110 - P0113 (IAT sensor) P0115 - P0118 (ECT sensor) P0120 - P0223, P2135 (TP sensor) P0125 (Insufficient ECT for Closed Loop) P0171, P0172 (Fuel system) P0300 - P0304 (Misfire) P0335 (CKP sensor) P0340 (CMP sensor) P0455, P0456 (EVAP system) P0500 (VSS) P2196 (A/F Sensor - rationality) P2A00 (A/F Sensor - slow response)

ES

Heated Oxygen Sensor Output Voltage (Abnormal Voltage Output, High Voltage and Low Voltage):

Active air-fuel ratio control	Executing
Active air-fuel ratio control begins when all of following conditions met:	-
Battery voltage	11 V or more
Engine coolant temperature	75°C (167°F) or more
Idling	OFF
Engine RPM	Less than 4,000 rpm
A/F sensor status	Activated
Fuel system status	Closed loop
Fuel cut	OFF
Engine load	10 to 80 %
Shift position	4th or 5th (M/T) 3rd or 4th (A/T)

Heated Oxygen Sensor Impedance (Low):

Battery voltage	11 V or more
Estimated rear HO2 sensor temperature	Less than 700°C (1,292°F)
ECM monitor	Completed
DTC P0606	Not set

Heated Oxygen Sensor Impedance (High):

Battery voltage	11 V or more
Estimated rear HO2 sensor temperature	450°C (842°F) or more
ECM monitor	Completed
DTC P0606	Not set

Heated Oxygen Sensor Output Voltage (Extremely High):

Battery voltage	11 V or more
Time after engine start	2 seconds or more

TYPICAL MALFUNCTION THRESHOLDS

Heated Oxygen Sensor Output Voltage (Abnormal Voltage Output):

Either of following conditions met:	1 or 2
1. All of following conditions (a), (b) and (c) met	-
(a) Commanded air-fuel ratio	14.3 or less
(b) Rear HO2 sensor voltage	0.21 to 0.59 V
(c) OSC (Oxygen Storage Capacity of Catalyst)	1.7 g or more
2. All of following conditions (d), (e) and (f) met	-

(d) Commanded air-fuel ratio	14.9 or more
(e) Rear HO2 sensor voltage	0.21 to 0.59 V
(f) OSC	1.7 g or more

Heated Oxygen Sensor Output Voltage (Low):

All of following conditions (a), (b) and (c) met	-
(a) Commanded air-fuel ratio	14.3 or less
(b) Rear HO2 sensor voltage	Less than 0.21 V
(c) OSC	1.7 g or more

Heated Oxygen Sensor Output Voltage (High):

All of following conditions (a), (b) and (c) met	-
(a) Commanded air-fuel ratio	14.9 or more
(b) Rear HO2 sensor voltage	More than 0.59 V
(c) OSC	1.7 g or more

Heated Oxygen Sensor Impedance (Low):

Duration of following condition met	30 seconds or more
Heated oxygen sensor impedance	Less than 5 Ω

Heated Oxygen Sensor Impedance (High):

Duration of following condition met	90 seconds or more
Heated oxygen sensor impedance	15 kΩ or more

Heated Oxygen Sensor Output Voltage (Extremely High):

Duration of following condition met	10 seconds or more
Heated oxygen sensor voltage	1.2 V or more

COMPONENT OPERATING RANGE

Duration of following condition met	30 seconds or more
Heated oxygen sensor voltage	Varies between 0.1 and 0.9 V

MONITOR RESULT

Refer to CHECKING MONITOR STATUS (See page ES-17).

WIRING DIAGRAM

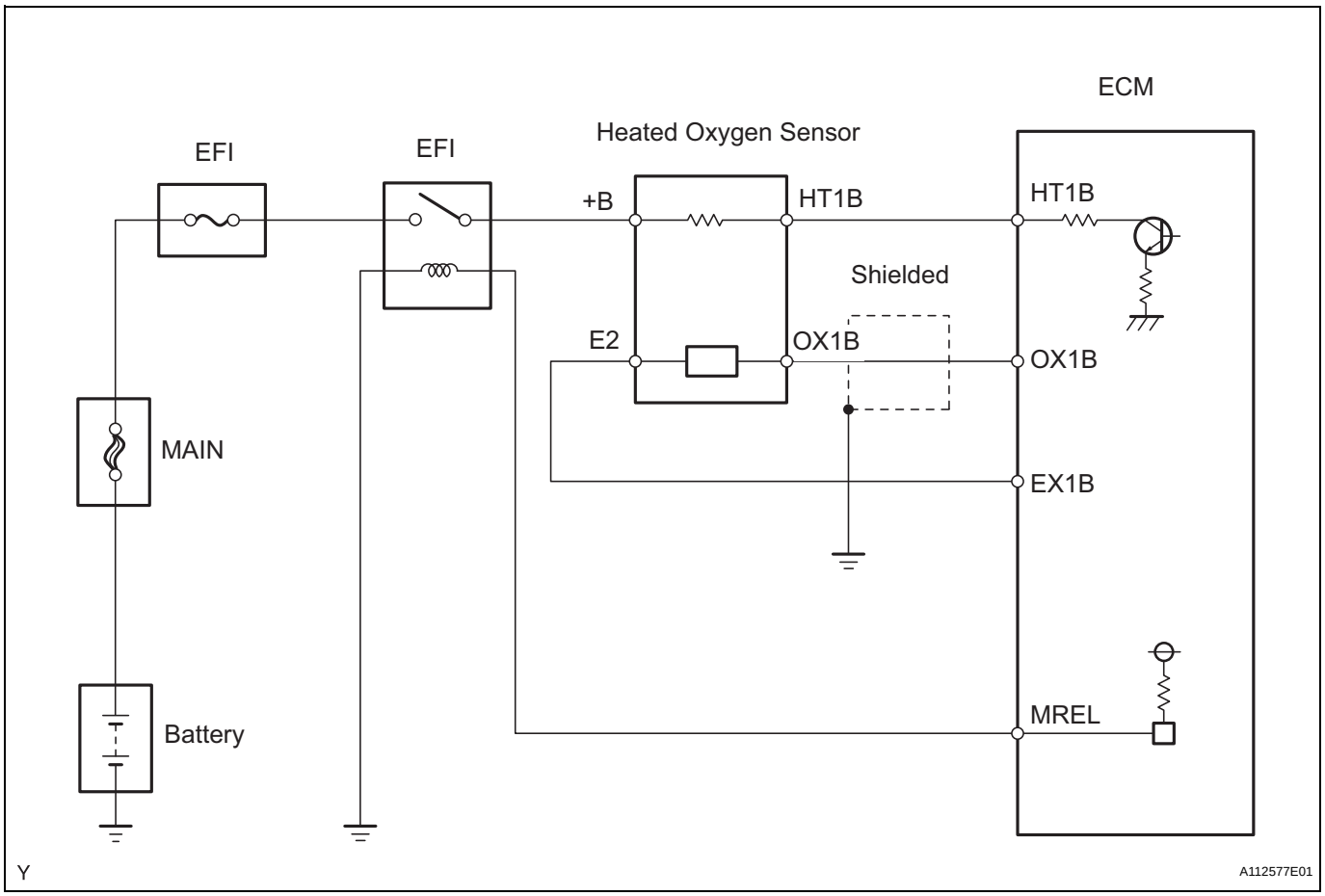

CONFIRMATION DRIVING PATTERN

HINT:

- This confirmation driving pattern is used in the "PERFORM CONFIRMATION DRIVING PATTERN" procedure of the following diagnostic troubleshooting procedure.
- Performing this confirmation pattern will activate the Heated Oxygen (HO2) sensor monitor. (The catalyst monitor is performed simultaneously.) This is very useful for verifying the completion of a repair.

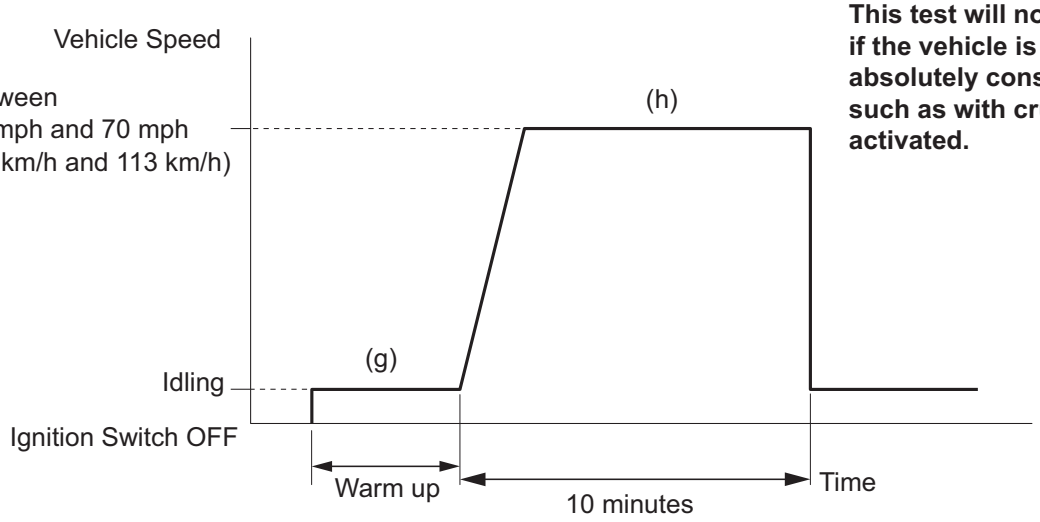

NOTICE:
This test will not be completed if the vehicle is driven at absolutely constant speed such as with cruise control activated.

(Note: Even if vehicle stops during driving pattern, test can be resumed)

P

A115372E13

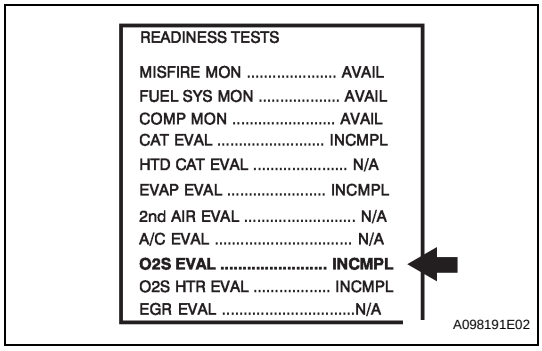

A098191E02

(a) Connect the intelligent tester to the DLC3.
(b) Turn the ignition switch to ON.
(c) Turn the tester ON.
(d) Clear DTCs (where set) (See page ES-34).
(e) Select the following menu items: DIAGNOSIS / CARB OBD II / READINESS TESTS.
(f) Check that O2S EVAL is INCMPL (incomplete).
(g) Start the engine and warm it up.
(h) Drive the vehicle at between 40 mph and 70 mph (64 km/h and 113 km/h) for at least 10 minutes.
(i) Note the state of the Readiness Tests items. Those items will change to COMPL (complete) as the O2S EVAL monitor operates.
(j) On the tester, select the following menu items: DIAGNOSIS / ENHANCED OBD II / DTC INFO / PENDING CODES and check if any DTCs (any pending DTCs) are set.
HINT:
If O2S EVAL does not change to COMPL, and any pending DTCs fail to set, extend the driving time.

INSPECTION PROCEDURE

HINT:
Intelligent tester only:
Malfunctioning areas can be identified by performing the A/F CONTROL function provided in the ACTIVE TEST. The A/F CONTROL function can help to determine whether the Air-Fuel Ratio (A/F) sensor, Heated Oxygen (HO2) sensor and other potential trouble areas are malfunctioning.

The following instructions describe how to conduct the A/F CONTROL operation using an intelligent tester.

(a) Connect an intelligent tester to the DLC3.
(b) Start the engine and turn the tester ON.
(c) Warm up the engine at an engine speed of 2,500 rpm for approximately 90 seconds.
(d) On the tester, select the following menu items: DIAGNOSIS / ENHANCED OBD II / ACTIVE TEST / A/F CONTROL.
(e) Perform the A/F CONTROL operation with the engine idling (press the RIGHT or LEFT button to change the fuel injection volume).
(f) Monitor the voltage outputs of the A/F and HO2 sensors (AFS B1 S1 and O2S B1 S2) displayed on the tester.

HINT:

- The A/F CONTROL operation lowers the fuel injection volume by 12.5 % or increases the injection volume by 25 %.
- The sensors react in accordance with increases and decreases in the fuel injection volume.

ES

Standard

Tester Display (Sensor)	Injection Volumes	Status	Voltages
AFS B1 S1 (A/F)	+25 %	Rich	Less than 3.0
	-12.5 %	Lean	More than 3.35
O2S B1 S2 (HO2)	+25 %	Rich	More than 0.5
	-12.5 %	Lean	Less than 0.4

NOTICE:
The A/F sensor has an output delay of a few seconds and the HO2 sensor has a maximum output delay of approximately 20 seconds.

Case	A/F Sensor (Sensor 1) Output Voltage		HO2 Sensor (Sensor 2) Output Voltage		Main Suspected Trouble Areas
1	Injection Volume +25 % -12.5 %		Injection Volume +25 % -12.5 %		-
	Output Voltage More than 3.35 V Less than 3.0 V		Output Voltage More than 0.5 V Less than 0.4 V		
2	Injection Volume +25 % -12.5 %		Injection Volume +25 % -12.5 %		• A/F sensor • A/F sensor heater • A/F sensor circuit
	Output Voltage Almost no reaction	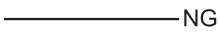	Output Voltage More than 0.5 V Less than 0.4 V		
3	Injection Volume +25 % -12.5 %		Injection Volume +25 % -12.5 %		• HO2 sensor • HO2 sensor heater • HO2 sensor circuit
	Output Voltage More than 3.35 V Less than 3.0 V		Output Voltage Almost no reaction		
4	Injection volume +25 % -12.5 %		Injection Volume +25 % -12.5 %		• Injector • Fuel pressure • Gas leakage from exhaust system (Air-fuel ratio extremely lean or rich)
	Output Voltage Almost no reaction	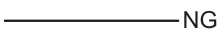	Output Voltage Almost no reaction		

Following the A/F CONTROL procedure enables technicians to check and graph the voltage outputs of both the A/F and HO2 sensors.
To display the graph, select the following menu items on the tester: DIAGNOSIS / ENHANCED OBD II / ACTIVE TEST / A/F CONTROL / USER DATA / AFS B1 S1 and O2S B1 S2, and press the YES button and then the ENTER button followed by the F4 button.
HINT:

- Read freeze frame data using an intelligent tester. Freeze frame data record the engine condition when malfunctions are detected. When troubleshooting, freeze frame data can help determine if the vehicle was moving or stationary, if the engine was warmed up or not, if the air-fuel ratio was lean or rich, and other data, from the time the malfunction occurred.
- If the OX1B wire from the ECM connector is short-circuited to the +B wire, DTC P0138 will be set.

ES

1	READ OUTPUT DTC

(a) Connect an intelligent tester to the DLC3.
(b) Turn the ignition switch to ON and turn the tester ON.
(c) Select the following menu items: DIAGNOSIS / ENHANCED OBD II / DTC INFO / CURRENT CODES.
(d) Read DTCs.

Result

Display (DTC output)	Proceed To
P0138	A
P0137	B
P0136	C

B → Go to step 14

C → Go to step 7

A

2	READ VALUE USING INTELLIGENT TESTER (OUTPUT VOLTAGE OF HEATED OXYGEN SENSOR)

(a) Connect the intelligent tester to the DLC3.
(b) Turn the ignition switch to ON and turn the tester ON.
(c) Select the following menu items: DIAGNOSIS / ENHANCED OBD II / DATA LIST / PRIMARY / O2S B1 S2.
(d) Allow the engine to idle.
(e) Read the Heated Oxygen (HO2) sensor output voltage while idling.

Result

HO2 Sensor Output Voltages	Proceed To
More than 1.2 V	A
Less than 1.0 V	B

B → Go to step 5

A

3	CHECK HARNESS AND CONNECTOR (CHECK FOR SHORT)

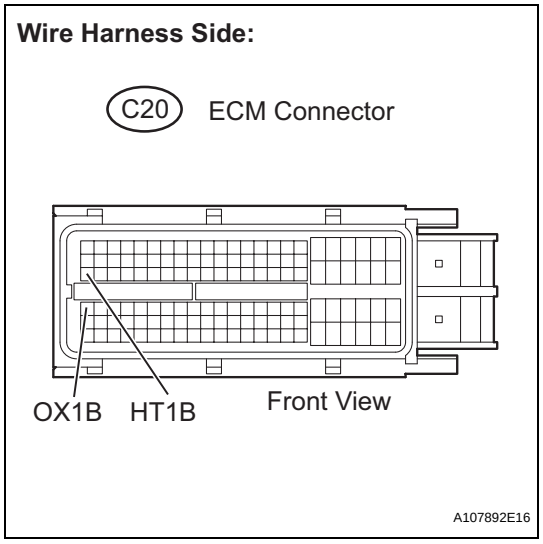

(a) Turn the ignition switch to OFF and wait for 5 minutes.
(b) Disconnect the C20 ECM connector.
(c) Check the resistance.
Standard resistance

Tester Connections	Specified Conditions
HT1B (C20-47) - OX1B (C20-64)	10 kΩ or higher

(d) Reconnect the ECM connector.

OK → REPLACE ECM

NG

4	INSPECT HEATED OXYGEN SENSOR (CHECK FOR SHORT)

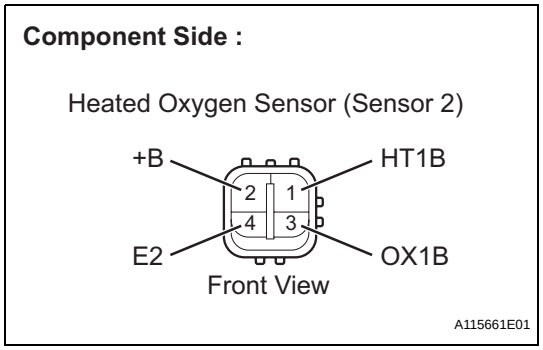

(a) Disconnect the D28 HO2 sensor connector.
(b) Check the resistance.
Standard resistance

Tester Connections	Specified Conditions
+B (2) - E2 (4)	10 kΩ or higher
+B (2) - OX1B (3)	

(c) Reconnect the HO2 sensor connector.

NG → REPLACE HEATED OXYGEN SENSOR

OK

REPAIR OR REPLACE HARNESS OR CONNECTOR

5	PERFORM CONFIRMATION DRIVING PATTERN

NEXT

6	CHECK WHETHER DTC OUTPUT RECURS (DTC P0138)

(a) On the intelligent tester, select the following menu items: DIAGNOSIS / ENHANCED OBD II / DTC INFO / CURRENT CODES.
(b) Read DTCs.

ES

Result

Display (DTC Output)	Proceed To
P0138	A
No output	B

B → CHECK FOR INTERMITTENT PROBLEMS

A

REPLACE HEATED OXYGEN SENSOR

ES

7 READ VALUE USING INTELLIGENT TESTER (OUTPUT VOLTAGE OF HEATED OXYGEN SENSOR)

(a) Connect the intelligent tester to the DLC3.
(b) Turn the ignition switch to ON and turn the tester ON.
(c) Start the engine.
(d) Select the following menu items: DIAGNOSIS / ENHANCED OBD II / DATA LIST / PRIMARY / O2S B1 S2
(e) After warming up the engine, run the engine at an engine speed of 2,500 rpm for 3 minutes.
(f) Read the output voltage of the HO2 sensor when the engine rpm is suddenly increased.
HINT:
Quickly accelerate the engine to 4,000 rpm 3 times using the accelerator pedal.
Standard:
Fluctuates between 0.4 V or less and 0.5 V or more.

NG → Go to step 14

OK

8 PERFORM CONFIRMATION DRIVING PATTERN

NEXT

9 CHECK WHETHER DTC OUTPUT RECURS (DTC P0136)

(a) On the intelligent tester, select the following menu items: DIAGNOSIS / ENHANCED OBD II / DTC INFO / CURRENT CODES.
(b) Read DTCs.

Result

Display (DTC Output)	Proceed To
P0136	A
No output	B

B → CHECK FOR INTERMITTENT PROBLEMS

A

10	REPLACE HEATED OXYGEN SENSOR

NEXT

11	PERFORM CONFIRMATION DRIVING PATTERN

NEXT

ES

12	CHECK WHETHER DTC OUTPUT RECURS (DTC P0136)

(a) On the intelligent tester, select the following menu items: DIAGNOSIS / ENHANCED OBD II / DTC INFO / CURRENT CODES.
(b) Read DTCs.

Result

Display (DTC Output)	Proceed To
P0136	A
No output	B

B → REPAIR COMPLETED

A

13	PERFORM ACTIVE TEST USING INTELLIGENT TESTER (INJECTION VOLUME)

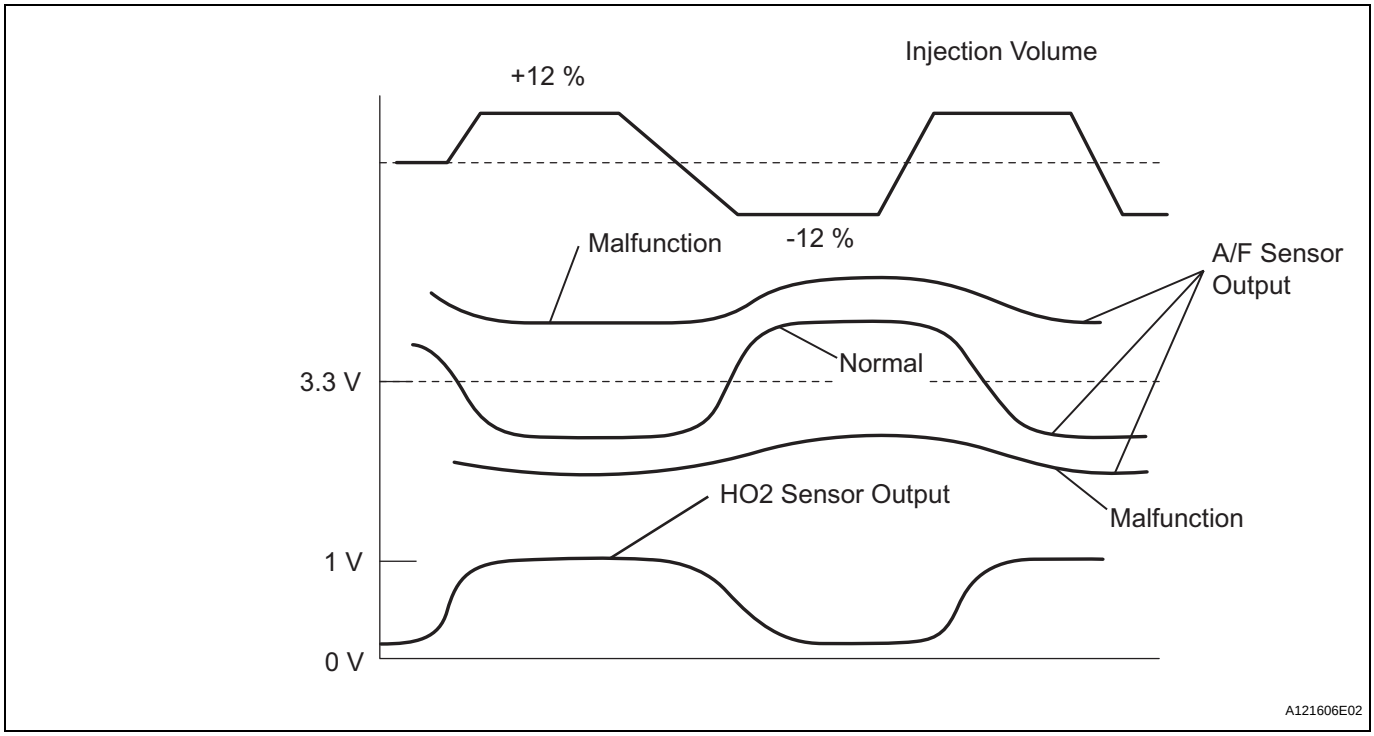

(a) Connect the intelligent tester to the DLC3.
(b) Start the engine and turn the tester ON.
(c) Warm up the engine.
(d) Select the following menu items: DIAGNOSIS / ENHANCED OBD II / ACTIVE TEST / INJ VOL.
(e) Change the fuel injection volume using the tester, monitoring the voltage output of Air-Fuel Ratio (A/F) and HO2 sensors displayed on the tester.

HINT:

- Change the fuel injection volume within the range of -12 % and +12 %. The injection volume can be changed in 1 % graduations within the range.
- The A/F sensor is displayed as AFS B1 S1, and the HO2 sensor is displayed as O2S B1 S2, on intelligent testers.

ES

Result

Tester Display (Sensor)	Voltage Variations	Proceed To
AFS B1 S1 (A/F)	Alternates between more and less than 3.3 V	OK
	Remains at more than 3.3 V	NG
	Remains at less than 3.3 V	NG

HINT:
A normal HO2 sensor voltage (O2S B1 S2) reacts in accordance with increases and decreases in fuel injection volumes. When the A/F sensor voltage remains at either less or more than 3.3 V despite the HO2 sensor indicating a normal reaction, the A/F sensor is malfunctioning.

NG → **REPLACE AIR FUEL RATIO SENSOR**

OK ↓

CHECK AND REPAIR EXTREMELY RICH OR LEAN ACTUAL AIR FUEL RATIO (INJECTOR,FUEL PRESSURE,GAS LEAKAGE FROM EXHAUST SYSTEM,ETC.)

14 CHECK FOR EXHAUST GAS LEAK

OK:
No gas leakage.

NG → **REPAIR OR REPLACE EXHAUST GAS LEAKAGE POINT**

OK ↓

15 INSPECT HEATED OXYGEN SENSOR (HEATER RESISTANCE) (See page ES-83)

NG → **REPLACE HEATED OXYGEN SENSOR**

OK ↓

16	INSPECT INTEGRATION RELAY (EFI RELAY) (See page ES-78)

NG → REPLACE INTEGRATION RELAY (EFI RELAY)

OK

17	CHECK HARNESS AND CONNECTOR (HEATED OXYGEN SENSOR - ECM)

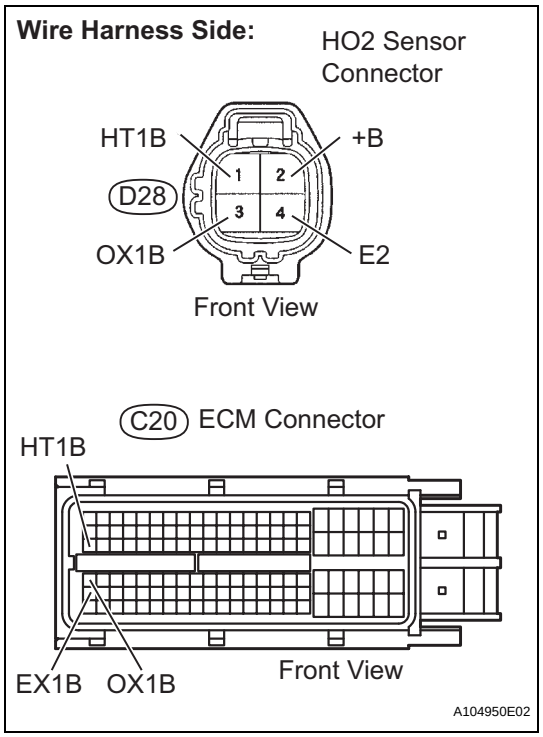

(a) Disconnect the D28 HO2 sensor connector.
(b) Turn the ignition switch to ON.
(c) Measure the voltage between the +B terminal of the HO2 sensor connector and body ground.

Standard voltage

Tester Connections	Specified Conditions
+B (D28-2) - Body ground	11 to 14 V

(d) Turn the ignition switch to OFF.
(e) Disconnect the C20 ECM connector.
(f) Check the resistance.

Standard resistance (Check for open)

Tester Connections	Specified Conditions
HT1B (D28-1) - HT1B (C20-47)	Below 1 Ω
OX1B (D28-3) - OX1B (C20-64)	
E2 (D28-4) - EX1B (C20-87)	

Standard resistance (Check for short)

Tester Connections	Specified Conditions
HT1B (D28-1) or HT1B (C20-47) - Body ground	10 kΩ or higher
OX1B (D28-3) or OX1B (C20-64) - Body ground	
E2 (D28-4) or EX1B (C20-87) - Body ground	

(g) Reconnect the HO2 sensor connector.
(h) Reconnect the ECM connector.

ES

Reference (System Diagram of Sensor 2):

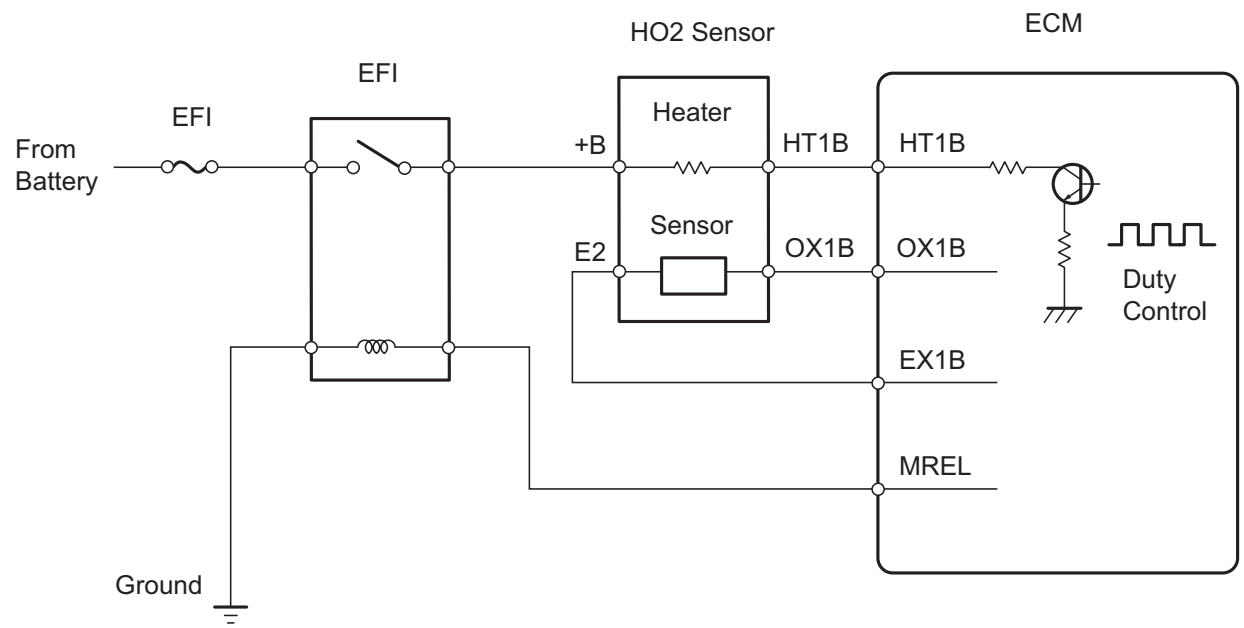

NG → **REPAIR OR REPLACE HARNESS OR CONNECTOR**

OK

REPLACE HEATED OXYGEN SENSOR

DTC	P0171	System Too Lean (Bank 1)

DTC	P0172	System Too Rich (Bank 1)

DESCRIPTION

The fuel trim is related to the feedback compensation value, not to the basic injection time. The fuel trim consists of both the short-term and the long-term fuel trims.

The short-term fuel trim is fuel compensation that is used to constantly maintain the air-fuel ratio at stoichiometric levels. The signal from the Air-Fuel Ratio (A/F) sensor indicates whether the air-fuel ratio is rich or lean compared to the stoichiometric ratio. This triggers a reduction in the fuel injection volume if the air-fuel ratio is rich and an increase in the fuel injection volume if it is lean.

Factors such as individual engine differences, wear over time and changes in operating environment cause short-term fuel trim to vary from the central value. The long-term fuel trim, which controls overall fuel compensation, compensates for long-term deviations in the fuel trim from the central value caused by the short-term fuel trim compensation.

If both the short-term and long-term fuel trims are lean or rich beyond predetermined values, it is interpreted as a malfunction, and the ECM illuminates the MIL and sets a DTC.

DTC No.	DTC Detection Conditions	Trouble Areas
P0171	With warm engine and stable air-fuel ratio feedback, fuel trim considerably in error to lean side (2 trip detection logic)	• Air induction system • Injector blockage • Mass Air Flow (MAF) meter • Engine Coolant Temperature (ECT) sensor • Fuel pressure • Gas leakage from exhaust system • Open or short in A/F sensor (sensor 1) circuit • A/F sensor (sensor 1) • A/F sensor heater (sensor 1) • Integration relay (EFI relay) • A/F sensor heater and EFI relay circuits • PCV valve and hose • PCV hose connections • ECM
P0172	With warm engine and stable air-fuel ratio feedback, fuel trim considerably in error to rich side (2 trip detection logic)	• Injector leakage or blockage • MAF meter • ECT sensor • Ignition system • Fuel pressure • Gas leakage from exhaust system • Open or short in A/F sensor (sensor 1) circuit • A/F sensor (sensor 1) • A/F sensor heater (sensor 1) • Integration relay (EFI relay) • A/F sensor heater and EFI relay circuits • ECM

HINT:

- When DTC P0171 is set, the actual air-fuel ratio is on the lean side. When DTC P0172 is set, the actual air-fuel ratio is on the rich side.
- If the vehicle runs out of fuel, the air-fuel ratio is lean and DTC P0171 may be set. The MIL is then illuminated.
- When the total of the short-term and long-term fuel trim values is within 20 % (and the engine coolant temperature is more than 75°C [167°F]), the system is functioning normally.

MONITOR DESCRIPTION

Under closed-loop fuel control, fuel injection volumes that deviate from those estimated by the ECM cause changes in the long-term fuel trim compensation value. The long-term fuel trim is adjusted when there are persistent deviations in the short-term fuel trim values. Deviations from the ECM's estimated fuel injection volumes also affect the average fuel trim learning value, which is a combination of the average short-term fuel trim (fuel feedback compensation value) and the average long-term fuel trim (learning value of the air-fuel ratio). If the average fuel trim learning value exceeds the malfunction threshold, the ECM interprets this a fault in the fuel system and sets a DTC.
Example:
The average fuel trim learning value is +35 % or more or -35 % or less, the ECM interprets this as a fuel system malfunction.

ES

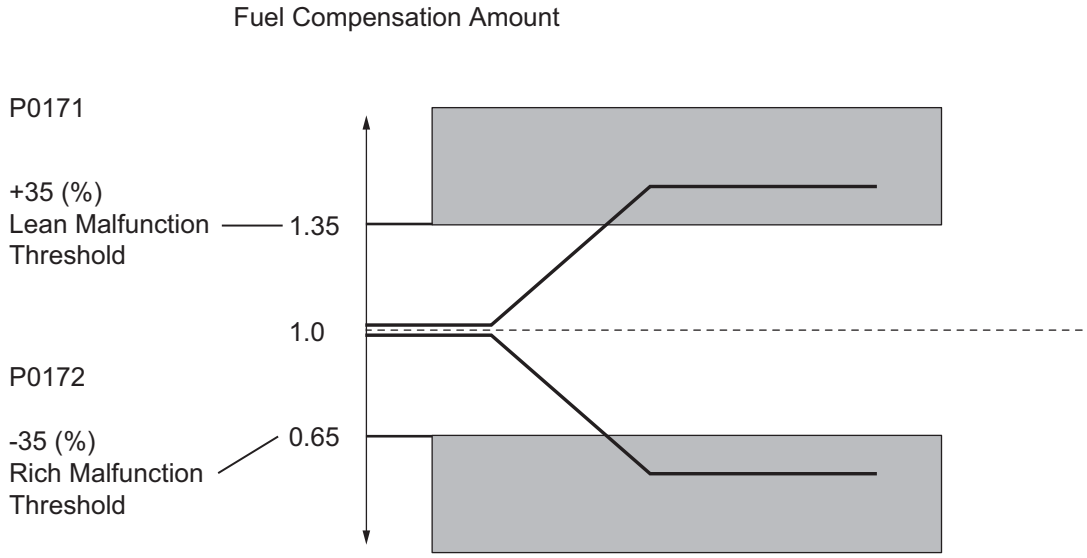

Y

A121607E02

MONITOR STRATEGY

Related DTCs	P0171: Fuel trim lean P0172: Fuel trim rich
Required Sensors/Components (Main)	Fuel system
Required Sensors/Components (Related)	A/F sensor, Mass air flow meter, Crankshaft position sensor
Frequency of Operation	Continuous
Duration	Within 10 seconds
MIL Operation	2 driving cycles
Sequence of Operation	None

TYPICAL ENABLING CONDITIONS

Monitor runs whenever following DTCs not present	P0010 (VVT OCV) P0011 (VVT System 1 - Advance) P0012 (VVT System 1 - Retard) P0031, P0032 (A/F sensor heater - Sensor 1) P0100 - P0103 (MAF meter) P0115 - P0118 (ECT sensor) P0120 - P0223, P2135 (TP sensor) P0125 (Insufficient ECT for Closed Loop) P0335 (CKP sensor) P0340 (CMP sensor) P0351 - P0354 (Igniter) P0500 (VSS)
Fuel system status	Closed loop
Battery voltage	11 V or more
Either of following conditions 1 or 2 set	-
1. Engine RPM	Below 1,100 rpm
2. Intake air amount per revolution	0.15 g/rev or more
Catalyst monitor	Not executed

TYPICAL MALFUNCTION THRESHOLDS

Purge-cut	Executing
Either of following conditions 1 or 2 met	-
1. Average of short-term fuel trim and long-term fuel trim	35 % or more (varies with ECT)
2. Average of short-term fuel trim and long-term fuel trim	-35 % or less (varies with ECT)

WIRING DIAGRAM

Refer to DTC P2195 (See page ES-280).

INSPECTION PROCEDURE

HINT:

- Read freeze frame data using an intelligent tester. Freeze frame data record the engine condition when malfunctions are detected. When troubleshooting, freeze frame data can help determine if the vehicle was moving or stationary, if the engine was warmed up or not, if the air-fuel ratio was lean or rich, and other data, from the time the malfunction occurred.
- A low A/F sensor voltage could be caused by a rich air-fuel mixture. Check for conditions that would cause the engine to run rich.
- A high A/F sensor voltage could be caused by a lean air-fuel mixture. Check for conditions that would cause the engine to run lean.

1	**CHECK ANY OTHER DTCS OUTPUT (IN ADDITION TO DTC P0171 OR P0172)**

(a) Connect an intelligent tester to the DLC3.
(b) Turn the ignition switch to ON and turn the tester ON.
(c) Select the following menu items: DIAGNOSIS / ENHANCED OBD II / DTC INFO / CURRENT CODES.
(d) Read DTCs.

Result

Display (DTC Output)	Proceed To
P0171 or P0172	A
P0171 or P0172 and other DTCs	B

HINT:
If any DTCs other than P0171 or P0172 are output, troubleshoot those DTCs first.

B → **GO TO DTC CHART**

A

2	**PERFORM ACTIVE TEST USING INTELLIGENT TESTER (A/F CONTROL)**

(a) Connect the intelligent tester to the DLC3.
(b) Start the engine and turn the tester ON.
(c) Warm up the engine at an engine speed of 2,500 rpm for approximately 90 seconds.
(d) On the tester, select the following menu items: DIAGNOSIS / ENHANCED OBD II / ACTIVE TEST / A/F CONTROL.
(e) Perform the A/F CONTROL operation with the engine in an idling condition (press the RIGHT or LEFT button to change the fuel injection volume).
(f) Monitor the outputs voltages of A/F and HO2 sensors (AFS B1S1 and O2S B1S2) displayed on the tester.

Result:

The A/F sensor reacts in accordance with increases and decreases in the fuel injection volume:
+25 % = Rich output:
Less than 3.0 V
-12.5 % = Lean output:
More than 3.35 V

NOTICE:

The A/F sensor has an output delay of a few seconds and the HO2 sensor has a maximum output delay of approximately 20 seconds.

Case	A/F Sensor (Sensor 1) Output Voltage		HO2 Sensor (Sensor 2) Output Voltage		Main Suspected Trouble Areas
1	Injection Volume +25 % -12.5 %		Injection Volume +25 % -12.5 %		-
	Output Voltage More than 3.35 V Less than 3.0 V		Output Voltage More than 0.5 V Less than 0.4 V		
2	Injection Volume +25 % -12.5 %		Injection Volume +25 % -12.5 %		• A/F sensor • A/F sensor heater • A/F sensor circuit
	Output Voltage Almost no reaction		Output Voltage More than 0.5 V Less than 0.4 V		

Case	A/F Sensor (Sensor 1) Output Voltage		HO2 Sensor (Sensor 2) Output Voltage		Main Suspected Trouble Areas
3	Injection volume +25 % -12.5 %		Injection Volume +25 % -12.5 %		Extremely rich or lean actual air-fuel ratio • Injector leakage or blockage • Gas leakage from exhaust system • Fuel pressure • MAF meter • ECT sensor • Air induction system • PCV hose connections
Output Voltage Almost no reaction ——— NG		Output Voltage Almost no reaction		——— NG	

Following the A/F CONTROL procedure enables technicians to check and graph the voltage outputs of both the A/F and HO2 sensors.
To display the graph, select the following menu items on the tester: DIAGNOSIS / ENHANCED OBD II / ACTIVE TEST / A/F CONTROL / USER DATA / AFS B1S1 and O2S B1S2, and press the YES button and then the ENTER button followed by the F4 button.

ES

Result

Result	Proceed To
Case 1	C
Case 2	B
Case 3	A

B → **Go to step 11**

C → **Go to step 15**

A

3 READ VALUE USING INTELLIGENT TESTER (MAF)

(a) Connect the intelligent tester to the DLC3.
(b) Turn the ignition switch to ON and turn the tester ON.
(c) Select the following menu items: DIAGNOSIS / ENHANCED OBD II / DATA LIST / PRIMARY / MAF and COOLANT TEMP.
(d) Allow the engine to idle until the COOLANT TEMP reaches 75°C (167°F) or more.
(e) Read the MAF with the engine in an idling condition and at an engine speed of 2,500 rpm.
Standard:
MAF while engine idling: 1 to 3 g/sec (shift position: N, A/C: OFF).
MAF at engine speed of 2,500 rpm: 2 to 6 g/sec (shift position: N, A/C: OFF).

NG → **REPLACE MASS AIR FLOW METER**

OK

4	READ VALUE USING INTELLIGENT TESTER (COOLANT TEMP)

(a) Connect the intelligent tester to the DLC3.
(b) Turn the ignition switch to ON and turn the tester ON.
(c) Select the following menu items: DIAGNOSIS / ENHANCED OBD II / DATA LIST / PRIMARY / COOLANT TEMP.
(d) Read the COOLANT TEMP twice, when the engine is both cold and warmed up.
Standard:
With cold engine: Same as ambient air temperature.
With warm engine: 75°C to 100°C (167°F to 212°F).

NG → **REPLACE ENGINE COOLANT TEMPERATURE SENSOR**

OK

5	CHECK PCV HOSE CONNECTIONS

(a) Check for PCV hose connections.
OK:
PCV hose is connected correctly and is not damaged.

NG → **REPAIR OR REPLACE PCV HOSE**

OK

6	CHECK AIR INDUCTION SYSTEM

(a) Check the air induction system for vacuum leakage.
OK:
No leakage from air induction system.

NG → **REPAIR OR REPLACE AIR INDUCTION SYSTEM**

OK

7	CHECK FOR SPARKS AND IGNITION (See page ES-160)

NG → **REPAIR OR REPLACE IGNITION SYSTEM**

OK

8	CHECK FOR EXHAUST GAS LEAK

(a) Check for exhaust gas leakage.

OK:
No gas leakage.

NG → **REPAIR OR REPLACE EXHAUST SYSTEM**

OK

9	CHECK FUEL PRESSURE

(a) Check the fuel pressure (See page FU-7).
Standard:
304 to 343 kPa (3.1 to 3.5 kgf/cm^2, 44.1 to 49.7 psi)

NG → **REPAIR OR REPLACE FUEL SYSTEM**

OK

10	INSPECT FUEL INJECTOR (INJECTION AND VOLUME)

(a) Check the injection volume (See page FU-16).
Standard:
45 to 58 cm^3 (2.9 to 3.5 cu in.) per 15 seconds

NG → **REPLACE FUEL INJECTOR**

OK

11	INSPECT AIR FUEL RATIO SENSOR (HEATER RESISTANCE) (See page ES-77)

NG → **REPLACE AIR FUEL RATIO SENSOR**

OK

12	INSPECT INTEGRATION RELAY (EFI RELAY) (See page ES-78)

NG → **REPLACE INTEGRATION RELAY**

OK

13	CHECK HARNESS AND CONNECTOR (A/F SENSOR - ECM) (See page ES-294)

NG → **REPAIR OR REPLACE HARNESS OR CONNECTOR**

OK

14	REPLACE AIR FUEL RATIO SENSOR

NEXT

15	PERFORM CONFIRMATION DRIVING PATTERN

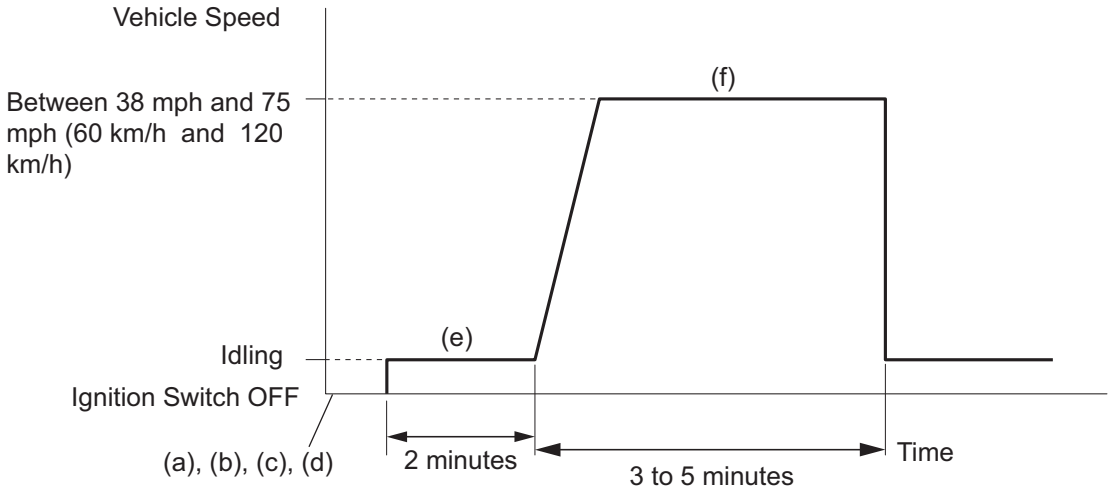

(a) Connect the intelligent tester to the DLC3.
(b) Turn the ignition switch to ON and turn the tester ON.
(c) Clear DTCs (See page ES-34).
(d) Switch the ECM from normal mode to check mode using the tester (See page ES-37).
(e) Start the engine and warm it up with all the accessories switched OFF.
(f) Drive the vehicle at between 38 mph and 75 mph (60 km/h and 120 km/h) and at an engine speed of between 1,400 rpm and 3,200 rpm for 3 to 5 minutes.
HINT:
If the system is still malfunctioning, the MIL will be illuminated during step (f).
NOTICE:
If the conditions in this test are not strictly followed, no malfunction will be detected.

NEXT

16	CHECK WHETHER DTC OUTPUT RECURS (DTC P0171 OR P0172)

(a) On the intelligent tester, select the following menu items: DIAGNOSIS / ENHANCED OBD II / DTC INFO / CURRENT CODES.
(b) Read DTCs.

Result

Display (DTC Output)	Proceed To
No output	A
P0171 or P0172	B

B → Go to step 3

A → END

DTC	P0300	Random / Multiple Cylinder Misfire Detected

DTC	P0301	Cylinder 1 Misfire Detected

DTC	P0302	Cylinder 2 Misfire Detected

DTC	P0303	Cylinder 3 Misfire Detected

DTC	P0304	Cylinder 4 Misfire Detected

ES

DESCRIPTION

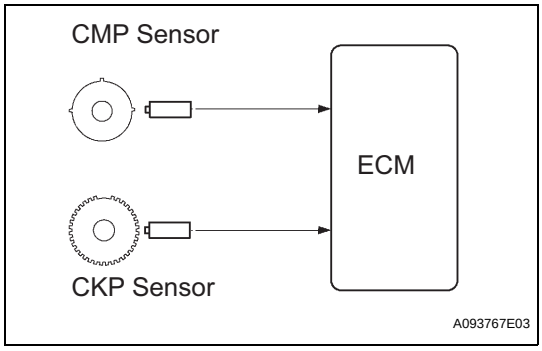

When the engine misfires, high concentrations of hydrocarbons (HC) enter the exhaust gas. Extremely high HC concentration levels can cause increases in exhaust emission levels. High concentrations of HC can also cause increases in the Three-Way Catalytic Converter (TWC) temperature, which may cause damage to the TWC. To prevent these increases in emissions and to limit the possibility of thermal damage, the ECM monitors the misfire rate. When the temperature of the TWC reaches the point of thermal degradation, the ECM blinks the MIL. To monitor misfires, the ECM uses both the Camshaft Position (CMP) sensor and the Crankshaft Position (CKP) sensor. The CMP sensor is used to identify any misfiring cylinders and the CKP sensor is used to measure variations in the crankshaft rotation speed. Misfires are counted as when the crankshaft rotation speed variations exceed predetermined thresholds. If the misfire rate exceeds the threshold level, and could cause emission deterioration, the ECM illuminates the MIL and sets a DTC.

DTC No.	DTC Detection Conditions	Trouble Areas
P0300	Simultaneous misfiring of several cylinders detected (2 trip detection logic)	• Open or short in engine wire harness • Connector connection • Vacuum hose connections • Ignition system • Injector • Fuel pressure • Mass Air Flow (MAF) meter • Engine Coolant Temperature (ECT) sensor • Compression pressure • Valve clearance • Valve timing • PCV valve and hose • PCV hose connections • Air induction system • ECM
P0301 P0302 P0303 P0304	Misfiring of specific cylinder detected (2 trip detection logic)	

When DTCs for misfiring cylinders are randomly set, but DTC P0300 is not set, it indicates that misfires have been detected in different cylinders at different times. DTC P0300 is only set when several misfiring cylinders are detected at the same time.

MONITOR DESCRIPTION

The ECM illuminates the MIL and sets a DTC when either of the following conditions, which could cause emission deterioration, is detected (2 trip detection logic).

- Within the first 1,000 crankshaft revolutions of the engine starting, an excessive misfiring rate (approximately 20 to 50 misfires per 1,000 crankshaft revolutions) occurs once.
- After the first 1,000 crankshaft revolutions, an excessive misfiring rate (approximately 20 to 50 misfires per 1,000 crankshaft revolutions) occurs 4 times in sequential crankshaft revolutions.

The ECM flashes the MIL and sets a DTC when either of the following conditions, which could cause Three-Way Catalytic Converter (TWC) damage, is detected (2 trip detection logic).

- In every 200 crankshaft revolutions at a high engine rpm, the threshold misfiring percentage is recorded once.
- In every 200 crankshaft revolutions at a normal engine rpm, the threshold misfiring percentage is recorded 3 times.

ES

MONITOR STRATEGY

Related DTCs	P0300: Multiple cylinder misfire P0301: Cylinder 1 misfire P0302: Cylinder 2 misfire P0303: Cylinder 3 misfire P0304: Cylinder 4 misfire
Required Sensors/Components (Main)	Crankshaft position sensor and Camshaft position sensor
Required Sensors/Components (Related)	Engine coolant temperature and intake air temperature sensors and Mass air flow meter
Frequency of Operation	Continuous
Duration	1,000 to 4,000 crankshaft revolutions: Emission related misfire 200 to 600 crankshaft revolutions: Catalyst damaged misfire
MIL Operation	2 driving cycles: Emission related misfire MIL flashes immediately: Catalyst damaged misfire
Sequence of Operation	None

TYPICAL ENABLING CONDITIONS

Misfire:

Monitor runs whenever following DTCs not present	P0100 - P0103 (MAF meter) P0110 - P0113 (IAT sensor) P0115 - P0118 (ECT sensor) P0120 - P0223, P2135 (TP sensor) P0125 (Insufficient ECT for Closed Loop) P0327, P0328 (Knock sensor) P0335 (CKP sensor) P0340 (CMP sensor) P0500 (VSS)
Battery voltage	8 V or more
VVT system	Not operated by scan tool
Engine RPM	450 to 6,600 rpm
Either of following conditions (a) or (b) met	-
(a) ECT at engine start	More than -7°C (19°F)
(b) ECT	More than 20°C (68°F)
Fuel cut	OFF

Monitor period of emission-related-misfire:

First 1,000 revolutions after engine start, or Check Mode	Crankshaft 1,000 revolutions
Except above	Crankshaft 1,000 revolutions x 4

Monitor period of catalyst-damaged-misfire (MIL blinks):

All of following conditions 1, 2 and 3 met	Crankshaft 200 revolutions x 3
1. Driving cycles	1st

2. Check mode	OFF
3. Engine RPM	Less than 2,800 rpm
Except above	Crankshaft 200 revolutions

TYPICAL MALFUNCTION THRESHOLDS

Monitor period of emission-related-misfire:

Misfire rate	1.63 % or more

Monitor period of catalyst-damage-misfire (MIL blinks):

Number of misfire per 200 revolutions	101 or more (varies with intake air amount and RPM)

MONITOR RESULT

Refer to CHECKING MONITOR STATUS (See page ES-17).

WIRING DIAGRAM

Wiring diagram of the ignition system.

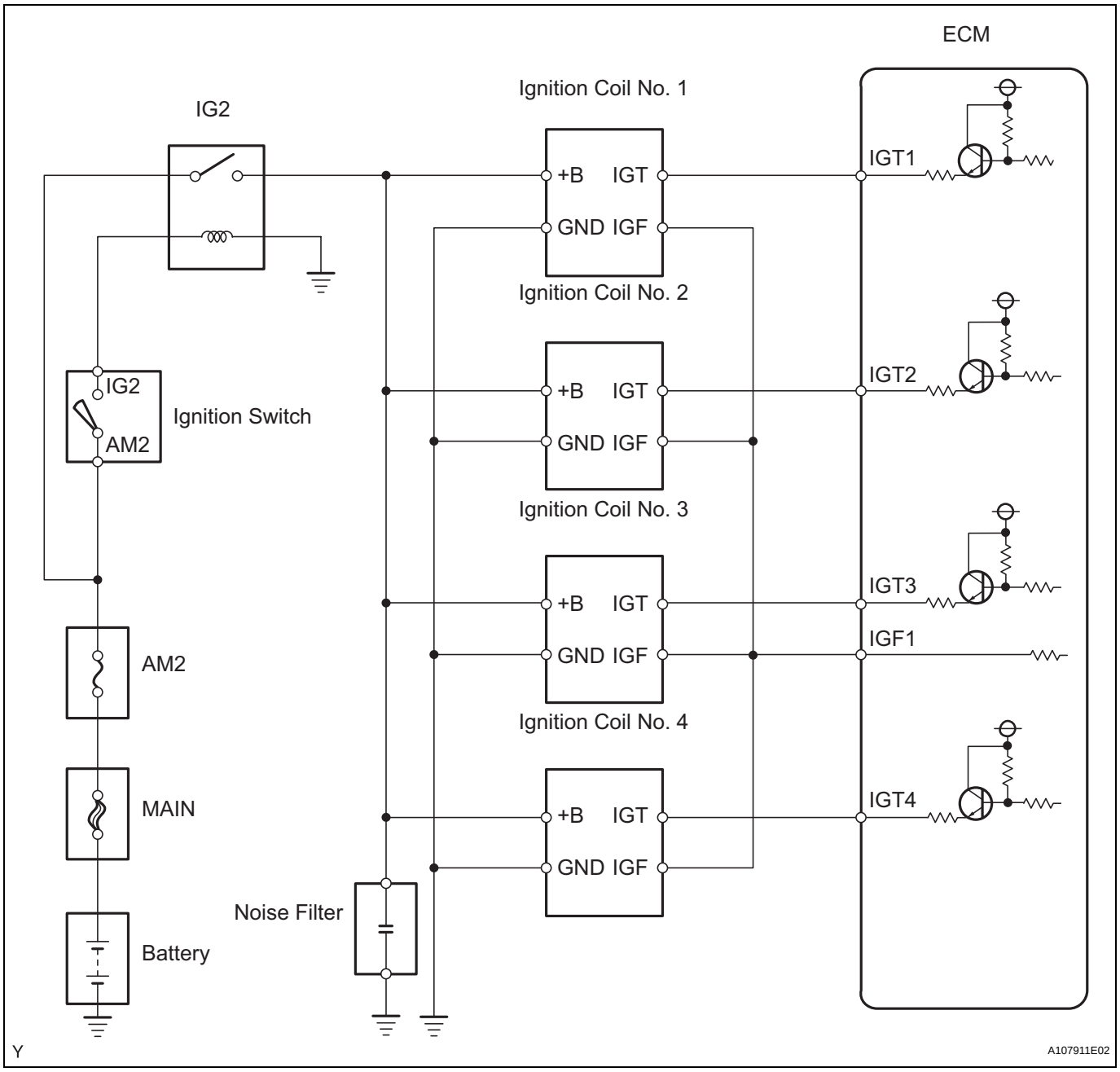

Wiring diagram of the injector circuit.

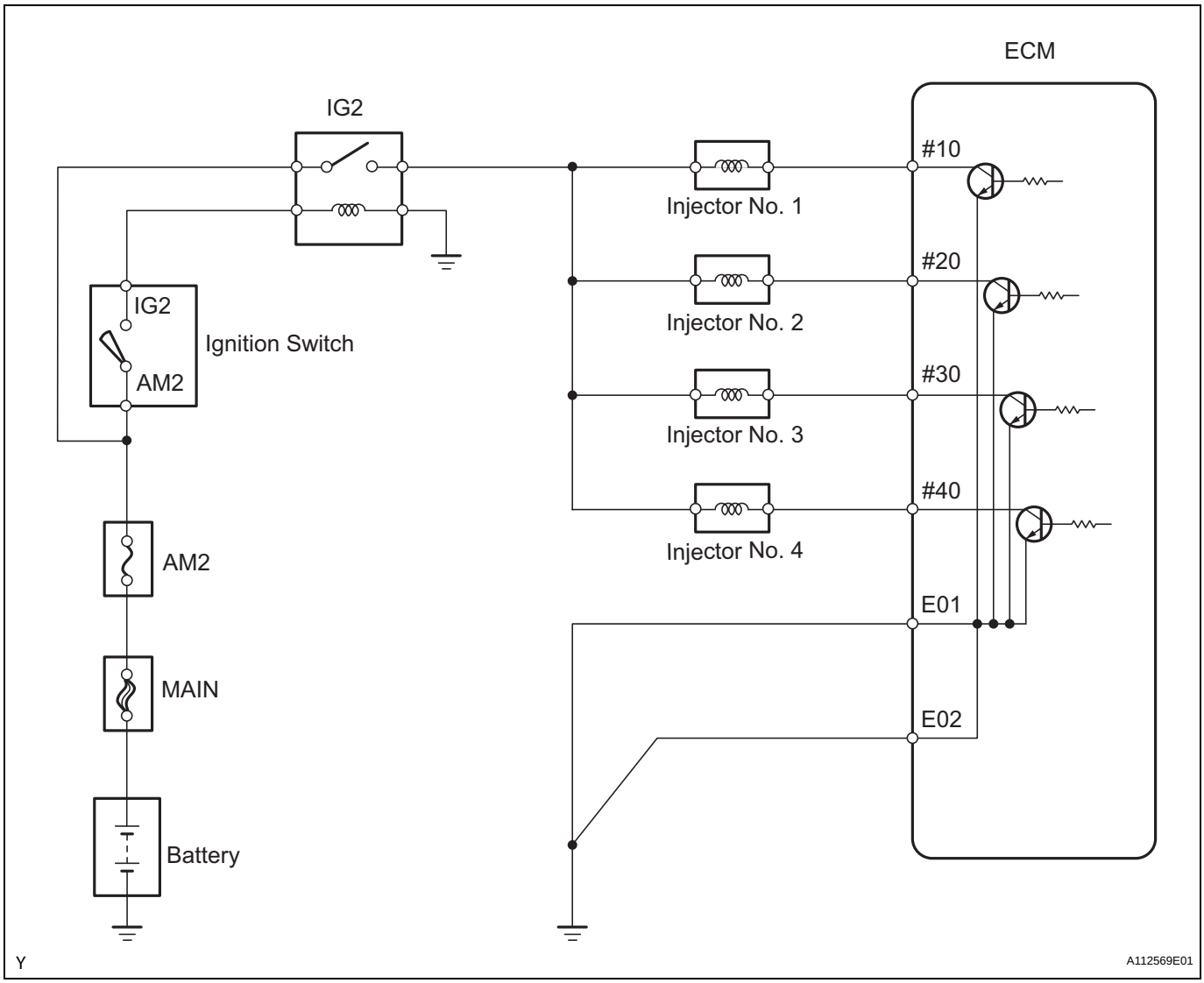

CONFIRMATION DRIVING PATTERN

1. Connect an intelligent tester to the DLC3.
2. Turn the ignition switch to ON.
3. Turn the tester ON.
4. Record the DTC(s) and freeze frame data.
5. Using the tester, switch the ECM from normal mode to check mode (See page ES-37).
6. Read the misfire counts of each cylinder (CYL #1 to #4) with the engine in an idling condition. If any misfire count is displayed, skip the following confirmation driving pattern.
7. Drive the vehicle several times with the conditions, such as engine rpm and engine load, shown in MISFIRE RPM and MISFIRE LOAD in the DATA LIST.
   HINT:
   In order to store misfire DTCs, it is necessary to drive the vehicle for the period of time shown in the table below, with the MISFIRE RPM and MISFIRE LOAD in the DATA LIST.

Engine RPM	Duration
Idling	3.5 minutes or more
1,000	3 minutes or more
2,000	1.5 minutes or more
3,000	1 minute or more

8. Check whether misfires have occurred by checking DTCs and freeze frame data.
   HINT:
   Do not turn the ignition switch to OFF until the stored DTC(s) and freeze frame data have been recorded. When the ECM returns to normal mode (default), the stored DTC(s), freeze frame data and other data will be erased.
9. Record the DTC(s), freeze frame data and misfire counts.
10. Turn the ignition switch to OFF and wait for at least 5 seconds.

INSPECTION PROCEDURE

HINT:

- If any DTCs other than misfire DTCs are output, troubleshoot those DTCs first.
- Read freeze frame data using an intelligent tester. Freeze frame data record the engine condition when malfunctions are detected. When troubleshooting, freeze frame data can help determine if the vehicle was moving or stationary, if the engine was warmed up or not, if the air-fuel ratio was lean or rich, and other data, from the time the malfunction occurred.
- If the misfire does not recur when the vehicle is brought to the workshop, reproduce the conditions stored in the freeze frame data.
- If the misfire still cannot be reproduced even though the conditions stored in the freeze frame data have been duplicated, one of the following factors is considered to be a possible cause of the problem:
  (a) The fuel level is low.
  (b) Improper fuel is used.
  (c) The spark plugs are dirty.
  (d) The problem is complex due to multiple factors.
- After finishing repairs, check that no misfires occur in each cylinder (CYL #1, #2, #3 and #4).
- Be sure to confirm that no misfiring cylinder DTCs are set again by conducting the confirmation driving pattern, after the repairs.
- For 6 and 8 cylinder engines, the ECM intentionally does not set the specific misfiring cylinder DTCs at high engine RPM. If misfires only occur during high engine RPM driving, only DTC P0300 is set.
  In the event of DTC P0300 being present, perform the following operations:
  (a) Clear the DTC (See page ES-34).
  (b) Start the engine and conduct the confirmation driving pattern.
  (c) Read the misfiring rates of each cylinder or DTC(s) using the tester.
  (d) Repair the cylinder(s) that has a high misfiring rate or is indicated by the DTC.
  (e) After finishing repairs, conduct the confirmation driving pattern again, in order to verify that DTC P0300 is not set.
- When either SHORT FT #1 or LONG FT #1 in the freeze frame data is outside the range of +-20 %, the air-fuel ratio may be rich (-20 % or less) or lean (+20 % or more).
- When the COOLANT TEMP in the freeze frame data is less than 75°C (167°F), the misfires occurred only while warming up the engine.

1	CHECK ANY OTHER DTCS OUTPUT (IN ADDITION TO MISFIRE DTCS)

(a) Connect an intelligent tester to the DLC3.
(b) Turn the ignition switch to ON.
(c) Turn the tester ON.
(d) Select the following menu items: DIAGNOSIS / ENHANCED OBD II / DTC INFO / CURRENT CODES.
(e) Read DTCs.

Result

Display (DTC Output)	Proceed To
P0300, P0301, P0302, P0303 and/or P0304	A
P0300, P0301, P0302, P0303 and/or P0304 and other DTCs	B

HINT:
If any DTCs other than P0300, P0301, P0302, P0303 and P0304 are output, troubleshoot those DTCs first.

B → GO TO DTC CHART

A

2 READ VALUE USING INTELLIGENT TESTER (MISFIRE RPM AND MISFIRE LOAD)

(a) Connect the intelligent tester to the DLC3.
(b) Turn the ignition switch to ON and turn the tester ON.
(c) Select the following menu items: DIAGNOSIS / ENHANCED OBD II / DATA LIST / MISFIRE / MISFIRE RPM and MISFIRE LOAD.
(d) Read and note the MISFIRE RPM and MISFIRE LOAD (engine load) values.
HINT:
The MISFIRE RPM and MISFIRE LOAD indicate the vehicle conditions under which the misfire occurred.

NEXT

3 CHECK PCV HOSE CONNECTIONS

OK:
PCV hose is connected correctly and is not damaged.

NG → REPAIR OR REPLACE PCV HOSE

OK

4 CHECK MISFIRE COUNT (CYL #1, #2, #3 AND #4)

(a) Connect the intelligent tester to the DLC3.
(b) Turn the ignition switch to ON.
(c) Turn the tester ON.
(d) Clear DTCs (See page ES-34).
(e) Select the following menu items: DIAGNOSIS / ENHANCED OBD II / DATA LIST / MISFIRE / CYL #1, #2, #3 and #4.
(f) Allow the engine to idle.
(g) Read each value for CYL #1 to #4 displayed on the tester. If no misfire counts occur in any cylinders, perform the following conditions:
(1) Shift the gear selector lever to the D position.
(2) Check the CYL #1 to #4.
(3) If misfire counts are still not displayed, perform steps (h) and (i) and then check the misfire counts again.
(h) Drive the vehicle with the MISFIRE RPM and MISFIRE LOAD noted in step 2.

(i) Read the CYL #1 to #4 or DTCs displayed on the tester.

Result

Misfire Count	Proceed To
Most misfires occur in only one or two cylinders	A
Three cylinders or more have equal misfire counts	B

HINT:

- If it is difficult to reproduce misfires for each cylinder, check the DATA LIST item called MISFIRE MARGIN. Try to find vehicle driving conditions that lower the MISFIRE MARGIN value. Values above 30 % are considered normal.
- If the freeze frame data's record of the ECT is below 75°C (167°F), the misfire may be detected only when the engine is cold.
- If the freeze frame data's record of the ENGINE RUN TIME is below 120 seconds, the misfire may be detected immediately after the engine is started.

ES

B → **Go to step 14**

A

5 PERFORM ACTIVE TEST USING INTELLIGENT TESTER (FUEL CUT #1 TO #4)

(a) Allow the engine to idle.
(b) Select the following menu items: DIAGNOSIS / ENHANCED OBD II / ACTIVE TEST / FUEL CUT#1 (to #4).
(c) If a cylinder has a high misfire count, cut fuel to that cylinder. Compare the misfire count of the cylinder before fuel cut and after fuel cut.

Result

Misfire Count in Each Cylinder	Proceed To
Misfire count of cylinder before fuel cut and after fuel cut roughly same	A
Misfire count of cylinder before fuel cut lower than after fuel cut	B

NOTICE:
This ACTIVE TEST cannot be performed while the vehicle is being driven.

HINT:
If the misfire count of the cylinder before and after the fuel cut are roughly the same, the cylinder is misfiring.
If the misfire count of the cylinder before the fuel cut is lower than after the fuel cut, the cylinder misfires sometimes.

B → **Go to step 11**

A

6	CHECK SPARK PLUG

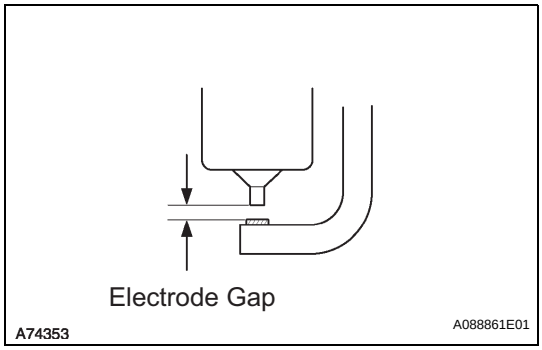

(a) Remove the ignition coil and the spark plug of the misfiring cylinder.
(b) Measure the spark plug electrode gap.
Standard:
1.0 to 1.1 mm (0.039 to 0.043 in.)
(c) Check the electrode for carbon deposits.
Recommended spark plug:

Manufactures	Products
DENSO	SK16R11
NGK	IFR5A11

NOTICE:
If the electrode gap is larger than standard, replace the spark plug. Do not adjust the electrode gap.

NG → **REPLACE SPARK PLUG**

OK

7	CHECK FOR SPARKS AND IGNITION

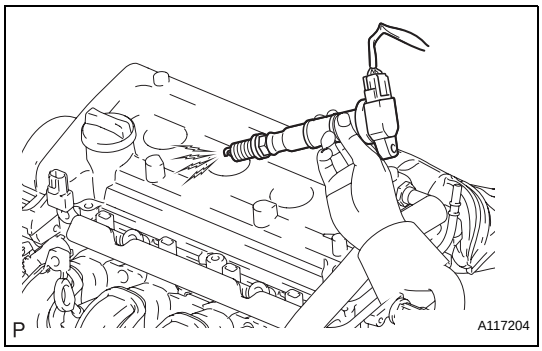

(a) Disconnect the injector connectors, in order to prevent the engine from starting.
(b) Install the spark plug onto the ignition coil.
(c) Attach the spark plug assembly to the cylinder head.
(d) Crank the engine for less than 2 seconds and check the spark.
OK:
Sparks jump across electrode gap.
(e) Reconnect the injector connectors.

NG → **Go to step 9**

OK

8	CHECK CYLINDER COMPRESSION PRESSURE OF MISFIRING CYLINDER

(a) Measure the cylinder compression pressure of the misfiring cylinder.

OK → **Go to step 10**

NG

CHECK ENGINE TO DETERMINE CAUSE OF LOW COMPRESSION

9	CHANGE NORMAL SPARK PLUG AND CHECK SPARK OF MISFIRING CYLINDER

(a) Change the installed spark plug to a spark plug that functions normally.
(b) Perform a spark test.
CAUTION:
Always disconnect all injector connectors.
NOTICE:
Do not crank the engine for more than 2 seconds.
(1) Install the spark plug to the ignition coil and connect the ignition coil connector.
(2) Disconnect the injector connector.
(3) Ground the spark plug.
(4) Check if sparks occur while the engine is being cranked.
OK:
Sparks jump across electrode gap.

ES

NG → **REPLACE IGNITION COIL ASSEMBLY THEN CONFIRM THAT THERE IS NO MISFIRE**

OK

REPLACE SPARK PLUG

10	INSPECT ECM TERMINAL OF MISFIRING CYLINDER (#10, #20, #30, AND /OR #40 VOLTAGE)

Wire Harness Side:

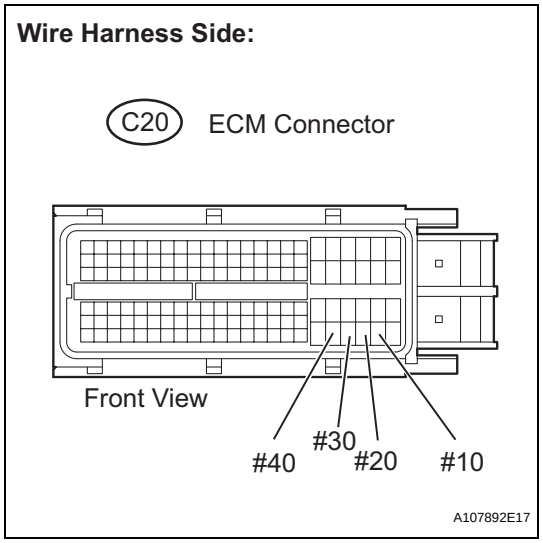

(a) Disconnect the C20 ECM connector.
(b) Turn the ignition switch to ON.
(c) Measure the voltage between the terminals of the ECM connector.
Standard voltage

Tester Connections	Specified Conditions
#10 (C20-108) - E01 (C20-45)	11 to 14 V
#20 (C20-107) - E01 (C20-45)	
#30 (C20-106) - E01 (C20-45)	
#40 (C20-105) - E01 (C20-45)	

(d) Reconnect the ECM connector.

OK → **Go to step 12**

NG

11	CHECK HARNESS AND CONNECTOR (INJECTOR - ECM)

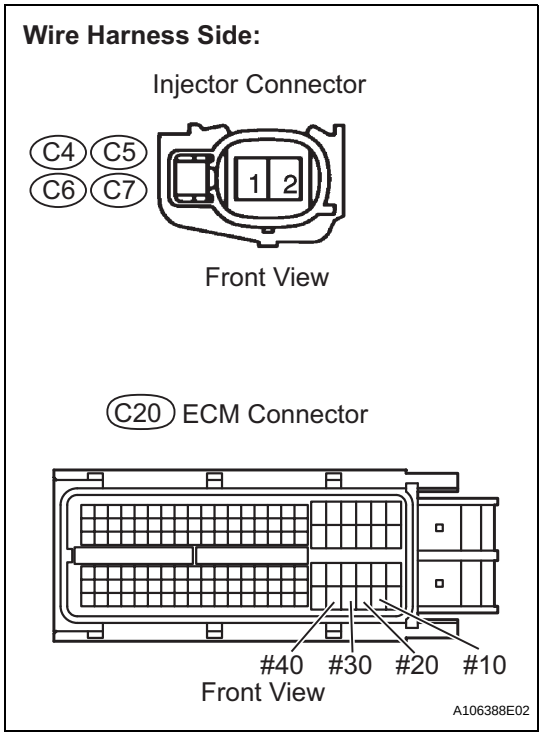

(a) Disconnect the injector connector (of the misfiring cylinder).
(b) Disconnect the C20 ECM connector.
(c) Turn the ignition switch to ON.
(d) Measure the resistance and voltage between the injector and the ECM connector terminals.

Standard voltage

Cylinder	Tester Connections	Specified Conditions
No. 1	C4-1 - Ground	11 to 14 V
No. 2	C5-1 - Ground	
No. 3	C6-1 - Ground	
No. 4	C7-1 - Ground	

Standard resistance

Cylinder	Tester Connections	Specified Conditions
No. 1	C4-2 - Ground	10 kΩ or higher
	C4-2 - C20-108 (#10)	Below 1 Ω
No. 2	C5-2 - Ground	10 kΩ or higher
	C5-2 - C20-107 (#20)	Below 1 Ω
No. 3	C6-2 - Ground	10 kΩ or higher
	C6-2 - C20-106 (#30)	Below 1 Ω
No. 4	C7-2 - Ground	10 kΩ or higher
	C7-2 - C20-105 (#40)	Below 1 Ω

(e) Reconnect the injector connector.
(f) Reconnect the ECM connector.

NG → **REPAIR OR REPLACE HARNESS OR CONNECTOR**

OK ↓

12	CHECK FUEL INJECTOR OF MISFIRING CYLINDER

(a) Check the injector injection (whether fuel volume is high or low, and whether injection pattern is poor).

NG → **REPLACE FUEL INJECTOR ASSEMBLY**

OK ↓

13	CHECK VALVE CLEARANCE OF MISFIRING CYLINDER

NG → **ADJUST VALVE CLEARANCE**

OK ↓

14	CHECK AIR INDUCTION SYSTEM

(a) Check the air induction system for vacuum leakage.
OK:
No leakage from air induction system.

NG → **REPAIR OR REPLACE AIR INDUCTION SYSTEM**

OK ↓

15	CHECK VALVE TIMING (See page ES-71)

NG → **ADJUST VALVE TIMING**

OK ↓

16	CHECK FUEL PRESSURE

(a) Check the fuel pressure (See page FU-7).

NG → **CHECK AND REPLACE FUEL PUMP, PRESSURE REGULATOR, FUEL PIPE LINE AND FILTER**

OK ↓

17	READ VALUE USING INTELLIGENT TESTER (COOLANT TEMP) (See page ES-148)

NG → **REPLACE ENGINE COOLANT TEMPERATURE SENSOR**

OK ↓

18	READ VALUE USING INTELLIGENT TESTER (MAF) (See page ES-147)

NG → **REPLACE MASS AIR FLOW METER**

OK ↓

CHECK FOR INTERMITTENT PROBLEMS

DTC	P0327	Knock Sensor 1 Circuit Low Input (Bank 1 or Single Sensor)

DTC	P0328	Knock Sensor 1 Circuit High Input (Bank 1 or Single Sensor)

DESCRIPTION

Flat type knock sensors (non-resonant type) have structures that can detect vibrations over a wide band of frequencies: between approximately 6 kHz and 15 kHz.

A knock sensor is fitted onto the engine block to detect engine knocking.

ES

The knock sensor contains a piezoelectric element which generates a voltage when it becomes deformed. The voltage is generated when the engine block vibrates due to knocking. Any occurrence of engine knocking can be suppressed by delaying the ignition timing.

DTC No.	DTC Detection Conditions	Trouble Areas
P0327	Output voltage of knock sensor 0.5 V or less (1 trip detection logic)	• Short in knock sensor circuit • Knock sensor • ECM
P0328	Output voltage of knock sensor 4.5 V or more (1 trip detection logic)	• Open in knock sensor circuit • Knock sensor • ECM

HINT:

When any of DTCs P0327 and P0328 are set, the ECM enters fail-safe mode. During fail-safe mode, the ignition timing is delayed to its maximum retardation. Fail-safe mode continues until the ignition switch is turned to OFF.

Reference: Inspection using an oscilloscope

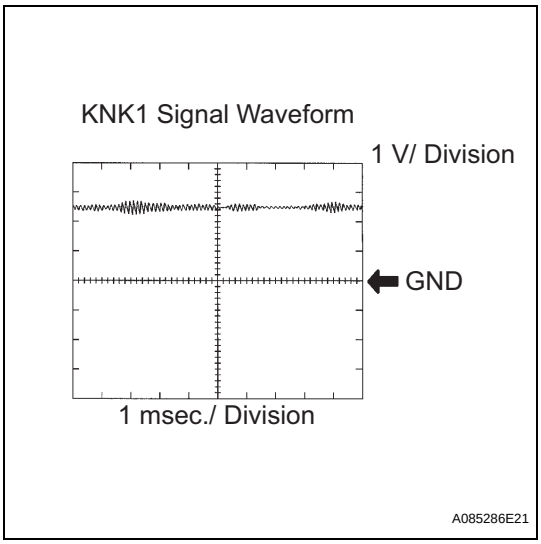

The correct waveform is as shown.

Items	Contents
Terminals	KNK1 - EKNK
Equipment Settings	1 V/Division 1 msec./Division
Conditions	Keep engine speed at 4,000 rpm with warm engine

MONITOR DESCRIPTION

If the output voltage transmitted by the knock sensor remains low or high for more than 1 second, the ECM interprets this as a malfunction in the sensor circuit, and sets a DTC.
The monitor for DTCs P0327 and P0328 begins to run when 5 seconds have elapsed since the engine was started.
If the malfunction is not repaired successfully, either DTC P0327 or P0328 is set 5 seconds after the engine is next started.

MONITOR STRATEGY

Related DTCs	P0327: Knock sensor range check (Low voltage) P0328: Knock sensor range check (High voltage)
Required Sensors/Components (Main)	Knock sensor
Required Sensors/Components (Related)	-
Frequency of Operation	Continuous
Duration	1 second
MIL Operation	Immediate
Sequence of Operation	None

ES

TYPICAL ENABLING CONDITIONS

Monitor runs whenever following DTCs not present	None
Battery voltage	10.5 V or more
Time after engine start	5 seconds or more

TYPICAL MALFUNCTION THRESHOLDS

Knock Sensor Range Check (Low voltage) P0327:

Knock sensor voltage	Less than 0.5 V

Knock Sensor Range Check (High voltage) P0328:

Knock sensor voltage	More than 4.5 V

WIRING DIAGRAM

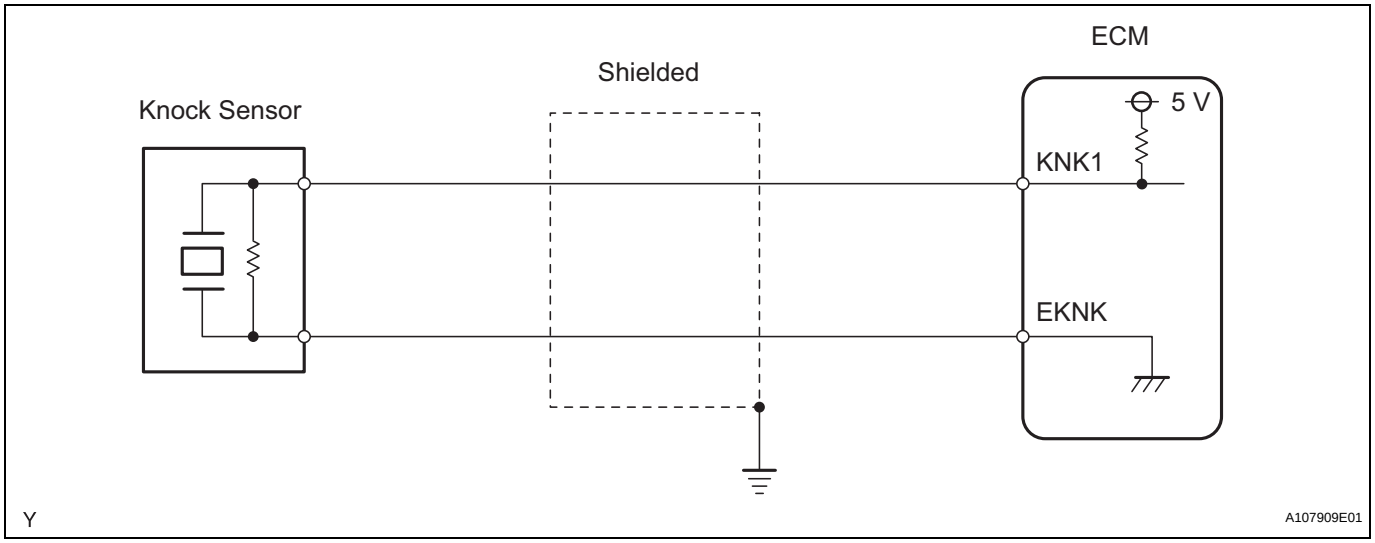

INSPECTION PROCEDURE

HINT:
Read freeze frame data using an intelligent tester. Freeze frame data record the engine condition when malfunctions are detected. When troubleshooting, freeze frame data can help determine if the vehicle was moving or stationary, if the engine was warmed up or not, if the air-fuel ratio was lean or rich, and other data, from the time the malfunction occurred.

1	READ VALUE USING INTELLIGENT TESTER (KNOCK FB VAL)

(a) Connect an intelligent tester to the DLC3.
(b) Start the engine and turn the tester ON.
(c) Warm up the engine.
(d) Select the following menu items: DIAGNOSIS / ENHANCED OBD II / DATA LIST / USER DATA / KNOCK FB VAL.
(e) Read the values displayed on the tester while driving the vehicle.
Standard:
The values change.
HINT

Malfunction does not occur	Knock Feedback Values change
Malfunctions occur	Knock Feedback Values do not change

HINT:
The knock feedback value change can be confirmed by running the engine at high load, for example, by activating the air conditioning system and revving up the engine.

OK → **CHECK FOR INTERMITTENT PROBLEMS**

NG

2	CHECK HARNESS AND CONNECTOR (ECM - KNOCK SENSOR)

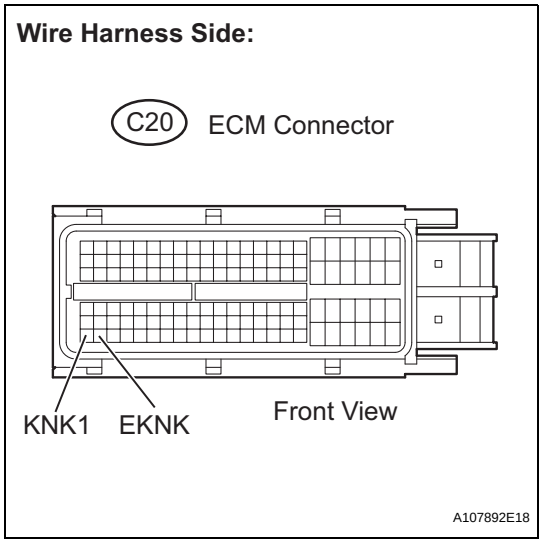

(a) Disconnect the C20 ECM connector.
(b) Measure the resistance between the terminals.
Standard resistance

Tester Connections	Specified Conditions
KNK1 (C20-110) - EKNK (C20-111)	120 to 280 kΩ at 20°C (68°F)

(c) Reconnect the ECM connector.

NG → **Go to step 4**

OK

3 **INSPECT ECM (KNK1 VOLTAGE)**

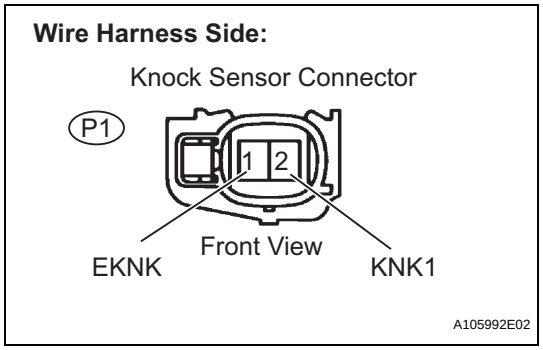

(a) Disconnect the P1 knock sensor connector.
(b) Turn the ignition switch to ON.
(c) Measure the voltage between the knock sensor terminals.
Standard voltage

Tester Connections	Specified Conditions
KNK1 (P1-2) - EKNK (P1-1)	4.5 to 5.5 V

(d) Reconnect the knock sensor connector.

NOTICE:
Fault may be intermittent. Check the wire harness and connectors carefully and retest.

NG → **REPLACE ECM**

OK

CHECK FOR INTERMITTENT PROBLEMS

4 **INSPECT KNOCK SENSOR**

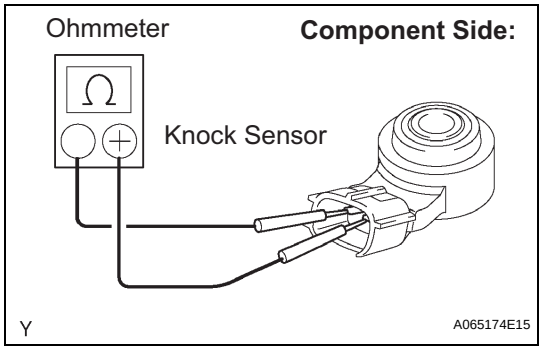

(a) Remove the knock sensor.
(b) Measure the resistance between the terminals.
Standard resistance

Tester Connections	Specified Conditions
KNK1 (2) - EKNK (1)	120 to 280 kΩ at 20°C (68°F)

(c) Reinstall the knock sensor.

NG → **REPLACE KNOCK SENSOR**

OK

REPAIR OR REPLACE HARNESS OR CONNECTOR

ES

DTC	P0335	Crankshaft Position Sensor "A" Circuit

DTC	P0339	Crankshaft Position Sensor "A" Circuit Intermittent

DESCRIPTION

The Crankshaft Position (CKP) sensor system consists of a CKP sensor plate and a pickup coil.
The sensor plate has 34 teeth and is installed on the crankshaft. The pickup coil is made of wound copper wire, an iron core and magnet. The sensor plate rotates and, as each tooth passes through the pickup coil, a pulse signal is created. The pickup coil generates 34 signals per engine revolution. Based on these signals, the ECM calculates the crankshaft position and engine RPM. Using these calculations, the fuel injection time and ignition timing are controlled.

ES

DTC No.	DTC Detection Conditions	Trouble Areas
P0335	• No CKP sensor signal to ECM while cranking (1 trip detection logic) • No CKP sensor signal to ECM at engine speed of 600 rpm or more (1 trip detection logic)	• Open or short in CKP sensor circuit • CKP sensor • CKP sensor plate • ECM
P0339	Under conditions (a), (b) and (c), no CKP sensor signal to ECM for 0.05 seconds or more (1 trip detection logic): (a) Engine speed 1,000 rpm or more (b) Starter signal OFF (c) 3 seconds or more have elapsed since starter signal switched from ON to OFF	• Open or short in CKP sensor circuit • CKP sensor • CKP sensor plate • ECM

Reference: Inspection using an oscilloscope.

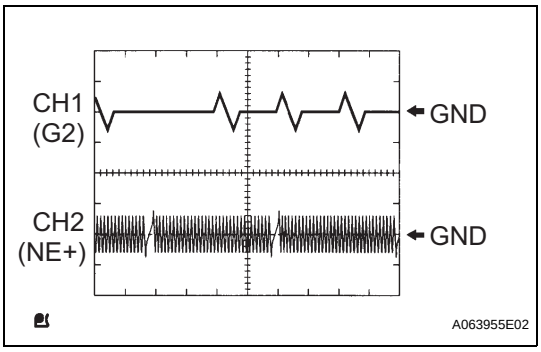

HINT:
- The correct waveform is as shown.
- G2+ stands for the Camshaft Position (CMP) sensor signal, and NE+ stands for the CKP sensor signal.
- Failure grounding of the shielded wire may causes noise in waveforms.

Items	Contents
Terminals	CH1: G2+ - NE- CH2: NE+ - NE-
Equipment Settings	5 V/Division, 20 msec./Division
Conditions	Cranking or idling

MONITOR DESCRIPTION

If there is no signal from the CKP sensor despite the engine revolving, the ECM interprets this as a malfunction of the sensor.
If the malfunction is not repaired successfully, a DTC is set 10 seconds after the engine is next started.

MONITOR STRATEGY

Related DTCs	P0335: CKP sensor range check or rationality
Required Sensors/Components (Main)	CKP sensor
Required Sensors/Components (Related)	CMP sensor
Frequency of Operation	Continuous
Duration	3 times
MIL Operation	Immediate
Sequence of Operation	None

TYPICAL ENABLING CONDITIONS

All:

Monitor runs whenever following DTCs not present	None

Case 1:

Time after starter OFF to ON	0.3 seconds or more
Number of CMP sensor signal pulse	6 times
Battery voltage	7 V or more
CMP sensor circuit fail	Not detected
Ignition switch	ON

Case 2:

Starter	OFF
Engine speed	More than 600 rpm
Time after starter from ON to OFF	3 seconds or more

TYPICAL MALFUNCTION THRESHOLDS

Case 1:

Number of CKP sensor signal pulse	132 or less, and 174 or more

Case 2:

Engine speed signal	No signal

COMPONENT OPERATING RANGE

CKP sensor	• CKP sensor output voltage fluctuates while crankshaft revolving • 34 CKP sensor signals per crankshaft revolution

WIRING DIAGRAM

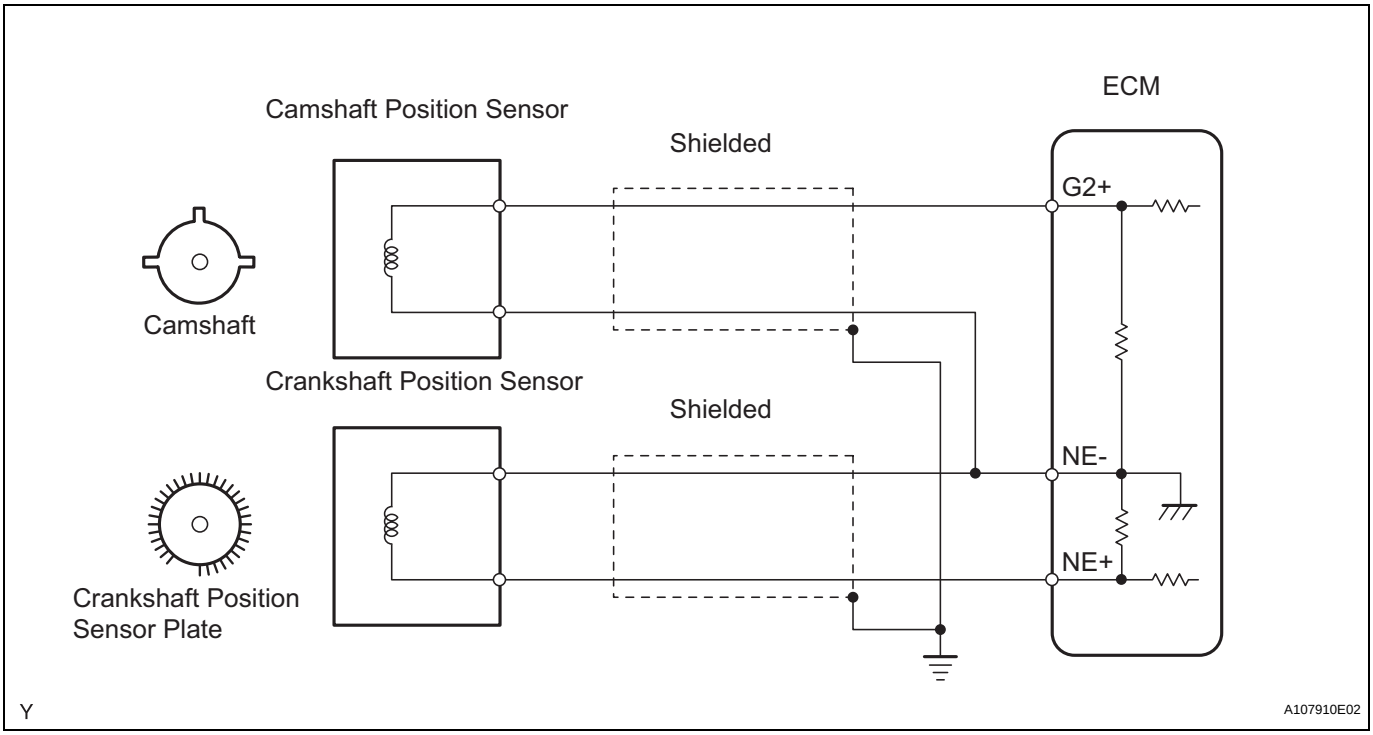

ES

INSPECTION PROCEDURE

HINT:

- If no problem is found through this diagnostic troubleshooting procedure, troubleshooting the engine mechanical systems.
- Check the engine speed. The engine speed can be checked by using an intelligent tester. To check, follow the operation below:
  (a) Connect the intelligent tester to the DLC3.
  (b) Start the engine.
  (c) Turn the tester ON
  (d) Select the following menu items: DIAGNOSIS / ENHANCED OBD II / DATA LIST / PRIMARY / ENGINE SPD.
  The engine speed may be indicated as zero despite the engine revolving normally. This is caused by a lack of NE signals from the Crankshaft Position (CKP) sensor. Alternatively, the engine speed may be indicated as lower than the actual engine speed, if the CKP sensor output voltage is insufficient.
- Read freeze frame data using an intelligent tester. Freeze frame data record the engine condition when malfunctions are detected. When troubleshooting, freeze frame data can help determine if the vehicle was moving or stationary, if the engine was warmed up or not, if the air-fuel ratio was lean or rich, and other data, from the time the malfunction occurred.

1	READ VALUE USING INTELLIGENT TESTER (ENGINE SPD)

(a) Connect an intelligent tester to the DLC3.
(b) Turn the ignition switch to ON.
(c) Turn the tester ON.
(d) Select the following menu items: DIAGNOSIS / ENHANCED OBD II / DATA LIST / PRIMARY / ENGINE SPD.
(e) Start the engine.

(f) Read the values displayed on the tester while the engine is running.
Standard:
Correct values are displayed.
HINT:
- To check the engine speed change, display the graph on the tester.
- If the engine does not start, check the engine speed while cranking.
- If the engine speed indicated on the tester remains zero (0), there may be an open or short in the Crankshaft Position (CKP) sensor circuit.

OK → **CHECK FOR INTERMITTENT PROBLEMS**

ES

NG

2 INSPECT CRANKSHAFT POSITION SENSOR (RESISTANCE)

Component Side:

CKP Sensor

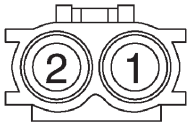

Front View

A078431E08

(a) Disconnect the C2 CKP sensor connector.
(b) Measure the resistance between terminals 1 and 2.
Standard resistance

Tester Connections	Conditions	Specified Conditions
1 - 2	Cold	985 to 1,600 Ω
1 - 2	Hot	1,265 to 1,890 Ω

HINT:
Terms cold and hot refer to the temperature of the coils.
Cold means approximately -10 to 50°C (14 to 122°F).
Hot means approximately 50 to 100°C (122 to 212°F).

(c) Reconnect the CKP sensor connector.

NG → **REPLACE CRANKSHAFT POSITION SENSOR**

OK

3	CHECK HARNESS AND CONNECTOR (CRANKSHAFT POSITION SENSOR - ECM)

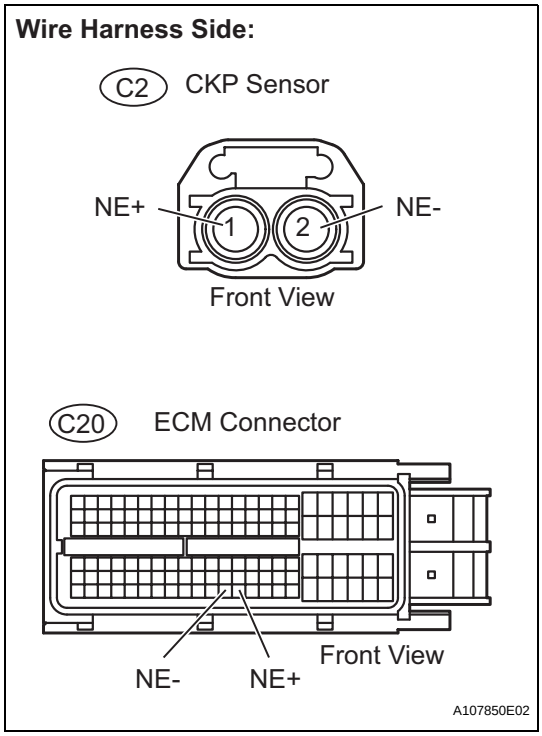

(a) Disconnect the C2 CKP sensor connector.
(b) Disconnect the C20 ECM connector.
(c) Check the resistance.

Standard resistance (Check for open)

Tester Connections	Specified Conditions
NE+ (C2-1) - NE+ (C20-122)	Below 1 Ω
NE- (C2-2) - NE- (C20-121)	

Standard resistance (Check for short)

Tester Connections	Specified Conditions
NE+ (C2-1) or NE+ (C20-122) - Body ground	10 kΩor higher
NE- (C2-2) or NE- (C20-121) - Body ground	

(d) Reconnect the ECM connector.
(e) Reconnect the CKP sensor connector.

NG → **REPAIR OR REPLACE HARNESS OR CONNECTOR**

OK

4	CHECK SENSOR INSTALLATION (CRANKSHAFT POSITION SENSOR)

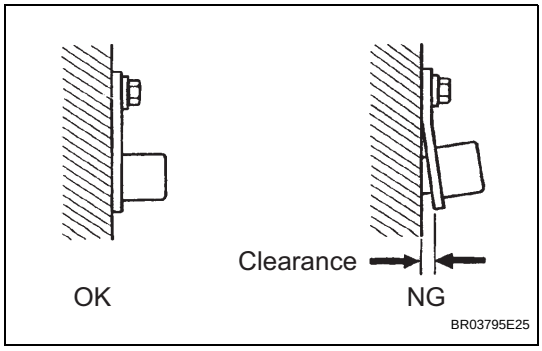

(a) Check the CKP sensor installation.

OK:

Sensor is installed correctly.

NG → **SECURELY REINSTALL SENSOR**

OK

5	CHECK CRANKSHAFT POSITION SENSOR PLATE (TEETH OF SENSOR PLATE)

(a) Check the teeth of the sensor plate.

OK:

Sensor plate does not have any cracks or deformation.

NG → **REPLACE CRANKSHAFT POSITION SENSOR PLATE**

OK

6	REPLACE CRANKSHAFT POSITION SENSOR

NEXT

7	CHECK WHETHER DTC OUTPUT RECURS

(a) Connect the intelligent tester to the DLC3.
(b) Turn the ignition switch to ON.
(c) Turn the tester ON.
(d) Clear DTCs (See page ES-34).
(e) Start the engine.
(f) Select the following menu items: DIAGNOSIS / ENHANCED OBD II / DTC INFO / CURRENT CODES.
(g) Read DTCs.

ES

Result

Display (DTC Output)	Proceed To
No output	A
P0335 or P0339	B

HINT:
If the engine does not start, replace the ECM.

B → REPLACE ECM

A

END

DTC	P0340	Camshaft Position Sensor "A" Circuit (Bank 1 or Single Sensor)

DESCRIPTION

The Camshaft Position (CMP) sensor consists of a magnet and an iron core which is wrapped with copper wire, and is installed onto the cylinder head. When the camshaft rotates, each of 3 teeth on the camshaft passes through the CMP sensor. This activates the internal magnet in the sensor, generating a voltage in the copper wire. The camshaft rotation is synchronized with the crankshaft rotation. When the crankshaft turns twice, the voltage is generated 3 times in the CMP sensor. The generated voltage in the sensor acts as a signal, allowing the ECM to locate the camshaft position. This signal is then used to control ignition timing, fuel injection timing, and the VVT system.

ES

DTC No.	DTC Detection Conditions	Trouble Areas
P0340	Case 1 • No Camshaft Position (CMP) sensor signal to ECM while cranking (2 trip detection logic) Case 2 • Camshaft/Crankshaft misalignment detected at engine speed of 600 rpm or more (1 trip detection logic)	• Open or short in CMP sensor circuit • CMP sensor • Camshaft • Jumped tooth of timing chain • ECM

HINT:
DTC P0340 indicates a malfunction relating to the CMP sensor (+) circuit (the wire harness between the ECM and CMP sensor, and the CMP sensor itself).
Reference: Inspection using an oscilloscope

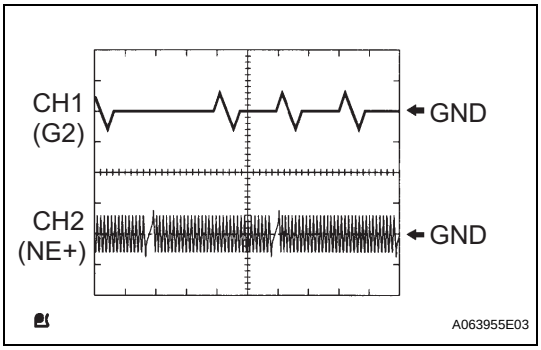

HINT:
- The correct waveform is as shown in the illustration.
- G2 stands for the CMP sensor signal, and NE+ stands for the Crankshaft Position (CKP) sensor signal.
- Grounding failure of the shielded wire may cause noise in waveforms.

Items	Contents
Terminals	CH1: G2 - NE- CH2: NE+ - NE-
Equipment Settings	5 V/Division, 20 ms/Division
Conditions	Cranking or idling

MONITOR DESCRIPTION

If no signal is transmitted by the CMP sensor despite the engine revolving, or the rotation of the camshaft and the crankshaft is not synchronized, the ECM interprets this as a malfunction of the sensor.
If the malfunction is not repaired successfully, a DTC is set 10 seconds after the engine is next started.

MONITOR STRATEGY

Related DTCs	P0340: Camshaft position sensor range check P0340: Camshaft position/crankshaft position misalignment
Required Sensors/Components (Main)	Camshaft Position (CMP) sensor

Required Sensors/Components (Related)	Crankshaft Position (CKP) sensor
Frequency of Operation	Continuous
Duration	4 seconds: CMP sensor range check 5 seconds: Camshaft position/crankshaft position misalignment
MIL Operation	2 driving cycles: CMP sensor range check Immediate: Camshaft position/crankshaft position misalignment
Sequence of Operation	None

TYPICAL ENABLING CONDITIONS

All:

Monitor runs whenever following DTCs not present	None

Camshaft Position Sensor Range Check:

Starter	ON
Minimal battery voltage while starter ON	Less than 11 V

Camshaft Position/Crankshaft Position Misalignment:

Engine speed	600 rpm or more
Starter	OFF

TYPICAL MALFUNCTION THRESHOLDS

Camshaft Position Sensor Range Check:

CMP sensor signal	No signal

Camshaft Position/Crankshaft Position Misalignment:

Camshaft position and crankshaft position phase	Misaligned

COMPONENT OPERATING RANGE

CMP sensor	• CMP sensor output voltage fluctuates while camshaft revolving • 3 CMP sensor signals per 2 crankshaft revolutions

WIRING DIAGRAM

Refer to DTC P0335 (See page ES-163).

INSPECTION PROCEDURE

HINT:

Read freeze frame data using an intelligent tester. Freeze frame data record the engine condition when malfunctions are detected. When troubleshooting, freeze frame data can help determine if the vehicle was moving or stationary, if the engine was warmed up or not, if the air-fuel ratio was lean or rich, and other data, from the time the malfunction occurred.

1 INSPECT CAMSHAFT POSITION SENSOR (RESISTANCE)

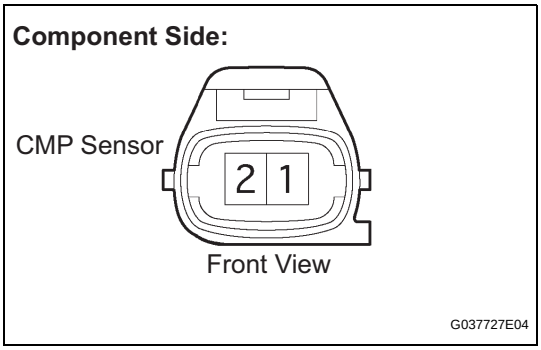

(a) Disconnect the C18 Camshaft Position (CMP) sensor connector.
(b) Measure the resistance between terminals 1 and 2.
Standard resistance

Tester Connections	Conditions	Specified Conditions
1 - 2	Cold	1,630 to 2,740 Ω
1 - 2	Hot	2,065 to 3,225 Ω

HINT:
Terms cold and hot refer to the temperature of the coils.
Cold means approximately -10° to 50°C (14 °to 122°F).
Hot means approximately 50° to 100°C (122°to 212°F).

(c) Reconnect the CMP sensor connector.

NG → **REPLACE CAMSHAFT POSITION SENSOR**

OK

2 CHECK HARNESS AND CONNECTOR (CAMSHAFT POSITION SENSOR - ECM)

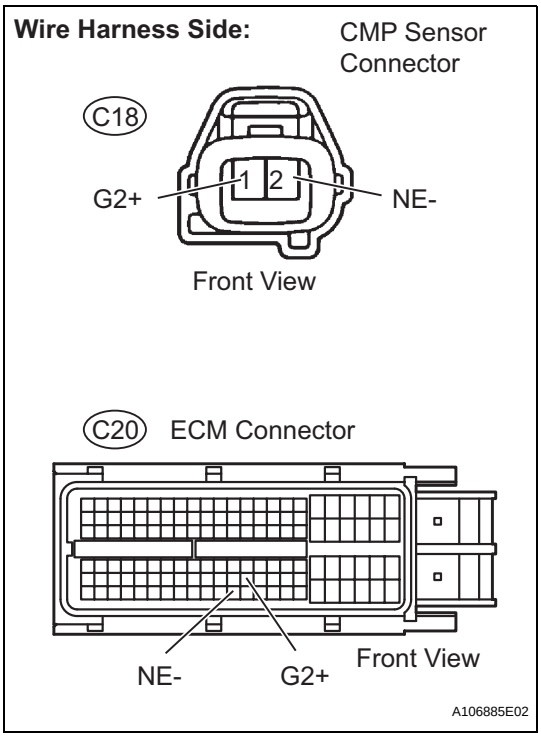

(a) Disconnect the C18 CMP sensor connector.
(b) Disconnect the C20 ECM connector.
(c) Check the resistance.
Standard resistance (Check for open)

Tester Connections	Specified Conditions
G2+ (C18-1) - G2+ (C20-99)	Below 1 Ω
NE- (C18-2) - NE- (C20-121)	

Standard resistance (Check for short)

Tester Connections	Specified Conditions
G2+ (C18-1) or G2+ (C20-99) - Body ground	10 kΩ or higher
NE- (C18-2) or NE- (C20-121) - Body ground	

(d) Reconnect the ECM connector.
(e) Reconnect the CMP sensor connector.

NG → **REPAIR OR REPLACE HARNESS OR CONNECTOR**

OK

3 CHECK SENSOR INSTALLATION (CAMSHAFT POSITION SENSOR)

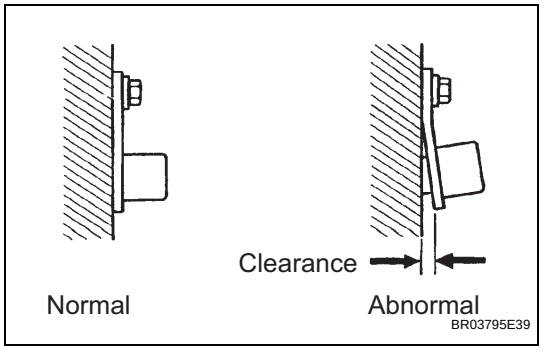

(a) Check the CMP sensor installation.
OK:
Sensor is installed correctly.

NG → **SECURELY REINSTALL SENSOR**

OK

4 CHECK VALVE TIMING (See page ES-71)

NG → **ADJUST VALVE TIMING**

OK

5 CHECK CAMSHAFT

(a) Check the teeth of the camshaft.
OK:
Camshaft teeth do not have any cracks or deformation.

NG → **REPLACE CAMSHAFT**

OK

6 REPLACE CAMSHAFT POSITION SENSOR

NEXT

7 CHECK WHETHER DTC OUTPUT RECURS

(a) Connect the intelligent tester to the DLC3.
(b) Turn the ignition switch to ON.
(c) Turn the tester ON.
(d) Clear DTCs (See page ES-34).
(e) Start the engine.
(f) Select the following menu items: DIAGNOSIS / ENHANCED OBD II / DTC INFO / PENDING CODES.
(g) Read DTCs.

Result

Display (DTC Output)	Proceed To
No output	A

ES

Display (DTC Output)	Proceed To
P0340	B

HINT:
If the engine does not start, replace the ECM.

B → REPLACE ECM

A

END

DTC	P0351	Ignition Coil "A" Primary / Secondary Circuit

DTC	P0352	Ignition Coil "B" Primary / Secondary Circuit

DTC	P0353	Ignition Coil "C" Primary / Secondary Circuit

DTC	P0354	Ignition Coil "D" Primary / Secondary Circuit

DESCRIPTION

HINT:

- These DTCs indicate malfunctions relating to the primary circuit.
- If DTC P0351 is set, check No. 1 ignition coil with igniter circuit.
- If DTC P0352 is set, check No. 2 ignition coil with igniter circuit.
- If DTC P0353 is set, check No. 3 ignition coil with igniter circuit.
- If DTC P0354 is set, check No. 4 ignition coil with igniter circuit.

A Direct Ignition System (DIS) is used on this vehicle.

The DIS is a 1-cylinder ignition system in which each cylinder is ignited by one ignition coil and one spark plug is connected to the end of each secondary wiring. A powerful voltage, generated in the secondary wiring, is applied directly to each spark plug. The sparks of the spark plugs pass from the center electrode to the ground electrodes.

The ECM determines the ignition timing and transmits the ignition (IGT) signals to each cylinder. Using the IGT signal, the ECM turns the power transistor inside the igniter on and off. The power transistor, in turn, switches on and off the current to the primary coil. When the current to the primary coil is cut off, a powerful voltage is generated in the secondary coil. This voltage is applied to the spark plugs, causing them to spark inside the cylinders. As the ECM cuts the current to the primary coil, the igniter sends back an ignition confirmation (IGF) signal to the ECM, for each cylinder ignition.

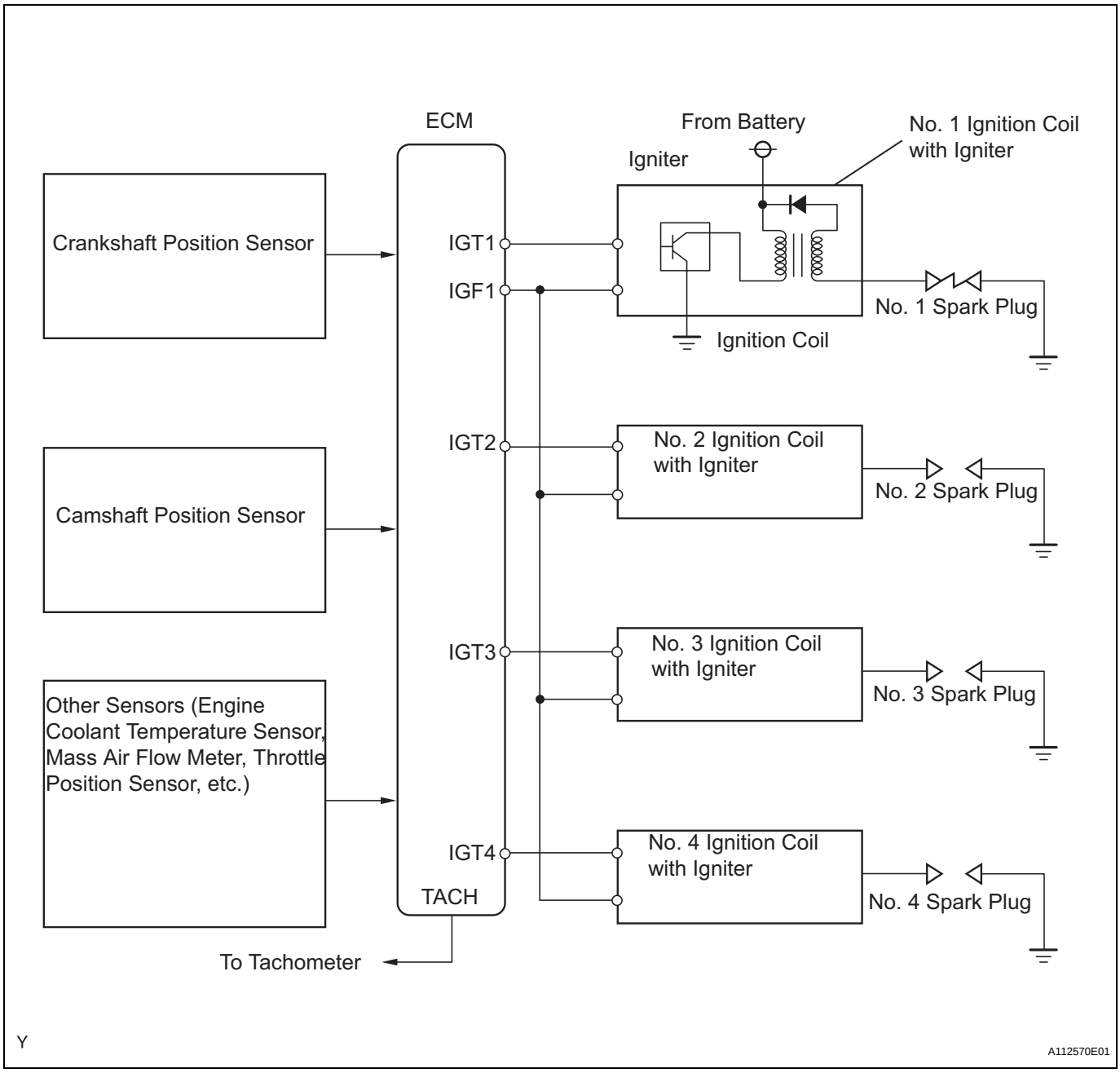

DTC No.	DTC Detection Conditions	Trouble Areas
P0351 P0352 P0353 P0354	No IGF signal to ECM while engine running (1 trip detection logic)	• Ignition system • Open or short in IGF1 or IGT circuit (1 to 4) between ignition coil with igniter and ECM • No. 1 to No. 4 ignition coils with igniters • ECM

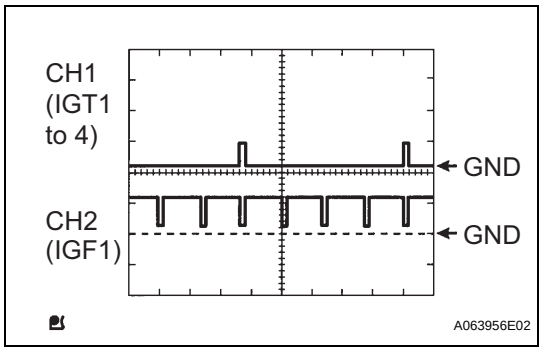

Reference: Inspection using an oscilloscope.
While cranking or idling the engine, check the waveform between terminals IGT (1 to 4) and E1, and IGF1 and E1 of the ECM connector.

Items	Contents
Terminals	CH1: IGT1, IGT2, IGT3, IGT4 - E1 CH2: IGF1 - E1
Equipment Settings	2 V/Division 20 msec./Division
Conditions	Cranking or idling

MONITOR DESCRIPTION

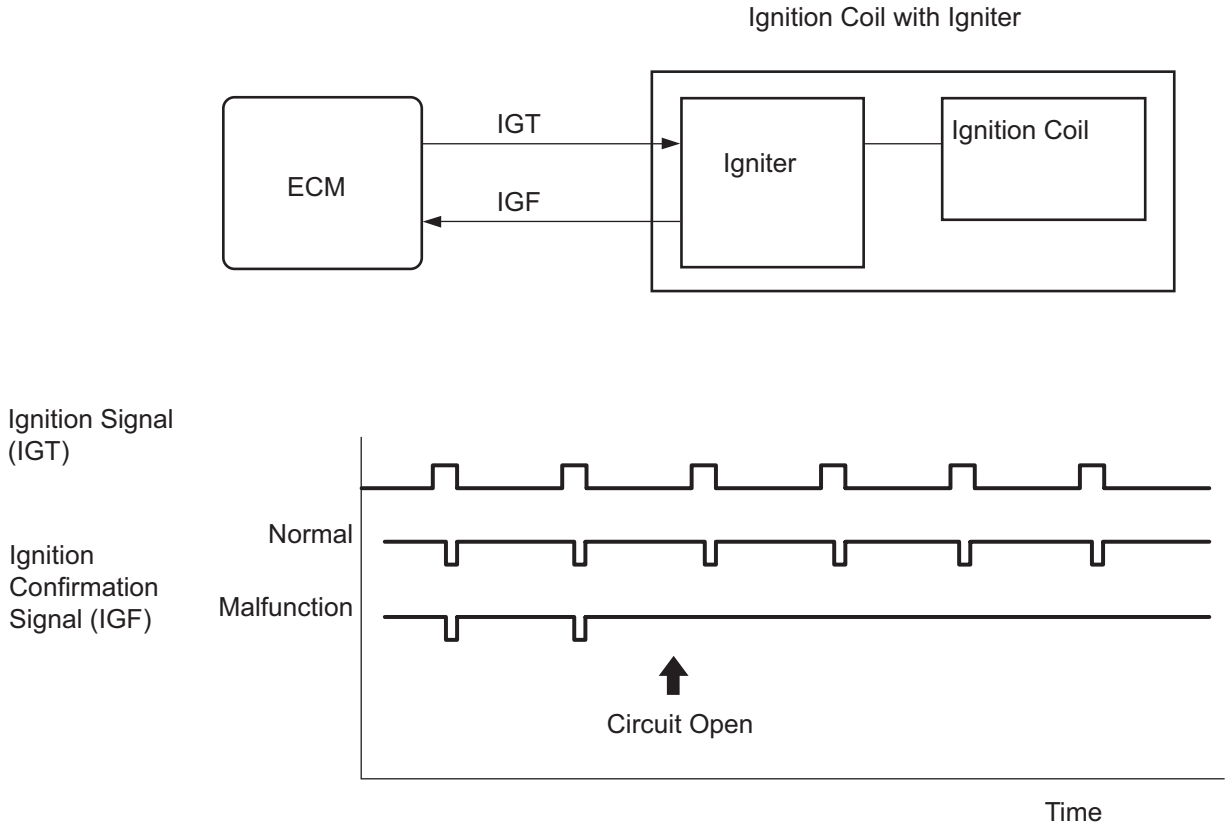

If the ECM does not receive any IGF signals despite transmitting the IGT signal, it interprets this as a fault in the igniter and sets a DTC.
If the malfunction is not repaired successfully, a DTC is set 1 second after the engine is next started.

MONITOR STRATEGY

Related DTCs	P0351: Igniter (cylinder 1) malfunction P0352: Igniter (cylinder 2) malfunction P0353: Igniter (cylinder 3) malfunction P0354: Igniter (cylinder 4) malfunction
Required Sensors/Components (Main)	Igniter
Required Sensors/Components (Related)	Crankshaft position sensor
Frequency of Operation	Continuous
Duration	0.256 seconds and 4 sparks
MIL Operation	Immediate
Sequence of Operation	None

TYPICAL ENABLING CONDITIONS

Monitor runs whenever following DTCs not present	None
Either of following conditions A or B met	-

A. Engine RPM	1,500 rpm or less
B. Starter	OFF
Either of following conditions C or D met	-
C. Both of following conditions (a) and (b) met	-
(a) Engine speed	500 rpm or less
(b) Battery voltage	6 V or more
D. All of following conditions (a), (b) and (c) met	-
(a) Engine speed	More than 500 rpm
(b) Battery voltage	10 V or more
(c) Number of sparks after CPU reset	5 sparks or more

TYPICAL MALFUNCTION THRESHOLDS

IGF signal	ECM does not receive any IGF signal despite ECM sending IGT signal to igniter

COMPONENT OPERATING RANGE

IGF signal	Igniter transmits IGF signal when it receives IGT signal from ECM

WIRING DIAGRAM

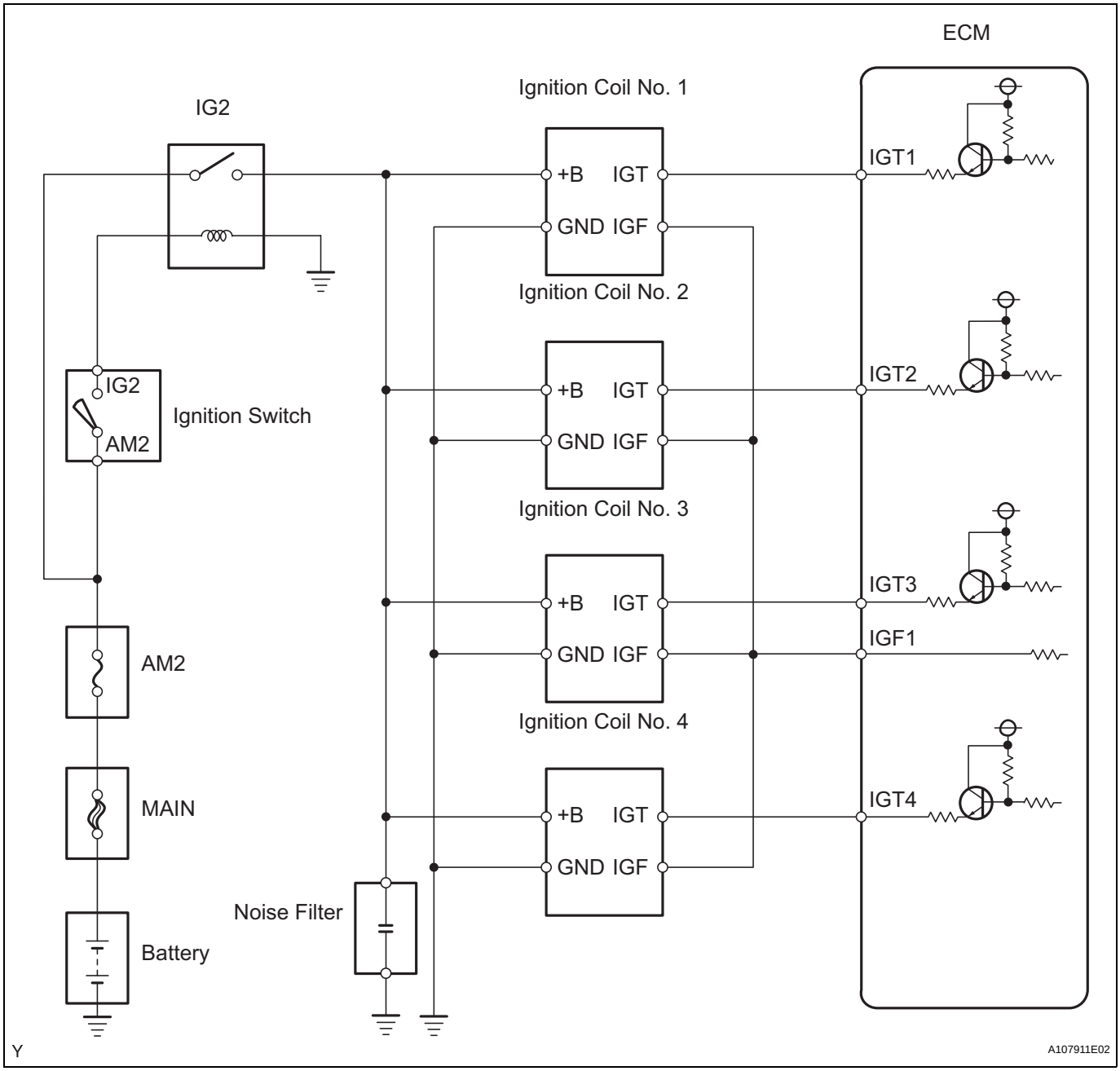

INSPECTION PROCEDURE

HINT:

Read freeze frame data using an intelligent tester. Freeze frame data record the engine condition when malfunctions are detected. When troubleshooting, freeze frame data can help determine if the vehicle was moving or stationary, if the engine was warmed up or not, if the air-fuel ratio was lean or rich, and other data, from the time the malfunction occurred.

1 INSPECT IGNITION COIL ASSEMBLY (POWER SOURCE)

Wire Harness Side:

Ignition Coil with Igniter Connector

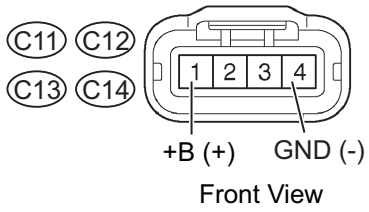

Y

A054393E33

(a) Disconnect the ignition coil with igniter connector.
(b) Check the resistance.

Standard resistance (Check for open)

Tester Connections	Specified Conditions
GND (C11-4) - Body ground	Below 1 Ω
GND (C12-4) - Body ground	
GND (C13-4) - Body ground	
GND (C14-4) - Body ground	

(c) Turn the ignition switch to ON.
(d) Measure the voltage between the terminals of the wire harness side connector.

Standard voltage

Tester Connections	Specified Conditions
+B (C11-1) - GND (C11-4)	11 to 14 V
+B (C12-1) - GND (C12-4)	
+B (C13-1) - GND (C13-4)	
+B (C14-1) - GND (C14-4)	

(e) Reconnect the ignition coil with igniter connector.

NG → **REPAIR OR REPLACE HARNESS OR CONNECTOR**

OK

2 CHECK HARNESS AND CONNECTOR (IGNITION COIL ASSEMBLY - ECM)

Wire Harness Side:

Ignition Coil with Igniter Connector

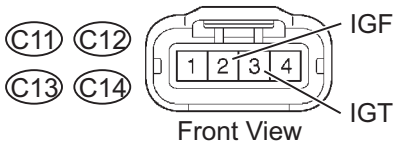

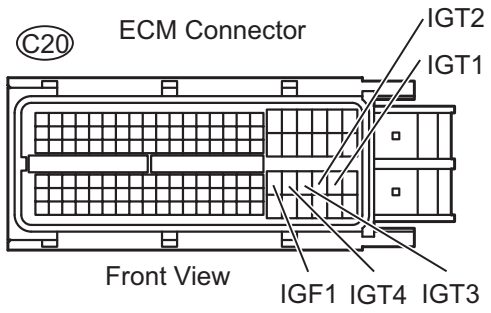

A105983E02

(a) Disconnect the ignition coil with connector.
(b) Disconnect the C20 ECM connector.
(c) Check the resistance.

Standard resistance (Check for open)

Tester Connections	Specified Conditions
IGF (C11-2) - IGF1 (C20-81)	Below 1 Ω
IGF (C12-2) - IGF1 (C20-81)	
IGF (C13-2) - IGF1 (C20-81)	
IGF (C14-2) - IGF1 (C20-81)	

Standard resistance (Check for open)

Tester Connections	Specified Conditions
IGT (C11-3) - IGT1 (C20-85)	Below 1 Ω
IGT (C12-3) - IGT2 (C20-84)	
IGT (C13-3) - IGT3 (C20-83)	
IGT (C14-3) - IGT4 (C20-82)	

Standard resistance (Check for short)

Tester Connections	Specified Conditions
IGF (C11-2) or IGF1 (C20-81) - Body ground	10 kΩ or higher
IGF (C12-2) or IGF1 (C20-81) - Body ground	
IGF (C13-2) or IGF1 (C20-81) - Body ground	
IGF (C14-2) or IGF1 (C20-81) - Body ground	

Standard resistance (Check for short)

Tester Connections	Specified Conditions
IGT (C11-3) or IGT1 (C20-85) - Body ground	10 kΩ or higher
IGT (C12-3) or IGT2 (C20-84) - Body ground	
IGT (C13-3) or IGT3 (C20-83) - Body ground	
IGT (C14-3) or IGT4 (C20-82) - Body ground	

(d) Reconnect the ECM connector.
(e) Reconnect the ignition coil with igniter connector.

NG → **REPAIR OR REPLACE HARNESS OR CONNECTOR**

OK

3	CHECK WHETHER DTC OUTPUT RECURS (DTC P0351, P0352, P0353 OR P0354)

(a) Connect an intelligent tester to the DLC3.
(b) Turn the ignition switch to ON and turn the tester ON.
(c) Clear DTCs (See page ES-34).
(d) Shuffle arrangement of the ignition coils with igniters (among No. 1 to No. 4 cylinders).
NOTICE:
Do not shuffle the connectors.
(e) Perform a simulation test.
(f) Check DTCs displayed on the tester.

Result

Display (DTC Output)	Proceed To
Same DTC output	A
Different ignition coil DTC output	B

B → **REPLACE IGNITION COIL ASSEMBLY**

A

REPLACE ECM

DTC	P0420	Catalyst System Efficiency Below Threshold (Bank 1)

MONITOR DESCRIPTION

The ECM uses sensors mounted in front of and behind the Three-Way Catalytic Converter (TWC) to monitor its efficiency.
The first sensor, the Air-Fuel Ratio (A/F) sensor, sends pre-catalyst information to the ECM. The second sensor, the Heated Oxygen (HO2) sensor, sends post-catalyst information to the ECM.
In order to detect any deterioration in the TWC, the ECM calculates the Oxygen Storage Capacity (OSC) of the TWC. This calculation is based on the voltage output of the HO2 sensor while performing active air-fuel ratio control, rather than the conventional detecting method, which uses the locus ratio.
The OSC value is an indication of the oxygen storage capacity of the TWC. When the vehicle is being driven with a warm engine, active air-fuel ratio control is performed for approximately 15 to 20 seconds. When it is performed, the ECM deliberately sets the air-fuel ratio to lean or rich levels. If the rich-lean cycle of the HO2 sensor is long, the OSC becomes greater. There is a direct correlation between the OSCs of the HO2 sensor and the TWC.
The ECM uses the OSC value to determine the state of the TWC. If any deterioration has occurred, it illuminates the MIL and sets the DTC.

DTC No.	DTC Detection Conditions	Trouble Areas
P0420	OSC value smaller than standard value under active air-fuel ratio control (2 trip detection logic)	• Front exhaust pipe (with TWC) • Gas leakage from exhaust system • Air-Fuel Ratio (A/F) sensor (sensor 1) • Heated Oxygen (HO2) sensor (sensor 2)

MONITOR STRATEGY

Related DTCs	P0420: Catalyst Deterioration
Required Sensors/Components (Main)	A/F sensor and HO2 sensor
Required Sensors/Components (Related)	Intake air temperature sensor, mass air flow meter, crankshaft position sensor and engine coolant temperature sensor
Frequency of Operation	Once per driving cycle
Duration	About 30 seconds
MIL Operation	2 driving cycles
Sequence of Operation	None

TYPICAL ENABLING CONDITIONS

Monitor runs whenever following DTCs not present	P0011 (VVT System 1 - Advance) P0012 (VVT System 1 - Retard) P0031, 32 (A/F Sensor heater - Sensor 1) P0037, 38 (O2 Sensor heater - Sensor 2) P0100 - P0103 (MAF meter) P0115 - P0118 (ECT sensor) P0120 - P0223, P2135 (TP sensor) P0125 (Insufficient ECT for Closed Loop) P0136 (O2 Sensor - Sensor 2) P0171, P0172 (Fuel system) P0300 - P0304 (Misfire) P0335 (CKP sensor) P0340 (CMP sensor) P0351 - P0354 (Igniter) P0500 (VSS) P2196 (A/F Sensor - rationality) P2A00 (A/F Sensor - slow response)
Battery voltage	11 V or more
Intake air temperature	-10°C (14°F) or more

Engine coolant temperature	75°C (167°F) or more
Atmospheric pressure	76 kPa (570 mmHg) or more
Idling	OFF
Engine RPM	Less than 4,000 rpm
A/F sensor status	Activated
Fuel system status	Closed loop
Engine load	10 to 80 %
All of following conditions (a), (b) and (c) met	-
(a) Mass air flow rate	2.5 to 27 g/sec
(b) Estimated front catalyst temperature	620° to 800°C (1,148° to 1,472°F)
(c) Estimated rear catalyst temperature	400° to 900°C (752° to 1,652°F)
Rear HO2 sensor heater monitor	Completed
Shift position	4th or 5th (M/T) 3rd or 4th (A/T)

ES

TYPICAL MALFUNCTION THRESHOLDS

Oxygen Storage Capacity (OSC) of Three-Way Catalytic Converter (TWC)	Less than 0.046875 g

MONITOR RESULT

Refer to CHECKING MONITOR STATUS (See page ES-17).

CONFIRMATION DRIVING PATTERN

HINT:

Performing this confirmation pattern will activate the catalyst monitor. This is very useful for verifying the completion of a repair.

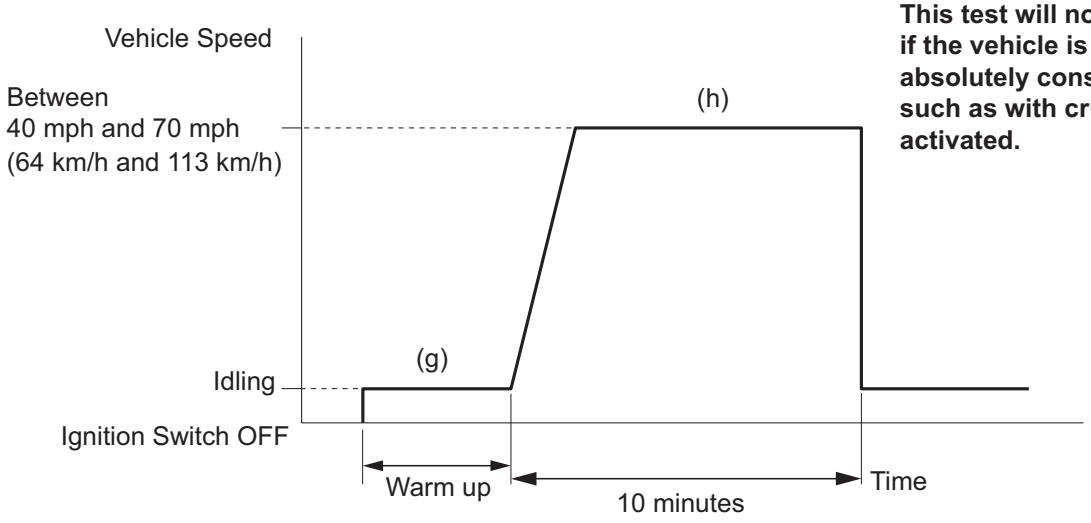

NOTICE:
This test will not be completed if the vehicle is driven at absolutely constant speed such as with cruise control activated.

(Note: Even if vehicle stops during driving pattern, test can be resumed)

P

A115372E13

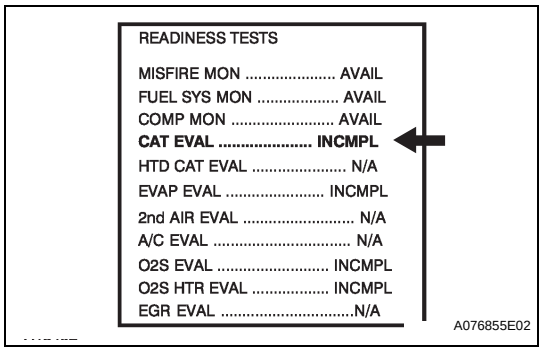

(a) Connect the intelligent tester to the DLC3.
(b) Turn the ignition switch to ON.
(c) Turn the tester ON.
(d) Clear DTCs (where set) (See page ES-34).
(e) Select the following menu items: DIAGNOSIS / CARB OBD II / READINESS TESTS.
(f) Check that CAT EVAL is INCMPL (incomplete).
(g) Start the engine and warm it up.
(h) Drive the vehicle at between 40 mph and 70 mph (64 km/h and 113 km/h) for at least 10 minutes.
(i) Note the state of the Readiness Tests items. Those items will change to COMPL (complete) as CAT EVAL monitor operates.
(j) On the tester, select the following menu items: DIAGNOSIS / ENHANCED OBD II / DTC INFO / PENDING CODES and check if any DTCs (any pending DTCs) are set.
HINT:
If CAT EVAL does not change to COMPL, and any pending DTCs fail to set, extend the driving time.

CONDITIONING FOR SENSOR TESTING

HINT:
Perform the operation with the engine speeds and time durations described below prior to checking the waveforms of the A/F and HO2 sensors. This is in order to activate the sensors sufficiently to obtain the appropriate inspection results.

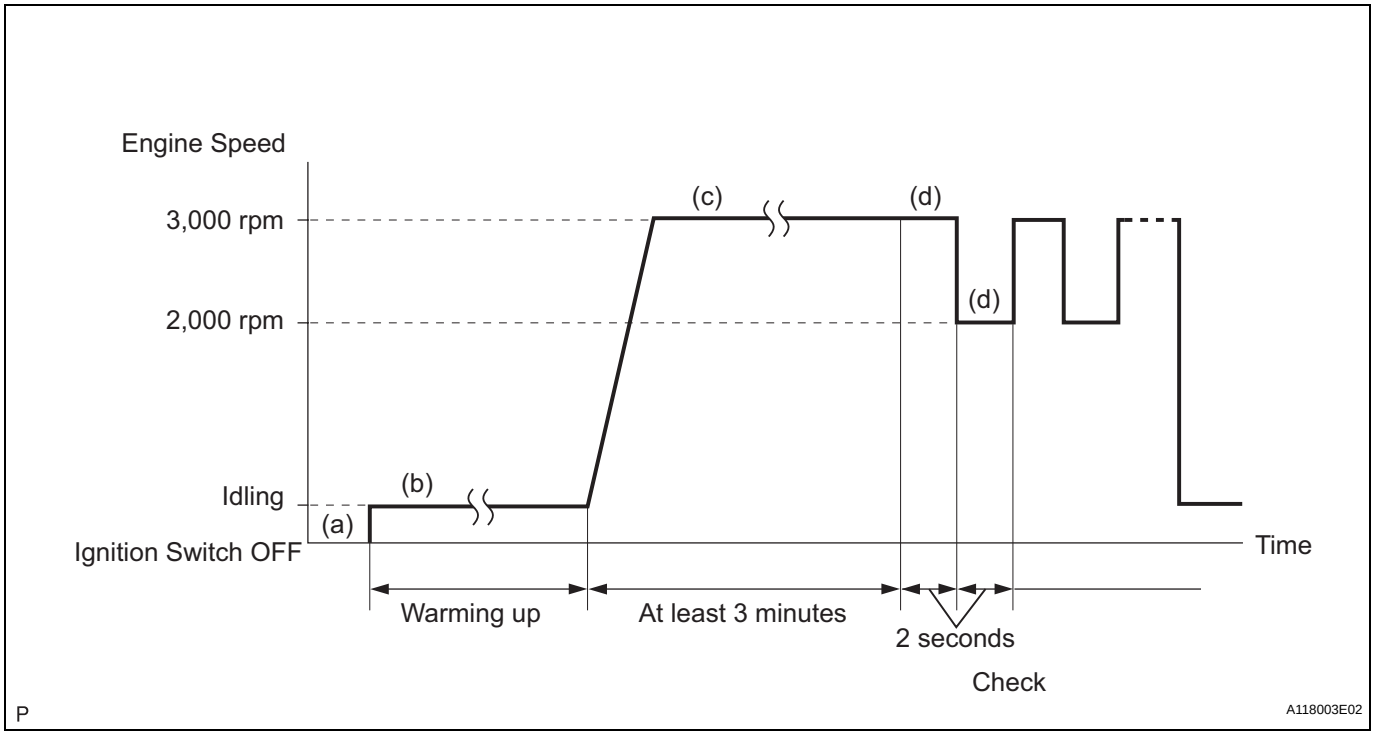

(a) Connect an intelligent tester to the DLC3.

(b) Start the engine and warm it up with all the accessories switched OFF, until the engine coolant temperature stabilizes.
(c) Run the engine at an engine speed of between 2,500 rpm and 3,000 rpm for at least 3 minutes.
(d) While running the engine at 3,000 rpm and 2,000 rpm alternating at 2 second intervals, check the waveforms of the A/F and HO2 sensors using the tester.
HINT:

- If either voltage output of the Air-Fuel Ratio (A/F) or Heated Oxygen (HO2) sensor does not fluctuate, or there is a noise in the waveform of either sensor the sensor may be malfunctioning.
- If the voltage outputs of both the sensors remain lean or rich, the air-fuel ratio may be extremely lean or rich. In such cases, perform the following A/F CONTROL using an intelligent tester.
- If the Three-Way Catalytic Converter (TWC) has deteriorated, the HO2 sensor (located behind the TWC) voltage output fluctuates up and down frequently, even under normal driving conditions (active air-fuel ratio control is not performed).

ES

Voltage output when active air-fuel ratio control not performed:

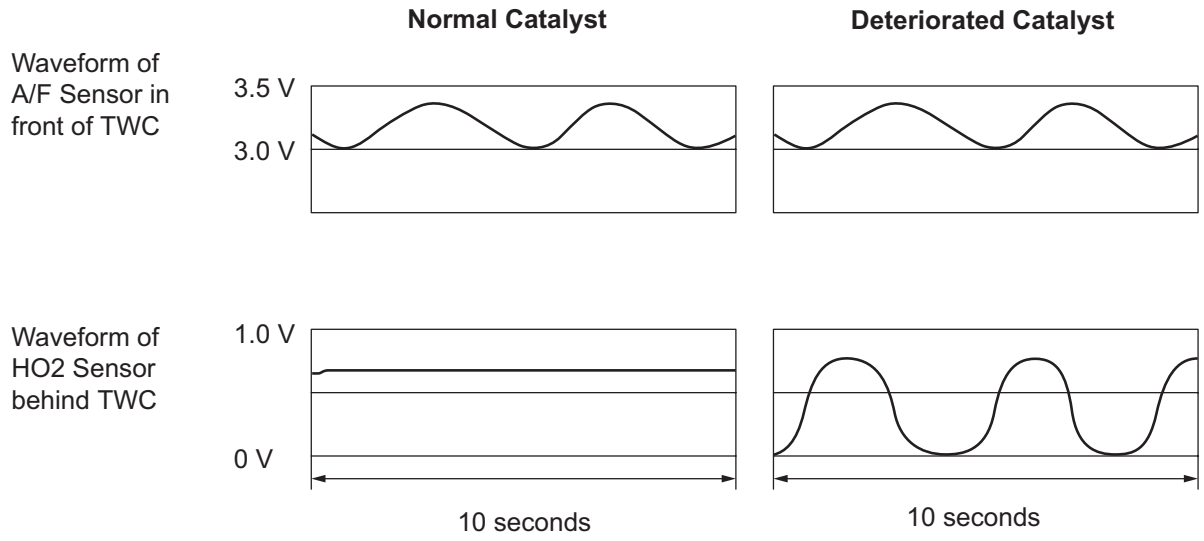

Y
A121610E02

INSPECTION PROCEDURE

HINT:
Read freeze frame data using an intelligent tester. Freeze frame data record the engine condition when malfunctions are detected. When troubleshooting, freeze frame data can help determine if the vehicle was moving or stationary, if the engine was warmed up or not, if the air-fuel ratio was lean or rich, and other data, from the time the malfunction occurred.

1	CHECK ANY OTHER DTCS OUTPUT (IN ADDITION TO DTC P0420)

(a) Connect an intelligent tester to the DLC3.
(b) Turn the ignition switch to ON and turn the tester ON.
(c) Select the following menu items: DIAGNOSIS / ENHANCED OBD II / DTC INFO / CURRENT CODES.
(d) Read DTCs.

Result

Display (DTC Output)	Proceed To
P0420	A

Display (DTC Output)	Proceed To
P0420 and other DTCs	B

HINT:
If any DTCs other than P0420 are output, troubleshoot those DTCs first.

B → GO TO DTC CHART

A

2 PERFORM ACTIVE TEST USING INTELLIGENT TESTER (A/F CONTROL)

(a) Connect the intelligent tester to the DLC3.
(b) Start the engine and turn the tester ON.
(c) Warm up the engine at an engine speed of 2,500 rpm for approximately 90 seconds.
(d) On the tester, select the following menu items: DIAGNOSIS / ENHANCED OBD II / ACTIVE TEST / A/F CONTROL.
(e) Perform the A/F CONTROL operation with the engine in an idling condition (press the RIGHT or LEFT button to change the fuel injection volume).
(f) Monitor the voltage outputs of the A/F and HO2 sensors (AFS B1 S1 and O2S B1 S2) displayed on the tester.

Result:

A/F sensor reacts in accordance with increases and decreases in fuel injection volume:
+25 % = Rich output:
Less than 3.0 V
-12.5 % = Lean output:
More than 3.35 V

NOTICE:
The A/F sensor has an output delay of a few seconds and the HO2 sensor has a maximum output delay of approximately 20 seconds.

Case	A/F Sensor (Sensor 1) Output Voltage		HO2 Sensor (Sensor 2) Output Voltage		Main Suspected Trouble Areas
1	Injection Volume +25 % -12.5 %		Injection Volume +25 % -12.5 %		• Catalyst • Exhaust gas leakage
	Output Voltage More than 3.35 V Less than 3.0 V		Output Voltage More than 0.5 V Less than 0.4 V		
2	Injection Volume +25 % -12.5 %		Injection Volume +25 % -12.5 %		• A/F sensor • A/F sensor heater • A/F sensor circuit
	Output Voltage Almost no reaction		Output Voltage More than 0.5 V Less than 0.4 V		

Case	A/F Sensor (Sensor 1) Output Voltage		HO2 Sensor (Sensor 2) Output Voltage		Main Suspected Trouble Areas
3	Injection Volume +25 % -12.5 %		Injection Volume +25 % -12.5 %		• HO2 sensor • HO2 sensor heater • HO2 sensor circuit
	Output Voltage More than 3.35 V Less than 3.0 V		Output Voltage Almost no reaction		
4	Injection volume +25 % -12.5 %		Injection Volume +25 % -12.5 %		Extremely rich or lean actual air-fuel ratio • Injector • Fuel pressure • Gas leakage from exhaust system
	Output Voltage Almost no reaction		Output Voltage Almost no reaction		

ES

Following the A/F CONTROL procedure enables technicians to check and graph the voltage outputs of both the A/F and HO2 sensors.
To display the graph, select the following menu items on the tester: DIAGNOSIS / ENHANCED OBD II / ACTIVE TEST / A/F CONTROL / USER DATA / AFS B1 S1 and O2S B1 S2, and press the YES button and then the ENTER button followed by the F4 button.

Result

Result	Proceed To
Case 1	A
Case 2	B
Case 3	C
Case 4	D

B → **REPLACE AIR FUEL RATIO SENSOR**

C → **Go to step 4**

D → **CHECK AND REPLACE EXTREMELY RICH OR LEAN ACTUAL AIR-FUEL RATIO, AND GO TO STEP 3**

A

3 CHECK FOR EXHAUST GAS LEAKAGE

OK:
No gas leakage.

NG → **REPAIR OR REPLACE EXHAUST GAS LEAKAGE POINT**

OK

REPLACE THREE-WAY CATALYTIC CONVERTER (BOTH FRONT AND REAR CATALYSTS (FRONT EXHAUST PIPE))

4	CHECK FOR EXHAUST GAS LEAKAGE

OK:
No gas leakage.

NG → **REPAIR OR REPLACE EXHAUST GAS LEAKAGE POINT**

OK

REPLACE HEATED OXYGEN SENSOR

DTC	P043E	Evaporative Emission System Reference Orifice Clog Up

DTC	P043F	Evaporative Emission System Reference Orifice High Flow

DTC SUMMARY

DTCs	Monitoring Items	Malfunction Detection Conditions	Trouble Areas	Detection Timings	Detection Logic
P043E	Reference orifice clogged	P043E, P043F, P2401, P2402 and P2419 present when one of following conditions met during key-off EVAP monitor: • EVAP pressure just after reference pressure measurement greater than -1 kPa-g (-7.5 mmHg-g) • Reference pressure less than -4.85 kPa-g (-36.4 mmHg-g) • Reference pressure greater than -1.057 kPa-g (-7.93 mmHg-g) • Reference pressure not saturated • Reference pressure difference between first and second 0.7 kPa-g (5.25 mmHg-g) or more HINT: Typical example values	• Canister pump module (Reference orifice, leak detection pump, vent valve) • Connector/wire harness (Canister pump module - ECM) • EVAP system hose (pipe from air inlet port to canister pump module, canister filter, fuel tank vent hose) • ECM	While ignition switch OFF	2 trip
P043F	Reference orifice high-flow		• Canister pump module (Reference orifice, leak detection pump, vent valve) • Connector/wire harness (Canister pump module - ECM) • EVAP system hose (pipe from air inlet port to canister pump module, canister filter, fuel tank vent hose) • ECM	While ignition switch OFF	2 trip

HINT:
The reference orifice is located inside the canister pump module.

DESCRIPTION

The description can be found in the EVAP (Evaporative Emission) System (See page ES-319).

INSPECTION PROCEDURE

Refer to the EVAP System (See page ES-324).

MONITOR DESCRIPTION

5 hours* after the ignition switch is turned to OFF, the leak detection pump creates negative pressure (vacuum) in the EVAP system. The ECM monitors for leaks and actuator malfunctions based on the EVAP pressure.
HINT:
*: If the engine coolant temperature is not below 35°C (95°F) 5 hours after the ignition switch is turned to OFF, the monitor check starts 2 hours later. If it is still not below 35°C (95°F) 7 hours after the ignition switch is turned to OFF, the monitor check starts 2.5 hours later.

Sequence	Operations	Descriptions	Duration
-	ECM activation	Activated by soak timer, 5 hours (7 or 9.5 hours) after ignition switch turned to OFF.	-

Sequence	Operations	Descriptions	Duration
A	Atmospheric pressure measurement	Vent valve turned OFF (vent) and EVAP system pressure measured by ECM in order to register atmospheric pressure. If pressure in EVAP system not between 76 kPa-a and 110 kPa-a (570 mmHg-a and 825 mmHg-a), ECM cancels EVAP system monitor.	10 seconds
B	First reference pressure measurement	In order to determine reference pressure, leak detection pump creates negative pressure (vacuum) through reference orifice and then ECM checks if leak detection pump and vent valve operate normally.	60 seconds
C	EVAP system pressure measurement	Vent valve turned ON (closed) to shut EVAP system. Negative pressure (vacuum) created in EVAP system, and EVAP system pressure then measured. Write down measured value as will be used in leak check. If EVAP pressure does not stabilize within 15 minutes, ECM cancels EVAP system monitor.	15 minutes*
D	Purge VSV monitor	Purge VSV opened and then EVAP system pressure measured by ECM. Large increase indicates normality.	10 seconds
E	Second reference pressure measurement	After second reference pressure measurement, leak check performed by comparing first and second reference pressure. If stabilized system pressure higher than second reference pressure, ECM determines that EVAP system leaking.	60 seconds
F	Final check	Atmospheric pressure measured and then monitoring result recorded by ECM.	-

* If only a small amount of fuel is in the fuel tank, it takes longer for the EVAP pressure to stabilize.

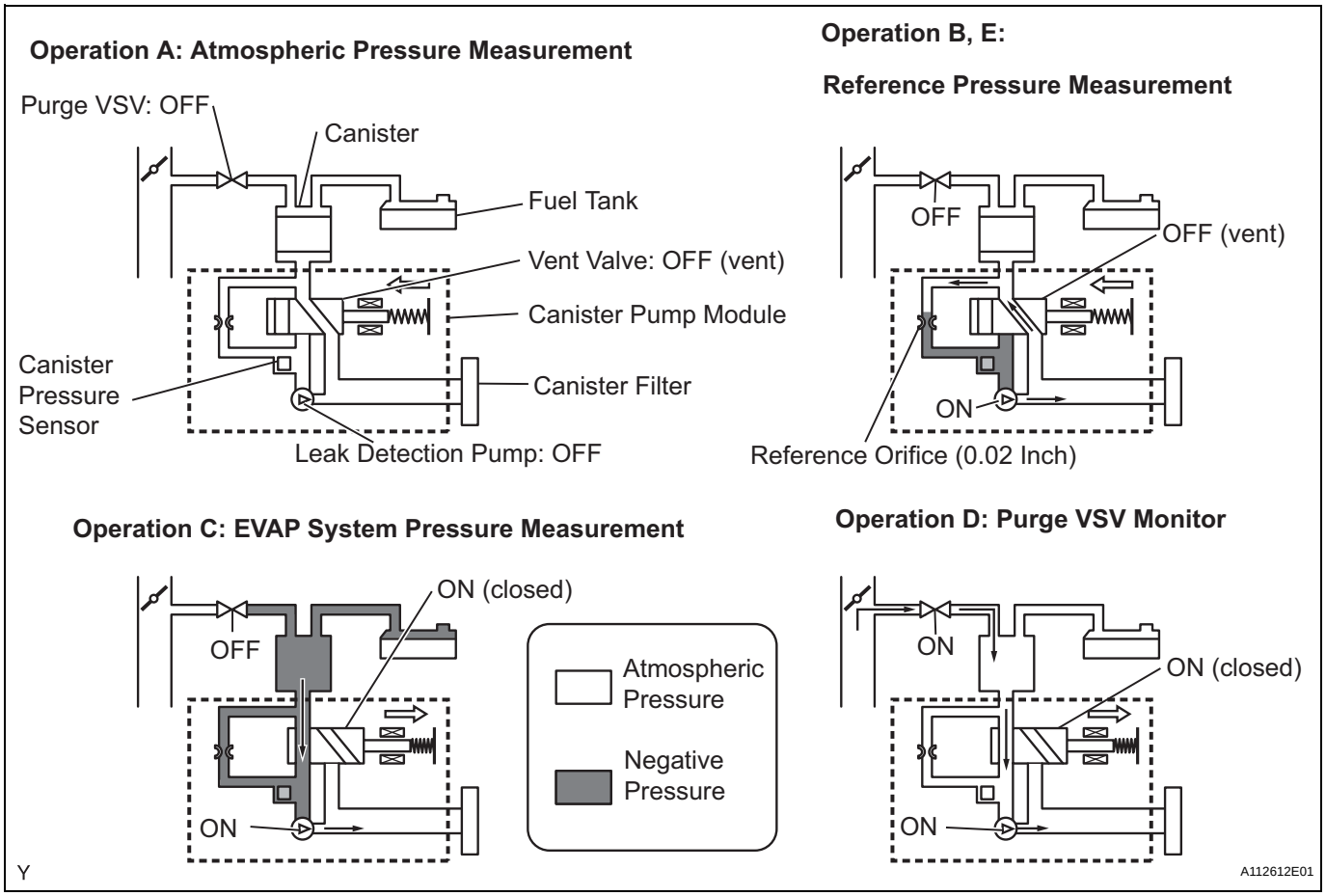

(a) P043E: Reference orifice clogged

In operation B, the leak detection pump creates negative pressure (vacuum) through the reference orifice. The EVAP system pressure is then measured by the ECM, using the canister pressure sensor, to determine the reference pressure. If the pressure is lower than -4.85 kPa-g (-36.4 mmHg-g), the ECM interprets this as a clog malfunction in the reference orifice, and stops the EVAP system monitor. The ECM then illuminates the MIL and sets the DTC (2 trip detection logic).

EVAP Pressure when Reference Orifice Clogged:

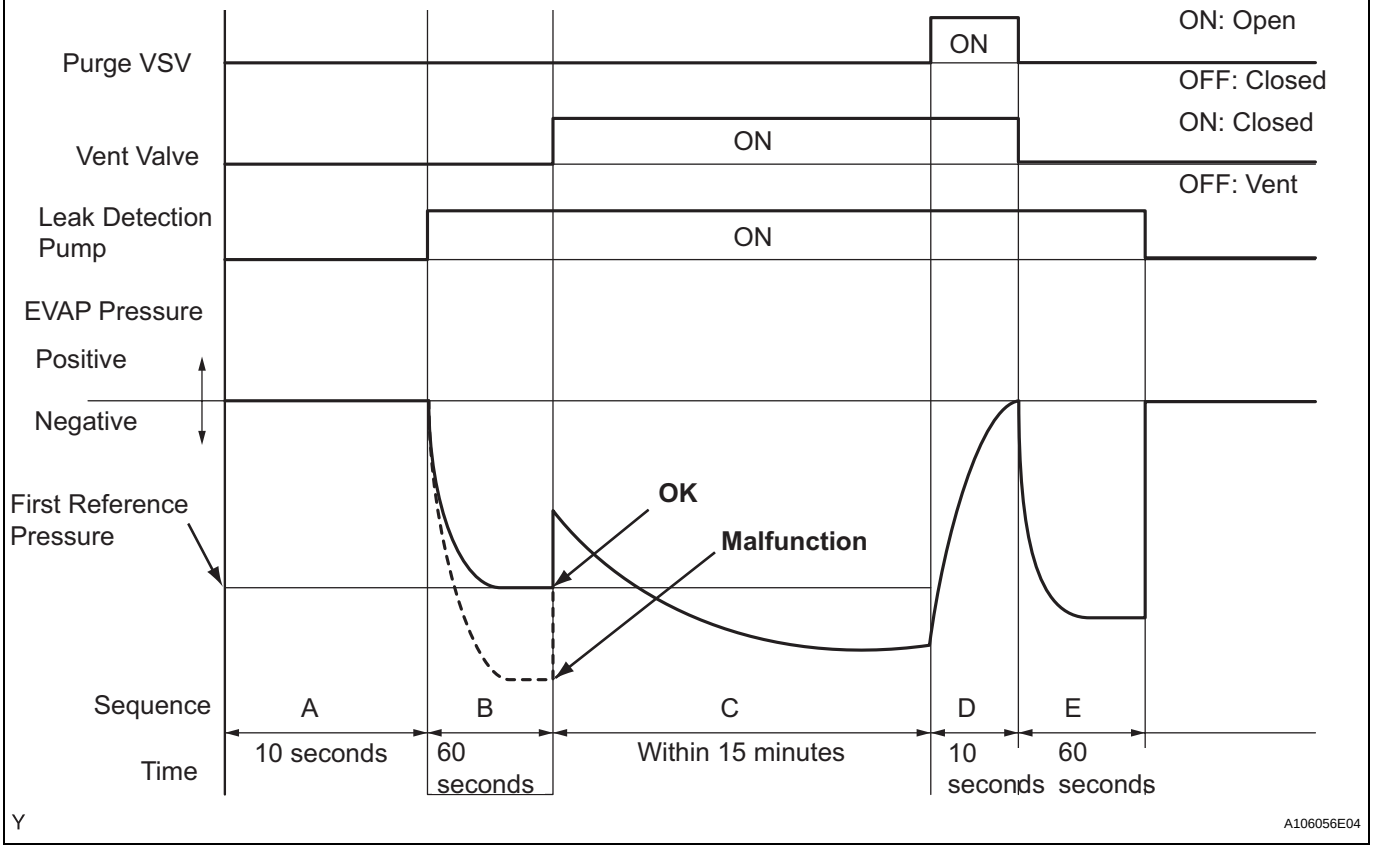

(b) P043F: Reference orifice high-flow

In operation B, the leak detection pump creates negative pressure (vacuum) through the reference orifice. The EVAP system pressure is then measured by the ECM using the canister pressure sensor to determine the reference pressure. If the pressure is higher than -1.057 kPa-g (-7.93 mmHg-g), the ECM interprets this as a high-flow malfunction in the reference orifice, and stops the EVAP system monitor. The ECM then illuminates the MIL and sets the DTC (2 trip detection logic).

EVAP Pressure when Reference Orifice High-flow Malfunction:

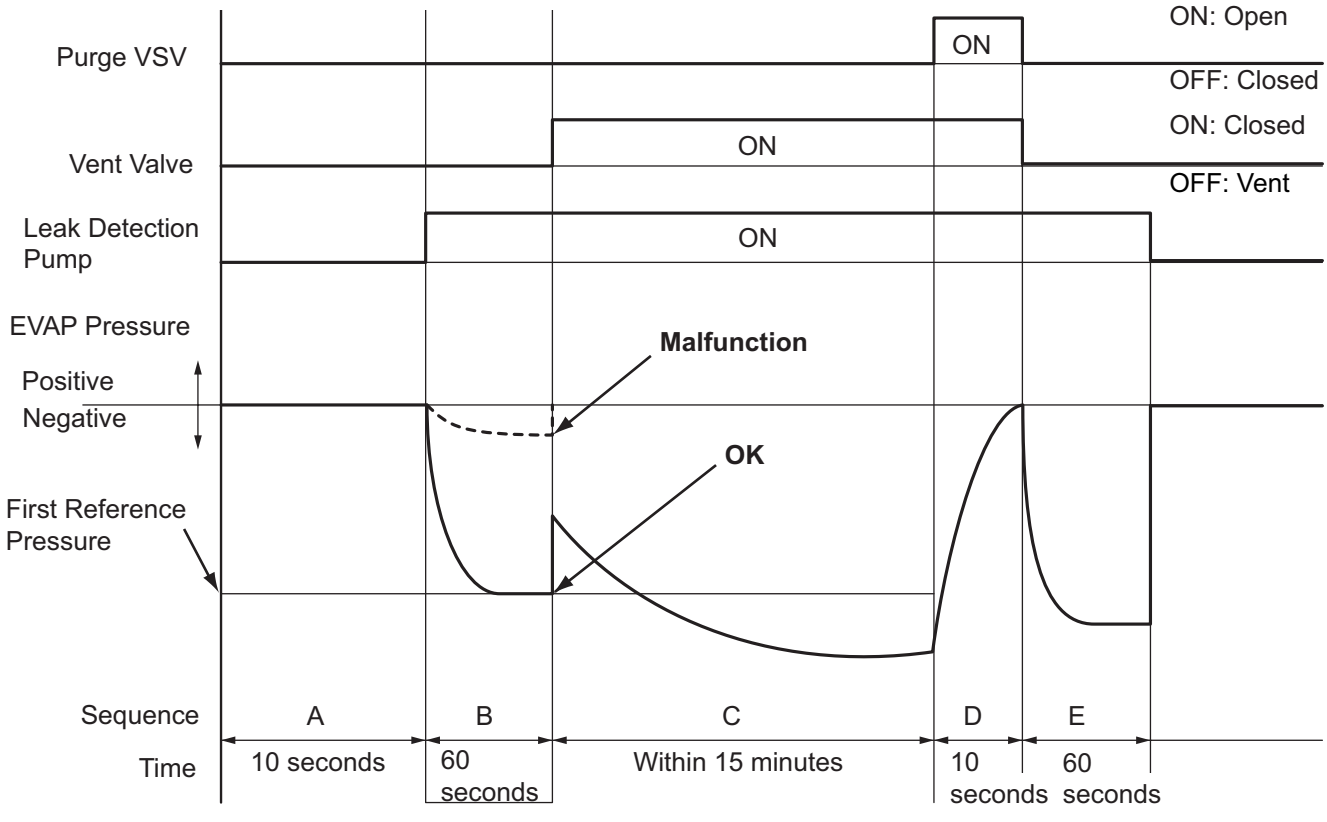

MONITOR STRATEGY

Required Sensors/Components	Canister pump module
Frequency of Operation	Once per driving cycle
Duration	Within 2 minutes
MIL Operation	2 driving cycles
Sequence of Operation	None

TYPICAL ENABLING CONDITIONS

Monitor runs whenever following DTCs not present	None
EVAP key-off monitor runs when all of following conditions met	-
Atmospheric pressure	76 to 110 kPa-a (570 to 825 mmHg-a)
Battery voltage	10.5 V or more
Vehicle speed	Below 2.5 mph (4 km/h)
Ignition switch	OFF
Time after key off	5 or 7 or 9.5 hours
Canister pressure sensor malfunction (P0450, P0451, P0452 and P0453)	Not detected
Purge VSV	Not operated by scan tool
Vent valve	Not operated by scan tool
Leak detection pump	Not operated by scan tool
Both of following conditions met before key off	Conditions 1 and 2
1. Duration that vehicle driven	5 minutes or more
2. EVAP purge operation	Performed

ECT	4.4° to 35°C (40° to 95°F)
IAT	4.4°to 35°C (40° to 95°F)

1. Key-off monitor sequence 1 to 8

1. Atmospheric pressure measurement

Next sequence run if following condition set	-
Atmospheric pressure change	Less than 0.3 kPa-g (2.25 mmHg-g) in 1 second

2. First reference pressure measurement

Next sequence run if all of following conditions set	Condition 1, 2 and 3
1. EVAP pressure just after reference pressure measurement start	-1 kPa-g (-7.5 mmHg-g) or less
2. Reference pressure	-4.85 to -1.057 kPa-g (-36.4 to -7.93 mmHg-g)
3. Reference pressure	Saturated within 60 seconds

3. Vent valve stuck closed check

Next sequence run if following condition set	-
EVAP pressure change after vent valve ON (closed)	0.3 kPa-g (2.25 mmHg-g) or more

4. Vacuum introduction

Next sequence run if following condition set	-
EVAP pressure	Saturated within 15 minutes

5. Purge VSV stuck closed check

Next sequence run if following condition set	-
EVAP pressure change after purge VSV ON (open)	0.3 kPa-g (2.25 mmHg-g) or more

6. Second reference pressure measurement

Next sequence run if all of following conditions set	Condition 1, 2, 3 and 4
1. EVAP pressure just after reference pressure	-1 kPa-g (-7.5 mmHg-g) or less
2. Reference pressure	-4.85 to -1.057 kPa-g (-36.4 to -7.93 mmHg-g)
3. Reference pressure	Saturated within 60 seconds
4. Reference pressure difference between first and second	Less than 0.7 kPa-g (5.25 mmHg-g)

7. Leak check

Next sequence run if following condition set	-
EVAP pressure when vacuum introduction complete	Second reference pressure or less

8. Atmospheric pressure measurement

EVAP monitor complete if following condition set	-
Atmospheric pressure difference between sequence 1 and 8	Within 0.3 kPa-g (2.25 mmHg-g)

TYPICAL MALFUNCTION THRESHOLDS

"Saturated" indicates that the EVAP pressure change is less than 0.286 kPa-g (2.14 mmHg-g) in 60 seconds.

One of following conditions met	-
EVAP pressure just after reference pressure measurement start	More than -1 kPa-g (-7.5 mmHg-g)
Reference pressure	Less than -4.85 kPa-g (-36.4 mmHg-g)
Reference pressure	-1.057 kPa-g (-7.93 mmHg-g) or more
Reference pressure	Not saturated within 60 seconds
Reference pressure difference between first and second	0.7 kPa-g (5.25 mmHg-g) or more

MONITOR RESULT

Refer to CHECKING MONITOR STATUS (See page ES-17).

DTC	P0441	Evaporative Emission Control System Incorrect Purge Flow

DTC SUMMARY

DTC	Monitoring Items	Malfunction Detection Conditions	Trouble Areas	Detection Timings	Detection Logic
P0441	Purge VSV (Vacuum Switching Valve) stuck open	Leak detection pump creates negative pressure (vacuum) in EVAP system and EVAP system pressure measured. Reference pressure measured at start and at end of leak check. If stabilized pressure higher than [second reference pressure x 0.2], ECM determines that purge VSV stuck open	• Purge VSV • Connector/wire harness (Purge VSV - ECM) • ECM • Canister pump module • Leakage from EVAP system	While ignition switch OFF	2 trip
	Purge VSV stuck closed	After EVAP leak check performed, purge VSV turned ON (open), and atmospheric air introduced into EVAP system. Reference pressure measured at start and at end of check. If pressure does not return to near atmospheric pressure, ECM determines that purge VSV stuck closed	• Purge VSV • Connector/wire harness (Purge VSV - ECM) • ECM • Canister pump module • Leakage from EVAP system	While ignition switch OFF	2 trip
	Purge flow	While engine running, following conditions successively met: • Negative pressure not created in EVAP system when purge VSV turned ON (open) • EVAP system pressure change less than 0.5 kPa-g (3.75 mmHg-g) when vent valve turned ON (closed) • Atmospheric pressure change before and after purge flow monitor less than 0.1 kPa-g (0.75 mmHg-g)	• Purge VSV • Connector/wire harness (Purge VSV - ECM) • Leakage from EVAP line (Purge VSV - Intake manifold) • ECM	While engine running	2 trip

DESCRIPTION

The description can be found in the EVAP (Evaporative Emission) System (See page ES-319).

INSPECTION PROCEDURE

Refer to the EVAP System (See page ES-324).

MONITOR DESCRIPTION

The two monitors, Key-Off and Purge Flow, are used to detect malfunctions relating to DTC P0441. The Key-Off monitor is initiated by the ECM internal timer, known as the soak timer, 5 hours* after the ignition switch is turned to OFF. The purge flow monitor runs while the engine is running.

1. KEY-OFF MONITOR

   5 hours* after the ignition switch is turned to OFF, the leak detection pump creates negative pressure (vacuum) in the EVAP system. The ECM monitors for leaks and actuator malfunctions based on the EVAP pressure.

   HINT:

   *: If the engine coolant temperature is not below 35°C (95°F) 5 hours after the ignition switch is turned to OFF, the monitor check starts 2 hours later. If it is still not below 35°C (95°F) 7 hours after the ignition switch is turned to OFF, the monitor check starts 2.5 hours later.

Sequence	Operations	Descriptions	Duration
-	ECM activation	Activated by soak timer, 5 hours (7 or 9.5 hours) after ignition switch turned to OFF.	-

Sequence	Operations	Descriptions	Duration
A	Atmospheric pressure measurement	Vent valve turned OFF (vent) and EVAP system pressure measured by ECM in order to register atmospheric pressure. If pressure in EVAP system not between 76 kPa-a and 110 kPa-a (570 mmHg-a and 825 mmHg-a), ECM cancels EVAP system monitor.	10 seconds
B	First reference pressure measurement	In order to determine reference pressure, leak detection pump creates negative pressure (vacuum) through reference orifice and then ECM checks if leak detection pump and vent valve operate normally.	60 seconds
C	EVAP system pressure measurement	Vent valve turned ON (closed) to shut EVAP system. Negative pressure (vacuum) created in EVAP system, and EVAP system pressure then measured. Write down measured value as will be used in leak check. If EVAP pressure does not stabilize within 15 minutes, ECM cancels EVAP system monitor.	15 minutes*
D	Purge VSV monitor	Purge VSV opened and then EVAP system pressure measured by ECM. Large increase indicates normality.	10 seconds
E	Second reference pressure measurement	After second reference pressure measurement, leak check performed by comparing first and second reference pressure. If stabilized system pressure higher than second reference pressure, ECM determines that EVAP system leaking.	60 seconds
F	Final check	Atmospheric pressure measured and then monitoring result recorded by ECM.	-

ES

* If only a small amount of fuel is in the fuel tank, it takes longer for the EVAP pressure to stabilize.

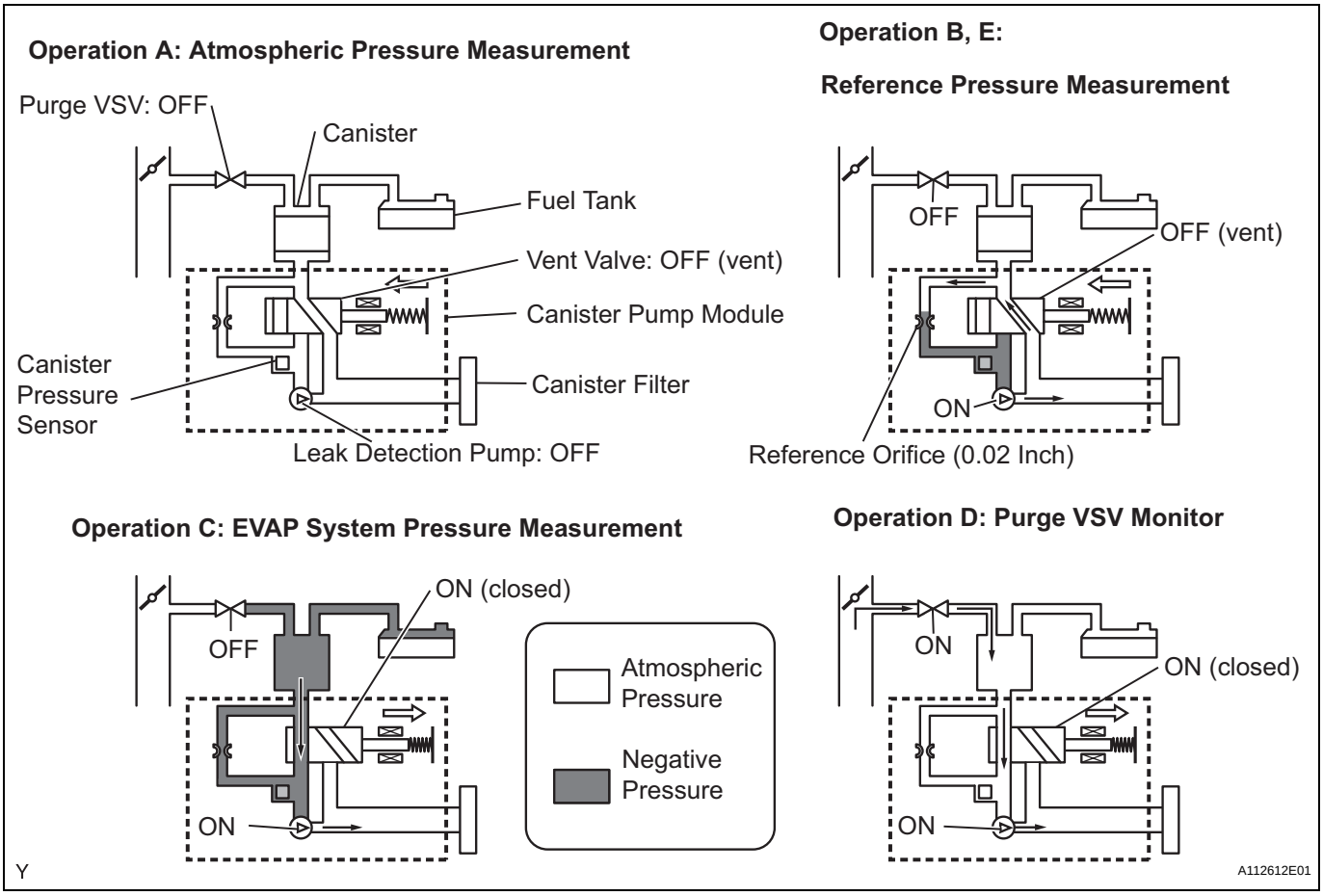

(a) Purge VSV stuck open

In operation C, the leak detection pump creates negative pressure (vacuum) in the EVAP system. The EVAP system pressure is then measured by the ECM using the canister pressure sensor. If the stabilized system pressure is higher than [second reference pressure x 0.2], the ECM interprets this as the purge VSV (Vacuum Switching Valve) being stuck open. The ECM illuminates the MIL and sets the DTC (2 trip detection logic).

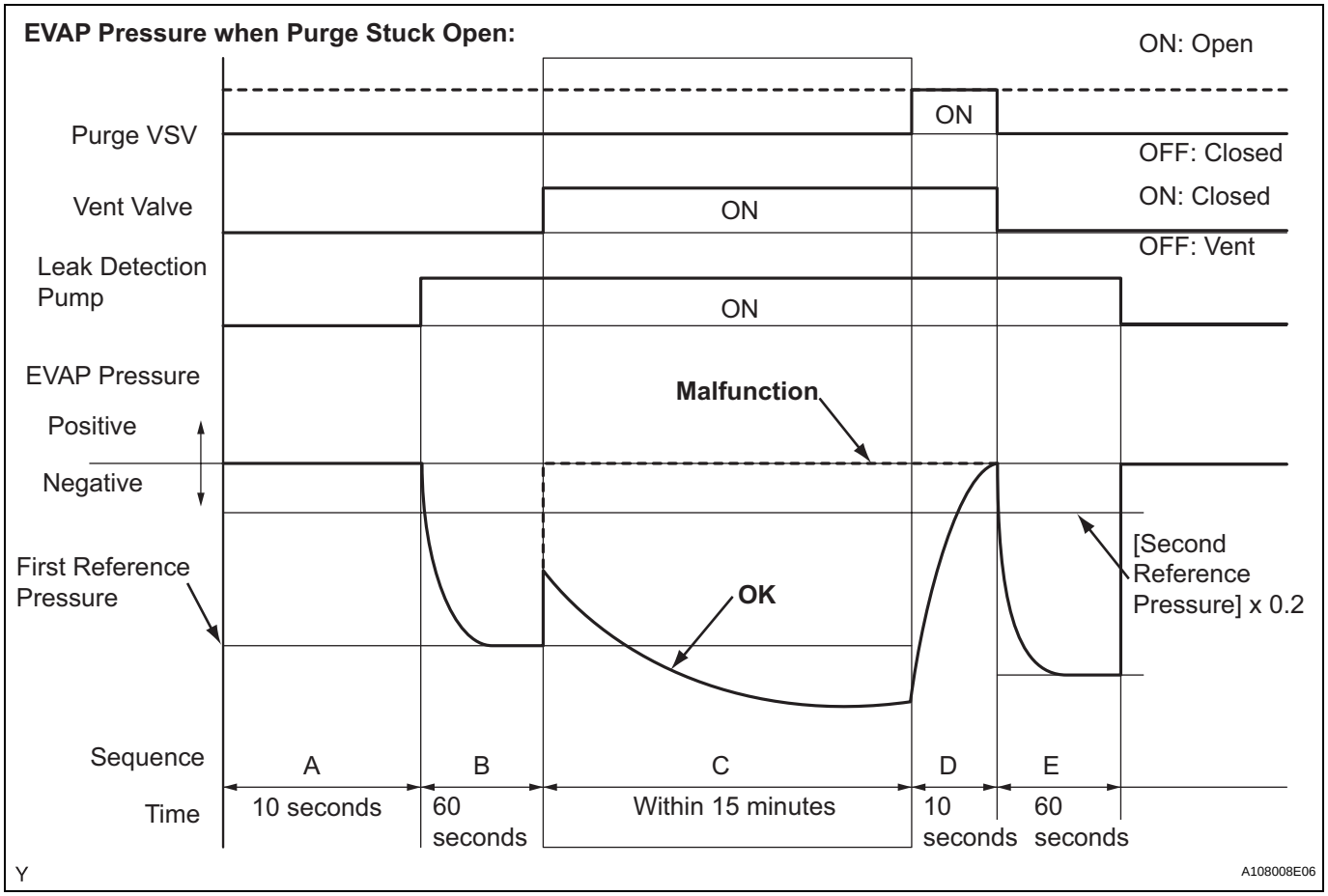

(b) Purge VSV stuck closed

In operation D, the canister pressure sensor measures the EVAP system pressure. The pressure measurement for purge VSV monitor is begun when the purge VSV is turned ON (open) after the EVAP leak check. When the measured pressure indicates an increase of 0.3 kPa-g (2.25 mmHg-g) or more, the purge VSV is functioning normally. If the pressure does not increase, the ECM interprets this as the purge VSV being stuck closed. The ECM illuminates the MIL and sets the DTC (2 trip detection logic).

EVAP Pressure when Purge VSV Stuck Closed:

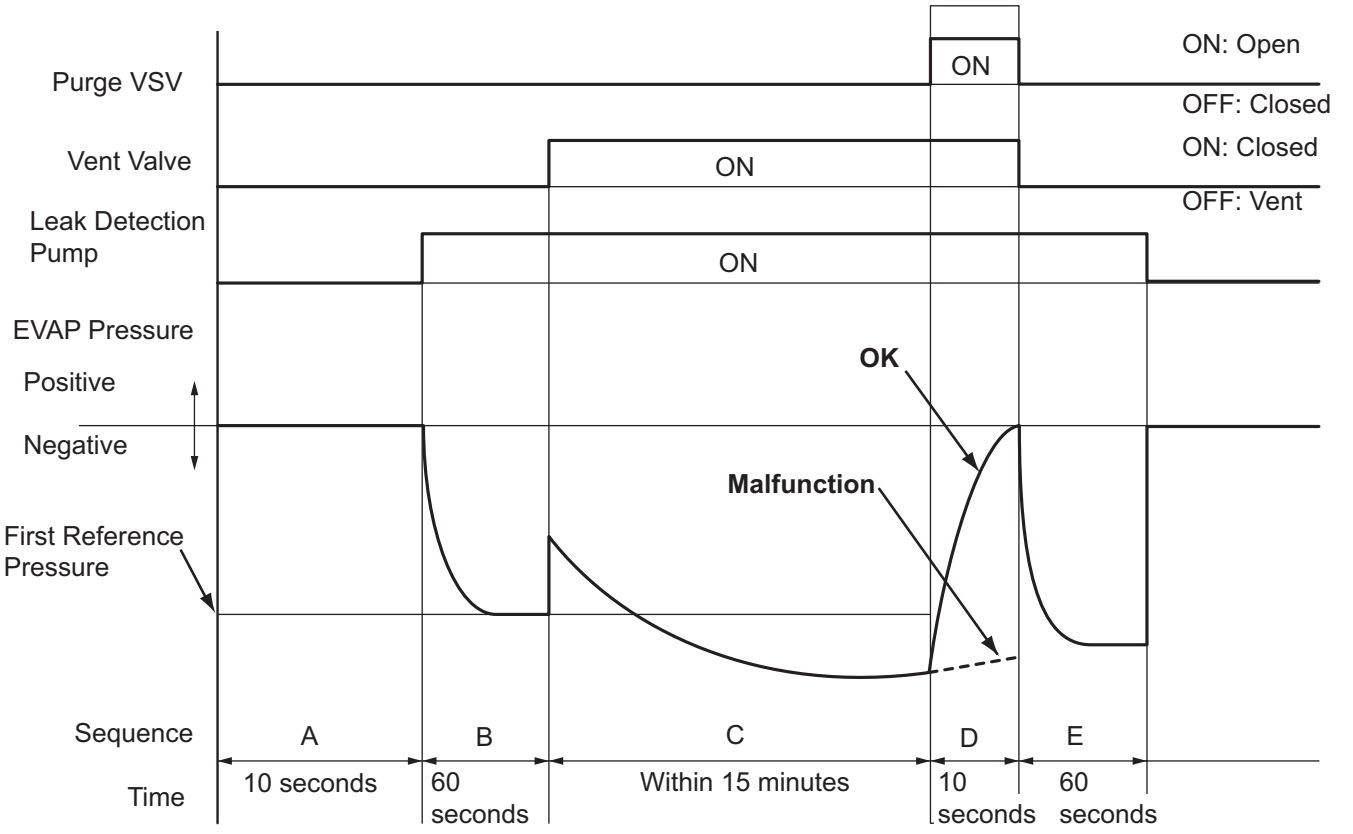

2. PURGE FLOW MONITOR

EVAP Pressure During Purge Flow Monitor:

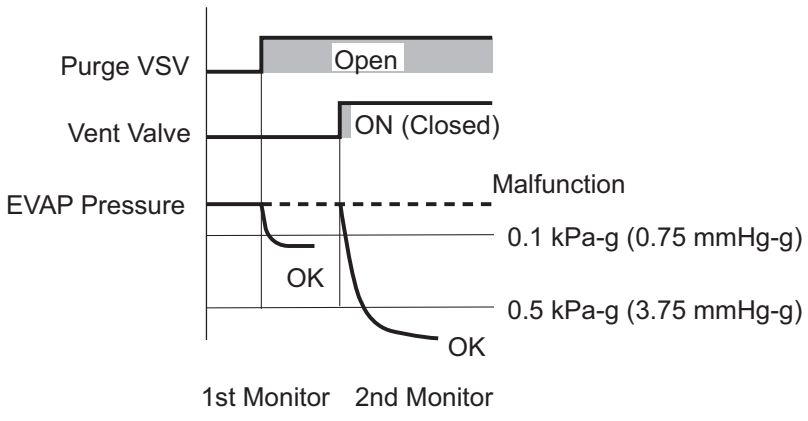

The purge flow monitor consists of the two step monitors. The 1st monitor is conducted every time and the 2nd monitor is activated if necessary.

- The 1st monitor
  While the engine is running and the purge VSV is ON (open), the ECM monitors the purge flow by measuring the EVAP pressure change. If negative pressure is not created, the ECM begins the 2nd monitor.
- The 2nd monitor
  The vent valve is turned ON (closed) and the EVAP pressure is then measured. If the variation in the pressure is less than 0.5 kPa-g (3.75 mmHg-g), the ECM interprets this as the purge VSV being stuck closed, and illuminates the MIL and sets DTC P0441 (2 trip detection logic).

Atmospheric pressure check:
In order to ensure reliable malfunction detection, the variation between the atmospheric pressures, before and after conduction of the purge flow monitor, is measured by the ECM.

OBD II MONITOR SPECIFICATIONS

1. Key-off Monitor

Monitor Strategy

Required Sensors/Components	Purge VSV and canister pump module
Frequency of Operation	Once per driving cycle
Duration	Within 15 minutes (varies with fuel in tank)
MIL Operation	2 driving cycles
Sequence of Operation	None

Typical Enabling Conditions

EVAP key-off monitor runs when all of following conditions met	-
Atmospheric pressure	76 to 110 kPa-a (570 to 825 mmHg-a)
Battery voltage	10.5 V or more
Vehicle speed	Below 2.5 mph (4 km/h)
Ignition switch	OFF
Time after key off	5 or 7 or 9.5 hours
Canister pressure sensor malfunction (P0450, P0451, P0452 and P0453)	Not detected
Purge VSV	Not operated by scan tool
Vent valve	Not operated by scan tool
Leak detection pump	Not operated by scan tool
Both of following conditions met before key off	Conditions 1 and 2
1. Duration that vehicle driven	5 minutes or more
2. EVAP purge operation	Performed
ECT	4.4° to 35°C (40° to 95°F)
IAT	4.4°to 35°C (40° to 95°F)

2. Key-off monitor sequence 1 to 8

1. Atmospheric pressure measurement

Next sequence run if following condition set	-
Atmospheric pressure change	Less than 0.3 kPa-g (2.25 mmHg-g) in 1 second

2. First reference pressure measurement

Next sequence run if all of following conditions set	Condition 1, 2 and 3
1. EVAP pressure just after reference pressure measurement start	-1 kPa-g (-7.5 mmHg-g) or less
2. Reference pressure	-4.85 to -1.057 kPa-g (-36.4 to -7.93 mmHg-g)
3. Reference pressure	Saturated within 60 seconds

3. Vent valve stuck closed check

Next sequence run if following condition set	-
EVAP pressure change after vent valve ON (closed)	0.3 kPa-g (2.25 mmHg-g) or more

4. Vacuum introduction

Next sequence run if following condition set	-
EVAP pressure	Saturated within 15 minutes

5. Purge VSV stuck closed check

Next sequence run if following condition set	-
EVAP pressure change after purge VSV ON (open)	0.3 kPa-g (2.25 mmHg-g) or more

6. Second reference pressure measurement

Next sequence run if all of following conditions set	Condition 1, 2, 3 and 4
1. EVAP pressure just after reference pressure	-1 kPa-g (-7.5 mmHg-g) or less
2. Reference pressure	-4.85 to -1.057 kPa-g (-36.4 to -7.93 mmHg-g)
3. Reference pressure	Saturated within 60 seconds
4. Reference pressure difference between first and second	Less than 0.7 kPa-g (5.25 mmHg-g)

7. Leak check

Next sequence run if following condition set	-
EVAP pressure when vacuum introduction complete	Second reference pressure or less

8. Atmospheric pressure measurement

EVAP monitor complete if following condition set	-
Atmospheric pressure difference between sequence 1 and 8	Within 0.3 kPa-g (2.25 mmHg-g)

Typical Malfunction Thresholds

Purge VSV stuck open:	-
EVAP pressure when vacuum introduction complete	Higher than reference pressure x 0.2

Purge VSV stuck closed:	-
EVAP pressure change after purge VSV ON (open)	Less than 0.3 kPa-g (2.25 mmHg-g)

OBD II MONITOR SPECIFICATIONS

1. Purge Flow Monitor

Monitor Strategy

Required Sensors/Components	Purge VSV and canister pump module
Frequency of Operation	Once per driving cycle
Duration	Within 30 seconds
MIL Operation	2 driving cycles
Sequence of Operation	None

Typical Enabling Conditions

Monitor runs whenever following DTCs not present	P0011 (VVT System 1 - Advance) P0012 (VVT System 1 - Retard) P0100 - P0103 (MAF meter) P0110 - P0113 (IAT sensor) P0115 - P0118 (ECT sensor) P0120 - P0223, P2135 (TP sensor) P0125 (Insufficient ECT for Closed Loop) P0171, P0172 (Fuel system) P0300 - P0304 (Misfire) P0335 (CKP sensor) P0340 (CMP sensor) P0351 - P0354 (Igniter) P0450 - P0453 (EVAP press sensor) P0500 (VSS)
Engine	Running
ECT	4.4°C (40°F) or more
IAT	4.4°C (40°F) or more

Canister pressure sensor malfunction	Not detected
Purge VSV	Not operated by scan tool
EVAP system check	Not operated by scan tool
Battery voltage	10 V or more
Purge duty cycle	8 % or more

Typical Malfunction Thresholds

Both of following conditions met	Conditions 1 and 2
1. EVAP pressure change when purge operation started	Less than 0.1 kPa-g (0.75 mmHg-g)
2. EVAP pressure change during purge operation when vent valve closed	Less than 0.5 kPa-g (3.75 mmHg-g)

MONITOR RESULT

Refer to CHECKING MONITOR STATUS (See page ES-17).

DTC	P0450	Evaporative Emission Control System Pressure Sensor / Switch

DTC	P0451	Evaporative Emission Control System Pressure Sensor Range / Performance

DTC	P0452	Evaporative Emission Control System Pressure Sensor / Switch Low Input

ES

DTC	P0453	Evaporative Emission Control System Pressure Sensor / Switch High Input

DTC SUMMARY

DTC	Monitoring Items	Malfunction Detection Conditions	Trouble Areas	Detection Timings	Detection Logic
P0450	Canister pressure sensor voltage fluctuation abnormal	Sensor output voltage rapidly fluctuates beyond upper and lower malfunction thresholds for 0.5 seconds.	• Canister pump module • EVAP system hose (pipe from air inlet port to canister pump module, canister filter, fuel tank vent hose) • ECM	• EVAP monitoring (ignition OFF) • Ignition ON	1 trip
P0451	Canister pressure sensor noise	Sensor output voltage fluctuates frequently within certain time period.	• Canister pump module • Connector/wire harness (Canister pump module - ECM) • EVAP system hose (pipe from air inlet port to canister pump module, canister filter, fuel tank vent hose) • ECM	• EVAP monitoring (ignition OFF) • Engine running	2 trip
	Canister pressure sensor signal becomes fixed/flat	Sensor output voltage does not vary within certain time period.	• Canister pump module • Connector/wire harness (Canister pump module - ECM) • EVAP system hose (pipe from air inlet port to canister pump module, canister filter, fuel tank vent hose) • ECM	• EVAP monitoring (ignition OFF)	2 trip
P0452	Canister pressure sensor voltage low	Sensor output voltage less than 0.45 V for 0.5 seconds.	• Canister pump module • Connector/wire harness (Canister pump module - ECM) • EVAP system hose (pipe from air inlet port to canister pump module, canister filter, fuel tank vent hose) • ECM	• Ignition ON • EVAP monitoring (ignition OFF)	1 trip

DTC	Monitoring Items	Malfunction Detection Conditions	Trouble Areas	Detection Timings	Detection Logic
P0453	Canister pressure sensor voltage high	Sensor output voltage more than 4.9 V for 0.5 seconds.	• Canister pump module • Connector/wire harness (Canister pump module - ECM) • EVAP system hose (pipe from air inlet port to canister pump module, canister filter, fuel tank vent hose) • ECM	• Ignition ON • EVAP monitoring (ignition OFF)	1 trip

HINT:
The canister pressure sensor is built into the canister pump module.

ES

DESCRIPTION

The description can be found in the EVAP (Evaporative Emission) System (See page ES-319).

MONITOR DESCRIPTION

Canister Pressure Sensor Specification:

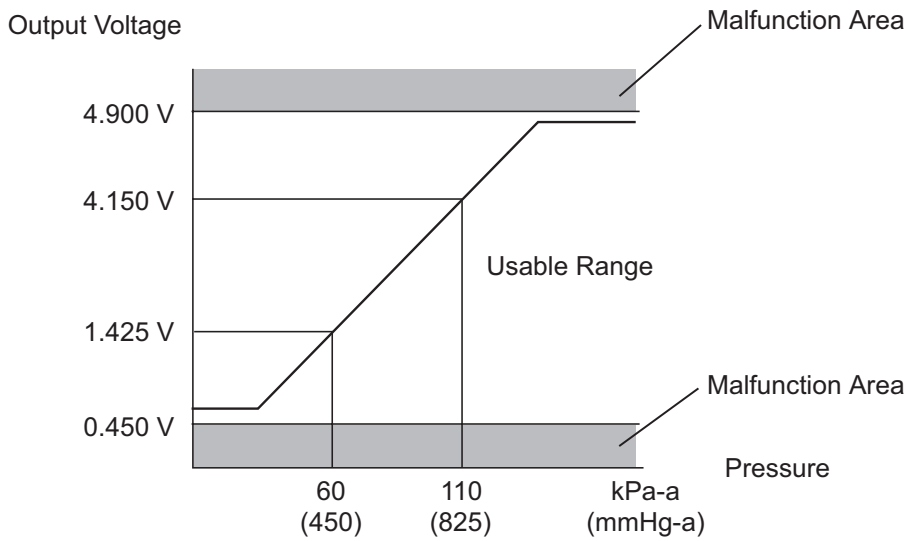

HINT:

Standard atmospheric pressure is 101.3 kPa-a (760 mmHg-a)

A115543E05

1. DTC P0450: Canister pressure sensor voltage abnormal fluctuation
   If the canister pressure sensor voltage output [pressure] rapidly fluctuates between less than 0.45 V [42.1 kPa-a (315.9 mmHg-a)] and more than 4.9 V [123.8 kPa-a (928.4 mmHg-a)], the ECM interprets this as an open or short circuit malfunction in the canister pressure sensor or its circuit, and stops the EVAP (Evaporative Emission) system monitor. The ECM then illuminates the MIL and sets the DTC (1 trip detection logic).

2. DTC P0451: Canister pressure sensor noise or fixed/flat
   If the canister pressure sensor voltage output fluctuates rapidly for 10 seconds, the ECM stops the EVAP system monitor. The ECM interprets this as noise from the canister pressure sensor, and stops the EVAP system monitor. The ECM then illuminates the MIL and sets the DTC.
   Alternatively, if the sensor voltage output does not change for 10 seconds, the ECM interprets this as the sensor being fixed/flat, and stops the monitor. The ECM then illuminates the MIL and sets the DTC. (Both the malfunctions are detected by 2 trip detection logic).
3. DTC P0452: Canister pressure sensor voltage low
   If the canister pressure sensor voltage output [pressure] is below 0.45 V [42.1 kPa-a (315.9 mmHg-a)], the ECM interprets this as an open or short circuit malfunction in the canister pressure sensor or its circuit, and stops the EVAP system monitor. The ECM then illuminates the MIL and sets the DTC (1 trip detection logic).
4. DTC P0453: Canister pressure sensor voltage high
   If the canister pressure sensor voltage output [pressure] is 4.9 V [123.8 kPa-a (928.4 mmHg-a)] or more, the ECM interprets this as an open or short circuit malfunction in the canister pressure sensor or its circuit, and stops the EVAP system monitor. The ECM then illuminates the MIL and sets the DTC (1 trip detection logic).

MONITOR STRATEGY

Required Sensors/Components	Canister pump module
Frequency of Operation	Once per driving cycle: P0451 sensor fixed/flat Continuous: P0451 sensor noise, P0450, P0452 and P0453
Duration	0.5 seconds: P0450, P0452 and P0453 10 seconds: P0451
MIL Operation	Immediate: P0450, P0452 and P0453 2 driving cycles: P0451
Sequence of Operation	None

TYPICAL ENABLING CONDITIONS

P0451 (Noise monitor):

Monitor runs whenever following DTCs not present	None
Atmospheric pressure (absolute pressure)	76 to 110 kPa-a (570 to 825 mmHg-a)
Battery voltage	10.5 V or more
Intake air temperature	4.4°to 35°C (40° to 95°F)
Canister pressure sensor malfunction (P0450, P0452, 0453)	Not detected
Either of following conditions met	A or B
A. Engine condition	Running
B. Time after key off	5 or 7 or 9.5 hours

P0451 (Fixed/flat monitor):

Monitor runs whenever following DTCs not present	None
Battery voltage	10.5 V or more
Intake air temperature	4.4°to 35°C (40° to 95°F)
Canister pressure sensor malfunction (P0450, P0452, 0453)	Not detected
Atmospheric pressure (absolute pressure)	76 to 110 kPa-a (570 to 825 mmHg-a)
Time after key off	5 or 7 or 9.5 hours

P0450, P0452 and P0453:

Monitor runs whenever following DTCs not present	None
Either of following conditions met	(a) or (b)
(a) Ignition switch	ON
(b) Soak timer	ON

TYPICAL MALFUNCTION THRESHOLDS

P0450: Canister pressure sensor chattering

EVAP pressure	Less than 42.1 kPa-a (315.9 mmHg-a), or more than 123.8 kPa-a (928.4 mmHg-a)

P0451: Canister pressure sensor noise

Frequency that EVAP pressure change 0.3 kPa-g (2.25 mmHg-g) or more	10 times or more in 10 seconds

P0451: Canister pressure sensor fixed/flat

EVAP pressure change during reference pressure	Less than 0.65 kPa-g (4.87 mmHg-g)

P0452: Canister pressure sensor low voltage

EVAP pressure	Less than 42.1 kPa-a (315.9 mmHg-a)

P0453: Canister pressure sensor high voltage

EVAP pressure	More than 123.8 kPa-a (928.4 mmHg-a)

WIRING DIAGRAM

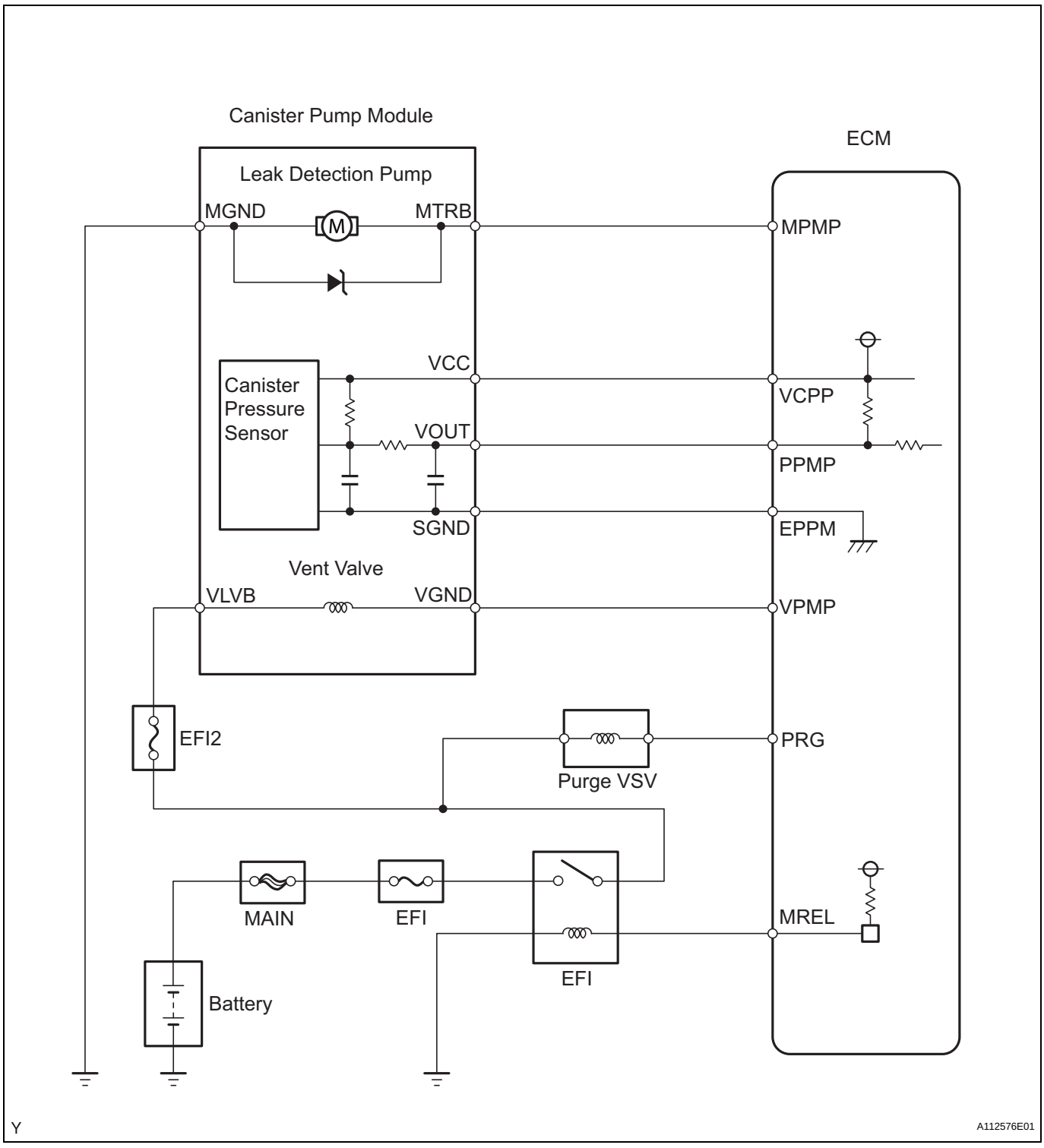

INSPECTION PROCEDURE

NOTICE:

- **When a vehicle is brought into the workshop, leave it as it is. Do not change the vehicle condition. For example, do not tighten the fuel cap.**
- **Do not disassemble the canister pump module.**
- **An intelligent tester is required to conduct the following diagnostic troubleshooting procedure.**

1	CONFIRM DTC AND EVAP PRESSURE

(a) Connect an intelligent tester to the DLC3.
(b) Turn the ignition switch to ON (do not start the engine).
(c) Turn the tester ON.
(d) Select the following menu items: DIAGNOSIS / ENHANCED OBD II / DTC INFO / CURRENT CODES.
(e) Read DTCs.
(f) Select the following menu items: DIAGNOSIS / ENHANCED OBD II / DATA LIST / EVAP / VAPOR PRESS.
(g) Read the EVAP (Evaporative Emission) pressure displayed on the tester.

ES

Result

Display (DTC Output)	Test Results	Suspected Trouble Areas	Proceed To
P0451	-	Canister pressure sensor	C
P0452	Less than 45 kPa-a (430 mmHg-a)	• Wire harness/connector (ECM - Canister pressure sensor) • Canister pressure sensor • Short in ECM circuit	A
P0453	More than 120 kPa-a (900 mmHg-a)	• Wire harness/connector (ECM - Canister pressure sensor) • Canister pressure sensor • Open in ECM circuit	B

B → Go to step 4

C → GO TO EVAP SYSTEM

A

2	CHECK HARNESS AND CONNECTOR (CANISTER PUMP MODULE - ECM)

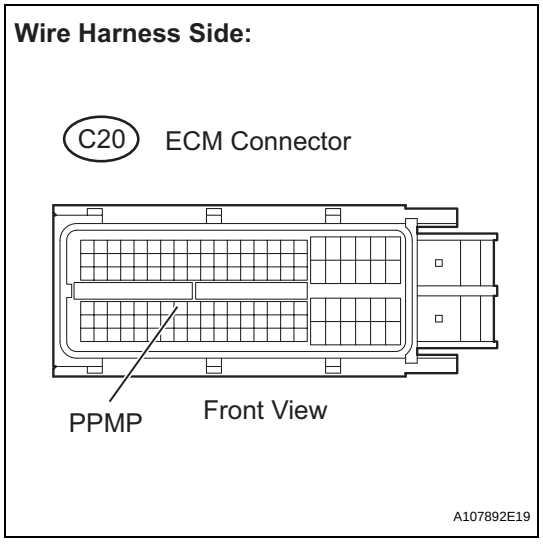

(a) Turn the ignition switch to OFF.
(b) Disconnect the C20 ECM connector.
(c) Check the resistance between PPMP terminal of the ECM connector and the body ground.

Result

Test Results	Suspected Trouble Areas	Proceed To
10 Ω or less	• Wire harness/connector (ECM - Canister pressure sensor) • Short in canister pressure sensor circuit	A
10 kΩ or more	• Wire harness/connector (ECM - Canister pressure sensor) • Short in ECM circuit	B

(d) Reconnect the ECM connector.

B → **Go to step 7**

A

ES

3 CHECK HARNESS AND CONNECTOR (CANISTER PUMP MODULE - ECM)

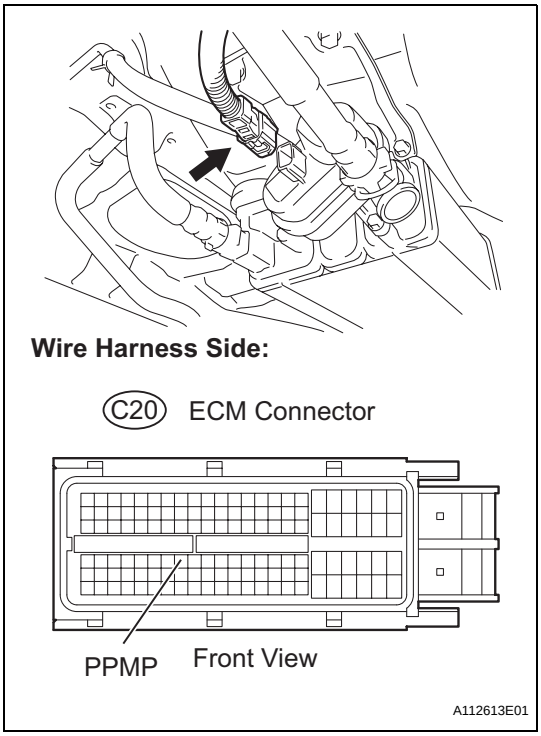

(a) Disconnect the J25 canister pump module connector.
(b) Disconnect the C20 ECM connector.
(c) Check the resistance between PPMP terminal of the ECM connector and the body ground.

Result

Test Results	Suspected Trouble Areas	Proceed To
10 kΩ or more	Short in canister pressure sensor circuit	A
10 Ω or less	Short in wire harness/connector (ECM - Canister pressure sensor)	B

(d) Reconnect the canister pump module connector.
(e) Reconnect the ECM connector.

A → **Go to step 5**

B → **Go to step 6**

4 CHECK HARNESS AND CONNECTOR (CANISTER PUMP MODULE - ECM)

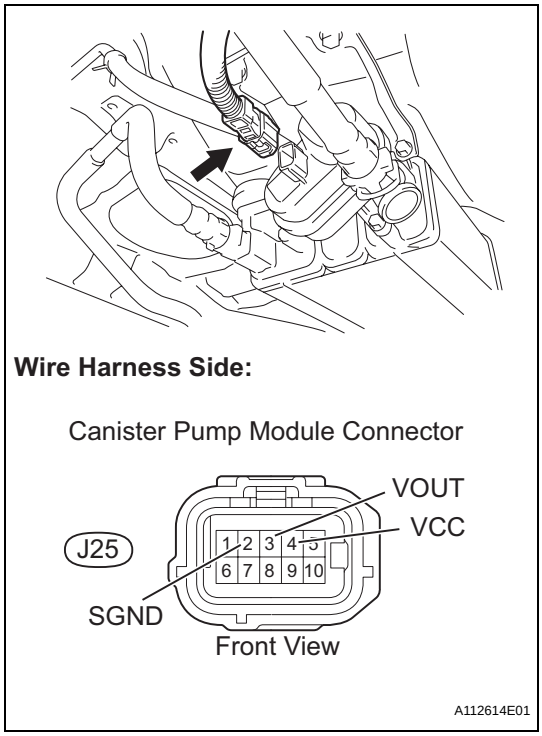

(a) Disconnect the J25 canister pump module connector.
(b) Turn the ignition switch to ON.
(c) Measure the voltage and resistance of the canister connector.

Standard

Tester Connections	Specified Conditions
VCC (J25-4) - Body ground	4.5 to 5.5 V
VOUT (J25-3) - Body ground	
SGND (J25-2) - Body ground	100 Ω or less

ES

Result

Test Results	Suspected Trouble Areas	Proceed To
Voltage and resistance within standard ranges	Open in canister pressure sensor circuit	A
Voltage and resistance outside standard ranges	Open in wire harness/connector (ECM - Canister pressure sensor)	B

(d) Reconnect the canister pump module connector.

A	Go to step 5
B	Go to step 6

5 REPLACE CHARCOAL CANISTER ASSEMBLY

(a) Replace the canister assembly (See page EC-7).
NOTICE:
When replacing the canister, check the canister pump module interior and related pipes for water, fuel and other liquids. If liquids are present, check for disconnections and/or cracks in the following: 1) the pipe from the air inlet port to the canister pump module; 2) the canister filter; and 3) the fuel tank vent hose.

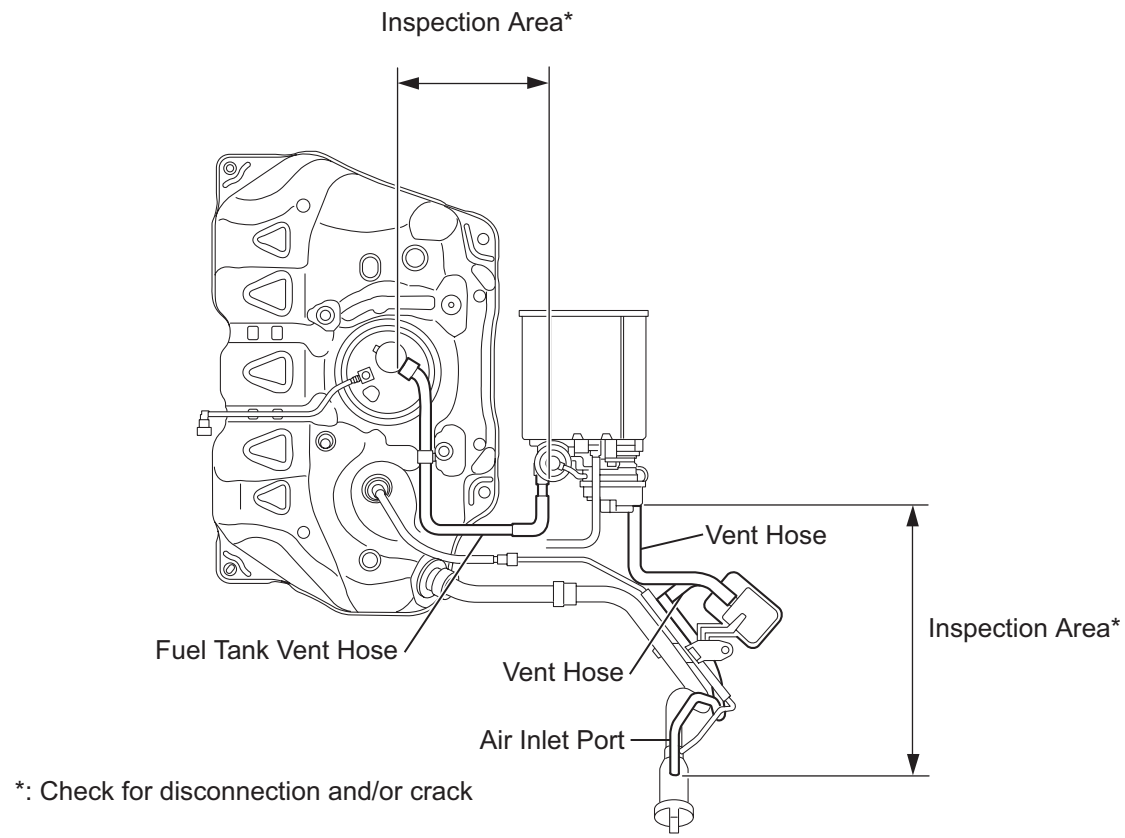

NEXT → Go to step 8

6	REPAIR OR REPLACE HARNESS OR CONNECTOR

HINT:
If the exhaust tail pipe has been removed, go to the next step before reinstalling it.

NEXT → Go to step 8

7	REPLACE ECM

(a) Replace the ECM (See page ES-431).

NEXT → Go to step 8

8	CHECK WHETHER DTC OUTPUT RECURS (AFTER REPAIR)

(a) Connect the intelligent tester to the DLC3.
(b) Turn the ignition switch to ON and turn the tester ON.
(c) Wait for at least 60 seconds.
(d) On the tester, select the following menu items: DIAGNOSIS / ENHANCED OBD II / DTC INFO / PENDING CODES.

HINT:
If no pending DTCs are displayed on the tester, the repair has been successfully completed.

NEXT

COMPLETED

DTC	P0455	Evaporative Emission Control System Leak Detected (Gross Leak)

DTC	P0456	Evaporative Emission Control System Leak Detected (Very Small Leak)

DTC SUMMARY

DTCs	Monitoring Items	Malfunction Detection Conditions	Trouble Areas	Detection Timings	Detection Logic
P0455	EVAP gross leak	Leak detection pump creates negative pressure (vacuum) in EVAP system and EVAP system pressure measured. Reference pressure measured at start and at end of leak check. If stabilized pressure higher than [second reference pressure x 0.2], ECM determines that EVAP system has large leak.	• Fuel cap (loose) • Leakage from EVAP line (Canister - Fuel tank) • Leakage from EVAP line (Purge VSV - Canister) • Canister pump module • Leakage from fuel tank • Leakage from canister	While ignition switch OFF	2 trip
P0456	EVAP small leak	Leak detection pump creates negative pressure (vacuum) in EVAP system and EVAP system pressure measured. Reference pressure measured at start and at end of leak check. If stabilized pressure higher than second reference pressure, ECM determines that EVAP system has small leak.	• Fuel cap (loose) • Leakage from EVAP line (Canister - Fuel tank) • Leakage from EVAP line (Purge VSV - Canister) • Canister pump module • Leakage from fuel tank • Leakage from canister	While ignition switch OFF	2 trip

DESCRIPTION

The description can be found in the EVAP (Evaporative Emission) System (See page ES-319).

INSPECTION PROCEDURE

Refer to the EVAP System (See page ES-324).

MONITOR DESCRIPTION

5 hours* after the ignition switch is turned to OFF, the leak detection pump creates negative pressure (vacuum) in the EVAP system. The ECM monitors for leaks and actuator malfunctions based on the EVAP pressure.

HINT:

*: If the engine coolant temperature is not below 35°C (95°F) 5 hours after the ignition switch is turned to OFF, the monitor check starts 2 hours later. If it is still not below 35°C (95°F) 7 hours after the ignition switch is turned to OFF, the monitor check starts 2.5 hours later.

Sequence	Operations	Descriptions	Duration
-	ECM activation	Activated by soak timer, 5 hours (7 or 9.5 hours) after ignition switch turned to OFF.	-
A	Atmospheric pressure measurement	Vent valve turned OFF (vent) and EVAP system pressure measured by ECM in order to register atmospheric pressure. If pressure in EVAP system not between 76 kPa-a and 110 kPa-a (570 mmHg-a and 825 mmHg-a), ECM cancels EVAP system monitor.	10 seconds
B	First reference pressure measurement	In order to determine reference pressure, leak detection pump creates negative pressure (vacuum) through reference orifice and then ECM checks if leak detection pump and vent valve operate normally.	60 seconds

Sequence	Operations	Descriptions	Duration
C	EVAP system pressure measurement	Vent valve turned ON (closed) to shut EVAP system. Negative pressure (vacuum) created in EVAP system, and EVAP system pressure then measured. Write down measured value as will be used in leak check. If EVAP pressure does not stabilize within 15 minutes, ECM cancels EVAP system monitor.	15 minutes*
D	Purge VSV monitor	Purge VSV opened and then EVAP system pressure measured by ECM. Large increase indicates normality.	10 seconds
E	Second reference pressure measurement	After second reference pressure measurement, leak check performed by comparing first and second reference pressure. If stabilized system pressure higher than second reference pressure, ECM determines that EVAP system leaking.	60 seconds
F	Final check	Atmospheric pressure measured and then monitoring result recorded by ECM.	-

* If only a small amount of fuel is in the fuel tank, it takes longer for the EVAP pressure to stabilize.

ES

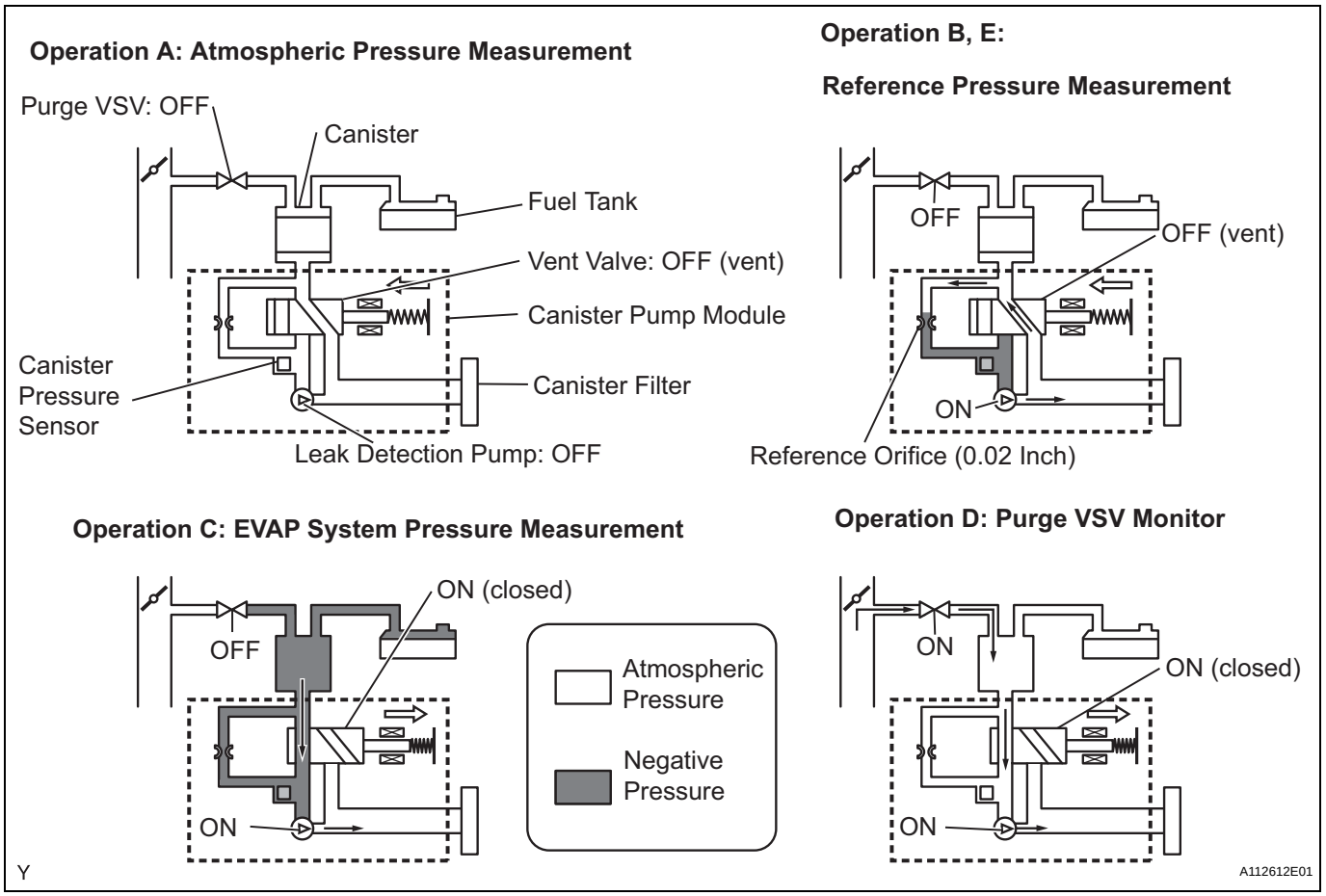

(a) P0455: EVAP gross leak

In operation C, the leak detection pump creates negative pressure (vacuum) in the EVAP system and the EVAP system pressure is measured. If the stabilized system pressure is higher than [second reference pressure x 0.2] (near atmospheric pressure), the ECM determines that the EVAP system has a large leakage, illuminates the MIL and sets the DTC (2 trip detection logic).

(b) P0456: EVAP very small leak
In operation C, the leak detection pump creates negative pressure (vacuum) in the EVAP system and the EVAP system pressure is measured. If the stabilized system pressure is higher than the second reference pressure, the ECM determines that the EVAP system has a small leakage, illuminates the MIL and sets the DTC (2 trip detection logic).

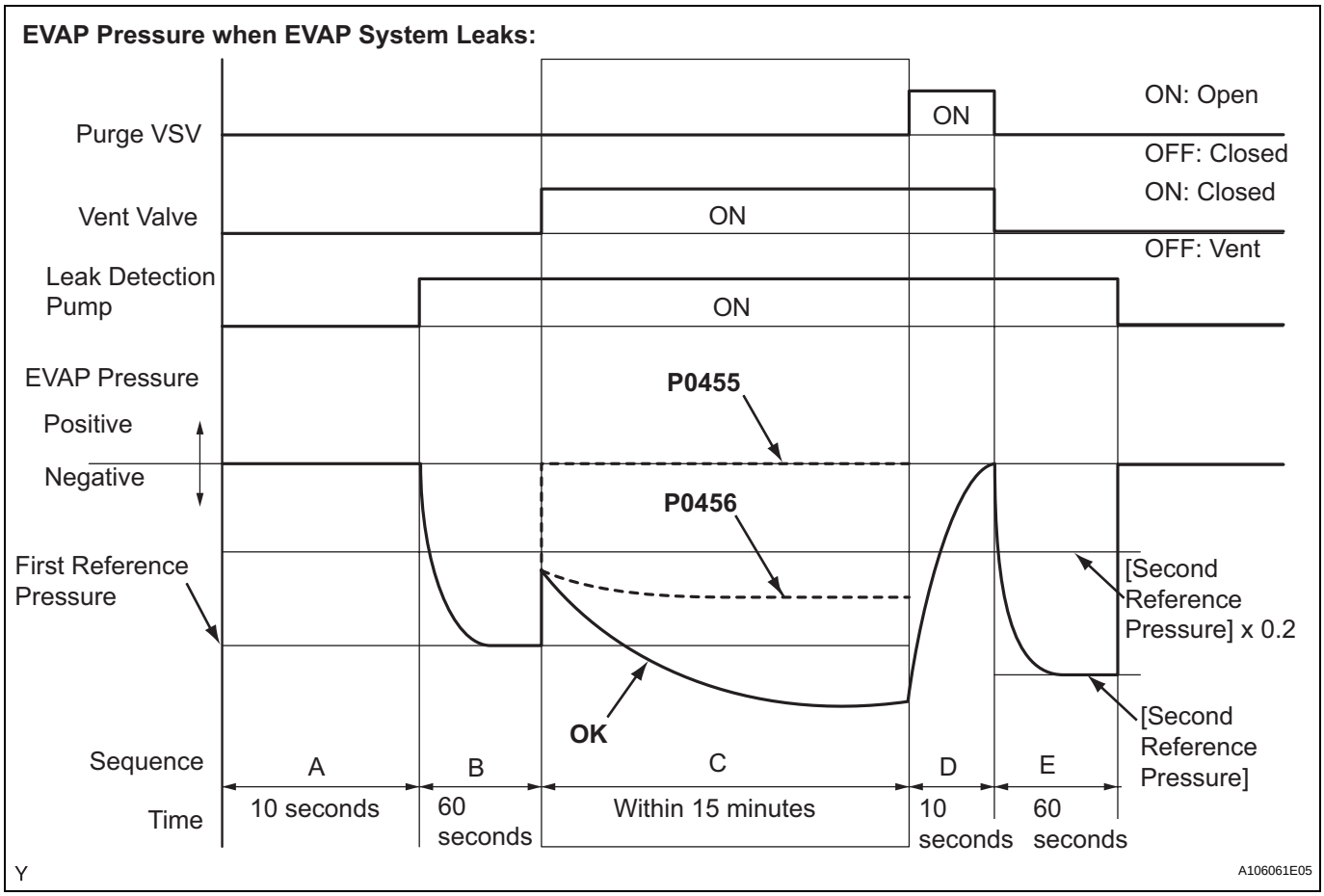

MONITOR STRATEGY

Required Sensors/Components	Purge VSV and canister pump module
Frequency of Operation	Once per driving cycle
Duration	Within 15 minutes (varies with amount of fuel in tank)
MIL Operation	2 driving cycles
Sequence of Operation	None

TYPICAL ENABLING CONDITIONS

Monitor runs whenever following DTCs not present	None
EVAP key-off monitor runs when all of following conditions met	-
Atmospheric pressure	76 to 110 kPa-a (570 to 825 mmHg-a)
Battery voltage	10.5 V or more
Vehicle speed	Below 2.5 mph (4 km/h)
Ignition switch	OFF
Time after key off	5 or 7 or 9.5 hours
Canister pressure sensor malfunction (P0450, P0451, P0452 and P0453)	Not detected
Purge VSV	Not operated by scan tool
Vent valve	Not operated by scan tool

Leak detection pump	Not operated by scan tool
Both of following conditions met before key off	Conditions 1 and 2
1. Duration that vehicle driven	5 minutes or more
2. EVAP purge operation	Performed
ECT	4.4° to 35°C (40° to 95°F)
IAT	4.4°to 35°C (40° to 95°F)

1. Key-off monitor sequence 1 to 8

1. Atmospheric pressure measurement

Next sequence run if following condition set	-
Atmospheric pressure change	Less than 0.3 kPa-g (2.25 mmHg-g) in 1 second

2. First reference pressure measurement

Next sequence run if all of following conditions set	Condition 1, 2 and 3
1. EVAP pressure just after reference pressure measurement start	-1 kPa-g (-7.5 mmHg-g) or less
2. Reference pressure	-4.85 to -1.057 kPa-g (-36.4 to -7.93 mmHg-g)
3. Reference pressure	Saturated within 60 seconds

3. Vent valve stuck closed check

Next sequence run if following condition set	-
EVAP pressure change after vent valve ON (closed)	0.3 kPa-g (2.25 mmHg-g) or more

4. Vacuum introduction

Next sequence run if following condition set	-
EVAP pressure	Saturated within 15 minutes

5. Purge VSV stuck closed check

Next sequence run if following condition set	-
EVAP pressure change after purge VSV ON (open)	0.3 kPa-g (2.25 mmHg-g) or more

6. Second reference pressure measurement

Next sequence run if all of following conditions set	Condition 1, 2, 3 and 4
1. EVAP pressure just after reference pressure	-1 kPa-g (-7.5 mmHg-g) or less
2. Reference pressure	-4.85 to -1.057 kPa-g (-36.4 to -7.93 mmHg-g)
3. Reference pressure	Saturated within 60 seconds
4. Reference pressure difference between first and second	Less than 0.7 kPa-g (5.25 mmHg-g)

7. Leak check

Next sequence run if following condition set	-
EVAP pressure when vacuum introduction complete	Second reference pressure or less

8. Atmospheric pressure measurement

EVAP monitor complete if following condition set	-
Atmospheric pressure difference between sequence 1 and 8	Within 0.3 kPa-g (2.25 mmHg-g)

TYPICAL MALFUNCTION THRESHOLDS

P0455: EVAP gross leak

EVAP pressure when vacuum introduction complete	Higher than reference pressure x 0.2

P0456: EVAP small leak

EVAP pressure when vacuum introduction complete	Between reference pressure and reference pressure x 0.2

MONITOR RESULT

Refer to CHECKING MONITOR STATUS (See page ES-17).

DTC	P0500	Vehicle Speed Sensor "A"

DESCRIPTION

The vehicle speed is detected using the No. 1 vehicle speed sensor. The No. 1 vehicle speed sensor transmits a 4-pluse signal for every revolution of the rotor shaft, which is rotated by the transaxle output shaft via the driven gear. The 4-pluse signal is converted into a more precise rectangular waveform by the waveform shaping circuit inside the combination meter. The signal is then transmitted to the ECM. The ECM determines the vehicle speed based on the frequency of the pulse signal.

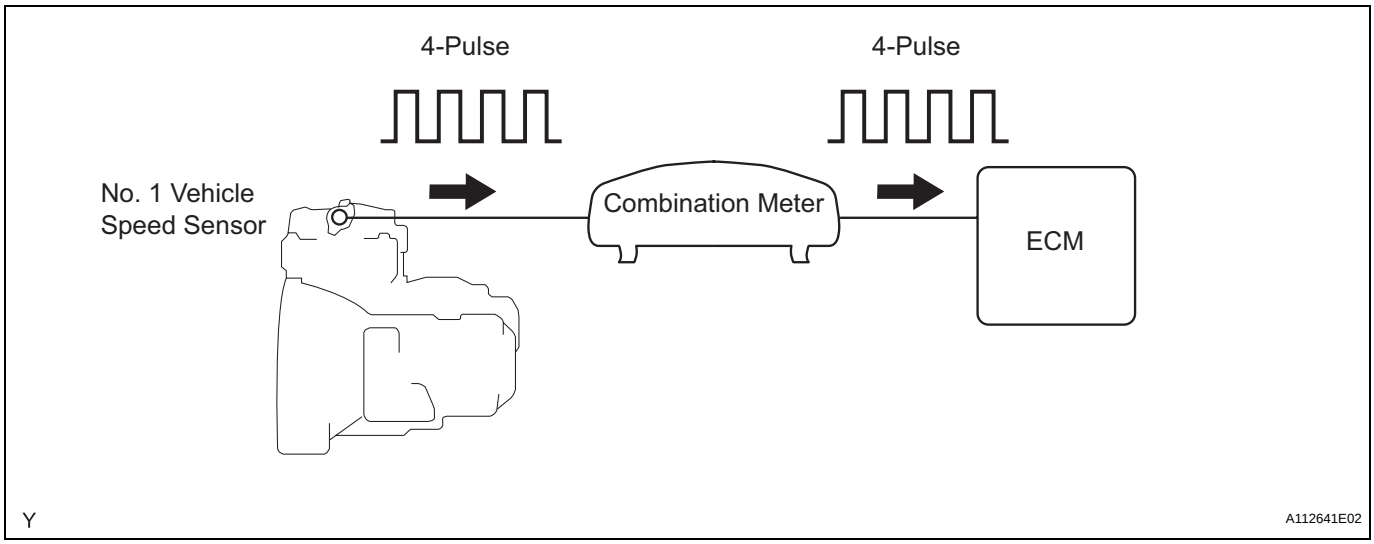

DTC No.	DTC Detection Conditions	Trouble Areas
P0500	While vehicle being driven, no vehicle speed sensor signal transmitted to ECM (1 trip detection logic: Automatic transaxle) (2 trip detection logic: Manual transaxle)	• Open or short in speed signal circuit • Vehicle speed sensor • Combination meter • ECM • Skid control ECU

MONITOR DESCRIPTION

Automatic Transaxle Models

The ECM assumes that the vehicle is being driven, when the indicated engine speed is more than 2,300 rpm and 30 seconds have elapsed since the Park/Neutral Position (PNP) switch was turned OFF. If there is no speed signal from the combination meter, despite these conditions being met, the ECM interprets this as a malfunction in the speed signal circuit. The ECM then illuminates the MIL and sets the DTC.

Manual Transaxle Models

The ECM assumes that the vehicle is being driven, when a high engine load or fuel-cut with the accelerator pedal released continues for 5 seconds or more. If there is no speed signal from the combination meter, despite this condition being met, the ECM interprets this as a malfunction in the speed signal circuit. The ECM then illuminates the MIL and sets the DTC.

MONITOR STRATEGY

Related DTCs	P0500: Vehicle speed sensor "A" pulse input error
Required Sensors/Components (Main)	Vehicle Speed Sensor (VSS), Combination meter and Skid control ECU
Required Sensors/Components (Related)	Park/Neutral Position (PNP) switch, Engine Coolant Temperature (ECT) sensor, Crankshaft Position (CKP) sensor, Throttle Position (TP) sensor and Mass Air Flow (MAF) meter
Frequency of Operation	Continuous

Duration	2 seconds: Automatic transaxle, Intake air temperature -10°C (14°F) or more 8 seconds: Automatic transaxle, Intake air temperature less than -10°C (14°F) 8 seconds: Manual transaxle Case 1 4.25 seconds: Manual transaxle Case 2
MIL Operation	Immediate: Automatic transaxle 2 driving cycles: Manual transaxle
Sequence of Operation	None

TYPICAL ENABLING CONDITIONS

M/T Case 1:

Monitor runs whenever following DTCs not present	P0100 - P0113 (MAF meter) P0115 - P0118 (ECT sensor) P0125 (Insufficient ECT for Closed Loop)
Engine coolant temperature	70°C (158°F) or more
Engine speed	2,000 to 5,000 rpm
Engine load	34.9 % or more
Fuel cut at high engine speed	Not executing

M/T Case 2:

Monitor runs whenever following DTCs not present	P0100 - P0113 (MAF meter) P0115 - P0118 (ECT sensor) P0125 (Insufficient ECT for Closed Loop)
Idle	ON
Fuel cut	ON

A/T:

Monitor runs whenever following DTCs not present	P0120 - P0223, P2135 (TP sensor)
Either of following condition (a) or (b) met:	-
(a) Following conditions 1 and 2 met:	-
1. ECT and ECT sensor	20°C (68°F) or more, and sensor does not malfunction (P0115 or P0116)
2. Time after PNP switch turned OFF	10 seconds or more
(b) Following conditions 1 and 2 met:	-
1. ECT and ECT sensor	Less than 20°C (68°F), and sensor malfunction (P0115 or P0116)
2. Time after PNP switch turned OFF	30 seconds or more
Engine speed	2,080 rpm or more (varies with throttle valve opening angle)
Fuel cut at high engine speed	Not executing
Time after ignition switch turned to ON	0.5 seconds or more
TP sensor learning	Completed

TYPICAL MALFUNCTION THRESHOLDS

Vehicle speed sensor signal	No pulse input

ES

WIRING DIAGRAM

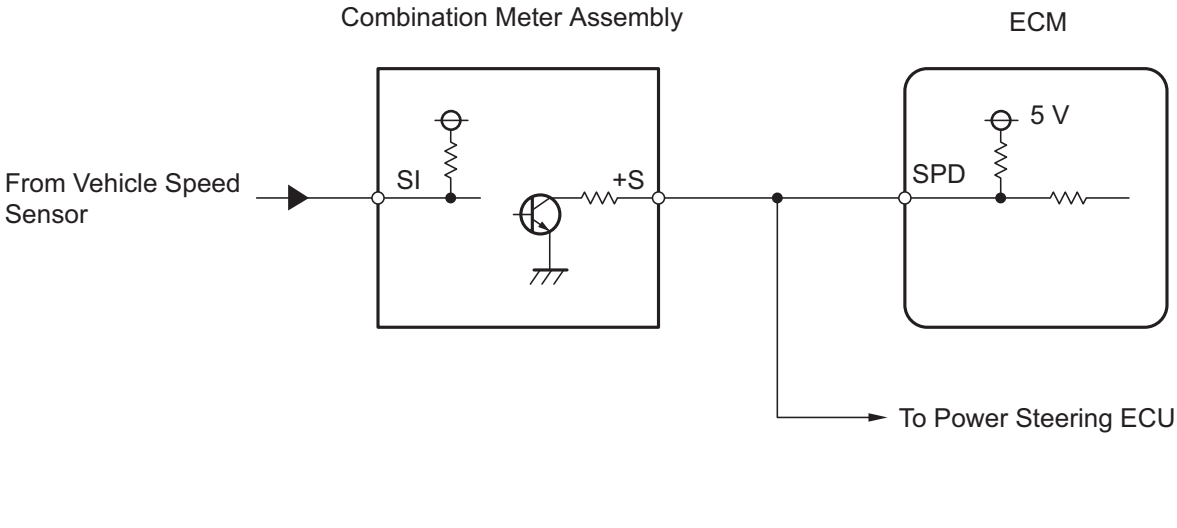

ES

INSPECTION PROCEDURE

HINT:
Read freeze frame data using an intelligent tester. Freeze frame data record the engine condition when malfunctions are detected. When troubleshooting, freeze frame data can help determine if the vehicle was moving or stationary, if the engine was warmed up or not, if the air-fuel ratio was lean or rich, and other data, from the time the malfunction occurred.

1	CHECK OPERATION OF SPEEDOMETER

(a) Drive the vehicle and check whether the operation of the speedometer in the combination meter is normal.
HINT:
- The vehicle speed sensor is operating normally if the speedometer reading is normal.
- If the speedometer does not operate, check it by following the procedure described in Speedometer Malfunction for Hatchback (See page ME-100) or Sedan (See page ME-36).

NG → GO TO MALFUNCTION IN SPEEDOMETER

OK

2	READ VALUE USING INTELLIGENT TESTER (VEHICLE SPD)

(a) Connect an intelligent tester to the DLC3.
(b) Turn the ignition switch to ON.
(c) Turn the tester ON.

(d) Select the following menu items: DIAGNOSIS / ENHANCED OBD II / DATA LIST / PRIMARY / VEHICLE SPD.
(e) Drive the vehicle.
(f) Read the value displayed on the tester.
OK:
Vehicle speeds displayed on tester and speedometer display are equal.

OK → **CHECK FOR INTERMITTENT PROBLEMS**

NG

ES

3 CHECK COMBINATION METER ASSEMBLY (+S VOLTAGE)

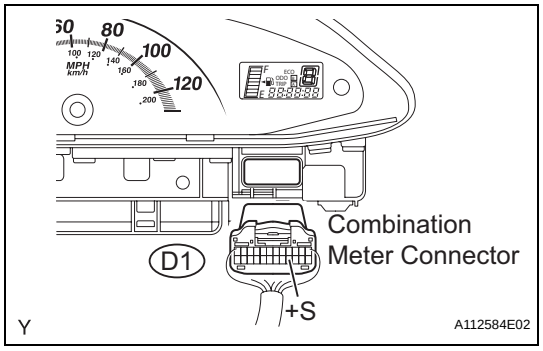

(a) Disconnect the D1 combination meter connector.
(b) Turn the ignition switch to ON.
(c) Measure the voltage between the terminal of the combination meter and the body ground.
Standard voltage

Tester Connections	Specified Conditions
+S (D1-16) - Body ground	4.5 to 5.5 V

(d) Reconnect the combination meter connector.

NG → **Go to step 5**

OK

4 CHECK COMBINATION METER ASSEMBLY (SPD SIGNAL WAVEFORM)

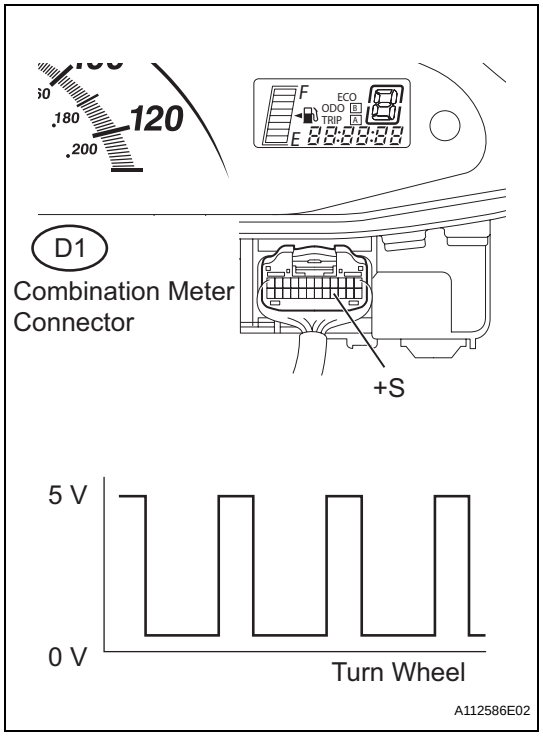

(a) Shift the transmission gear selector lever to the neutral position.
(b) Jack up the vehicle.
(c) Turn the ignition switch to ON.
(d) Check the voltage between the terminal of the combination meter and the body ground while the wheel is turned slowly.
Standard voltage

Tester Connections	Specified Conditions
+S (D1-16) - Body ground	Voltage generated intermittently

HINT:
The output voltage should fluctuate up and down, similarly to the diagram, when the wheel is turned slowly.

NG → **REPLACE COMBINATION METER ASSEMBLY**

OK

5	CHECK HARNESS AND CONNECTOR (COMBINATION METER ASSEMBLY - ECM)

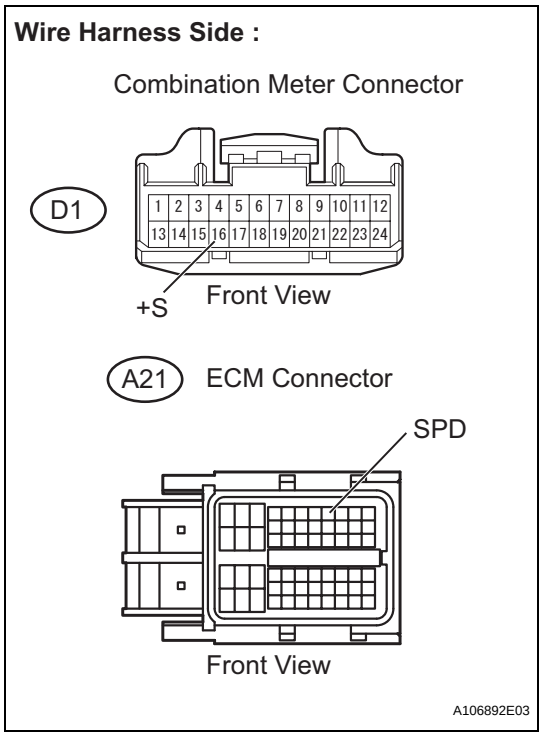

(a) Disconnect the D1 combination meter connector.
(b) Disconnect the A21 ECM connector.
(c) Check the resistance.

Standard resistance (check for open)

Tester Connections	Specified Conditions
+S (D1-16) - SPD (A21-8)	Below 1 Ω

Standard resistance (check for short)

Tester Connections	Specified Conditions
+S (D1-16) or SPD (A21-8) - Body ground	10 kΩ or higher

(d) Reconnect the combination meter connector.
(e) Reconnect the ECM connector.

NG → **REPAIR OR REPLACE HARNESS OR CONNECTOR**

OK

REPLACE ECM

DTC	P0504	Brake Switch "A" / "B" Correlation

DESCRIPTION

The stop light switch is a duplex system that transmits two signals: STP and ST1-. These two signals are used by the ECM to monitor whether or not the brake system is working properly. If the signals, which indicate the brake pedal is being depressed and released, are detected simultaneously, the ECM interprets this as a malfunction in the stop light switch and sets the DTC.

HINT:

The normal conditions are as shown in the table below. The signals can be read using an intelligent tester.

Signals	Brake Pedal Released	In Transition	Brake Pedal Depressed
STP	OFF	ON	ON
ST1-	ON	ON	OFF

ES

DTC No.	DTC Detection Conditions	Trouble Areas
P0504	Conditions (a), (b) and (c) continue for 0.5 seconds or more (1 trip detection logic): (a) Ignition switch ON (b) Brake pedal released (c) STP signal OFF when ST1- signal OFF	• Short in stop light switch signal circuit • STOP fuse • IGN fuse • Stop light switch • ECM

WIRING DIAGRAM

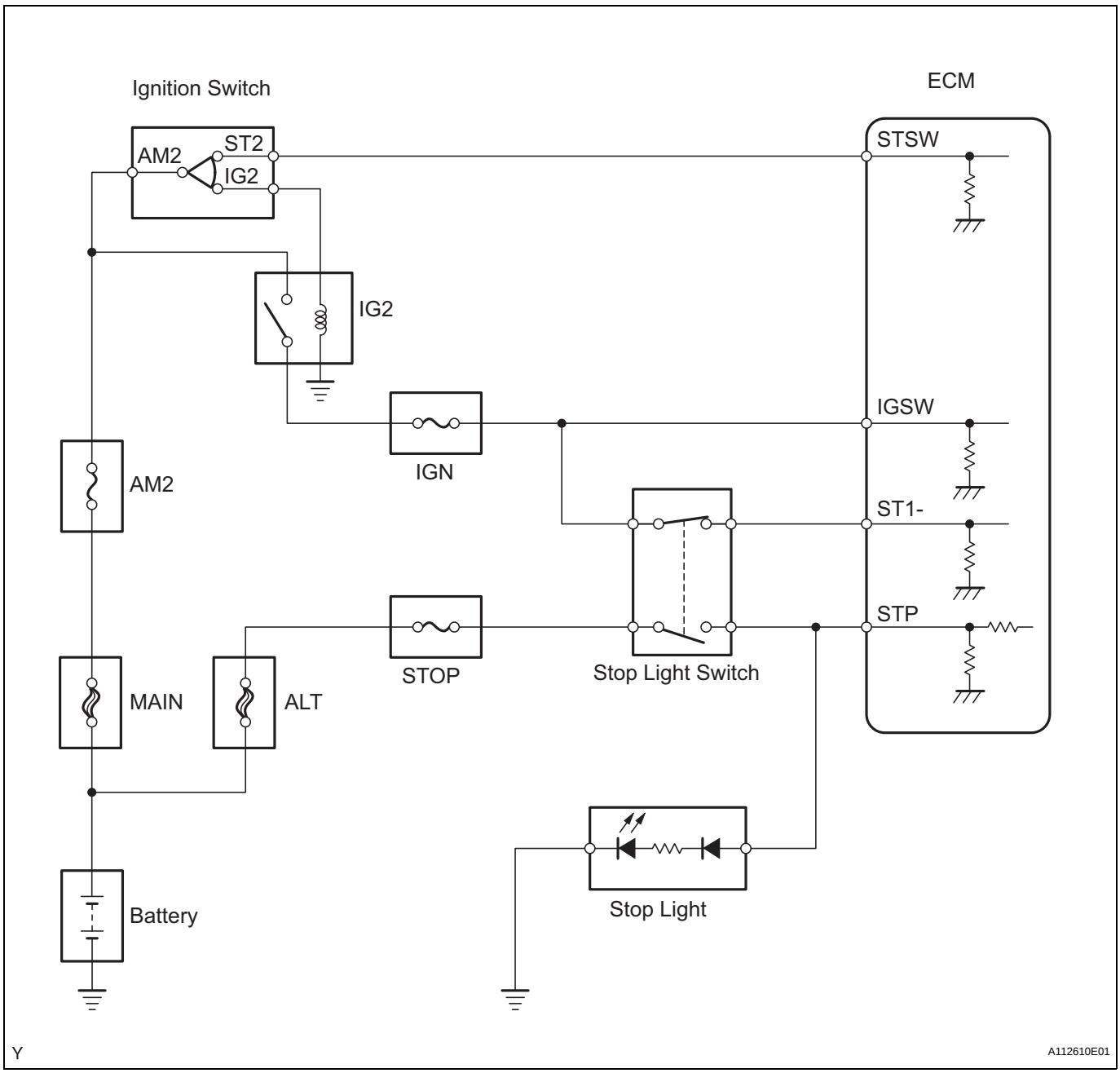

INSPECTION PROCEDURE

HINT:

- Read freeze frame data using an intelligent tester. Freeze frame data record the engine condition when malfunctions are detected. When troubleshooting, freeze frame data can help determine if the vehicle was moving or stationary, if the engine was warmed up or not, if the air-fuel ratio was lean or rich, and other data, from the time the malfunction occurred.
- STP signal conditions can be checked using an intelligent tester.
  (a) Connect the intelligent tester to the DLC3.
  (b) Turn the ignition switch to ON.
  (c) Turn the tester ON.
  (d) Select the following menu items: DIAGNOSIS / ENHANCED OBD II / DATA LIST / PRIMARY / STOP LIGHT SW.
  (e) Check the STP signal when the brake pedal is depressed and released.

Brake Pedal Operation	Specified Conditions
Depressed	STP signal ON
Released	STP signal OFF

1 CHECK STOP LIGHT SWITCH ASSEMBLY (TERMINAL B VOLTAGE)

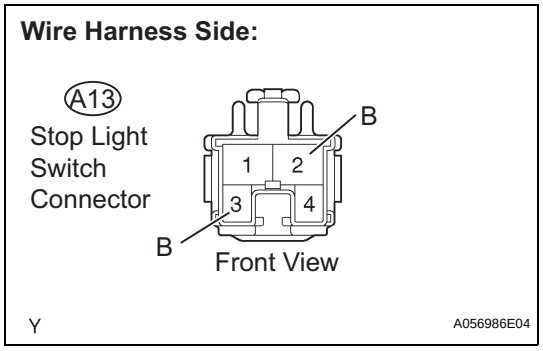

(a) Disconnect the A13 stop light switch connector.
(b) Turn the ignition switch to ON.
(c) Measure the voltage between the terminals of the A13 stop light switch connector and body ground.

Standard voltage

Tester Connections	Specified Conditions
B (A13-2) - Body ground	11 to 14 V
B (A13-3) - Body ground	

(d) Reconnect the stop light switch connector.

NG → **Go to step 4**

OK

2 INSPECT STOP LIGHT SWITCH ASSEMBLY

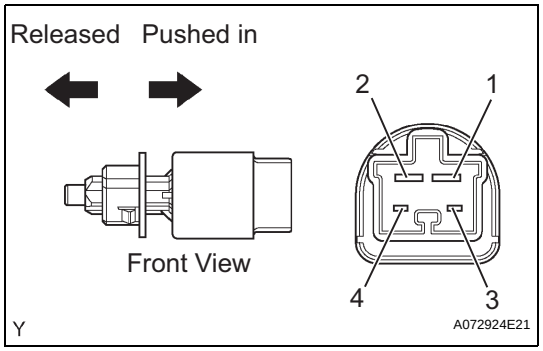

(a) Remove the stop light switch assembly.
(b) Check the resistance.

Standard resistance

Tester Connections	Switch Positions	Specified Conditions
1 - 2	Switch pin released	Below 1 Ω
	Switch pin pushed in	10 kΩ or higher
3 - 4	Switch pin released	10 kΩ or higher
	Switch pin pushed in	Below 1 Ω

(c) Reinstall the stop light switch assembly.

NG → **REPLACE STOP LIGHT SWITCH ASSEMBLY**

OK

ES

3	CHECK ECM (STP AND ST1 - VOLTAGE)

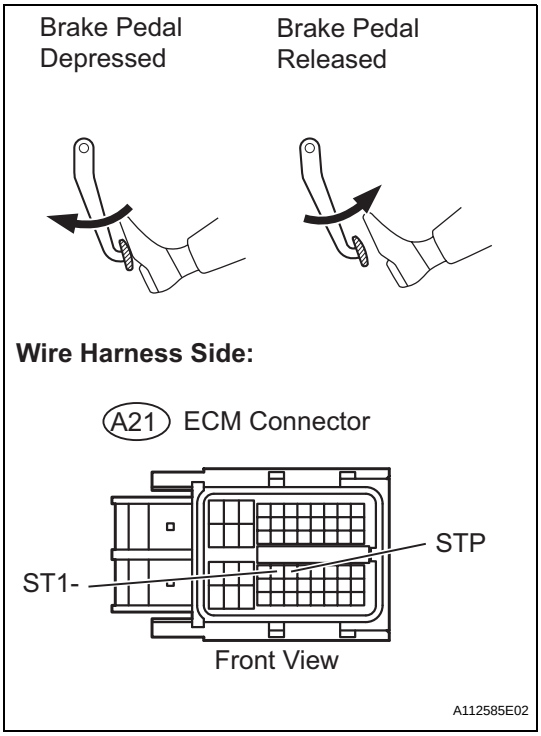

(a) Disconnect the A21 ECM connector.
(b) Turn the ignition switch to ON.
(c) Measure the voltage between the terminals ST1- and STP of the A21 ECM connector and body ground.
Standard voltage

Tester Connections	Brake Pedal Operations	Specified Conditions
ST1- (A21-35) - Body ground	Released	11 to 14 V
	Depressed	0 to 3 V
STP (A21-36) - Body ground	Released	0 to 3 V
	Depressed	11 to 14 V

(d) Reconnect the ECM connector.

NG → **REPAIR OR REPLACE HARNESS OR CONNECTOR**

OK

REPLACE ECM

4	INSPECT FUSE (STOP AND IGN FUSE)

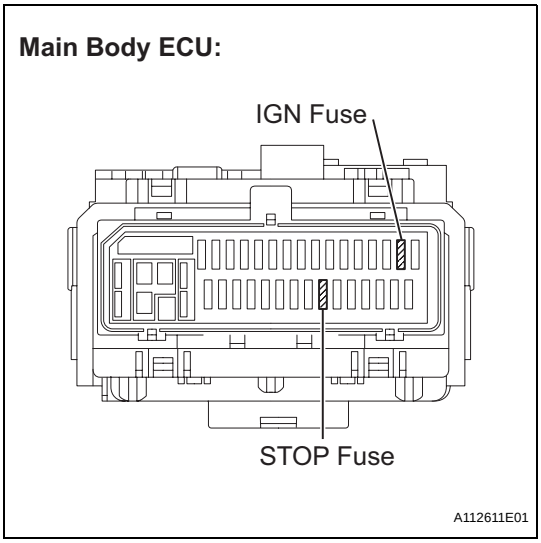

(a) Remove the STOP and IGN fuses from the main body ECU.
(b) Check the resistance.
Standard resistance:
Below 1 Ω
(c) Reinstall the STOP and IGN fuses.

NG → **CHECK FOR SHORTS IN ALL HARNESSES AND CONNECTORS CONNECTED TO FUSE AND REPLACE FUSE**

OK

REPAIR OR REPLACE HARNESS OR CONNECTOR

DTC	P0505	Idle Control System Malfunction

DESCRIPTION

The idling speed is controlled by the ETCS (Electronic Throttle Control System). The ETCS is comprised of: 1) the one valve type throttle body; 2) the throttle actuator, which operates the throttle valve; 3) the Throttle Position (TP) sensor, which detects the opening angle of the throttle valve; 4) the Accelerator Pedal Position (APP) sensor, which detects the accelerator pedal position; and 5) the ECM, which controls the ETCS. Based on the target idling speed, the ECM controls the throttle actuator to provide the proper throttle valve opening angle.

DTC No.	DTC Detection Conditions	Trouble Areas
P0505	Idling speed continues to vary greatly from target idling speed (2 trip detection logic)	• ETCS • Air induction system • PCV hose connections • ECM

MONITOR DESCRIPTION

The ECM monitors the idling speed and idling air flow volume to conduct Idle Speed Control (ISC). The ECM determines that the ISC system is malfunctioning if the following conditions apply:

- The learned idling air flow volume remains at the maximum or minimum volume 5 times or more during a drive cycle.
- After driving at 6.25 mph (10 km/h) or more, the actual engine idling speed varies from the target idling speed by between 100 rpm and 200 rpm, 5 times or more during a drive cycle.

Example:

If the actual idling speed varies from the target idling speed by more than 200 rpm* 5 times during a drive cycle, the ECM illuminates the MIL and sets the DTC.

HINT:

*: Threshold idling speed varies with engine load.

Example:

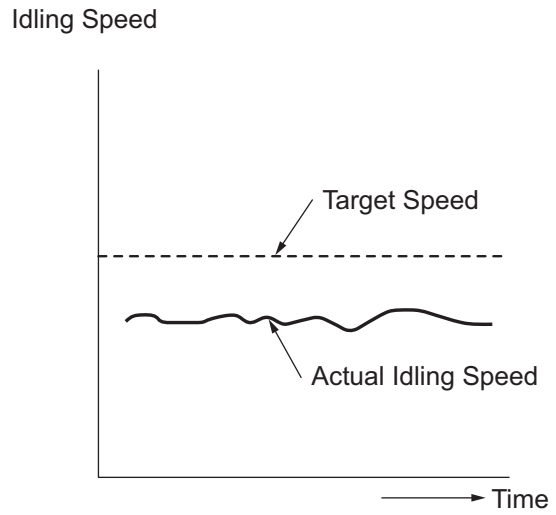

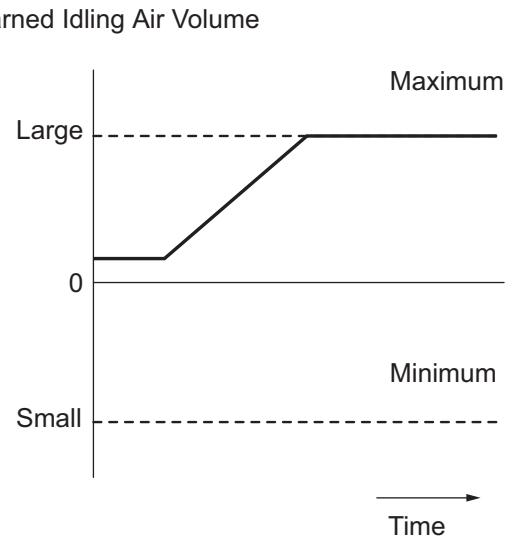

Y

A121611E02

MONITOR STRATEGY

Related DTCs	P0505: ISC function
Required Sensors/Components (Main)	ETCS
Required Sensors/Components (Related)	Crankshaft position sensor, Engine coolant temperature sensor, and Vehicle speed sensor
Frequency of Operation	Once per driving cycle: Functional check Continuous: Range check
Duration	10 minutes: Functional check 10 seconds: Range check
MIL Operation	2 driving cycles: Functional check Immediate: Range check
Sequence of Operation	None

TYPICAL ENABLING CONDITIONS

Functional check:

Engine	Running

Range check:

Time after first missing voltage change	10 seconds or more
Output signal duty	10 to 90 %
Battery voltage	11 V or more

TYPICAL MALFUNCTION THRESHOLDS

Functional check:

Either of following conditions 1 or 2 met	-
1. Frequency that both of following conditions (a) and (b) set	5 times or more
(a) Engine rpm - Target engine rpm	Less than -100 rpm, or more than 150 rpm
(b) Vehicle condition	Stop after vehicle was driven by 6.25 mph (10 km/h) or more
2. Frequency that both of following conditions (c) and (d) set	Once
(c) Engine rpm - Target engine rpm	Less than -100 rpm, or more than 150 rpm
(d) IAC flow rate learning value	0.55 L/sec or less, or 3.82 L/sec

Range check:

Number of missing output voltage changes	2,000 times or more

ES

INSPECTION PROCEDURE

HINT:

- The following conditions may also cause DTC P0505 to be set:
  (a) The floor carpet overlapping slightly onto the accelerator pedal, causing the accelerator pedal to be slightly depressed and therefore the throttle valve position to be slightly open.
  (b) The accelerator pedal being not fully released.
- Read freeze frame data using an intelligent tester. Freeze frame data record the engine condition when malfunctions are detected. When troubleshooting, freeze frame data can help determine if the vehicle was moving or stationary, if the engine was warmed up or not, if the air-fuel ratio was lean or rich, and other data, from the time the malfunction occurred.

1	CHECK ANY OTHER DTCS OUTPUT (IN ADDITION TO DTC P0505)

(a) Connect an intelligent tester to the DLC3.
(b) Turn the ignition switch to ON.
(c) Turn the tester ON.
(d) Select the following the menu items: DIAGNOSIS / ENHANCED OBD II / DTC INFO / CURRENT CODES.
(e) Read DTCs.

Result

Display (DTC Output)	Proceed To
P0505	A
P0505 and other DTCs	B

HINT:
If any DTCs other than P0505 are output, troubleshoot those DTCs first.

B → GO TO DTC CHART

A

2	CHECK PCV HOSE CONNECTIONS

OK:
PCV hose is connected correctly and is not damaged.

NG → REPAIR OR REPLACE PCV HOSE

OK

3	CHECK AIR INDUCTION SYSTEM

(a) Check the air induction system for vacuum leakage.
OK:
No leakage from air induction system.

NG → **REPAIR OR REPLACE AIR INDUCTION SYSTEM**

OK

ES

4	CHECK THROTTLE VALVE

(a) Check the throttle valve condition.

NG → **REPLACE THROTTLE BODY ASSEMBLY**

OK

REPLACE ECM

DTC	P050A	Cold Start Idle Air Control System Performance

DTC	P050B	Cold Start Ignition Timing Performance

DESCRIPTION

The Electronic Throttle Control System (ETCS) controls the engine idling speed. The ETCS operates the throttle actuator to open and close the throttle valve, and adjusts the intake air amount to achieve the target idling speed.
In addition, the ECM retards the ignition timing and the ETCS increases the intake air amount to quickly increase the catalyst temperature at cold start to reduce emissions.

DTC No.	DTC Detection Conditions	Trouble Areas
P050A	Accumulated intake air amount during 10 seconds of idling after cold start, less than threshold (2 trip detection logic)	• Throttle body assembly • Mass air flow meter • Air induction system • PCV hose connections • VVT system • Air cleaner filter element • ECM
P050B	Ignition timing retard value insufficient for 5 seconds or more during 10 seconds of P050A monitoring duration at cold start (2 trip detection logic)	• Throttle body assembly • Mass air flow meter • Air induction system • PCV hose connections • VVT system • Air cleaner filter element • ECM

ES

MONITOR DESCRIPTION

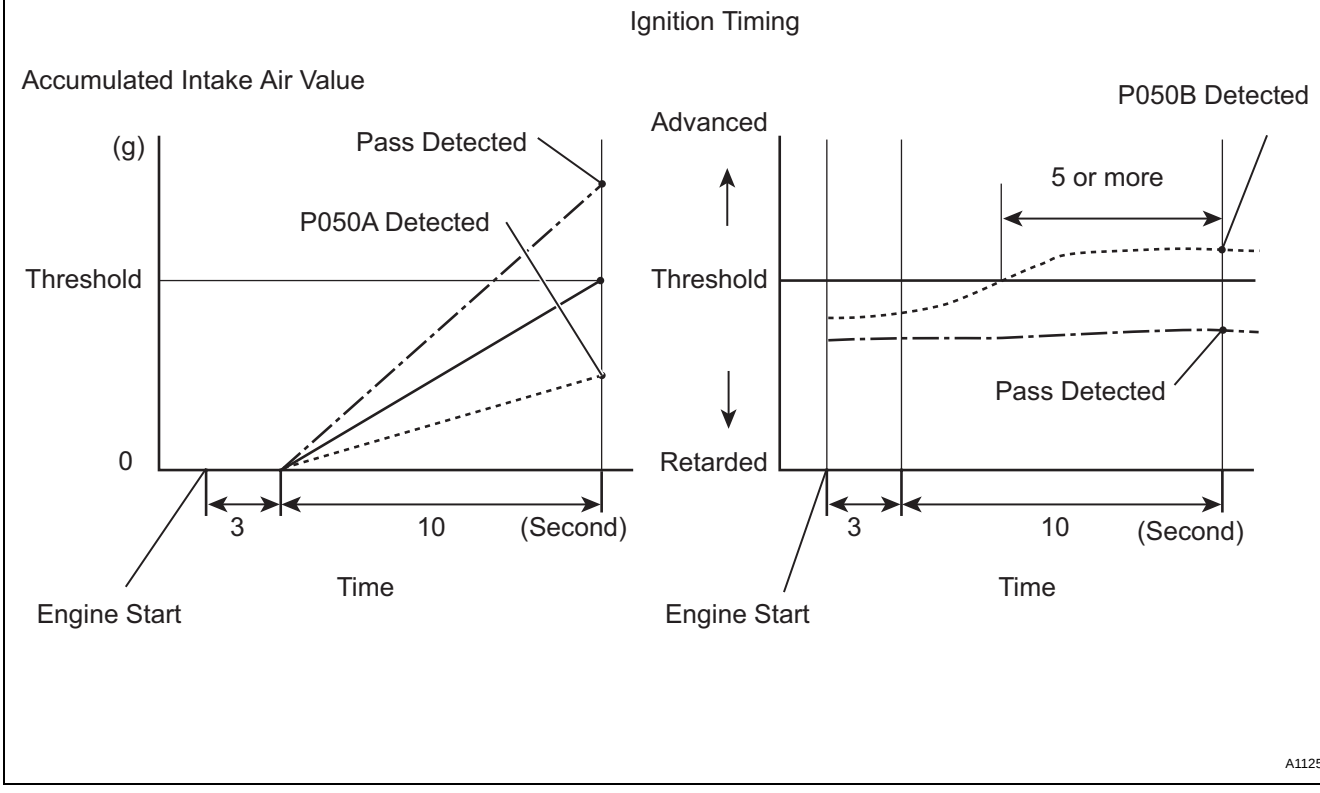

The ECM monitors the intake air amount during idling and the ignition timing.
When the Engine Coolant Temperature (ECT) is between -10°C and 50 °C (14°F and 122°F), the ECM calculates the idling intake air amount for 10 seconds, beginning 3 seconds after the engine starts.
When the accumulated value is below the threshold, the ECM interprets this as a malfunction in the Idle Speed Control (ISC) system at cold start.
The ECM also monitors the ignition timing at cold start, and judges it to be incorrect when it is advanced to the same value for a warm engine for 5 seconds or more of the 10 second monitoring period.
Example:
P050A is detected when all conditions below are met (2 trip detection logic).
1. The ECT is between -10°C and 50 °C (14°F and 122°F) when the engine starts.
2. The engine idles for 13 seconds after engine start.
3. The accumulated intake air amount is below the threshold.

The ECM sets the DTC and illuminates the MIL 13 seconds after the engine is next started.

NOTICE:
When the negative battery terminal is disconnected during inspection or repairs, the ISC learning values are cleared. The ISC learning must be performed by warming up the engine and idling for 5 minutes with the ECT at 75°C (167°F) or more because DTCs cannot be detected with the ISC learning values cleared.

MONITOR STRATEGY

Related DTCs	P050A: Idle speed control problem at cold P050B: Idle ignition timing problem at cold
Required Sensors/Components (Main)	Mass air flow meter
Required Sensors/Components (Related)	Engine Coolant Temperature (ECT) sensor, Throttle position sensor, Vehicle speed sensor
Frequency of Operation	Once per driving cycle
Duration	10 seconds
MIL Operation	2 driving cycles
Sequence of Operation	None

TYPICAL ENABLING CONDITIONS

P050A:

Battery voltage	8 V or more
Time after engine start	3 seconds or more
Starter	OFF
ECT at engine start	-10°C (14°F) or more
ECT	-10°C to 50°C (14°F to 122°F)
Engine idling time	3 seconds or more
Fuel-cut	OFF
Vehicle speed	Less than 1.875 mph (3 km/h)
Time after shift position changed (A/T)	1 second or more
Atmospheric pressure	76 kPa (570 mmHg) or more

P050B:

Battery voltage	8 V or more
Time after engine start	3 seconds or more
Starter	OFF
ECT at engine start	-10°C (14°F) or more
ECT	-10°C to 50°C (14°F to 122°F)
Engine idling time	3 seconds or more
Fuel-cut	OFF
Vehicle speed	Less than 1.875 mph (3 km/h)

TYPICAL MALFUNCTION THRESHOLDS

P050A:

Accumulated air flow amount (M/T)	Varies with ECT (Example: Less than 13.75 g)
Accumulated air flow amount (A/T)	Varies with ECT (Example: Less than 17.5 g)

P050B:

Accumulated time when ignition timing retard value insufficient	5 seconds or more

INSPECTION PROCEDURE

HINT:
Read freeze frame data using an intelligent tester. Freeze frame data record the engine condition when malfunctions are detected. When troubleshooting, freeze frame data can help determine if the vehicle was moving or stationary, if the engine was warmed up or not, if the air-fuel ratio was lean or rich, and other data, from the time the malfunction occurred.

ES

1	CHECK ANY OTHER DTCS OUTPUT (IN ADDITION TO DTC P050A AND/OR P050B)

(a) Connect an intelligent tester to the DLC3.
(b) Turn the ignition switch to ON.
(c) Turn the tester ON.
(d) Select the following the menu items: DIAGNOSIS / ENHANCED OBD II / DTC INFO / CURRENT CODES.
(e) Read the DTCs.

Result

Display (DTC Output)	Proceed To
P050A and/or P050B	A
P050A and/or P050B and other DTCs	B

HINT:
If any DTCs other than P050A and P050B are output, troubleshoot those DTCs first.

B → GO TO DTC CHART

A

2	READ VALUE USING INTELLIGENT TESTER (FUEL TRIM)

HINT:
Calculate the total fuel trim values to check the characteristic deviation of the mass air flow meter.
(a) Connect the intelligent tester to the DLC3.
(b) Turn the ignition switch to ON.
(c) Turn the tester ON.
(d) Select the following menu items: DIAGNOSIS / ENHANCED OBD II / DATA LIST / PRIMARY / SHORT FT #1 and LONG FT #1.
(e) Read the values displayed on the tester.
(f) Add together the SHORT FT #1 and LONG FT #1 values to obtain the total FUEL TRIM.

OK:
Total of SHORT FT #1 and LONG FT #1 values is between -20 % and 20 %.

OK → **Go to step 12**

NG

3	PERFORM ACTIVE TEST USING INTELLIGENT TESTER (OPERATE OCV)

(a) Connect the intelligent tester to the DLC3.
(b) Start the engine and turn the tester ON.
(c) Warm up the engine.
(d) Select the following menu items: DIAGNOSIS / ENHANCED OBD II / ACTIVE TEST / VVT CTRL B1.
(e) Check the engine speed while operating the Oil Control Valve (OCV) using the tester.

OK

Tester Operations	Specified Conditions
OCV OFF	Normal engine speed
OCV ON	Engine idles roughly or stalls (soon after OCV switched from OFF to ON)

NG → **Go to step 8**

OK

4	CHECK PCV HOSE CONNECTIONS

OK:
PCV hose is connected correctly and is not damaged.

NG → **Go to step 9**

OK

5	CHECK AIR INDUCTION SYSTEM

(a) Check the air induction system for vacuum leakage.
OK:
No leakage from air induction system.

NG → **Go to step 10**

OK

6	CHECK AIR CLEANER FILTER ELEMENT SUB-ASSEMBLY

(a) Visually check that the air cleaner filter element is not excessively contaminated with dirt or oil.
OK:
Air cleaner filter element is not excessively contaminated with dirt or oil.

NG → Go to step 11

OK

7	REPLACE MASS AIR FLOW METER

NEXT → Go to step 15

8	CHECK AND REPAIR VVT SYSTEM

NEXT → Go to step 15

9	REPAIR OR REPLACE PCV HOSE

NEXT → Go to step 15

10	REPAIR OR REPLACE AIR INDUCTION SYSTEM

NEXT → Go to step 15

11	REPLACE AIR CLEANER FILTER ELEMENT SUB-ASSEMBLY

NEXT → Go to step 15

12	CHECK THROTTLE VALVE

(a) Check for deposits around the throttle valve and throttle valve condition.

OK:

No deposits around throttle valve and throttle valve moves smoothly.

NG → Go to step 14

OK

13	REPLACE ECM

NEXT → Go to step 15

14	REPAIR OR REPLACE THROTTLE BODY ASSEMBLY

NEXT → Go to step 15

15	CHECK WHETHER DTC OUTPUT RECURS (DTC P050A AND/OR P050B)

NOTICE:
In this operation, the engine must be cold (the same level as the engine coolant temperature recorded in the freeze frame data).

(a) Connect the intelligent tester to the DLC3.
(b) Turn the ignition switch to ON.
(c) Turn the tester ON.
(d) Clear DTCs (See page ES-34).
(e) Switch the ECM from normal mode to check mode using the tester (See page ES-37).
(f) Start the engine to idle for a minute.
OK:
Stable fast idling.
(g) Read DTCs.
OK:
No DTC output.

NEXT

END

DTC	P0560	System Voltage

DESCRIPTION

The battery supplies electricity to the ECM even when the ignition switch is in the OFF position. This power allows the ECM to store data such as DTC history, freeze frame data and fuel trim values. If the battery voltage falls below a minimum level, these memories are cleared and the ECM determines that there is a malfunction in the power supply circuit. When the engine is next started, the ECM illuminates the MIL and sets the DTC.

DTC No.	DTC Detection Conditions	Trouble Areas
P0560	Open in ECM back up power source circuit (1 trip detection logic)	• Open in back up power source circuit • Battery • Battery terminals • EFI fuse • ECM

ES

HINT:
If DTC P0560 is set, the ECM does not store other DTCs or the data stored in the ECM are partly eraced.

MONITOR STRATEGY

Related DTCs	P0560: ECM system voltage
Required Sensors/Components (Main)	ECM
Required Sensors/Components (Related)	-
Frequency of Operation	Continuous
Duration	3 seconds
MIL Operation	Immediate (MIL illuminated after next engine start)
Sequence of Operation	None

TYPICAL ENABLING CONDITIONS

Monitor runs whenever following DTCs not present	None

TYPICAL MALFUNCTION THRESHOLDS

ECM power source	Less than 3.5 V

WIRING DIAGRAM

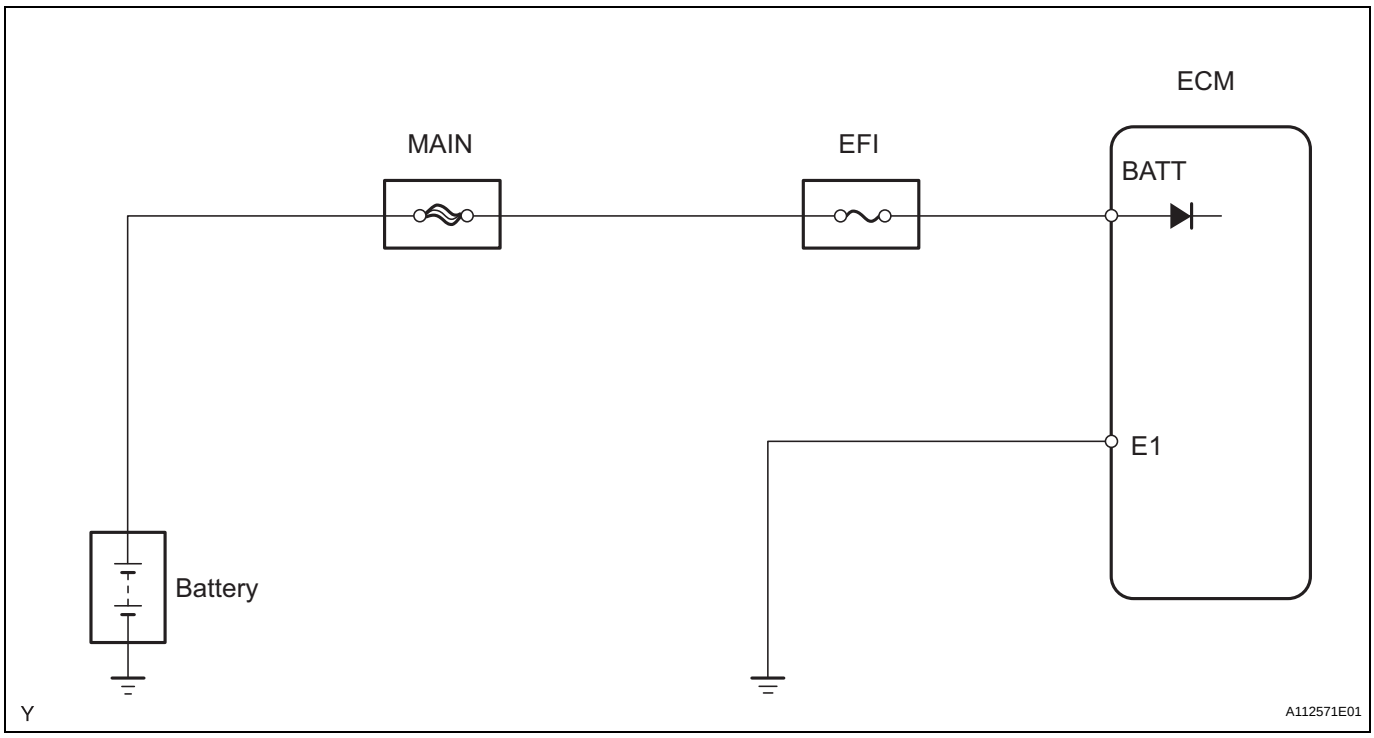

ES

INSPECTION PROCEDURE

HINT:
Read freeze frame data using an intelligent tester. Freeze frame data record the engine condition when malfunctions are detected. When troubleshooting, freeze frame data can help determine if the vehicle was moving or stationary, if the engine was warmed up or not, if the air-fuel ratio was lean or rich, and other data, from the time the malfunction occurred.

1	CHECK FUSE (EFI FUSE)

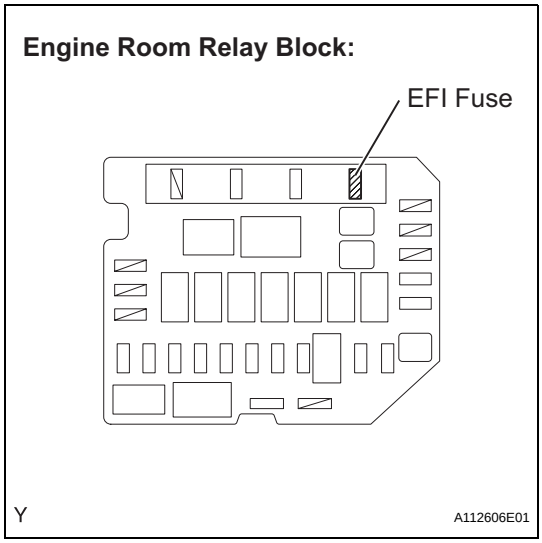

(a) Remove the EFI fuse from the engine room relay block.
(b) Check the resistance of the EFI fuse.
Standard resistance:
Below 1 Ω
(c) Reinstall the EFI fuse.

NG → **CHECK FOR SHORTS IN ALL HARNESSES AND CONNECTORS CONNECTED TO FUSE AND REPLACE FUSE**

OK

2	CHECK HARNESS AND CONNECTOR (ECM - EFI FUSE, EFI FUSE - BATTERY)

Engine Room Relay Block :

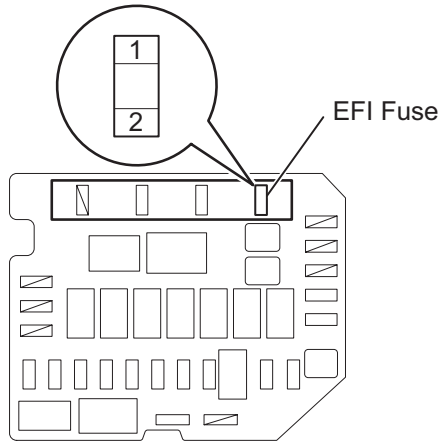

Wire Harness Side :

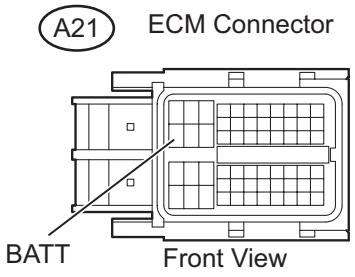

A107903E02

(a) Check the harness and the connector between the EFI fuse and ECM.
  (1) Remove the EFI fuse from the engine room relay block.
  (2) Disconnect the A21 ECM connector.
  (3) Check the resistance.

Standard resistance (Check for open)

Tester Connections	Specified Conditions
EFI fuse (2) - BATT (A21-20)	Below 1 Ω

Standard resistance (Check for short)

Tester Connections	Specified Conditions
EFI fuse (2) or BATT (A21-20) - Body ground	10 kΩ or higher

  (4) Reconnect the ECM connector.
  (5) Reinstall the EFI fuse.

(b) Check the harness and the connector between the EFI fuse and battery.
  (1) Remove the EFI fuse from the engine room relay block.
  (2) Disconnect the positive battery terminal.
  (3) Check the resistance.

Standard resistance (Check for open)

Tester Connections	Specified Conditions
Battery positive terminal - EFI fuse (1)	Below 1 Ω

Standard resistance (Check for short)

Tester Connections	Specified Conditions
Battery positive terminal or EFI fuse (1) - Body ground	10 kΩ or higher

  (4) Reconnect the positive battery terminal.
  (5) Reinstall the EFI fuse.

NG → **REPAIR OR REPLACE HARNESS OR CONNECTOR**

OK

3	INSPECT BATTERY

(a) Check that the battery is not depleted.

OK:

Battery is not depleted

NG → **REPLACE BATTERY**

OK

4	CHECK BATTERY TERMINAL

(a) Check that the battery terminals are not loose or corroded.
OK:
Battery terminals are not loose or corroded

NG → **REPAIR OR REPLACE BATTERY TERMINAL**

OK

ES

5	CHECK WHETHER DTC OUTPUT RECURS

(a) Connect the intelligent tester to the DLC3.
(b) Turn the ignition switch to ON and turn the tester ON.
(c) Clear DTCs (See page ES-34).
(d) Turn the ignition switch to OFF and turn the tester OFF.
(e) Start the engine and turn the tester ON.
(f) Select the following menu items: DIAGNOSIS / ENHANCED OBD II / DTC INFO / CURRENT CODES.
(g) Read DTCs.

Result

Display (DTC Output)	Proceed To
P0560	A
No output	B

B → **CHECK FOR INTERMITTENT PROBLEMS**

A

REPLACE ECM

DTC	P0604	Internal Control Module Random Access Memory (RAM) Error

DTC	P0606	ECM / PCM Processor

DTC	P0607	Control Module Performance

DTC	P0657	Actuator Supply Voltage Circuit / Open

DESCRIPTION

The ECM continuously monitors its own internal memory status, internal circuits, and output signals transmitted to the throttle actuator. This self-check ensures that the ECM is functioning properly. If any malfunction is detected, the ECM sets the appropriate DTC and illuminates the MIL.
The ECM memory status is diagnosed by internal mirroring of the main CPU and the sub CPU to detect Random Access Memory (RAM) errors. The two CPUs also perform continuous mutual monitoring. The ECM illuminates the MIL and sets a DTC if: 1) outputs from the two CPUs are different or deviate from the standards, 2) the signals sent to the throttle actuator deviate from the standards, 3) a malfunction is found in the throttle actuator supply voltage, and 4) any other ECM malfunction is found.

DTC No.	DTC Detection Conditions	Trouble Areas
P0604 P0606 P0607 P0657	ECM internal error (1 trip detection logic)	ECM

MONITOR STRATEGY

Related DTCs	P0604: ECM RAM error P0606: ECM range check P0607: ECM CPU malfunction P0657: ETCS power supply
Required Sensors/Components (Main)	ECM
Required Sensors/Components (Related)	-
Frequency of Operation	Once per driving cycle: P0657 Continuous: P0604, P0606 and P0607
Duration	Within 1 second
MIL Operation	Immediate
Sequence of Operation	None

TYPICAL ENABLING CONDITIONS

Monitor runs whenever following DTCs not present	None

TYPICAL MALFUNCTION THRESHOLDS

ECM RAM errors (P0604):

RAM mirror check	Fail

ECM CPU range check (P0606):

Either of following conditions met:	-
Difference between throttle valve position of main CPU and throttle valve position of sub CPU	0.3 V or more
Difference between accelerator pedal position of main CPU and accelerator pedal position of sub CPU	0.3 V or more

ECM CPU malfunction (P0607):

Either A or B met	-
A. All of following conditions (a), (b) and (c) met	-
(a) CPU reset	1 time or more
(b) Learned TP - learned APP	0.4 V or more
(c) Electronic throttle actuator	OFF
B. CPU reset	2 times or more

ETCS power supply (P0657):

ETCS power supply when ignition switch turned to ON	7 V or more

INSPECTION PROCEDURE

ES

Read freeze frame data using an intelligent tester. Freeze frame data record the engine condition when malfunctions are detected. When troubleshooting, freeze frame data can help determine if the vehicle was moving or stationary, if the engine was warmed up or not, if the air-fuel ratio was lean or rich, and other data, from the time the malfunction occurred.

1	**CHECK ANY OTHER DTCS OUTPUT (IN ADDITION TO DTC P0604, P0606, P0607 or P0657)**

(a) Connect an intelligent tester to the DLC3.
(b) Turn the ignition switch to ON.
(c) Turn the tester ON.
(d) Select the following menu items: DIAGNOSIS / ENHANCED OBD II / DTC INFO / CURRENT CODES.
(e) Read DTCs.

Result

Display (DTC Output)	Proceed To
P0604, P0606, P0607 or P0657	A
P0604, P0606, P0607 or P0657 and other DTCs	B

B → **GO TO DTC CHART**

A →

REPLACE ECM

DTC	P0617	Starter Relay Circuit High

DESCRIPTION

The cranking holding control system provides a current to the starter when the ECM detects the ignition switch's start signal (STSW). When the ECM judges that the engine has started, the system cuts the current to the starter. When the ECM receives the STSW signal, it turns on the ACC (Accessory) relay, which prevents flickering of the combination meter, clock and audio system. Also, the ECM sends a signal to the ECM's STAR terminal. Then the STAR output signal travels through the Park/Neutral Position (PNP) switch to the ST relay, causing the starter to activate. When the engine is cranking, the starter operation signal is sent to the ECM's STA terminal.

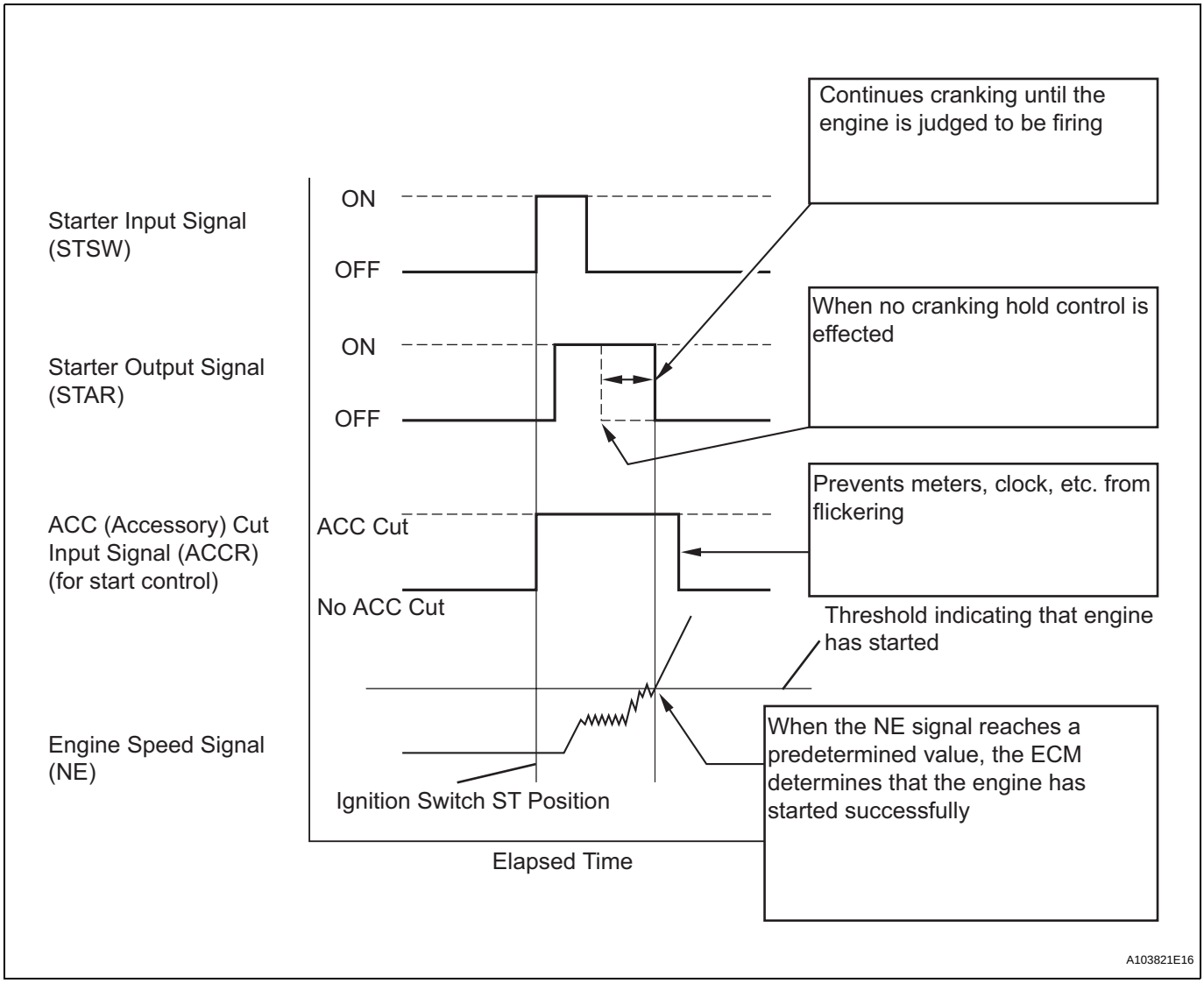

While the engine is being cranked, the positive battery voltage is applied to terminal STA of the ECM. If the ECM detects the Starter Control (STA) signal while the vehicle is being driven, it determines that there is a malfunction in the STA circuit. The ECM then illuminates the MIL and sets the DTC.
This monitor runs when the vehicle is driven at 12.43 mph (20 km/h) for over 20 seconds.

DTC No.	DTC Detection Conditions	Trouble Areas
P0617	When conditions (a), (b) and (c) met for 20 seconds (1 trip detection logic): (a) Vehicle speed more than 12.43 mph (20 km/h) (b) Engine speed more than 1,000 rpm (c) STA signal ON	• Park/Neutral Position (PNP) switch (A/T*) • Clutch start switch (M/T*) • Starter relay circuit • Ignition switch • ECM

*: A/T denotes Automatic Transaxle models and M/T denotes Manual Transaxle models.

MONITOR STRATEGY

Related DTCs	P0617: Starter signal
Required Sensors/Components (Main)	STARTER relay, PNP switch, Clutch start switch and Ignition switch
Required Sensors/Components (Related)	Vehicle Speed Sensor (VSS), Crankshaft Position (CKP) sensor
Frequency of Operation	Continuous
Duration	20 seconds
MIL Operation	Immediate
Sequence of Operation	None

ES

TYPICAL ENABLING CONDITIONS

Monitor runs whenever following DTCs not present	None
Battery voltage	10.5 V or more
Vehicle speed	12.43 mph (20 km/h) or more
Engine speed	1,000 rpm or more

TYPICAL MALFUNCTION THRESHOLDS

Starter signal	ON

WIRING DIAGRAM

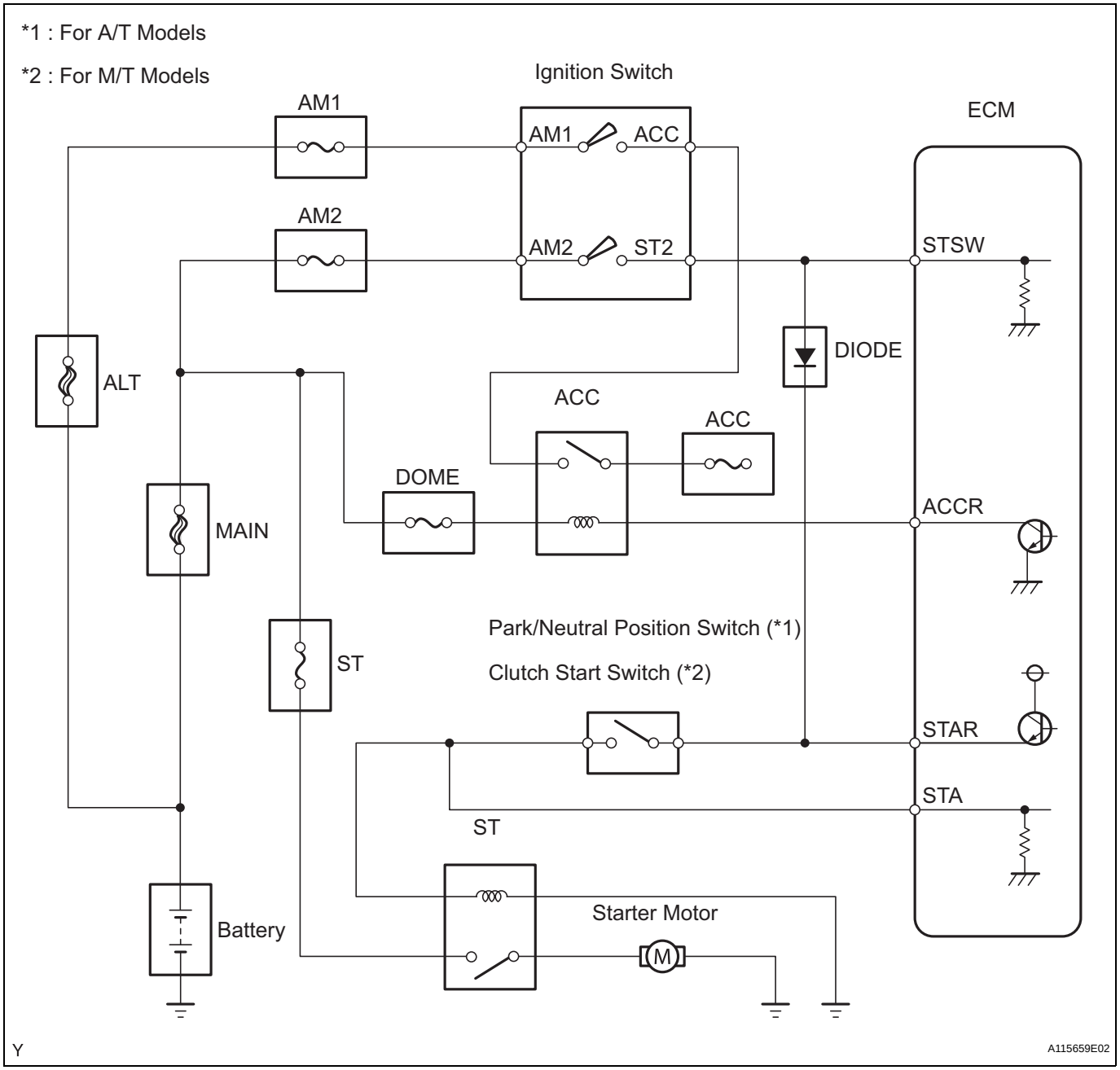

INSPECTION PROCEDURE

HINT:

- The following troubleshooting flowchart is based on the premise that the engine is cranked normally. If the engine will not crank, proceed to the problem symptoms table (See page ES-24).
- Read freeze frame data using an intelligent tester. Freeze frame data record the engine condition when malfunctions are detected. When troubleshooting, freeze frame data can help determine if the vehicle was moving or stationary, if the engine was warmed up or not, if the air-fuel ratio was lean or rich, and other data, from the time the malfunction occurred.

1	READ VALUE USING INTELLIGENT TESTER (STARTER SIGNAL)

(a) Connect an intelligent tester to the DLC3.
(b) Turn the ignition switch to ON and turn the tester ON.

(c) Select the following menu items: DIAGNOSIS / ENHANCED OBD II / DATA LIST / PRIMARY / STARTER SIG.
(d) Check the value displayed on the tester when the ignition switch is turned to the ON and START positions.

OK

Ignition Switch Positions	STARTER SIG
ON	OFF
START	ON

OK → **CHECK FOR INTERMITTENT PROBLEMS**

NG

ES

2 INSPECT PARK / NEUTRAL POSITION SWITCH (A/T) OR CLUTCH SWITCH ASSEMBLY (M/T)

Component Side:

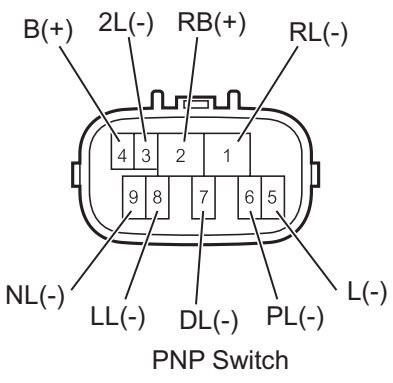

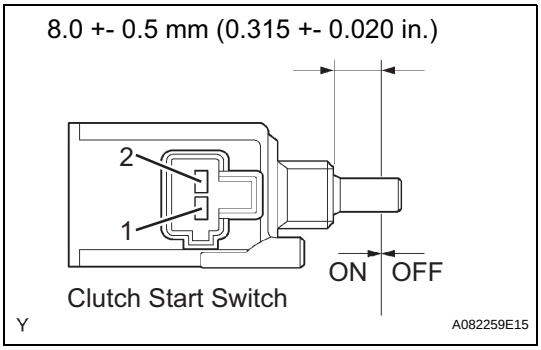

(a) Inspect the Park/Neutral Position (PNP) switch (for A/T models).
(1) Disconnect the C27 PNP switch connector.
(2) Check the resistance when the transmission gear selector lever is moved to each position.

Standard resistance

Gear Selector Lever Positions	Tester Connections	Specified Conditions
P	2 - 6, 4 - 5	Below 1 Ω
R	1 - 2	
N	2 - 9, 4 - 5	
D	2 - 7	
2	2 - 3	
L	2 - 8	

(3) Reconnect the PNP switch connector.
(b) Inspect the clutch start switch (for M/T models).
(1) Disconnect the A16 clutch start switch connector.
(2) Check the resistance when the clutch start switch is ON and OFF.

Standard resistance

Switch Positions	Tester Connections	Specified Conditions
ON (pushed)	1 - 2	Below 1 Ω
OFF (free)	1 - 2	10 kΩ or higher

(3) Reconnect the clutch start switch connector.

OK → **Go to step 5**

NG

3 REPLACE PARK / NEUTRAL POSITION SWITCH (A/T) OR CLUTCH SWITCH ASSEMBLY (M/T)

NEXT

4 READ VALUE USING INTELLIGENT TESTER (STARTER SIGNAL)

(a) Connect the intelligent tester to the DLC3.
(b) Turn the ignition switch to ON and turn the tester ON.
(c) Select the following menu items: DIAGNOSIS / ENHANCED OBD II / DATA LIST / PRIMARY / STARTER SIG.
(d) Check the value displayed on the tester when the ignition switch is turned to the ON and START positions.

OK

Ignition Switch Positions	STARTER SIG
ON	OFF
START	ON

ES

OK → SYSTEM OK

NG

5 INSPECT IGNITION OR STARTER SWITCH ASSEMBLY

Component Side:

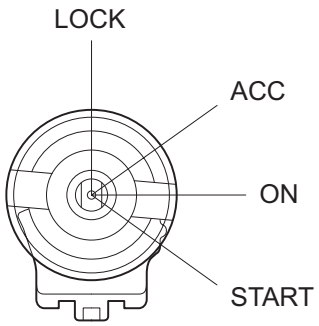

Ignition Switch

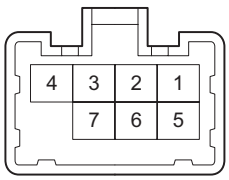

Front View

Y A107906E02

(a) Disconnect the D8 ignition switch connector.
(b) Check the resistance.

Standard resistance

Ignition Switch Positions	Tester Connectinos	Specified Conditions
LOCK	All Terminals	10 kΩ or higher
ACC	2-4	Below 1 Ω
ON	1-4, 1-6, 2-4, 3-4, 5-6	
START	1-4, 3-4, 5-6, 5-7	

(c) Reconnect the ignition switch connector.

OK → Go to step 7

NG

6 REPLACE IGNITION OR STARTER SWITCH ASSEMBLY

NEXT

7	READ VALUE USING INTELLIGENT TESTER (STARTER SIGNAL)

(a) Connect the intelligent tester to the DLC3.
(b) Turn the ignition switch to ON and turn the tester ON.
(c) Select the following menu items: DIAGNOSIS / ENHANCED OBD II / DATA LIST / PRIMARY / STARTER SIG.
(d) Check the value displayed on the tester when the ignition switch is turned to the ON and START positions.

OK

Ignition Switch Positions	STARTER SIG
ON	OFF
START	ON

OK → **SYSTEM OK**

NG

8	REPAIR OR REPLACE HARNESS OR CONNECTOR (PNP SWITCH OR CLUTCH START SWITCH - STA TERMINAL OF ECM)

NEXT

9	CHECK WHETHER DTC OUTPUT RECURS

(a) Connect the intelligent tester to the DLC3.
(b) Turn the ignition switch to ON.
(c) Turn the tester ON.
(d) Clear DTCs (See page ES-34).
(e) Drive the vehicle at more than 12.43 mph (20 km/h) for over 20 seconds.
(f) Select the following menu items: DIAGNOSIS / ENHANCED OBD II / DTC INFO / CURRENT CODES.
(g) Read DTCs.

Result

Display (DTC Output)	Proceed To
P0617	A
No DTC	B

B → **SYSTEM OK**

A

REPLACE ECM

DTC	P0630	VIN not Programmed or Mismatch - ECM / PCM

DESCRIPTION

DTC P0630 is set when the Vehicle Identification Number (VIN) is not stored in the Engine Control Module (ECM) or the input VIN is incorrect. Input the VIN with the intelligent tester.

DTC No.	DTC Detection Conditions	Trouble Areas
P0630	• VIN not stored in ECM • Input VIN incorrect	ECM

MONITOR STRATEGY

Related DTCs	P0630: VIN not programmed
Required Sensors/Components (Main)	ECM
Required Sensors/Components (Related)	-
Frequency of Operation	Continuous
Duration	0.325 seconds
MIL Operation	Immediate
Sequence of Operation	None

TYPICAL ENABLING CONDITIONS

Battery voltage	8 V or more
Ignition switch	ON
Starter	OFF

TYPICAL MALFUNCTION THRESHOLDS

VIN code	Not programmed

COMPONENT OPERATING RANGE

VIN code	Programmed

INSPECTION PROCEDURE

1	READ CURRENT DTC

(a) Connect an intelligent tester to the DLC3.
(b) Turn the ignition switch to ON and turn the tester ON.
(c) Select the following menu items: DIAGNOSIS / ENHANCED OBD II / DTC INFO / CURRENT CODES.
(d) Read DTCs.

Result

Display (DTC Output)	Proceed To
P0630	**A**
P0630 and other DTCs	**B**

If any DTCs other than P0630 are output, troubleshoot those DTCs first.

NOTICE:
If P0630 is set, the VIN must be input to the ECM using the intelligent tester. However, all DTCs are cleared automatically by the tester when the VIN is input. If DTCs other than P0630 are set, check them first.

B	**GO TO DTC CHART**

A

2	**INPUT VIN WITH INTELLIGENT TESTER**

Refer to the REGISTRATION (See page ES-14).

NEXT

END

DTC	P0724	Brake Switch "B" Circuit High

DESCRIPTION

The purpose of this circuit is to prevent the engine from stalling when brakes are suddenly applied while driving in lock-up condition.
When the brake pedal is depressed, this switch sends a signal to the ECM. Then the ECM cancels the operation of the lock-up clutch while braking is in progress.

DTC No.	DTC Detection Conditions	Trouble Areas
P0724	Stop light switch remains ON even when vehicle repeats 5 cycles of STOP (less than 1.86 mph (3 km/h)) and GO (18.65 mph (30 km/h)or more) (2 trip detection logic)	• Short in stop light switch signal circuit • Stop light switch • ECM

MONITOR DESCRIPTION

This DTC indicates that the stop light switch remains ON. When the stop light switch remains ON during "stop and go" driving, the ECM interprets this as a fault in the stop light switch and the MIL comes on and the ECM stores the DTC. The vehicle must stop (less than 1.86 mph (3 km/h)) and go (18.65 mph (30 km/h) or more) 5 times during 2 driving cycles, in order to detect a malfunction.

MONITOR STRATEGY

Related DTCs	P0724: Stop light switch/Range check/Rationality
Required sensors/Components (Main)	Stop light switch
Required sensors/Components (Related)	Speed sensor
Frequency of Operation	Continuous
Duration	5 times
MIL Operation	2 driving cycles
Sequence of Operation	None

TYPICAL ENABLING CONDITIONS

The stop light switch remains ON during GO and STOP 5 times.
GO and STOP are defined as follows;

Monitor runs whenever following DTCs not present	None
GO: Vehicle speed	18.65 mph (30 km/h) or more
STOP: Vehicle speed	Less than 1.86 mph (3 km/h)

TYPICAL MALFUNCTION THRESHOLDS

Stop light switch status	Stuck ON

WIRING DIAGRAM

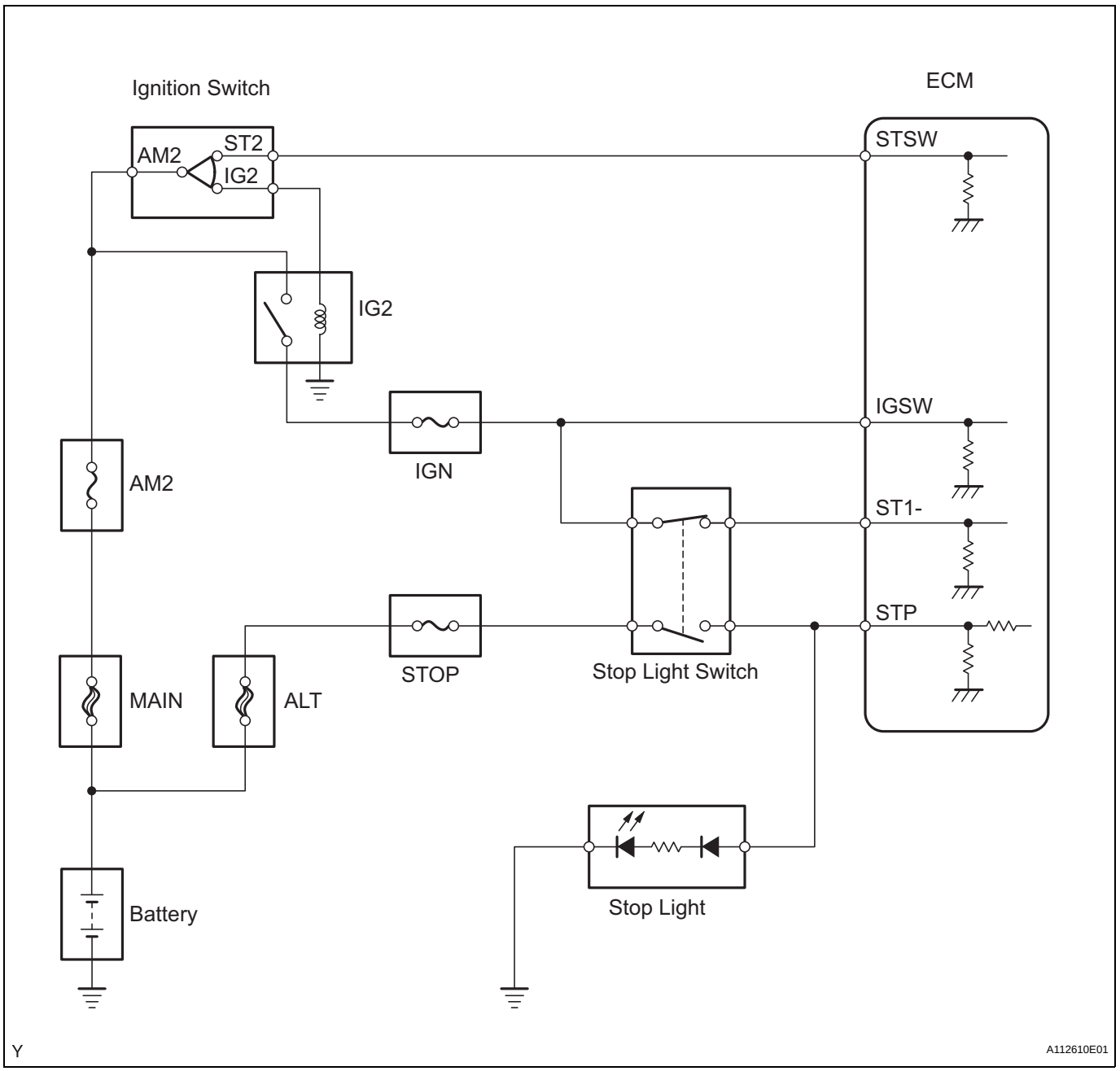

INSPECTION PROCEDURE

HINT:
Read freeze frame data using an intelligent tester. Freeze frame data record the engine condition when malfunctions are detected. When troubleshooting, freeze frame data can help determine if the vehicle was moving or stationary, if the engine was warmed up or not, if the air-fuel ratio was lean or rich, and other data, from the time the malfunction occurred.

1	**READ VALUE USING INTELLIGENT TESTER (STOP LIGHT SW)**

(a) Connect an intelligent tester to the DLC3.
(b) Turn the ignition switch to ON and turn the tester ON.

(c) Select the following menu items: DIAGNOSIS / ENHANCED OBD II / DATA LIST / PRIMARY / STOP LIGHT SW.
(d) Read the values displayed on the tester.

OK

Item	Measurement Item: Range (display)	Normal Condition
STOP LIGHT SW	Stop light switch status: ON or OFF	• ON: Brake pedal is depressed • OFF: Brake pedal is released

OK → **CHECK FOR INTERMITTENT PROBLEMS**

NG

ES

2 **INSPECT STOP LIGHT SWITCH ASSEMBLY (See page ES-227)**

NG → **REPLACE STOP LIGHT SWITCH ASSEMBLY**

OK

3 **CHECK HARNESS AND CONNECTOR (STOP LIGHT SWITCH - ECM)**

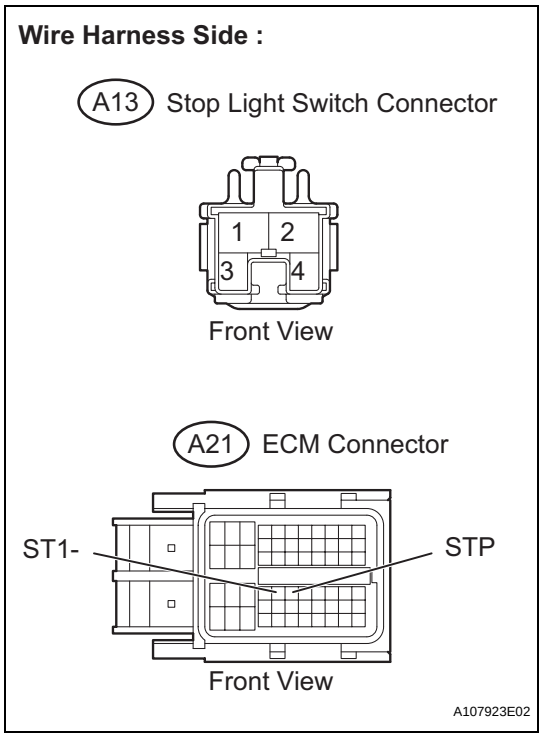

(a) Disconnect the A21 ECM connector.
(b) Disconnect the A13 stop light switch connector.
(c) Check the resistance.

Standard resistance (Check for open)

Tester Connections	Specified Conditions
STP (A21-36) - Stop light switch (A13-1)	Below 1Ω
ST1- (A21-35) - Stop light switch (A13-4)	

Standard resistance (Check for short)

Tester Connections	Specified Conditions
STP (A21-36) or Stop light switch (A13-1) - Body ground	10 kΩ or higher
ST1- (A21-35) or Stop light switch (A13-4) - Body ground	

(d) Reconnect the ECM connector.
(e) Reconnect the stop light switch connector.

NG → **REPAIR OR REPLACE HARNESS OR CONNECTOR**

OK

REPLACE ECM

DTC	P2102	Throttle Actuator Control Motor Circuit Low

DTC	P2103	Throttle Actuator Control Motor Circuit High

DESCRIPTION

The throttle actuator is operated by the ECM and opens and closes the throttle valve using gears.
The opening angle of the throttle valve is detected by the Throttle Position (TP) sensor, which is mounted on the throttle body. The TP sensor provides feedback to the ECM. This feedback allows the ECM to appropriately control the throttle actuator and monitor the throttle opening angle as the ECM responds to driver inputs.
HINT:
This ETCS (Electronic Throttle Control System) does not use a throttle cable.

ES

DTC No.	DTC Detection Conditions	Trouble Areas
P2102	Conditions (a) and (b) continue for 2.0 seconds (1 trip detection logic): (a) Throttle actuator duty ratio 80 % or more (b) Throttle actuator current 0.5 A or less	• Open in throttle actuator circuit • Throttle actuator • ECM
P2103	Either of following conditions met (1 trip detection logic): • Throttle actuator current 10 A or more for 0.1 seconds • Throttle actuator current 7 A or more for 0.6 seconds	• Short in throttle actuator circuit • Throttle actuator • Throttle valve • Throttle body assembly • ECM

MONITOR DESCRIPTION

The ECM monitors the electrical current through the electronic actuator, and detects malfunctions and open circuits in the throttle actuator based on this value. If the current is outside the standard range, the ECM determines that there is a malfunction in the throttle actuator. In addition, if the throttle valve does not function properly (for example, stuck on), the ECM determines that there is a malfunction. The ECM then illuminates the MIL and sets a DTC.
Example:
When the electrical current is more than 10 A, or less than 0.5 A and the throttle actuator duty ratio exceeds 80 %, the ECM interprets this as the current being outside the standard range, and illuminates the MIL and sets a DTC.
If the malfunction is not repaired successfully, a DTC is set when the engine is quickly revved to a high rpm several times after the engine has idled for 5 seconds after engine start.

MONITOR STRATEGY

Related DTCs	P2102: Throttle actuator current (low current) P2103: Throttle actuator current (high current)
Required Sensors/Components (Main)	Throttle actuator (throttle body)
Required Sensors/Components (Related)	None
Frequency of Operation	Continuous
Duration	2 seconds: P2102 0.1 seconds or 0.6 seconds: P2103
MIL Operation	Immediate
Sequence of Operation	None

TYPICAL ENABLING CONDITIONS

Monitor runs whenever following DTCs not present	None

P2102:

Throttle actuator	Activated

Duty-cycle ratio to open throttle actuator	80 % or more
Throttle actuator power supply	8 V or more

P2103:

Throttle actuator	Activated
Throttle actuator power supply	8 V or more
Battery voltage	8 V or more
Starter	OFF

TYPICAL MALFUNCTION THRESHOLDS

P2102:

Throttle actuator current	Less than 0.5 A

P2103:

Hybrid IC current limiter port	Fail

FAIL-SAFE

When either of these DTCs, or other DTCs relating to ETCS (Electronic Throttle Control System) malfunctions, are set, the ECM enters fail-safe mode. During fail-safe mode, the ECM cuts the current to the throttle actuator off, and the throttle valve is returned to a 6° throttle angle by the return spring. The ECM then adjusts the engine output by controlling the fuel injection (intermittent fuel-cut) and ignition timing, in accordance with the accelerator pedal opening angle, to allow the vehicle to continue at a minimal speed. If the accelerator pedal is depressed firmly and gently, the vehicle can be driven slowly. Fail-safe mode continues until a pass condition is detected, and the ignition switch is then turned to OFF.

WIRING DIAGRAM

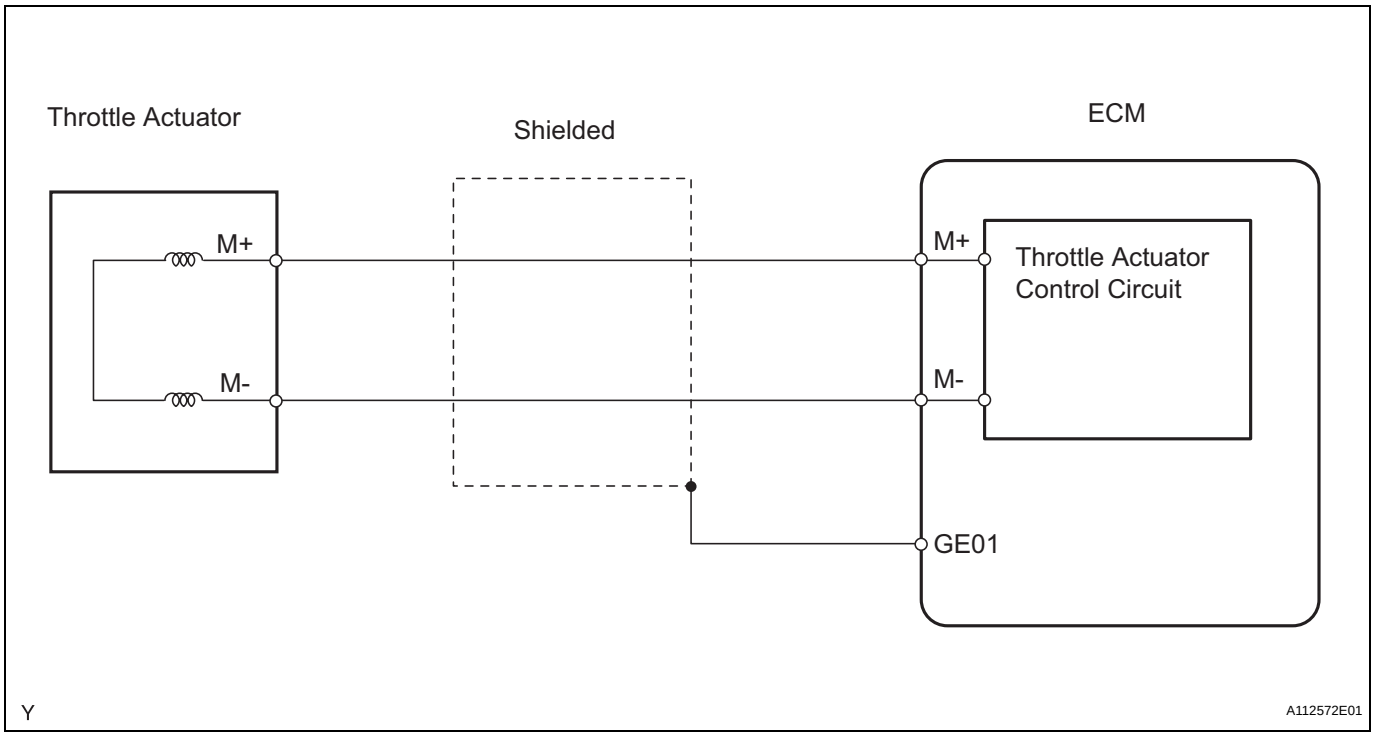

INSPECTION PROCEDURE

HINT:

- Read freeze frame data using an intelligent tester. Freeze frame data record the engine condition when malfunctions are detected. When troubleshooting, freeze frame data can help determine if the vehicle was moving or stationary, if the engine was warmed up or not, if the air-fuel ratio was lean or rich, and other data, from the time the malfunction occurred.
- The throttle actuator current (THROTTLE MOT) and the throttle actuator duty ratio (THROTTLE OPN / THROTTLE CLS) can be read using the intelligent tester. However the ECM shuts off the throttle actuator current when the ETCS malfunctions.

1 INSPECT THROTTLE BODY (RESISTANCE OF THROTTLE ACTUATOR)

Component Side:

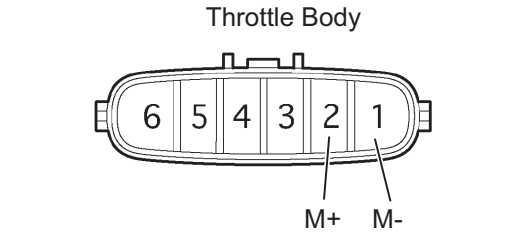

(a) Disconnect the C17 throttle body connector.
(b) Measure the resistance of the throttle actuator.
Standard resistance

Tester Connections	Specified Conditions
M+ (2) - M- (1)	0.3 to 100 Ω at 20°C (68°F)

(c) Reconnect the throttle body connector.

NG → **REPLACE THROTTLE BODY ASSEMBLY**

OK

2 CHECK HARNESS AND CONNECTOR (THROTTLE ACTUATOR - ECM)

Wire Harness Side:

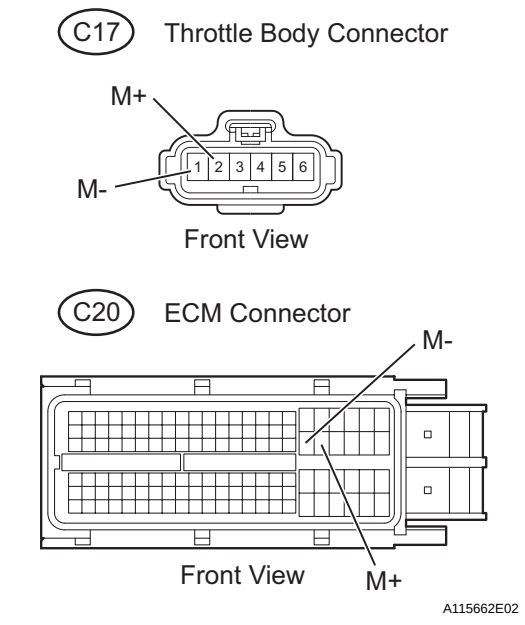

(a) Disconnect the C17 throttle body connector.
(b) Disconnect the C20 ECM connector.
(c) Check the resistance.
Standard resistance (Check for open)

Tester Connections	Specified Conditions
M+ (C17-2) - M+ (C20-42)	Below 1 Ω
M- (C17-1) - M- (C20-41)	

Standard resistance (Check for short)

Tester Connections	Specified Conditions
M+ (C17-2) or M+ (C20-42) - Body ground	10 kΩ or higher
M- (C17-1) or M- (C20-41) - Body ground	

(d) Reconnect the throttle body connector.
(e) Reconnect the ECM connector.

NG → **REPAIR OR REPLACE HARNESS OR CONNECTOR**

OK

3	INSPECT THROTTLE BODY ASSEMBLY

(a) Check for foreign objects between the throttle valve and the housing.
OK:
No foreign objects between throttle valve and housing.

NG → **REMOVE FOREIGN OBJECT AND CLEAN THROTTLE BODY**

OK

4	INSPECT THROTTLE VALVE

(a) Check if the throttle valve opens and closes smoothly.
OK:
Throttle valve opens and closes smoothly.

NG → **REPLACE THROTTLE BODY ASSEMBLY**

OK

REPLACE ECM

DTC	P2111	Throttle Actuator Control System - Stuck Open

DTC	P2112	Throttle Actuator Control System - Stuck Closed

DESCRIPTION

The throttle actuator is operated by the ECM, and opens and closes the throttle valve using gears. The opening angle of the throttle valve is detected by the Throttle Position (TP) sensor, which is mounted on the throttle body. The TP sensor provides feedback to the ECM in order that it can control the throttle actuator, and therefore the throttle valve, appropriately in response to driver inputs.

HINT:

This ETCS (Electronic Throttle Control System) does not use a throttle cable.

DTC No.	DTC Detection Conditions	Trouble Areas
P2111	Throttle actuator does not close when signaled by ECM (1 trip detection logic)	• Throttle actuator • Throttle body assembly • Throttle valve
P2112	Throttle actuator does not open when signaled by ECM (1 trip detection logic)	• Throttle actuator • Throttle body assembly • Throttle valve

MONITOR DESCRIPTION

The ECM determines that there is a malfunction in the ETCS when the throttle valve remains at a fixed angle despite a high drive current from the ECM. The ECM illuminates the MIL and sets a DTC.

If the malfunction is not repaired successfully, a DTC is set when the accelerator pedal is fully depressed and released quickly (to fully open and close the throttle valve) after the engine is next started.

MONITOR STRATEGY

Related DTCs	P2111: Throttle actuator stuck open P2112: Throttle actuator stuck closed
Required Sensors/Components (Main)	Throttle actuator
Required Sensors/Components (Related)	-
Frequency of Operation	Continuous
Duration	0.5 seconds
MIL Operation	Immediate
Sequence of Operation	None

TYPICAL ENABLING CONDITIONS

All:

Monitor runs whenever following DTCs not present	None

P2111 (Throttle actuator stuck open):

All of following conditions met	-
Throttle actuator current	2 A or more
Duty cycle to close throttle	80 % or more

P2112 (Throttle actuator stuck closed):

All of following conditions met	-
Throttle actuator current	2 A or more
Duty cycle to open throttle	80 % or more

TYPICAL MALFUNCTION THRESHOLDS

P2111 (Throttle actuator stuck open):

TP sensor voltage change	No change

P2112 (Throttle actuator stuck closed):

TP sensor voltage change	No change

FAIL-SAFE

When either of these DTCs, or other DTCs relating to ETCS (Electronic Throttle Control System) malfunctions, are set, the ECM enters fail-safe mode. During fail-safe mode, the ECM cuts the current to the throttle actuator off, and the throttle valve is returned to a 6° throttle angle by the return spring. The ECM then adjusts the engine output by controlling the fuel injection (intermittent fuel-cut) and ignition timing, in accordance with the accelerator pedal opening angle, to allow the vehicle to continue at a minimal speed. If the accelerator pedal is depressed firmly and gently, the vehicle can be driven slowly. Fail-safe mode continues until a pass condition is detected, and the ignition switch is then turned to OFF.

WIRING DIAGRAM

Refer to DTC P2102 (See page ES-250).

INSPECTION PROCEDURE

HINT:

Read freeze frame data using an intelligent tester. Freeze frame data record the engine condition when malfunctions are detected. When troubleshooting, freeze frame data can help determine if the vehicle was moving or stationary, if the engine was warmed up or not, if the air-fuel ratio was lean or rich, and other data, from the time the malfunction occurred.

1	CHECK ANY OTHER DTCS OUTPUT (IN ADDITION TO DTC P2111 OR P2112)

(a) Connect an intelligent tester to the DLC3.
(b) Turn the ignition switch to ON.
(c) Turn the tester ON.
(d) Select the following menu items: DIAGNOSIS / ENHANCED OBD II / DTC INFO / CURRENT CODES.
(e) Read DTCs.

Result

Display (DTC Output)	Proceed To
P2111 or P2112	A
P2111 or P2112 and other DTCs	B

HINT:

If any DTCs other than P2111 or P2112 are output, troubleshoot those DTCs first.

B → GO TO DTC CHART

A

2	INSPECT THROTTLE BODY ASSEMBLY (VISUALLY CHECK THROTTLE VALVE)

(a) Check for contamination between the throttle valve and the housing. If necessary, clean the throttle body. And check that the throttle valve moves smoothly.

OK:
Throttle valve is not contaminated with foreign objects and moves smoothly.

NG → **REPLACE THROTTLE BODY ASSEMBLY**

OK

3 CHECK WHETHER DTC OUTPUT RECURS (DTC P2111 OR P2112)

(a) Connect the intelligent tester to the DLC3.
(b) Turn the ignition switch to ON.
(c) Turn the tester ON.
(d) Clear DTCs (See page ES-34).
(e) Start the engine, and fully depress and release the accelerator pedal quickly (to fully open and close the throttle valve).
(f) Select the following menu items: DIAGNOSIS / ENHANCED OBD II / DTC INFO / CURRENT CODES.
(g) Read DTCs.

Result

Display (DTC Output)	Proceed To
No DTC	A
P2111 or P2112	B

B → **REPLACE ECM**

A

CHECK FOR INTERMITTENT PROBLEMS

DTC	P2118	Throttle Actuator Control Motor Current Range / Performance

DESCRIPTION

The ETCS (Electronic Throttle Control System) has a dedicated power supply circuit. The voltage (+BM) is monitored and when it is low (less than 4 V), the ECM determines that there is a malfunction in the ETCS and cuts off the current to the throttle actuator.
When the voltage becomes unstable, the ETCS itself becomes unstable. For this reason, when the voltage is low, the current to the throttle actuator is cut. If repairs are made and the system returns to normal, turn the ignition switch to OFF. The ECM then allows the current to flow to the throttle actuator so that it can be restarted.
HINT:
The ETCS does not use a throttle cable.

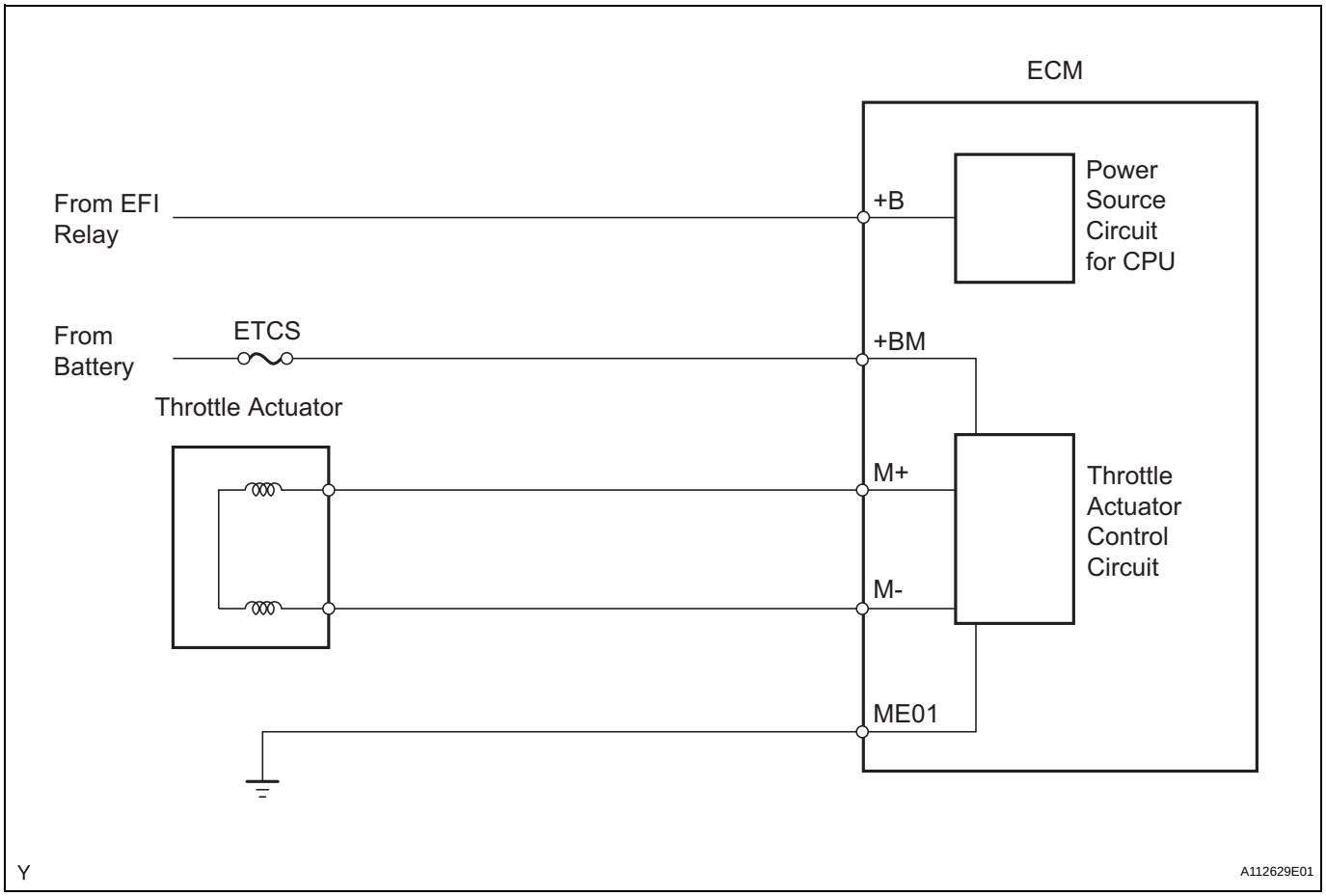

DTC No.	DTC Detection Conditions	Trouble Areas
P2118	Open in ETCS power source (+BM) circuit (1 trip detection logic)	• Open in ETCS power source circuit • Battery • Battery terminals • ETCS fuse • ECM

MONITOR DESCRIPTION

The ECM monitors the battery supply voltage applied to the throttle actuator.
When the power supply voltage (+BM) drops below 4 V for 0.8 seconds or more, the ECM interprets this as an open in the power supply circuit (+BM). The ECM illuminates the MIL and sets the DTC.
If the malfunction is not repaired successfully, the DTC is set 5 seconds after the engine is next started.

MONITOR STRATEGY

Related DTCs	P2118: Throttle actuator power supply
Required Sensors/Components (Main)	Throttle actuator, throttle valve, ETCS fuse
Required Sensors/Components (Related)	None
Frequency of Operation	Continuous
Duration	0.8 seconds
MIL Operation	Immediate
Sequence of Operation	None

TYPICAL ENABLING CONDITIONS

Monitor runs whenever following DTCs not present	None
Battery voltage	8 V or more
Electronic throttle actuator power	ON

TYPICAL MALFUNCTION THRESHOLDS

Throttle actuator power supply voltage (+BM)	Less than 4 V

COMPONENT OPERATING RANGE

Throttle actuator power supply voltage (+BM)	11 to 14 V

FAIL-SAFE

When this DTC, or other DTCs relating to ETCS (Electronic Throttle Control System) malfunctions, are set, the ECM enters fail-safe mode. During fail-safe mode, the ECM cuts the current to the throttle actuator off, and the throttle valve is returned to a 6° throttle angle by the return spring. The ECM then adjusts the engine output by controlling the fuel injection (intermittent fuel-cut) and ignition timing, in accordance with the accelerator pedal opening angle, to allow the vehicle to continue at a minimal speed. If the accelerator pedal is depressed firmly and gently, the vehicle can be driven slowly.
Fail-safe mode continues until a pass condition is detected, and the ignition switch is then turned to OFF.

WIRING DIAGRAM

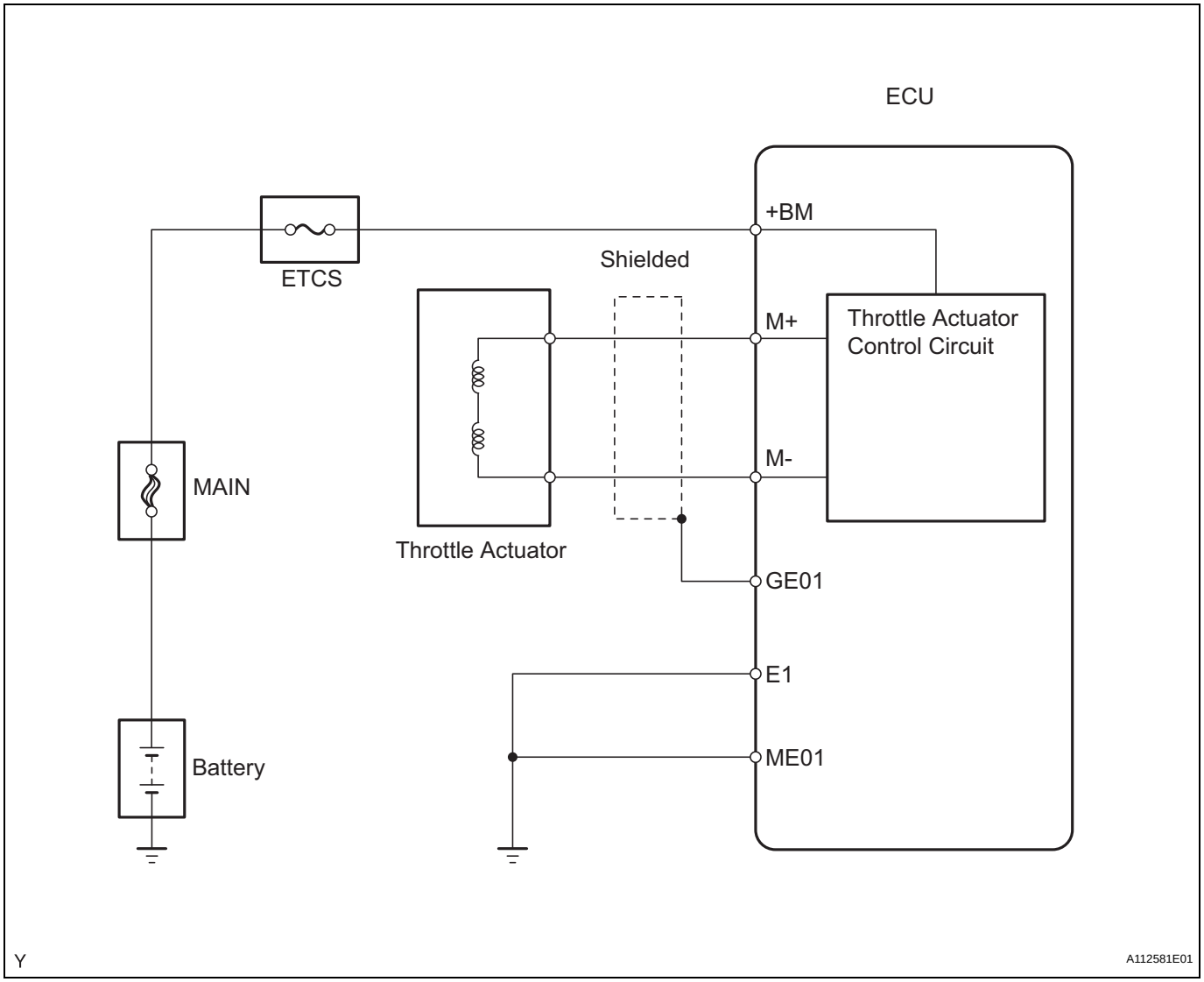

INSPECTION PROCEDURE

HINT:

Read freeze frame data using an intelligent tester. Freeze frame data record the engine condition when malfunctions are detected. When troubleshooting, freeze frame data can help determine if the vehicle was moving or stationary, if the engine was warmed up or not, if the air-fuel ratio was lean or rich, and other data, from the time the malfunction occurred.

1	READ VALUE USING INTELLIGENT TESTER (+BM VOLTAGE)

(a) Connect an intelligent tester to the DLC3.
(b) Turn the ignition switch to ON.
(c) Turn the tester ON.
(d) Select the following menu items: DIAGNOSIS / ENHANCED OBD II / DATA LIST / +BM VOLTAGE.
(e) Read the value displayed on the tester.
Standard voltage:
11 to 14 V

OK → Go to step 5

NG

2	CHECK FUSE (ETCS FUSE)

Engine Room Relay Block:

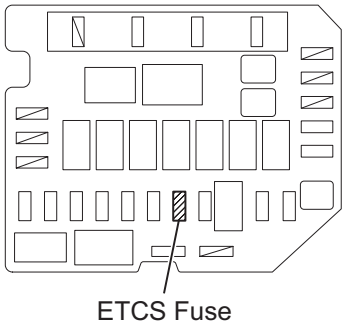

A112591E01

(a) Remove the ETCS fuse from the engine room relay block.
(b) Check the ETCS fuse resistance.
Standard resistance:
Below 1 Ω
(c) Reinstall the ETCS fuse.

NG → **CHECK FOR SHORTS IN ALL HARNESSES AND CONNECTORS CONNECTED TO FUSE AND REPLACE FUSE**

OK

ES

3	CHECK HARNESS AND CONNECTOR (ECM - ETCS FUSE, ETCS FUSE - BATTERY)

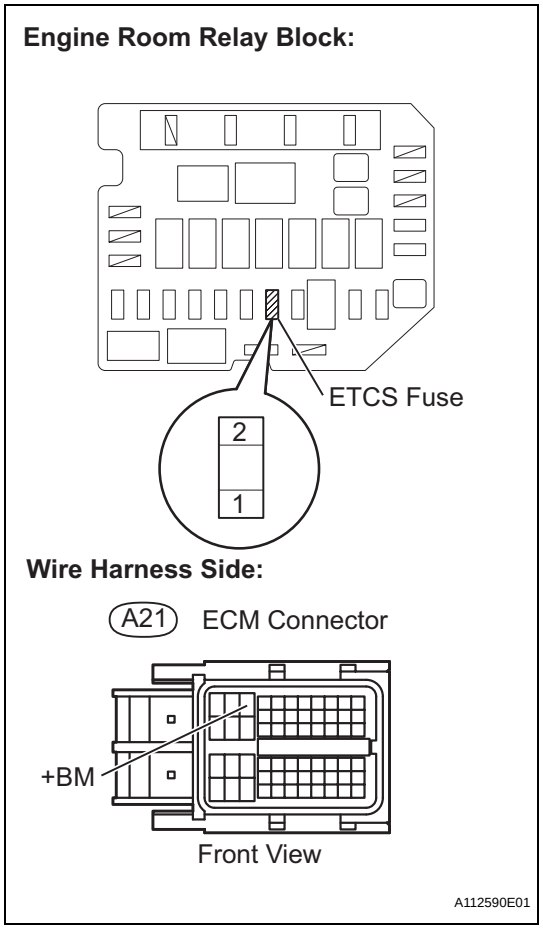

(a) Check the harness and connector between the ETCS fuse and ECM.
  (1) Remove the ETCS fuse from the engine room relay block.
  (2) Disconnect the A21 ECM connector.
  (3) Check the resistance.

Standard resistance (Check for open)

Tester Connections	Specified Conditions
ETCS fuse (2) - +BM (A21-3)	Below 1 Ω

Standard resistance (Check for short)

Tester Connections	Specified Conditions
ETCS fuse (2) or +BM (A21-3) - Body ground	10 kΩ or higher

  (4) Reinstall the ETCS fuse.
  (5) Reconnect the ECM connector.

(b) Check the harness and connector between the ETCS fuse and positive battery cable.
  (1) Remove the ETCS fuse from the engine room relay block.
  (2) Disconnect the positive battery cable.
  (3) Check the resistance.

Standard resistance (Check for open)

Tester Connections	Specified Conditions
Positive battery cable - ETCS fuse (1)	Below 1 Ω

Standard resistance (Check for short)

Tester Connections	Specified Conditions
Positive battery cable or ETCS fuse (1) - Body ground	10 kΩ or higher

  (4) Reinstall the ETCS fuse.
  (5) Reconnect the positive battery cable.

NG → **REPAIR OR REPLACE HARNESS OR CONNECTOR**

OK

ES

4	INSPECT ECM (+BM VOLTAGE)

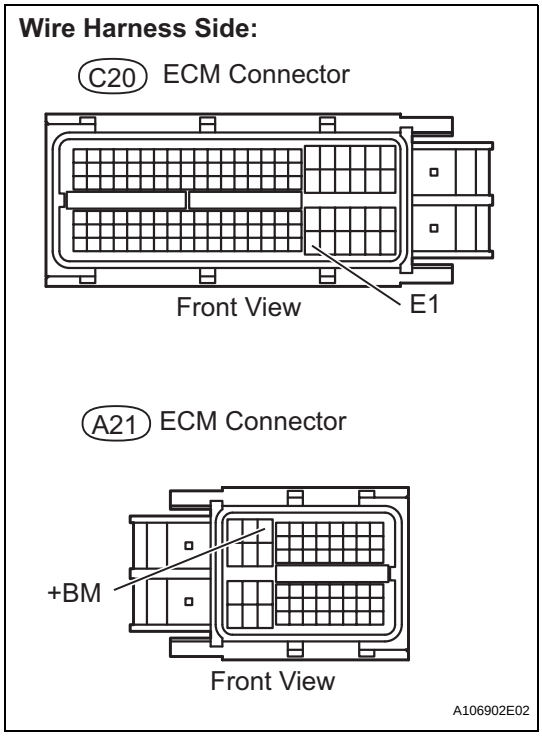

(a) Disconnect the A21 and C20 ECM connectors.
(b) Measure the voltage between the terminals of the A21 and C20 ECM connectors.
Standard voltage

Tester Connections	Specified Conditions
+BM (A21-3) - E1 (C20-104)	11 to 14 V

(c) Reconnect the ECM connectors.

NG → **REPAIR OR REPLACE HARNESS OR CONNECTOR (TERMINAL E1 - BODY GROUND)**

OK

REPLACE ECM

5	INSPECT BATTERY

(a) Check that the battery is not depleted.
OK:
Battery is not depleted

NG → **REPLACE BATTERY**

OK

6	CHECK BATTERY TERMINAL

(a) Check that the battery terminals and ECM ground are not loose or corroded.
OK:
Battery terminals and ECM ground are not loose or corroded

NG → **REPAIR OR REPLACE BATTERY TERMINAL**

OK

CHECK FOR INTERMITTENT PROBLEMS

DTC	P2119	Throttle Actuator Control Throttle Body Range / Performance

DESCRIPTION

The Electronic Throttle Control System (ETCS) is composed of the throttle actuator, Throttle Position (TP) sensor, Accelerator Pedal Position (APP) sensor, and ECM. The ECM operates the throttle actuator to regulate the throttle valve in response to driver inputs. The TP sensor detects the opening angle of the throttle valve, and provides the ECM with feedback so that the throttle valve can be appropriately controlled by the ECM.

DTC No.	DTC Detection Conditions	Trouble Areas
P2119	Throttle valve opening angle continues to vary greatly from target opening angle (1 trip detection logic)	• ETCS • ECM

ES

MONITOR DESCRIPTION

The ECM determines the actual opening angle of the throttle valve from the TP sensor signal. The actual opening angle is compared to the target opening angle commanded by the ECM. If the difference between these two values is outside the standard range, the ECM interprets this as a malfunction in the ETCS. The ECM then illuminates the MIL and sets the DTC.
If the malfunction is not repaired successfully, the DTC is set when the accelerator pedal is quickly released (to close the throttle valve) after the engine speed reaches 5,000 rpm by the accelerator pedal being fully depressed (fully open the throttle valve).

MONITOR STRATEGY

Related DTCs	P2119: ETCS malfunction
Required Sensors/Components (Main)	Throttle actuator
Required Sensors/Components (Related)	-
Frequency of Operation	Continuous
Duration	Within 1 second
MIL Operation	Immediate
Sequence of Operation	None

TYPICAL ENABLING CONDITIONS

Monitor runs whenever following DTCs not present	None

TYPICAL MALFUNCTION THRESHOLDS

Either of following conditions A or B met	-
A. Difference between commanded closed throttle position and current closed throttle position	0.3 V or more for 1 second
B. Difference between commanded open throttle position and current open throttle position	0.3 V or more for 0.6 seconds

FAIL-SAFE

When this DTC, or other DTCs relating to ETCS (Electronic Throttle Control System) malfunctions, are set, the ECM enters fail-safe mode. During fail-safe mode, the ECM cuts the current to the throttle actuator off, and the throttle valve is returned to a 6° throttle angle by the return spring. The ECM then adjusts the engine output by controlling the fuel injection (intermittent fuel-cut) and ignition timing, in accordance with the accelerator pedal opening angle, to allow the vehicle to continue at a minimal speed. If the accelerator pedal is depressed firmly and gently, the vehicle can be driven slowly.

Fail-safe mode continues until a pass condition is detected, and the ignition switch is then turned to OFF.

WIRING DIAGRAM

Refer to DTC P2102 (See page ES-250).

INSPECTION PROCEDURE

HINT:
Read freeze frame data using an intelligent tester. Freeze frame data record the engine condition when malfunctions are detected. When troubleshooting, freeze frame data can help determine if the vehicle was moving or stationary, if the engine was warmed up or not, if the air-fuel ratio was lean or rich, and other data, from the time the malfunction occurred.

ES

1 **CHECK ANY OTHER DTCS OUTPUT (IN ADDITION TO DTC P2119)**

(a) Connect an intelligent tester to the DLC3.
(b) Turn the ignition switch to ON.
(c) Turn the tester ON.
(d) Select the following menu items: DIAGNOSIS / ENHANCED OBD II / DTC INFO / CURRENT CODES.
(e) Read DTCs.

Result

Display (DTC Output)	Proceed To
P2119	A
P2119 and other DTCs	B

HINT:
If any DTCs other than P2119 are output, troubleshoot those DTCs first.

B → **GO TO DTC CHART**

A

2 **CHECK WHETHER DTC OUTPUT RECURS (DTC P2119)**

(a) Connect the intelligent tester to the DLC3.
(b) Turn the ignition switch to ON.
(c) Turn the tester ON.
(d) Clear DTCs (See page ES-34).
(e) Allow the engine to idle for 15 seconds.
CAUTION:
Exercise extreme care and take precautions in steps (f) and (g) below. Failure to do so may result in the vehicle unexpectedly rolling away.
(f) Securely apply the parking brake and move the gear selector lever to the D position.
(g) While depressing the brake pedal securely, fully depress the accelerator pedal for 5 seconds.
(h) On the tester, select the following menu items: DIAGNOSIS / ENHANCED OBD II / DTC INFO / CURRENT CODES.

(i) Read DTCs.
HINT:
The output voltage of the throttle position sensor can be checked during step (g) using the intelligent tester. Variations in the output voltage indicate that the throttle actuator is in operation. To check the output voltage using the intelligent tester, select the following menu items: DIAGNOSIS / ENHANCED OBD II / DATA LIST / ETCS / THROTTLE POS #1.
OK:
No DTC output.

NG → **REPLACE THROTTLE BODY ASSEMBLY**

ES

OK

CHECK FOR INTERMITTENT PROBLEMS

DTC	P2120	Throttle / Pedal Position Sensor / Switch "D" Circuit
DTC	P2122	Throttle / Pedal Position Sensor / Switch "D" Circuit Low Input
DTC	P2123	Throttle / Pedal Position Sensor / Switch "D" Circuit High Input
DTC	P2125	Throttle / Pedal Position Sensor / Switch "E" Circuit
DTC	P2127	Throttle / Pedal Position Sensor / Switch "E" Circuit Low Input
DTC	P2128	Throttle / Pedal Position Sensor / Switch "E" Circuit High Input
DTC	P2138	Throttle / Pedal Position Sensor / Switch "D" / "E" Voltage Correlation

HINT:
These DTCs relate to the Accelerator Pedal Position (APP) sensor.

DESCRIPTION

HINT:
This ETCS (Electronic Throttle Control System) does not use a throttle cable.
The APP sensor is mounted on the accelerator pedal bracket and has 2 sensor circuits: VPA (main) and VPA2 (sub). This sensor is a non-contact type, and uses Hall-effect elements, in order to yield accurate signals, even in extreme driving conditions, such as at high speeds as well as very low speeds. The voltage, which is applied to terminals VPA and VPA2 of the ECM, varies between 0 V and 5 V in proportion to the operating angle of the accelerator pedal (throttle valve). A signal from VPA indicates the actual accelerator pedal opening angle (throttle valve opening angle) and is used for engine control. A signal from VPA2 conveys the status of the VPA circuit and is used to check the APP sensor itself.
The ECM monitors the actual accelerator pedal opening angle (throttle valve opening angle) through the signals from VPA and VPA2, and controls the throttle actuator according to these signals.

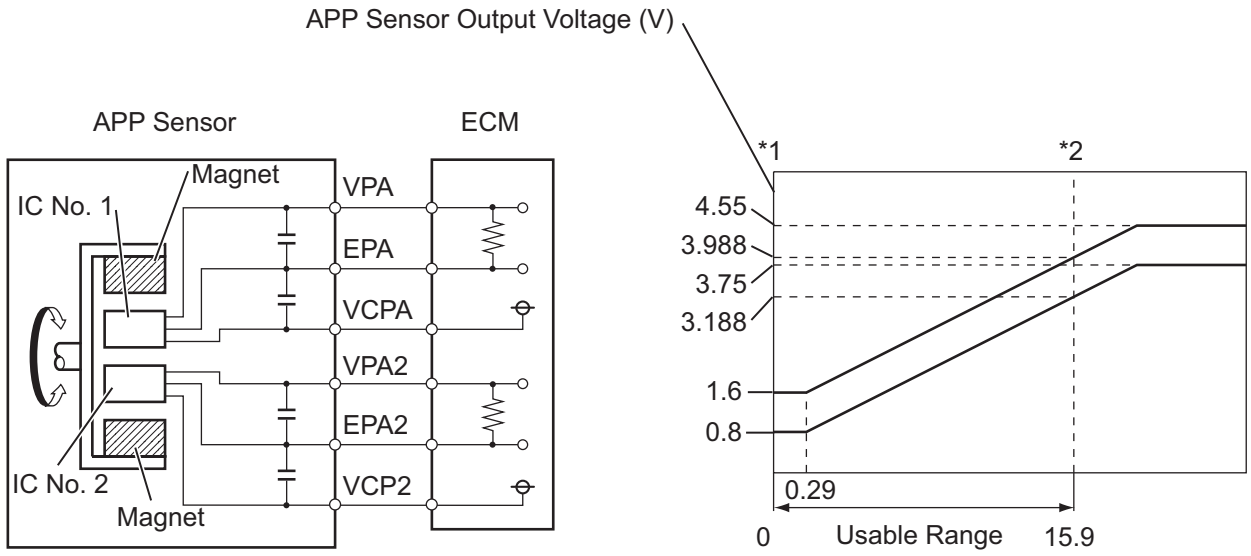

Y

A112620E01

DTC No.	DTC Detection Conditions	Trouble Areas
P2120	VPA fluctuates rapidly beyond upper and lower malfunction thresholds for 0.5 seconds or more (1 trip detection logic)	• APP sensor • ECM
P2122	VPA 0.4 V or less for 0.5 seconds or more when accelerator pedal fully released (1 trip detection logic)	• APP sensor • Open in VCP1 circuit • Open or ground short in VPA circuit • ECM
P2123	VPA 4.8 V or more for 2.0 seconds or more (1 trip detection logic)	• APP sensor • Open in EPA circuit • ECM
P2125	VPA2 fluctuates rapidly beyond upper and lower malfunction thresholds for 0.5 seconds or more (1 trip detection logic)	• APP sensor • ECM
P2127	VPA2 1.2 V or less for 0.5 seconds or more when accelerator pedal fully released (1 trip detection logic)	• APP sensor • Open in VCP2 circuit • Open or ground short in VPA2 circuit • ECM
P2128	Conditions (a) and (b) continue for 2.0 seconds or more (1 trip detection logic): (a) VPA2 4.8 V or more (b) VPA between 0.4 V and 3.45 V	• APP sensor • Open in EPA2 circuit • ECM
P2138	Condition (a) or (b) continues for 2.0 seconds or more (1 trip detection logic): (a) Difference between VPA and VPA2 0.02 V or less (b) VPA 0.4 V or less and VPA2 1.2 V or less	• Short between VPA and VPA2 circuits • APP sensor • ECM

HINT:
When any of these DTCs are set, check the APP sensor voltage by selecting the following menu items on an intelligent tester: DIAGNOSIS / ENHANCED OBD II / DATA LIST / PRIMARY / ACCEL POS #1 and ACCEL POS #2.

Trouble Areas	ACCEL POS #1 When AP Released	ACCEL POS #2 When AP Released	ACCEL POS #1 When AP Depressed	ACCEL POS #2 When AP Depressed
VCP circuit open	0 to 0.2 V	0 to 0.2 V	0 to 0.2 V	0 to 0.2 V
Open or ground short in VPA circuit	0 to 0.2 V	1.2 to 2.0 V	0 to 0.2 V	3.4 to 5.0 V
Open or ground short in VPA2 circuit	0.5 to 1.1 V	0 to 0.2 V	2.6 to 4.5 V	0 to 0.2 V
EPA circuit open	4.5 to 5.0 V	4.5 to 5.0 V	4.5 to 5.0 V	4.5 to 5.0 V
Normal condition	0.5 to 1.1 V	1.2 to 2.0 V	2.6 to 4.5 V	3.4 to 5.0 V

HINT:
- Accelerator pedal positions are expressed as voltages.
- AP denotes for Accelerator Pedal.

ES

MONITOR DESCRIPTION

When either output voltage of VPA or VPA2 deviates from the standard range, or the difference between the output voltages of the 2 sensor circuits is less than the threshold, the ECM determines that there is a malfunction in the APP sensor. The ECM then illuminates the MIL and sets a DTC.
Example:
When the output voltage of VPA drops below 0.4 V for more than 0.5 seconds when the accelerator pedal is fully depressed, DTC P2122 is set.
If the malfunction is not repaired successfully, a DTC is set 2 seconds after the engine is next started.

MONITOR STRATEGY

Related DTCs	P2120: APP sensor 1 range check (fluctuating) P2122: APP sensor 1 range check (low voltage) P2123: APP sensor 1 range check (high voltage) P2125: APP sensor 2 range check (fluctuating) P2127: APP sensor 2 range check (low voltage) P2128: APP sensor 2 range check (high voltage) P2138: APP sensor range check (correlation)
Required Sensors/Components (Main)	APP sensor
Required Sensors/Components (Related)	-
Frequency of Operation	Continuous
Duration	0.5 seconds: P2120, P2122, P2125 and P2127 2.0 seconds: P2123, P2128 and P2138
MIL Operation	Immediate
Sequence of Operation	None

TYPICAL ENABLING CONDITIONS

Monitor runs whenever following DTCs not present	None
Either of following conditions 1 or 2 met:	-
1. Ignition switch	ON
2. Throttle actuator power	ON

TYPICAL MALFUNCTION THRESHOLDS

P2120:

Either of following conditions 1 or 2 met:	-
1. VPA voltage when VPA2 voltage 0.04 V or more	0.4 V or less
2. VPA voltage	4.8 V or more

P2122:

VPA voltage when VPA2 voltage 0.04 V or more	0.4 V or less

P2123:

VPA voltage	4.8 V or more

P2125:

Either of following conditions 1 or 2 met:	-
1. VPA2 voltage when VPA voltage 0.04 V or more	1.2 V or less
2. VPA2 voltage when VPA 0.4 to 3.45 V	4.8 V or more

P2127:

VPA2 voltage when VPA voltage 0.04 V or more	1.2 V or less

ES

P2128:

VPA2 voltage when VPA 0.4 to 3.45 V	4.8 V or more

P2138:

Either of following conditions A or B met:	-
Condition A	-
Difference between VPA and VPA 2 voltages	0.02 V or less
Condition B	-
VPA voltage	0.4 V or less
VPA2 voltage	1.2 V or less

COMPONENT OPERATING RANGE

VPA voltage	0.5 V to 4.5 V
VPA2 voltage	1.2 V to 5.0 V
Difference between VPA and VPA2 voltages	More than 0.02 V

FAIL-SAFE

When any of DTCs P2120, P2121, P2122, P2123, P2125, P2127, P2128 and P2138 are set, the ECM enters fail-safe mode. If either of the 2 sensor circuit malfunctions, the ECM uses the remaining circuit to calculate the accelerator pedal position to allow the vehicle to continue driving. If both of the circuits malfunction, the ECM regards the accelerator pedal as being released. As a result, the throttle valve is closed and the engine idles.

Fail-safe mode continues until a pass condition is detected, and the ignition switch is turned to OFF.

WIRING DIAGRAM

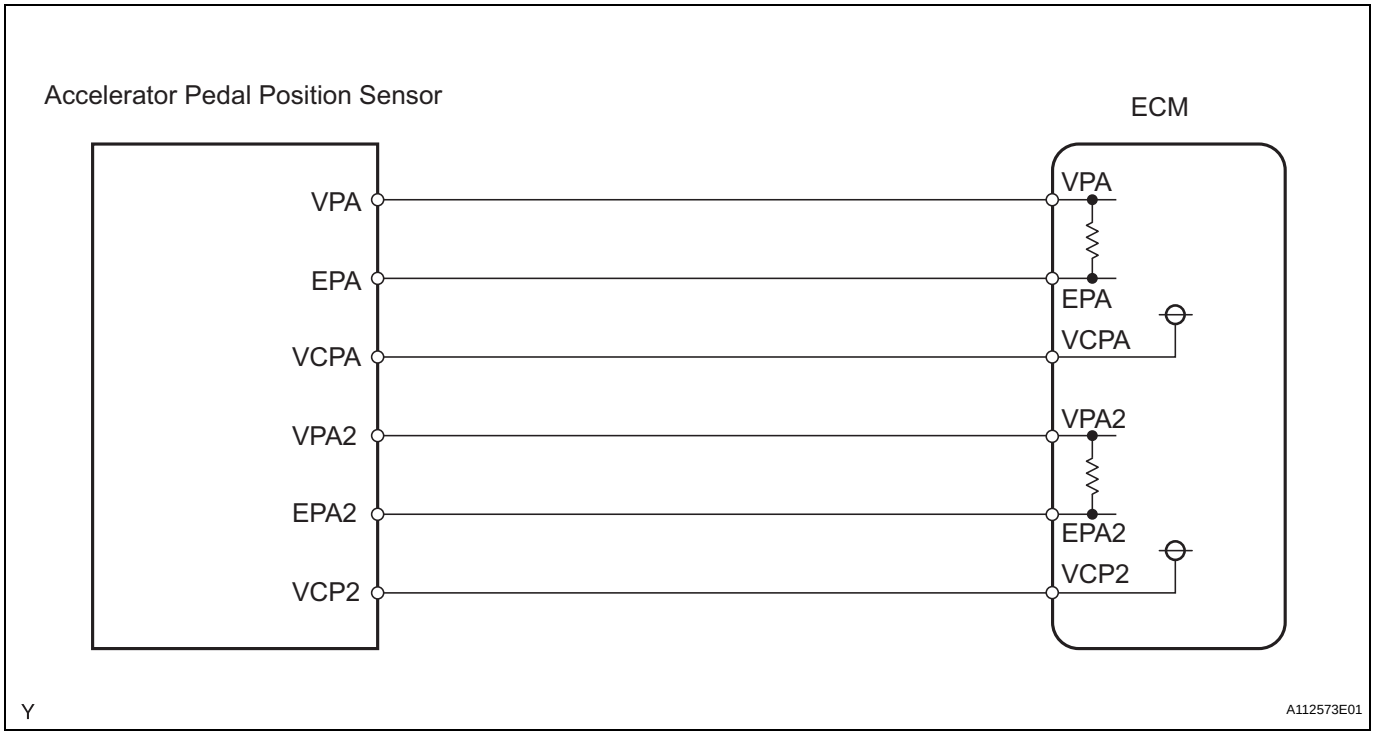

INSPECTION PROCEDURE

HINT:
Read freeze frame data using an intelligent tester. Freeze frame data record the engine condition when malfunctions are detected. When troubleshooting, freeze frame data can help determine if the vehicle was moving or stationary, if the engine was warmed up or not, if the air-fuel ratio was lean or rich, and other data, from the time the malfunction occurred.

1	READ VALUE USING INTELLIGENT TESTER (ACCEL POS #1 AND ACCEL POS #2)

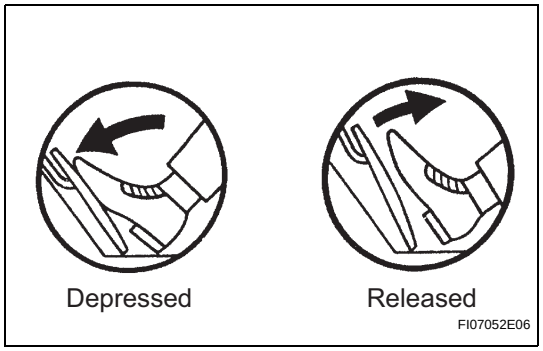

(a) Connect an intelligent tester to the DLC3.
(b) Turn the ignition switch to ON and turn the tester ON.
(c) Select the following menu items: DIAGNOSIS / ENHANCED OBD II / DATA LIST / ETCS / ACCEL POS #1 and ACCEL POS #2.
(d) Read the value displayed on the tester.

Standard voltage

Accelerator Pedal Operations	ACCEL POS #1	ACCEL POS #2
Released → Depressed → Released	0.5 to 4.5 V	1.2 to 5.0 V
	Difference between ACCEL POS #1 and ACCEL POS #2 is greater than 0.02 V	Difference between ACCEL POS #1 and ACCEL POS #2 is greater than 0.02 V

OK → **Go to step 5**

NG

2	CHECK HARNESS AND CONNECTOR (ACCELERATOR PEDAL POSITION SENSOR - ECM)

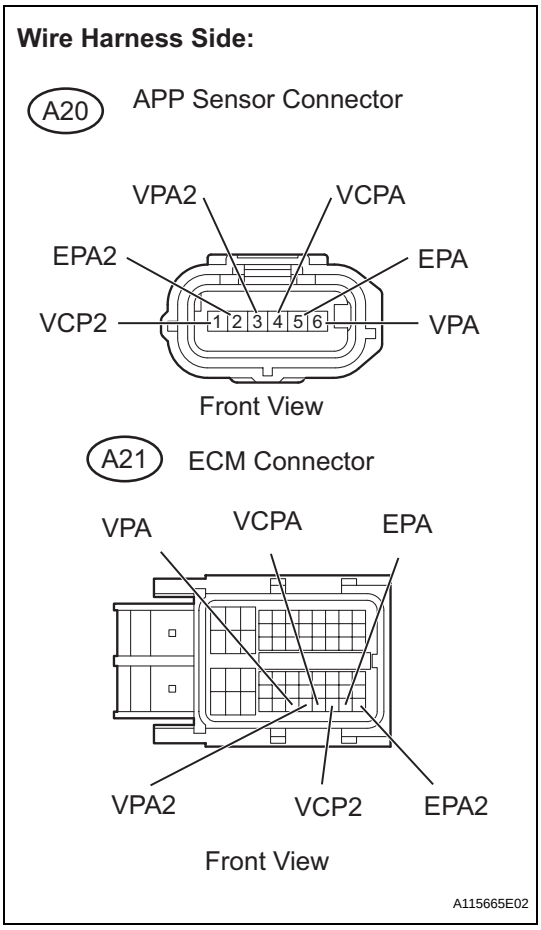

(a) Disconnect the A20 Accelerator Pedal Position (APP) sensor connector.
(b) Disconnect the A21 ECM connector.
(c) Check the resistance.

Standard resistance (Check for open)

Tester Connections	Specified Conditions
VPA (A20-6) - VPA (A21-55)	Below 1 Ω
EPA (A20-5) - EPA (A21-59)	
VCPA (A20-4) - VCPA (A21-57)	
VPA2 (A20-3) - VPA2 (A21-56)	
EPA2 (A20-2) - EPA2 (A21-60)	
VCP2 (A20-1) - VCP2 (A21-58)	

Standard resistance (Check for short)

Tester Connections	Specified Conditions
VPA (A20-6) or VPA (A21-55) - body ground	10 kΩ or higher
EPA (A20-5) or EPA (A21-59) - body ground	
VCPA (A20-4) or VCPA (A21-57) - body ground	
VPA2 (A20-3) or VPA2 (A21-56) - body ground	
EPA2 (A20-2) or EPA2 (A21-60) - body ground	
VCP2 (A20-1) or VCP2 (A21-58) - body ground	

(d) Reconnect the APP sensor connector.
(e) Reconnect the ECM connector.

NG → **REPAIR OR REPLACE HARNESS OR CONNECTOR**

OK

3	INSPECT ECM (VCPA AND VCP2 VOLTAGE)

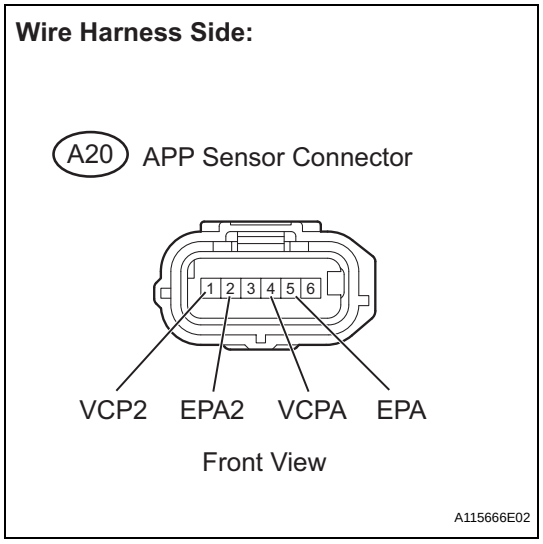

(a) Disconnect the A20 APP sensor connector.
(b) Turn the ignition switch to ON.
(c) Measure the voltage between the terminals of the A20 APP sensor connector.

Standard voltage

Tester Connections	Specified Conditions
VCPA (A20-4) - EPA (A20-5)	4.5 to 5.5 V
VCP2 (A20-1) - EPA2 (A20-2)	

(d) Reconnect the APP sensor connector.

NG → **REPLACE ECM**

OK

4	REPLACE ACCELERATOR PEDAL ASSEMBLY

NEXT

5	CHECK WHETHER DTC OUTPUT RECURS (ACCELERATOR PEDAL POSITION SENSOR DTCS)

(a) Connect the intelligent tester to the DLC3.
(b) Turn the ignition switch to ON and turn the tester ON.
(c) Clear DTCs (See page ES-34).
(d) Start the engine.
(e) Allow the engine to idle for 15 seconds.
(f) Select the following menu items: DIAGNOSIS / ENHANCED OBD II / DTC INFO / CURRENT CODES.
(g) Read DTCs.

Result

Display (DTC Output)	Proceed To
P2120, P2122, P2123, P2125, P2127, P2128, and/or P2138	A
No output	B

B → **SYSTEM OK**

A

REPLACE ECM

DTC	P2121	Throttle / Pedal Position Sensor / Switch "D" Circuit Range / Performance

DESCRIPTION

HINT:

Refer to DTC P2120 (See page ES-266).

DTC No.	DTC Detection Conditions	Trouble Areas
P2121	Difference between VPA and VPA2 less than 0.4 V, or more than 1.2 V for 0.5 seconds (1 trip detection logic)	• Accelerator Pedal Position (APP) sensor • ECM

MONITOR DESCRIPTION

When the difference between the output voltages of VPA and VPA2 deviates from the standard, the ECM determines that the Accelerator Pedal Position (APP) sensor is malfunctioning. The ECM turns on the MIL and the DTC is set.

MONITOR STRATEGY

Related DTCs	P2121: APP sensor rationality
Required Sensors/Components (Main)	APP sensor
Required Sensors/Components (Related)	-
Frequency of Operation	Continuous
Duration	0.5 seconds
MIL Operation	Immediate
Sequence of Operation	None

TYPICAL ENABLING CONDITIONS

Monitor runs whenever following DTCs not present	None
Either of following conditions 1 or 2 met:	-
1. Ignition switch	ON
2. Throttle actuator power	ON

TYPICAL MALFUNCTION THRESHOLDS

Difference between VPA voltage (learned value) and VPA2 voltage (learned value)	Less than 0.4 V, or more than 1.2 V

FAIL-SAFE

The APP sensor has two (main and sub) sensor circuits. If a malfunction occurs in either of the sensor circuits, the ECM detects the abnormal signal voltage difference between the two sensor circuits and switches to limp mode. In limp mode, the functioning circuit is used to calculate the accelerator pedal opening angle to allow the vehicle to continue driving. If both circuits malfunction, the ECM regards the opening angle of the accelerator pedal as being fully closed. In this case, the throttle valve remains closed as if the engine is idling.

If a pass condition is detected and then the ignition switch is turned to OFF, the fail-safe operation stops and the system returns to a normal condition.

WIRING DIAGRAM

Refer to DTC P2120 (See page ES-270).

INSPECTION PROCEDURE

HINT:
Read freeze frame data using an intelligent tester. Freeze frame data record the engine condition when malfunctions are detected. When troubleshooting, freeze frame data can help determine if the vehicle was moving or stationary, if the engine was warmed up or not, if the air-fuel ratio was lean or rich, and other data, from the time the malfunction occurred.

1 CHECK ANY OTHER DTCS OUTPUT (IN ADDITION TO DTC P2121)

(a) Connect an intelligent tester to the DLC3.
(b) Turn the ignition switch to ON.
(c) Turn the tester ON.
(d) Select the following menu items: DIAGNOSIS / ENHANCED OBD II / DTC INFO / CURRENT CODES.
(e) Read DTCs.

ES

Result

Display (DTC Output)	Proceed To
P2121	A
P2121 and other DTCs	B

HINT:
If any DTCs other than P2121 are output, troubleshoot those DTCs first.

B → GO TO DTC CHART

A

2 READ VALUE USING INTELLIGENT TESTER (ACCEL POS #1 AND ACCEL POS #2)

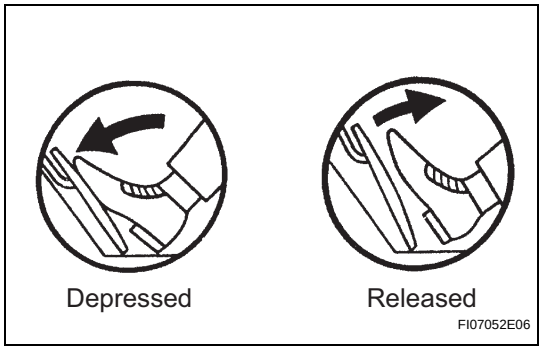

(a) Connect the intelligent tester to the DLC3.
(b) Turn the ignition switch to ON and turn the tester ON.
(c) Select the following menu items: DIAGNOSIS / ENHANCED OBD II / DATA LIST / PRIMARY / ACCEL POS #1 and ACCEL POS #2.
(d) Read the values displayed on the tester.

Standard voltage

Accelerator Pedal Operations	ACCEL POS #1	ACCEL POS #2
Released	0.5 to 1.1 V	1.2 to 2.0 V
Depressed	2.6 to 4.5 V	3.4 to 5.0 V

OK → CHECK FOR INTERMITTENT PROBLEMS

NG

3 REPLACE ACCELERATOR PEDAL ASSEMBLY

NEXT

4	CHECK WHETHER DTC OUTPUT RECURS (DTC P2121)

(a) Connect the intelligent tester to the DLC3.
(b) Turn the ignition switch to ON and turn the tester ON.
(c) Clear DTCs (See page ES-34).
(d) Start the engine.
(e) Allow the engine to idle for 15 seconds.
(f) Select the following menu items: DIAGNOSIS / ENHANCED OBD II / DTC INFO / CURRENT CODES.
(g) Read DTCs.

Result

ES

Display (DTC Output)	Proceed To
P2121	A
No output	B

B → SYSTEM OK

A → REPLACE ECM

DTC	P2195	Oxygen (A/F) Sensor Signal Stuck Lean (Bank 1 Sensor 1)

DTC	P2196	Oxygen (A/F) Sensor Signal Stuck Rich (Bank 1 Sensor 1)

HINT:
- Although the DTC titles say oxygen sensor, these DTCs relate to the Air-Fuel Ratio (A/F) sensor.
- Sensor 1 refers to the sensor mounted in front of the Three-Way Catalytic Converter (TWC) and located near the engine assembly.

ES

DESCRIPTION

The A/F sensor generates a voltage* that corresponds to the actual air-fuel ratio. This sensor voltage is used to provide the ECM with feedback so that it can control the air-fuel ratio. The ECM determines the deviation from the stoichiometric air-fuel ratio level, and regulates the fuel injection time. If the A/F sensor malfunctions, the ECM is unable to control the air-fuel ratio accurately.

The A/F sensor is of the planar type and is integrated with the heater, which heats the solid electrolyte (zirconia element). This heater is controlled by the ECM. When the intake air volume is low (the exhaust gas temperature is low), a current flows into the heater to heat the sensor, in order to facilitate accurate air-fuel ratio detection. In addition, the sensor and heater portions are narrower than the conventional type. The heat generated by the heater is conducted to the solid electrolyte through the alumina, therefore the sensor activation is accelerated.

In order to obtain a high purification rate of the carbon monoxide (CO), hydrocarbon (HC) and nitrogen oxide (NOx) components in the exhaust gas, a TWC is used. For the most efficient use of the TWC, the air-fuel ratio must be precisely controlled so that it is always close to the stoichiometric level.

*: Value changes inside the ECM. Since the A/F sensor is the current output element, a current is converted into a voltage inside the ECM. Any measurements taken at the A/F sensor or ECM connectors will show a constant voltage.

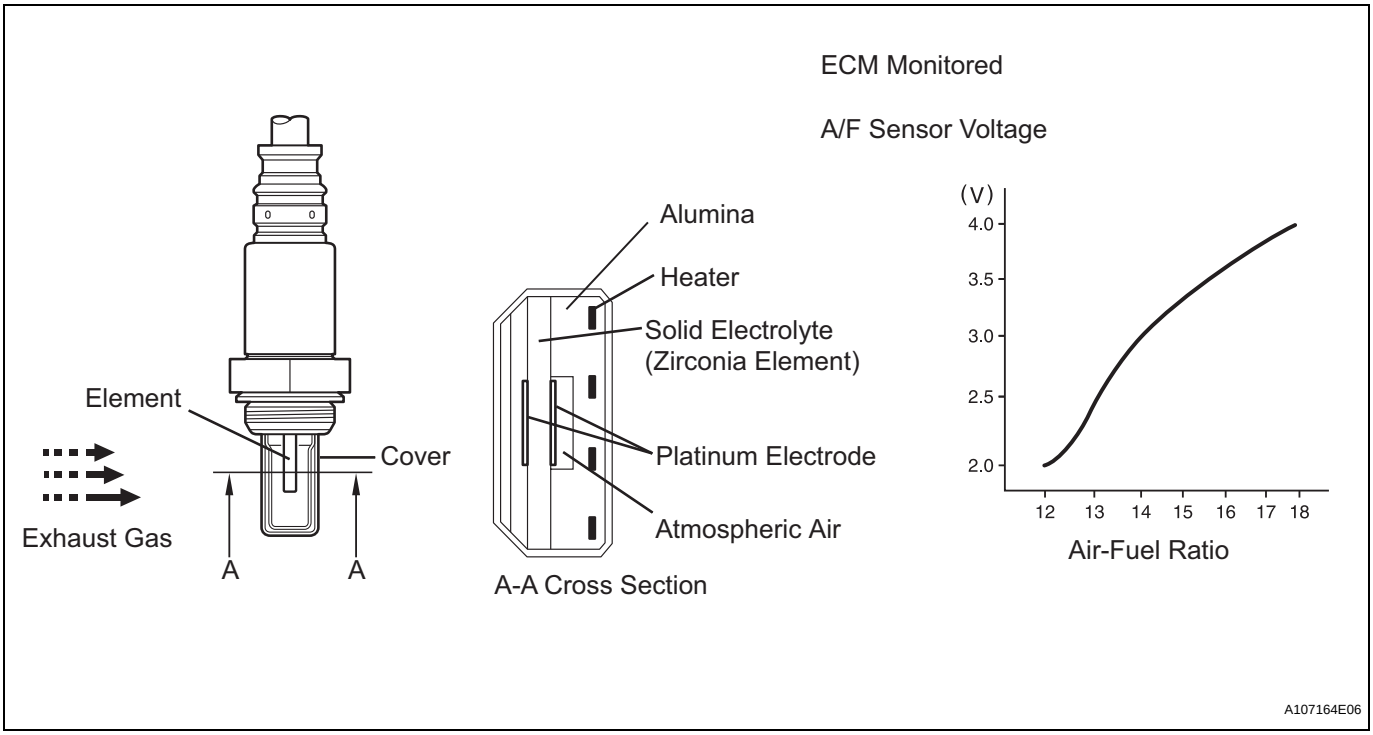

DTC No.	DTC Detection Conditions	Trouble Areas
P2195	Conditions (a) and (b) continue for 10 seconds or more (2 trip detection logic): (a) A/F sensor voltage more than 3.8 V (b) Heated Oxygen (HO2) sensor voltage 0.15 V or more	• Open or short in A/F sensor (sensor 1) circuit • A/F sensor (sensor 1) • A/F sensor heater (sensor 1) • Integration relay (EFI relay) • A/F sensor heater and EFI relay circuits • ECM
	While fuel-cut operation performed (during vehicle deceleration), A/F sensor current 3.6 mA or more for 3 seconds (2 trip detection logic)	• A/F sensor • ECM
P2196	Conditions (a) and (b) continue for 10 seconds or more (2 trip detection logic): (a) A/F sensor voltage less than 2.8 V for 10 seconds (b) HO2 sensor voltage less than 0.6 V	• Open or short in A/F sensor (sensor 1) circuit • A/F sensor (sensor 1) • A/F sensor heater (sensor 1) • Integration relay (EFI relay) • A/F sensor heater and EFI relay circuits • ECM
	While fuel-cut operation performed (during vehicle deceleration), A/F sensor current less than 1.0 mA for 3 seconds (2 trip detection logic)	• A/F sensor • ECM

ES

HINT:
- When either of these DTCs is set, check the A/F sensor output voltage by selecting the following menu items on an intelligent tester: DIAGNOSIS / ENHANCED OBD II / DATA LIST / PRIMARY / AFS B1 S1.
- Short-term fuel trim values can also be read using an intelligent tester.
- The ECM regulates the voltages at the A1A+ and A1A- terminals of the ECM to a constant level. Therefore, the A/F sensor output voltage cannot be confirmed without using an intelligent tester.
- If the A/F sensor is malfunctioning, the ECM sets the DTC P2195 or P2196.

MONITOR DESCRIPTION

Sensor voltage detection monitor

Under the air-fuel ratio feedback control, if the A/F sensor output voltage indicates rich or lean for a certain period of time, the ECM determines that there is a malfunction in the A/F sensor. The ECM illuminates the MIL and sets a DTC.

Example:

If the A/F sensor output voltage is less than 2.8 V (very rich condition) for 10 seconds, despite the rear HO2 sensor output voltage being less than 0.6 V, the ECM sets DTC P2196. Alternatively, if the A/F sensor output voltage is more than 3.8 V (very lean condition) for 10 seconds, despite the rear HO2 sensor output voltage being 0.15 V or more, DTC P2195 is set.

Sensor current detection monitor

A rich air-fuel mixture causes a low A/F sensor current, and a lean air-fuel mixture causes a high A/F sensor current. Therefore, the sensor output becomes low during acceleration, and it becomes high during deceleration with the throttle valve fully closed. The ECM monitors the A/F sensor current during fuel-cut and detects any abnormal current values.

If the A/F sensor output is 3.6 mA or more for more than 3 seconds of cumulative time, the ECM interprets this as a malfunction in the A/F sensor and sets DTC P2195 (high-side stuck). If the A/F sensor output is less than 1.0 mA for more than 3 seconds of cumulative time, the ECM sets DTC P2196 (low-side stuck).

A/F Sensor Current Monitor:

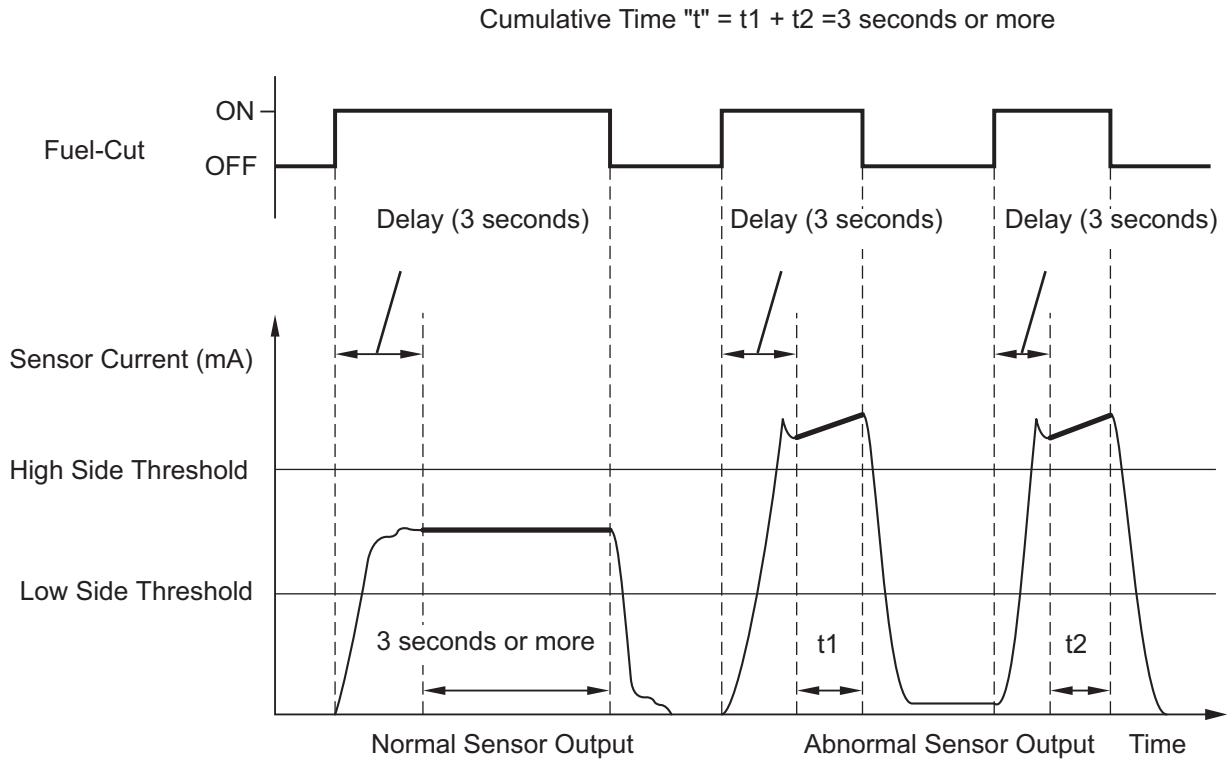

MONITOR STRATEGY

Related DTCs	P2195: A/F sensor signal stuck lean P2196: A/F sensor signal stuck rich
Required Sensors/Components (Main)	A/F sensor
Required Sensors/Components (Related)	HO2 sensor
Frequency of Operation	Continuous
Duration	10 seconds: Sensor voltage detection monitor 3 seconds: Sensor current detection monitor
MIL Operation	2 driving cycles
Sequence of Operation	None

TYPICAL ENABLING CONDITIONS

All

Monitor runs whenever following DTCs not present	P0031, P0032 (A/F sensor heater - Sensor 1) P0037, P0038 (O2 sensor heater - Sensor 2) P0100 - P0103 (MAF meter) P0110 - P0113 (IAT sensor) P0115 - P0118 (ECT sensor) P0120 - P0223, P2135 (TP sensor) P0125 (Insufficient ECT for Closed Loop) P0136 (O2 Sensor - Sensor 2) P0171, P0172 (Fuel system) P0300 - P0304 (Misfire) P0335 (CKP sensor) P0340 (CMP sensor) P0455, P0456 (EVAP system) P0500 (VSS)

Sensor voltage detection monitor (Lean side malfunction P2195):

Duration while all of following conditions met	2 seconds or more
Rear HO2 sensor voltage	0.15 V or more
Time after engine start	30 seconds or more
A/F sensor status	Activated
Fuel system status	Closed-loop
Engine	Running

Sensor voltage detection monitor (Rich side malfunction P2196):

Duration while all of following conditions met	2 seconds or more
Rear HO2 sensor voltage	Below 0.6 V
Time after engine start	30 seconds or more
A/F sensor status	Activated
Fuel system status	Closed-loop
Engine	Running

Sensor current detection monitor P2195 and P2196

Battery voltage	11 V or more
Atmospheric pressure	76 kPa (570 mmHg) or more
A/F sensor status	Activated
Continuous time of fuel cut	3 to 10 seconds
ECT	75°C (167°F) or more

TYPICAL MALFUNCTION THRESHOLDS

Sensor voltage detection monitor (Lean side malfunction P2195):

A/F sensor voltage	More than 3.8 V for 10 seconds

Sensor voltage detection monitor (Rich side malfunction P2196):

A/F sensor voltage	Less than 2.8 V for 10 seconds

Sensor current detection monitor (High side malfunction P2195):

A/F sensor current during fuel cut	3.6 mA or more

Sensor current detection monitor (Rich side malfunction P2196):

A/F sensor current during fuel cut	Less than 1 mA

MONITOR RESULT

Refer to CHECKING MONITOR STATUS (See page ES-17).

WIRING DIAGRAM

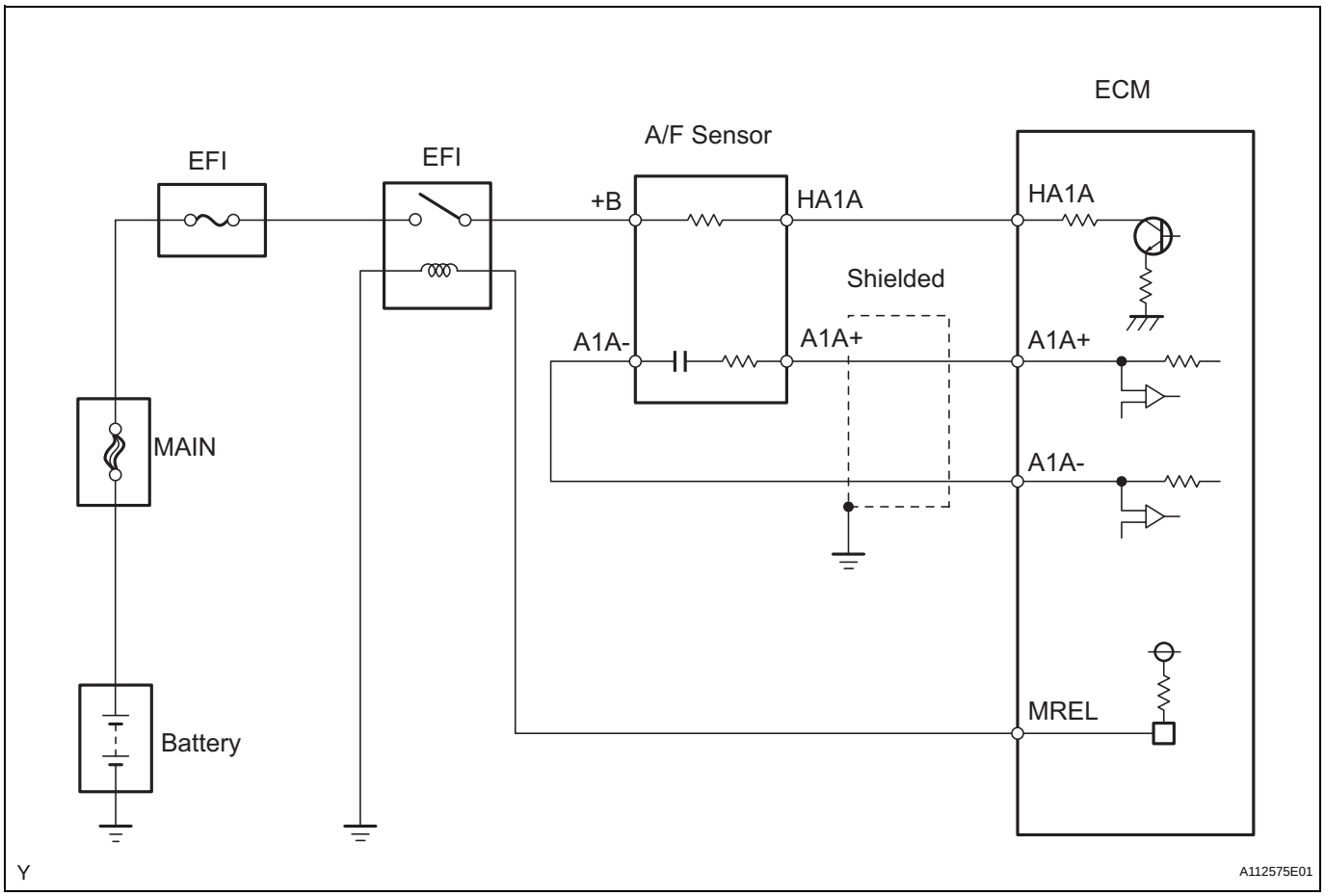

CONFIRMATION DRIVING PATTERN

This confirmation driving pattern is used in the "PERFORM CONFIRMATION DRIVING PATTERN" procedure of the following diagnostic troubleshooting procedure.

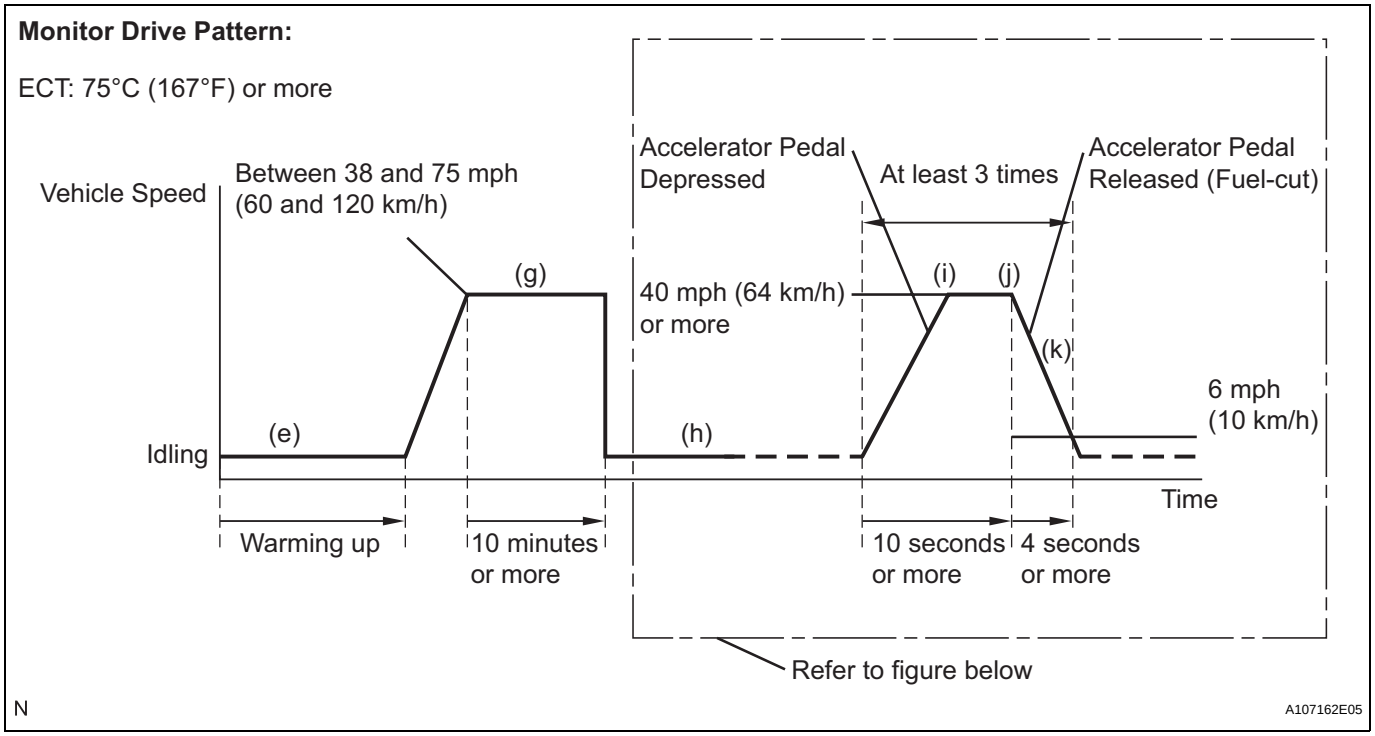

Driving Pattern Detail for (h) through (k):

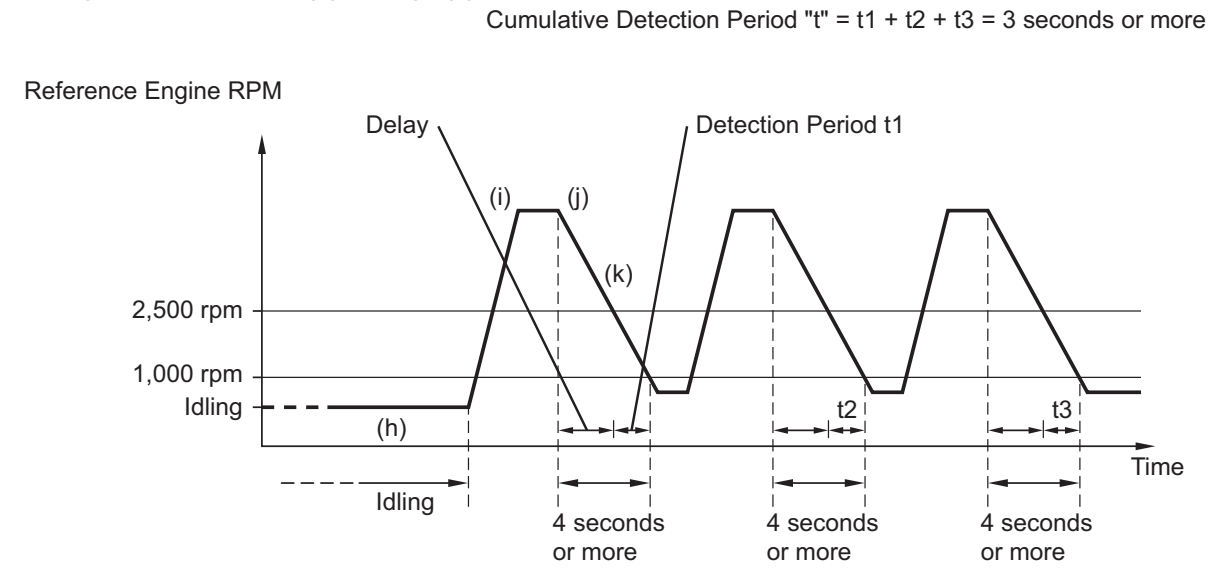

(a) Connect an intelligent tester to the DLC3.
(b) Turn the ignition switch to ON.
(c) Turn the tester ON.
(d) Clear DTCs (See page ES-34).
(e) Start the engine, and warm it up until the ECT reaches 75°C (167°F) or higher.
(f) On the intelligent tester, select the following menu items to check the fuel-cut status: DIAGNOSIS / ENHANCED OBD II / DATA LIST / USER DATA / FC IDLE.
(g) Drive the vehicle at between 38 mph (60 km/h) and 75 mph (120 km/h) for at least 10 minutes.
(h) Change the transmission to 2nd gear.
(i) Drive the vehicle at proper vehicle speed to perform fuel-cut operation (refer to the following HINT).
HINT:
Fuel-cut is performed when the following conditions are met:
- Accelerator pedal fully released.
- Engine speed is 2,500 rpm or more (fuel injection returns at 1,000 rpm).

(j) Accelerate the vehicle to 40 mph (64 km/h) or more by depressing the accelerator pedal for at least 10 seconds.
(k) Soon after performing step (j) above, release the accelerator pedal for at least 4 seconds without depressing the brake pedal, in order to execute fuel-cut control.
(l) Allow the vehicle to decelerate until the vehicle speed declines to less than 6 mph (10 km/h).
(m) Repeat steps from (h) through (k) above at least 3 times in one driving cycle.
HINT:
Completion of all A/F sensor monitors is required to change the value in TEST RESULT.
CAUTION:
Strictly observe posted speed limits, traffic laws, and road conditions when performing these drive patterns.

INSPECTION PROCEDURE

HINT:
Intelligent tester only:
Malfunctioning areas can be identified by performing the A/F CONTROL function provided in the ACTIVE TEST. The A/F CONTROL function can help to determine whether the Air-fuel Ratio (A/F) sensor, Heated Oxygen (HO2) sensor and other potential trouble areas are malfunctioning.

The following instructions describe how to conduct the A/F CONTROL operation using the intelligent tester.
(a) Connect the intelligent tester to the DLC3.
(b) Start the engine and turn the tester ON.
(c) Warm up the engine at an engine speed of 2,500 rpm for approximately 90 seconds.
(d) On the tester, select the following menu items: DIAGNOSIS / ENHANCED OBD II / ACTIVE TEST / A/F CONTROL.
(e) Perform the A/F CONTROL operation with the engine idling (press the RIGHT or LEFT button to change the fuel injection volume).
(f) Monitor the output voltages of the A/F and HO2 sensors (AFS B1 S1 and O2S B1 S2) displayed on the tester.
HINT:

- The A/F CONTROL operation lowers the fuel injection volume by 12.5 % or increases the injection volume by 25 %.
- The sensors react in accordance with increases and decreases in the fuel injection volume.

Standard

Tester Display (Sensor)	Injection Volume	Status	Voltages
AFS B1 S1 (A/F)	+25 %	Rich	Less than 3.0
	-12.5 %	Lean	More than 3.35
O2S B1 S2 (HO2)	+25 %	Rich	More than 0.5
	-12.5 %	Lean	Less than 0.4

NOTICE:
The A/F sensor has an output delay of a few seconds and the HO2 sensor (sensor 2) output has a maximum output delay of approximately of 20 seconds.

Case	A/F Sensor (Sensor 1) Output Voltage		HO2 Sensor (Sensor 2) Output Voltage		Main Suspected Trouble Areas
1	Injection Volume +25 % -12.5 %		Injection Volume +25 % -12.5 %		-
	Output Voltage More than 3.35 V Less than 3.0 V		Output Voltage More than 0.5 V Less than 0.4 V		
2	Injection Volume +25 % -12.5 %		Injection Volume +25 % -12.5 %		• A/F sensor • A/F sensor heater • A/F sensor circuit
	Output Voltage Almost no reaction		Output Voltage More than 0.5 V Less than 0.4 V		
3	Injection Volume +25 % -12.5 %		Injection Volume +25 % -12.5 %		• HO2 sensor • HO2 sensor heater • HO2 sensor circuit
	Output Voltage More than 3.35 V Less than 3.0 V		Output Voltage Almost no reaction		
4	Injection volume +25 % -12.5 %		Injection Volume +25 % -12.5 %		• Injector • Fuel pressure • Gas leakage from exhaust system (Air-fuel ratio extremely lean or rich)
	Output Voltage Almost no reaction	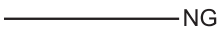	Output Voltage Almost no reaction	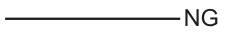	

Following the A/F CONTROL procedure enables technicians to check and graph the voltage outputs of both the A/F and HO2 sensors.
To display the graph, select the following menu items on the tester: DIAGNOSIS / ENHANCED OBD II / ACTIVE TEST / A/F CONTROL / USER DATA / AFS B1 S1 and O2S B1 S2, and press the YES button and then the ENTER button followed by the F4 button.
HINT:

- DTC P2A00 may be set, when the air-fuel ratio is stuck rich or lean.
- Read freeze frame data using an intelligent tester. Freeze frame data record the engine condition when malfunctions are detected. When troubleshooting, freeze frame data can help determine if the vehicle was moving or stationary, if the engine was warmed up or not, if the air-fuel ratio was lean or rich, and other data, from the time the malfunction occurred.
- A low A/F sensor voltage could be caused by a rich air-fuel mixture. Check for conditions that would cause the engine to run rich.
- A high A/F sensor voltage could be caused by a lean air-fuel mixture. Check for conditions that would cause the engine to run lean.

ES

1	CHECK ANY OTHER DTCS OUTPUT (IN ADDITION TO P2195 OR P2196)

(a) Connect an intelligent tester to the DLC3.
(b) Turn the ignition switch to ON.
(c) Turn the tester ON.
(d) Select the following menu items: DIAGNOSIS / ENHANCED OBD II / DTC INFO / CURRENT CODES.
(e) Read DTCs.

Result

Display (DTC Output)	Proceed To
P2195 or P2196	A
P2195 or P2196 and other DTCs	B

HINT:
If any DTCs relating to the A/F sensor (DTCs for the A/F sensor heater or A/F sensor admittance) are output, troubleshoot those DTCs first.

B → GO TO DTC CHART

A

2	READ VALUE USING INTELLIGENT TESTER (TEST VALUE OF A/F SENSOR)

(a) Connect the intelligent tester to the DLC3.
(b) Turn the ignition switch to ON and turn the tester ON.
(c) Clear DTCs (See page ES-34).
(d) Drive the vehicle in accordance with the drive pattern described in the CONFIRMATION DRIVING PATTERN.
(e) Select the following menu items: DIAGNOSIS / ENHANCED OBD II / MONITOR INFO / MONITOR STATUS.
(f) Check that the status of O2S MON is COMPL.
If the status is still INCMPL, drive the vehicle according to the driving pattern again.
HINT:
- AVAIL indicates that the component has not been monitored yet.

- COMPL indicates that the component is functioning normally.
- INCMPL indicates that the component is malfunctioning.

(g) Select the following menu items: DIAGNOSIS / ENHANCED OBD II / MONITOR INFO / TEST RESULT / RANGE B1 S1, then press the ENTER button.
(h) Check the test value of the A/F sensor output current during fuel-cut.

Result

Test Value	Proceed To
Within normal range (1.0 mA or more, and less than 3.6 mA)	A
Outside normal range (Less than 1.0 mA, or 3.6 mA or more)	B

ES

B → Go to step 12

A

3	READ VALUE USING INTELLIGENT TESTER (OUTPUT VOLTAGE OF A/F SENSOR)

(a) Connect the intelligent tester to the DLC3.
(b) Start the engine.
(c) Turn the tester ON.
(d) Warm up the A/F sensor at an engine speed of 2,500 rpm for 90 seconds.
(e) On the tester, select the following menu items: DIAGNOSIS / ENHANCED OBD II / SNAPSHOT / MANUAL SNAPSHOT / USER DATA / AFS B1 S1 and ENGINE SPD.
(f) Check the A/F sensor voltage three times, when the engine is in each of the following conditions:
(1) While idling (check for at least 30 seconds)
(2) At an engine speed of approximately 2,500 rpm (without any sudden changes in engine speed)
(3) Raise the engine speed to 4,000 rpm and then quickly release the accelerator pedal so that the throttle valve is fully closed.

Standard voltage

Conditions	A/F Sensor Voltage Variations	Reference
(1) and (2)	Remains at approximately 3.3 V	Between 3.1 V and 3.5 V
(3)	Increases to 3.8 V or more	This occurs during engine deceleration (when fuel-cut performed)

HINT:

- For more information, see the diagrams below.

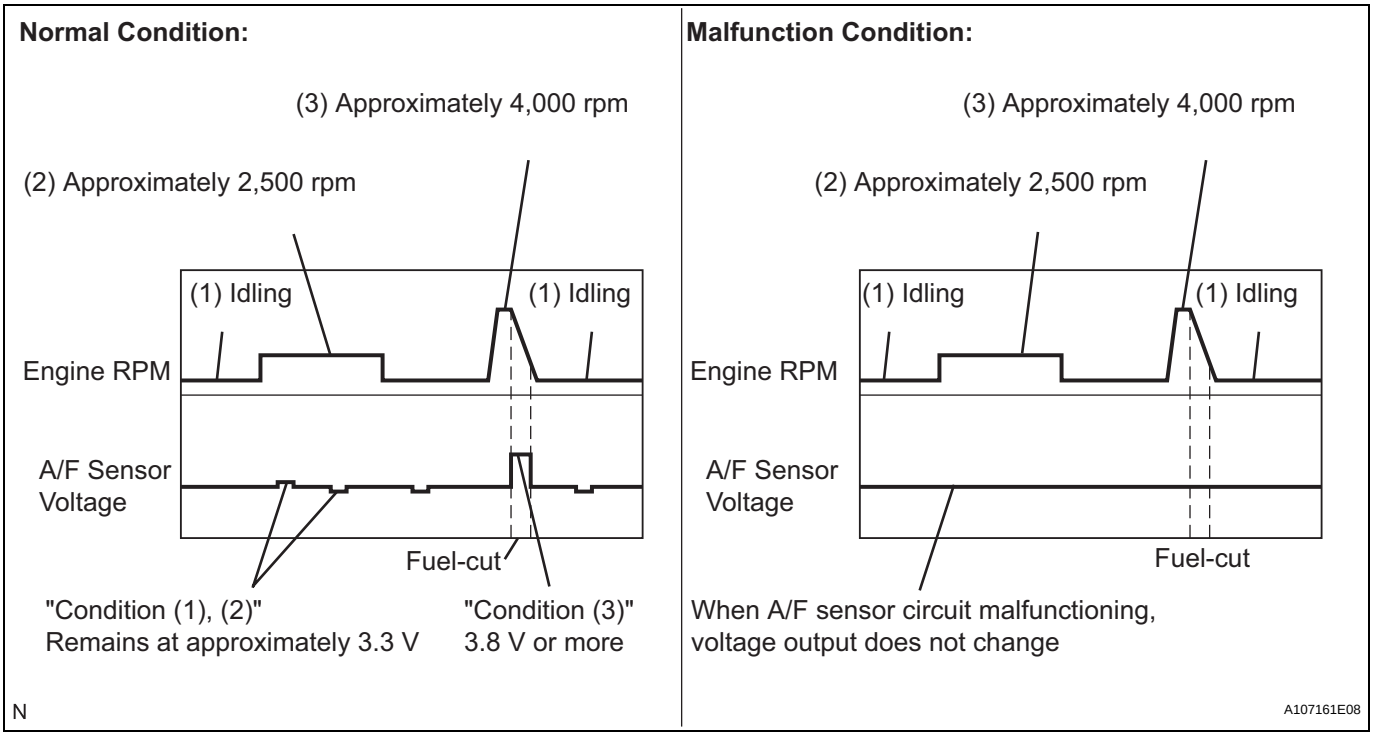

- If the output voltage of the A/F sensor remains at approximately 3.3 V (see Malfunction Condition diagram) under any conditions, including those above, the A/F sensor may have an open circuit. (This will also happen if the A/F sensor heater has an open circuit.)
- If the output voltage of the A/F sensor remains at either approximately 3.8 V or more, or 2.8 V or less (see Malfunction Condition diagram) under any conditions, including those above, the A/F sensor may have a short circuit.
- The ECM stops fuel injection (fuel cut) during engine deceleration. This causes a lean condition and result in a momentary increase in the A/F sensor output voltage.
- The ECM must establish a closed throttle valve position learning value to perform fuel cut. If the battery terminal has been reconnected, the vehicle must be driven over 10 mph (16 km/h) to allow the ECM to learn the closed throttle valve position.
- When the vehicle is driven:
  The output voltage of the A/F sensor may be below 2.8 V during fuel enrichment. For the vehicle, this translates to a sudden increase in speed with the accelerator pedal fully depressed when trying to overtake another vehicle. The A/F sensor is functioning normally.
- The A/F sensor is a current output element; therefore, the current is converted into a voltage inside the ECM. Measuring the voltage at the connectors of the A/F sensor or ECM will show a constant voltage result.

NG	**Go to step 9**

OK

4	PERFORM CONFIRMATION DRIVING PATTERN

NEXT

5	CHECK WHETHER DTC OUTPUT RECURS (DTC P2195 OR P2196)

(a) Read DTCs using the intelligent tester.
(b) Select the following menu items: DIAGNOSIS / ENHANCED OBD II / DTC INFO / PENDING CODES.

ES

Result

Display (DTC Output)	Proceed To
P2195 or P2196	A
No output	B

B → END

A

6	REPLACE AIR FUEL RATIO SENSOR

NEXT

7	PERFORM CONFIRMATION DRIVING PATTERN

NEXT

8	CHECK WHETHER DTC OUTPUT RECURS (DTC P2195 OR P2196)

(a) Read DTCs using the intelligent tester.
(b) Select the following menu items: DIAGNOSIS / ENHANCED OBD II / DTC INFO / PENDING CODES.

Result

Display (DTC Output)	Proceed To
No output	A
P2195 or P2196	B

B → REPLACE ECM

A

END

9	INSPECT AIR FUEL RATIO SENSOR (HEATER RESISTANCE) (See page ES-77)

NG → REPLACE AIR FUEL RATIO SENSOR

OK

10	INSPECT INTEGRATION RELAY (EFI RELAY) (See page ES-78)

NG → REPLACE INTEGRATION RELAY (EFI RELAY)

OK

11	CHECK HARNESS AND CONNECTOR (A/F SENSOR - ECM)

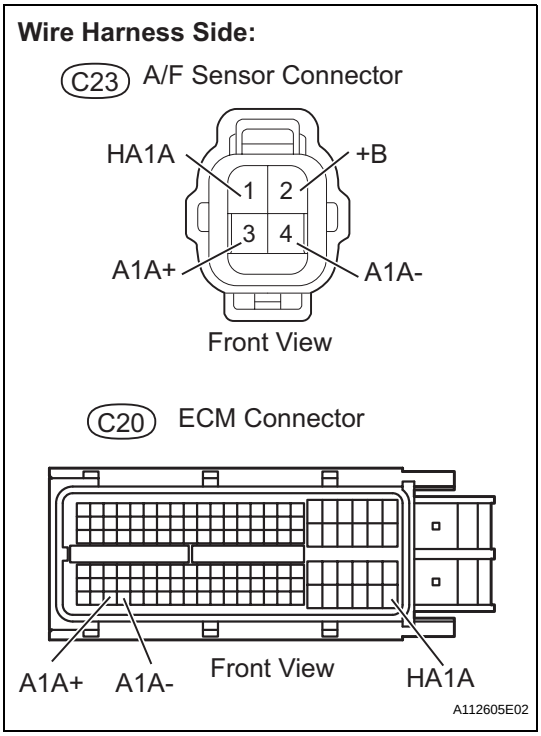

(a) Disconnect the C23 A/F sensor connector.
(b) Turn the ignition switch to ON.
(c) Check the voltage between the +B terminal of the A/F sensor connector and body ground.

Standard voltage

Tester Connections	Specified Conditions
+B (C23-2) - Body ground	11 to 14 V

(d) Turn the ignition switch to OFF.
(e) Disconnect the C20 ECM connector.
(f) Check the resistance.

Standard resistance (Check for open)

Tester Connections	Specified Conditions
HA1A (C23-1) - HA1A (C20-109)	Below 1 Ω
A1A+ (C23-3) - A1A+ (C20-112)	
A1A- (C23-4) - A1A- (C20-113)	

Standard resistance (Check for short)

Tester Connections	Specified Conditions
HA1A (C23-1) or HA1A (C20-109) - Body ground	10 kΩ or higher
A1A+ (C23-3) or A1A+ (C20-112) - Body ground	
A1A- (C23-4) or A1A- (C20-113) - Body ground	

(g) Reconnect the ECM connector.
(h) Reconnect the A/F sensor connector.

Reference (System Diagram of Sensor 1):

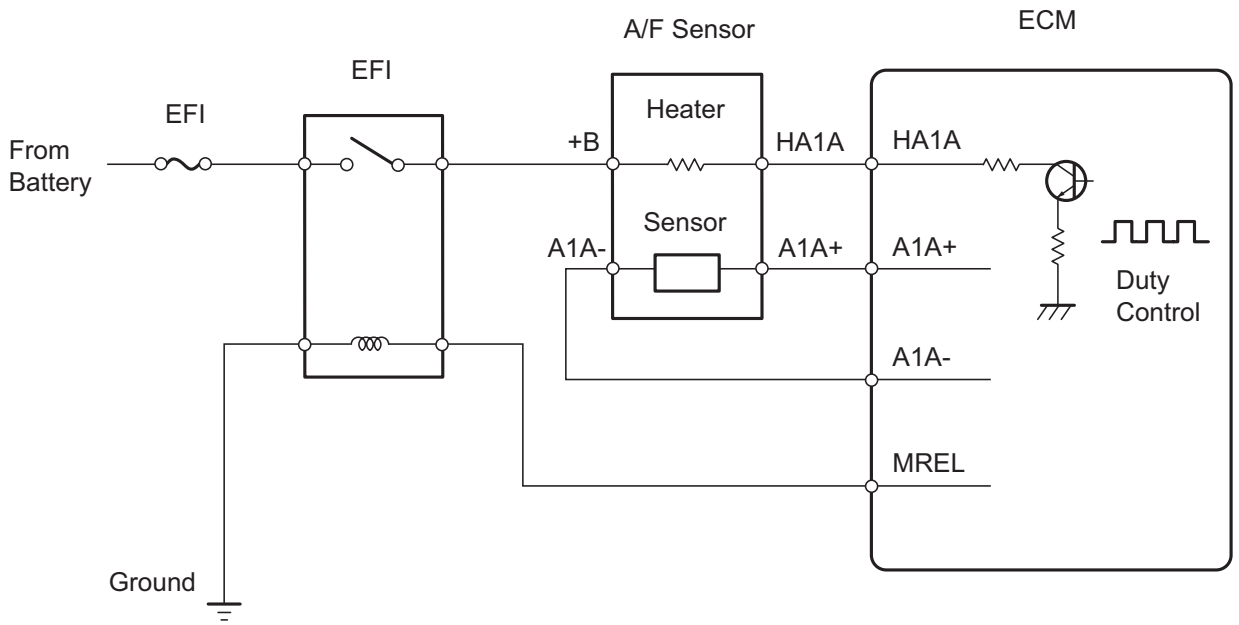

ES

NG → **REPAIR OR REPLACE HARNESS OR CONNECTOR**

OK

12	REPLACE AIR FUEL RATIO SENSOR

NEXT

13	PERFORM CONFIRMATION DRIVING PATTERN

NEXT

14	CHECK WHETHER DTC OUTPUT RECURS (DTC P2195 OR P2196)

(a) Read DTCs using the intelligent tester.
(b) Select the following menu items: DIAGNOSIS / ENHANCED OBD II / DTC INFO / PENDING CODES.

Result

Display (DTC Output)	Proceed To
No output	A
P2195 or P2196	B

B → **REPLACE ECM**

A

END

DTC	P2238	Oxygen (A/F) Sensor Pumping Current Circuit Low (Bank 1 Sensor 1)

DTC	P2239	Oxygen (A/F) Sensor Pumping Current Circuit High (Bank 1 Sensor 1)

DTC	P2252	Oxygen (A/F) Sensor Reference Ground Circuit Low (Bank 1 Sensor 1)

DTC	P2253	Oxygen (A/F) Sensor Reference Ground Circuit High (Bank 1 Sensor 1)

ES

HINT:
- Although the DTC titles say oxygen sensor, these DTCs relate to the Air-Fuel Ratio (A/F) sensor.
- Sensor 1 refers to the sensor mounted in front of the Three-Way Catalytic Converter (TWC) and located near the engine assembly.

DESCRIPTION

Refer to DTC P2195 (See page ES-276).

DTC No.	DTC Detection Conditions	Trouble Areas
P2238	• Case 1: Condition (a) or (b) continues for 5.0 seconds or more (2 trip detection logic): (a) AF+ voltage 0.5 V or less (b) (AF+) - (AF-) = 0.1 V or less • Case 2: A/F sensor admittance: Less than 0.022 1/Ω (2 trip detection logic)	• Open or short in A/F sensor (sensor 1) circuit • A/F sensor (sensor 1) • A/F sensor heater (sensor 1) • Integration relay (EFI relay) • A/F sensor heater and EFI relay circuits • ECM
P2239	AF+ voltage more than 4.5 V for 5.0 seconds or more (2 trip detection logic)	• Open or short in A/F sensor (sensor 1) circuit • A/F sensor (sensor 1) • A/F sensor heater (sensor 1) • Integration relay (EFI relay) • A/F sensor heater and EFI relay circuits • ECM
P2252	AF- voltage 0.5 V or less for 5.0 seconds or more (2 trip detection logic)	• Open or short in A/F sensor (sensor 1) circuit • A/F sensor (sensor 1) • A/F sensor heater (sensor 1) • Integration relay (EFI relay) • A/F sensor heater and EFI relay circuits • ECM
P2253	AF- voltage more than 4.5 V for 5.0 seconds or more (2 trip detection logic)	• Open or short in A/F sensor (sensor 1) circuit • A/F sensor (sensor 1) • A/F sensor heater (sensor 1) • Integration relay (EFI realy) • A/F sensor heater and EFI relay circuits • ECM

MONITOR DESCRIPTION

The Air-Fuel Ratio (A/F) sensor varies its output voltage in proportion to the air-fuel ratio. If the A/F sensor impedance (alternating current resistance) or output voltage deviates greatly from the standard range, the ECM determines that there is an open or short in the A/F sensor circuit.

MONITOR STRATEGY

Related DTCs	P2238: A/F sensor open circuit between AF+ and AF- P2238: A/F sensor short circuit between AF+ and AF- P2238: A/F sensor short circuit between AF+ and GND P2239: A/F sensor short circuit between AF+ and +B P2252: A/F sensor short circuit between AF- and GND P2253: A/F sensor short circuit between AF- and +B
Required Sensors/Components (Main)	A/F sensor
Required Sensors/Components (Related)	Engine Coolant Temperature (ECT) sensor, Crankshaft position sensor
Frequency of Operation	Once per driving cycle
Duration	10 seconds: A/F sensor open circuit between AF+ and AF- 5 seconds: Others
MIL Operation	2 driving cycles
Sequence of Operation	None

ES

TYPICAL ENABLING CONDITIONS

Monitor runs whenever following DTCs not present	P0031, P0032 (A/F sensor heater - Sensor 1) P0100 - P0103 (MAF meter) P0110 - P0113 (IAT sensor) P0115 - P0118 (ECT sensor) P0120 - P0223, P2135 (TP sensor) P0125 (Insufficient ECT for Closed Loop) P0171, P0172 (Fuel system) P0300 - P0304 (Misfire) P0335 (CKP sensor) P0340 (CMP sensor) P0455, P0456 (EVAP system) P0500 (VSS)

P2238 (open circuit between AF+ and AF-):

AF+ terminal voltage	0.5 to 4.5 V
AF- terminal voltage	0.5 to 4.5 V
Difference between AF+ and AF- terminal voltages	0.1 to 0.8 V
ECT	5°C (41°F) or more (varies with ECT at engine start)
Engine	Running
Fuel-cut	OFF
Time after fuel-cut OFF	5 seconds or more
A/F sensor heater	ON
Battery voltage	11 V or more
Ignition switch	ON
Time after ignition switch is OFF to ON	5 seconds or more

Others:

Battery voltage	11 V or more
Ignition switch	ON
Time after ignition switch is OFF to ON	5 seconds or more

TYPICAL MALFUNCTION THRESHOLDS

P2238 (Open circuit between AF+ and AF-):

A/F sensor admittance	Below 0.022 1/Ω

P2238 (Short circuit between AF+ and GND):

AF+ terminal voltage	0.5 V or less

P2238 (Short circuit between AF+ and AF-):

Difference between AF+ and AF- terminal voltages	0.1 V or less

P2239 (Short circuit between AF+ and +B):

AF+ terminal voltage	More than 4.5 V

P2252 (Short circuit between AF- and GND):

AF- terminal voltage	0.5 V or less

P2253 (Short circuit between AF- and +B):

AF- terminal voltage	More than 4.5 V

WIRING DIAGRAM

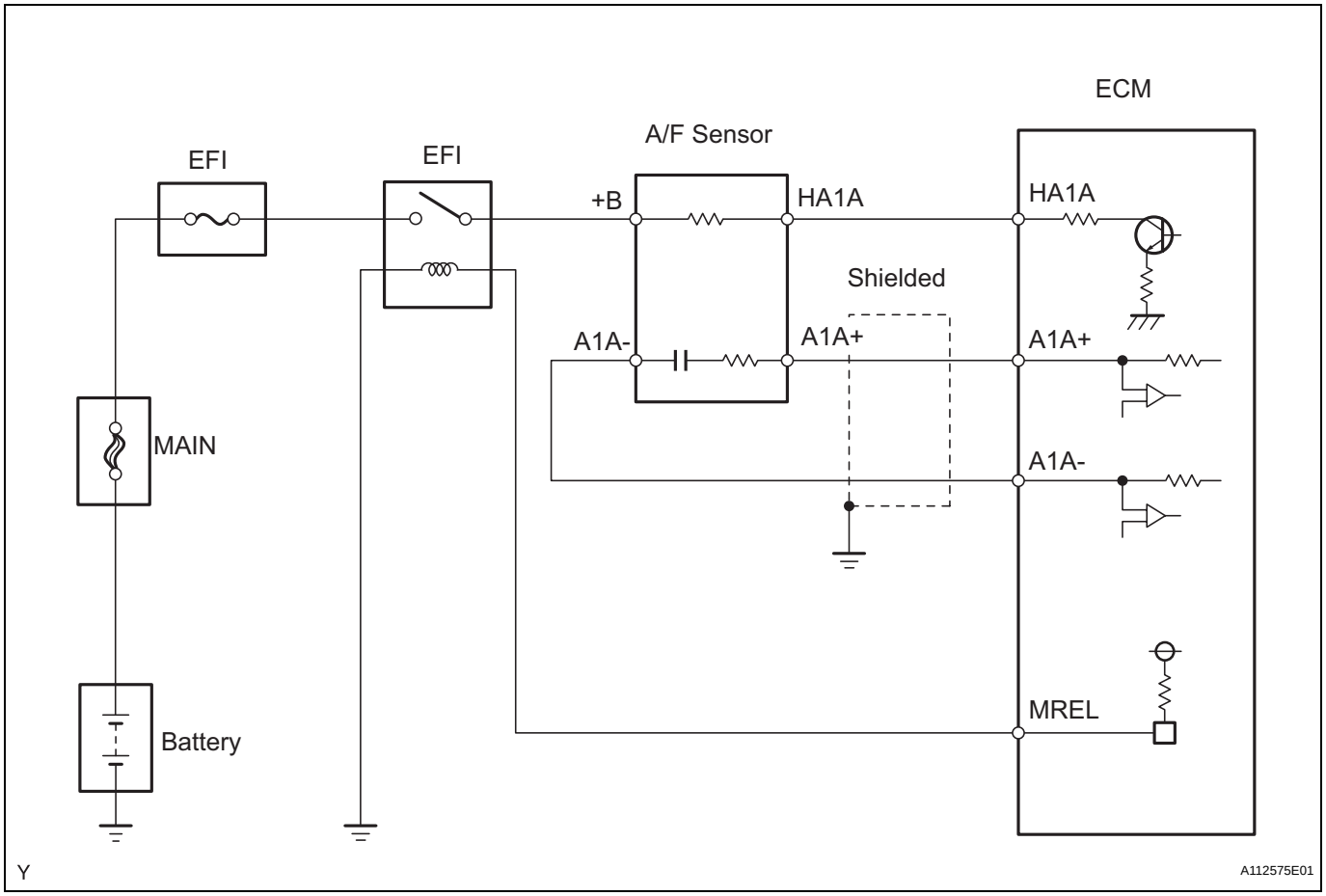

INSPECTION PROCEDURE

HINT:
Intelligent tester only:
Malfunctioning areas can be identified by performing the A/F CONTROL function provided in the ACTIVE TEST. The A/F CONTROL function can help to determine whether the Air-Fuel Ratio (A/F) sensor, Heated Oxygen (HO2) sensor and other potential trouble areas are malfunctioning.
The following instructions describe how to conduct the A/F CONTROL operation using the intelligent tester.
(a) Connect the intelligent tester to the DLC3.
(b) Start the engine and turn the tester ON.
(c) Warm up the engine at an engine speed of 2,500 rpm for approximately 90 seconds.
(d) On the tester, select the following menu items: DIAGNOSIS / ENHANCED OBD II / ACTIVE TEST / A/F CONTROL.
(e) Perform the A/F CONTROL operation with the engine idling (press the RIGHT or LEFT button to change the fuel injection volume).

(f) Monitor the output voltages of the A/F and HO2 sensors (AFS B1 S1 and O2S B1 S2) displayed on the tester.

HINT:

- The A/F CONTROL operation lowers the fuel injection volume by 12.5 % or increases the injection volume by 25 %.
- The sensors react in accordance with increases and decreases in the fuel injection volume.

Standard

Tester Display (Sensor)	Injection Volume	Status	Voltages
AFS B1 S1 (A/F)	+25 %	Rich	Less than 3.0
	-12.5 %	Lean	More than 3.35
O2S B1 S2 (HO2)	+25 %	Rich	More than 0.5
	-12.5 %	Lean	Less than 0.4

ES

NOTICE:

The A/F sensor has an output delay of a few seconds and the HO2 sensor has a maximum output delay of approximately 20 seconds.

Case	A/F Sensor (Sensor 1) Output Voltage		HO2 Sensor (Sensor 2) Output Voltage		Main Suspected Trouble Areas
1	Injection Volume +25 % -12.5 %		Injection Volume +25 % -12.5 %		-
	Output Voltage More than 3.35 V Less than 3.0 V		Output Voltage More than 0.5 V Less than 0.4 V		
2	Injection Volume +25 % -12.5 %		Injection Volume +25 % -12.5 %		• A/F sensor • A/F sensor heater • A/F sensor circuit
	Output Voltage Almost no reaction		Output Voltage More than 0.5 V Less than 0.4 V		
3	Injection Volume +25 % -12.5 %		Injection Volume +25 % -12.5 %		• HO2 sensor • HO2 sensor heater • HO2 sensor circuit
	Output Voltage More than 3.35 V Less than 3.0 V		Output Voltage Almost no reaction		
4	Injection volume +25 % -12.5 %		Injection Volume +25 % -12.5 %		• Injector • Fuel pressure • Gas leakage from exhaust system (Air-fuel ratio extremely lean or rich)
	Output Voltage Almost no reaction		Output Voltage Almost no reaction		

Following the A/F CONTROL procedure enables technicians to check and graph the output voltages of both the A/F and HO2 sensors.

To display the graph, select the following menu items on the tester: DIAGNOSIS / ENHANCED OBD II / ACTIVE TEST / A/F CONTROL / USER DATA / AFS B1 S1 and O2S B1 S2, and press the YES button and then the ENTER button followed by the F4 button.

HINT:
Read freeze frame data using an intelligent tester. Freeze frame data record the engine condition when malfunctions are detected. When troubleshooting, freeze frame data can help determine if the vehicle was moving or stationary, if the engine was warmed up or not, if the air-fuel ratio was lean or rich, and other data, from the time the malfunction occurred.

1	**INSPECT AIR FUEL RATIO SENSOR (HEATER RESISTANCE) (See page ES-77)**

NG → **REPLACE AIR FUEL RATIO SENSOR**

OK

2	**INSPECT INTEGRATION RELAY (EFI RELAY) (See page ES-78)**

NG → **REPLACE INTEGRATION RELAY (EFI RELAY)**

OK

3	**CHECK HARNESS AND CONNECTOR (A/F SENSOR - ECM) (See page ES-294)**

NG → **REPAIR OR REPLACE HARNESS OR CONNECTOR**

OK

4	**REPLACE AIR FUEL RATIO SENSOR**

NEXT

5	**CHECK WHETHER DTC OUTPUT RECURS**

(a) Connect the intelligent tester to the DLC3.
(b) Turn the ignition switch to ON and turn the tester ON.
(c) Clear DTCs (See page ES-34).
(d) Start the engine.
(e) Allow the engine to idle for 5 minutes or more.
(f) Select the following menu items: DIAGNOSIS / ENHANCED OBD II / DTC INFO / PENDING CODES.
(g) Read pending DTCs.

Result

Display (DTC Output)	Proceed To
No output	A
P2238, P2239, P2252 or P2253	B

B → **REPLACE ECM**

A

END

DTC	P2401	Evaporative Emission Leak Detection Pump Stuck OFF

DTC	P2402	Evaporative Emission Leak Detection Pump Stuck ON

DTC SUMMARY

DTCs	Monitoring Items	Malfunction Detection Conditions	Trouble Areas	Detection Timings	Detection Logic
P2401	Leak detection pump stuck OFF	P043E, P043F, P2401, P2402 and P2419 present when one of following conditions met during key-off EVAP monitor: • EVAP pressure just after reference pressure measurement greater than -1 kPa-g (-7.5 mmHg-g) • Reference pressure less than -4.85 kPa-g (-36.4 mmHg-g) • Reference pressure greater than -1.057 kPa-g (-7.93 mmHg-g) • Reference pressure not saturated • Reference pressure difference between first and second 0.7 kPa-g (5.25 mmHg-g) or more HINT: Typical example values	• Canister pump module (Reference orifice, leak detection pump, vent valve) • Connector/wire harness (Canister pump module - ECM) • EVAP system hose (pipe from air inlet port to canister pump module, canister filter, fuel tank vent hose) • ECM	While ignition switch OFF	2 trip
P2402	Leak detection pump stuck ON		• Canister pump module (Reference orifice, leak detection pump, vent valve) • Connector/wire harness (Canister pump module - ECM) • EVAP system hose (pipe from air inlet port to canister pump module, canister filter, fuel tank vent hose) • ECM	While ignition switch OFF	2 trip

HINT:
The leak detection pump is built into the canister pump module.

DESCRIPTION

The description can be found in the EVAP (Evaporative Emission) System (See page ES-319).

INSPECTION PROCEDURE

Refer to the EVAP System (See page ES-324).

MONITOR DESCRIPTION

5 hours* after the ignition switch is turned to OFF, the leak detection pump creates negative pressure (vacuum) in the EVAP system. The ECM monitors for leaks and actuator malfunctions based on the EVAP pressure.
HINT:
*: If the engine coolant temperature is not below 35°C (95°F) 5 hours after the ignition switch is turned to OFF, the monitor check starts 2 hours later. If it is still not below 35°C (95°F) 7 hours after the ignition switch is turned to OFF, the monitor check starts 2.5 hours later.

Sequence	Operations	Descriptions	Duration
-	ECM activation	Activated by soak timer, 5 hours (7 or 9.5 hours) after ignition switch turned to OFF.	-

Sequence	Operations	Descriptions	Duration
A	Atmospheric pressure measurement	Vent valve turned OFF (vent) and EVAP system pressure measured by ECM in order to register atmospheric pressure. If pressure in EVAP system not between 76 kPa-a and 110 kPa-a (570 mmHg-a and 825 mmHg-a), ECM cancels EVAP system monitor.	10 seconds
B	First reference pressure measurement	In order to determine reference pressure, leak detection pump creates negative pressure (vacuum) through reference orifice and then ECM checks if leak detection pump and vent valve operate normally.	60 seconds
C	EVAP system pressure measurement	Vent valve turned ON (closed) to shut EVAP system. Negative pressure (vacuum) created in EVAP system, and EVAP system pressure then measured. Write down measured value as will be used in leak check. If EVAP pressure does not stabilize within 15 minutes, ECM cancels EVAP system monitor.	15 minutes*
D	Purge VSV monitor	Purge VSV opened and then EVAP system pressure measured by ECM. Large increase indicates normality.	10 seconds
E	Second reference pressure measurement	After second reference pressure measurement, leak check performed by comparing first and second reference pressure. If stabilized system pressure higher than second reference pressure, ECM determines that EVAP system leaking.	60 seconds
F	Final check	Atmospheric pressure measured and then monitoring result recorded by ECM.	-

ES

* If only a small amount of fuel is in the fuel tank, it takes longer for the EVAP pressure to stabilize.

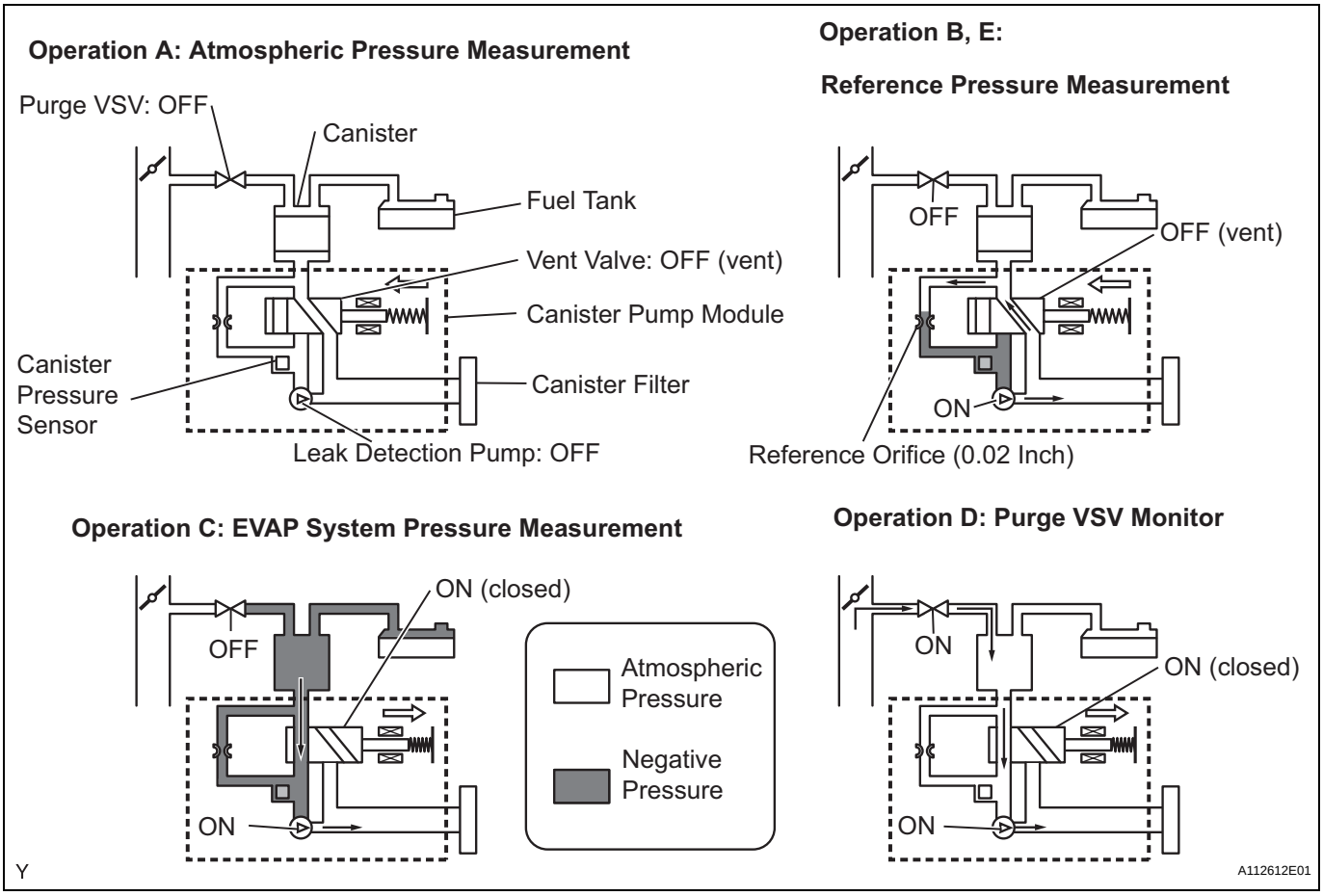

1. P2401: Leak detection pump stuck OFF
   In operation B, the leak detection pump creates negative pressure (a vacuum) through the reference orifice. The EVAP system pressure is then measured by the ECM, using the canister pressure sensor, to determine the reference pressure. If the pressure is higher than -1.057 kPa-g (-7.93 mmHg-g), or lower than -4.85 kPa-g (-36.4 mmHg-g), the ECM interprets this as the leak detection pump being stuck OFF (not operating). The ECM illuminates the MIL and sets the DTC (2 trip detection logic).

EVAP Pressure when Leak Detection Pump Stuck OFF:

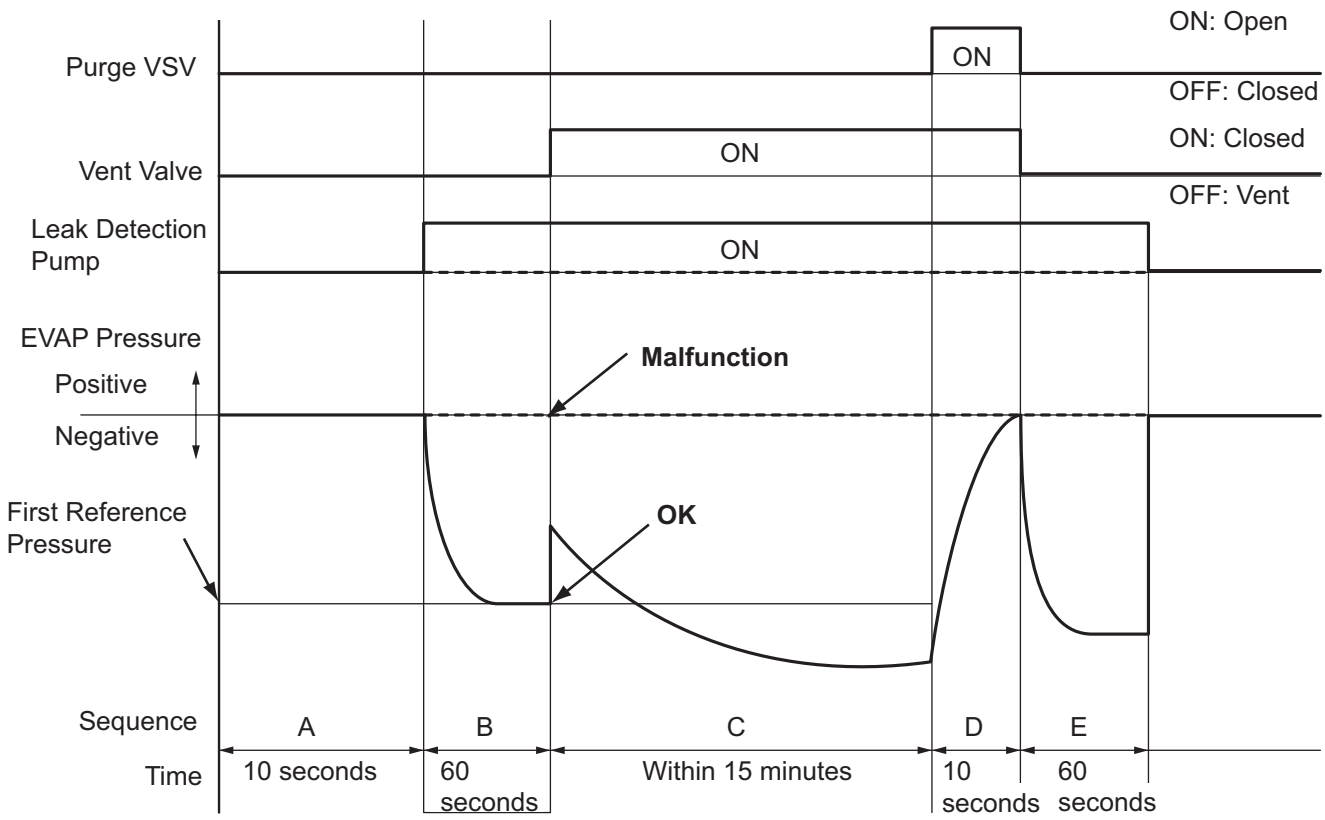

2. P2402: Leak detection pump stuck ON
In operation B, the leak detection pump creates negative pressure (a vacuum) through the reference orifice. The EVAP (Evaporative Emission) system pressure is then measured by the ECM, using the canister pressure sensor, to determine the reference pressure. If the pressure is higher than -1.057 kPa-g (-7.93 mmHg-g), or lower than -4.85 kPa-g (-36.4 mmHg-g), the ECM interprets this as the leak detection pump being stuck ON (remaining ON all the time). The ECM illuminates the MIL and sets the DTC (2 trip detection logic).

EVAP Pressure when Leak Detection Pump Stuck ON:

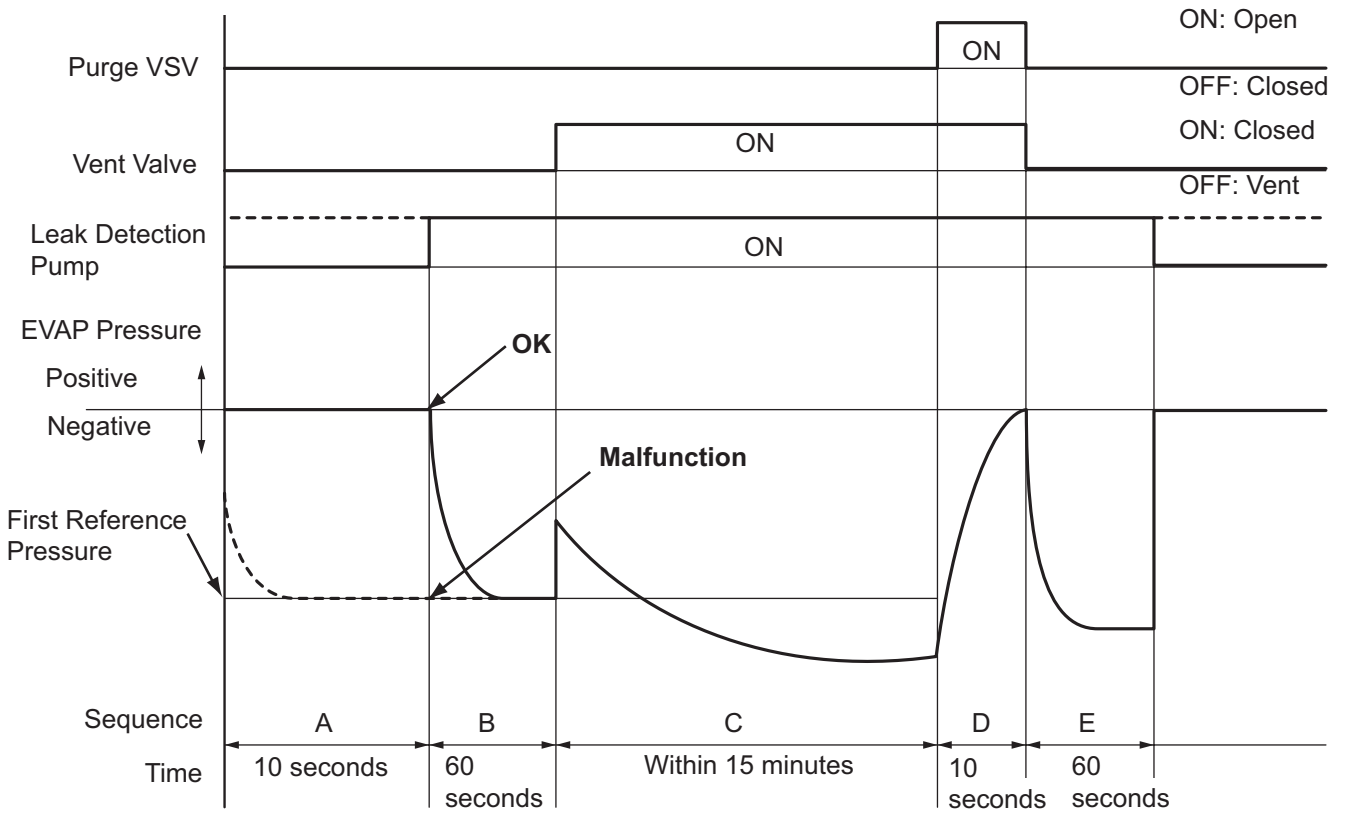

HINT:
The detection logic of DTCs P2401 and P2402 is the same because in both cases the reference pressure measured in operation B is compared to the atmospheric pressure registered in operation A. The ECM calculates the difference between these pressures by deducting [the reference pressure] from [the stored atmospheric pressure], and uses this to monitor the EVAP system pressure change.

MONITOR STRATEGY

Required Sensors/Components	Purge VSV and canister pump module
Frequency of Operation	Once per driving cycle
Duration	Within 2 minutes (varies with amount of fuel in tank)
MIL Operation	2 driving cycles
Sequence of Operation	None

TYPICAL ENABLING CONDITIONS

Monitor runs whenever following DTCs not present	None
EVAP key-off monitor runs when all of following conditions met	-
Atmospheric pressure	76 to 110 kPa-a (570 to 825 mmHg-a)
Battery voltage	10.5 V or more

Vehicle speed	Below 2.5 mph (4 km/h)
Ignition switch	OFF
Time after key off	5 or 7 or 9.5 hours
Canister pressure sensor malfunction (P0450, P0451, P0452 and P0453)	Not detected
Purge VSV	Not operated by scan tool
Vent valve	Not operated by scan tool
Leak detection pump	Not operated by scan tool
Both of following conditions met before key off	Conditions 1 and 2
1. Duration that vehicle driven	5 minutes or more
2. EVAP purge operation	Performed
ECT	4.4° to 35°C (40° to 95°F)
IAT	4.4°to 35°C (40° to 95°F)

1. Key-off monitor sequence 1 to 8

1. Atmospheric pressure measurement

Next sequence run if following condition set	-
Atmospheric pressure change	Less than 0.3 kPa-g (2.25 mmHg-g) in 1 second

2. First reference pressure measurement

Next sequence run if all of following conditions set	Condition 1, 2 and 3
1. EVAP pressure just after reference pressure measurement start	-1 kPa-g (-7.5 mmHg-g) or less
2. Reference pressure	-4.85 to -1.057 kPa-g (-36.4 to -7.93 mmHg-g)
3. Reference pressure	Saturated within 60 seconds

3. Vent valve stuck closed check

Next sequence run if following condition set	-
EVAP pressure change after vent valve ON (closed)	0.3 kPa-g (2.25 mmHg-g) or more

4. Vacuum introduction

Next sequence run if following condition set	-
EVAP pressure	Saturated within 15 minutes

5. Purge VSV stuck closed check

Next sequence run if following condition set	-
EVAP pressure change after purge VSV ON (open)	0.3 kPa-g (2.25 mmHg-g) or more

6. Second reference pressure measurement

Next sequence run if all of following conditions set	Condition 1, 2, 3 and 4
1. EVAP pressure just after reference pressure	-1 kPa-g (-7.5 mmHg-g) or less
2. Reference pressure	-4.85 to -1.057 kPa-g (-36.4 to -7.93 mmHg-g)
3. Reference pressure	Saturated within 60 seconds
4. Reference pressure difference between first and second	Less than 0.7 kPa-g (5.25 mmHg-g)

7. Leak check

Next sequence run if following condition set	-
EVAP pressure when vacuum introduction complete	Second reference pressure or less

8. Atmospheric pressure measurement

EVAP monitor complete if following condition set	-
Atmospheric pressure difference between sequence 1 and 8	Within 0.3 kPa-g (2.25 mmHg-g)

TYPICAL MALFUNCTION THRESHOLDS

"Saturated" indicates that the EVAP pressure change is less than 0.286 kPa-g (2.14 mmHg-g) in 60 seconds.

One of following conditions met	-
EVAP pressure just after reference pressure measurement start	More than -1 kPa-g (-7.5 mmHg-g)
Reference pressure	Less than -4.85 kPa-g (-36.4 mmHg-g)
Reference pressure	-1.057 kPa-g (-7.93 mmHg-g) or more
Reference pressure	Not saturated within 60 seconds
Reference pressure difference between first and second	0.7 kPa-g (5.25 mmHg-g) or more

MONITOR RESULT

Refer to CHECKING MONITOR STATUS (See page ES-17).

DTC	P2419	Evaporative Emission System Switching Valve Control Circuit Low

DTC	P2420	Evaporative Emission System Switching Valve Control Circuit High

DTC SUMMARY

DTCs	Monitoring Items	Malfunction Detection Conditions	Trouble Areas	Detection Timings	Detection Logic
P2419	Vent valve stuck closed	P043E, P043F, P2401, P2402 and P2419 present when one of following conditions met during key-off EVAP monitor: • EVAP pressure just after reference pressure measurement greater than -1 kPa-g (-7.5 mmHg-g) • Reference pressure less than -4.85 kPa-g (-36.4 mmHg-g) • Reference pressure greater than -1.057 kPa-g (-7.93 mmHg-g) • Reference pressure not saturated • Reference pressure difference between first and second 0.7 kPa-g (5.25 mmHg-g) or more HINT: Typical example values	• Canister pump module (Reference orifice, leak detection pump, vent valve) • Connector/wire harness (Canister pump module - ECM) • EVAP system hose (pipe from air inlet port to canister pump module, canister filter, fuel tank vent hose) • ECM	While ignition switch OFF	2 trip
P2420	Vent valve stuck open (vent)	Following condition met during key-off EVAP monitor: • EVAP pressure change when vent valve closed (ON) less than 0.3 kPa-g (2.25 mmHg-g)	• Canister pump module (Reference orifice, leak detection pump, vent valve) • Connector/wire harness (Canister pump module - ECM) • ECM	While ignition switch OFF	2 trip

HINT:
The vent valve is built into the canister pump module.

DESCRIPTION

The description can be found in the EVAP (Evaporative Emission) System (See page ES-319).

INSPECTION PROCEDURE

Refer to the EVAP System (See page ES-324).

MONITOR DESCRIPTION

5 hours* after the ignition switch is turned to OFF, the leak detection pump creates negative pressure (vacuum) in the EVAP system. The ECM monitors for leaks and actuator malfunctions based on the EVAP pressure.
HINT:
*: If the engine coolant temperature is not below 35°C (95°F) 5 hours after the ignition switch is turned to OFF, the monitor check starts 2 hours later. If it is still not below 35°C (95°F) 7 hours after the ignition switch is turned to OFF, the monitor check starts 2.5 hours later.

Sequence	Operations	Descriptions	Duration
-	ECM activation	Activated by soak timer, 5 hours (7 or 9.5 hours) after ignition switch turned to OFF.	-

Sequence	Operations	Descriptions	Duration
A	Atmospheric pressure measurement	Vent valve turned OFF (vent) and EVAP system pressure measured by ECM in order to register atmospheric pressure. If pressure in EVAP system not between 76 kPa-a and 110 kPa-a (570 mmHg-a and 825 mmHg-a), ECM cancels EVAP system monitor.	10 seconds
B	First reference pressure measurement	In order to determine reference pressure, leak detection pump creates negative pressure (vacuum) through reference orifice and then ECM checks if leak detection pump and vent valve operate normally.	60 seconds
C	EVAP system pressure measurement	Vent valve turned ON (closed) to shut EVAP system. Negative pressure (vacuum) created in EVAP system, and EVAP system pressure then measured. Write down measured value as will be used in leak check. If EVAP pressure does not stabilize within 15 minutes, ECM cancels EVAP system monitor.	15 minutes*
D	Purge VSV monitor	Purge VSV opened and then EVAP system pressure measured by ECM. Large increase indicates normality.	10 seconds
E	Second reference pressure measurement	After second reference pressure measurement, leak check performed by comparing first and second reference pressure. If stabilized system pressure higher than second reference pressure, ECM determines that EVAP system leaking.	60 seconds
F	Final check	Atmospheric pressure measured and then monitoring result recorded by ECM.	-

ES

* If only a small amount of fuel is in the fuel tank, it takes longer for the EVAP pressure to stabilize.

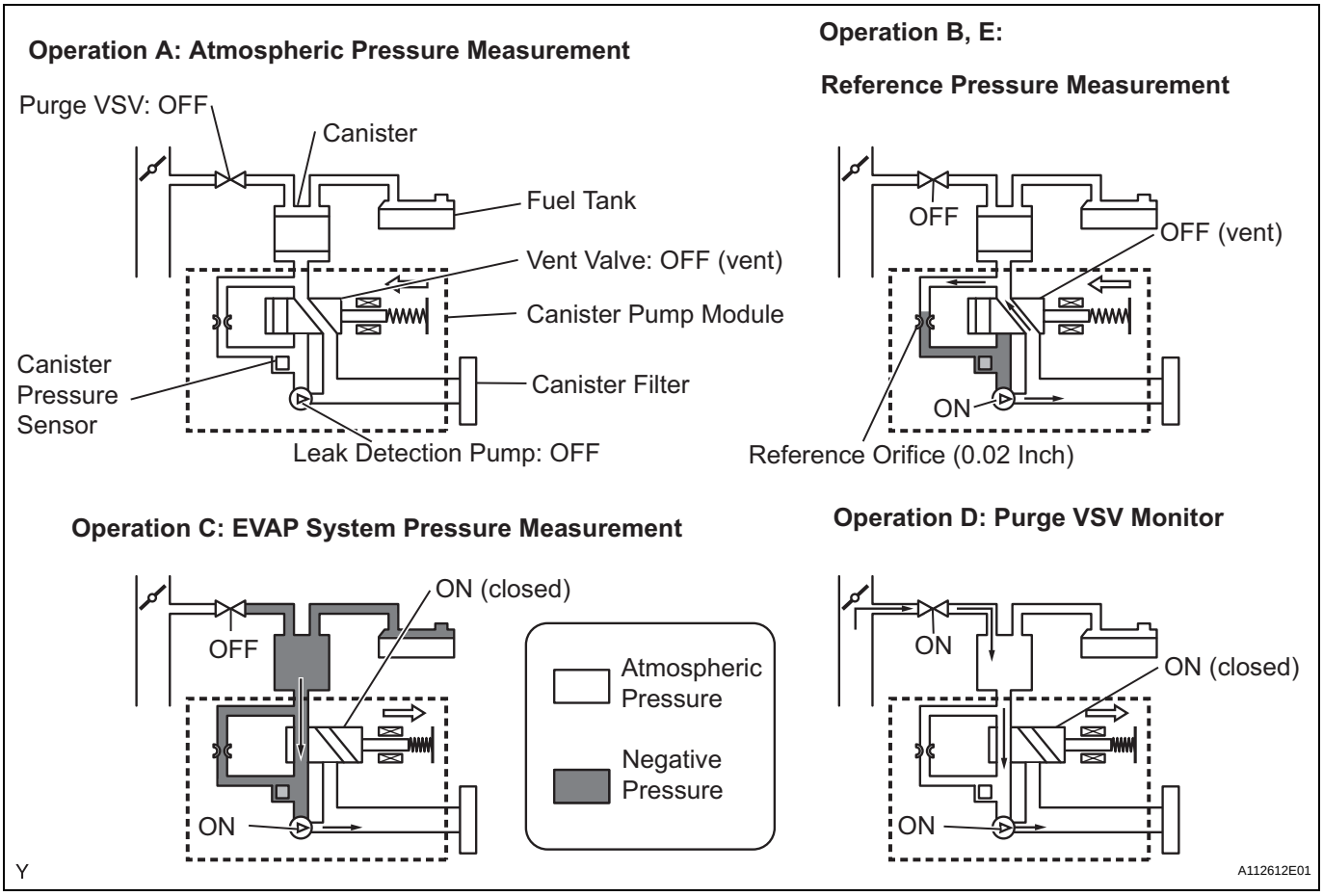

1. P2419: Vent valve stuck closed
   In operation B, the leak detection pump creates negative pressure (a vacuum) through the reference orifice. The EVAP system pressure is then measured by the ECM, using the canister pressure sensor, to determine the reference pressure. If the pressure exceeds -1.057 kPa-g (-7.93 mmHg-g) 4 seconds after the leak detection pump is turned ON, the ECM interprets this as the vent valve being stuck closed.
   The ECM illuminates the MIL and sets the DTC (2 trip detection logic).

EVAP Pressure when Vent Valve Stuck ON:

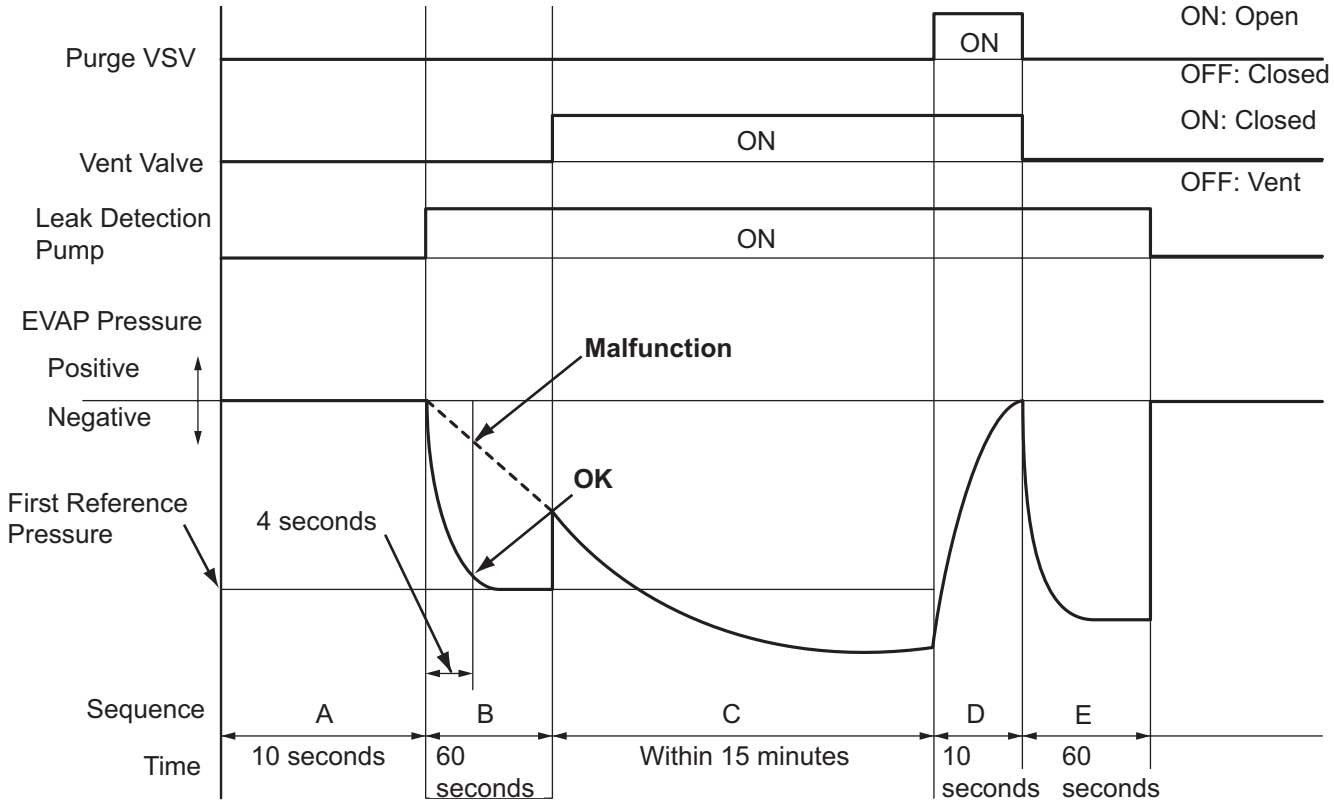

ES

2. P2420: Vent valve stuck open (vent)
In operation C, the vent valve turns ON (closes) and the EVAP system pressure is then measured by the ECM, using the canister pressure sensor, to conduct an EVAP leak check. If the pressure does not increase when the vent valve is open, the ECM interprets this as the vent valve being stuck open. The ECM illuminates the MIL and sets the DTC.

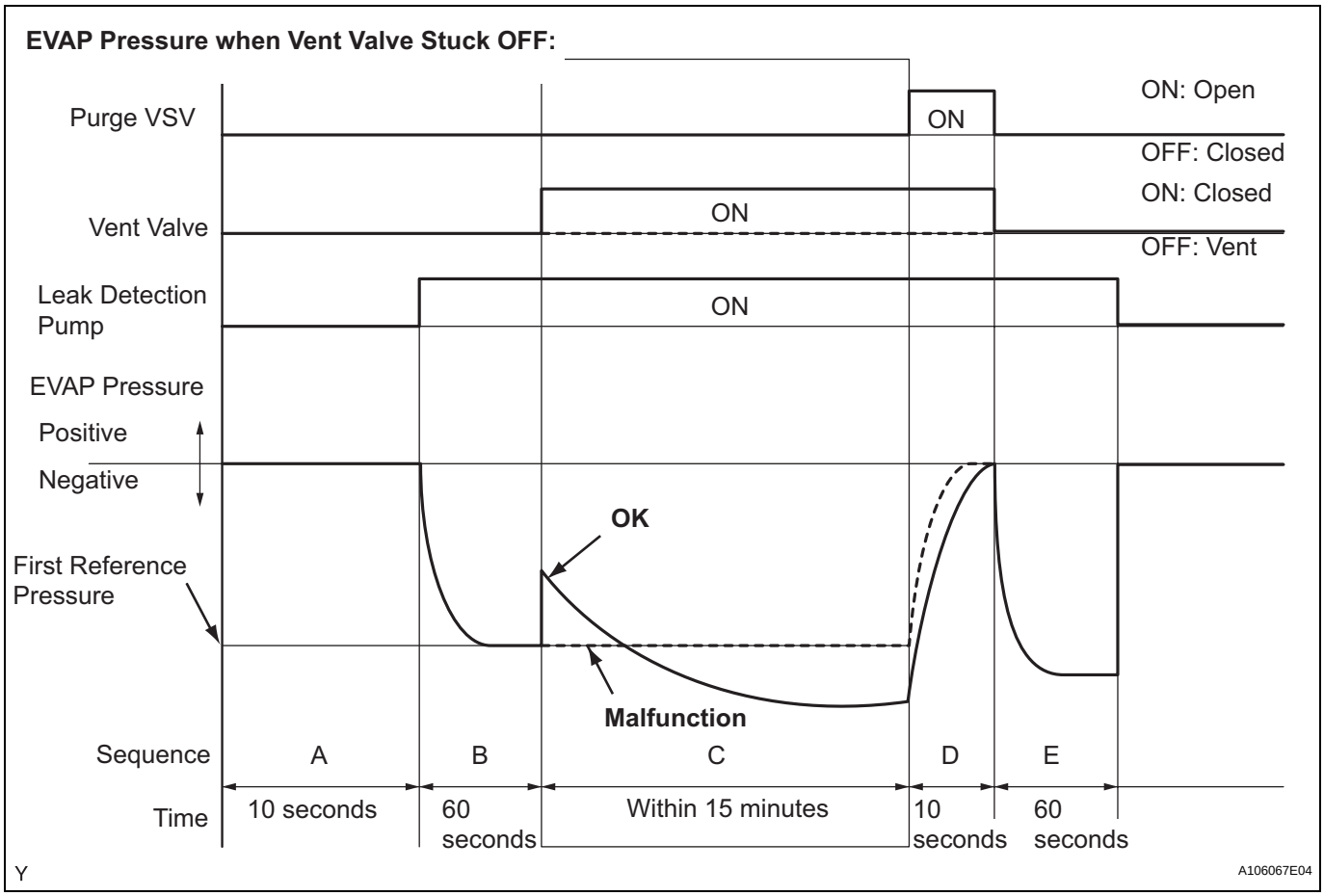

MONITOR STRATEGY

Required Sensors/Components	Purge VSV and canister pump module
Frequency of Operation	Once per driving cycle
Duration	Within 15 minutes (varies with amount of fuel in tank)
MIL Operation	2 driving cycles
Sequence of Operation	None

TYPICAL ENABLING CONDITIONS

Monitor runs whenever following DTCs not present	None
EVAP key-off monitor runs when all of following conditions met	-
Atmospheric pressure	76 to 110 kPa-a (570 to 825 mmHg-a)
Battery voltage	10.5 V or more
Vehicle speed	Below 2.5 mph (4 km/h)
Ignition switch	OFF
Time after key off	5 or 7 or 9.5 hours
Canister pressure sensor malfunction (P0450, P0451, P0452 and P0453)	Not detected
Purge VSV	Not operated by scan tool
Vent valve	Not operated by scan tool

Leak detection pump	Not operated by scan tool
Both of following conditions met before key off	Conditions 1 and 2
1. Duration that vehicle driven	5 minutes or more
2. EVAP purge operation	Performed
ECT	4.4° to 35°C (40° to 95°F)
IAT	4.4°to 35°C (40° to 95°F)

1. Key-off monitor sequence 1 to 8

1. Atmospheric pressure measurement

Next sequence run if following condition set	-
Atmospheric pressure change	Less than 0.3 kPa-g (2.25 mmHg-g) in 1 second

2. First reference pressure measurement

Next sequence run if all of following conditions set	Condition 1, 2 and 3
1. EVAP pressure just after reference pressure measurement start	-1 kPa-g (-7.5 mmHg-g) or less
2. Reference pressure	-4.85 to -1.057 kPa-g (-36.4 to -7.93 mmHg-g)
3. Reference pressure	Saturated within 60 seconds

3. Vent valve stuck closed check

Next sequence run if following condition set	-
EVAP pressure change after vent valve ON (closed)	0.3 kPa-g (2.25 mmHg-g) or more

4. Vacuum introduction

Next sequence run if following condition set	-
EVAP pressure	Saturated within 15 minutes

5. Purge VSV stuck closed check

Next sequence run if following condition set	-
EVAP pressure change after purge VSV ON (open)	0.3 kPa-g (2.25 mmHg-g) or more

6. Second reference pressure measurement

Next sequence run if all of following conditions set	Condition 1, 2, 3 and 4
1. EVAP pressure just after reference pressure	-1 kPa-g (-7.5 mmHg-g) or less
2. Reference pressure	-4.85 to -1.057 kPa-g (-36.4 to -7.93 mmHg-g)
3. Reference pressure	Saturated within 60 seconds
4. Reference pressure difference between first and second	Less than 0.7 kPa-g (5.25 mmHg-g)

7. Leak check

Next sequence run if following condition set	-
EVAP pressure when vacuum introduction complete	Second reference pressure or less

8. Atmospheric pressure measurement

EVAP monitor complete if following condition set	-
Atmospheric pressure difference between sequence 1 and 8	Within 0.3 kPa-g (2.25 mmHg-g)

TYPICAL MALFUNCTION THRESHOLDS

"Saturated" indicates that the EVAP pressure change is less than 0.286 kPa-g (2.14 mmHg-g) in 60 seconds.

P2419: Vent valve stuck closed

One of following conditions set	-
EVAP pressure just after reference pressure measurement start	More than -1 kPa-g (-7.5 mmHg-g)
Reference pressure	Less than -4.85 kPa-g (-36.4 mmHg-g)
Reference pressure	-1.057 kPa-g (-7.93 mmHg-g) or more
Reference pressure	Not saturated within 60 seconds

Reference pressure difference between first and second	0.7 kPa-g (5.25 mmHg-g) or more

P2420: Vent valve stuck open (vent)

EVAP pressure change after EVAP canister vent valve ON	Less than 0.3 kPa-g (2.25 mmHg-g)

MONITOR RESULT

Refer to CHECKING MONITOR STATUS (See page ES-17).

DTC	P2610	ECM / PCM Internal Engine Off Timer Performance

DTC SUMMARY

DTC	Monitoring Items	Malfunction Detection Conditions	Trouble Areas	Detection Timings	Detection Logic
P2610	Soak timer (built into ECM)	ECM internal malfunction	ECM	Engine running	2 trip

DESCRIPTION

To ensure the accuracy of the EVAP (Evaporative Emission) monitor values, the soak timer, which is built into the ECM, measures 5 hours (+-15 minutes) from when the ignition switch is turned to OFF, before the monitor is run. This allows the fuel to cool down, which stabilizes the EVAP pressure. When 5 hours have elapsed, the ECM turns on.

ES

Soak Timer Circuit:

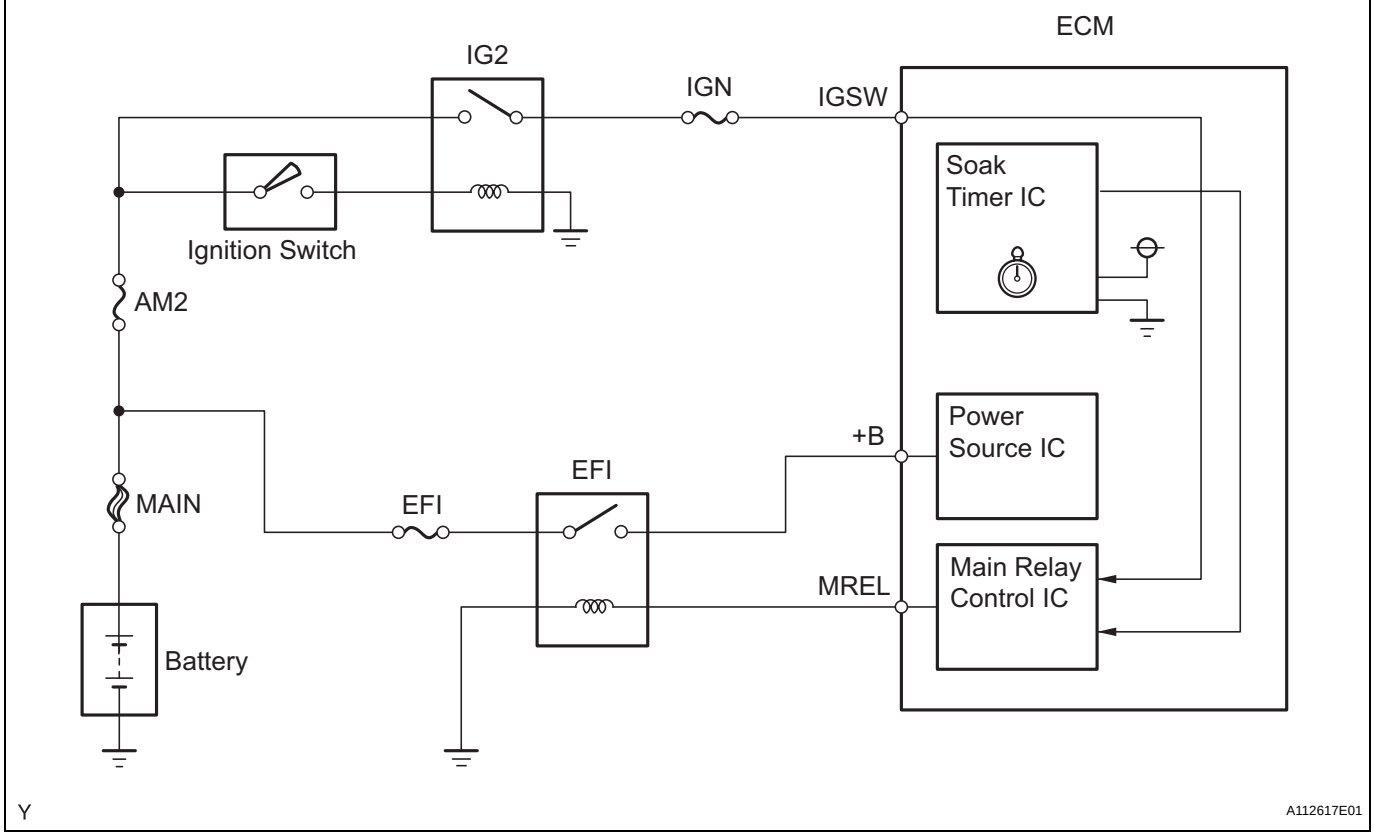

MONITOR DESCRIPTION

5 hours after the ignition switch is turned to OFF, the soak timer activates the ECM to begin the EVAP system monitor. While the engine is running, the ECM monitors the synchronization of the soak timer and the CPU clock. If these two are not synchronized, the ECM interprets this as a malfunction, illuminates the MIL and sets the DTC (2 trip detection logic).

MONITOR STRATEGY

Required Sensors/Components	ECM
Frequency of Operation	Once per driving cycle

Duration	10 minutes
MIL Operation	2 driving cycles
Sequence of Operation	None

TYPICAL ENABLING CONDITIONS

Monitor runs whenever following DTC not present	None
Ignition switch	ON
Engine	Running
Battery voltage	8 V or more
Starter	OFF

TYPICAL MALFUNCTION THRESHOLDS

Soak timer measurement when ECM CPU clock counts 10 minutes	Less than 7 minutes, or more than 13 minutes

INSPECTION PROCEDURE

HINT:

- DTC P2610 is set if an internal ECM problem is detected. Diagnostic procedures are not required. ECM replacement is necessary.
- Read freeze frame data using an intelligent tester. Freeze frame data record the engine condition when malfunctions are detected. When troubleshooting, freeze frame data can help determine if the vehicle was moving or stationary, if the engine was warmed up or not, if the air-fuel ratio was lean or rich, and other data, from the time the malfunction occurred.

1	**REPLACE ECM**

(a) Replace the ECM (See page ES-431).

NEXT

2	**CHECK WHETHER DTC OUTPUT RECURS**

(a) Connect an intelligent tester to the DLC3.
(b) Turn the ignition switch to ON.
(c) Turn the tester ON.
(d) Clear DTCs (See page ES-34).
(e) Start the engine and wait for 10 minutes or more.
(f) On the tester, select the following menu items: DIAGNOSIS / ENHANCED OBD II / DTC INFO / PENDING CODES.
(g) If no pending DTC is displayed, the repair has been successfully completed.

NEXT

END

DTC	P2A00	A/F Sensor Circuit Slow Response (Bank 1 Sensor 1)

HINT:
Sensor 1 refers to the sensor mounted in front of the Three-Way Catalytic Converter (TWC) and located near the engine assembly.

DESCRIPTION

Refer to DTC P2195 (See page ES-276).

DTC No.	DTC Detection Conditions	Trouble Areas
P2A00	Calculated value of air-fuel ratio (A/F) sensor response rate deterioration level less than threshold (2 trip detection logic)	• Open or short in A/F sensor circuit • A/F sensor • ECM

ES

MONITOR DESCRIPTION

After the engine is warmed up, the ECM performs air-fuel ratio feedback control to maintain the air-fuel ratio at the stoichiometric level. In addition, active A/F control is performed for approximately 10 seconds after the preconditions are met in order to measure the A/F sensor response rate. During active A/F control, the ECM forcibly increases and decreases the injection volume a certain amount, based on the stoichiometric air-fuel ratio learned during normal air-fuel ratio control, and measures the A/F sensor response rate. The ECM receives a signal from the A/F sensor while performing active A/F control and uses it to calculate the A/F sensor response rate deterioration level.
If the A/F sensor response rate deterioration level is less than the threshold, the ECM interprets this as a malfunction and sets the DTC.

Air-Fuel Ratio Sensor Output:

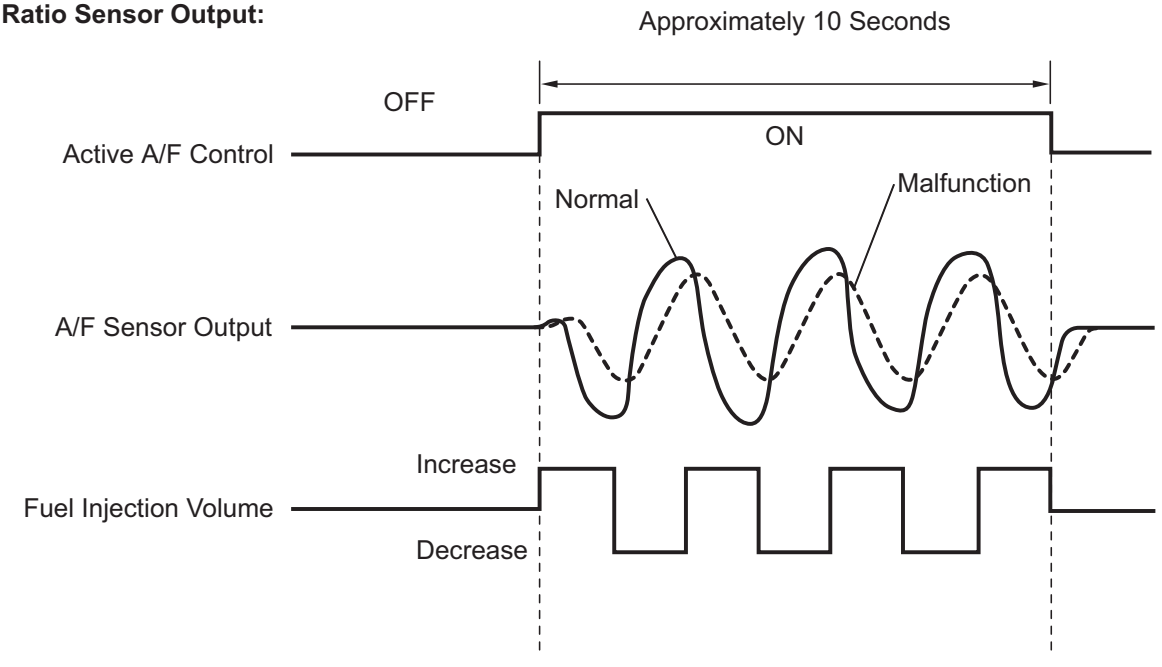

CONFIRMATION DRIVING PATTERN

HINT:
Performing this confirmation pattern will activate the A/F sensor response monitor.

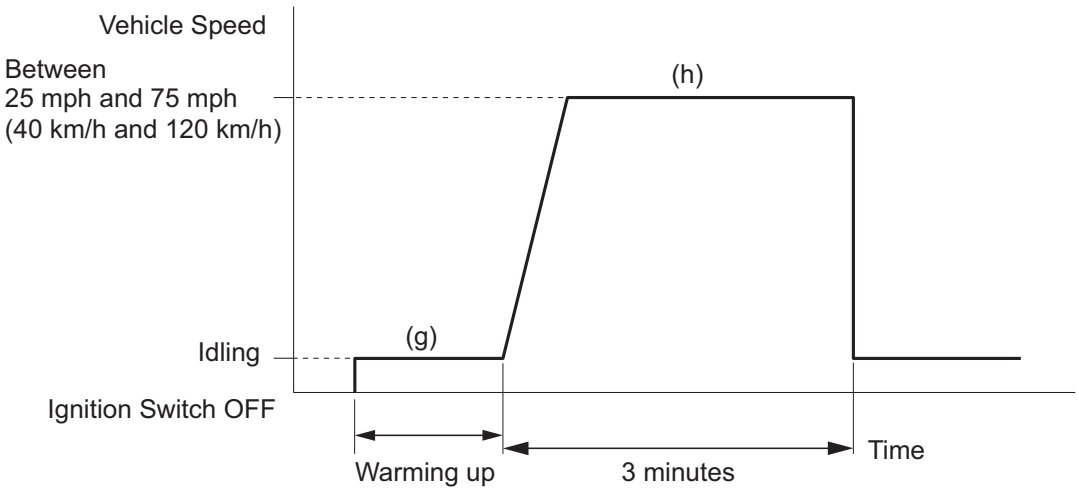

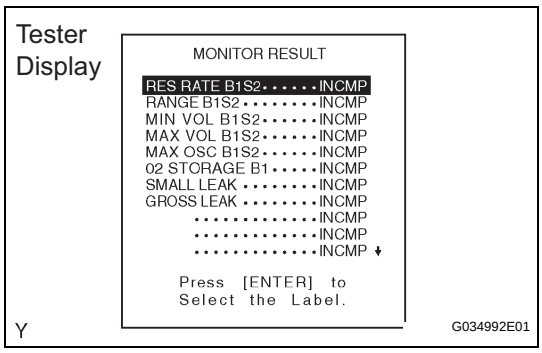

(a) Connect an intelligent tester to the DLC3.
(b) Turn the ignition switch to ON.
(c) Turn the tester ON.
(d) Clear DTCs (where set) (See page ES-34).
(e) Select the following menu items: DIAGNOSIS / ENHANCED OBD II / MONITOR INFO / MONITOR RESULT.
(f) Check that RES RATE B1S1 is INCOMP.
(g) Start the engine and warm it up.
(h) Drive the vehicle at a constant speed of between 25 mph and 75 mph (40 km/h and 120 km/h) for 3 minutes.
(i) Check the monitor result values on the intelligent tester by selecting the following menu items: DIAGNOSIS / ENHANCED OBD II / MONITOR INFO / MONITOR RESULT / RES RATE B1S1.
(j) If the values indicated on the tester do not change, perform READINESS MONITOR DRIVE PATTERN for the A/F sensor and the heated oxygen sensor (See page ES-19).
HINT:
Completion of all A/F sensor monitors is required to change the value in RES RATE B1S1.
(k) Note the value of the RES RATE B1S1.
(l) Select the following menu items: DIAGNOSIS / ENHANCED OBD II / DTC INFO / PENDING CODES.
(m) Check if any DTCs (any pending DTCs) are set.

MONITOR STRATEGY

Related DTCs	P2A00: Air-Fuel Ratio (A/F) sensor slow response
Required Sensors/Components (Main)	A/F sensor
Required Sensors/Components (Related)	Vehicle speed sensor, Crankshaft position sensor
Frequency of Operation	Once per driving cycle
Duration	10 to 15 seconds
MIL Operation	2 driving cycles
Sequence of Operation	None

TYPICAL ENABLING CONDITIONS

Monitor runs whenever following DTCs not present	P0031, 32 (A/F Sensor heater - Sensor 1) P0100 - P0103 (MAF meter) P0110 - P0113 (IAT sensor) P0115 - P0118 (ECT sensor) P0120 - P0223, P2135 (TP sensor) P0125 (Insufficient ECT for Closed Loop) P0171, P0172 (Fuel system) P0300 - P0304 (Misfire) P0335 (CKP sensor) P0340 (CMP sensor) P0455, P0456 (EVAP system) P0500 (VSS) P2196 (A/F Sensor - rationality)
Active A/F control	Performing
Active A/F control performed when following conditions met	-
Engine coolant temperature	75°C (167°F) or more
Battery voltage	11 V or more
Idle	OFF
Engine RPM	Less than 4,000 rpm
A/F sensor status	Activated
Fuel-cut	OFF
Engine load	10 to 70 %
Shift position	2 or more
Catalyst monitor	Not yet
Intake air amount	4 to 17 g/sec

TYPICAL MALFUNCTION THRESHOLDS

Response rate deterioration level	Less than 0.15 V

MONITOR RESULT

Refer to CHECKING MONITOR STATUS (See page ES-17).

WIRING DIAGRAM

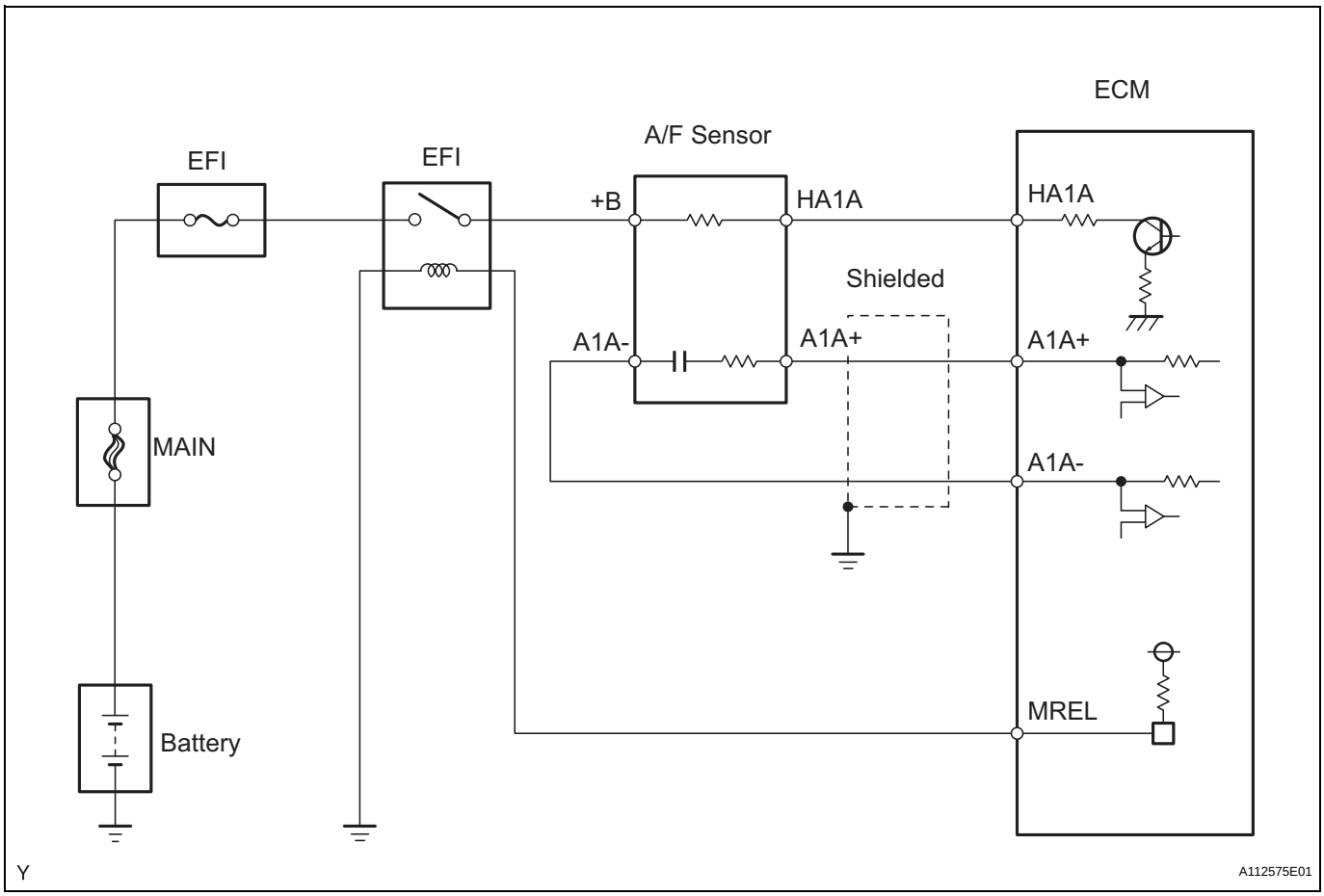

INSPECTION PROCEDURE

HINT:
Intelligent tester only:
Malfunctioning areas can be identified by performing the A/F CONTROL function provided in the ACTIVE TEST. The A/F CONTROL function can help to determine whether the Air-Fuel Ratio (A/F) sensor, Heated Oxygen (HO2) sensor and other potential trouble areas are malfunctioning.
The following instructions describe how to conduct the A/F CONTROL operation using an intelligent tester.
(a) Connect an intelligent tester to the DLC3.
(b) Start the engine and turn the tester ON.
(c) Warm up the engine at an engine speed of 2,500 rpm for approximately 90 seconds.
(d) On the tester, select the following menu items: DIAGNOSIS / ENHANCED OBD II / ACTIVE TEST / A/F CONTROL.
(e) Perform the A/F CONTROL operation with the engine idling (press the RIGHT or LEFT button to change the fuel injection volume).
(f) Monitor the voltage outputs of the A/F and HO2 sensors (AFS B1 S1 and O2S B1 S2) displayed on the tester.
HINT:

- The A/F CONTROL operation lowers the fuel injection volume by 12.5 % or increases the injection volume by 25 %.

- The sensors react in accordance with increases and decreases in the fuel injection volume.

Standard

Tester Display (Sensor)	Injection Volumes	Status	Voltages
AFS B1 S1 (A/F)	+25 %	Rich	Less than 3.0
	-12.5 %	Lean	More than 3.35
O2S B1 S2 (HO2)	+25 %	Rich	More than 0.5
	-12.5 %	Lean	Less than 0.4

NOTICE:
The A/F sensor has an output delay of a few seconds and the HO2 sensor has a maximum output delay of approximately 20 seconds.

Case	A/F Sensor (Sensor 1) Output Voltage		HO2 Sensor (Sensor 2) Output Voltage		Main Suspected Trouble Areas
1	Injection Volume +25 % -12.5 %		Injection Volume +25 % -12.5 %		-
	Output Voltage More than 3.35 V Less than 3.0 V		Output Voltage More than 0.5 V Less than 0.4 V		
2	Injection Volume +25 % -12.5 %		Injection Volume +25 % -12.5 %		• A/F sensor • A/F sensor heater • A/F sensor circuit
	Output Voltage Almost no reaction		Output Voltage More than 0.5 V Less than 0.4 V		
3	Injection Volume +25 % -12.5 %		Injection Volume +25 % -12.5 %		• HO2 sensor • HO2 sensor heater • HO2 sensor circuit
	Output Voltage More than 3.35 V Less than 3.0 V		Output Voltage Almost no reaction		
4	Injection volume +25 % -12.5 %		Injection Volume +25 % -12.5 %		• Injector • Fuel pressure • Gas leakage from exhaust system (Air-fuel ratio extremely lean or rich)
	Output Voltage Almost no reaction	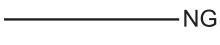	Output voltage Almost no reaction	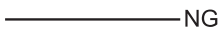	

Following the A/F CONTROL procedure enables technicians to check and graph the voltage outputs of both the A/F and HO2 sensors.
To display the graph, select the following menu items on the tester: DIAGNOSIS / ENHANCED OBD II / ACTIVE TEST / A/F CONTROL / USER DATA / AFS B1 S1 and O2S B1 S2, and press the YES button and then the ENTER button followed by the F4 button.
HINT:

- DTC P2A00 may be set, when the air-fuel ratio is stuck rich or lean.
- A low A/F sensor voltage could be caused by a rich air-fuel mixture. Check for conditions that would cause the engine to run rich.
- A high A/F sensor voltage could be caused by a lean air-fuel mixture. Check for conditions that would cause the engine to run lean.

- Read freeze frame data using an intelligent tester. Freeze frame data record the engine condition when malfunctions are detected. When troubleshooting, freeze frame data can help determine if the vehicle was moving or stationary, if the engine was warmed up or not, if the air-fuel ratio was lean or rich, and other data, from the time the malfunction occurred.

1	CHECK ANY OTHER DTCS OUTPUT (IN ADDITION TO DTC P2A00)

(a) Connect an intelligent tester to the DLC3.
(b) Turn the ignition switch to ON.
(c) Turn the tester ON.
(d) Select the following menu items: DIAGNOSIS / ENHANCED OBD II / DTC INFO / CURRENT CODES.
(e) Read DTCs.

Result

Display (DTC Output)	Proceed To
P2A00	A
P2A00 and other DTCs	B

If any DTCs relating to the A/F sensor (DTCs for the A/F sensor heater or A/F sensor admittance) are output, troubleshoot those DTCs first.

B → GO TO DTC CHART

A

2	INSPECT AIR FUEL RATIO SENSOR (HEATER RESISTANCE) (See page ES-77)

NG → REPLACE AIR FUEL RATIO SENSOR

OK

3	CHECK HARNESS AND CONNECTOR (ECM - AIR FUEL RATIO SENSOR) (See page ES-294)

NG → REPAIR OR REPLACE HARNESS OR CONNECTOR

OK

4	PERFORM CONFIRMATION DRIVING PATTERN

NEXT

5	CHECK WHETHER DTC OUTPUT RECURS (DTC P2A00)

(a) Connect the intelligent tester to the DLC3.
(b) Turn the ignition switch to ON and turn the tester ON.
(c) Select the following menu items: DIAGNOSIS / ENHANCED OBD II / DTC INFO / PENDING CODES.

(d) Read pending DTCs.

Result

Display (DTC Output)	Proceed To
P2A00	A
No output	B

B → CHECK FOR INTERMITTENT PROBLEMS

A

6 REPLACE AIR FUEL RATIO SENSOR

NEXT

7 PERFORM CONFIRMATION DRIVING PATTERN

NEXT

8 CHECK WHETHER DTC OUTPUT RECURS (DTC P2A00)

(a) Connect the intelligent tester to the DLC3.
(b) Turn the ignition switch to ON and turn the tester ON.
(c) Select the following menu items: DIAGNOSIS / ENHANCED OBD II / DTC INFO / PENDING CODES.
(d) Read pending DTCs.

Result

Display (DTC Output)	Proceed To
No output	A
P2A00	B

B → REPLACE ECM

A

END

ES

EVAP System

RELATED DTCS

DTCs	Monitoring Items	See page
P043E	Reference orifice clogged (built into canister pump module)	ES-187
P043F	Reference orifice high-flow (built into canister pump module)	
P0441	• Purge VSV (Vacuum Switching Valve) stuck closed • Purge VSV stuck open • Purge flow	ES-192
P0450	Canister pressure sensor (built into canister pump module) voltage abnormal fluctuation	ES-199
P0451	• Canister pressure sensor (built into canister pump module) noise • Canister pressure sensor (built into canister pump module) signal becomes fixed/flat	
P0452	Canister pressure sensor (built into canister pump module) voltage low	
P0453	Canister pressure sensor (built into canister pump module) voltage high	
P0455	EVAP gross leak	ES-209
P0456	EVAP small leak	
P2401	Leak detection pump stuck OFF (built into canister pump module)	ES-296
P2402	Leak detection pump stuck ON (built into canister pump module)	
P2419	Vent valve stuck closed (built into canister pump module)	ES-302
P2420	Vent valve stuck open (vent) (built into canister pump module)	
P2610	Soak timer (built into ECM)	ES-308

If any EVAP system DTCs are set, the malfunctioning area can be determined using the table below.

DTCs / Malfunctioning Areas	P043E P043F	P0441	P0450	P0451	P0452	P0453	P0455	P0456	P2401 P2402	P2419	P2420
Reference orifice clogged	●								●	●	
Reference orifice high-flow	●								●	●	
Purge VSV stuck open		●					●				
Purge VSV stuck closed		●									
Canister pressure sensor fixed output				●							
Canister pressure sensor noise				●							
Canister pressure sensor low output			●		●						
Canister pressure sensor high output			●			●					
Gross leak		●					●				
Small leak								●			
Leak detection pump stuck OFF	●								●	●	
Leak detection pump stuck ON	●								●	●	
Vent valve stuck closed	●								●	●	
Vent valve stuck open (vent)											●

Y

A106731E11

NOTICE:
If the reference pressure difference between the first and second checks is greater than the specification, all the DTCs relating to the reference pressure (P043E, P043F, P2401, P2402 and P2419) are stored.

DESCRIPTION

Location of EVAP (Evaporative Emission) System:

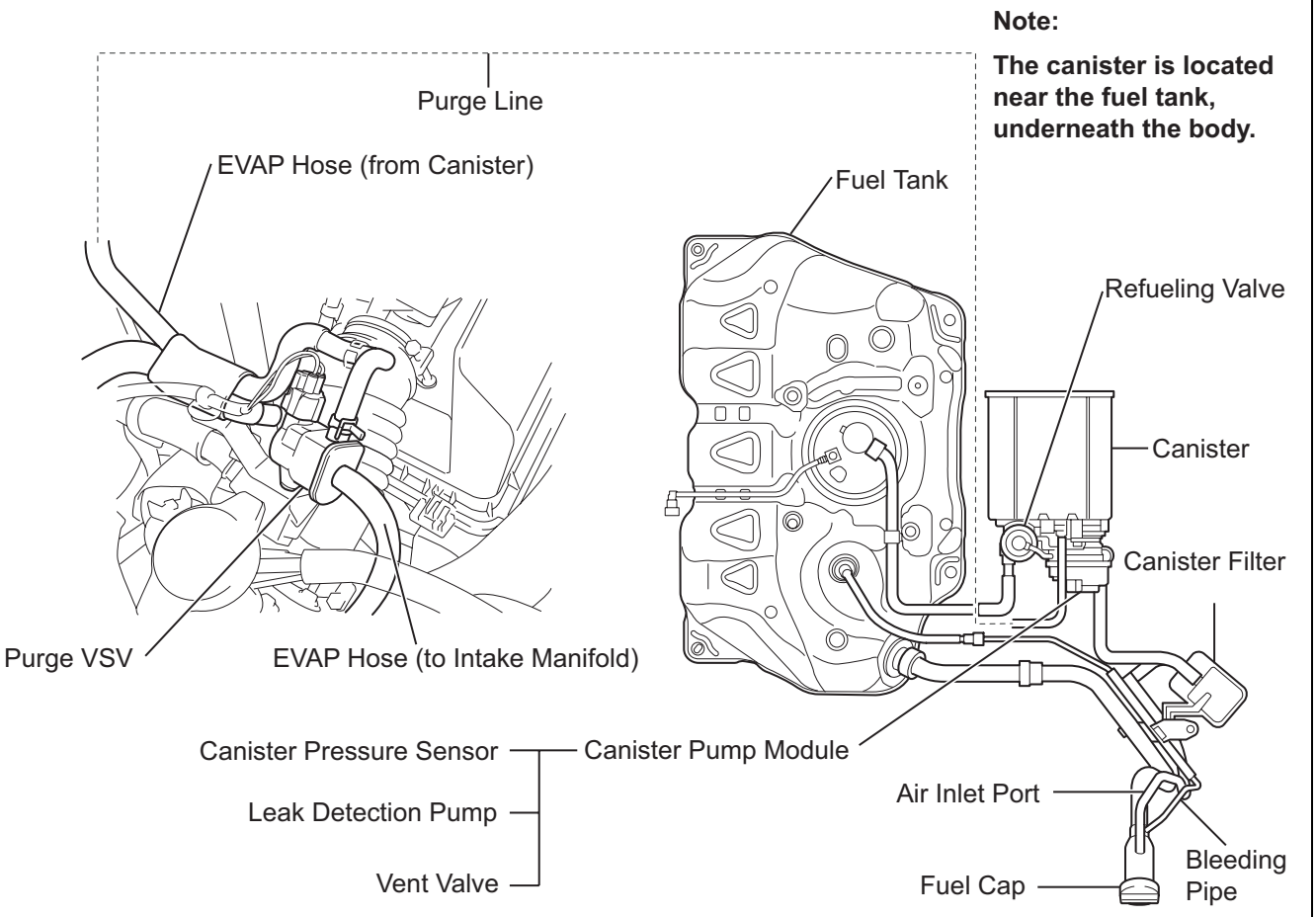

Y

A112623E01

EVAP System Circuit:

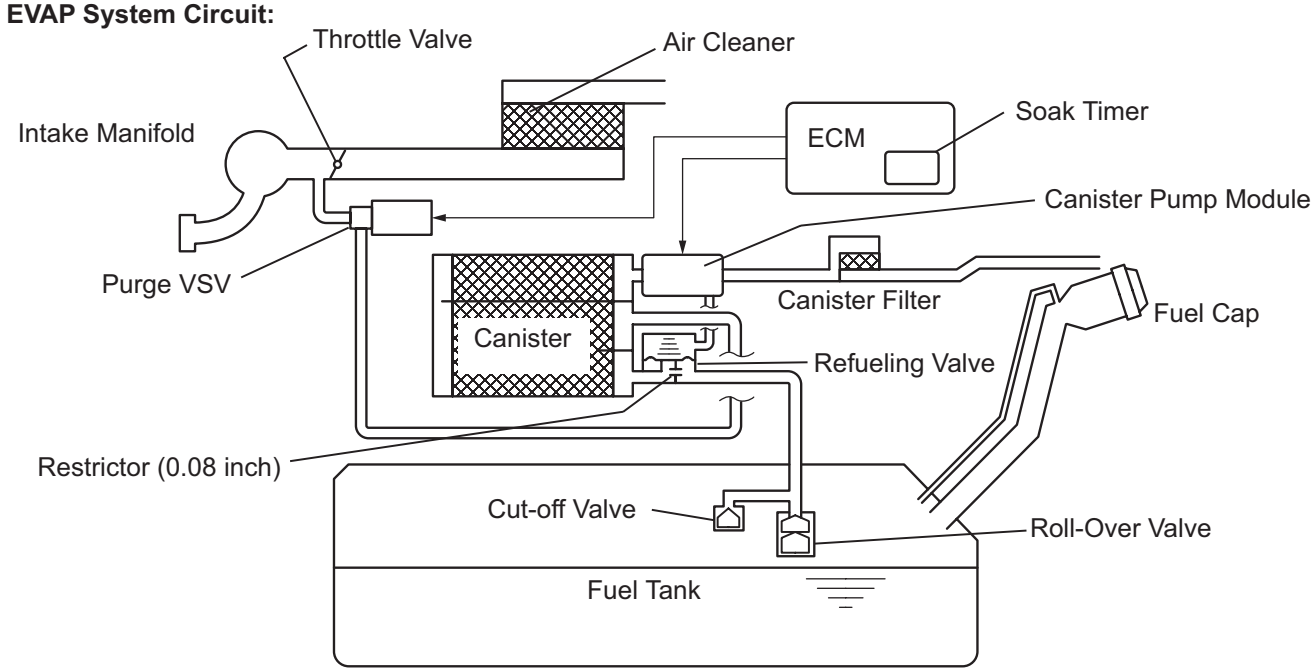

NOTICE:

In this vehicle's EVAP system, turning ON the vent valve does not seal off the EVAP system. To check for leaks in the EVAP system, disconnect the air inlet vent hose and apply pressure from the atmospheric side of the canister.

While the engine is running, if a predetermined condition (closed-loop etc.) is met, the purge VSV is opened by the ECM and stored fuel vapors in the canister are purged into the intake manifold. The ECM changes the duty cycle ratio of the purge VSV to control purge flow volume.

The purge flow volume is also determined by the intake manifold pressure. Atmospheric pressure is allowed into the canister through the vent valve to ensure that the purge flow is maintained when the negative pressure (vacuum) is applied to the canister.

The following two monitors run to confirm the appropriate EVAP system operation.

1. Key-off monitor

This monitor checks for EVAP (Evaporative Emission) system leaks and canister pump module malfunctions. The monitor starts 5 hours* after the ignition switch is turned to OFF. At least 5 hours are required for the fuel to cool down to stabilize the EVAP pressure, thus making the EVAP system monitor more accurate.

The leak detection pump creates negative pressure (vacuum) in the EVAP system and the pressure is measured. Finally, the ECM monitors for leaks from the EVAP system, and malfunctions in both the canister pump module and purge VSV, based on the EVAP pressure.

HINT:

*: If the engine coolant temperature is not below 35°C (95°F) 5 hours after the ignition switch is turned off, the monitor check starts 2 hours later. If it is still not below 35°C (95°F) 7 hours after the ignition switch is turned off, the monitor check starts 2.5 hours later.

2. Purge flow monitor

The purge flow monitor consists of the two monitors. The 1st monitor is conducted every time and the 2nd monitor is activated if necessary.

- The 1st monitor
  While the engine is running and the purge VSV (Vacuum Switching Valve) is ON (open), the ECM monitors the purge flow by measuring the EVAP pressure change. If negative pressure is not created, the ECM begins the 2nd monitor.

- The 2nd monitor
  The vent valve is turned OFF (open) and the EVAP pressure is measured. If the variation in the pressure is less than 0.5 kPa-g (3.75 mmHg-g), the ECM interprets this as the purge VSV being stuck closed, and illuminates the MIL and sets DTC P0441 (2 trip detection logic).

Atmospheric pressure check:
In order to ensure reliable malfunction detection, the variation between the atmospheric pressures, before and after conduction of the purge flow monitor, is measured by the ECM.

EVAP Purge Flow:

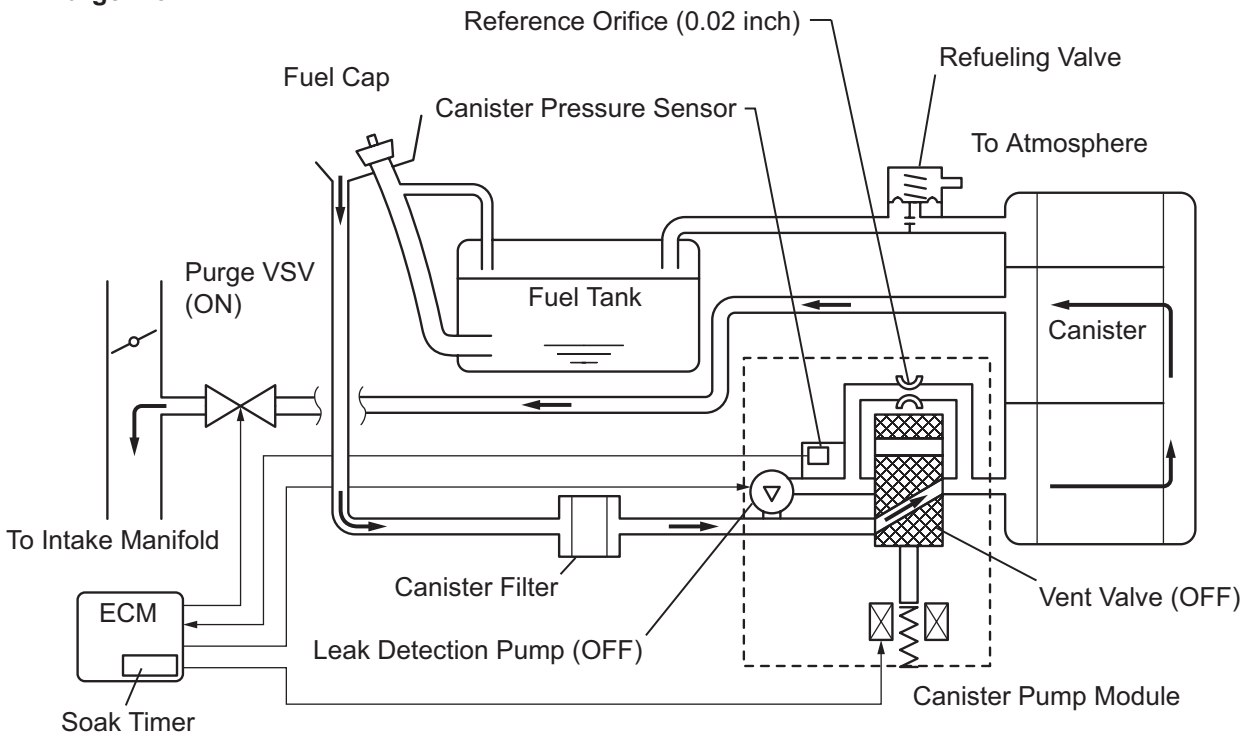

Components	Operations
Canister	Contains activated charcoal to absorb EVAP (Evaporative Emissions) generated in fuel tank.
Cut-off valve	Located in fuel tank. Valve floats and closes when fuel tank 100 % full.
Purge VSV (Vacuum Switching Valve)	Opens or closes line between canister and intake manifold. ECM uses purge VSV to control EVAP purge flow. In order to discharge EVAP absorbed by canister to intake manifold, ECM opens purge VSV. EVAP discharge volume to intake manifold controlled by purge VSV duty cycle ratio (current-carrying time). (Open: ON, Closed: OFF)
Refueling valve	Controls EVAP pressure from fuel tank to canister. Valve consists of diaphragm, spring and restrictor (diameter: 0.08 inch). When fuel vapor and pressure inside fuel tank increase, valve opens. While EVAP purged, valve closes and restrictor prevents large amount of vacuum from affecting pressure in fuel tank. Valve opened while refueling.
Roll-over valve	Located in fuel tank. Valve closed by its own weight when vehicle overturns to prevent fuel from spilling out.
Soak timer	Built into ECM. To ensure accurate EVAP monitor, measures 5 hours (+- 15 min) after ignition switch turned to OFF. This allows fuel to cool down, stabilizing EVAP pressure. When approximately 5 hours elapsed, ECM activates (refer to fig. 3).
Canister pump module	Consists of (a) to (d) below. Canister pump module cannot be disassembled.
(a) Vent valve	Vents and closes EVAP system. When ECM turns valve ON, EVAP system closed. When, ECM turns valve OFF, EVAP system vented. Negative pressure (vacuum) created in EVAP system to check for EVAP leaks by closing purge VSV, turning on vent valve (closed) and operating leak detection pump (refer to fig. 1).
(b) Canister pressure sensor	Indicates pressure as voltages. ECM supplies regulated 5 V to canister pressure sensor, and uses feedback from sensor to monitor EVAP system pressure (refer to fig. 2).

Components	Operations
(c) Leak detection pump	Creates negative pressure (vacuum) in EVAP system for leak check.
(d) Reference orifice	Has opening with 0.02 inch diameter. Vacuum produced through orifice by closing purge VSV, turning off vent valve and operating leak detection pump, to monitor reference pressure. Reference pressure indicates small leak of EVAP.

Canister Pump Module (fig. 1):

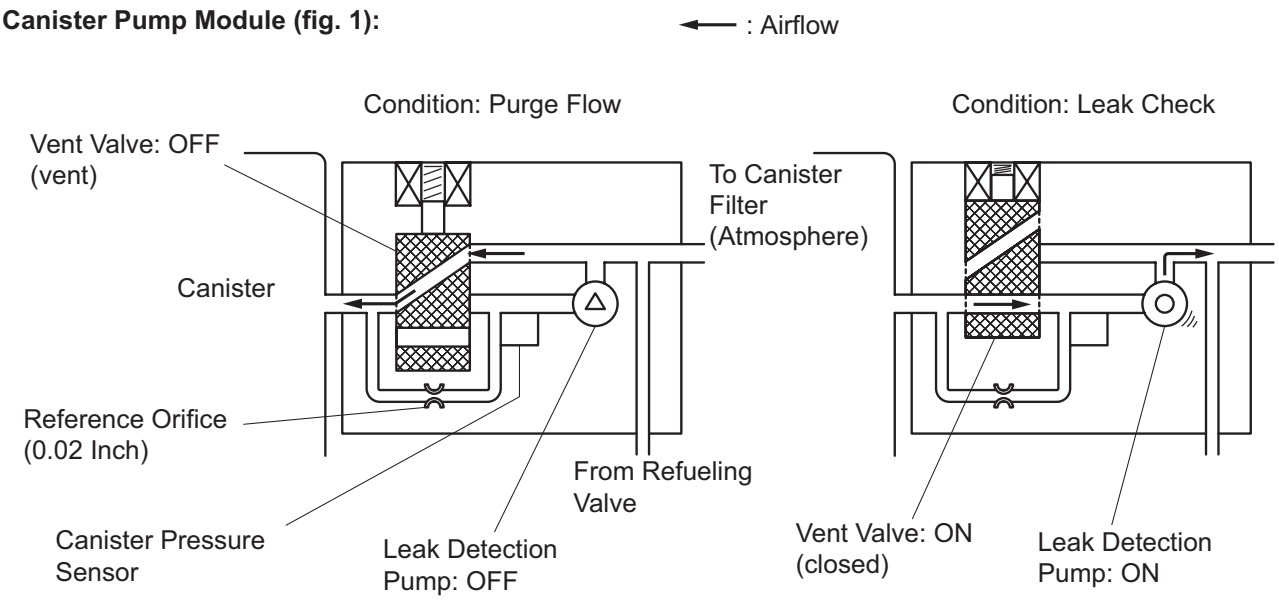

Y

A115902E02

Canister Pressure Sensor Specification (fig. 2):

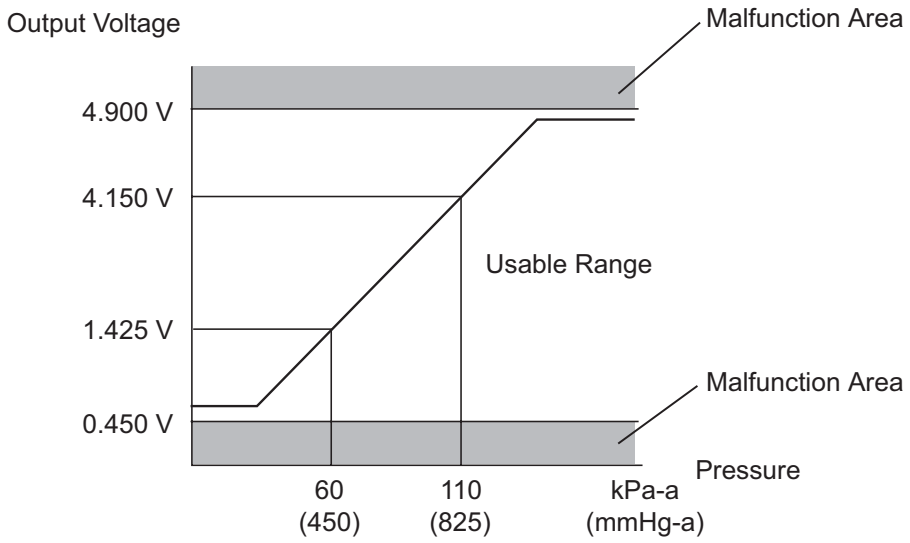

HINT:

Standard atmospheric pressure is 101.3 kPa-a (760 mmHg-a)

A115543E06

Soak Timer Circuit (fig. 3):

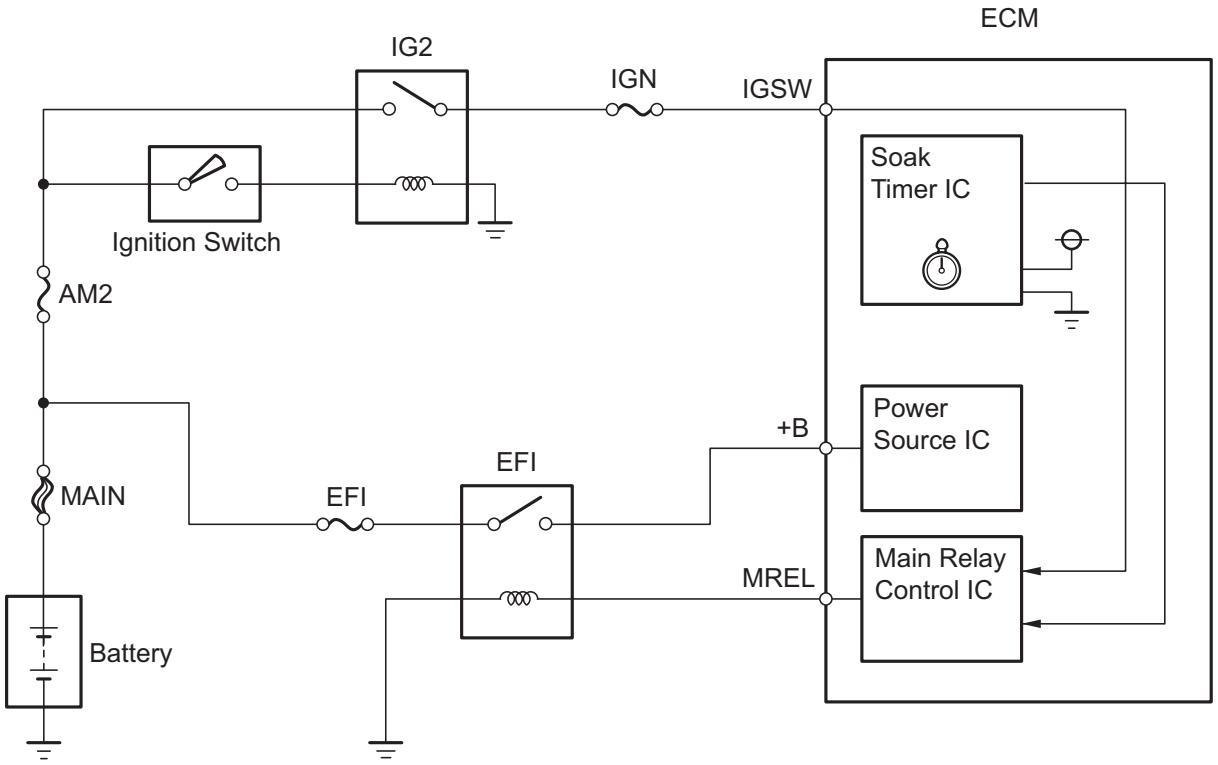

WIRING DIAGRAM

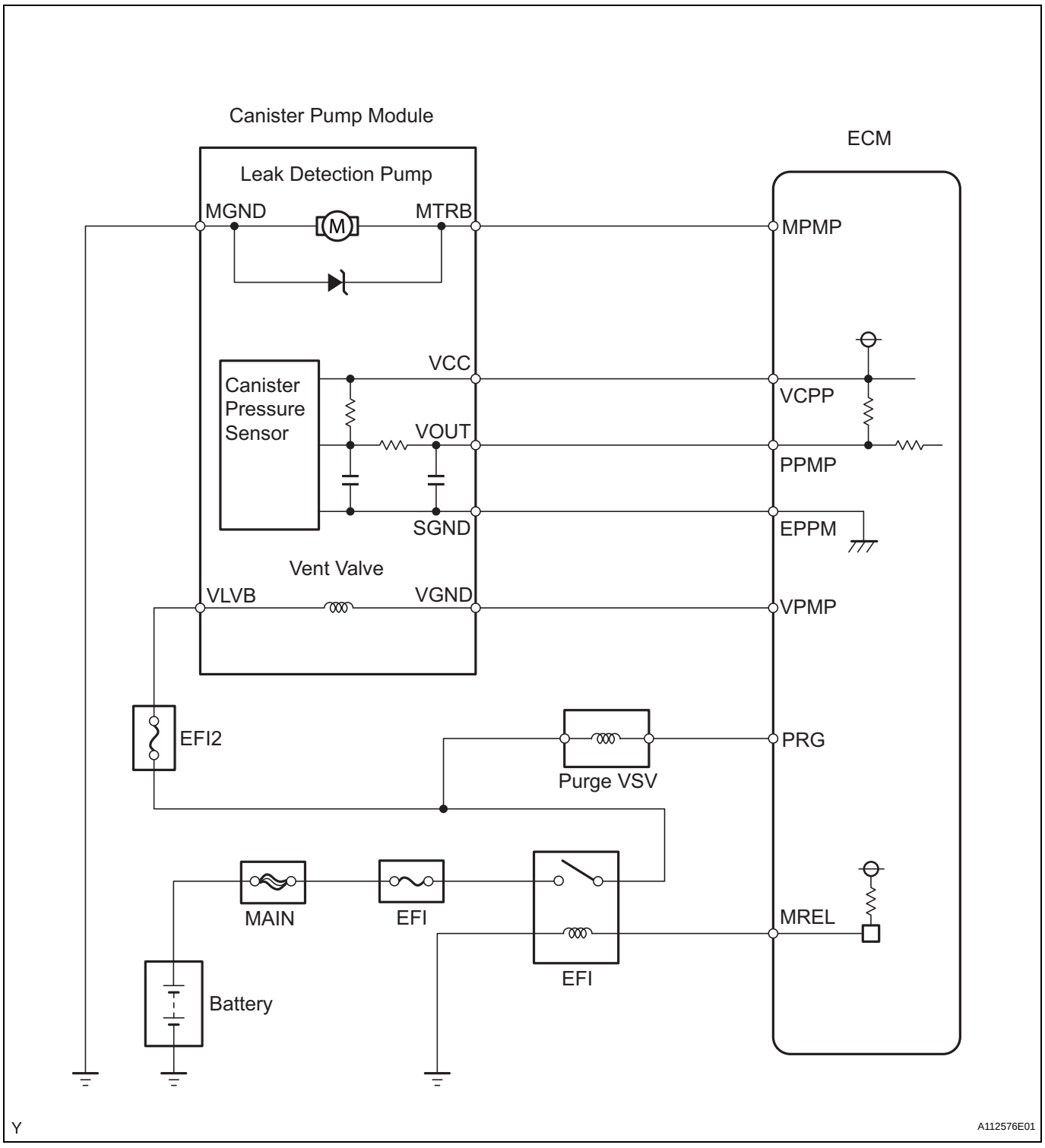

INSPECTION PROCEDURE

NOTICE:

An intelligent tester is required to conduct the following diagnostic troubleshooting procedure.

HINT:

- Using intelligent tester monitor results enables the EVAP (Evaporative Emission) system to be confirmed.

- Read freeze frame data using an intelligent tester. Freeze frame data record the engine condition when malfunctions are detected. When troubleshooting, freeze frame data can help determine if the vehicle was moving or stationary, if the engine was warmed up or not, if the air-fuel ratio was lean or rich, and other data, from the time the malfunction occurred.

1	**CONFIRM DTC**

(a) Turn the ignition switch to OFF and wait for 10 seconds.
(b) Turn the ignition switch to ON.
(c) Turn the ignition switch to OFF and wait for 10 seconds.
(d) Connect an intelligent tester to the DLC3.
(e) Turn the ignition switch to ON and turn the tester ON.
(f) Select the following menu items: DIAGNOSIS / ENHANCED OBD II / DTC INFO / CURRENT CODES.
(g) Confirm DTCs and freeze frame data.
If any EVAP system DTCs are set, the malfunctioning area can be determined using the table below.
NOTICE:
If the reference pressure difference between the first and second checks is greater than the specification, all the DTCs relating to the reference pressure (P043E, P043F, P2401, P2402 and P2419) are stored.

DTCs / Malfunctioning Areas	P043E P043F	P0441	P0450	P0451	P0452	P0453	P0455	P0456	P2401 P2402	P2419	P2420
Reference orifice clogged	●								●	●	
Reference orifice high-flow	●								●	●	
Purge VSV stuck open		●					●				
Purge VSV stuck closed		●									
Canister pressure sensor fixed output				●							
Canister pressure sensor noise				●							
Canister pressure sensor low output			●		●						
Canister pressure sensor high output			●			●					
Gross leak		●					●				
Small leak								●			
Leak detection pump stuck OFF	●								●	●	
Leak detection pump stuck ON	●								●	●	
Vent valve stuck closed	●								●	●	
Vent valve stuck open (vent)											●

Y

A106731E11

NEXT

2	PERFORM EVAP SYSTEM CHECK (AUTO OPERATION)

NOTICE:

- **The EVAP SYSTEM CHECK (AUTO OPERATION) consists of five steps performed automatically by the intelligent tester. It takes a maximum of approximately 18 minutes.**
- **Do not perform the EVAP SYSTEM CHECK when the fuel tank is more than 90% full because the cut-off valve may be closed, making the fuel tank leak check unavailable.**
- **Do not run the engine during this operation.**
- **When the temperature of the fuel is 35°C (95°F) or more, a large amount of vapor forms and any check results become inaccurate. When performing the EVAP SYSTEM CHECK, keep the temperature below 35°C (95°F).**

(a) Clear DTCs (See page ES-34).

(b) On the tester, select the following menu items: DIAGNOSIS / ENHANCED OBD II / SYSTEM CHECK / EVAP SYS CHECK / AUTO OPERATION.
(c) After the EVAP SYSTEM CHECK is completed, check for pending DTCs by selecting the following menu items: DIAGNOSIS / ENHANCED OBD II / DTC INFO / PENDING CODES.
HINT:
If no pending DTCs are displayed, perform the MONITOR CONFIRMATION (see "Diagnostic Help" menu). After this confirmation, check for pending DTCs. If no DTCs are displayed, the EVAP system is normal.

ES

NEXT

3	PERFORM EVAP SYSTEM CHECK (MANUAL OPERATION)

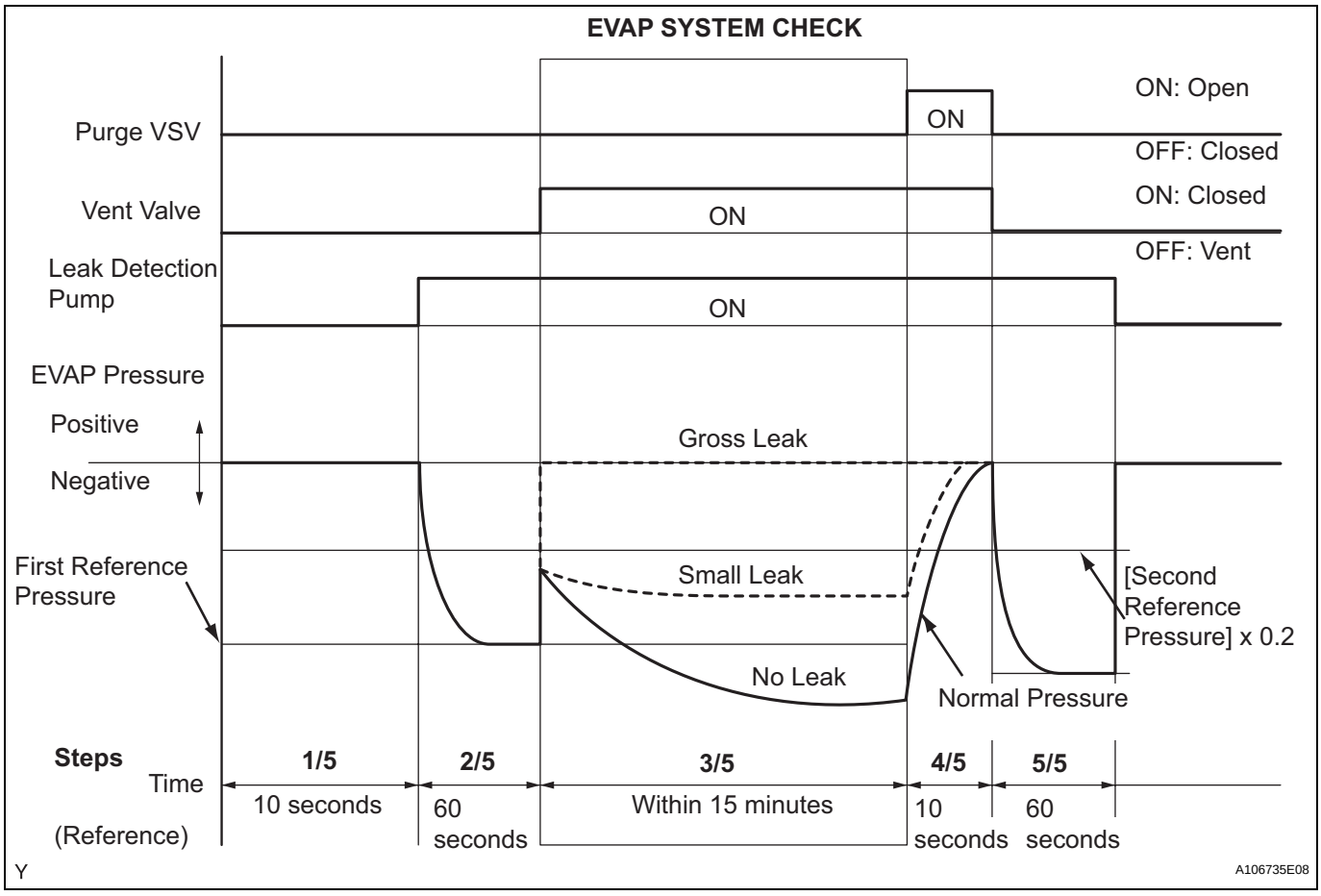

NOTICE:

- **In the EVAP SYSTEM CHECK (MANUAL OPERATION), perform the series of 5 EVAP SYSTEM CHECK steps manually using the intelligent tester.**
- **Do not perform the EVAP SYSTEM CHECK when the fuel tank is more than 90% full because the cut-off valve may be closed, making the fuel tank leak check unavailable.**
- **Do not run the engine during this operation.**

- **When the temperature of the fuel is 35°C (95°F) or more, a large amount of vapor forms and any check results become inaccurate. When performing the EVAP SYSTEM CHECK, keep the temperature below 35°C (95°F).**

(a) Clear DTCs (See page ES-34).

(b) Select the following menu items: DIAGNOSIS / ENHANCED OBD II / SYSTEM CHECK / EVAP SYS CHECK / MANUAL OPERATION.

NEXT

4	PERFORM EVAP SYSTEM CHECK (STEP 1/5)

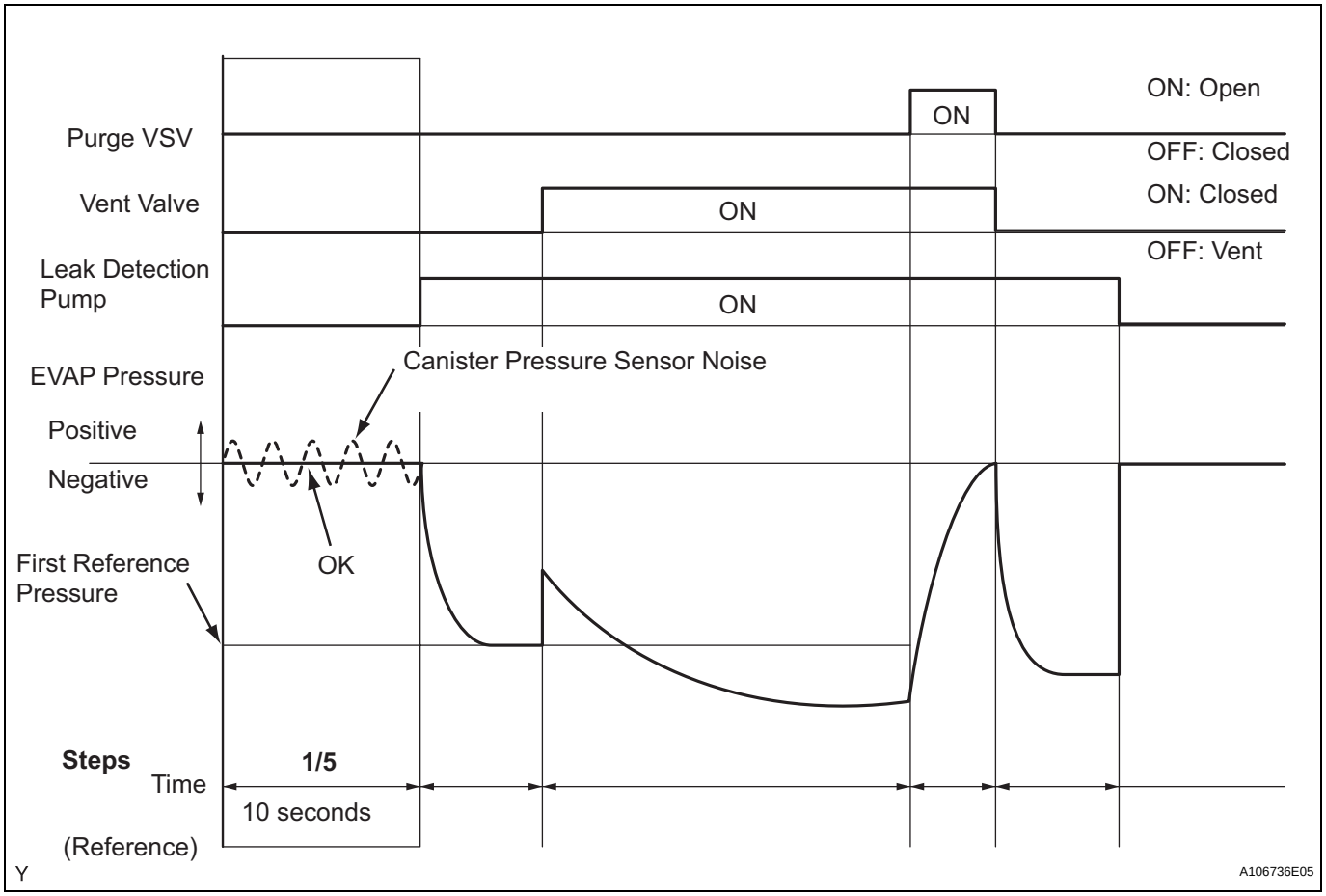

(a) Check the EVAP pressure in step 1/5.

Result

DTCs*	Test Results	Suspected Trouble Areas	Proceed To
-	Virtually no variation in EVAP pressure	Not yet determined	A
P0451	EVAP pressure fluctuates by +-0.3 kPa-g (2.25 mmHg-g) or more	Canister pressure sensor noise	B

*: These DTCs are already present in the ECM when the vehicle arrives and are confirmed in step 1.

B	Go to step 29

A

5	PERFORM EVAP SYSTEM CHECK (STEP 1/5 TO 2/5)

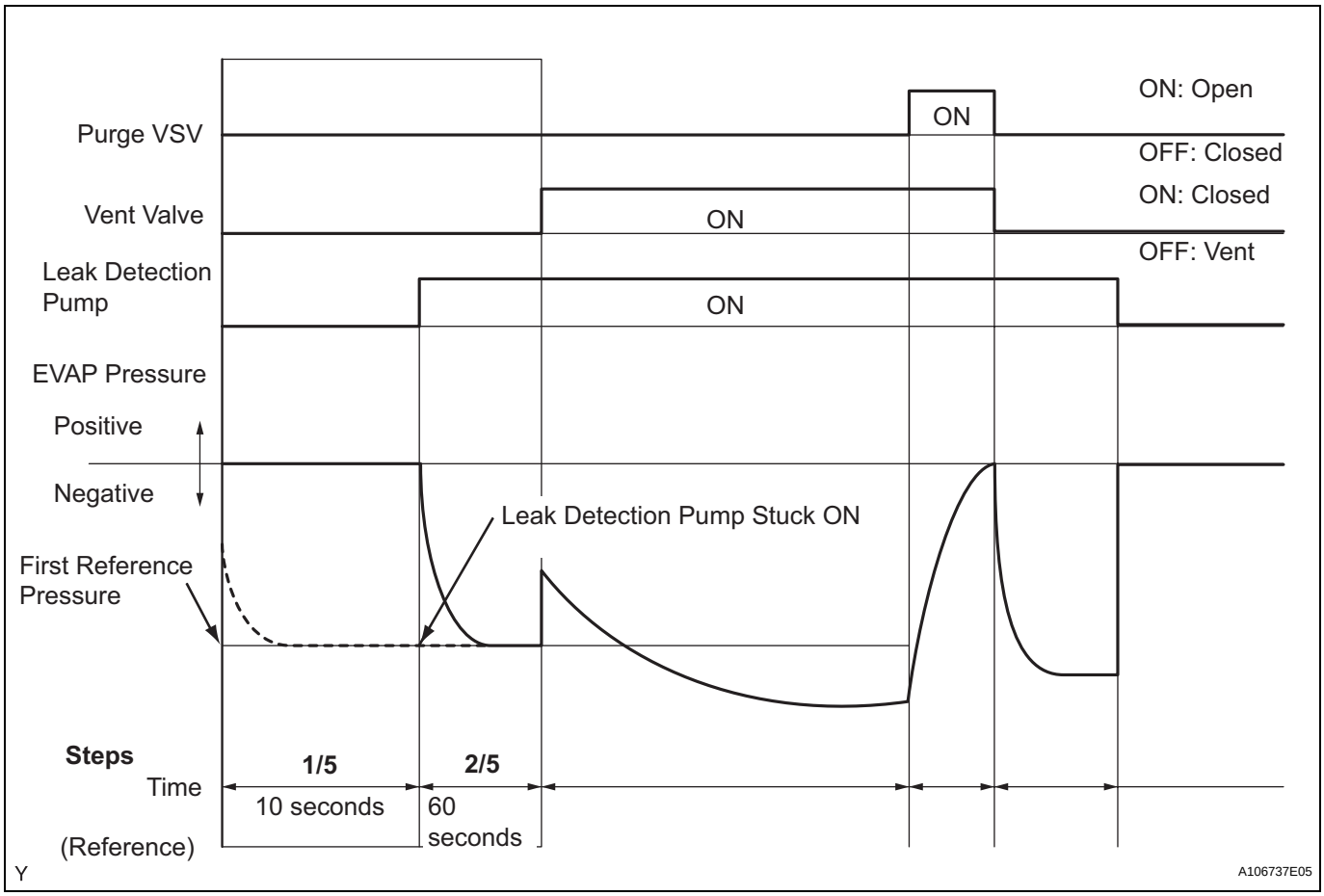

(a) Check the EVAP pressure in steps 1/5 and 2/5.

Result

DTCs*	Test Results	Suspected Trouble Areas	Proceed To
-	Virtually no variation in EVAP pressure during step 1/5. Then decreases to reference pressure	Not yet determined	A
P2402	Small difference between EVAP pressures during steps 1/5 and 2/5	Leak detection pump stuck ON	B

*: These DTCs are already present in the ECM when the vehicle arrives and are confirmed in step 1.
HINT:
The first reference pressure is the value determined in step 2/5.

B → Go to step 22

A

6	PERFORM EVAP SYSTEM CHECK (STEP 2/5)

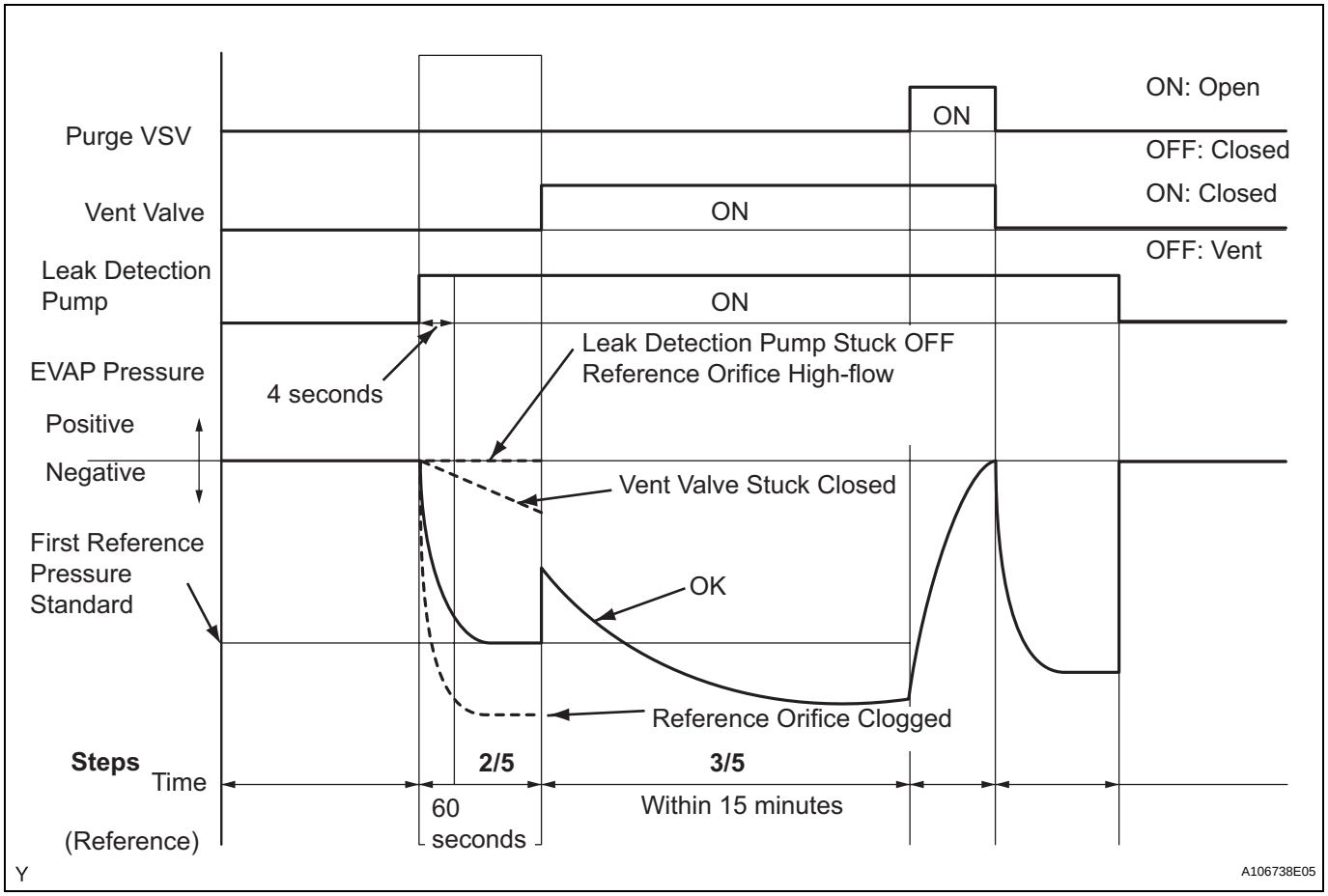

HINT:
Make a note of the pressures checked in steps (a) and (b) below.
(a) Check the EVAP pressure 4 seconds after the leak detection pump is activated*.
*: The leak detection pump begins to operate as step 1/5 finishes and step 2/5 starts.
(b) Check the EVAP pressure again when it has stabilized. This pressure is the reference pressure.

Result

DTCs*	Test Results	Suspected Trouble Areas	Proceed To
-	EVAP pressure in step (b) between -4.85 kPa-g and -1.057 kPa-g (-36.4 mmHg-g and -7.93 mmHg-g)	Not yet determined	A
P043F and P2401	EVAP pressure in step (b) -1.057 kPa-g (-7.93 mmHg-g) or more	• Reference orifice high-flow • Leak detection pump stuck OFF	B
P043E	EVAP pressure in step (b) below -4.85 kPa-g (-36.4 mmHg-g)	Reference orifice clogged	C
P2419	EVAP pressure in step (a) more than -1.057 kPa-g (-7.93 mmHg-g)	Vent valve stuck closed	D

*: These DTCs are already present in the ECM when the vehicle arrives and are confirmed in step 1.

B	Go to step 11
C	Go to step 29
D	Go to step 20

A

7	PERFORM EVAP SYSTEM CHECK (STEP 2/5 TO 3/5)

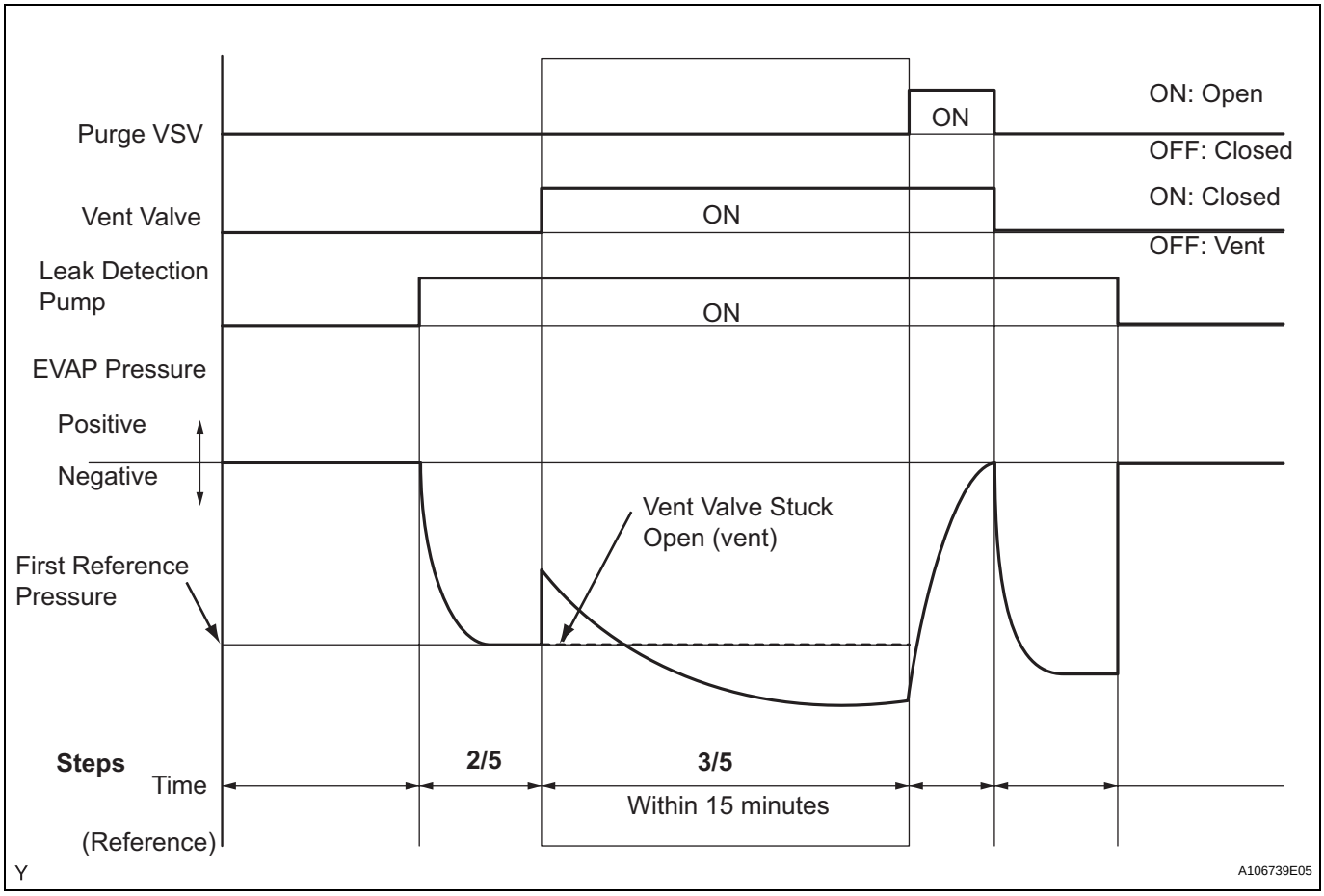

(a) Check the EVAP pressure increase in step 3/5.

Result

DTCs*	Test Results	Suspected Trouble Areas	Proceed To
-	EVAP pressure increases by 0.3 kPa-g (2.25 mmHg-g) or more within 10 seconds of proceeding from step 2/5 to step 3/5	Not yet determined	A
P2420	No variation in EVAP pressure despite proceeding from step 2/5 to step 3/5	Vent valve stuck open (vent)	B
P0451	No variation in EVAP pressure during steps 1/5 through 3/5	Canister pressure sensor malfunction fixed	C

*: These DTCs are already present in the ECM when the vehicle arrives and are confirmed in step 1.

B	Go to step 19

C	Go to step 29

A

8	PERFORM EVAP SYSTEM CHECK (STEP 3/5)

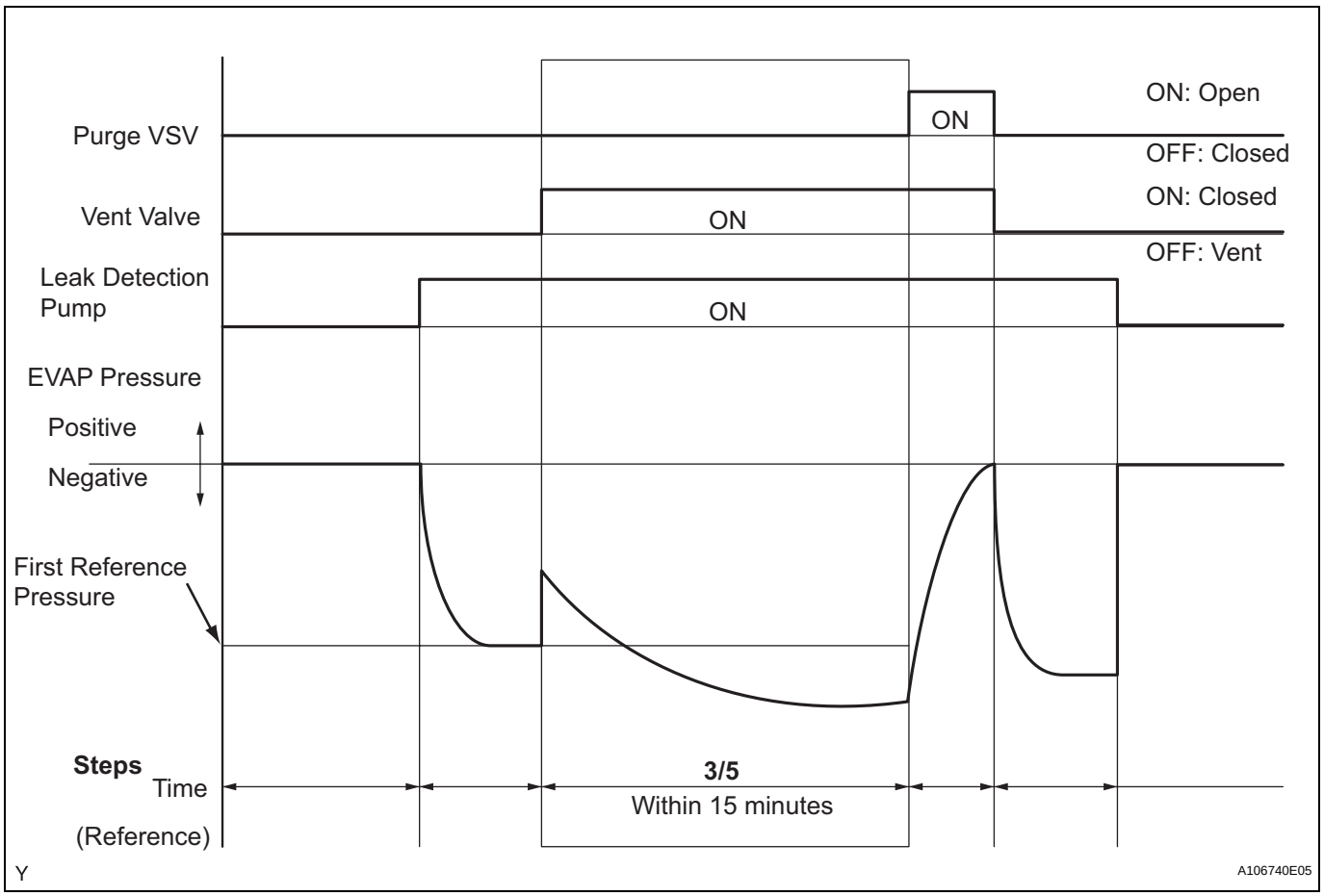

(a) Wait until the EVAP pressure change is less than 0.1 kPa-g (0.75 mmHg-g) for 30 seconds.

(b) Measure the EVAP pressure and record it.
HINT:
A few minutes are required for the EVAP pressure to become saturated. When there is little fuel in the fuel tank, it takes up to 15 minutes.

NEXT

ES

9	PERFORM EVAP SYSTEM CHECK (STEP 4/5)

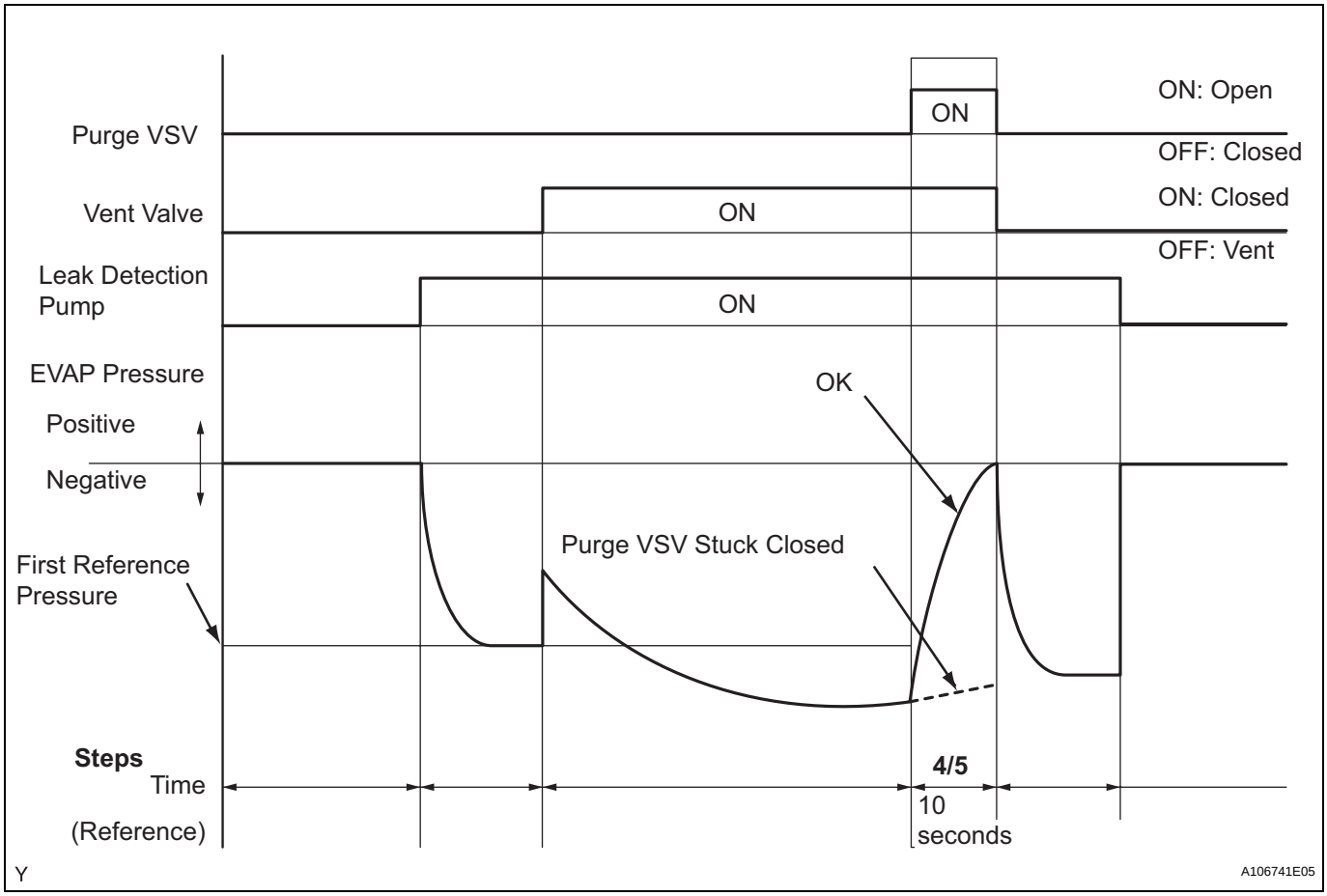

(a) Check the EVAP pressure in step 4/5.

Result

DTCs*	Test Results	Suspected Trouble Areas	Proceed To
-	EVAP pressure increases by 0.3 kPa-g (2.25 mmHg-g) or more within 10 seconds of proceeding from step 3/5 to step 4/5	Not yet determined	A
P0441	EVAP pressure increases by 0.3 kPa-g (2.25 mmHg-g) or more within 10 seconds of proceeding from step 3/5 to step 4/5	Problems in EVAP hose between purge VSV and intake manifold	B
P0441	Variation in EVAP pressure less than 0.3 kPa-g (2.25 mmHg-g) for 10 seconds, after proceeding from step 3/5 to step 4/5	Purge VSV stuck closed	C

*: These DTCs are already present in the ECM when the vehicle arrives and are confirmed in step 1.

B → Go to step 15

C → Go to step 12

A

10	PERFORM EVAP SYSTEM CHECK (STEP 5/5)

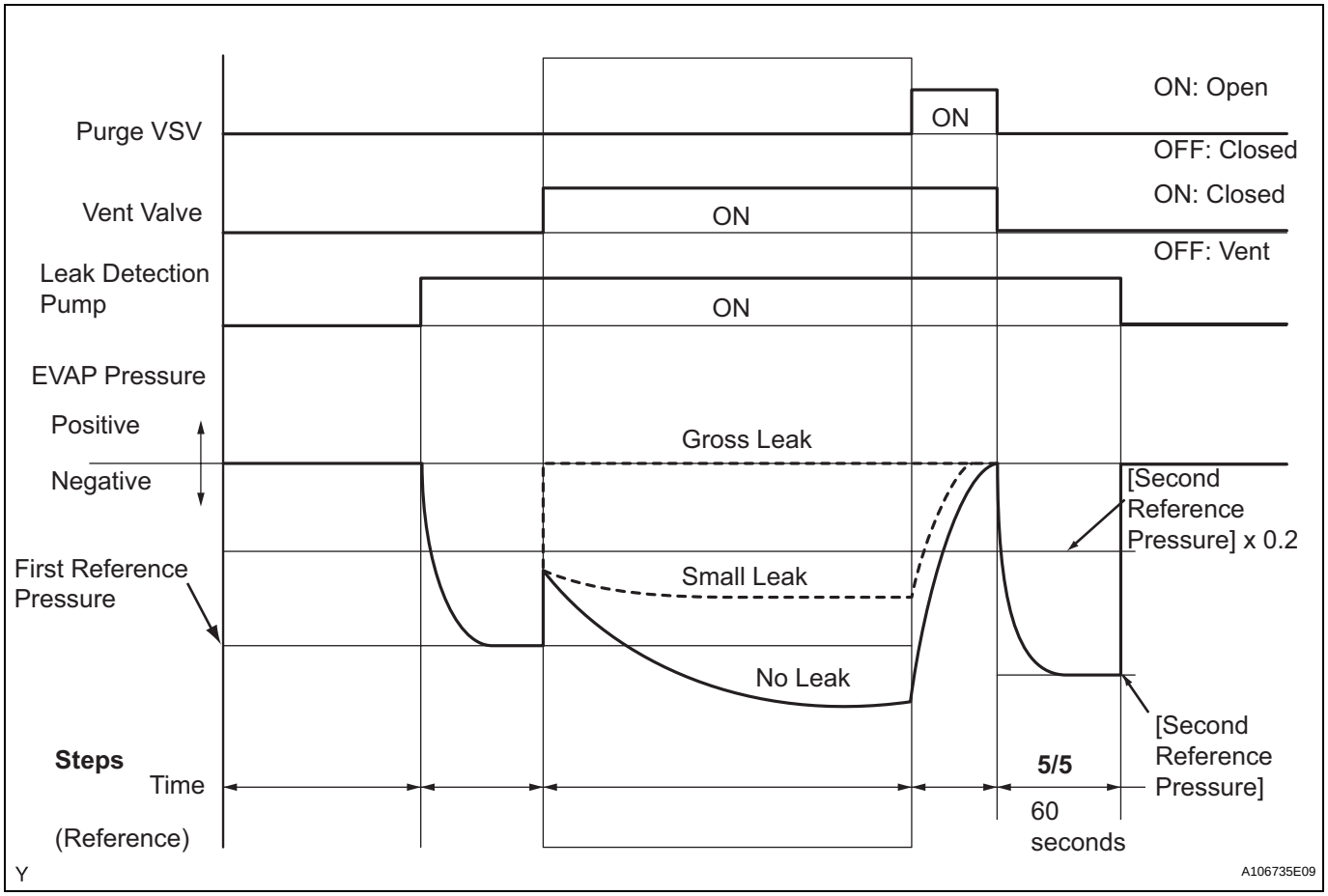

(a) Check the EVAP pressure in step 5/5.
(b) Compare the EVAP pressure in step 3/5 and the second reference pressure (step 5/5).

Result

DTCs*	Test Results	Suspected Trouble Areas	Proceed To
-	EVAP pressure (step 3/5) lower than second reference pressure (step 5/5)	Not yet determined (no leakage from EVAP system)	A
P0441 and P0455	EVAP pressure (step 3/5) higher than [second reference pressure (step 5/5) x 0.2]	• Purge VSV stuck open • EVAP gross leak	B
P0456	EVAP pressure (step 3/5) higher than second reference pressure (step 5/5)	EVAP small leak	B

*: These DTCs are already present in the ECM when the vehicle arrives and are confirmed in step 1.

A	Go to step 35
B	Go to step 12

11	PERFORM EVAP SYSTEM CHECK (STEP 3/5)

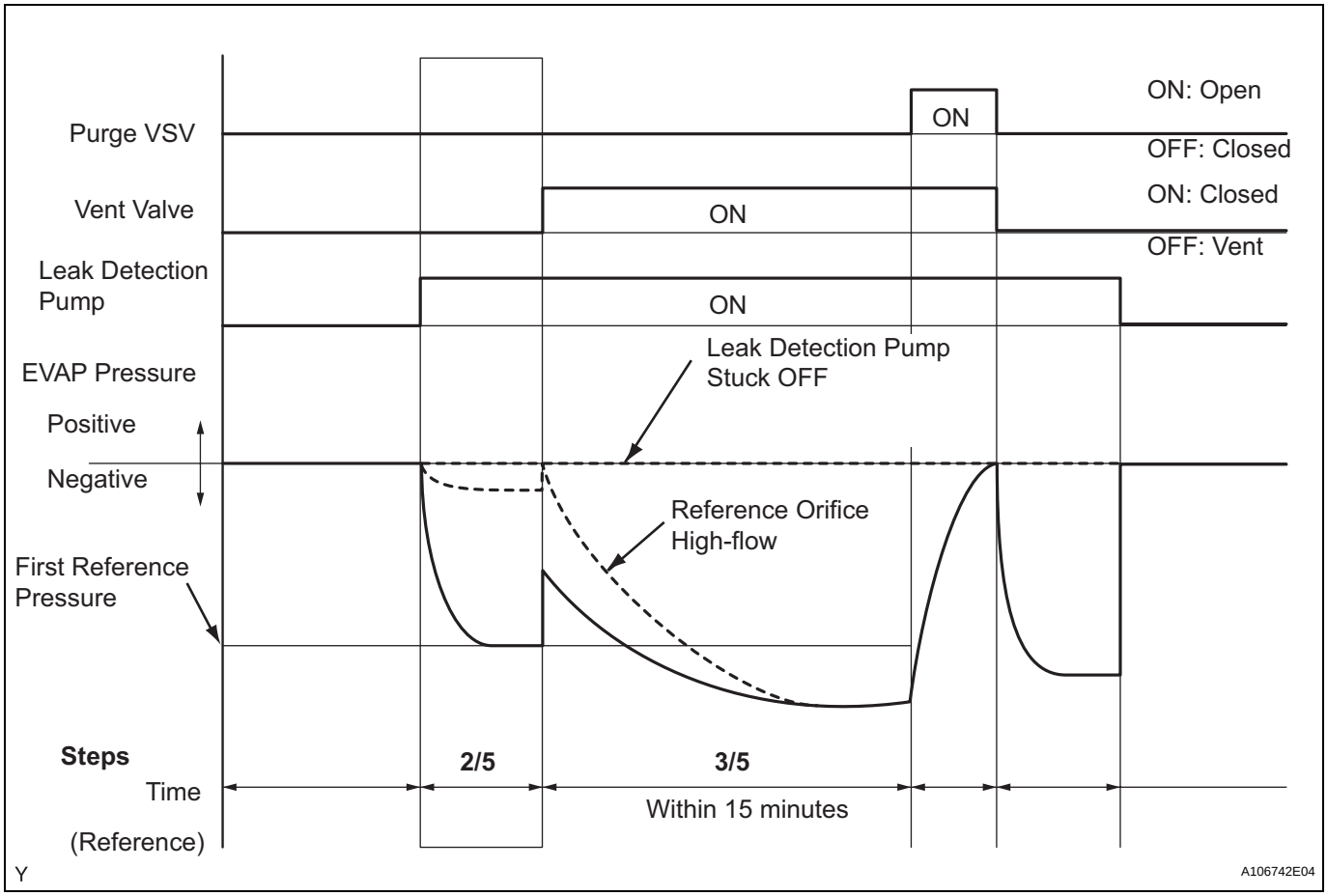

(a) Check the EVAP pressure in step 3/5.

Result

DTCs*	Test Results	Suspected Trouble Areas	Proceed To
P043F	EVAP pressure less than [reference pressure] measured at 2/5	Reference orifice high-flow	A
P2401	EVAP pressure almost same as [reference pressure] measured at 2/5	Leak detection pump stuck OFF	B

*: These DTCs are already present in the ECM when the vehicle arrives and are confirmed in step 1.
HINT:
The first reference pressure is the value determined in step 2/5.

A	Go to step 29
B	Go to step 22

12 PERFORM ACTIVE TEST USING INTELLIGENT TESTER (PURGE VSV)

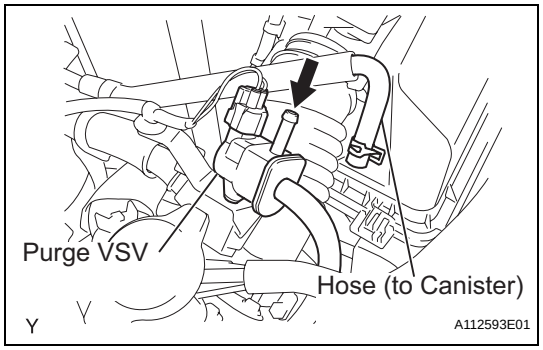

(a) On the intelligent tester, select the following menu items: DIAGNOSIS / ENHANCED OBD II / ACTIVE TEST / EVAP VSV.
(b) Disconnect the hose (connected to the canister) from the purge VSV.
(c) Start the engine.
(d) Using the tester, turn off the purge VSV (EVAP VSV: OFF).
(e) Use your finger to confirm that the purge VSV has no suction.
(f) Using the tester, turn on the purge VSV (EVAP VSV: ON).
(g) Use your finger to confirm that the purge VSV has suction.

ES

Result

Test Results	Suspected Trouble Areas	Proceed To
No suction when purge VSV turned OFF, and suction applied when turned ON	Purge VSV normal	A
Suction applied when purge VSV turned OFF	Purge VSV stuck open	B
No suction when purge VSV turned ON	• Purge VSV stuck closed • Problems with EVAP hose between purge VSV and intake manifold	C

(h) Reconnect the hose.

B	Go to step 14
C	Go to step 15

A

13 CHECK FUEL CAP ASSEMBLY

(a) Check that the fuel cap is correctly installed and confirm the fuel cap meets OEM specifications.
  (1) Tighten the fuel cap until a few click sounds are heard.
  HINT:
  If an EVAP tester is available, check the fuel cap using the tester.
(b) Remove the fuel cap and install it onto a fuel cap adapter.
(c) Connect an EVAP tester pump hose to the adapter, and pressurize the cap to 3.2 to 3.7 kPa (24 to 28 mmHg) using an EVAP tester pump.
(d) Seal the adapter and wait for 2 minutes.
(e) Check the pressure. If the pressure is 2 kPa (15 mmHg) or more, the fuel cap is normal.

Result

Test Results	Suspected Trouble Areas	Proceed To
Fuel cap correctly installed	-	A

Test Results	Suspected Trouble Areas	Proceed To
Fuel cap loose	• Fuel cap improperly installed • Defective fuel cap • Fuel cap does not meet OEM specifications	B
No fuel cap	-	C

(f) Reinstall the fuel cap.

A	Go to step 28
B	Go to step 26
C	Go to step 27

ES

14 INSPECT DUTY VACUUM SWITCHING VALVE (PURGE VSV)

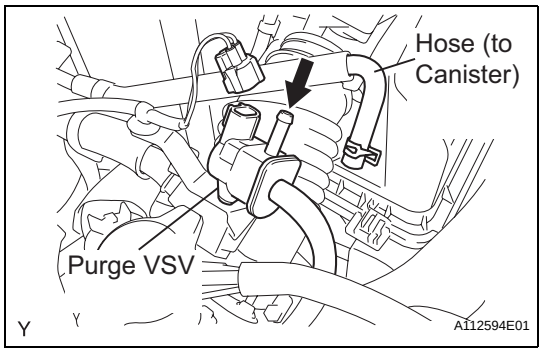

(a) Turn the ignition switch to OFF.
(b) Disconnect the C3 purge VSV connector.
(c) Disconnect the hose (connected to the canister) from the purge VSV.
(d) Start the engine.
(e) Use your finger to confirm that the purge VSV has no suction.

Result

Test Results	Suspected Trouble Areas	Proceed To
No suction	ECM	A
Suction applied	Purge VSV	B

(f) Reconnect the purge VSV connector.
(g) Reconnect the hose.

A	Go to step 34
B	Go to step 30

15 CHECK EVAP HOSE (PURGE VSV - INTAKE MANIFOLD)

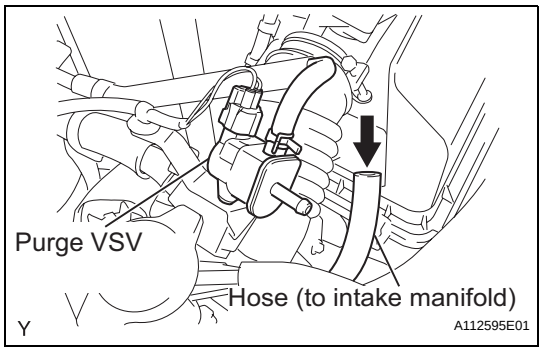

(a) Disconnect the hose (connected to the intake manifold) from the purge VSV.
(b) Start the engine.
(c) Use your finger to confirm that the hose has suction.

Result

Test Results	Suspected Trouble Areas	Proceed To
Suction applied	EVAP hose between purge VSV and intake manifold normal	A
No suction	• Intake manifold port • EVAP hose between purge VSV and intake manifold	B

(d) Reconnect the hose.

B → Go to step 25

A

16 INSPECT DUTY VACUUM SWITCHING VALVE (PURGE VSV)

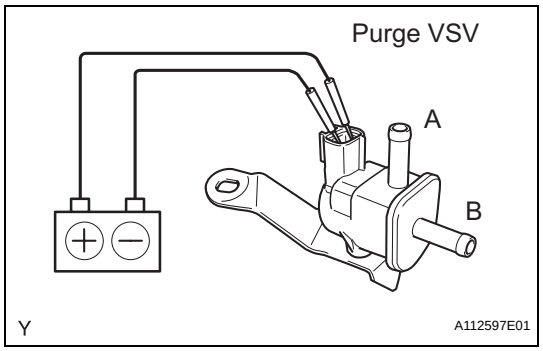

(a) Remove the purge VSV.
(b) Apply the battery voltage to the terminals of the purge VSV.
(c) Using an air gun, confirm that air flows from port A to port B.

Result

Test Results	Suspected Trouble Areas	Proceed To
Air flows	Purge VSV normal	A
No air flow	Purge VSV	B

(d) Install the purge VSV.

B → Go to step 30

A

17 CHECK HARNESS AND CONNECTOR (POWER SOURCE OF PURGE VSV)

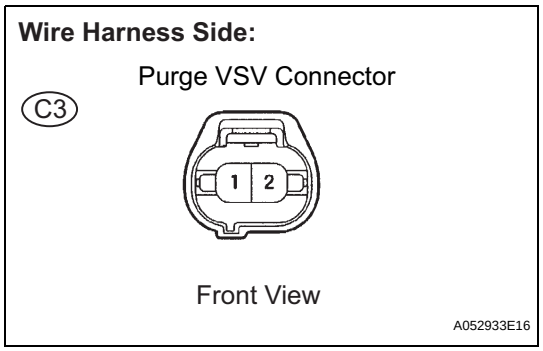

(a) Disconnect the C3 purge VSV connector.
(b) Turn the ignition switch to ON.
(c) Measure the voltage between terminal 2 of the purge VSV connector and the body ground.

Result

Test Results	Suspected Trouble Areas	Proceed To
11 to 14 V	Normal	A
Other than result above	Wire harness or connectors between purge VSV and ECM	B

(d) Reconnect the purge VSV connector.

B	Go to step 31

A

18 CHECK HARNESS AND CONNECTOR (PURGE VSV - ECM)

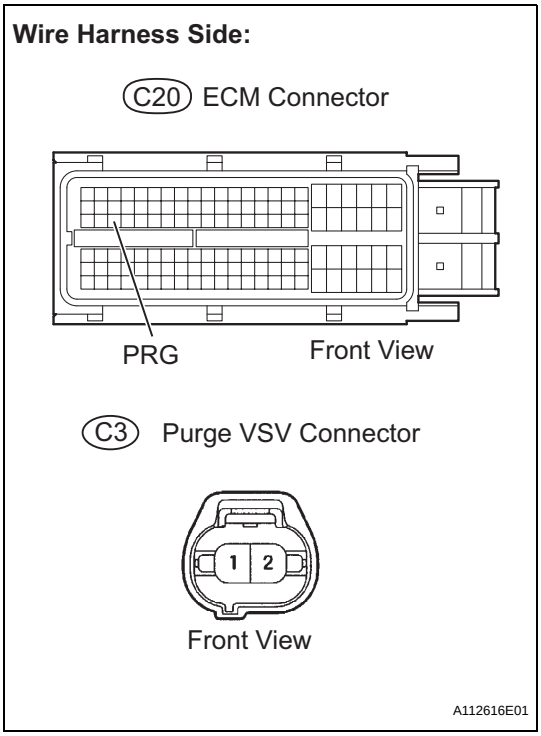

(a) Disconnect the C20 ECM connector and the C3 purge VSV connector.
(b) Check the resistance.

Standard resistance

Tester Connections	Specified Conditions
PRG (C20-49) - Purge VSV (C3-1)	Below 1 Ω
PRG (C20-49) - Body ground	10 kΩ or higher
Purge VSV (C3-1) - Body ground	

(c) Reconnect the purge VSV connector.
(d) Reconnect the ECM connector.

OK	Go to step 34
NG	Go to step 31

19 INSPECT CANISTER PUMP MODULE (POWER SOURCE FOR VENT VALVE)

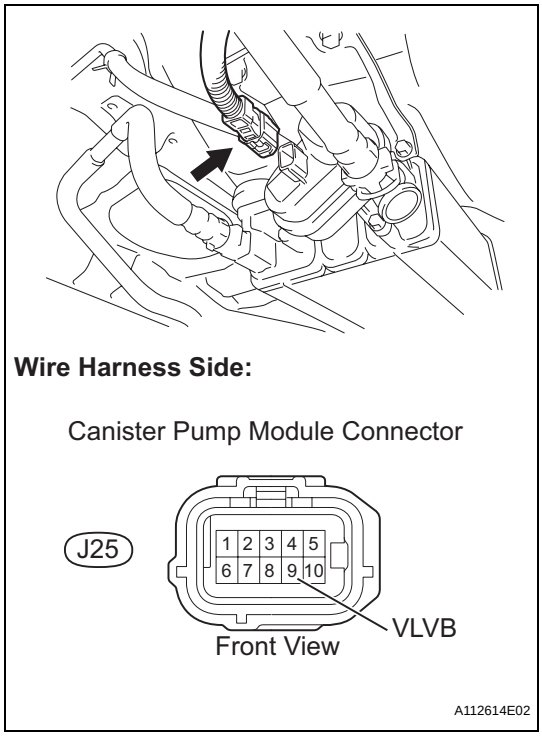

(a) Turn the ignition switch to OFF.
(b) Disconnect the J25 canister pump module connector.
(c) Turn the ignition switch to ON.
(d) Measure the voltage between VLVB terminal of the canister pump module connector and the body ground.

Result

Test Results	Suspected Trouble Areas	Proceed To
11 to 14 V	1. Wire harness between vent valve and ECM 2. Vent valve 3. ECM	A
Below 3 V	Power source wire harness of vent valve	B

(e) Reconnect the canister pump module connector.

B → Go to step 31

A

20 INSPECT CANISTER PUMP MODULE (VENT VALVE OPERATION)

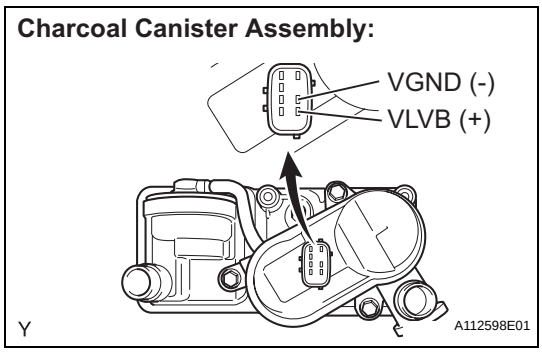

(a) Turn the ignition switch to OFF.
(b) Disconnect the J25 canister pump module connector.
(c) Apply the battery voltage to VLVB and VGND terminals of the canister pump module.
(d) Touch the canister pump module to confirm the vent valve operation.

Result

Test Results	Suspected Trouble Areas	Proceed To
Operating	1. Wire harness between vent valve and ECM 2. ECM	A

Test Results	Suspected Trouble Areas	Proceed To
Not operating	Vent valve	B

(e) Reconnect the canister connector.

B	Go to step 29

A

21 CHECK HARNESS AND CONNECTOR (ECM - CANISTER PUMP MODULE)

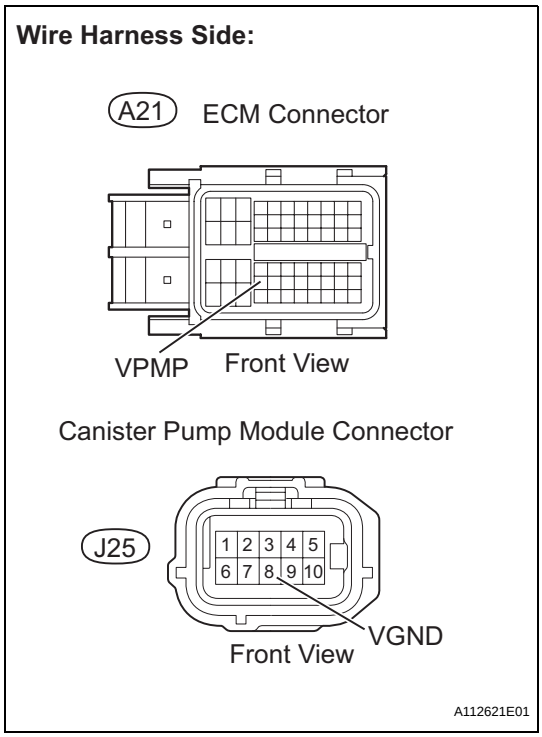

(a) Disconnect the A21 ECM connector.
(b) Disconnect the J25 canister pump module connector.
(c) Check the resistance between VPMP terminal of the ECM connector and VGND terminal of the canister pump module connector.

Result

Test Results	Suspected Trouble Areas	Proceed To
Below 1 Ω	ECM	A
10 kΩ or higher	Wire harness between ECM and canister pump module	B

(d) Reconnect the ECM connector.
(e) Reconnect the canister pump module connector.

A	Go to step 34
B	Go to step 31

22	PERFORM ACTIVE TEST USING INTELLIGENT TESTER (VACUUM PUMP (ALONE))

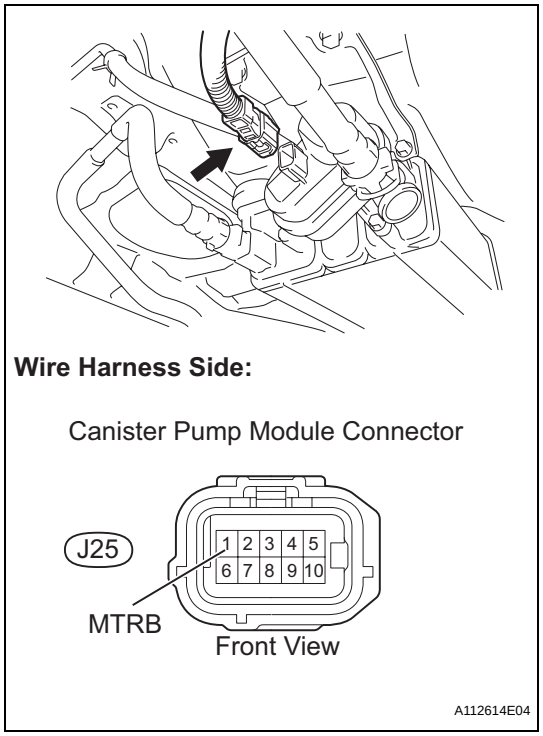

(a) Turn the ignition switch to OFF.
(b) Disconnect the J25 canister pump module connector.
(c) Turn the ignition switch to ON.
(d) On the intelligent tester, select the following menu items: DIAGNOSIS / ENHANCED OBD II / ACTIVE TEST / VACUUM PUMP (ALONE).
(e) Measure the voltage between MTRB terminal 1 of the canister pump module connector and the body ground when the leak detection pump is turned ON and OFF using the tester.

ES

Result

Test Results	Suspected Trouble Areas	Proceed To
Below 3 V when OFF 11 to 14 V when ON	1. Wire harness between leak detection pump and body ground 2. Leak detection pump	A
Below 3 V when OFF and ON	1. Wire harness between leak detection pump and ECM 2. ECM	B

B → Go to step 24

A

23	CHECK HARNESS AND CONNECTOR (CANISTER PUMP MODULE - BODY GROUND)

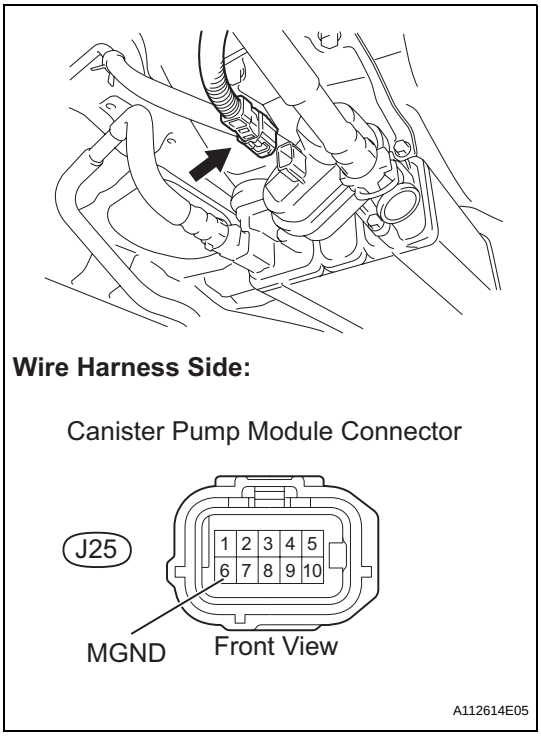

(a) Turn the ignition switch to OFF.
(b) Disconnect the J25 canister pump module connector.
(c) Check the resistance between MGND terminal of the canister pump module connector and the body ground.

Result

Test Results	Suspected Trouble Areas	Proceed To
Below 1 Ω	**Leak detection pump**	**A**
10 kΩ or higher	**Wire harness between canister pump module and body ground**	**B**

(d) Reconnect the canister pump module connector.

A	**Go to step 29**
B	**Go to step 31**

24 CHECK HARNESS AND CONNECTOR (ECM - CANISTER PUMP MODULE)

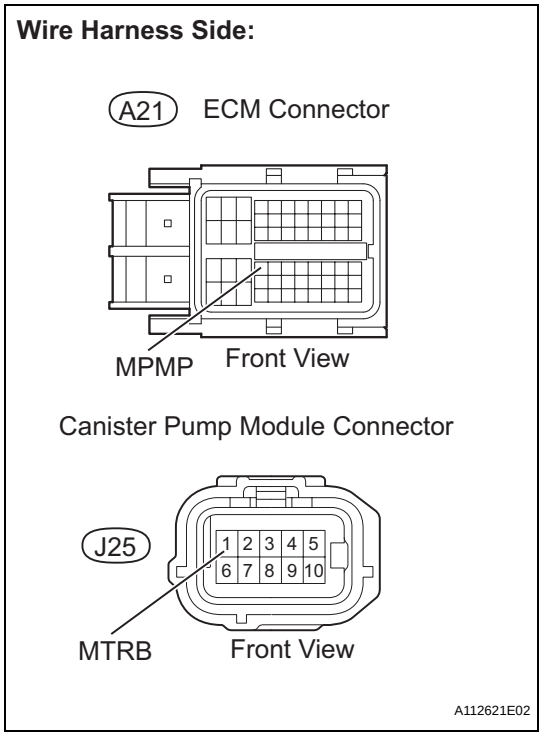

(a) Turn the ignition switch to OFF.
(b) Disconnect the J25 canister pump module connector.
(c) Disconnect the A21 ECM connector.
(d) Check the resistance between MPMP terminal of the ECM connector and MTRB terminal of the canister pump module connector.

ES

Result

Test Results	Suspected Trouble Areas	Proceed To
Below 1 Ω	ECM	A
10 kΩ or higher	Wire harness between ECM and canister pump module	B

(e) Reconnect the canister pump module connector.
(f) Reconnect the ECM connector.

A	Go to step 34
B	Go to step 31

25 INSPECT INTAKE MANIFOLD (EVAP PURGE PORT)

(a) Stop the engine.
(b) Disconnect the EVAP hose from the intake manifold.
(c) Start the engine.
(d) Use your finger to confirm that the port of the intake manifold has suction.

Result

Test Results	Suspected Trouble Areas	Proceed To
Suction applied	EVAP hose between intake manifold and purge VSV	A
No suction	Intake manifold	B

(e) Reconnect the EVAP hose.

A	Go to step 32
B	Go to step 33

26	CORRECTLY REINSTALL OR REPLACE FUEL CAP

HINT:
- When reinstalling the fuel cap, tighten it until a few click sounds are heard.
- When replacing the fuel cap, use a fuel cap that meets OEM specifications, and install it until a few click sounds are heard.

NEXT	Go to step 36

ES

27	REPLACE FUEL CAP

HINT:
When installing the fuel cap, tighten it until a few click sounds are heard.

NEXT	Go to step 36

28	LOCATE EVAP LEAK PART

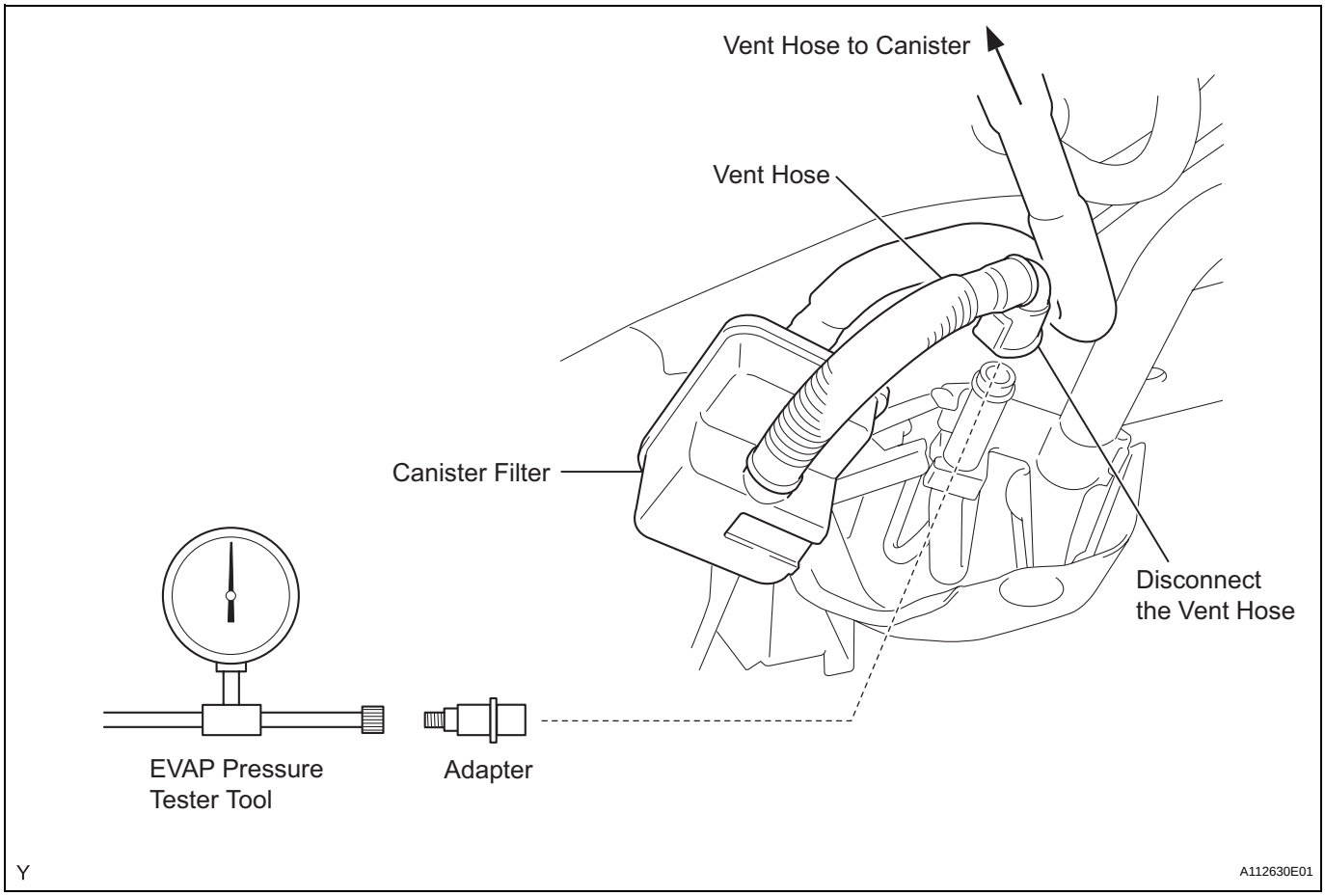

(a) Disconnect the vent hose.
(b) Connect the EVAP pressure tester tool to the vent hose with the adapter.

(c) Pressurize the EVAP system to 3.2 to 3.7 kPa (24 to 28 mmHg).
(d) Apply soapy water to the piping and connecting parts of the EVAP system.
(e) Look for areas where bubbles appear. This indicates the leak point.
(f) Repair or replace the leak point.
HINT:
Disconnect the hose between the canister and the fuel tank from the canister. Block the canister side and conduct an inspection. In this way, the fuel tank can be excluded as an area suspected of causing fuel leaks.

NEXT	Go to step 36

ES

29	REPLACE CHARCOAL CANISTER ASSEMBLY

(a) Replace the canister assembly (See page EC-7).
NOTICE:
When replacing the canister, check the canister pump module interior and related pipes for water, fuel and other liquids. If liquids are present, check for disconnections and/or cracks in the following: 1) the pipe from the air inlet port to the canister pump module; 2) the canister filter; and 3) the fuel tank vent hose.

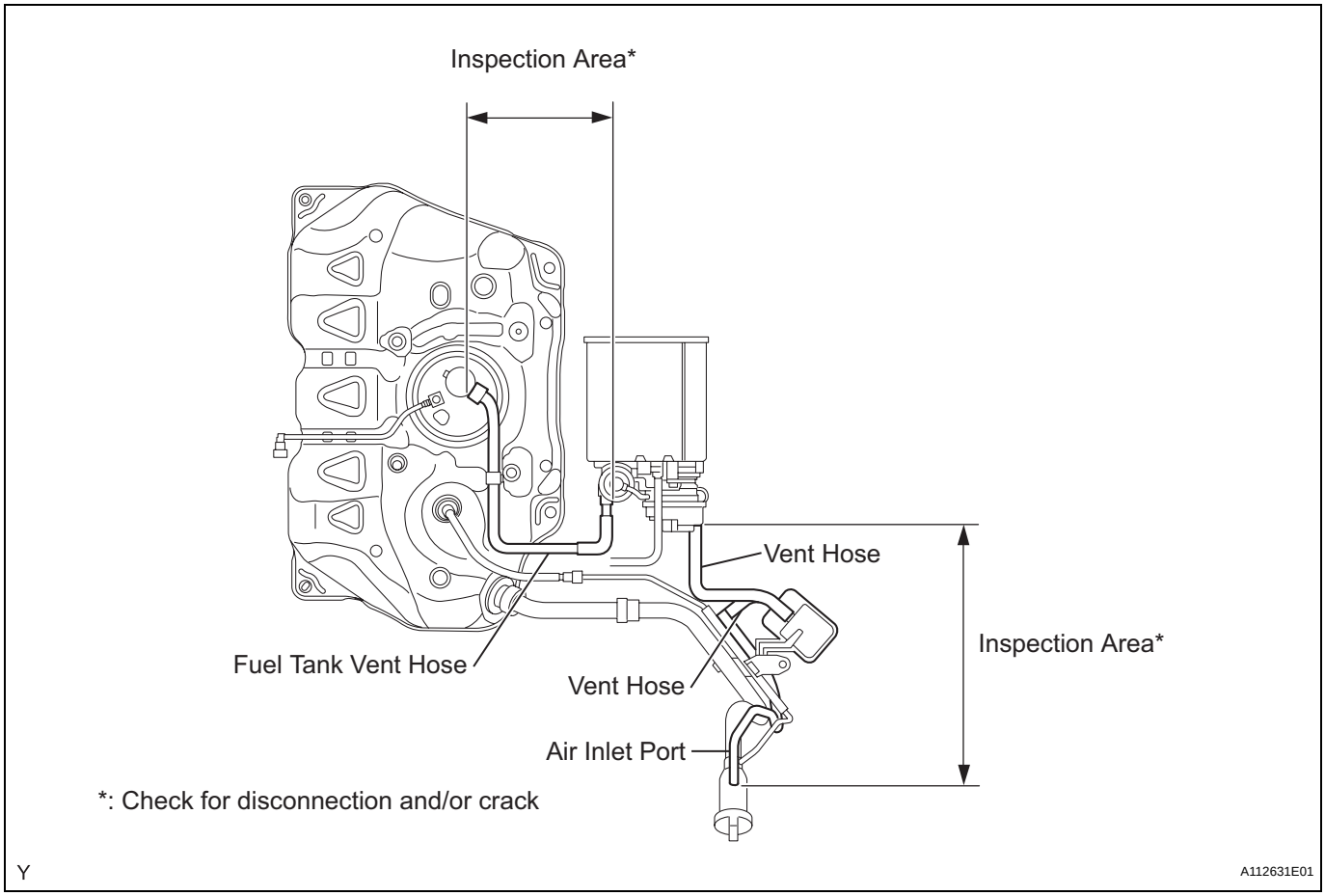

NEXT → Go to step 36

30	REPLACE DUTY VACUUM SWITCHING VALVE (PURGE VSV)

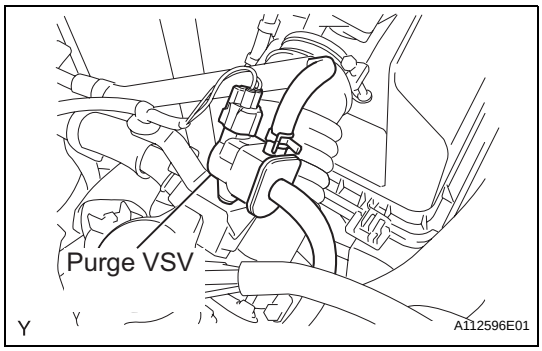

(a) Disconnect the connector and the hoses from the purge VSV.
(b) Remove the purge VSV.
(c) Install a new purge VSV.
(d) Reconnect the connector and hoses.

NEXT → Go to step 36

31	REPAIR OR REPLACE HARNESS OR CONNECTOR

NEXT → Go to step 36

32	REPLACE EVAP HOSE (INTAKE MANIFOLD - PURGE VSV)

NEXT → Go to step 36

33	INSPECT INTAKE MANIFOLD (EVAP PURGE PORT)

(a) Check that the EVAP purge port of the intake manifold is not clogged. If necessary, replace the intake manifold.

NEXT → Go to step 36

34	REPLACE ECM

(a) Replace the ECM (See page ES-431).

NEXT → Go to step 36

35	REPAIR OR REPLACE PARTS AND COMPONENTS INDICATED BY OUTPUT DTCS

(a) Repair the malfunctioning areas indicated by the DTCs that had been confirmed when the vehicle was brought in.

NEXT → Go to step 36

36	PERFORM EVAP SYSTEM CHECK (AUTO OPERATION)

NOTICE:

- **The EVAP SYSTEM CHECK (AUTO OPERATION) consists of five steps performed automatically by the intelligent tester. It takes a maximum of approximately 18 minutes.**
- **Do not perform the EVAP SYSTEM CHECK when the fuel tank is more than 90% full because the cut-off valve may be closed, making the fuel tank leak check unavailable.**
- **Do not run the engine in this step.**
- **When the temperature of the fuel is 35°C (95°F) or more, a large amount of vapor forms and any check results become inaccurate. When performing an EVAP SYSTEM CHECK, keep the temperature below 35°C (95°F).**

(a) Clear DTCs (See page ES-34).

(b) On the intelligent tester, select the following menu items: DIAGNOSIS / ENHANCED OBD II / SYSTEM CHECK / EVAP SYS CHECK / AUTO OPERATION.

(c) After the SYSTEM CHECK is completed, check for pending DTCs by selecting the following menu items: DIAGNOSIS / ENHANCED OBD II / DTC INFO / PENDING CODES.
HINT:
If no pending DTCs are found, the repair has been successfully completed.

ES

NEXT

COMPLETED

CONFIRMATION DRIVING PATTERN

HINT:
After a repair, check Monitor Status by performing the Key-Off Monitor Confirmation and Purge Flow Monitor Confirmation described below.

1. KEY-OFF MONITOR CONFIRMATION

(a) Preconditions
The monitor will not run unless:
- The vehicle has been driven for 10 minutes or more (in a city area or on a free way)
- The fuel tank is less than 90 % full
- The altitude is less than 8,000 ft (2,400 m)
- The Engine Coolant Temperature (ECT) is between 4.4°C and 35°C (40°F and 95°F)
- The Intake Air Temperature (IAT) is between 4.4°C and 35°C (40°F and 95°F)
- The vehicle remains stationary (the vehicle speed is 0 mph [0 km/h])

(b) Monitor Conditions
1. Allow the engine to idle for at least 5 minutes.
2. Turn the ignition switch to OFF and wait for 6 hours (8 or 10.5 hours).
HINT:
Do not start the engine until checking MONITOR STATUS. If the engine is started, the steps described above must be repeated.

(c) Monitor Status
1. Connect an intelligent tester to the DLC3.
2. Turn the ignition switch to ON and turn the tester ON.
3. Select the following menu items: DIAGNOSIS / ENHANCED OBD II / MONITOR STATUS.
4. Check the Monitor Status displayed on the tester.
HINT:
If INCMP is displayed, the monitor is not complete. Make sure that the preconditions have been met, and perform the Monitor Conditions again.

2. PURGE FLOW MONITOR CONFIRMATION (P0441)

HINT:
Perform this monitor confirmation after the Key-Off Monitor Confirmation shows COMPL (complete).

(a) Preconditions
The monitor will not run unless:
- The vehicle has been driven for 10 minutes or more (in a city area or on a free way)
- The ECT is between 4.4°C and 35°C (40°F and 95°F)
- The IAT is between 4.4°C and 35°C (40°F and 95°F)

(b) Monitor Conditions
1. Release the pressure from the fuel tank by removing and reinstalling the fuel cap.
2. Warm the engine up until the ECT reaches more than 75°C (167°F).
3. Increase the engine speed to 3,000 rpm once.
4. Allow the engine to idle and turn A/C ON for 1 minute.

(c) Monitor Status
1. Turn the ignition switch to OFF (where ON or the engine is running).
2. Connect an intelligent tester to the DLC3.
3. Turn the ignition switch to ON and turn the tester ON.
4. Select the following menu items: DIAGNOSIS / ENHANCED OBD II / MONITOR STATUS.
5. Check the Monitor Status displayed on the tester.
HINT:
If INCMP is displayed, the monitor is not complete. Make sure that the preconditions have been met, and perform the Monitor Conditions again.

MONITOR RESULT

Refer to CHECKING MONITOR STATUS (See page ES-17).

The test value and test limit information are described in the following table. This information is included under MONITOR RESULT in the emissions-related DTC sections:
- MID (Monitor Identification Data) is assigned to each emissions-related component.
- TID (Test Identification Data) is assigned to each test value.
- Scaling is used to calculate the test value indicated on generic OBD II scan tools.

EVAP - Key-off Type

MID	TID	Scaling	Unit	Description
$3D	$C9	Multiply by 0.001	kPa	Test value for small leak (P0456) Refer to pressure D*
$3D	$CA	Multiply by 0.001	kPa	Test value for gross leak (P0455) Refer to pressure E*
$3D	$CB	Multiply by 0.001	kPa	Test value for leak detection pump stuck OFF (P2401) Refer to pressure A*
$3D	$CD	Multiply by 0.001	kPa	Test value for leak detection pump stuck ON (P2402) Refer to pressure A*
$3D	$CE	Multiply by 0.001	kPa	Test value for vent valve stuck OFF (vent) (P2420) Refer to pressure C*
$3D	$CF	Multiply by 0.001	kPa	Test value for vent valve stuck ON (P2419) Refer to pressure A*
$3D	$D0	Multiply by 0.001	kPa	Test value for reference orifice low flow (P043E) Refer to pressure B*

MID	TID	Scaling	Unit	Description
$3D	$D1	Multiply by 0.001	kPa	Test value for reference orifice high flow (P043F) Refer to pressure A*
$3D	$D4	Multiply by 0.001	kPa	Test value for purge VSV stuck closed (P0441) Refer to pressure F*
$3D	$D5	Multiply by 0.001	kPa	Test value for purge VSV stuck open (P0441) Refer to pressure E*
$3D	$D7	Multiply by 0.001	kPa	Test value for purge flow insufficient (P0441) Refer to pressure G*

* Pressures A to G are indicated in the diagram below.

ES

Key-off Monitor:

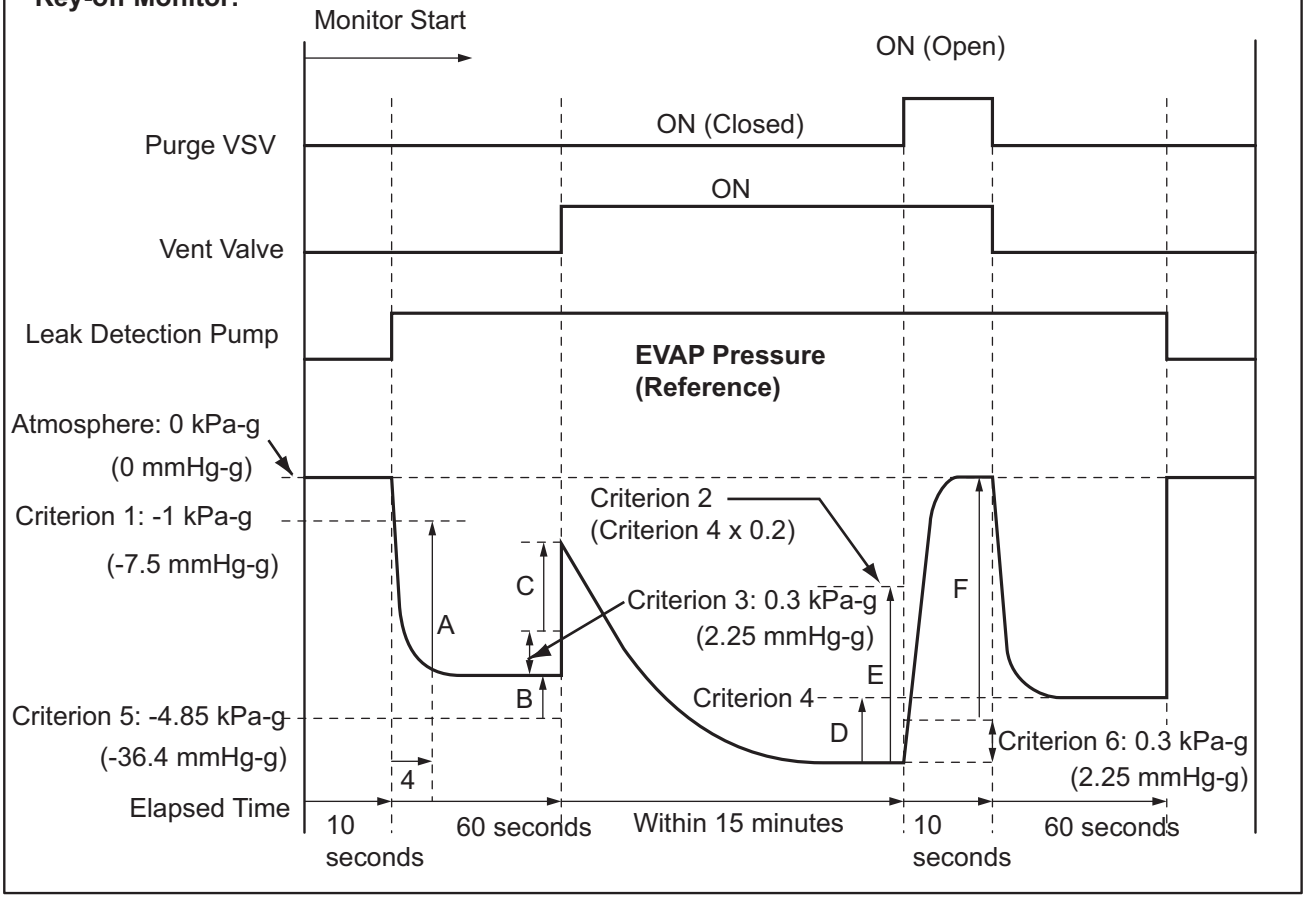

Purge Flow Monitor:

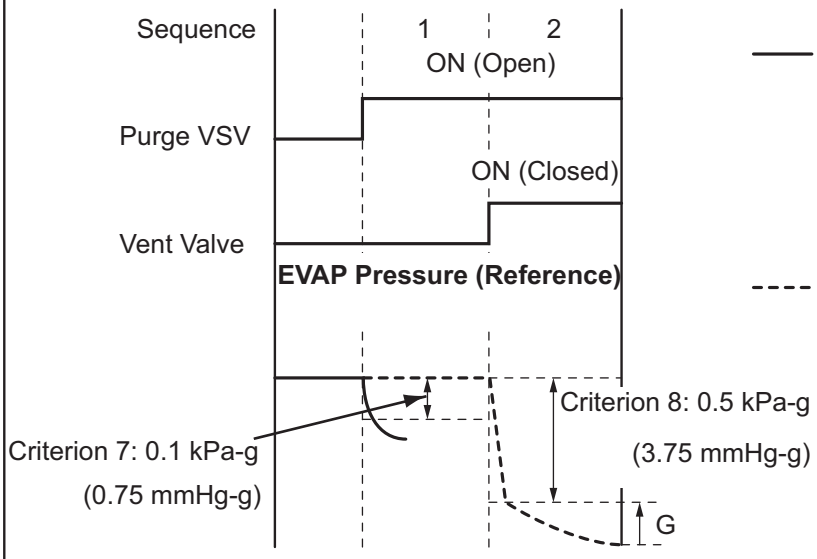

——— If pressure change in sequence 1 is greater than criterion 7, purge flow monitor is completed (functioning normally).

- - - - If pressure change in sequence 1 is smaller than criterion 7 and pressure change in sequence 2 is smaller than criterion 8, purge flow is insufficient.

Y

A106747E07

ECM Power Source Circuit

DESCRIPTION

When the ignition switch is turned to ON, the battery voltage is applied to the IGSW of the ECM. The output signal from the MREL terminal of the ECM causes a current to flow to the coil, closing the contacts of the integration relay (EFI relay) and supplying power to either terminal +B or +B2 of the ECM.

WIRING DIAGRAM

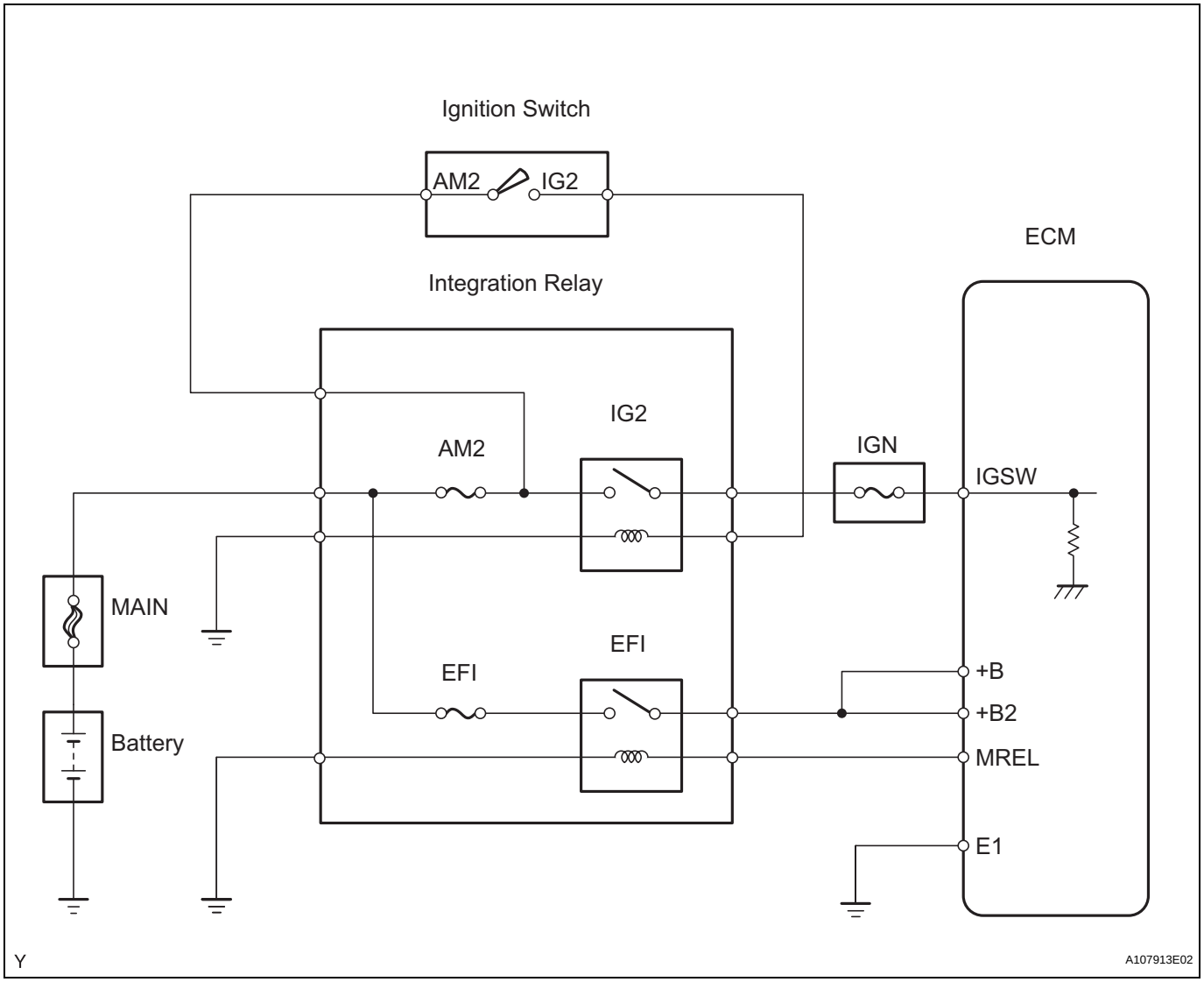

ES

INSPECTION PROCEDURE

1 INSPECT INTEGRATION RELAY (INTEGRATION RELAY - BODY GROUND)

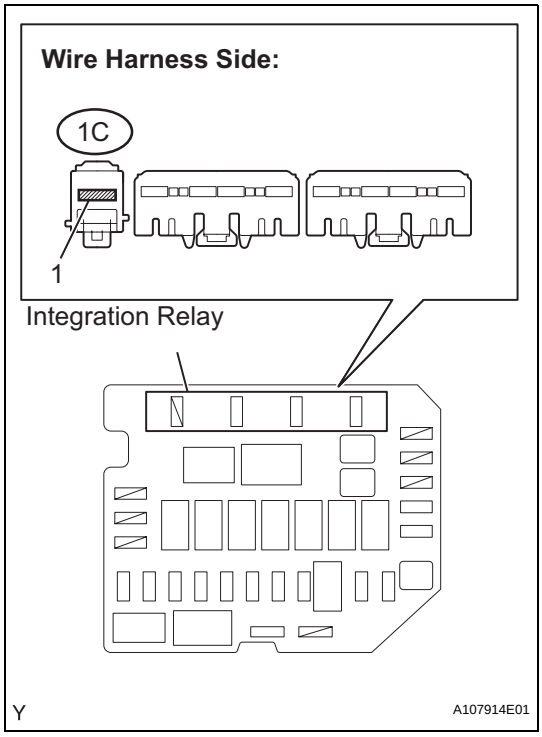

(a) Remove the integration relay from the engine room relay block.

(b) Measure the voltage between the terminal of the integration relay and body ground.

Standard voltage

Tester Connections	Specified Conditions
Engine room relay block (1C-1) - Body ground	11 to 14 V

(c) Reinstall the integration relay.

NG → **REPAIR OR REPLACE HARNESS OR CONNECTOR**

OK

2 INSPECT INTEGRATION RELAY (EFI RELAY AND IG2 RELAY)

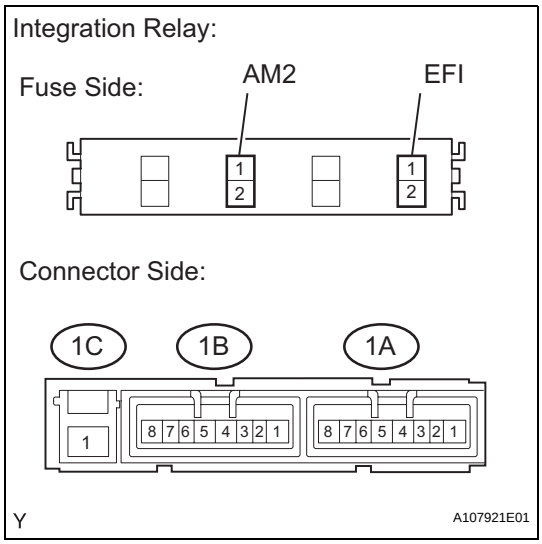

(a) Remove the integration relay from the engine room relay block.

(b) Inspect the EFI fuse and the AM2 fuse.

(1) Remove the EFI fuse and AM2 fuse from the integration relay.

(2) Check the resistance of the EFI fuse and AM2 fuse.

Standard resistance:

Below 1 Ω

(3) Reinstall the EFI fuse and the AM2 fuse.

(c) Inspect the EFI relay and the IG2 relay.

(1) Check the resistance between the terminals shown below.

Standard resistance

Tester Connections	Specified Conditions
1C-1 - 1A-4	10 kΩ or higher
	Below 1 Ω (when battery voltage is applied to terminals 1A-2 and 1A-3)
1C-1 - 1B-4	10 kΩ or higher
	Below 1 Ω (when battery voltage is applied to terminals 1A-2 and 1A-3)
1C-1 - 1B-1	Below 1 Ω

(2) Reinstall the integration relay.

NG → REPLACE INTEGRATION RELAY

OK

3 CHECK HARNESS AND CONNECTOR (+B, +B2 AND MREL CIRCUIT)

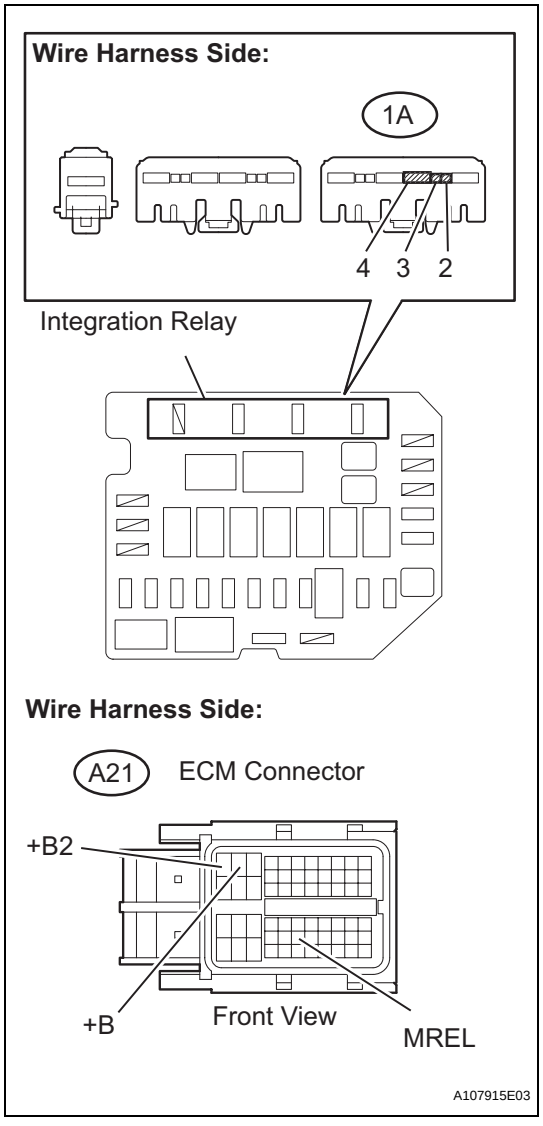

(a) Check the harness and the connectors between the integration relay and the ECM.
(1) Remove the integration relay from the engine room relay block.
(2) Disconnect the A21 ECM connector.
(3) Check the resistance.

Standard resistance (Check for open)

Tester Connections	Specified Conditions
MREL (A21-44) - Engine room relay block (1A-2)	Below 1 Ω
+B (A21-2) - Engine room relay block (1A-4)	
+B2 (A21-1) - Engine room relay block (1A-4)	

Standard resistance (Check for short)

Tester Connections	Specified Conditions
MREL (A21-44) or Engine room relay block (1A-2) - Body ground	10 kΩ or higher
+B (A21-2) or Engine room relay block (1A-4) - Body ground	
+B2 (A21-1) or Engine room relay block (1A-4) - Body ground	

(b) Check the harness and the connectors between the integration relay and body ground.
(1) Check the resistance.

Standard resistance (Check for open)

Tester Connections	Specified Conditions
Engine room relay block (1A-3) - Body ground	Below 1 Ω

(c) Reinstall the integration relay.
(d) Reconnect the ECM connector.

NG → REPAIR OR REPLACE HARNESS OR CONNECTOR

OK

4	CHECK HARNESS AND CONNECTOR (ECM - BODY GROUND)

Wire Harness Side:

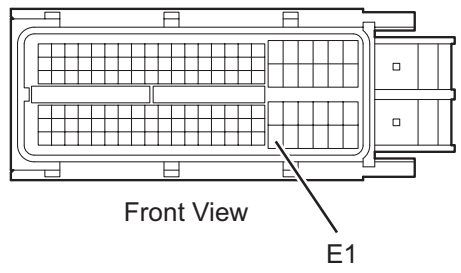

A107892E01

(a) Disconnect the C20 ECM connector.
(b) Check the resistance.
Standard resistance (Check for open)

Tester Connections	Specified Conditions
E1 (C20-104) - Body ground	Below 1 Ω

(c) Reconnect the ECM connector.

NG → **REPAIR OR REPLACE HARNESS OR CONNECTOR**

OK

5	INSPECT ECM (IGSW VOLTAGE)

Wire Harness Side:

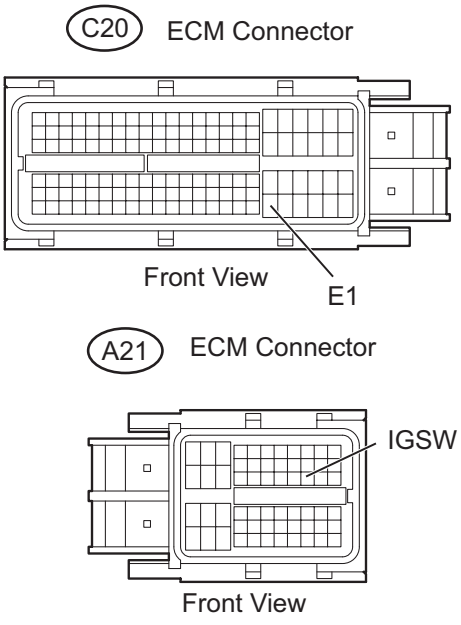

A107934E01

(a) Disconnect the C20 and A21 ECM connectors.
(b) Turn the ignition switch to ON.
(c) Measure the voltage between the terminals of the C20 and A21 ECM connectors.
Standard voltage

Tester Connections	Specified Conditions
IGSW (A21-28) - E1 (C20-104)	11 to 14 V

(d) Reconnect the ECM connectors.

OK → **REPLACE ECM**

NG

6	INSPECT FUSE (IGN FUSE)

Main Body ECU:

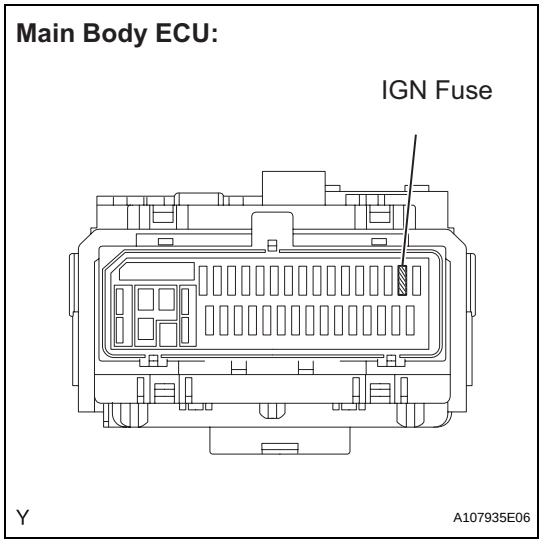

(a) Remove the IGN fuse from the main body ECU.
(b) Check the IGN fuse resistance.
Standard resistance:
Below 1 Ω
(c) Reinstall the IGN fuse.

NG → **CHECK FOR SHORTS IN ALL HARNESSES AND CONNECTORS CONNECTED TO FUSE AND REPLACE FUSE**

OK

ES

7	CHECK HARNESS AND CONNECTOR (INTEGRATION RELAY - ECM, INTEGRATION RELAY - BODY GROUND)

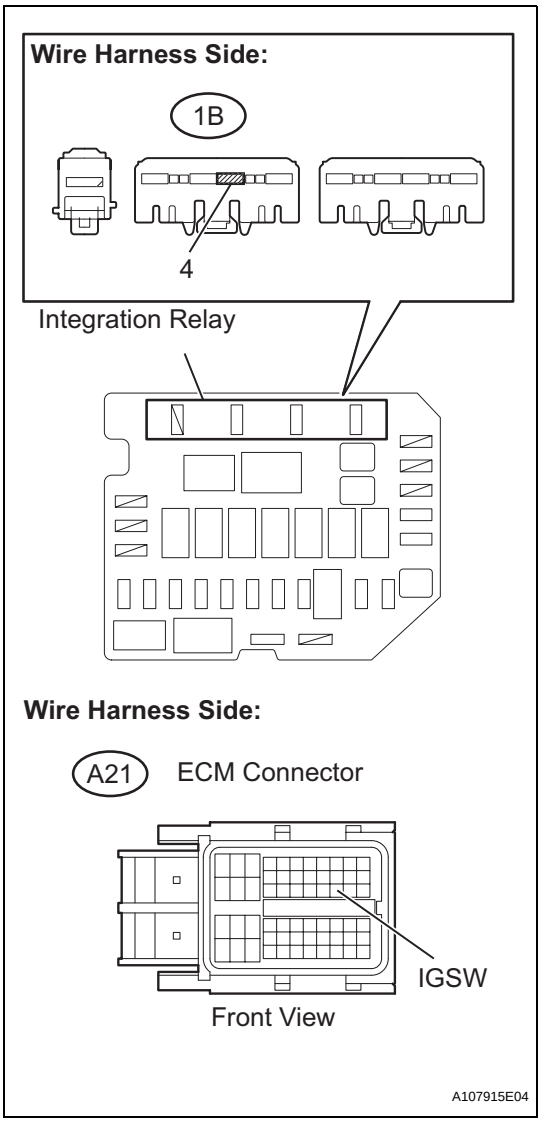

(a) Remove the integration relay from the engine room relay block.
(b) Disconnect the A21 ECM connector.
(c) Check the resistance.

Standard resistance (Check for open)

Tester Connections	Specified Conditions
Engine room relay block (1B-4) - IGSW (A21-28)	Below 1 Ω

Standard resistance (Check for short)

Tester Connections	Specified Conditions
Engine room relay block (1B-4) or IGSW (A21-28) - Body ground	10 kΩ or higher

(d) Reinstall the integration relay.
(e) Reconnect the ECM connector.

NG → **REPAIR OR REPLACE HARNESS OR CONNECTOR**

OK

8	CHECK HARNESS AND CONNECTOR (INTEGRATION RELAY - IGNITION SWITCH ASSEMBLY)

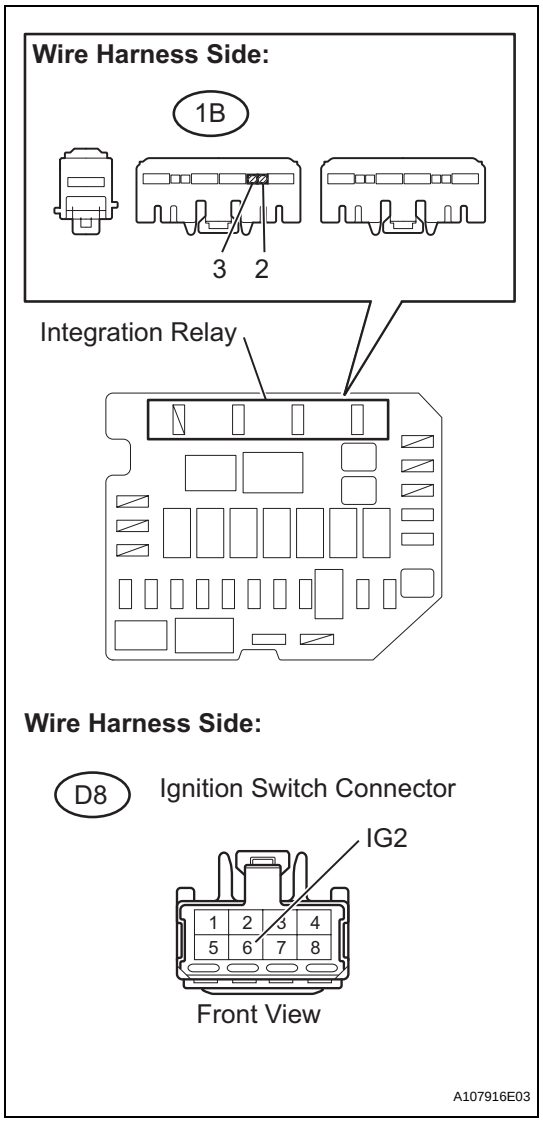

(a) Check the harness and the connectors between the integration relay and the ignition switch.
  (1) Remove the integration relay from the engine room relay block.
  (2) Disconnect the D8 ignition switch connector.
  (3) Check the resistance.
    Standard resistance (Check for open)

Tester Connections	Specified Conditions
Engine room relay block (1B-2) - IG2 (D8-6)	Below 1 Ω

Standard resistance (Check for short)

Tester Connections	Specified Conditions
Engine room relay block (1B-2) or IG2 (D8-6) - Body ground	10 kΩ or higher

(b) Check the harness and the connectors between the integration relay and body ground.
  (1) Check the resistance.
    Standard resistance (Check for open)

Tester Connections	Specified Conditions
Engine room relay block (1B-3) - Body ground	Below 1 Ω

(c) Reinstall the integration relay.
(d) Reconnect the ignition switch connector.

NG → **REPAIR OR REPLACE HARNESS OR CONNECTOR**

OK

ES

9	INSPECT IGNITION OR STARTER SWITCH ASSEMBLY

Component Side :

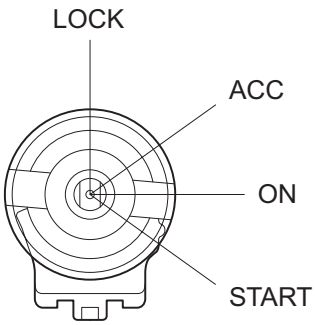

Ignition Switch

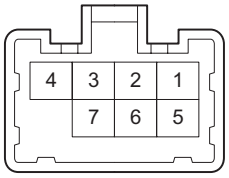

Front View

Y A107906E01

(a) Disconnect the D8 ignition switch connector.
(b) Check the resistance between the terminals shown below.

Standard resistance

Key Positions	Tester Connections	Specified Conditions
LOCK	-	10 kΩ or higher
ACC	2-4	Below 1 Ω
ON	1-2-4	
	5-6	
START	1-3-4	
	5-6-7	

(c) Reconnect the ignition switch connector.

NG → **REPLACE IGNITION OR STARTER SWITCH ASSEMBLY**

OK

REPAIR OR REPLACE HARNESS OR CONNECTOR

VC Output Circuit

DESCRIPTION

The ECM constantly generates 5 V power from the battery voltages supplied to the +B (BATT) terminal to operate the microprocessor. The ECM also provides this power to the sensors through the VC output circuit.

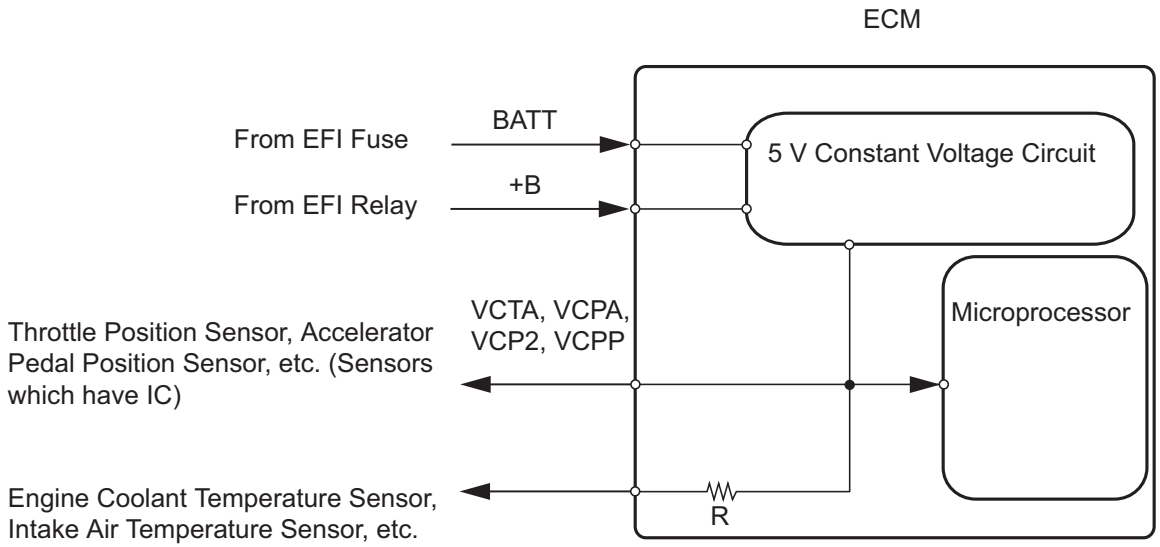

When the VC circuit is short-circuited, the microprocessor in the ECM and sensors that are supplied with power through the VC circuit are inactivated because the power is not supplied from the VC circuit. Under this condition, the system does not start up and the MIL does not illuminate even if the system malfunctions.

HINT:

Under normal conditions, the MIL is illuminated for several seconds when the ignition switch is first turned to ON. The MIL goes off when the engine is started.

WIRING DIAGRAM

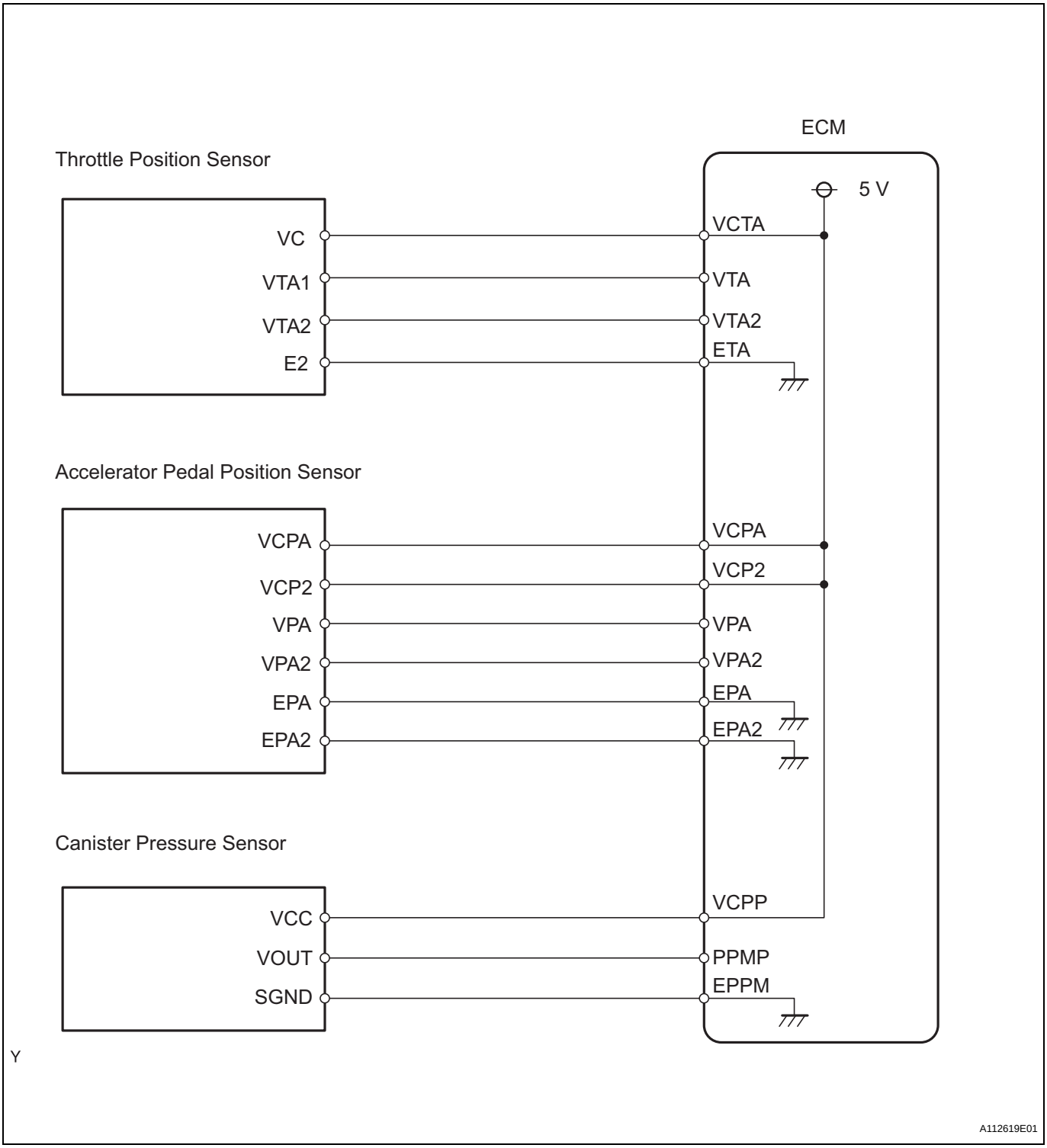

INSPECTION PROCEDURE

1	**CHECK MIL**

(a) Check that Malfunction Indicator Lamp (MIL) lights up when turning the ignition switch ON.

OK:
MIL lights up

OK → **SYSTEM OK**

NG

2	CHECK COMMUNICATION BETWEEN INTELLIGENT TESTER AND ECM

(a) Connect the intelligent tester to the DLC3.
(b) Turn the ignition switch to ON and tester ON.
(c) Check the communication between the tester and ECM.

Result

Result	Proceed To
Communication is possible	A
Communication is not possible	B

A → **GO TO MIL CIRCUIT**

B

3	CHECK MIL (THROTTLE POSITION SENSOR)

(a) Disconnect the C17 throttle body connector.
(b) Turn the ignition switch to ON.
(c) Check the MIL.

Result

Result	Proceed To
MIL illuminates	A
MIL does not illuminate	B

(d) Reconnect the throttle body connector.

A → **REPLACE THROTTLE BODY ASSEMBLY**

B

4	CHECK MIL (ACCELERATOR PEDAL POSITION SENSOR)

(a) Disconnect the A20 accelerator pedal position sensor connector.
(b) Turn the ignition switch to ON.
(c) Check the MIL.

Result

Result	Proceed To
MIL illuminates	A
MIL does not illuminate	B

(d) Reconnect the accelerator pedal position sensor connector.

A → **REPLACE ACCELERATOR PEDAL POSITION SENSOR**

B

5	CHECK MIL (CANISTER PUMP MODULE)

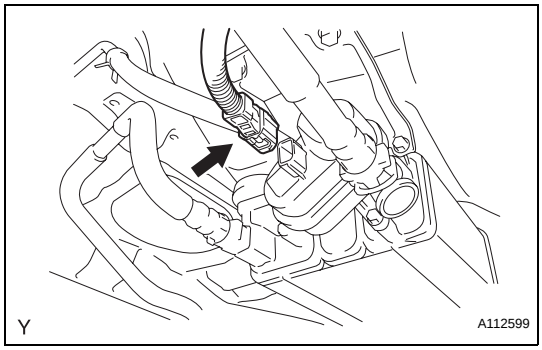

(a) Disconnect the J25 canister pump module connector.
(b) Turn the ignition switch to ON.
(c) Check the MIL.

ES

Result

Result	Proceed To
MIL illuminates	A
MIL does not illuminate	B

(d) Reconnect the canister pump module connector.

A → **REPLACE CHARCOAL CANISTER ASSEMBLY**

B

6	CHECK HARNESS AND CONNECTOR

(a) Disconnect the C17 throttle body connector.
(b) Disconnect the A20 accelerator pedal position sensor connector.
(c) Disconnect the J25 canister pump module connector.

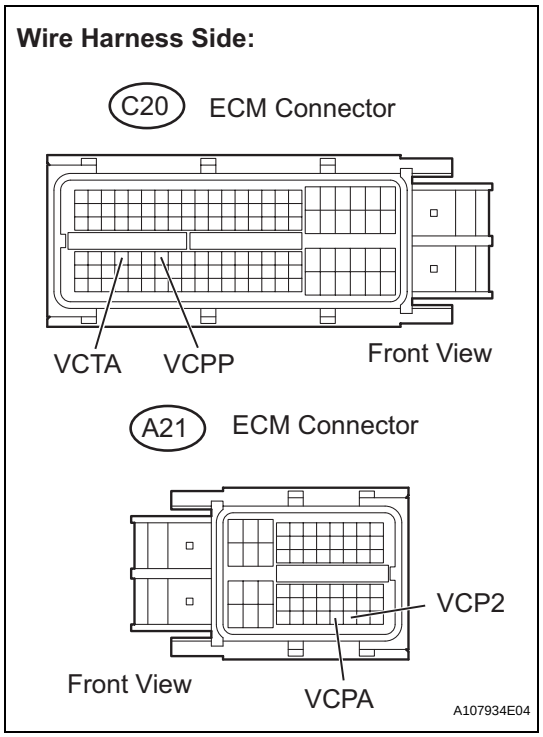

(d) Disconnect the A21 and C20 ECM connectors.
(e) Check the resistance.

Standard resistance (Check for short)

Tester Connections	Specified Conditions
VCTA (C20-67) - Body ground	10 kΩ or higher
VCPA (A21-57) - Body ground	
VCP2 (A21-58) - Body ground	
VCPP (C20-70) - Body ground	

(f) Reconnect the throttle body connector.
(g) Reconnect the accelerator pedal position sensor connector.
(h) Reconnect the canister pump module connector.
(i) Reconnect the ECM connectors.

ES

NG → **REPAIR OR REPLACE HARNESS OR CONNECTOR**

OK

REPLACE ECM

Fuel Pump Control Circuit

DESCRIPTION

When the engine is cranked, the starter relay drive signal output from the STAR terminal of the ECM is input into the STA terminal of the ECM, and NE signal generated by the crankshaft position sensor is also input into the NE+ terminal. Thus, the ECM interprets that the engine is cranked, and turns the transistor Tr1 in the ECM internal circuit ON. The current flows to the C/OPN (Circuit Opening) relay by turning the Tr1 ON. Then, the fuel pump operates.
While the NE signal is input into the ECM, when engine is running, the ECM turns the Tr1 on continuously.

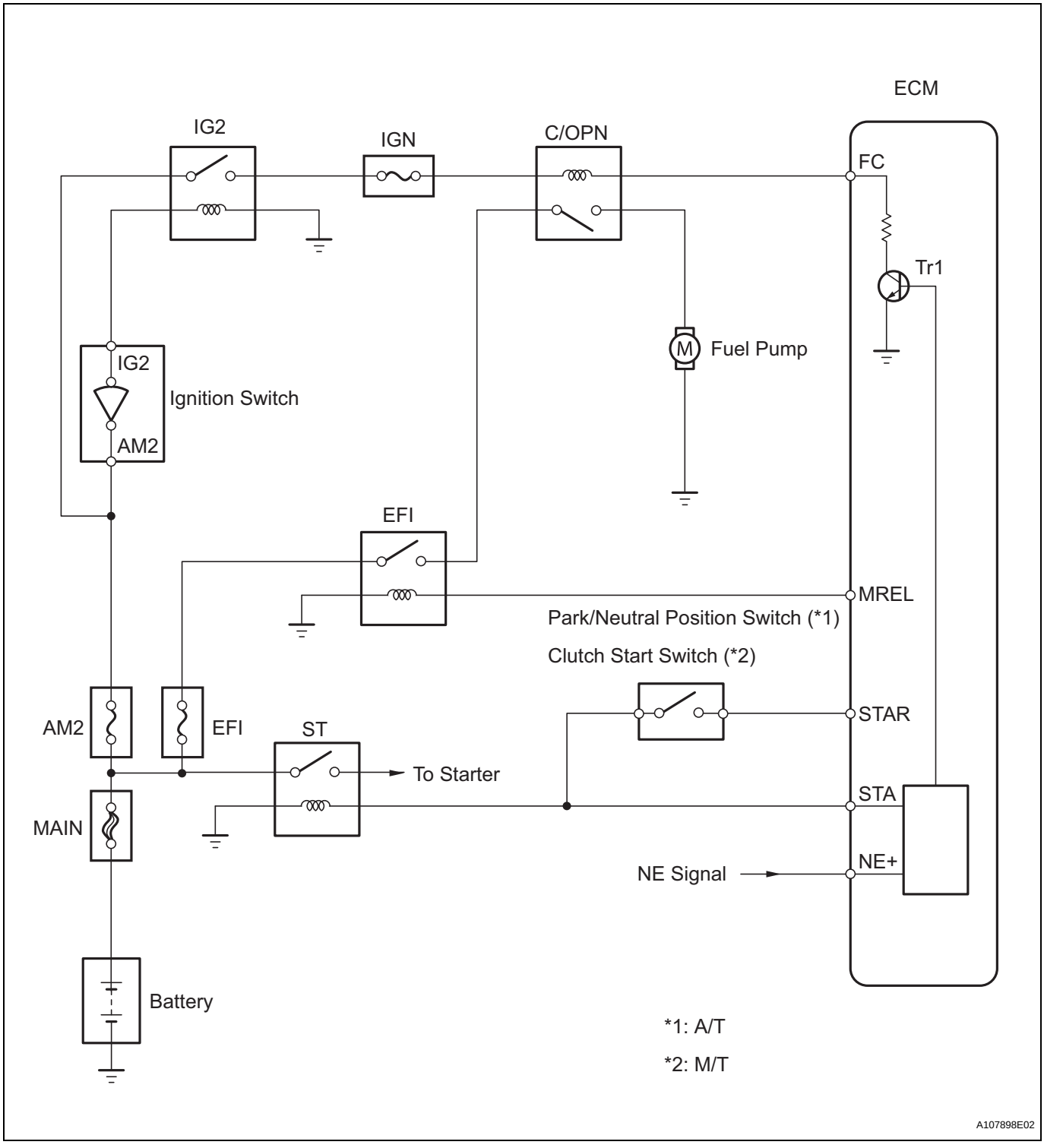

WIRING DIAGRAM

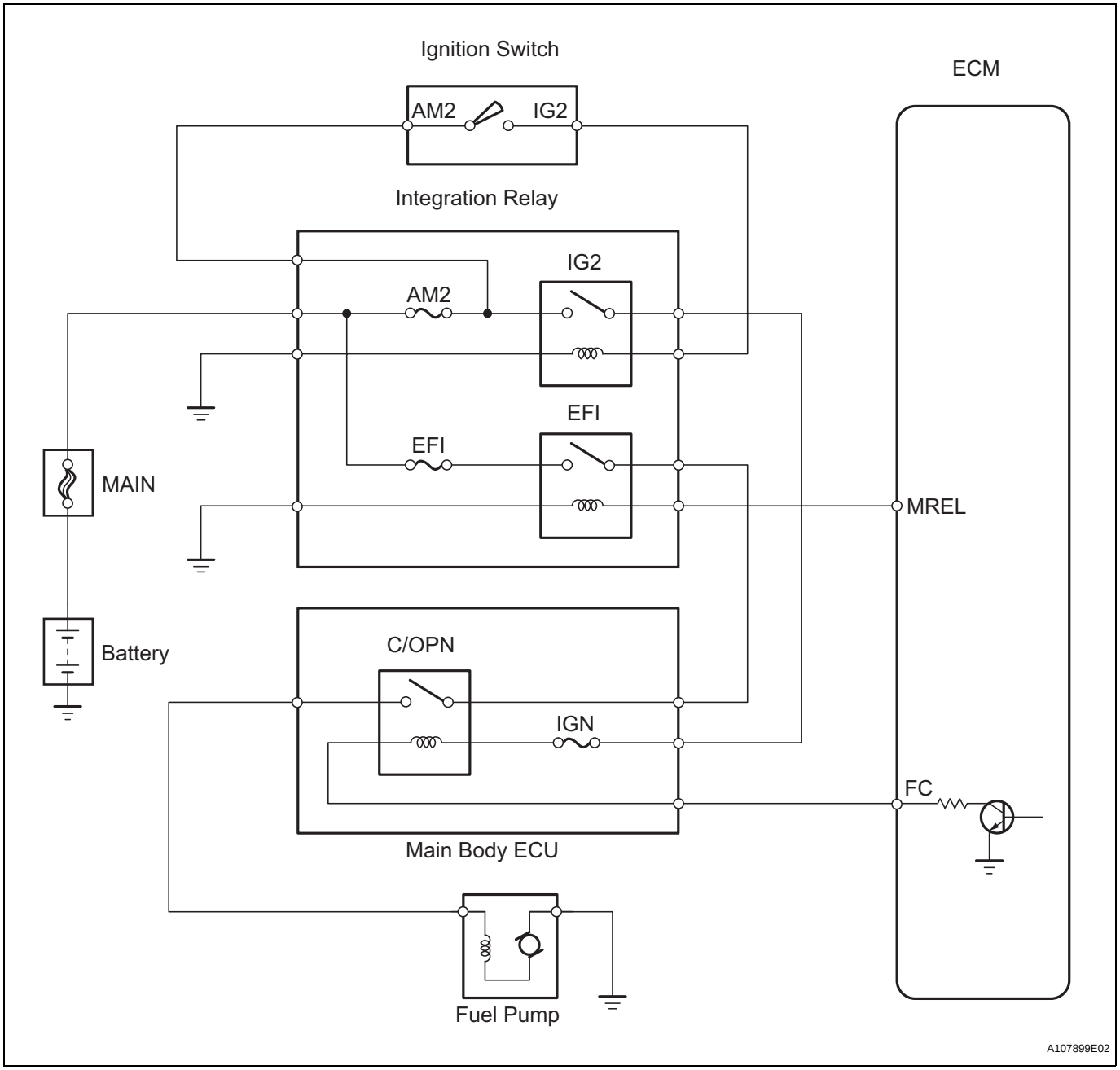

INSPECTION PROCEDURE

1	**PERFORM ACTIVE TEST USING INTELLIGENT TESTER (FUEL PUMP/SPD)**

(a) Connect an intelligent tester to the DLC3.
(b) Turn the ignition switch to ON and turn the tester ON.
(c) Select the following menu items: DIAGNOSIS / ENHANCED OBD II / ACTIVE TEST / FUEL PUMP/ SPD.
(d) Check whether the fuel pump operating sound occurs when perform the Active Test on the tester.
OK:
Fuel pump operating sound occurs.

OK → Go to step 8

NG

2 INSPECT MAIN BODY ECU (C/OPN RELAY INPUT VOLTAGE)

Main Body ECU:

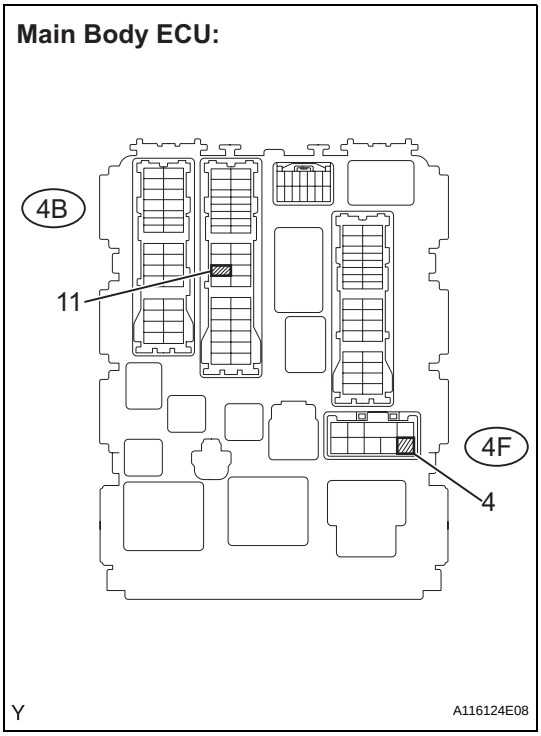

(a) Measure the voltage between the terminal of the main body ECU and the body ground when the ignition switch is turned to ON and OFF.

Standard voltage

Tester Connections	Ignition Switch Conditions	Specified Conditions
4B-11 - Body ground	OFF	Below 1 V
4F-4 - Body ground		
4B-11 - Body ground	ON	11 to 14 V
4F-4 - Body ground		

OK → Go to step 4

NG

3	CHECK HARNESS AND CONNECTOR (MAIN BODY ECU - INTEGRATION RELAY)

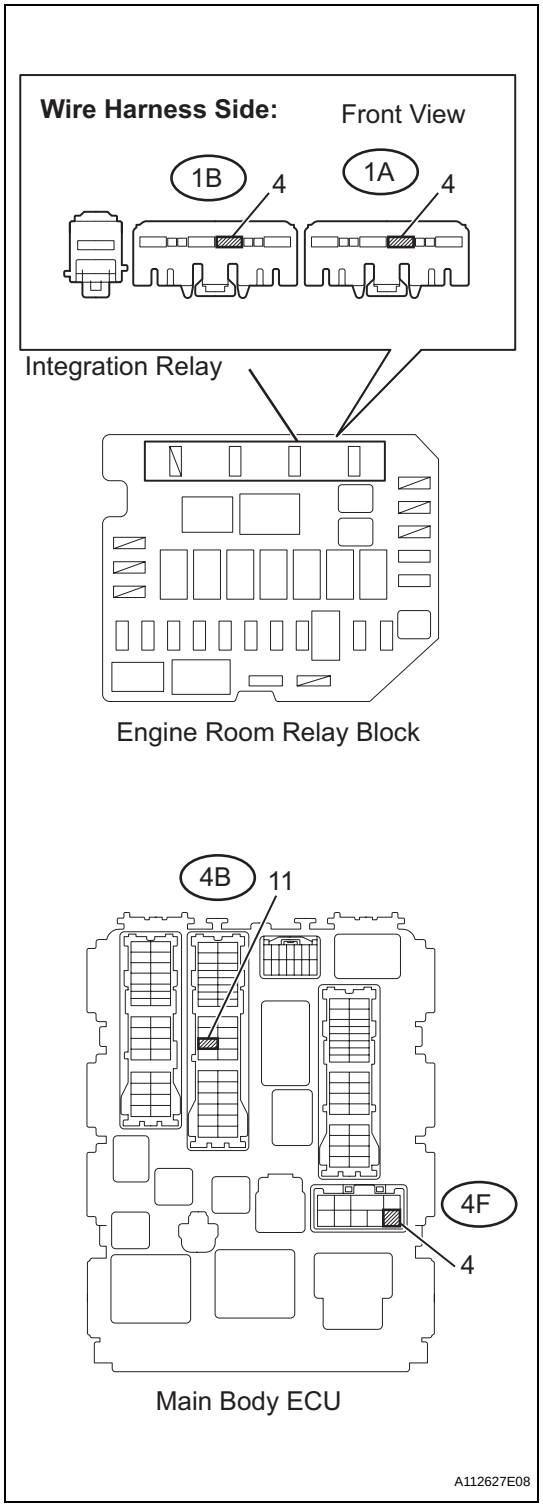

(a) Remove the integration relay from the engine room relay block.
(b) Disconnect the main body ECU connector.
(c) Check the resistance.

Standard resistance (Check for open)

Tester Connections	Specified Conditions
1B-4 - 4F-4	Below 1 Ω
1A-4 - 4B-11	

Standard resistance (Check for short)

Tester Connections	Specified Conditions
4F-4 - Body ground	10 kΩ or higher
4B-11 - Body ground	

(d) Reinstall the integration relay.
(e) Reconnect the main body ECU connector.

NG → **REPAIR OR REPLACE HARNESS OR CONNECTOR**

OK

GO TO ECM POWER SOURCE CIRCUIT

ES

4	INSPECT MAIN BODY ECU (C/OPN RELAY)

Main Body ECU:

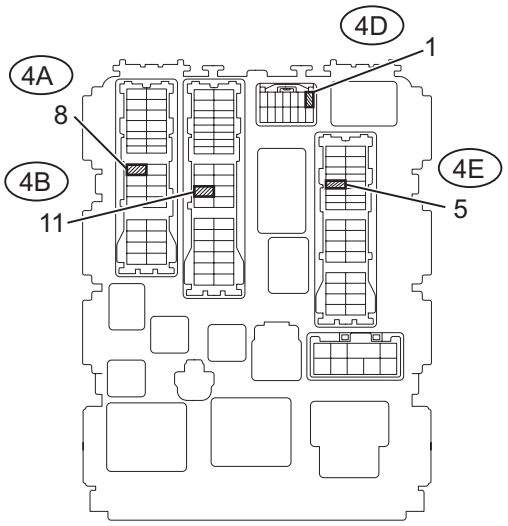

(a) Remove the main body ECU.
(b) Check the C/OPN relay resistance.
Standard resistance

Tester Connections	Specified Conditions
4B-11 - 4A-8	10 kΩ or higher
	Below 1 Ω (when battery voltage is applied to terminals 4D-1 and 4E-5)

HINT:
Relay coil circuit between 4D-1 and 4E-5 is not through IGN fuse.
(c) Reinstall the main body ECU.

NG → **REPLACE MAIN BODY ECU**

OK

ES

5	CHECK HARNESS AND CONNECTOR (MAIN BODY ECU - ECM)

Wire Harness Side:

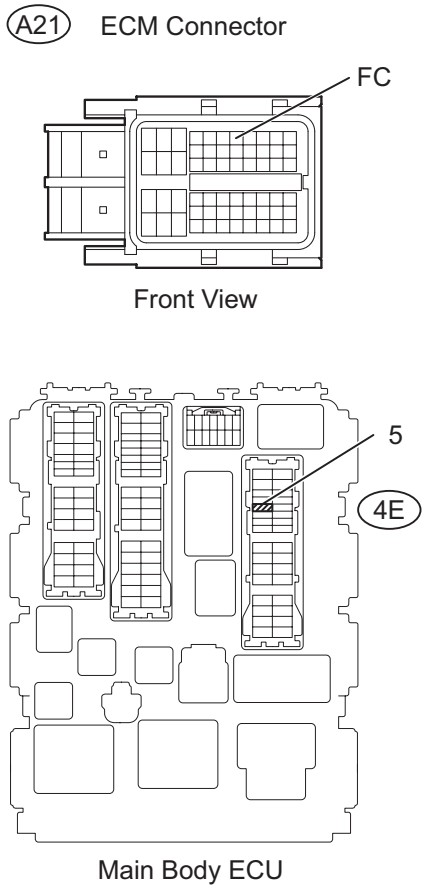

A115687E03

(a) Disconnect the A21 ECM connector.
(b) Disconnect the 4E connector from main body ECU.
(c) Check the resistance.

Standard resistance (Check for open)

Tester Connections	Specified Conditions
Main Body ECU (4E-5) - FC (A21-7)	Below 1 Ω

Standard resistance (Check for short)

Tester Connections	Specified Conditions
Main body ECU (4E-5) or FC (A21-7) - Body ground	10 kΩ or higher

(d) Reconnect the main body ECU and the ECM connectors.

NG → **REPAIR OR REPLACE HARNESS OR CONNECTOR**

OK

ES

6 CHECK HARNESS AND CONNECTOR (C/OPN RELAY - FUEL PUMP - BODY GROUND)

Wire Harness Side:

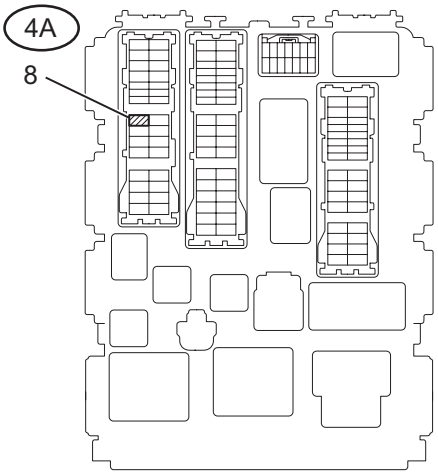

Wire Harness Side:

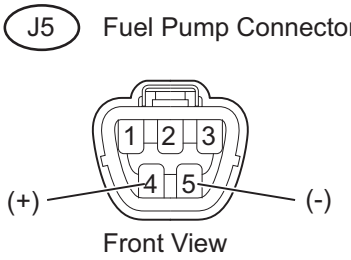

A107901E04

(a) Check the harness and the connectors between the main body ECU and the fuel pump.
 (1) Disconnect the 4A main body ECU connector.
 (2) Disconnect the J5 fuel pump connector.
 (3) Check the resistance.
 Standard resistance (Check for open)

Tester Connections	Specified Conditions
Main body ECU (4A-8) - Fuel pump (J5-4)	Below 1 Ω

Standard resistance (Check for short)

Tester Connections	Specified Conditions
Main body ECU (4A-8) or Fuel pump (J5-4) - Body ground	10 kΩ or higher

(b) Check the harness and the connectors between the fuel pump and the body ground.
 (1) Disconnect the J5 fuel pump connector.
 (2) Check the resistance.
 Standard resistance (Check for open)

Tester Connections	Specified Conditions
Fuel pump (J5-5) - Body ground	Below 1 Ω

(c) Reconnect the main body ECU connector.
(d) Reconnect the fuel pump connector.

NG → **REPAIR OR REPLACE HARNESS OR CONNECTOR**

OK

7 INSPECT FUEL PUMP

Component Side :

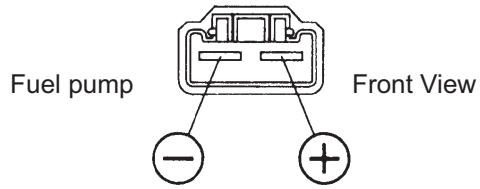

A095616E03

(a) Inspect fuel pump resistance.
 (1) Measure the resistance between the terminals.
 Standard resistance:
 0.2 to 3.0 Ω at 20°C (68°F)
(b) Inspect fuel pump operation.
 (1) Apply the battery voltage to both the terminals. Check that the pump operates.
 NOTICE:
 - **These tests must be done quickly (within 10 seconds) to prevent the coil from burning out.**
 - **Keep the fuel pump as far away from the battery as possible.**

- **Always switch at the battery side.**

NG → **REPLACE FUEL PUMP**

OK

REPLACE ECM

8	READ VALUE USING INTELLIGENT TESTER (STARTER SIG)

(a) Connect the intelligent tester to the DLC3.
(b) Turn the ignition switch to ON and turn the tester ON.
(c) Select the following menu items: DIAGNOSIS / ENHANCED OBD II / DATA LIST / PRIMARY / STARTER SIG.
(d) Check the result when the ignition switch is turned to ON and START.
Standard

Ignition Switch Position	ON	START
Starter Signal	OFF	ON

NG → **REPAIR OR REPLACE STARTING SYSTEM**

OK

9	READ VALUE USING INTELLIGENT TESTER (ENGINE SPD)

(a) Connect the intelligent tester to the DLC3.
(b) Turn the ignition switch to ON and turn the tester ON.
(c) Select the following menu items: DIAGNOSIS / ENHANCED OBD II / DATA LIST / PRIMARY / ENGINE SPD.
(d) Read the values displayed on the tester while cranking.
Standard:
Values are displayed continuously.

NG → **REPAIR OR REPLACE CRANKSHAFT POSITION SENSOR CIRCUIT**

OK

REPLACE ECM

Cranking Holding Function Circuit

DESCRIPTION

The cranking holding control system provides a current to the starter when the ECM detects the ignition switch's start signal (STSW). When the ECM judges that the engine has started, the system cuts the current to the starter. When the ECM receives the STSW signal, it turns on the ACC (Accessory) relay, which prevents flickering of the combination meter, clock and audio system. Also, the ECM sends a signal to the ECM's STAR terminal. Then the STAR output signal travels through the Park/Neutral Position (PNP) switch to the ST relay, causing the starter to activate. When the engine is cranking, the starter operation signal is sent to the ECM's STA terminal.

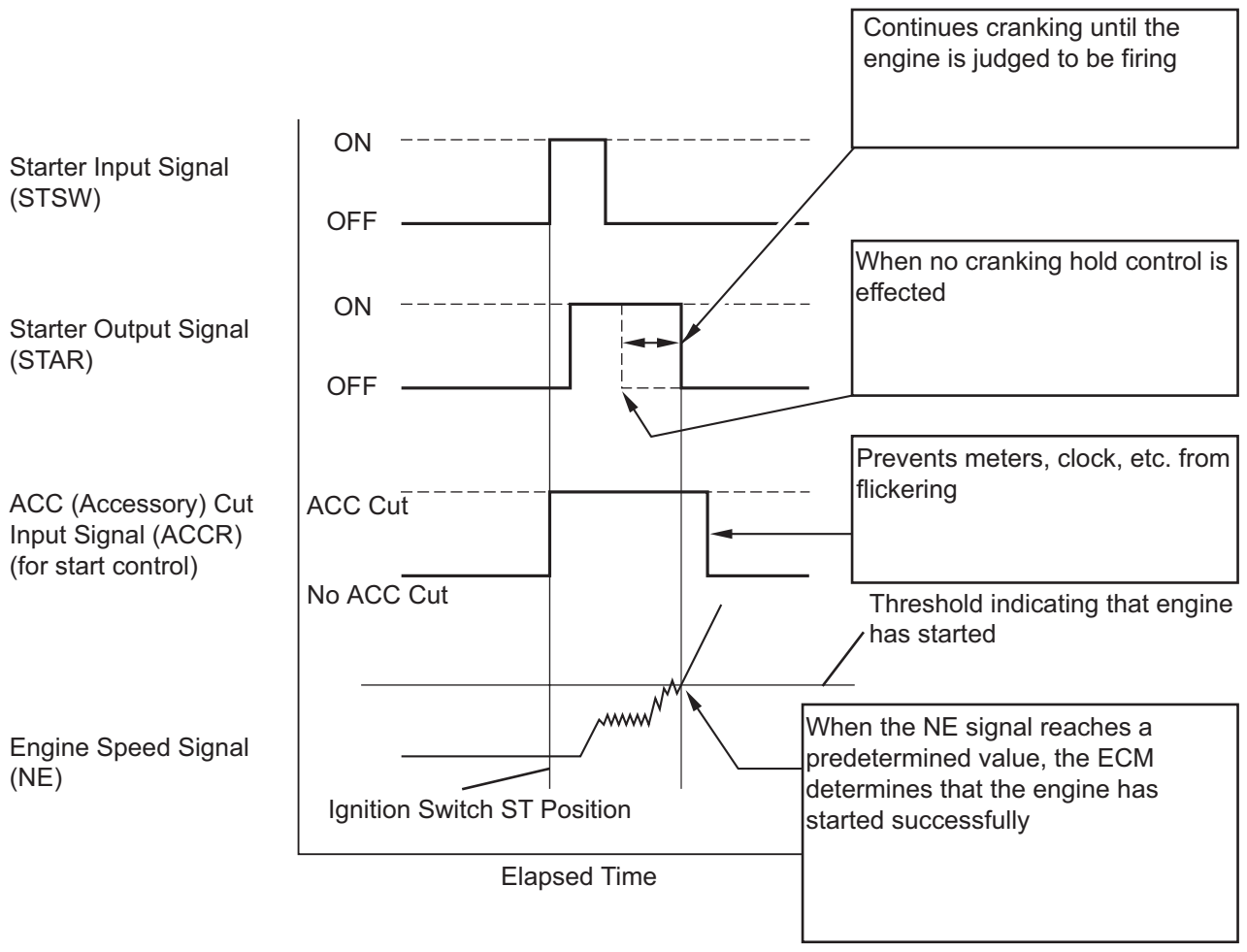

WIRING DIAGRAM

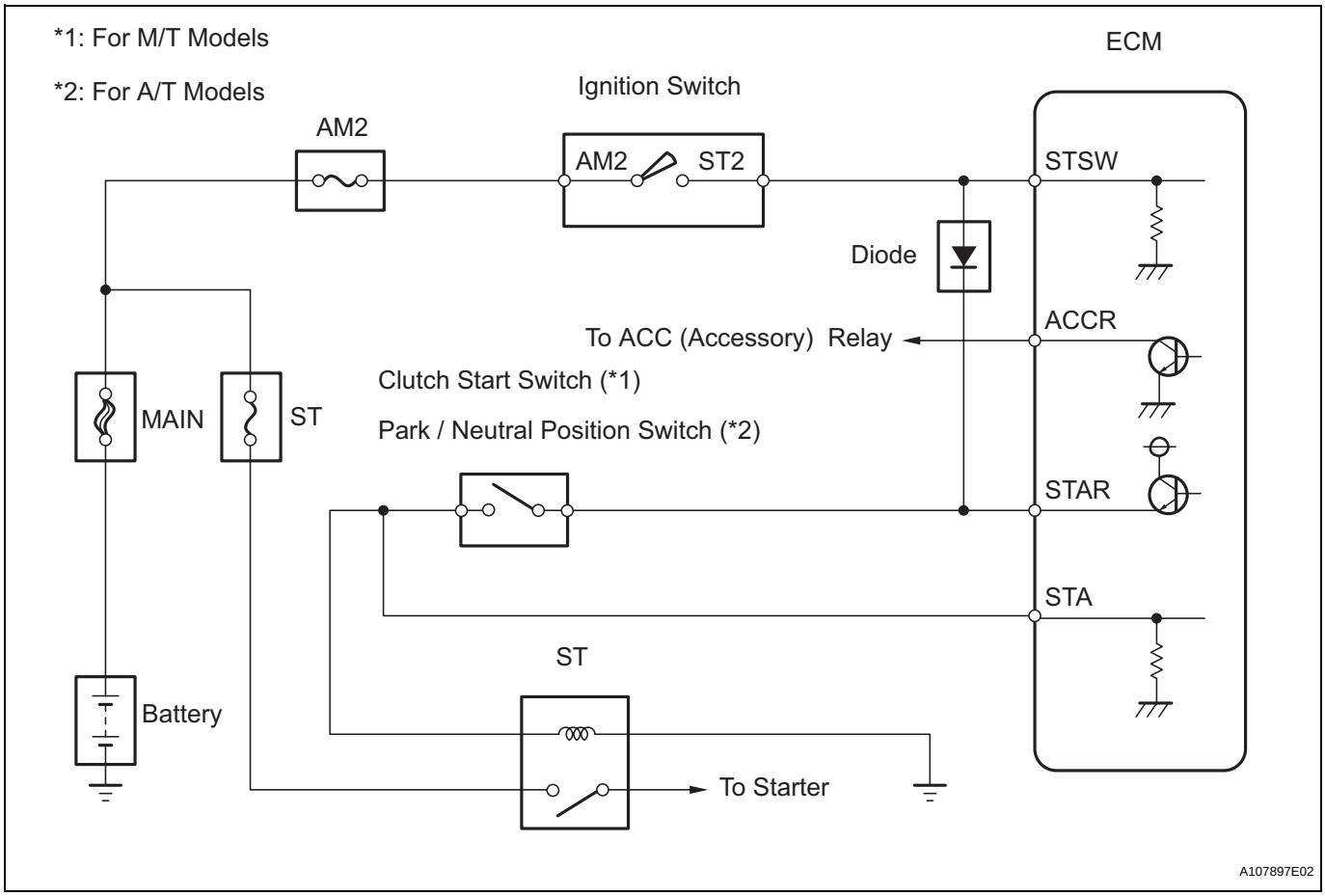

ES

INSPECTION PROCEDURE

1	READ VALUE USING INTELLIGENT TESTER (STARTER SIG)

(a) Connect an intelligent tester to the DLC3.
(b) Turn the ignition switch to ON and turn the tester ON.
(c) Select the following menu items: DIAGNOSIS / ENHANCED OBD II / DATA LIST / PRIMARY / STARTER SIG.
(d) Check the result when the ignition switch is turned to ON and START.

OK

Ignition Switch Position	ON	START
Starter Signal	OFF	ON

OK → **Go to step 12**

NG

2 INSPECT ECM (STSW VOLTAGE)

Wire Harness Side:

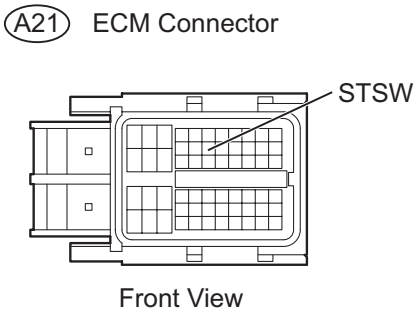

A115671E01

(a) Disconnect the A21 ECM connector.
(b) Measure the voltage between the terminals of the ECM connector and body ground while cranking the engine.
Standard voltage

Tester Connections	Specified Conditions
STSW (A21-14) - Body ground	11 to 14 V

Result

Result	Proceed To
Within standard range(A/T)	A
Within standard range (M/T)	B
Outside standard range	C

(c) Reconnect the ECM connector.

B → **Go to step 6**

C → **Go to step 9**

A

3 INSPECT ECM (STAR VOLTAGE)

Wire Harness Side:

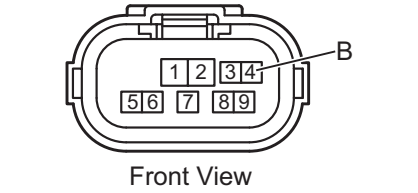

A107891E01

(a) Disconnect the C27 Park/Neutral Position (PNP) switch connector.
(b) Measure the voltage between the terminals of the PNP switch connector and body ground while cranking the engine.
Standard voltage

Tester Connections	Specified Conditions
B (C27-4) - Body ground	11 to 14 V

(c) Reconnect the PNP switch connector.

NG → **Go to step 10**

OK

4 INSPECT PARK/NEUTRAL POSITION SWITCH ASSEMBLY

Component Side:

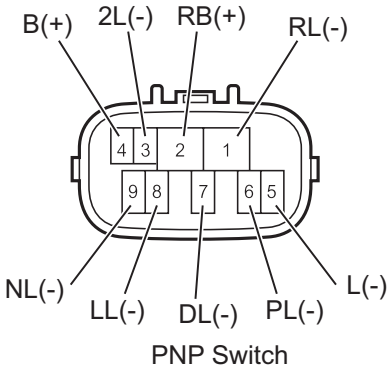

(a) Disconnect the C27 PNP switch connector.
(b) Check the resistance between each terminal shown below when the shift lever is moved to each range.

Standard resistance

Shift Position	Tester Connections	Specified Conditions
P	PL (6) - RB (2)	Below 1 Ω
	L (5) - B (4)	
R	RL (1) - RB (2)	
N	NL (9) - RB (2)	
	L (5) - B (4)	
D	DL (7) - RB (2)	
2	2L (3) - RB (2)	
L	LL (8) - RB (2)	

(c) Reconnect the PNP switch connector.

NG → **REPLACE PARK / NEUTRAL POSITION SWITCH**

OK

5 CHECK HARNESS AND CONNECTOR (PARK/NEUTRAL POSITION SWITCH - ECM)

Wire Harness Side:

C27 PNP Switch Connector

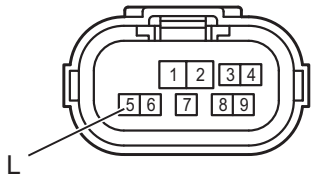

Front View

A21 ECM Connector

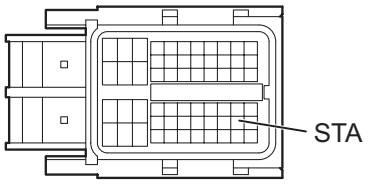

Front View

A115685E01

(a) Disconnect the C27 PNP switch connector.
(b) Disconnect the A21 ECM connector.
(c) Check the resistance.

Standard resistance (Check for open)

Tester Connections	Specified Conditions
L (C27-5) - STA (A21-48)	Below 1 Ω

Standard resistance (Check for short)

Tester Connections	Specified Conditions
L (C27-5) or STA (A21-48) - Body ground	10 kΩ or higher

(d) Reconnect the PNP switch connector.
(e) Reconnect the ECM connector.

NG → **REPAIR OR REPLACE HARNESS OR CONNECTOR**

ES

OK

REPLACE ECM

6 INSPECT ECM (STAR VOLTAGE)

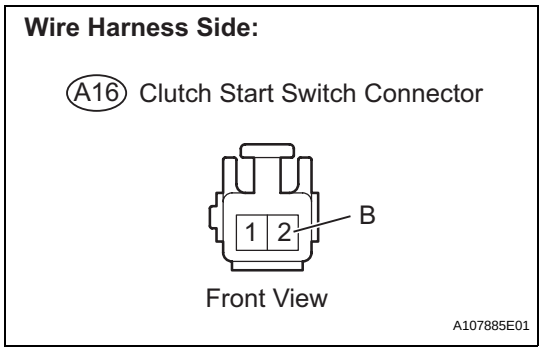

(a) Disconnect the A16 clutch start switch connector.
(b) Measure the voltage between the terminals of the clutch start switch connector and body ground while cranking the engine.

Standard voltage

Tester Connections	Specified Conditions
B (A16-2) - Body ground	11 to 14 V

(c) Reconnect the clutch start switch connector.

NG → **Go to step 11**

OK

7 INSPECT CLUTCH START SWITCH ASSEMBLY

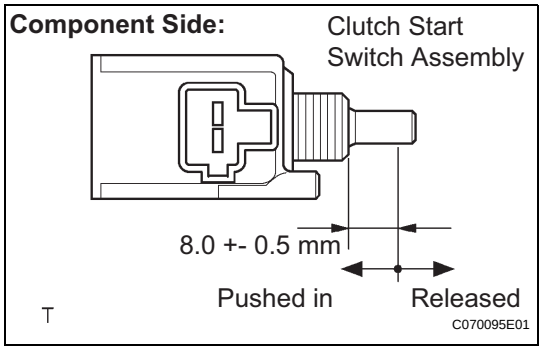

(a) Disconnect the A16 clutch start switch connector.
(b) Check the resistance between the terminals of the clutch start switch.

Standard resistance

Switch Positions	Specified Conditions
Pushed in	Below 1 Ω
Released	10 kΩ or higher

(c) Reconnect the clutch start switch connector.

NG → **REPLACE CLUTCH START SWITCH**

OK

8	CHECK HARNESS AND CONNECTOR (CLUTCH START SWITCH - ECM)

Wire Harness Side:

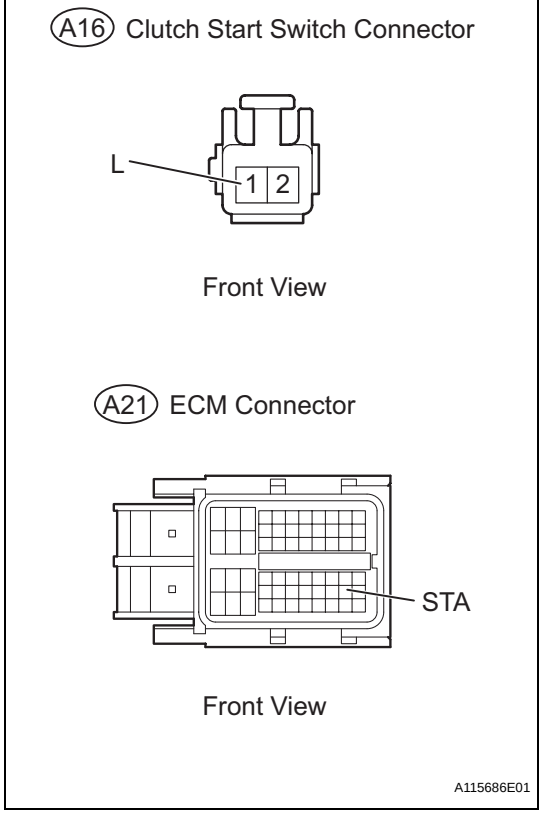

(a) Disconnect the A16 clutch start switch connector.
(b) Disconnect the A21 ECM connector.
(c) Check the resistance.

Standard resistance (Check for open)

Tester Connections	Specified Conditions
L (A16-1) - STA (A21-48)	Below 1 Ω

Standard resistance (Check for short)

Tester Connections	Specified Conditions
L (A16-1) or STA (A21-48) - Body ground	10 kΩ or higher

(d) Reconnect the clutch start switch connector.
(e) Reconnect the ECM connector.

NG → **REPAIR OR REPLACE HARNESS OR CONNECTOR**

OK

REPLACE ECM

ES

9	INSPECT IGNITION SWITCH

Component Side:

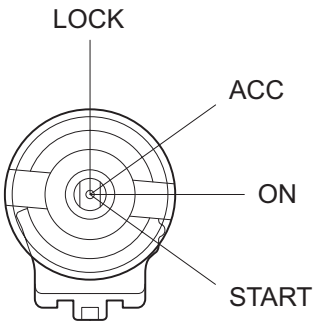

Ignition Switch

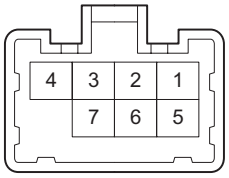

Front View

Y A107906E02

(a) Disconnect the D8 ignition switch connector.
(b) Check the resistance between the terminals shown below.

Standard resistance

Key Positions	Tester Connections	Specified Conditions
LOCK	-	10 kΩ or higher
ACC	2 - 4	Below 1 Ω
ON	1 - 2 - 4	
	5 - 6	
START	1 - 3 - 4	
	5 - 6 - 7	

(c) Reconnect the ignition switch connector.

NG → REPLACE IGNITION SWITCH

OK

REPAIR OR REPLACE HARNESS OR CONNECTOR (ECM - IGNITION SWITCH - BATTERY)

10	CHECK HARNESS AND CONNECTOR (IGNITION SWITCH - PARK/NEUTRAL POSITION SWITCH - ECM)

Wire Harness Side:

D8 Ignition Switch Connector

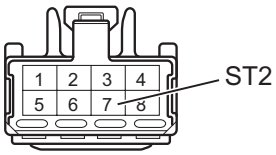

Front View

C27 PNP Switch Connector

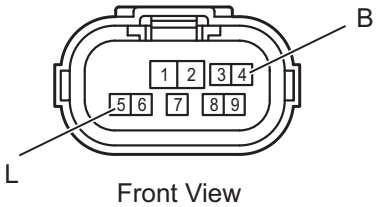

Front View

C20 ECM Connector

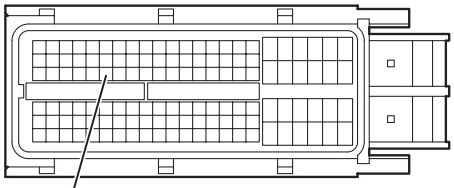

Front View

STAR

A115683E02

(a) Disconnect the D8 ignition switch connector.
(b) Disconnect the C27 PNP switch connector.
(c) Disconnect the C20 ECM connector.
(d) Check the resistance.

Standard resistance (Check for open)

Tester Connections	Specified Conditions
ST2 (D8-7) - B (C27-4)	Below 1 Ω
STAR (C20-52) - B (C27-4)	
STAR (C20-52) - L (C27-5)	

Standard resistance (Check for short)

Tester Connections	Specified Conditions
ST2 (D8-7) or B (C27-4) - Body ground	10 kΩ or higher
STAR (C20-52) or B (C27-4) - Body ground	
STAR (C20-52) or L (C27-5) - Body ground	

(e) Reconnect the ignition switch connector.
(f) Reconnect the PNP switch connector.
(g) Reconnect the ECM connector.

NG → **REPAIR OR REPLACE HARNESS OR CONNECTOR**

OK

REPLACE ECM

ES

11	CHECK HARNESS AND CONNECTOR (IGNITION SWITCH - CLUTCH START SWITCH - ECM)

Wire Harness Side:

D8 Ignition Switch Connector

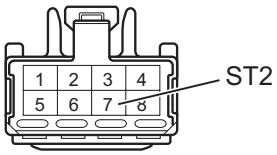

Front View

A16 Clutch Start Switch Connector

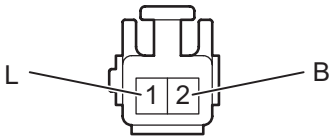

Front View

C20 ECM Connector

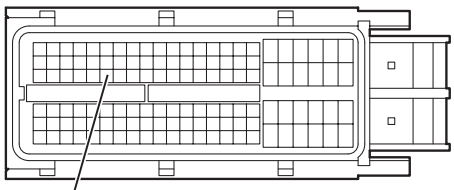

Front View

A115684E02

(a) Disconnect the D8 ignition switch connector.
(b) Disconnect the A16 clutch start switch connector.
(c) Disconnect the C20 ECM connector.
(d) Check the resistance.

Standard resistance (Check for open)

Tester Connections	Specified Conditions
ST2 (D8-7) - B (A16-2)	Below 1 Ω
STAR (C20-52) - B (A16-2)	
STAR (C20-52) - L (A16-1)	

Standard resistance (Check for short)

Tester Connections	Specified Conditions
ST2 (D8-7) or B (A16-2) - Body ground	10 kΩ or higher
STAR (C20-52) or B (A16-2) - Body ground	
STAR (C20-52) or L (A16-1) - Body ground	

(e) Reconnect the ignition switch connector.
(f) Reconnect the clutch start switch connector.
(g) Reconnect the ECM connector.

NG → **REPAIR OR REPLACE HARNESS OR CONNECTOR**

OK

REPLACE ECM

12	INSPECT BATTERY

(a) Check that the battery is not depleted.

OK:

Battery is not depleted.

NG → REPLACE BATTERY

OK

13	CHECK BATTERY TERMINAL

(a) Check that the battery terminals are not loose or corroded.
OK:
Battery terminals are not loose or corroded.

NG → REPAIR OR REPLACE BATTERY TERMINAL

OK

14	CHECK HARNESS AND CONNECTOR (PNP SWITCH OR CLUTCH START SWITCH - ST RELAY)

Wire Harness Side:

C27 PNP Switch Connector

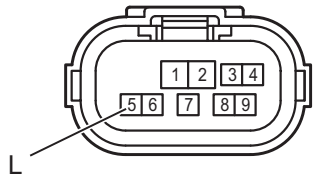

Front View

A16 Clutch Start Switch Connector

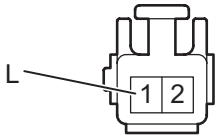

Front View

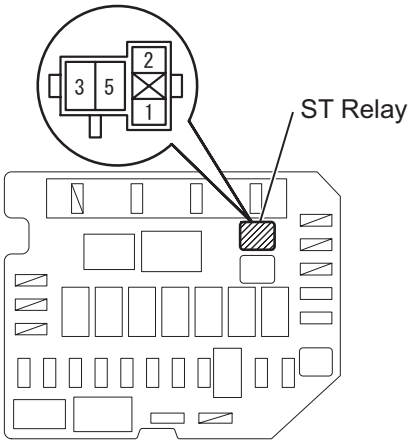

Engine Room Relay Block

A112628E01

(a) Remove the ST relay from the engine room relay block.
(b) Disconnect the C27 PNP switch connector (A/T).
(c) Disconnect the A16 clutch start switch connector (M/T).
(d) Check the resistance.

Standard resistance (Check for open)

Tester Connections	Specified Conditions
L (C27-5) - ST relay (2)	Below 1 Ω
L (A16-1) - ST relay (2)	
ST relay (1) - Body ground	

Standard resistance (Check for short)

Tester Connections	Specified Conditions
L (C27-5) or ST relay (2) - Body ground	10 kΩ or higher
L (A16-1) or ST relay (2) - Body ground	

(e) Reinstall the ST relay.
(f) Reconnect the PNP switch connector (A/T).
(g) Reconnect the clutch start switch connector (M/T).

NG → **REPAIR OR REPLACE HARNESS OR CONNECTOR**

OK

CHECK AND REPLACE STARTER RELAY AND STARTER

MIL Circuit

DESCRIPTION

The MIL (Malfunction Indicator Lamp) is used to indicate vehicle malfunction detections by the ECM. When the ignition switch is turned to ON, power is supplied to the MIL circuit, and the ECM provides the circuit ground which illuminates the MIL.
The MIL operation can be checked visually: When the ignition switch is first turned to ON, the MIL should be illuminated and should then turn off. If the MIL remains illuminated or is not illuminated, conduct the following troubleshooting procedure using an intelligent tester.

WIRING DIAGRAM

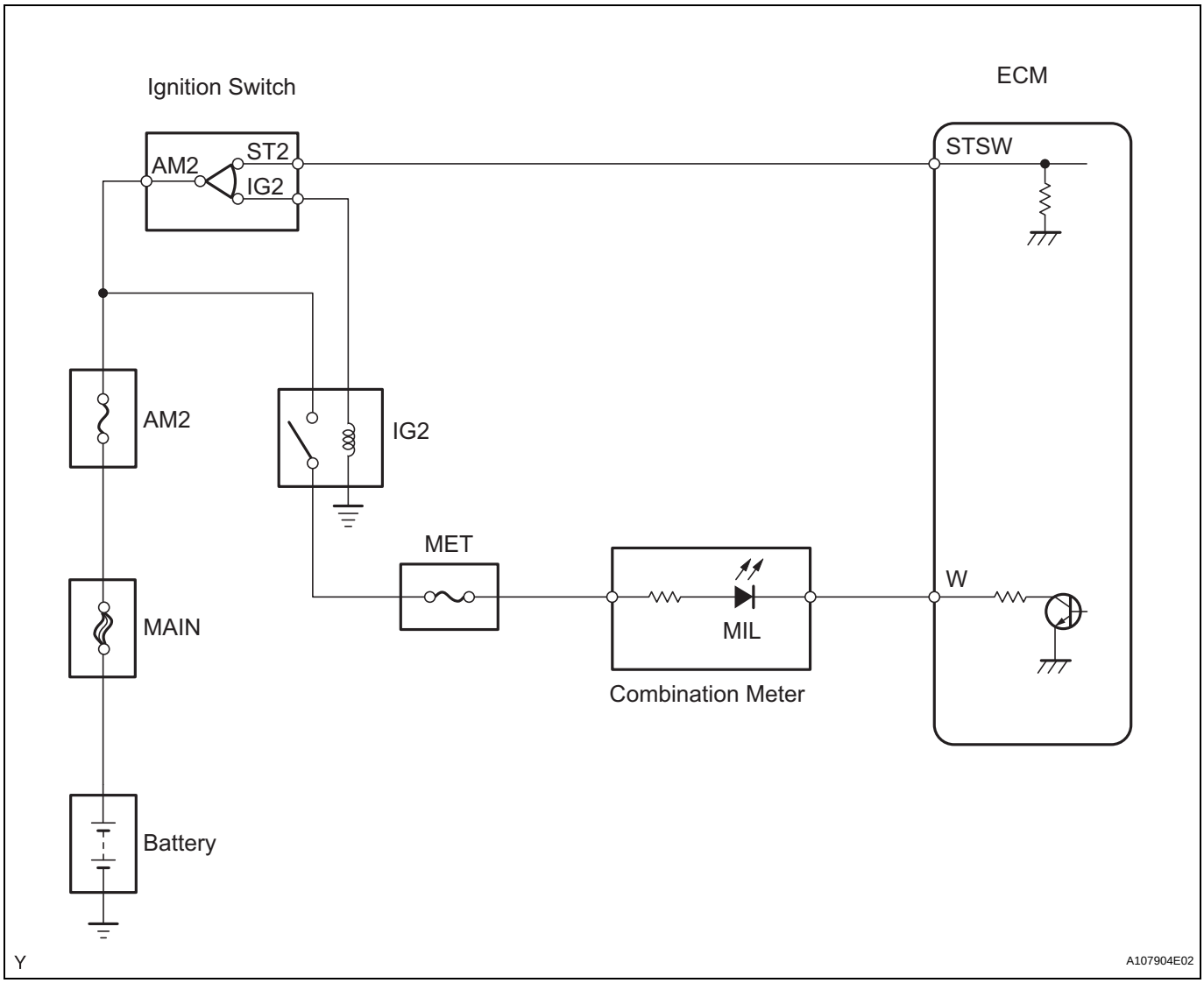

INSPECTION PROCEDURE

1	CHECK THAT MIL IS ILLUMINATED

(a) Perform troubleshooting in accordance with the table below.

Conditions	Proceed To
MIL remains ON	A
MIL does not illuminate	B

B → **Go to step 5**

ES

A

2	CHECK WHETHER MIL TURNS OFF

(a) Connect an intelligent tester to the DLC3.
(b) Turn the ignition switch to ON and turn the tester ON.
(c) Select the following menu items: DIAGNOSIS / ENHANCED OBD II / DTC INFO / CURRENT CODES.
(d) Check if any DTCs have been stored. Note down any DTCs.
(e) Clear DTCs (See page ES-34).
(f) Check if the MIL goes off.
Standard:
MIL should go off.

OK → **REPAIR CIRCUITS INDICATED BY OUTPUT DTCS**

NG

3	CHECK HARNESS AND CONNECTOR (CHECK FOR SHORT IN WIRE HARNESS)

Wire Harness Side:

A21 ECM Connector

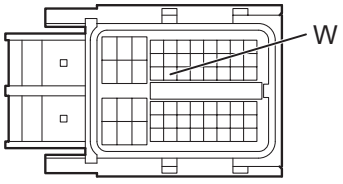

Front View

A115671E03

(a) Disconnect the A21 ECM connector.
(b) Turn the ignition switch to ON.
(c) Check that the MIL is not illuminated.
OK:
MIL is not illuminated.
(d) Reconnect the ECM connector.

OK → **REPLACE ECM**

NG

4 CHECK HARNESS AND CONNECTOR (COMBINATION METER - ECM)

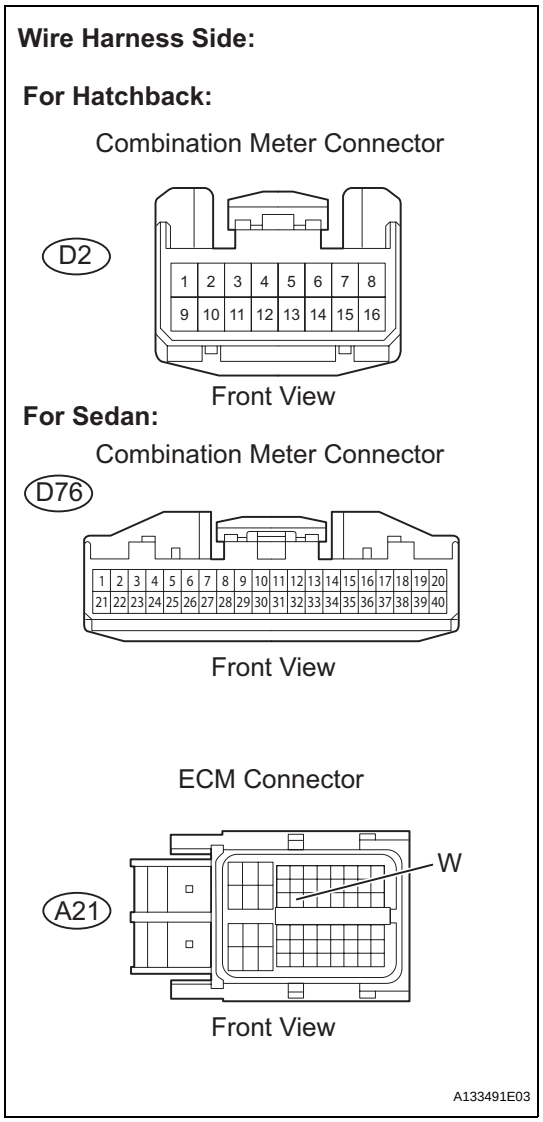

(a) Disconnect the A21 ECM connector.
(b) Disconnect the D2 combination meter connector (for Hatchback).
(c) Disconnect the D76 combination meter connector (for Sedan).
(d) Check the resistance.
Standard resistance (Check for short)

Tester Connections	Specified Conditions
W (A21-24) or combination meter (D2-4) - Body ground	10 kΩ or higher
W (A21-24) or combination meter (D76-4) - Body ground	

(e) Reconnect the ECM connector.
(f) Reconnect the combination meter connector.

OK → **REPAIR OR REPLACE COMBINATION METER ASSEMBLY**

NG

REPAIR OR REPLACE HARNESS OR CONNECTOR

5 CHECK THAT MIL IS ILLUMINATED

(a) Check if the MIL is illuminated when the ignition switch is turned to ON.
OK:
MIL should be illuminated.

OK → **SYSTEM OK**

ES

NG

6	CHECK THAT ENGINE STARTS

(a) Turn the ignition switch to ON.
(b) Start the engine.

Result	Proceed To
Engine starts	A
Engine does not start*	B

HINT:
*: The intelligent tester cannot communicate with the ECM.

B → GO TO VC OUTPUT CIRCUIT

A

7	INSPECT COMBINATION METER ASSEMBLY (MIL CIRCUIT)

- Check the MIL circuit for Hatchback (See page ME-76).
- Check the MIL circuit for Sedan (See page ME-12).

NG → REPAIR OR REPLACE COMBINATION METER ASSEMBLY

OK

CHECK AND REPLACE HARNESS OR CONNECTOR (COMBINATION METER - ECM)

MASS AIR FLOW METER

COMPONENTS

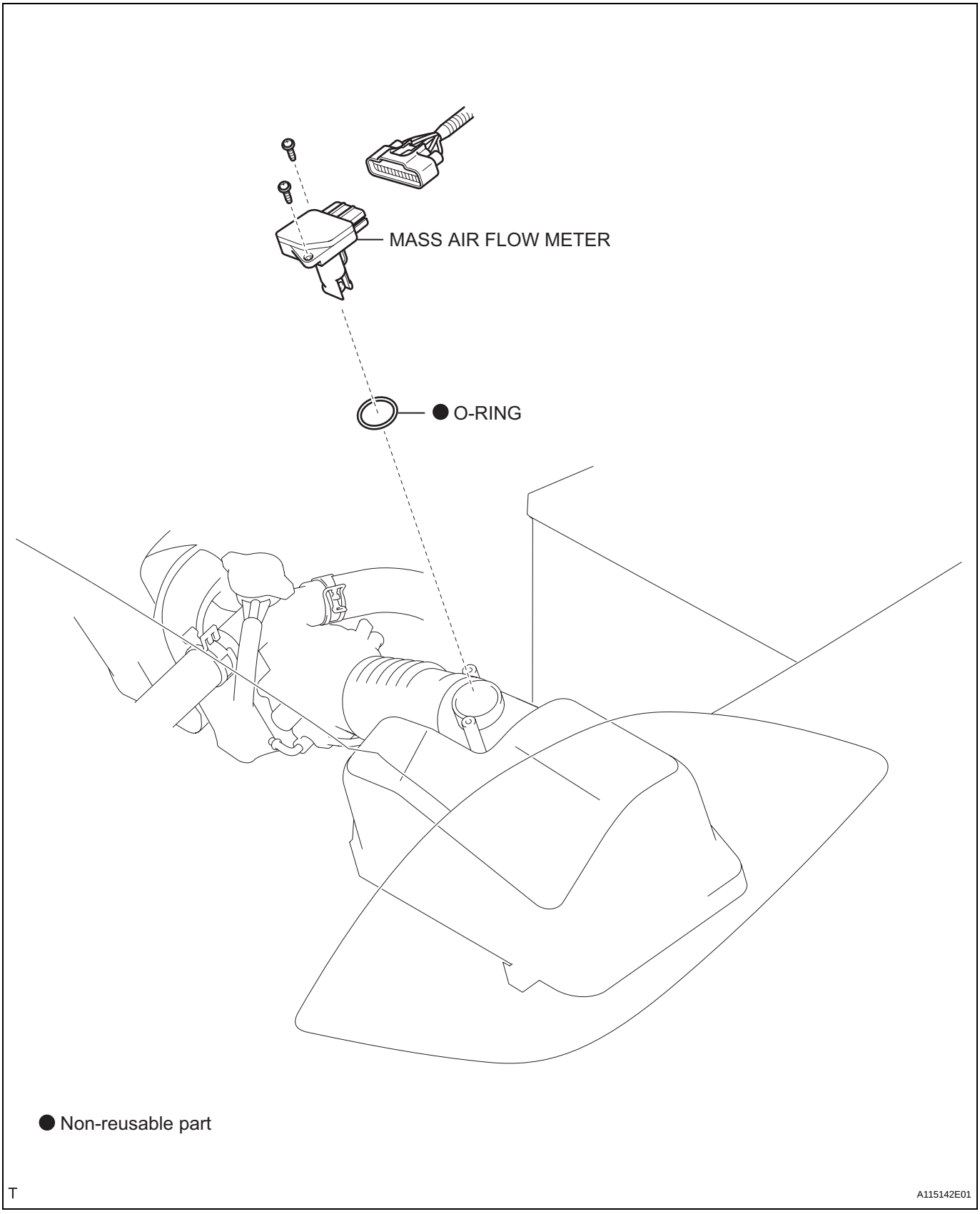

ON-VEHICLE INSPECTION

NOTICE:

- **Perform the mass air flow meter inspection according to the procedures below.**
- **Only replace the mass air flow meter when both the LONG FT#1 value and MAF value in the DATA LIST (with the engine stopped) are not within the normal operating range.**

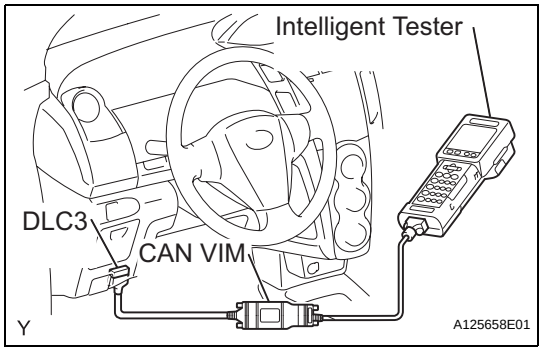

1. INSPECT MASS AIR FLOW METER

(a) Perform confirmation driving pattern.

(1) Connect the intelligent tester to the DLC3.

(2) Turn the ignition switch to ON.

(3) Turn the tester ON.

(4) Clear the DTCs (see page ES-34).

(5) Start the engine and warm it up with all the accessory switches OFF (until the engine coolant temperature is 75°C (167°F) or more).

(6) Drive the vehicle at 50 km/h (31 mph) or more for 3 to 5 minutes *1.

(7) Allow the engine to idle for 2 minutes *2.

(8) Perform steps *1 and *2 at least 3 times.

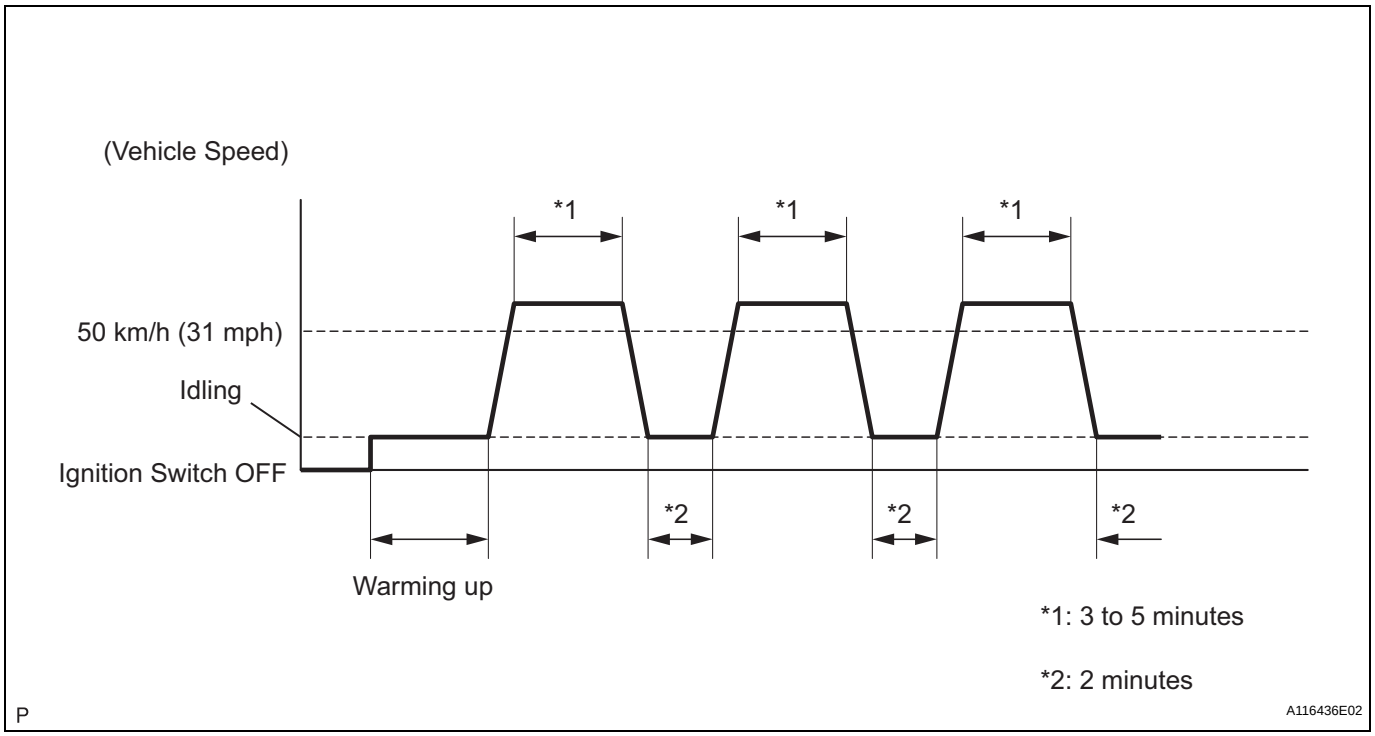

(b) Read the value using the intelligent tester (LONG FT#1).

(1) Select the following menu items: DIAGNOSIS / ENHANCED OBD II / DATA LIST / PRIMARY / LONG FT #1.

(2) Read the values displayed on the tester.

Standard value:

Within -15 to +15 %

If the result is not within the specified range, perform the inspection below.

(c) Read the value using the intelligent tester (MAF).
NOTICE:
- **Turn off the engine.**
- **Perform the inspection with the vehicle indoors and on a level surface.**
- **Perform the inspection of the mass air flow meter while it is installed into the air cleaner case (installed on the vehicle).**
- **During the test, do not use the exhaust air duct to perform suction on the exhaust pipe.**

(1) Turn the ignition switch to ACC.
(2) Turn the ignition switch ON (do not run the engine).
(3) Turn the tester ON.
(4) Select the following menu items: DIAGNOSIS / ENHANCED OBD II / DATA LIST / PRIMARY / MAF.
(5) Wait 30 seconds, and read the values on the intelligent tester.
Standard condition:
Less than 0.28g/sec
- If the result is not as specified, replace the mass air flow meter.
- If the result is within the specified range, investigate the cause of the extremely rich or lean air fuel ratio (see page ES-136).

REMOVAL

1. DISCONNECT CABLE FROM NEGATIVE BATTERY TERMINAL

2. REMOVE MASS AIR FLOW METER

(a) Disconnect the wire harness clamp and mass air flow meter connector.

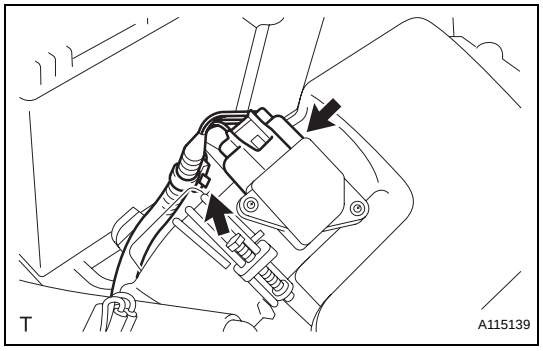

(b) Remove the 2 screws and the mass air flow meter.

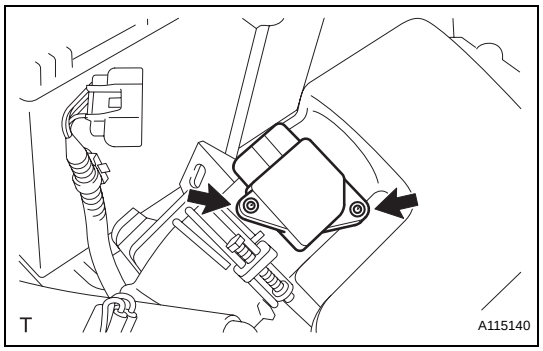

(c) Remove the O-ring from the mass air flow meter.

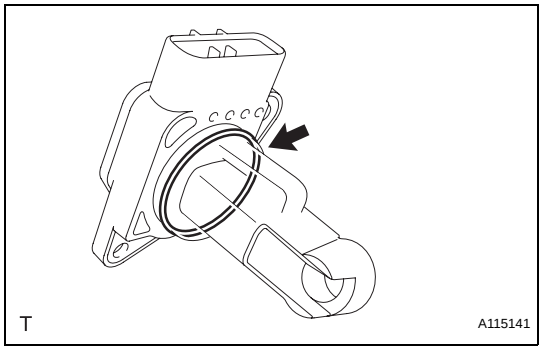

INSTALLATION

1. INSTALL MASS AIR FLOW METER

(a) Install a new O-ring onto the mass air flow meter.

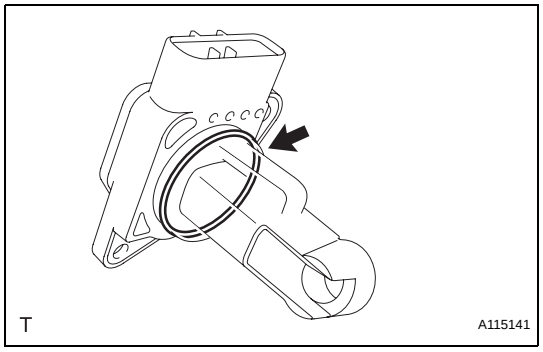

ES

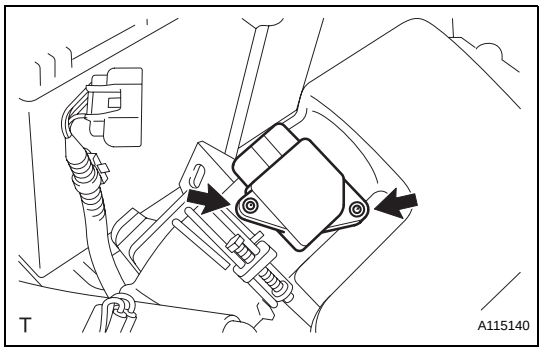

(b) Install the mass air flow meter with the 2 screws.

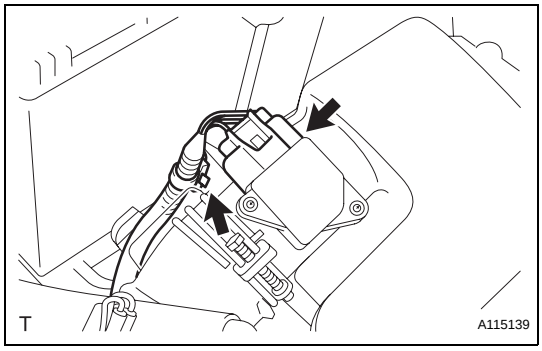

(c) Connect the wire harness clamp and mass air flow meter connector.

2. CONNECT CABLE TO NEGATIVE BATTERY TERMINAL
Torque: 5.4 N*m (55 kgf*cm, 48 in.*lbf)

CAMSHAFT TIMING OIL CONTROL VALVE ASSEMBLY

COMPONENTS

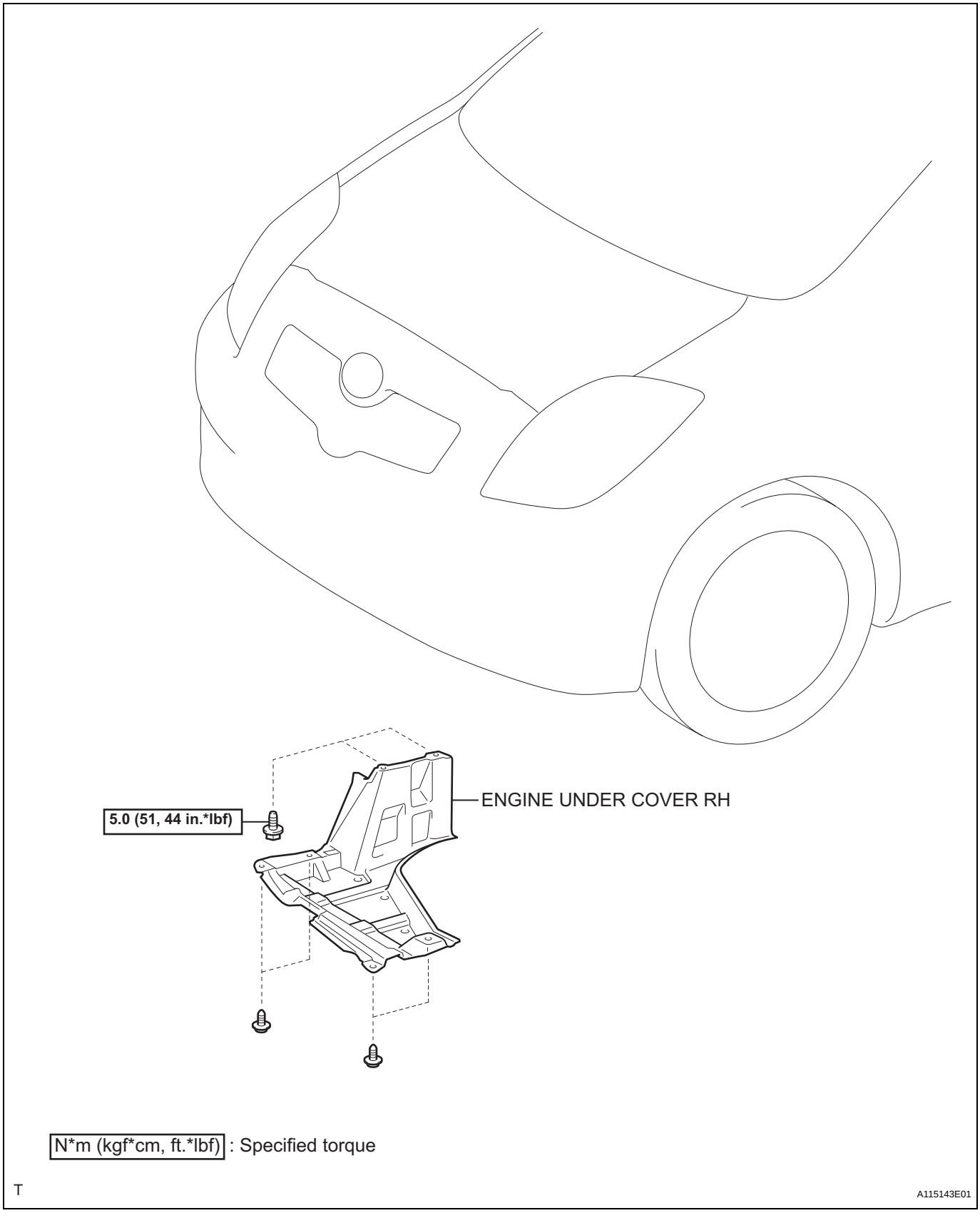

N*m (kgf*cm, ft.*lbf) : Specified torque

T

A115143E01

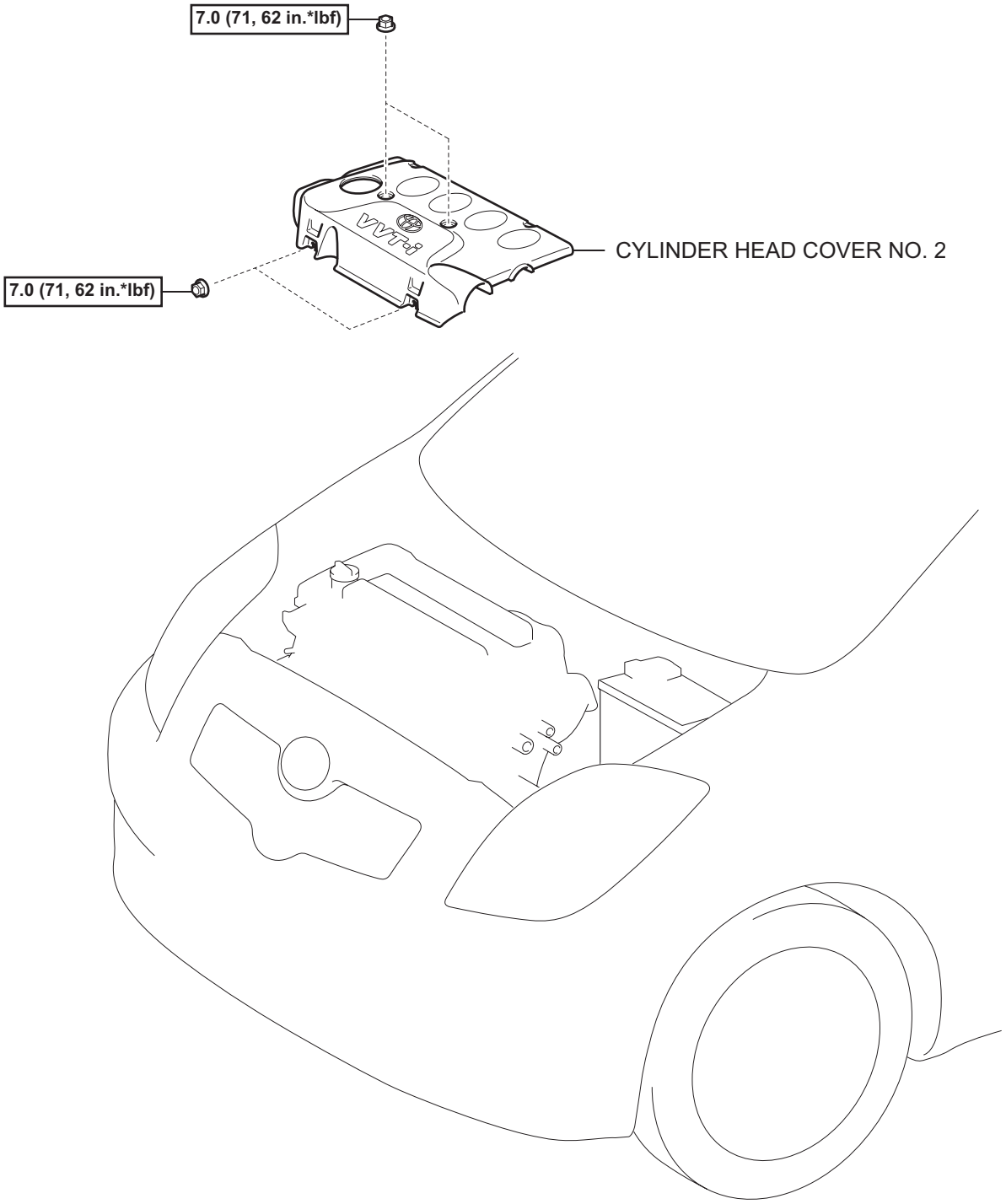

N*m (kgf*cm, ft.*lbf) : Specified torque

T

A115136E01

ES

ES

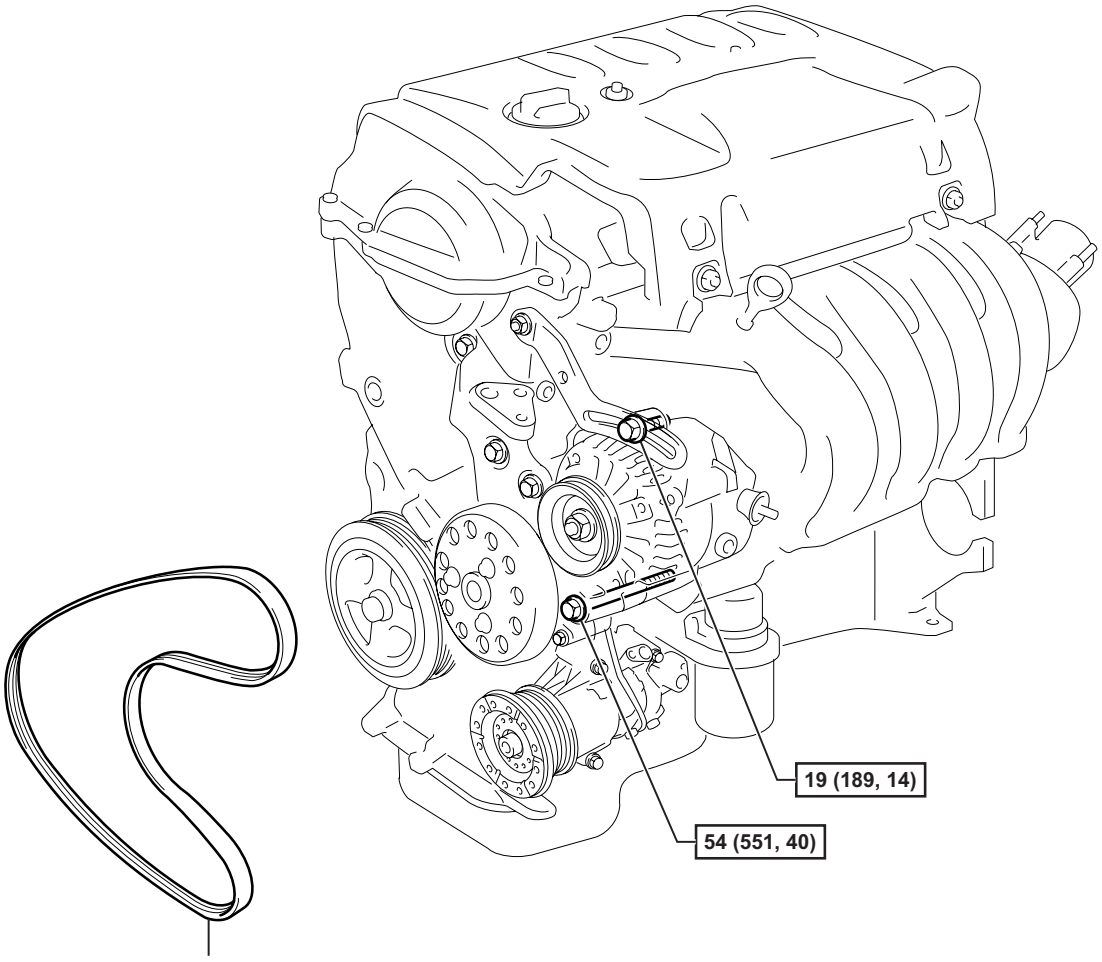

N*m (kgf*cm, ft.*lbf) : Specified torque

T

A116199E01

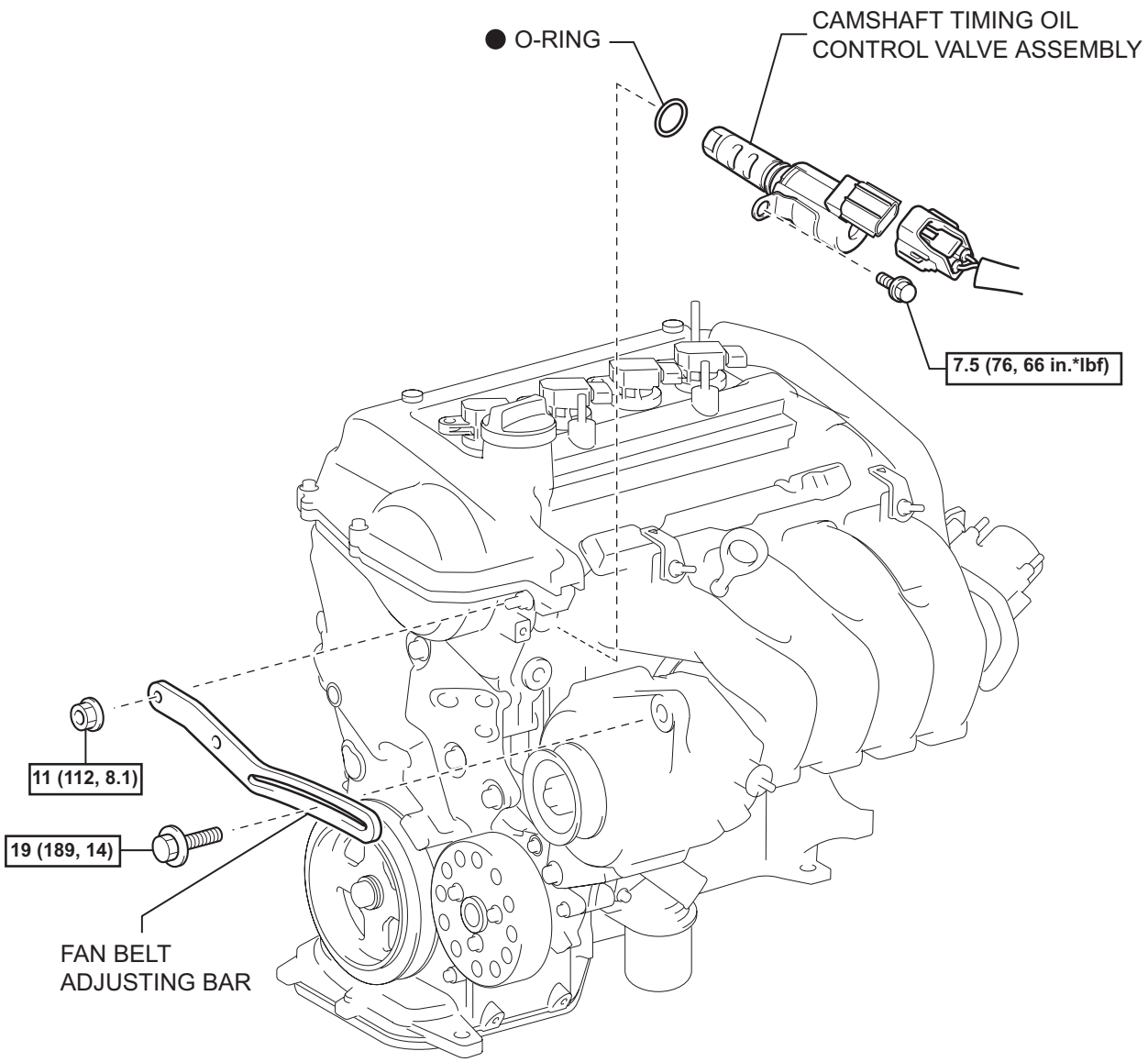

N*m (kgf*cm, ft.*lbf) : Specified torque

● Non-reusable part

T

A116180E01

ES

ES

REMOVAL

1. **DISCONNECT CABLE FROM NEGATIVE BATTERY TERMINAL**
2. **REMOVE ENGINE UNDER COVER RH**
3. **REMOVE CYLINDER HEAD COVER NO. 2 (See page IG-9)**
4. **REMOVE FAN AND GENERATOR V BELT (See page EM-7)**
5. **REMOVE FAN BELT ADJUSTING BAR**
   (a) Remove the bolt and nut and remove the fan belt adjusting bar.

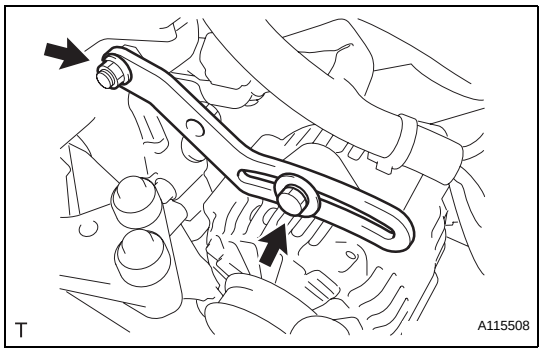

6. **REMOVE CAMSHAFT TIMING OIL CONTROL VALVE ASSEMBLY**
   (a) Disconnect the camshaft timing oil control valve assembly connector.

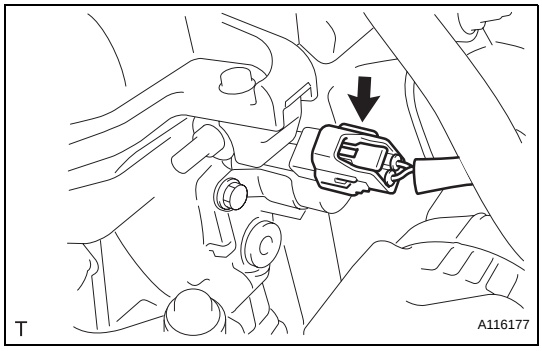

   (b) Remove the bolt and nut and remove the camshaft timing oil control valve assembly.

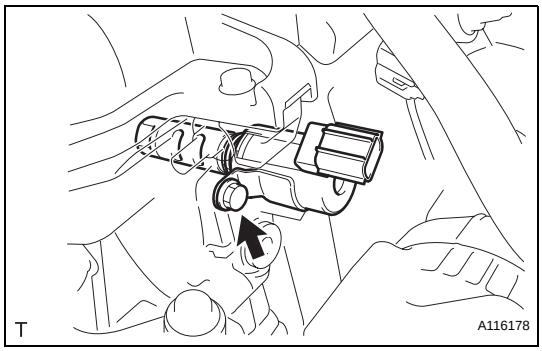

   (c) Remove the O-ring from the camshaft timing oil control valve assembly.

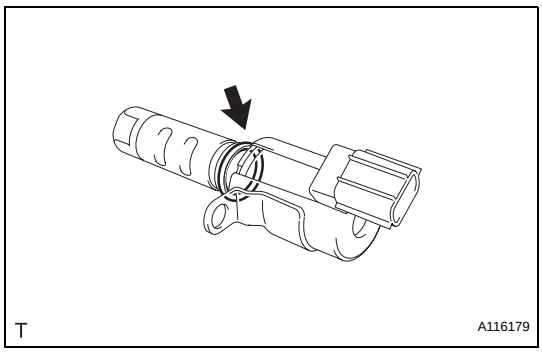

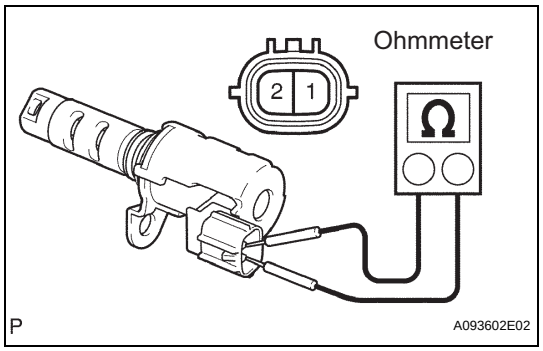

INSPECTION

1. INSPECT CAMSHAFT TIMING OIL CONTROL VALVE ASSEMBLY

(a) Check the resistance.

(1) Measure the resistance between the terminals.

Standard resistance:

6.9 to 7.9 Ω at 20 °C (68°F)

If the result is not as specified, replace the oil control valve assembly.

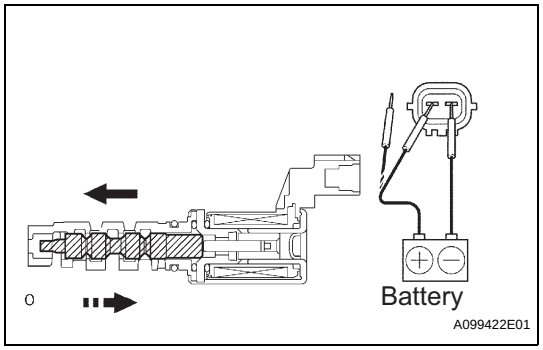

(b) Check the operation.

(1) Connect the positive (+) battery lead to terminal 1 and the negative (-) lead to terminal 2, and check the movement of the valve.

Standard

Condition	Specified Condition
Battery positive (+) voltage applied	Valve moves to the left as shown in the illustration
Battery positive (+) voltage cut off	Valve moves to the right as shown in the illustration

If the result is not as specified, replace the oil control valve.

NOTICE:

If the valve does not return properly because of foreign matter intrusion, a small amount of leakage in the advanced direction may occur and a DTC may be output.

INSTALLATION

1. INSTALL CAMSHAFT TIMING OIL CONTROL VALVE ASSEMBLY

(a) Apply a light coat of engine oil to a new O-ring and install it onto the camshaft timing oil control valve assembly.

NOTICE:

Do not twist the O-ring.

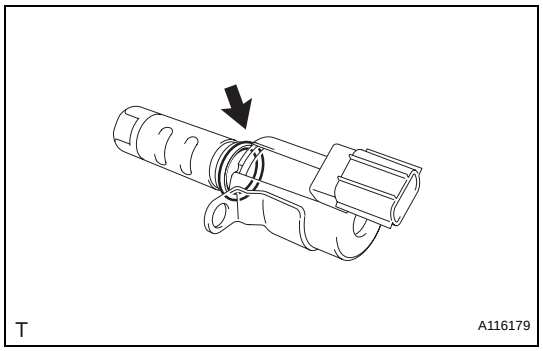

(b) Install the camshaft timing oil control valve assembly with the bolt.

Torque: 7.5 N*m (76 kgf*cm, 66 in.*lbf)

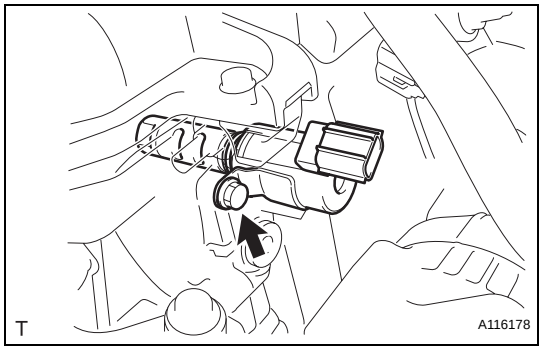

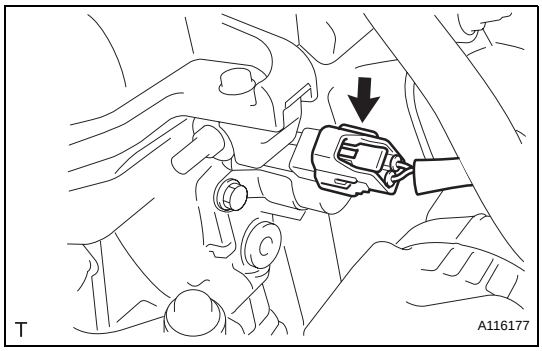

(c) Connect the camshaft timing oil control valve assembly connector.

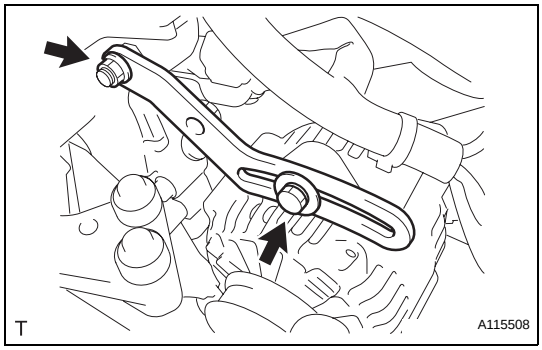

2. INSTALL FAN BELT ADJUSTING BAR

(a) Provisionally install the fan belt adjusting bar with the bolt and nut.

(b) Tighten the nut to the specified torque.
Torque: 11 N*m (112 kgf*cm, 8.1 ft.*lbf)

3. INSTALL FAN AND GENERATOR V BELT (See page EM-7)

4. ADJUST FAN AND GENERATOR V BELT (See page EM-7)

5. INSPECT FAN AND GENERATOR V BELT (See page EM-8)

6. CONNECT CABLE TO NEGATIVE BATTERY TERMINAL
Torque: 5.4 N*m (55 kgf*cm, 48 in.*lbf)

7. CHECK FOR ENGINE OIL LEAKAGE

8. INSTALL CYLINDER HEAD COVER NO. 2 (See page IG-10)

9. INSTALL ENGINE UNDER COVER RH

CAMSHAFT POSITION SENSOR

COMPONENTS

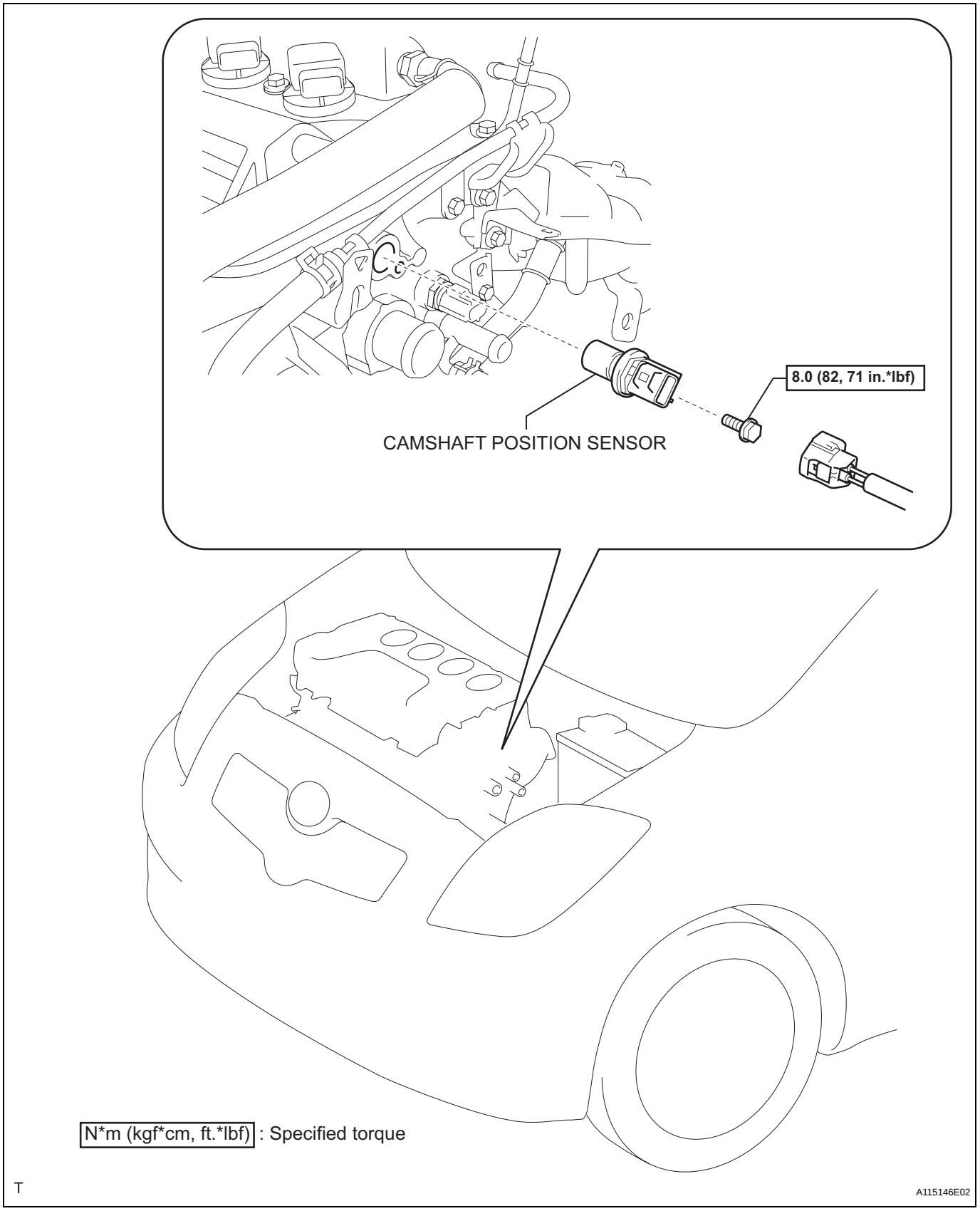

REMOVAL

1. DISCONNECT CABLE FROM NEGATIVE BATTERY TERMINAL

2. REMOVE CAMSHAFT POSITION SENSOR

(a) Disconnect the camshaft position sensor connector.

(b) Remove the bolt and remove the camshaft position sensor.

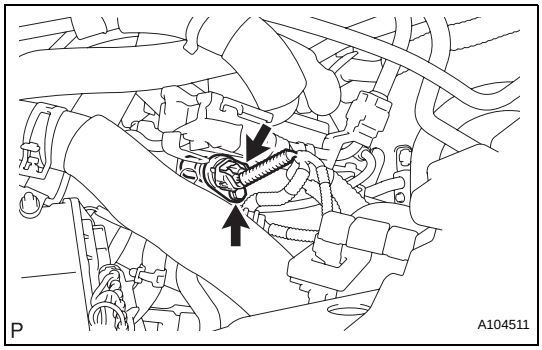

INSPECTION

1. INSPECT CAMSHAFT POSITION SENSOR

(a) Check the resistance.

(1) Using an ohmmeter, measure the resistance between the terminals.

Standard resistance

Temperature	Specified Condition
Cold	1,630 to 2,740 Ω
Hot	2,065 to 3,225 Ω

HINT:

In the table above, the terms Cold and Hot refer to the temperature of the coils. Cold means approximately -10 to 50 °C (14 to 122 °F). Hot means approximately 50 to 100 °C (122 to 212 °F).

If the resistance is not as specified, replace the camshaft position sensor.

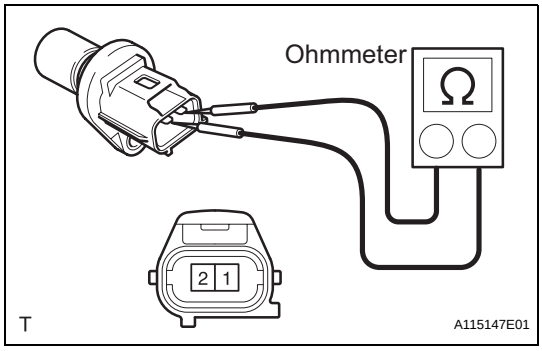

INSTALLATION

1. INSTALL CAMSHAFT POSITION SENSOR

(a) Apply a light coat of engine oil to the O-ring on the camshaft position sensor.

(b) Install the camshaft position sensor with the bolt.

Torque: 8.0 N*m (82 kgf*cm, 71 in.*lbf)

NOTICE:

Do not twist the O-ring.

(c) Connect the camshaft position sensor connector.

2. CONNECT CABLE TO NEGATIVE BATTERY TERMINAL

Torque: 5.4 N*m (55 kgf*cm, 48 in.*lbf)

3. CHECK FOR ENGINE OIL LEAKAGE

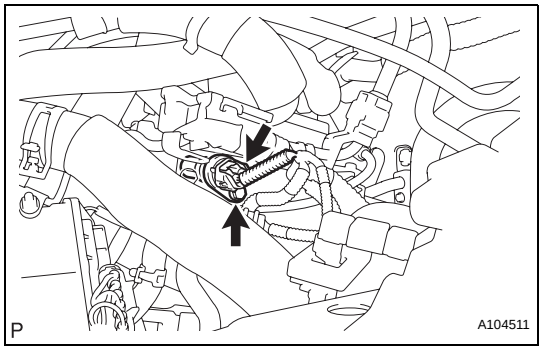

CRANKSHAFT POSITION SENSOR

COMPONENTS

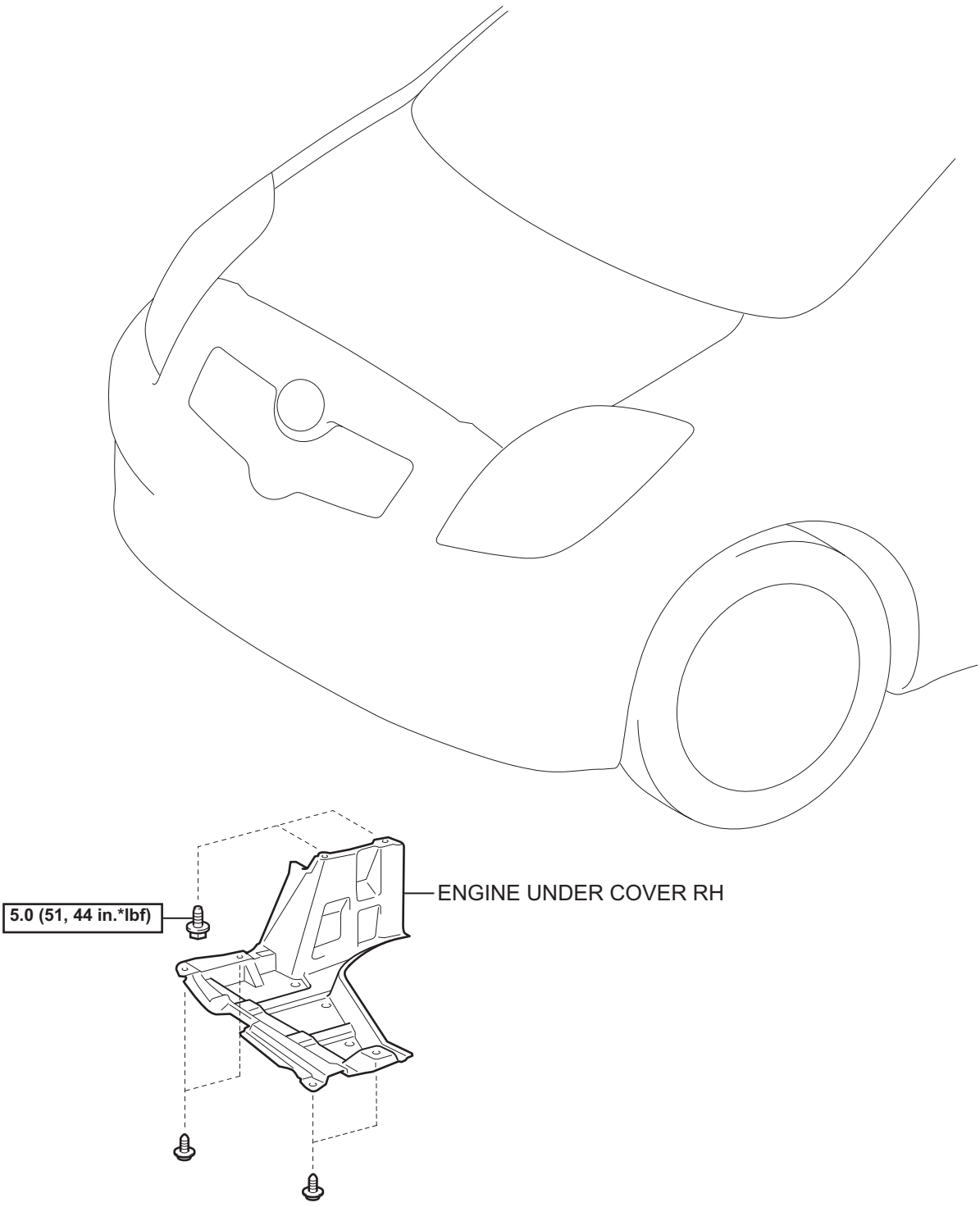

N*m (kgf*cm, ft.*lbf) : Specified torque

T

A115143E01

ES

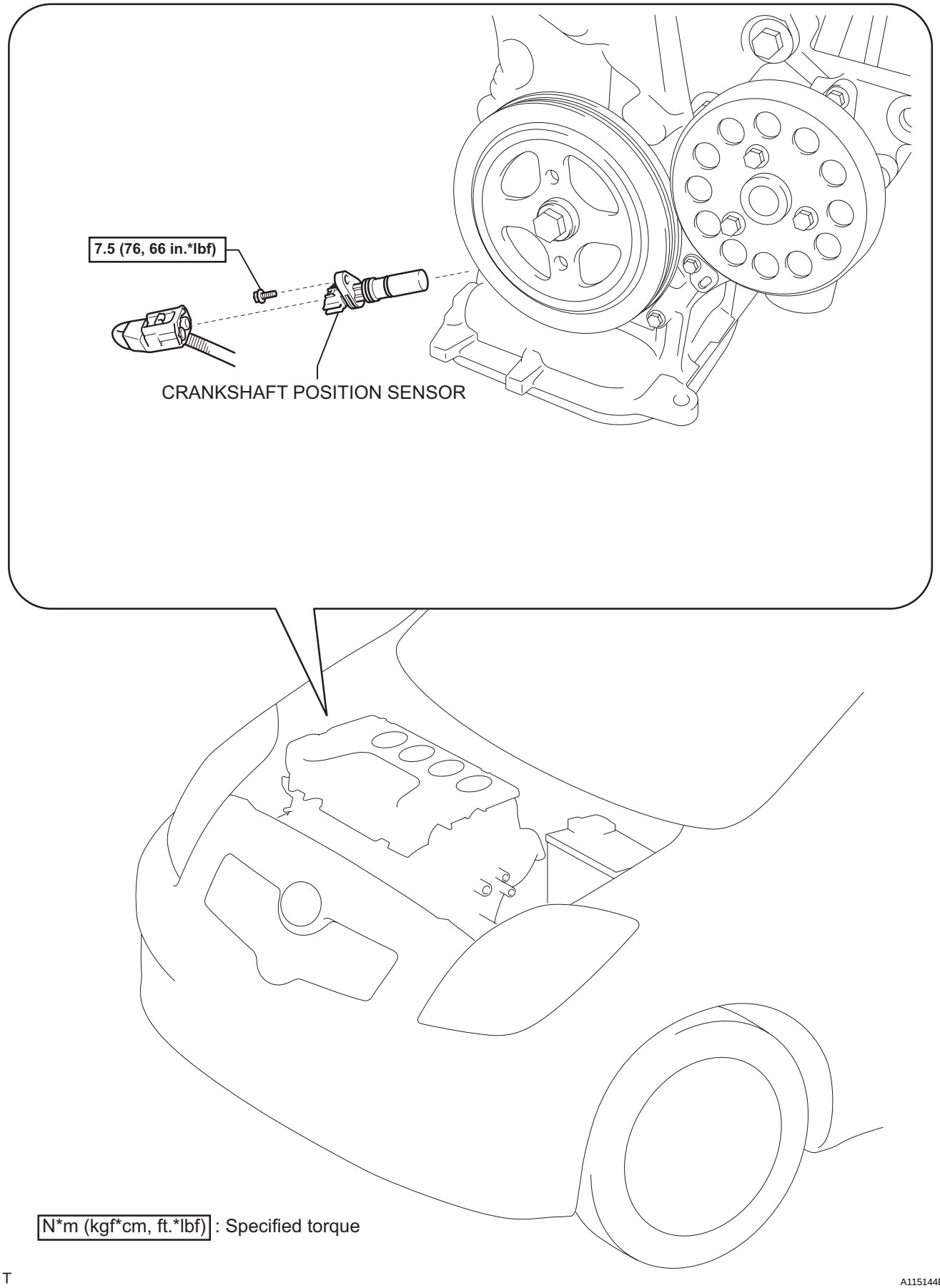
7.5 (76, 66 in.*lbf)
CRANKSHAFT POSITION SENSOR
N*m (kgf*cm, ft.*lbf) : Specified torque
T
A115144E01

REMOVAL

1. **DISCONNECT CABLE FROM NEGATIVE BATTERY TERMINAL**
2. **REMOVE ENGINE UNDER COVER RH**
3. **REMOVE CRANKSHAFT POSITION SENSOR**
   (a) Disconnect the crankshaft position sensor connector.
   (b) Remove the bolt and remove the crankshaft position sensor.

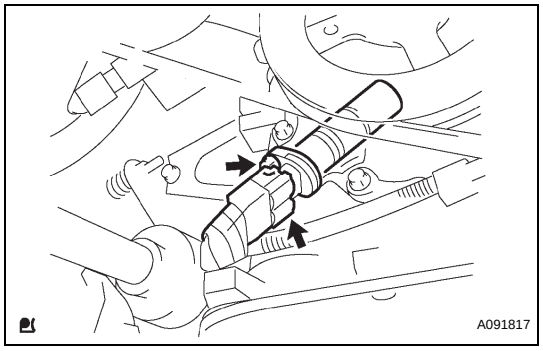

INSPECTION

1. **INSPECT CRANKSHAFT POSITION SENSOR**
   (a) Check the resistance.
      (1) Using an ohmmeter, measure the resistance between the terminals.
      Standard resistance

Temperature	Specified Condition
Cold	985 to 1,600 Ω
Hot	1,265 to 1,890 Ω

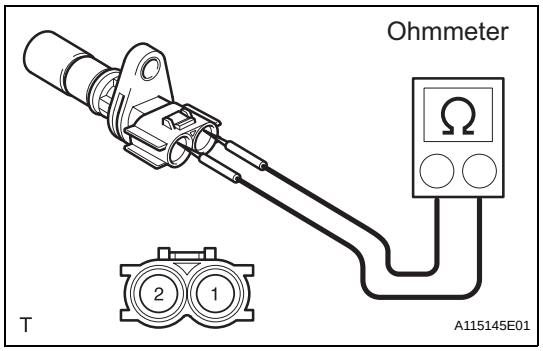

HINT:
In the table above, the terms Cold and Hot refer to the temperature of the coils. Cold means approximately -10 to 50 °C (14 to 122 °F). Hot means approximately 50 to 100 °C (122 to 212 °F).
If the resistance is not as specified, replace the crankshaft position sensor.

INSTALLATION

1. **INSTALL CRANKSHAFT POSITION SENSOR**
   (a) Apply a light coat of engine oil to the O-ring on the crankshaft position sensor.
   (b) Install the crankshaft position sensor with the bolt.
   Torque: 7.5 N*m (76 kgf*cm, 66 in.*lbf)
   NOTICE:
   Do not twist the O-ring.
   (c) Connect the crankshaft position sensor connector.
2. **CONNECT CABLE TO NEGATIVE BATTERY TERMINAL**
   Torque: 5.4 N*m (55 kgf*cm, 48 in.*lbf)
3. **CHECK FOR ENGINE OIL LEAKAGE**
4. **INSTALL ENGINE UNDER COVER RH**

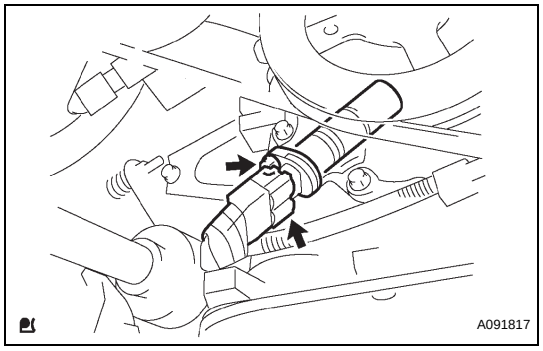

ENGINE COOLANT TEMPERATURE SENSOR

COMPONENTS

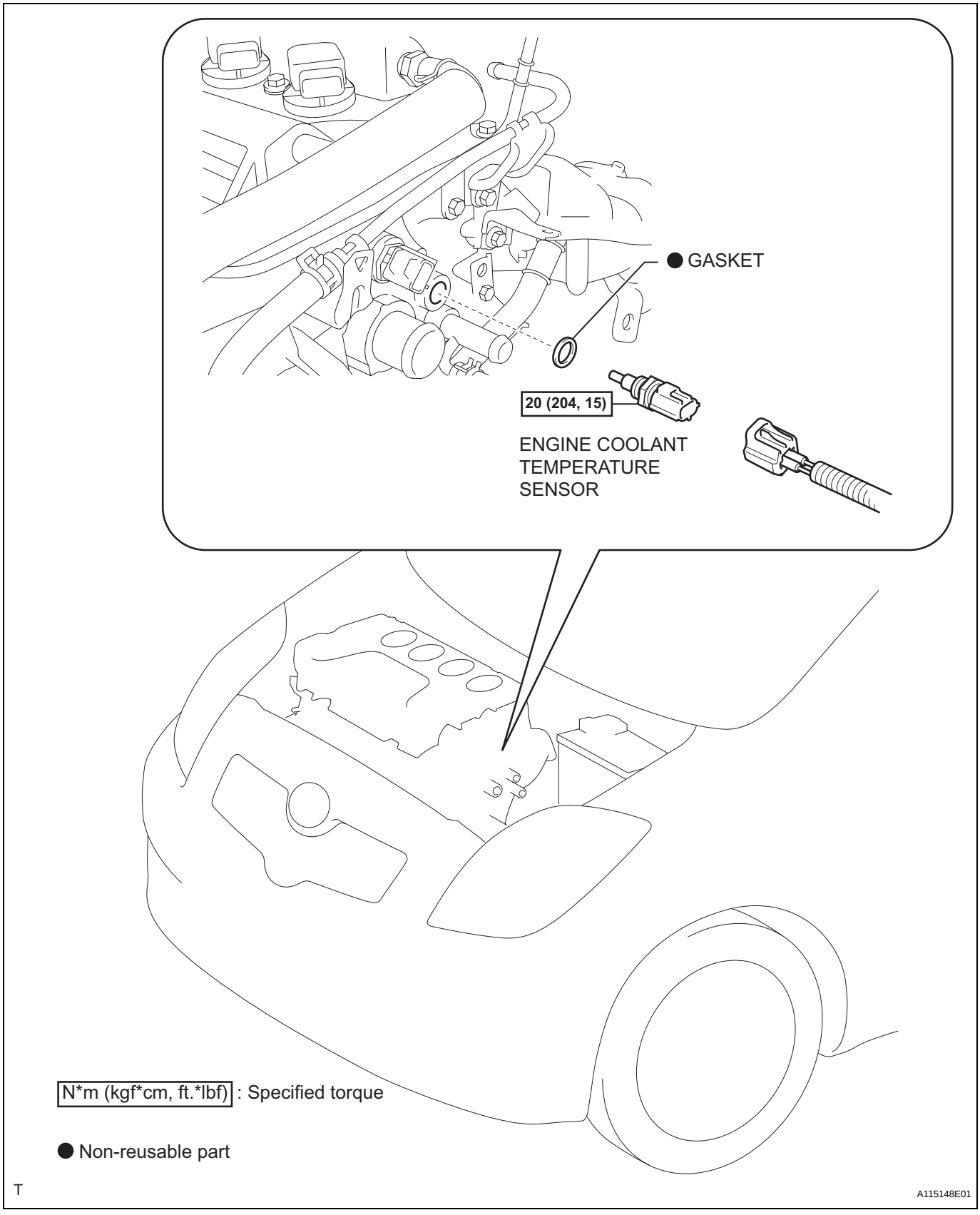

REMOVAL

1. **DISCONNECT CABLE FROM NEGATIVE BATTERY TERMINAL**
2. **DRAIN ENGINE COOLANT (See page CO-8)**
3. **REMOVE ENGINE COOLANT TEMPERATURE SENSOR**
   (a) Disconnect the engine coolant temperature sensor connector.

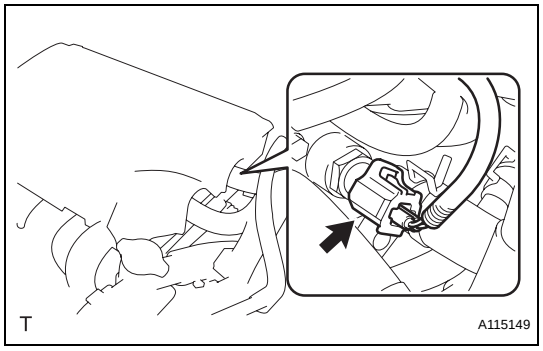

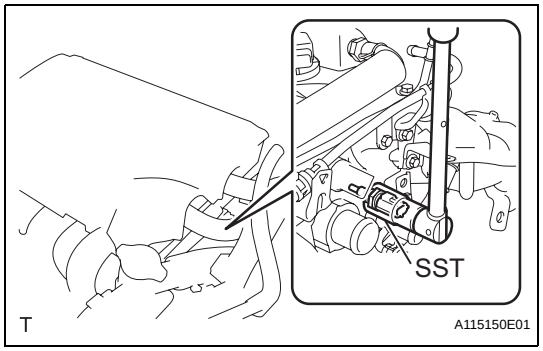

   (b) Using SST, remove the engine coolant temperature sensor.
   SST 09817-33190

INSPECTION

1. **INSPECT ENGINE COOLANT TEMPERATURE SENSOR**
   (a) Check the resistance.
      (1) Using an ohmmeter, measure the resistance between the terminals.
      Standard resistance

Condition	Specified Condition
Approximately 20°C (68°F)	2.32 to 2.59 kΩ
Approximately 80°C (176°F)	0.310 to 0.326 kΩ

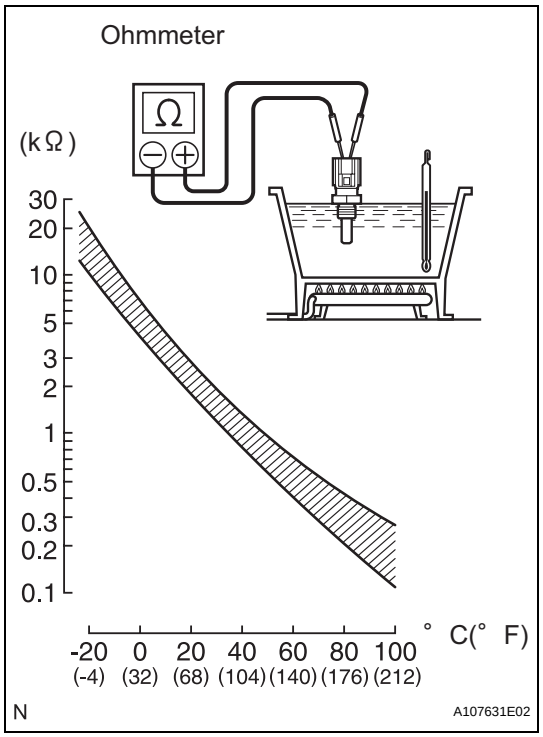

NOTICE:
When checking the engine coolant temperature sensor in water, keep the terminals dry. After the check, wipe the sensor dry.
If the resistance is not as specified, replace the engine coolant temperature sensor.

INSTALLATION

1. INSTALL ENGINE COOLANT TEMPERATURE SENSOR

(a) Provisionally install the engine coolant temperature sensor through a new gasket.

(b) Using SST, tighten the engine coolant temperature sensor.
SST 09817-33190
Torque: 20 N*m (204 kgf*cm, 15 ft.*lbf)

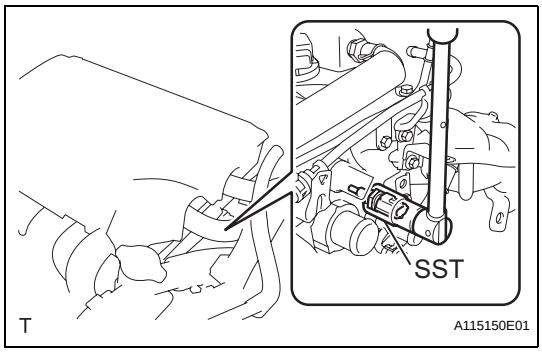

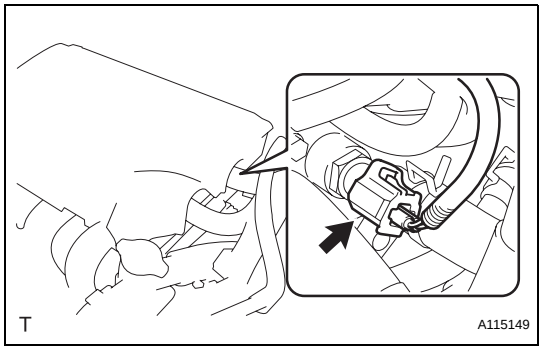

(c) Connect the engine coolant temperature sensor connector.

2. CONNECT CABLE TO NEGATIVE BATTERY TERMINAL
Torque: 5.4 N*m (55 kgf*cm, 48 in.*lbf)

3. ADD ENGINE COOLANT (See page CO-8)

4. CHECK FOR ENGINE COOLANT LEAKAGE (See page CO-1)

THROTTLE BODY

COMPONENTS

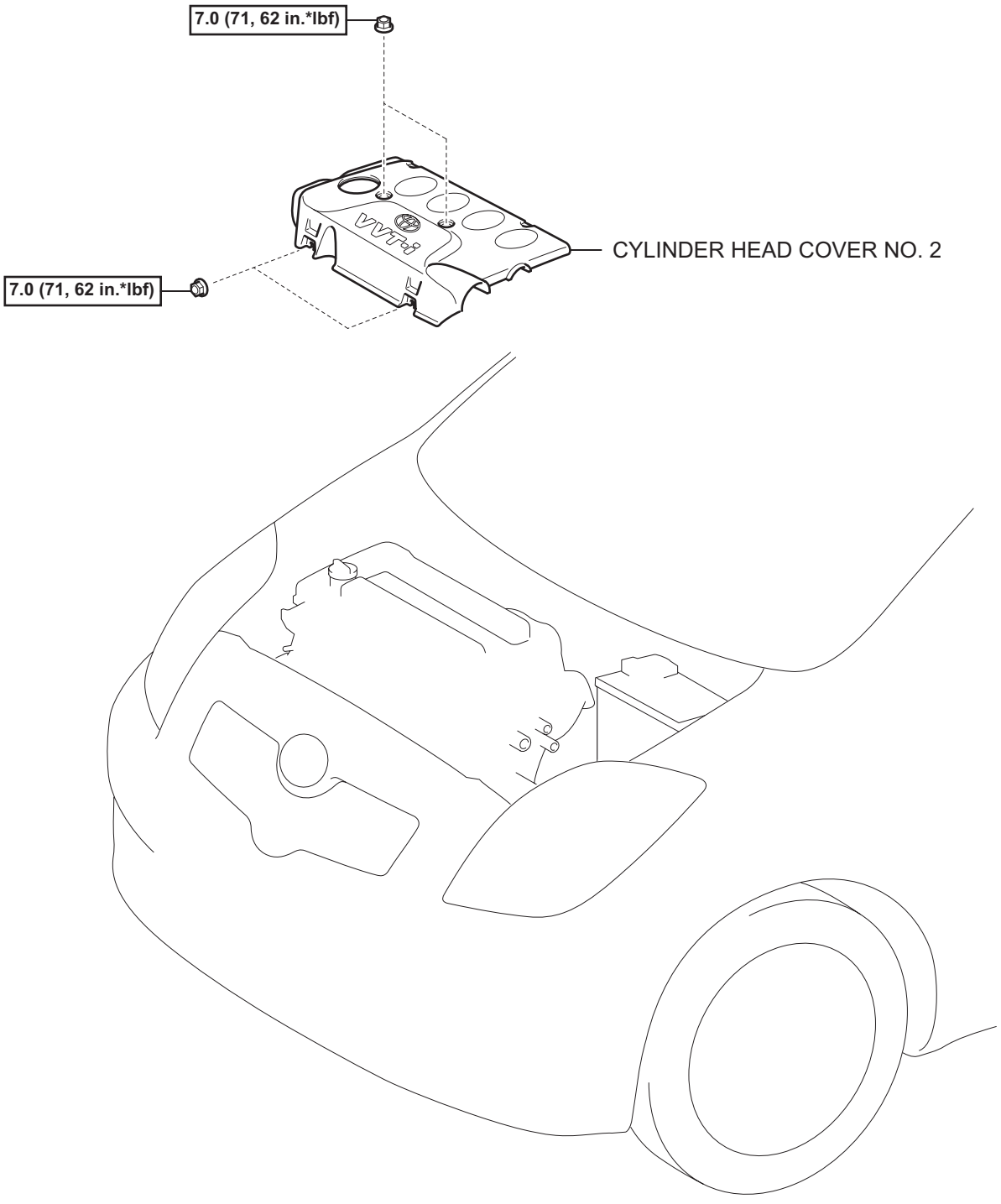

N*m (kgf*cm, ft.*lbf) : Specified torque

T

A115136E01

ES

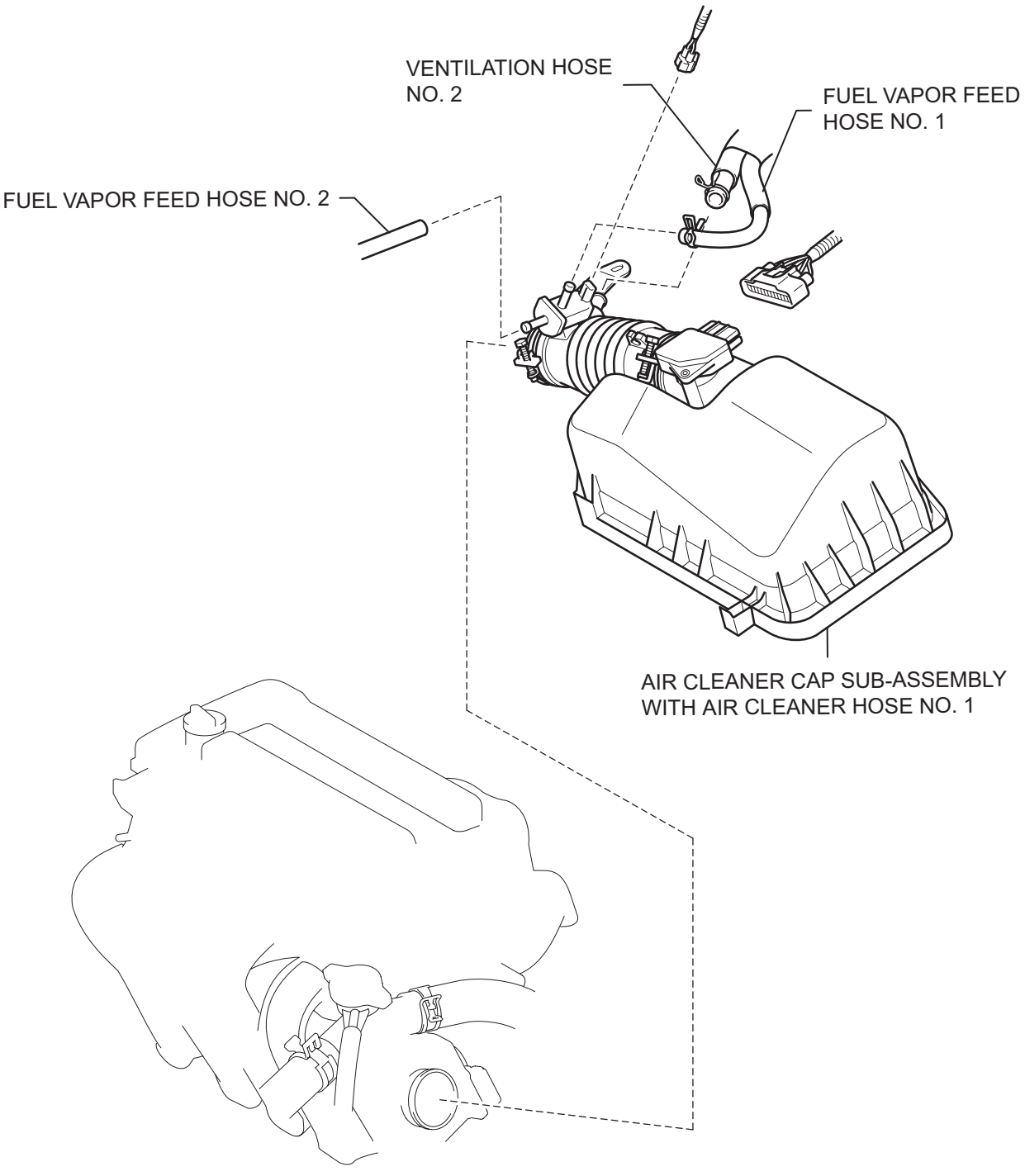

T

A133592E01

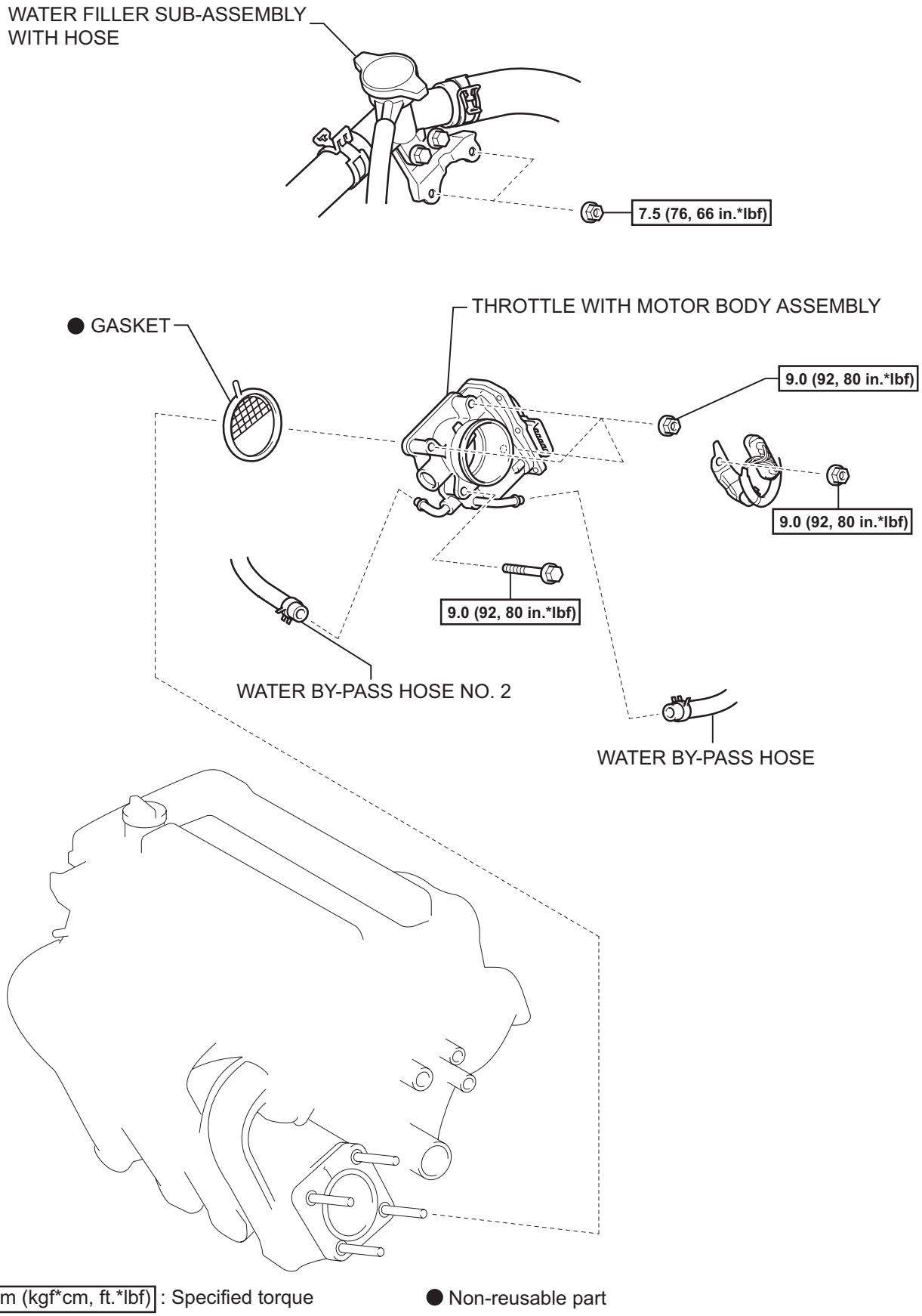

N*m (kgf*cm, ft.*lbf) : Specified torque ● Non-reusable part

A115138E01

ON-VEHICLE INSPECTION

1. INSPECT THROTTLE WITH MOTOR BODY ASSEMBLY

(a) Check the throttle control motor operating sounds.
  (1) Turn the ignition switch to ON.
  (2) When pressing the accelerator pedal, listen for sounds of the motor running. Make sure no friction noise comes from the motor.

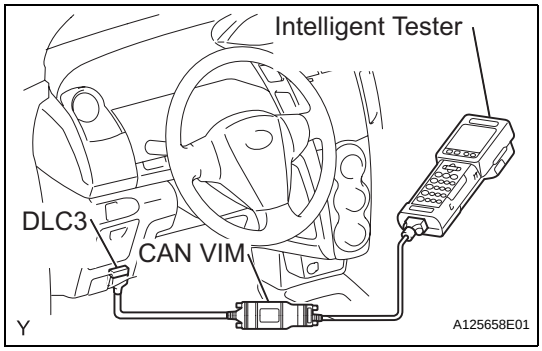

(b) Check the throttle position sensor.
  (1) Connect an intelligent tester to the DLC3.
  (2) Turn the ignition switch to ON.
  (3) Push the intelligent tester main switch ON.
  (4) Select the following menu items: DIAGNOSIS / ENHANCED OBD II / DATA LIST / THROTTLE POS.
  (5) Depress the accelerator pedal. When the throttle valve is fully open, check that the value of the "THROTTLE POS" is within the specifications.

Standard throttle valve opening percentage: 60 % or more

NOTICE:

When checking the standard throttle valve opening percentage, the shift lever should be in the neutral position.

If the percentage is less than 60 %, replace the throttle with motor body assembly.

REMOVAL

1. **DISCONNECT CABLE FROM NEGATIVE BATTERY TERMINAL**
2. **DRAIN ENGINE COOLANT (See page CO-8)**
3. **REMOVE CYLINDER HEAD COVER NO. 2 (See page IG-9)**
4. **REMOVE AIR CLEANER CAP SUB-ASSEMBLY WITH AIR CLEANER HOSE NO. 1**
   (a) Disconnect fuel vapor feed hose No. 1 and fuel vapor feed hose No. 2 from the vacuum switching valve assembly.
   (b) Disconnect the vacuum switching valve assembly connector and wire harness clamp.

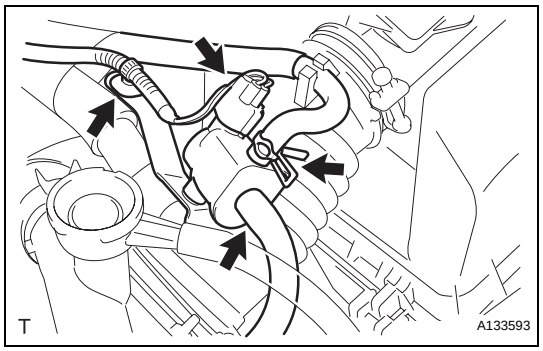

   (c) Disconnect ventilation hose No. 2.

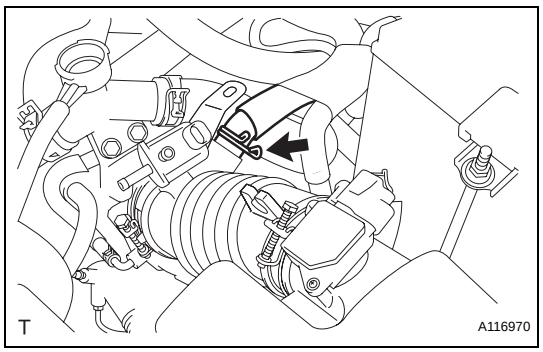

   (d) Disconnect the wire harness clamp and mass air flow meter connector.

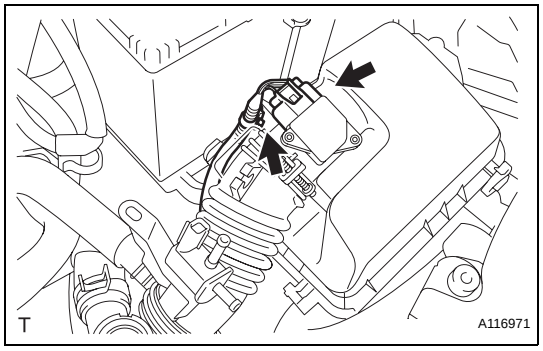

   (e) Loosen the hose clamp, unlock the air cleaner assembly clamp and remove air cleaner cap sub-assembly with air cleaner hose No. 1.

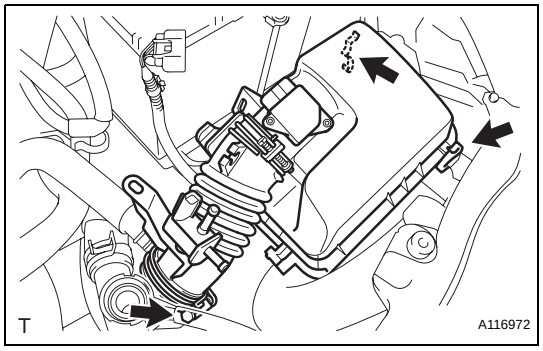

ES

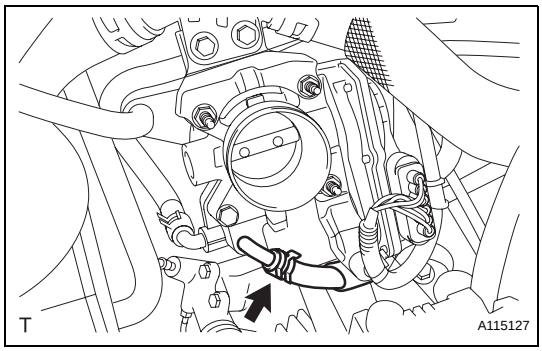

5. DISCONNECT WATER BY-PASS HOSE

(a) Disconnect the water by-pass hose.

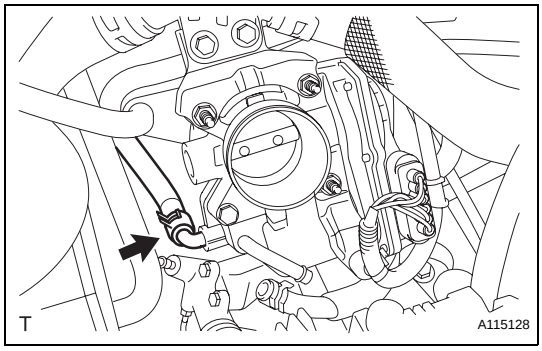

6. DISCONNECT WATER BY-PASS HOSE NO. 2

(a) Disconnect water by-pass hose No. 2.

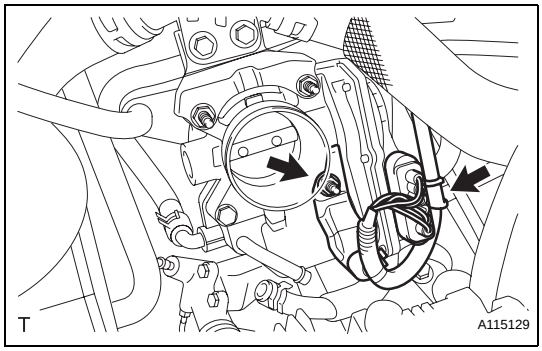

7. REMOVE THROTTLE WITH MOTOR BODY ASSEMBLY

(a) Disconnect the throttle with motor body assembly connector.

(b) Remove the nut and remove the wire harness with bracket.

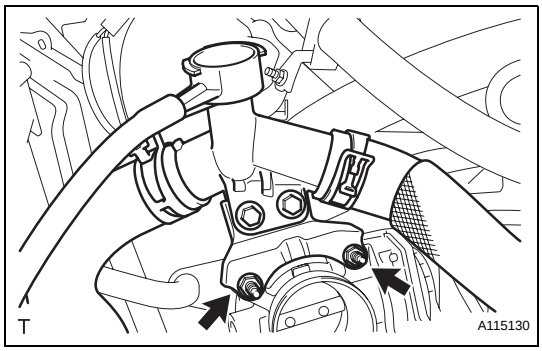

(c) Remove the 2 nuts and remove the water filler sub-assembly with hose.

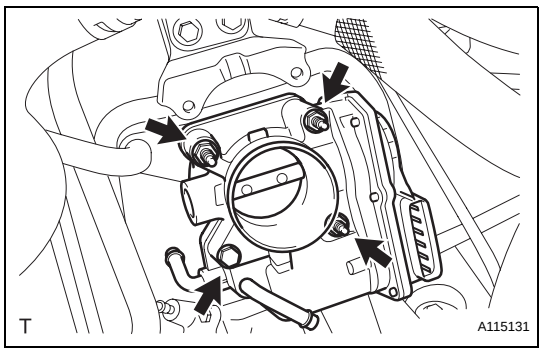

(d) Remove the bolt and 3 nuts and remove the throttle with motor body assembly.

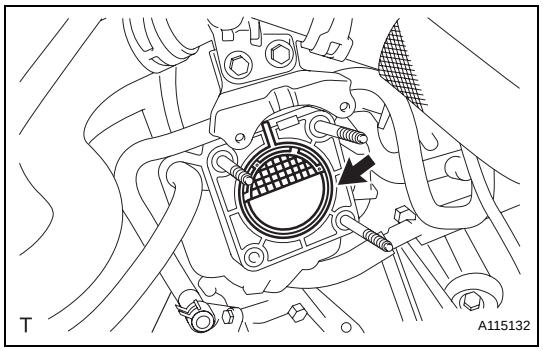

(e) Remove the gasket from the intake manifold.

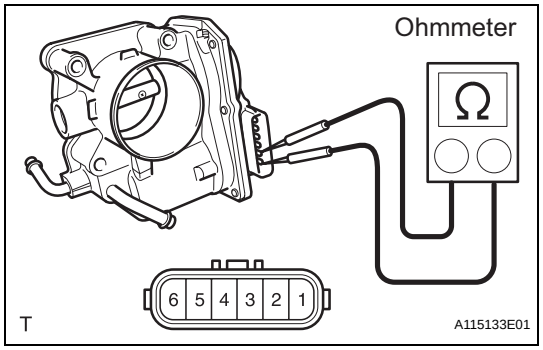

INSPECTION

1. INSPECT THROTTLE WITH MOTOR BODY ASSEMBLY

(a) Check the resistance.

(1) Using an ohmmeter, measure the resistance between the terminals.

Standard resistance

Tester Connection	Specified Condition
1 (M-) - 2 (M+)	0.3 to 100 Ω at 20°C (68°F)

If the result is not as specified, replace the throttle with motor body assembly.

INSTALLATION

1. INSTALL THROTTLE WITH MOTOR BODY ASSEMBLY

(a) Install a new gasket onto the intake manifold.

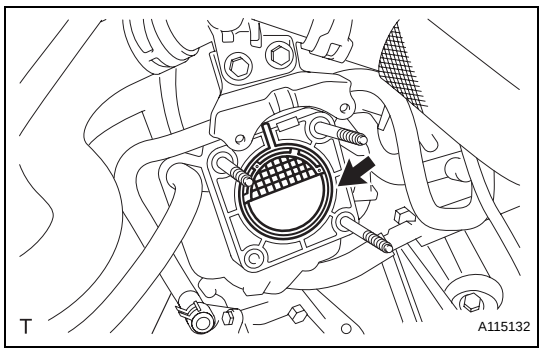

(b) Install the throttle with motor body assembly using the bolt and 3 nuts.

Torque: 9.0 N*m (92 kgf*cm, 80 in.*lbf)

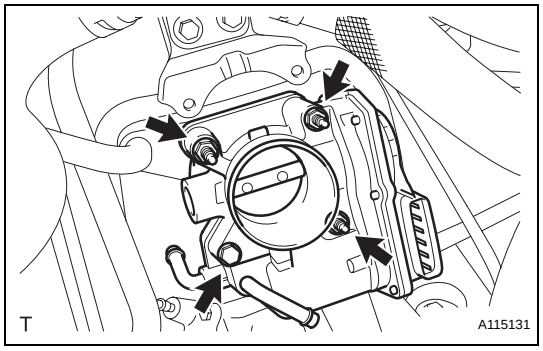

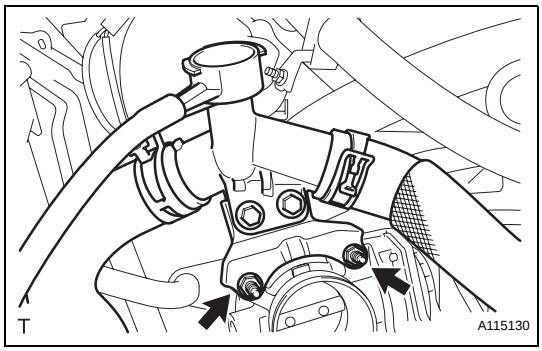

(c) Install the water filler sub-assembly with hose using the 2 nuts.
Torque: 7.5 N*m (76 kgf*cm, 66 in.*lbf)

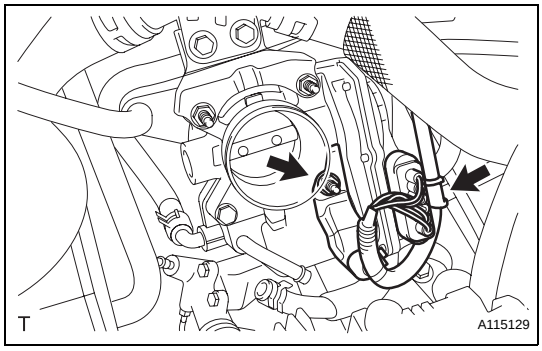

(d) Install the wire harness with bracket using the nut.
Torque: 9.0 N*m (92 kgf*cm, 80 in.*lbf)
(e) Connect the throttle with motor body assembly connector.

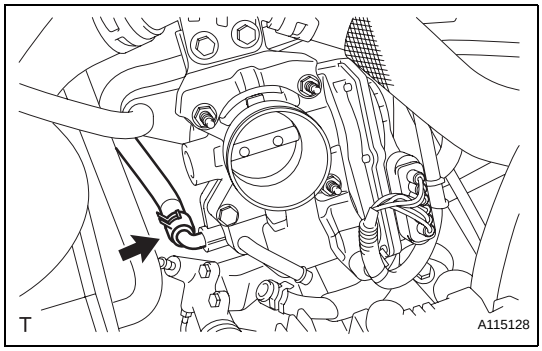

2. CONNECT WATER BY-PASS HOSE NO. 2
(a) Connect water by-pass hose No. 2.

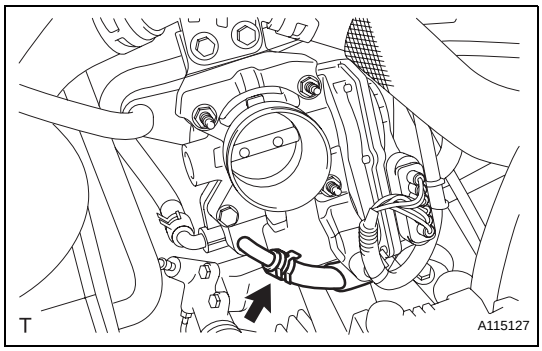

3. CONNECT WATER BY-PASS HOSE
(a) Connect the water by-pass hose.

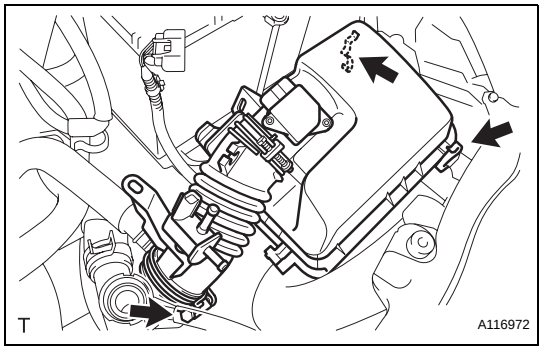

4. INSTALL AIR CLEANER CAP SUB-ASSEMBLY WITH AIR CLEANER HOSE NO. 1
(a) Install air cleaner cap sub-assembly with air cleaner hose No. 1.
(b) Tighten the hose clamp to the specified torque.
Torque: 3.0 N*m (31 kgf*cm, 27 in.*lbf)

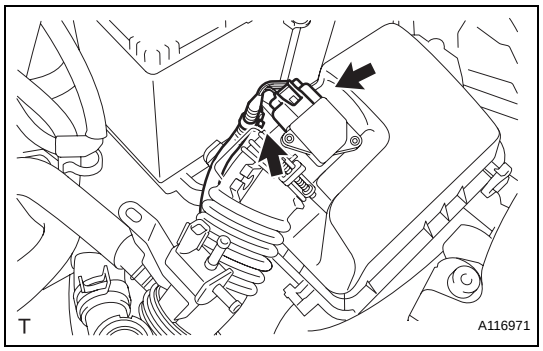

(c) Connect the wire harness clamp and mass air flow meter connector.

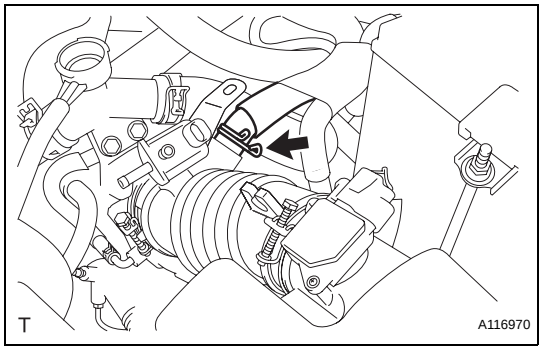

(d) Connect ventilation hose No. 2.

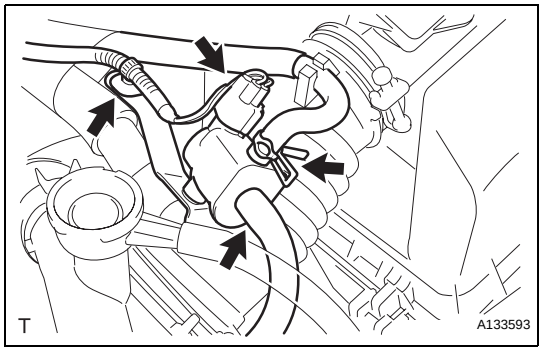

(e) Connect the vacuum switching valve assembly connector and wire harness clamp.
(f) Connect fuel vapor feed hose No. 1 and fuel vapor feed hose No. 2 to the vacuum switching valve assembly.

5. CONNECT CABLE TO NEGATIVE BATTERY TERMINAL
Torque: 5.4 N*m (55 kgf*cm, 48 in.*lbf)

6. ADD ENGINE COOLANT (See page CO-8)

7. CHECK FOR ENGINE COOLANT LEAKAGE (See page CO-1)

8. INSTALL CYLINDER HEAD COVER NO. 2 (See page IG-10)

KNOCK SENSOR

COMPONENTS

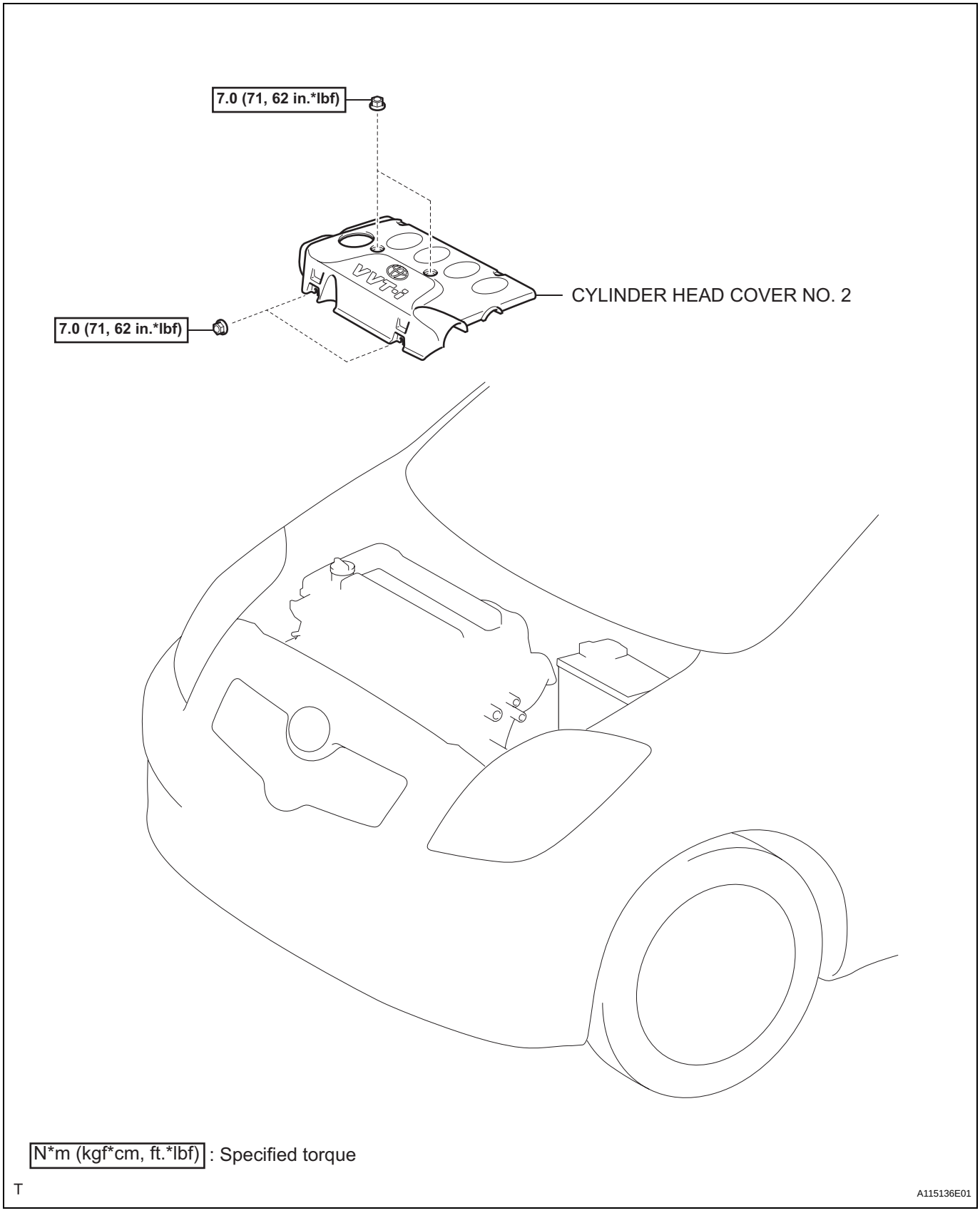

N*m (kgf*cm, ft.*lbf) : Specified torque

T

A115136E01

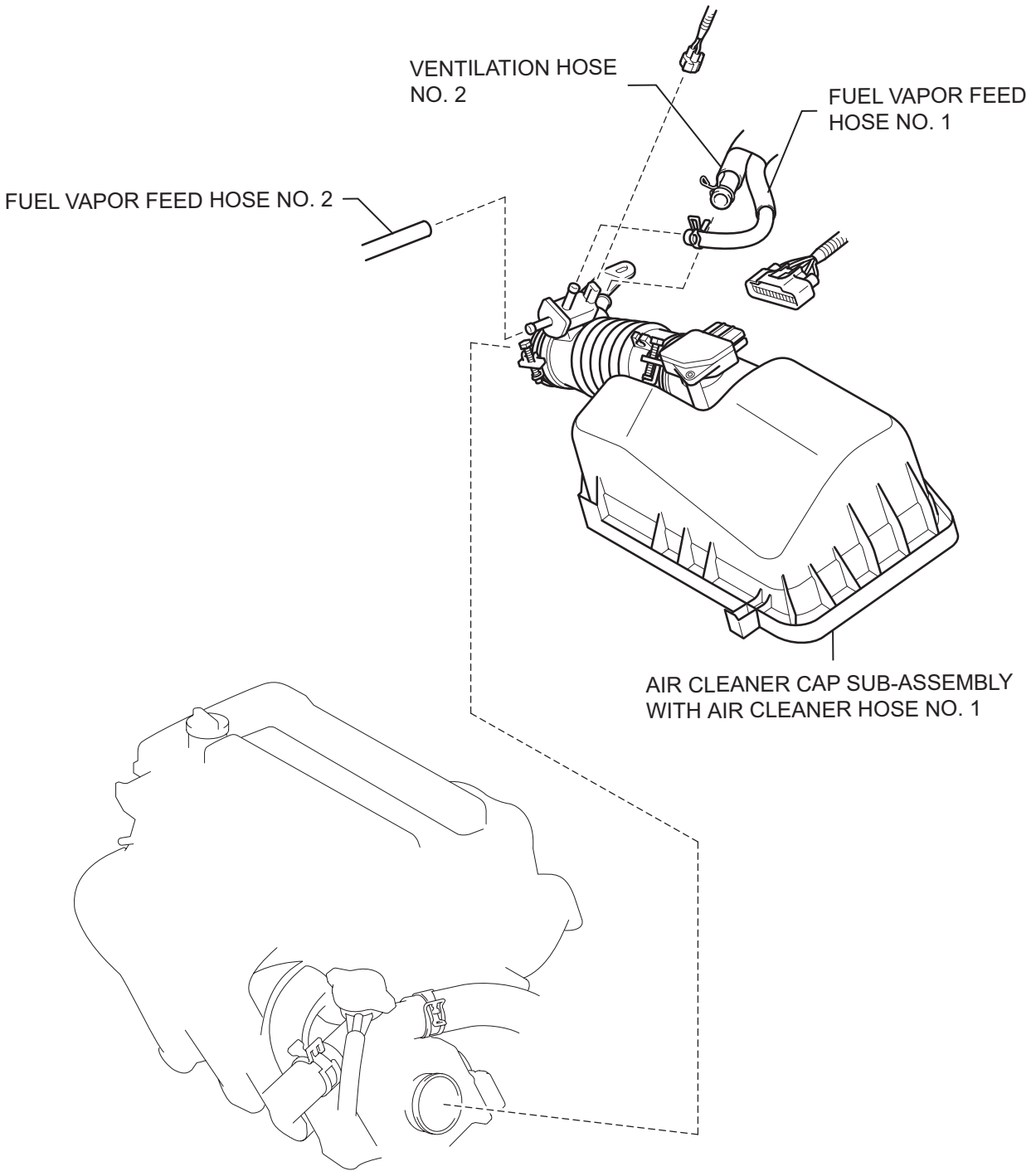

ES

T

A133592E01

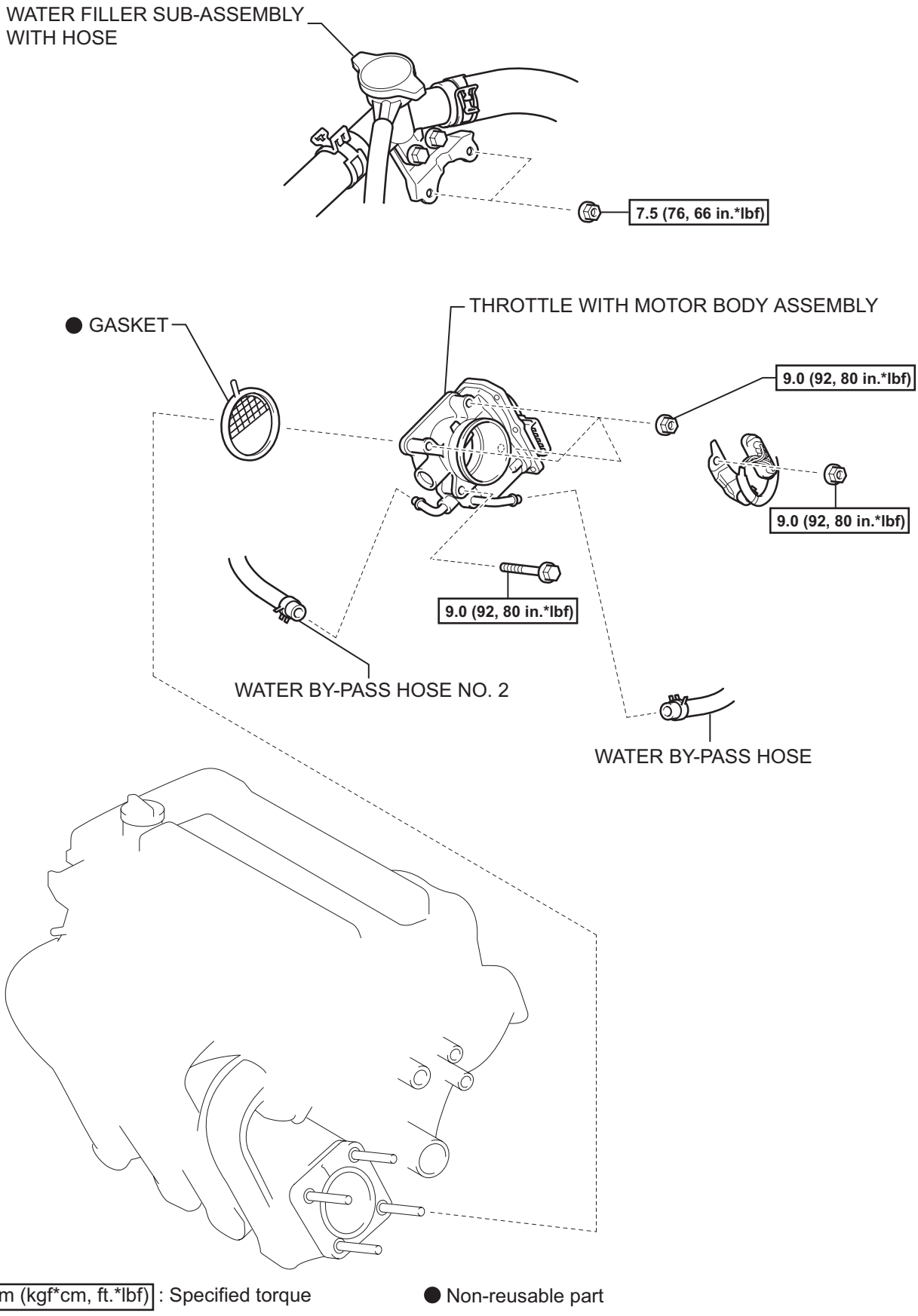
WATER FILLER SUB-ASSEMBLY WITH HOSE
7.5 (76, 66 in.*lbf)
ES
GASKET
THROTTLE WITH MOTOR BODY ASSEMBLY
9.0 (92, 80 in.*lbf)
9.0 (92, 80 in.*lbf)
9.0 (92, 80 in.*lbf)
WATER BY-PASS HOSE NO. 2
WATER BY-PASS HOSE
N*m (kgf*cm, ft.*lbf) : Specified torque
Non-reusable part
A115138E01

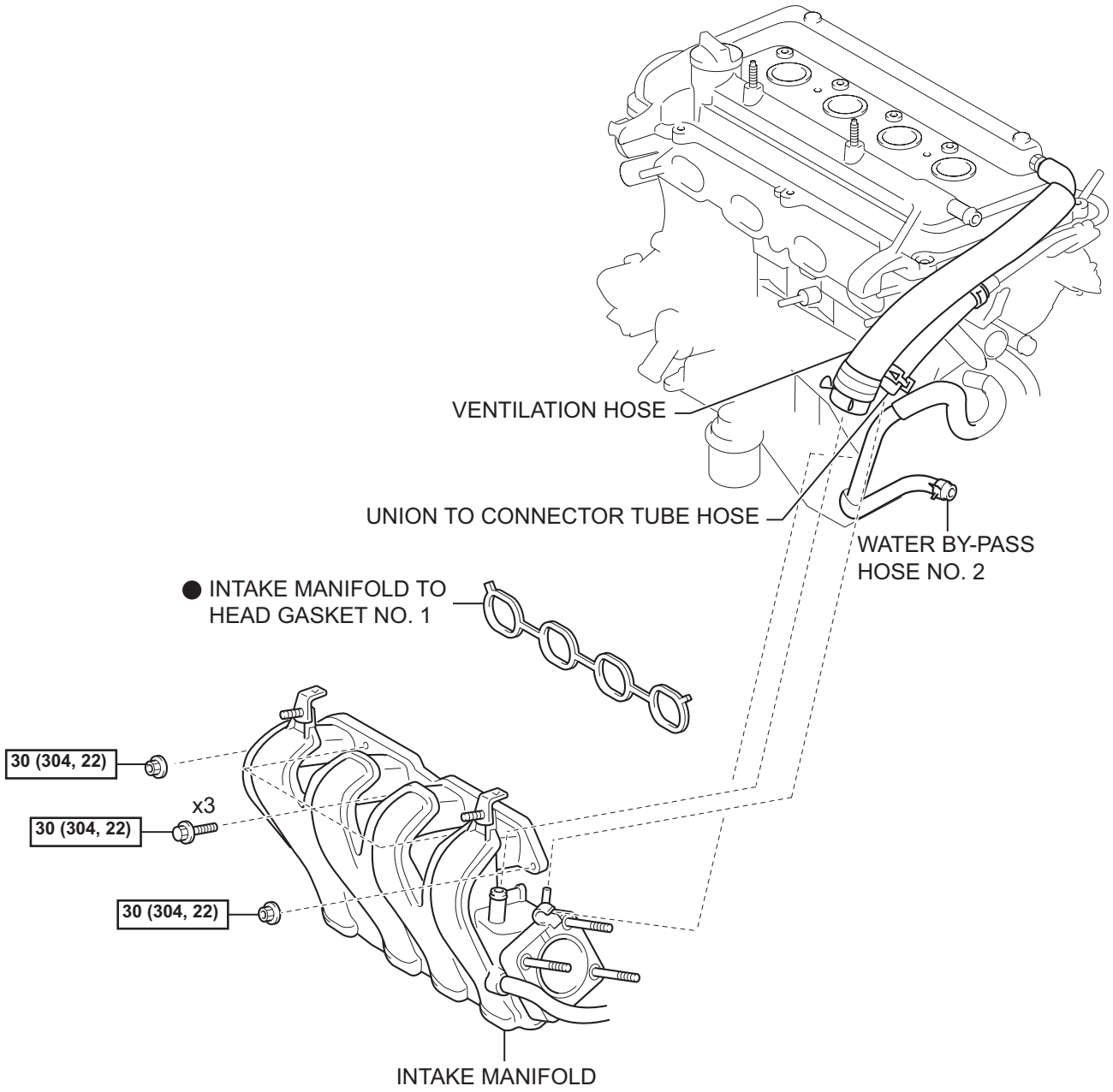

N*m (kgf*cm, ft.*lbf) : Specified torque

● Non-reusable part

T

A116974E01

ES

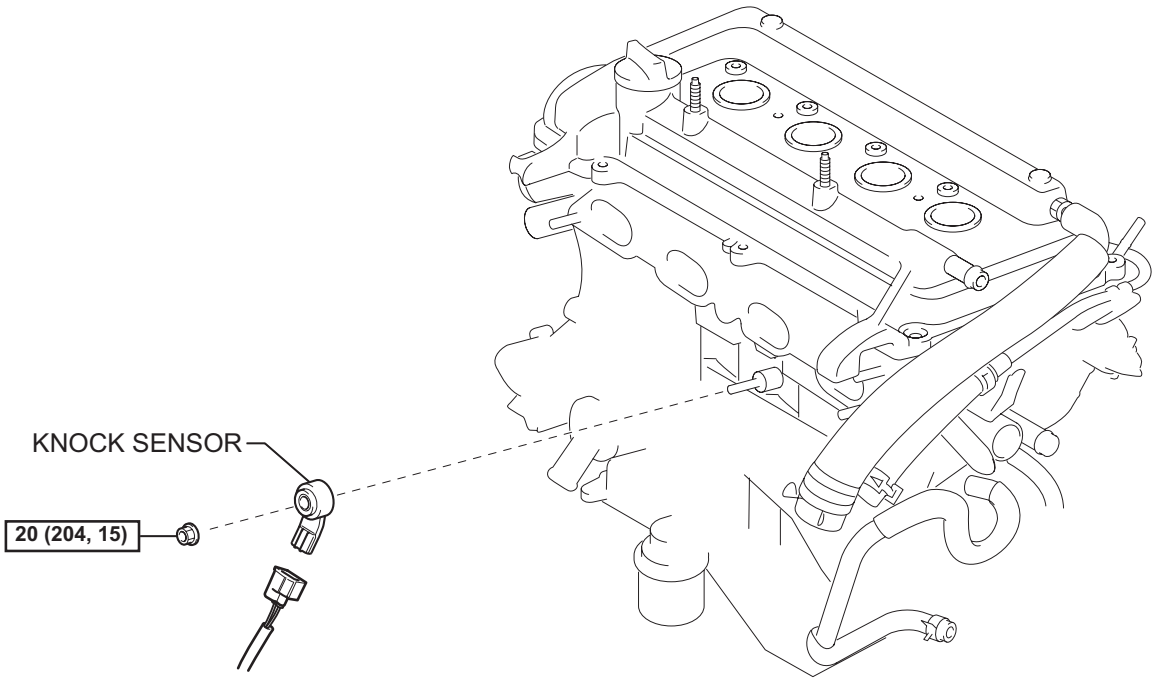

N*m (kgf*cm, ft*lbf) : Specified torque

T

A121464E01

REMOVAL

1. **DISCONNECT CABLE FROM NEGATIVE BATTERY TERMINAL**
2. **DRAIN ENGINE COOLANT (See page CO-8)**
3. **REMOVE CYLINDER HEAD COVER NO. 2 (See page IG-9)**
4. **REMOVE AIR CLEANER CAP SUB-ASSEMBLY WITH AIR CLEANER HOSE NO. 1 (See page ES-410)**
5. **DISCONNECT WATER BY-PASS HOSE (See page ES-411)**
6. **DISCONNECT WATER BY-PASS HOSE NO. 2 (See page ES-411)**
7. **REMOVE THROTTLE WITH MOTOR BODY ASSEMBLY (See page ES-412)**
8. **REMOVE INTAKE MANIFOLD**

(a) Separate the engine wire harness from the intake manifold.

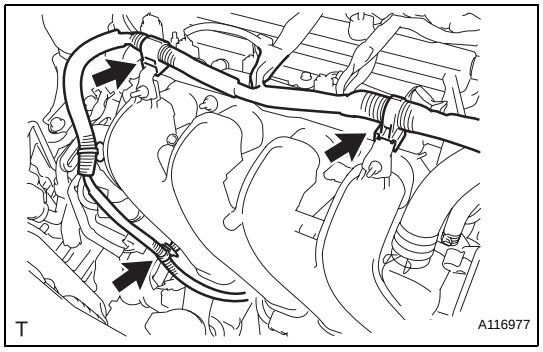

(b) Separate water by-pass hose No. 2.

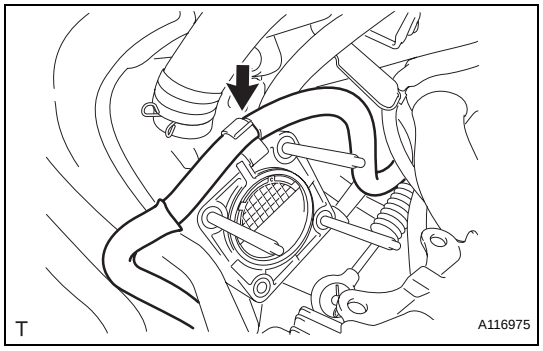

(c) Disconnect the ventilation hose.

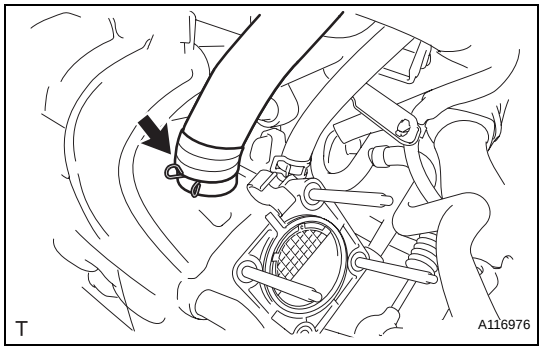

ES

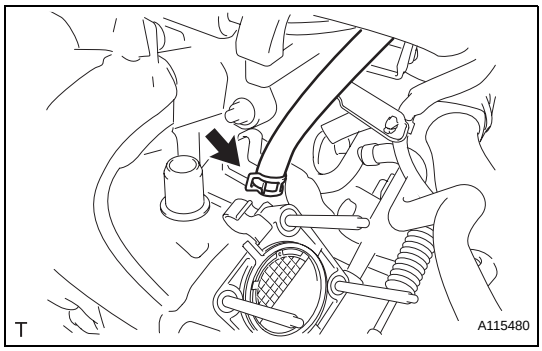

(d) Disconnect the union to connector tube hose.

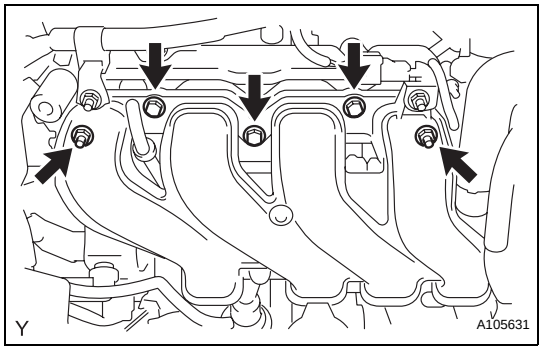

(e) Remove the 3 bolts and 2 nuts and remove the intake manifold.
(f) Remove the gasket from the intake manifold.

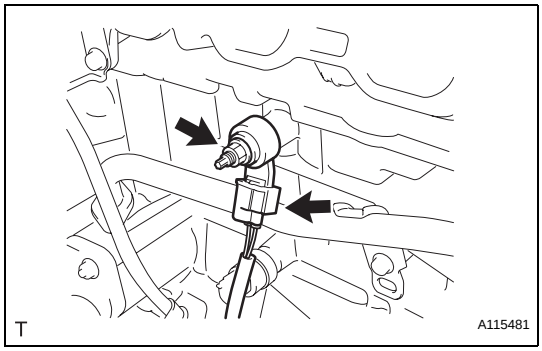

9. REMOVE KNOCK SENSOR
(a) Disconnect the knock sensor connector.
(b) Remove the nut and remove the knock sensor.

INSPECTION

1. INSPECT KNOCK SENSOR
(a) Check the resistance.
(1) Using an ohmmeter, measure the resistance between the terminals.
Standard resistance:
120 to 280 kΩ at 20°C (68°F)
If the result is not as specified, replace the knock sensor.

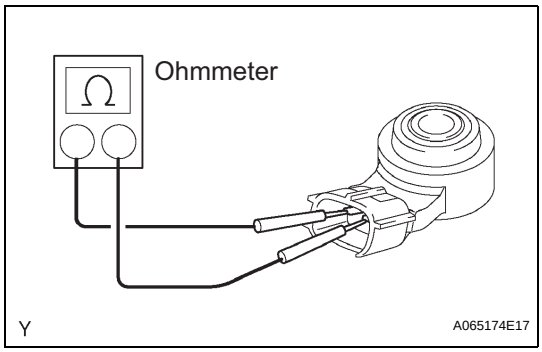

INSTALLATION

1. INSTALL KNOCK SENSOR
(a) Install the knock sensor with the nut as shown in the illustration.
Torque: 20 N*m (204 kgf*cm, 15 ft.*lbf)
(b) Connect the knock sensor connector.

2. INSTALL INTAKE MANIFOLD
(a) Install a new gasket onto the intake manifold.

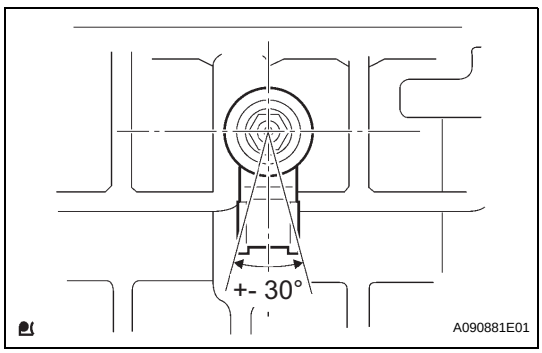

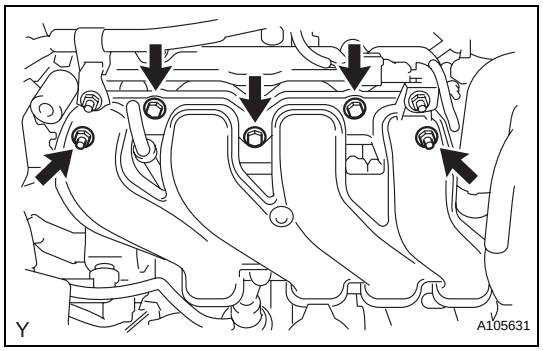

(b) Install the intake manifold with the 3 bolts and 2 nuts.
Torque: 30 N*m (304 kgf*cm, 22 ft.*lbf)

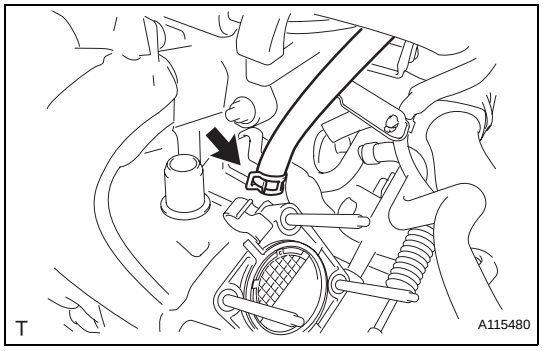

(c) Connect the union to connector tube hose.

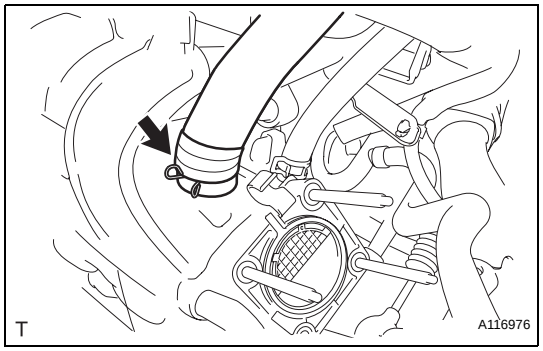

(d) Connect the ventilation hose.

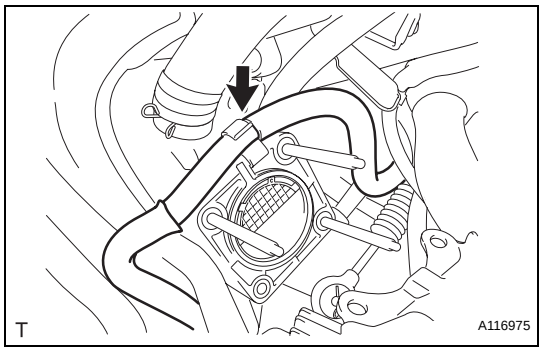

(e) Install water by-pass hose No. 2.

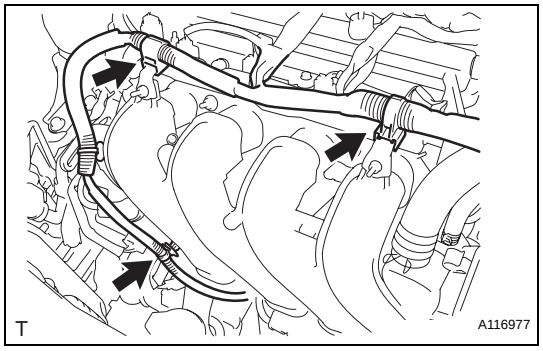

(f) Install the engine wire harness onto the intake manifold.

3. **INSTALL THROTTLE WITH MOTOR BODY ASSEMBLY (See page ES-413)**
4. **CONNECT WATER BY-PASS HOSE NO. 2 (See page ES-414)**
5. **CONNECT WATER BY-PASS HOSE (See page ES-414)**

ES

6. **INSTALL AIR CLEANER CAP SUB-ASSEMBLY WITH AIR CLEANER HOSE NO. 1 (See page ES-414)**
7. **CONNECT CABLE TO NEGATIVE BATTERY TERMINAL**
   Torque: 5.4 N*m (55 kgf*cm, 48 in.*lbf)
8. **ADD ENGINE COOLANT (See page CO-8)**
9. **CHECK FOR ENGINE COOLANT LEAKAGE (See page CO-1)**
10. **INSTALL CYLINDER HEAD COVER NO. 2 (See page IG-10)**

INTEGRATION RELAY

COMPONENTS

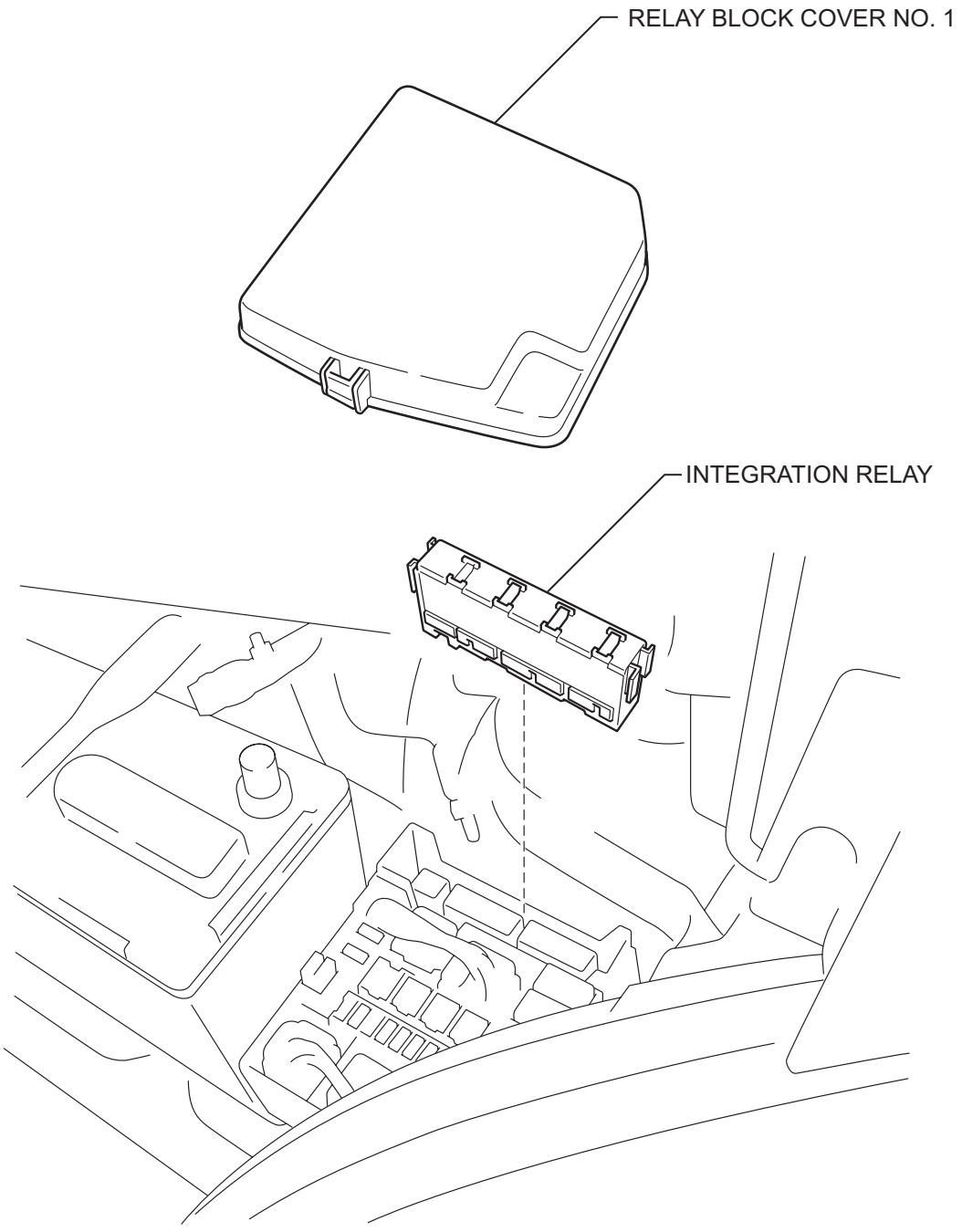

N

A115401E01

ES

REMOVAL

1. **DISCONNECT CABLE FROM NEGATIVE BATTERY TERMINAL**
2. **REMOVE RELAY BLOCK COVER NO. 1**
3. **REMOVE INTEGRATION RELAY**
   (a) Using a screwdriver with its tip wrapped in protective tape, disengage the 2 claws and disconnect the integration relay.
   (b) Disconnect the 3 connectors.

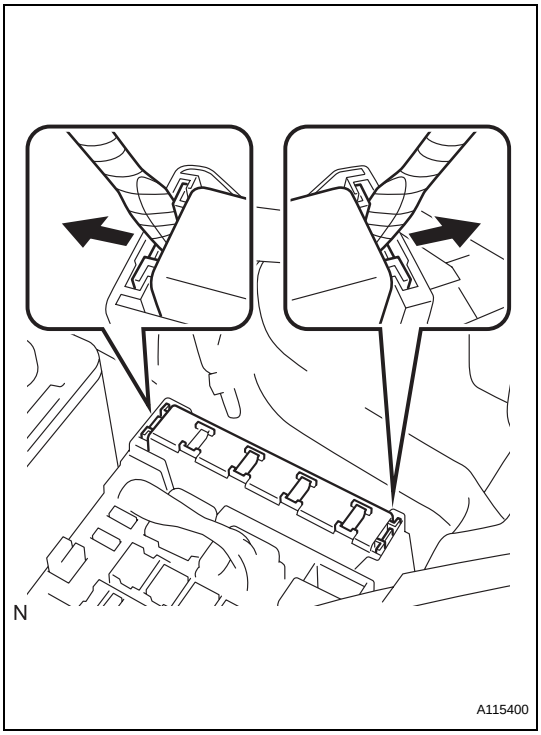

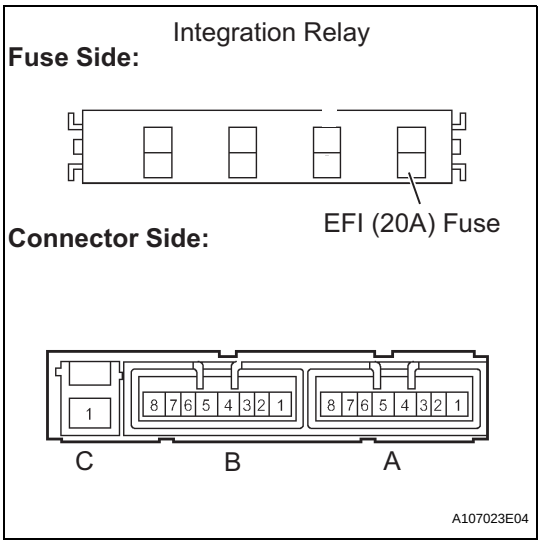

INSPECTION

1. **INSPECT INTEGRATION RELAY**
   (a) Inspect the EFI (20A) fuse.
      (1) Disconnect the fuse.
      (2) Using an ohmmeter, measure the resistance of the fuse.
      Standard resistance

Tester Connection	Specified Condition
1 - 2	Below 1 Ω

   (b) Inspect the EFI relay.
      (1) Using an ohmmeter, measure the resistance between the terminals.

Standard resistance

Tester Connection	Specified Condition
A4 - C1	10 kΩor higher
	Below 1 Ω (Battery voltage applied between terminals A2 and A3)

NOTICE:
While using the battery for the inspection, do not bring the positive and negative tester probes too close to each other as a short circuit may occur.

INSTALLATION

1. INSTALL INTEGRATION RELAY

(a) Connect the 3 connectors.

(b) Attach the integration relay to the engine room relay block.

2. INSTALL RELAY BLOCK COVER NO. 1

3. CONNECT CABLE TO NEGATIVE BATTERY TERMINAL

Torque: 5.4 N*m (55 kgf*cm, 48 in.*lbf)

ECM

COMPONENTS

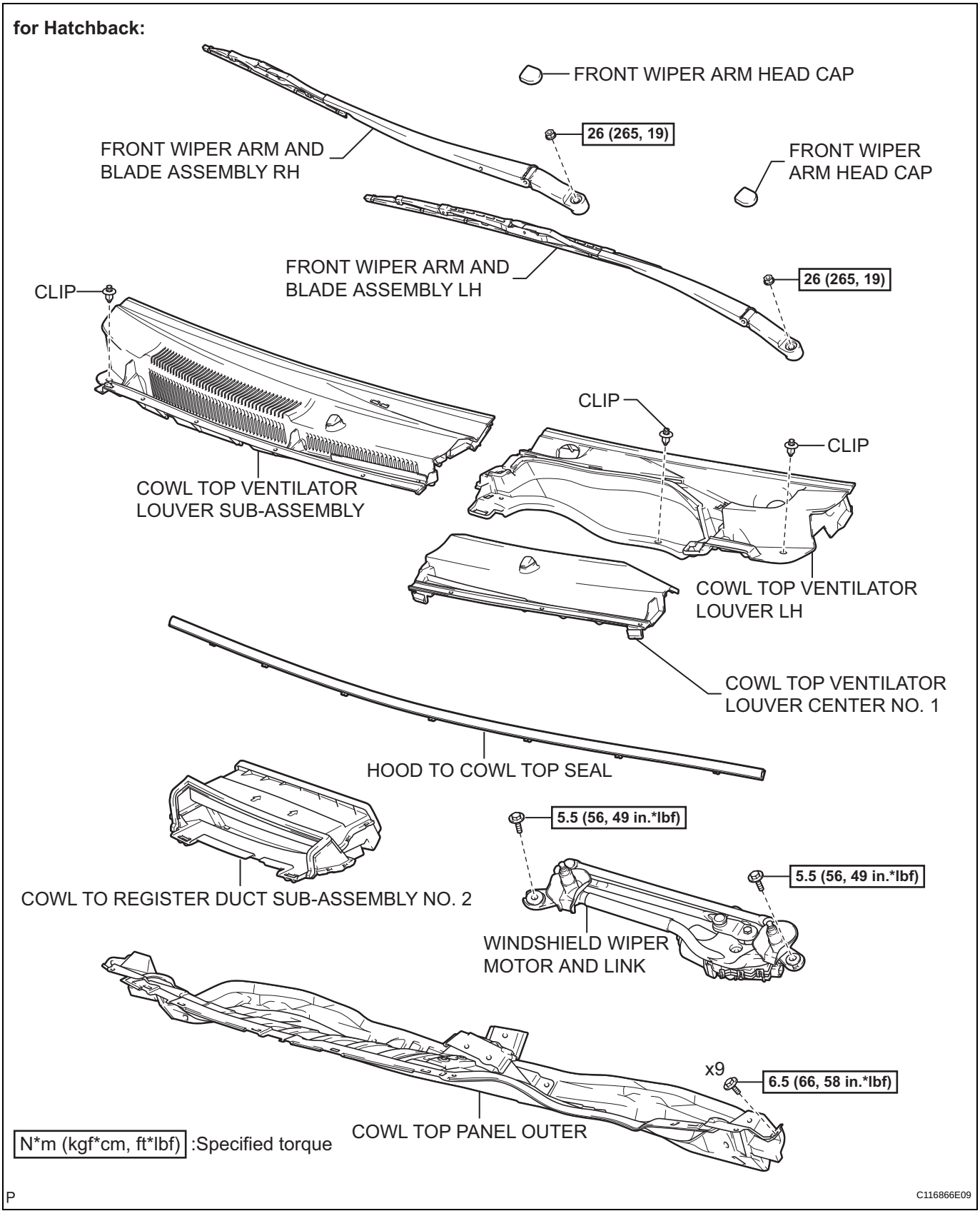

for Sedan:

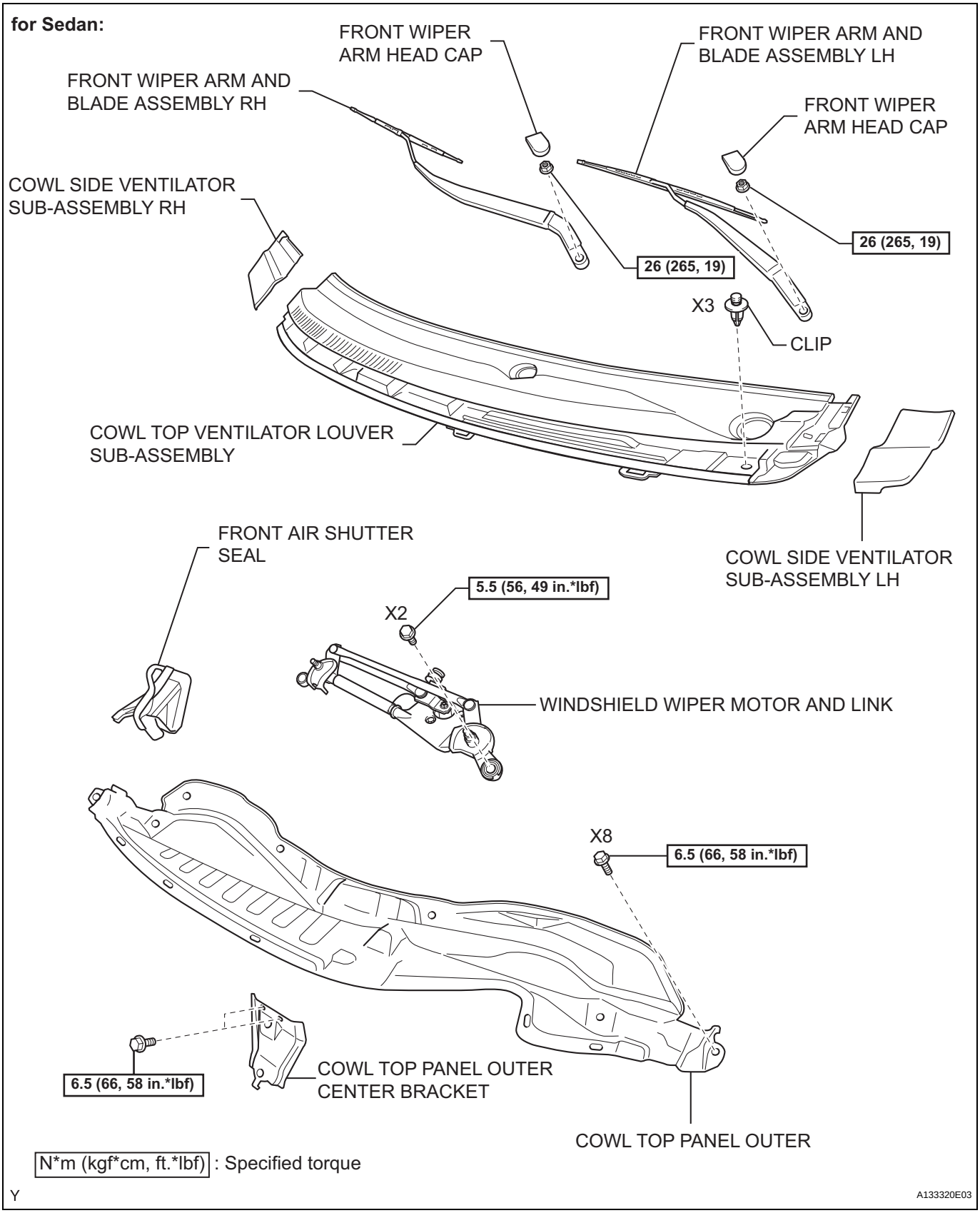

N*m (kgf*cm, ft.*lbf) : Specified torque

Y

A133320E03

ES

ES

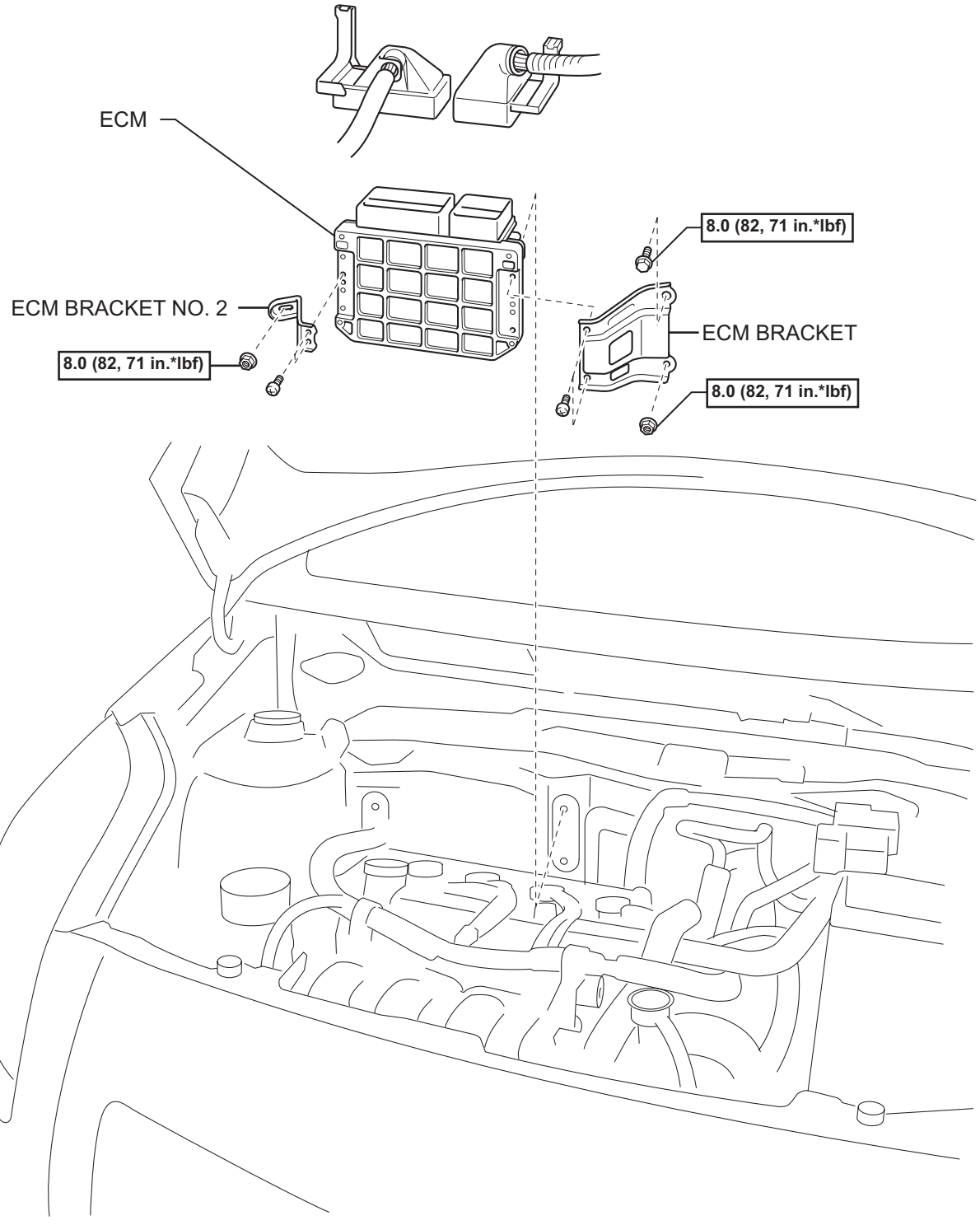

N*m (kgf*cm, ft.*lbf) : Specified torque

Y

A115379E03

REMOVAL

NOTICE:
Replace the ECM with a new one if necessary.

1. **DISCONNECT CABLE FROM NEGATIVE BATTERY TERMINAL**
2. **REMOVE FRONT WIPER ARM HEAD CAP (for Hatchback) (See page WW-17)**
3. **REMOVE FRONT WIPER ARM HEAD CAP (for Sedan) (See page WW-9)**
4. **REMOVE FRONT WIPER ARM AND BLADE ASSEMBLY LH (for Hatchback) (See page WW-17)**
5. **REMOVE FRONT WIPER ARM AND BLADE ASSEMBLY LH (for Sedan) (See page WW-9)**
6. **REMOVE FRONT WIPER ARM AND BLADE ASSEMBLY RH (for Hatchback) (See page WW-17)**
7. **REMOVE FRONT WIPER ARM AND BLADE ASSEMBLY RH (for Sedan) (See page WW-9)**
8. **REMOVE HOOD TO COWL TOP SEAL (for Hatchback) (See page WW-18)**
9. **REMOVE COWL SIDE VENTILATOR SUB-ASSEMBLY LH (for Sedan) (See page WW-10)**
10. **REMOVE COWL SIDE VENTILATOR SUB-ASSEMBLY RH (for Sedan) (See page WW-10)**
11. **REMOVE COWL TOP VENTILATOR LOUVER LH (for Hatchback) (See page WW-18)**
12. **REMOVE COWL TOP VENTILATOR LOUVER SUB-ASSEMBLY (for Hatchback) (See page WW-18)**
13. **REMOVE COWL TOP VENTILATOR LOUVER SUB-ASSEMBLY (for Sedan LHD) (See page WW-10)**
14. **REMOVE WINDSHIELD WIPER MOTOR AND LINK (for Hatchback) (See page WW-19)**
15. **REMOVE WINDSHIELD WIPER MOTOR AND LINK (for Sedan) (See page WW-10)**
16. **REMOVE COWL TO REGISTER DUCT SUB-ASSEMBLY NO. 2 (for Hatchback) (See page EM-122)**

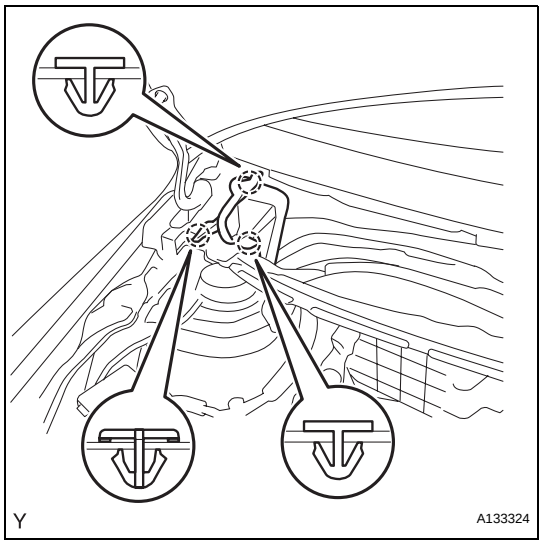

17. REMOVE FRONT AIR SHUTTER SEAL (for Sedan)

(a) Disengage the 3 claws and remove the front air shutter seal.

18. REMOVE COWL TOP PANEL OUTER (for Hatchback) (See page EM-123)

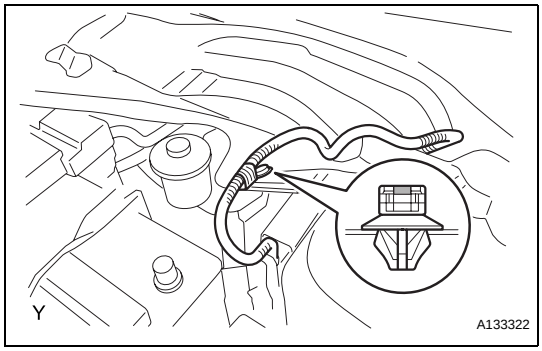

19. REMOVE COWL TOP PANEL OUTER (for Sedan)

(a) Disengage the claw and disconnect the wire harness.

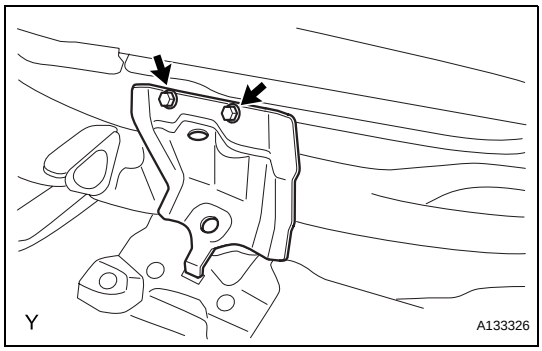

(b) Remove the 2 bolts and remove the cowl top panel outer center bracket.

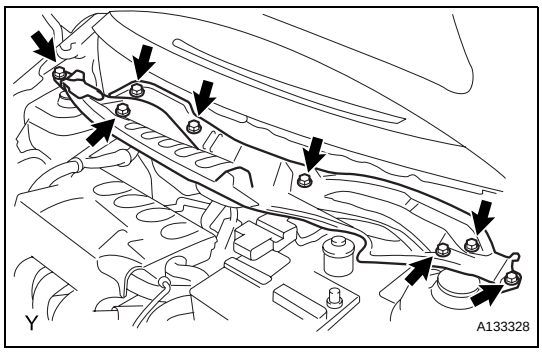

(c) Remove the 8 bolts and remove the cowl top panel outer.

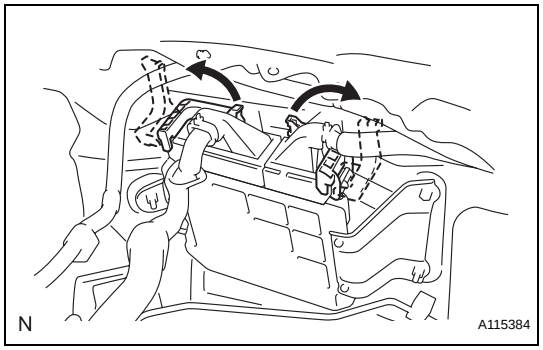

20. REMOVE ECM

(a) Remove the 2 lock knobs and harness clamp.

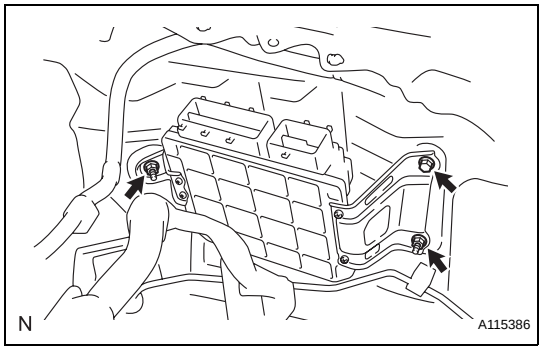

(b) Disconnect the 2 ECM connectors.

(c) Remove the bolt and 2 nuts and remove the ECM.

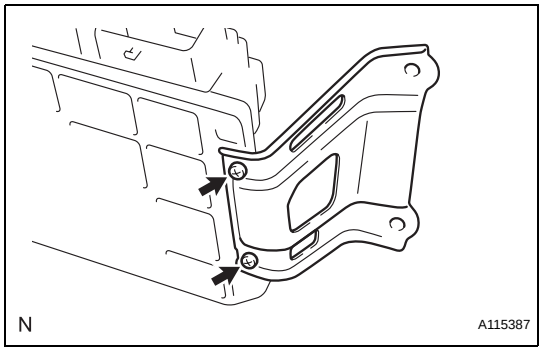

21. REMOVE ECM BRACKET

(a) Remove the 2 screws and the ECM bracket.

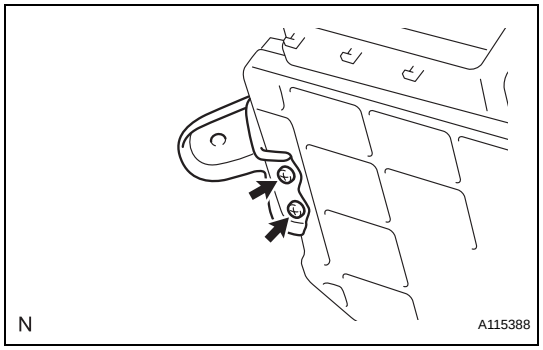

22. REMOVE ECM BRACKET NO. 2

(a) Remove the 2 screws and ECM bracket No. 2.

INSTALLATION

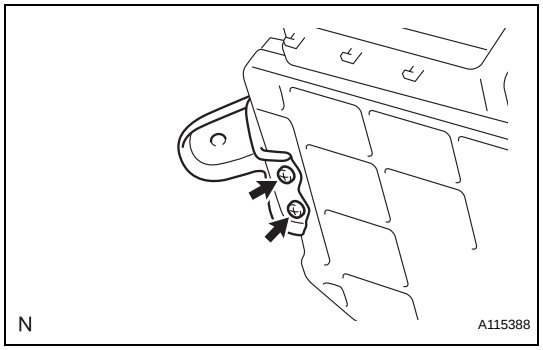

1. INSTALL ECM BRACKET NO. 2

(a) Install ECM bracket No. 2 with the 2 screws.

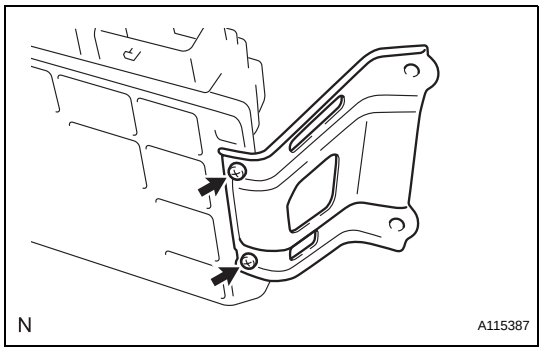

2. INSTALL ECM BRACKET

(a) Install the ECM bracket with the 2 screws.

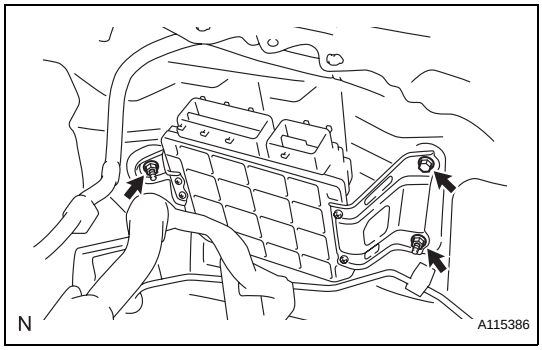

3. INSTALL ECM

(a) Install the ECM with the bolt and 2 nuts.
Torque: 8.0 N*m (82 kgf*cm, 71 in.*lbf)

(b) Connect the 2 ECM connectors.

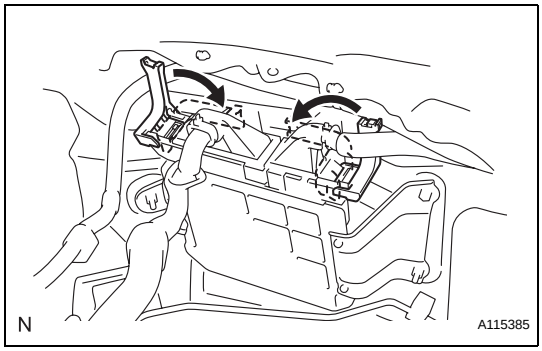

(c) Install the 2 lock knobs and harness clamp.

4. INSTALL COWL TOP PANEL OUTER (for Hatchback) (See page EM-146)

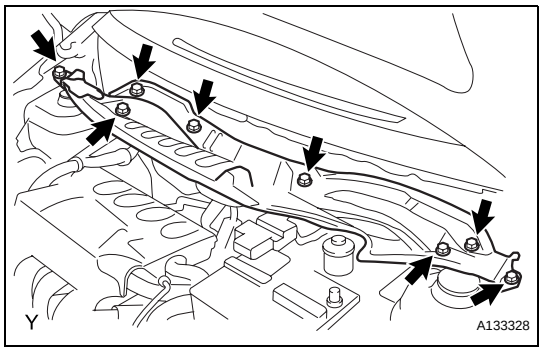

5. INSTALL COWL TOP PANEL OUTER (for Sedan)

(a) Install the cowl top panel outer and install the 8 bolts.
Torque: 6.5 N*m (66 kgf*cm, 58 in.*lbf)

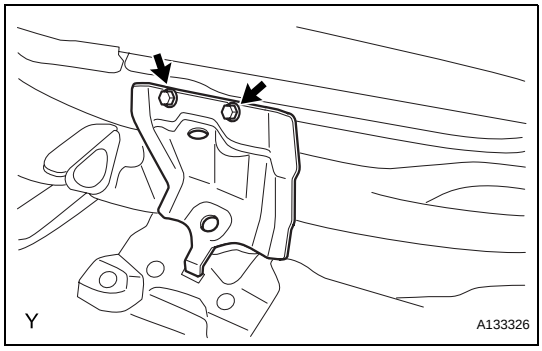

(b) Install the cowl top panel outer center bracket and install the 2 bolts.
Torque: 6.5 N*m (66 kgf*cm, 58 in.*lbf)

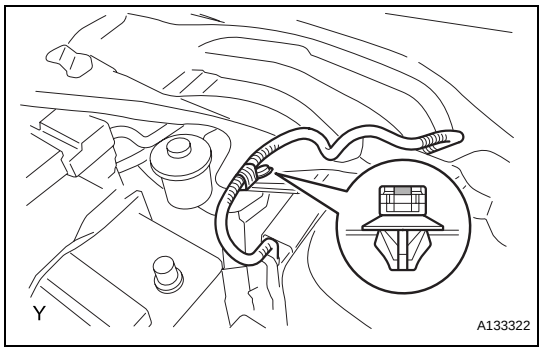

(c) Connect the wire harness and engage the claw.

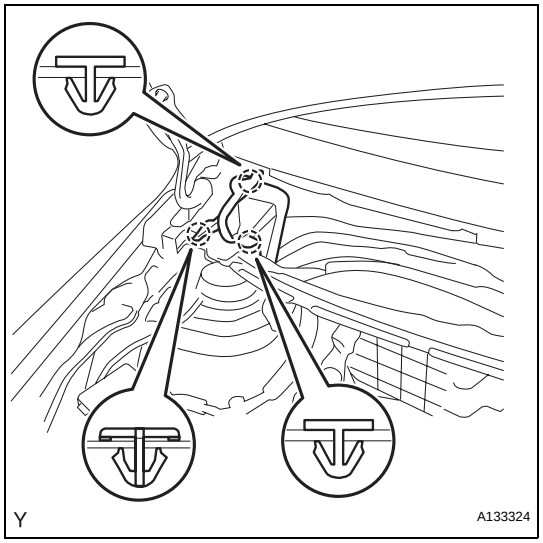

6. **INSTALL FRONT AIR SHUTTER SEAL (for Sedan)**
   (a) Install the front air shutter seal and engage the 3 claws.
7. **INSTALL COWL TO REGISTER DUCT SUB-ASSEMBLY NO. 2 (for Hatchback) (See page EM-147)**
8. **INSTALL WINDSHIELD WIPER MOTOR AND LINK (for Hatchback) (See page WW-21)**
9. **INSTALL WINDSHIELD WIPER MOTOR AND LINK (for Sedan) (See page WW-12)**
10. **INSTALL COWL TOP VENTILATOR LOUVER LH (for Hatchback) (See page WW-21)**
11. **INSTALL COWL TOP VENTILATOR LOUVER SUB-ASSEMBLY (for Hatchback) (See page WW-21)**
12. **INSTALL COWL TOP VENTILATOR LOUVER SUB-ASSEMBLY (for Sedan) (See page WW-12)**
13. **INSTALL HOOD TO COWL TOP SEAL (for Hatchback) (See page WW-22)**
14. **INSTALL COWL SIDE VENTILATOR SUB-ASSEMBLY LH (for Sedan) (See page WW-13)**
15. **INSTALL COWL SIDE VENTILATOR SUB-ASSEMBLY RH (for Sedan) (See page WW-13)**
16. **INSTALL FRONT WIPER ARM AND BLADE ASSEMBLY LH (for Hatchback) (See page WW-22)**
17. **INSTALL FRONT WIPER ARM AND BLADE ASSEMBLY LH (for Sedan) (See page WW-13)**
18. **INSTALL FRONT WIPER ARM AND BLADE ASSEMBLY RH (for Hatchback) (See page WW-23)**
19. **INSTALL FRONT WIPER ARM AND BLADE ASSEMBLY RH (for Sedan) (See page WW-14)**
20. **INSTALL FRONT WIPER ARM HEAD CAP (for Hatchback) (See page WW-23)**
21. **INSTALL FRONT WIPER ARM HEAD CAP (for Sedan) (See page WW-15)**
22. **CONNECT CABLE TO NEGATIVE BATTERY TERMINAL**
    Torque: 5.4 N*m (55 kgf*cm, 48 in.*lbf)

ACCELERATOR PEDAL

COMPONENTS

ES

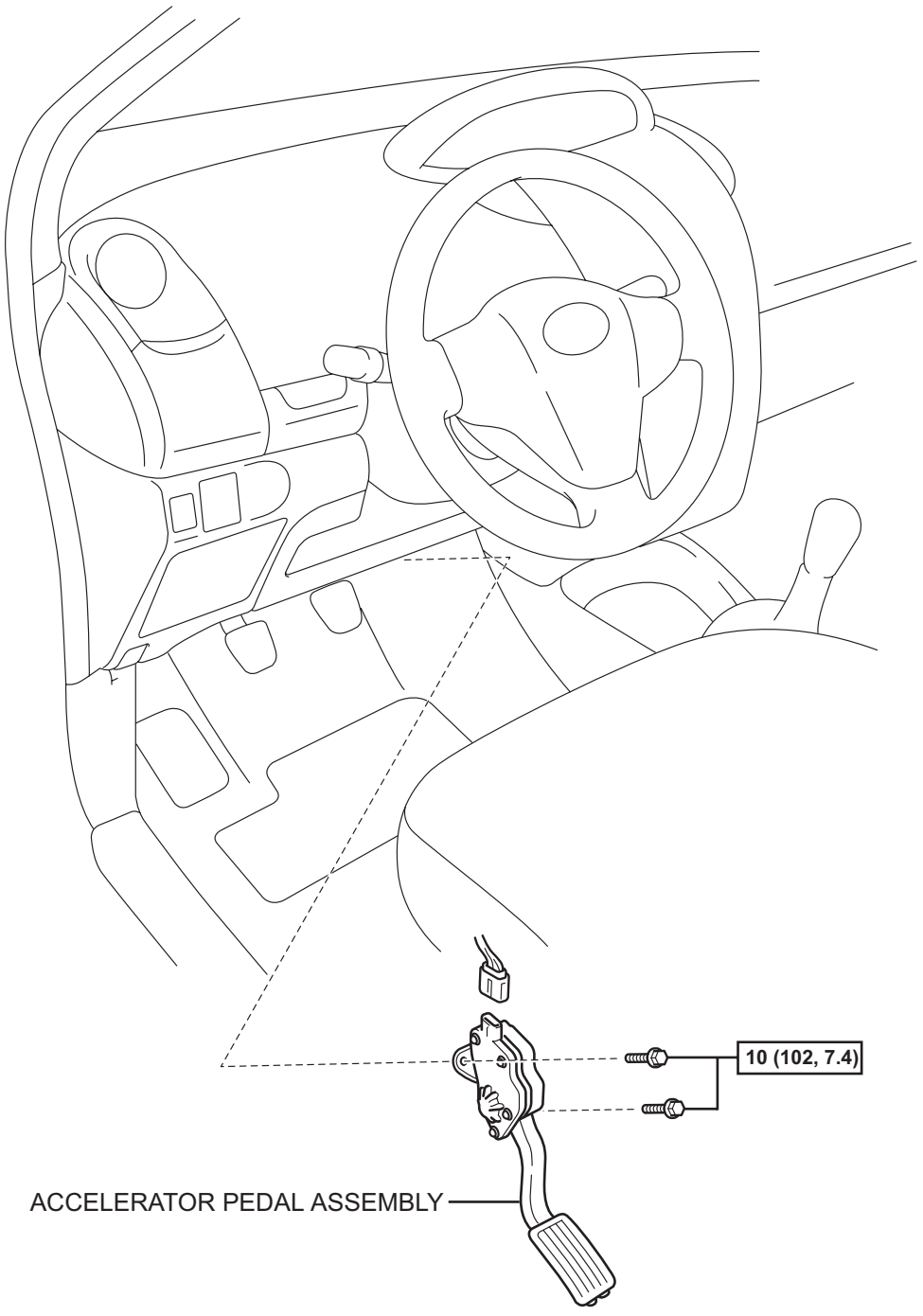

N*m (kgf*cm, ft.*lbf) : Specified torque

N

A115380E04

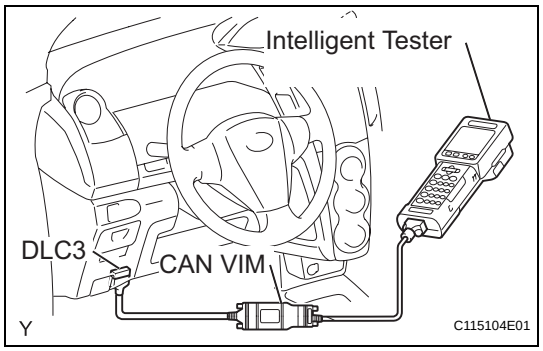

ON-VEHICLE INSPECTION

1. INSPECT ACCELERATOR PEDAL ASSEMBLY

(a) Connect an intelligent tester to the DLC3.

(b) Turn the ignition switch ON and turn the tester ON.

(c) Select the following menu items: Powertrain / Engine and ECT / Data List / Accelerator Pedal Position No. 1 and Accelerator Pedal Position No. 2.

(d) While the accelerator pedal is depressed or released, check that the values of accelerator pedal position No. 1 and accelerator pedal position No. 2 are within the specifications.

Accelerator Pedal Position No. 1 Standard Voltage

Condition	Specified Condition
Accelerator pedal released	0.5 to 1.1 V
Accelerator pedal depressed	2.6 to 4.5 V

Accelerator Pedal Position No. 2 Standard Voltage

Condition	Specified Condition
Accelerator pedal released	1.2 to 2.0 V
Accelerator pedal depressed	3.4 to 5.0 V

HINT:
If the results are not as specified, check the accelerator pedal, wire harness or ECM.

ES

REMOVAL

1. DISCONNECT CABLE FROM NEGATIVE BATTERY TERMINAL

2. REMOVE ACCELERATOR PEDAL ASSEMBLY

(a) Disconnect the accelerator pedal connector.

(b) Remove the 2 bolts and the accelerator pedal.

NOTICE:

- **Do not drop or strike the accelerator pedal.**
- **Do not disassemble the accelerator pedal.**

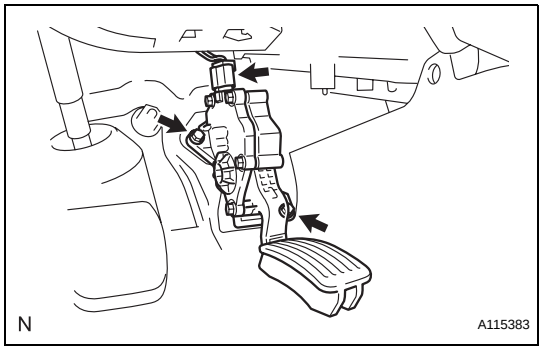

ES

INSTALLATION

NOTICE:

- **Avoid any physical shock to the accelerator pedal.**
- **Do not disassemble the accelerator pedal.**

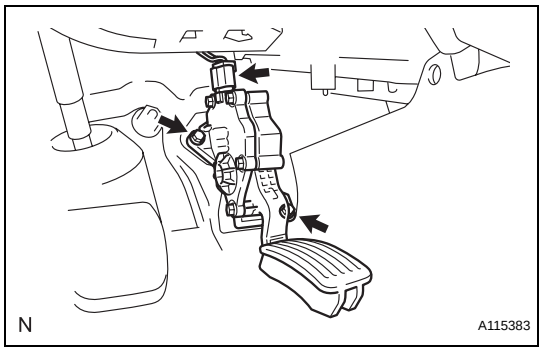

1. INSTALL ACCELERATOR PEDAL ASSEMBLY

(a) Install the accelerator pedal with the 2 bolts.
Torque: 10 N*m (102 kgf*cm, 7.4 ft.*lbf)

(b) Connect the accelerator pedal connector.

2. CONNECT CABLE TO NEGATIVE BATTERY TERMINAL
Torque: 5.4 N*m (55 kgf*cm, 48 in.*lbf)

ENGINE

ON-VEHICLE INSPECTION

1. **INSPECT ENGINE COOLANT (See page CO-1)**
2. **INSPECT ENGINE OIL (See page LU-1)**
3. **INSPECT BATTERY (See page CH-4)**
4. **INSPECT AIR CLEANER FILTER ELEMENT SUB-ASSEMBLY**
   (a) Remove the air cleaner filter element sub-assembly.
   (b) Visually check that there is no dirt, blockage, or damage to the air cleaner filter element.
   HINT:
   - If there is any dirt or a blockage in the air cleaner filter element, clean it with compressed air.
   - If any dirt or a blockage remains even after cleaning the air cleaner filter element with compressed air, replace it.
5. **INSPECT SPARK PLUG (See page IG-5)**
6. **INSPECT IGNITION TIMING**
   (a) When using an intelligent tester:
      (1) Warm up and stop the engine.
      (2) Connect the intelligent tester to the DLC3.
      (3) Turn the ignition switch ON.
      (4) Select the following menu items:
      DIAGNOSIS / ENHANCED OBD II/ ACTIVE TEST / TC (TE1) / ON.
      HINT:
      Refer to the intelligent tester operator's manual for further details.
      (5) Inspect the ignition timing during idling.
      Ignition timing:
      8 to 12 degrees BTDC
      NOTICE:
      - **Turn all the electrical systems and the A/C off.**
      - **Inspect the ignition timing with the cooling fan off.**
      - **When checking the ignition timing, shift the transmission to the neutral position.**
      (6) Select the following menu items: TC (TE1) / OFF.
      (7) Turn the ignition switch OFF.
      (8) Disconnect the intelligent tester from the DLC3.
   (b) When not using an intelligent tester:
      (1) Remove cylinder head cover No. 2 (see page IG-9).

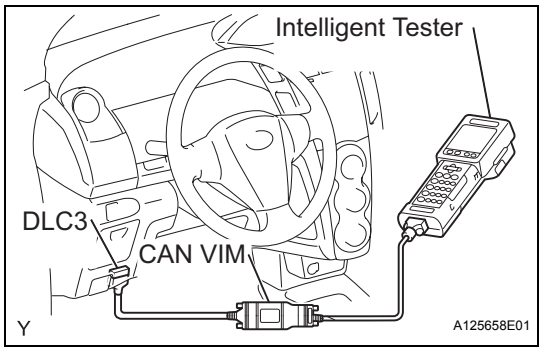

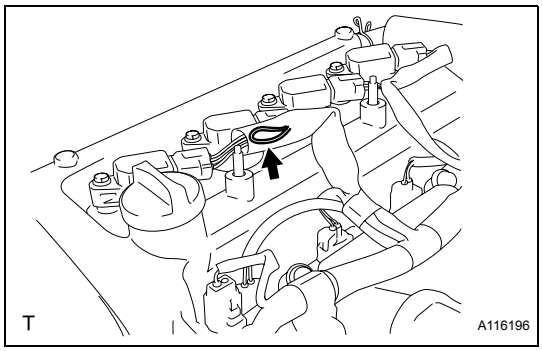

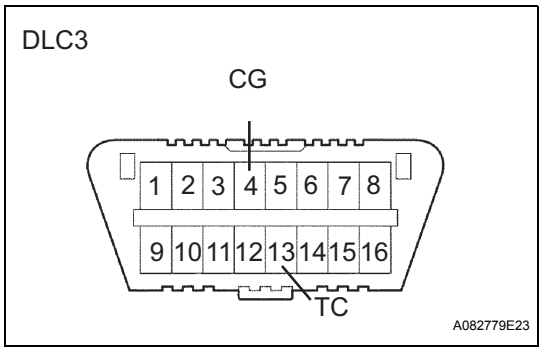

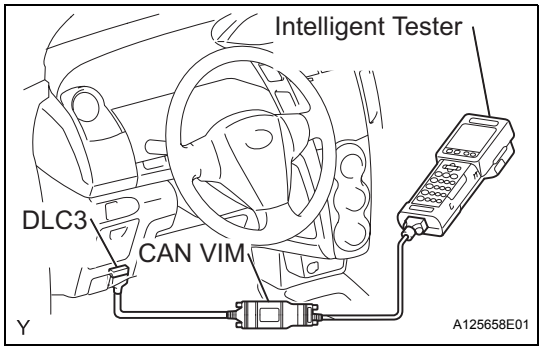

(2) Pull out the wire harness (brown) shown in the illustration.
NOTICE:
After checking, wrap the wire harness with tape.
(3) Warm up and stop the engine.
(4) Connect the clip of the timing light to the wire harness.
NOTICE:
Use a timing light that detects the first signal.
(5) Turn the ignition switch ON.
(6) Using SST, connect terminals 13 (TC) and 4 (CG) of the DLC3.
SST 09843-18040
NOTICE:
Examine the terminal numbers before connecting them. Connecting the wrong terminals could damage the engine.
(7) Inspect the ignition timing during idling.
Ignition timing:
8 to 12 degrees BTDC
NOTICE:
- **Turn all the electrical systems and the A/C off.**
- **Inspect the ignition timing with the cooling fan off.**
- **When checking the ignition timing, shift the transmission to the neutral position.**

(8) Disconnect terminals 13 (TC) and 4 (CG) of the DLC3.
(9) Turn the ignition switch OFF.
(10) Remove the timing light.
(11) Install cylinder head cover No. 2 (see page IG-10).

7. INSPECT ENGINE IDLING SPEED

(a) When using an intelligent tester:
(1) Warm up and stop the engine.
(2) Connect the intelligent tester to the DLC3.
(3) Turn the ignition switch ON.
(4) Select the following menu items:
DIAGNOSIS / ENHANCED OBD II/ DATA LIST / PRIMARY / ENGINE SPD.
HINT:
Refer to the intelligent tester operator's manual for further details.
(5) Inspect the engine idling speed.
Idling speed:
550 to 650 rpm for manual transaxle
650 to 750 rpm for automatic transaxle
NOTICE:
- **Turn all the electrical systems and the A/C off.**

- **Inspect the idling speed with the cooling fan off.**
- **When checking the idling speed, shift the transmission to either the neutral position or the parking position.**

(6) Turn the ignition switch OFF.
(7) Disconnect the intelligent tester from the DLC3.

(b) When not using an intelligent tester.
(1) Warm up and stop the engine.

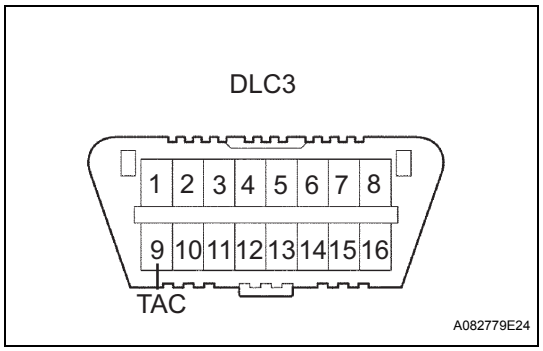

(2) Install SST to terminal 9 (TAC) of the DLC3, then connect a tachometer.
SST 09843-18040
NOTICE:
Examine the terminal numbers before connecting them. Connecting the wrong terminals could damage the engine.
(3) Turn the ignition switch ON.
(4) Inspect the engine idling speed.
Idling speed:
550 to 650 rpm for manual transaxle
650 to 750 rpm for automatic transaxle
(5) Turn the ignition switch OFF.
(6) Disconnect the tachometer.
(7) Remove SST from terminal 9 (TAC).

8. INSPECT COMPRESSION

(a) Warm up and stop the engine.
(b) Remove cylinder head cover No. 2 (see page IG-9).
(c) Remove the 4 ignition coils (see page IG-9).
(d) Remove the 4 spark plugs.
(e) Disconnect the 4 fuel injector connectors.

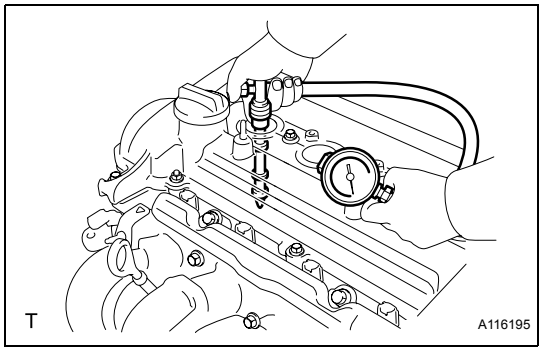

(f) Inspect the cylinder compression pressure.
(1) Insert a compression gauge into the spark plug hole.
(2) Fully open the throttle.
(3) While cranking the engine, measure the compression pressure.
Compression:
1,471kPa (15.0 kgf/cm^2, 213 psi)
Minimum pressure:
1,079 kPa (11.0 kgf/cm^2, 156 psi)
Difference between each cylinder:
98 kPa (1.0 kgf/cm^2, 14 psi) or less
NOTICE:
- **Use a fully-charged battery so the engine speed can be increased to 250 rpm or more.**
- **Inspect the other cylinders in the same way.**
- **Measure the compression in as short a time as possible.**

(4) If the cylinder compression is low, pour a light coat of engine oil into the cylinder through the spark plug hole, then inspect it again.
HINT:
- If adding oil increases the compression, the piston rings and/or cylinder bore may be worn or damaged.
- If the pressure stays low, the valve may be stuck or seated improperly, or there may be leakage from the gasket.

(g) Connect the 4 fuel injector connectors.
(h) Install the 4 spark plugs.
Torque: 18 N*m (184 kgf*cm, 13 ft.*lbf)
(i) Install the 4 ignition coils (see page IG-9).
(j) Install cylinder head cover No. 2 (see page IG-10).

EM

9. INSPECT CO/HC

(a) Start the engine.
(b) Run the engine at 2,500 rpm for approximately 180 seconds.
(c) Insert the CO/HC meter testing probe at least 40 cm (1.3 ft) into the tailpipe while idling.
(d) Check the CO/HC concentration during idling and when running at 2,500 rpm.
HINT:
When doing the 2 mode (with the engine idling/ running at 2,500 rpm) test, the measuring procedures are determined by applicable local regulations.
If the CO/HC concentration does not comply with the regulations, troubleshoot in the order given below.
(1) Check the heated oxygen sensor operation (see page ES-276).
(2) See the table below for possible causes, then inspect the applicable parts and repair them if necessary.

CO	HC	Problems	Possible Causes
Normal	High	Rough idling	1. Faulty ignition: – Incorrect timing – Fouled, shorted or improperly gapped plugs 2. Incorrect valve clearance 3. Leakage from intake and exhaust valves 4. Leakage from cylinders
Low	High	Rough idling (Fluctuating HC reading)	1. Vacuum leaks: – PCV hoses – Intake manifold – Throttle body – Brake booster line 2. Lean mixture causing misfire
High	High	Rough idling (Black smoke from exhaust)	1. Restricted air cleaner filter element 2. Plugged PCV valve 3. Faulty EFI systems: – Faulty pressure regulator – Faulty engine coolant temperature sensor – Faulty mass air flow meter – Faulty ECM – Faulty injectors – Throttle body

DRIVE BELT

COMPONENTS

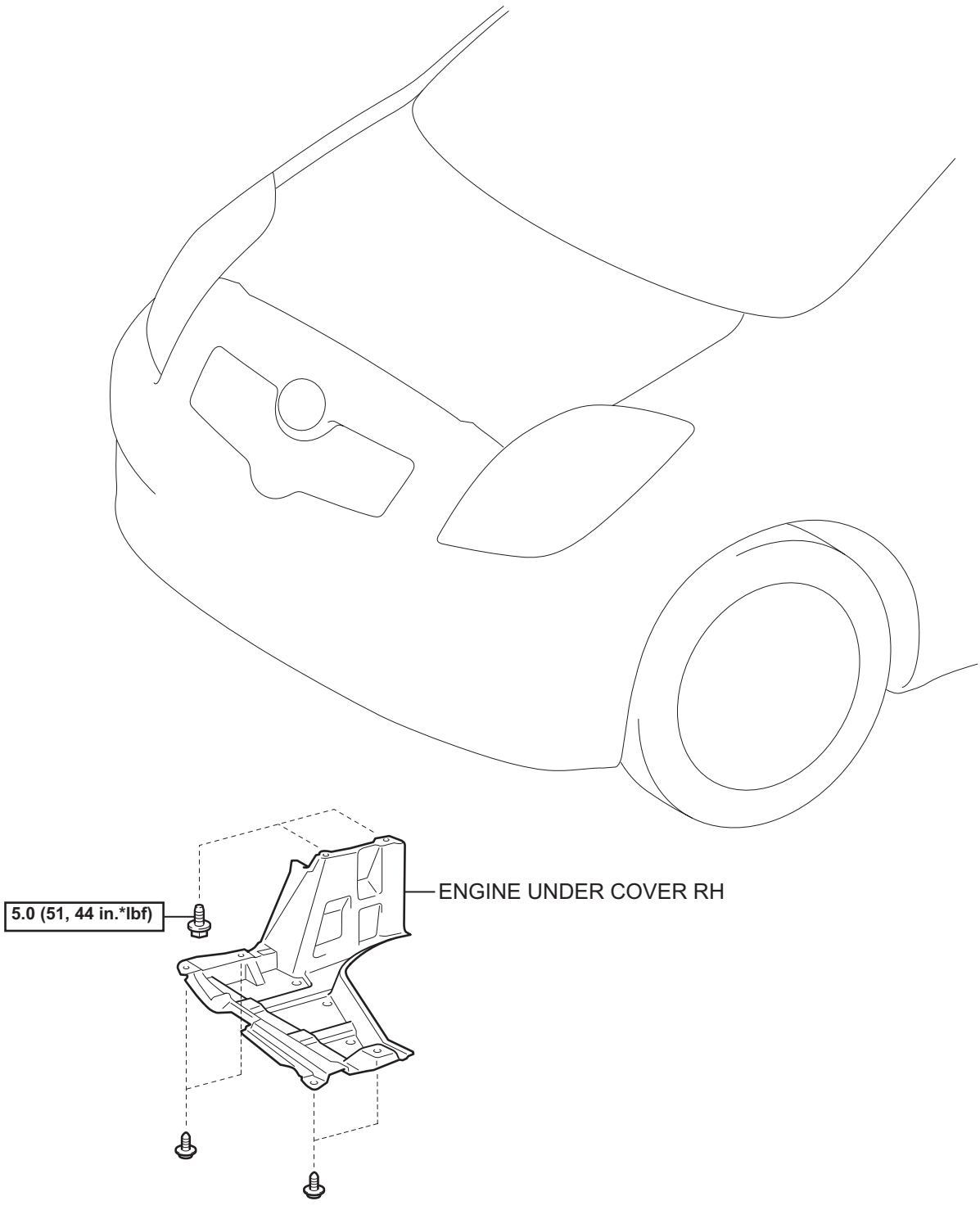

N*m (kgf*cm, ft.*lbf) : Specified torque

T

A115143E01

EM

EM

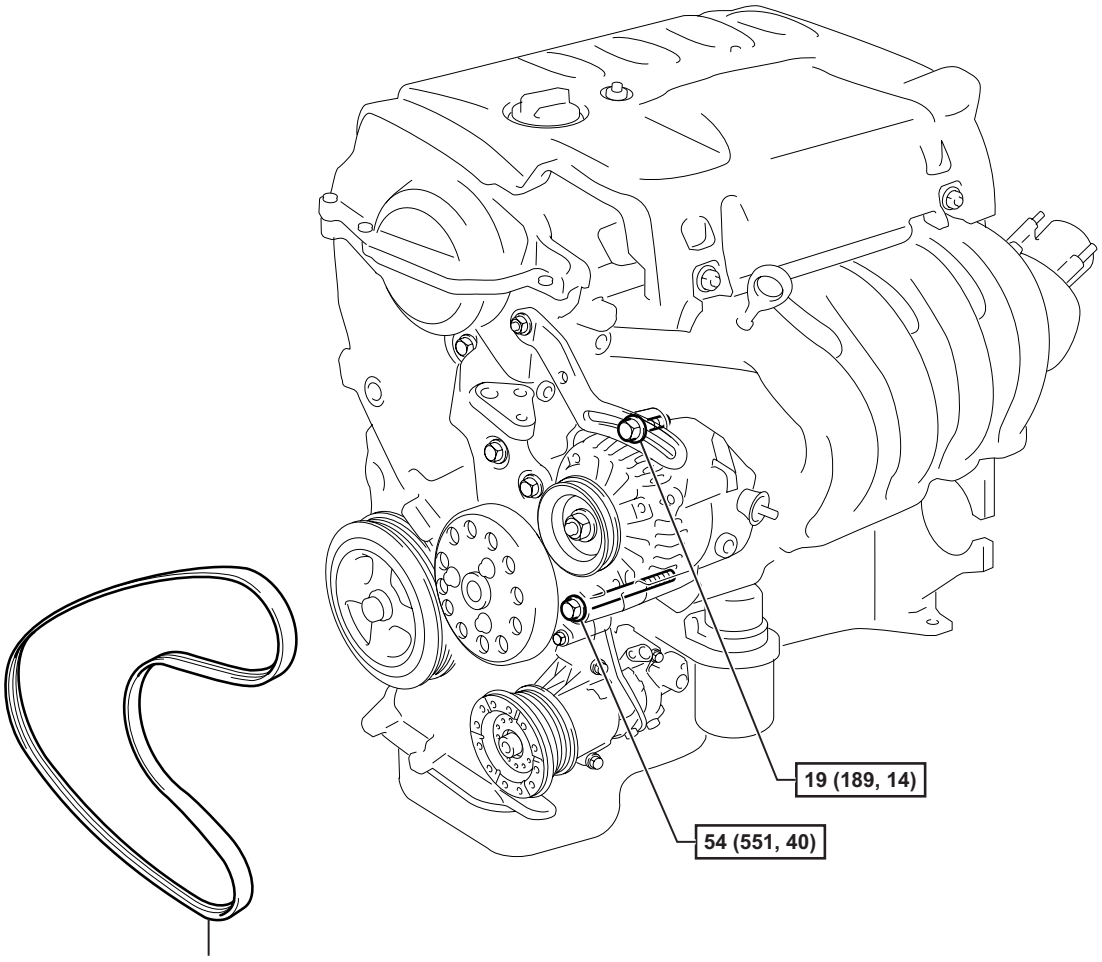

N*m (kgf*cm, ft.*lbf) : Specified torque

T

A116199E01

REMOVAL

1. REMOVE ENGINE UNDER COVER RH

2. REMOVE FAN AND GENERATOR V BELT

(a) Loosen bolts A and B.

(b) Release the fan and generator V belt tension and remove the fan and generator V belt.

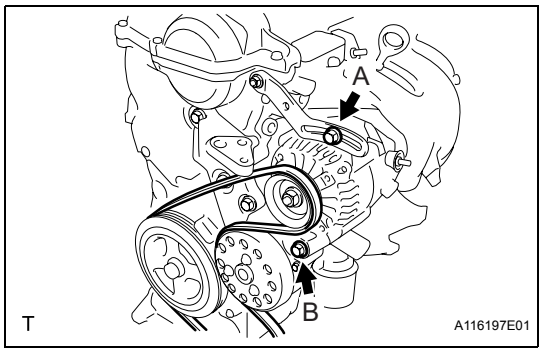

INSPECTION

1. INSPECT FAN AND GENERATOR V BELT

(a) Visually check the belt for excessive wear, frayed cords etc. If any defects are found, replace the belt.
HINT:
- If any defects are found, replace the belt.
- Cracks on the rib side of a belt are considered acceptable. If the belt has pieces missing from the ribs, it should be replaced.

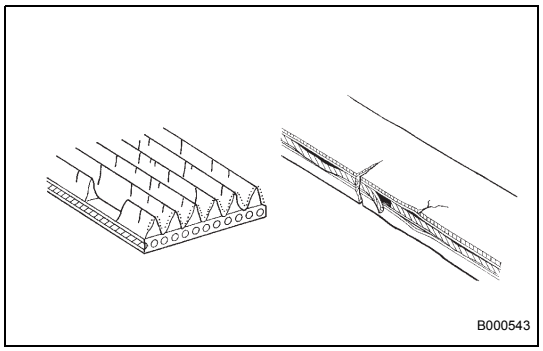

EM

INSTALLATION

1. INSTALL FAN AND GENERATOR V BELT

(a) Provisionally install the fan and generator V belt onto each pulley.

NOTICE:

Make sure that the V-belt is securely fitted into the rib groove of the pulley.

2. ADJUST FAN AND GENERATOR V BELT

(a) Insert an adjusting bar between the engine mounting bracket and generator assembly. Push the adjusting bar toward the vehicle front to adjust the generator V belt tension.

NOTICE:

Do not insert the adjusting bar between the camshaft timing oil control valve assembly and generator assembly. It could damage the camshaft timing oil control valve assembly.

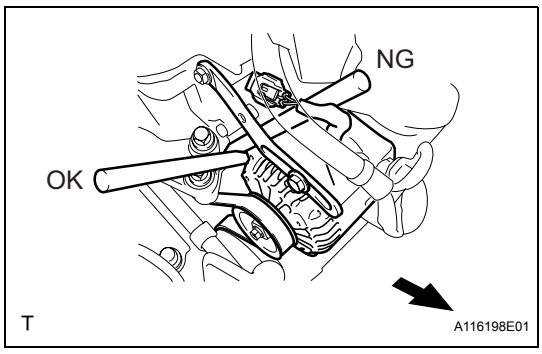

(b) First tighten bolt A, then tighten bolt B.

Torque: 19 N*m (189 kgf*cm, 14 ft.*lbf) for bolt A
54 N*m (551 kgf*cm, 40 ft.*lbf) for bolt B

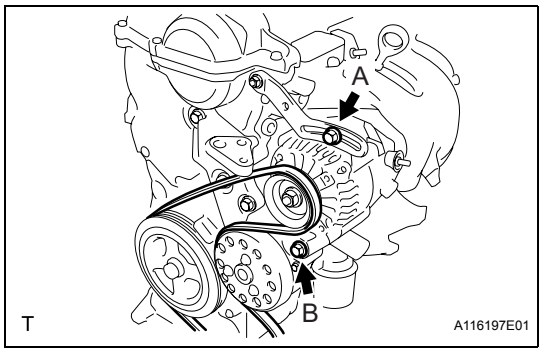

3. INSPECT FAN AND GENERATOR V BELT

(a) Check the V belt deflection and tension.

Deflection

Item	Specified Condition
New belt	7.0 to 8.5 mm (0.28 to 0.33 in)
Used belt	11 to 13 mm (0.43 to 0.51 in)

Tension

Item	Specified Condition
New belt	539 to 637 N (55 to 65 kg, 121 to 143 ld)
Used belt	245 to 392 N (25 to 40 kg, 55 to 88 ld)

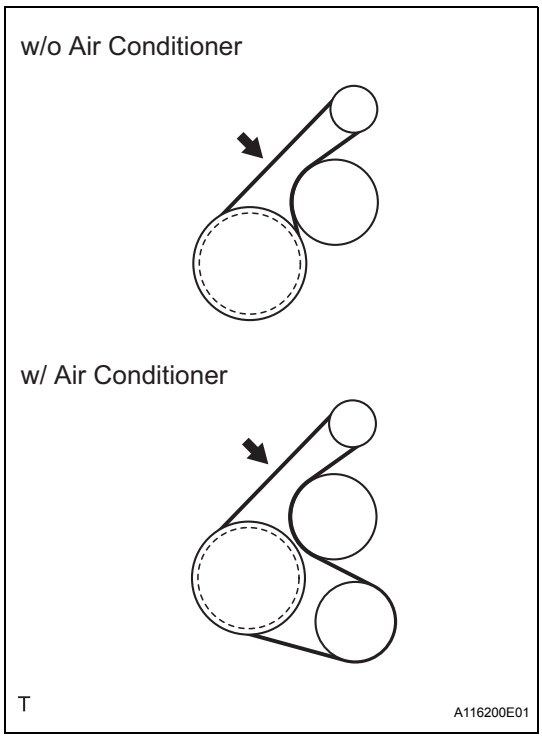

If the belt deflection is not as specified, adjust it.

HINT:

- Check the V belt deflection at the specified point.
- Check the drive belt deflection at the specified point.
- When installing a new belt, set its tension to the specified value.
- When inspecting a belt which has been used for over 5 minutes, apply the used belt specifications.

- When reinstalling a belt which has been used for over 5 minutes, adjust its deflection and tension to the intermediate values of each used belt specification.
- V-ribbed belt tension and deflection should be checked after 2 revolutions of engine cranking.
- When using a belt tension gauge, confirm its accuracy by using a master gauge first.

4. INSTALL ENGINE UNDER COVER RH

VALVE CLEARANCE

ADJUSTMENT

1. **DISCONNECT CABLE FROM NEGATIVE BATTERY TERMINAL**
2. **REMOVE ENGINE UNDER COVER RH**
3. **REMOVE CYLINDER HEAD COVER NO. 2 (See page IG-9)**
4. **REMOVE IGNITION COIL NO. 1 (See page IG-9)**
5. **DISCONNECT VENTILATION HOSE (See page FU-13)**
6. **DISCONNECT VENTILATION HOSE NO. 2 (See page FU-13)**
7. **REMOVE CYLINDER HEAD COVER SUB-ASSEMBLY (See page FU-13)**
8. **INSPECT VALVE CLEARANCE**

HINT:
Inspect the valve clearance when the engine is cold.

(a) Set the No. 1 cylinder to TDC/compression.
(1) Turn the crankshaft damper and align its timing notch with the timing mark "0" of the oil pump.

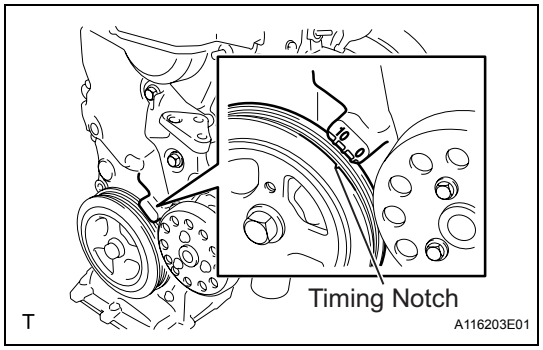

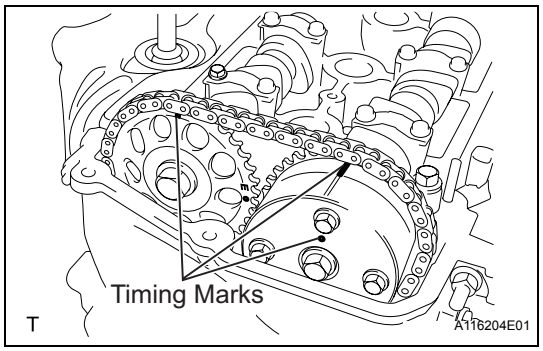

(2) Check that both timing marks on the camshaft timing sprocket and camshaft timing gear are facing upward, as shown in the illustration.
HINT:
If not, turn the crankshaft 1 complete revolution (360°) and align the marks as above.

(b) Check the valves indicated in the illustration.
(1) Using a feeler gauge, measure the clearance between the valve lifter and camshaft.
Valve clearance (cold):
for intake:
0.15 to 0.25 mm (0.006 to 0.010 in.)
for exhaust:
0.25 to 0.35 mm (0.010 to 0.014 in.)

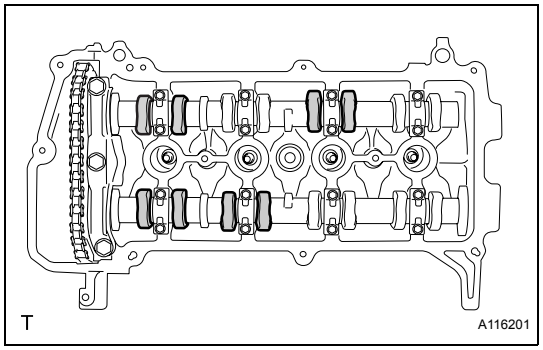

(2) Record any out-of-specification valve clearance measurements. They will be used later to determine the required replacement adjusting shim.

(c) Turn the crankshaft 1 complete revolution (360°) and align its timing notch with the timing mark "0" of the oil pump.

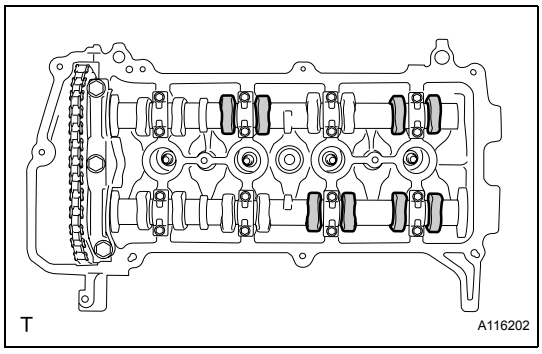

(d) Check the valves indicated in the illustration.

(1) Using a feeler gauge, measure the clearance between the valve lifter and camshaft.

Valve clearance (cold):
for intake:
0.15 to 0.25 mm (0.006 to 0.010 in.)
for exhaust:
0.25 to0.35 mm (0.010 to 0.014 in.)

(2) Record any out-of-specification valve clearance measurements. They will be used later to determine the required replacement adjusting shim.

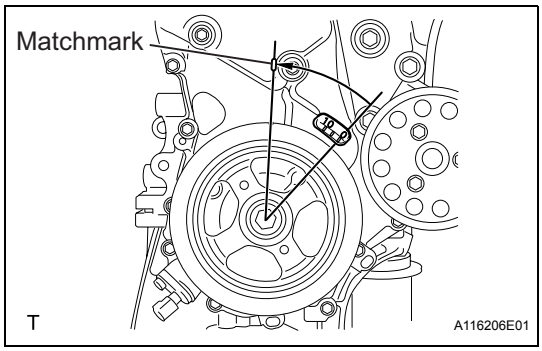

9. ADJUST VALVE CLEARANCE

NOTICE:
When rotating the camshaft with the timing chain removed, rotate the crankshaft damper counterclockwise 40° from the TDC and align its timing notch with the matchmark of the timing chain cover to prevent the pistons from coming into contact with the valves.

(a) Remove the fan and generator V belt (See page EM-7).

(b) Remove the engine mounting insulator sub-assembly RH (See page LU-17).

(c) Set the No. 1 cylinder to TDC/compression.

(1) Turn the crankshaft damper and align its timing notch with the timing mark "0" of the oil pump.

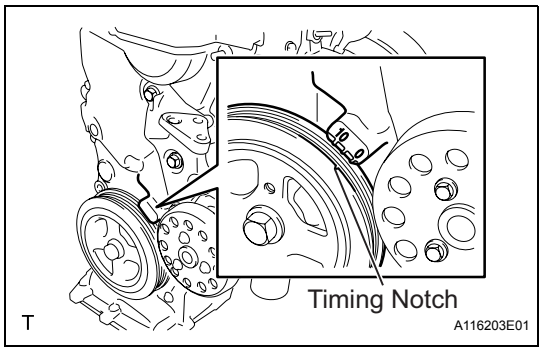

(2) Check that both timing marks on the camshaft timing sprocket and camshaft timing gear are facing upward, as shown in the illustration.
HINT:
If not, turn the crankshaft 1 complete revolution (360°) and align the marks as above.

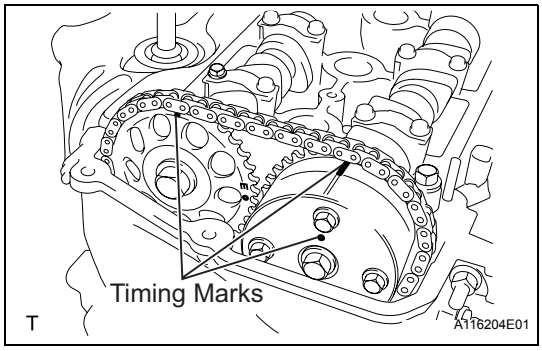

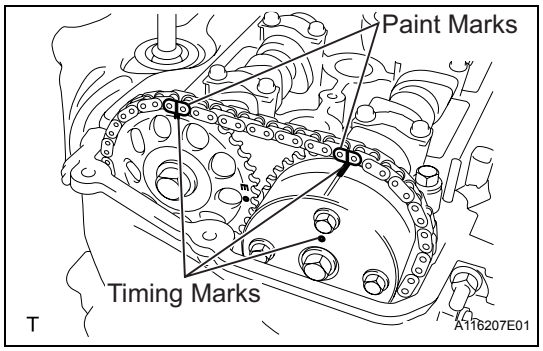

(d) Place paint marks on the chain in the places where the timing marks of the camshaft timing sprocket and the camshaft timing gear are located.

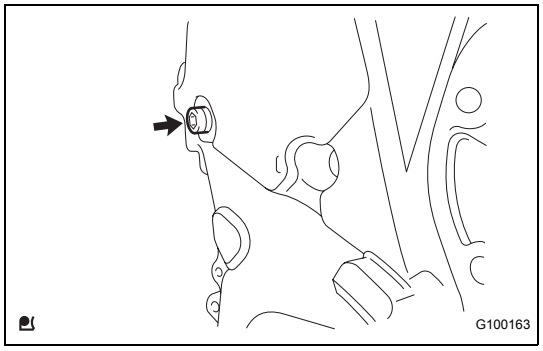

(e) Using an 8 mm hexagon wrench, remove the screw plug.

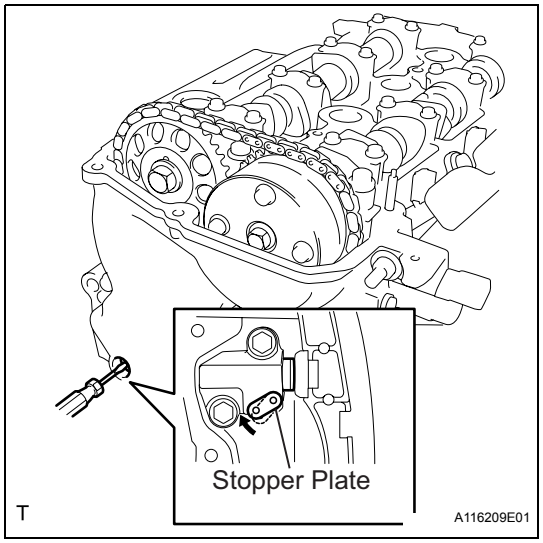

(f) Insert a screwdriver into the service hole in the chain tensioner to pull the stopper plate of the chain tensioner upward.

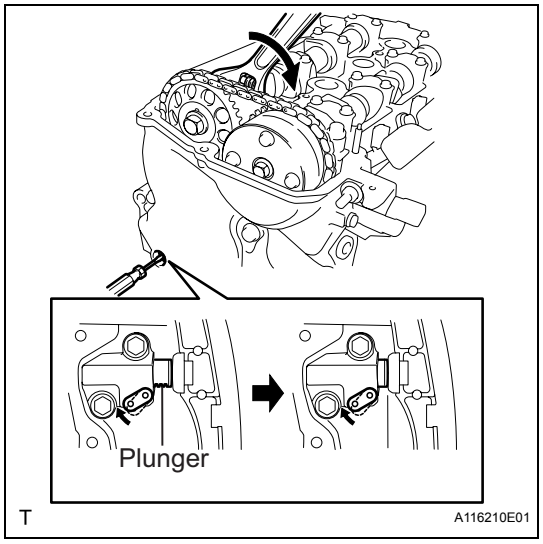

(g) Using a wrench, rotate camshaft No. 2 clockwise to push in the plunger of the chain tensioner.

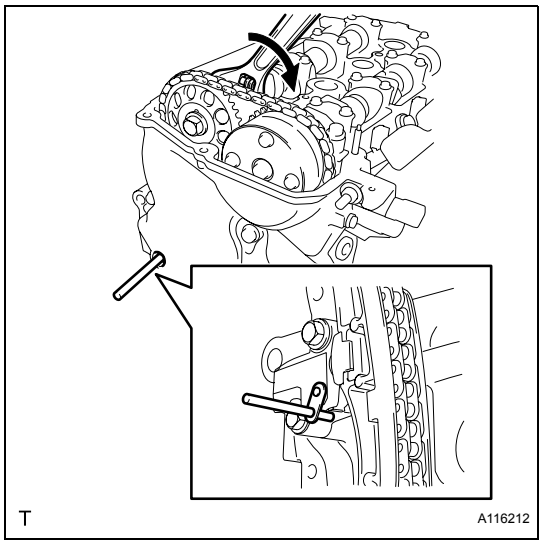

(h) Remove the screwdriver from the service hole, then align the hole in the stopper plate with the service hole and insert a 3 mm (0.12 in.) diameter bar into the holes to hold the stopper plate.
HINT:
- Fix the stopper plate using the bar while rotating the camshaft right and left slightly.
- Hold the bar with tape so that the bar does not come off.

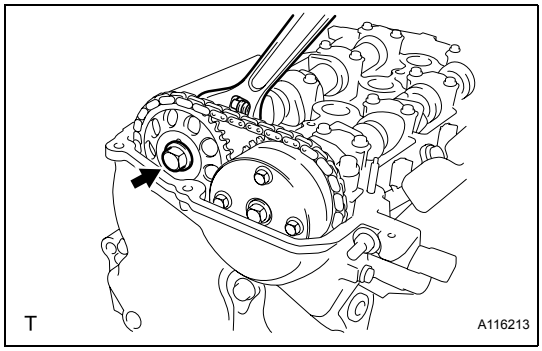

(i) Using a wrench, hold the hexagonal lobe of camshaft No. 2 and remove the fringe bolt.

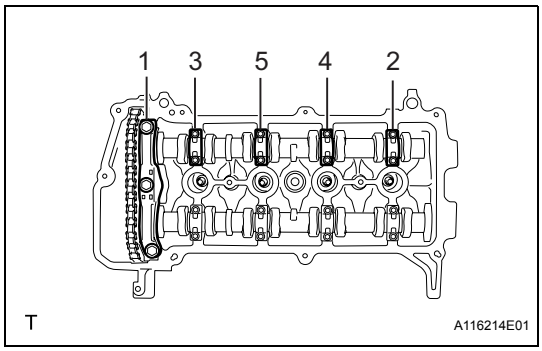

(j) Using several steps, loosen and remove the 11 bearing cap bolts uniformly in the sequence shown in the illustration, then remove camshaft bearing cap No. 1 and camshaft bearing cap No. 2.
NOTICE:
Loosen each bolt uniformly while keeping the camshaft level.

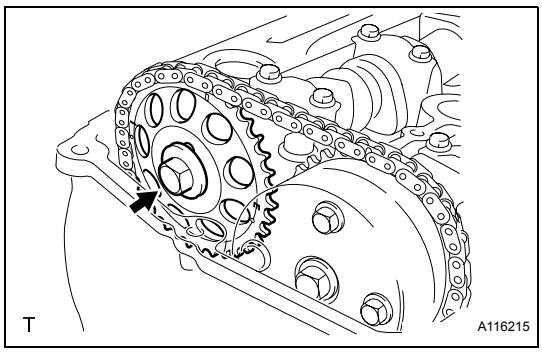

(k) Remove the fringe bolt and remove the camshaft timing sprocket.

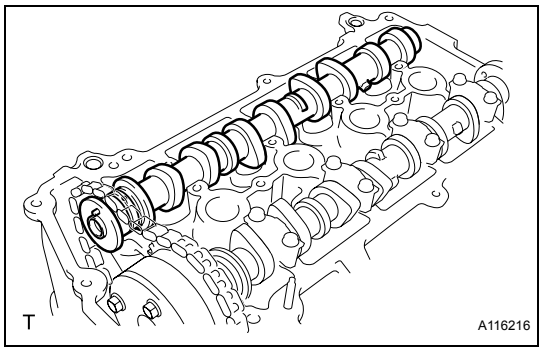

(l) Remove camshaft No. 2.

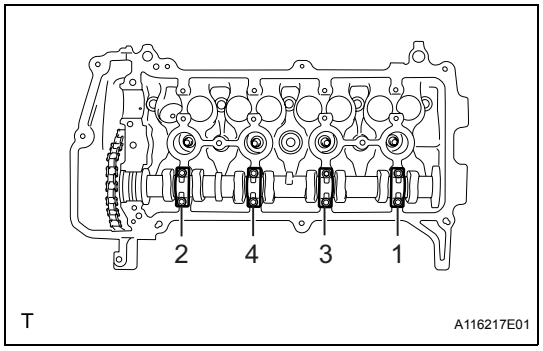

(m) Using several steps, loosen and remove the 8 bearing cap bolts uniformly in the sequence shown in the illustration, then remove camshaft bearing cap No. 2.
NOTICE:
Loosen each bolt uniformly while keeping the camshaft level.

EM

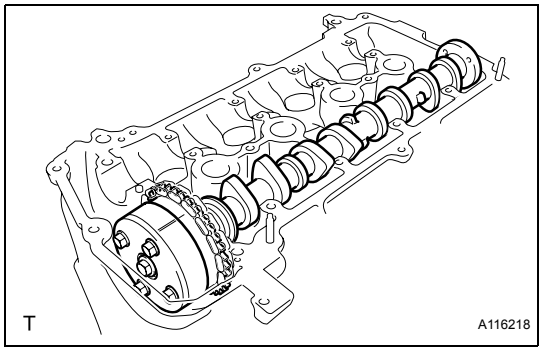

(n) Hold the chain by hand and remove the camshaft and the camshaft timing gear assembly.

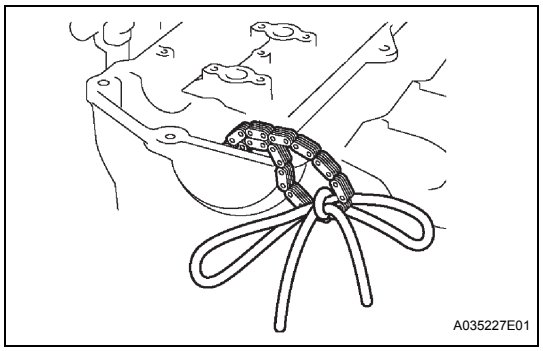

(o) Tie the chain with a piece of string as shown in the illustration.
(p) Remove the 16 valve lifters.

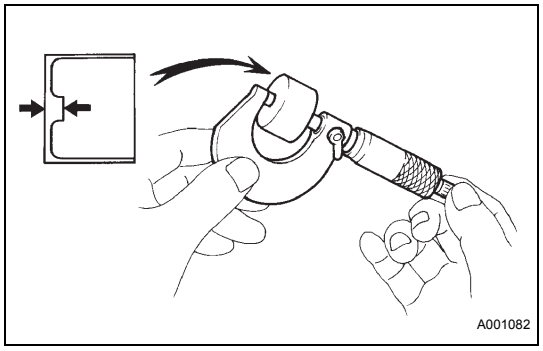

(q) Using a micrometer, measure the thickness of the removed lifter.
(r) Calculate the thickness of a new lifter so that the valve clearance comes to within the specified values.

A	Thickness of new lifter
B	Thickness of used lifter
C	Measured valve clearance

Valve clearance:
Intake A = B + (C - 0.20 mm (0.008 in.))
Exhaust A = B + (C - 0.30 mm (0.012 in.))

(s) Select a new lifter with a thickness as close to the calculated values as possible.
HINT:
Lifters are available in 35 sizes in increments of 0.020mm (0.0008 in.), from 5.060 mm (0.1992 in.) to 5.740 mm (0.2260 in.).

Measured clearance mm(in.) / Installed lifter thickness mm(in.)	0.000 - 0.030 (0.0000 - 0.0012)	0.031 - 0.050 (0.0012 - 0.0020)	0.051 - 0.070 (0.0020 - 0.0028)	0.071 - 0.090 (0.0028 - 0.0035)	0.091 - 0.110 (0.0036 - 0.0043)	0.111 - 0.130 (0.0044 - 0.0051)	0.131 - 0.149 (0.0052 - 0.0059)	0.150 - 0.250 (0.0059 - 0.0098)	0.251 - 0.270 (0.0099 - 0.0106)	0.271 - 0.290 (0.0107 - 0.0114)	0.291 - 0.310 (0.0115 - 0.0122)	0.311 - 0.330 (0.0122 - 0.0130)	0.331 - 0.350 (0.0130 - 0.0138)	0.351 - 0.370 (0.0138 - 0.0146)	0.371 - 0.390 (0.0146 - 0.0154)	0.391 - 0.410 (0.0154 - 0.0161)	0.411 - 0.430 (0.0162 - 0.0169)	0.431 - 0.450 (0.0170 - 0.0177)	0.451 - 0.470 (0.0178 - 0.0185)	0.471 - 0.490 (0.0185 - 0.0193)	0.491 - 0.510 (0.0193 - 0.0201)	0.511 - 0.530 (0.0201 - 0.0209)	0.531 - 0.550 (0.0209 - 0.0217)	0.551 - 0.570 (0.0217 - 0.0224)	0.571 - 0.590 (0.0225 - 0.0232)	0.591 - 0.610 (0.0233 - 0.0240)	0.611 - 0.630 (0.0241 - 0.0248)	0.631 - 0.650 (0.0248 - 0.0256)	0.651 - 0.670 (0.0256 - 0.0264)	0.671 - 0.690 (0.0264 - 0.0272)	0.691 - 0.710 (0.0272 - 0.0280)	0.711 - 0.730 (0.0280 - 0.0287)	0.731 - 0.750 (0.0288 - 0.0295)	0.751 - 0.770 (0.0296 - 0.0303)	0.771 - 0.790 (0.0304 - 0.0311)	0.791 - 0.810 (0.0311 - 0.0319)	0.811 - 0.830 (0.0319 - 0.0327)	0.831 - 0.850 (0.0327 - 0.0335)	0.851 - 0.870 (0.0335 - 0.0343)	0.871 - 0.890 (0.0343 - 0.0350)	0.891 - 0.910 (0.0351 - 0.0358)	0.911 - 0.930 (0.0359 - 0.0366)
5.060 (0.1992)									12	14	16	18	20	22	24	26	28	30	32	34	36	38	40	42	44	46	48	50	52	54	56	58	60	62	64	66	68	70	72	74	74	74
5.080 (0.2000)								06	14	16	18	20	22	24	26	28	30	32	34	36	38	40	42	44	46	48	50	52	54	56	58	60	62	64	66	68	70	72	74	74	74
5.100 (0.2008)							06	06	16	18	20	22	24	26	28	30	32	34	36	38	40	42	44	46	48	50	52	54	56	58	60	62	64	66	68	70	72	74	74	74	
5.120 (0.2016)						06	06	06	18	20	22	24	26	28	30	32	34	36	38	40	42	44	46	48	50	52	54	56	58	60	62	64	66	68	70	72	74	74	74		
5.140 (0.2024)					06	06	06	08	20	22	24	26	28	30	32	34	36	38	40	42	44	46	48	50	52	54	56	58	60	62	64	66	68	70	72	74	74	74			
5.160 (0.2031)				06	06	06	08	10	22	24	26	28	30	32	34	36	38	40	42	44	46	48	50	52	54	56	58	60	62	64	66	68	70	72	74	74	74				
5.180 (0.2039)			06	06	06	08	10	12	24	26	28	30	32	34	36	38	40	42	44	46	48	50	52	54	56	58	60	62	64	66	68	70	72	74	74	74					
5.200 (0.2047)			06	06	08	10	12	14	26	28	30	32	34	36	38	40	42	44	46	48	50	52	54	56	58	60	62	64	66	68	70	72	74	74	74						
5.210 (0.2051)	06	06	08	10	12	14	16		28	30	32	34	36	38	40	42	44	46	48	50	52	54	56	58	60	62	64	66	68	70	72	74	74	74							
5.220 (0.2055)	06	06	08	10	12	14	16		28	30	32	34	36	38	40	42	44	46	48	50	52	54	56	58	60	62	64	66	68	70	72	74	74	74							
5.230 (0.2059)	06	08	10	12	14	16	18		30	32	34	36	38	40	42	44	46	48	50	52	54	56	58	60	62	64	66	68	70	72	74	74	74								
5.240 (0.2063)	06	08	10	12	14	16	18		30	32	34	36	38	40	42	44	46	48	50	52	54	56	58	60	62	64	66	68	70	72	74	74	74								
5.250 (0.2067)	06	10	12	14	16	18	20		32	34	36	38	40	42	44	46	48	50	52	54	56	58	60	62	64	66	68	70	72	74	74	74									
5.260 (0.2071)	08	10	12	14	16	18	20		32	34	36	38	40	42	44	46	48	50	52	54	56	58	60	62	64	66	68	70	72	74	74	74									
5.270 (0.2075)	10	12	14	16	18	20	22		34	36	38	40	42	44	46	48	50	52	54	56	58	60	62	64	66	68	70	72	74	74	74										
5.280 (0.2079)	10	12	14	16	18	20	22		34	36	38	40	42	44	46	48	50	52	54	56	58	60	62	64	66	68	70	72	74	74	74										
5.290 (0.2083)	12	14	16	18	20	22	24		36	38	40	42	44	46	48	50	52	54	56	58	60	62	64	66	68	70	72	74	74	74											
5.300 (0.2087)	12	14	16	18	20	22	24		36	38	40	42	44	46	48	50	52	54	56	58	60	62	64	66	68	70	72	74	74	74											
5.310 (0.2091)	14	16	18	20	22	24	26		38	40	42	44	46	48	50	52	54	56	58	60	62	64	66	68	70	72	74	74	74												
5.320 (0.2094)	14	16	18	20	22	24	26		38	40	42	44	46	48	50	52	54	56	58	60	62	64	66	68	70	72	74	74	74												
5.330 (0.2098)	16	18	20	22	24	26	28		40	42	44	46	48	50	52	54	56	58	60	62	64	66	68	70	72	74	74	74													
5.340 (0.2102)	16	18	20	22	24	26	28		40	42	44	46	48	50	52	54	56	58	60	62	64	66	68	70	72	74	74	74													
5.350 (0.2106)	18	20	22	24	26	28	30		42	44	46	48	50	52	54	56	58	60	62	64	66	68	70	72	74	74	74														
5.360 (0.2110)	18	20	22	24	26	28	30		42	44	46	48	50	52	54	56	58	60	62	64	66	68	70	72	74	74	74														
5.370 (0.2114)	20	22	24	26	28	30	32		44	46	48	50	52	54	56	58	60	62	64	66	68	70	72	74	74	74															
5.380 (0.2118)	20	22	24	26	28	30	32		44	46	48	50	52	54	56	58	60	62	64	66	68	70	72	74	74	74															
5.390 (0.2122)	22	24	26	28	30	32	34		46	48	50	52	54	56	58	60	62	64	66	68	70	72	74	74	74																
5.400 (0.2126)	22	24	26	28	30	32	34		46	48	50	52	54	56	58	60	62	64	66	68	70	72	74	74	74																
5.410 (0.2130)	24	26	28	30	32	34	36		48	50	52	54	56	58	60	62	64	66	68	70	72	74	74	74																	
5.420 (0.2134)	24	26	28	30	32	34	36		48	50	52	54	56	58	60	62	64	66	68	70	72	74	74	74																	
5.430 (0.2138)	26	28	30	32	34	36	38		50	52	54	56	58	60	62	64	66	68	70	72	74	74	74																		
5.440 (0.2142)	26	28	30	32	34	36	38		50	52	54	56	58	60	62	64	66	68	70	72	74	74	74																		
5.450 (0.2146)	28	30	32	34	36	38	40		52	54	56	58	60	62	64	66	68	70	72	74	74	74																			
5.460 (0.2150)	28	30	32	34	36	38	40		52	54	56	58	60	62	64	66	68	70	72	74	74	74																			
5.470 (0.2154)	30	32	34	36	38	40	42		54	56	58	60	62	64	66	68	70	72	74	74	74																				
5.480 (0.2157)	30	32	34	36	38	40	42		54	56	58	60	62	64	66	68	70	72	74	74	74																				
5.490 (0.2161)	32	34	36	38	40	42	44		56	58	60	62	64	66	68	70	72	74	74	74																					
5.500 (0.2165)	32	34	36	38	40	42	44		56	58	60	62	64	66	68	70	72	74	74	74																					
5.510 (0.2169)	34	36	38	40	42	44	46		58	60	62	64	66	68	70	72	74	74	74																						
5.520 (0.2173)	34	36	38	40	42	44	46		58	60	62	64	66	68	70	72	74	74	74																						
5.530 (0.2177)	36	38	40	42	44	46	48		60	62	64	66	68	70	72	74	74	74																							
5.540 (0.2181)	36	38	40	42	44	46	48		60	62	64	66	68	70	72	74	74	74																							
5.550 (0.2185)	38	40	42	44	46	48	50		62	64	66	68	70	72	74	74	74																								
5.560 (0.2189)	38	40	42	44	46	48	50		62	64	66	68	70	72	74	74	74																								
5.570 (0.2193)	40	42	44	46	48	50	52		64	66	68	70	72	74	74	74																									
5.580 (0.2197)	40	42	44	46	48	50	52		64	66	68	70	72	74	74	74																									
5.590 (0.2201)	42	44	46	48	50	52	54		66	68	70	72	74	74	74	74																									
5.600 (0.2205)	42	44	46	48	50	52	54		66	68	70	72	74	74	74																										
5.620 (0.2213)	44	46	48	50	52	54	56		68	70	72	74	74	74																											
5.640 (0.2220)	46	48	50	52	54	56	58		70	72	74	74	74																												
5.660 (0.2228)	48	50	52	54	56	58	60		72	74	74	74																													
5.680 (0.2236)	50	52	54	56	58	60	62		74	74	74																														
5.700 (0.2244)	52	54	56	58	60	62	64		74	74																															
5.720 (0.2252)	54	56	58	60	62	64	66		74																																
5.740 (0.2260)	56	58	60	62	64	66	68																																		

T

A117457

EM

Intake valve clearance (cold):
0.15 to 0.25 mm (0.006 to 0.010 in.)
EXAMPLE:
A 5.250 mm (0.2067 in.) lifter is installed, and the measured clearance is 0.400 mm (0.0158 in.). Replace the 5.250 mm (0.2067 in.) lifter with a new No. 46 lifter.

New Shim Thickness

Shim No.	Thickness	Shim No.	Thickness	Shim No.	Thickness
06	5.060 (0.1992)	30	5.300 (0.2087)	54	5.540 (0.2181)
08	5.080 (0.2000)	32	5.320 (0.2094)	56	5.560 (0.2189)
10	5.100 (0.2008)	34	5.340 (0.2102)	58	5.580 (0.2197)
12	5.120 (0.2016)	36	5.360 (0.2110)	60	5.600 (0.2205)
14	5.140 (0.2024)	38	5.380 (0.2118)	62	5.620 (0.2213)
16	5.160 (0.2031)	40	5.400 (0.2126)	64	5.640 (0.2220)
18	5.180 (0.2039)	42	5.420 (0.2134)	66	5.660 (0.2228)
20	5.200 (0.2047)	44	5.440 (0.2142)	68	5.680 (0.2236)
22	5.220 (0.2055)	46	5.460 (0.2150)	70	5.700(0.2244)
24	5.240 (0.2063)	48	5.480 (0.2157)	72	5.720 (0.2252)
26	5.260 (0.2071)	50	5.500 (0.2165)	74	5.740 (0.2260)
28	5.280 (0.2079)	52	5.520 (0.2173)		

Measured clearance mm(in.) / Installed lifter thickness mm(in.)	0.000 - 0.030 (0.0000 - 0.0012)	0.031 - 0.050 (0.0012 - 0.0020)	0.051 - 0.070 (0.0020 - 0.0028)	0.071 - 0.090 (0.0028 - 0.0035)	0.091 - 0.110 (0.0036 - 0.0043)	0.111 - 0.130 (0.0044 - 0.0051)	0.131 - 0.150 (0.0052 - 0.0059)	0.151 - 0.170 (0.0059 - 0.0067)	0.171 - 0.190 (0.0067 - 0.0075)	0.191 - 0.210 (0.0075 - 0.0083)	0.211 - 0.230 (0.0083 - 0.0091)	0.231 - 0.249 (0.0091 - 0.0098)	0.250 - 0.350 (0.0098 - 0.0138)	0.351 - 0.370 (0.0138 - 0.0146)	0.371 - 0.390 (0.0146 - 0.0154)	0.391 - 0.410 (0.0154 - 0.0161)	0.411 - 0.430 (0.0162 - 0.0169)	0.431 - 0.450 (0.0170 - 0.0177)	0.451 - 0.470 (0.0178 - 0.0185)	0.471 - 0.490 (0.0185 - 0.0193)	0.491 - 0.510 (0.0193 - 0.0201)	0.511 - 0.530 (0.0201 - 0.0209)	0.531 - 0.550 (0.0209 - 0.0217)	0.551 - 0.570 (0.0217 - 0.0224)	0.571 - 0.590 (0.0225 - 0.0232)	0.591 - 0.610 (0.0233 - 0.0240)	0.611 - 0.630 (0.0241 - 0.0248)	0.631 - 0.650 (0.0248 - 0.0256)	0.651 - 0.670 (0.0256 - 0.0264)	0.671 - 0.690 (0.0264 - 0.0272)	0.691 - 0.710 (0.0272 - 0.0280)	0.711 - 0.730 (0.0280 - 0.0287)	0.731 - 0.750 (0.0288 - 0.0295)	0.751 - 0.770 (0.0296 - 0.0303)	0.771 - 0.790 (0.0304 - 0.0311)	0.791 - 0.810 (0.0311 - 0.0319)	0.811 - 0.830 (0.0319 - 0.0327)	0.831 - 0.850 (0.0327 - 0.0335)	0.851 - 0.870 (0.0335 - 0.0343)	0.871 - 0.890 (0.0343 - 0.0350)	0.891 - 0.910 (0.0351 - 0.0358)	0.911 - 0.930 (0.0359 - 0.0366)	0.931 - 0.950 (0.0367 - 0.0374)	0.951 - 0.970 (0.0374 - 0.0382)	0.971 - 0.990 (0.0382 - 0.0390)	0.991 - 1.010 (0.0390 - 0.0398)	1.011 - 1.030 (0.0398 - 0.0406)
5.060 (0.1992)														12	14	16	18	20	22	24	26	28	30	32	34	36	38	40	42	44	46	48	50	52	54	56	58	60	62	64	66	68	70	72	74	74	74
5.080 (0.2000)												06		14	16	18	20	22	24	26	28	30	32	34	36	38	40	42	44	46	48	50	52	54	56	58	60	62	64	66	68	70	72	74	74	74
5.100 (0.2008)											06	06		16	18	20	22	24	26	28	30	32	34	36	38	40	42	44	46	48	50	52	54	56	58	60	62	64	66	68	70	72	74	74	74	
5.120 (0.2016)										06	06	06		18	20	22	24	26	28	30	32	34	36	38	40	42	44	46	48	50	52	54	56	58	60	62	64	66	68	70	72	74	74	74		
5.140 (0.2024)									06	06	06	08		20	22	24	26	28	30	32	34	36	38	40	42	44	46	48	50	52	54	56	58	60	62	64	66	68	70	72	74	74	74			
5.160 (0.2031)								06	06	06	08	10		22	24	26	28	30	32	34	36	38	40	42	44	46	48	50	52	54	56	58	60	62	64	66	68	70	72	74	74	74				
5.180 (0.2039)								06	06	08	10	12		24	26	28	30	32	34	36	38	40	42	44	46	48	50	52	54	56	58	60	62	64	66	68	70	72	74	74	74					
5.200 (0.2047)							06	06	08	10	12	14		26	28	30	32	34	36	38	40	42	44	46	48	50	52	54	56	58	60	62	64	66	68	70	72	74	74	74						
5.210 (0.2051)						06	06	08	10	12	14	16		28	30	32	34	36	38	40	42	44	46	48	50	52	54	56	58	60	62	64	66	68	70	72	74	74	74							
5.220 (0.2055)						06	06	08	10	12	14	16		28	30	32	34	36	38	40	42	44	46	48	50	52	54	56	58	60	62	64	66	68	70	72	74	74	74							
5.230 (0.2059)				06	06	08	10	12	14	16	18			30	32	34	36	38	40	42	44	46	48	50	52	54	56	58	60	62	64	66	68	70	72	74	74	74								
5.240 (0.2063)			06	06	06	08	10	12	14	16	18			30	32	34	36	38	40	42	44	46	48	50	52	54	56	58	60	62	64	66	68	70	72	74	74	74								
5.250 (0.2067)			06	06	06	10	12	14	16	18	20			32	34	36	38	40	42	44	46	48	50	52	54	56	58	60	62	64	66	68	70	72	74	74	74									
5.260 (0.2071)		06	06	06	08	10	12	14	16	18	20			32	34	36	38	40	42	44	46	48	50	52	54	56	58	60	62	64	66	68	70	72	74	74	74									
5.270 (0.2075)		06	06	08	10	12	14	16	18	20	22			34	36	38	40	42	44	46	48	50	52	54	56	58	60	62	64	66	68	70	72	74	74	74										
5.280 (0.2079)	06	06	06	08	10	12	14	16	18	20	22			34	36	38	40	42	44	46	48	50	52	54	56	58	60	62	64	66	68	70	72	74	74	74										
5.290 (0.2083)	06	06	08	10	12	14	16	18	20	22	24			36	38	40	42	44	46	48	50	52	54	56	58	60	62	64	66	68	70	72	74	74	74											
5.300 (0.2087)	06	06	08	10	12	14	16	18	20	22	24			36	38	40	42	44	46	48	50	52	54	56	58	60	62	64	66	68	70	72	74	74	74											
5.310 (0.2091)	06	06	08	10	12	14	16	18	20	22	24	26		38	40	42	44	46	48	50	52	54	56	58	60	62	64	66	68	70	72	74	74	74												
5.320 (0.2094)	06	06	08	10	12	14	16	18	20	22	24	26		38	40	42	44	46	48	50	52	54	56	58	60	62	64	66	68	70	72	74	74	74												
5.330 (0.2098)	06	08	10	12	14	16	18	20	22	24	26	28		40	42	44	46	48	50	52	54	56	58	60	62	64	66	68	70	72	74	74	74													
5.340 (0.2102)	06	08	10	12	14	16	18	20	22	24	26	28		40	42	44	46	48	50	52	54	56	58	60	62	64	66	68	70	72	74	74	74													
5.350 (0.2106)	08	10	12	14	16	18	20	22	24	26	28	30		42	44	46	48	50	52	54	56	58	60	62	64	66	68	70	72	74	74	74														
5.360 (0.2110)	08	10	12	14	16	18	20	22	24	26	28	30		42	44	46	48	50	52	54	56	58	60	62	64	66	68	70	72	74	74	74														
5.370 (0.2114)	10	12	14	16	18	20	22	24	26	28	30	32		44	46	48	50	52	54	56	58	60	62	64	66	68	70	72	74	74	74															
5.380 (0.2118)	10	12	14	16	18	20	22	24	26	28	30	32		44	46	48	50	52	54	56	58	60	62	64	66	68	70	72	74	74	74															
5.390 (0.2122)	12	14	16	18	20	22	24	26	28	30	32	34		46	48	50	52	54	56	58	60	62	64	66	68	70	72	74	74	74																
5.400 (0.2126)	12	14	16	18	20	22	24	26	28	30	32	34		46	48	50	52	54	56	58	60	62	64	66	68	70	72	74	74	74																
5.410 (0.2130)	14	16	18	20	22	24	26	28	30	32	34	36		48	50	52	54	56	58	60	62	64	66	68	70	72	74	74	74																	
5.420 (0.2134)	14	16	18	20	22	24	26	28	30	32	34	36		48	50	52	54	56	58	60	62	64	66	68	70	72	74	74	74																	
5.430 (0.2138)	16	18	20	22	24	26	28	30	32	34	36	38		50	52	54	56	58	60	62	64	66	68	70	72	74	74	74																		
5.440 (0.2142)	16	18	20	22	24	26	28	30	32	34	36	38		50	52	54	56	58	60	62	64	66	68	70	72	74	74	74																		
5.450 (0.2146)	18	20	22	24	26	28	30	32	34	36	38	40		52	54	56	58	60	62	64	66	68	70	72	74	74	74	74																		
5.460 (0.2150)	18	20	22	24	26	28	30	32	34	36	38	40		52	54	56	58	60	62	64	66	68	70	72	74	74	74																			
5.470 (0.2154)	20	22	24	26	28	30	32	34	36	38	40	42		54	56	58	60	62	64	66	68	70	72	74	74	74																			
5.480 (0.2157)	20	22	24	26	28	30	32	34	36	38	40	42		54	56	58	60	62	64	66	68	70	72	74	74	74																			
5.490 (0.2161)	22	24	26	28	30	32	34	36	38	40	42	44		56	58	60	62	64	66	68	70	72	74	74	74																				
5.500 (0.2165)	22	24	26	28	30	32	34	36	38	40	42	44		56	58	60	62	64	66	68	70	72	74	74	74																				
5.510 (0.2169)	24	26	28	30	32	34	36	38	40	42	44	46		58	60	62	64	66	68	70	72	74	74	74																					
5.520 (0.2173)	24	26	28	30	32	34	36	38	40	42	44	46		58	60	62	64	66	68	70	72	74	74	74																					
5.530 (0.2177)	26	28	30	32	34	36	38	40	42	44	46	48		60	62	64	66	68	70	72	74	74	74																						
5.540 (0.2181)	26	28	30	32	34	36	38	40	42	44	46	48		60	62	64	66	68	70	72	74	74	74																						
5.550 (0.2185)	28	30	32	34	36	38	40	42	44	46	48	50		62	64	66	68	70	72	74	74	74																							
5.560 (0.2189)	28	30	32	34	36	38	40	42	44	46	48	50		62	64	66	68	70	72	74	74	74																							
5.570 (0.2193)	30	32	34	36	38	40	42	44	46	48	50	52		64	66	68	70	72	74	74	74																								
5.580 (0.2197)	30	32	34	36	38	40	42	44	46	48	50	52		64	66	68	70	72	74	74	74																								
5.590 (0.2201)	32	34	36	38	40	42	44	46	48	50	52	54		66	68	70	72	74	74	74																									
5.600 (0.2205)	34	36	38	40	42	42	44	46	48	50	52	54		66	68	70	72	74	74	74																									
5.620 (0.2213)	34	36	38	40	42	44	46	48	50	52	54	56		68	70	72	74	74	74																										
5.640 (0.2220)	36	38	40	42	44	46	48	50	52	54	56	58		70	72	74	74	74																											
5.660 (0.2228)	38	40	42	44	46	48	50	52	54	56	58	60		72	74	74	74																												
5.680 (0.2236)	40	42	44	46	48	50	52	54	56	58	60	62		74	74	74																													
5.700 (0.2244)	42	44	46	48	50	52	54	56	58	60	62	64		74	74																														
5.720 (0.2252)	44	46	48	50	52	54	56	58	60	62	64	66		74																														
5.740 (0.2260)	46	48	50	52	54	56	58	60	62	64	66	68																																

T

A117458

EM

Exhaust valve clearance (Cold):
0.25 to 0.35 mm (0.010 to 0.014 in.)
EXAMPLE:
A 5.340 mm (0.2102 in.) lifter is installed, and the measured clearance is 0.440 mm (0.0173 in.). Replace the 5.340 mm (0.2102 in.) lifter with a new No. 48 lifter.

New Shim Thickness

Shim No.	Thickness	Shim No.	Thickness	Shim No.	Thickness
06	5.060 (0.1992)	30	5.300 (0.2087)	54	5.540 (0.2181)
08	5.080 (0.2000)	32	5.320 (0.2094)	56	5.560 (0.2189)
10	5.100 (0.2008)	34	5.340 (0.2102)	58	5.580 (0.2197)
12	5.120 (0.2016)	36	5.360 (0.2110)	60	5.600 (0.2205)
14	5.140 (0.2024)	38	5.380 (0.2118)	62	5.620 (0.2213)
16	5.160 (0.2031)	40	5.400 (0.2126)	64	5.640 (0.2220)
18	5.180 (0.2039)	42	5.420 (0.2134)	66	5.660 (0.2228)
20	5.200 (0.2047)	44	5.440 (0.2142)	68	5.680 (0.2236)
22	5.220 (0.2055)	46	5.460 (0.2150)	70	5.700 (0.2244)
24	5.240 (0.2063)	48	5.480 (0.2157)	72	5.720 (0.2252)
26	5.260 (0.2071)	50	5.500 (0.2165)	74	5.740 (0.2260)
28	5.280 (0.2079)	52	5.520 (0.2173)		

(t) Install the selected valve lifter.
(u) Apply a light coat of engine oil to the camshaft and camshaft journals.

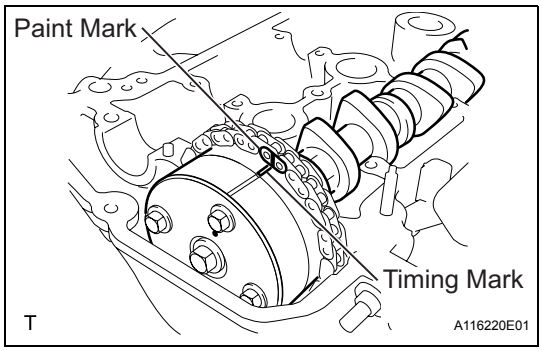

(v) Install the chain onto the camshaft timing gear with the paint mark and the timing mark aligned as shown in the illustration.

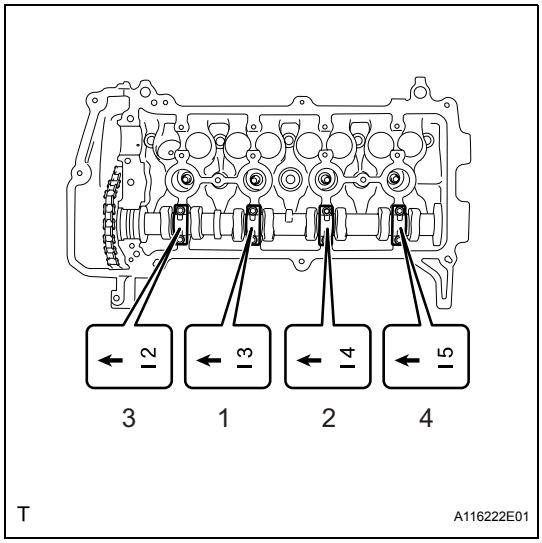

(w) Examine the front marks and the numbers on camshaft bearing cap No. 2 and check that the sequence is as shown in the illustration. Then uniformly tighten the bolts in several steps in the sequence shown in the illustration.
Torque: 13 N*m (129 kgf*cm, 9.4 ft.*lbf)
NOTICE:
Tighten each bolt uniformly while keeping the camshaft level.

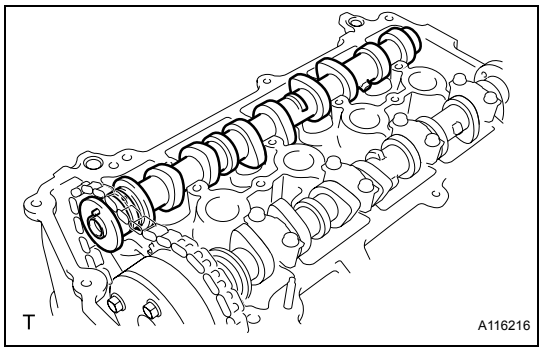

(x) Install camshaft No. 2.

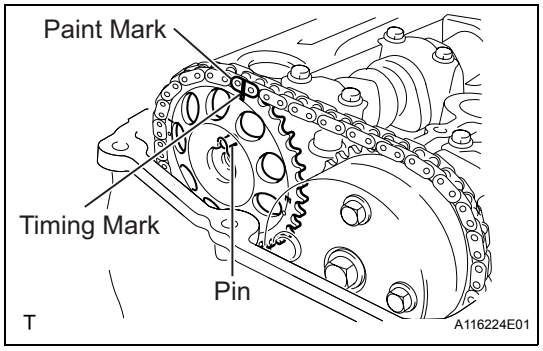

(y) Hold the chain, and align the timing mark on the camshaft timing sprocket with the paint mark of the chain.

(z) Align the alignment pin hole in the camshaft timing sprocket with the alignment pin of the camshaft, and install the sprocket onto the camshaft.

EM

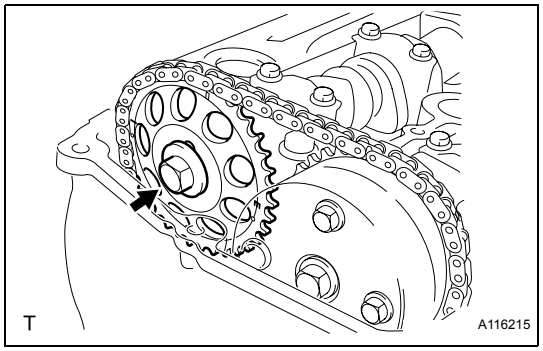

(aa) Provisionally install the flange bolt.

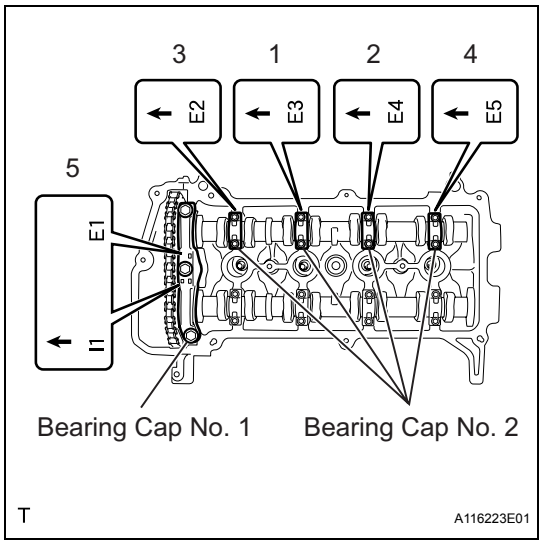

(ab) Examine the front marks and the numbers of camshaft bearing cap No. 1 and camshaft bearing cap No. 2 and check that the sequence is as shown in the illustration. Then uniformly tighten the bolts in several steps, in the sequence shown in the illustration.

Torque: for bearing cap No. 2
13 N*m (129 kgf*cm, 9.4 ft.*lbf)
for bearing cap No. 1
23 N*m (235 kgf*cm, 17 ft.*lbf)

NOTICE:
Tighten each bolt uniformly while keeping the camshaft level.

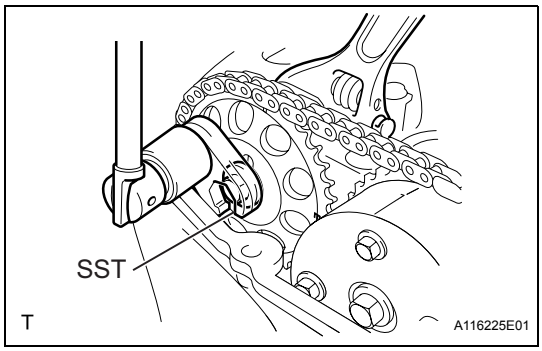

(ac) Using a wrench, hold the hexagonal lobe of camshaft No. 2 and install the flange bolt.
Torque: 64 N*m (653 kgf*cm, 47 ft.*lbf)
SST 09023-38400
(ad) Remove the bar from the timing chain tensioner.

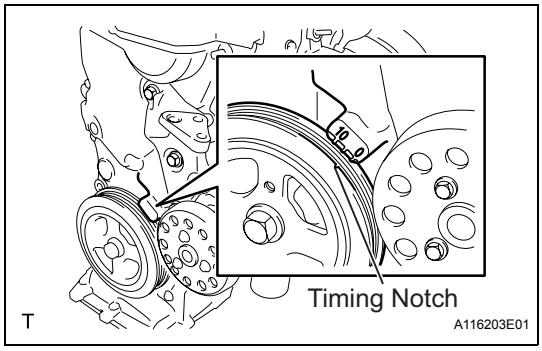

(ae) Turn the crankshaft damper and align its timing notch with the timing mark "0" of the oil pump.

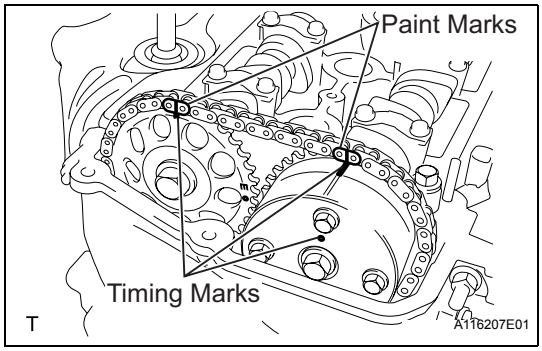

(af) Check that all the pairs of timing marks are aligned.
(ag) Apply adhesive to the 2 or 3 threads of the screw plug.
Adhesive:
Toyota Genuine Adhesive 1324, Three Bond 1324 or Equivalent

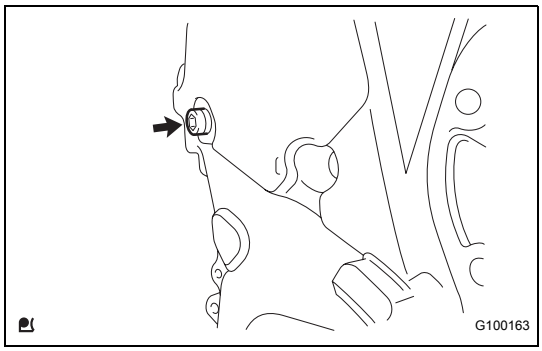

(ah) Using an 8 mm hexagon wrench, install the screw plug.
Torque: 15 N*m (153 kgf*cm, 11 ft.*lbf)
(ai) Install the engine mounting insulator sub-assembly RH (See page LU-26). (for Hatchback)
(aj) Install the engine mounting insulator sub-assembly RH (See page LU-26). (for Sedan)
(ak) Install the fan and generator V belt (See page EM-7).
(al) Adjust the fan and generator V belt (See page EM-7).
(am) Inspect the fan and generator V belt (See page EM-8).

10. **INSTALL CYLINDER HEAD COVER SUB-ASSEMBLY (See page FU-19)**
11. **CONNECT VENTILATION HOSE NO. 2 (See page FU-20)**
12. **CONNECT VENTILATION HOSE (See page FU-20)**
13. **INSTALL IGNITION COIL NO. 1 (See page IG-9)**

14. **CONNECT CABLE TO NEGATIVE BATTERY TERMINAL**
    Torque: 5.4 N*m (55 kgf*cm, 48 in.*lbf)
15. **CHECK FOR ENGINE OIL LEAKAGE**
16. **INSTALL CYLINDER HEAD COVER NO. 2 (See page IG-10)**
17. **INSTALL ENGINE UNDER COVER RH**

TIMING CHAIN

COMPONENTS

EM

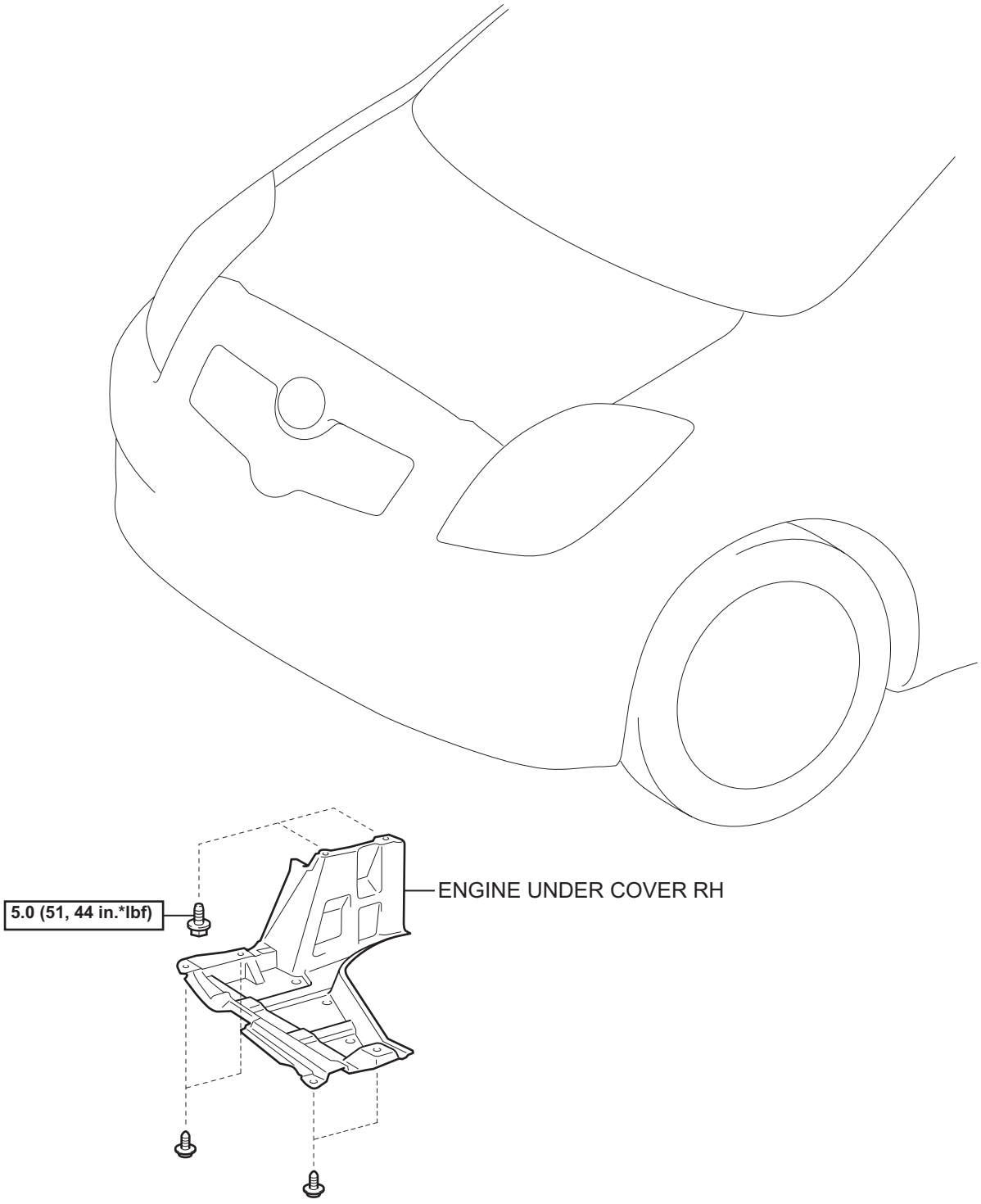

N*m (kgf*cm, ft.*lbf) : Specified torque

T

A115143E01

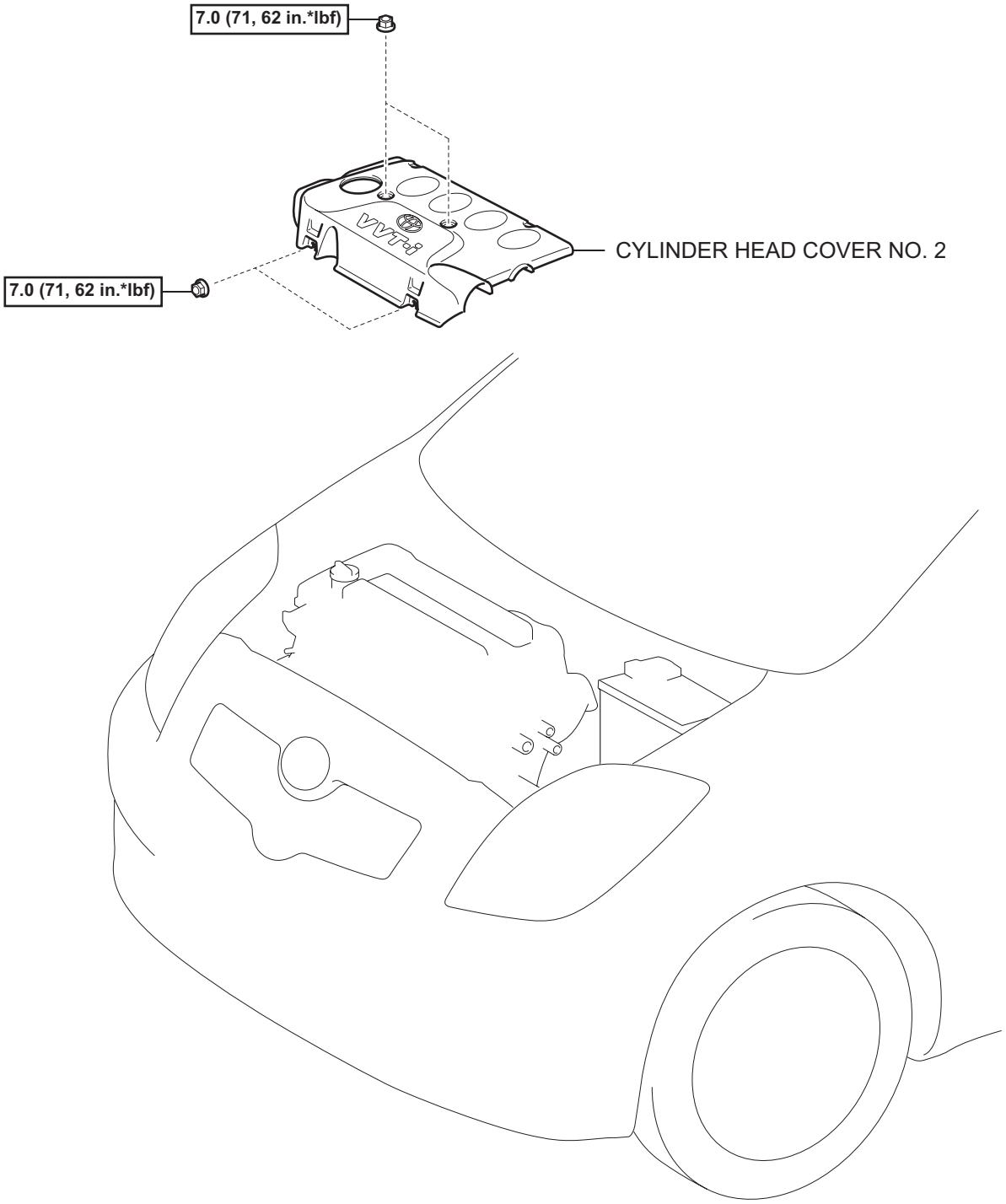

N*m (kgf*cm, ft.*lbf) : Specified torque

T

A115136E01

EM

EM

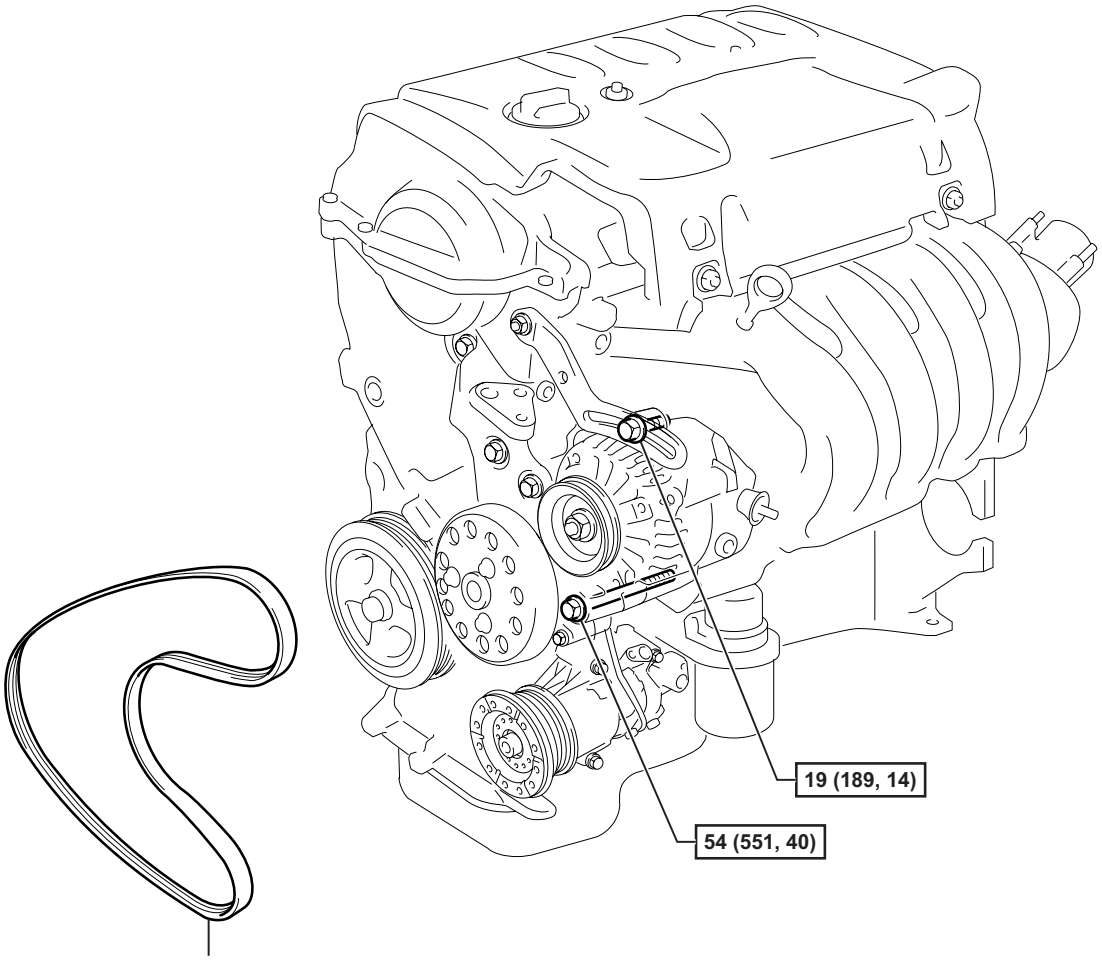

N*m (kgf*cm, ft.*lbf) : Specified torque

T

A116199E01

for Hatchback:

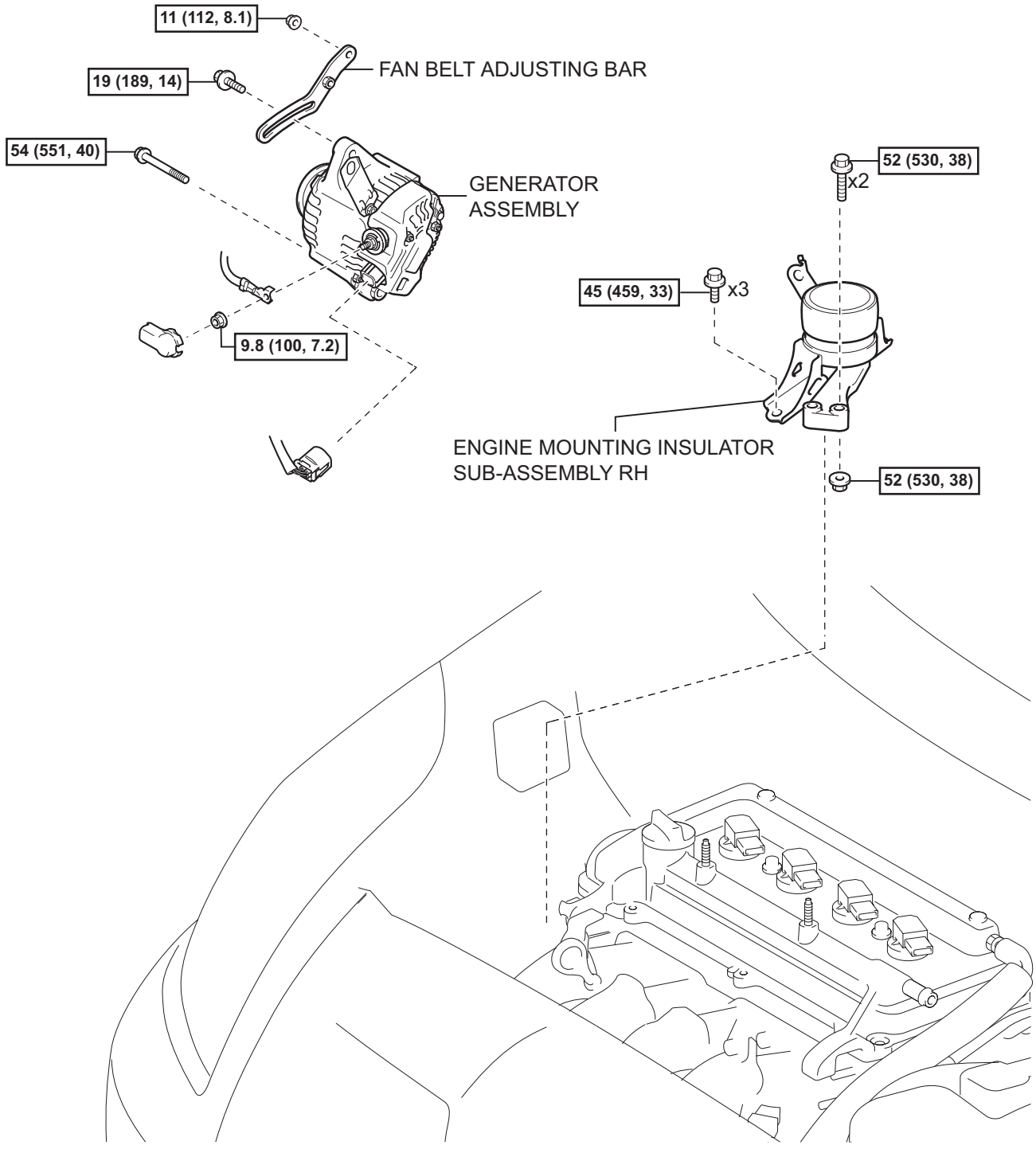

N*m (kgf*cm, ft.*lbf) : Specified torque

T

A116193E06

EM

for Sedan:

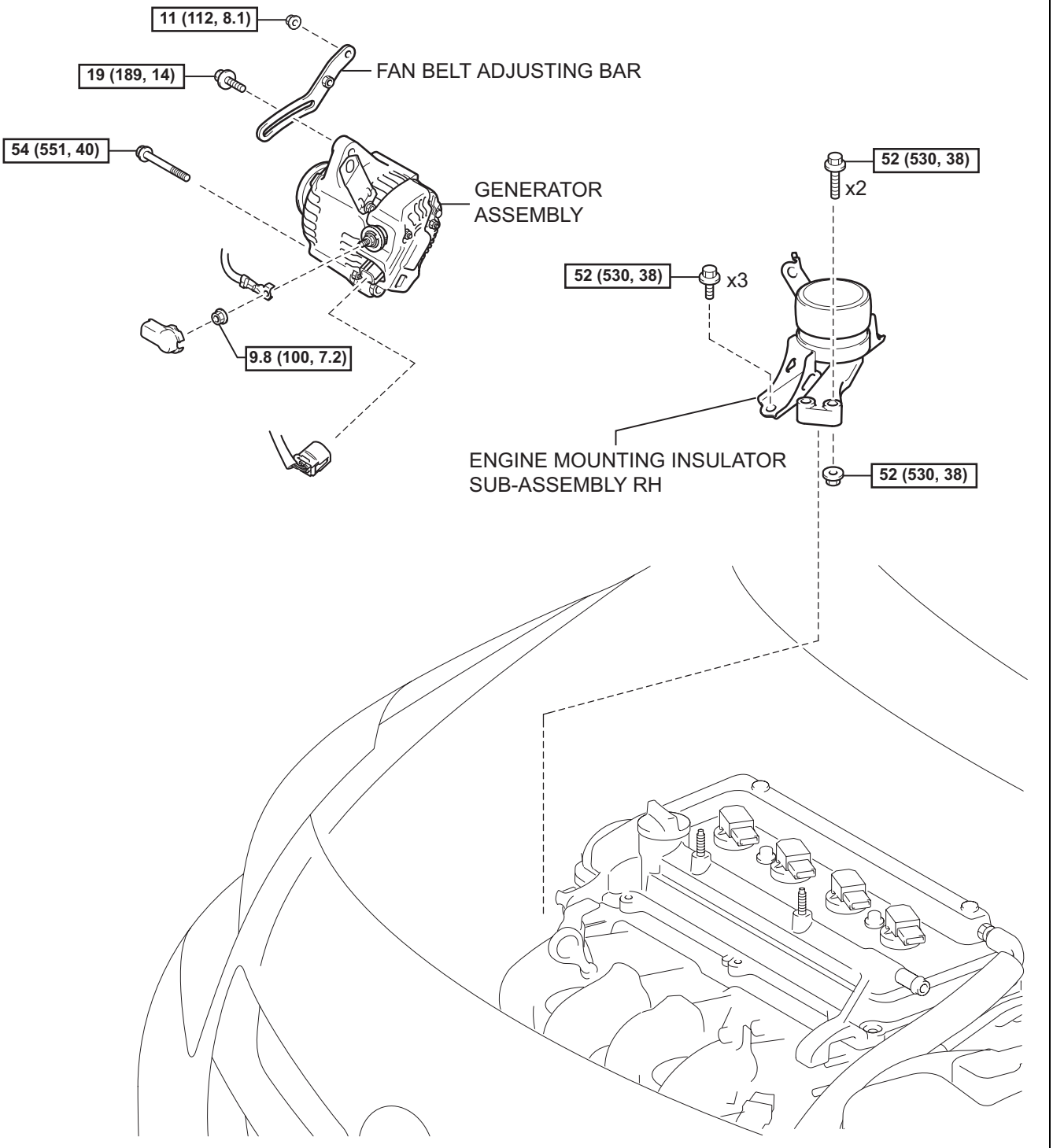

N*m (kgf*cm, ft*lbf) : Specified torque

T

A133594E01

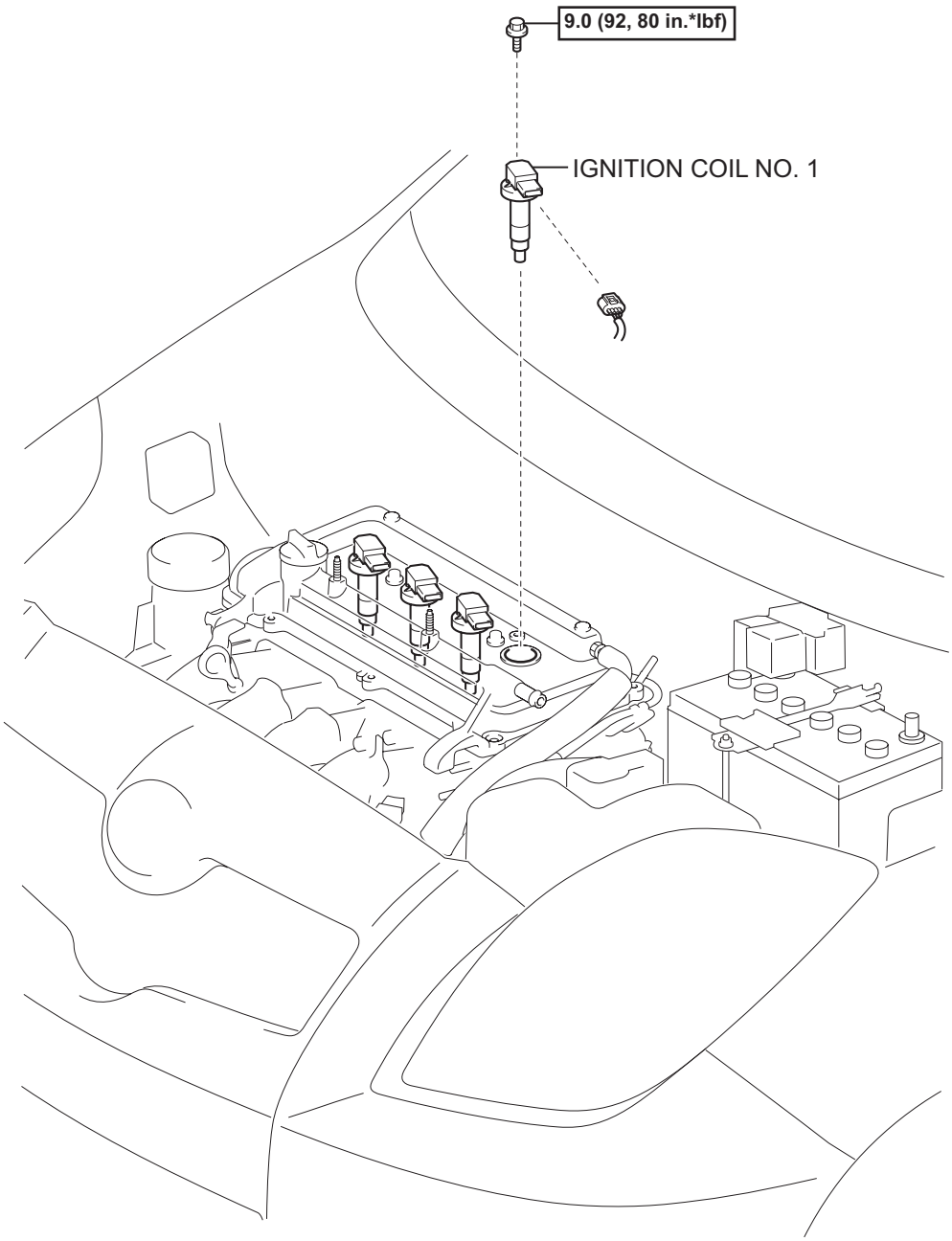

N*m (kgf*cm, ft.*lbf) : Specified torque

T

A115486E01

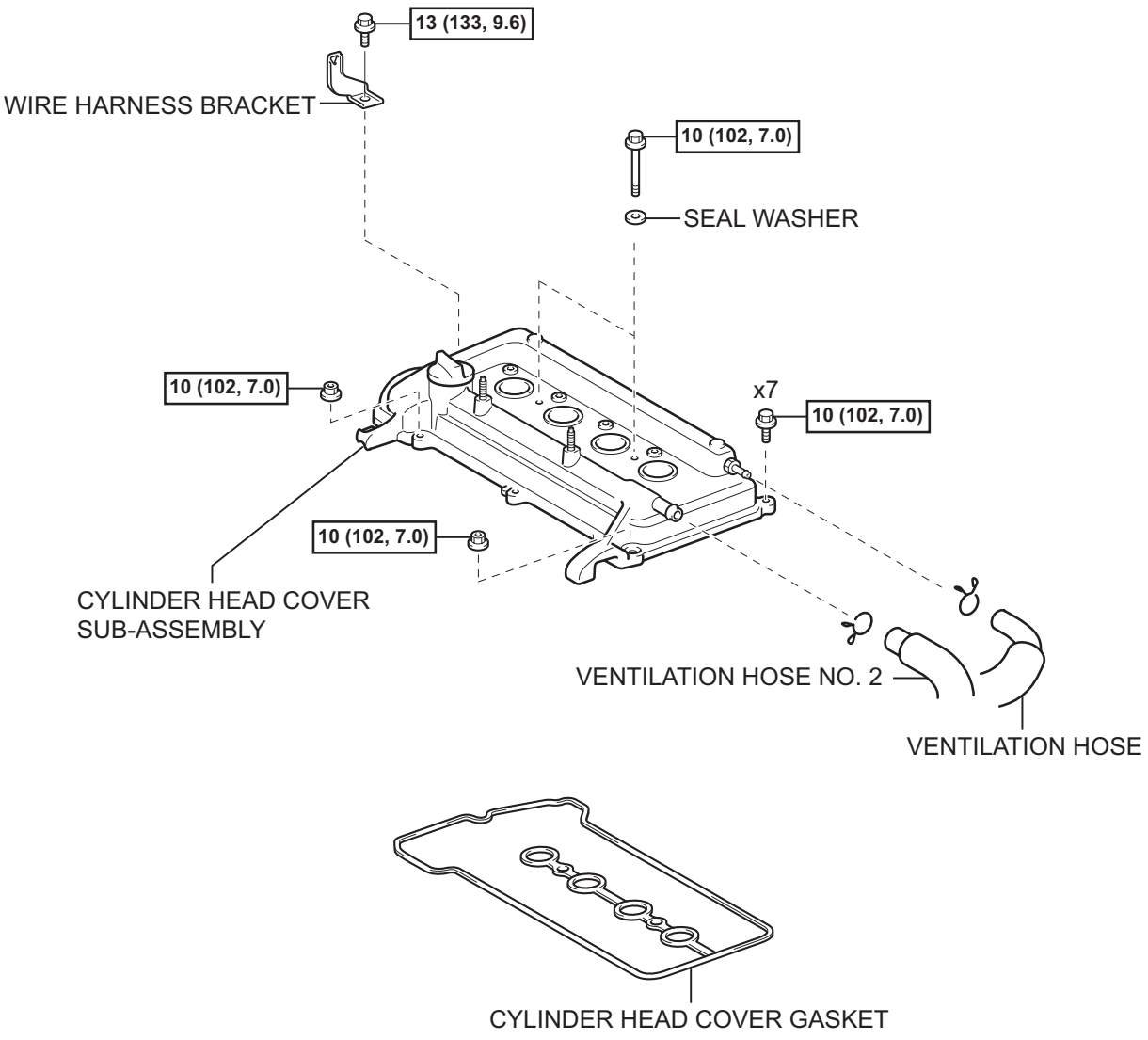

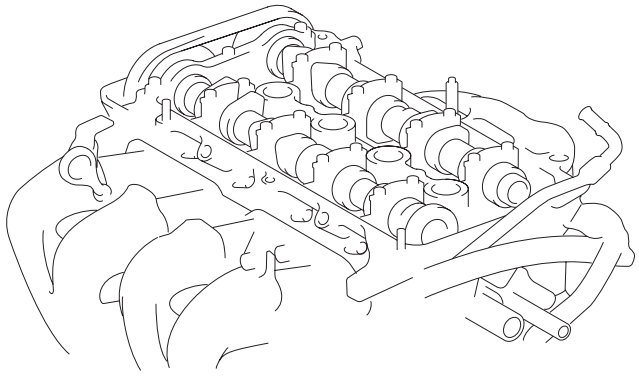

N*m (kgf*cm, ft.*lbf) : Specified torque

T

A115504E01

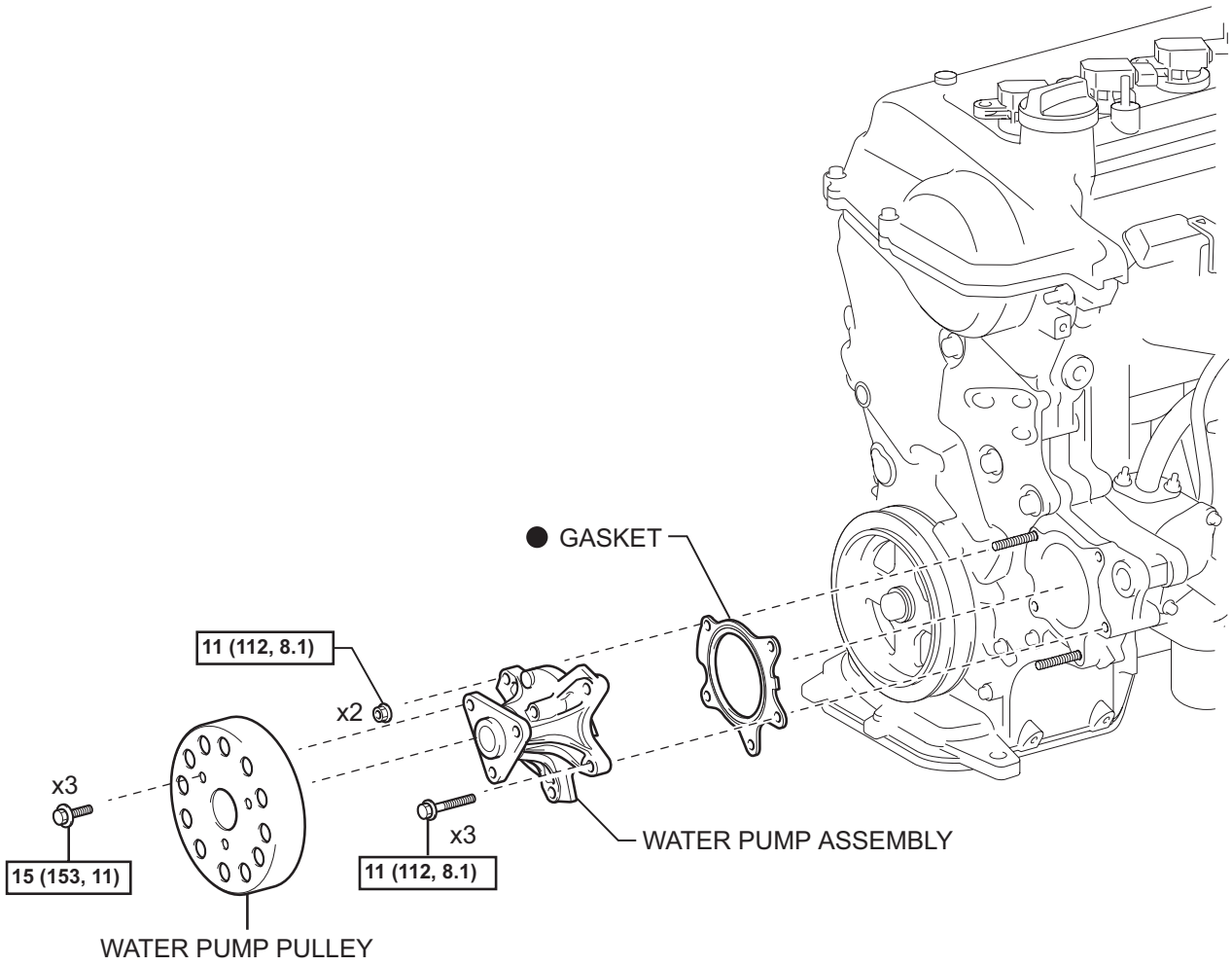

N*m (kgf*cm, ft.*lbf) : Specified torque

● Non-reusable part

T

A116194E01

EM

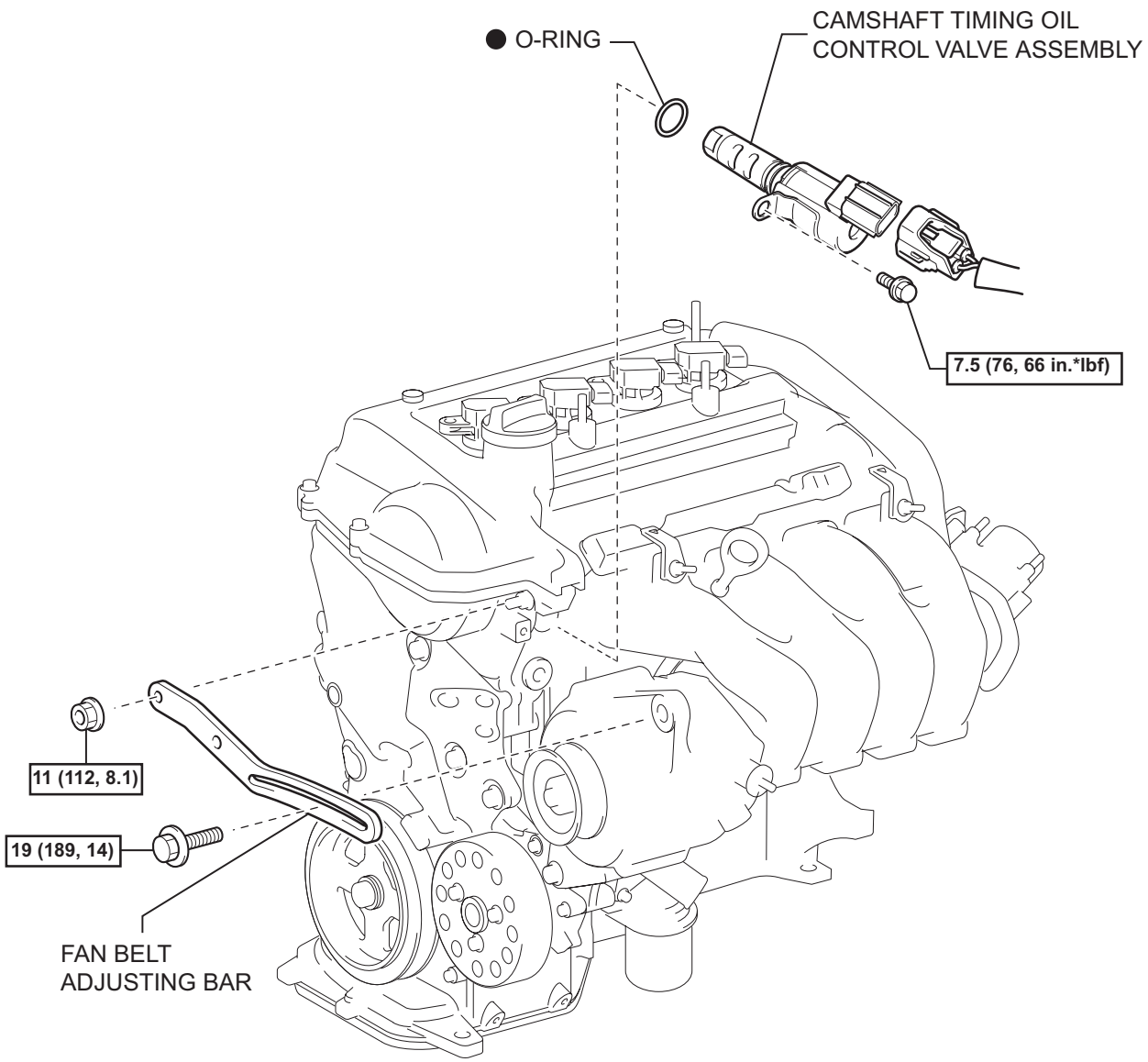

N*m (kgf*cm, ft.*lbf) : Specified torque

● Non-reusable part

T

A116180E01

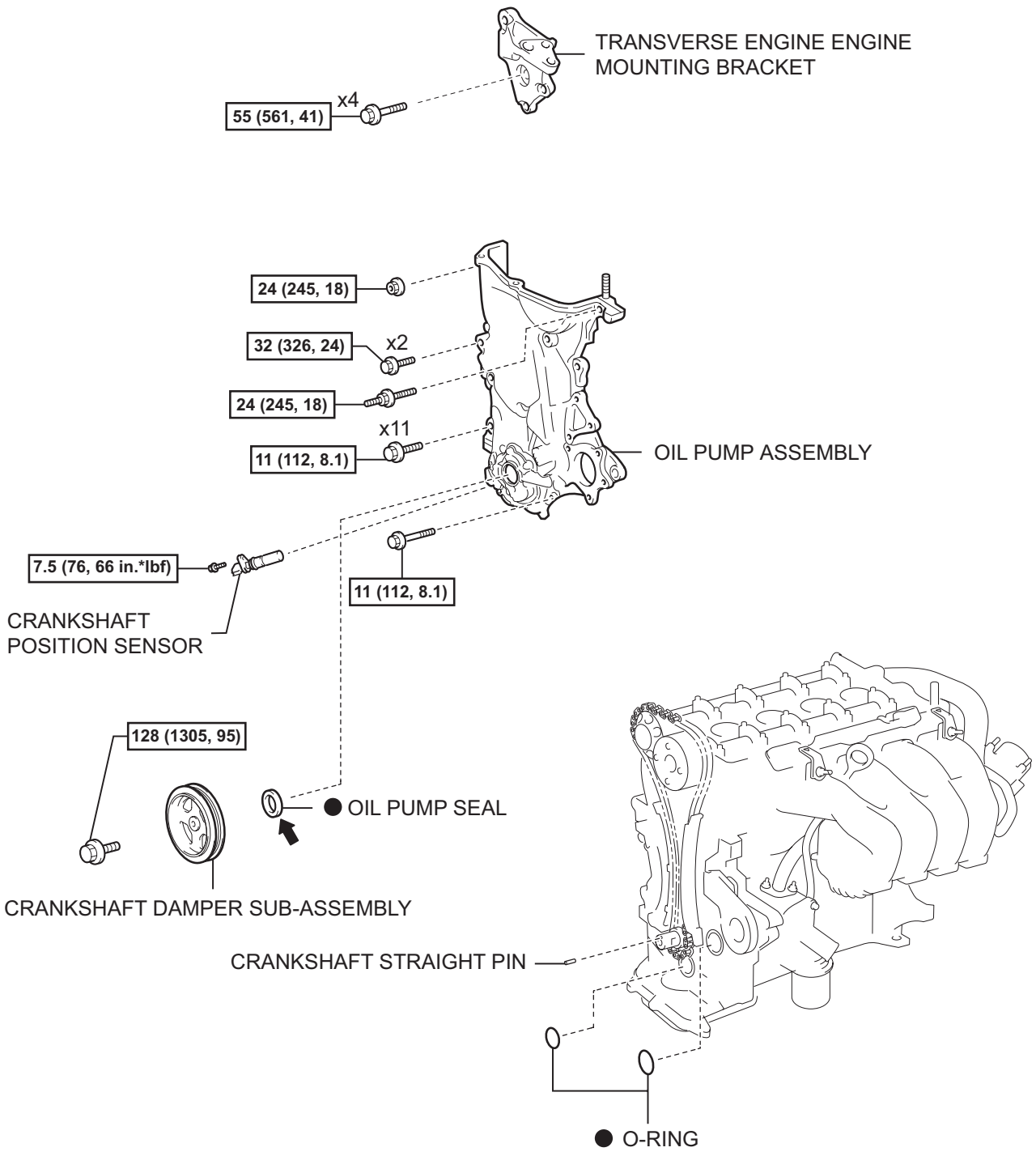

N*m (kgf*cm, ft.*lbf) : Specified torque

● Non-reusable part ⬅ Apply MP grease

T

A116559E01

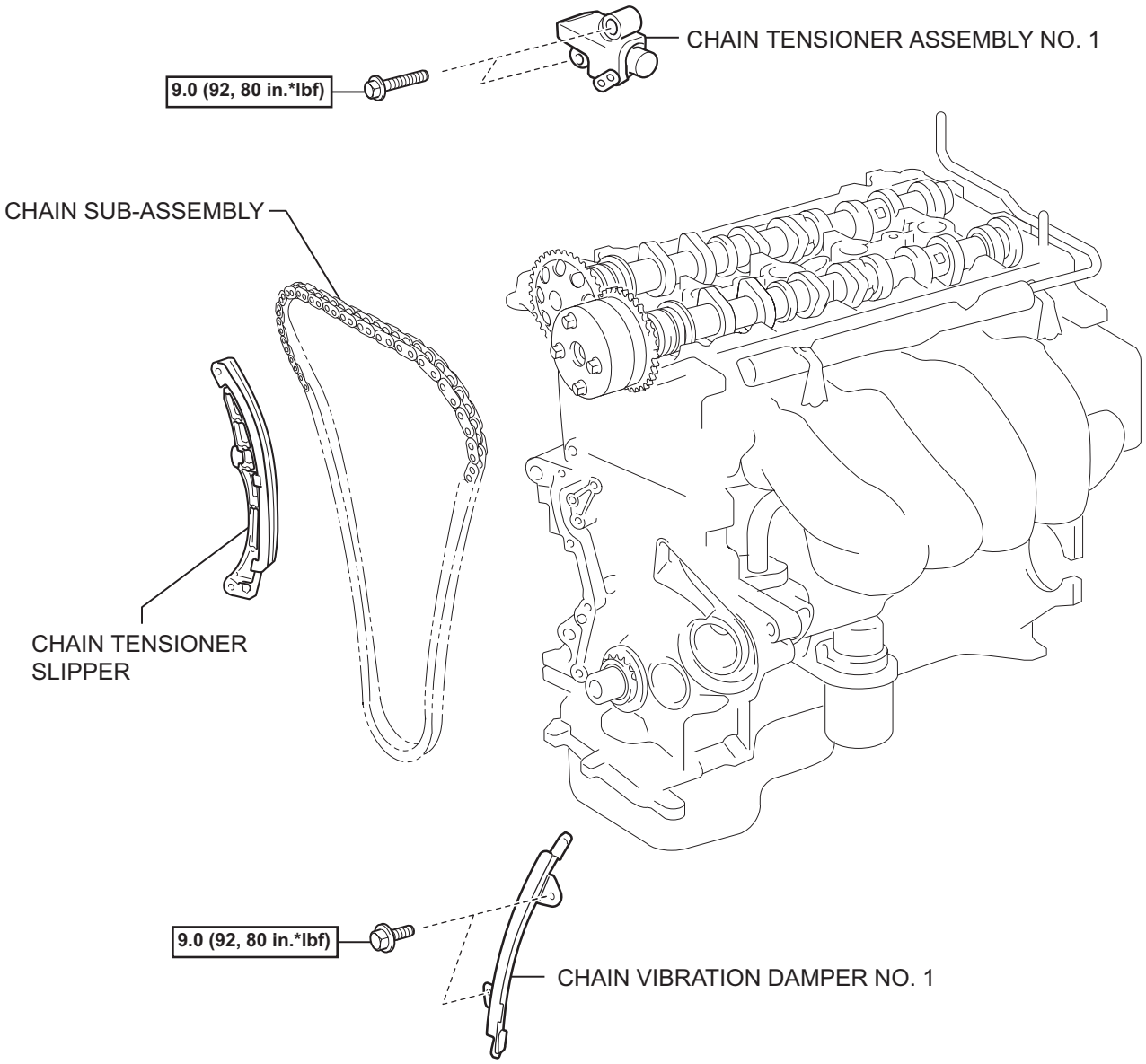

N*m (kgf*cm, ft.*lbf) : Specified torque

T

A116579E01

REMOVAL

1. DISCONNECT CABLE FROM NEGATIVE BATTERY TERMINAL
2. REMOVE FRONT WHEEL RH
3. REMOVE ENGINE UNDER COVER RH
4. DRAIN ENGINE OIL
5. DRAIN ENGINE COOLANT (See page CO-8)
6. REMOVE CYLINDER HEAD COVER NO. 2 (See page IG-9)
7. REMOVE FAN AND GENERATOR V BELT (See page EM-7)
8. REMOVE GENERATOR ASSEMBLY (See page CH-10)
9. REMOVE IGNITION COIL NO. 1 (See page IG-9)
10. DISCONNECT VENTILATION HOSE (See page FU-13)
11. DISCONNECT VENTILATION HOSE NO. 2 (See page FU-13)
12. REMOVE CYLINDER HEAD COVER SUB-ASSEMBLY (See page FU-13)
13. REMOVE ENGINE MOUNTING INSULATOR SUB-ASSEMBLY RH (See page LU-17)
14. REMOVE CRANKSHAFT DAMPER SUB-ASSEMBLY (See page LU-18)
15. REMOVE CRANKSHAFT POSITION SENSOR (See page ES-403)
16. REMOVE CAMSHAFT TIMING OIL CONTROL VALVE ASSEMBLY (See page ES-396)
17. REMOVE WATER PUMP PULLEY (See page CO-15)
18. REMOVE WATER PUMP ASSEMBLY (See page CO-15)
19. REMOVE TRANSVERSE ENGINE ENGINE MOUNTING BRACKET (See page LU-18)
20. REMOVE OIL PUMP ASSEMBLY (See page LU-19)
21. REMOVE OIL PUMP SEAL (See page LU-21)
22. REMOVE CHAIN TENSIONER ASSEMBLY NO. 1
    NOTICE:
    - Do not rotate the crankshaft with the chain tensioner removed.
    - When rotating the camshaft with the timing chain removed, rotate the crankshaft counterclockwise 40° from the TDC first.

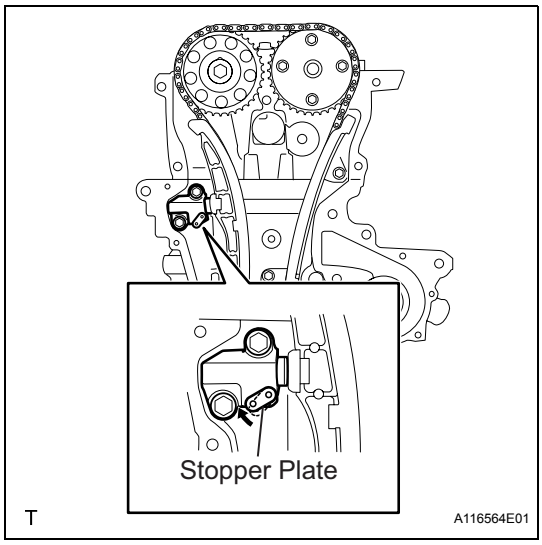

(a) Pull up the stopper plate and hold it with its lock released.

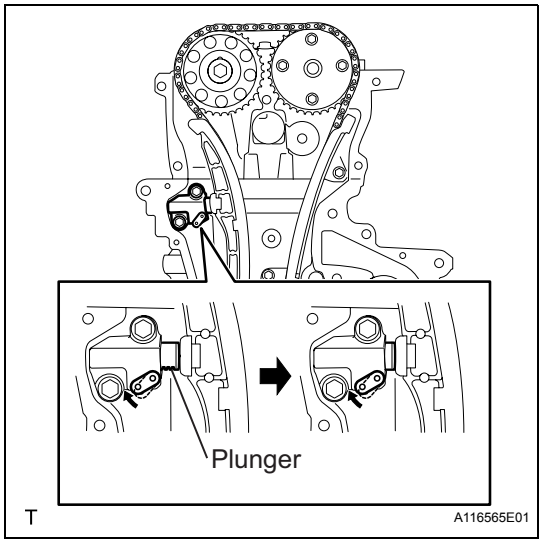

(b) Unlock the plunger of the tensioner and push it in to the end.

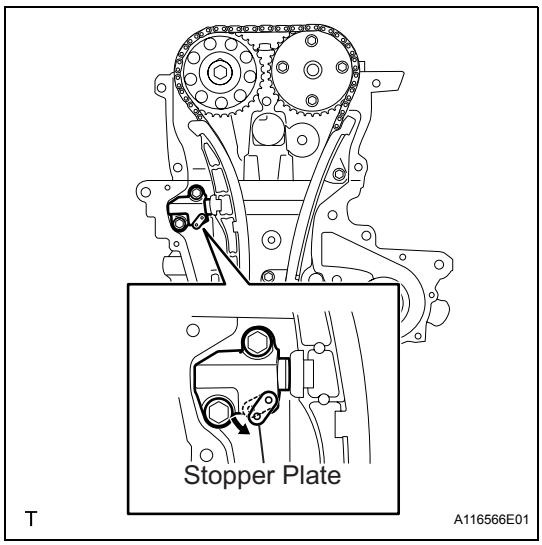

(c) Pull down the stopper plate with the plunger pushed to the end and lock the plunger.

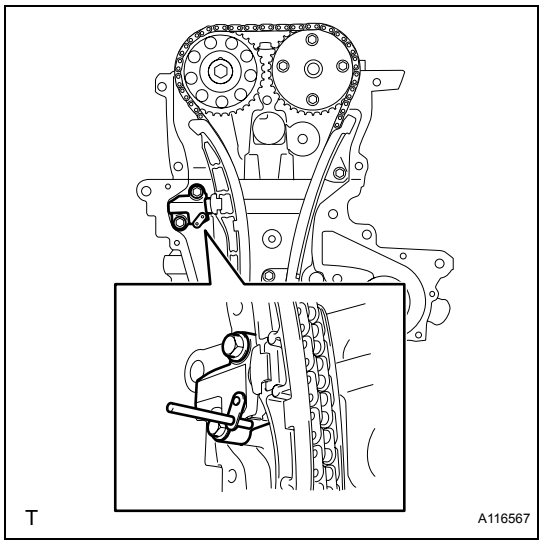

(d) Insert a 3 mm (0.12 in.) diameter bar into the hole in the stopper plate and lock the plunger.

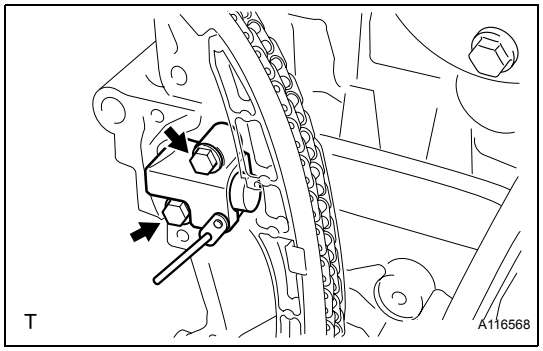

(e) Remove the 2 bolts and remove chain tensioner assembly No. 1.

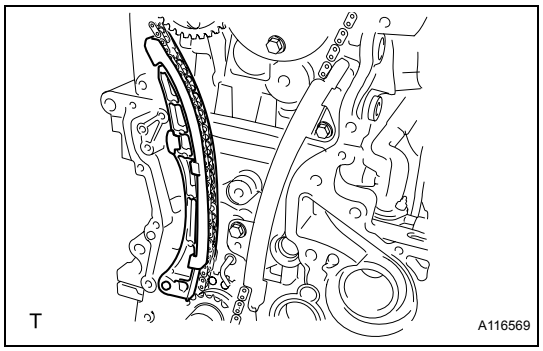

23. REMOVE CHAIN TENSIONER SLIPPER

(a) Remove the chain tensioner slipper.

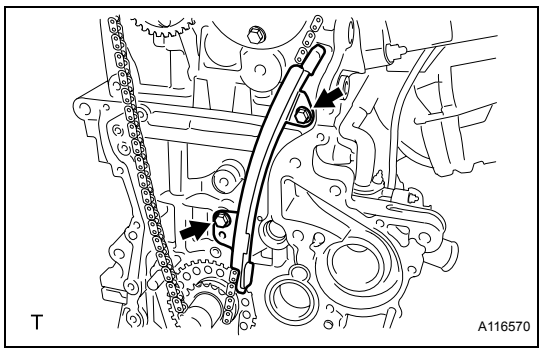

24. REMOVE CHAIN VIBRATION DAMPER NO. 1

(a) Remove the 2 bolts and remove chain vibration damper No. 1.

25. REMOVE CHAIN SUB-ASSEMBLY

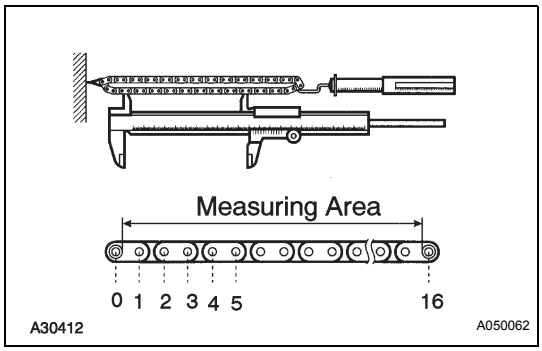

INSPECTION

1. INSPECT CHAIN SUB-ASSEMBLY

(a) Using a spring scale, apply 140 N (14.3 kgf, 31.5 lb) to the timing chain and measure its length.

Maximum chain elongation:

123.2 mm (4.850 in.)

If the elongation is greater than the maximum, replace the chain.

HINT:

Perform the same measurement at 3 or more random places and calculate the average length.

INSTALLATION

1. INSTALL CHAIN SUB-ASSEMBLY

(a) Make sure that all the timing marks are in the positions (TDC) shown in the illustration.

HINT:

The positions of the timing marks may differ from the predetermined positions due to the force of the valve spring.

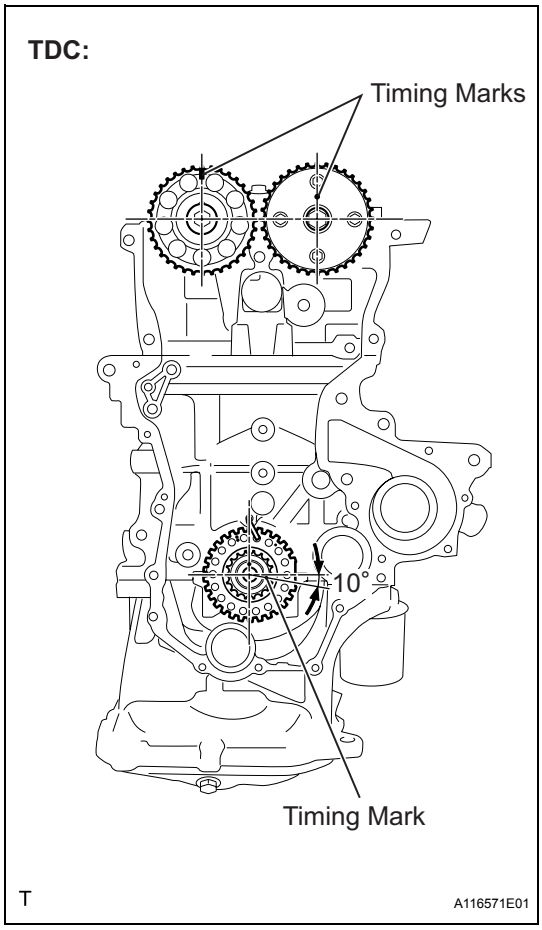

(b) Set the timing mark of the crankshaft in a position between 40 and 140°ATDC as illustrated.

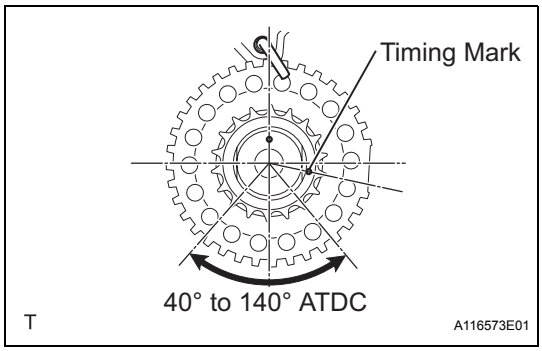

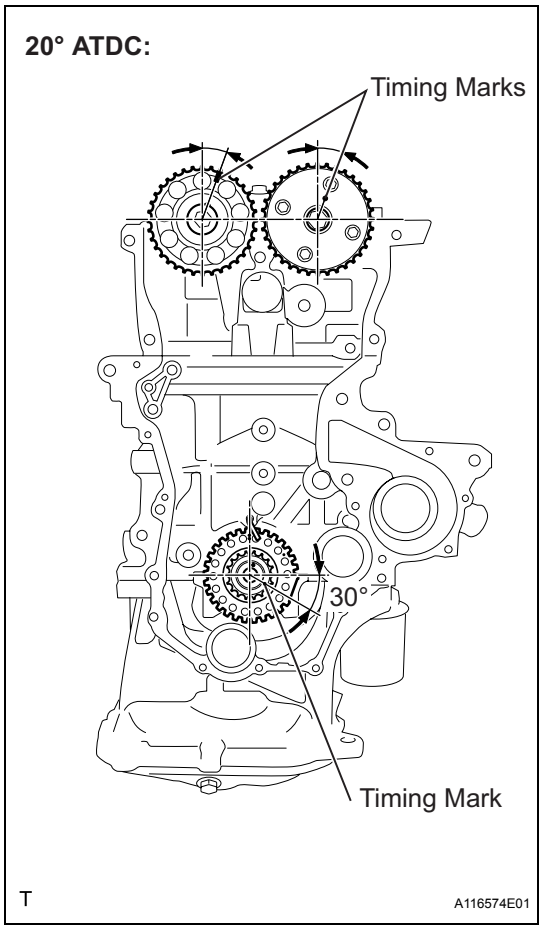

(c) Set the camshaft timing gear and the camshaft timing sprocket in the positions (20°ATDC) shown in the illustration.

(d) Set the crankshaft in the position (20°ATDC) shown in the illustration.

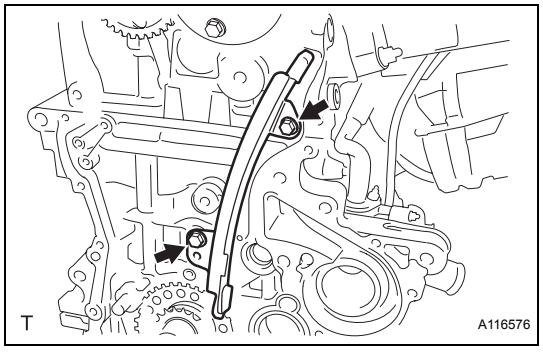

(e) Install chain vibration damper No. 1 with the 2 bolts.
Torque: 9.0 N*m (92 kgf*cm, 80 in.*lbf)

EM

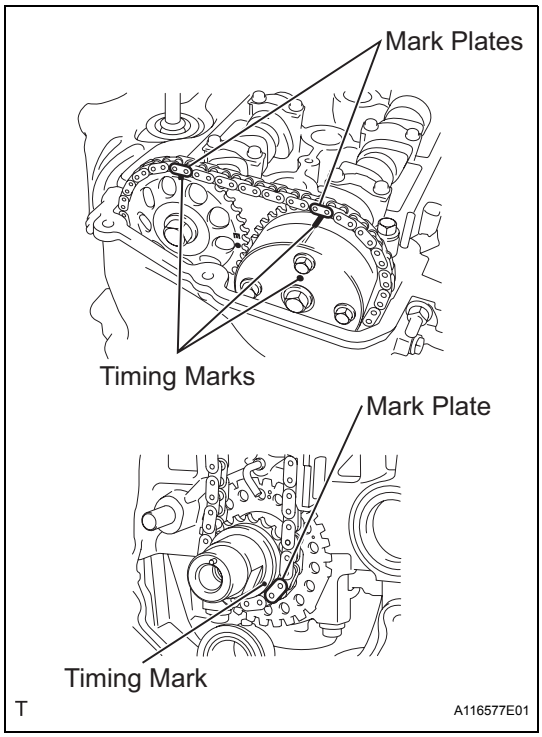

(f) Align the timing marks of the camshaft with the mark plates of the timing chain and install the timing chain.
HINT:
Align the timing marks with the mark plates while turning the hexagonal service portion of the camshaft using a wrench.

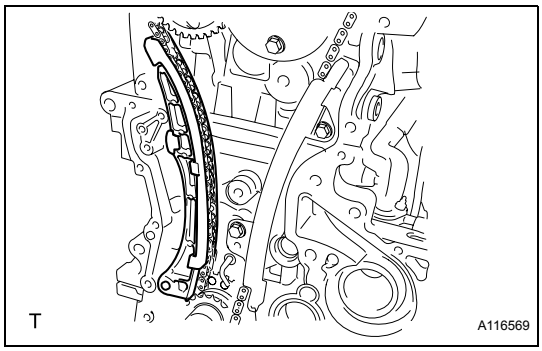

2. INSTALL CHAIN TENSIONER SLIPPER
(a) Install the chain tensioner slipper.

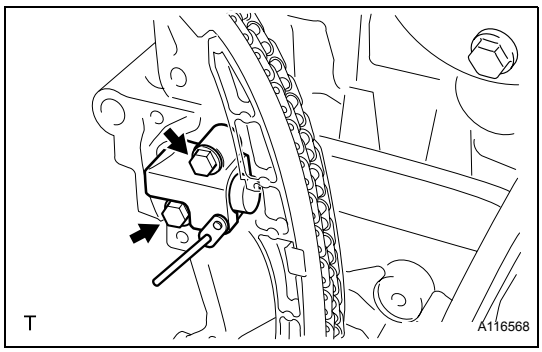

3. INSTALL CHAIN TENSIONER ASSEMBLY NO. 1
(a) Install chain tensioner assembly No. 1 with the 2 bolts.
Torque: 9.0 N*m (92 kgf*cm, 80 in.*lbf)
(b) Remove the bar from chain tensioner assembly No. 1.

4. INSTALL OIL PUMP SEAL (See page LU-21)

5. INSTALL OIL PUMP ASSEMBLY (See page LU-22)

6. INSTALL TRANSVERSE ENGINE ENGINE MOUNTING BRACKET (See page LU-26)

7. INSTALL WATER PUMP ASSEMBLY (See page CO-16)

8. INSTALL WATER PUMP PULLEY (See page CO-16)

9. INSTALL CAMSHAFT TIMING OIL CONTROL VALVE ASSEMBLY (See page ES-397)

10. INSTALL CRANKSHAFT POSITION SENSOR (See page ES-403)

11. INSTALL CRANKSHAFT DAMPER SUB-ASSEMBLY (See page LU-26)
12. INSTALL ENGINE MOUNTING INSULATOR SUB-ASSEMBLY RH (See page LU-26)
13. INSTALL CYLINDER HEAD COVER SUB-ASSEMBLY (See page FU-19)
14. CONNECT VENTILATION HOSE NO. 2 (See page FU-20)
15. CONNECT VENTILATION HOSE (See page FU-20)
16. INSTALL IGNITION COIL NO. 1 (See page IG-9)
17. INSTALL GENERATOR ASSEMBLY (See page CH-17)
18. INSTALL FAN AND GENERATOR V BELT (See page EM-7)
19. ADJUST FAN AND GENERATOR V BELT (See page EM-7)
20. INSPECT FAN AND GENERATOR V BELT (See page EM-8)
21. CONNECT CABLE TO NEGATIVE BATTERY TERMINAL
    Torque: 5.4 N*m (55 kgf*cm, 48 in.*lbf)
22. ADD ENGINE OIL
23. ADD ENGINE COOLANT (See page CO-8)
24. CHECK ENGINE OIL LEVEL (See page LU-1)
25. CHECK FOR ENGINE OIL LEAKAGE
26. CHECK FOR ENGINE COOLANT LEAKAGE (See page CO-1)
27. INSTALL CYLINDER HEAD COVER NO. 2 (See page IG-10)
28. INSTALL ENGINE UNDER COVER RH
29. INSTALL FRONT WHEEL RH
    Torque: 103 N*m (1050 kgf*cm, 76 ft.*lbf)

CAMSHAFT

COMPONENTS

EM

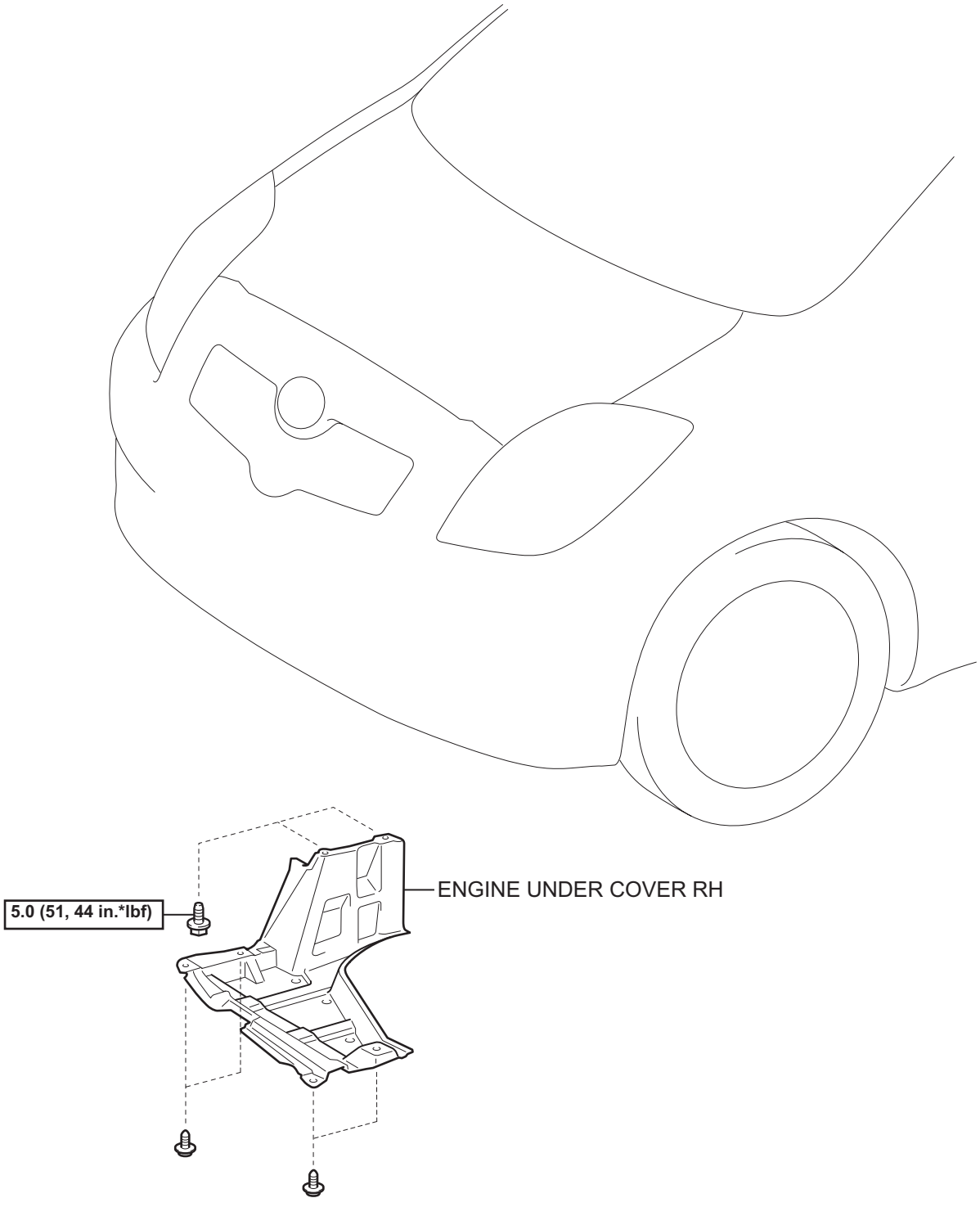

N*m (kgf*cm, ft.*lbf) : Specified torque

T

A115143E01

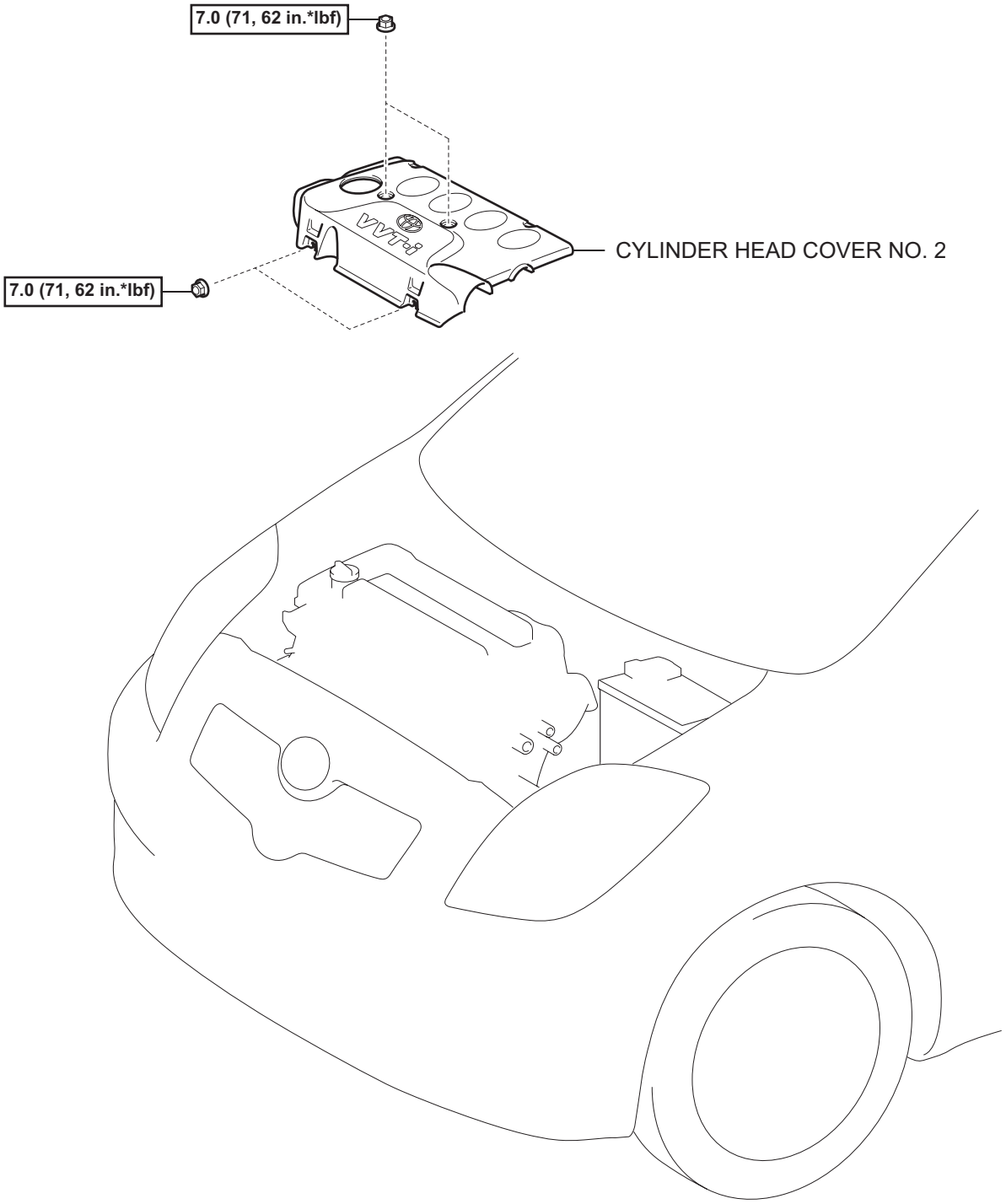

N*m (kgf*cm, ft.*lbf) : Specified torque

T

A115136E01

EM

for Hatchback:

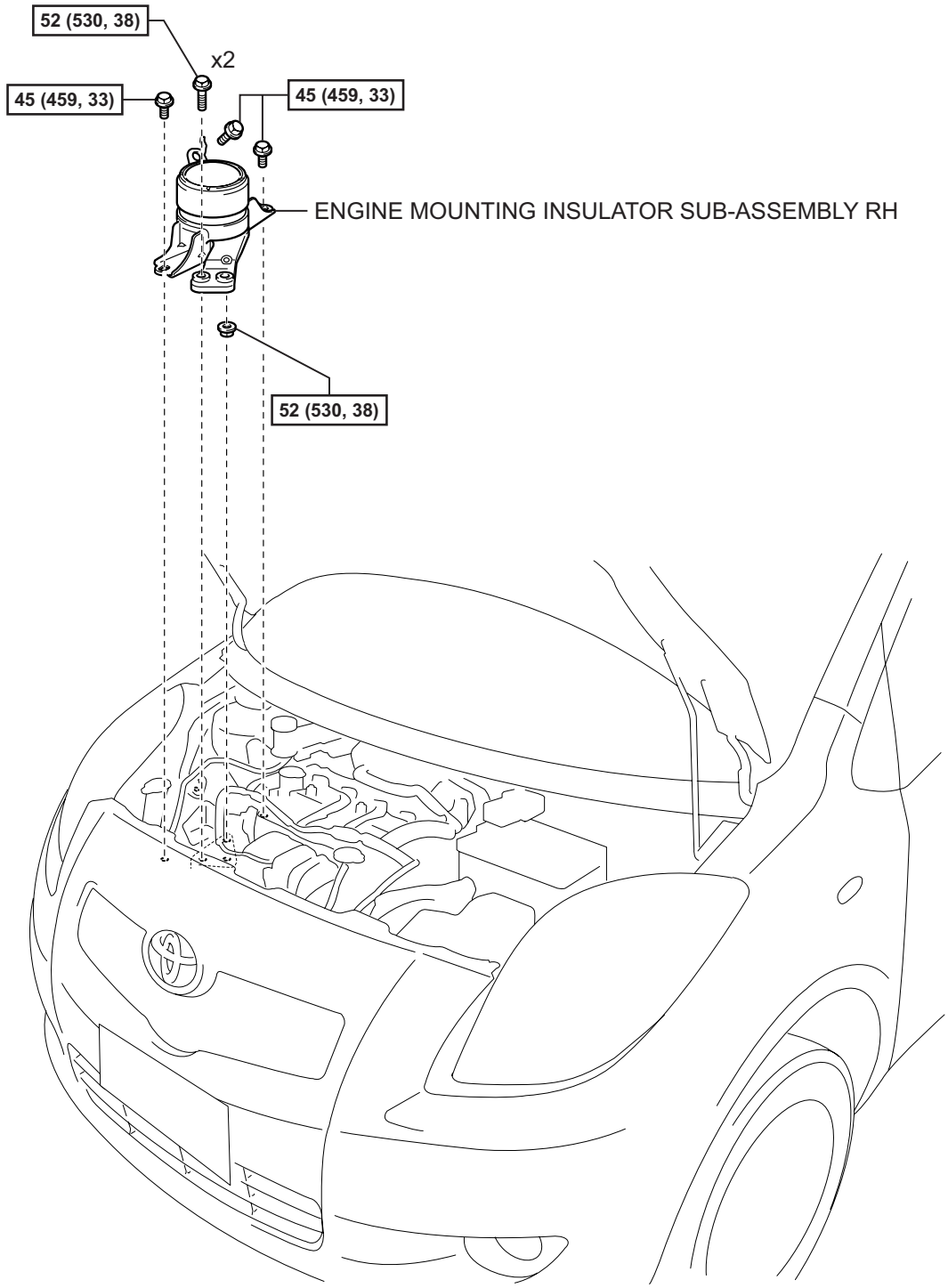

N*m (kgf*cm, ft.*lbf) : Specified torque

T

A116232E04

for Sedan:

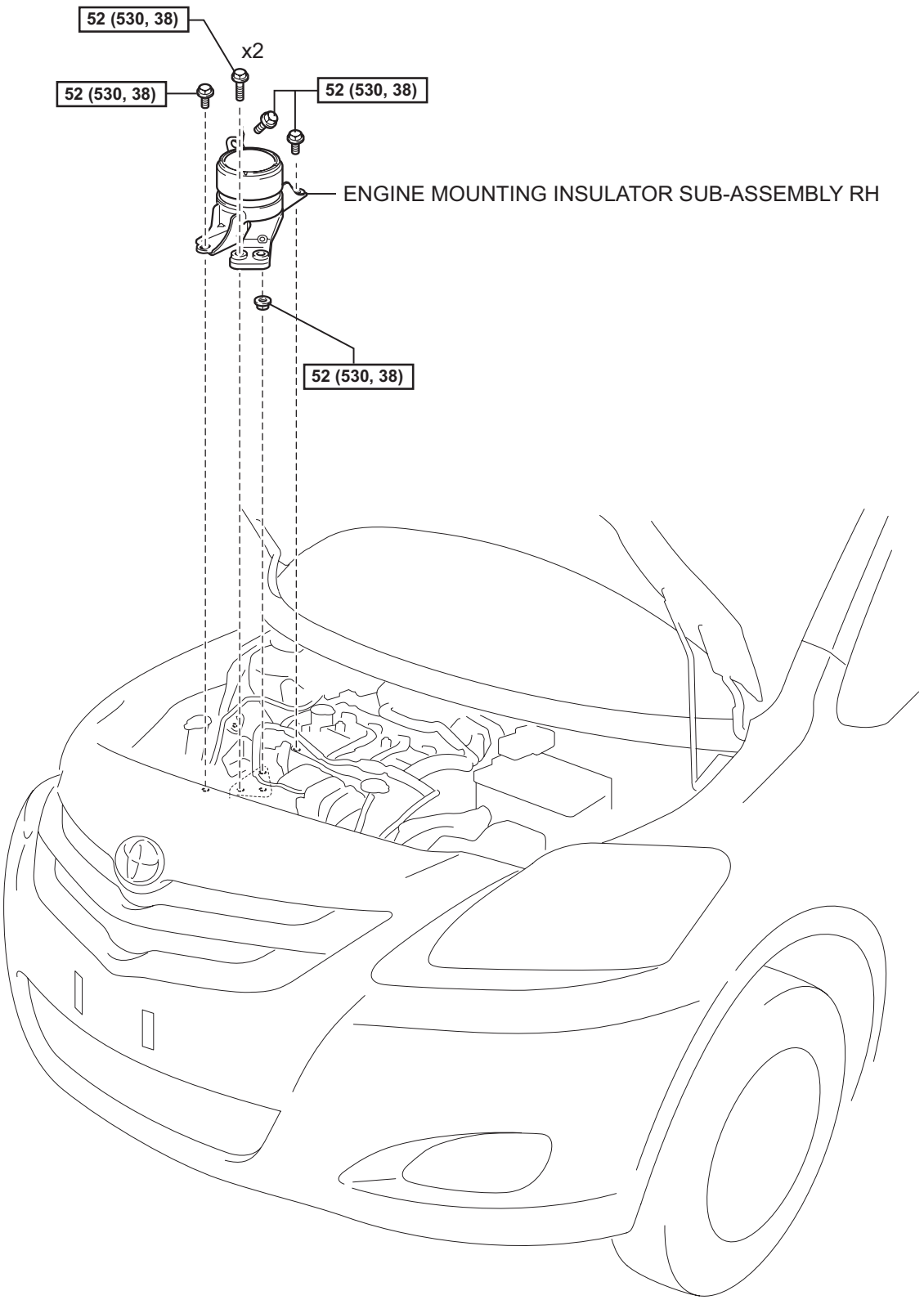

EM

N*m (kgf*cm, ft*lbf) : Specified torque

T

A133595E01

EM

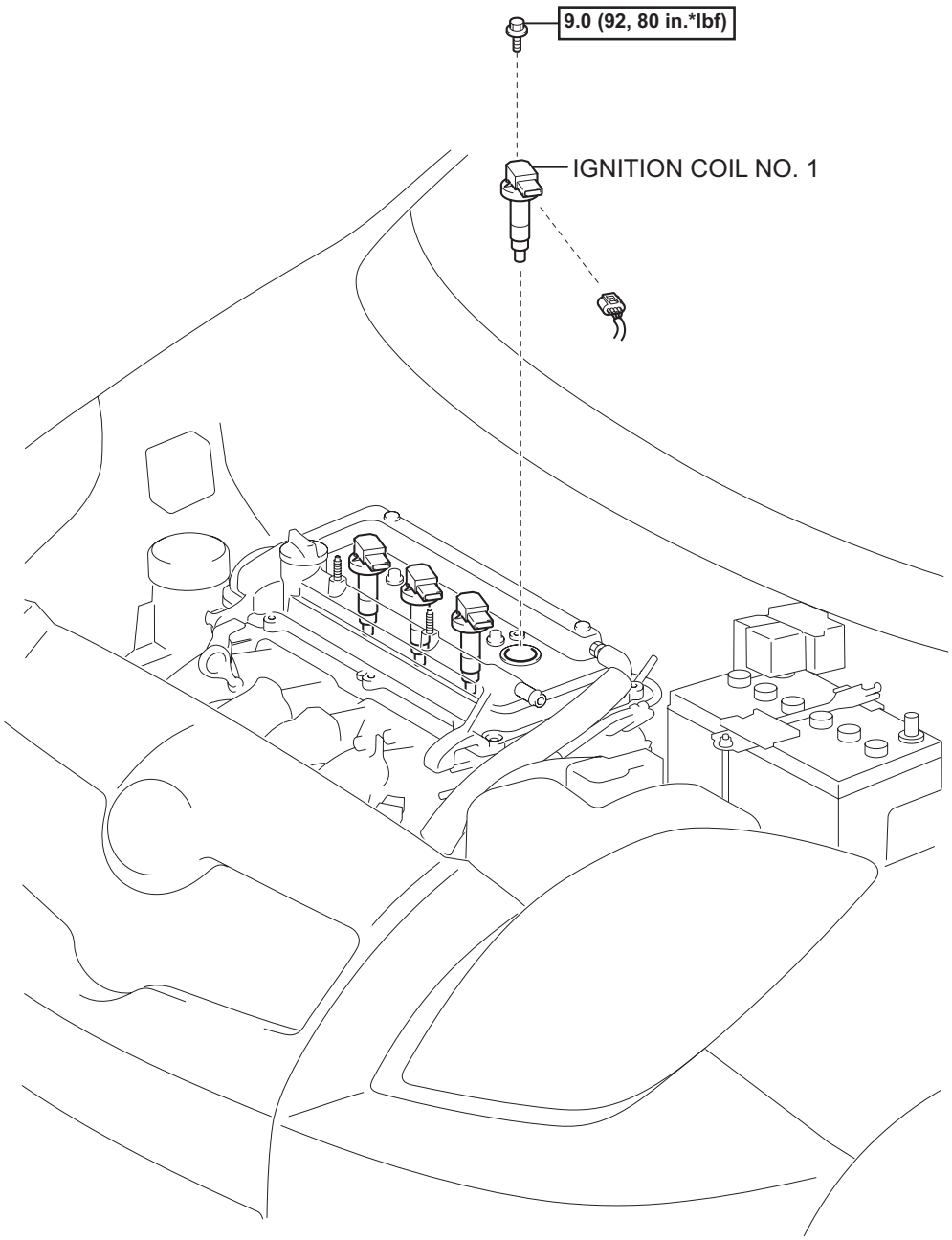

N*m (kgf*cm, ft.*lbf) : Specified torque

T

A115486E01

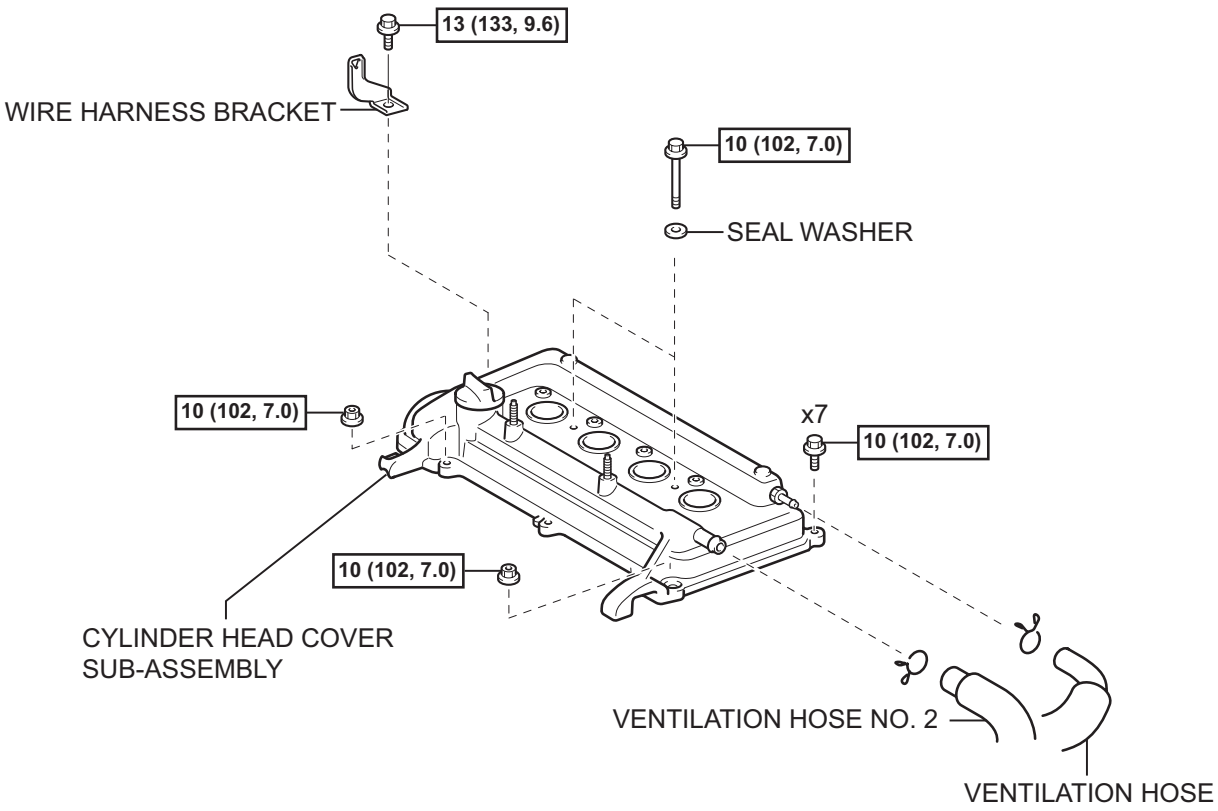

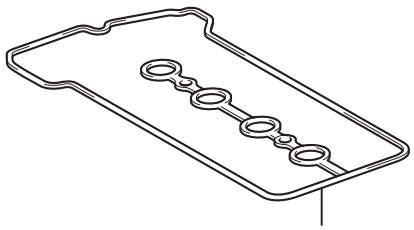

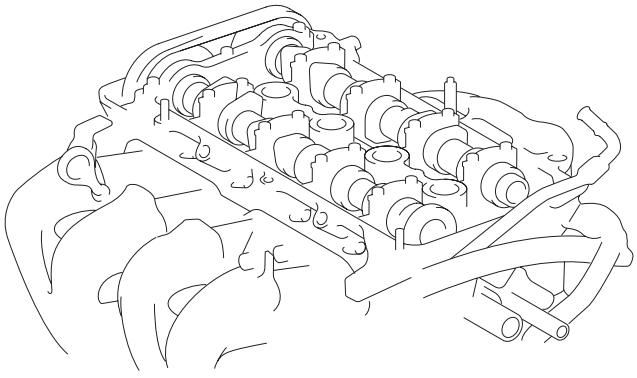

N*m (kgf*cm, ft.*lbf) : Specified torque

T

A115504E01

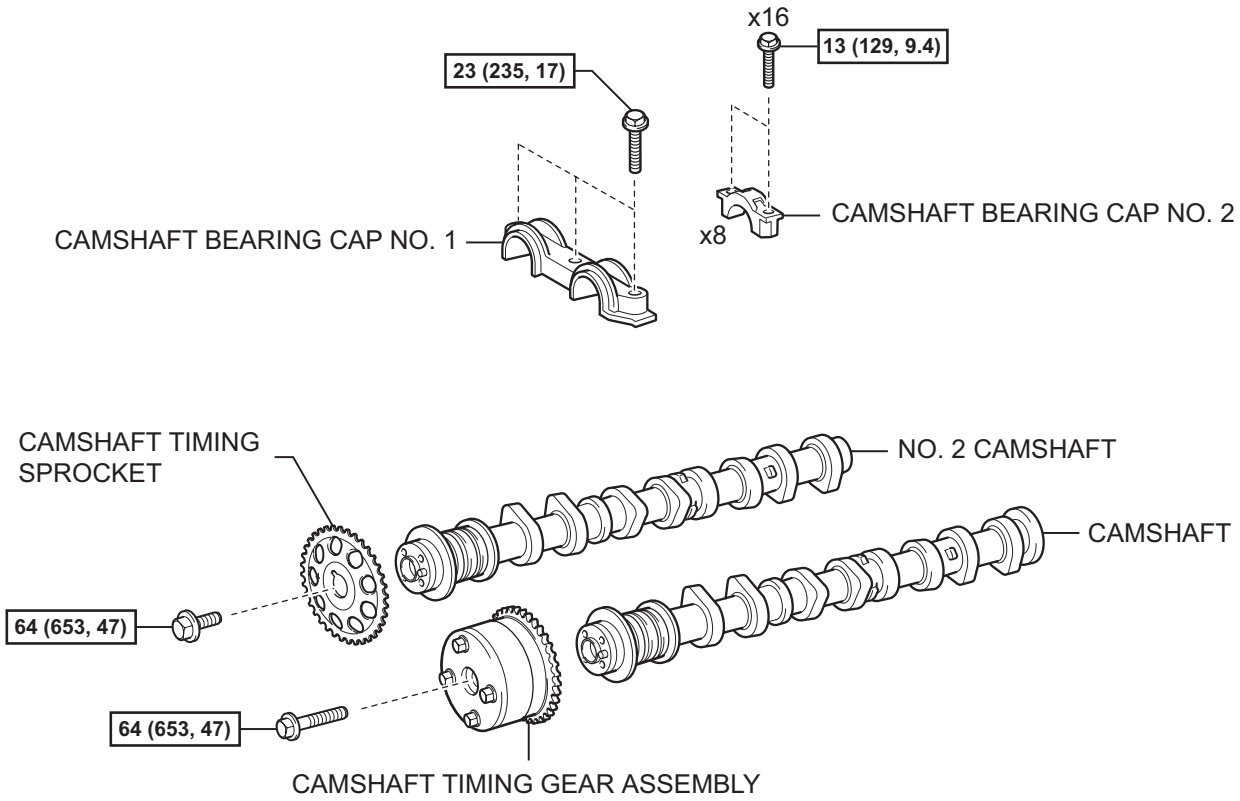

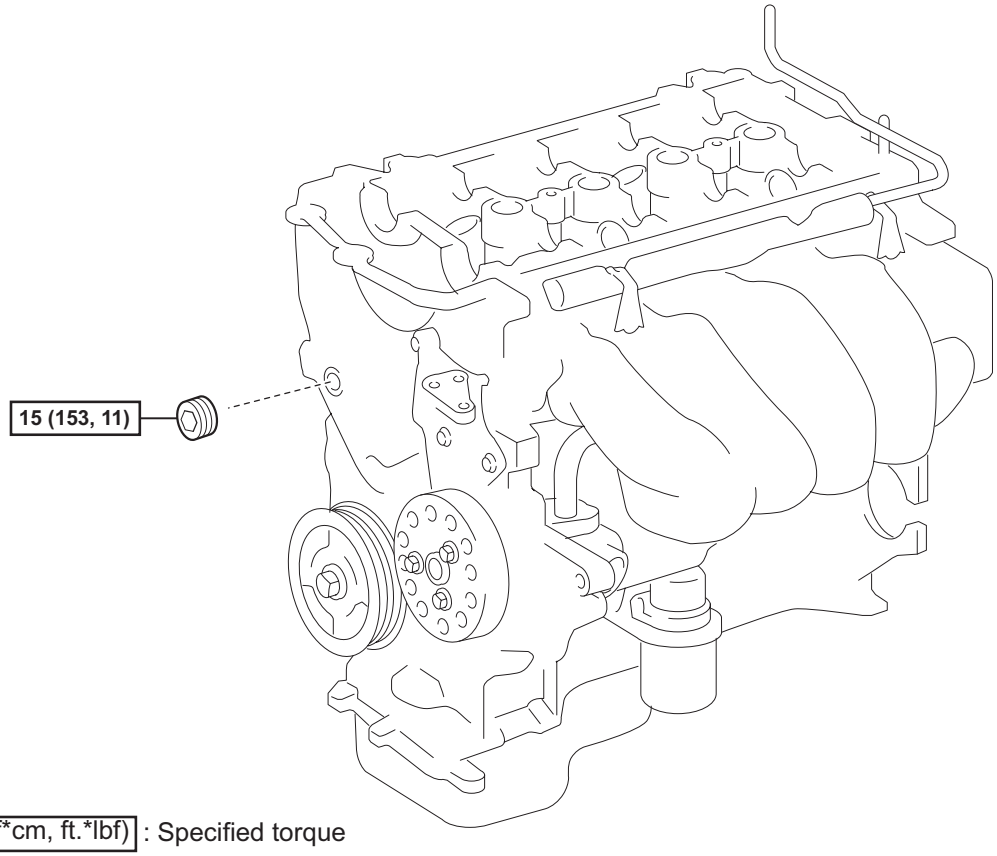

N*m (kgf*cm, ft.*lbf) : Specified torque

T

A116233E02

REMOVAL

1. **DISCONNECT CABLE FROM NEGATIVE BATTERY TERMINAL**
2. **REMOVE ENGINE UNDER COVER RH**
3. **REMOVE CYLINDER HEAD COVER NO. 2 (See page IG-9)**
4. **REMOVE IGNITION COIL NO. 1 (See page IG-9)**
5. **DISCONNECT VENTILATION HOSE (See page FU-13)**
6. **DISCONNECT VENTILATION HOSE NO. 2 (See page FU-13)**
7. **REMOVE CYLINDER HEAD COVER SUB-ASSEMBLY (See page FU-13)**
8. **REMOVE FAN AND GENERATOR V BELT (See page EM-7)**
9. **REMOVE ENGINE MOUNTING INSULATOR SUB-ASSEMBLY RH (See page LU-17)**
10. **REMOVE NO. 2 CAMSHAFT**

NOTICE:
When rotating the camshaft with the timing chain removed, rotate the crankshaft damper counterclockwise 40 ° from the TDC and align its timing notch with the matchmark of the timing chain cover to prevent the pistons from coming into contact with the valves.

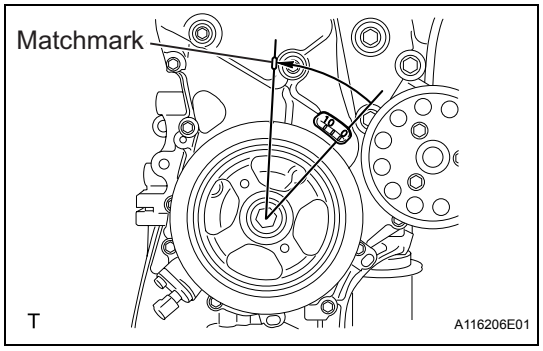

(a) Set the No. 1 cylinder to TDC / compression.
  (1) Turn the crankshaft damper, and align its timing notch with the timing mark "0" of the oil pump.

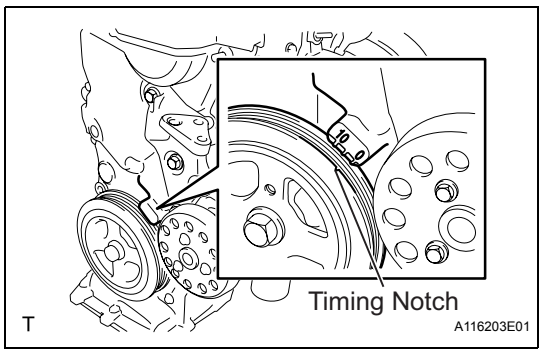

  (2) Check that the timing marks on both the camshaft timing sprocket and the camshaft timing gear are facing upward, as shown in the illustration.
  HINT:
  If not, turn the crankshaft 1 complete revolution (360°) and align the marks as above.

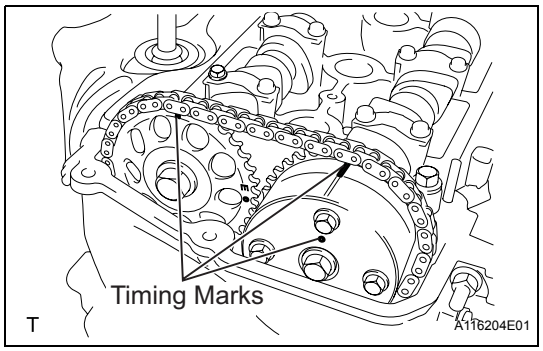

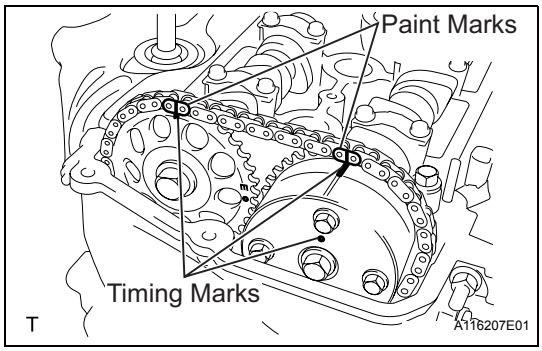

(b) Place paint marks on the chain in the places where the timing marks of the camshaft timing sprocket and the camshaft timing gear are located.

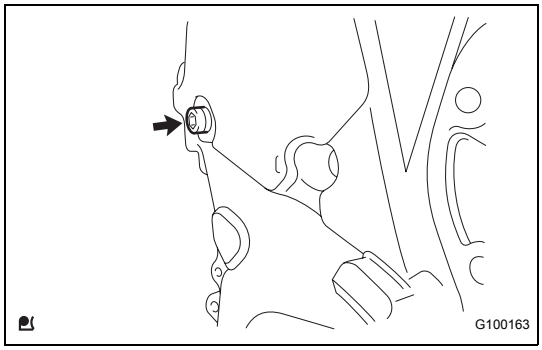

(c) Using an 8 mm hexagon wrench, remove the screw plug.

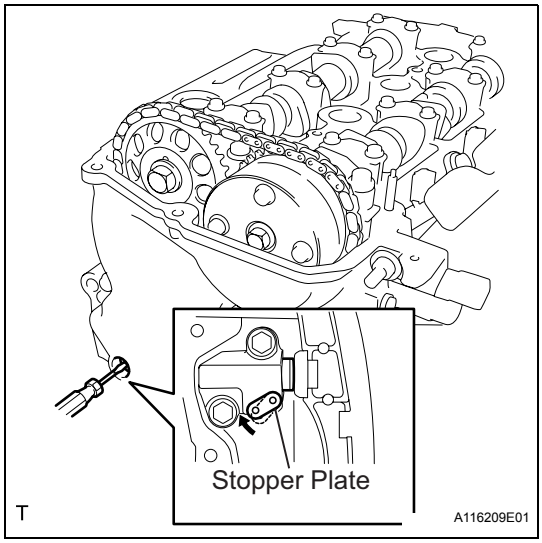

(d) Insert a screwdriver into the service hole in the chain tensioner to pull the stopper plate of the chain tensioner upward.

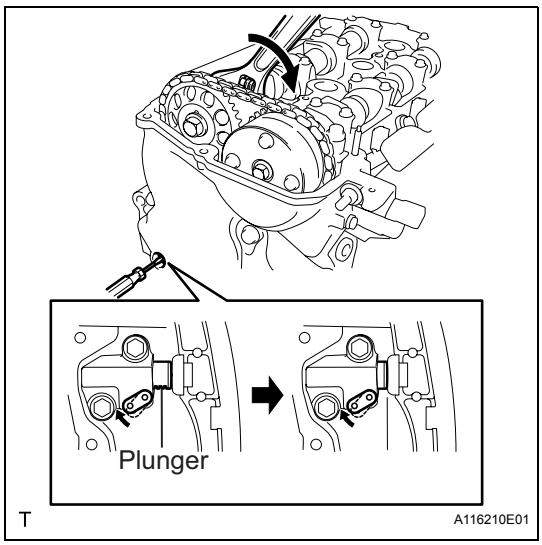

(e) Using a wrench, rotate camshaft No. 2 clockwise to push in the plunger of the chain tensioner.

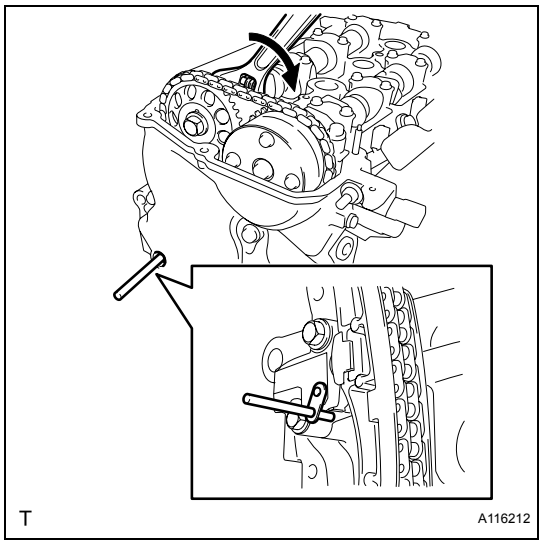

(f) Remove the screwdriver from the service hole, then align the hole in the stopper plate with the service hole and insert a 3 mm (0.12 in.) diameter bar into the holes to hold the stopper plate.
HINT:
- Fix the stopper plate using the bar while rotating the camshaft right and left slightly.
- Hold the bar with tape so that it does not come off.

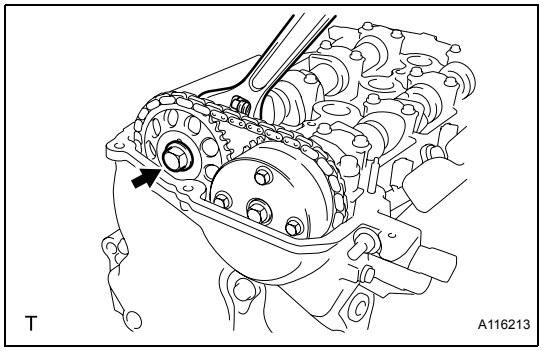

(g) Using a wrench, hold the hexagonal lobe of camshaft No. 2 and remove the flange bolt.

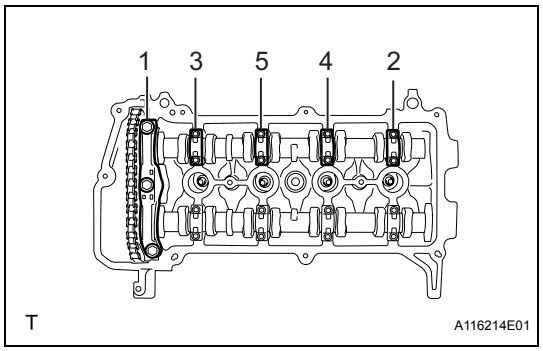

(h) Using several steps, loosen and remove the 11 bearing cap bolts uniformly in the sequence shown in the illustration, then remove camshaft bearing caps No. 1 and No. 2.
NOTICE:
Loosen the bolts uniformly while keeping the camshaft level.

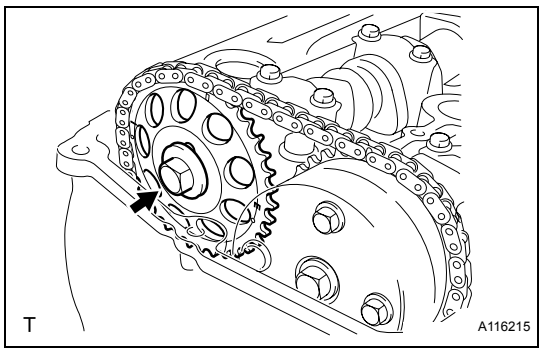

(i) Remove the flange bolt and remove the camshaft timing sprocket.

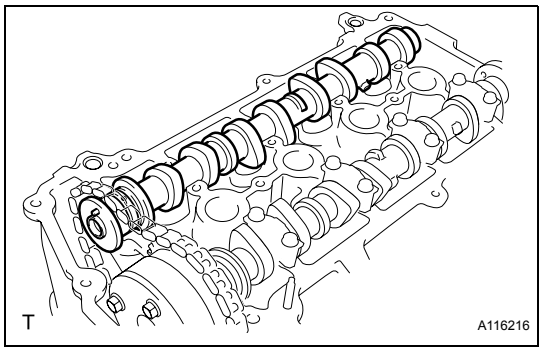

(j) Remove camshaft No. 2.

11. REMOVE CAMSHAFT

(a) Using several steps, loosen and remove the 8 bearing cap bolts uniformly in the sequence shown in the illustration, then remove camshaft bearing cap No. 2.

NOTICE:
Loosen each bolt uniformly while keeping the camshaft level.

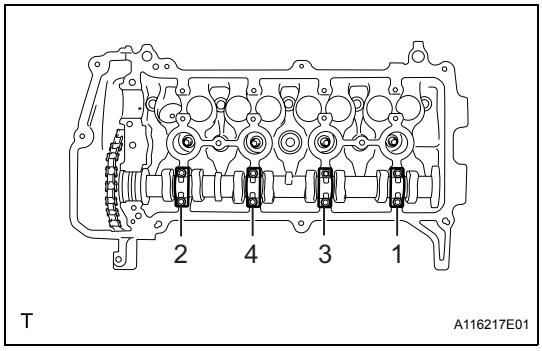

(b) Hold the chain by hand, and remove the camshaft and the camshaft timing gear assembly.

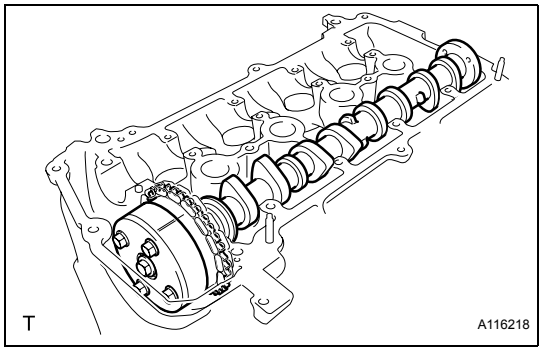

(c) Tie the chain with a piece of string as shown in the illustration.

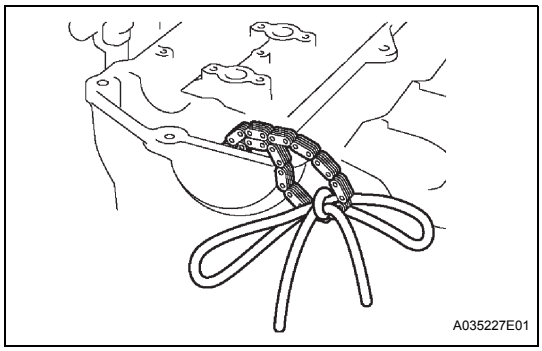

12. REMOVE CAMSHAFT TIMING GEAR ASSEMBLY

(a) Clamp the camshaft in a vise and confirm that it is locked.

NOTICE:
Do not damage the camshaft.

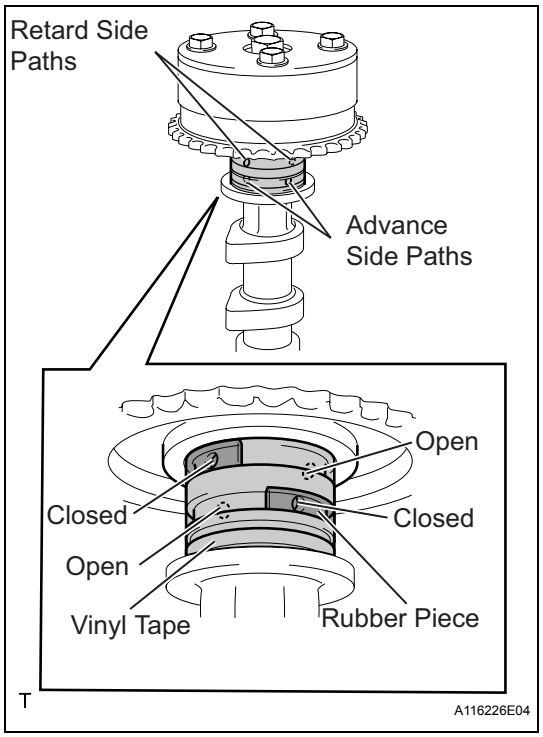

(b) Cover the 4 oil paths of the cam journal with tape as shown in the illustration.
HINT:
One of the 2 grooves located on the cam journal is for retarding cam timing (upper) and the other is for advancing cam timing (lower). Each groove has 2 oil paths. Plug one of the oil paths for each groove with a piece of rubber before wrapping the cam journal with the tape.

(c) Puncture the tape covering the advance oil path and the retard oil path on the opposite side from the advance oil path.

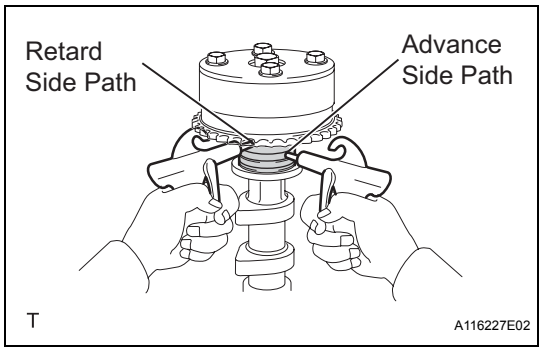

(d) Apply air at about 150 kPa (1.5 kgf*cm^2) pressure into the 2 broken paths (the advance side path and the retard side path).
NOTICE:
Cover the paths with a shop rag or piece of cloth to prevent oil splashes.

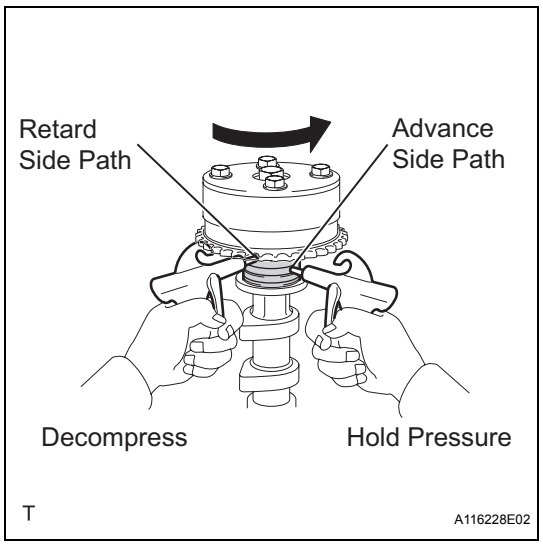

(e) Confirm that the camshaft timing gear assembly revolves in the timing advance direction when the air pressure on the timing retard path is reduced.
HINT:
The lock pin is released, and the camshaft timing gear revolves in the advance direction.

(f) When the camshaft timing gear reaches the most advanced position, release the air pressure on the timing retard side path, and then release the air pressure on the timing advance side path.
NOTICE:
The camshaft timing gear assembly occasionally shifts to the retard side abruptly, if the air pressure on the advance side path is released first. This often results in breakage of the lock pin.

EM

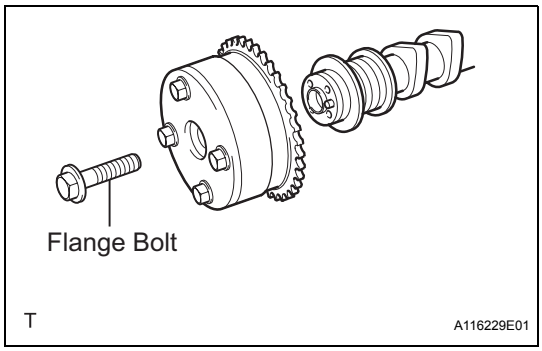

(g) Remove the flange bolt and remove the camshaft timing gear assembly.
NOTICE:
- **Do not remove the other 4 bolts.**
- **When reusing the camshaft timing gear, unlock the lock pin inside the camshaft timing gear first.**

INSPECTION

1. INSPECT CAMSHAFT TIMING GEAR ASSEMBLY

(a) Check the lock of camshaft timing gear.

(1) Clamp the camshaft in a vice, and check that the camshaft timing gear is locked.

NOTICE:
Do not damage the camshaft.

(b) Release the lock pin.

(1) Cover the 4 oil paths of the cam journal with tape as shown in the illustration.

HINT:
One of the 2 grooves located on the cam journal is for retarding cam timing (upper) and the other is for advancing cam timing (lower). Each groove has 2 oil paths. Plug one of the oil paths for each groove with a piece of rubber before wrapping the cam journal with the tape.

(2) Puncture the tape covering the advance oil path and the retard oil path on the opposite side from the advance oil path.

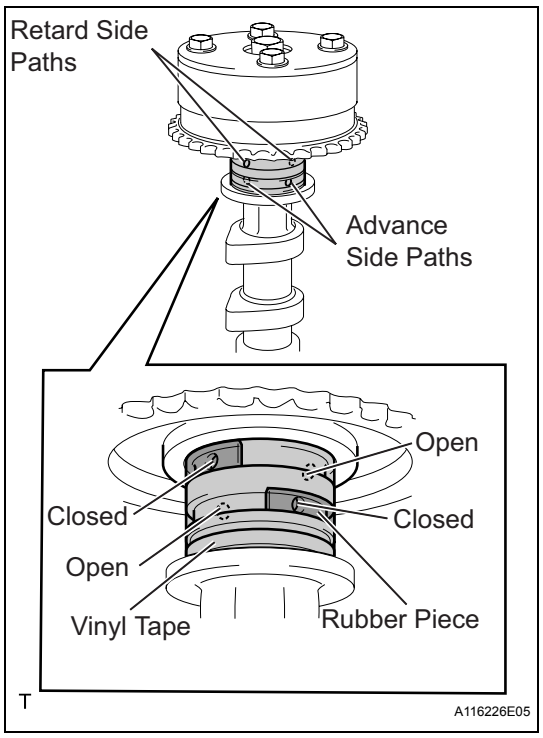

(3) Apply air at about 150 kPa (1.5kgf*cm^2) pressure into the 2 broken paths (the advance side path and the retard side path).

NOTICE:
Cover the paths with a shop rag or piece of cloth to prevent oil splashes.

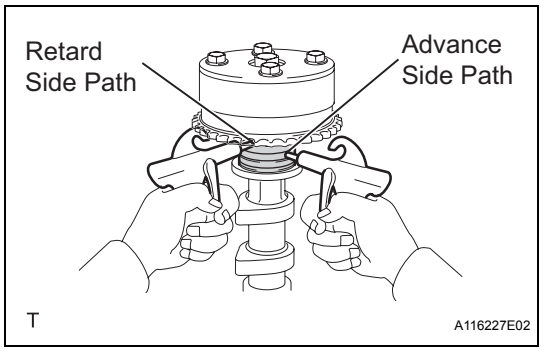

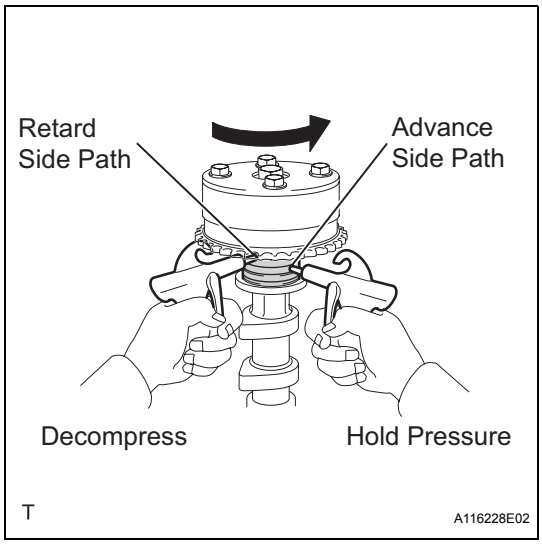

(4) Confirm that the camshaft timing gear assembly revolves in the timing advance direction when the air pressure on the timing retard path is reduced.
HINT:
The lock pin is released and the camshaft timing gear revolves in the advance direction.

(5) When the camshaft timing gear reaches the most advanced position, release the air pressure on the timing retard side path, and then release the air pressure on the timing advance side path.
NOTICE:
Camshaft timing gear assembly occasionally shifts to the retard side abruptly if the air pressure on the advance side path is released first. This often results in breakage of the lock pin.

(c) Check the revolution.

(1) Rotate the valve timing assembly back and forth several times, except where the lock pin meets it at the most retarded angle. Check the movable range and that it rotates smoothly.
Standard:
Smooth movable range is about 22.5°
NOTICE:
Perform this check by hand, instead of using air pressure.

(d) Check that the gear locks in the most retarded position.

(1) Confirm that the camshaft timing gear assembly is locked in the most retarded position.

INSTALLATION

1. INSTALL CAMSHAFT TIMING GEAR ASSEMBLY

NOTICE:

Install the camshaft timing gear assembly onto the camshaft with the lock pin of the camshaft timing gear assembly released.

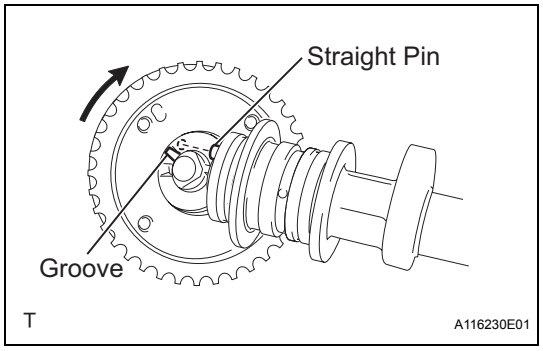

(a) Put the camshaft timing gear assembly and camshaft together with the straight pin of the groove.

(b) Turn the camshaft timing gear assembly clockwise while pushing it gently toward the camshaft. When the pin fits the groove, push to ensure a good fit.

NOTICE:

Do not turn the camshaft timing gear in the retard direction (clockwise).

(c) Check that there is no clearance between the gear flange and the camshaft.

(d) Tighten the flange bolt with the camshaft timing gear fixed.

Torque: 64 N*m (653 kgf*cm, 47 ft.*lbf)

NOTICE:

- **Do not lock the camshaft timing gear assembly when tightening the bolt.**
- **Release the lock pin of the camshaft timing gear assembly first, and tighten the bolt when the lock pin is locked in the most retarded position.**
- **Tightening the bolts with the lock pin locked could cause breakage of the lock pin.**

(e) Check that the camshaft timing gear assembly moves smoothly in the retard direction (clockwise) and is locked in the most retarded position.

2. INSTALL CAMSHAFT

(a) Apply a light coat of engine oil to the camshaft and camshaft journals.

(b) Install the chain onto the camshaft timing gear with the paint mark and the timing mark aligned as shown in the illustration.

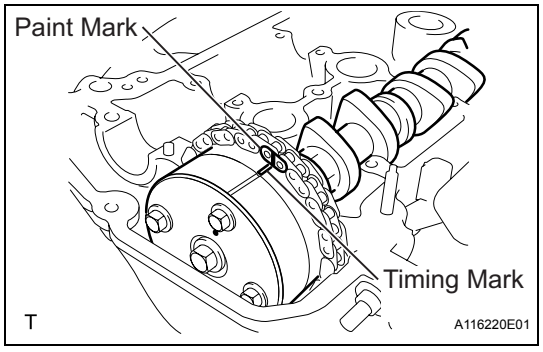

EM

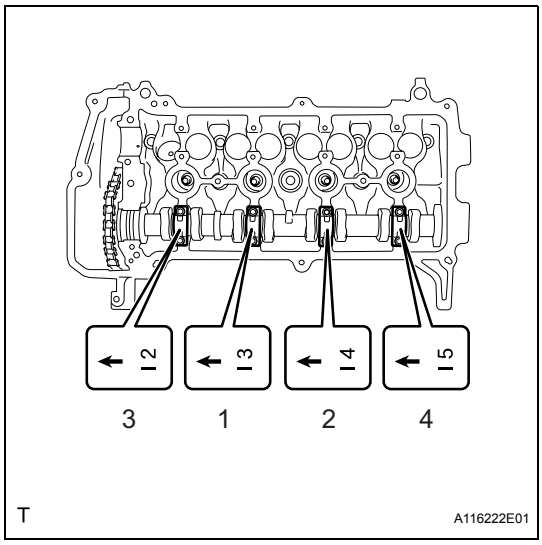

(c) Examine the front marks and numbers on camshaft bearing cap No. 2 and check that the sequence is as shown in the illustration. Then uniformly tighten the bolts, in several steps, in the sequence shown in the illustration.
Torque: 13 N*m (129 kgf*cm, 9.4 ft.*lbf)
NOTICE:
Tighten each bolt uniformly while keeping the camshaft level.

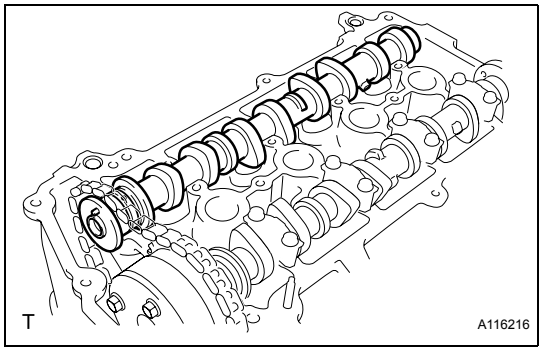

3. INSTALL NO. 2 CAMSHAFT

(a) Install camshaft No. 2.

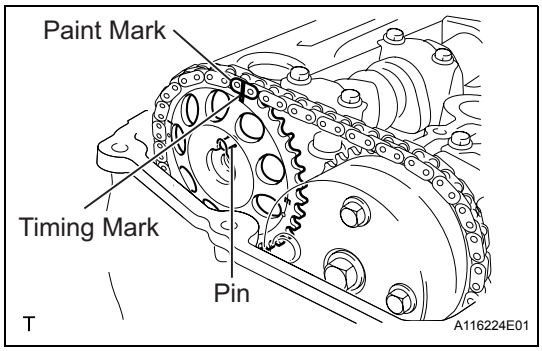

(b) Hold the chain and align the timing mark on the camshaft timing sprocket with the paint mark of the chain.

(c) Align the alignment pin hole in the camshaft timing sprocket with the alignment pin of the camshaft, and install the sprocket onto the camshaft.

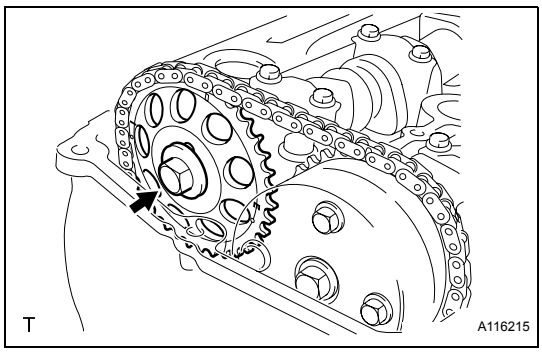

(d) Provisionally install the flange bolt.

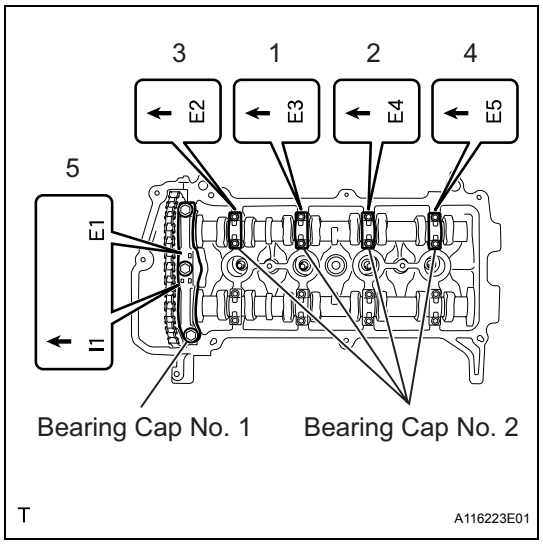

(e) Examine the front marks and numbers on camshaft bearing caps No. 1 and No. 2 and check that the sequence is as shown in the illustration. Then uniformly tighten the bolts, in several steps, in the sequence shown in the illustration.
Torque: for bearing cap No. 2
13 N*m (129 kgf*cm, 9.4 ft.*lbf)
for bearing cap No. 1
23 N*m (235 kgf*cm, 17 ft.*lbf)
NOTICE:
Tighten each bolt uniformly while keeping the camshaft level.

EM

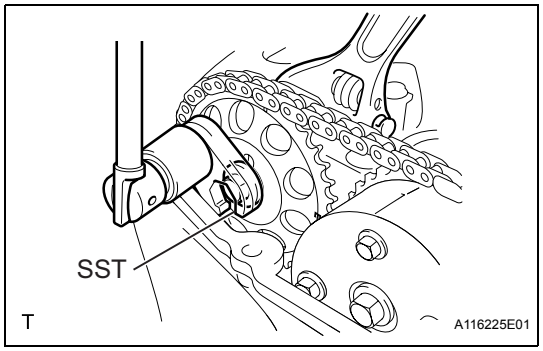

(f) Using a wrench, hold the hexagonal lobe of camshaft No. 2 and install the flange bolt.
SST 09023-38400
Torque: 64 N*m (653 kgf*cm, 47 ft.*lbf)
(g) Remove the bar from the timing chain tensioner.

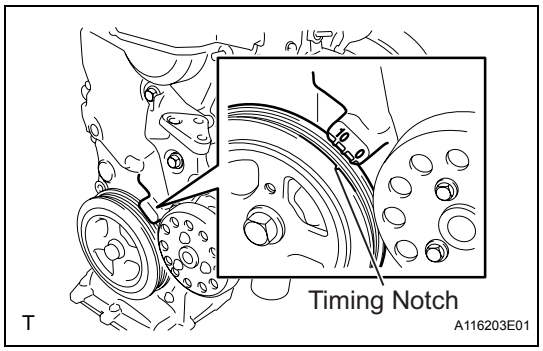

(h) Turn the crankshaft damper and align its timing notch with the timing mark "0" of the oil pump.

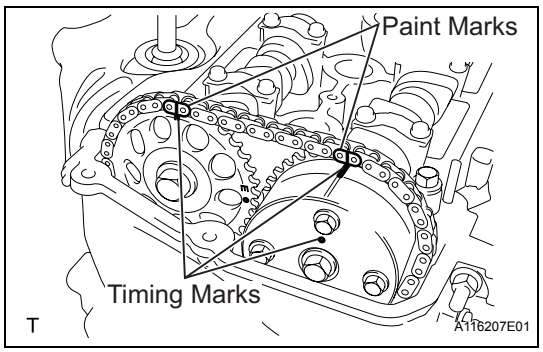

(i) Check that all the pairs of timing marks are aligned.
(j) Apply adhesive to the end 2 or 3 threads of the screw plug.
Adhesive:
Toyota Genuine Adhesive 1324, Three Bond 1324 or Equivalent

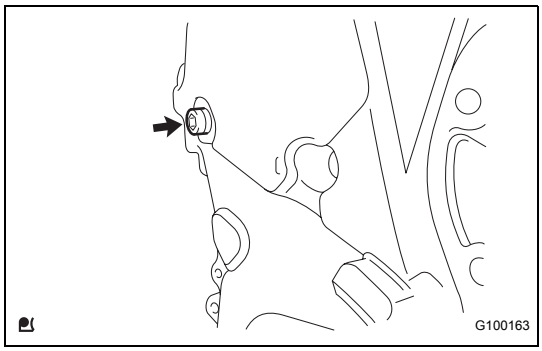

(k) Using an 8 mm hexagon wrench, install the screw plug.
Torque: 15 N*m (153 kgf*cm, 11 ft.*lbf)

4. **INSPECT VALVE CLEARANCE (See page EM-9)**
5. **ADJUST VALVE CLEARANCE (See page EM-10)**
6. **INSTALL ENGINE MOUNTING INSULATOR SUB-ASSEMBLY RH (See page LU-26)**
7. **INSTALL FAN AND GENERATOR V BELT (See page EM-7)**
8. **ADJUST FAN AND GENERATOR V BELT (See page EM-7)**
9. **INSPECT FAN AND GENERATOR V BELT (See page EM-8)**
10. **INSTALL CYLINDER HEAD COVER SUB-ASSEMBLY (See page FU-19)**
11. **CONNECT VENTILATION HOSE NO. 2 (See page FU-20)**
12. **CONNECT VENTILATION HOSE (See page FU-20)**
13. **INSTALL IGNITION COIL NO. 1 (See page IG-9)**
14. **CONNECT CABLE TO NEGATIVE BATTERY TERMINAL**
    Torque: 5.4 N*m (55 kgf*cm, 48 in.*lbf)
15. **CHECK FOR ENGINE OIL LEAKAGE**
16. **INSTALL CYLINDER HEAD COVER NO. 2 (See page IG-10)**
17. **INSTALL ENGINE UNDER COVER RH**

CYLINDER HEAD

COMPONENTS

for Hatchback:

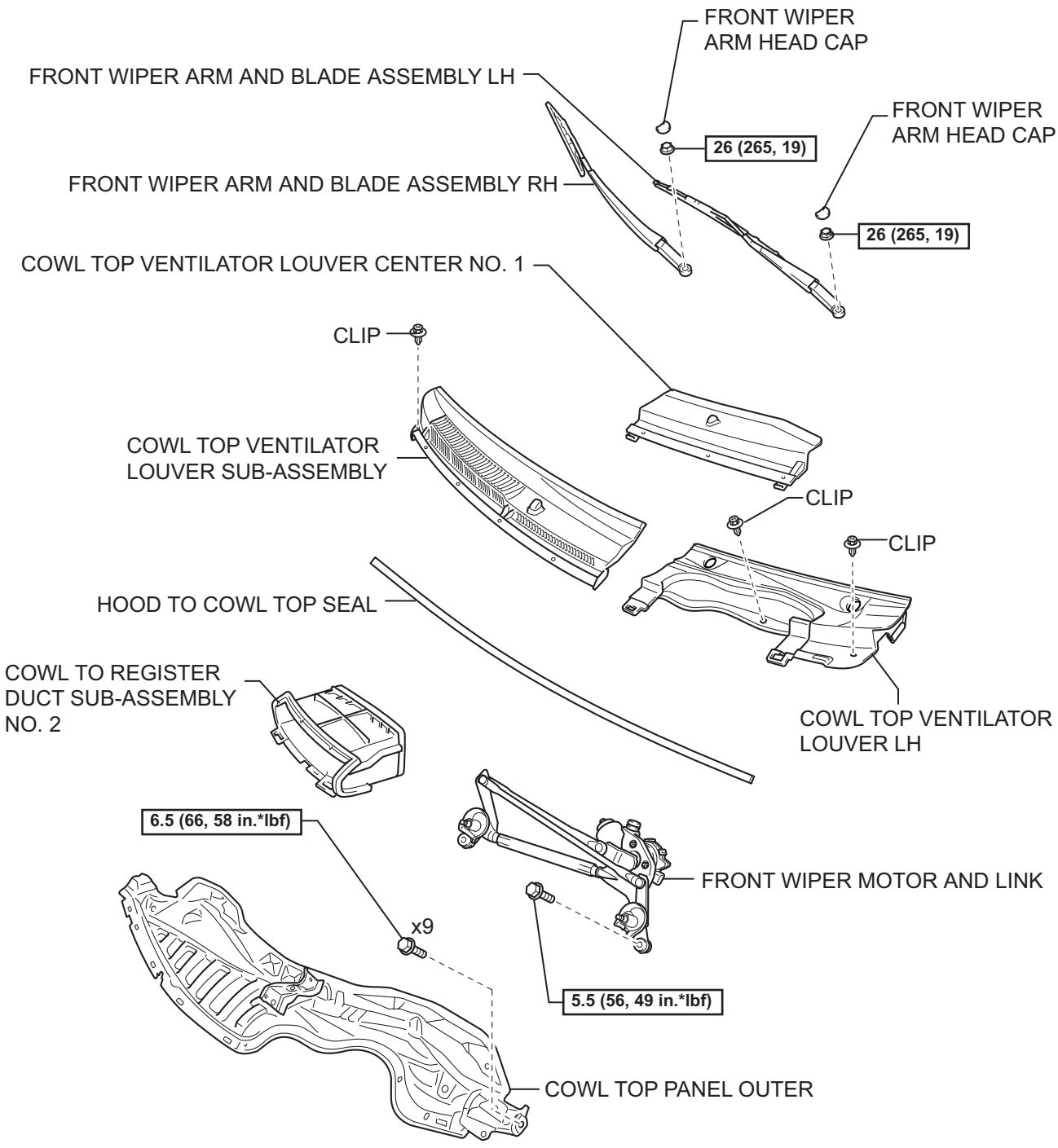

N*m (kgf*cm, ft*lbf) : Specified torque

Y

A118803E10

EM

for Sedan:

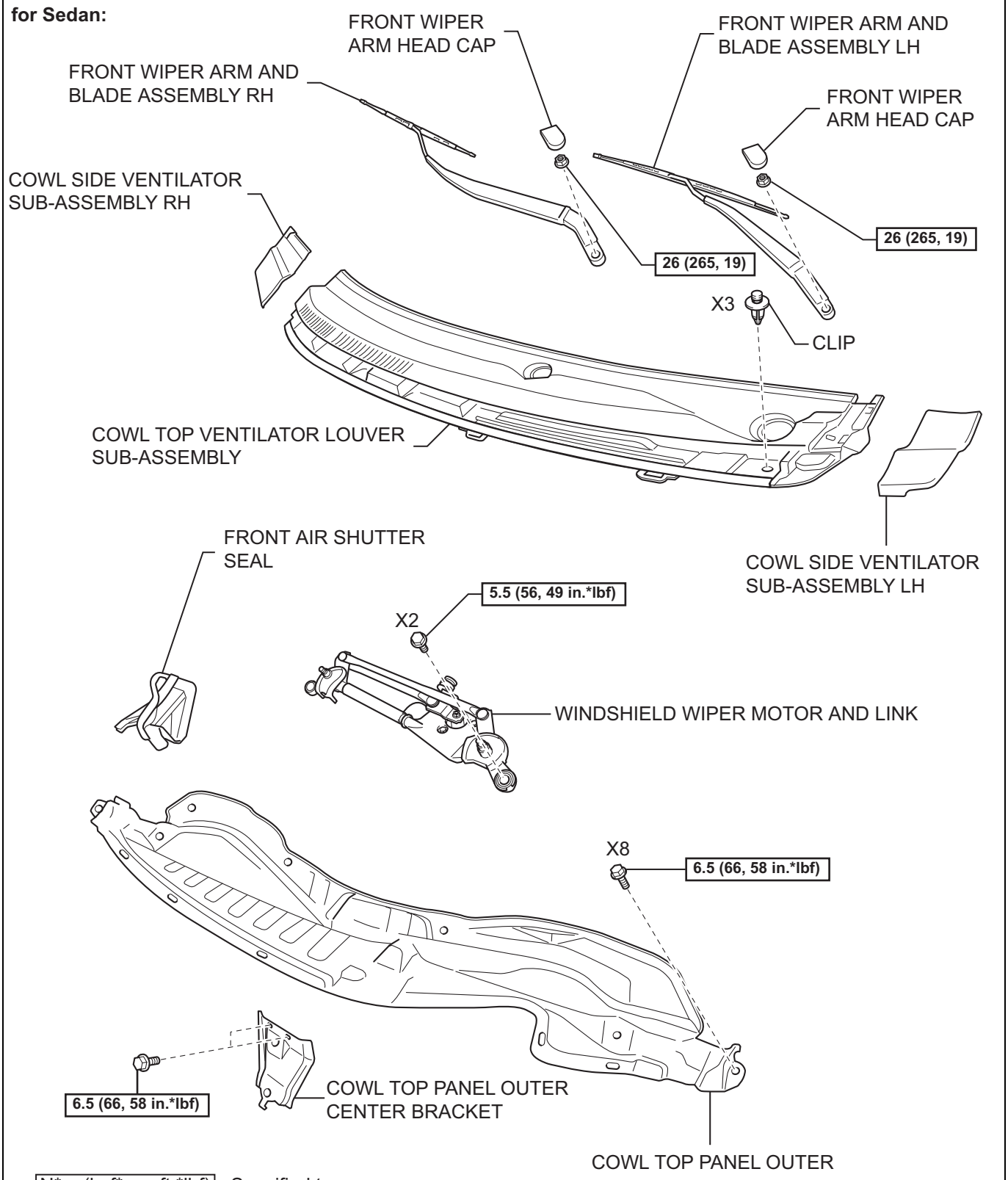

N*m (kgf*cm, ft.*lbf) : Specified torque

Y

A133320E03

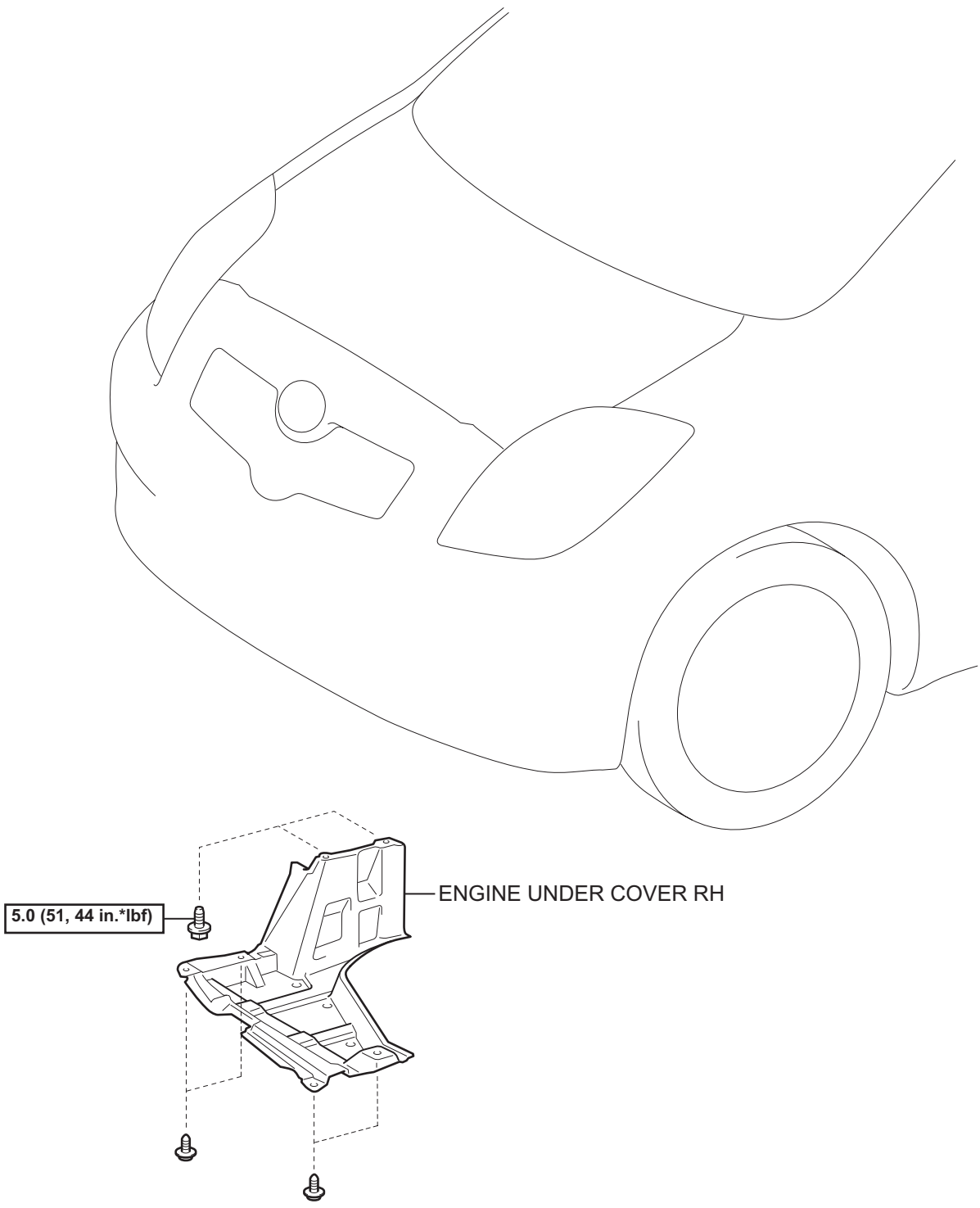

N*m (kgf*cm, ft.*lbf) : Specified torque

T

A115143E01

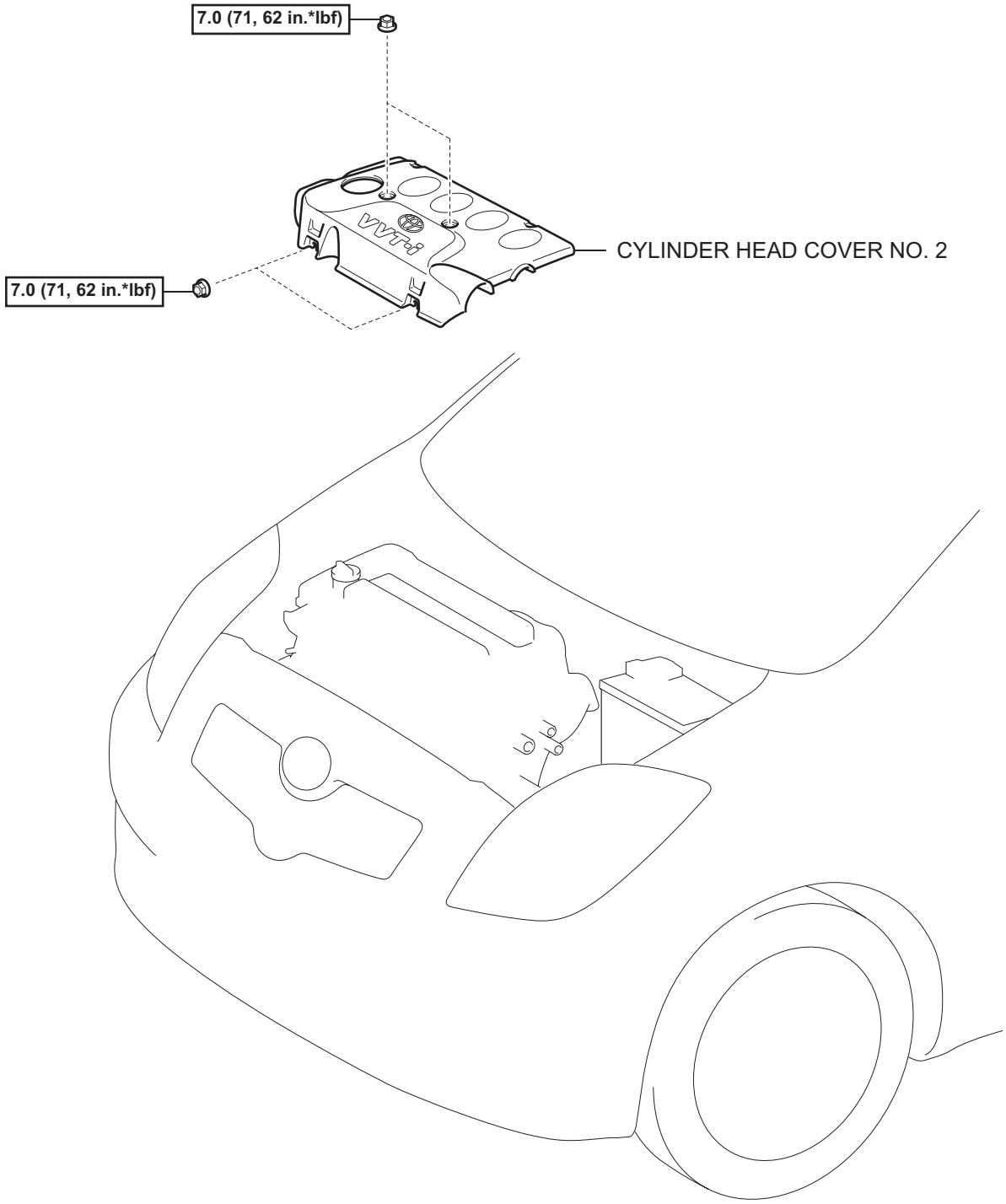

EM

N*m (kgf*cm, ft.*lbf) : Specified torque

T

A115136E01

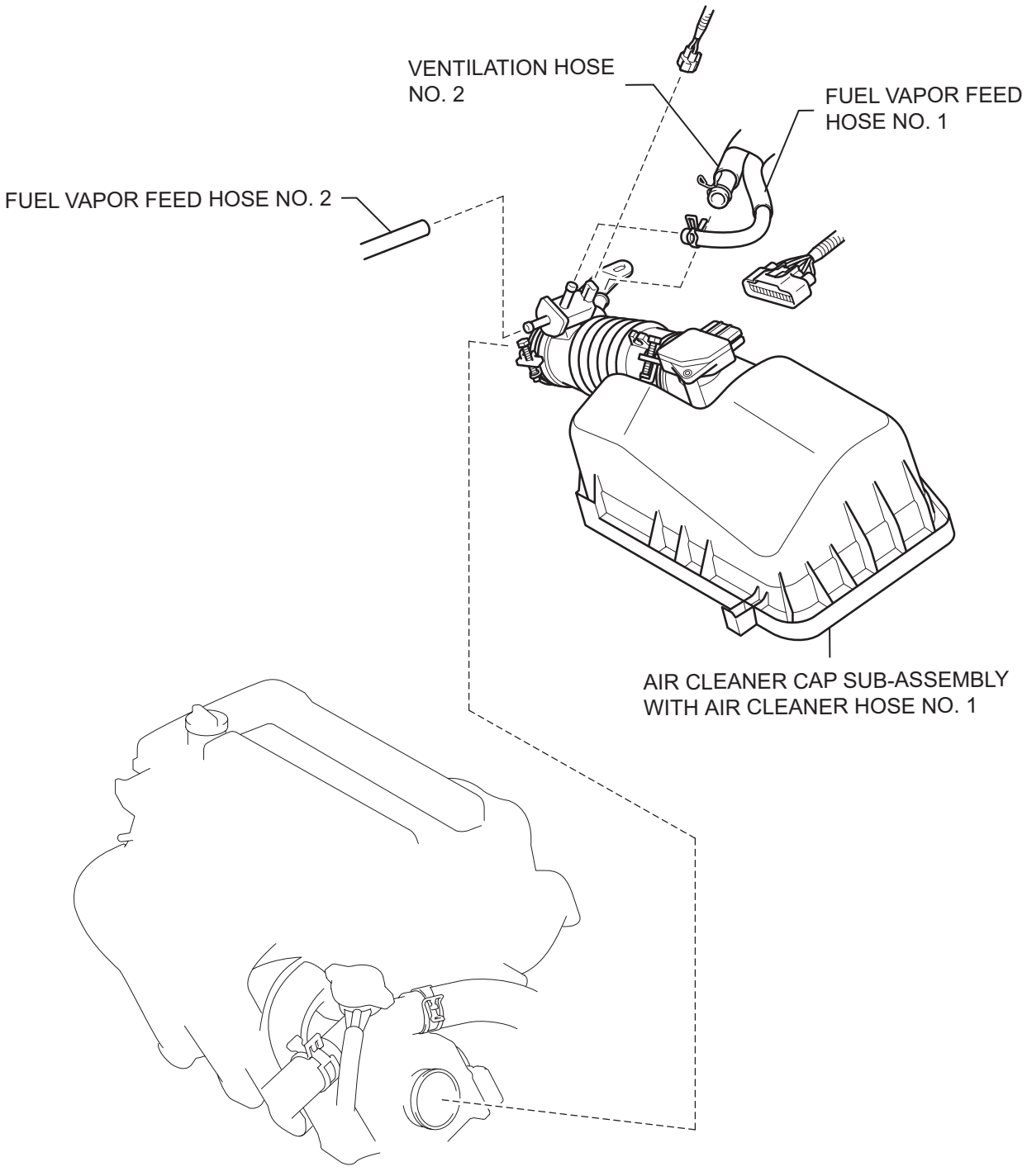

T

A133592E01

EM

EM

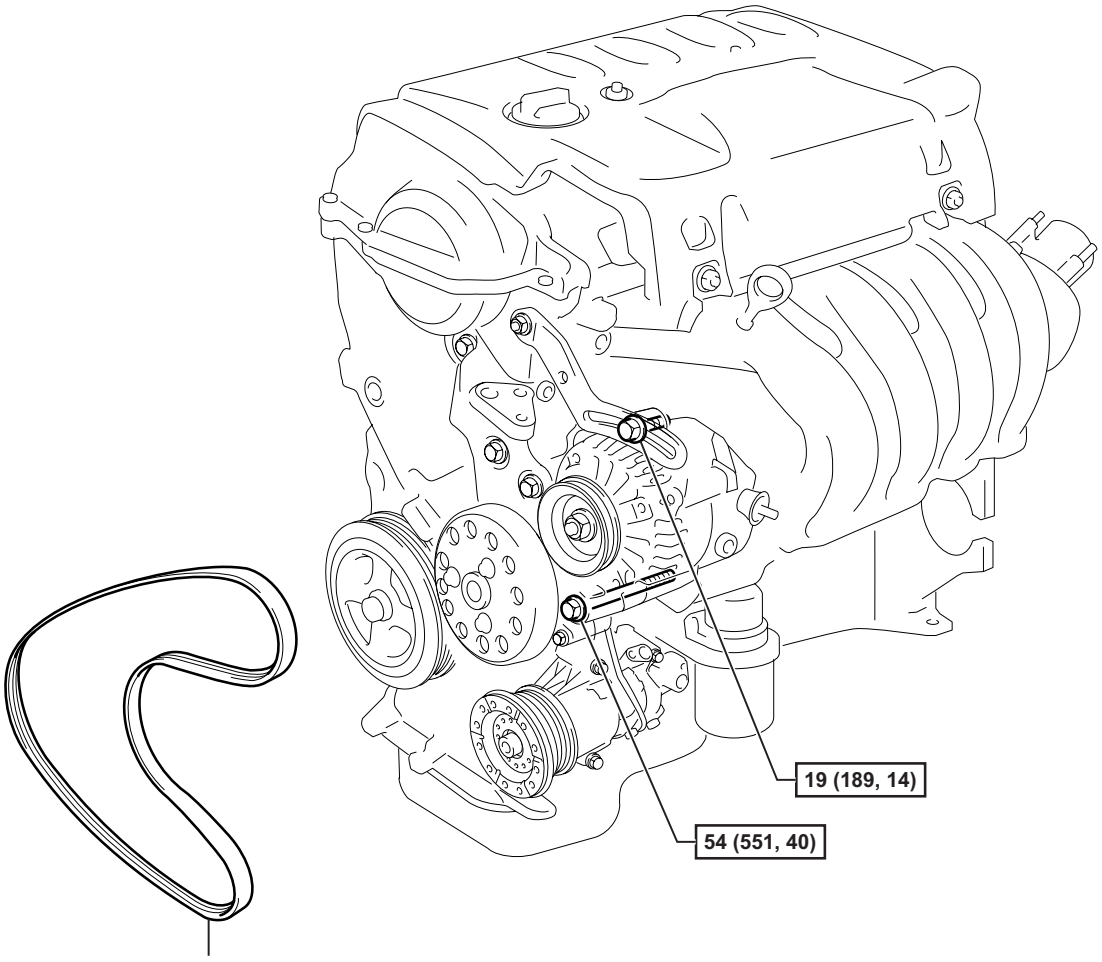

N*m (kgf*cm, ft.*lbf) : Specified torque

T

A116199E01

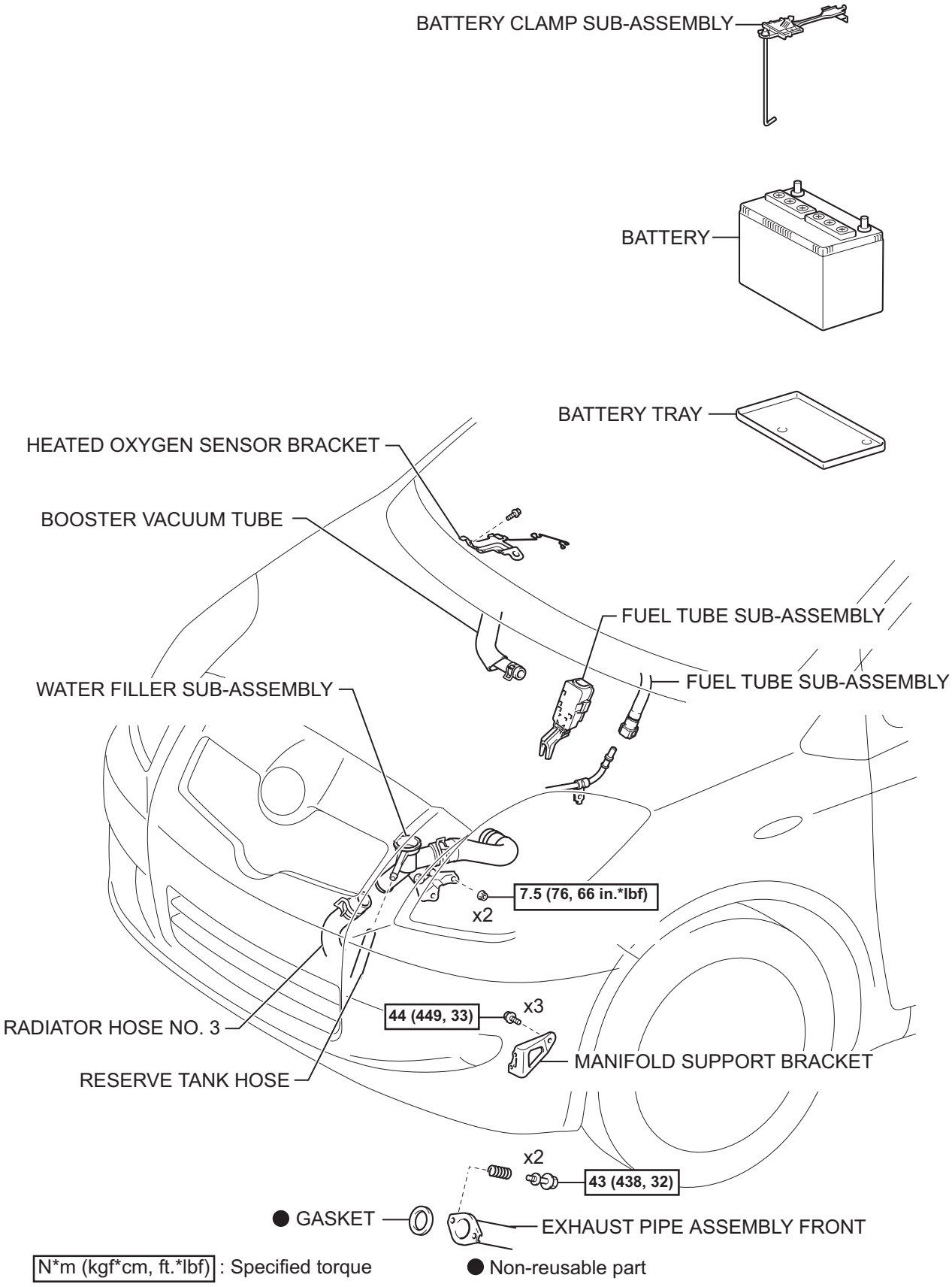

T

A116961E01

EM

for Hatchback:

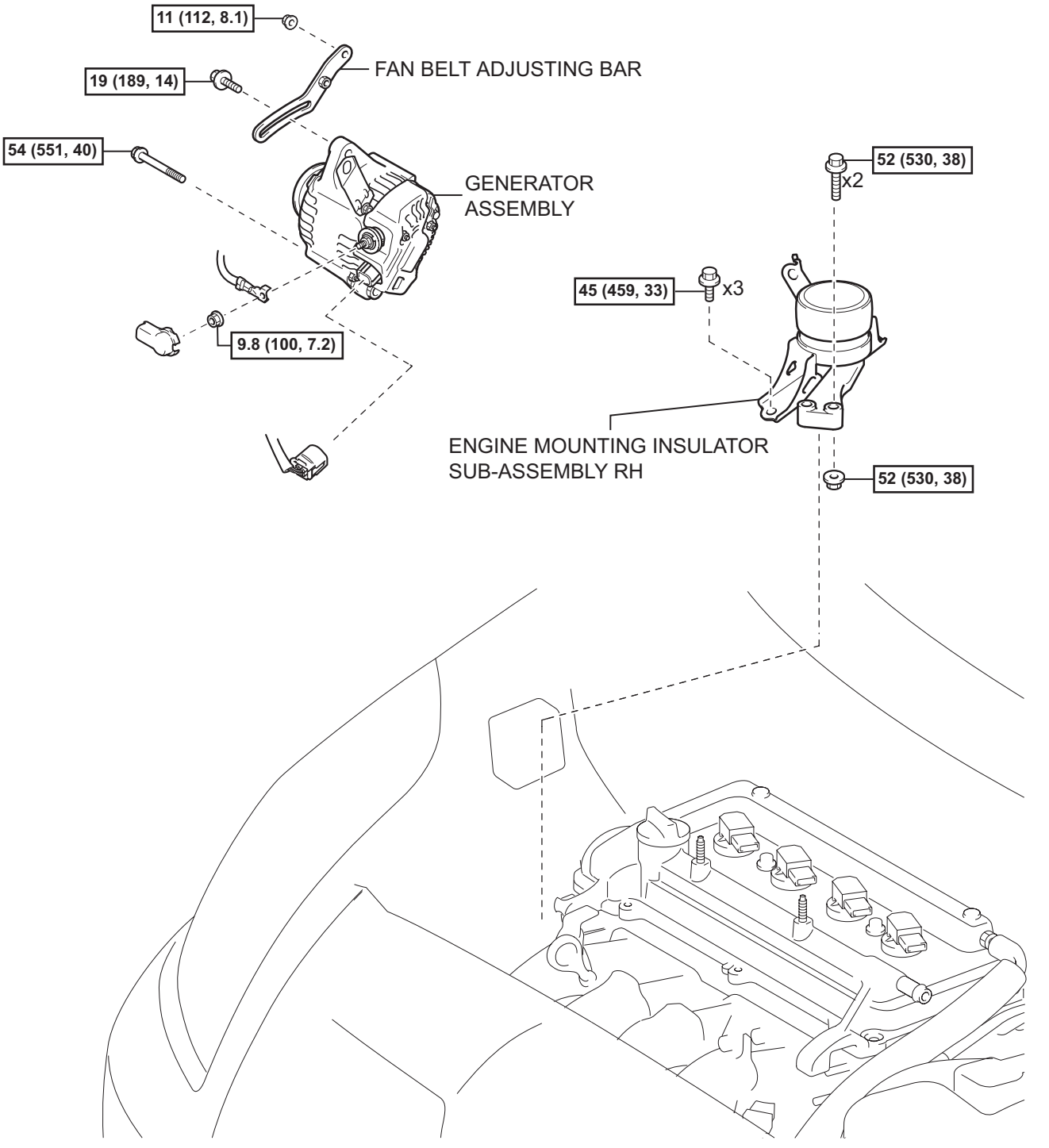

N*m (kgf*cm, ft.*lbf) : Specified torque

T

A116193E06

for Sedan:

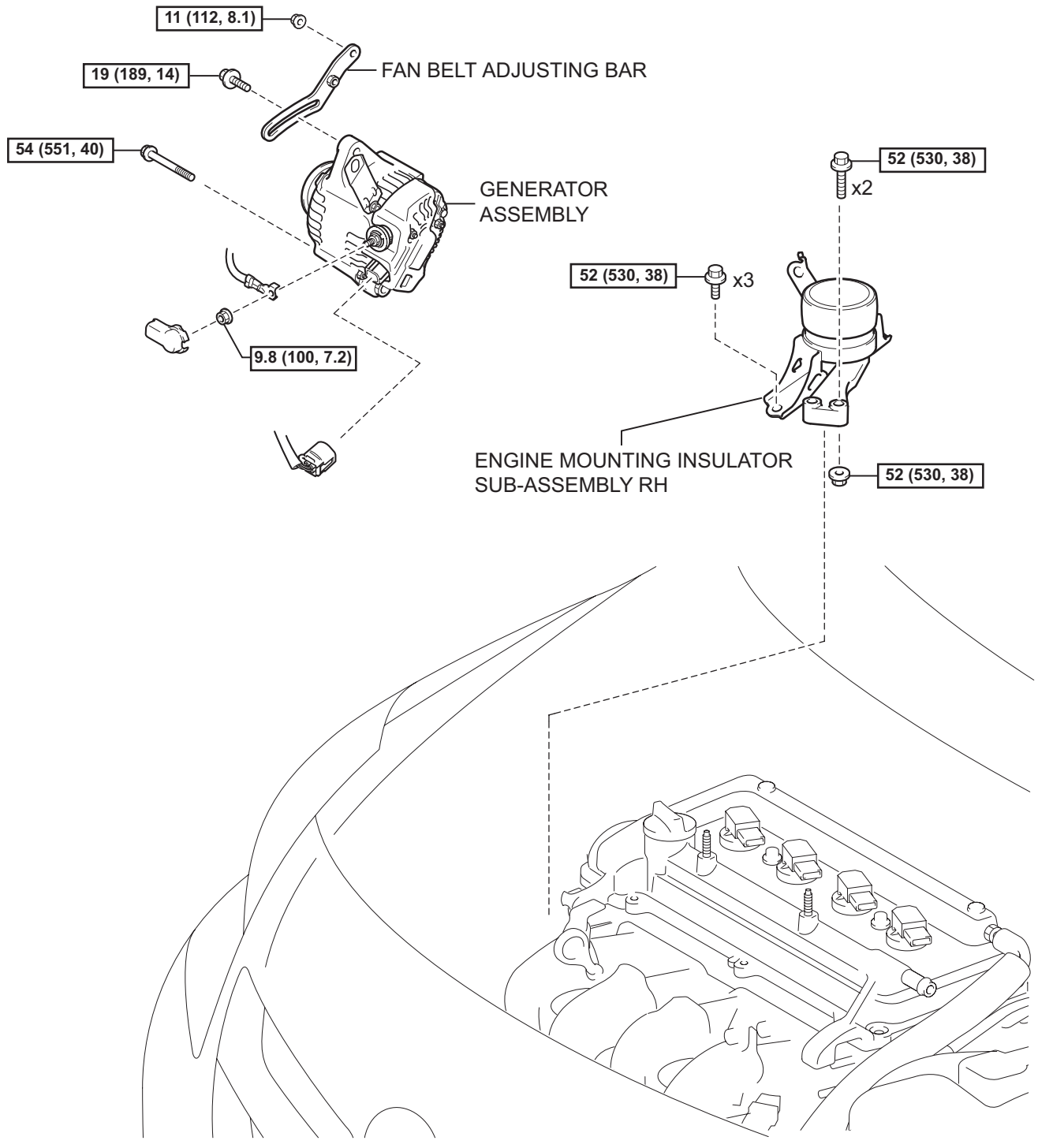

N*m (kgf*cm, ft*lbf) : Specified torque

T

A133594E01

EM

EM

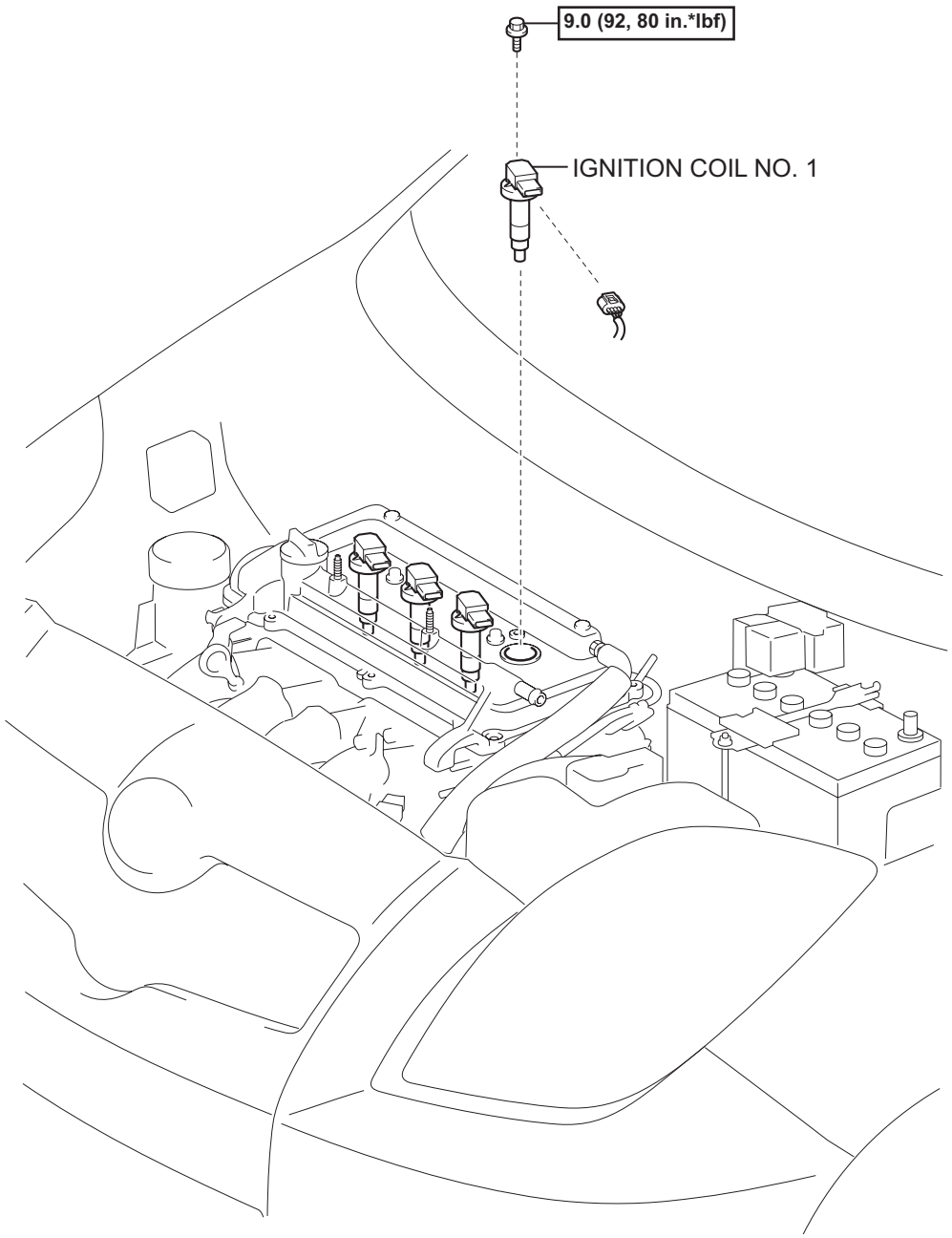

N*m (kgf*cm, ft.*lbf) : Specified torque

T

A115486E01

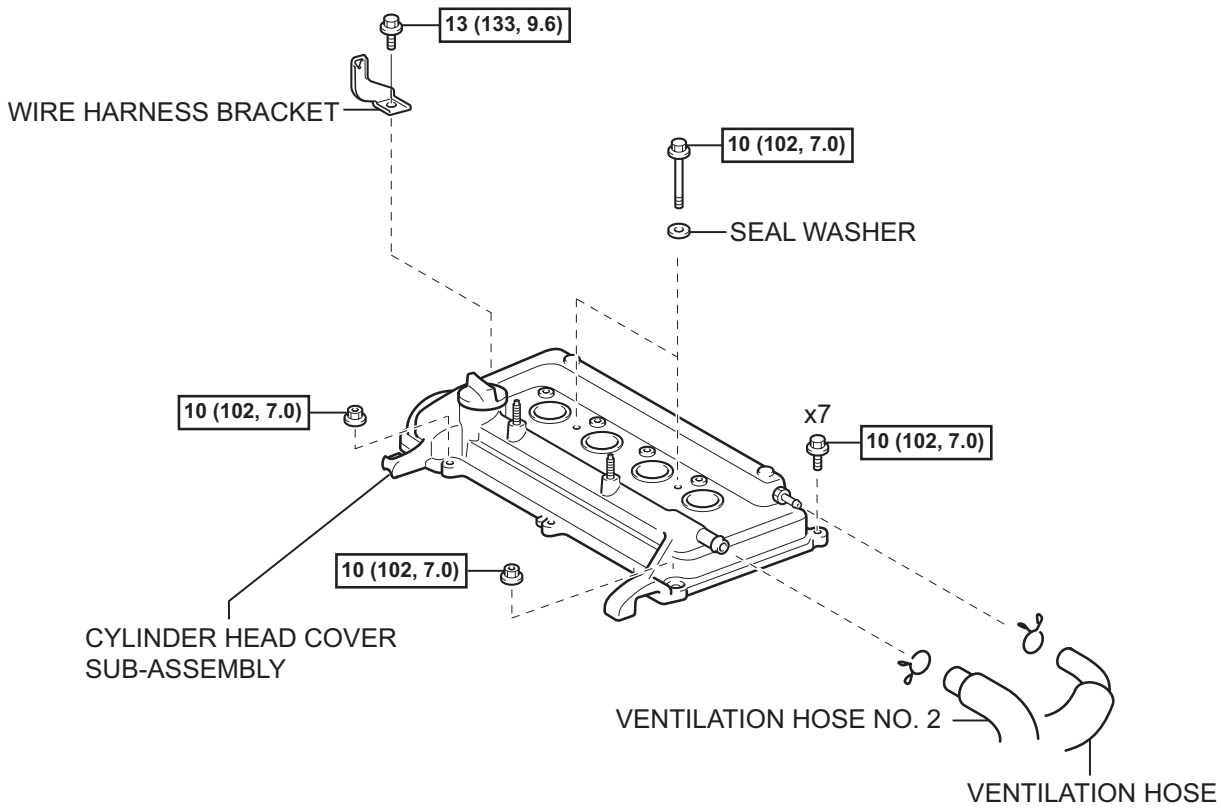

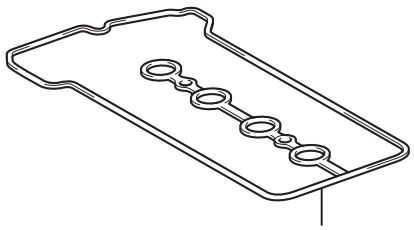

CYLINDER HEAD COVER GASKET

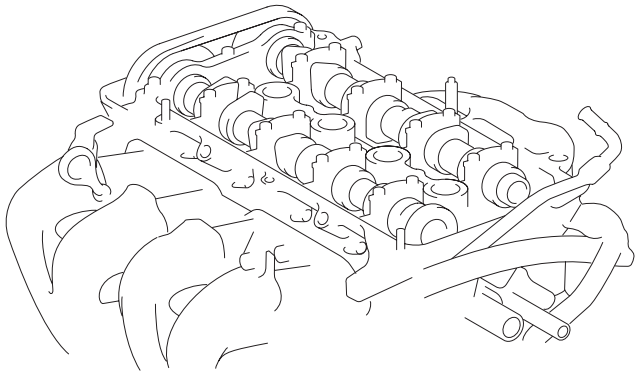

N*m (kgf*cm, ft.*lbf) : Specified torque

T

A115504E01

EM

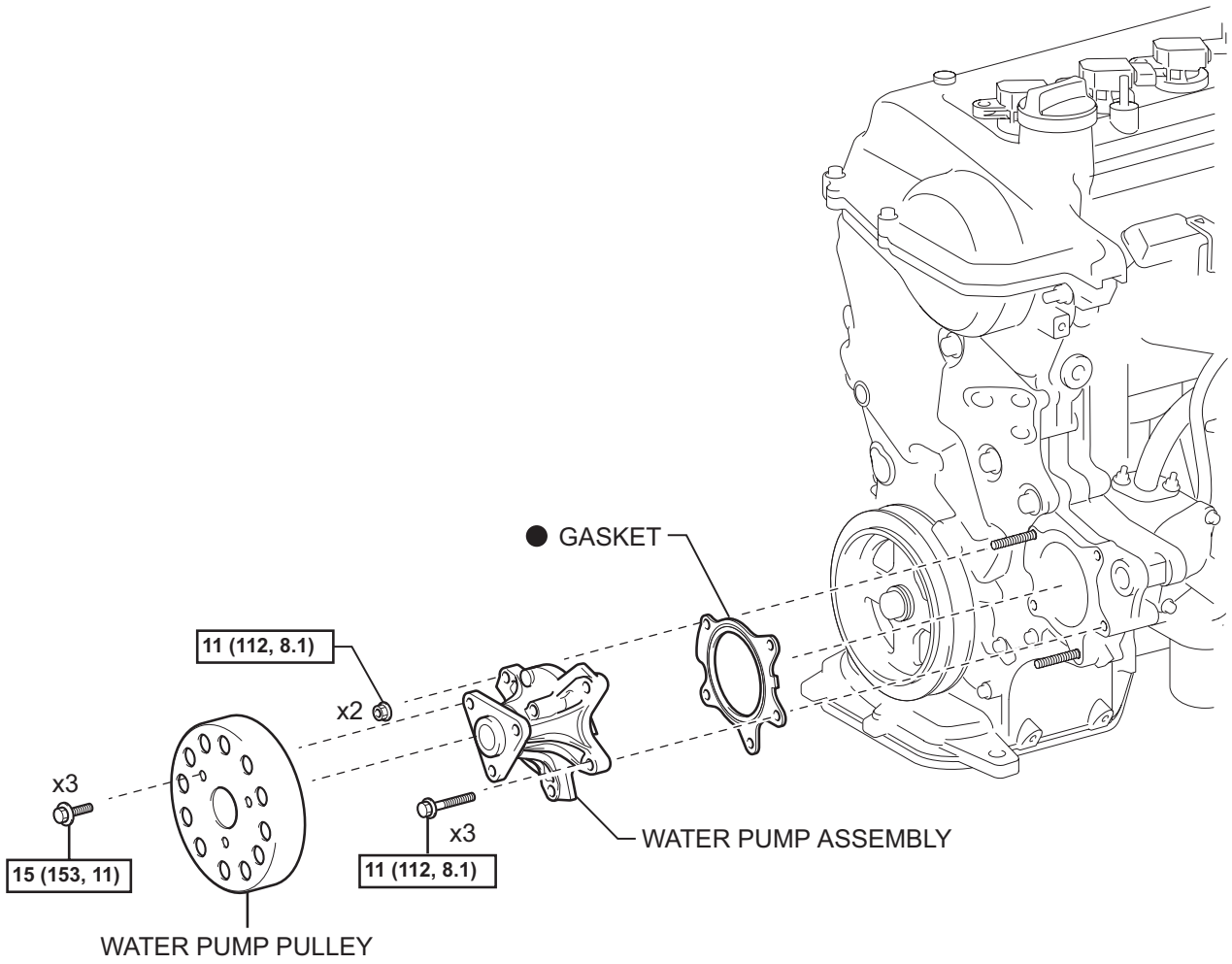

N*m (kgf*cm, ft.*lbf) : Specified torque

● Non-reusable part

T

A116194E01

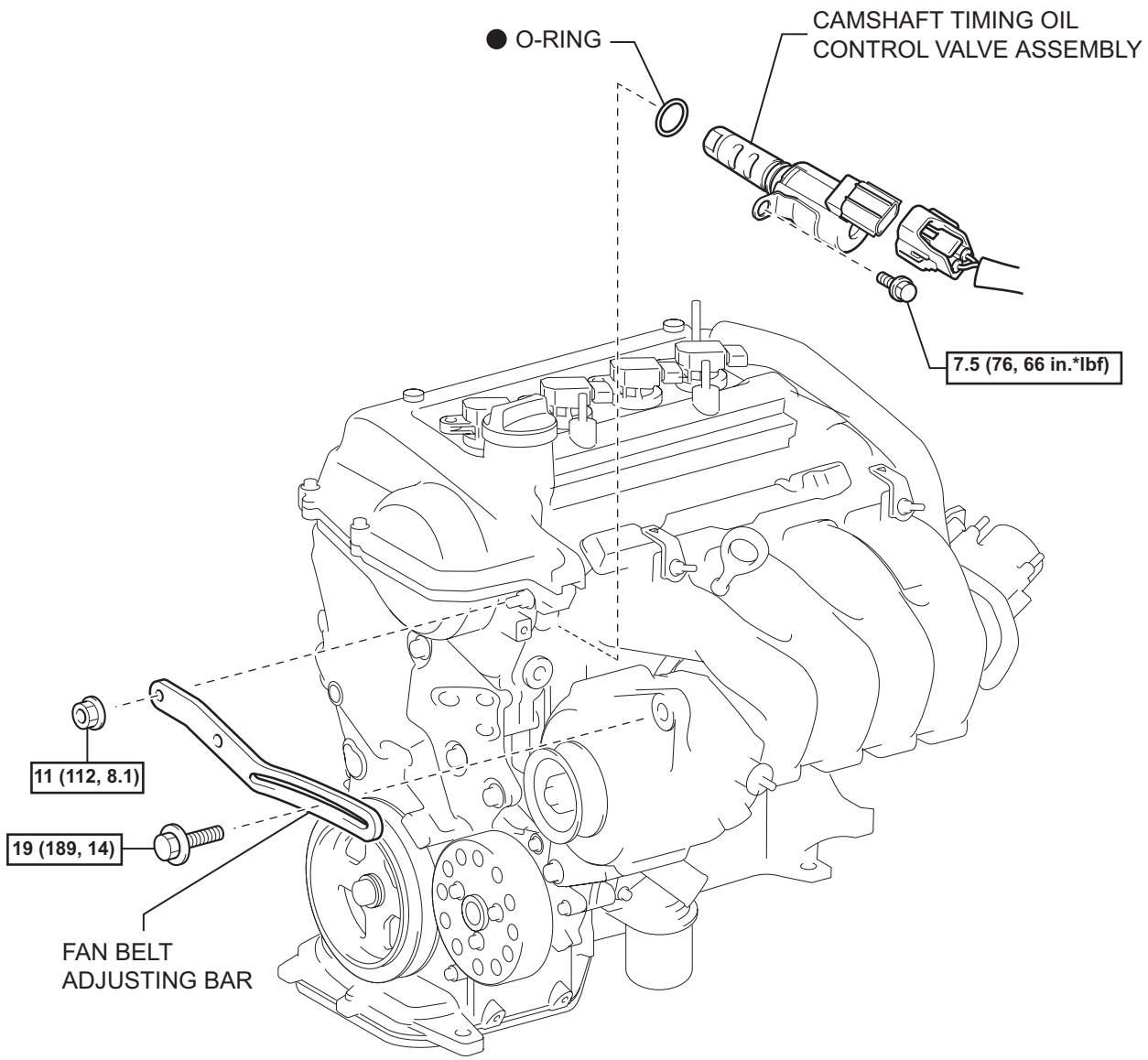

N*m (kgf*cm, ft.*lbf) : Specified torque

● Non-reusable part

T

A116180E01

EM

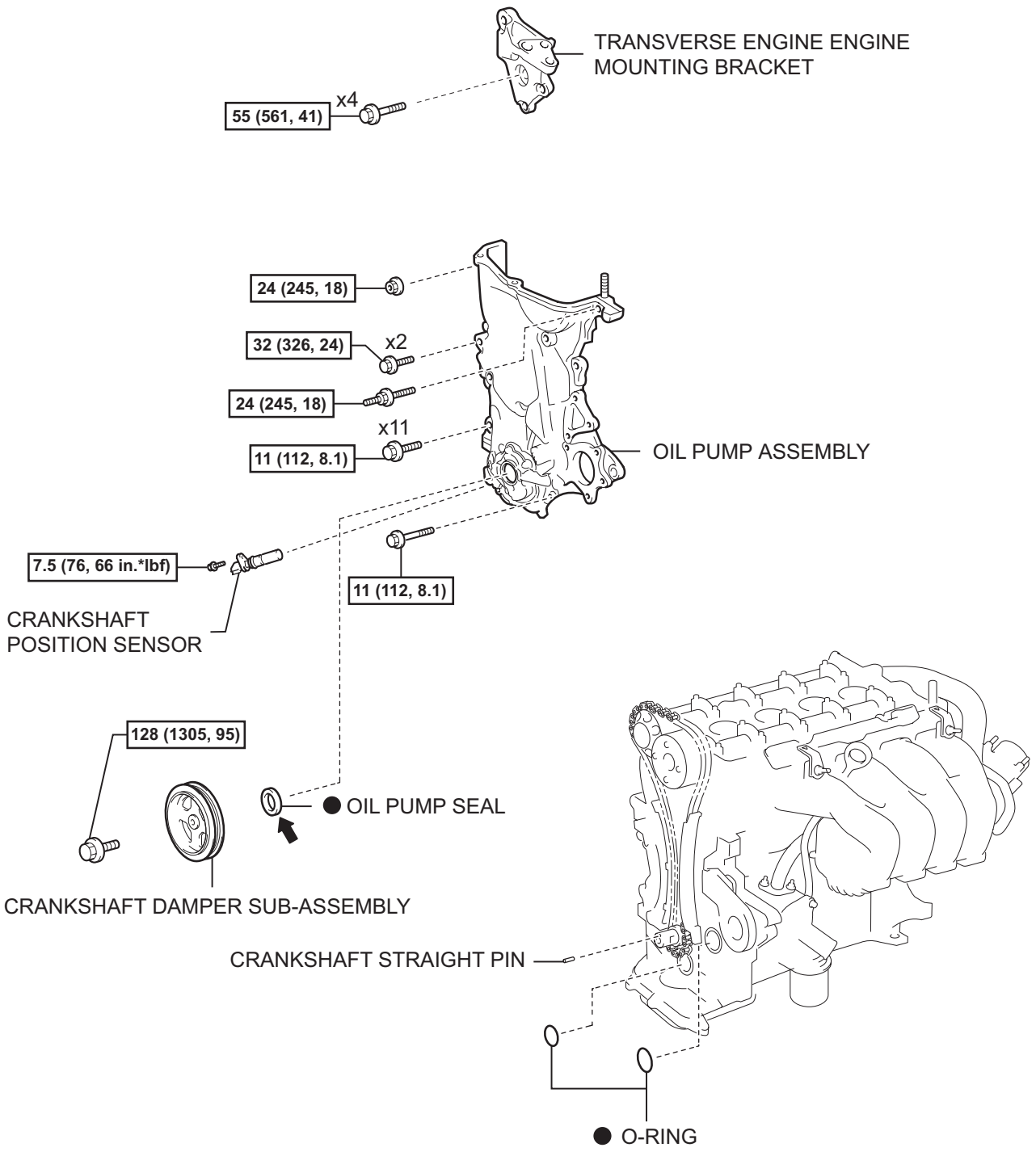

N*m (kgf*cm, ft.*lbf) : Specified torque

● Non-reusable part ⬅ Apply MP grease

T

A116559E01

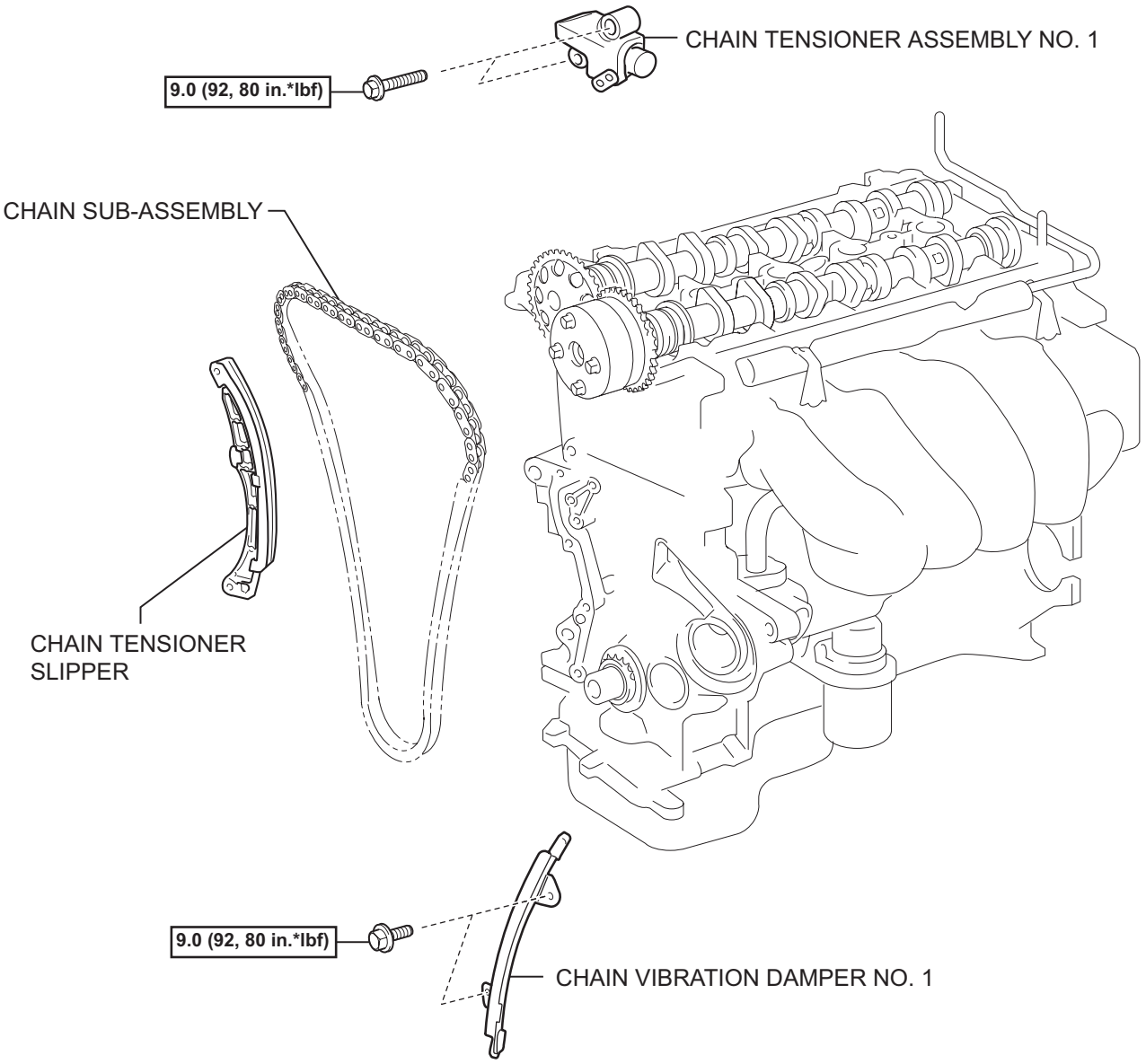

N*m (kgf*cm, ft.*lbf) : Specified torque

T

A116579E01

EM

EM

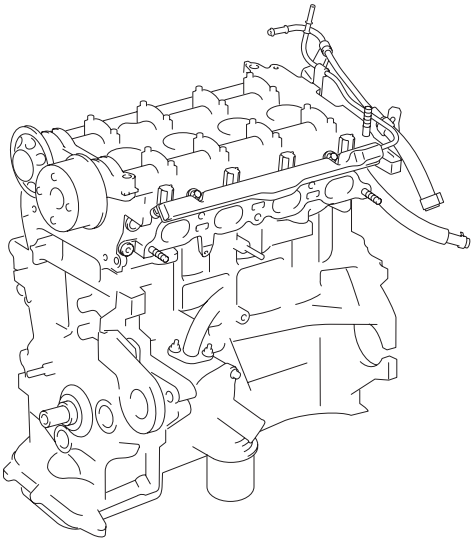

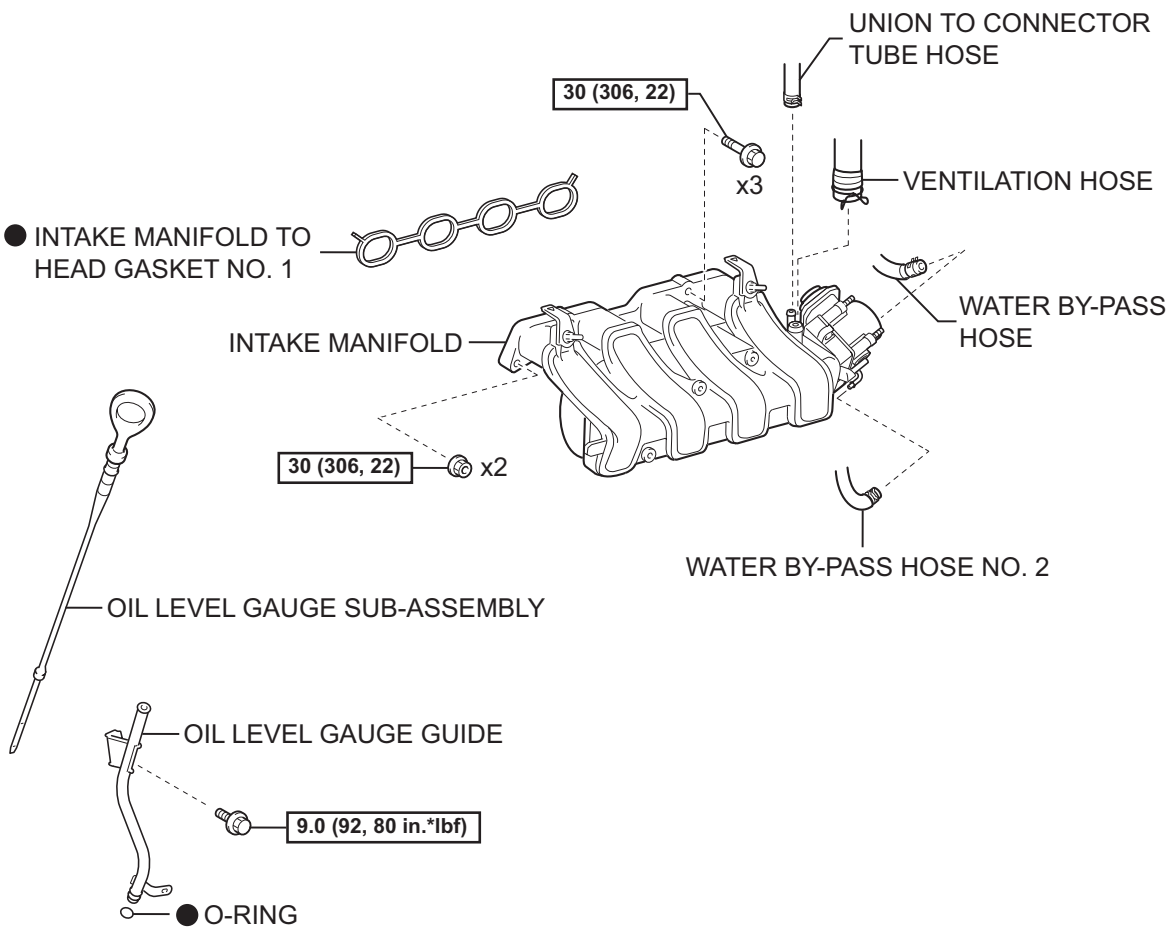

N*m (kgf*cm, ft*lbf) : Specified torque

● Non-reusable part

T

A121463E01

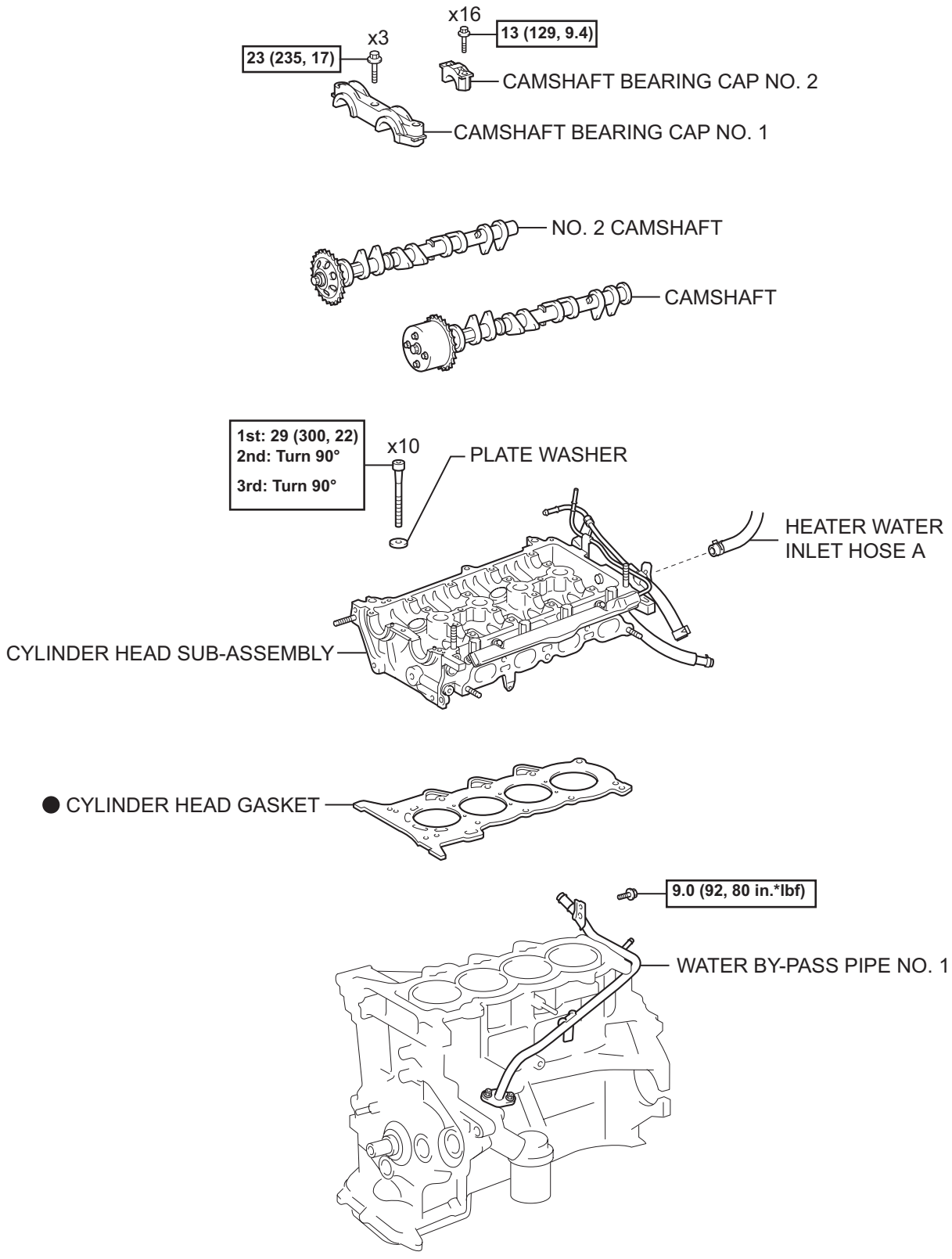

N*m (kgf*cm, ft.*lbf) : Specified torque

● Non-reusable part

T

A116963E01

EM

EM

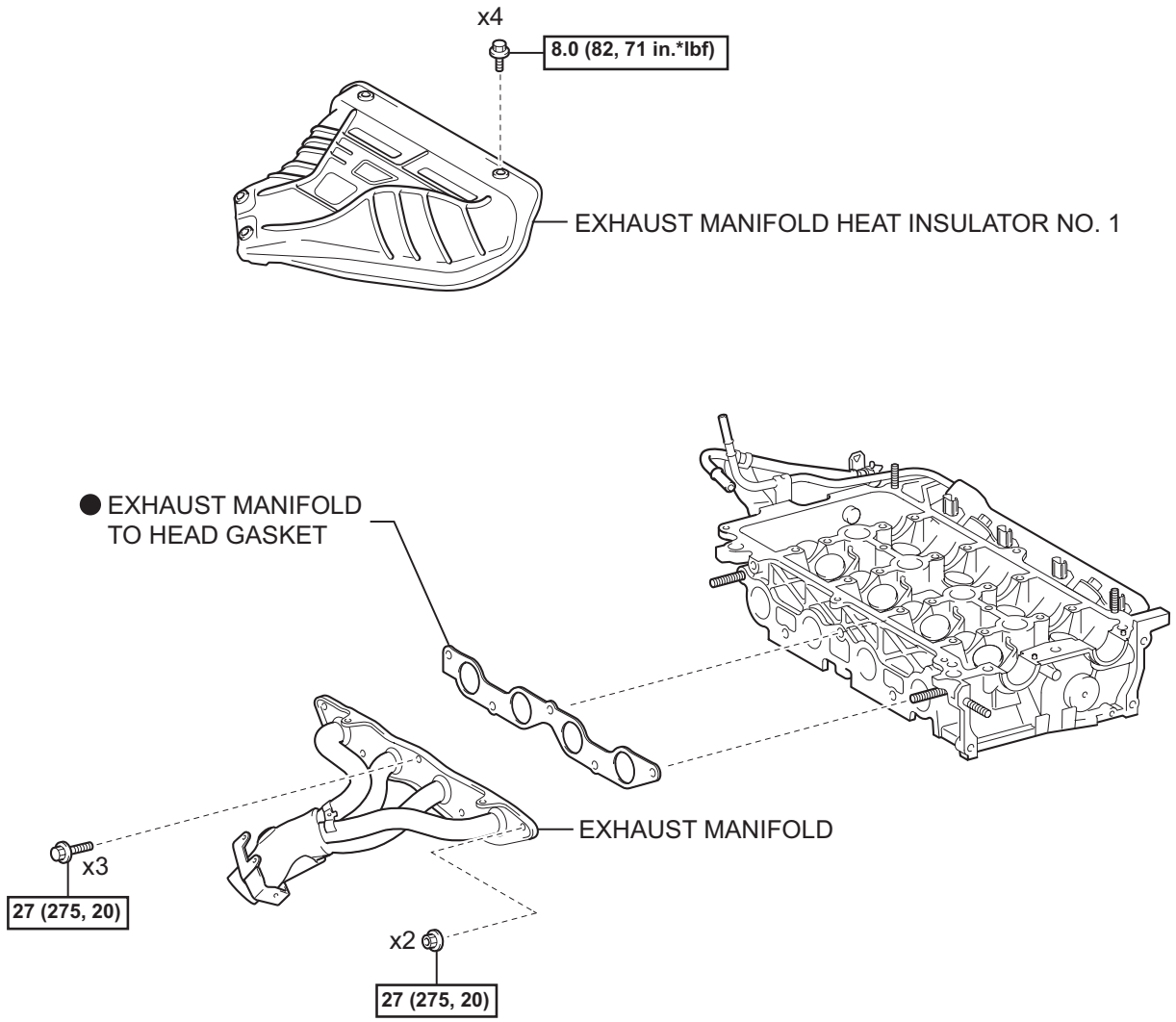

N*m (kgf*cm, ft.*lbf) : Specified torque

● Non-reusable part

T

A116967E01

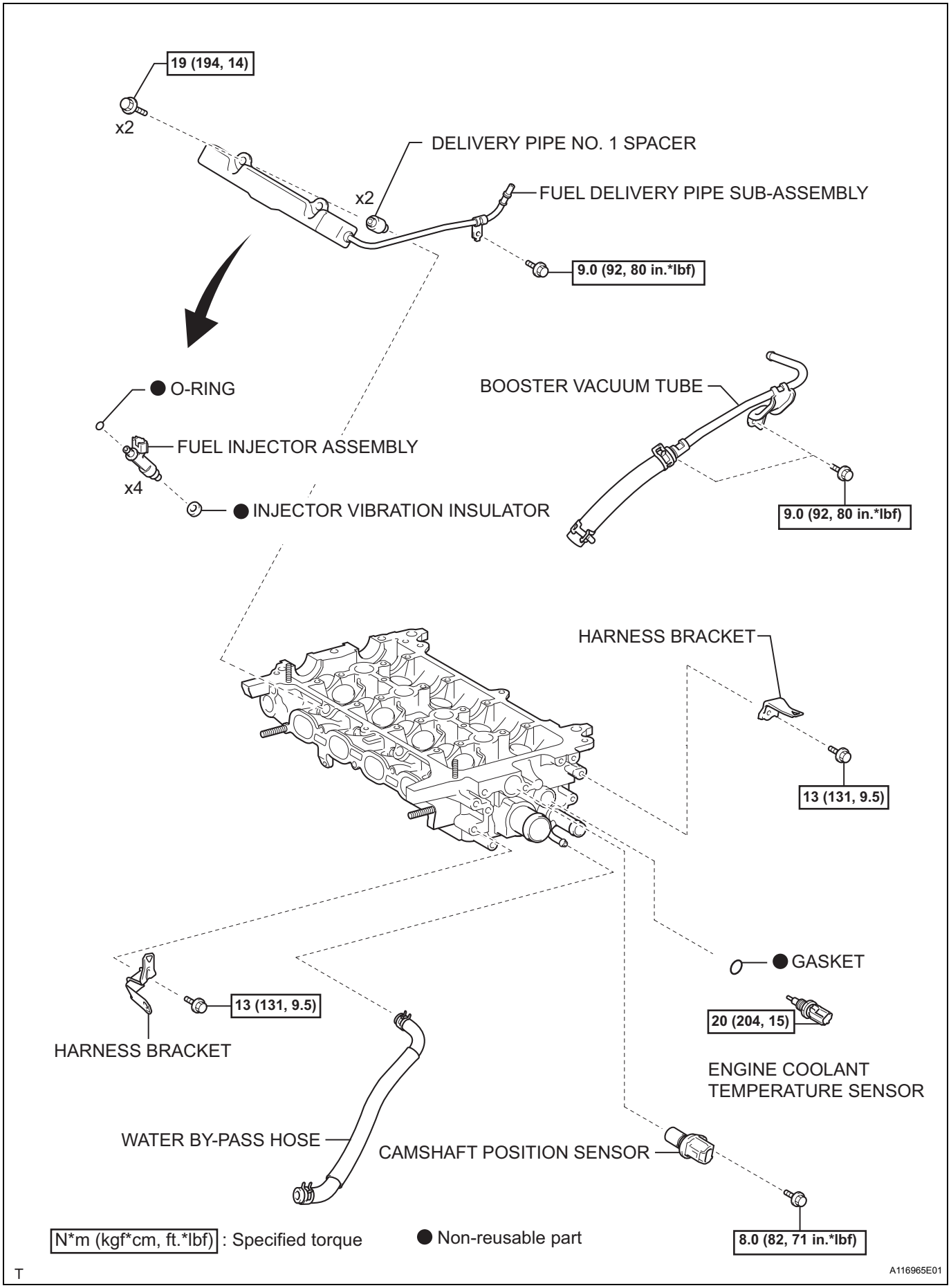
19 (194, 14)
x2
DELIVERY PIPE NO. 1 SPACER
x2
FUEL DELIVERY PIPE SUB-ASSEMBLY
9.0 (92, 80 in.*lbf)
O-RING
FUEL INJECTOR ASSEMBLY
x4
INJECTOR VIBRATION INSULATOR
BOOSTER VACUUM TUBE
9.0 (92, 80 in.*lbf)
HARNESS BRACKET
13 (131, 9.5)
GASKET
20 (204, 15)
ENGINE COOLANT TEMPERATURE SENSOR
13 (131, 9.5)
HARNESS BRACKET
WATER BY-PASS HOSE
CAMSHAFT POSITION SENSOR
8.0 (82, 71 in.*lbf)
N*m (kgf*cm, ft.*lbf) : Specified torque
Non-reusable part
T
A116965E01

EM

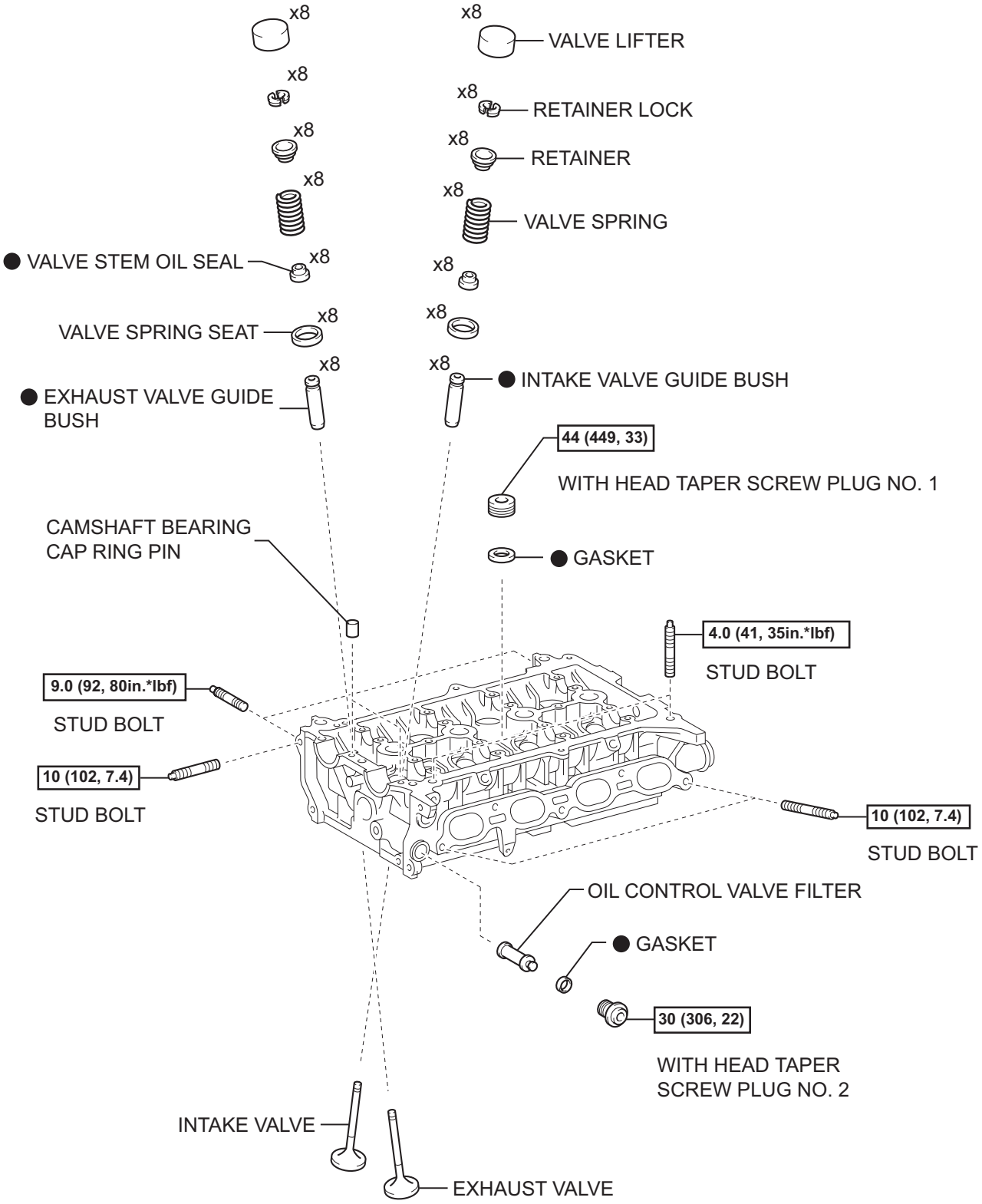

T

A117451E03

REMOVAL

1. **DISCHARGE FUEL SYSTEM PRESSURE** (See Page FU-1)
2. **DISCONNECT CABLE FROM NEGATIVE BATTERY TERMINAL**
3. **REMOVE FRONT WIPER ARM HEAD CAP (for Hatchback) (See page WW-17)**
4. **REMOVE FRONT WIPER ARM HEAD CAP (for Sedan) (See page WW-9)**
5. **REMOVE FRONT WIPER ARM AND BLADE ASSEMBLY LH (for Hatchback) (See page WW-17)**
6. **REMOVE FRONT WIPER ARM AND BLADE ASSEMBLY LH (for Sedan) (See page WW-9)**
7. **REMOVE FRONT WIPER ARM AND BLADE ASSEMBLY RH (for Hatchback) (See page WW-17)**
8. **REMOVE FRONT WIPER ARM AND BLADE ASSEMBLY RH (for Sedan) (See page WW-9)**
9. **REMOVE HOOD TO COWL TOP SEAL (for Hatchback) (See page WW-18)**
10. **REMOVE COWL TOP VENTILATOR LOUVER SUB-ASSEMBLY (for Hatchback) (See page WW-18)**
11. **REMOVE COWL TOP VENTILATOR LOUVER LH (for Hatchback) (See page WW-18)**
12. **REMOVE COWL SIDE VENTILATOR SUB-ASSEMBLY LH (for Sedan) (See page WW-10)**
13. **REMOVE COWL SIDE VENTILATOR SUB-ASSEMBLY RH (for Sedan) (See page WW-10)**
14. **REMOVE COWL TOP VENTILATOR LOUVER SUB-ASSEMBLY (for Sedan) (See page WW-10)**
15. **REMOVE FRONT WIPER MOTOR AND LINK (for Hatchback) (See page WW-19)**
16. **REMOVE FRONT WIPER MOTOR AND LINK (for Sedan) (See page WW-10)**
17. **REMOVE COWL TO REGISTER DUCT SUB-ASSEMBLY NO. 2 (for Hatchback) (See page EM-122)**
18. **REMOVE FRONT AIR SHUTTER SEAL RH (for Sedan) (See page ES-432)**
19. **REMOVE COWL TOP PANEL OUTER (for Hatchback) (See page EM-123)**
20. **REMOVE COWL TOP PANEL OUTER (for Sedan) (See page ES-432)**
21. **REMOVE BATTERY**
22. **REMOVE BATTERY TRAY**
23. **REMOVE FRONT WHEEL RH**

24. REMOVE ENGINE UNDER COVER RH

25. DRAIN ENGINE OIL

26. DRAIN ENGINE COOLANT (See page CO-8)

27. REMOVE CYLINDER HEAD COVER NO. 2 (See page IG-9)

28. REMOVE AIR CLEANER CAP SUB-ASSEMBLY WITH AIR CLEANER HOSE NO. 1 (See page ES-410)

29. DISCONNECT RADIATOR HOSE NO. 3

(a) Disconnect radiator hose No. 3.

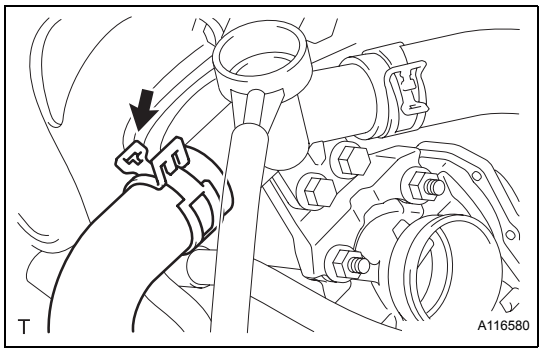

30. DISCONNECT RESERVE TANK HOSE

(a) Disconnect the reserve tank hose.

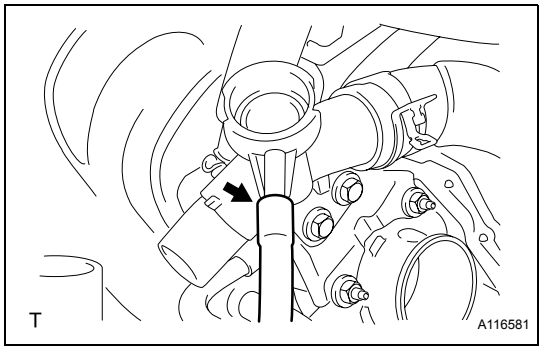

31. REMOVE WATER FILLER SUB-ASSEMBLY

(a) Separate radiator hose No. 1 from the cylinder head.

(b) Remove the 2 nuts and remove the water filler sub-assembly.

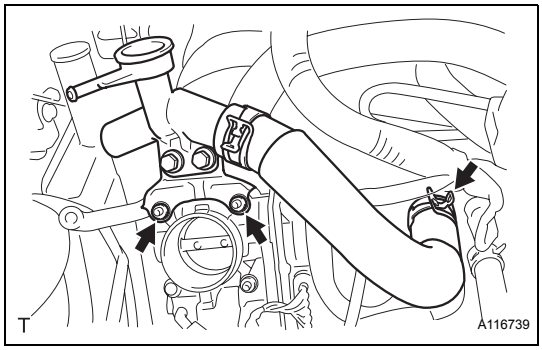

32. DISCONNECT WATER BY-PASS HOSE NO. 2

(a) Disconnect water by-pass hose No. 2.

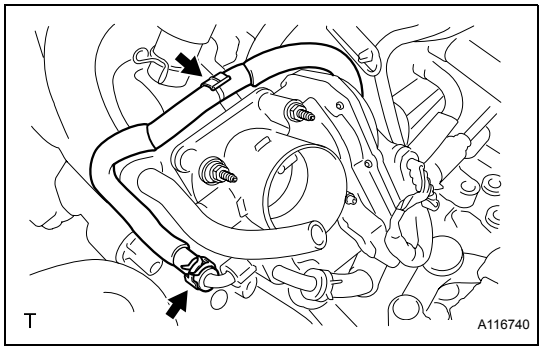

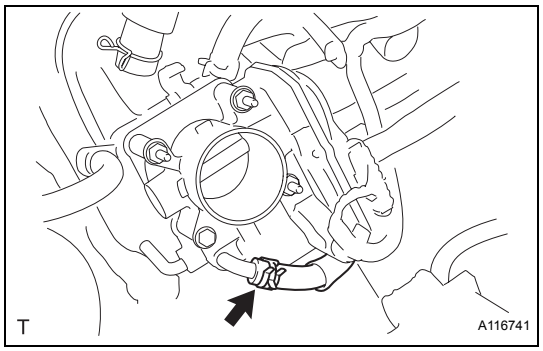

33. DISCONNECT WATER BY-PASS HOSE

(a) Disconnect the water by-pass hose.

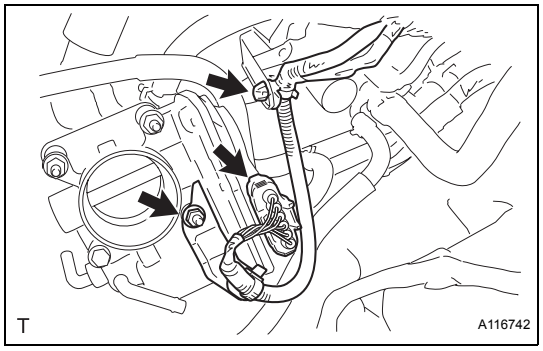

34. DISCONNECT THROTTLE WITH MOTOR BODY CONNECTOR

(a) Separate the wire harness clamp.

(b) Remove the nut and separate the throttle with motor body connector.

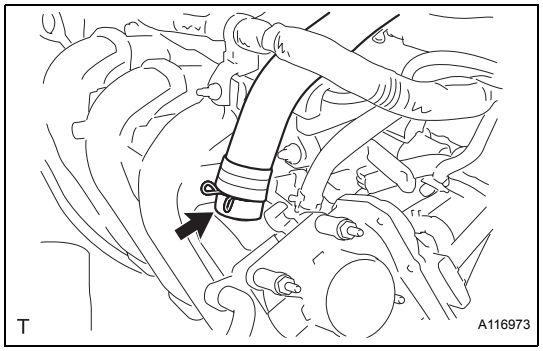

35. DISCONNECT VENTILATION HOSE

(a) Disconnect the ventilation hose.

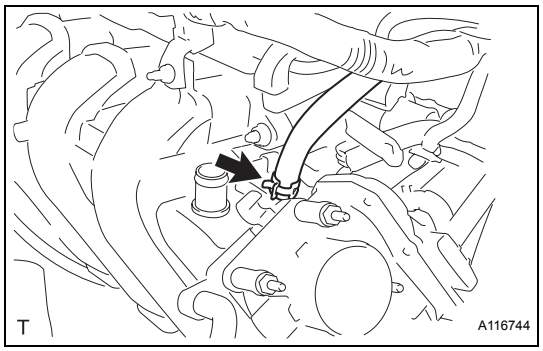

36. DISCONNECT UNION TO CONNECTOR TUBE HOSE

(a) Disconnect the union to connector tube hose.

37. REMOVE OIL LEVEL GAUGE SUB-ASSEMBLY

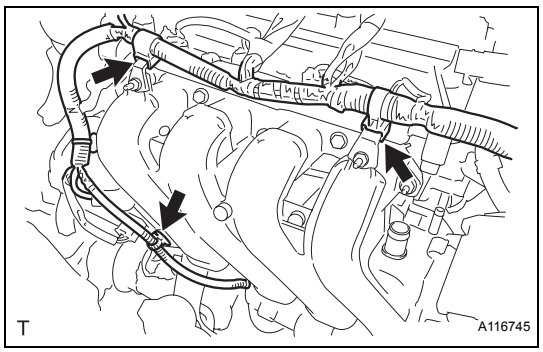

38. REMOVE INTAKE MANIFOLD

(a) Separate the 3 wire harness clamps shown in the illustration.

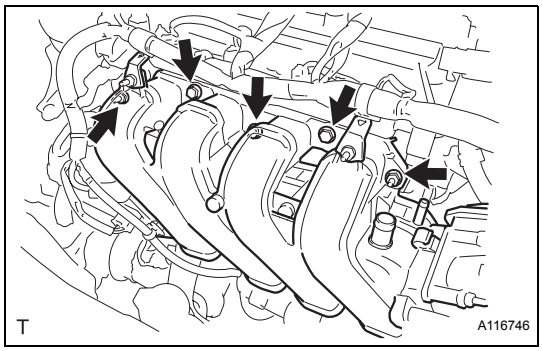

(b) Remove the 3 bolts and 2 nuts and remove the intake manifold.

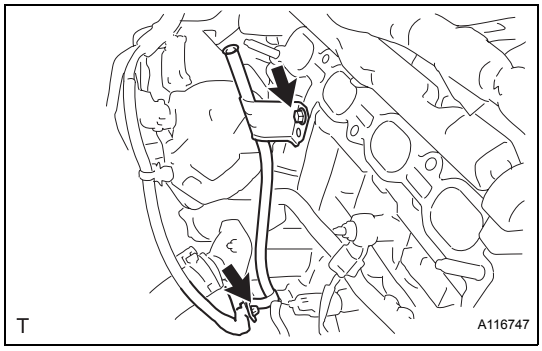

39. REMOVE OIL LEVEL GAUGE GUIDE

(a) Remove the wire harness clamp and the bolt and remove the oil level gauge guide.

40. DISCONNECT FUEL TUBE SUB-ASSEMBLY (See page FU-14)

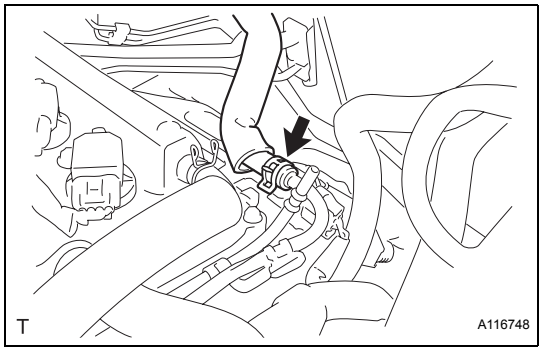

41. DISCONNECT BOOSTER VACUUM TUBE

(a) Disconnect the booster vacuum tube.

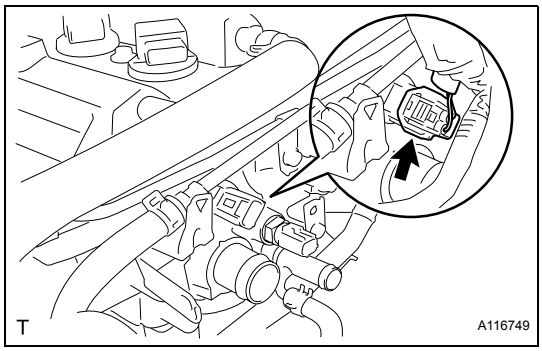

42. DISCONNECT CAMSHAFT POSITION SENSOR CONNECTOR

(a) Disconnect the camshaft position sensor connector.

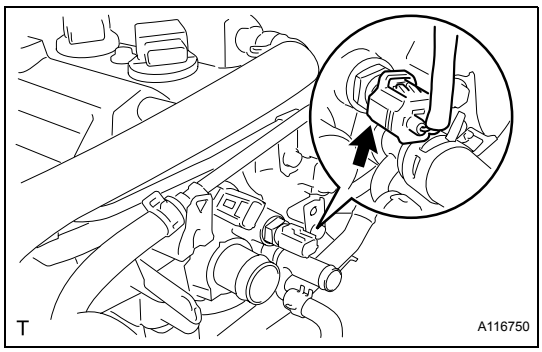

43. DISCONNECT ENGINE COOLANT TEMPERATURE SENSOR CONNECTOR

(a) Disconnect the engine coolant temperature sensor connector.

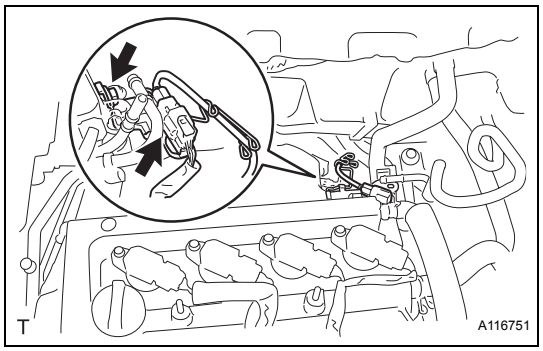

44. DISCONNECT HEATED OXYGEN SENSOR CONNECTOR

(a) Remove the bolts and separate the sensor bracket.
(b) Disconnect the heated oxygen sensor connector.

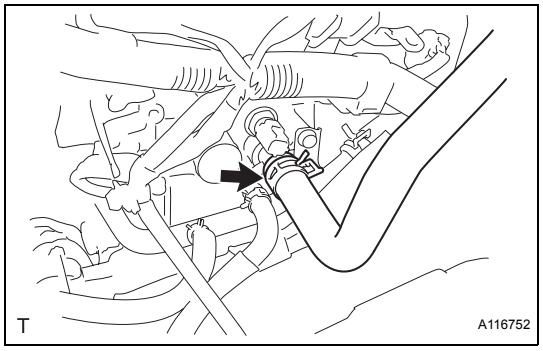

45. DISCONNECT HEATER WATER INLET HOSE A

(a) Disconnect heater water inlet hose A.

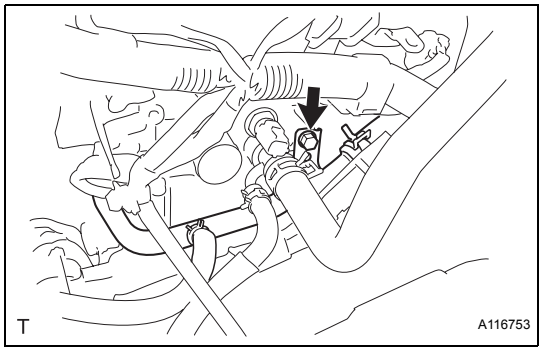

46. SEPARATE WATER BY-PASS PIPE NO. 1

(a) Remove the bolt and separate water by-pass pipe No. 1.

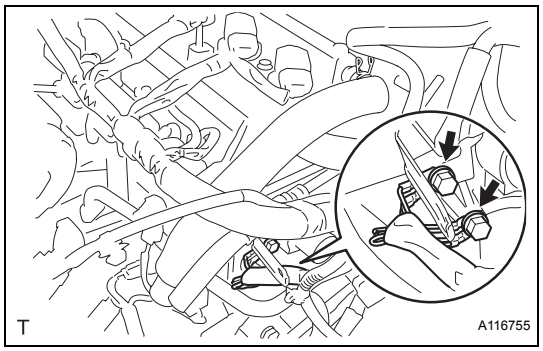

47. DISCONNECT WIRE HARNESS

(a) Remove the 2 bolts and disconnect the wire harness.

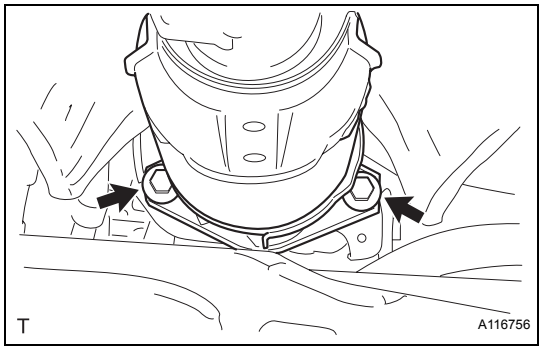

48. SEPARATE EXHAUST PIPE ASSEMBLY FRONT

(a) Remove the 2 bolts and 2 compression springs and separate the exhaust pipe assembly front.

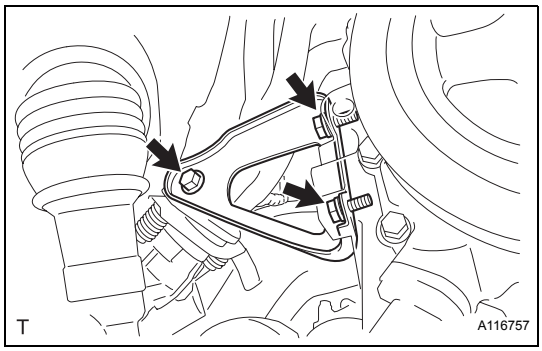

49. **REMOVE MANIFOLD SUPPORT BRACKET**
    (a) Remove the 3 bolts and remove the manifold support bracket.
50. **REMOVE FAN AND GENERATOR V BELT (See page EM-7)**
51. **REMOVE GENERATOR ASSEMBLY (See page CH-10)**
52. **REMOVE IGNITION COIL NO. 1 (See page IG-9)**
53. **REMOVE VENTILATION HOSE (See page FU-13)**
54. **REMOVE VENTILATION HOSE NO. 2 (See page FU-13)**
55. **REMOVE CYLINDER HEAD COVER SUB-ASSEMBLY (See page FU-13)**
56. **REMOVE ENGINE MOUNTING INSULATOR SUB-ASSEMBLY RH (See page LU-17)**
57. **REMOVE CRANKSHAFT DAMPER SUB-ASSEMBLY (See page LU-18)**
58. **REMOVE CRANKSHAFT POSITION SENSOR (See page ES-403)**
59. **REMOVE CAMSHAFT TIMING OIL CONTROL VALVE ASSEMBLY (See page ES-396)**
60. **REMOVE WATER PUMP PULLEY (See page CO-15)**
61. **REMOVE WATER PUMP ASSEMBLY (See page CO-15)**
62. **REMOVE TRANSVERSE ENGINE ENGINE MOUNTING BRACKET (See page LU-17)**
63. **REMOVE OIL PUMP ASSEMBLY (See page LU-19)**
64. **REMOVE OIL PUMP SEAL (See page LU-21)**
65. **REMOVE CHAIN TENSIONER ASSEMBLY NO. 1 (See page EM-33)**
66. **REMOVE CHAIN TENSIONER SLIPPER (See page EM-35)**
67. **REMOVE CHAIN VIBRATION DAMPER NO. 1 (See page EM-35)**
68. **REMOVE CHAIN SUB-ASSEMBLY**
69. **REMOVE CAMSHAFT**
    NOTICE:
    When rotating the camshaft with the timing chain removed, rotate the crankshaft counterclockwise 40° from the TDC first.

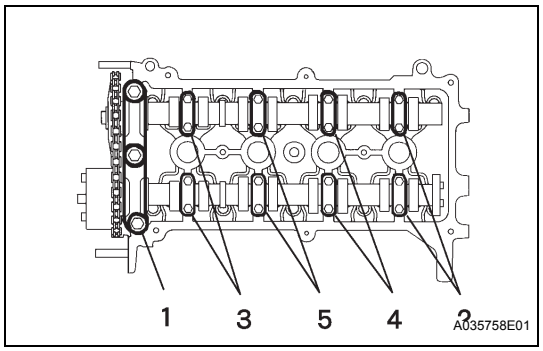

(a) Using several steps, uniformly loosen and remove the 19 bearing cap bolts in the sequence shown in the illustration, and then remove camshaft bearing cap No. 1 and camshaft bearing cap No. 2.
NOTICE:
Loosen each bolt uniformly while keeping the camshaft level.
(b) Remove the camshaft and camshaft No. 2.

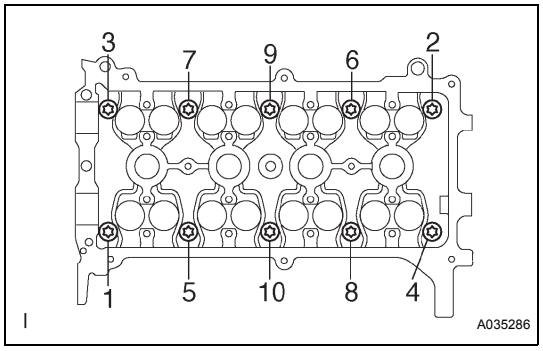

70. REMOVE CYLINDER HEAD SUB-ASSEMBLY

(a) Using several steps, uniformly loosen and remove the 10 cylinder head bolts with an 8 mm bi-hexagon wrench in the sequence shown in the illustration. Remove the 10 plate washers.
NOTICE:
- **Do not drop the washers into the cylinder head.**
- **Head warpage or cracking could result from removing the bolts in the wrong order.**

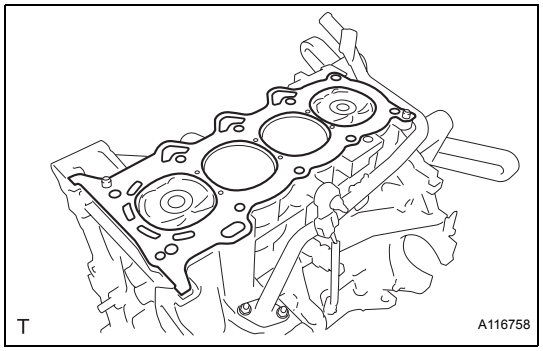

71. REMOVE CYLINDER HEAD GASKET

(a) Remove the cylinder head gasket.

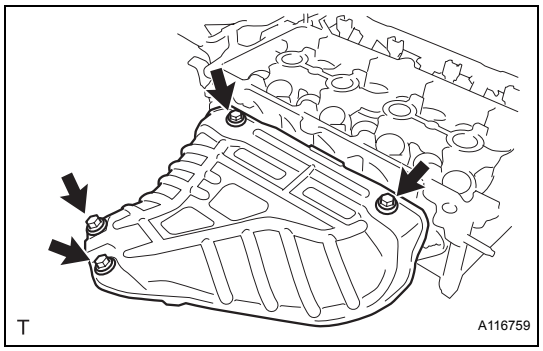

72. REMOVE EXHAUST MANIFOLD HEAT INSULATOR NO. 1

(a) Remove the 4 bolts and remove exhaust manifold heat insulator No. 1.

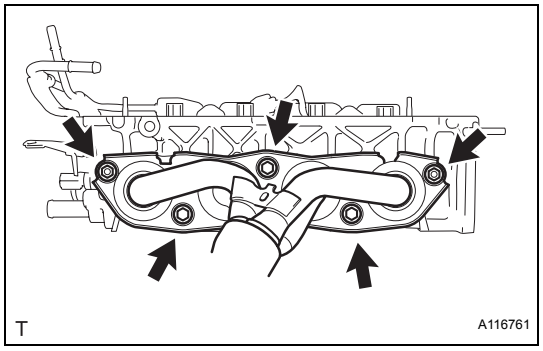

73. REMOVE EXHAUST MANIFOLD

(a) Remove the 3 bolts and 2 nuts and remove the exhaust manifold.

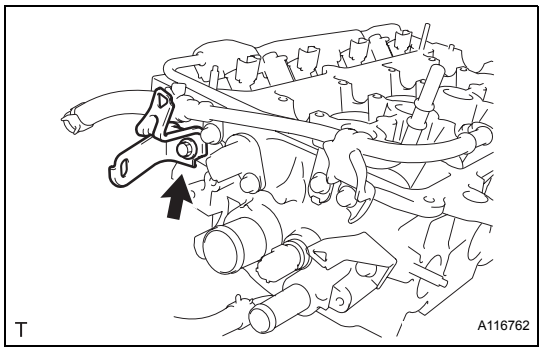

74. REMOVE HARNESS BRACKET

(a) Remove the bolt and remove the harness bracket.

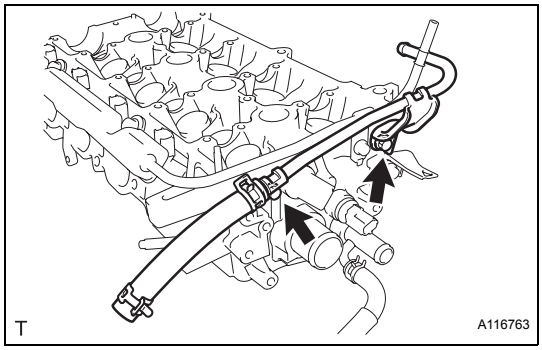

75. REMOVE BOOSTER VACUUM TUBE

(a) Remove the 2 bolts and remove the booster vacuum tube.

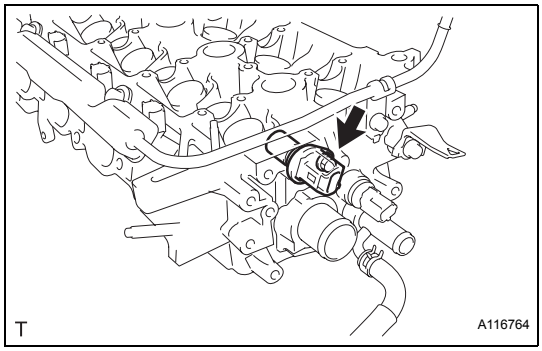

76. REMOVE CAMSHAFT POSITION SENSOR

(a) Remove the bolt and remove the camshaft position sensor.

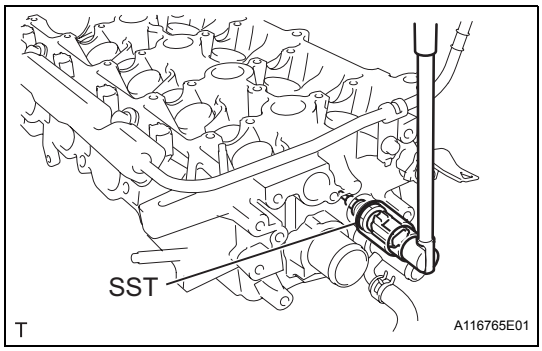

77. REMOVE ENGINE COOLANT TEMPERATURE SENSOR

(a) Using SST, remove the engine coolant temperature sensor connector.

SST 09817-33190

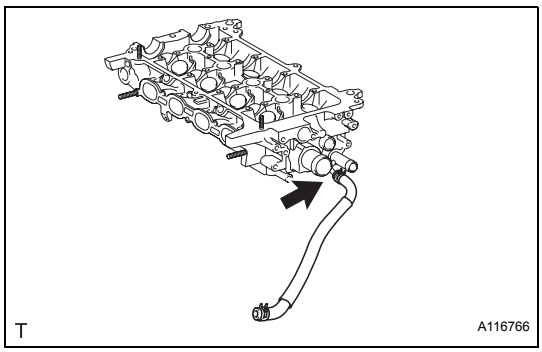

78. REMOVE WATER BY-PASS HOSE

(a) Remove the water by-pass hose.

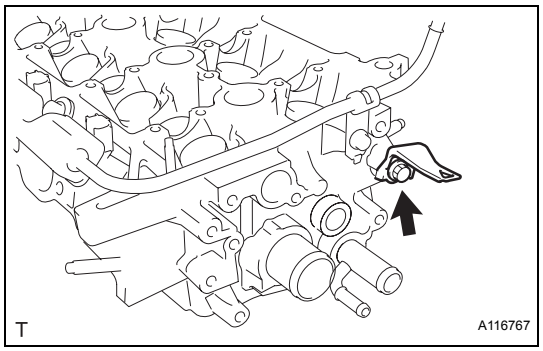

79. REMOVE HARNESS BRACKET

(a) Remove the bolt and remove the harness bracket.

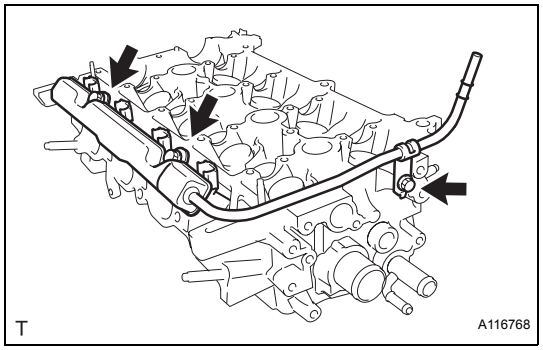

80. REMOVE FUEL DELIVERY PIPE SUB-ASSEMBLY

(a) Remove the 3 bolts and remove the fuel delivery pipe sub-assembly with 4 fuel injectors.

NOTICE:
Do not drop the fuel injectors when removing the fuel delivery pipe sub-assembly.

81. REMOVE FUEL INJECTOR ASSEMMBLY (See page FU-16)

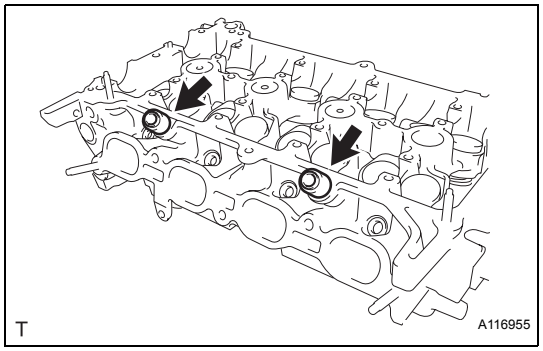

82. REMOVE DELIVERY PIPE NO. 1 SPACER

(a) Remove the 2 delivery pipe No. 1 spacers.

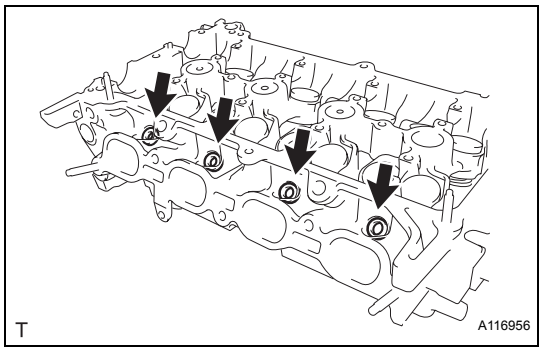

83. REMOVE INJECTOR VIBRATION INSULATOR

(a) Remove the 4 injector vibration insulators.

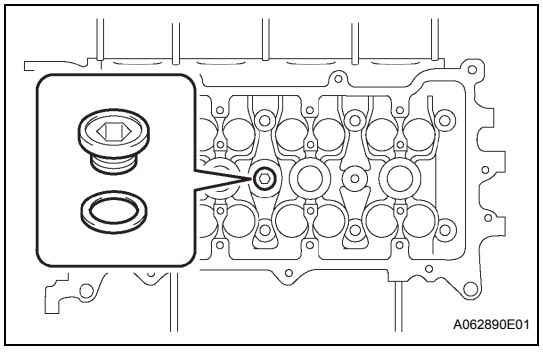

DISASSEMBLY

1. REMOVE WITH HEAD TAPER SCREW PLUG NO. 1

(a) Using a 10 mm socket hexagon wrench, remove the taper screw plug and the gasket.

2. REMOVE VALVE LIFTER

HINT:
Keep the valve lifters in the correct order so that they can be returned to their original locations when reassembled.

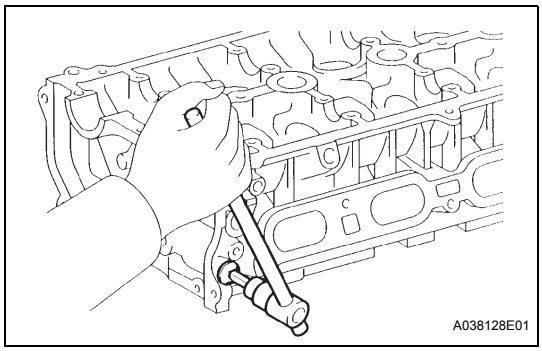

3. REMOVE WITH HEAD TAPER SCREW PLUG NO. 2

(a) Using an 8 mm hexagon wrench, remove the taper screw plug.

4. REMOVE OIL CONTROL VALVE FILTER

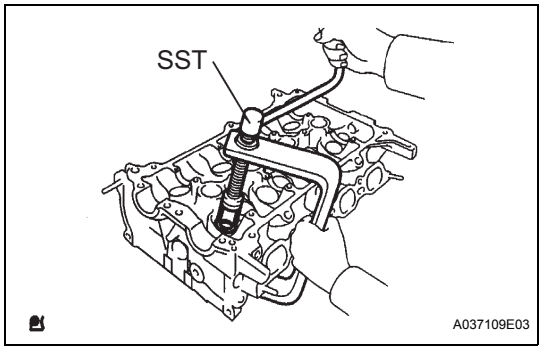

5. REMOVE INTAKE VALVE

(a) Using SST, compress the valve spring and remove the 2 retainer locks, retainer and valve spring.
SST 09202-70020 (09202-00010)
HINT:
Keep the valves, valve springs, spring seats and spring retainers in the correct order so that they can be returned to their original locations when reassembled.

6. REMOVE EXHAUST VALVE

(a) Using SST, compress the valve spring and remove the 2 retainer locks, retainer and valve spring.
SST 09202-70020 (09202-00010)
HINT:
Keep the valves, valve springs, spring seats and spring retainers in the correct order so that they can be returned to their original locations when reassembled.

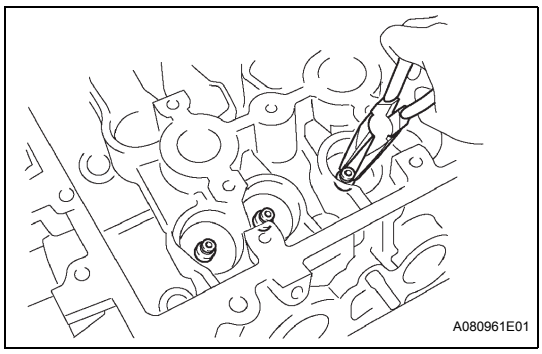

7. REMOVE VALVE STEM OIL SEAL

(a) Using needle-nose pliers, remove the oil seal.

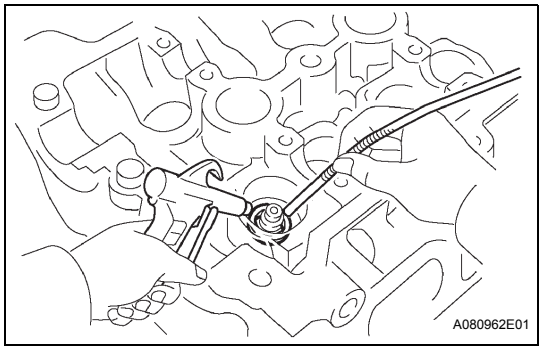

8. REMOVE VALVE SPRING SEAT

(a) Using compressed air and a magnetic finger, remove the valve spring seats.

9. REMOVE STUD BOLT

(a) Using "Torx" socket wrenches E5 and E7, remove the 7 stud bolts.

10. REMOVE CAMSHAFT BEARING CAP SETTING RING PIN

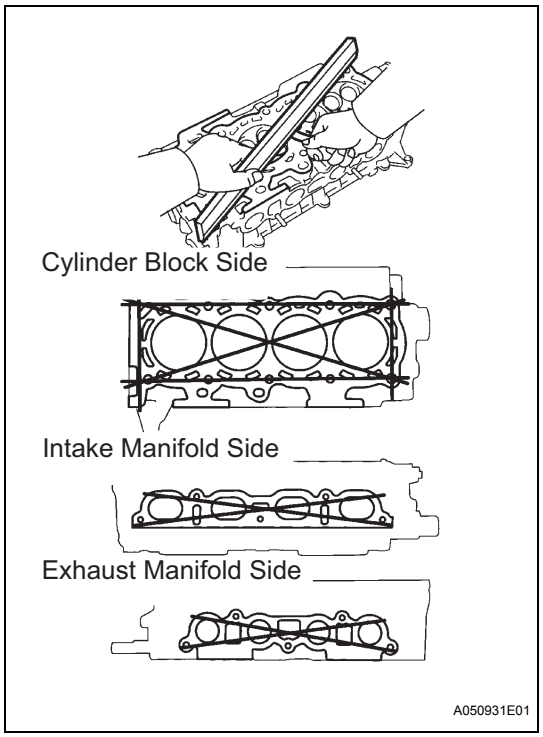

INSPECTION

1. INSPECT CYLINDER HEAD FOR WARPAGE

(a) Using a precision straightedge and feeler gauge, measure the warpage of the surface that is in contact with the cylinder block and the manifolds.

Maximum warpage

Surface	Specified Condition
Cylinder block side	0.05 mm (0.0020 in.)
Intake manifold side	0.10 mm (0.0039 in.)
Exhaust manifold side	0.10 mm (0.0039 in.)

If the warpage is greater than the maximum, replace the cylinder head.

EM

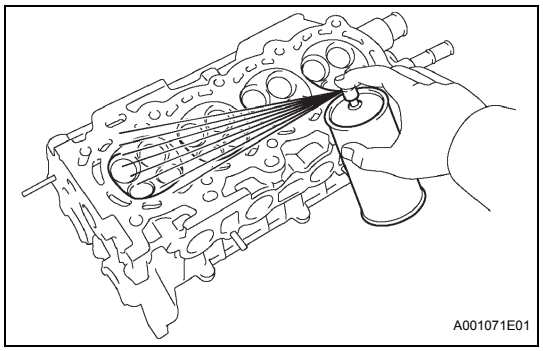

2. INSPECT CYLINDER HEAD FOR CRACKS

(a) Using a dye penetrate, check the combustion chamber, intake ports, exhaust ports and cylinder block surface for cracks.

If cracked, replace the cylinder head.

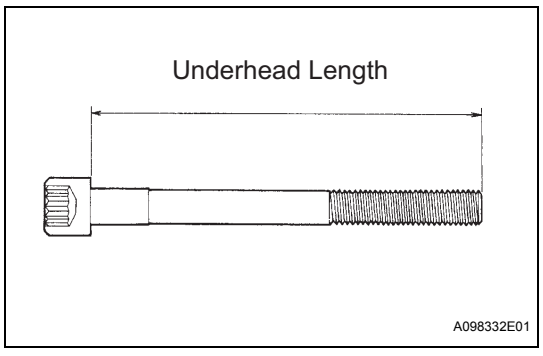

3. INSPECT CYLINDER HEAD SET BOLT

(a) Using vernier calipers, measure the length of the head bolts from the seat to the end.

Standard length:
142.8 to 144.2 mm (5.622 to 5.677 in.)
Maximum length:
147.1 mm (5.791 in.)

If the length is greater than the maximum, replace the bolt.

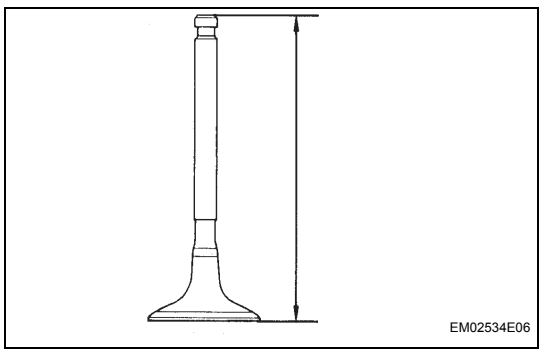

4. INSPECT INTAKE VALVE

(a) Check the overall valve length.

Standard overall length:
89.25 mm (3.5138 in.)
Minimum overall length:
88.75 mm (3.4941 in.)

If the overall length is less than the minimum, replace the valve.

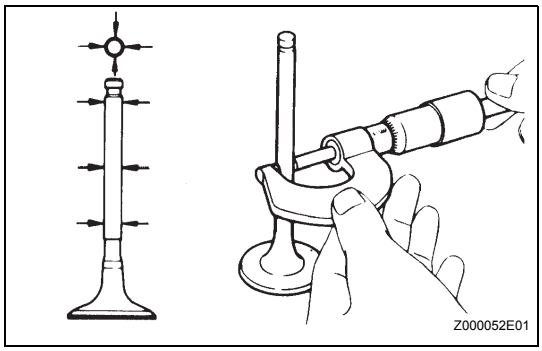

(b) Using a micrometer, measure the diameter of the valve stem.
Standard valve stem diameter:
4.970 to 4.985 mm (0.1957 to 0.1963 in.)

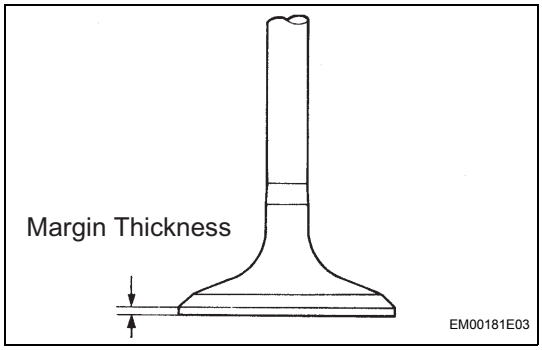

(c) Check the valve head margin thickness.
Standard margin thickness:
1.0 mm (0.039 in.)
Minimum margin thickness:
0.5 mm (0.020 in.)
If the margin thickness is less than the minimum, replace the valve.

5. INSPECT EXHAUST VALVE

(a) Check the overall valve length.
Standard overall length:
87.90 mm (3.4606 in.)
Minimum overall length:
87.40 mm (3.4409 in.)
If the overall length is less than the minimum, replace the valve.

(b) Using a micrometer, measure the diameter of the valve stem.
Standard valve stem diameter:
4.965 to 4.980 mm (0.1955 to 0.1961 in.)

(c) Check the valve head margin thickness.
Standard margin thickness:
1.15 mm (0.045 in.)
Minimum margin thickness:
0.5 mm (0.020 in.)
If the margin thickness is less than the minimum, replace the valve.

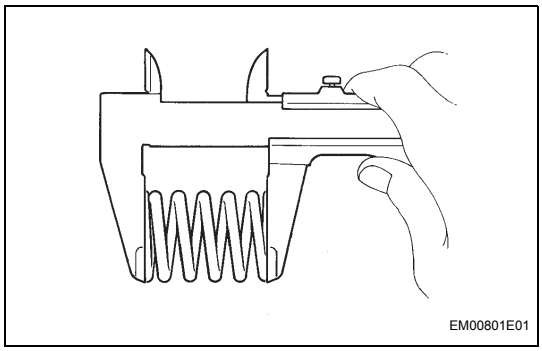

6. INSPECT VALVE SPRING

(a) Using vernier calipers, measure the free length of the valve spring.
Standard free length:
45.05 to 45.15 mm (1.774 to 1.778 in.)
If the free length is not as specified, replace the spring.

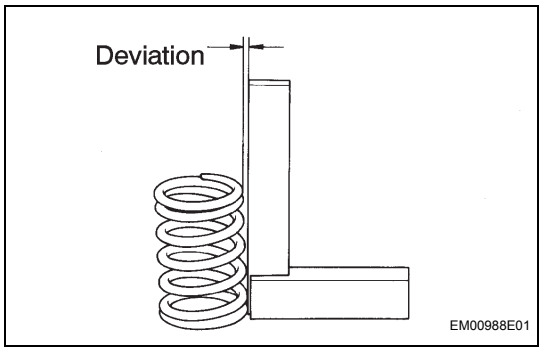

(b) Using a steel square, measure the deviation of the valve spring.
Maximum deviation:
1.6 mm (0.063 in.)
Maximum angle (reference):
2°
If the deviation is greater than the maximum, replace the spring.

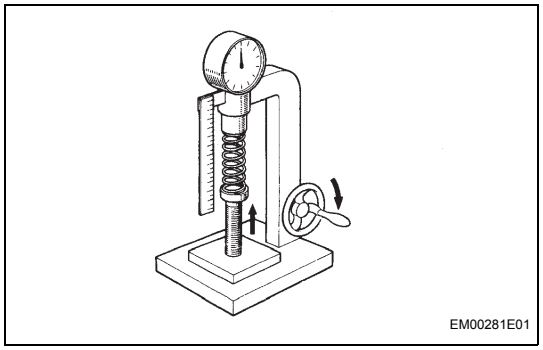

(c) Using a spring tester, measure the tension of the valve spring at the specified installed length.
Standard installed tension:
149 to 165 N (15.2 to 16.8 kgf, 33.5 to 37.1 lbf) at 32.5 mm (1.280 in.)
Maximum working tension:
286 to 316 N (29.1 to 32.2 kgf, 64.2 to 71.0 lbf) at 23.9 mm (0.941 in.)
If the installed tension is not as specified, replace the valve spring.

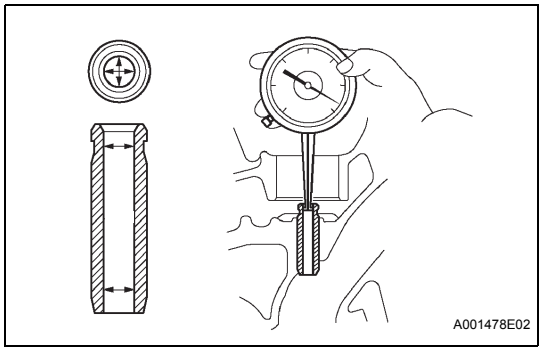

7. INSPECT VALVE GUIDE BUSH OIL CLEARANCE

(a) Using a caliper gauge, measure the inside diameter of the guide bush.
Bush inside diameter:
5.010 to 5.030 mm (0.1972 to 0.1980 in.)

(b) Subtract the valve stem diameter measurement from the guide bush inside diameter measurement to calculate the oil clearance.
Standard oil clearance

Guide Bush	Specified Condition
Intake	0.025 to 0.060 mm (0.0010 to 0.0024 in.)
Exhaust	0.030 to 0.065 mm (0.0012 to 0.0026 in.)

Maximum oil clearance

Guide Bush	Specified Condition
Intake	0.08 mm (0.0032 in.)
Exhaust	0.10 mm (0.0039 in.)

If the clearance is greater than the maximum, replace the valve and guide bush (see page EM-92).

8. INSPECT INTAKE VALVE SEAT

(a) Apply a light coat of prussian blue to the valve face.
(b) Lightly press the valve against the seat.

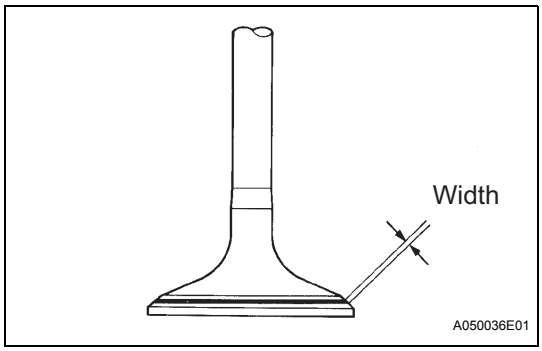

(c) Check the valve face and seat in accordance with the following procedure.
  (1) If blue appears 360° around the face, the valve is concentric. If not, replace the valve.
  (2) If blue appears 360° around the valve seat, the guide and face are concentric. If not, resurface the seat.
  (3) Check that the seat contact is in the middle of the valve face with the width between 1.0 to 1.4 mm (0.039 to 0.055 in.).

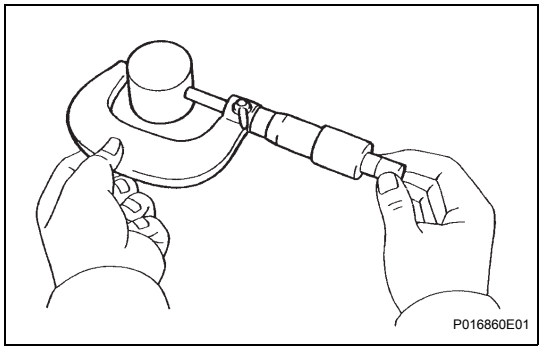

9. INSPECT VALVE LIFTER

(a) Using a micrometer, measure the lifter diameter.
Standard lifter diameter:
30.966 to 30.976 mm (1.2191 to 1.2195 in.)

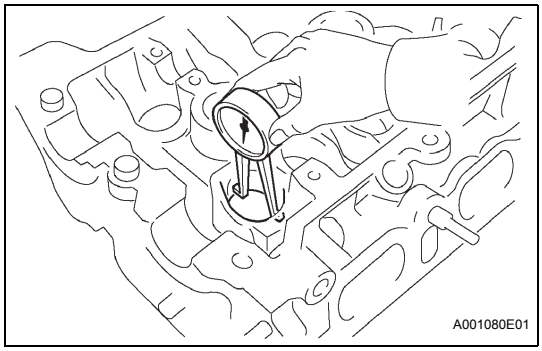

10. INSPECT VALVE LIFTER OIL CLEARANCE

(a) Using a caliper gauge, measure the lifter bore diameter of the cylinder head.
Standard lifter bore diameter:
31.000 to 31.025 mm (1.2205 to 1.2215 in.)

(b) Subtract the lifter diameter measurement from the lifter bore diameter measurement to calculate the oil clearance.
Standard oil clearance:
0.024 to 0.059 mm (0.0009 to 0.0023 in.)
Maximum oil clearance:
0.1 mm (0.0039 in.)
If the oil clearance is greater than the maximum, replace the lifter. If necessary, replace the cylinder head.

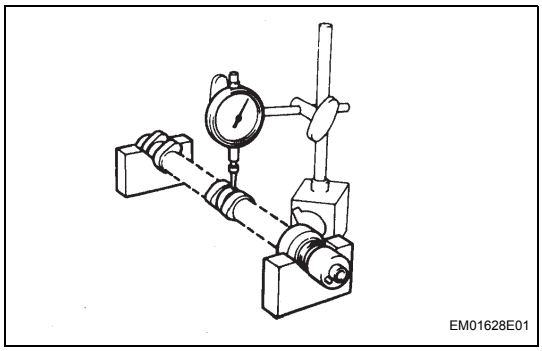

11. INSPECT CAMSHAFT

(a) Inspect the camshaft for runout.
  (1) Place the camshaft on V-blocks.
  (2) Using a dial indicator, measure the circle runout at the center journal.
  Maximum circle runout:
  0.03 mm (0.0012 in.)
  If the circle runout is greater than the maximum, replace the camshaft.

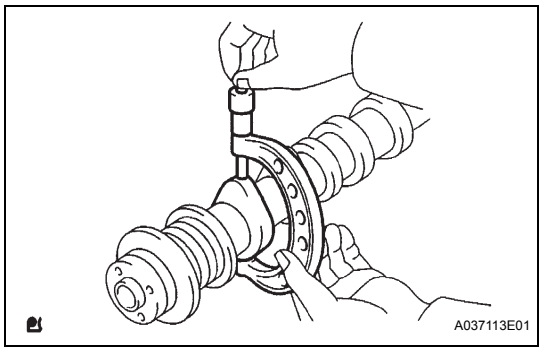

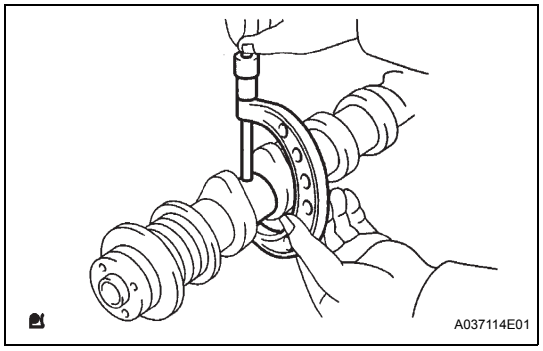

(b) Inspect the cam lobes.
(1) Using a micrometer, measure the cam lobe height.
Standard cam lobe height:
44.617 to 44.717 mm (1.7566 to 1.7605 in.)
Minimum cam lobe height:
43.16 mm (1.6992 in.)
If the cam lobe height is less than the minimum, replace the camshaft.

(c) Inspect the camshaft journals.
(1) Using a micrometer, measure the journal diameter.
Standard journal diameter

Journal	Specified Condition
No. 1 journal	34.449 to 34.465 mm (1.3563 to 1.3569 in.)
Other journals	22.949 to 22.965 mm (0.9035 to 0.9041 in.)

If the journal diameter is not as specified, check the oil clearance.

12. INSPECT NO. 2 CAMSHAFT

(a) Inspect the camshaft for runout.
(1) Place the camshaft on V-blocks.
(2) Using a dial indicator, measure the circle runout at the center journal.
Maximum circle runout:
0.03 mm (0.0012 in.)
If the circle runout is greater than the maximum, replace the camshaft.

(b) Inspect the cam lobes.
(1) Using a micrometer, measure the cam lobe height.
Standard cam lobe height:
44.666 to 44.766 (1.7585 to 1.7624 in.)
Minimum cam lobe height:
44.52 mm (1.7528 in.)
If the cam lobe height is less than the minimum, replace the camshaft.

(c) Inspect the camshaft journals.
(1) Using a micrometer, measure the journal diameter.
Standard journal diameter

Journal	Specified Condition
No. 1 journal	34.449 to 34.465 mm (1.3563 to 1.3569 in.)
Other journals	22.949 to 22.965 mm (0.9035 to 0.9041 in.)

If the journal diameter is not as specified, check the oil clearance.

EM

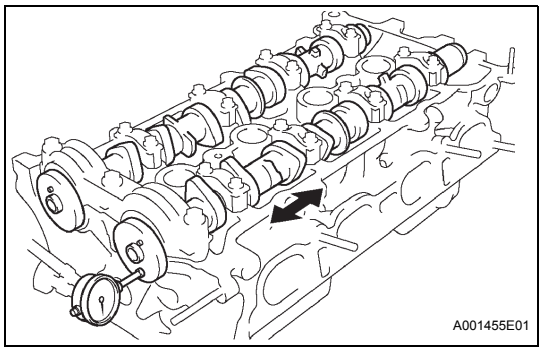

13. INSPECT CAMSHAFT THRUST CLEARANCE

(a) Install the camshafts.

(b) Using a dial indicator, measure the thrust clearance while moving the camshaft back and forth.
Standard thrust clearance:
0.040 to 0.095 mm (0.0016 to 0.0037 in.)
Maximum thrust clearance:
0.11 mm (0.0043 in.)
If the thrust clearance is greater than the maximum, replace the camshaft. If necessary, replace the bearing caps and the cylinder head together.

14. INSPECT CAMSHAFT OIL CLEARANCE

(a) Clean the bearing caps and the camshaft journals.

(b) Place the camshafts on the cylinder head.

(c) Lay a strip of Plastigage across each of the camshaft journals.

(d) Install the bearing caps (see page EM-97).
NOTICE:
Do not turn the camshaft.

(e) Remove the bearing caps.

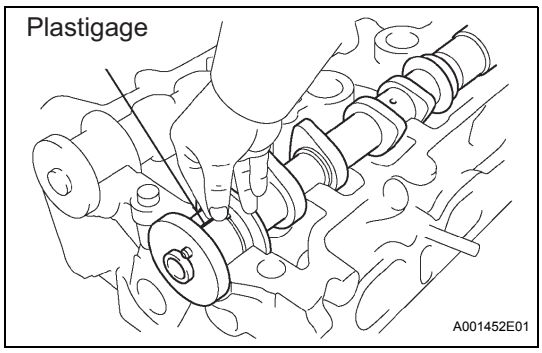

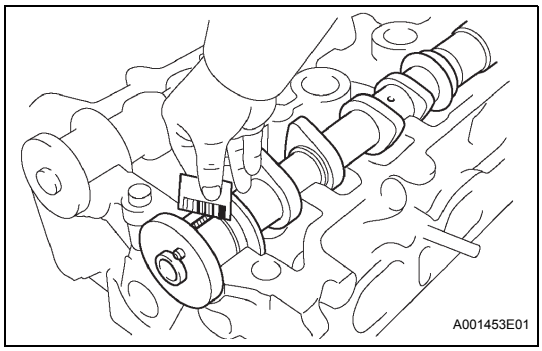

(f) Measure the Plastigage at its widest point.
Standard oil clearance:
0.035 to 0.072 mm (0.0014 to 0.0028 in.)
Maximum oil clearance:
0.08 mm (0.0031 in.)
If the oil clearance is greater than the maximum, replace the camshaft. If necessary, replace the bearing caps and the cylinder head together.
NOTICE:
Completely remove the Plastigage after the measurement.

REPLACEMENT

1. REMOVE INTAKE VALVE GUIDE BUSH

(a) Heat the cylinder head to 80 to 100°C (176 to 212°F).

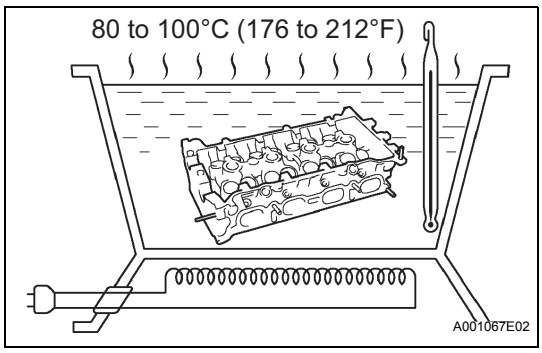

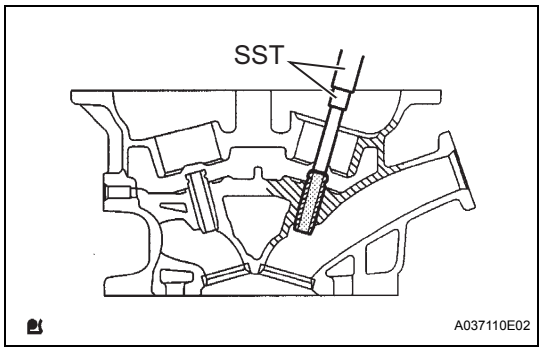

(b) Using SST and a hammer, tap out the guide bushing.
SST 09201-10000 (09201-01050), 09950-70010 (09951-07100)

2. REMOVE EXHAUST VALVE GUIDE BUSH

(a) Heat the cylinder head to 80 to 100°C (176 to 212°F).

(b) Using SST and a hammer, tap out the guide bushing.
SST 09201-10000 (09201-01050), 09950-70010 (09951-07100)

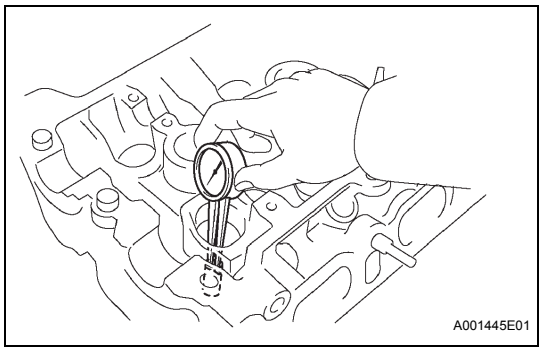

3. INSTALL INTAKE VALVE GUIDE BUSH

(a) Using a caliper gauge, measure the bushing bore diameter of the cylinder head.
Inside Diameter:
9.685 to 9.706 mm (0.3813 to 0.3821 in.)
If the bushing bore diameter of the cylinder head is greater than 9.706 mm (0.3821 in.), machine the bushing bore to the dimension of 9.735 to 9.755 mm (0.3833 to 0.3841 in.).

Bushing bore diameter mm (in.)	Bushing size
9.685 to 9.706 (0.3813 to 0.3821)	STD
9.735 to 9.755 (0.3833 to 0.3841)	O/S 0.05

(b) Heat the cylinder head to 80 to 100°C (176 to 212°F).

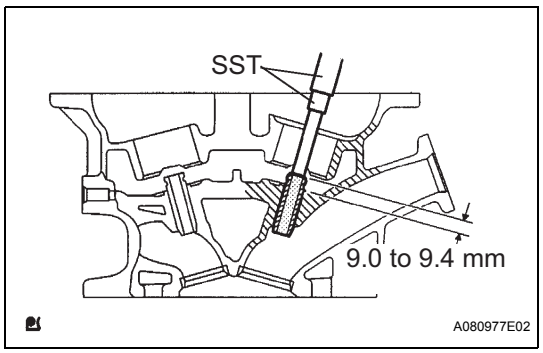

(c) Using SST and a hammer, tap a new guide bushing in to the specified protrusion height.
SST 09201-10000 (09201-01050), 09950-70010 (09951-07100)
Protrusion height:
9.0 to 9.4 mm (0.354 to 0.370 in.)

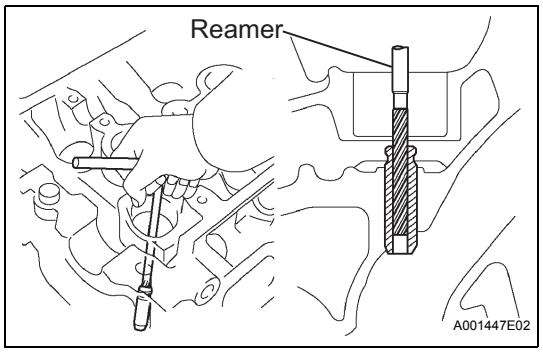

(d) Using a sharp 5 mm reamer, ream the guide bushing to obtain the standard oil clearance between the guide bushing and valve stem.
Standard oil clearance:
0.025 to 0.060 mm (0.0010 to 0.0024 in.)

4. INSTALL EXHAUST VALVE GUIDE BUSH

(a) Using a caliper gauge, measure the bushing bore diameter of the cylinder head.
Inside Diameter:
9.685 to 9.706 mm (0.3813 to 0.3821 in.)

If the bushing bore diameter of the cylinder head is greater than 9.706 mm (0.3821 in.), machine the bushing bore to the dimension of 9.735 to 9.755 mm (0.3833 to 0.3841 in.).

Bushing bore diameter mm (in.)	Bushing size
9.685 to 9.706 (0.3813 to 0.3821)	STD
9.735 to 9.755 (0.3833 to 0.3841)	O/S 0.05

(b) Heat the cylinder head to 80 to 100°C (176 to 212°F).

(c) Using SST and a hammer, tap a new guide bushing in to the specified protrusion height.
SST 09201-10000 (09201-01050), 09950-70010 (09951-07100)
Protrusion height:
9.0 to 9.4 mm (0.354 to 0.370 in.)

(d) Using a sharp 5 mm reamer, ream the guide bushing to obtain the standard oil clearance between the guide bushing and valve stem.
Standard oil clearance:
0.030 to 0.065 mm (0.0012 to 0.0026 in.)

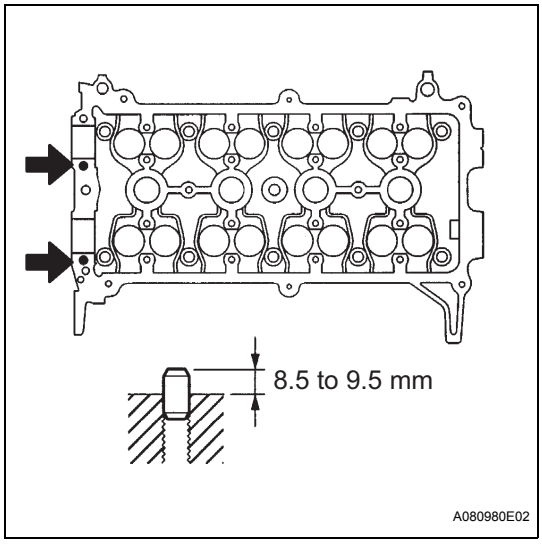

REASSEMBLY

1. INSTALL CAMSHAFT BEARING CAP SETTING RING PIN

(a) Using a plastic-faced hammer, tap a new ring pin in to the specified protrusion height.
Protrusion height:
8.5 to 9.5 mm (0.335 to 0.374 in.)

2. INSTALL STUD BOLT

(a) Using "Torx" socket wrenches E5 and E7, install the 7 stud bolts.
Torque:
Stud bolt A:
10 N*m (102 kgf*cm, 7.4 ft.*lbf)
Stud bolt B:
4.0 N*m (41 kgf*cm, 35 in.*lbf)
Stud bolt C:
10 N*m (102 kgf*cm, 7.4 ft.*lbf)
Stud bolt D:
9.0 N*m (92 kgf*cm, 80 in.*lbf)

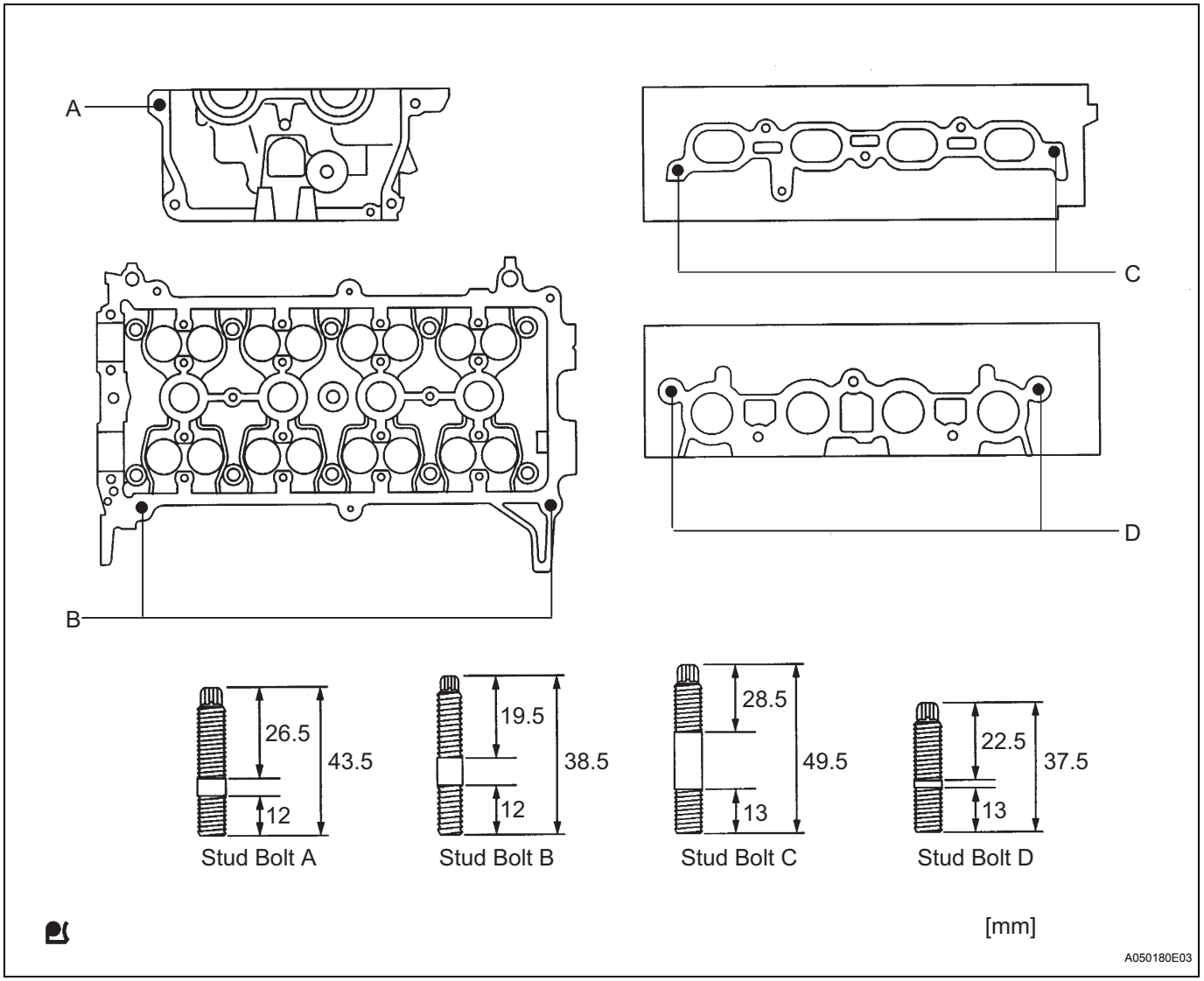

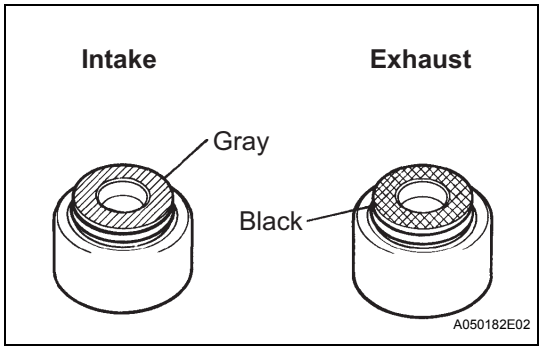

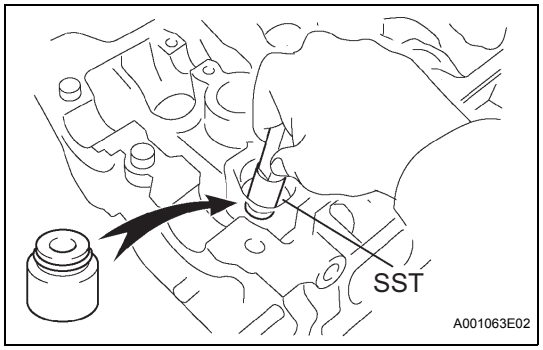

3. INSTALL VALVE STEM OIL SEAL

(a) Apply a light coat of engine oil to new valve stem oil seals.

NOTICE:

Installing the oil seals for the intake and exhaust onto the opposite valve guide bush as may cause failures.

HINT:

The intake valve oil seal is gray and the exhaust valve oil seal is black.

(b) Using SST, push in the oil seals.

SST 09201-41020

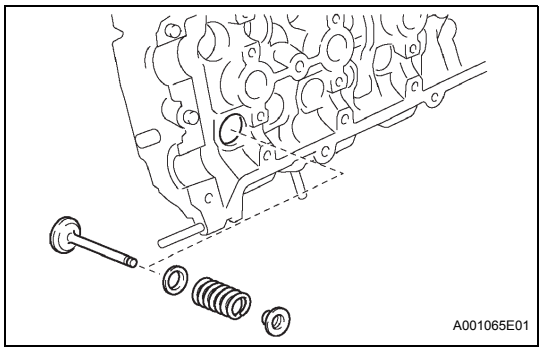

4. INSTALL INTAKE VALVE

(a) Install the valve, spring seat, valve spring, and spring retainer.
NOTICE:
Install the parts in their original locations in the original order.

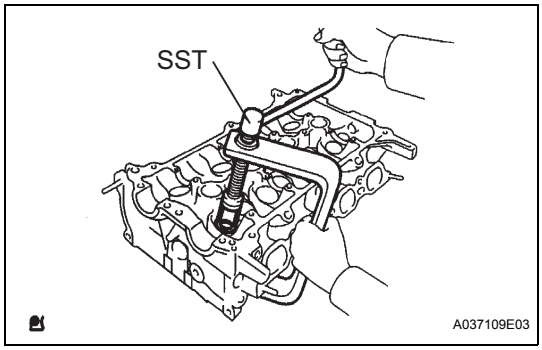

(b) Using SST, compress the valve spring and place the 2 retainer locks around the valve stem.
SST 09202-70020 (09202-00010)

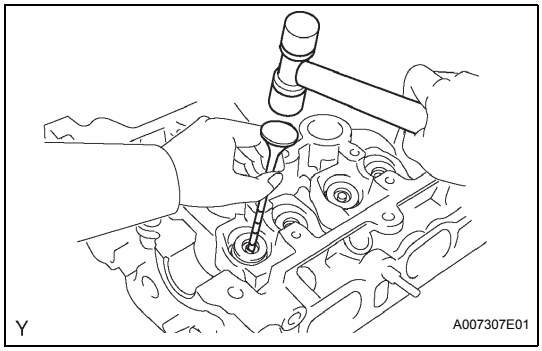

(c) Using a plastic-faced hammer and the valve stem (not in use) with its tip wrapped in tape, gently tap the valve stem tip to ensure a proper fit.
NOTICE:
Do not damage the valve stem tip.

5. INSTALL EXHAUST VALVE

(a) Install the valve, spring seat, valve spring, and spring retainer.
(b) Using SST, compress the valve spring and place the 2 retainer locks around the valve stem.
SST 09202-70020 (09202-00010)
(c) Using a plastic-faced hammer and the valve stem (not in use) with its tip wrapped in tape, lightly tap the valve stem tip to ensure a proper fit.
NOTICE:
Do not damage the valve stem tip.

6. INSTALL OIL CONTROL VALVE FILTER

(a) Install the oil control valve filter.

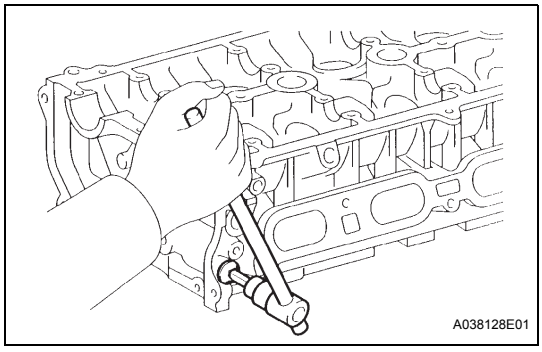

7. INSTALL WITH HEAD TAPER SCREW PLUG NO. 2

(a) Using an 8 mm hexagon wrench, install the taper screw plug and a new gasket.
Torque: 30 N*m (306 kgf*cm, 22 ft.*lbf)

8. INSTALL VALVE LIFTER

(a) Apply a light coat of engine oil to the 16 valve lifters.
(b) Install the 16 valve lifters.
(c) Check that the valve lifters rotate smoothly by hand.

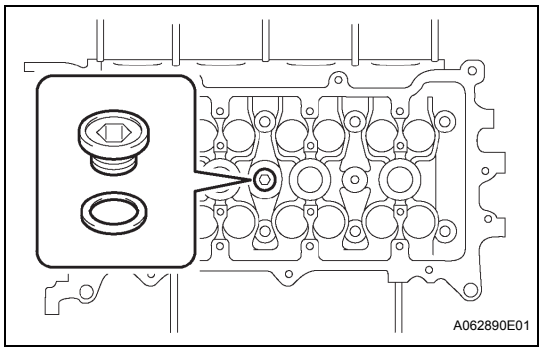

9. INSTALL WITH HEAD TAPER SCREW PLUG NO. 1

(a) Using a 10 mm socket hexagon wrench, install the taper screw plug with a new gasket.
Torque: 44 N*m (449 kgf*cm, 33 ft.*lbf)

INSTALLATION

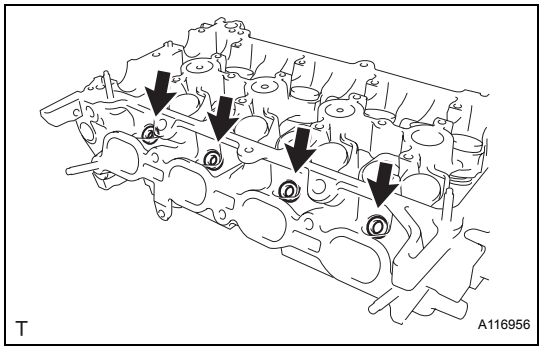

1. INSTALL INJECTOR VIBRATION INSULATOR

(a) Install 4 new injector vibration insulators onto the cylinder head.

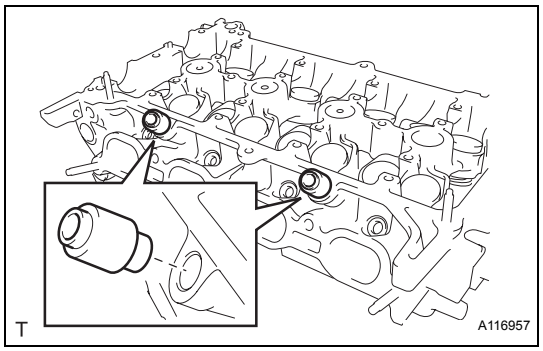

2. INSTALL DELIVERY PIPE NO. 1 SPACER

(a) Install the 2 delivery pipe No. 1 spacers onto the cylinder head.
NOTICE:
Install the delivery pipe No. 1 spacer in the correct direction.

3. INSTALL FUEL INJECTOR ASSEMBLY (See page FU-17)

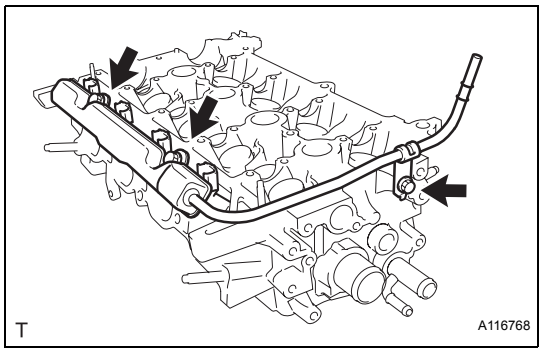

4. INSTALL FUEL DELIVERY PIPE SUB-ASSEMBLY

(a) Provisionally install the fuel delivery pipe sub-assembly with the 4 fuel injectors using the 3 bolts.
NOTICE:
- **Do not drop the fuel injectors when installing the fuel delivery pipe sub-assembly.**
- **Check that the fuel injectors rotate smoothly after installing the fuel delivery pipe sub-assembly.**

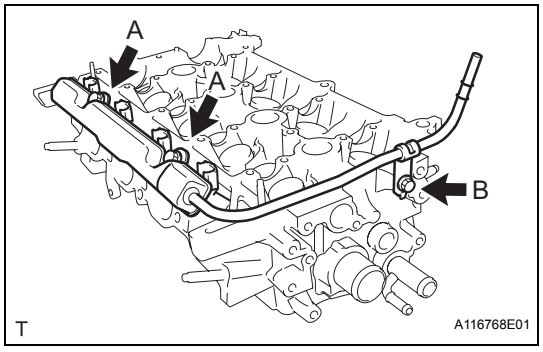

(b) Tighten the 3 bolts to the specified torque.
Torque: 19 N*m (194 kgf*cm, 14 ft.*lbf) for bolt A
9.0 N*m (92 kgf*cm, 80 in.*lbf) for bolt B

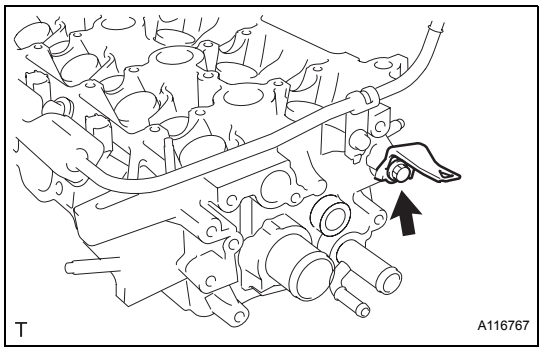

5. INSTALL HARNESS BRACKET

(a) Install the harness bracket with the bolt.
Torque: 13 N*m (131 kgf*cm, 9.5 ft.*lbf)

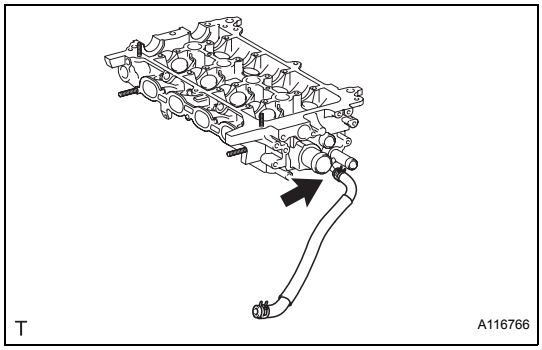

6. INSTALL WATER BY-PASS HOSE

(a) Install the water by-pass hose.

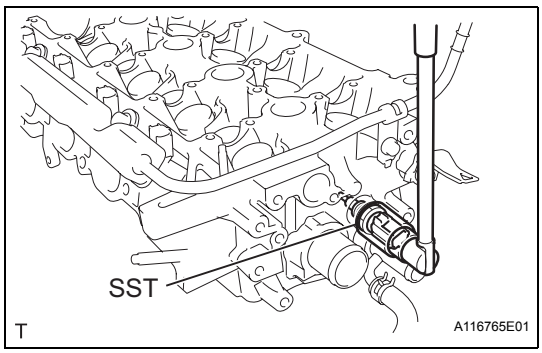

7. INSTALL ENGINE COOLANT TEMPERATURE SENSOR

(a) Provisionally install the engine coolant temperature sensor through a new gasket.
(b) Using SST, tighten the engine coolant temperature sensor.
SST 09817-33190
Torque: 20 N*m (204 kgf*cm, 15 ft.*lbf)

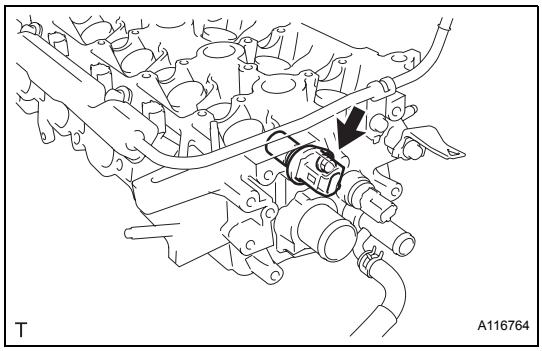

8. INSTALL CAMSHAFT POSITION SENSOR

(a) Apply a light coat of engine oil to the O-ring on the camshaft position sensor.
(b) Install the camshaft position sensor with the bolt.
Torque: 8.0 N*m (82 kgf*cm, 71 in.*lbf)
NOTICE:
Do not twist the O-ring.

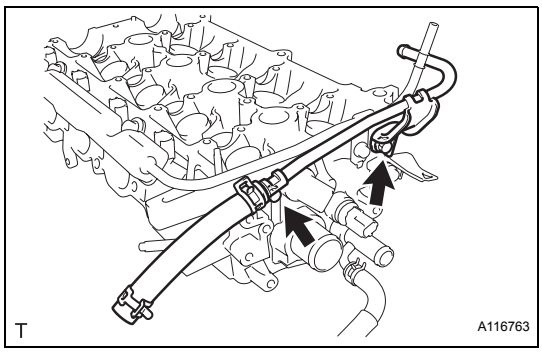

9. INSTALL BOOSTER VACUUM TUBE

(a) Install the booster vacuum tube with the 2 bolts.
Torque: 9.0 N*m (92 kgf*cm, 80 in.*lbf)

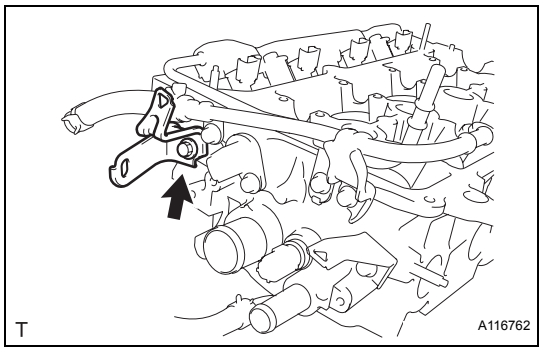

10. INSTALL HARNESS BRACKET

(a) Install the harness bracket with the bolt.
Torque: 13 N*m (131 kgf*cm, 9.5 ft.*lbf)

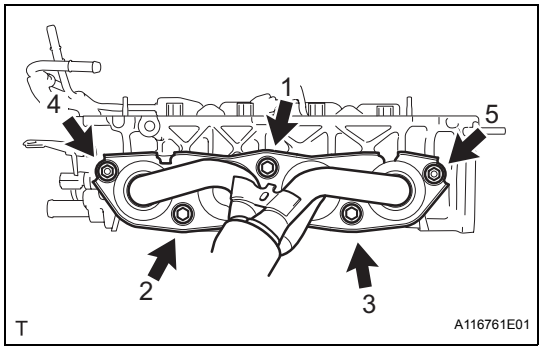

11. INSTALL EXHAUST MANIFOLD

(a) Using several steps, install a new exhaust manifold gasket and the exhaust manifold with the 3 bolts and 2 nuts in the sequence shown in the illustration.
Torque: 27 N*m (275 kgf*cm, 20 ft.*lbf)

EM

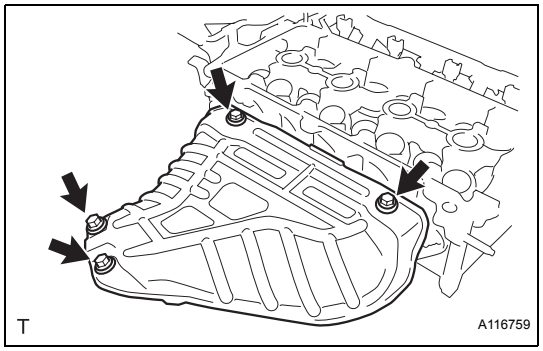

12. INSTALL EXHAUST MANIFOLD HEAT INSULATOR NO. 1

(a) Install exhaust manifold heat insulator No. 1 with the 4 bolts.
Torque: 8.0 N*m (82 kgf*cm, 71 in.*lbf)

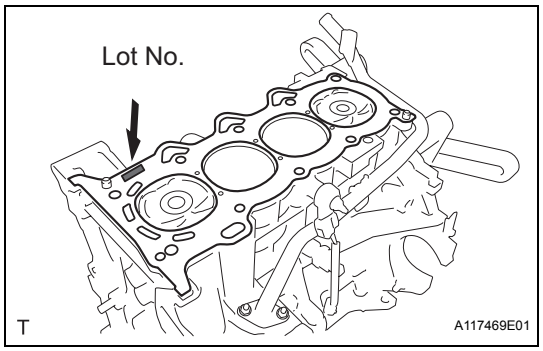

13. INSTALL CYLINDER HEAD GASKET

(a) Place a new cylinder head gasket on the cylinder block with the Lot No. stamp facing upward.
NOTICE:
- **Remove any oil from the contact surfaces.**
- **Check the mounting orientation of the cylinder head gasket.**
- **Place the cylinder head on the cylinder head gently in order not to damage the gasket.**

14. INSTALL CYLINDER HEAD SUB-ASSEMBLY

HINT:
The cylinder head bolts are tightened in 2 successive steps.

(a) Apply a light coat of engine oil to the threads of the cylinder head bolts.

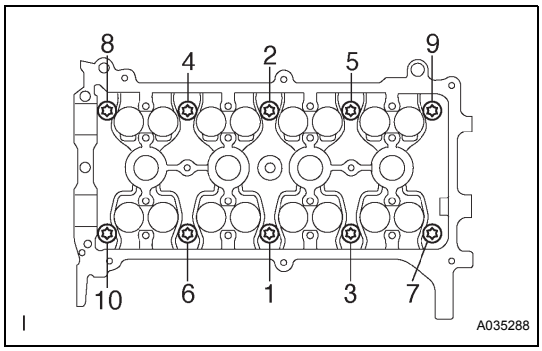

(b) Using several steps, install and tighten the 10 cylinder head bolts and plate washers uniformly with an 8 mm bi-hexagon wrench, in the sequence shown in the illustration.
Torque: 29 N*m (300 kgf*cm, 22 ft.*lbf)
(c) Mark the front of the cylinder head bolt with paint.

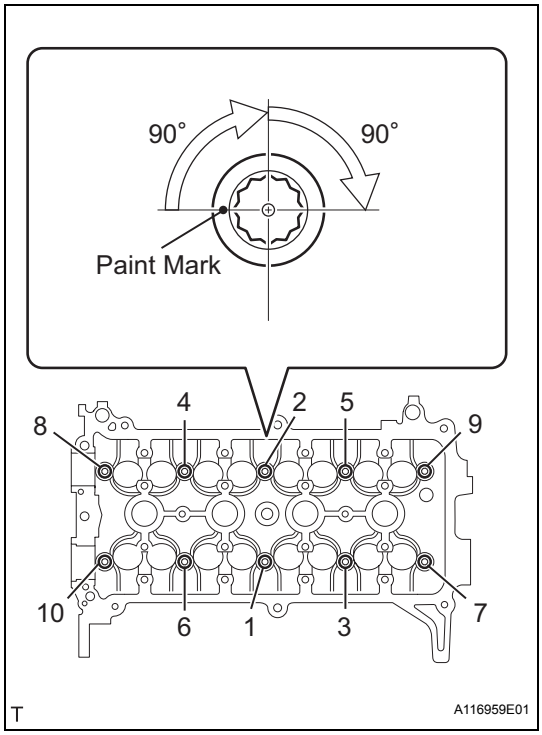

(d) Retighten the cylinder head bolts 90° and then an additional by 90° as shown in the illustration.
(e) Check that the paint mark is now at a 180° angle from the front.

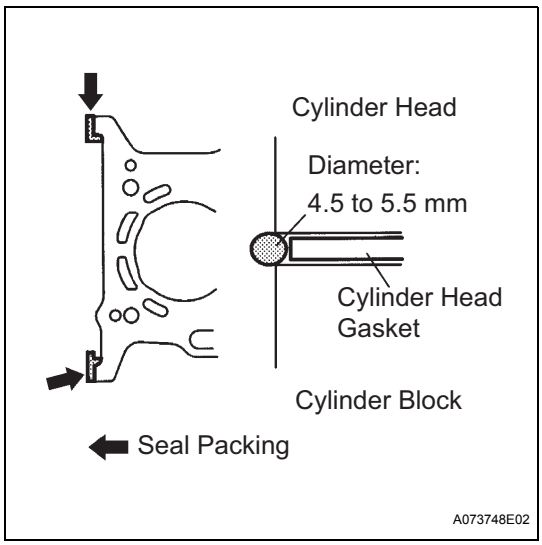

(f) Apply a continuous bead of seal packing (Diameter 4.5 to 5.5 mm (0.177 to 0.217 in.)) as shown in the illustration.
Seal Packing:
Toyota Genuine Seal Packing Black, Three Bond 1207B or Equivalent
NOTICE:
- **Remove any oil from the contact surfaces.**
- **Install the oil pump assembly within 3 minutes and tighten the bolts within 15 minutes of applying the seal packing.**

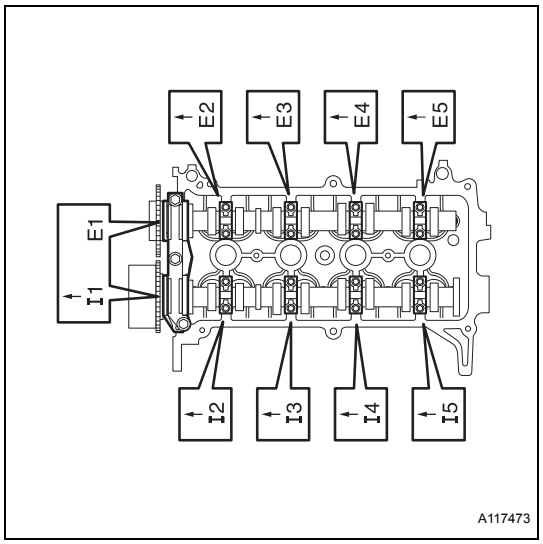

15. **INSTALL CAMSHAFT**
    (a) Examine the front marks and numbers and check that the sequence is as shown in the illustration. Then provisionally tighten the 19 bolts.

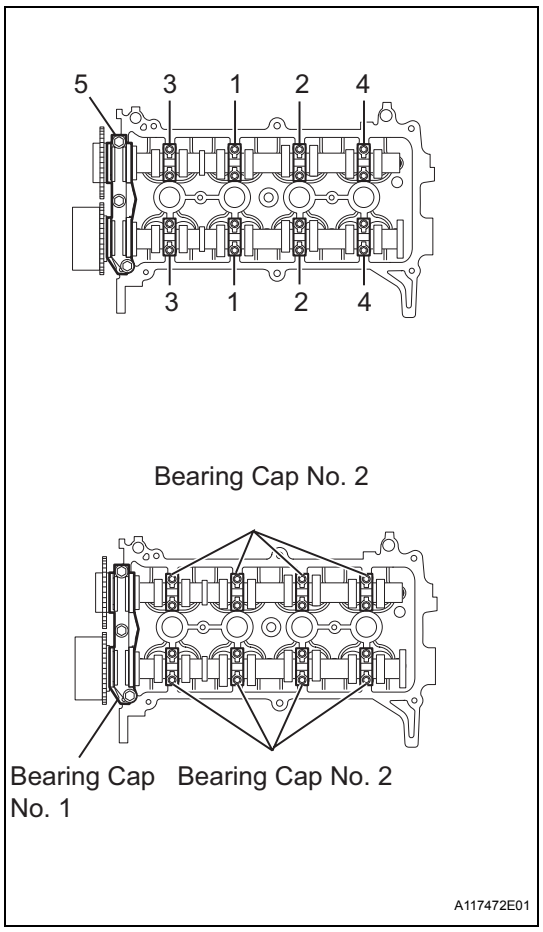

    (b) Uniformly tighten the bolts in several steps in the sequence shown in the illustration and install camshaft bearing cap No. 1 and camshaft bearing cap No. 2.
    Torque: Camshaft bearing cap No. 1
    23 N*m (235 kgf*cm, 17 ft.*lbf)
    Camshaft bearing cap No. 2
    13 N*m (129 kgf*cm, 9.4 ft.*lbf)
    NOTICE:
    Tighten each bolt uniformly while keeping the camshaft level.

16. **INSTALL CHAIN SUB-ASSEMBLY (See page EM-36)**
17. **INSTALL CHAIN TENSIONER SLIPPER (See page EM-38)**
18. **INSTALL CHAIN TENSIONER ASSEMBLY NO. 1 (See page EM-38)**
19. **INSTALL OIL PUMP SEAL (See page LU-21)**
20. **INSTALL OIL PUMP ASSEMBLY (See page LU-22)**
21. **INSTALL TRANSVERSE ENGINE ENGINE MOUNTING BRACKET (See page LU-26)**
22. **INSTALL WATER PUMP ASSEMBLY (See page CO-16)**
23. **INSTALL WATER PUMP PULLEY (See page CO-16)**
24. **INSTALL CAMSHAFT TIMING OIL CONTROL VALVE ASSEMBLY (See page ES-397)**
25. **INSTALL CRANKSHAFT POSITION SENSOR (See page ES-403)**
26. **INSTALL CRANKSHAFT DAMPER SUB-ASSEMBLY (See page LU-26)**
27. **INSTALL ENGINE MOUNTING INSULATOR SUB-ASSEMBLY RH (See page LU-26)**

EM

28. **INSTALL CYLINDER HEAD COVER SUB-ASSEMBLY (See page FU-19)**
29. **INSTALL VENTILATION HOSE NO. 2 (See page FU-20)**
30. **INSTALL VENTILATION HOSE (See page FU-20)**
31. **INSTALL IGNITION COIL NO. 1 (See page IG-9)**
32. **INSTALL GENERATOR ASSEMBLY (See page CH-17)**
33. **INSTALL FAN AND GENERATOR V BELT (See page EM-7)**
34. **ADJUST FAN AND GENERATOR V BELT (See page EM-7)**

EM

35. **INSPECT FAN AND GENERATOR V BELT (See page EM-8)**
36. **INSTALL MANIFOLD SUPPORT BRACKET**
    (a) Install the manifold support bracket with the 3 bolts.
    Torque: 44 N*m (449 kgf*cm, 33 ft.*lbf)

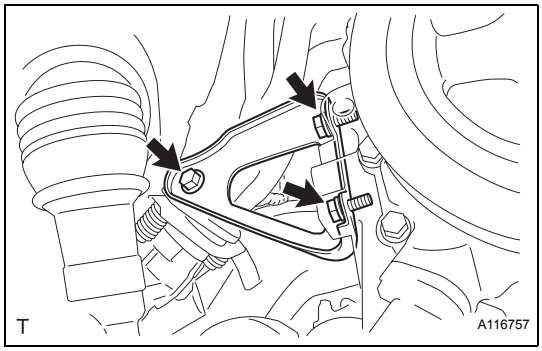

37. **INSTALL EXHAUST PIPE ASSEMBLY FRONT**
    (a) Using vernier calipers, measure the free length of the compression spring.
    Minimum length:
    40.5 mm (1.594 in.)
    If the length is not as specified, replace the compression spring.

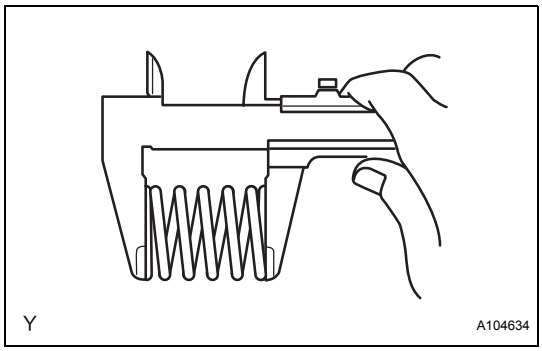

    (b) Using a plastic hammer and a wooden block, tap in a new exhaust pipe gasket until its surface is flush with the exhaust manifold.
    NOTICE:
    - **Install the exhaust pipe gasket in the correct direction.**
    - **Do not damage the outer surface of the exhaust pipe gasket.**
    - **Do not reuse the exhaust pipe gasket.**
    - **Do not push in the gasket with the exhaust pipe when installing.**

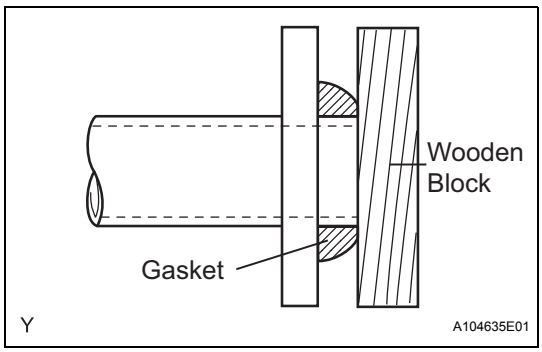

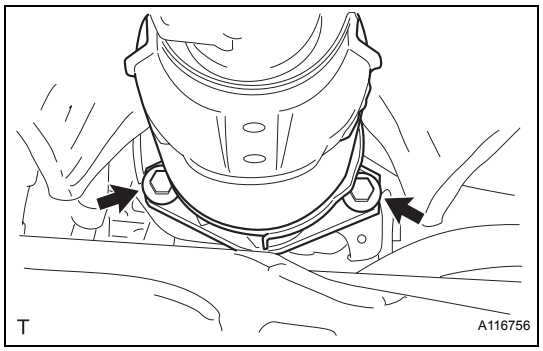

(c) Install the exhaust front pipe assembly with the 2 compression springs and 2 bolts.
Torque: 43 N*m (439 kgf*cm, 32 ft.*lbf)

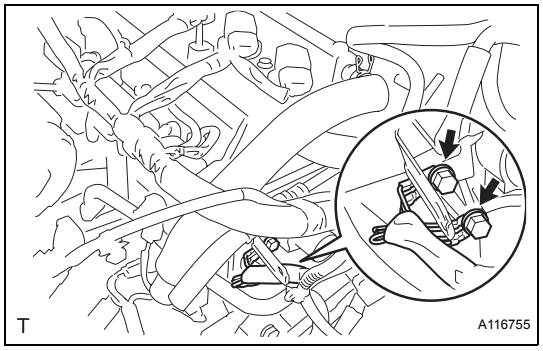

38. CONNECT WIRE HARNESS

(a) Connect the wire harness with the 2 bolts.
Torque: 13 N*m (133 kgf*cm, 10 ft.*lbf)

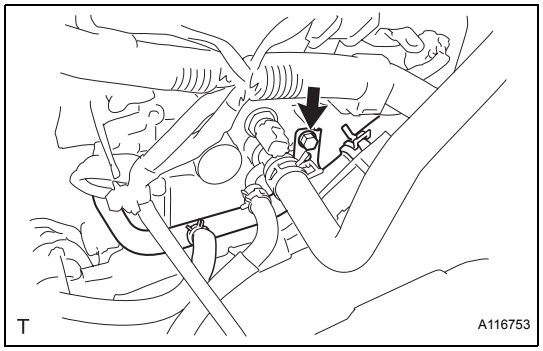

39. INSTALL WATER BY-PASS HOSE NO. 1

(a) Install water by-pass pipe No. 1 with the bolt.
Torque: 9.0 N*m (92 kgf*cm, 80 in.*lbf)

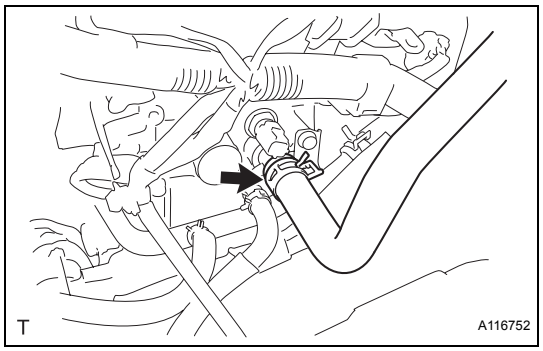

40. CONNECT HEATER WATER INLET HOSE A

(a) Connect heater water inlet hose A.

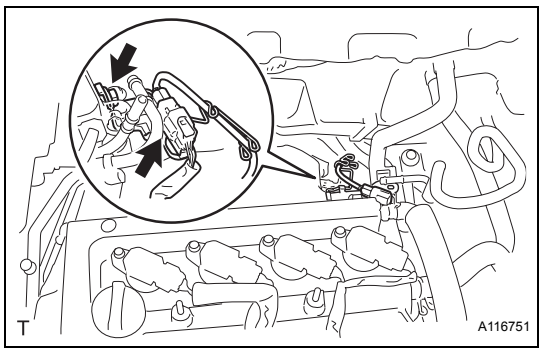

41. CONNECT HEATED OXYGEN SENSOR CONNECTOR

(a) Connect the heated oxygen sensor connector.
(b) Install the sensor bracket with the bolt.

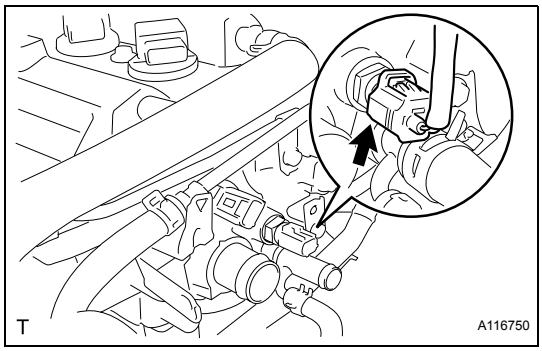

42. CONNECT ENGINE COOLANT TEMPERATURE SENSOR CONNECTOR

(a) Connect the engine coolant temperature sensor connector.

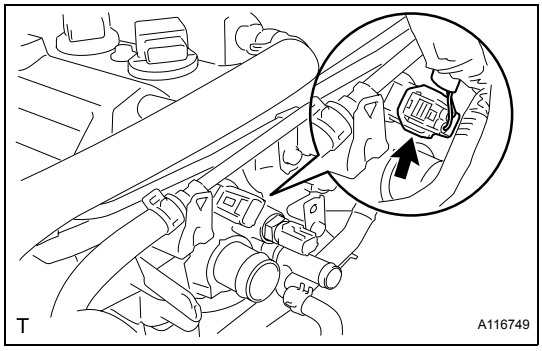

43. CONNECT CAMSHAFT POSITION SENSOR CONNECTOR

(a) Connect the camshaft position sensor connector.

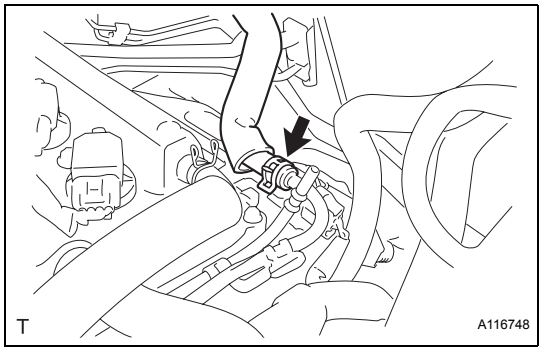

44. CONNECT BOOSTER VACUUM TUBE

(a) Connect the booster vacuum tube.

45. CONNECT FUEL TUBE SUB-ASSEMBLY (See page FU-18)

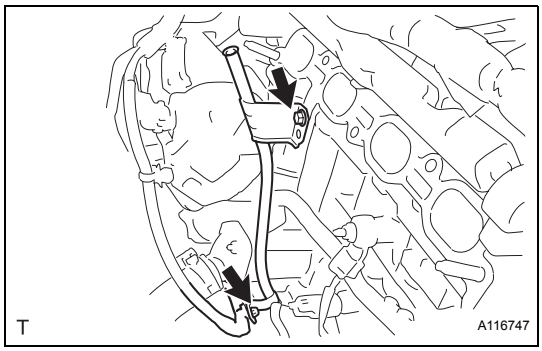

46. INSTALL OIL LEVEL GAUGE GUIDE

(a) Apply engine oil to a new O-ring.

(b) Install the oil level gauge guide with the bolt through a new O-ring.
Torque: 9.0 N*m (92 kgf*cm, 80 in.*lbf)

(c) Install the wire harness.

47. INSTALL INTAKE MANIFOLD

(a) Install a new gasket onto the intake manifold.

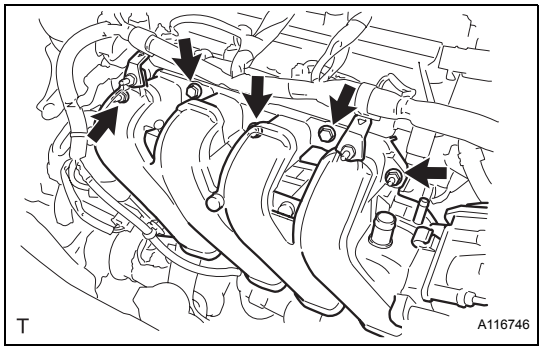

(b) Install the intake manifold with the 3 bolts and 2 nuts.
Torque: 30 N*m (306 kgf*cm, 22 ft.*lbf)

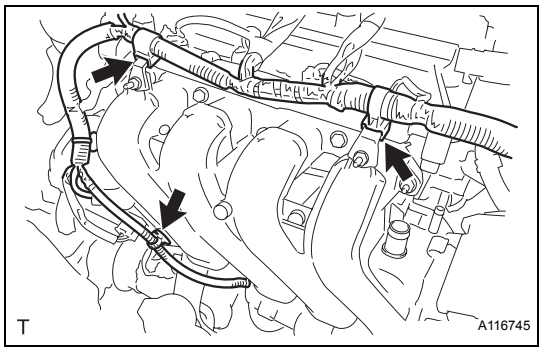

(c) Connect the 3 wire harness clamps shown in the illustration.

48. INSTALL OIL LEVEL GAUGE SUB-ASSEMBLY

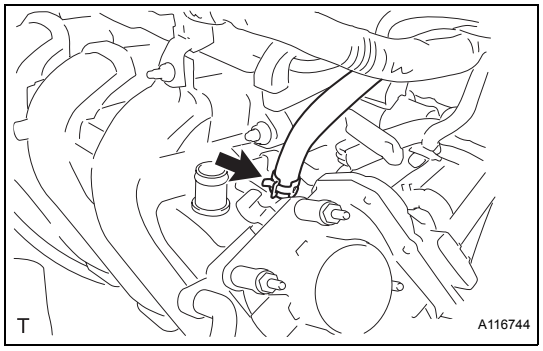

49. CONNECT UNION TO CONNECTOR TUBE HOSE

(a) Connect the union to connector tube hose.

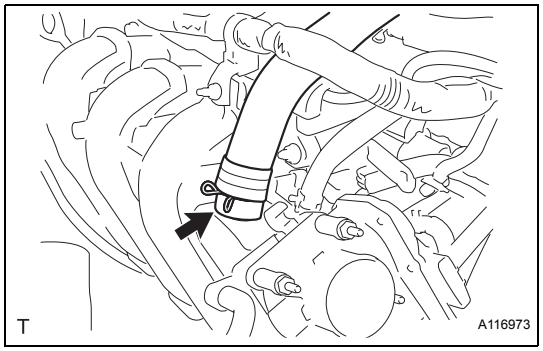

50. CONNECT VENTILATION HOSE

(a) Connect the ventilation hose.

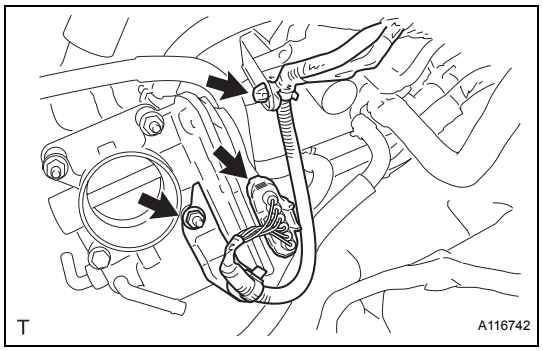

51. CONNECT THROTTLE WITH MOTOR BODY CONNECTOR

(a) Install the throttle with motor body connector bracket with the nut.
Torque: 9.0 N*m (92 kgf*cm, 80 in.*lbf)

(b) Connect the throttle with motor body connector.

(c) Connect the wire harness clamp.

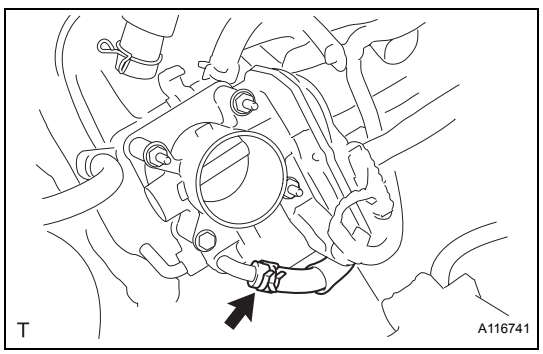

52. CONNECT WATER BY-PASS HOSE

(a) Connect the water by-pass hose.

EM

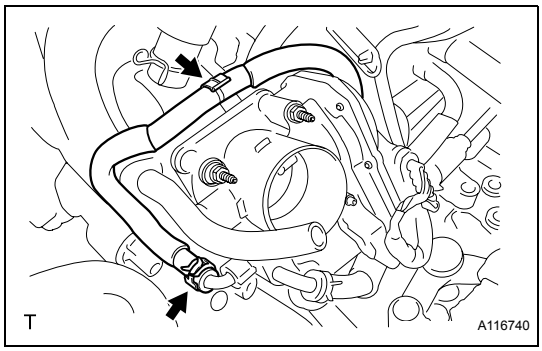

53. CONNECT WATER BY-PASS HOSE NO. 2

(a) Connect water by-pass hose No. 2.

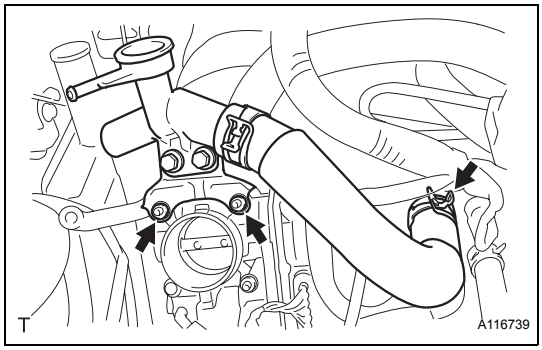

54. INSTALL WATER FILLER SUB-ASSEMBLY

(a) Install the water filler sub-assembly with the 2 nuts.
Torque: 7.5 N*m (76 kgf*cm, 66 in.*lbf)

(b) Connect radiator hose No. 1 to the cylinder head.

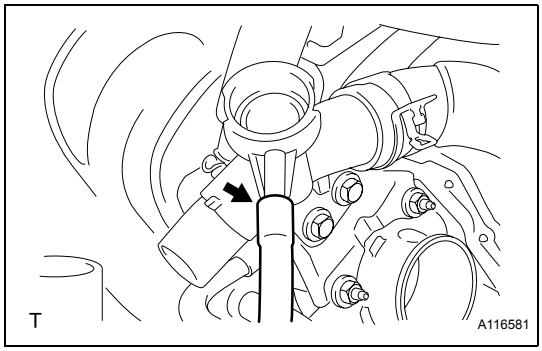

55. CONNECT RESERVE TANK HOSE

(a) Connect the reserve tank hose.

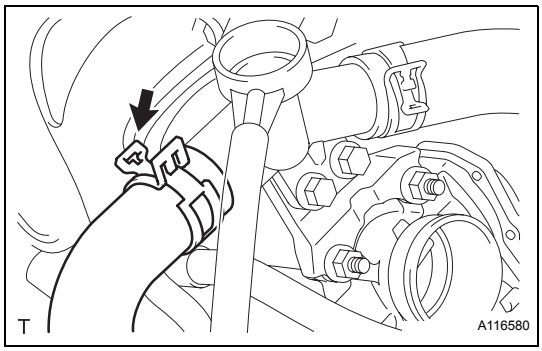

56. CONNECT RADIATOR HOSE NO. 3

(a) Connect radiator hose No. 3.

57. INSTALL AIR CLEANER CAP SUB-ASSEMBLY WITH AIR CLEANER HOSE NO. 1 (See page ES-414)

58. INSTALL BATTERY TRAY

59. INSTALL BATTERY

60. ADD ENGINE OIL

61. ADD ENGINE COOLANT (See page CO-8)

62. CHECK ENGINE OIL LEVEL (See page LU-1)

63. CHECK FOR ENGINE OIL LEAKAGE

64. CHECK FOR ENGINE COOLANT LEAKAGE (See page CO-1)

65. CHECK FOR EXHAUST GAS LEAKAGE

66. CHECK FOR FUEL LEAKAGE (See page FU-7)

67. INSTALL CYLINDER HEAD COVER NO. 2 (See page IG-10)

68. INSTALL ENGINE UNDER COVER RH
69. INSTALL FRONT WHEEL RH
70. INSTALL COWL TOP PANEL OUTER (for Hatchback) (See page EM-146)
71. INSTALL COWL TOP PANEL OUTER (for Sedan) (See page ES-434)
72. INSTALL COWL TO REGISTER DUCT SUB-ASSEMBLY NO. 2 (for Hatchback) (See page EM-147)
73. INSTALL FRONT AIR SHUTTER SEAL RH (for Sedan) (See page ES-435)
74. INSTALL FRONT WIPER MOTOR AND LINK (for Hatchback) (See page WW-21)
75. INSTALL FRONT WIPER MOTOR AND LINK (for Sedan) (See page WW-12)
76. INSTALL COWL TOP VENTILATOR LOUVER LH (for Hatchback) (See page WW-21)
77. INSTALL COWL TOP VENTILATOR LOUVER SUB-ASSEMBLY (for Hatchback) (See page WW-21)
78. INSTALL COWL TOP VENTILATOR LOUVER SUB-ASSEMBLY (for Sedan) (See page WW-12)
79. INSTALL COWL SIDE VENTILATOR SUB-ASSEMBLY LH (for Sedan) (See page WW-13)
80. INSTALL COWL SIDE VENTILATOR SUB-ASSEMBLY RH (for Sedan) (See page WW-13)
81. INSTALL HOOD TO COWL TOP SEAL (for Hatchback) (See page WW-22)
82. INSTALL FRONT WIPER ARM AND BLADE ASSEMBLY LH (for Hatchback) (See page WW-22)
83. INSTALL FRONT WIPER ARM AND BLADE ASSEMBLY LH (for Sedan) (See page WW-13)
84. INSTALL FRONT WIPER ARM AND BLADE ASSEMBLY RH (for Hatchback) (See page WW-23)
85. INSTALL FRONT WIPER ARM AND BLADE ASSEMBLY RH (for Sedan) (See page WW-14)
86. INSTALL FRONT WIPER ARM HEAD CAP (for Hatchback) (See page WW-23)
87. INSTALL FRONT WIPER ARM HEAD CAP (for Sedan) (See page WW-15)

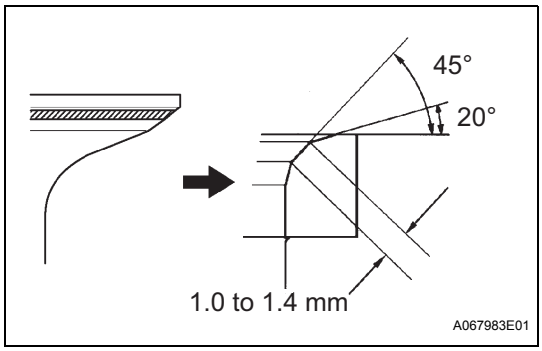

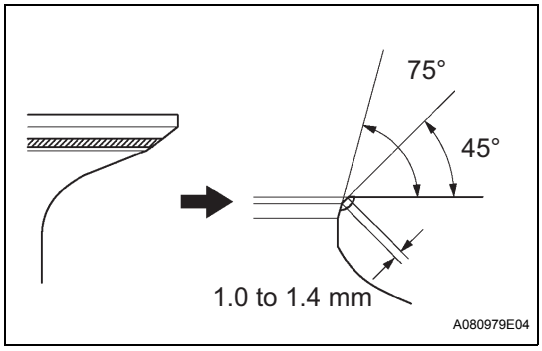

REPAIR

1. REPAIR INTAKE VALVE

(a) Repair the intake valve seat.
NOTICE:
Releasing the seat-cutter pressure gradually helps to make the valve seat face smoother.

(b) If the seating is too high on the valve face, use 20° and 45° cutters to correct the seat.

(c) If the seating is too low on the valve face, use 75° and 45° cutters to correct the seat.

(d) Hand-lap the valve and valve seat with an abrasive compound.

(e) Recheck the valve seating position.

2. REPAIR EXHAUST VALVE
NOTICE:
Releasing the seat-cutter pressure gradually helps to make the valve seat face smoother.

(a) If the seating is too high on the valve face, use 20° and 45° cutters to correct the seat.

(b) If the seating is too low on the valve face, use 75° and 45° cutters to correct the seat.

(c) Hand-lap the valve and valve seat with an abrasive compound.

(d) Recheck the valve seating position.

EM

ENGINE ASSEMBLY

COMPONENTS

for Hatchback:

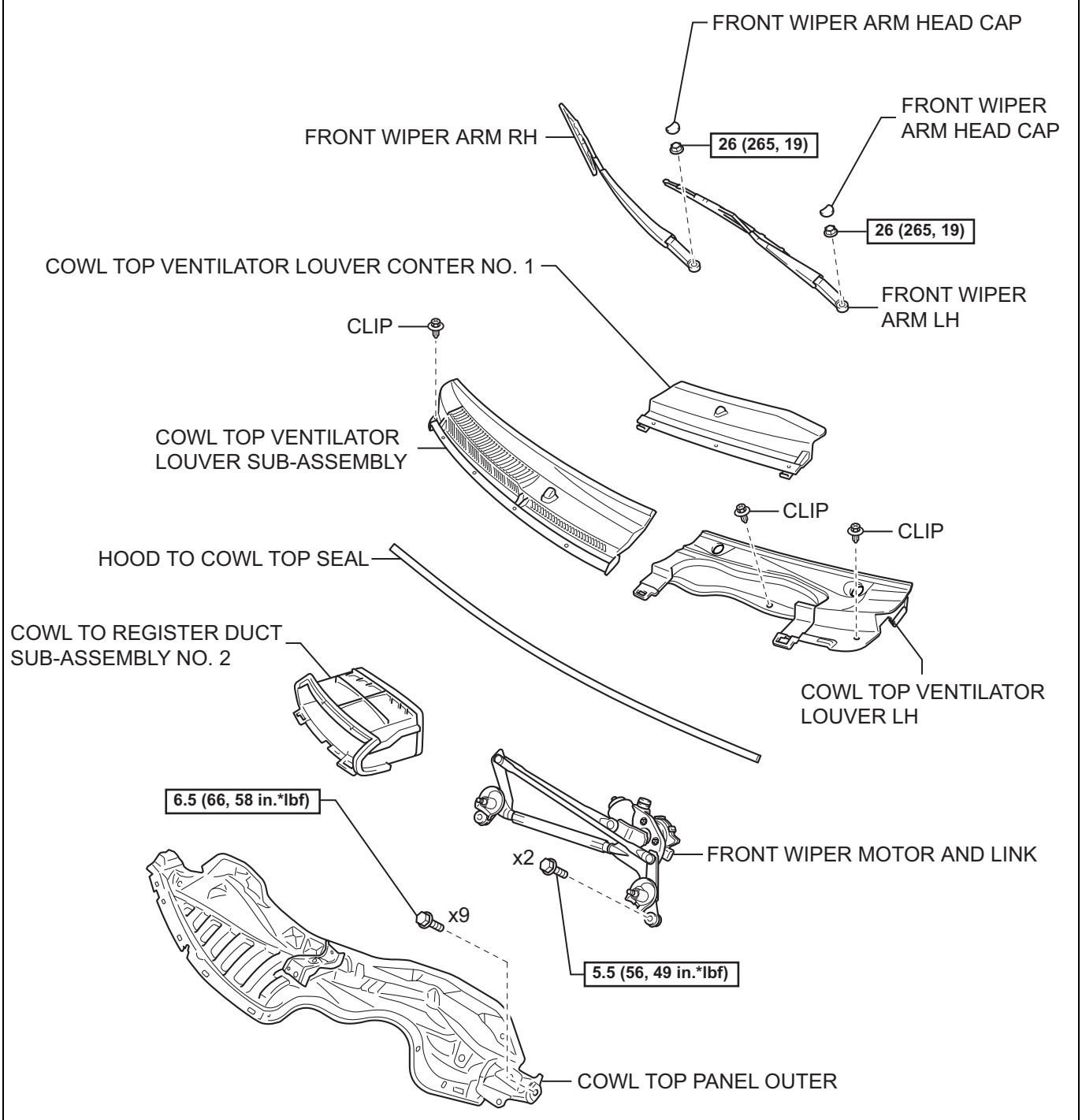

N*m (kgf*cm, ft*lbf) : Specified torque

Y

A118803E11

for Sedan:

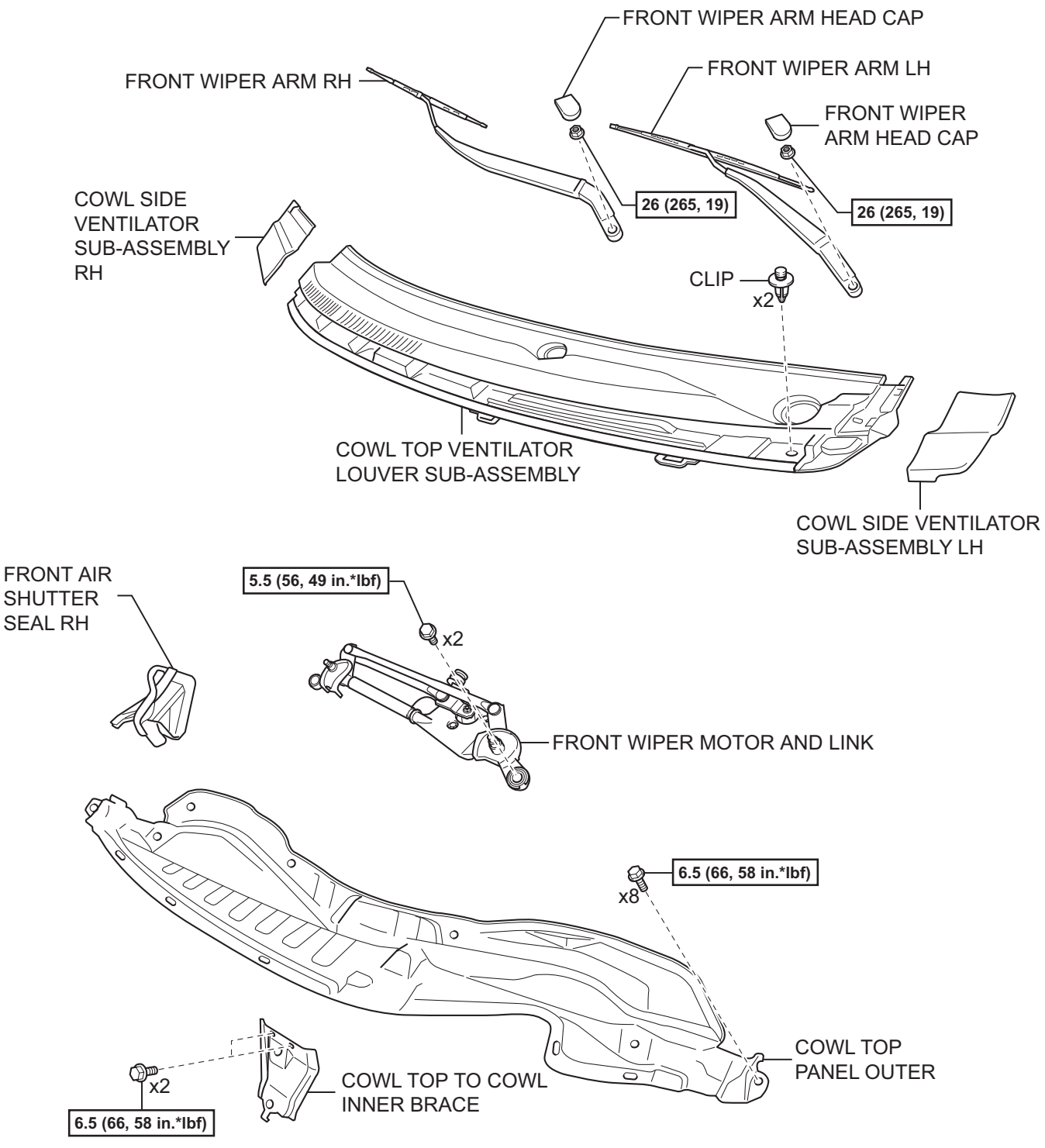

N*m (kgf*cm, ft*lbf) : Specified torque

Y

A133320E11

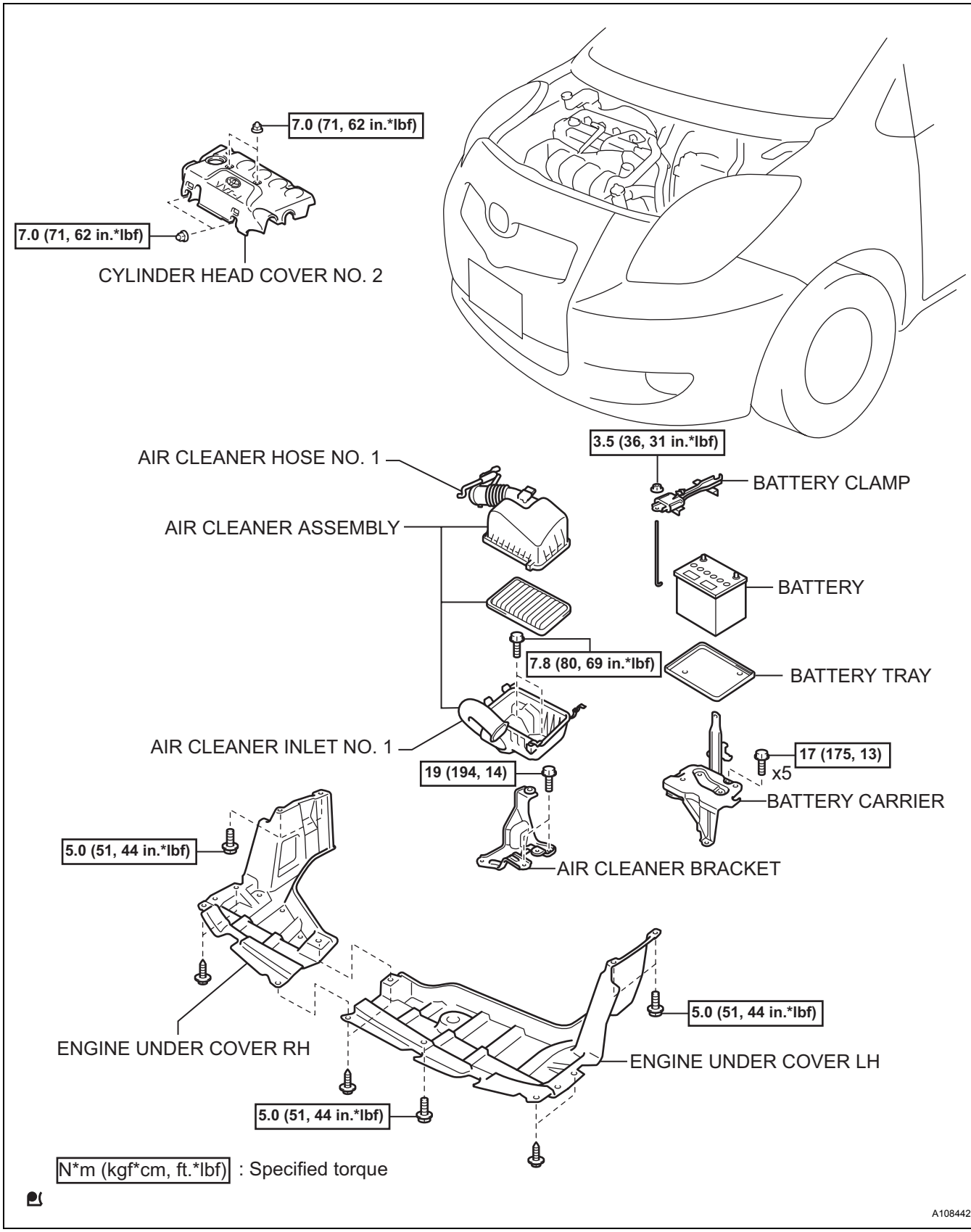
7.0 (71, 62 in.*lbf)
7.0 (71, 62 in.*lbf)
CYLINDER HEAD COVER NO. 2
3.5 (36, 31 in.*lbf)
BATTERY CLAMP
AIR CLEANER HOSE NO. 1
AIR CLEANER ASSEMBLY
BATTERY
7.8 (80, 69 in.*lbf)
BATTERY TRAY
AIR CLEANER INLET NO. 1
19 (194, 14)
17 (175, 13)
x5
BATTERY CARRIER
AIR CLEANER BRACKET
5.0 (51, 44 in.*lbf)
5.0 (51, 44 in.*lbf)
ENGINE UNDER COVER RH
ENGINE UNDER COVER LH
5.0 (51, 44 in.*lbf)
N*m (kgf*cm, ft.*lbf) : Specified torque
A108442E08

EM

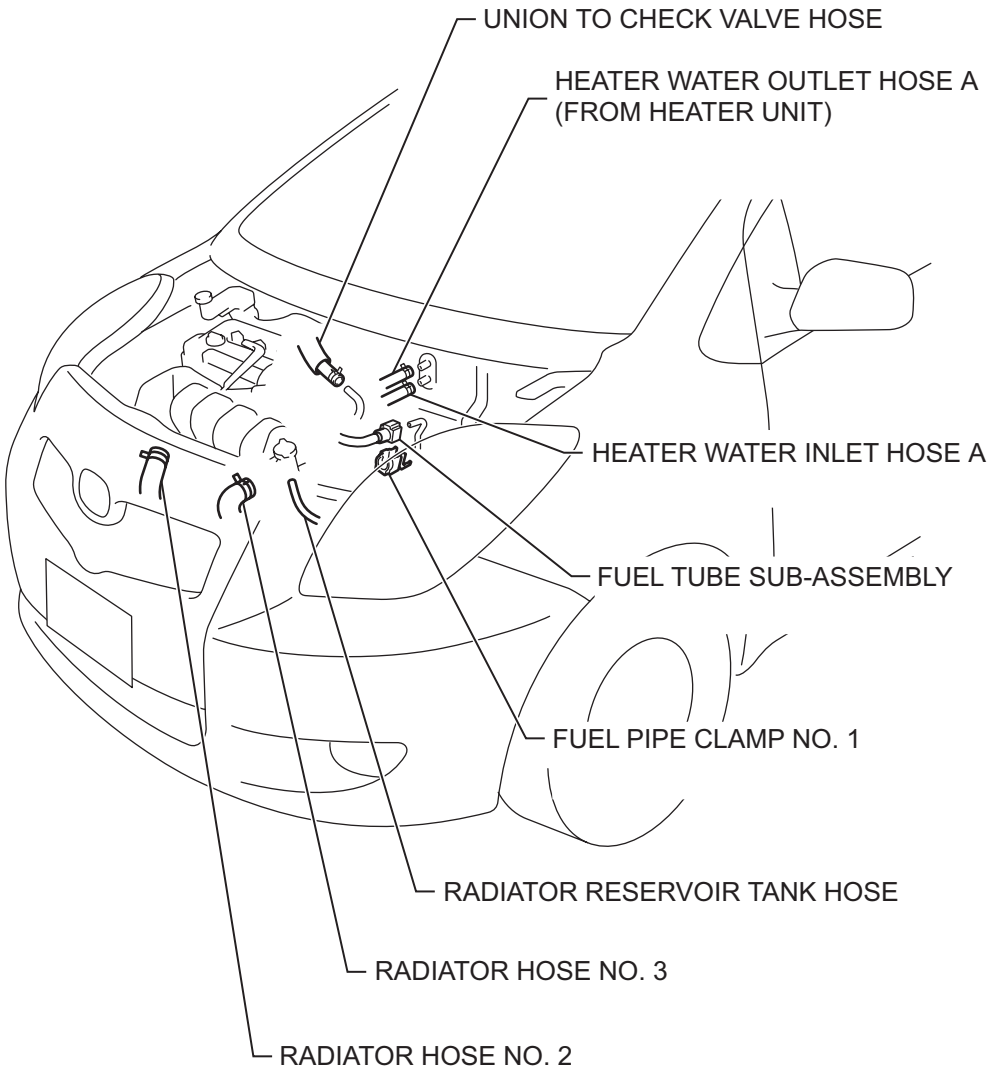

A108443E08

for Hatchback:

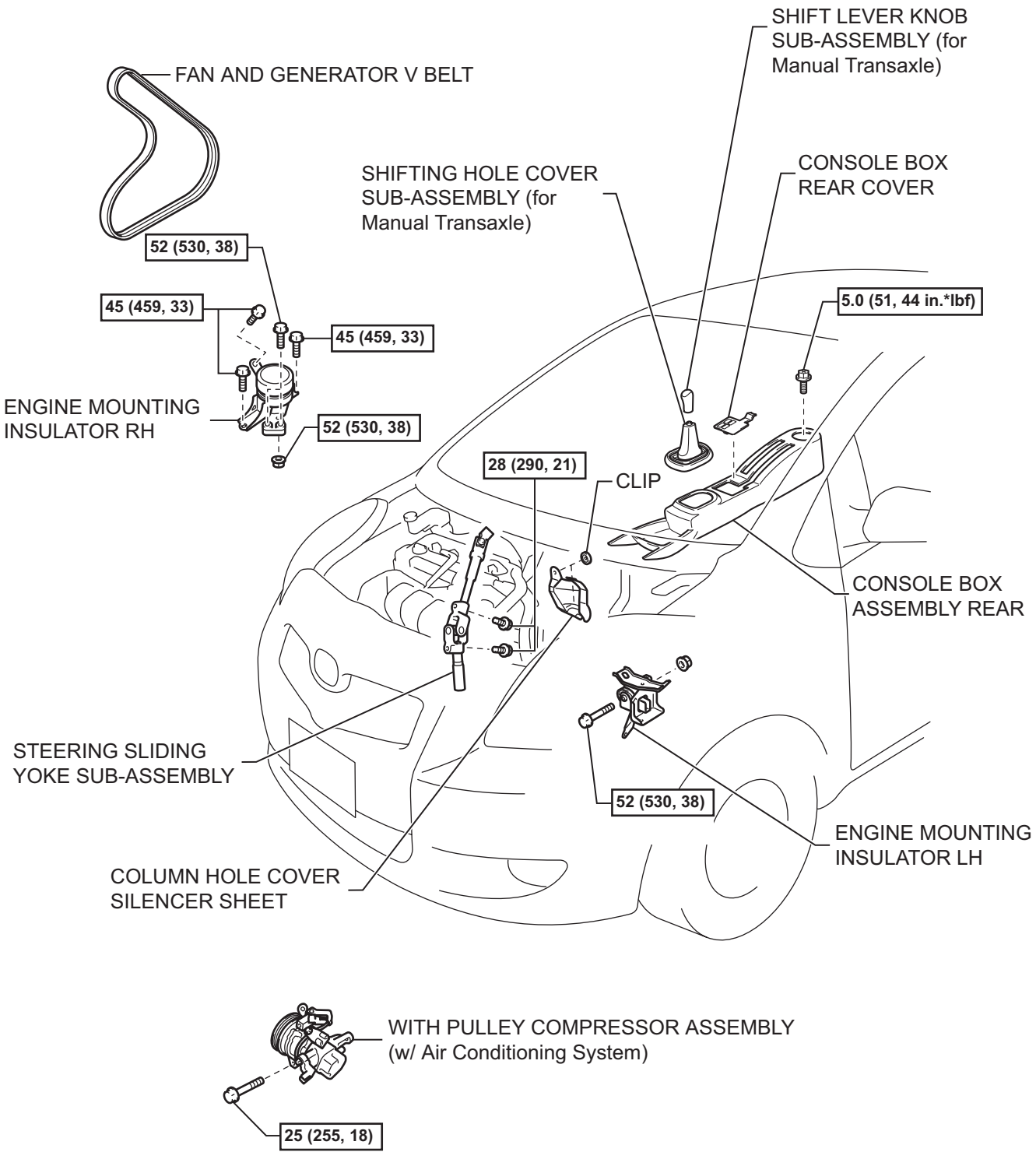

N*m (kgf*cm, ft.*lbf) : Specified torque

A108444E13

EM

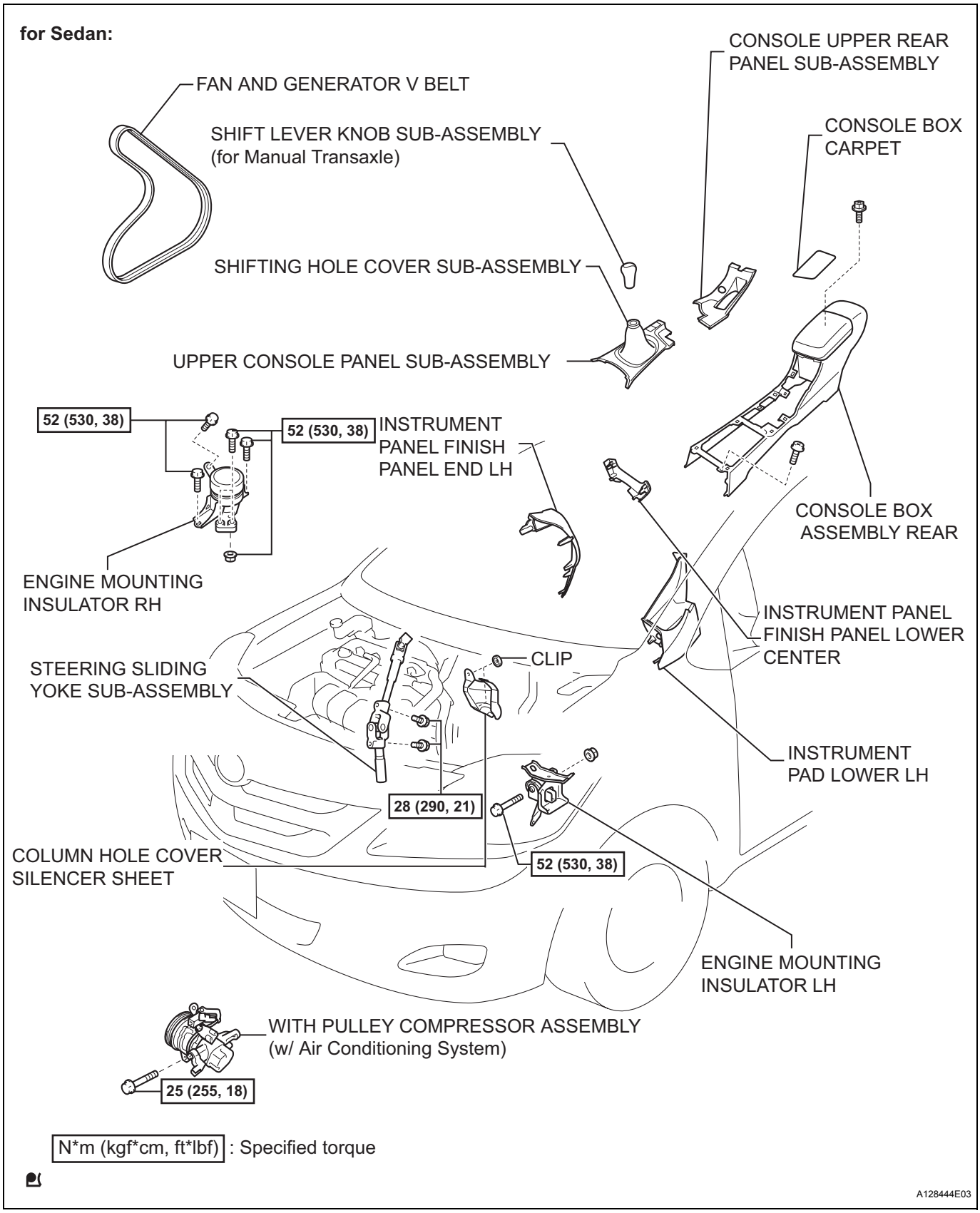
for Sedan:
CONSOLE UPPER REAR PANEL SUB-ASSEMBLY
FAN AND GENERATOR V BELT
SHIFT LEVER KNOB SUB-ASSEMBLY (for Manual Transaxle)
CONSOLE BOX CARPET
SHIFTING HOLE COVER SUB-ASSEMBLY
UPPER CONSOLE PANEL SUB-ASSEMBLY
52 (530, 38)
52 (530, 38)
INSTRUMENT PANEL FINISH PANEL END LH
CONSOLE BOX ASSEMBLY REAR
ENGINE MOUNTING INSULATOR RH
INSTRUMENT PANEL FINISH PANEL LOWER CENTER
CLIP
STEERING SLIDING YOKE SUB-ASSEMBLY
INSTRUMENT PAD LOWER LH
28 (290, 21)
COLUMN HOLE COVER SILENCER SHEET
52 (530, 38)
ENGINE MOUNTING INSULATOR LH
WITH PULLEY COMPRESSOR ASSEMBLY (w/ Air Conditioning System)
25 (255, 18)
N*m (kgf*cm, ft*lbf) : Specified torque
A128444E03

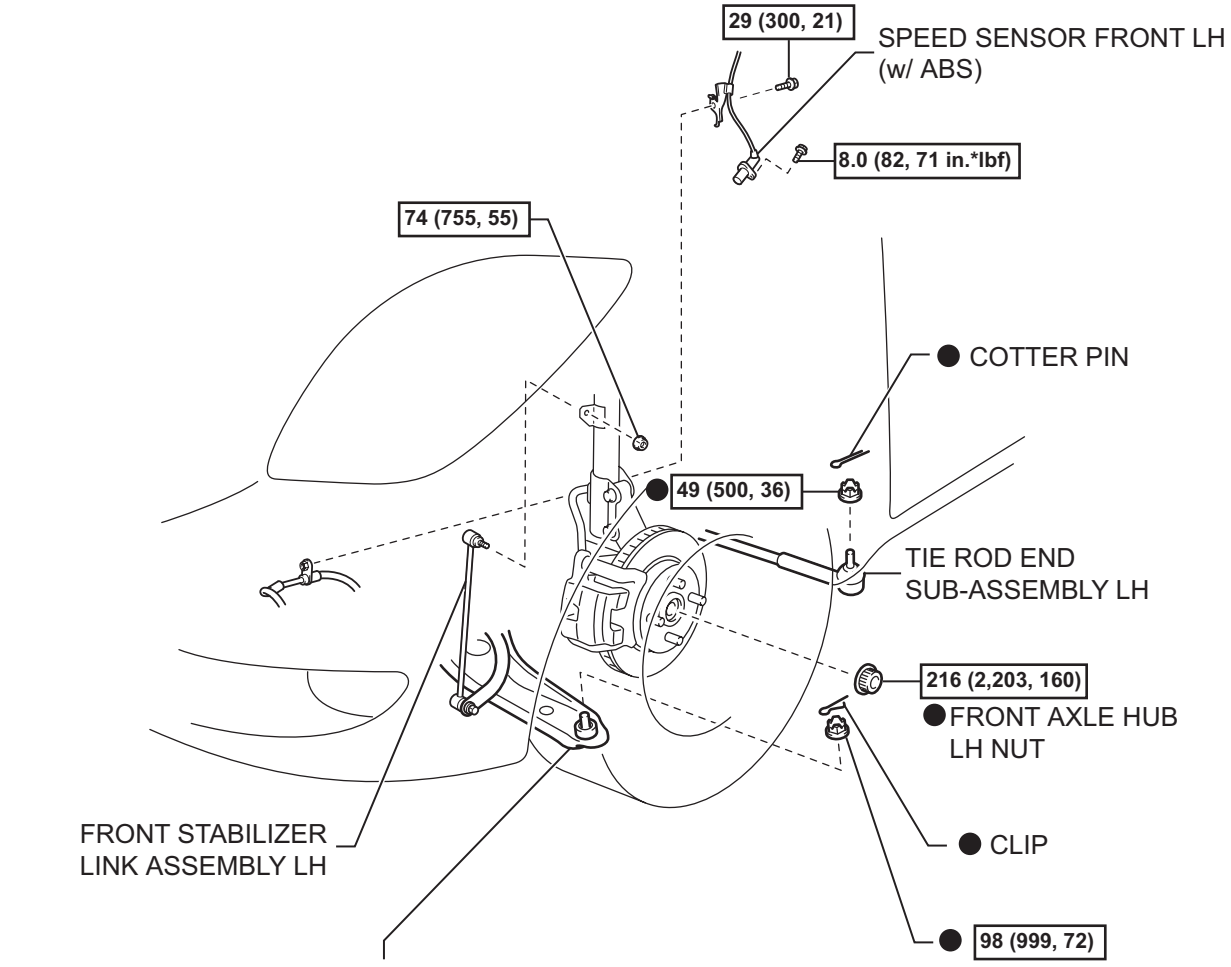

N*m (kgf*cm, ft.*lbf) : Specified torque ● Non-reusable part

A108449E06

EM

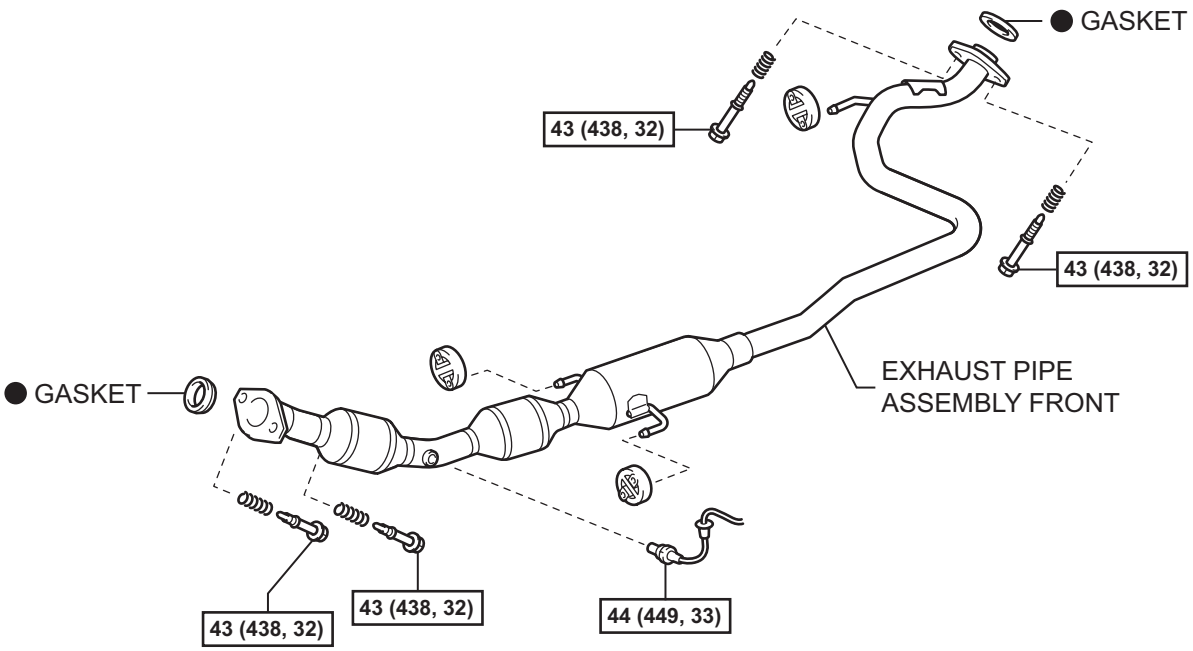

N*m (kgf*cm, ft*lbf) : Specified torque

● Non-reusable part

A136509E01

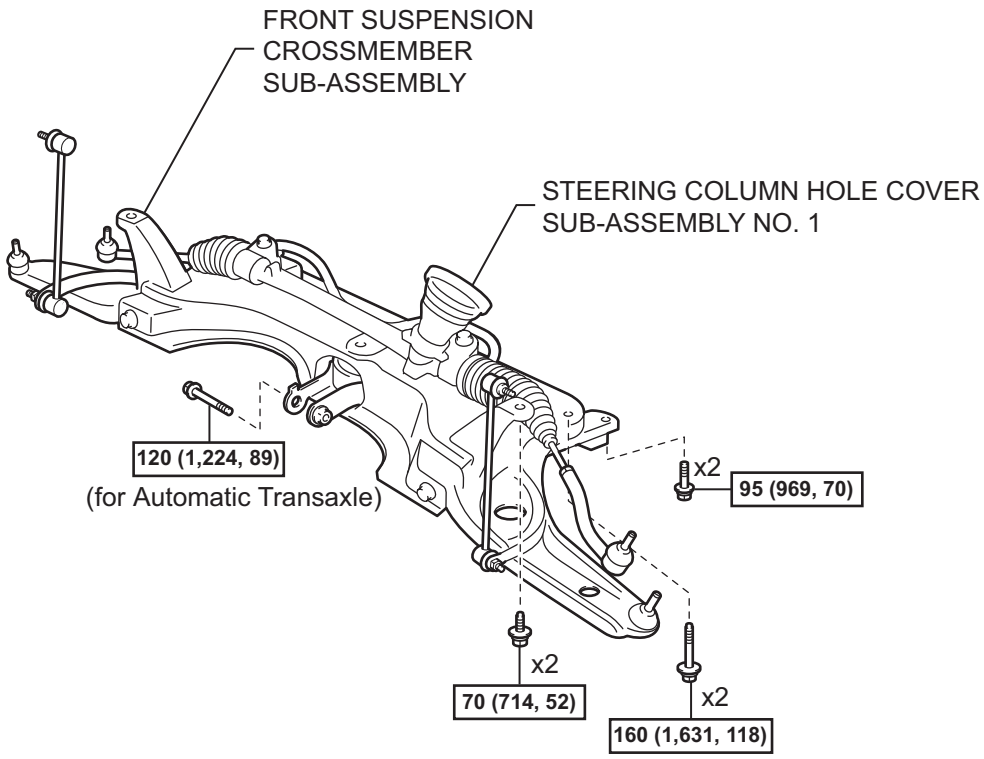

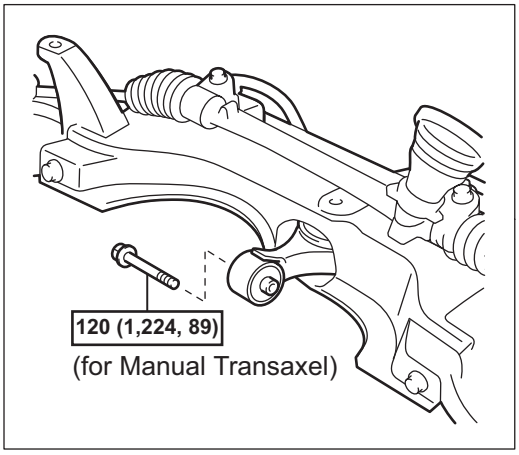

N*m (kgf*cm, ft.*lbf) : Specified torque

A108445E05

for Automatic Transaxle:

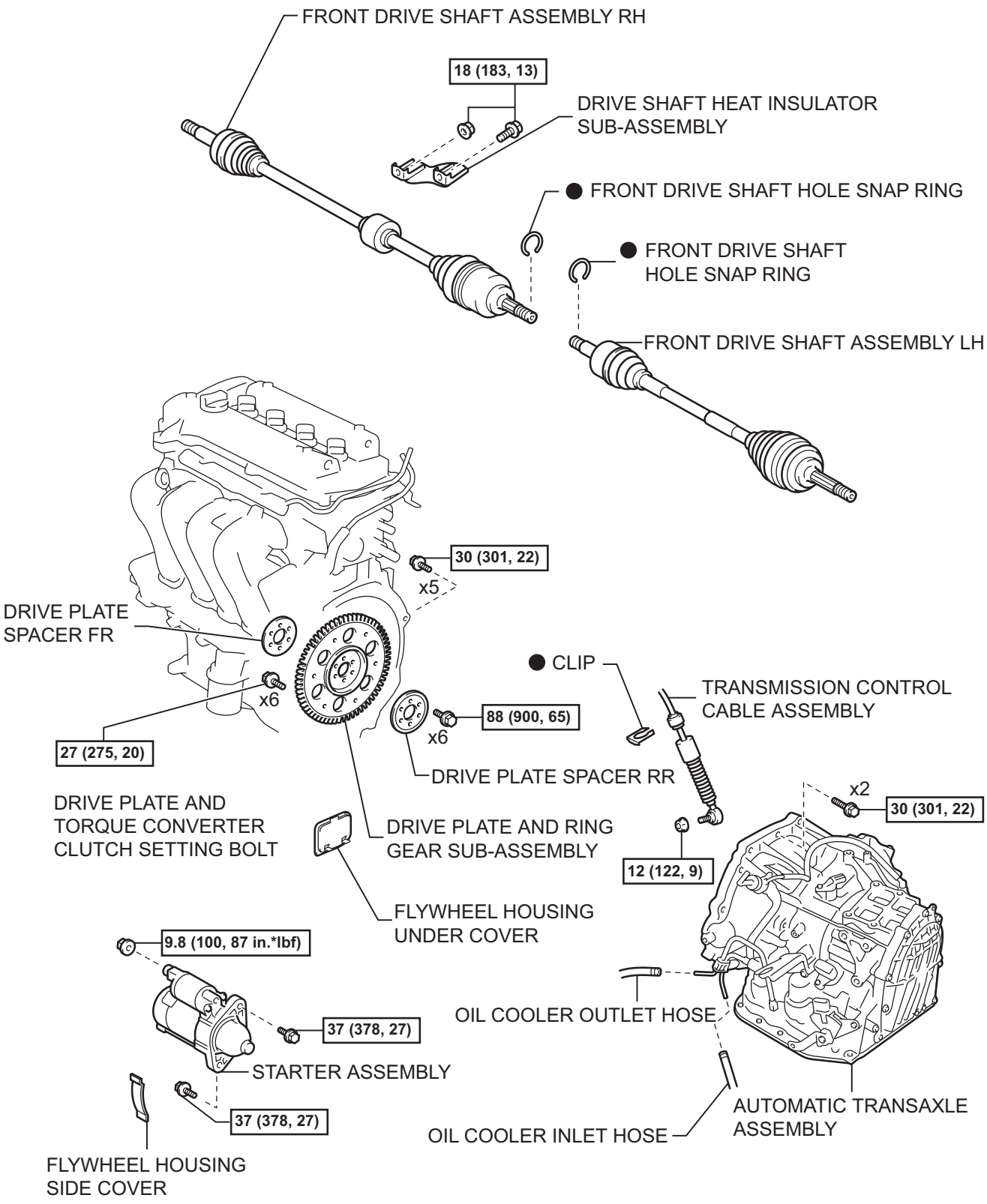

N*m (kgf*cm, ft.*lbf) : Specified torque ● Non-reusable part

A117318E08

for Manual Transaxle:

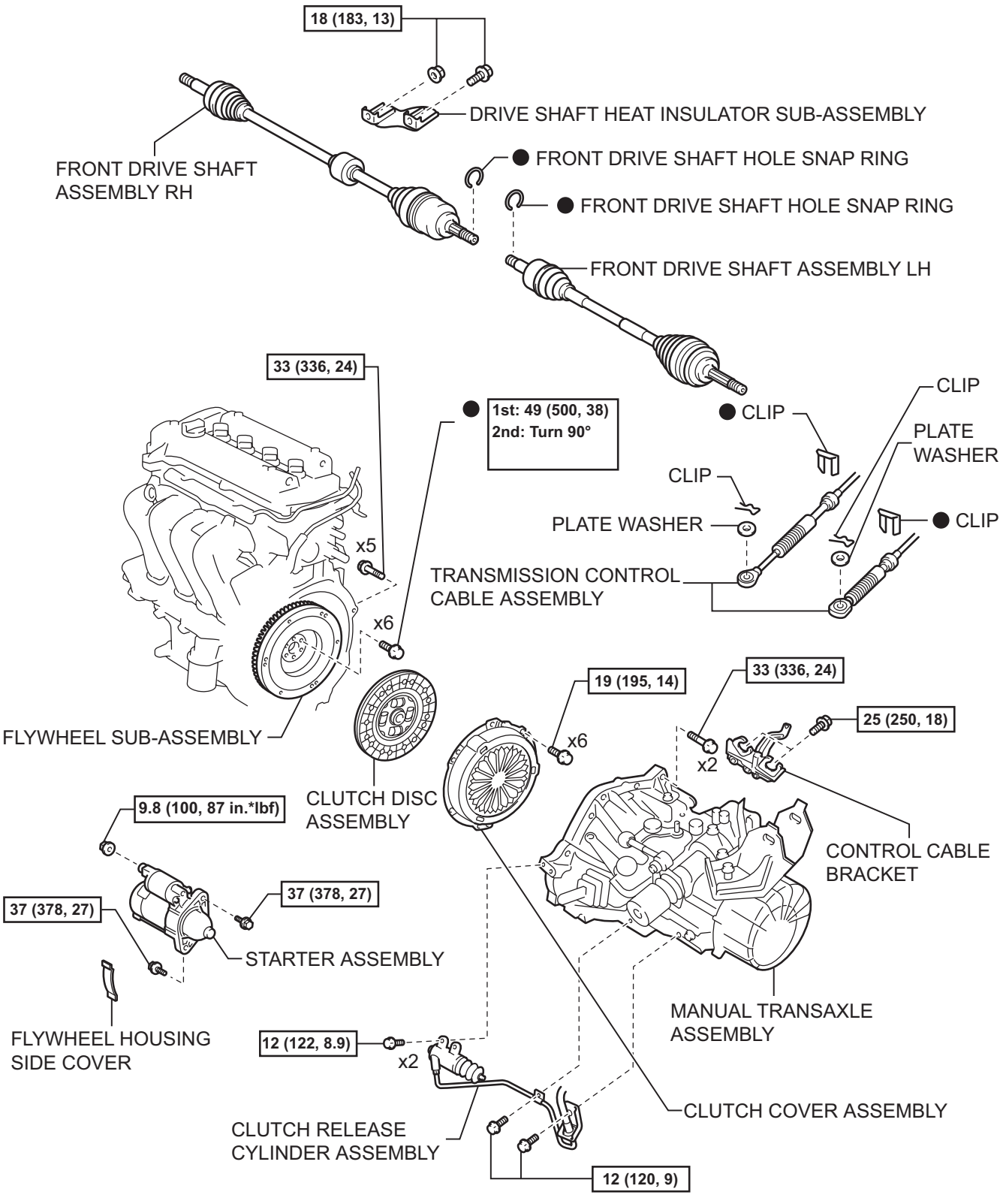

N*m (kgf*cm, ft*lbf) : Specified torque ● Non-reusable part

A117354E09

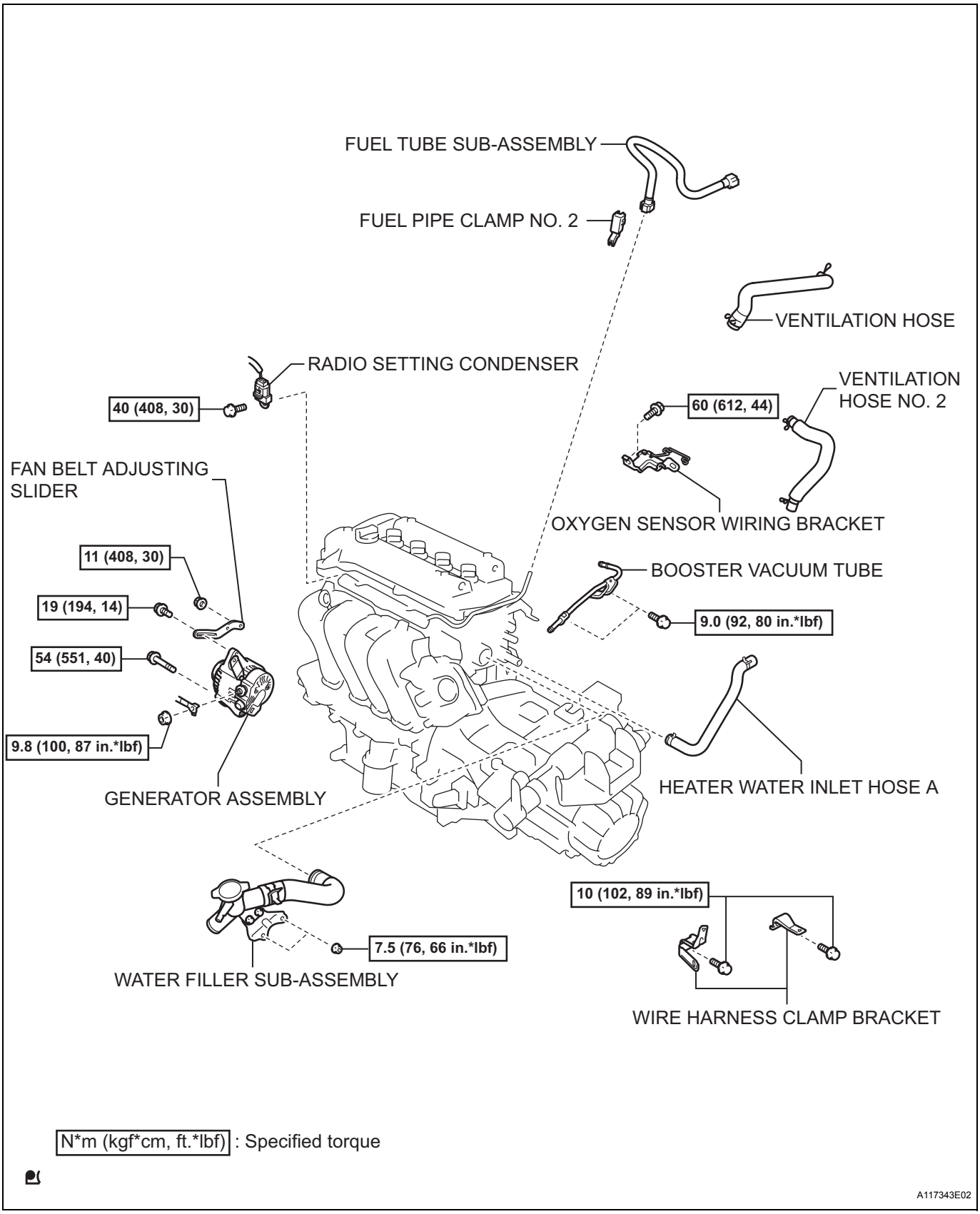
FUEL TUBE SUB-ASSEMBLY
FUEL PIPE CLAMP NO. 2
VENTILATION HOSE
RADIO SETTING CONDENSER
40 (408, 30)
60 (612, 44)
VENTILATION HOSE NO. 2
FAN BELT ADJUSTING SLIDER
OXYGEN SENSOR WIRING BRACKET
11 (408, 30)
BOOSTER VACUUM TUBE
19 (194, 14)
9.0 (92, 80 in.*lbf)
54 (551, 40)
9.8 (100, 87 in.*lbf)
GENERATOR ASSEMBLY
HEATER WATER INLET HOSE A
10 (102, 89 in.*lbf)
7.5 (76, 66 in.*lbf)
WATER FILLER SUB-ASSEMBLY
WIRE HARNESS CLAMP BRACKET
N*m (kgf*cm, ft.*lbf) : Specified torque
A117343E02

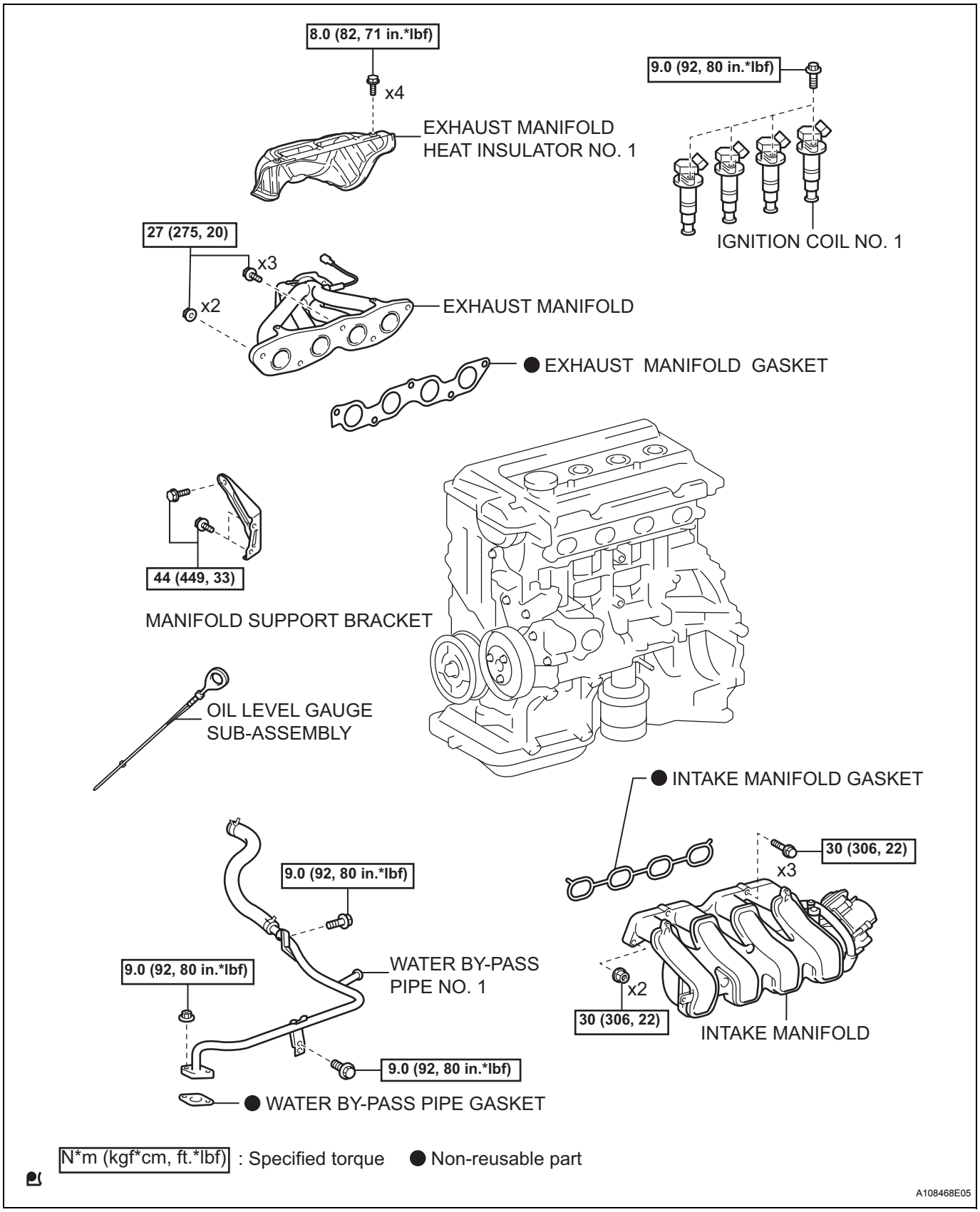
8.0 (82, 71 in.*lbf)
x4
EXHAUST MANIFOLD
HEAT INSULATOR NO. 1
9.0 (92, 80 in.*lbf)
IGNITION COIL NO. 1
27 (275, 20)
x3
x2
EXHAUST MANIFOLD
● EXHAUST MANIFOLD GASKET
44 (449, 33)
MANIFOLD SUPPORT BRACKET
OIL LEVEL GAUGE
SUB-ASSEMBLY
● INTAKE MANIFOLD GASKET
30 (306, 22)
x3
9.0 (92, 80 in.*lbf)
9.0 (92, 80 in.*lbf)
WATER BY-PASS
PIPE NO. 1
x2
30 (306, 22)
INTAKE MANIFOLD
9.0 (92, 80 in.*lbf)
● WATER BY-PASS PIPE GASKET
N*m (kgf*cm, ft.*lbf) : Specified torque
● Non-reusable part
A108468E05

EM

EM

REMOVAL

1. **DISCHARGE FUEL SYSTEM PRESSURE**
2. **REMOVE BATTERY**
   (a) Disconnect the cable from the battery terminal.
   (b) Loosen the nut and remove the battery clamp.
   (c) Remove the battery.
3. **REMOVE BATTERY TRAY**
4. **REMOVE FRONT WHEELS**
5. **REMOVE ENGINE UNDER COVER LH**
6. **REMOVE ENGINE UNDER COVER RH**
7. **DRAIN ENGINE COOLANT (See page CO-8)**
8. **DRAIN AUTOMATIC TRANSAXLE FLUID (for Automatic Transaxle) (See page AX-158)**
9. **DRAIN MANUAL TRANSAXLE OIL (for Manual Transaxle) (See page MX-26)**
10. **REMOVE FRONT WIPER ARM HEAD CAP (See page WW-9)**
11. **REMOVE FRONT WIPER ARM LH (See page WW-9)**
12. **REMOVE FRONT WIPER ARM RH (See page WW-9)**
13. **REMOVE HOOD TO COWL TOP SEAL (for Hatchback) (See page WW-18)**
14. **REMOVE COWL TOP VENTILATOR LOUVER SUB-ASSEMBLY (for Hatchback) (See page WW-18)**
15. **REMOVE COWL TOP VENTILATOR LOUVER LH (for Hatchback) (See page WW-18)**
16. **REMOVE COWL SIDE VENTILATOR SUB-ASSEMBLY LH (for Sedan) (See page WW-10)**
17. **REMOVE COWL SIDE VENTILATOR SUB-ASSEMBLY RH (for Sedan) (See page WW-10)**
18. **REMOVE COWL TOP VENTILATOR LOUVER SUB-ASSEMBLY (for Sedan) (See page WW-10)**
19. **REMOVE FRONT WIPER MOTOR AND LINK (See page WW-19)**
20. **REMOVE COWL TO REGISTER DUCT SUB-ASSEMBLY NO. 2 (for Hatchback)**
    (a) Disengage the claw and remove cowl to register duct sub-assembly No. 2.

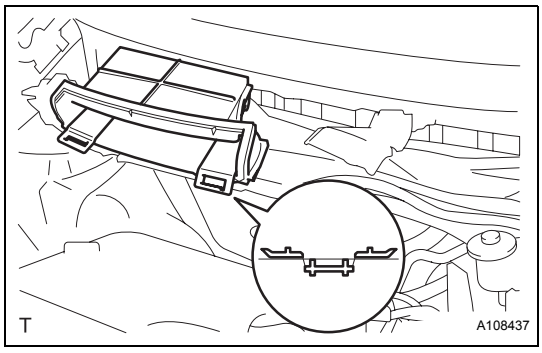

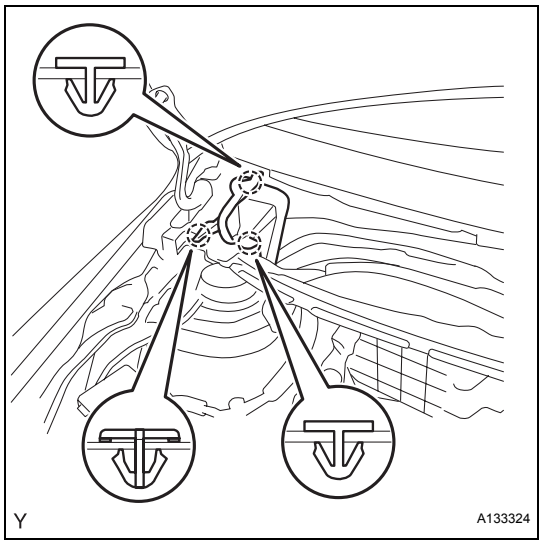

21. REMOVE FRONT AIR SHUTTER SEAL RH (for Sedan)

(a) Disengage the 3 claws and remove the front air shutter seal RH.

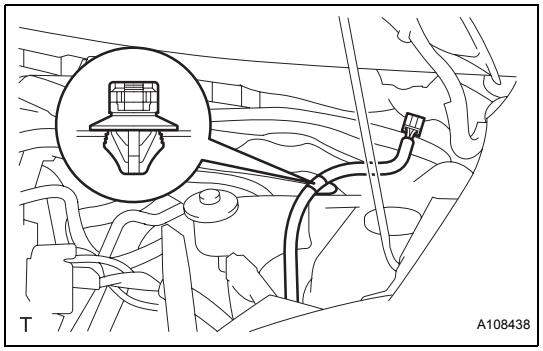

22. REMOVE COWL TOP PANEL OUTER (for Hatchback)

(a) Disengage the wire harness clamp.



(b) Remove the 9 bolts and remove the cowl top panel outer.

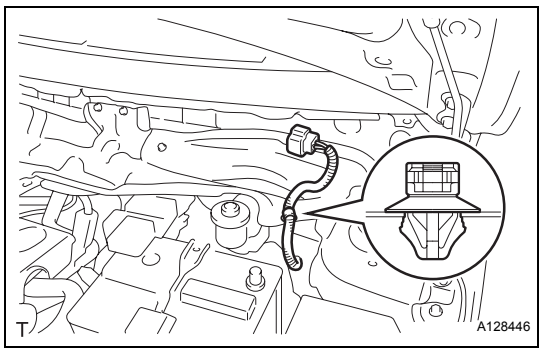

23. REMOVE COWL TOP PANEL OUTER (for Sedan)

(a) Disengage the wire harness clamp.

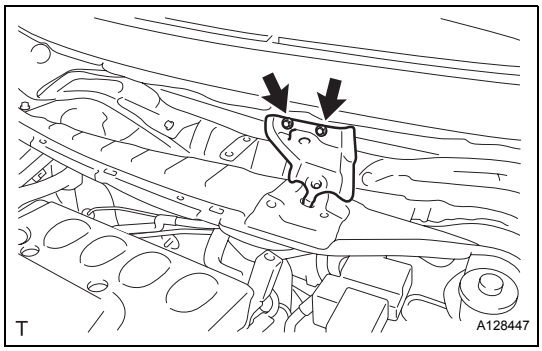

(b) Remove the 2 bolts and remove the cowl top to cowl inner brace.

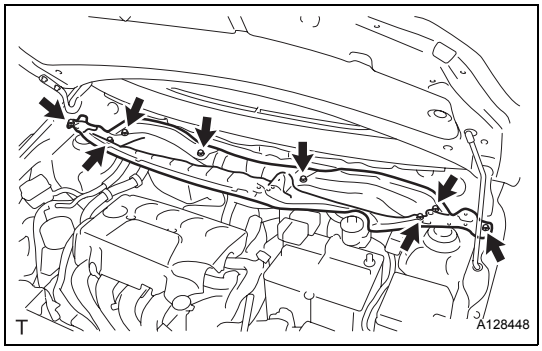

(c) Remove the 8 bolts and remove the cowl top panel outer.

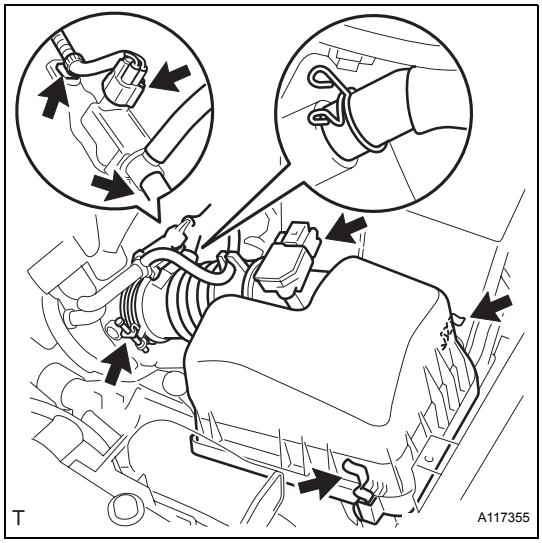

24. REMOVE AIR CLEANER ASSEMBLY

(a) Separate the intake air flow meter connector and the wire harness clamp.
(b) Separate the fuel vapor feed hose and fuel vapor feed hose No. 1 from the vacuum switching valve assembly.
(c) Separate the vacuum switching valve connector and the wire harness clamp.
(d) Separate the ventilation hose from the air cleaner hose.
(e) Release the air cleaner cap sub-assembly with air cleaner hose No. 1.
(f) Loosen the air cleaner hose clamp on the throttle body side and remove the air cleaner cap and the air cleaner hose.
(g) Remove the air cleaner element.

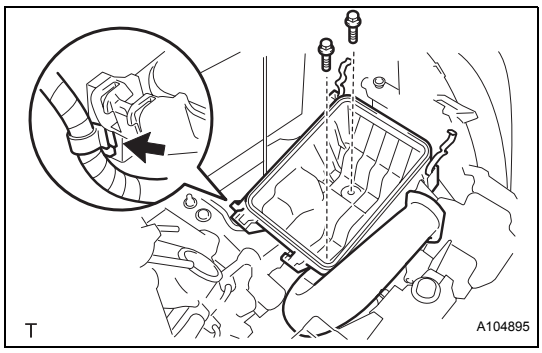

(h) Separate the wire harness clamp from the air cleaner case.
(i) Remove the 2 bolts and remove the air cleaner case with air cleaner inlet No. 1.

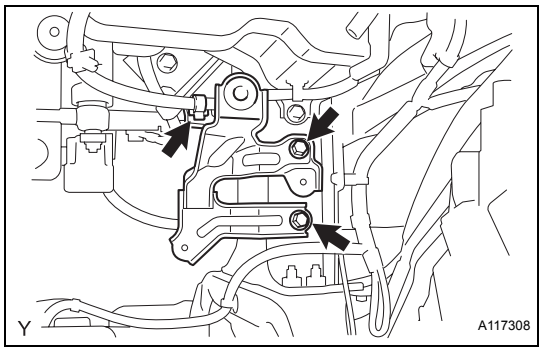

25. REMOVE AIR CLEANER BRACKET

(a) Separate the wire harness clamp from the air cleaner bracket.

(b) Remove the 2 bolts and remove the air cleaner bracket.

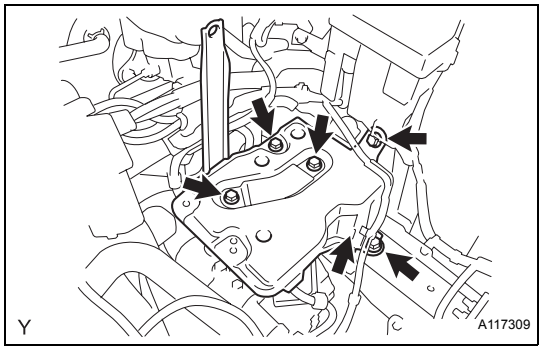

26. REMOVE BATTERY CARRIER

(a) Separate the wire harness clamp from the battery carrier.

(b) Remove the 5 bolts and remove the battery carrier.

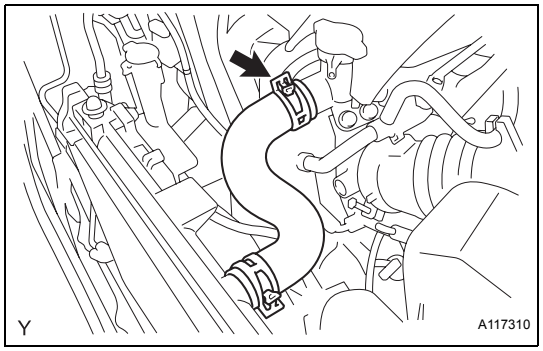

27. DISCONNECT RADIATOR HOSE NO. 3

(a) Disconnect radiator hose No. 3 from the water filler.

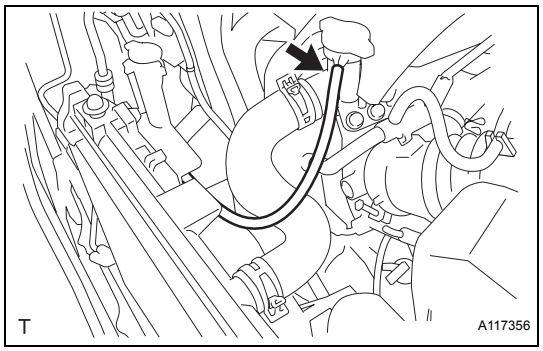

28. DISCONNECT RADIATOR RESERVOIR TANK HOSE

(a) Disconnect the radiator reservoir tank hose from the water filler.

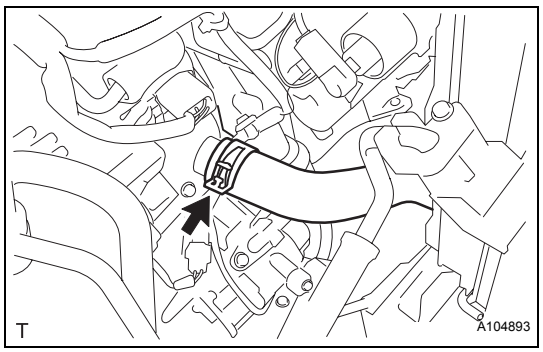

29. DISCONNECT RADIATOR HOSE NO. 2

(a) Disconnect radiator hose No. 2 from the water inlet.

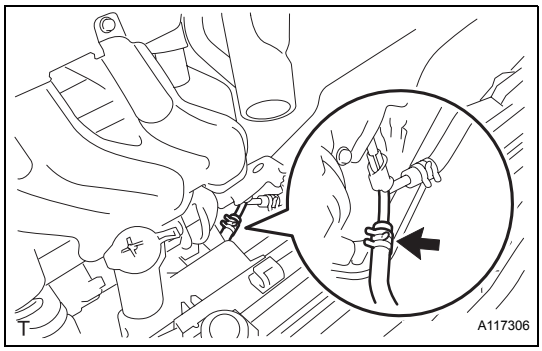

30. **DISCONNECT OIL COOLER OUTLET HOSE (for Automatic Transaxle)**
    (a) Loosen the clip and disconnect the oil cooler outlet hose.

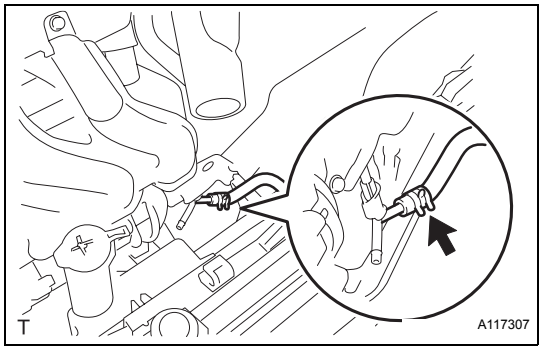

31. **DISCONNECT OIL COOLER INLET HOSE (for Automatic Transaxle)**
    (a) Loosen the clip and disconnect the oil cooler inlet hose.

32. **REMOVE CYLINDER HEAD COVER NO. 2 (See page IG-9)**

33. **SEPARATE TRANSMISSION CONTROL CABLE ASSEMBLY (for Automatic Transaxle) (See page AX-106)**

34. **SEPARATE TRANSMISSION CONTROL CABLE ASSEMBLY (for Manual Transaxle) (See page MX-27)**

35. **DISCONNECT UNION TO CHECK VALVE HOSE**
    (a) Disconnect the union to check valve hose from the booster vacuum tube.

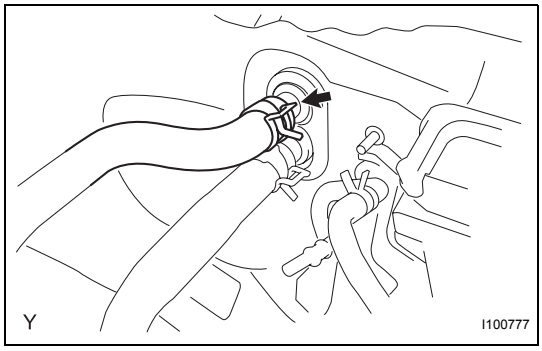

36. **DISCONNECT HEATER WATER OUTLET HOSE A (FROM HEATER UNIT)**
    (a) Disconnect heater water outlet hose A from the heater unit.

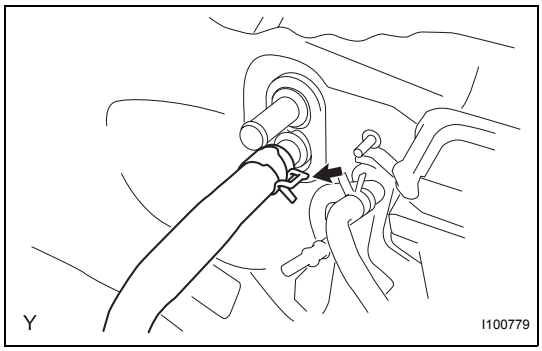

37. **DISCONNECT HEATER WATER INLET HOSE A**
    (a) Disconnect heater water inlet hose A from the heater unit.

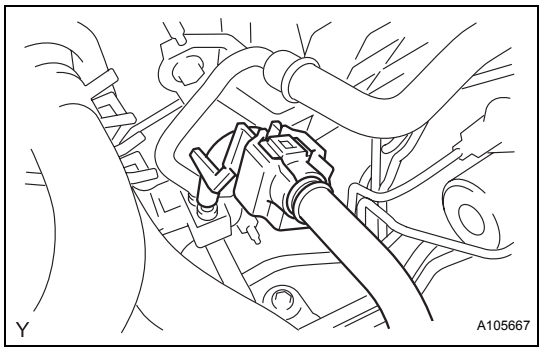

38. DISCONNECT FUEL TUBE SUB-ASSEMBLY

(a) Remove fuel pipe clamp No. 1.

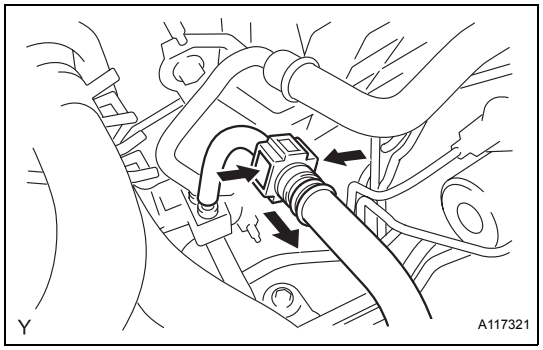

(b) Pinch the retainer as illustrated, then pull the fuel tube connector out of the pipe.

NOTICE:

- **Remove any dirt and foreign matter from the fuel tube connector before performing this work.**
- **Do not allow any scratches or foreign matter on the parts when disconnecting, as the fuel tube connector has the O-rings that seal the pipe.**
- **Perform this work by hand. Do not use any tools.**
- **Do not forcibly bend, twist or turn the nylon tube.**
- **Protect the disconnected parts by covering them with vinyl bags after disconnecting the fuel tube.**
- **If the fuel tube connector and pipe are stuck, push and pull to release them.**

39. REMOVE FAN AND GENERATOR V BELT (See page EM-7)

40. SEPARATE WITH PULLEY COMPRESSOR ASSEMBLY (w/ Air Conditioning System)

(a) Disconnect the connector.

(b) Remove the 4 bolts and separate the with pulley compressor assembly.

HINT:

Remove the compressor assembly together with the low and high pressure hoses, then suspend them from the body with a piece of rope.

41. SEPARATE CLUTCH RELEASE CYLINDER ASSEMBLY (for Manual Transaxle) (See page MX-27)

EM

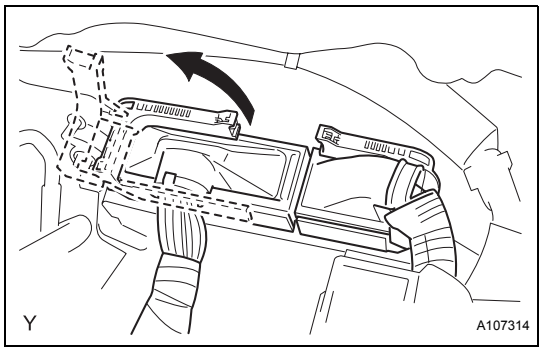

42. DISCONNECT ENGINE WIRE

(a) Pull up the lever and disconnect the connector of the engine control computer.

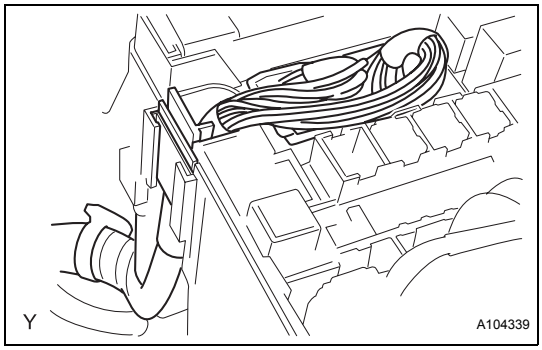

(b) Remove the 2 connectors and the clamp from the engine room junction block and disconnect the wire harness.

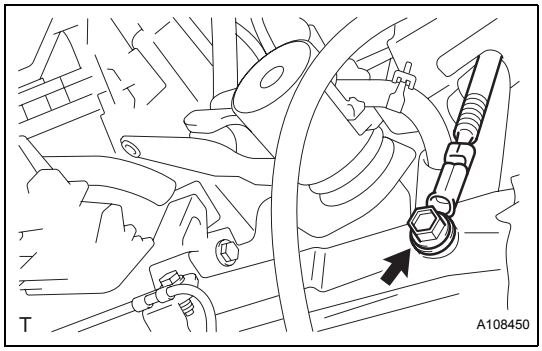

(c) Remove the bolt and separate the earth wire of the engine room wire harness.

(d) Disconnect all the wire harnesses and connectors. Make sure that no wire harness is connected between the body and engine.

43. REMOVE COLUMN HOLE COVER SILENCER SHEET (See page PS-74)

44. SEPARATE STEERING SLIDING YOKE SUB-ASSEMBLY (See page PS-74)

45. REMOVE STEERING COLUMN HOLE COVER SUB-ASSEMBLY NO. 1 (See page PS-75)

46. REMOVE SHIFT LEVER KNOB SUB-ASSEMBLY (for Manual Transaxle)

47. REMOVE SHIFTING HOLE COVER SUB-ASSEMBLY (for Manual Transaxle) (See page PB-6)

48. REMOVE CONSOLE BOX REAR COVER (for Hatchback) (See page PB-6)

49. REMOVE INSTRUMENT PANEL FINISH PANEL LOWER CENTER (for Sedan) (See page ME-138)

50. REMOVE INSTRUMENT PANEL FINISH PANEL END LH (for Sedan) (See page ME-138)

51. REMOVE INSTRUMENT PAD LOWER LH (for Sedan) (See page IP-44)

52. REMOVE UPPER CONSOLE PANEL SUB-ASSEMBLY (for Sedan) (See page IP-84)

53. REMOVE CONSOLE UPPER REAR PANEL SUB-ASSEMBLY (for Sedan) (See page IP-84)

54. REMOVE CONSOLE BOX CARPET (for Sedan) (See page PB-7)
55. REMOVE REAR CONSOLE BOX ASSEMBLY (See page PB-8)
56. REMOVE HEATED OXYGEN SENSOR (See page EC-22)
57. REMOVE EXHAUST PIPE ASSEMBLY FRONT (See page EX-5)
58. REMOVE FRONT AXLE HUB LH NUT (See page DS-3)
59. REMOVE FRONT AXLE HUB RH NUT (See page AX-159)
60. SEPARATE SPEED SENSOR FRONT LH (w/ ABS) (See page DS-3)
61. SEPARATE SPEED SENSOR FRONT RH (w/ ABS) (See page AX-159)
62. SEPARATE TIE ROD END SUB-ASSEMBLY LH (See page DS-3)
63. SEPARATE TIE ROD END SUB-ASSEMBLY RH (See page AX-160)
64. SEPARATE FRONT STABILIZER LINK ASSEMBLY LH (See page DS-4)
65. SEPARATE FRONT STABILIZER LINK ASSEMBLY RH (See page AX-160)
66. SEPARATE FRONT SUSPENSION ARM SUB-ASSEMBLY LOWER NO. 1 LH (See page DS-4)
67. SEPARATE FRONT SUSPENSION ARM SUB-ASSEMBLY LOWER NO. 1 RH (See page AX-160)
68. SEPARATE FRONT AXLE ASSEMBLY LH (See page DS-4)
69. SEPARATE FRONT AXLE ASSEMBLY RH (See page MX-29)
70. REMOVE FRONT DRIVE SHAFT ASSEMBLY LH (See page DS-5)
71. REMOVE FRONT DRIVE SHAFT ASSEMBLY RH (See page DS-5)
72. REMOVE FLYWHEEL HOUSING UNDER COVER (for Automatic Transaxle)

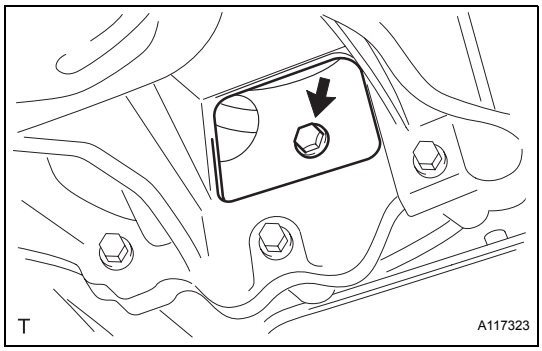

73. REMOVE DRIVE PLATE AND TORQUE CONVERTER CLUTCH SETTING BOLT (for Automatic Transaxle)

(a) Remove the 6 torque converter set bolts.

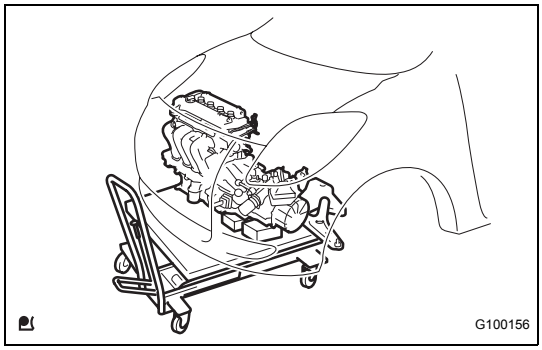

74. REMOVE ENGINE ASSEMBLY WITH TRANSAXLE

(a) Set the engine lifter.

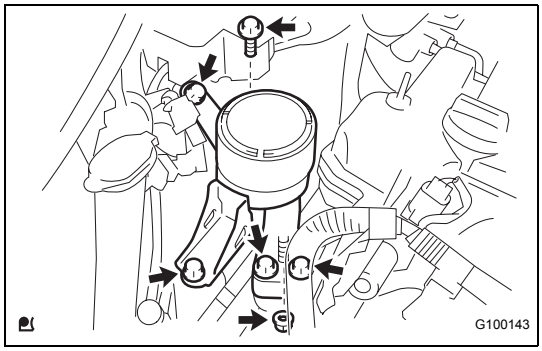

(b) Remove the 5 bolts and the nut and remove the engine mounting insulator RH.

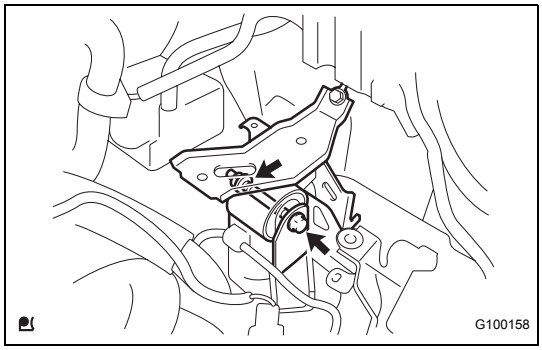

(c) Remove the through bolt and the nut and separate the engine mounting insulator LH.

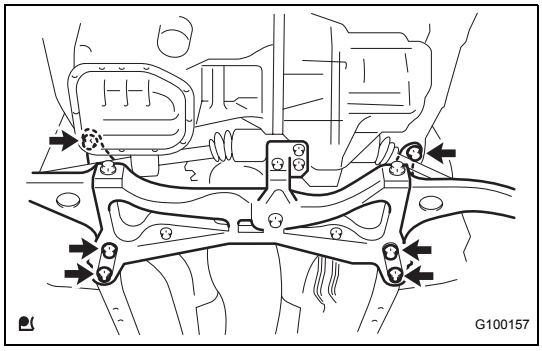

(d) Remove the 6 bolts, and remove the engine assembly with transaxle and the front suspension crossmember from the vehicle.

75. REMOVE FRONT SUSPENSION CROSSMEMBER SUB-ASSEMBLY

(a) Remove the bolt and remove the radio setting condenser.

(b) Remove the bolt and remove the oxygen sensor wiring bracket.

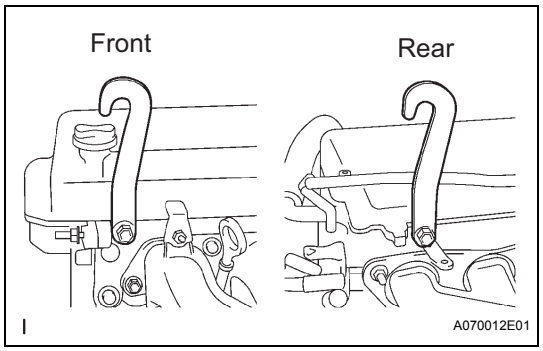

(c) Install the engine hangers with the bolts, as shown in the illustration.
Torque: 40 N*m (408 kgf*cm, 30 ft.*lbf)
Part No.:
12281-21010 for engine hanger
91642-81025 for bolt

(d) Using an engine sling device and a chain block, suspend the engine assembly with transaxle and front suspension crossmember.

(e) Remove the through bolt from the engine moving control rod and remove the front suspension crossmember.

76. REMOVE VENTILATION HOSE

(a) Loosen the 2 clips and remove the ventilation hose.

77. REMOVE VENTILATION HOSE NO. 2

(a) Loosen the clips and remove ventilation hose No. 2.

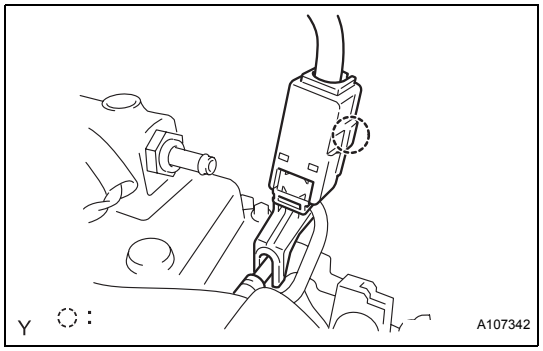

78. REMOVE FUEL TUBE SUB-ASSEMBLY

(a) Disengage the claw and remove fuel pipe clamp No. 2.

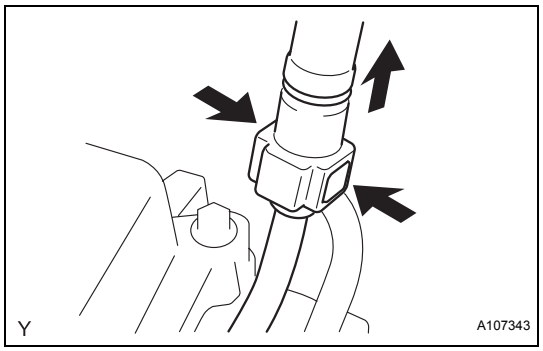

(b) Pinch the fuel tube connector retainer from both sides, disconnect the fuel tube connector and separate the fuel tube from the pipe.
NOTICE:
- **Remove any dirt and foreign matter from the fuel tube connector before performing this work.**
- **Do not allow any scratches or foreign matter on the parts when disconnecting, as the fuel tube connector has the O-rings that seal the pipe.**
- **Perform this work by hand. Do not use any tools.**
- **Do not forcibly bend, twist or turn the nylon tube.**
- **Protect the disconnected parts by covering them with vinyl bags after disconnecting the fuel tube.**
- **If the fuel tube connector and pipe are stuck, push and pull to release them.**

79. REMOVE WATER FILLER SUB-ASSEMBLY

(a) Disconnect radiator hose No. 1 from the cylinder head.

(b) Remove the 2 nuts and remove the water filler sub-assembly.

80. REMOVE HEATER WATER INLET HOSE A

(a) Disconnect heater water inlet hose A from the cylinder head.

81. REMOVE FLYWHEEL HOUSING SIDE COVER (See page ST-9)

82. REMOVE STARTER ASSEMBLY (See page ST-9)

83. REMOVE AUTOMATIC TRANSAXLE ASSEMBLY (for Automatic Transaxle)

(a) Remove the 7 bolts and remove the automatic transaxle with torque converter.

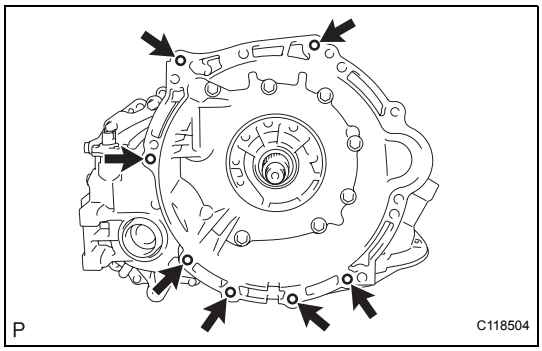

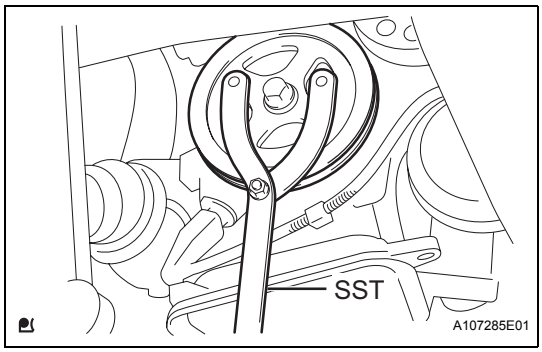

84. REMOVE DRIVE PLATE AND RING GEAR SUB-ASSEMBLY (for Automatic Transaxle)

(a) Hold the crankshaft with SST.
SST 09960-10010 (09962-01000, 09963-01000)

(b) Remove the 6 bolts, drive plate spacer FR, drive plate and ring gear sub-assembly and drive plate spacer RR.

85. REMOVE CONTROL CABLE BRACKET (for Manual Transaxle) (See page MX-28)

86. REMOVE MANUAL TRANSAXLE ASSEMBLY (for Manual Transaxle) (See page MX-30)

87. REMOVE CLUTCH COVER ASSEMBLY (for Manual Transaxle) (See page CL-15)

88. REMOVE CLUTCH DISC ASSEMBLY (for Manual Transaxle)

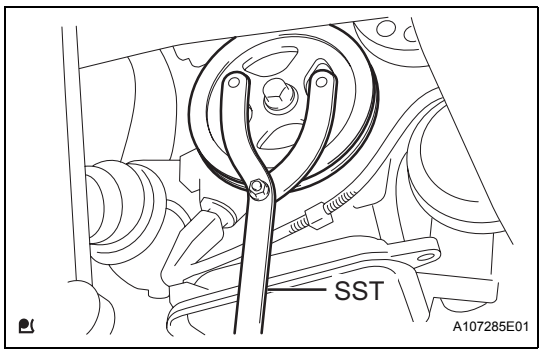

89. REMOVE FLYWHEEL SUB-ASSEMBLY (for Manual Transaxle)

(a) Hold the crankshaft with SST.
SST 09960-10010 (09962-01000, 09963-01000)

(b) Remove the 6 bolts and flywheel.

90. REMOVE OIL LEVEL GAUGE SUB-ASSEMBLY

91. REMOVE IGNITION COIL NO. 1

(a) Disconnect the connectors of the ignition coils.

(b) Remove the bolt and remove all the ignition coils.

92. REMOVE GENERATOR ASSEMBLY (See page CH-10)

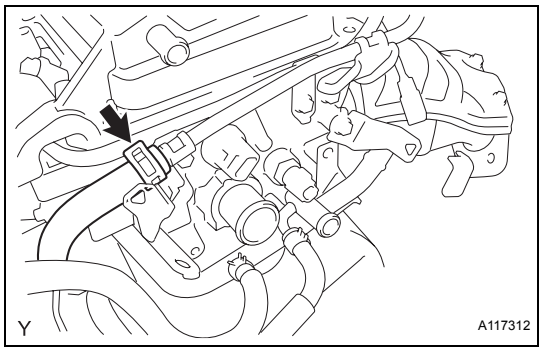

93. REMOVE INTAKE MANIFOLD

(a) Disconnect the union to connector tube hose from the booster vacuum tube.

(b) Disconnect the engine wire from the intake manifold.

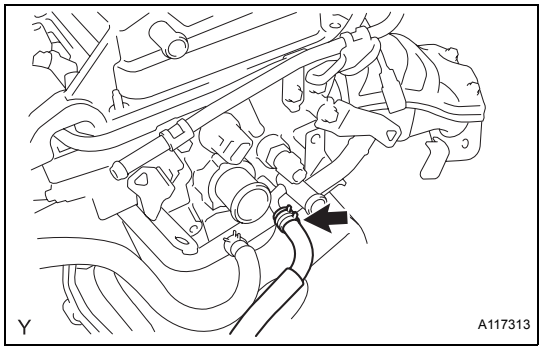

(c) Disconnect the water by-pass hose from the cylinder head.

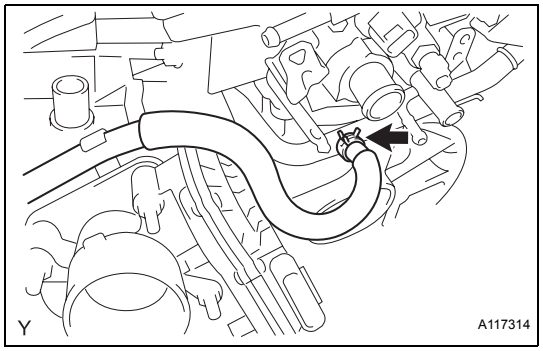

(d) Disconnect the water by-pass hose from water bypass pipe No. 1.

(e) Disconnect the throttle with motor body assembly connector.

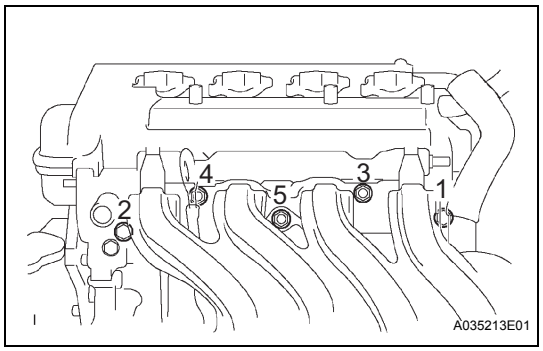

(f) Remove the 3 bolts and 2 nuts in the order shown in the illustration and remove the intake manifold.

(g) Remove the gasket from the intake manifold.

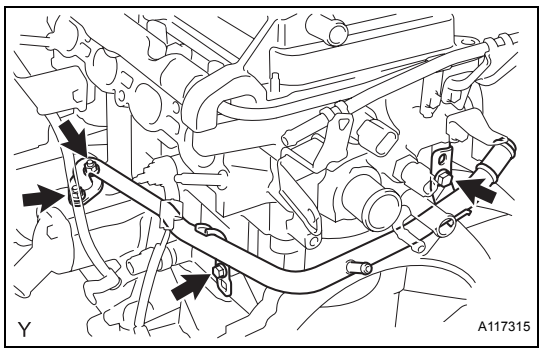

94. REMOVE WATER BY-PASS PIPE NO. 1

(a) Remove the 2 bolts and 2 nuts and remove water by-pass pipe No. 1.

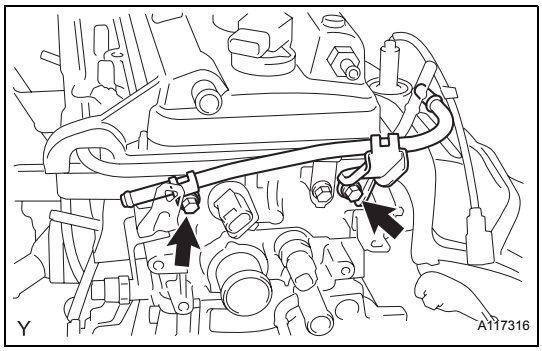

95. REMOVE BOOSTER VACUUM TUBE

(a) Remove the 2 bolts and remove the booster vacuum tube.

96. REMOVE ENGINE WIRE

(a) Disconnect all the sensor connectors and wire harness clamps from the engine assembly and remove the engine wire harness.

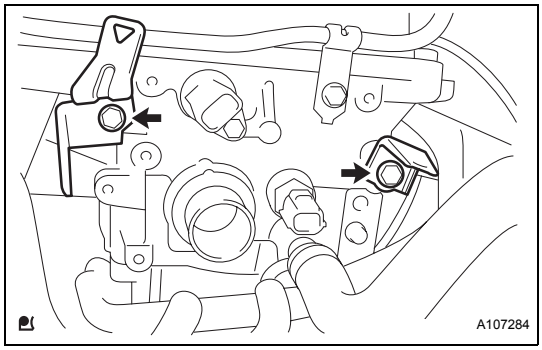

97. REMOVE WIRE HARNESS CLAMP BRACKET

(a) Remove the 2 bolts and remove the 2 wire harness clamp brackets.

98. REMOVE EXHAUST MANIFOLD HEAT INSULATOR NO. 1

(a) Remove the 4 bolts and remove the exhaust manifold heat insulator.

99. REMOVE MANIFOLD SUPPORT BRACKET

(a) Remove the 3 bolts and remove the manifold support bracket.

100. REMOVE EXHAUST MANIFOLD

(a) Remove the 3 bolts and 2 nuts and remove the exhaust manifold.

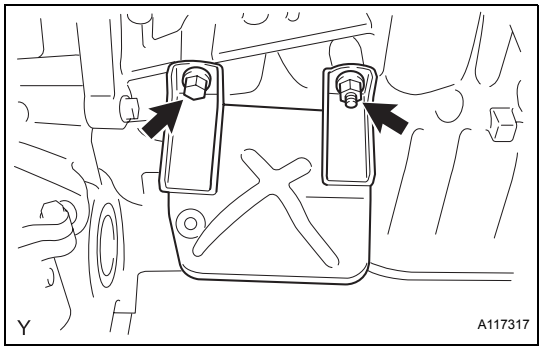

101. REMOVE DRIVE SHAFT HEAT INSULATOR SUB-ASSEMBLY

(a) Remove the bolt and nut and remove the drive shaft heat insulator.

INSTALLATION

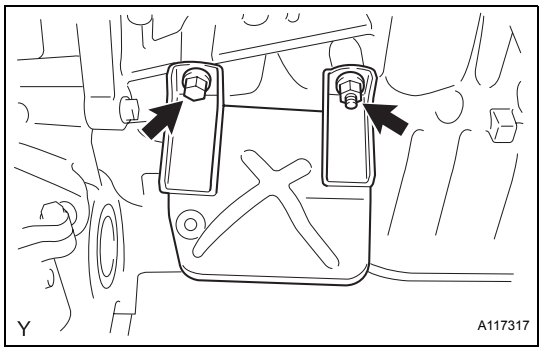

1. INSTALL DRIVE SHAFT HEAT INSULATOR SUB-ASSEMBLY

(a) Install the drive shaft heat insulator sub-assembly with the bolt and nut.
Torque: 18 N*m (183 kgf*cm, 13 ft.*lbf)

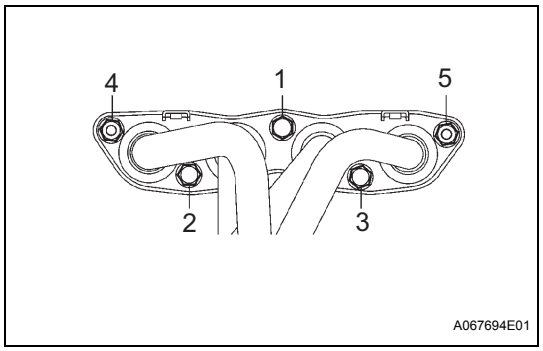

2. INSTALL EXHAUST MANIFOLD

(a) Tighten the exhaust manifold nuts and bolts, in the order shown in the illustration, through a new gasket.
Torque: 27 N*m (275 kgf*cm, 20 ft.*lbf)

3. INSTALL MANIFOLD SUPPORT BRACKET

(a) Install the manifold bracket with the 3 bolts.
Torque: 44 N*m (449 kgf*cm, 33 ft.*lbf)

4. INSTALL EXHAUST MANIFOLD HEAT INSULATOR NO.1

(a) Install the exhaust manifold insulator with the 4 bolts.
Torque: 8.0 N*m (82 kgf*cm, 71 in.*lbf)

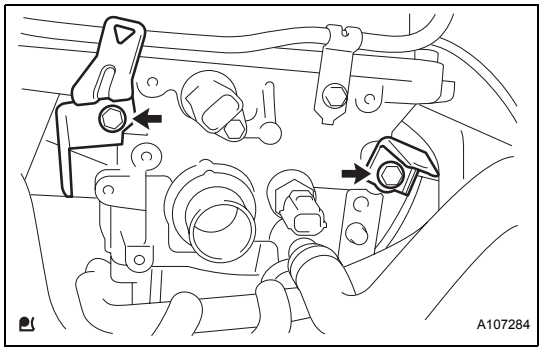

5. INSTALL WIRE HARNESS CLAMP BRACKET

(a) Install the 2 wire harness clamp brackets with the 2 bolts.
Torque: 10 N*m (102 kgf*cm, 89 in.*lbf)

6. INSTALL ENGINE WIRE

(a) Connect all the sensor connectors and wire harness clamps to the engine assembly and install the engine wire harness.

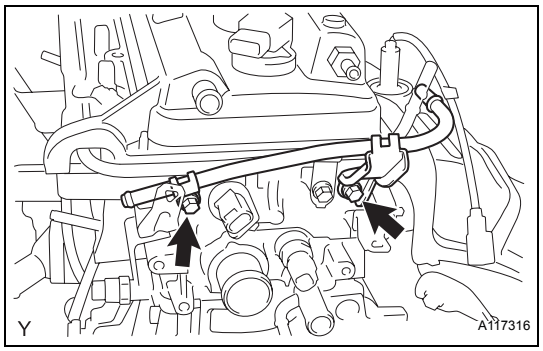

7. INSTALL BOOSTER VACUUM TUBE

(a) Install the booster vacuum tube with the 2 bolts.
Torque: 9.0 N*m (92 kgf*cm, 80 in.*lbf)

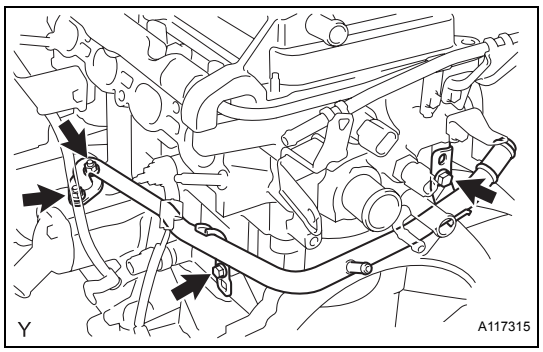

8. INSTALL WATER BY-PASS PIPE NO. 1

(a) Install water by-pass pipe No. 1 through a new gasket with the 2 bolts and 2 nuts.
Torque: 9.0 N*m (92 kgf*cm, 80 in.*lbf)

9. INSTALL INTAKE MANIFOLD

(a) Install a new gasket onto the intake manifold.

EM

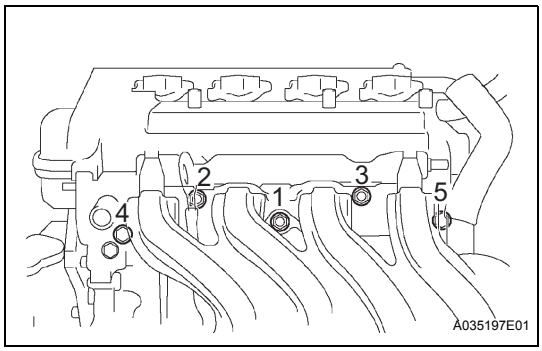

(b) Provisionally tighten the intake manifold nuts and bolts in the order shown in the illustration, and then tighten them to the specified torque.
Torque: 30 N*m (306 kgf*cm, 22 ft.*lbf)

(c) Connect the engine wire to the intake manifold.

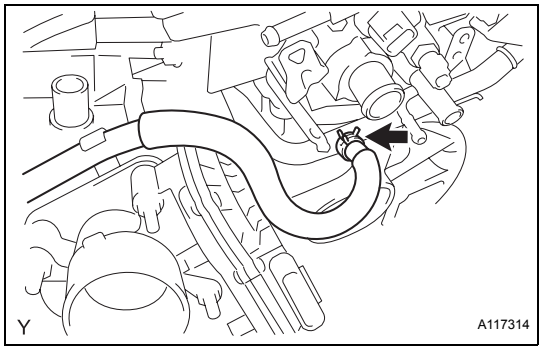

(d) Connect the water by-pass hose to water bypass pipe No. 1.

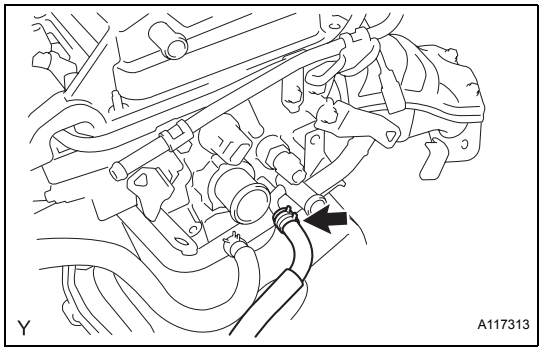

(e) Connect the water by-pass hose to the cylinder head.

(f) Connect the union to connector tube hose to the booster vacuum tube.

(g) Connect the throttle with motor body assembly connector.

10. INSTALL OIL LEVEL GAUGE SUB-ASSEMBLY

11. INSTALL GENERATOR ASSEMBLY (See page CH-17)

12. INSTALL IGNITION COIL NO.1 (See page IG-9)

13. INSTALL DRIVE PLATE AND RING GEAR SUB-ASSEMBLY (for Automatic Transaxle)

(a) Hold the crankshaft with SST.
SST 09960-10010 (09962-01000, 09963-01000)

(b) Clean the 6 bolts and their holes.

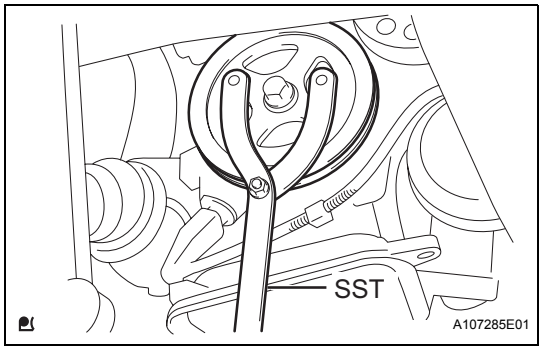

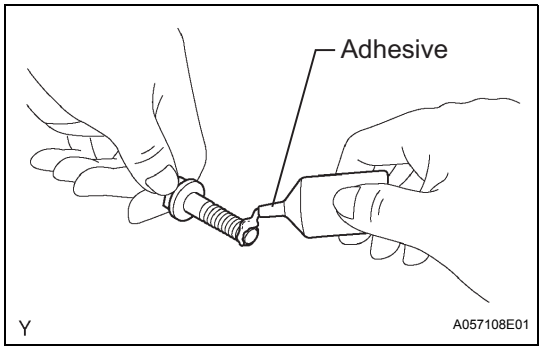

(c) Apply adhesive to the end 2 or 3 threads of the bolts.
Adhesive:
Part No. 08833-0070, three bond 1324 or the equivalent.

(d) Install the drive plate spacer RR, drive plate and ring gear sub-assembly and drive plate spacer FR.

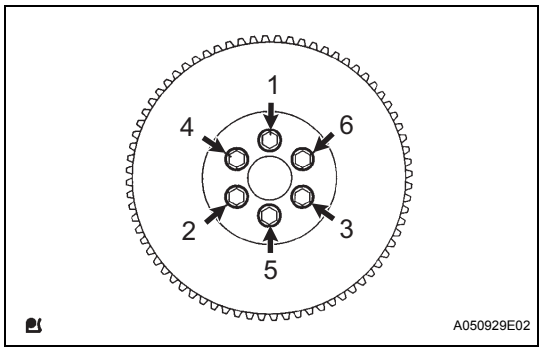

(e) Install and uniformly tighten the 6 bolts in several steps, in the sequence shown in the illustration.
Torque: 88 N*m (900 kgf*cm, 65 ft.*lbf)
NOTICE:
Do not start the engine for at least 1 hour after performing the installation.

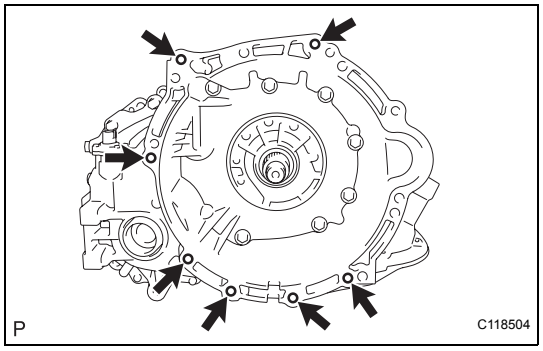

14. INSTALL AUTOMATIC TRANSAXLE ASSEMBLY (for Automatic Transaxle)

(a) Make sure that the knock pin is installed on the engine side.

(b) Install the automatic transaxle with torque converter with the 7 bolts.
Torque: 30 N*m (301 kgf*cm, 22 ft.*lbf)
CAUTION:
Make sure that the torque converter rotates.

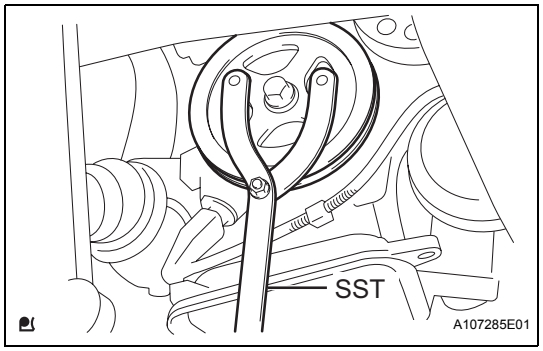

15. INSTALL FLYWHEEL SUB-ASSEMBLY (for Manual Transaxle)

(a) Hold the crankshaft with SST.
SST 09960-10010 (09962-01000, 09963-01000)

(b) Clean the 6 bolts and their holes.

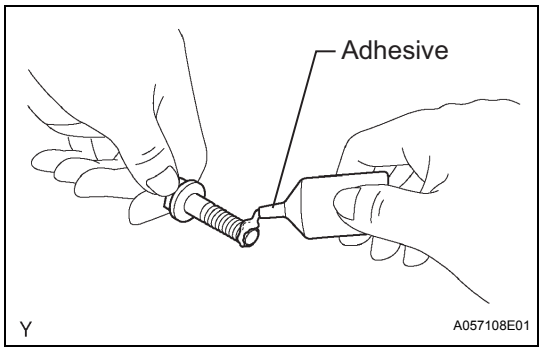

(c) Apply adhesive to the end 2 or 3 threads of new bolts.
Adhesive:
Part No. 08833-0070, three bond 1324 or the equivalent.

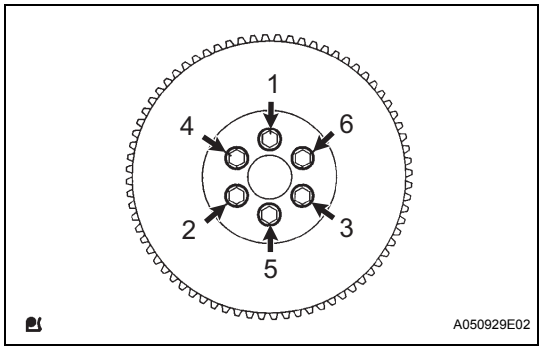

(d) Install the flywheel with the 6 bolts in the order shown in the illustration.
Torque: 49 N*m (500 kgf*cm, 38 ft.*lbf)

(e) Mark a paint mark on each bolt head on the engine upper side.

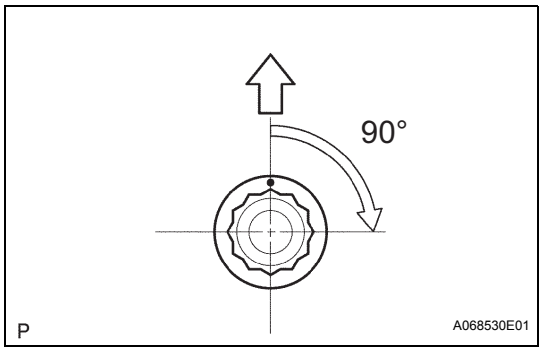

(f) Tighten the bolts 90° in the sequence shown in the illustration.
NOTICE:
Do not start the engine for at least 1 hour after performing the installation.

16. **INSTALL CLUTCH DISC ASSEMBLY (for Manual Transaxle) (See page CL-16)**
17. **INSTALL CLUTCH COVER ASSEMBLY (for Manual Transaxle) (See page CL-17)**
18. **INSPECT AND ADJUST CLUTCH COVER ASSEMBLY (for Manual Transaxle) (See page CL-17)**
19. **INSTALL MANUAL TRANSAXLE ASSEMBLY (for Manual Transaxle) (See page MX-30)**
20. **INSTALL CONTROL CABLE BRACKET (for Manual Transaxle) (See page MX-32)**
21. **INSTALL STARTER ASSEMBLY (See page ST-17)**
22. **INSTALL FLYWHEEL HOUSING SIDE COVER (See page ST-17)**
23. **CONNECT HEATER WATER INLET HOSE A**
    (a) Connect heater water inlet hose A to the cylinder head.
24. **INSTALL WATER FILLER SUB-ASSEMBLY**
    (a) Connect radiator hose No. 1 to the cylinder head.
    (b) Install the water filler sub-assembly with the 2 nuts.
    Torque: 7.5 N*m (76 kgf*cm, 66 in.*lbf)
    (c) Connect radiator hose No. 1 to the water filler.

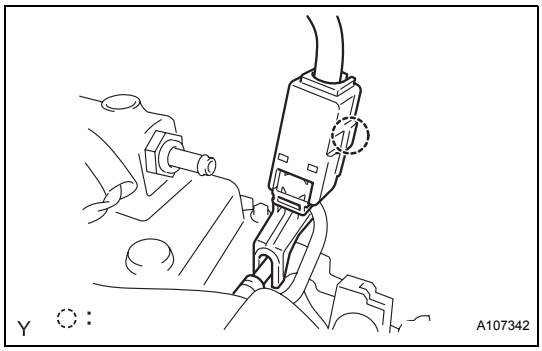

25. **INSTALL FUEL TUBE SUB-ASSEMBLY**
    (a) Connect the fuel tube connector and pipe and install fuel pipe clamp No. 2.
    CAUTION:
    Align the fuel tube connector with the pipe, then push the fuel tube connector in until the retainer makes a click sound. If the connection is tight, apply a small amount of engine oil to the the tip of the pipe. After connecting, pull the pipe and connector to make sure that they are securely connected.
26. **INSTALL VENTILATION HOSE NO. 2**
    (a) Install ventilation hose No. 2 with the clip.
27. **INSTALL VENTILATION HOSE**
    (a) Install the ventilation hose with the clip.
28. **INSTALL FRONT SUSPENSION CROSSMEMBER SUB-ASSEMBLY**
    (a) Install the engine moving control rod with the through bolt.
    Torque: 120 N*m (1,224 kgf*cm, 89 ft.*lbf)
    (b) Remove the 2 bolts and remove the 2 engine hangers.

(c) Install the oxygen sensor wiring bracket with the bolt.
Torque: 60 N*m (612 kgf*cm, 44 ft.*lbf)

(d) Install the radio setting condenser with the bolt.
Torque: 40 N*m (408 kgf*cm, 30 ft.*lbf)

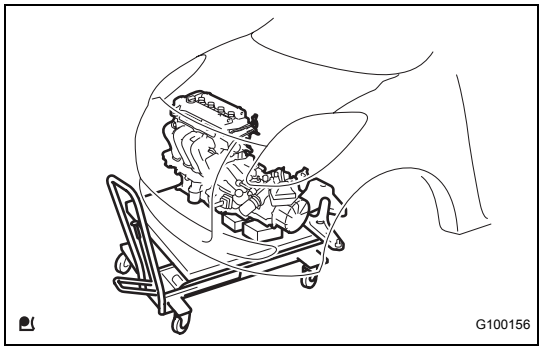

29. INSTALL ENGINE ASSEMBLY WITH TRANSAXLE (for Hatchback)

(a) Set the engine assembly with transaxle and front suspension crossmember on the engine lifter.

(b) Operate the engine lifter and lift the engine assembly with transaxle and front suspension crossmember to the position where the engine mounting insulators RH and LH can be installed.

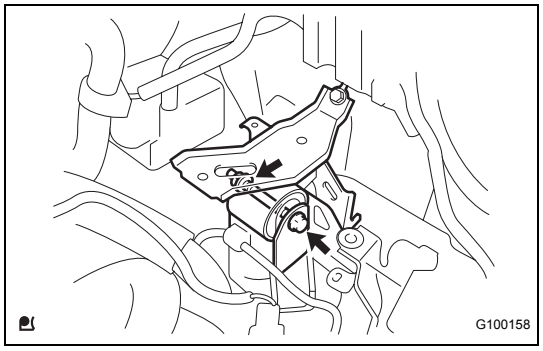

(c) Install the engine mounting insulator LH with the through bolt and nut.
Torque: 52 N*m (530 kgf*cm, 38 ft.*lbf)

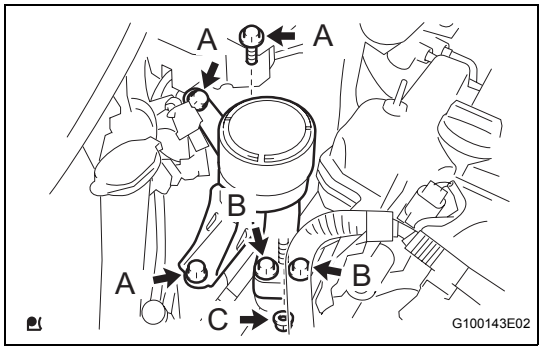

(d) Install the engine mounting insulator RH with the 5 bolts and nut.
Torque: 45 N*m (459 kgf*cm, 33 ft.*lbf) for Bolt A
52 N*m (530 kgf*cm, 38 ft.*lbf) for Bolt B
52 N*m (530 kgf*cm, 38 ft.*lbf) for Nut C

(e) Operate the engine lifter and provisionally install the front suspension crossmember onto the vehicle with the 6 bolts.

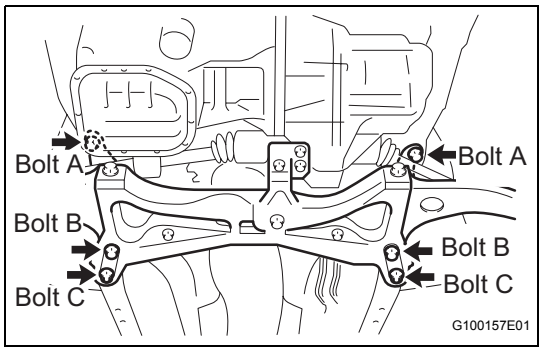

(f) Insert SST into the datum holes in the front suspension crossmembers RH and LH alternately and tighten bolts A, B and C on both sides in several sequences.
SST 09670-00010
Torque: 70 N*m (714 kgf*cm, 52 ft.*lbf) for Bolt A
160 N*m (1,631 kgf*cm, 118 ft.*lbf) for Bolt B
95 N*m (969 kgf*cm, 70 ft.*lbf) for Bolt C
CAUTION:
- **Insert SST into the datum hole vertically.**
- **If impossible to insert SST vertically, loosen all the bolts and then insert SST again.**

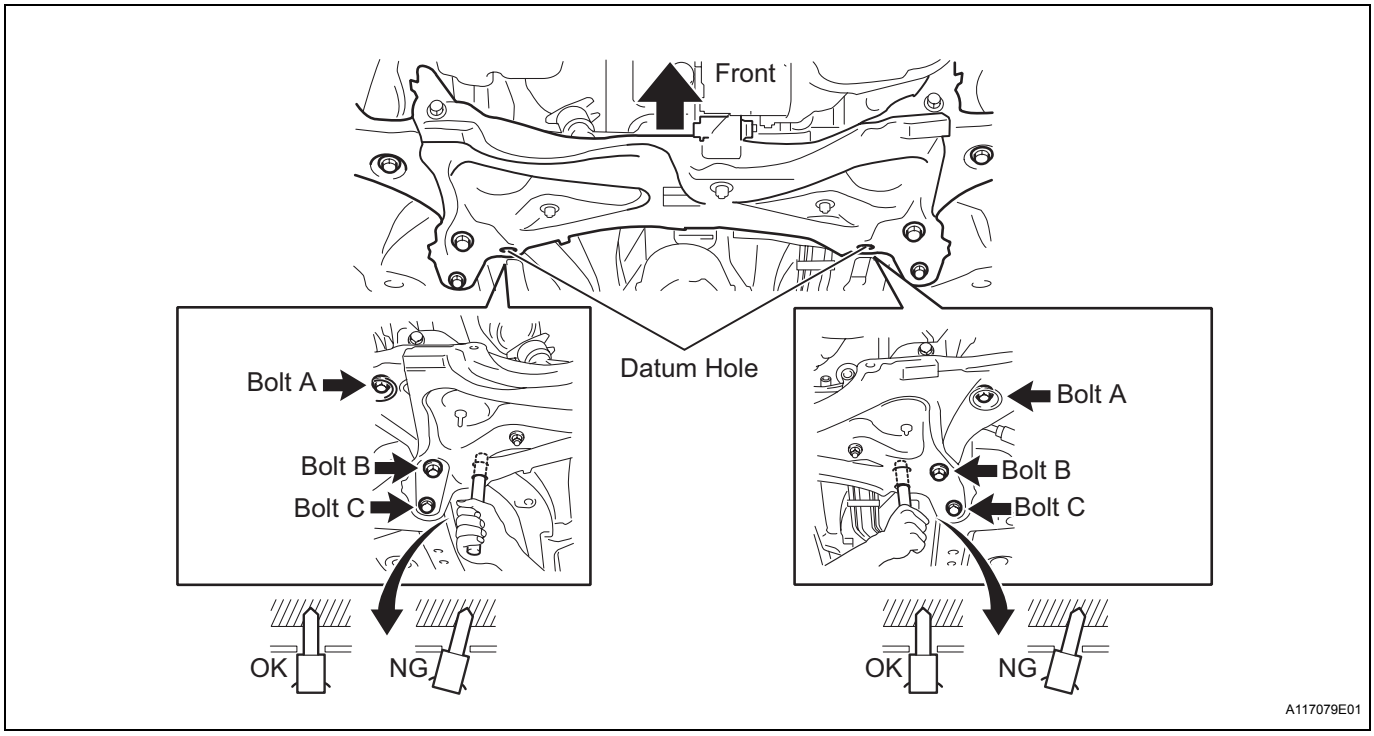

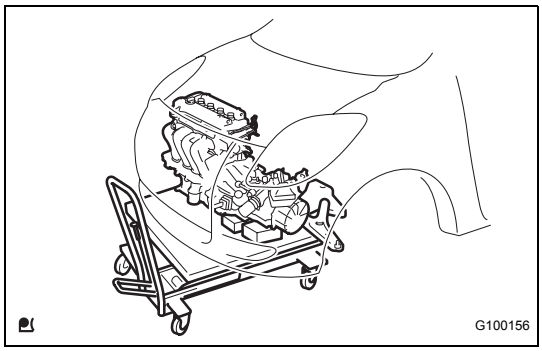

30. REMOVE ENGINE ASSEMBLY WITH TRANSAXLE (for Sedan)

(a) Set the engine assembly with transaxle and front suspension crossmember on the engine lifter.

(b) Operate the engine lifter and lift the engine assembly with transaxle and front suspension crossmember to the position where the engine mounting insulators RH and LH can be installed.

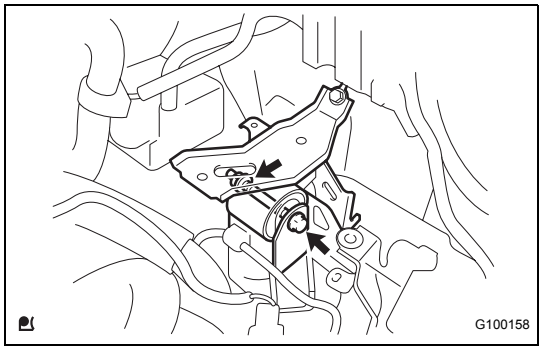

(c) Install the engine mounting insulator LH with the through bolt and nut.
Torque: 52 N*m (530 kgf*cm, 38 ft.*lbf)

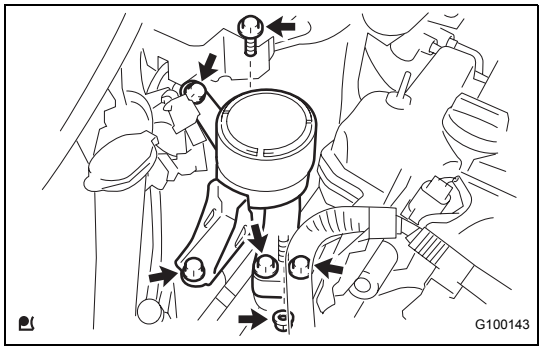

(d) Install the engine mounting insulator RH with the 5 bolts and nut.
Torque: 52 N*m (530 kgf*cm, 38 ft.*lbf)

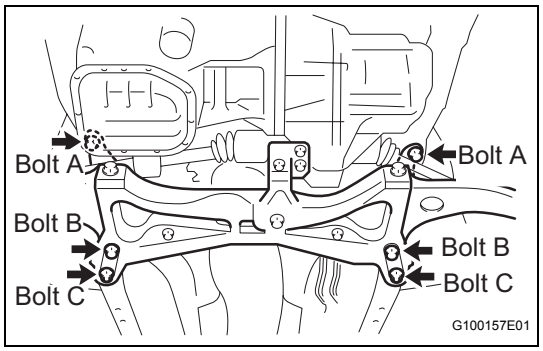

(e) Operate the engine lifter and provisionally install the engine assembly with transaxle and front suspension crossmember onto the vehicle with the 6 bolts.

(f) Insert SST into the datum holes of the front suspension crossmembers RH and LH alternately and tighten bolts A, B and C on both sides in several sequences.

SST 09670-00010

Torque: 70 N*m (714 kgf*cm, 52 ft.*lbf) for Bolt A
160 N*m (1,631 kgf*cm, 118 ft.*lbf) for Bolt B
95 N*m (969 kgf*cm, 70 ft.*lbf) for Bolt C

CAUTION:

- **Insert SST into the datum hole vertically.**
- **If impossible to insert SST vertically, loosen all the bolts and then insert SST again.**

EM

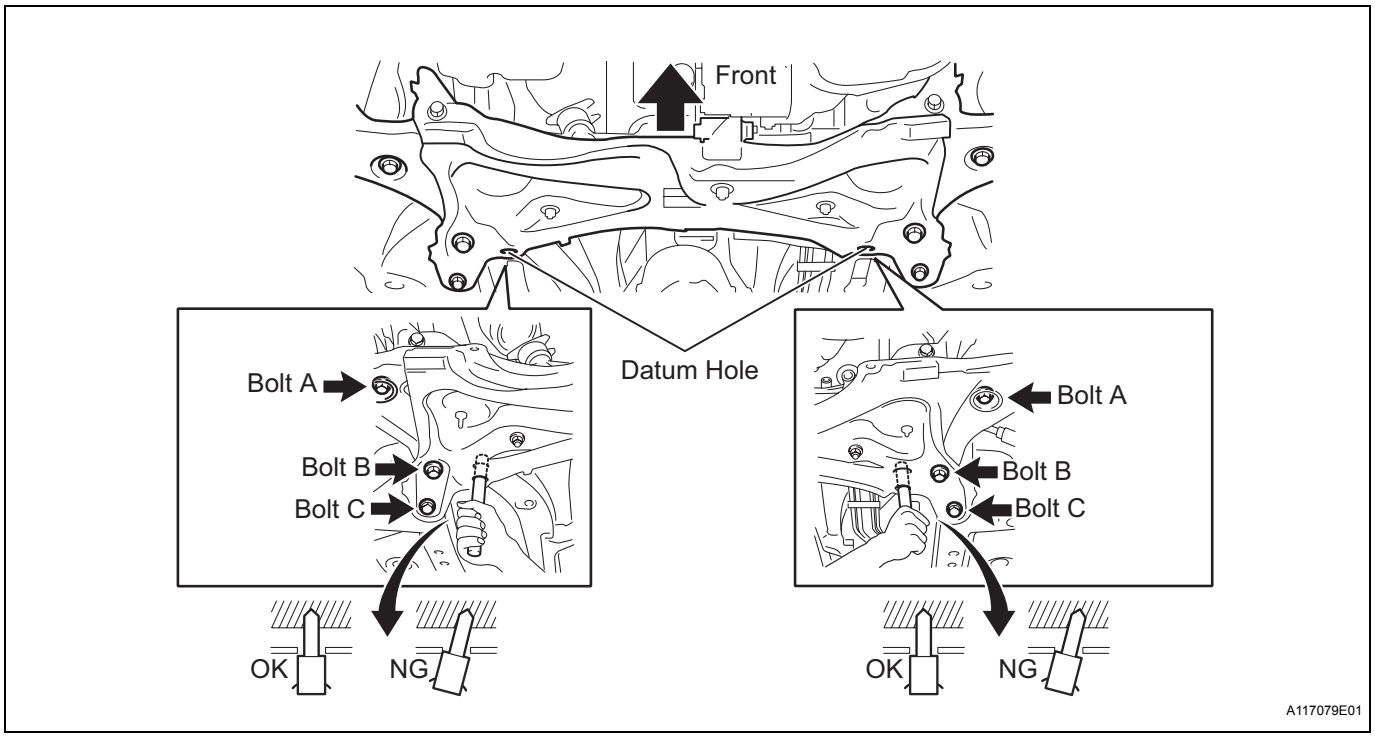

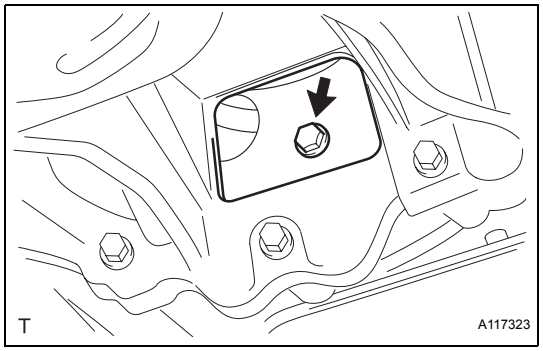

31. **INSTALL DRIVE PLATE AND TORQUE CONVERTER CLUTCH SETTING BOLT (for Automatic Transaxle)**
    (a) Tighten the 6 torque converter set bolts.
    Torque: 27 N*m (275 kgf*cm, 20 ft.*lbf)
32. **INSTALL FLYWHEEL HOUSING UNDER COVER**
33. **INSTALL FRONT DRIVE SHAFT ASSEMBLY LH (See page DS-13)**
34. **INSTALL FRONT DRIVE SHAFT ASSEMBLY RH (See page DS-14)**
35. **INSTALL FRONT AXLE ASSEMBLY LH (See page DS-14)**
36. **INSTALL FRONT AXLE ASSEMBLY RH (See page DS-14)**

37. INSTALL FRONT STABILIZER LINK ASSEMBLY LH (See page DS-14)
38. INSTALL FRONT STABILIZER LINK ASSEMBLY RH (See page MX-31)
39. INSTALL FRONT SUSPENSION ARM SUB-ASSEMBLY LOWER NO. 1 LH (See page DS-14)
40. INSTALL FRONT SUSPENSION ARM SUB-ASSEMBLY LOWER NO. 1 RH (See page MX-31)
41. INSTALL TIE ROD END SUB-ASSEMBLY LH (See page DS-15)
42. INSTALL TIE ROD END SUB-ASSEMBLY RH (See page MX-31)
43. INSTALL SPEED SENSOR FRONT LH (w/ ABS) (See page DS-15)
44. INSTALL SPEED SENSOR FRONT RH (w/ ABS) (See page MX-31)
45. INSTALL FRONT AXLE HUB LH NUT (See page DS-15)
46. INSTALL FRONT AXLE HUB RH NUT (See page MX-31)
47. INSTALL EXHAUST PIPE ASSEMBLY FRONT (See page EX-8)
48. INSTALL HEATED OXYGEN SENSOR (See page EC-23)
49. INSTALL CONSOLE BOX ASSEMBLY REAR (See page PB-10)
50. INSTALL CONSOLE BOX REAR COVER (for Hatchback) (See page PB-11)
51. INSTALL SHIFTING HOLE COVER SUB-ASSEMBLY (for Manual Transaxle) (See page PB-12)
52. INSTALL CONSOLE BOX CARPET (for Sedan) (See page PB-11)
53. INSTALL CONSOLE UPPER REAR PANEL SUB-ASSEMBLY (for Sedan) (See page IP-89)
54. INSTALL UPPER CONSOLE PANEL SUB-ASSEMBLY (for Sedan) (See page IP-89)
55. INSTALL INSTRUMENT PAD LOWER LH (for Sedan) (See page IP-55)
56. INSTALL INSTRUMENT PANEL FINISH PANEL END LH (for Sedan) (See page ME-141)
57. INSTALL INSTRUMENT PANEL FINISH PANEL LOWER CENTER (for Sedan) (See page ME-142)
58. INSTALL SHIFT LEVER KNOB SUB-ASSEMBLY (for Manual Transaxle)

59. **INSTALL STEERING COLUMN HOLE COVER SUB-ASSEMBLY NO. 1 (See page PS-79)**

60. **INSTALL STEERING SLIDING YOKE SUB-ASSEMBLY (See page PS-79)**

61. **INSTALL COLUMN HOLE COVER SILENCER SHEET (See page PS-79)**

62. **CONNECT ENGINE WIRE**

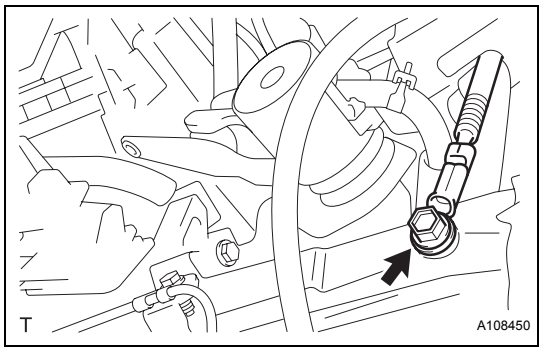

(a) Install the earth wire of the engine room wire harness with the bolt.

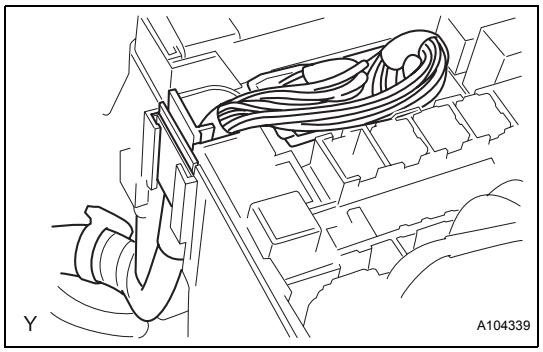

(b) Connect the 2 engine wire harness connectors and wire harness clamp to the engine room junction block.

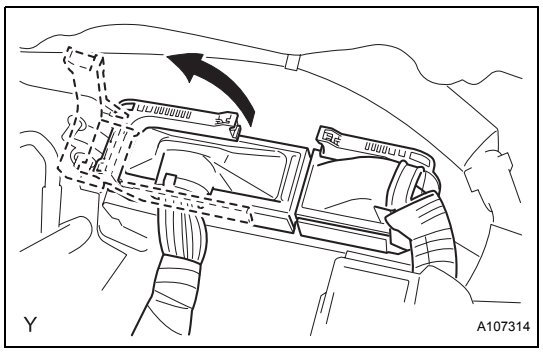

(c) Connect the engine wire harness connector to the ECM.

63. **INSTALL CLUTCH RELEASE CYLINDER ASSEMBLY (for Manual Transaxle) (See page MX-32)**

64. **INSTALL WITH PULLEY COMPRESSOR ASSEMBLY (w/ Air Conditioning System) (See page AC-209)**

65. **INSTALL FAN AND GENERATOR V BELT (See page EM-7)**

66. **ADJUST FAN AND GENERATOR V BELT (See page EM-7)**

67. **CONNECT FUEL TUBE SUB-ASSEMBLY**

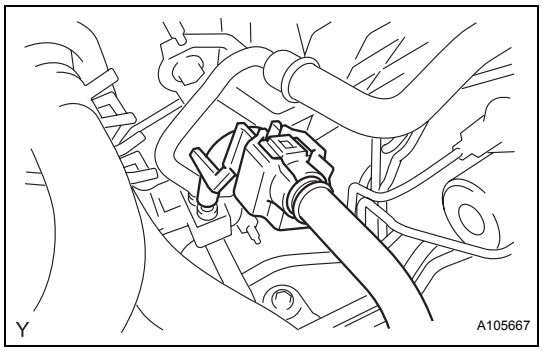

(a) Connect the fuel tube connector and fuel pipe, and install fuel pipe clamp No. 1.

CAUTION:

Align the fuel tube connector with the pipe, then push the fuel tube connector in until the retainer makes a click sound. If the connection is tight, apply a small amount of engine oil to the the tip of the pipe. After connecting, pull the pipe and connector to make sure that they are securely connected.

EM

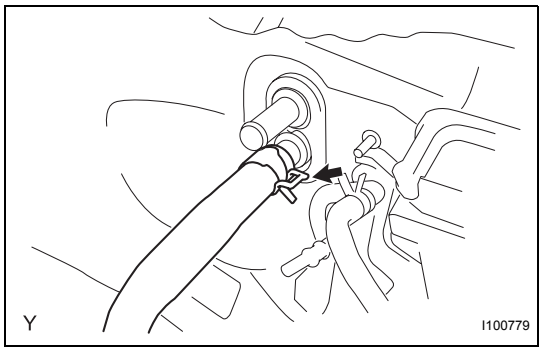

68. CONNECT HEATER WATER INLET HOSE A

(a) Connect heater water inlet hose A to the heater unit.

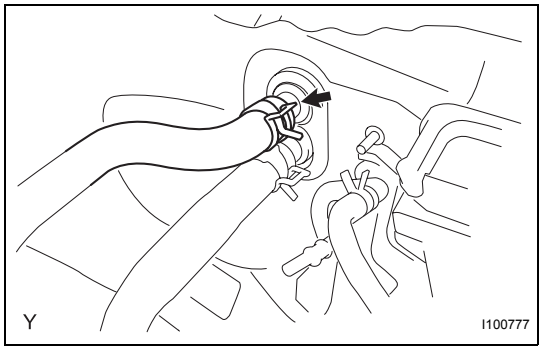

69. CONNECT HEATER WATER OUTLET HOSE A (FROM HEATER UNIT)

(a) Connect heater water outlet hose A to the heater unit.

70. CONNECT UNION TO CHECK VALVE HOSE

(a) Connect the union to check valve hose to the booster vacuum tube.

71. INSTALL TRANSMISSION CONTROL CABLE ASSEMBLY (for Automatic Transaxle) (See page AX-109)

72. INSTALL TRANSMISSION CONTROL CABLE ASSEMBLY (for Manual Transaxle) (See page MX-32)

73. INSTALL CYLINDER HEAD COVER NO. 2 (See page IG-10)

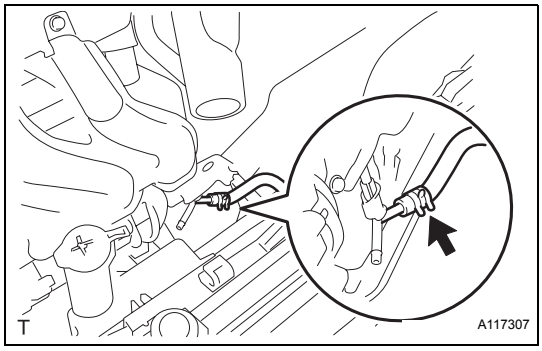

74. CONNECT OIL COOLER INLET HOSE (for Automatic Transaxle)

(a) Connect the oil cooler inlet hose with the clip.

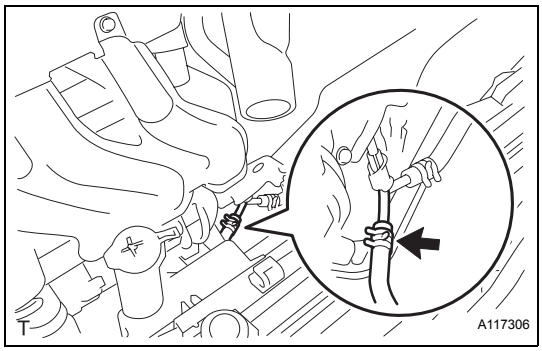

75. CONNECT OIL COOLER OUTLET HOSE (for Automatic Transaxle)

(a) Connect the oil cooler outlet hose with the clip.

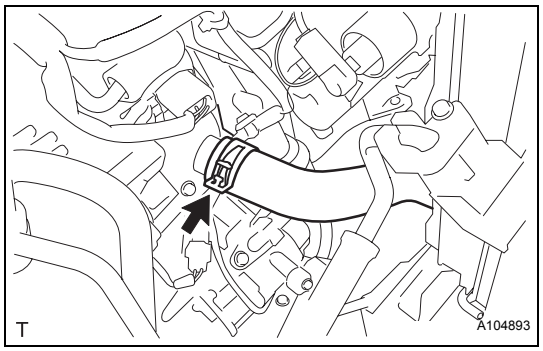

76. CONNECT RADIATOR HOSE NO. 2

(a) Connect radiator hose No. 2 to the water inlet.

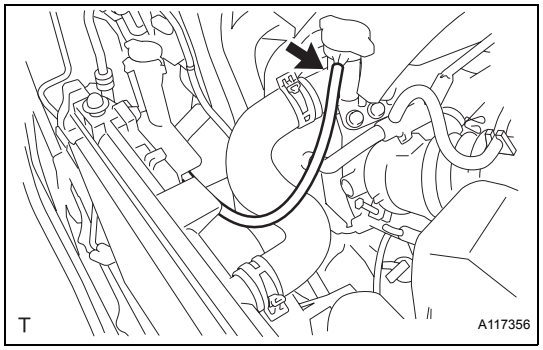

77. CONNECT RADIATOR RESERVOIR TANK HOSE

(a) Connect the radiator reservoir tank hose to the water filler.

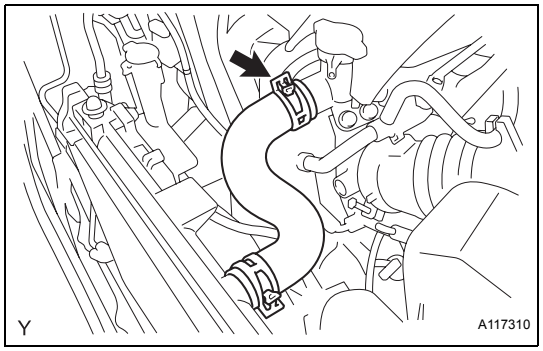

78. CONNECT RADIATOR HOSE NO. 3

(a) Connect radiator hose No. 3 to the water filler.

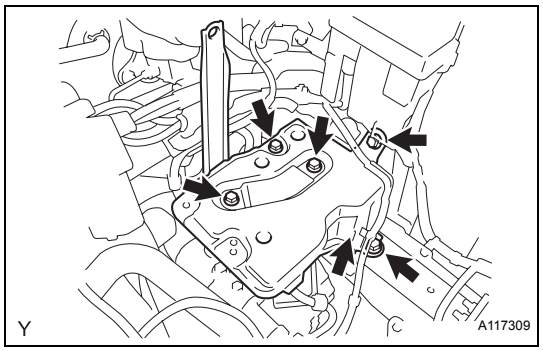

79. INSTALL BATTERY CARRIER

(a) Install the battery carrier with the 5 bolts.
Torque: 17 N*m (173 kgf*cm, 13 ft.*lbf)

(b) Install the clamp.

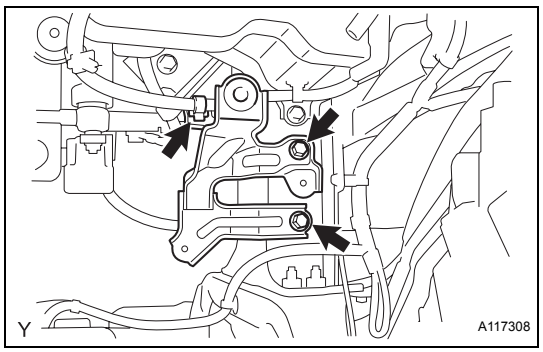

80. INSTALL AIR CLEANER BRACKET

(a) Install the air cleaner bracket with the 2 bolts.
Torque: 19 N*m (194 kgf*cm, 14 ft.*lbf)

(b) Connect the wire harness clamp to the air cleaner bracket.

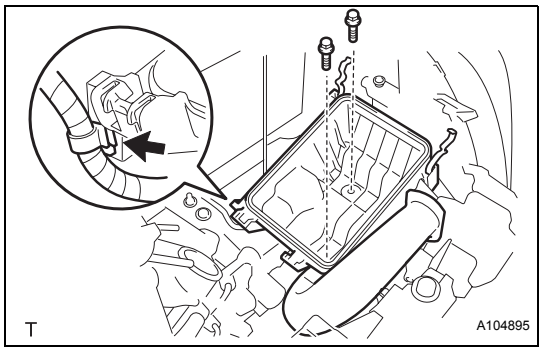

81. INSTALL AIR CLEANER ASSEMBLY

(a) Install the air cleaner case with air cleaner inlet No. 1 with the 2 bolts.
Torque: 7.8 N*m (80 kgf*cm, 69 in.*lbf)

(b) Connect the wire harness to the air cleaner case.

(c) Install the air cleaner element.

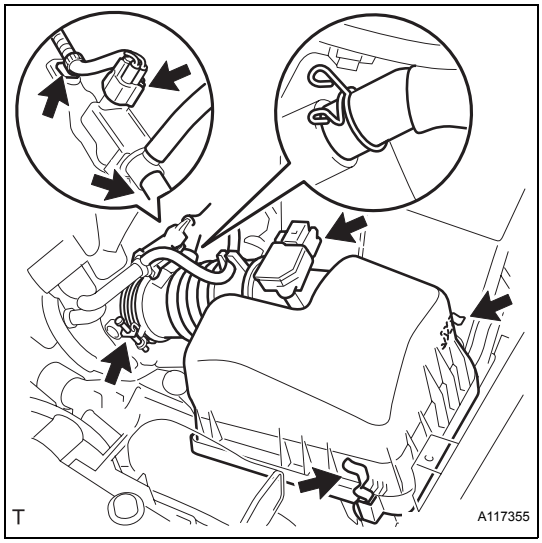

(d) Install and lock the air cleaner cap and the air cleaner hose and then tighten the air cleaner hose clamp.
Torque: 4.0 N*m (41 kgf*cm, 35 in.*lbf)

(e) Connect the ventilation hose to the air cleaner hose.

(f) Connect the vacuum switching valve connector and the wire harness clamp.

(g) Connect the fuel vapor feed hose and fuel vapor feed hose No. 1 to the vacuum switching valve assembly.

(h) Connect the intake air flow meter connector and the wire harness clamp.



82. INSTALL COWL TOP PANEL OUTER (for Hatchback)

(a) Install the cowl top panel with the 9 bolts.
Torque: 6.5 N*m (66 kgf*cm, 58 ft.*lbf)

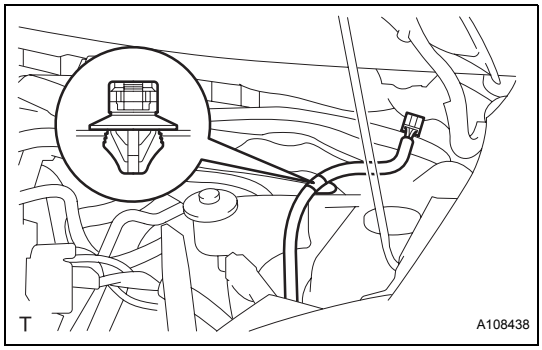

(b) Connect the wire harness clamp.

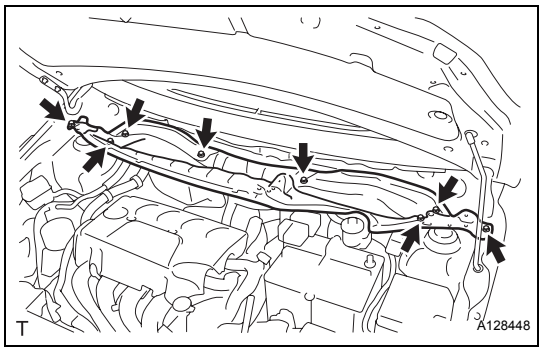

83. INSTALL COWL TOP PANEL OUTER (for Sedan)

(a) Install the cowl top panel outer with the 8 bolts.
Torque: 6.5 N*m (66 kgf*cm, 58 in.*lbf)

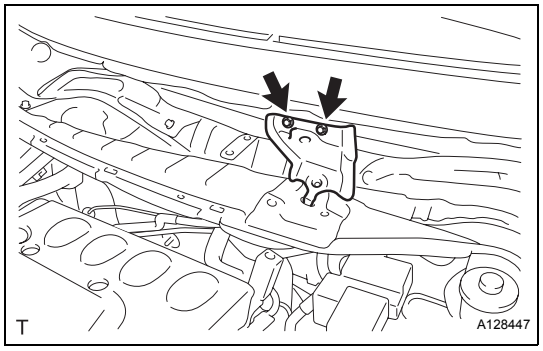

(b) Install the cowl top to cowl inner brace with the 2 bolts.
Torque: 6.5 N*m (66 kgf*cm, 58 in.*lbf)

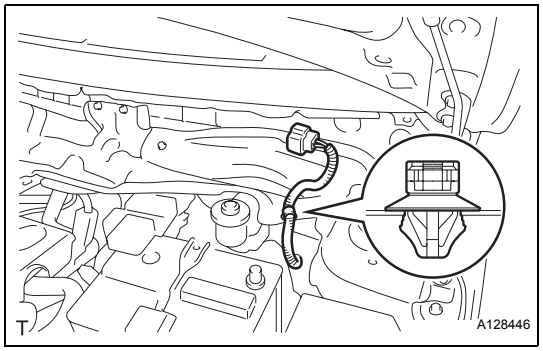

(c) Connect the wire harness clamp.

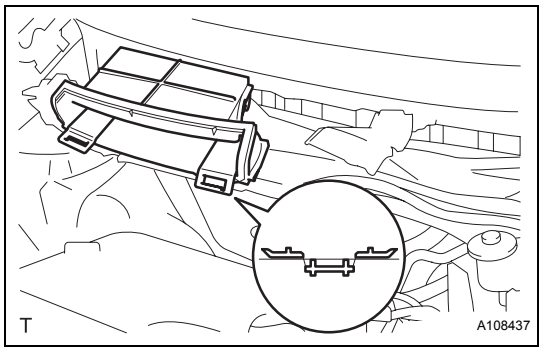

84. INSTALL COWL TO REGISTER DUCT SUB-ASSEMBLY NO. 2 (for Hatchback)

(a) Engage the claw and install cowl to register duct No. 2.

EM

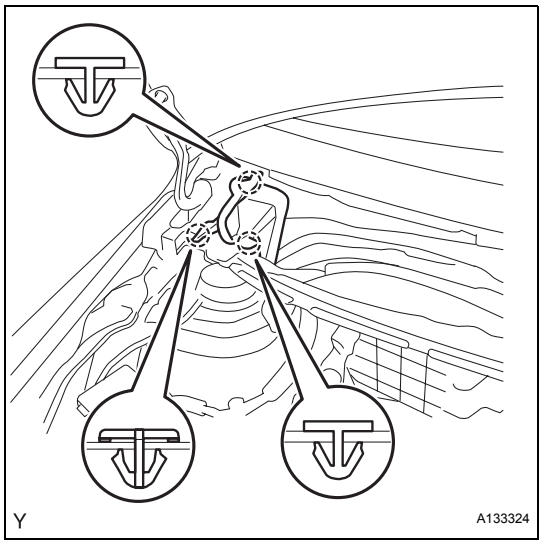

EM

85. **INSTALL FRONT AIR SHUTTER SEAL RH (for Sedan)**
    (a) Engage the 3 claws to install the front air shutter seal RH.
86. **INSTALL FRONT WIPER MOTOR AND LINK (See page WW-21)**
87. **INSTALL COWL TOP VENTILATOR LOUVER LH (for Hatchback) (See page WW-21)**
88. **INSTALL COWL TOP VENTILATOR LOUVER SUB-ASSEMBLY (for Hatchback) (See page WW-21)**
89. **INSTALL HOOD TO COWL TOP SEAL (for Hatchback) (See page WW-22)**
90. **INSTALL COWL TOP VENTILATOR LOUVER SUB-ASSEMBLY (for Sedan) (See page WW-12)**
91. **INSTALL COWL SIDE VENTILATOR SUB-ASSEMBLY LH (for Sedan) (See page WW-13)**
92. **INSTALL COWL SIDE VENTILATOR SUB-ASSEMBLY RH (for Sedan) (See page WW-13)**
93. **INSTALL FRONT WIPER ARM LH (See page WW-22)**
94. **INSTALL FRONT WIPER ARM RH (See page WW-23)**
95. **INSTALL FRONT WIPER ARM HEAD CAP (See page WW-23)**
96. **INSTALL BATTERY TRAY**
97. **INSTALL BATTERY**
    (a) Install the battery onto the vehicle with the battery clamp.
    Torque: 3.5 N*m (36 kgf*cm, 31 in.*lbf)
    (b) Connect the cable to the battery terminal.
    Torque: 5.4 N*m (55 kgf*cm, 48 in.*lbf)
98. **ADD ENGINE COOLANT (See page CO-8)**
99. **ADD AUTOMATIC TRANSAXLE FLUID (for Automatic Transaxle) (See page AX-169)**
100. **INSPECT AUTOMATIC TRANSAXLE FLUID (for Automatic Transaxle) (See page AX-93)**
101. **ADD MANUAL TRANSAXLE OIL (for Manual Transaxle)**
102. **INSPECT MANUAL TRANSAXLE OIL (for Manual Transaxle) (See page MX-2)**
103. **INSPECT FAN AND GENERATOR V BELT (See page EM-8)**
104. **CHECK FOR FUEL LEAKAGE (See page FU-7)**
105. **CHECK FOR ENGINE OIL LEAKAGE**
106. **CHECK FOR EXHAUST GAS LEAKAGE**
107. **CHECK FOR ENGINE COOLANT LEAKAGE (See page CO-1)**

108. INSTALL ENGINE UNDER COVER RH
109. INSTALL ENGINE UNDER COVER LH
110. INSTALL FRONT WHEELS
     Torque: 103 N*m (1,050 kgf*cm, 76 ft.*lbf)
111. INSPECT IGNITION TIMING (See page EM-1)
112. INSPECT ENGINE IDLING SPEED (See page EM-2)
113. INSPECT CO/HC (See page EM-4)
114. INSPECT FRONT WHEEL ALIGNMENT
115. INSPECT ABS SENSOR SIGNAL (w/ ABS)

ENGINE UNIT

COMPONENTS

EM

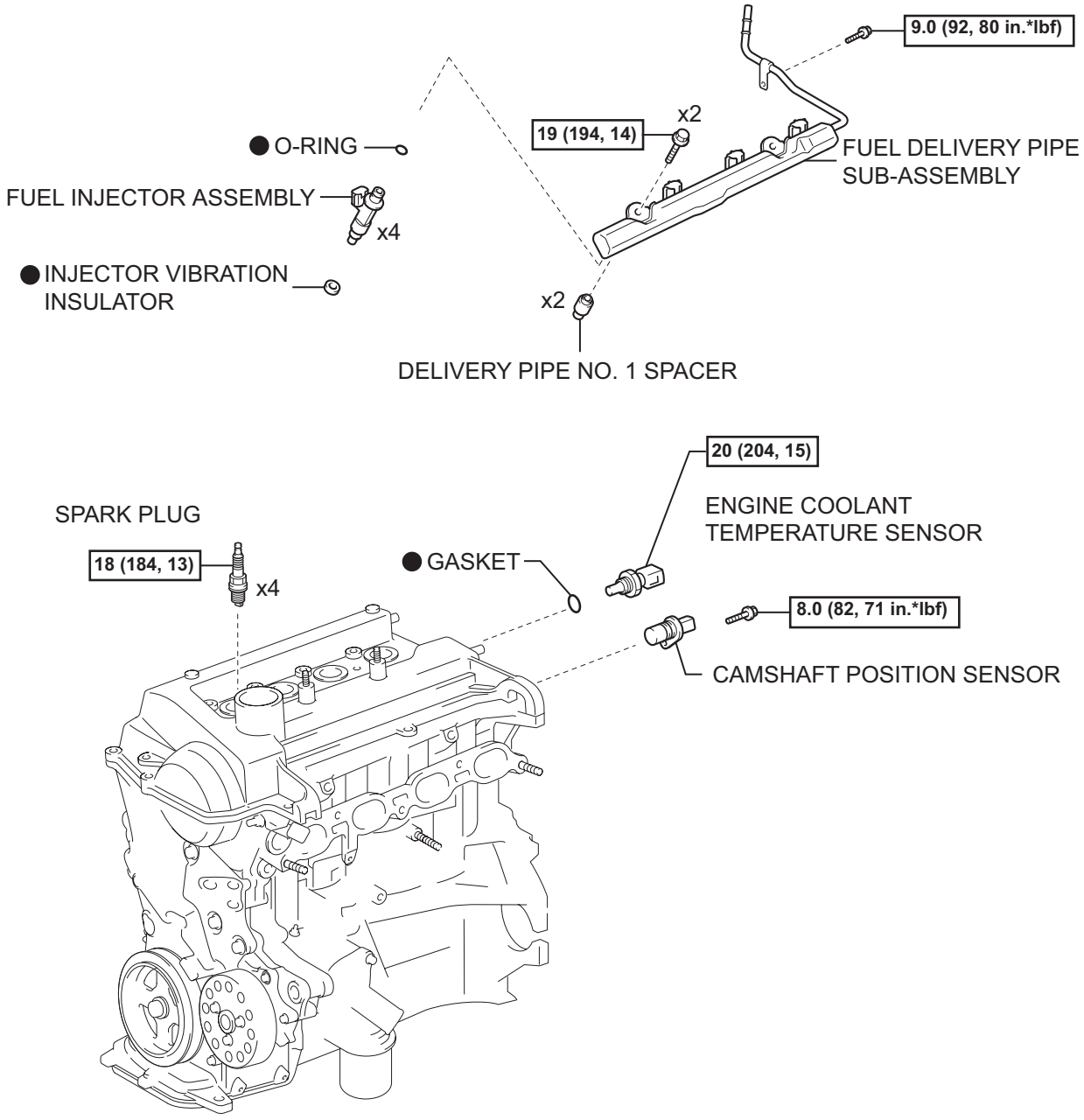

N*m (kgf*cm, ft.*lbf) : Specified torque

● Non-reusable part

A117466E01

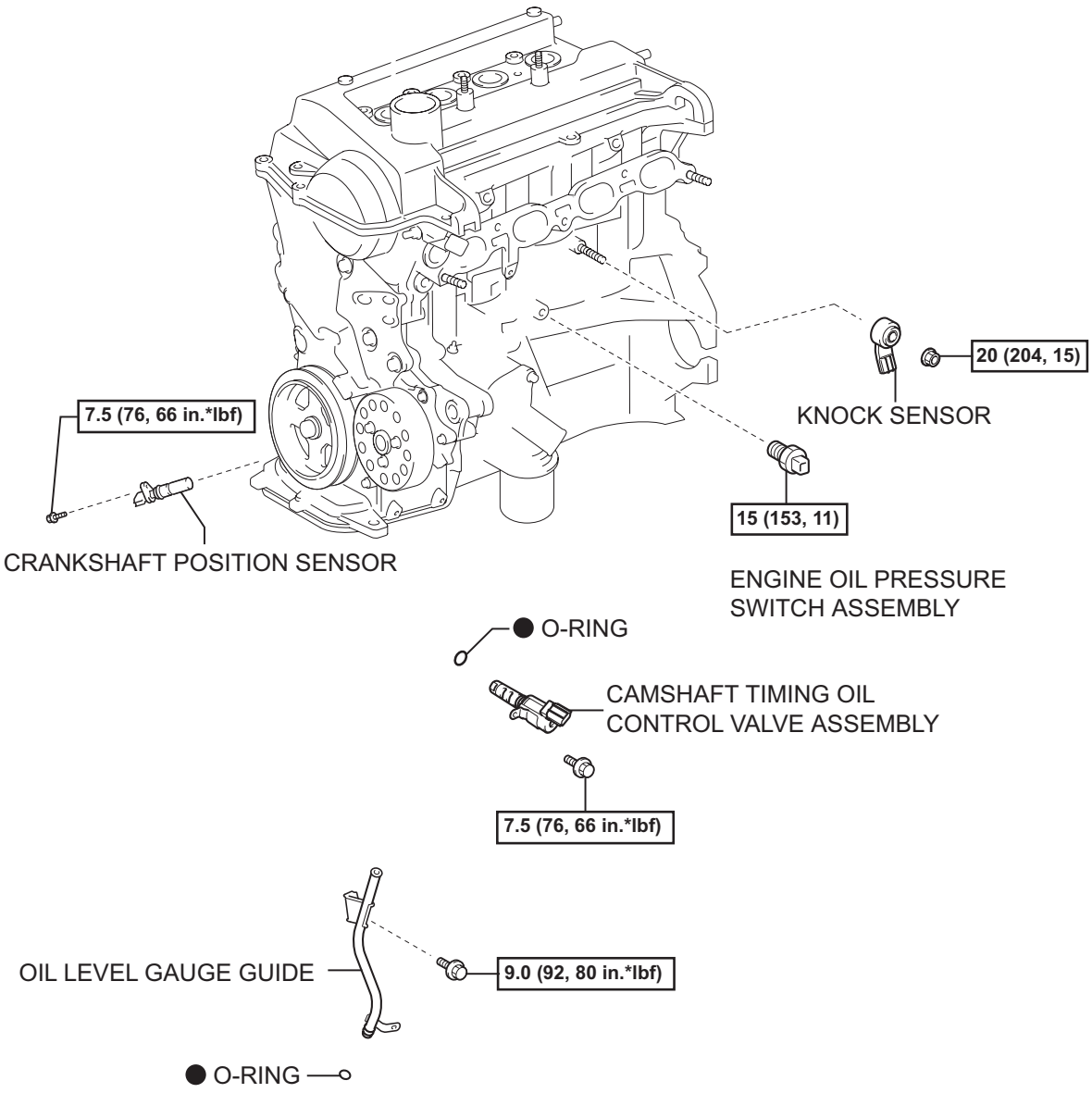

N*m (kgf*cm, ft.*lbf) : Specified torque

● Non-reusable part

A117467E01

EM

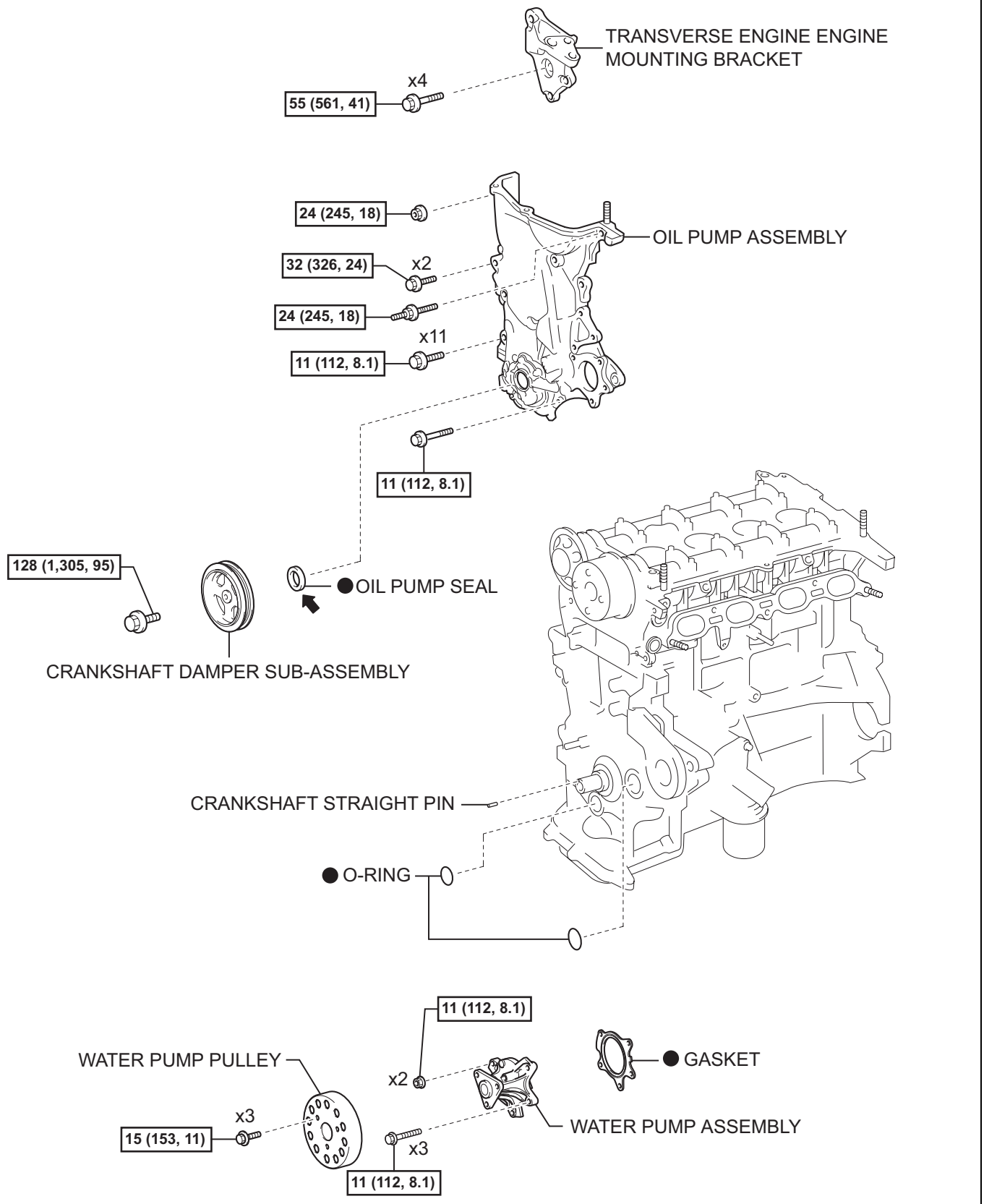

N*m (kgf*cm, ft.*lbf) : Specified torque ● Non-reusable part ⬅ Apply MP grease

T

A117447E01

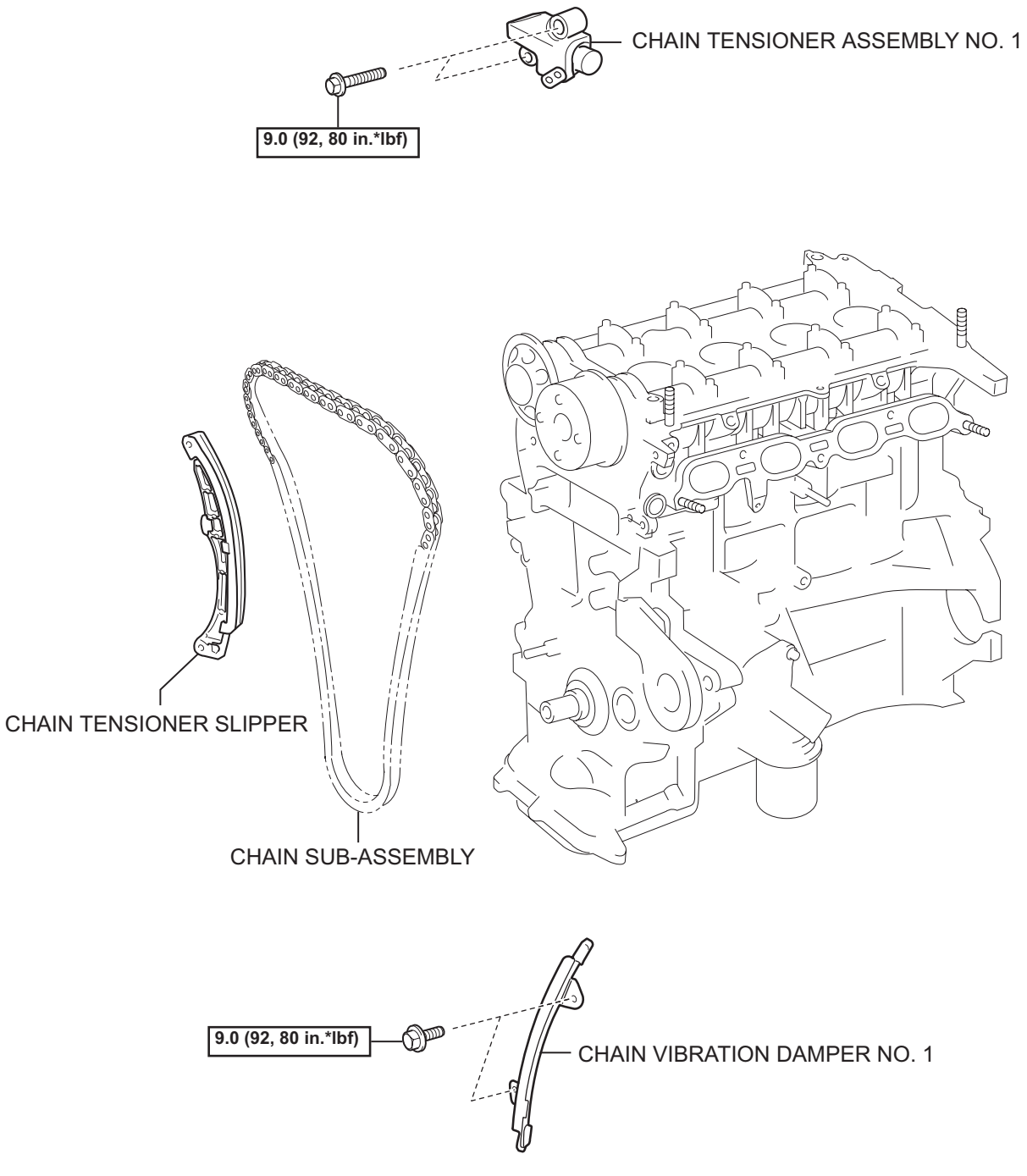

N*m (kgf*cm, ft.*lbf) : Specified torque

T

A117448E01

EM

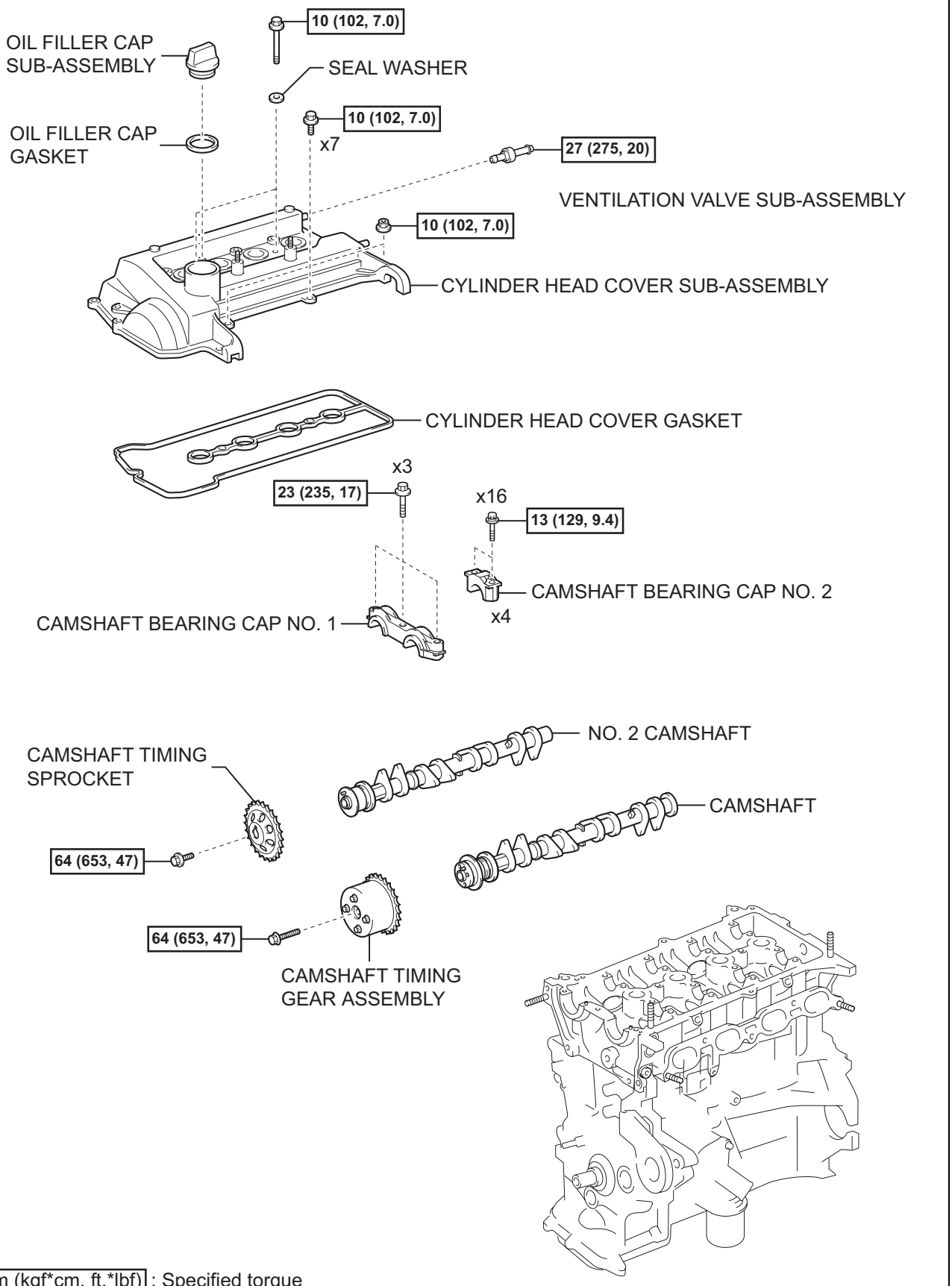

EM

N*m (kgf*cm, ft.*lbf) : Specified torque

T

A117449E01

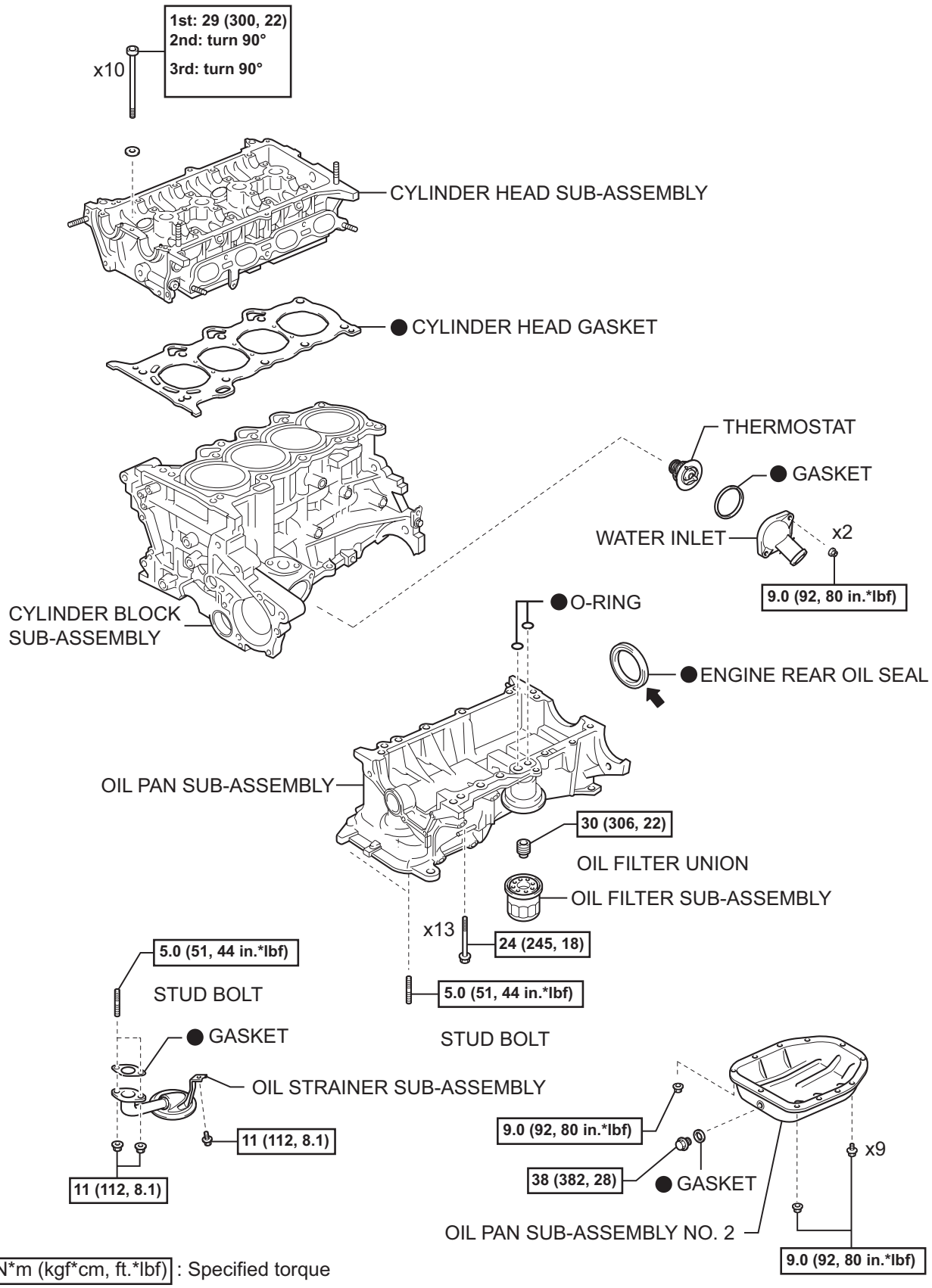
1st: 29 (300, 22)
2nd: turn 90°
3rd: turn 90°
x10
CYLINDER HEAD SUB-ASSEMBLY
● CYLINDER HEAD GASKET
THERMOSTAT
● GASKET
WATER INLET
x2
9.0 (92, 80 in.*lbf)
CYLINDER BLOCK SUB-ASSEMBLY
● O-RING
● ENGINE REAR OIL SEAL
OIL PAN SUB-ASSEMBLY
30 (306, 22)
OIL FILTER UNION
OIL FILTER SUB-ASSEMBLY
x13
24 (245, 18)
5.0 (51, 44 in.*lbf)
STUD BOLT
5.0 (51, 44 in.*lbf)
STUD BOLT
● GASKET
OIL STRAINER SUB-ASSEMBLY
11 (112, 8.1)
11 (112, 8.1)
9.0 (92, 80 in.*lbf)
38 (382, 28)
● GASKET
x9
OIL PAN SUB-ASSEMBLY NO. 2
9.0 (92, 80 in.*lbf)
N*m (kgf*cm, ft.*lbf) : Specified torque
● Non-reusable part
Apply MP grease
A117468E01

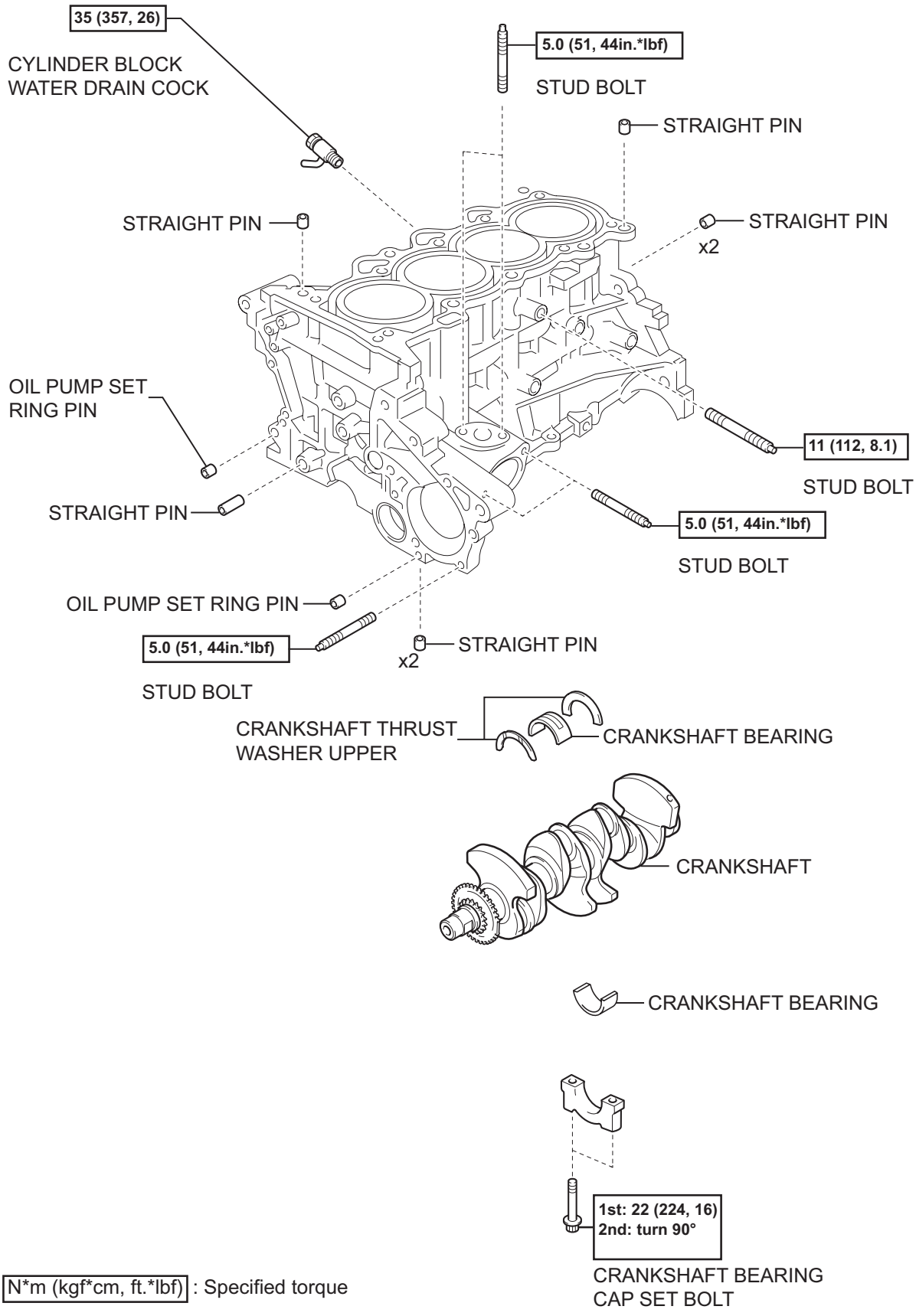
35 (357, 26)
CYLINDER BLOCK WATER DRAIN COCK
5.0 (51, 44in.*lbf)
STUD BOLT
STRAIGHT PIN
STRAIGHT PIN
STRAIGHT PIN
x2
OIL PUMP SET RING PIN
11 (112, 8.1)
STUD BOLT
STRAIGHT PIN
5.0 (51, 44in.*lbf)
STUD BOLT
OIL PUMP SET RING PIN
5.0 (51, 44in.*lbf)
STRAIGHT PIN
x2
STUD BOLT
CRANKSHAFT THRUST WASHER UPPER
CRANKSHAFT BEARING
CRANKSHAFT
CRANKSHAFT BEARING
1st: 22 (224, 16)
2nd: turn 90°
CRANKSHAFT BEARING CAP SET BOLT
N*m (kgf*cm, ft.*lbf) : Specified torque
T
A117453E02

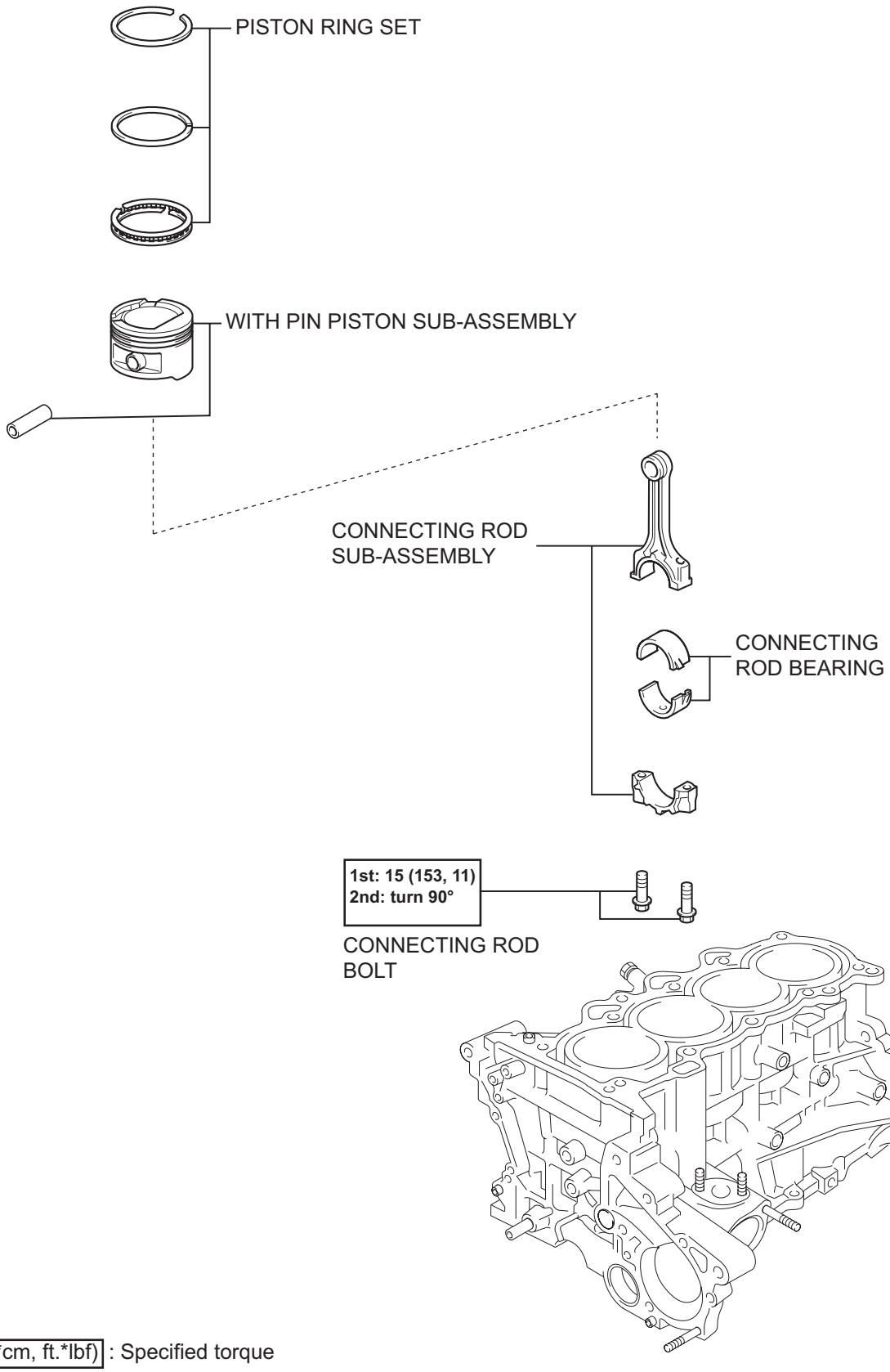

N*m (kgf*cm, ft.*lbf) : Specified torque

T

A117452E03

EM

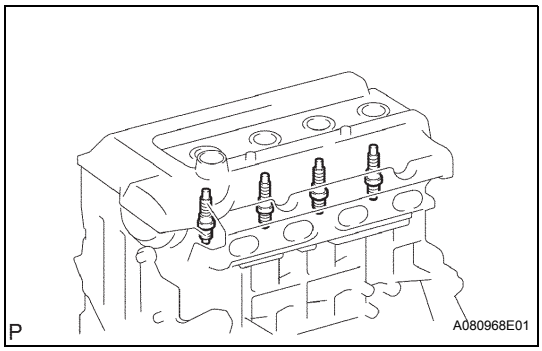

DISASSEMBLY

1. REMOVE SPARK PLUG

(a) Using a spark plug wrench, remove the 4 spark plugs.

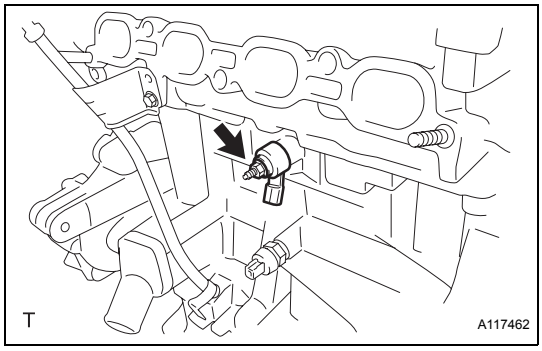

2. REMOVE KNOCK SENSOR

(a) Remove the nut and remove the knock sensor.

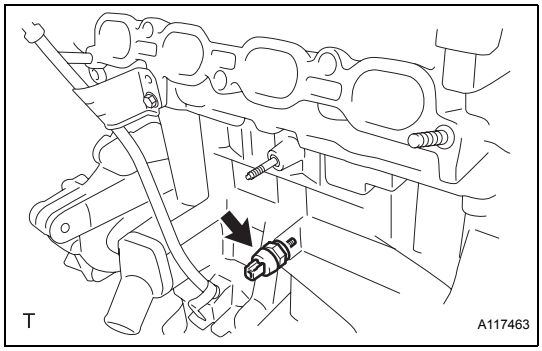

3. REMOVE ENGINE OIL PRESSURE SWITCH ASSEMBLY

(a) Using a 24 mm deep socket wrench, remove the oil pressure switch.

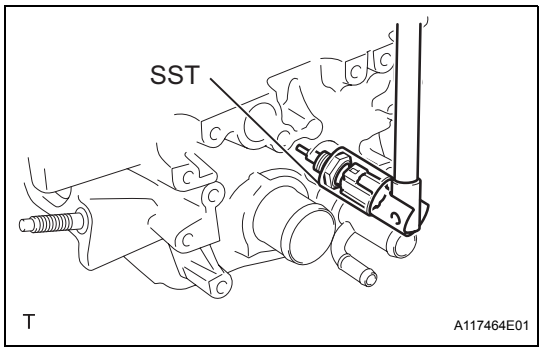

4. REMOVE ENGINE COOLANT TEMPERATURE SENSOR

(a) Using SST, remove the engine coolant temperature sensor.

SST 09817-33190

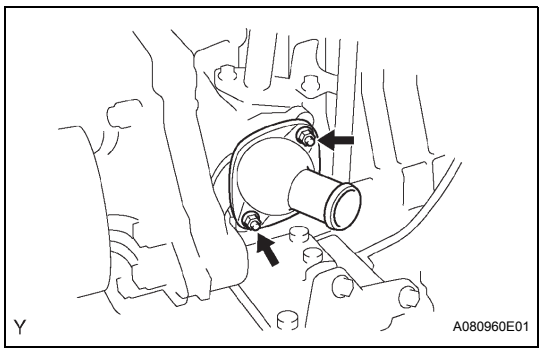

5. REMOVE WATER INLET

(a) Remove the 2 nuts and remove the water inlet.

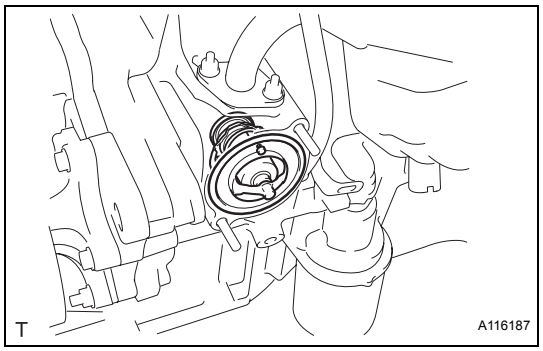

6. REMOVE THERMOSTAT

(a) Remove the thermostat.

(b) Remove the gasket from the thermostat.

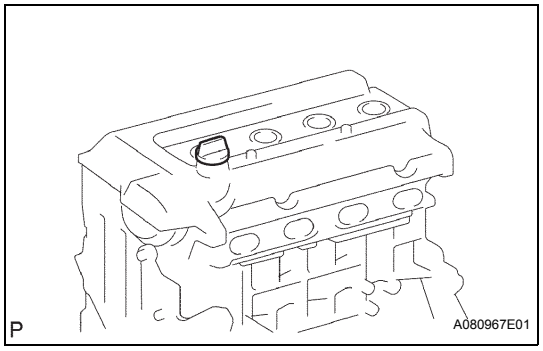

7. REMOVE OIL FILLER CAP SUB-ASSEMBLY

(a) Remove the oil filler cap from the cylinder head cover.

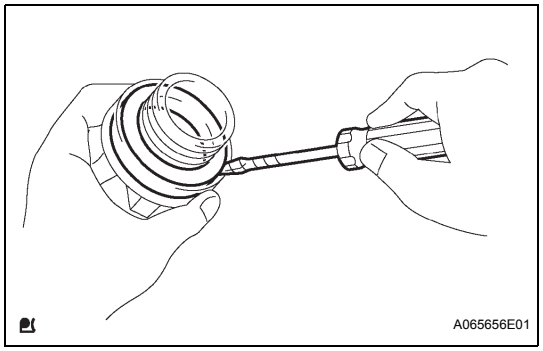

8. REMOVE OIL FILLER CAP GASKET

(a) Using a screwdriver, remove the gasket from the oil filler cap.

9. REMOVE CRANKSHAFT POSITION SENSOR

(a) Remove the bolt and the crankshaft position sensor.

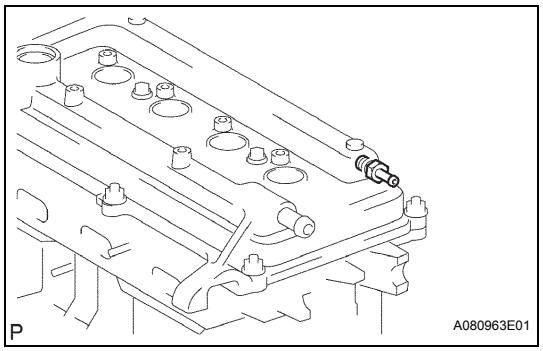

10. REMOVE VENTILATION VALVE SUB-ASSEMBLY

(a) Remove the ventilation valve from the cylinder head cover.

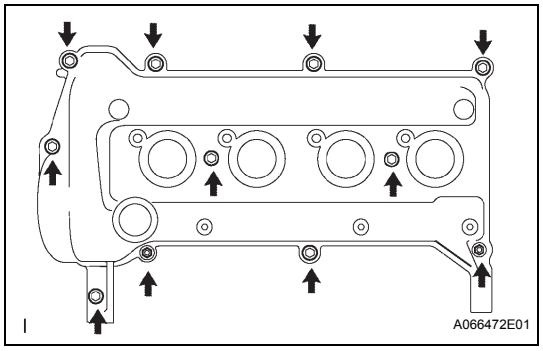

11. REMOVE CYLINDER HEAD COVER SUB-ASSEMBLY

(a) Remove the 9 bolts, 2 nuts and 2 seal washers and then remove the cylinder head cover sub-assembly.

12. REMOVE CYLINDER HEAD COVER GASKET

(a) Remove the gasket from the cylinder head cover.

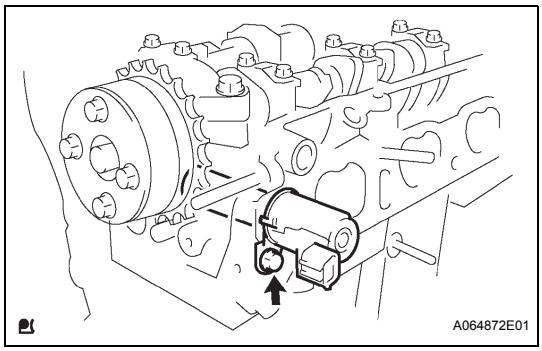

13. REMOVE CAMSHAFT TIMING OIL CONTROL VALVE ASSEMBLY

(a) Remove the bolt and the camshaft timing oil control valve.

14. REMOVE OIL LEVEL GAUGE GUIDE

(a) Remove the bolt and the oil level gauge guide.

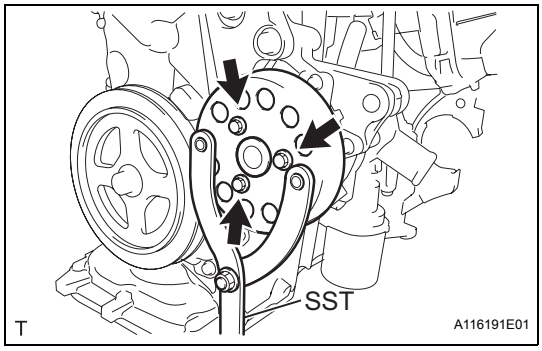

15. REMOVE WATER PUMP PULLEY

(a) Using SST, hold the pump pulley.
SST 09960-10010 (09962-01000, 09963-00700)

(b) Remove the 3 bolts and the pump pulley.

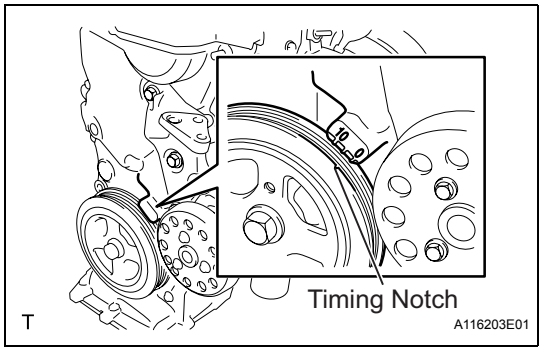

16. REMOVE CRANKSHAFT DAMPER SUB-ASSEMBLY

(a) Set cylinder No. 1 to TDC/compression.

(1) Turn the crankshaft damper sub-assembly, and align its timing notch with timing mark "0" of the oil pump.

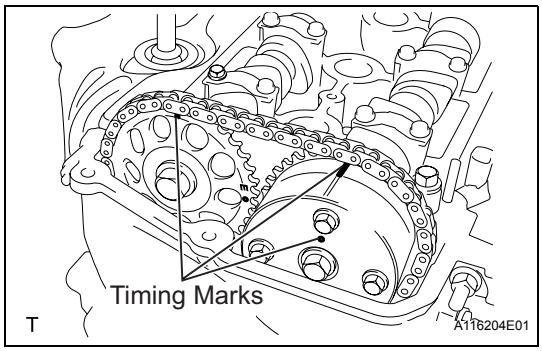

(2) Check that the timing marks on the camshaft timing sprocket and the camshaft timing gear are all facing upward, as shown in the illustration.
If not, turn the crankshaft 1 complete revolution (360°) and align the marks as above.

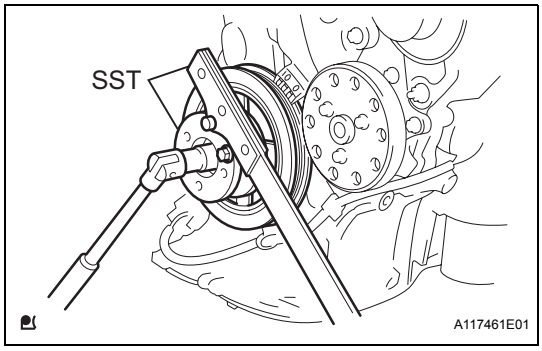

(b) Using 2 SSTs, loosen the bolt while holding the crankshaft damper sub-assembly.
SST 09213-14010 (91651-60865), 09330-00021
NOTICE:
Check the SST installation positions when installing them, to avoid the SST fixing bolts from coming into contact with the oil pump assembly.

(c) Remove the SSTs and the bolt.

(d) Remove the crankshaft damper sub-assembly.

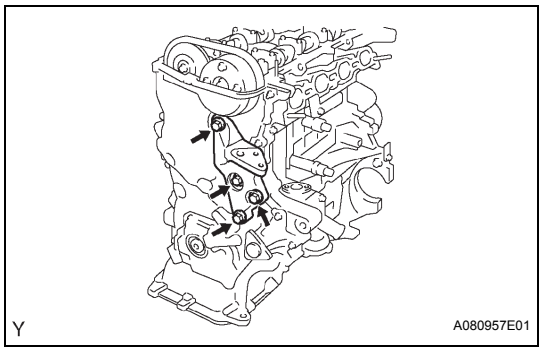

17. REMOVE TRANSVERSE ENGINE ENGINE MOUNTING BRACKET

(a) Remove the 4 bolts and remove the transverse engine mounting bracket.

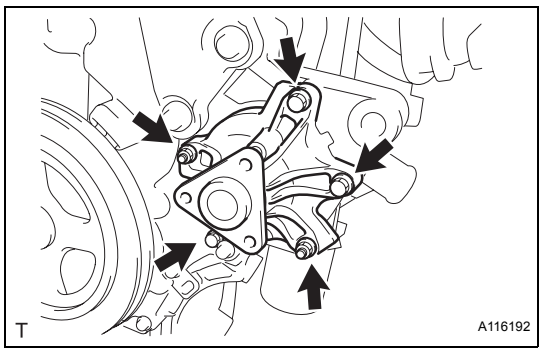

18. REMOVE WATER PUMP ASSEMBLY

(a) Remove the 3 bolts and the 2 nuts and remove the water pump and the gasket.

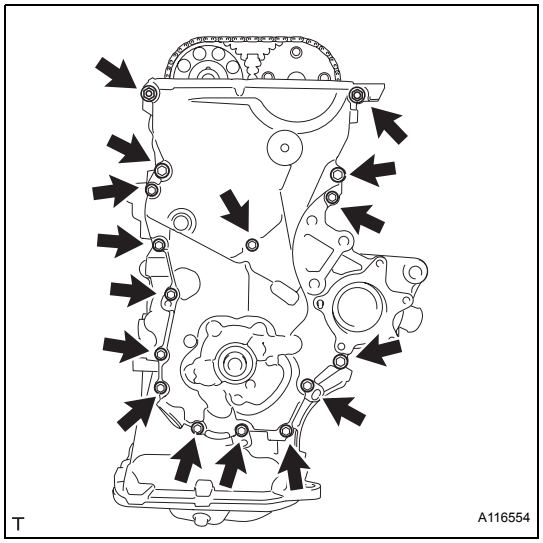

19. REMOVE OIL PUMP ASSEMBLY

(a) Remove the 15 bolts and the nut.

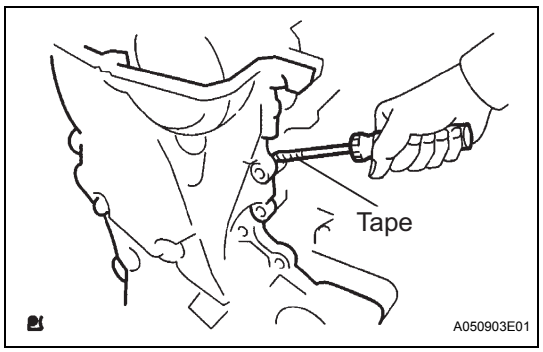

(b) Using a screwdriver with its tip wrapped in protective tape, prize the oil pump assembly to remove it.

NOTICE:

Do not damage the contact surface of the oil pump assembly and oil pan sub-assembly.

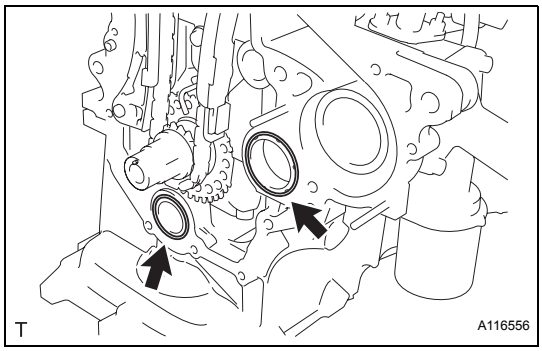

(c) Remove the 2 O-rings from the cylinder block and oil pan sub-assembly.

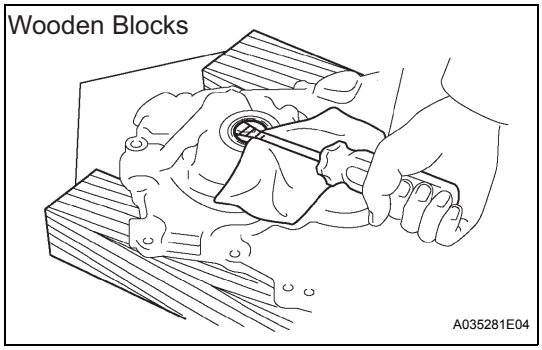

20. REMOVE OIL PUMP SEAL

(a) Using a screwdriver with its tip wrapped in tape, remove the oil seal.

21. REMOVE CHAIN TENSIONER ASSEMBLY NO. 1

NOTICE:

- **Do not rotate the crankshaft with the chain tensioner removed.**
- **When rotating the camshaft with the timing chain removed, rotate the crankshaft counterclockwise 40° from the TDC first.**

(a) Pull up the stopper plate and hold it with its lock released.

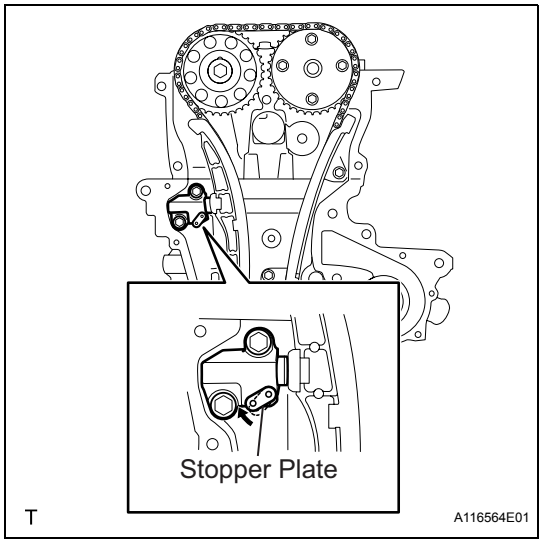

(b) Unlock the plunger of the tensioner and push it in to the end.

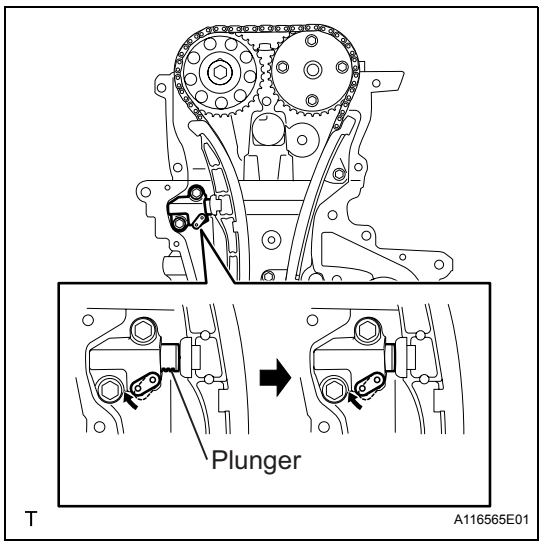

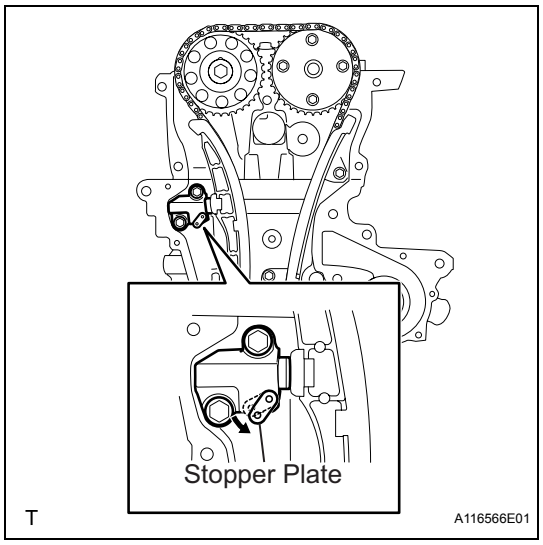

(c) Pull down the stopper plate with the plunger pushed to the end and lock the plunger.

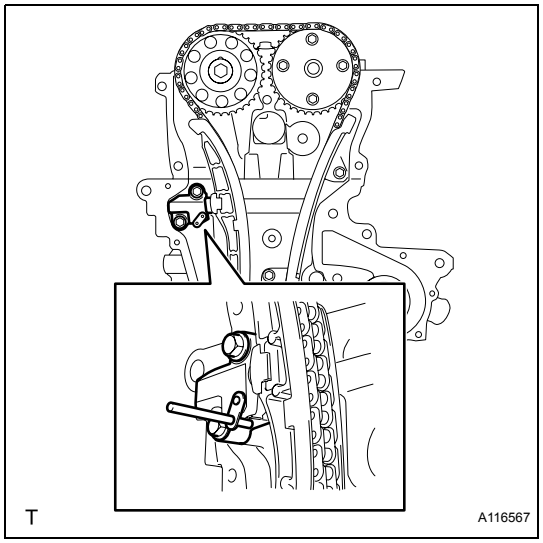

(d) Insert a 3 mm (0.12 in.) diameter bar into the hole in the stopper plate and lock the plunger.

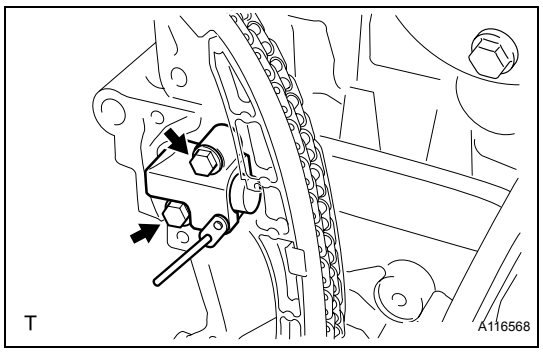

(e) Remove the 2 bolts and remove chain tensioner assembly No. 1.

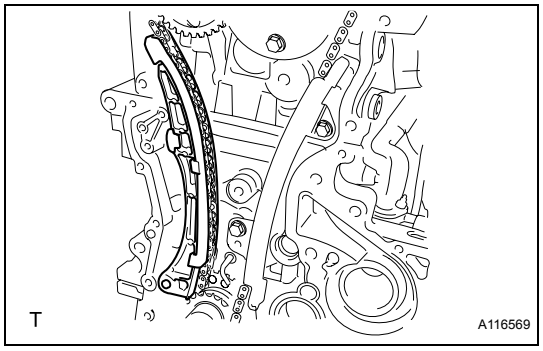

22. REMOVE CHAIN TENSIONER SLIPPER

(a) Remove the chain tensioner slipper.

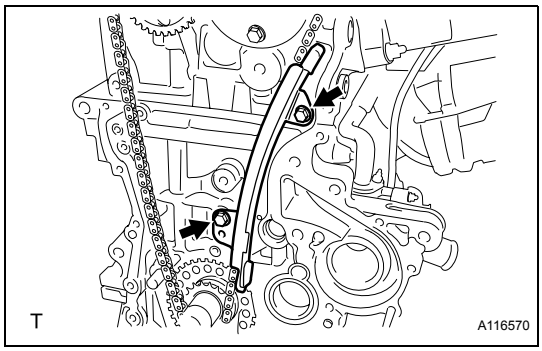

23. REMOVE CHAIN VIBRATION DAMPER NO. 1

(a) Remove the 2 bolts and remove chain vibration damper No. 1.

24. REMOVE CHAIN SUB-ASSEMBLY

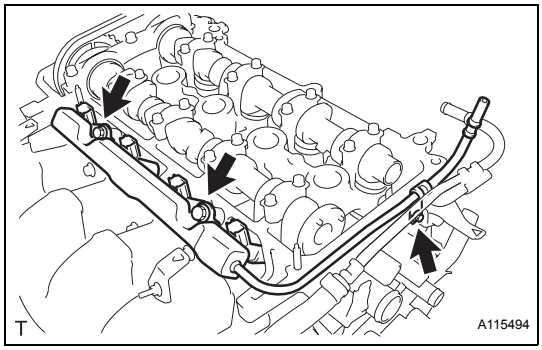

25. REMOVE FUEL DELIVERY PIPE SUB-ASSEMBLY

(a) Remove the 3 bolts and remove the fuel delivery pipe sub-assembly with 4 fuel injectors.

NOTICE:

Do not drop the fuel injectors when removing the fuel delivery pipe sub-assembly.

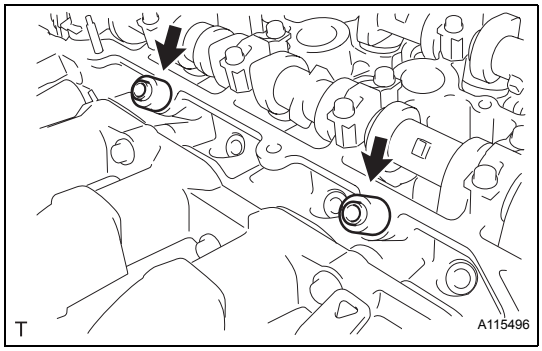

26. REMOVE DELIVERY PIPE NO. 1 SPACER

(a) Remove the 2 delivery pipe No. 1 spacers.

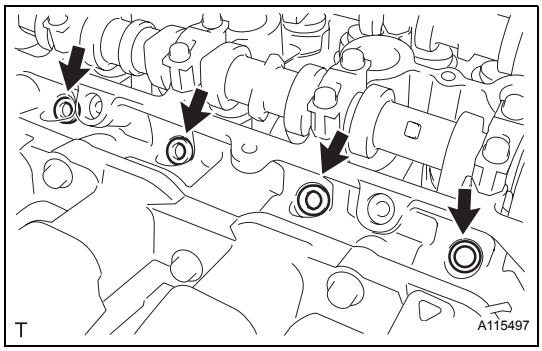

27. REMOVE INJECTOR VIBRATION INSULATOR

(a) Remove the 4 injector vibration insulators.

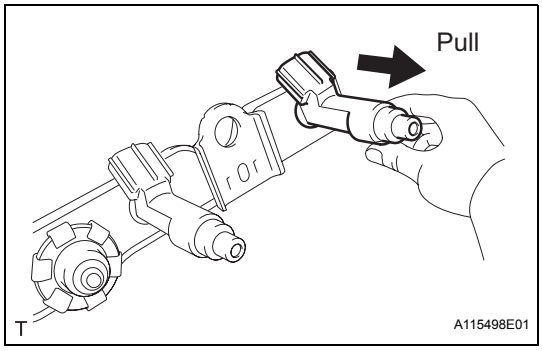

28. REMOVE FUEL INJECTOR ASSEMBLY

(a) Pull the 4 fuel injector assemblies out of the fuel delivery pipe sub-assembly.

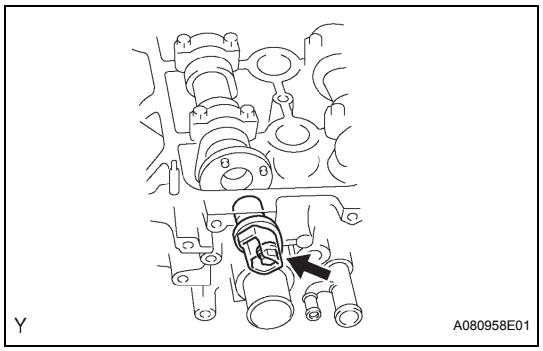

29. REMOVE CAMSHAFT POSITION SENSOR

(a) Remove the bolt and the camshaft position sensor.

30. REMOVE NO. 2 CAMSHAFT

NOTICE:

When rotating the camshaft with the timing chain removed, rotate the crankshaft counterclockwise 40° from the TDC first.

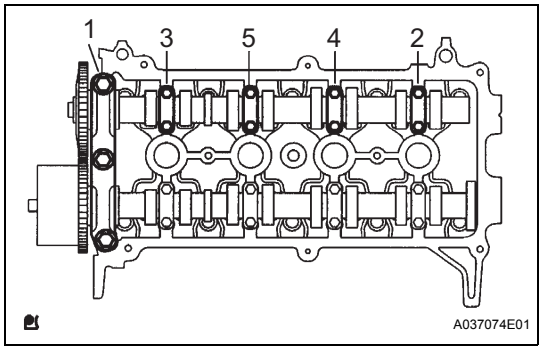

(a) Using several steps, uniformly loosen and remove the 11 bearing cap bolts in the sequence shown in the illustration, then remove camshaft bearing cap No. 1, camshaft bearing cap No. 2 and camshaft No. 2.

NOTICE:

Loosen each bolt uniformly while keeping the camshaft level.

EM

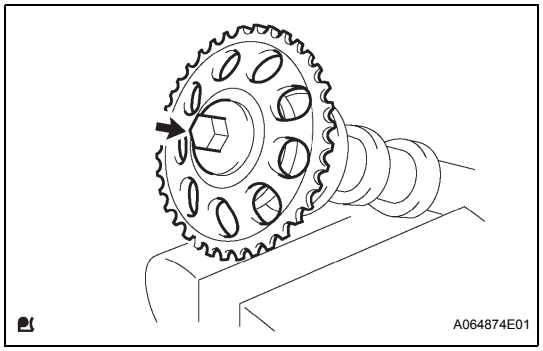

31. REMOVE CAMSHAFT TIMING SPROCKET

(a) Clamp the camshaft in a vice.

(b) Remove the flange bolt and the camshaft timing sprocket.

NOTICE:

Do not damage the camshaft.

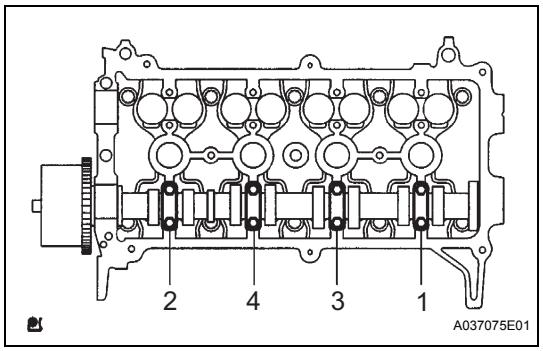

32. REMOVE CAMSHAFT

(a) Using several steps, uniformly loosen and remove the 8 bearing cap bolts in the sequence shown in the illustration, then remove camshaft bearing cap No. 2 and the camshaft.

NOTICE:

Loosen each bolt uniformly while keeping the camshaft level.

33. REMOVE CAMSHAFT TIMING GEAR ASSEMBLY

(a) Clamp the camshaft in a vise, and confirm that it is locked.

NOTICE:

Do not damage the camshaft.

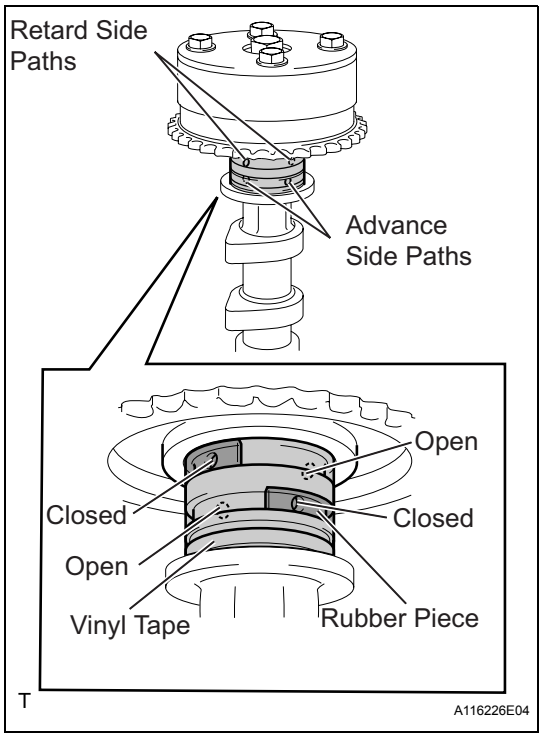

(b) Cover the 4 oil paths of the cam journal with tape as shown in the illustration.
HINT:
One of the 2 grooves located on the cam journal is for retarding cam timing (upper) and the other is for advancing cam timing (lower). Each groove has 2 oil paths. Plug one of the oil paths for each groove with a piece of rubber before wrapping the cam journal with the tape.

(c) Puncture the tape covering the advance oil path and the retard oil path on the opposite side from the advance oil path.

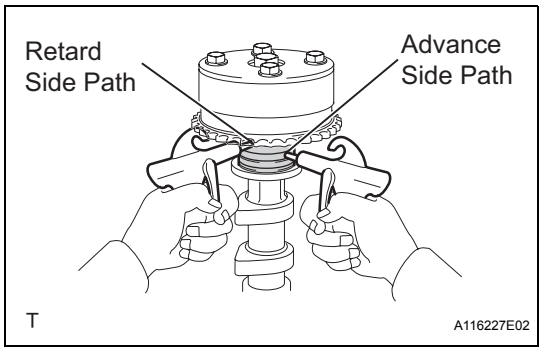

(d) Apply about 150 kPa (1.5 kgf*cm^2) air pressure into the 2 broken paths (the advance side path and the retard side path).
NOTICE:
Cover the paths with a shop rag or piece of cloth to prevent oil splashes.

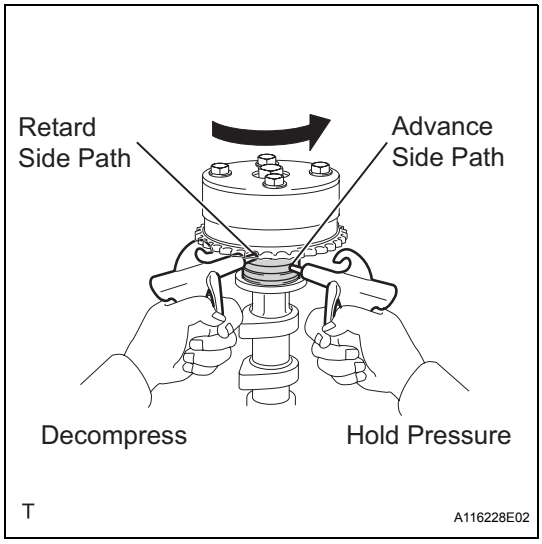

(e) Confirm that the camshaft timing gear assembly revolves in the timing advance direction when the air pressure on the timing retard path is reduced.
HINT:
The lock pin is released and the camshaft timing gear revolves in the advance direction.

(f) When the camshaft timing gear reaches the most advanced position, release the air pressure on the timing retard side path, and then release the air pressure on the timing advance side path.
NOTICE:
Camshaft timing gear assembly occasionally shifts to the retard side abruptly if the air pressure on the advance side path is released first. This often results in breakage of the lock pin.

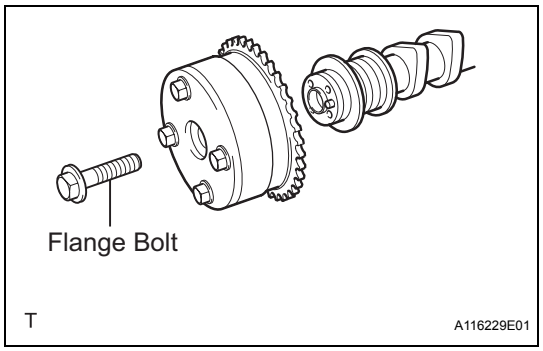

(g) Remove the flange bolt and remove the camshaft timing gear assembly.
NOTICE:
- **Do not remove the other 4 bolts.**
- **When reusing the camshaft timing gear, unlock the lock pin inside the camshaft timing gear first.**

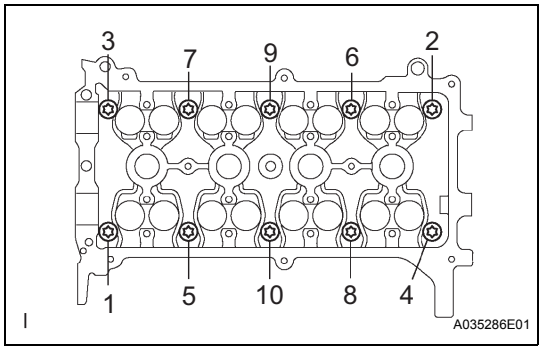

34. REMOVE CYLINDER HEAD SUB-ASSEMBLY

(a) Using several steps, uniformly loosen and remove the 10 cylinder head bolts with an 8 mm bi-hexagon wrench in the sequence shown in the illustration. Remove the 10 cylinder head bolts and the plate washers.
NOTICE:
- **Do not drop the washers into the cylinder head.**
- **Head warpage or cracking could result from removing bolts in the wrong order.**

35. REMOVE CYLINDER HEAD GASKET

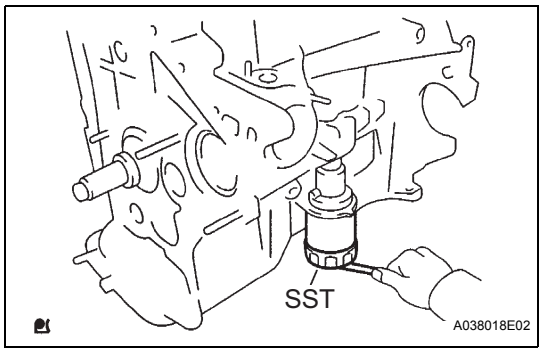

36. REMOVE OIL FILTER SUB-ASSEMBLY

(a) Using SST, remove the oil filter.
SST 09228-06501

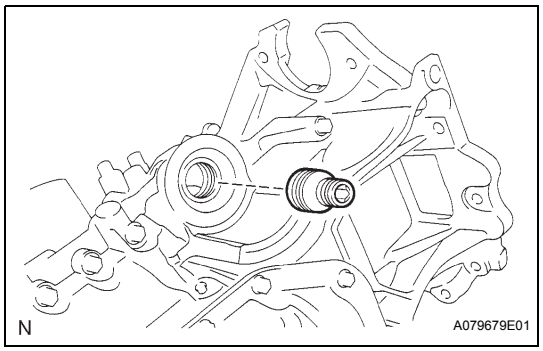

37. REMOVE OIL FILTER UNION

(a) Using a 12 mm hexagon wrench, remove the oil filter union.

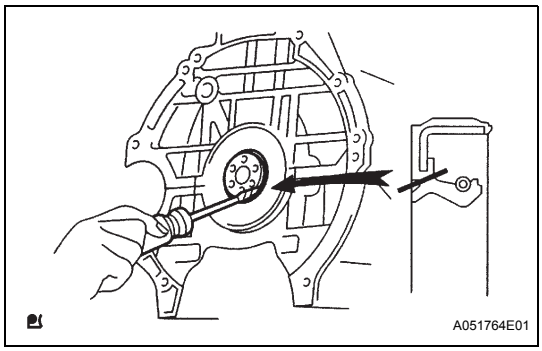

38. REMOVE ENGINE REAR OIL SEAL

(a) Using a knife, cut off the oil seal lip.

(b) Using a screwdriver with its tip wrapped in protective tape, pry out the oil seal.

NOTICE:

After removal, check the crankshaft for any damage. If damaged, smooth the surface with 400-grit sandpaper.

39. REMOVE OIL PAN SUB-ASSEMBLY NO. 2

(a) Remove the oil pan drain plug and gasket.

(b) Remove the 9 bolts and 2 nuts.

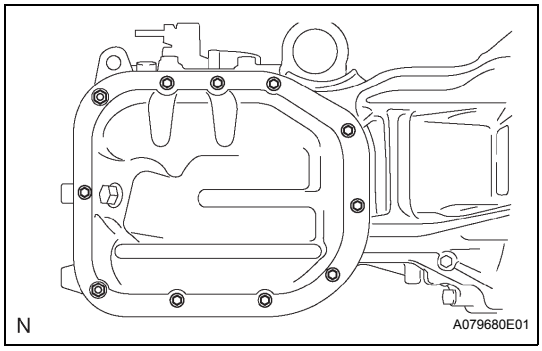

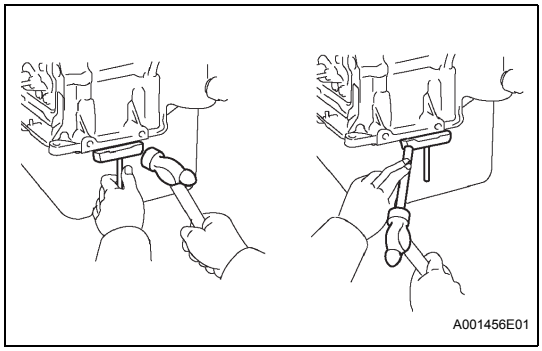

(c) Insert the blade of SST between oil pan No. 1 and oil pan No. 2, and cut off the applied sealer and remove oil pan No. 2.

SST 09032-00100

NOTICE:

Do not damage oil pan No. 1 or oil pan No. 2.

40. REMOVE OIL STRAINER SUB-ASSEMBLY

(a) Remove the bolt and 2 nuts.

(b) Remove the oil strainer and the gasket.

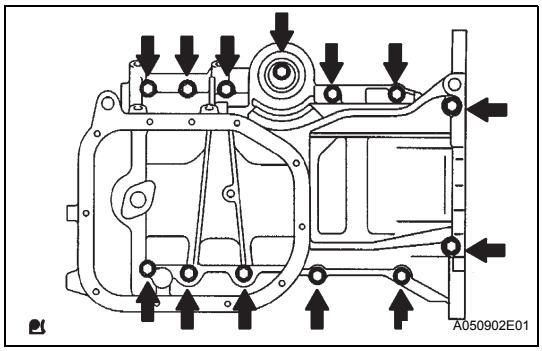

41. REMOVE OIL PAN SUB-ASSEMBLY

(a) Loosen and remove the 13 bolts uniformly in several steps.

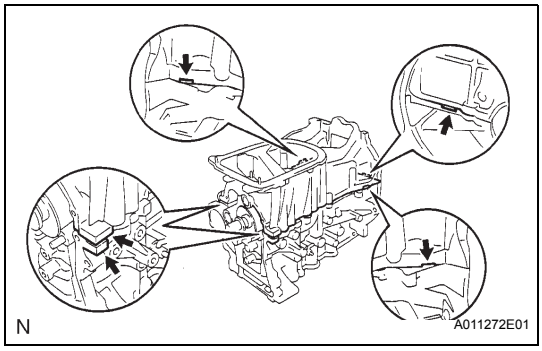

(b) Using a screwdriver, remove oil pan No. 1 by prying between the cylinder block and oil pan No. 1.

NOTICE:

Do not damage the contact surfaces of oil pan No. 1 or the cylinder block.

(c) Remove the 2 O-rings from the cylinder block.

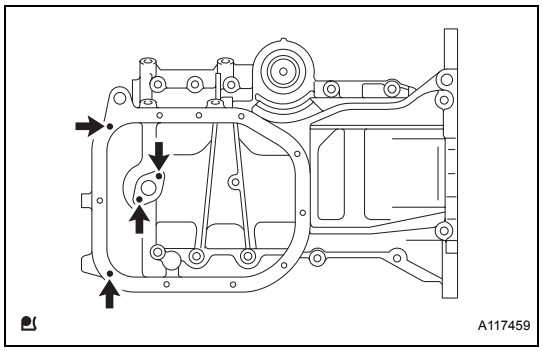

42. REMOVE STUD BOLT

(a) Remove the 4 stud bolts.

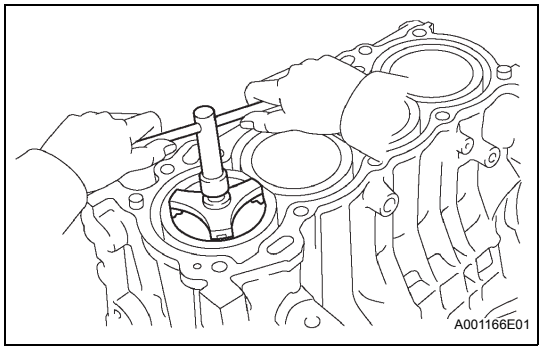

43. REMOVE PISTON SUB-ASSEMBLY WITH CONNECTING ROD

(a) Using a ridge reamer, remove all the carbon from the top of the cylinder.

(b) Push the piston, connecting rod assembly and upper bearing down through the top of the cylinder block to remove them.
HINT:
- Keep the bearing, connecting rod and cap together.
- Keep the piston and the connecting rod assemblies in the correct order so that they can be returned to their original locations when reassembled.

44. REMOVE CONNECTING ROD BEARING

45. REMOVE CRANKSHAFT

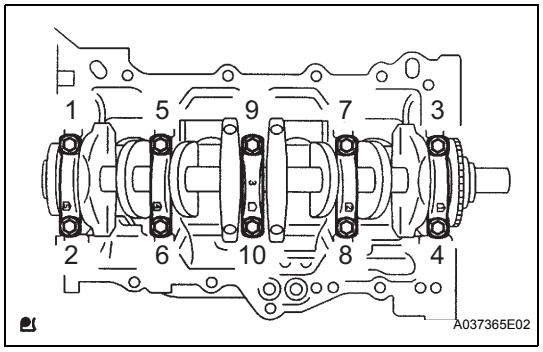

(a) Using several steps, loosen and remove the 10 bearing cap sub-assembly bolts uniformly with SST in the sequence shown in the illustration.
SST 09011-38121

(b) Remove the bearing cap and the crankshaft.

46. REMOVE CRANKSHAFT BEARING

47. REMOVE CRANKSHAFT THRUST WASHER UPPER

48. REMOVE PISTON RING SET

NOTICE:
Keep the piston rings in the correct combination and correct order so that they can be returned to their original locations when reassembled.

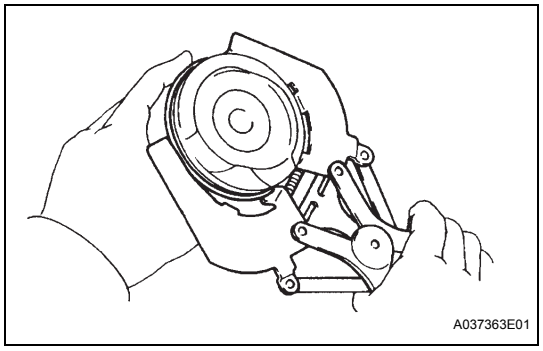

(a) Using a piston ring expander, remove the 2 compression rings.

(b) Remove the 2 side rails and the oil ring by hand.

EM

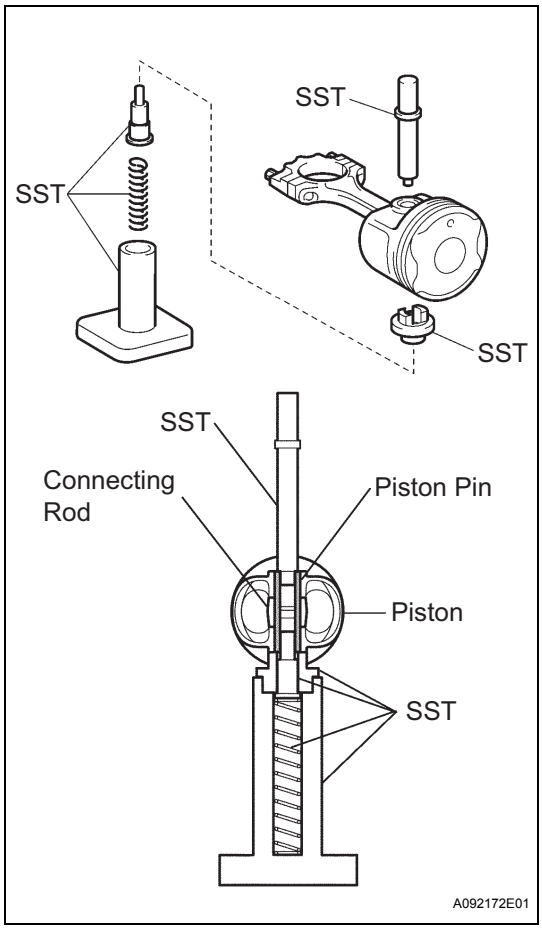

49. REMOVE WITH PIN PISTON SUB-ASSEMBLY

(a) Using SST, press the piston pin out of the piston.

SST 09221-25026 (09221-00021, 09221-00030, 09221-00090, 09221-00150, 09221-00100)

NOTICE:

Keep the pistons, pins, rings, connecting rods and bearings in the correct order so that they can be returned to their original locations when reassembled.

50. REMOVE CYLINDER BLOCK WATER DRAIN COCK SUB-ASSEMBLY

51. REMOVE STUD BOLT

(a) Using "Torx" socket wrench E5, remove the 7 stud bolts.

52. REMOVE RING PIN

53. REMOVE STRAIGHT PIN

EM

INSPECTION

1. INSPECT CAMSHAFT TIMING GEAR ASSEMBLY

(a) Check the lock of camshaft timing gear.

(1) Clamp the camshaft in a vice, and check that the camshaft timing gear is locked.

NOTICE:

Do not damage the camshaft.

(b) Release the lock pin.

(1) Cover the 4 oil paths of the cam journal with tape as shown in the illustration.

HINT:

One of the 2 grooves located on the cam journal is for retarding cam timing (upper) and the other is for advancing cam timing (lower). Each groove has 2 oil paths. Plug one of the oil paths for each groove with a piece of rubber before wrapping the cam journal with the tape.

(2) Puncture the tape covering the advance oil path and the retard oil path on the opposite side from the advance oil path.

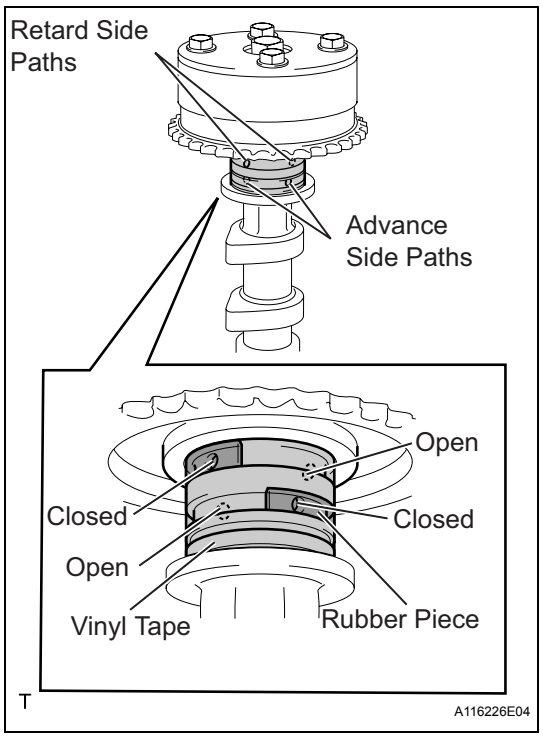

(3) Apply air at about 150 kPa (1.5 kgf*cm^2) pressure into the 2 broken paths (the advance side path and the retard side path).

NOTICE:

Cover the paths with a shop rag or piece of cloth to prevent oil splashes.

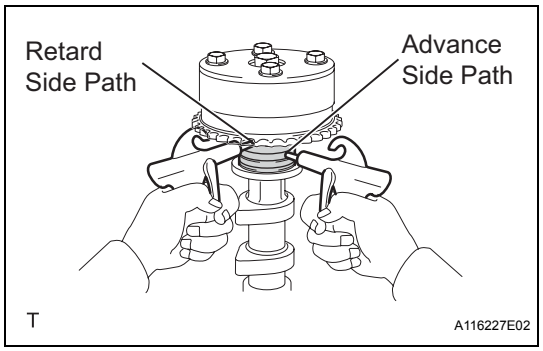

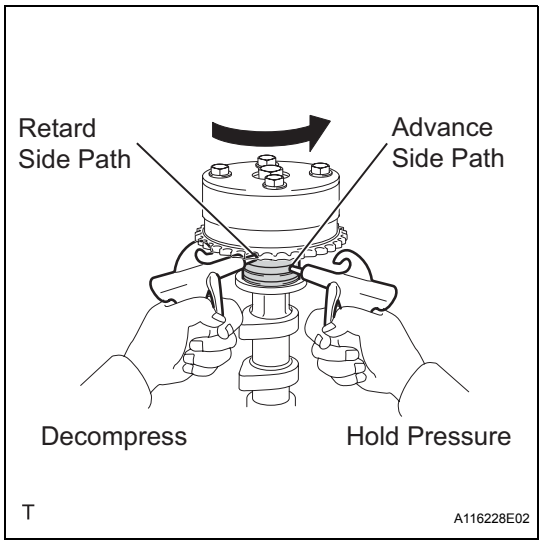

(4) Confirm that the camshaft timing gear assembly revolves in the timing advance direction when the air pressure on the timing retard path is reduced.
HINT:
The lock pin is released and the camshaft timing gear revolves in the advance direction.

(5) When the camshaft timing gear reaches the most advanced position, release the air pressure on the timing retard side path, and then release the air pressure on the timing advance side path.
NOTICE:
Camshaft timing gear assembly occasionally shifts to the retard side abruptly if the air pressure on the advance side path is released first. This often results in breakage of the lock pin.

(c) Check that the revolution is smooth.

(1) Rotate the valve timing assembly back and forth several times, except where the lock pin meets it at the most retarded angle. Check the movable range and that it rotates smoothly.
Standard:
Smooth movable range is about 22.5°
NOTICE:
Perform this check by hand, instead of using air pressure.

(d) Check that the gear locks in the most retarded position.

(1) Confirm that the camshaft timing gear assembly is locked in the most retarded position.

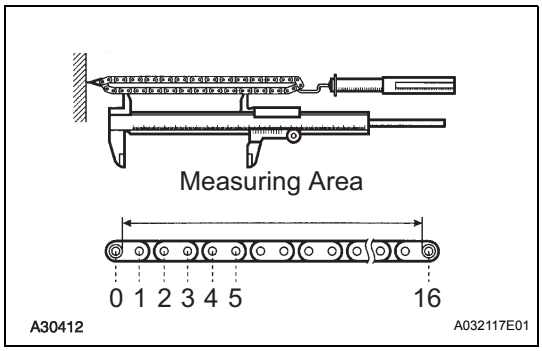

2. INSPECT CHAIN SUB-ASSEMBLY

(a) Using a spring scale, apply 140 N (14.3 kgf, 31.5 lb) to the timing chain and measure its length.
Maximum chain elongation:
123.2 mm (4.850 in.)
If the elongation is greater than the maximum, replace the chain.
HINT:
Perform the same measurement at 3 or more random places and calculate the average length.

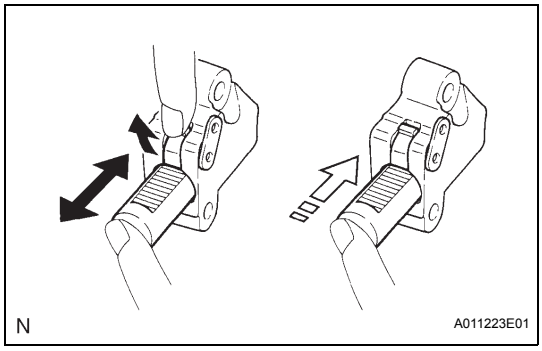

3. INSPECT CHAIN TENSIONER ASSEMBLY NO. 1

(a) Check that the plunger moves smoothly when the ratchet pawl is raised with your finger.

(b) Release the ratchet pawl and check that the plunger is locked in place by the ratchet pawl and does not move when pushed with your finger.

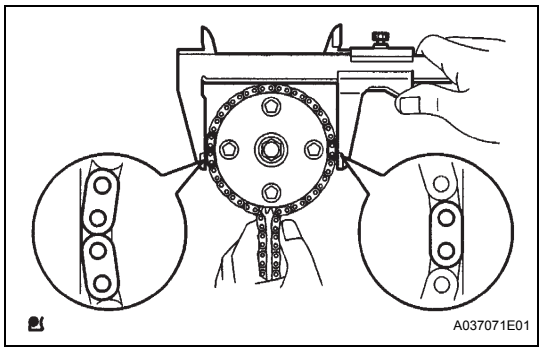

4. INSPECT CAMSHAFT TIMING GEAR ASSEMBLY

(a) Wrap the chain around the timing sprocket.

(b) Using vernier calipers, measure the diameter of the timing gear with the chain.

Minimum gear diameter (with chain):
96.2 mm (3.787 in.)

If the diameter is less than the minimum, replace the camshaft timing gear.

NOTICE:
Make sure that the vernier calipers are in contact with the chain link when measuring.

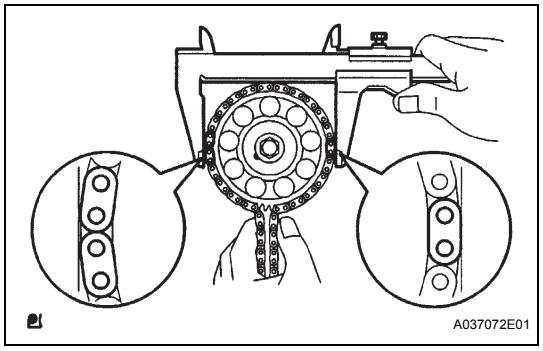

5. INSPECT CAMSHAFT TIMING SPROCKET

(a) Wrap the chain around the timing sprocket.

(b) Using vernier calipers, measure the diameter of the timing gear with the chain.

Minimum gear diameter (with chain):
96.2 mm (3.787 in.)

If the diameter is less than the minimum, replace the camshaft timing sprocket.

NOTICE:
Make sure that the vernier calipers are in contact with the chain link when measuring.

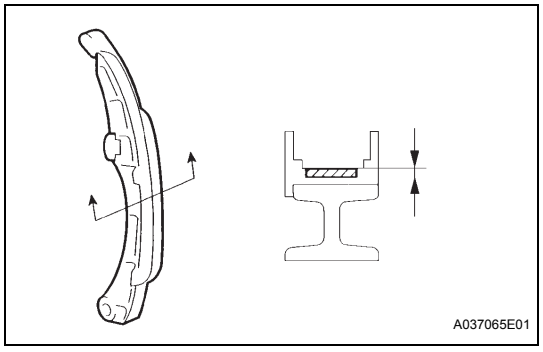

6. INSPECT CHAIN TENSIONER SLIPPER

(a) Check the chain tensioner slipper.

Minimum thickness:
1.0 mm (0.039 in.)

If the thickness is less than the minimum, replace the chain tensioner slipper.

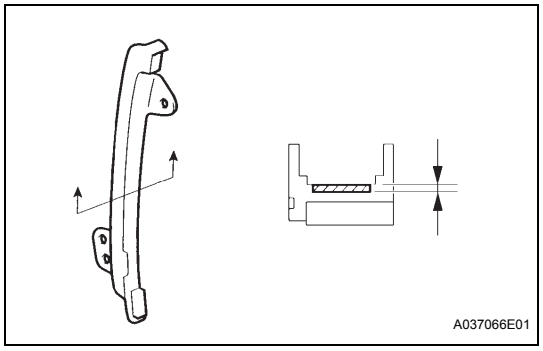

7. INSPECT CHAIN VIBRATION DAMPER NO. 1

(a) Check the vibration damper.

Minimum thickness:
1.0 mm (0.039 in.)

If the thickness is less than the minimum, replace the chain vibration damper.

EM

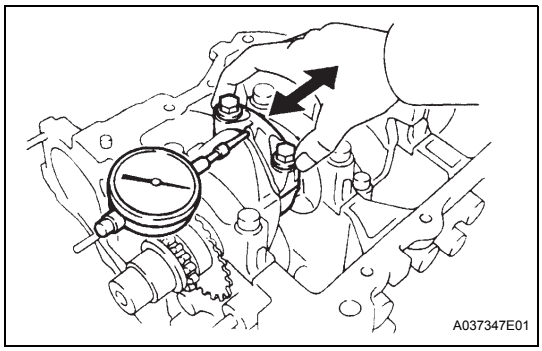

8. INSPECT CONNECTING ROD THRUST CLEARANCE

(a) Using a dial indicator, measure the thrust clearance while moving the connecting rod back and forth.
Standard thrust clearance:
0.16 to 0.36 mm (0.0063 to 0.0142 in.)
Maximum thrust clearance:
0.36 mm (0.0142 in.)

9. INSPECT CONNECTING ROD OIL CLEARANCE

(a) Check that the matchmarks on the connecting rod and cap are aligned to ensure correct reassembly.

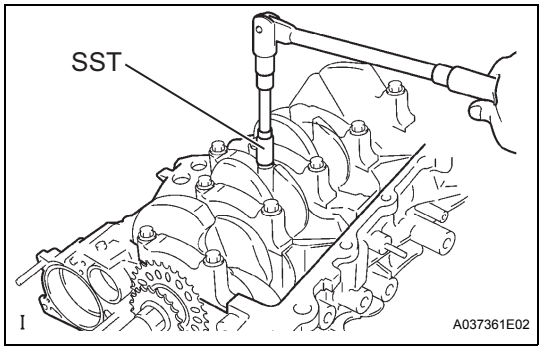

(b) Using SST, remove the 2 connecting rod cap bolts.
SST 09205-16010

(c) Clean the crank pin and bearing.

(d) Check the crank pin and bearing for pitting and scratches.

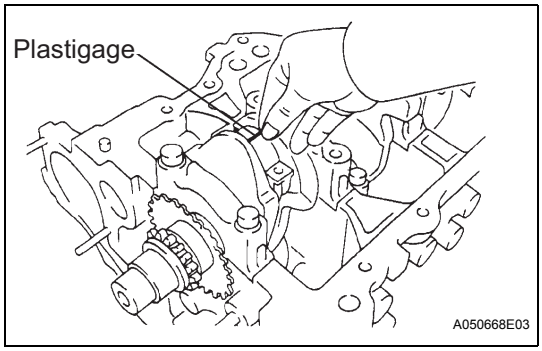

(e) Lay a strip of Plastigage across the crank pin.

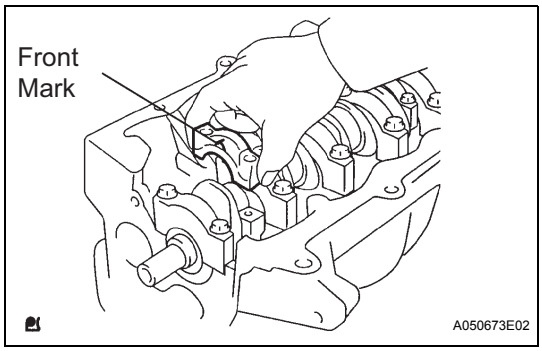

(f) Make sure that the connecting rod and its cap are in the correct combination and that the front mark of the cap is facing in the correct mounting orientation, then install the cap onto the connecting rod.

(g) Apply a light coat of engine oil to the threads of the connecting rod cap bolts.

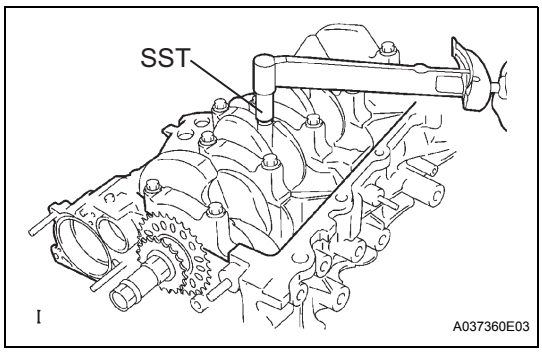

(h) Using SST, tighten the bolts in several steps to the specified torque.
SST 09205-16010
Torque: 15 N*m (153 kgf*cm, 11 ft.*lbf)

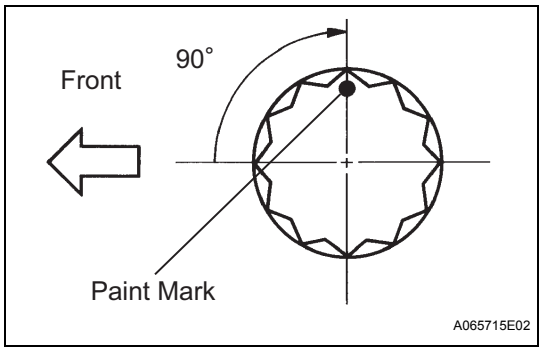

(i) Mark the front of the connecting cap bolts with paint.
(j) Retighten the cap bolts by 90° as shown in the illustration.
NOTICE:
Do not turn the crankshaft.
(k) Remove the 2 bolts, connecting rod cap and lower bearing.

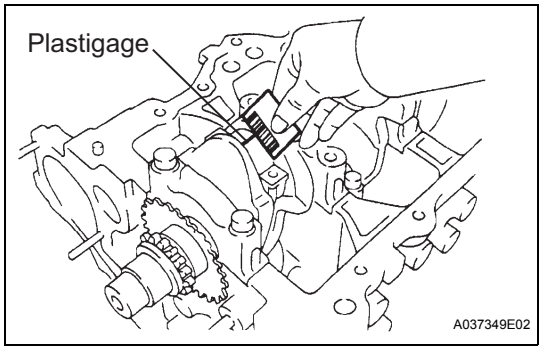

(l) Measure the Plastigage at its widest point.
Standard oil clearance:
0.012 to 0.038 mm (0.00047 to 0.00015 in.)
Maximum oil clearance:
0.058 mm (0.0028in.)
NOTICE:
Completely remove the Plastigage after the measurement.

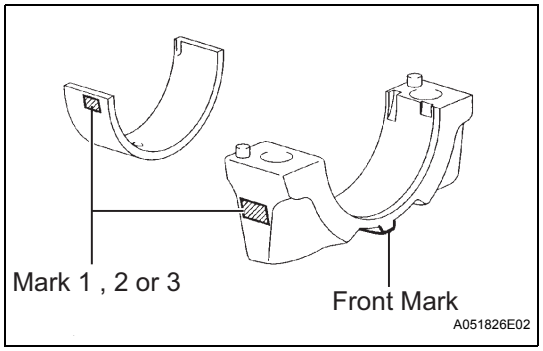

(m) When replacing a bearing, replace it with one with the same number as marked on the connecting rod. There are 3 sizes of standard bearings, marked 1, 2 and 3 accordingly.
Standard bearing center wall thickness

Mark	mm (in.)
1	1.491 to 1.494 (0.0587 to 0.0588)
2	1.494 to 1.497 (0.0588 to 0.0589)
3	1.497 to 1.500 (0.0589 to 0.0591)

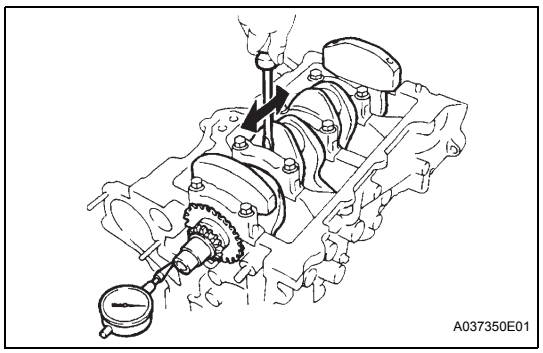

10. INSPECT CRANKSHAFT THRUST CLEARANCE

(a) Using a dial indicator, measure the thrust clearance while moving the crankshaft back and forth with a screwdriver.
Standard thrust clearance:
0.09 to 0.19 mm (0.0035 to 0.0075 in.)
Maximum thrust clearance:
0.30 mm (0.0118 in.)
If the thrust clearance is greater than the maximum, replace the thrust washers as a set. Check the crankshaft and block for wear. Repair or replace the parts if necessary.
HINT:
Thrust washer thickness: 2.43 to 2.48 mm (0.0957 to 0.976 in.)

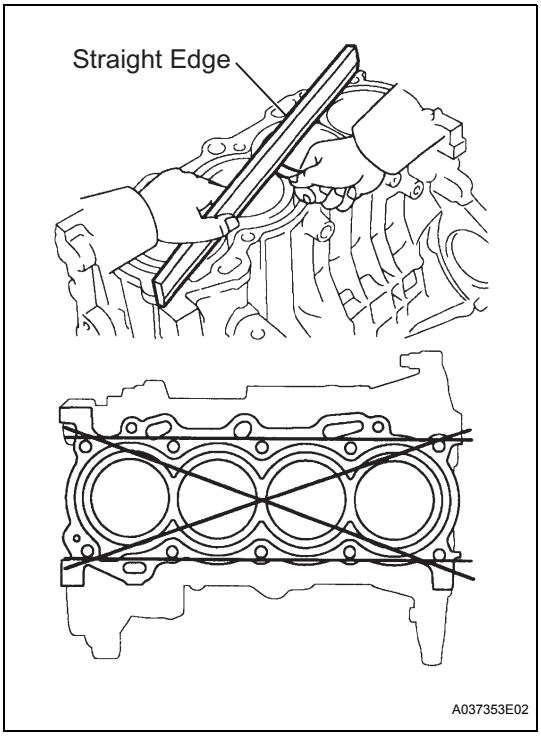

11. INSPECT CYLINDER BLOCK FOR WARPAGE

(a) Using a precision straight edge and feeler gauge, measure the warpage of the surface which is in contact with the cylinder head gasket.

Maximum warpage:

0.05 mm (0.0020 in.)

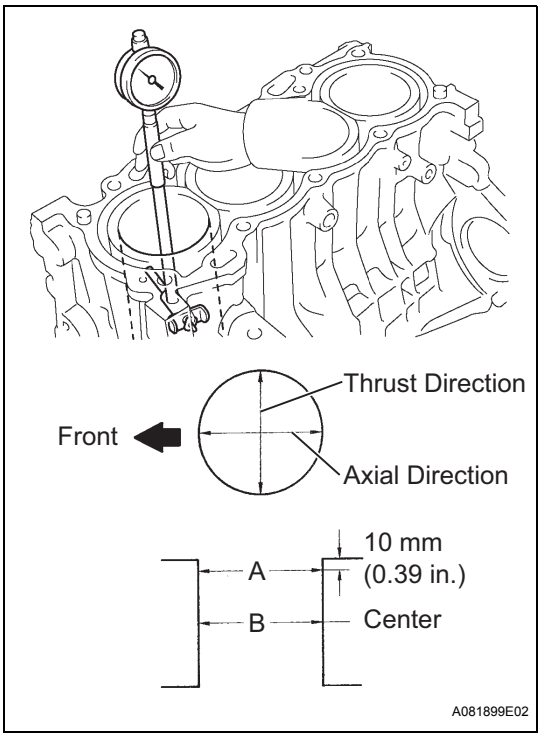

12. INSPECT CYLINDER BORE

(a) Using a cylinder gauge, measure the cylinder bore diameter at positions A and B in both the thrust and axial directions.

Standard Inside diameter:

75.000 to 75.013 mm (2.9528 to 2.9533 in.)

(b) Calculate the difference between the maximum diameter and the minimum diameter of the 4 measured values.

Difference limit:

0.10 mm (0.0039 in.)

If the difference is greater than the limit, replace the cylinder block.

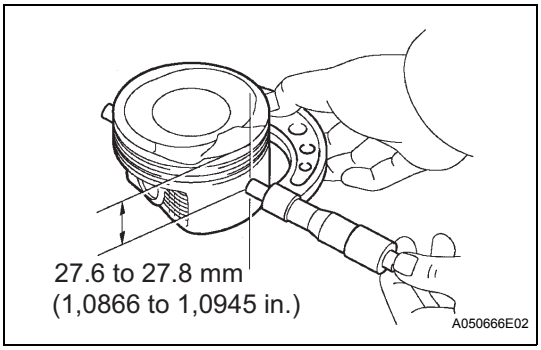

13. INSPECT WITH PIN PISTON SUB-ASSEMBLY

(a) Using a micrometer, measure the piston diameter at a right angle to the piston pin center line, and at the position 27.6 to 27.8 mm (1.0866 to 1.0945 in.) from the top of the piston head.

Piston diameter:

74.935 to 74.945 mm (2.9502 to 2.9506 in.)

(b) Using a caliper gauge, measure the piston pin hole diameter.
Piston pin hole diameter:
18.013 to 18.016 mm (0.7092 to 0.7093 in.) at 20°C (68°F)

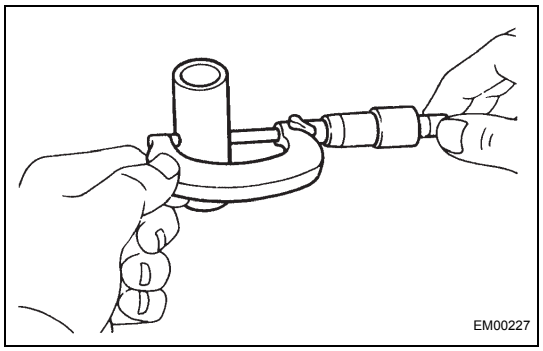

(c) Using a micrometer, measure the piston pin diameter.
Piston pin diameter:
18.001 to 18.004 mm (0.7087 to 0.7088 in.)

(d) Subtract the piston pin diameter measurement from the piston pin hole diameter measurement to calculate the oil clearance.
Standard oil clearance:
0.009 to 0.015 mm (0.0004 to 0.0006 in.)
Maximum oil clearance:
0.050 mm (0.0020 in.)
If necessary, replace the piston and piston pin together.

14. INSPECT PISTON CLEARANCE

(a) Subtract the piston diameter measurement from the cylinder bore diameter measurement.
Standard oil clearance:
0.045 to 0.068 mm (0.0018 to 0.0027 in.)
Maximum oil clearance:
0.08 mm (0.0032 in.)

15. INSPECT CONNECTING ROD SUB-ASSEMBLY

(a) Using a rod aligner and feeler gauge, check the connecting rod alignment.

(1) Check for misalignment.
Maximum misalignment:
0.05 mm (0.0020 in.) per 100 mm (3.94 in.)
If the misalignment is greater than the maximum, replace the connecting rod assembly.

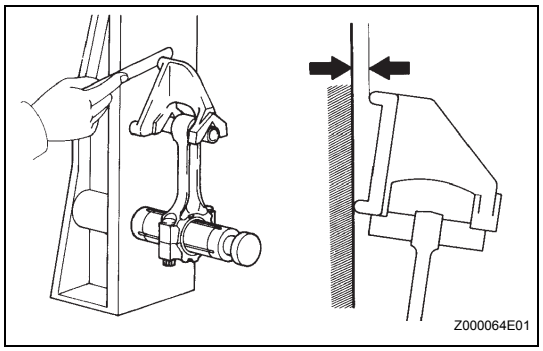

(2) Check for twist.
Maximum twist:
0.05 mm (0.0020 in.) per 100 mm (3.94 in.)
If the twist is greater than the maximum, replace the connecting rod assembly.

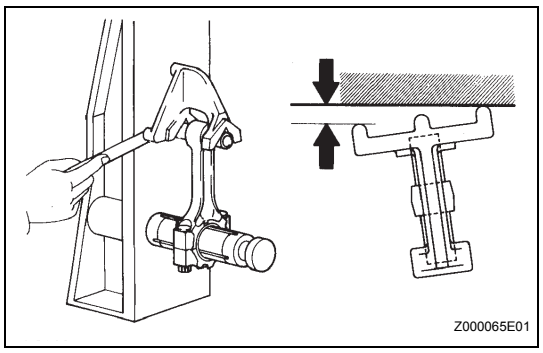

EM

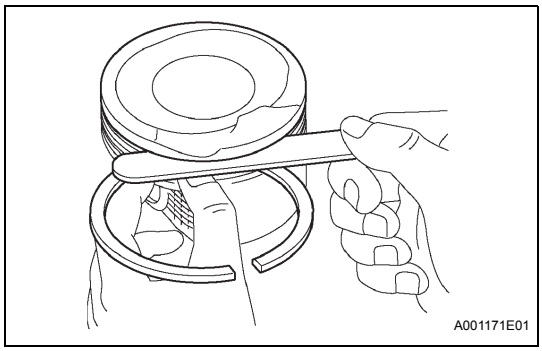

16. INSPECT RING GROOVE CLEARANCE

(a) Using a feeler gauge, measure the clearance between a new piston ring and the wall of the ring groove.

Ring groove clearance:

No. 1:

0.03 to 0.07 mm (0.0012 to 0.0028 in.)

No. 2:

0.02 to 0.06 mm (0.0008 to 0.0024 in.)

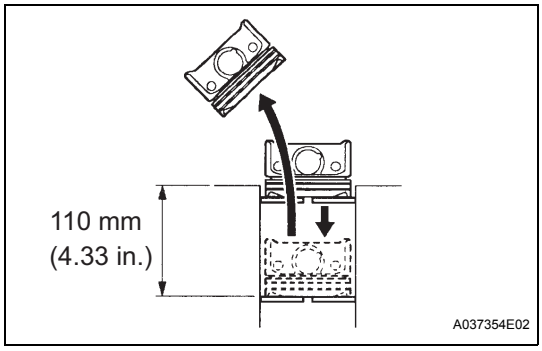

17. INSPECT PISTON RING END GAP

(a) Using a piston, push the piston ring, a little beyond the bottom of the ring travel, 110 mm (4.33 in.) from the top of the cylinder block.

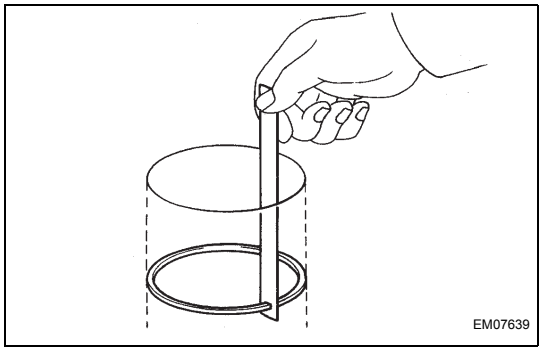

(b) Using a feeler gauge, measure the end gap.

Standard end gap:

No. 1:

0.25 to 0.35 mm (0.0098 to 0.0138 in.)

No. 2:

0.35 to 0.50 mm (0.0138 to 0.0197 in.)

Oil (Side Rail):

0.10 to 0.35 mm (0.0039 to 0.0138 in.)

Maximum end gap:

No. 1:

0.91 mm (0.0358 in.)

No. 2:

1.06 mm (0.0417 in.)

Oil (Side Rail):

0.82 mm (0.323 in.)

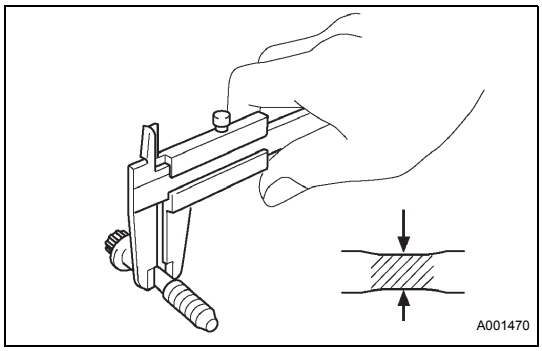

18. INSPECT CONNECTING ROD BOLT

(a) Using vernier calipers, measure the diameter of the bolt at the elongated portion.

Standard diameter:

6.6 to 6.7 mm (0.260 to 0.264 in.)

Minimum diameter:

6.4 mm (0.252 in.)

If the diameter is less than the minimum, replace the bolt.

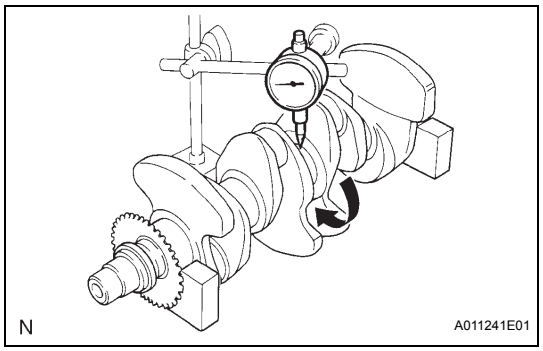

19. INSPECT CRANKSHAFT

(a) Using a dial indicator and V-blocks, measure the circle runout as shown in the illustration.
Maximum circle runout:
0.03 mm (0.0012 in.)

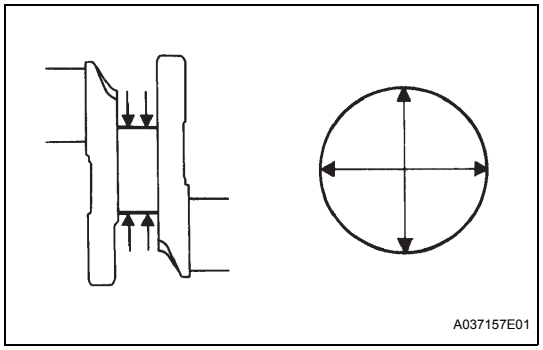

(b) Using a micrometer, measure the diameter of each main journal.
Outside diameter:
45.988 to 46.000 mm (1.8106 to 1.8110 in.)

(c) Check each main journal for taper and out-of-roundness as shown.
Maximum taper and out-of-roundness:
0.02 mm (0.0008 in.)

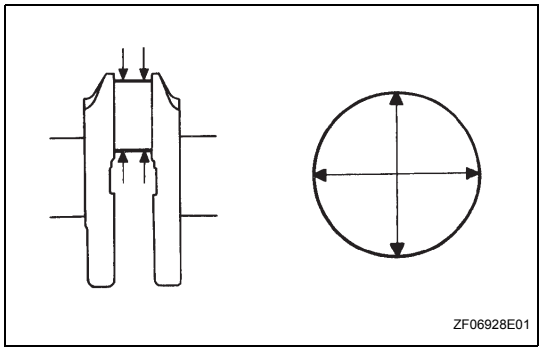

(d) Using a micrometer, measure the diameter of each crank pin.
Outside diameter:
39.992 to 40.000 mm (1.5745 to 1.5748 in.)

(e) Check each crank pin for taper and out-of-roundness as shown.
Maximum taper and out-of-roundness:
0.02 mm (0.0008 in.)

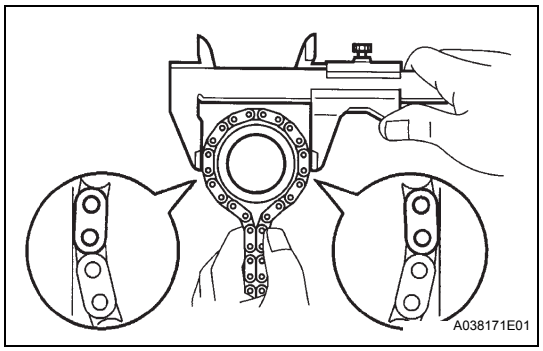

(f) Wrap the chain around the timing sprocket.

(g) Using vernier calipers, measure the timing sprocket diameter with the chain.
Standard sprocket diameter (with chain):
51.72 mm (2.0362 in.)
Minimum sprocket diameter (with chain):
50.5 mm (1.988 in.)
NOTICE:
Make sure that the vernier calipers are in contact with the chain rollers when measuring.

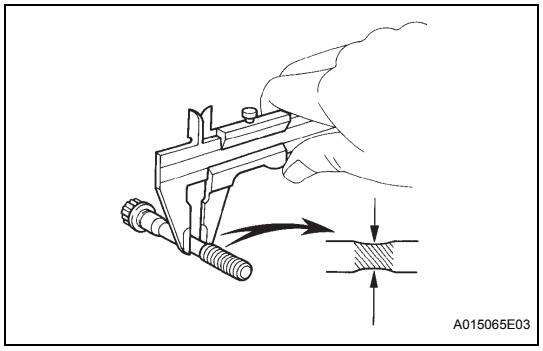

20. INSPECT CRANKSHAFT BEARING CAP SET BOLT

(a) Using vernier calipers, measure the tension portion diameter of the elongated portion.
Standard diameter:
7.3 to 7.5 mm (0.287 to 0.295 in.)
Minimum diameter:
7.2 mm (0.283 in.)
If the diameter is less than the minimum, replace the bolt.

EM

21. INSPECT CRANKSHAFT OIL CLEARANCE

(a) Clean each main journal and bearing.

(b) Install the bearing onto the cylinder block and bearing cap. (See page EM-183)

(c) Place the crankshaft onto the cylinder block.

(d) Lay a strip of Plastigage across each journal.

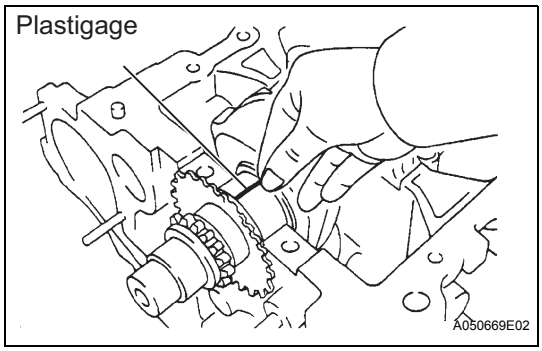

(e) Examine the front marks and numbers and install the bearing cap onto the cylinder block.

(f) Apply a light coat of engine oil to the threads of the bearing cap bolts.

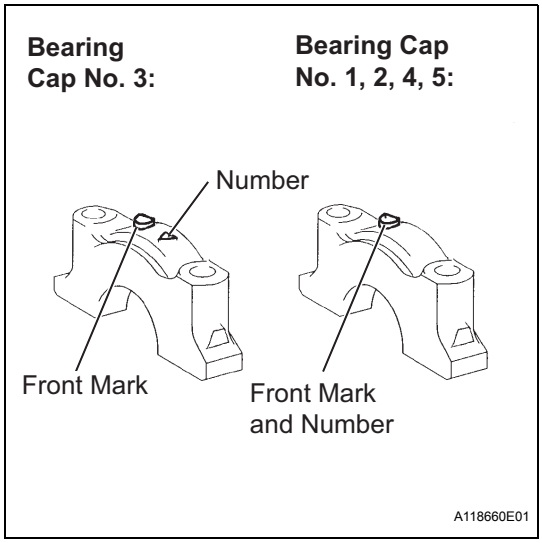

(g) Using SST, tighten the bolts in several steps to the specified torque in the sequence shown in the illustration. (*1)
SST 09011-38121
Torque: 22 N*m (224 kgf*cm, 16 ft.*lbf)

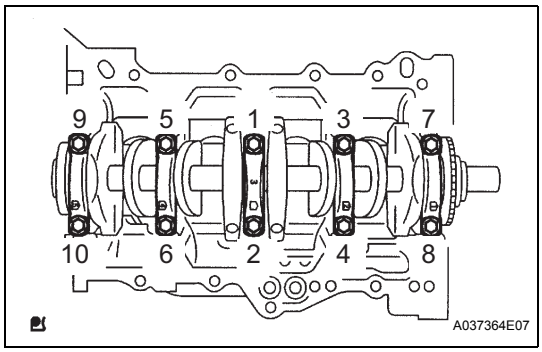

(h) Mark the front of the bearing cap bolts with paint.

(i) Retighten the bearing cap bolts by 90° in the same sequence as step (*1).

(j) Check that the painted mark is now at a 90° angle from the front.
NOTICE:
Do not turn the crankshaft.

(k) Remove the bearing cap sub-assembly.

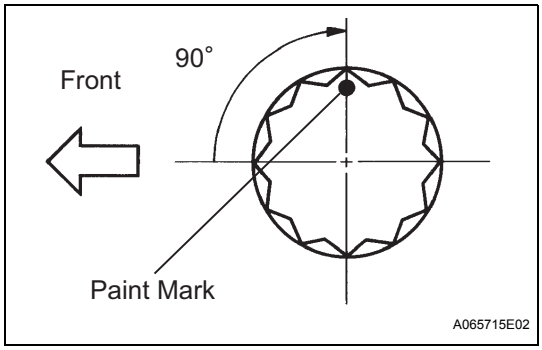

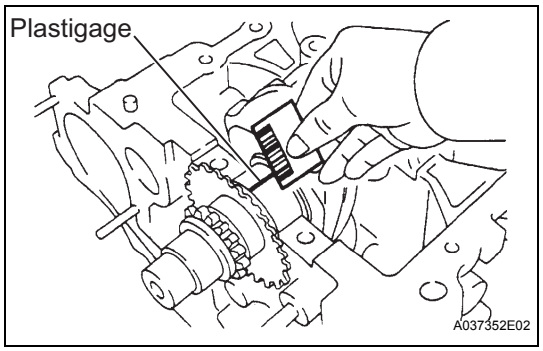

(l) Measure the Plastigage at its widest point.
Standard oil clearance:
0.01 to 0.023 mm (0.0004 to 0.0009 in.)
Maximum oil clearance:
0.07 mm (0.0028 in.)
NOTICE:
Completely remove the Plastigage after the mesurement.

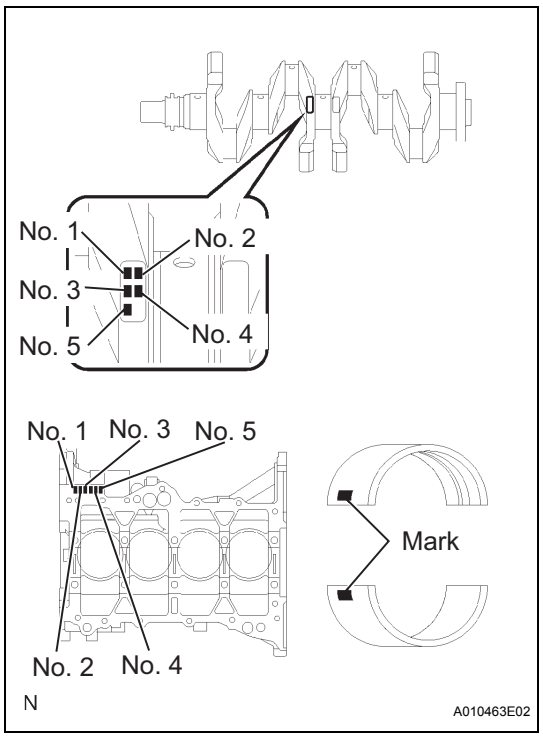

(m) When replacing a standard bearing, replace it with one with the same number. If the number of the bearing cannot be found, select the correct bearing by adding together the numbers imprinted on the cylinder block and crankshaft, then select the bearing with the same number as the total. There are 4 sizes of standard bearings, marked 1, 2, 3 and 4 accordingly.
EXAMPLE: Cylinder Block 4 (A) + Crankshaft 3 (B) = Total 7 (Use Bearing 3)

Cylinder Block (A) + Crankshaft (B)	0 to 2	3 to 5	6 to 8	9 to 11
Use Bearing	1	2	3	4

EM

Item	Mark	mm (in.)
Cylinder block main journal bore diameter (A)	0	50.000 to 50.003 (1.96850 to 1.96862)
	1	50.003 to 50.005 (1.96862 to 1.96870)
	2	50.005 to 50.007 (1.96870 to 1.96878)
	3	50.007 to 50.010 (1.96878 to 1.96890)
	4	50.010 to 50.012 (1.96890 to 1.96898)
	5	50.012 to 50.014 (1.96898 to 1.96906)
	6	50.014 to 50.016 (1.96906 to 1.96913)
Crankshaft main journal diameter (B)	0	45.998 to 46.000 (1.81094 to 1.81102)
	1	45.996 to 45.998 (1.81087 to 1.81094)
	2	45.994 to 45.996 (1.81079 to 1.81087)
	3	45.992 to 45.994 (1.81071 to 1.81079)
	4	45.990 to 45.992 (1.81063 to 1.81071)
	5	45.988 to 45.990 (1.81055 to 1.81063)
Standard bearing center wall thickness	1	1.992 to 1.995 (0.07843 to 0.07854)
	2	1.995 to 1.998 (0.07854 to 0.07866)
	3	1.998 to 2.001 (0.07866 to 0.07878)
	4	2.001 to 2.004 (0.07878 to 0.07890)

REASSEMBLY

1. INSTALL CYLINDER BLOCK WATER DRAIN COCK SUB-ASSEMBLY

(a) Apply adhesive to the end 2 or 3 threads of the drain union and install the water drain cock within 3 minutes of applying the adhesive.

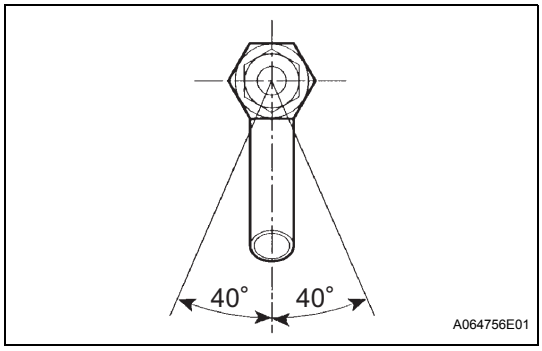

(b) After applying the specified torque, rotate the drain union clockwise until its drain port faces downward.
Torque: 35 N*m (357 kgf*cm, 26 ft.*lbf)
NOTICE:
- **Do not add coolant within 1 hour of installation.**
- **Do not rotate the drain union more than 360° in step (b), and never loosen it after setting the union correctly.**

2. INSTALL STRAIGHT PIN

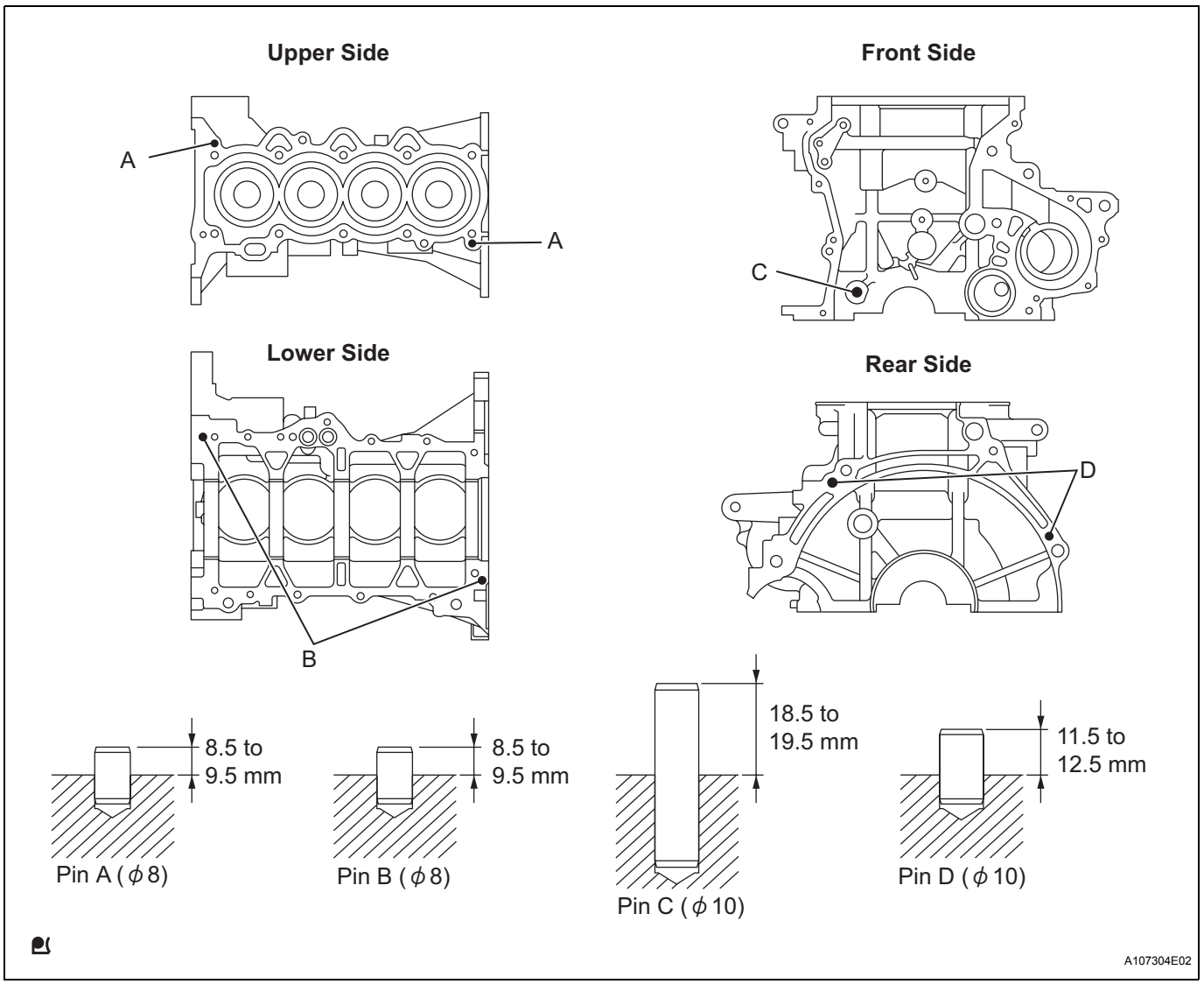

(a) Using a plastic-faced hammer, tap in the straight pin.
Standard protrusion:
Pin A:

8.5 to 9.5 mm (0.335 to 0.374 in.)
Pin B:
8.5 to 9.5 mm (0.335 to 0.374 in.)
Pin C:
18.5 to 19.5 mm (0.728 to 0.768 in.)
Pin D:
11.5 to 12.5 mm (0.453 to 0.492 in.)

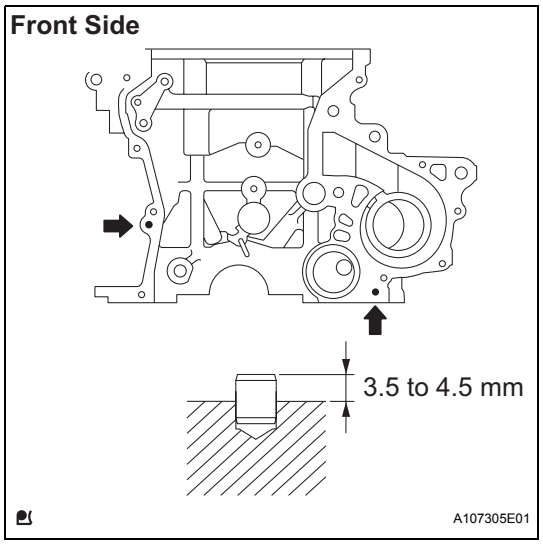

3. INSTALL OIL PUMP SET RING PIN

(a) Using a plastic-faced hammer, tap in a new ring pin.
Standard protrusion:
3.5 to 4.5 mm (0.138 to 0.177 in.)

4. INSTALL STUD BOLT

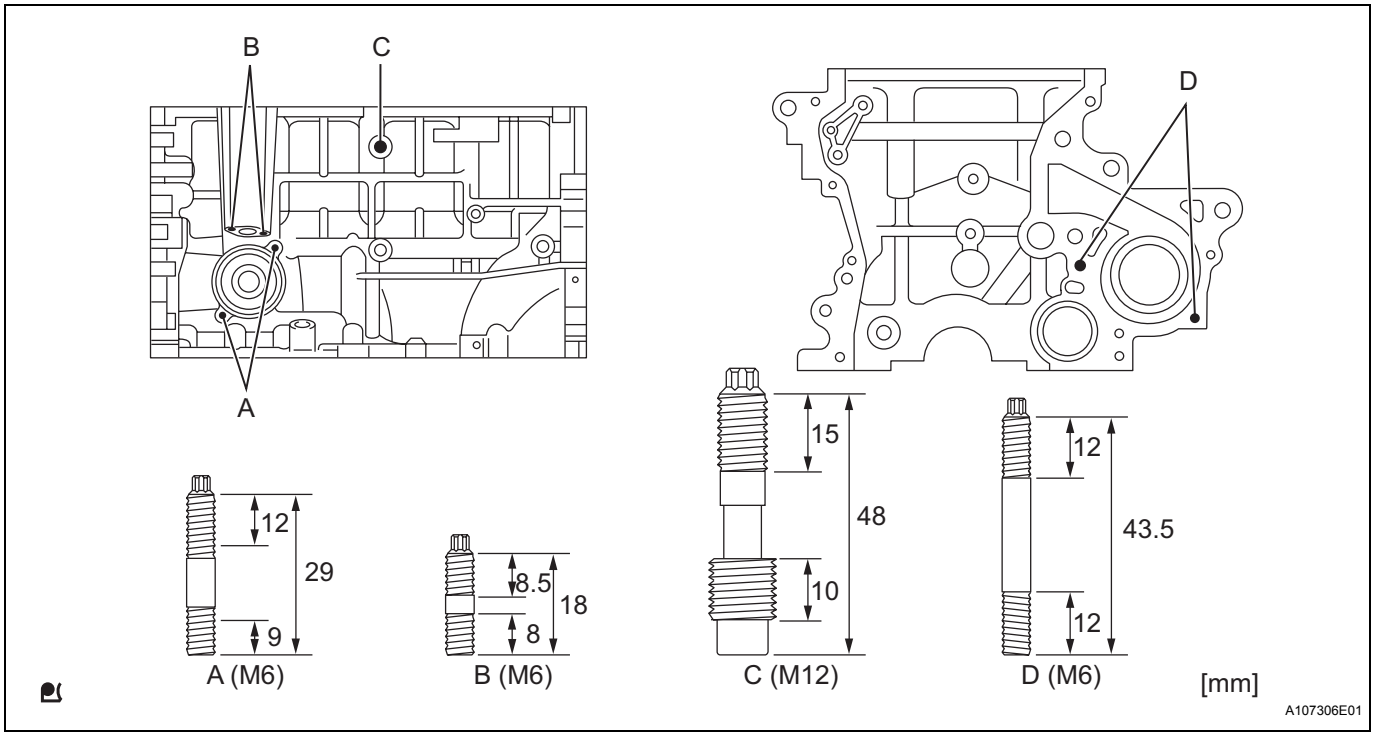

(a) Using "Torx" socket wrench E5, install the 7 stud bolts.
Torque: 5.0 N*m (51 kgf*cm, 44 in.*lbf) (for Stud bolt A, B and D)
11 N*m (112 kgf*cm, 8.1 ft.*lbf) (for Stud bolt C)
NOTICE:
The lower threads of the bolt are installed into the cylinder block.

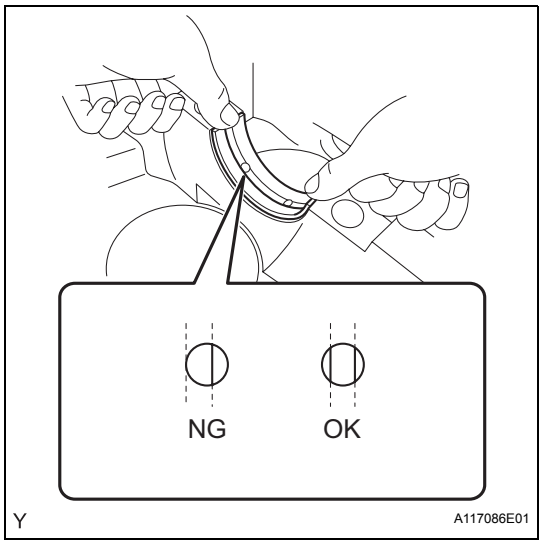

5. INSTALL CRANKSHAFT BEARING

(a) Align the crankshaft bearing (upper) with the oil hole of the cylinder block and install the bearing.
NOTICE:
Do not apply engine oil to the bearing or its contact surface.

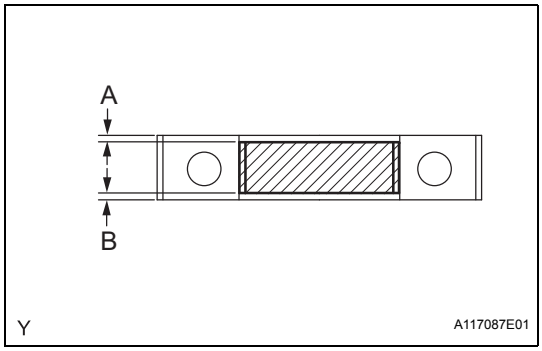

(b) Align the crankshaft bearing (lower) with the bearing cap and install the crankshaft bearing cap.
NOTICE:
- **Install the bearing cap so that the gap between A and B is less than 0.7 mm (0.028 in.).**
- **Do not apply engine oil to the bearing or its contact surface.**

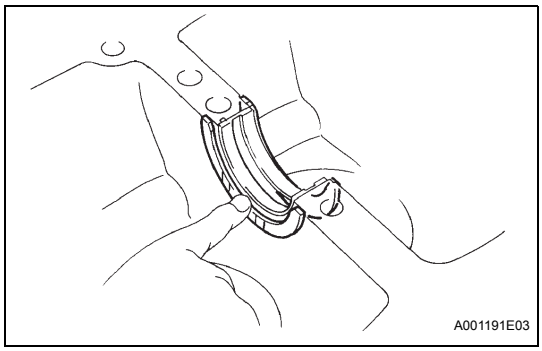

6. INSTALL CRANKSHAFT THRUST WASHER UPPER

(a) Install the 2 thrust washers onto the No. 3 journal position of the cylinder block with the oil grooves facing outward.
(b) Apply engine oil to the upper bearing and install the crankshaft onto the cylinder block.

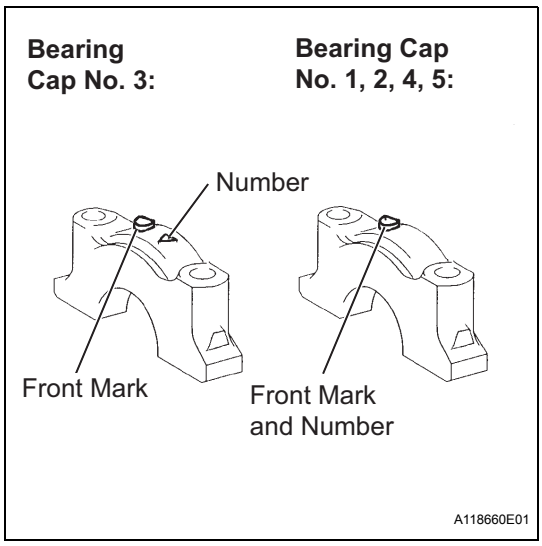

7. INSTALL CRANKSHAFT

(a) Examine the front marks and numbers and install the bearing caps onto the cylinder block.
(b) Apply a light coat of engine oil to the threads of the bearing cap bolts.

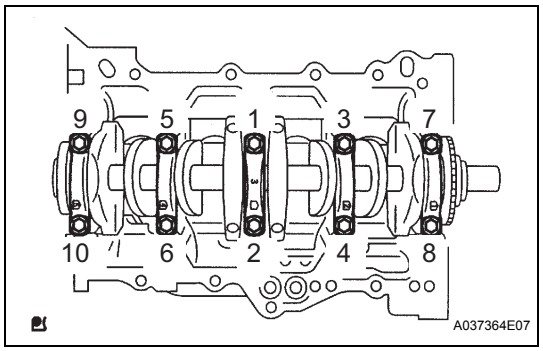

(c) Using SST, tighten the bolts in several steps to the specified torque in the sequence shown in the illustration (*1).
SST 09011-38121
Torque: 22 N*m (224 kgf*cm, 16 ft.*lbf)
NOTICE:
Check that the crankshaft turns smoothly.

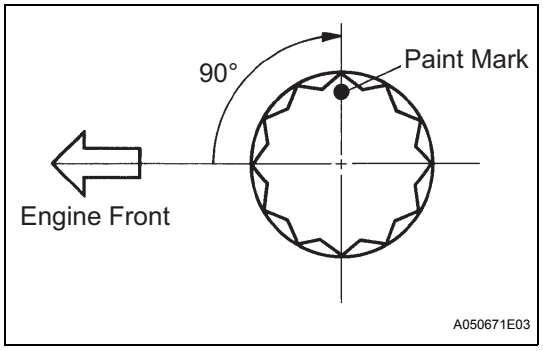

(d) Mark the front of the bearing cap bolts with paint.
(e) Retighten the bearing cap bolts by 90° in the same sequence as step (*1).
(f) Check that the painted mark is now at a 90° angle from the front.

8. INSPECT CRANKSHAFT THRUST CLEARANCE (See page EM-174)

9. INSPECT CRANKSHAFT OIL CLEARANCE (See page EM-179)

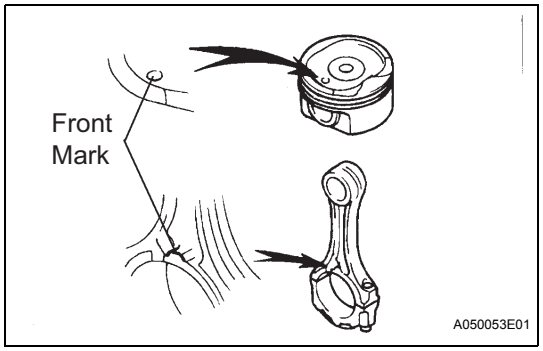

10. INSTALL WITH PIN PISTON SUB-ASSEMBLY
(a) Coat the piston pin and pin holes in the piston with engine oil.
(b) Align the cavity of the piston with the protruding portion on the connecting rod.

EM

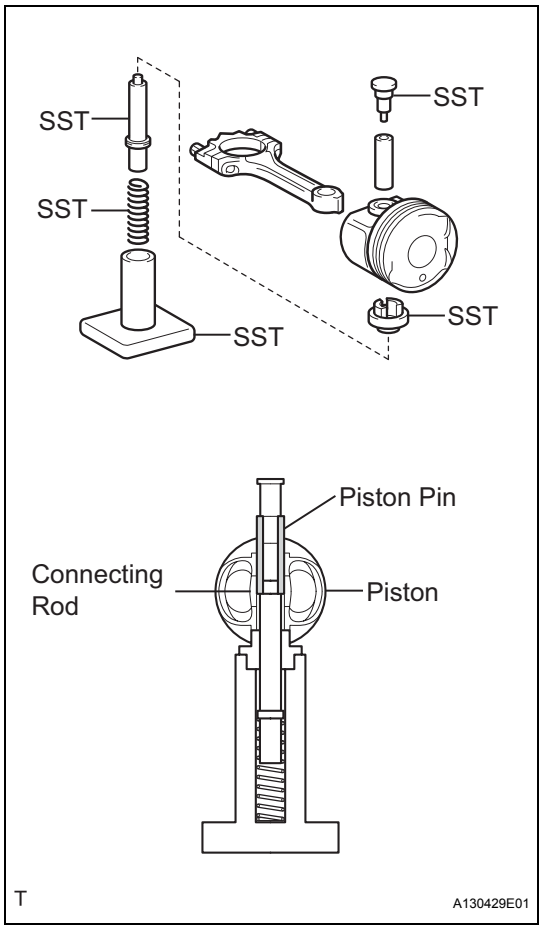

(c) Using SST, press in the piston pin.
SST 09221-25026 (09221-00021, 09221-00030, 09221-00090, 09221-00150, 09221-00100)
NOTICE:
Keep the pistons, pins, rings, connecting rods and bearings in the correct order so that they can be returned to the original locations when reassembled.

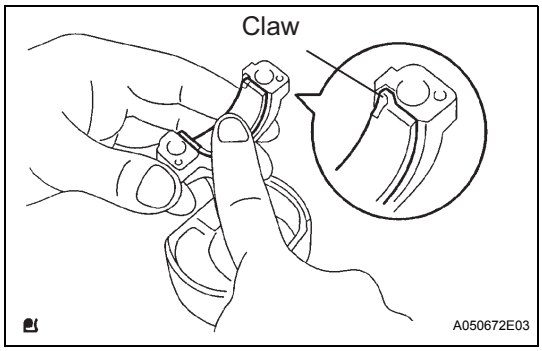

11. INSTALL CONNECTING ROD BEARING
(a) Align the bearing claw with the groove of the connecting rod or connecting cap.
NOTICE:
Clean the back side of the bearing and the bearing surface of the connecting rod and keep them free of oil.

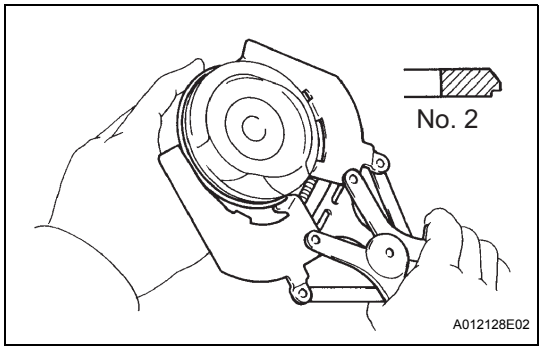

12. INSTALL PISTON RING SET
HINT:
When reusing the piston rings, install them onto the matched pistons with the surfaces facing correctly.
(a) Install the oil ring expander and 2 side rails by hand.
(b) Using a piston ring expander, install the 2 compression rings.

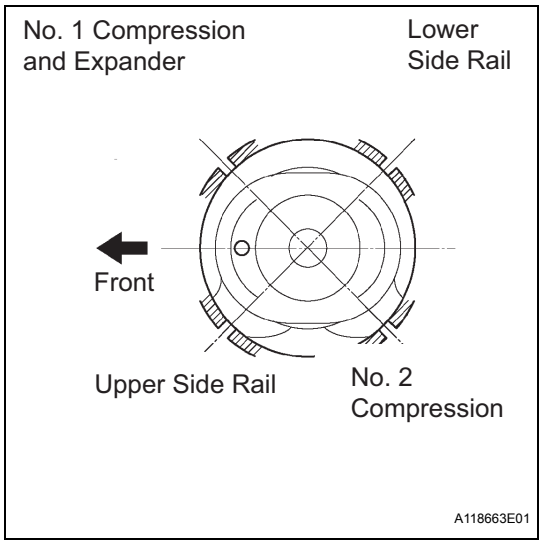

(c) Position the piston rings so that the ring ends are as shown.

13. INSTALL PISTON SUB-ASSEMBLY WITH CONNECTING ROD

(a) Apply engine oil to the cylinder walls, the pistons, and the surfaces of the connecting rod bearings.

(b) Check the position of the piston ring ends.

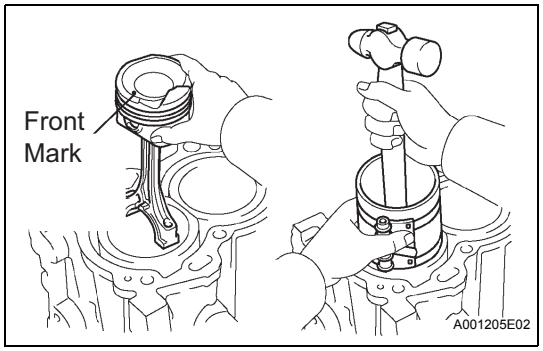

(c) Using a piston ring compressor, push the correctly numbered piston and connecting rod assemblies into each cylinder with the front mark on the piston facing forward.

NOTICE:

- **Clean the back side of the bearing and the bearing surface of the connecting rod cap and keep them free of oil.**
- **Match the numbered connecting rod cap with the connecting rod.**

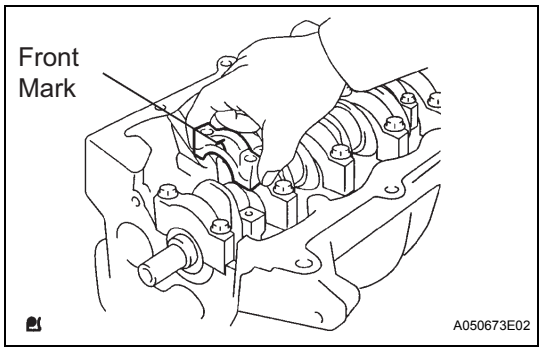

(d) Make sure that the connecting rod and its cap are in the correct combination and that the front mark of the cap is facing in the correct mounting orientation, then install the cap onto the connecting rod.

(e) Apply a light coat of engine oil to the threads of the connecting rod cap bolts.

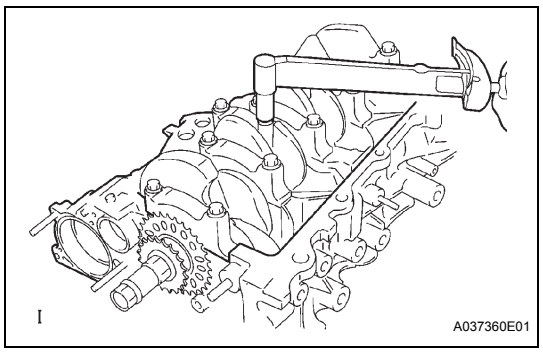

(f) Using SST, tighten the bolts in several steps to the specified torque.

SST 09205-16010

Torque: 15 N*m (153 kgf*cm, 11 ft.*lbf)

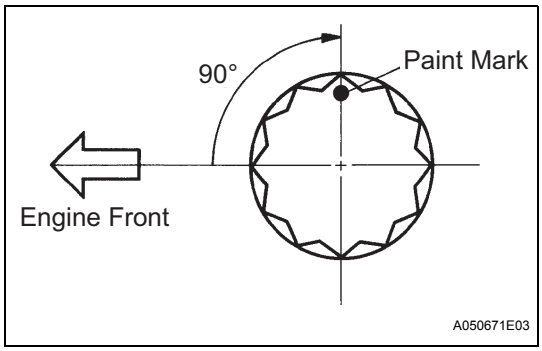

(g) Mark the front of the connecting cap bolts with paint.
(h) Retighten the cap bolts by 90° as shown.
(i) Check that the crankshaft turns smoothly.

14. INSPECT CONNECTING ROD THRUST CLEARANCE (See page EM-173)

15. INSPECT CONNECTING ROD OIL CLEARANCE (See page EM-173)

16. INSTALL STUD BOLT

(a) Using "Torx" socket wrench E5, install the 4 stud bolts.
Torque: 5.0 N*m (51 kgf*cm, 44 in.*lbf)

EM

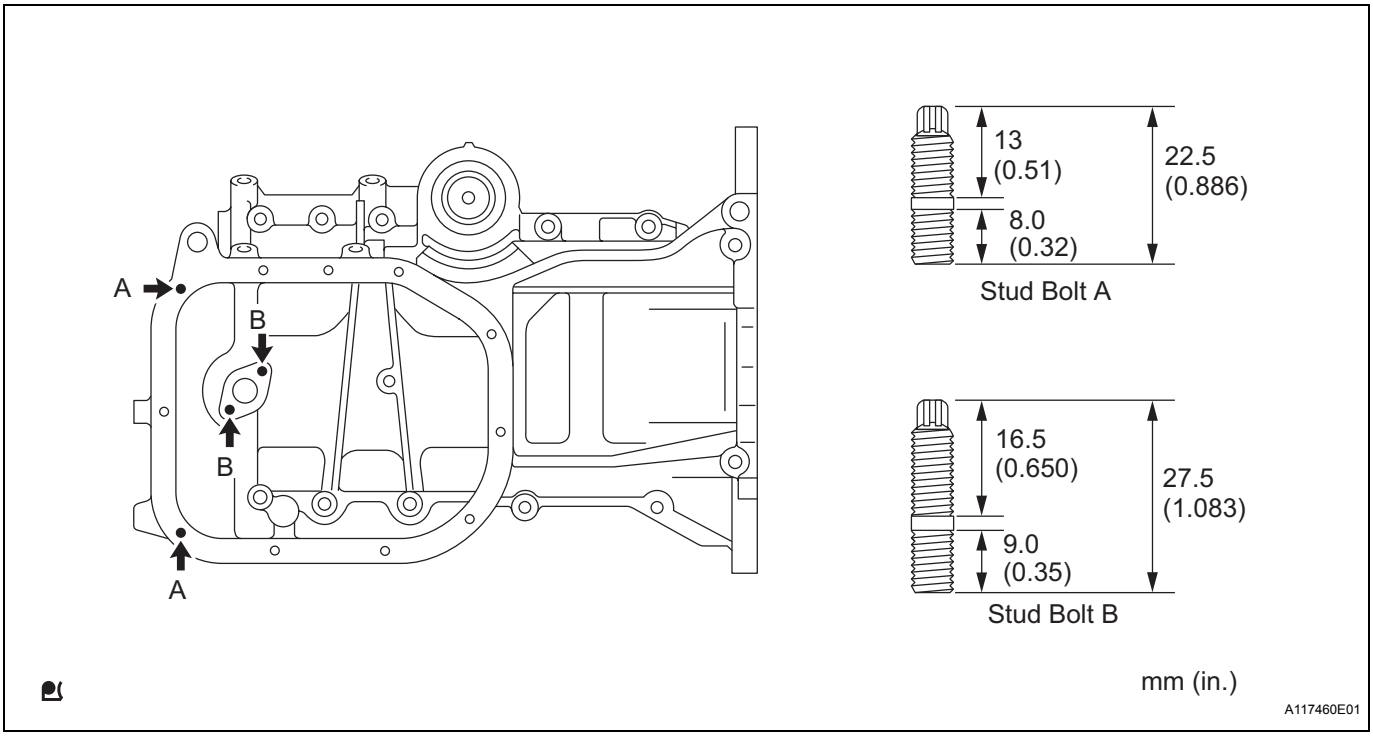

17. INSTALL OIL PAN SUB-ASSEMBLY

(a) Remove any old packing material from the contact surface.

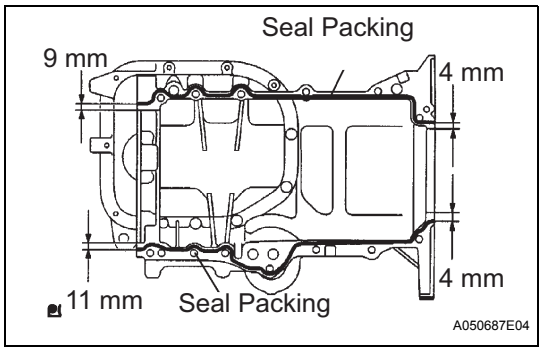

(b) Apply a continuous bead of seal packing (Diameter 2.0 mm to 3.0 mm (0.079 to 0.118 in.)) to the oil pan mating surface as shown in the illustration.
Seal packing:
Toyota Genuine Seal Packing Black, Three Bond 1207B or Equivalent
NOTICE:
- **Remove any oil from the contact surface.**
- **Install the oil pan within 3 minutes of applying the seal packing.**
- **Do not expose the seal to engine oil for at least within 2 hours after the installation.**

(c) Install 2 new O-rings onto the cylinder block.

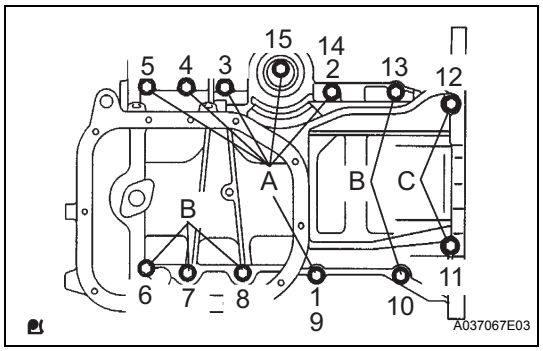

(d) Using several steps, install and tighten the 13 bolts uniformly in the sequence shown in the illustration.
Torque: 24 N*m (245 kgf*cm, 18 ft.*lbf)
HINT:
Each bolt length is as follows:
Bolt A 49 mm (1.93 in.)
Bolt B 88 mm (3.47 in.)
Bolt C 144 mm (5.67 in.)

18. INSTALL OIL STRAINER SUB-ASSEMBLY

(a) Install a new gasket and the oil strainer with the 2 nuts and the bolt.
Torque: 11 N*m (112 kgf*cm, 8.1 ft.*lbf)

19. INSTALL OIL PAN SUB-ASSEMBLY NO. 2

(a) Remove any old packing material from the contact surface.

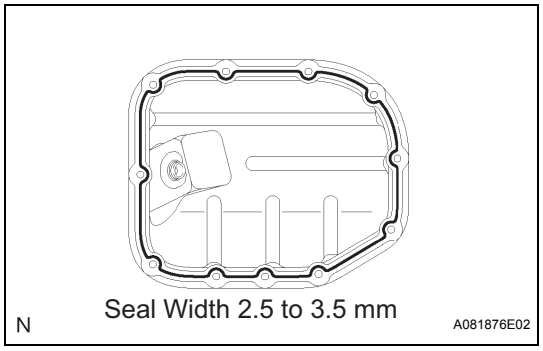

(b) Apply a continuous bead of seal packing (Diameter 2.5 to 3.5 mm (0.0984 to 0.1378 in.)) to the oil pan mating surface as shown in the illustration.
Seal packing:
Toyota Genuine Seal Packing Black, Three Bond 1207B or Equivalent
NOTICE:
- **Remove any oil from the contact surface.**
- **Install the oil pan within 3 minutes of applying the seal packing.**
- **Do not expose the seal to engine oil for at least 2 hours after the installation.**
- **Do not start the engine for at least 2 hours after the installation.**

(c) Install oil pan No. 2 with the 9 bolts and the 2 nuts.
Torque: 9.0 N*m (92 kgf*cm, 80 in.*lbf)

(d) Install the drain plug with a new gasket.
Torque: 38 N*m (382 kgf*cm, 28 ft.*lbf)

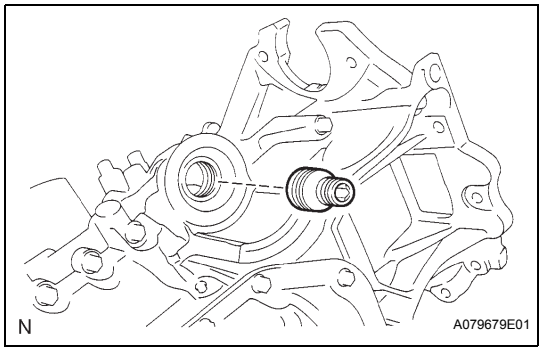

20. INSTALL OIL FILTER UNION

(a) Using a 12 mm hexagon wrench, install the oil filter union.
Torque: 30 N*m (306 kgf*cm, 22 ft.*lbf)

21. INSTALL OIL FILTER SUB-ASSEMBLY

(a) Check and clean the oil filter installation surface.

(b) Apply clean engine oil to the gasket of a new oil filter.

(c) Gently screw the oil filter into place, and tighten it until the gasket comes into contact with the seat.

EM

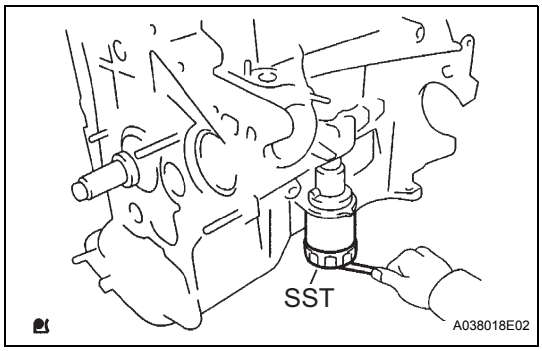

(d) Using SST, tighten it an additional 3/4 turn.
SST 09228-06501
HINT:
When using a torque wrench, tighten it to the specified torque.
Torque: 13 N*m (133 kgf*cm, 9.5 ft.*lbf)

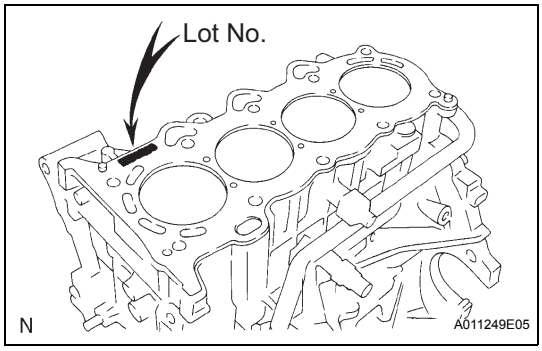

22. INSTALL CYLINDER HEAD GASKET

(a) Place a new cylinder head gasket on the cylinder block with the Lot No. stamp facing upward.
NOTICE:
- **Remove any oil from the contact surface.**
- **Pay attention to the mounting orientation of the cylinder head gasket.**
- **Place the cylinder head on the cylinder head gently in order not to damage the gasket.**

23. INSTALL CYLINDER HEAD SUB-ASSEMBLY

HINT:
The cylinder head bolts are tightened in 2 successive steps.

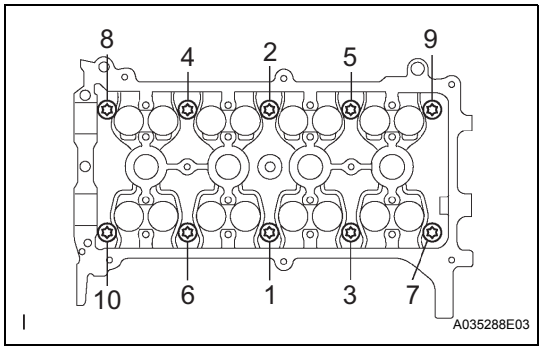

(a) Apply a light coat of engine oil to the threads of the cylinder head bolts.
(b) Using several steps, install and tighten the 10 cylinder head bolts and plate washers uniformly with an 8 mm bi-hexagon wrench in the sequence shown in the illustration.
Torque: 29 N*m (300 kgf*cm, 22 ft.*lbf)
(c) Mark the front of the cylinder head bolt with paint.

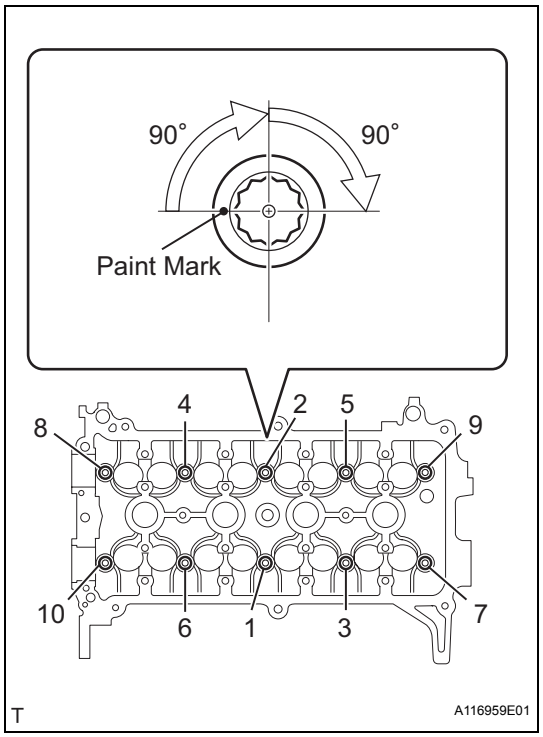

(d) Retighten the cylinder head bolts by 90° and then an additional 90° as shown in the illustration.
(e) Check that the paint mark is now at a 180° angle from the front.

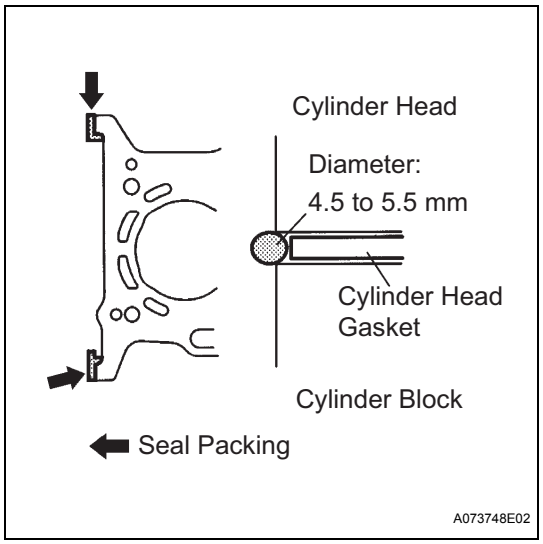

(f) Apply a continuous bead of seal packing (Diameter 4.5 to 5.5 mm (0.177 to 0.217 in.)) as shown in the illustration.
Seal Packing:
Toyota Genuine Seal Packing Black, Three Bond 1207B or Equivalent
NOTICE:
- **Remove any oil from the contact surface.**
- **Install the oil pump assembly within 3 minutes and tighten the bolts within 15 minutes of applying seal packing.**

24. INSTALL ENGINE REAR OIL SEAL

(a) Apply MP grease to a new oil seal lip.
NOTICE:
Keep the seal lip free of foreign matter.

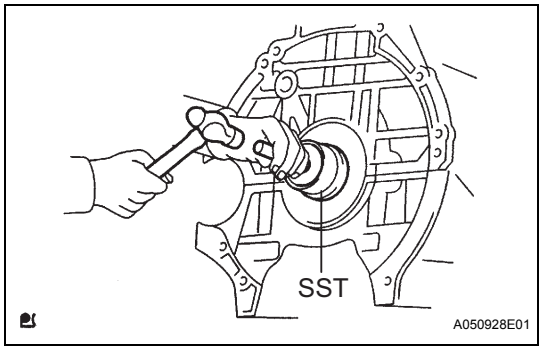

(b) Using SST and a hammer, tap in the oil seal until its surface is flush with the rear oil seal retainer edge.
SST 09223-56010
NOTICE:
- **Do not tap the oil seal at an angle.**
- **Wipe any extra grease off the crankshaft.**

25. INSTALL CAMSHAFT TIMING GEAR ASSEMBLY
NOTICE:
Install the camshaft timing gear assembly onto the camshaft with the lock pin of the camshaft timing gear assembly released.

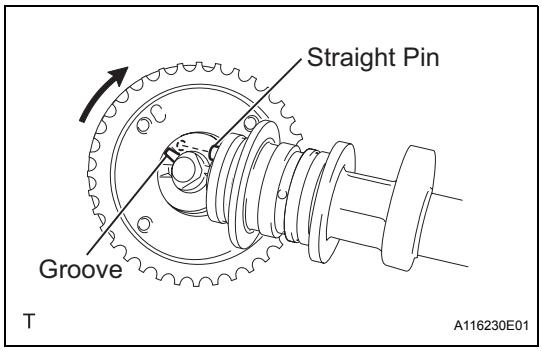

(a) Put the camshaft timing gear assembly and camshaft together with the straight pin of the groove.
(b) Turn the camshaft timing gear assembly clockwise while pushing it gently toward the camshaft. When the pin fits into the groove, push to ensure a good fit.
NOTICE:
Do not turn the camshaft timing gear in the retard direction (clockwise).
(c) Check that there is no clearance between the gear fringe and the camshaft.
(d) Tighten the flange bolt with the camshaft timing gear fixed.
Torque: 64 N*m (653 kgf*cm, 47 ft.*lbf)
NOTICE:
- **Do not lock the camshaft timing gear assembly when tightening the bolt.**
- **Release the lock pin of the camshaft timing gear assembly first, and tighten the bolt when the lock pin is locked in the most retarded position.**
- **Tightening the bolts with the lock pin locked could cause breakage of the lock pin.**

(e) Check that the camshaft timing gear assembly moves smoothly in the retard direction (clockwise) and is locked in the most retarded position.

26. INSTALL CAMSHAFT

(a) Apply a light coat of engine oil to the camshaft journals.
(b) Place the camshaft on the cylinder head with the timing mark on the camshaft timing gear facing upward.

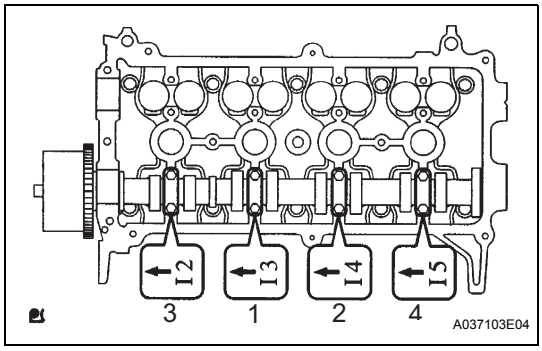

(c) Examine the front marks and numbers and tighten the bolts in the sequence shown in the illustration.
Torque: 13 N*m (129 kgf*cm, 9.4 ft.*lbf)
NOTICE:
Tighten each bolt uniformly while keeping the camshaft level.

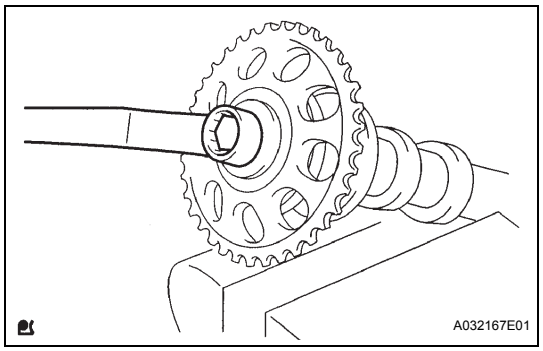

27. INSTALL CAMSHAFT TIMING SPROCKET

(a) Clamp the camshaft in a vice.

(b) Align the knock pin hole in the camshaft timing sprocket with the knock pin of the camshaft, and install the camshaft timing sprocket.
Torque: 64 N*m (653 kgf*cm, 47 ft.*lbf)
NOTICE:
Do not damage the camshaft.

28. INSTALL NO. 2 CAMSHAFT

(a) Apply a light coat of engine oil to the camshaft journals.

(b) Place the camshaft on the cylinder head with the timing mark on the camshaft timing gear facing upward.

(c) Examine the front marks and numbers on camshaft bearing caps No. 1 and No. 2 and check that the sequence is as shown in the illustration. Then uniformly tighten the bolts, in several steps, in the sequence shown in the illustration.
Torque: 13 N*m (129 kgf*cm, 9.4 ft.*lbf) for bearing cap No. 2
23 N*m (235 kgf*cm, 17 ft.*lbf) for bearing cap No. 1
NOTICE:
Tighten each bolt uniformly while keeping the camshaft level.

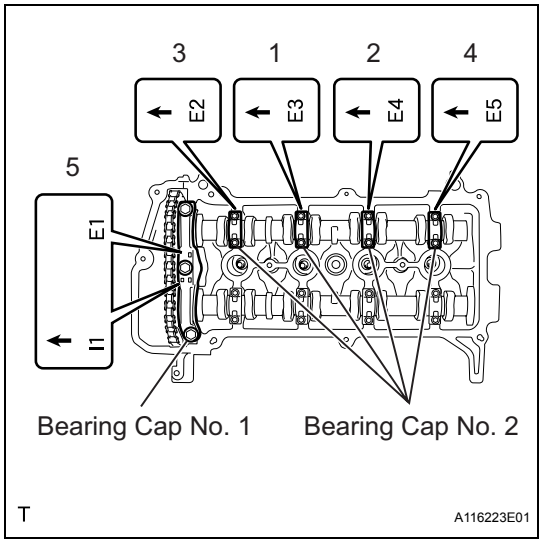

29. INSTALL CAMSHAFT POSITION SENSOR

(a) Apply engine oil to the O-ring.
NOTICE:
If the O-ring is damaged, replace the camshaft position sensor.

(b) Install the camshaft position sensor with the bolt.
Torque: 8.0 N*m (82 kgf*cm, 71 in.*lbf)

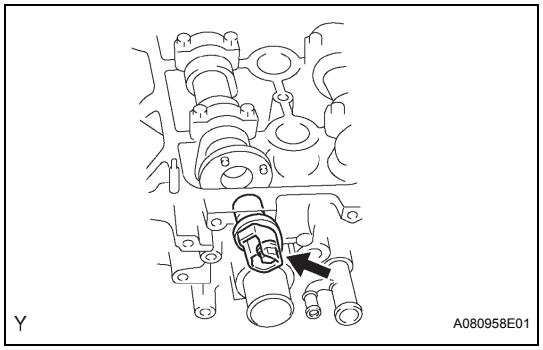

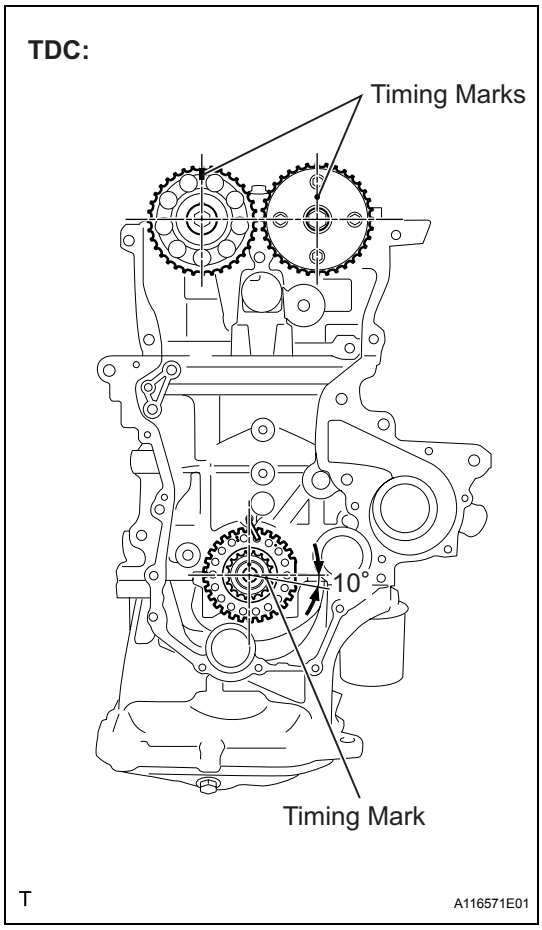

30. INSTALL CHAIN SUB-ASSEMBLY

(a) Make sure that all the timing marks are in the positions (TDC) shown in the illustration.
HINT:
The positions of the timing marks may differ from the predetermined positions due to the force of the valve spring.

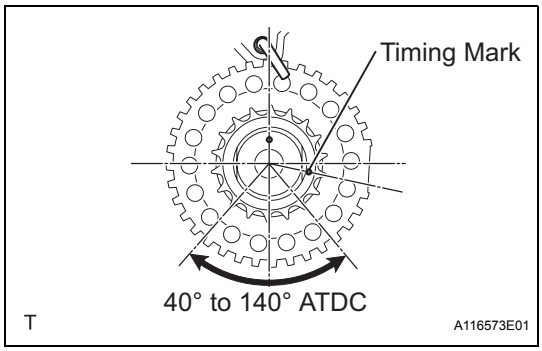

(b) Set the timing mark of the crankshaft in a position between 40 and 140°ATDC, as illustrated.

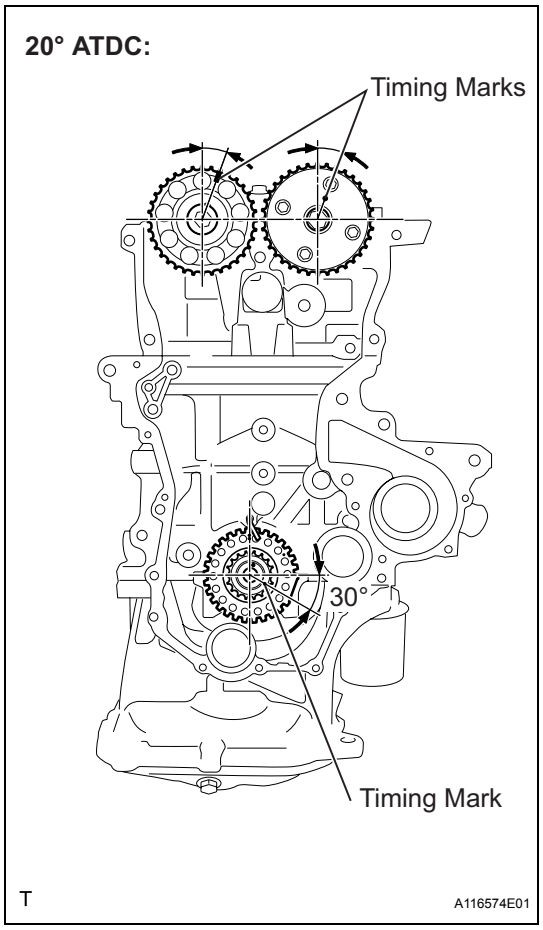

(c) Set the camshaft timing gear and the camshaft timing sprocket in the positions (20°ATDC) shown in the illustration.

(d) Set the crankshaft in the position (20°ATDC) shown in the illustration.

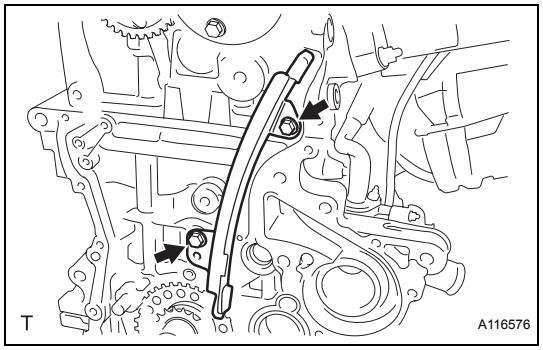

(e) Install chain vibration damper No. 1 with the 2 bolts.
Torque: 9.0 N*m (92 kgf*cm, 80 in.*lbf)

EM

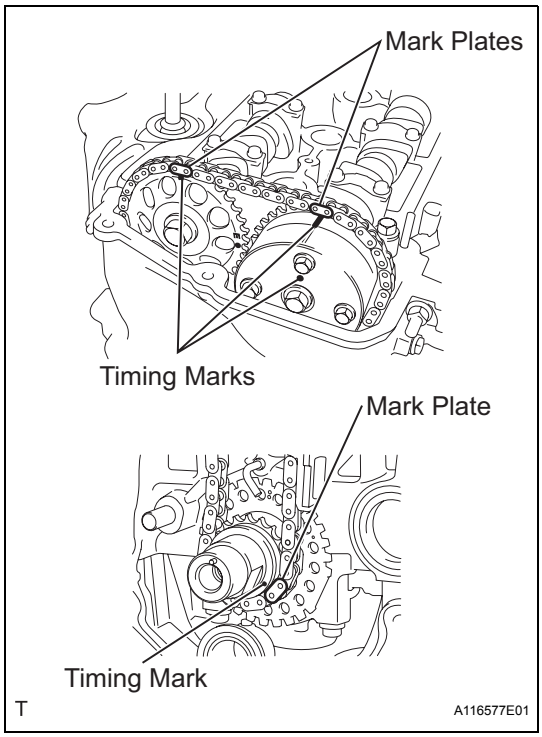

(f) Align the timing marks of the camshaft with the mark plates of the timing chain and install the timing chain.
HINT:
Align the timing marks with the mark plates while turning the hexagonal service portion of the camshaft using a wrench.

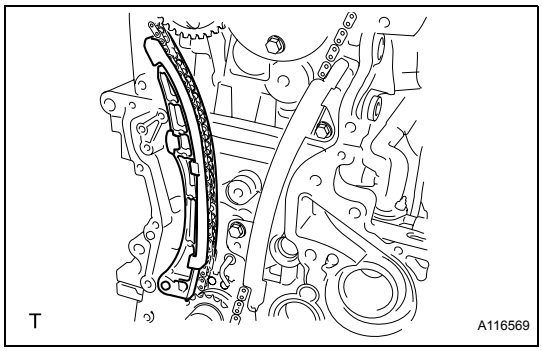

31. INSTALL CHAIN TENSIONER SLIPPER

(a) Install the chain tensioner slipper.

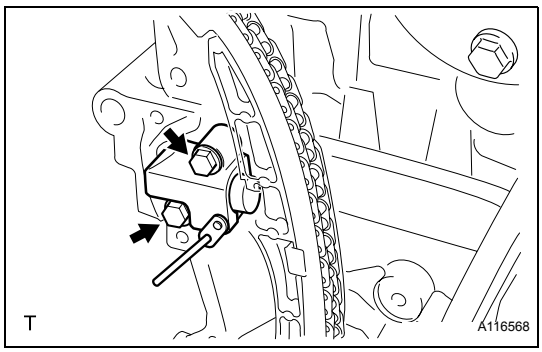

32. INSTALL CHAIN TENSIONER ASSEMBLY NO. 1

(a) Install chain tensioner assembly No. 1 with the 2 bolts.
Torque: 9.0 N*m (92 kgf*cm, 80 in.*lbf)

(b) Remove the bar from chain tensioner assembly No. 1.

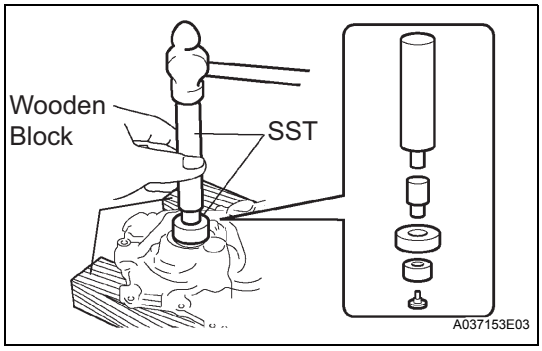

33. INSTALL OIL PUMP SEAL

(a) Using SST and a hammer, tap in a new oil seal until its surface is flush with the timing chain cover edge.
SST 09950-60010 (09951-00250, 09951-00380, 09952-06010), 09950-70010 (09951-07100)
NOTICE:
- **Do not tap the oil seal at an angle.**
- **Keep the seal lip free of foreign matter.**

(b) Apply MP grease to the oil seal lip.

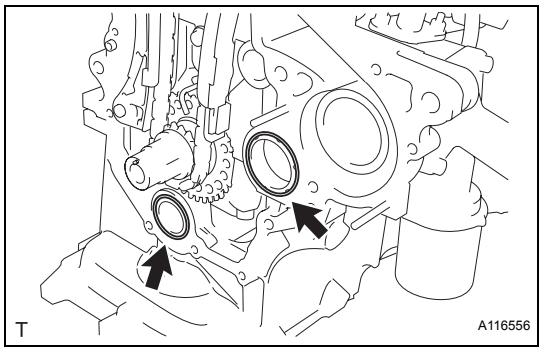

34. INSTALL OIL PUMP ASSEMBLY

(a) Install 2 new O-rings in the 2 locations shown in the illustration.

(b) Apply seal packing to the oil pump assembly, cylinder head and cylinder block as shown in the illustration.

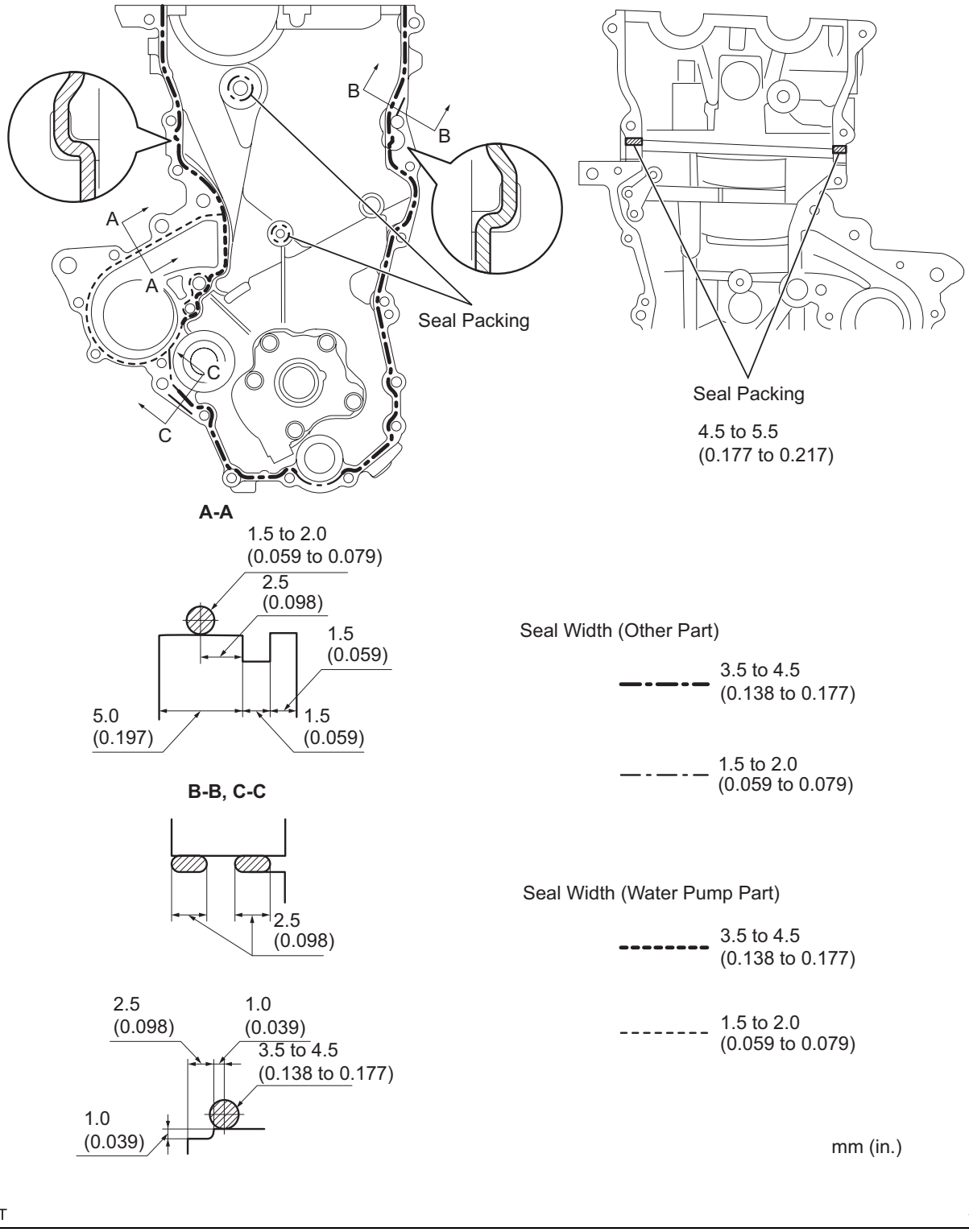

Seal packing:
Water pump part Toyota Genuine Seal Packing 1282B, Three Bond 1282B or Equivalent
Other part Toyota Genuine Seal Packing Black, Three Bond 1207B or Equivalent

NOTICE:
- **Remove any oil from the contact surface.**
- **Install the oil pump assembly within 3 minutes and tighten the bolts and nut within 15 minutes of applying the the seal packing.**
- **Do not expose the seal to engine oil for at least 2 hours after the installation.**

(c) Align the keyway of the oil pump rotor with the rectangular portion of the crankshaft, and slide the oil pump into place.

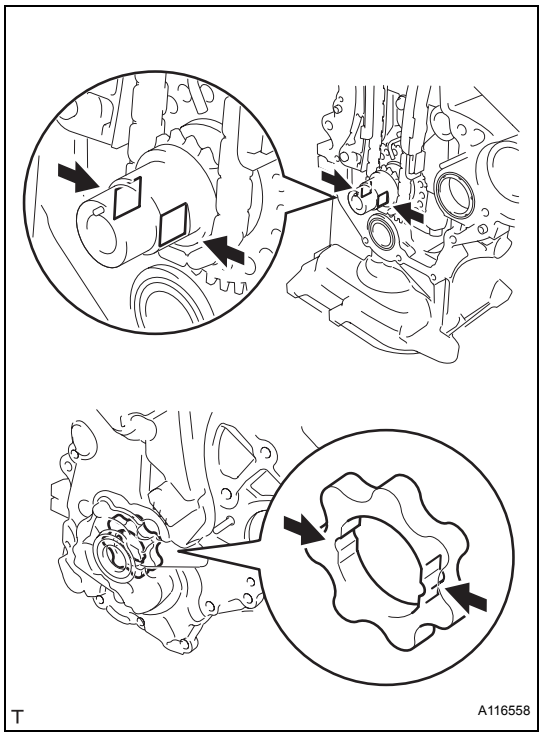

(d) Install the oil pump assembly with the 15 bolts and nut. Tighten the bolts and nut uniformly in several steps.

Torque: 32 N*m (326 kgf*cm, 24 ft.*lbf) for bolt A
11 N*m (112 kgf*cm, 8.1 ft.*lbf) for bolt B
11 N*m (112 kgf*cm, 8.1 ft.*lbf) for bolt C
24 N*m (245 kgf*cm, 18 ft.*lbf) for nut D
24 N*m (245 kgf*cm, 18 ft.*lbf) for bolt E

NOTICE:
Install the mounting bracket and water pump within 15 minutes of installing the oil pump assembly.

HINT:
Each bolt length is as follows.
A: 30 mm (1.181 in.)
B: 35 mm (1.378 in.)
C: 20 mm (0.787 in.)
E: 20 to 14 mm (0.787 to 0.551 in.) Double ended bolt

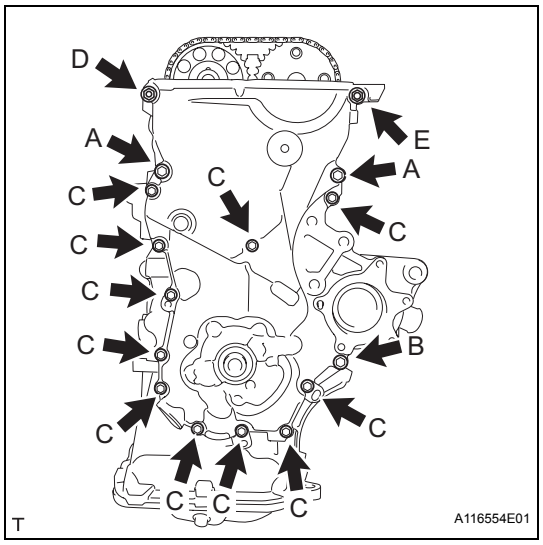

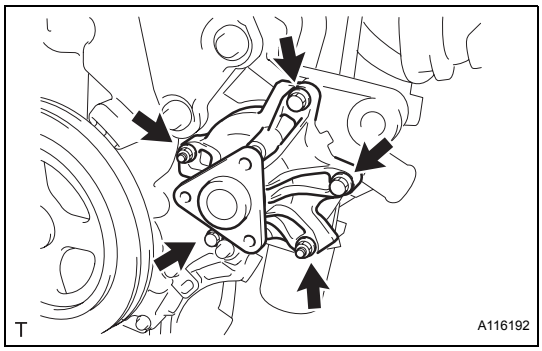

35. INSTALL WATER PUMP ASSEMBLY

(a) Install the water pump and a new gasket with the 3 bolts and 2 nuts.
Torque: 11 N*m (112 kgf*cm, 8.1 ft.*lbf)

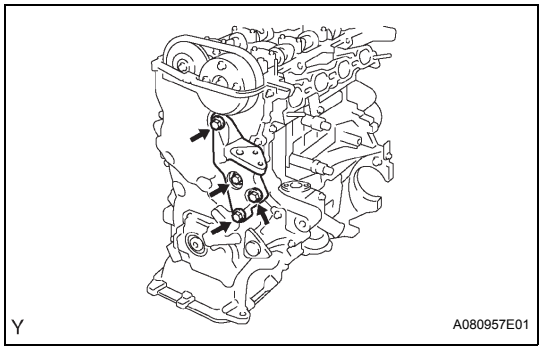

36. INSTALL TRANSVERSE ENGINE ENGINE MOUNTING BRACKET

(a) Install the transverse engine mounting bracket with the 4 bolts.
Torque: 55 N*m (561 kgf*cm, 41 ft.*lbf)

37. INSTALL CRANKSHAFT DAMPER SUB-ASSEMBLY

(a) Align the pin hole in the crankshaft damper with the pin position and install the crankshaft damper sub-assembly.

(b) Provisionally install the bolt.

(c) Using 2 SSTs, tighten the bolt while holding the crankshaft damper sub-assembly.
SST 09213-14010 (91651-60865), 09330-00021
Torque: 128 N*m (1305 kgf*cm, 95 ft.*lbf)
NOTICE:
Check the SST installation positions when installing them, to avoid the SST fixing bolts from coming into contact with the oil pump assembly.

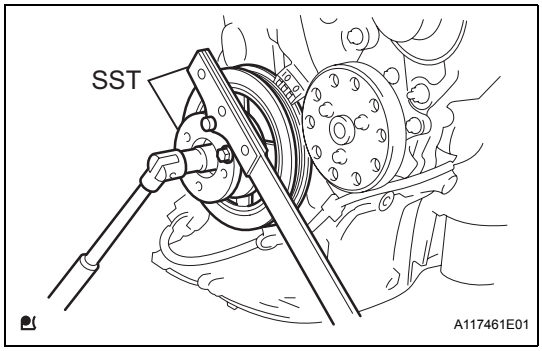

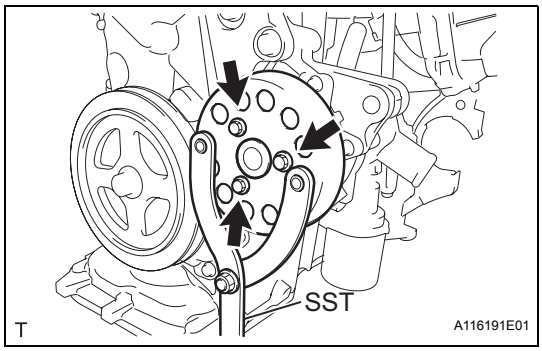

38. INSTALL WATER PUMP PULLEY

(a) Using SST, install the pump pulley with the 3 bolts.
SST 09960-10010 (09962-01000, 09963-00700)
Torque: 15 N*m (153 kgf*cm, 11 ft.*lbf)

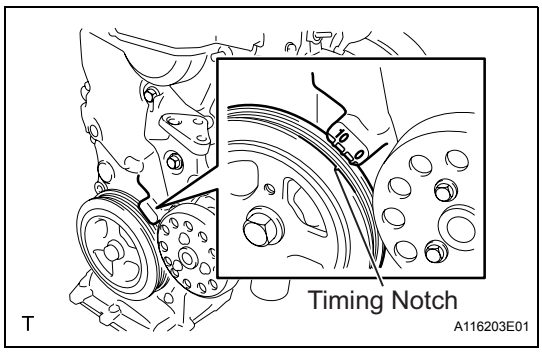

39. INSPECT VALVE CLEARANCE

(a) Set the No. 1 cylinder to TDC/compression.

(1) Turn the crankshaft damper, and align its timing notch with the timing mark "0" of the oil pump.

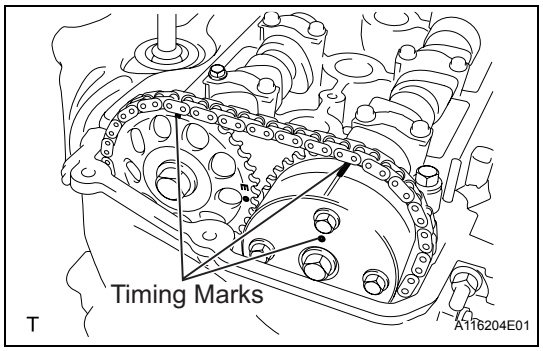

(2) Check that the timing marks on the camshaft timing sprocket and camshaft timing gear are all facing upward, as shown in the illustration.
HINT:
If not, turn the crankshaft 1 complete revolution (360°) and align the marks as above.

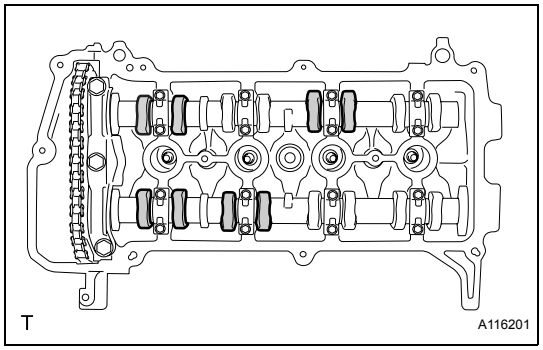

(b) Check the valves indicated in the illustration.
(1) Using a feeler gauge, measure the clearance between the valve lifter and camshaft.
Valve clearance (cold):
for intake:
0.15 to 0.25 mm (0.006 to 0.010 in.)
for exhaust:
0.25 to 0.35 mm (0.010 to 0.014 in.)
(2) Record any out-of-specification valve clearance measurements. They will be used later to determine the required replacement adjusting shim.

(c) Turn the crankshaft 1 complete revolution (360°) and align its timing notch with timing mark "0" of the oil pump.

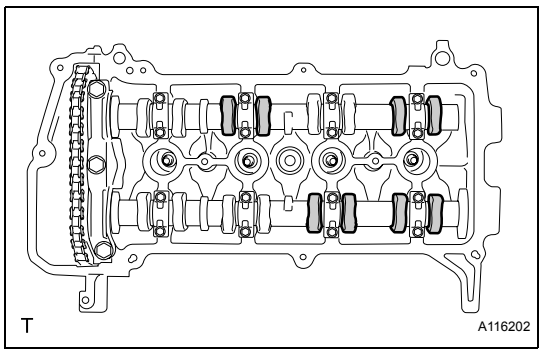

(d) Check the valves indicated in the illustration.
(1) Using a feeler gauge, measure the clearance between the valve lifter and camshaft.
Valve clearance (cold):
for Intake:
0.15 to 0.25 mm (0.006 to 0.010 in.)
for Exhaust:
0.25 to 0.35 mm (0.010 to 0.014 in.)
(2) Record any out-of-specification valve clearance measurements. They will be used later to determine the required replacement adjusting shim.

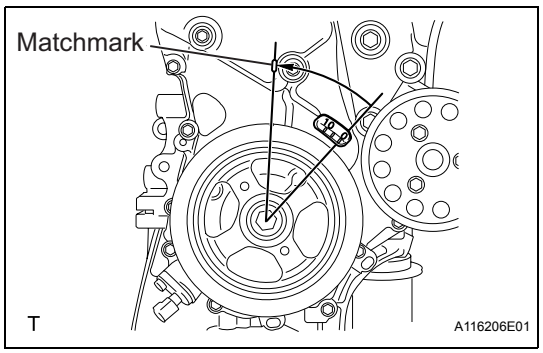

40. ADJUST VALVE CLEARANCE
NOTICE:
When rotating the camshaft with the timing chain removed, rotate the crankshaft damper counterclockwise 40° from the TDC and align its timing notch with the matchmark of the timing chain cover to prevent the pistons from coming into contact with the valves.

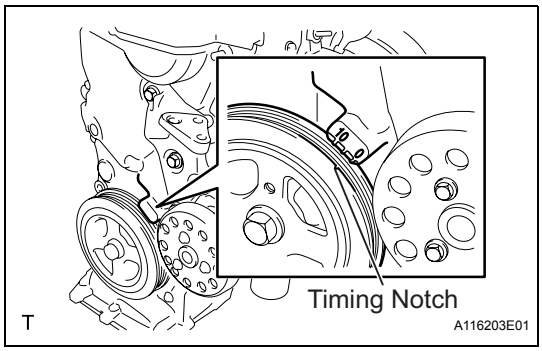

(a) Set the No. 1 cylinder to TDC/compression.
(1) Turn the crankshaft damper, and align its timing notch with timing mark "0" of the oil pump.

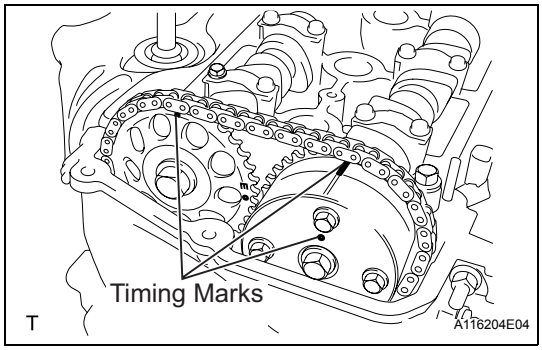

(2) Check that the timing marks on the camshaft timing sprocket and camshaft timing gear are all facing upward as shown in the illustration.
HINT:
If not, turn the crankshaft 1 complete revolution (360°) and align the marks as above.

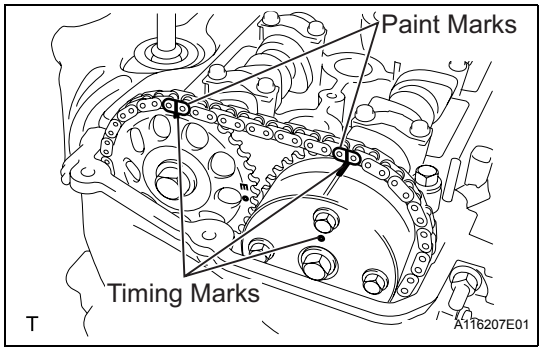

(b) Put paint marks on the chain in the places where the timing marks of the camshaft timing sprocket and the camshaft timing gear are located.

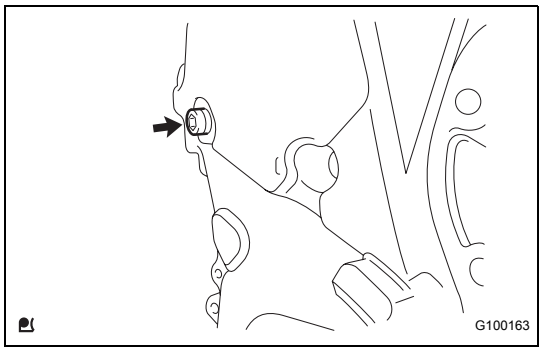

(c) Using an 8 mm hexagon wrench, remove the screw plug.

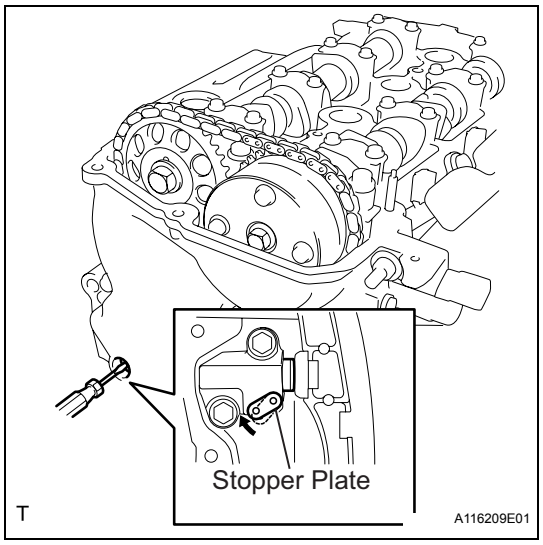

(d) Insert a screwdriver into the service hole in the chain tensioner to pull the stopper plate of the chain tensioner upward.

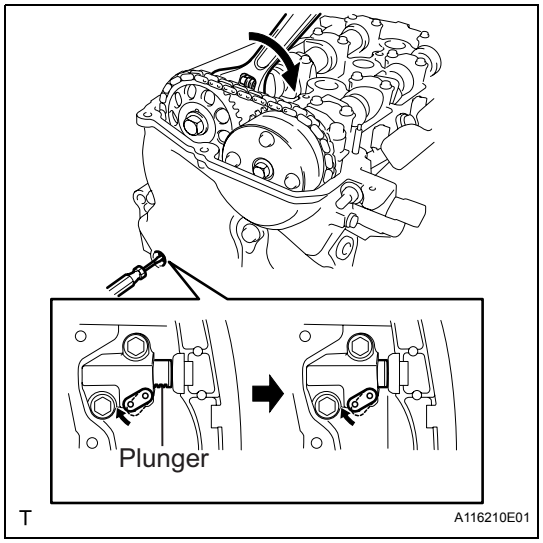

(e) Using a wrench, rotate the No. 2 camshaft clockwise to push in the plunger of the chain tensioner.

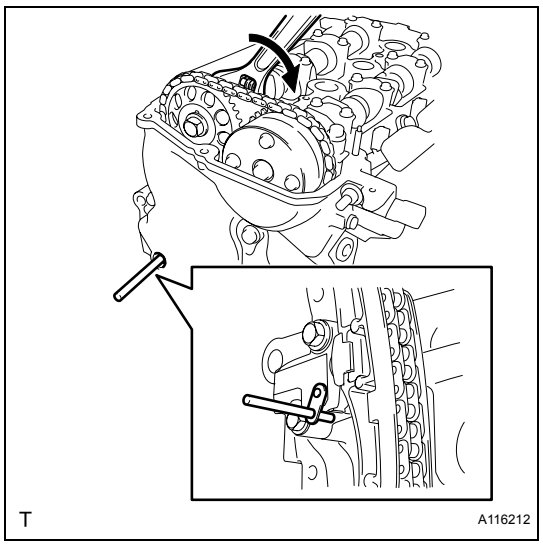

(f) Remove the screwdriver from the service hole, then align the hole in the stopper plate with the service hole and insert a 3 mm (0.12 in.) diameter bar into the holes to hold the stopper plate.
HINT:
- Fix the stopper plate using the bar while rotating the camshaft right and left slightly.
- Hold the bar with tape so that it does not come out.

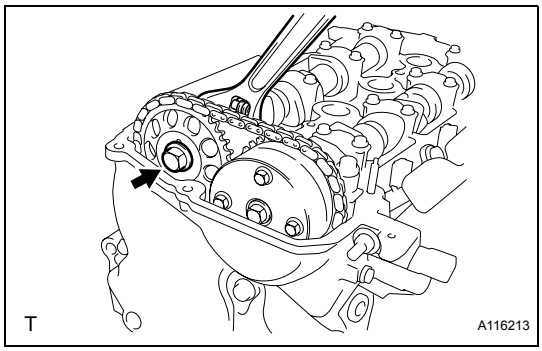

(g) Using a wrench, hold the hexagonal lobe of No. 2 camshaft and remove the flange bolt.

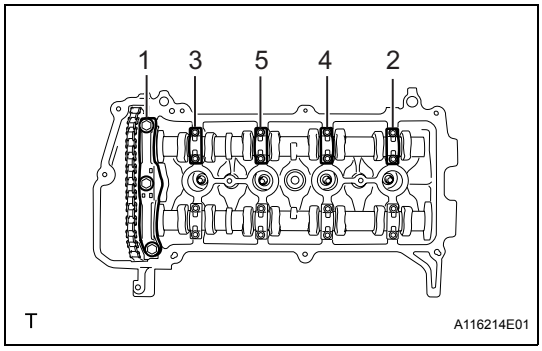

(h) Using several steps, loosen and remove the 11 bearing cap bolts uniformly in the sequence shown in the illustration, then remove camshaft bearing cap No. 1 and camshaft bearing cap No. 2.
NOTICE:
Loosen each bolt uniformly while keeping the camshaft level.

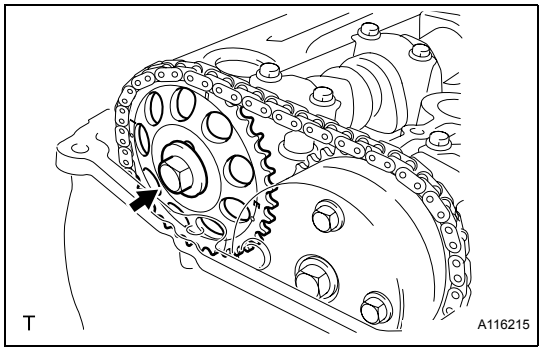

(i) Remove the flange bolt and remove the camshaft timing sprocket.

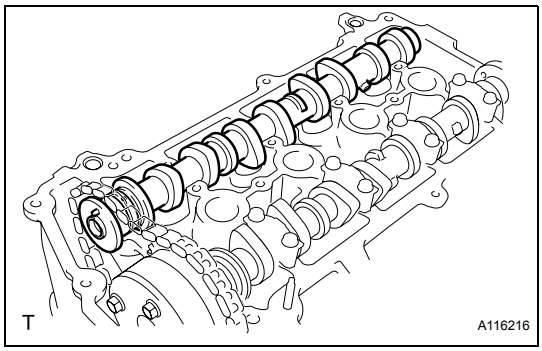

(j) Remove the No. 2 camshaft.

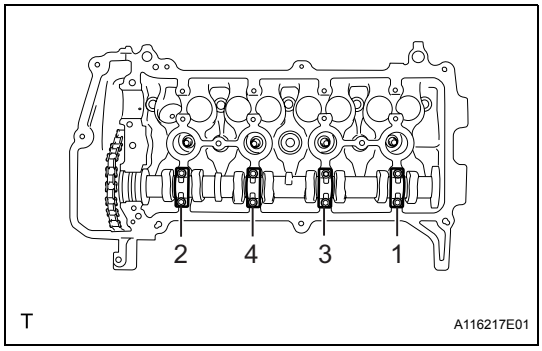

(k) Using several steps, loosen and remove the 8 bearing cap bolts uniformly in the sequence shown in the illustration, then remove camshaft bearing cap No. 2.
NOTICE:
Loosen the bolts uniformly while keeping the camshaft level.

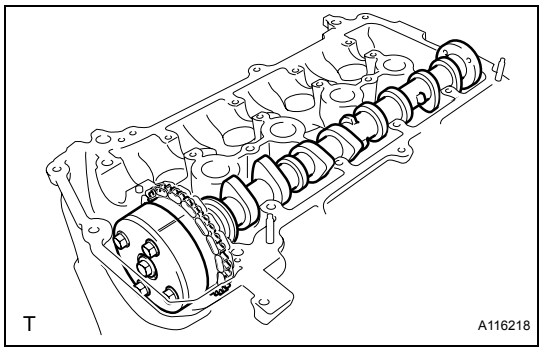

(l) Hold the chain by hand, and remove the camshaft and the camshaft timing gear assembly.

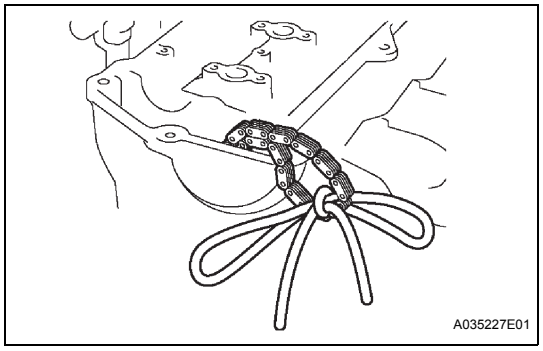

(m) Tie the chain with a piece of string as shown in the illustration.
(n) Remove the valve lifters.

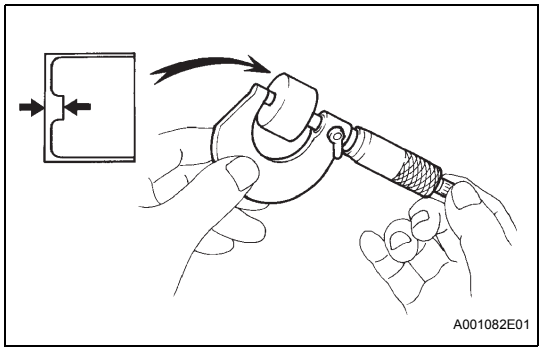

(o) Using a micrometer, measure the thickness of the removed lifter.
(p) Calculate the thickness of the new lifter so that the valve clearance comes to within the specified values.

A	Thickness of new lifter
B	Thickness of used lifter
C	Measured valve clearance

Valve clearance:
Intake A = B + (C - 0.20 mm (0.008 in.))
Exhaust A = B + (C - 0.30 mm (0.012 in.))

(q) Select a new lifter with a thickness as close to the calculated values as possible.
HINT:
Lifters are available in 35 sizes in increments of 0.020 mm (0.0008 in.), from 5.060 mm (0.1992 in.) to 5.740 mm (0.2260 in.).

EM

EM

Installed lifter thickness mm(in.) \ Measured clearance mm(in.)	0.000 - 0.030 (0.0000 - 0.0012)	0.031 - 0.050 (0.0012 - 0.0020)	0.051 - 0.070 (0.0020 - 0.0028)	0.071 - 0.090 (0.0028 - 0.0035)	0.091 - 0.110 (0.0036 - 0.0043)	0.111 - 0.130 (0.0044 - 0.0051)	0.131 - 0.149 (0.0052 - 0.0059)	0.150 - 0.250 (0.0059 - 0.0098)	0.251 - 0.270 (0.0099 - 0.0106)	0.271 - 0.290 (0.0107 - 0.0114)	0.291 - 0.310 (0.0115 - 0.0122)	0.311 - 0.330 (0.0122 - 0.0130)	0.331 - 0.350 (0.0130 - 0.0138)	0.351 - 0.370 (0.0138 - 0.0146)	0.371 - 0.390 (0.0146 - 0.0154)	0.391 - 0.410 (0.0154 - 0.0161)	0.411 - 0.430 (0.0162 - 0.0169)	0.431 - 0.450 (0.0170 - 0.0177)	0.451 - 0.470 (0.0178 - 0.0185)	0.471 - 0.490 (0.0185 - 0.0193)	0.491 - 0.510 (0.0193 - 0.0201)	0.511 - 0.530 (0.0201 - 0.0209)	0.531 - 0.550 (0.0209 - 0.0217)	0.551 - 0.570 (0.0217 - 0.0224)	0.571 - 0.590 (0.0225 - 0.0232)	0.591 - 0.610 (0.0233 - 0.0240)	0.611 - 0.630 (0.0241 - 0.0248)	0.631 - 0.650 (0.0248 - 0.0256)	0.651 - 0.670 (0.0256 - 0.0264)	0.671 - 0.690 (0.0264 - 0.0272)	0.691 - 0.710 (0.0272 - 0.0280)	0.711 - 0.730 (0.0280 - 0.0287)	0.731 - 0.750 (0.0288 - 0.0295)	0.751 - 0.770 (0.0296 - 0.0303)	0.771 - 0.790 (0.0304 - 0.0311)	0.791 - 0.810 (0.0311 - 0.0319)	0.811 - 0.830 (0.0319 - 0.0327)	0.831 - 0.850 (0.0327 - 0.0335)	0.851 - 0.870 (0.0335 - 0.0343)	0.871 - 0.890 (0.0343 - 0.0350)	0.891 - 0.910 (0.0351 - 0.0358)	0.911 - 0.930 (0.0359 - 0.0366)
5.060 (0.1992)									12	14	16	18	20	22	24	26	28	30	32	34	36	38	40	42	44	46	48	50	52	54	56	58	60	62	64	66	68	70	72	74	74	74	74
5.080 (0.2000)							06		14	16	18	20	22	24	26	28	30	32	34	36	38	40	42	44	46	48	50	52	54	56	58	60	62	64	66	68	70	72	74	74	74	
5.100 (0.2008)						06	06		16	18	20	22	24	26	28	30	32	34	36	38	40	42	44	46	48	50	52	54	56	58	60	62	64	66	68	70	72	74	74	74		
5.120 (0.2016)					06	06	06		18	20	22	24	26	28	30	32	34	36	38	40	42	44	46	48	50	52	54	56	58	60	62	64	66	68	70	72	74	74	74			
5.140 (0.2024)				06	06	06	08		20	22	24	26	28	30	32	34	36	38	40	42	44	46	48	50	52	54	56	58	60	62	64	66	68	70	72	74	74	74				
5.160 (0.2031)			06	06	06	08	10		22	24	26	28	30	32	34	36	38	40	42	44	46	48	50	52	54	56	58	60	62	64	66	68	70	72	74	74	74					
5.180 (0.2039)		06	06	06	08	10	12		24	26	28	30	32	34	36	38	40	42	44	46	48	50	52	54	56	58	60	62	64	66	68	70	72	74	74	74						
5.200 (0.2047)		06	06	08	10	12	14		26	28	30	32	34	36	38	40	42	44	46	48	50	52	54	56	58	60	62	64	66	68	70	72	74	74	74							
5.210 (0.2051)	06	06	08	10	12	14	16		28	30	32	34	36	38	40	42	44	46	48	50	52	54	56	58	60	62	64	66	68	70	72	74	74	74								
5.220 (0.2055)	06	06	08	10	12	14	16		28	30	32	34	36	38	40	42	44	46	48	50	52	54	56	58	60	62	64	66	68	70	72	74	74	74								
5.230 (0.2059)	06	08	10	12	14	16	18		30	32	34	36	38	40	42	44	46	48	50	52	54	56	58	60	62	64	66	68	70	72	74	74	74									
5.240 (0.2063)	06	08	10	12	14	16	18		30	32	34	36	38	40	42	44	46	48	50	52	54	56	58	60	62	64	66	68	70	72	74	74	74									
5.250 (0.2067)	06	10	12	14	16	18	20		32	34	36	38	40	42	44	46	48	50	52	54	56	58	60	62	64	66	68	70	72	74	74	74										
5.260 (0.2071)	08	10	12	14	16	18	20		32	34	36	38	40	42	44	46	48	50	52	54	56	58	60	62	64	66	68	70	72	74	74	74										
5.270 (0.2075)	10	12	14	16	18	20	22		34	36	38	40	42	44	46	48	50	52	54	56	58	60	62	64	66	68	70	72	74	74	74											
5.280 (0.2079)	10	12	14	16	18	20	22		34	36	38	40	42	44	46	48	50	52	54	56	58	60	62	64	66	68	70	72	74	74	74											
5.290 (0.2083)	12	14	16	18	20	22	24		36	38	40	42	44	46	48	50	52	54	56	58	60	62	64	66	68	70	72	74	74	74												
5.300 (0.2087)	12	14	16	18	20	22	24		36	38	40	42	44	46	48	50	52	54	56	58	60	62	64	66	68	70	72	74	74	74												
5.310 (0.2091)	14	16	18	20	22	24	26		38	40	42	44	46	48	50	52	54	56	58	60	62	64	66	68	70	72	74	74	74													
5.320 (0.2094)	14	16	18	20	22	24	26		38	40	42	44	46	48	50	52	54	56	58	60	62	64	66	68	70	72	74	74	74													
5.330 (0.2098)	16	18	20	22	24	26	28		40	42	44	46	48	50	52	54	56	58	60	62	64	66	68	70	72	74	74	74														
5.340 (0.2102)	16	18	20	22	24	26	28		40	42	44	46	48	50	52	54	56	58	60	62	64	66	68	70	72	74	74	74														
5.350 (0.2106)	18	20	22	24	26	28	30		42	44	46	48	50	52	54	56	58	60	62	64	66	68	70	72	74	74	74															
5.360 (0.2110)	18	20	22	24	26	28	30		42	44	46	48	50	52	54	56	58	60	62	64	66	68	70	72	74	74	74															
5.370 (0.2114)	20	22	24	26	28	30	32		44	46	48	50	52	54	56	58	60	62	64	66	68	70	72	74	74	74																
5.380 (0.2118)	20	22	24	26	28	30	32		44	46	48	50	52	54	56	58	60	62	64	66	68	70	72	74	74	74																
5.390 (0.2122)	22	24	26	28	30	32	34		46	48	50	52	54	56	58	60	62	64	66	68	70	72	74	74	74																	
5.400 (0.2126)	22	24	26	28	30	32	34		46	48	50	52	54	56	58	60	62	64	66	68	70	72	74	74	74																	
5.410 (0.2130)	24	26	28	30	32	34	36		48	50	52	54	56	58	60	62	64	66	68	70	72	74	74	74																		
5.420 (0.2134)	24	26	28	30	32	34	36		48	50	52	54	56	58	60	62	64	66	68	70	72	74	74	74																		
5.430 (0.2138)	26	28	30	32	34	36	38		50	52	54	56	58	60	62	64	66	68	70	72	74	74	74																			
5.440 (0.2142)	26	28	30	32	34	36	38		50	52	54	56	58	60	62	64	66	68	70	72	74	74	74																			
5.450 (0.2146)	28	30	32	34	36	38	40		52	54	56	58	60	62	64	66	68	70	72	74	74	74																				
5.460 (0.2150)	28	30	32	34	36	38	40		52	54	56	58	60	62	64	66	68	70	72	74	74	74																				
5.470 (0.2154)	30	32	34	36	38	40	42		54	56	58	60	62	64	66	68	70	72	74	74	74																					
5.480 (0.2157)	30	32	34	36	38	40	42		54	56	58	60	62	64	66	68	70	72	74	74	74																					
5.490 (0.2161)	32	34	36	38	40	42	44		56	58	60	62	64	66	68	70	72	74	74	74																						
5.500 (0.2165)	32	34	36	38	40	42	44		56	58	60	62	64	66	68	70	72	74	74	74																						
5.510 (0.2169)	34	36	38	40	42	44	46		58	60	62	64	66	68	70	72	74	74	74																							
5.520 (0.2173)	34	36	38	40	42	44	46		58	60	62	64	66	68	70	72	74	74	74																							
5.530 (0.2177)	36	38	40	42	44	46	48		60	62	64	66	68	70	72	74	74	74																								
5.540 (0.2181)	36	38	40	42	44	46	48		60	62	64	66	68	70	72	74	74	74																								
5.550 (0.2185)	38	40	42	44	46	48	50		62	64	66	68	70	72	74	74	74																									
5.560 (0.2189)	38	40	42	44	46	48	50		62	64	66	68	70	72	74	74	74																									
5.570 (0.2193)	40	42	44	46	48	50	52		64	66	68	70	72	74	74	74																										
5.580 (0.2197)	40	42	44	46	48	50	52		64	66	68	70	72	74	74	74																										
5.590 (0.2201)	42	44	46	48	50	52	54		66	68	70	72	74	74	74	74																										
5.600 (0.2205)	42	44	46	48	50	52	54		66	68	70	72	74	74	74																										
5.620 (0.2213)	44	46	48	50	52	54	56		68	70	72	74	74	74																										
5.640 (0.2220)	46	48	50	52	54	56	58		70	72	74	74	74																										
5.660 (0.2228)	48	50	52	54	56	58	60		72	74	74	74																										
5.680 (0.2236)	50	52	54	56	58	60	62		74	74	74																										
5.700 (0.2244)	52	54	56	58	60	62	64		74	74																											
5.720 (0.2252)	54	56	58	60	62	64	66		74																												
5.740 (0.2260)	56	58	60	62	64	66	68																														

T

A117457

Intake valve clearance (cold):
0.15 to 0.25 mm (0.006 to 0.010 in.)
EXAMPLE:
A 5.250 mm (0.2067 in.) lifter is installed, and the measured clearance is 0.400 mm (0.0158 in.). Replace the 5.250 mm (0.2067 in.) lifter with a new No. 46 lifter.

New Shim Thickness

Shim No.	Thickness	Shim No.	Thickness	Shim No.	Thickness
06	5.060 (0.1992)	30	5.300 (0.2087)	54	5.540 (0.2181)
08	5.080 (0.2000)	32	5.320 (0.2094)	56	5.560 (0.2189)
10	5.100 (0.2008)	34	5.340 (0.2102)	58	5.580 (0.2197)
12	5.120 (0.2016)	36	5.360 (0.2110)	60	5.600 (0.2205)
14	5.140 (0.2024)	38	5.380 (0.2118)	62	5.620 (0.2213)
16	5.160 (0.2031)	40	5.400 (0.2126)	64	5.640 (0.2220)
18	5.180 (0.2039)	42	5.420 (0.2134)	66	5.660 (0.2228)
20	5.200 (0.2047)	44	5.440 (0.2142)	68	5.680 (0.2236)
22	5.220 (0.2055)	46	5.460 (0.2150)	70	5.700 (0.2244)
24	5.240 (0.2063)	48	5.480 (0.2157)	72	5.720 (0.2252)
26	5.260 (0.2071)	50	5.500 (0.2165)	74	5.740 (0.2260)
28	5.280 (0.2079)	52	5.520 (0.2173)		

EM

Installed lifter thickness mm(in.) \ Measured clearance mm(in.)	0.000 - 0.030 (0.0000 - 0.0012)	0.031 - 0.050 (0.0012 - 0.0020)	0.051 - 0.070 (0.0020 - 0.0028)	0.071 - 0.090 (0.0028 - 0.0035)	0.091 - 0.110 (0.0036 - 0.0043)	0.111 - 0.130 (0.0044 - 0.0051)	0.131 - 0.150 (0.0052 - 0.0059)	0.151 - 0.170 (0.0059 - 0.0067)	0.171 - 0.190 (0.0067 - 0.0075)	0.191 - 0.210 (0.0075 - 0.0083)	0.211 - 0.230 (0.0083 - 0.0091)	0.231 - 0.249 (0.0091 - 0.0098)	0.250 - 0.350 (0.0098 - 0.0138)	0.351 - 0.370 (0.0138 - 0.0146)	0.371 - 0.390 (0.0146 - 0.0154)	0.391 - 0.410 (0.0154 - 0.0161)	0.411 - 0.430 (0.0162 - 0.0169)	0.431 - 0.450 (0.0170 - 0.0177)	0.451 - 0.470 (0.0178 - 0.0185)	0.471 - 0.490 (0.0185 - 0.0193)	0.491 - 0.510 (0.0193 - 0.0201)	0.511 - 0.530 (0.0201 - 0.0209)	0.531 - 0.550 (0.0209 - 0.0217)	0.551 - 0.570 (0.0217 - 0.0224)	0.571 - 0.590 (0.0225 - 0.0232)	0.591 - 0.610 (0.0233 - 0.0240)	0.611 - 0.630 (0.0241 - 0.0248)	0.631 - 0.650 (0.0248 - 0.0256)	0.651 - 0.670 (0.0256 - 0.0264)	0.671 - 0.690 (0.0264 - 0.0272)	0.691 - 0.710 (0.0272 - 0.0280)	0.711 - 0.730 (0.0280 - 0.0287)	0.731 - 0.750 (0.0288 - 0.0295)	0.751 - 0.770 (0.0296 - 0.0303)	0.771 - 0.790 (0.0304 - 0.0311)	0.791 - 0.810 (0.0311 - 0.0319)	0.811 - 0.830 (0.0319 - 0.0327)	0.831 - 0.850 (0.0327 - 0.0335)	0.851 - 0.870 (0.0335 - 0.0343)	0.871 - 0.890 (0.0343 - 0.0350)	0.891 - 0.910 (0.0351 - 0.0358)	0.911 - 0.930 (0.0359 - 0.0366)	0.931 - 0.950 (0.0367 - 0.0374)	0.951 - 0.970 (0.0374 - 0.0382)	0.971 - 0.990 (0.0382 - 0.0390)	0.991 - 1.010 (0.0390 - 0.0398)	1.011 - 1.030 (0.0398 - 0.0406)
5.060 (0.1992)														12	14	16	18	20	22	24	26	28	30	32	34	36	38	40	42	44	46	48	50	52	54	56	58	60	62	64	66	68	70	72	74	74	74
5.080 (0.2000)												06		14	16	18	20	22	24	26	28	30	32	34	36	38	40	42	44	46	48	50	52	54	56	58	60	62	64	66	68	70	72	74	74	74	
5.100 (0.2008)											06	06		16	18	20	22	24	26	28	30	32	34	36	38	40	42	44	46	48	50	52	54	56	58	60	62	64	66	68	70	72	74	74	74		
5.120 (0.2016)										06	06	06		18	20	22	24	26	28	30	32	34	36	38	40	42	44	46	48	50	52	54	56	58	60	62	64	66	68	70	72	74	74	74			
5.140 (0.2024)									06	06	06	08		20	22	24	26	28	30	32	34	36	38	40	42	44	46	48	50	52	54	56	58	60	62	64	66	68	70	72	74	74	74				
5.160 (0.2031)								06	06	06	08	10		22	24	26	28	30	32	34	36	38	40	42	44	46	48	50	52	54	56	58	60	62	64	66	68	70	72	74	74	74					
5.180 (0.2039)								06	06	08	10	12		24	26	28	30	32	34	36	38	40	42	44	46	48	50	52	54	56	58	60	62	64	66	68	70	72	74	74	74						
5.200 (0.2047)							06	06	08	10	12	14		26	28	30	32	34	36	38	40	42	44	46	48	50	52	54	56	58	60	62	64	66	68	70	72	74	74	74							
5.210 (0.2051)						06	06	08	10	12	14	16		28	30	32	34	36	38	40	42	44	46	48	50	52	54	56	58	60	62	64	66	68	70	72	74	74	74								
5.220 (0.2055)						06	06	08	10	12	14	16		28	30	32	34	36	38	40	42	44	46	48	50	52	54	56	58	60	62	64	66	68	70	72	74	74	74								
5.230 (0.2059)				06	06	08	10	12	14	16	18			30	32	34	36	38	40	42	44	46	48	50	52	54	56	58	60	62	64	66	68	70	72	74	74	74									
5.240 (0.2063)				06	06	06	08	10	12	14	16	18		30	32	34	36	38	40	42	44	46	48	50	52	54	56	58	60	62	64	66	68	70	72	74	74	74									
5.250 (0.2067)				06	06	06	10	12	14	16	18	20		32	34	36	38	40	42	44	46	48	50	52	54	56	58	60	62	64	66	68	70	72	74	74	74										
5.260 (0.2071)			06	06	06	08	10	12	14	16	18	20		32	34	36	38	40	42	44	46	48	50	52	54	56	58	60	62	64	66	68	70	72	74	74	74										
5.270 (0.2075)			06	06	08	10	12	14	16	18	20	22		34	36	38	40	42	44	46	48	50	52	54	56	58	60	62	64	66	68	70	72	74	74	74											
5.280 (0.2079)		06	06	06	08	10	12	14	16	18	20	22		34	36	38	40	42	44	46	48	50	52	54	56	58	60	62	64	66	68	70	72	74	74	74											
5.290 (0.2083)		06	06	08	10	12	14	16	18	20	22	24		36	38	40	42	44	46	48	50	52	54	56	58	60	62	64	66	68	70	72	74	74	74												
5.300 (0.2087)		06	06	08	10	12	14	16	18	20	22	24		36	38	40	42	44	46	48	50	52	54	56	58	60	62	64	66	68	70	72	74	74	74												
5.310 (0.2091)	06	06	08	10	12	14	16	18	20	22	24	26		38	40	42	44	46	48	50	52	54	56	58	60	62	64	66	68	70	72	74	74	74													
5.320 (0.2094)	06	06	08	10	12	14	16	18	20	22	24	26		38	40	42	44	46	48	50	52	54	56	58	60	62	64	66	68	70	72	74	74	74													
5.330 (0.2098)	06	08	10	12	14	16	18	20	22	24	26	28		40	42	44	46	48	50	52	54	56	58	60	62	64	66	68	70	72	74	74	74														
5.340 (0.2102)	06	08	10	12	14	16	18	20	22	24	26	28		40	42	44	46	48	50	52	54	56	58	60	62	64	66	68	70	72	74	74	74														
5.350 (0.2106)	08	10	12	14	16	18	20	22	24	26	28	30		42	44	46	48	50	52	54	56	58	60	62	64	66	68	70	72	74	74	74															
5.360 (0.2110)	08	10	12	14	16	18	20	22	24	26	28	30		42	44	46	48	50	52	54	56	58	60	62	64	66	68	70	72	74	74	74															
5.370 (0.2114)	10	12	14	16	18	20	22	24	26	28	30	32		44	46	48	50	52	54	56	58	60	62	64	66	68	70	72	74	74	74																
5.380 (0.2118)	10	12	14	16	18	20	22	24	26	28	30	32		44	46	48	50	52	54	56	58	60	62	64	66	68	70	72	74	74	74																
5.390 (0.2122)	12	14	16	18	20	22	24	26	28	30	32	34		46	48	50	52	54	56	58	60	62	64	66	68	70	72	74	74	74																	
5.400 (0.2126)	12	14	16	18	20	22	24	26	28	30	32	34		46	48	50	52	54	56	58	60	62	64	66	68	70	72	74	74	74																	
5.410 (0.2130)	14	16	18	20	22	24	26	28	30	32	34	36		48	50	52	54	56	58	60	62	64	66	68	70	72	74	74	74																		
5.420 (0.2134)	14	16	18	20	22	24	26	28	30	32	34	36		48	50	52	54	56	58	60	62	64	66	68	70	72	74	74	74																		
5.430 (0.2138)	16	18	20	22	24	26	28	30	32	34	36	38		50	52	54	56	58	60	62	64	66	68	70	72	74	74	74																			
5.440 (0.2142)	16	18	20	22	24	26	28	30	32	34	36	38		50	52	54	56	58	60	62	64	66	68	70	72	74	74	74																			
5.450 (0.2146)	18	20	22	24	26	28	30	32	34	36	38	40		52	54	56	58	60	62	64	66	68	70	72	74	74	74	74																			
5.460 (0.2150)	18	20	22	24	26	28	30	32	34	36	38	40		52	54	56	58	60	62	64	66	68	70	72	74	74	74																				
5.470 (0.2154)	20	22	24	26	28	30	32	34	36	38	40	42		54	56	58	60	62	64	66	68	70	72	74	74	74																				
5.480 (0.2157)	20	22	24	26	28	30	32	34	36	38	40	42		54	56	58	60	62	64	66	68	70	72	74	74	74																				
5.490 (0.2161)	22	24	26	28	30	32	34	36	38	40	42	44		56	58	60	62	64	66	68	70	72	74	74	74																					
5.500 (0.2165)	22	24	26	28	30	32	34	36	38	40	42	44		56	58	60	62	64	66	68	70	72	74	74	74																					
5.510 (0.2169)	24	26	28	30	32	34	36	38	40	42	44	46		58	60	62	64	66	68	70	72	74	74	74																						
5.520 (0.2173)	24	26	28	30	32	34	36	38	40	42	44	46		58	60	62	64	66	68	70	72	74	74	74																						
5.530 (0.2177)	26	28	30	32	34	36	38	40	42	44	46	48		60	62	64	66	68	70	72	74	74	74																							
5.540 (0.2181)	26	28	30	32	34	36	38	40	42	44	46	48		60	62	64	66	68	70	72	74	74	74																							
5.550 (0.2185)	28	30	32	34	36	38	40	42	44	46	48	50		62	64	66	68	70	72	74	74	74																								
5.560 (0.2189)	28	30	32	34	36	38	40	42	44	46	48	50		62	64	66	68	70	72	74	74	74																								
5.570 (0.2193)	30	32	34	36	38	40	42	44	46	48	50	52		64	66	68	70	72	74	74	74																									
5.580 (0.2197)	30	32	34	36	38	40	42	44	46	48	50	52		64	66	68	70	72	74	74	74																									
5.590 (0.2201)	32	34	36	38	40	42	44	46	48	50	52	54		66	68	70	72	74	74	74																									
5.600 (0.2205)	34	36	38	40	42	42	44	46	48	50	52	54		66	68	70	72	74	74	74																									
5.620 (0.2213)	34	36	38	40	42	44	46	48	50	52	54	56		68	70	72	74	74	74																									
5.640 (0.2220)	36	38	40	42	44	46	48	50	52	54	56	58		70	72	74	74	74																									
5.660 (0.2228)	38	40	42	44	46	48	50	52	54	56	58	60		72	74	74	74																									
5.680 (0.2236)	40	42	44	46	48	50	52	54	56	58	60	62		74	74	74																									
5.700 (0.2244)	42	44	46	48	50	52	54	56	58	60	62	64		74	74																									
5.720 (0.2252)	44	46	48	50	52	54	56	58	60	62	64	66		74																									
5.740 (0.2260)	46	48	50	52	54	56	58	60	62	64	66	68																											

T

A117458

Exhaust valve clearance (cold):
0.25 to 0.35 mm (0.010 to 0.014 in.)
EXAMPLE:
A 5.340 mm (0.2102 in.) lifter is installed, and the measured clearance is 0.440 mm (0.0173 in.). Replace the 5.340 mm (0.2102 in.) lifter with a new No. 48 lifter.

New Shim Thickness

Shim No.	Thickness	Shim No.	Thickness	Shim No.	Thickness
06	5.060 (0.1992)	30	5.300 (0.2087)	54	5.540 (0.2181)
08	5.080 (0.2000)	32	5.320 (0.2094)	56	5.560 (0.2189)
10	5.100 (0.2008)	34	5.340 (0.2102)	58	5.580 (0.2197)
12	5.120 (0.2016)	36	5.360 (0.2110)	60	5.600 (0.2205)
14	5.140 (0.2024)	38	5.380 (0.2118)	62	5.620 (0.2213)
16	5.160 (0.2031)	40	5.400 (0.2126)	64	5.640 (0.2220)
18	5.180 (0.2039)	42	5.420 (0.2134)	66	5.660 (0.2228)
20	5.200 (0.2047)	44	5.440 (0.2142)	68	5.680 (0.2236)
22	5.220 (0.2055)	46	5.460 (0.2150)	70	5.700 (0.2244)
24	5.240 (0.2063)	48	5.480 (0.2157)	72	5.720 (0.2252)
26	5.260 (0.2071)	50	5.500 (0.2165)	74	5.740 (0.2260)
28	5.280 (0.2079)	52	5.520 (0.2173)		

(r) Install the selected valve lifter.
(s) Apply a light coat of engine oil to the camshaft and camshaft journals.

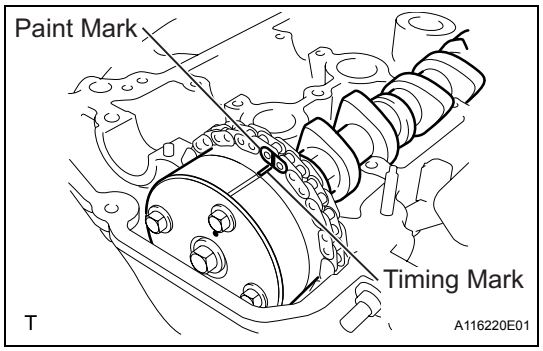

(t) Install the chain onto the camshaft timing gear with the paint mark and the timing mark aligned, as shown in the illustration.

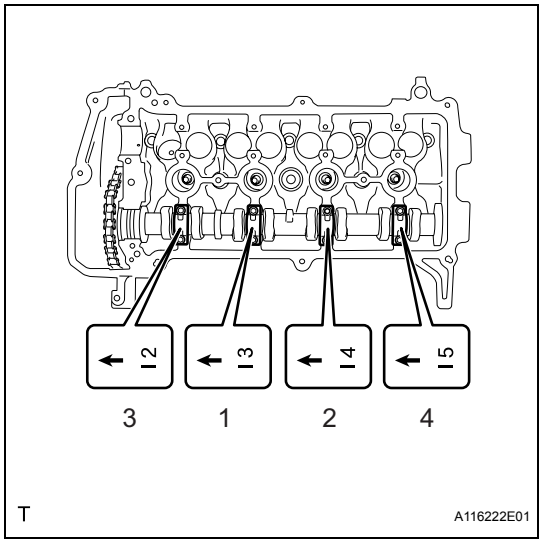

(u) Examine the front marks and the numbers on camshaft bearing cap No. 2 and check that the sequence is as shown in the illustration. Then uniformly tighten the bolts in several steps in the sequence shown in the illustration.
Torque: 13 N*m (129 kgf*cm, 9.4 ft.*lbf)
NOTICE:
Tighten the bolts uniformly while keeping the camshaft level.

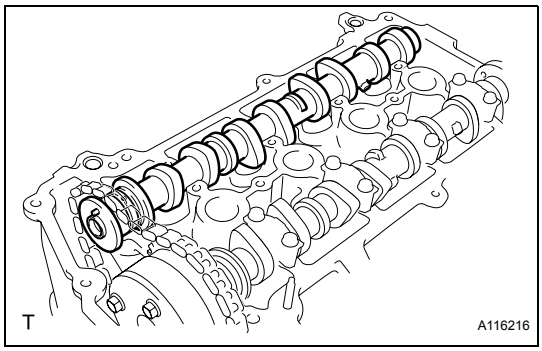

(v) Install camshaft No. 2.

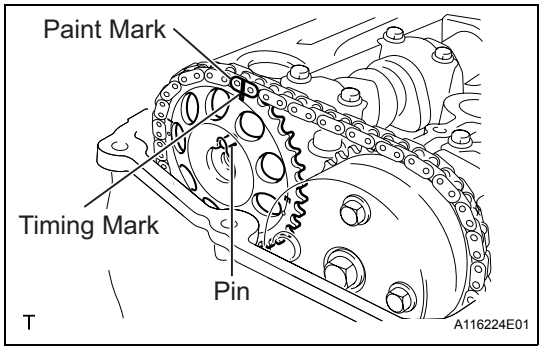

(w) Hold the chain, and align the timing mark on the camshaft timing sprocket with the paint mark of the chain.
(x) Align the alignment pin hole in the camshaft timing sprocket with the alignment pin of the camshaft, and install the sprocket onto the camshaft.

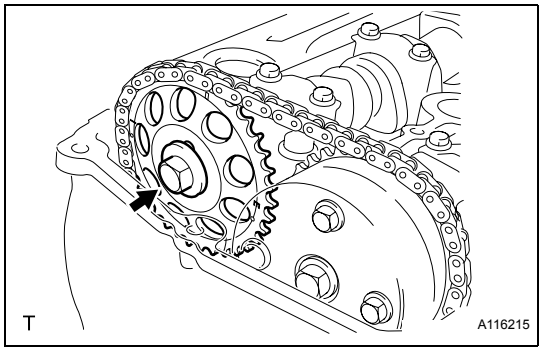

(y) Provisionally install the flange bolt.

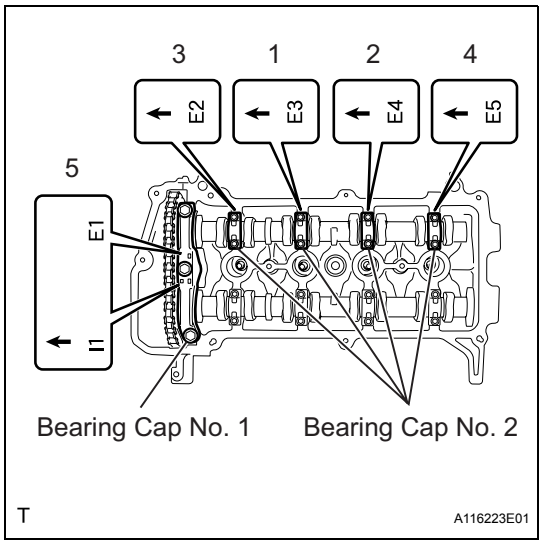

(z) Examine the front marks and the numbers of camshaft bearing cap No. 1 and camshaft bearing cap No. 2 and check that the sequence is as shown in the illustration. Then uniformly tighten the bolts, in several steps, in the sequence shown in the illustration.

Torque: 13 N*m (129 kgf*cm, 9.4 ft.*lbf) for bearing cap No. 2
23 N*m (235 kgf*cm, 17 ft.*lbf) for bearing cap No. 1

NOTICE:
Tighten the bolts uniformly while keeping the camshaft level.

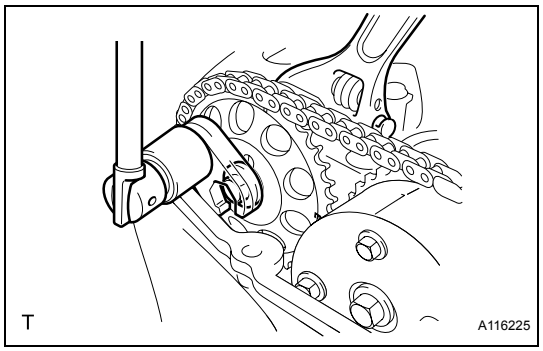

(aa) Using a wrench, hold the hexagonal lobe of camshaft No. 2, and install the flange bolt.
Torque: 64 N*m (653 kgf*cm, 47 ft.*lbf)
SST 09023-38400
(ab) Remove the bar from the timing chain tensioner.

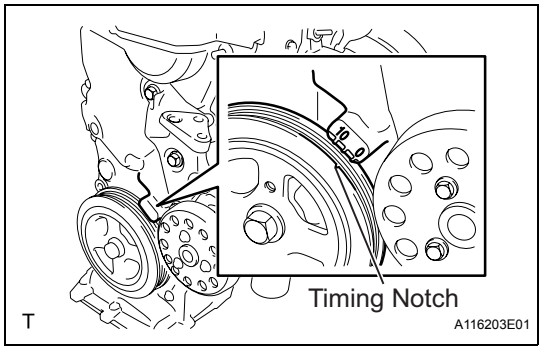

(ac) Turn the crankshaft damper, and align its timing notch with the timing mark "0" of the oil pump.

EM

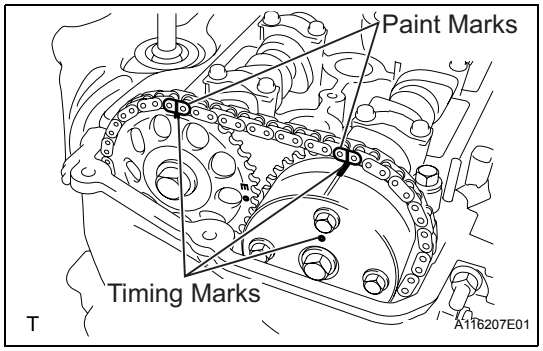

(ad) Check that all the pairs of timing marks are aligned.
(ae) Apply adhesive to the end 2 or 3 threads of the screw plug.
Adhesive:
Toyota Genuine Adhesive 1324, Three Bond 1324 or Equivalent

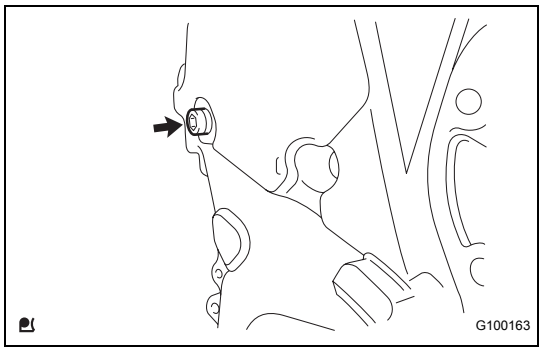

(af) Using an 8 mm hexagon wrench, install the screw plug.
Torque: 15 N*m (153 kgf*cm, 11 ft.*lbf)

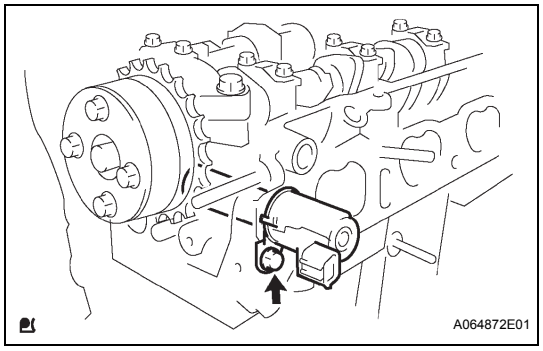

41. INSTALL CAMSHAFT TIMING OIL CONTROL VALVE ASSEMBLY
(a) Apply a light coat of engine oil to a new O-ring, and install it onto the camshaft timing oil control valve.
(b) Install the camshaft timing oil control valve with the bolt.
Torque: 7.5 N*m (76 kgf*cm, 66 in.*lbf)
NOTICE:
Do not twist the O-ring.

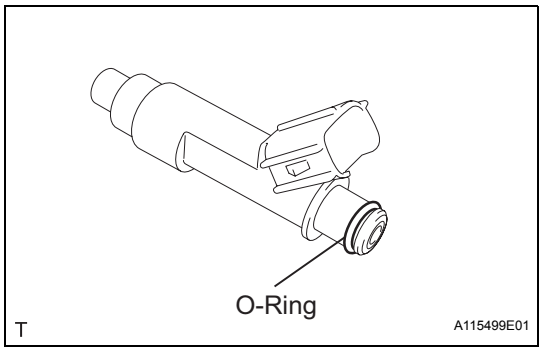

42. INSTALL FUEL INJECTOR ASSEMBLY

(a) Apply a light coat of gasoline or spindle oil to new O-rings, then install one onto each fuel injector.

(b) Apply a light coat of gasoline or spindle oil to the contact surfaces of the fuel delivery pipe and the O-ring of the fuel injector.

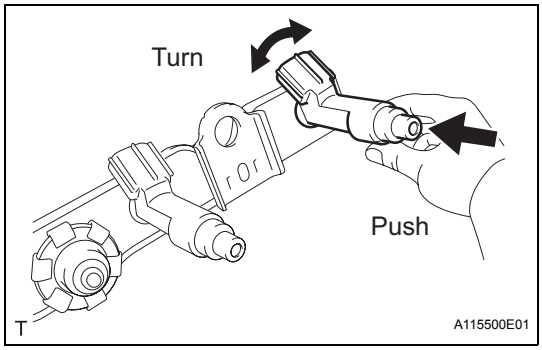

(c) While turning the fuel injector left and right, install it onto the fuel delivery pipe.

NOTICE:

- **Do not twist the O-ring.**
- **After installing the fuel injectors, check that they turn smoothly. If not, replace the O-ring with a new one.**

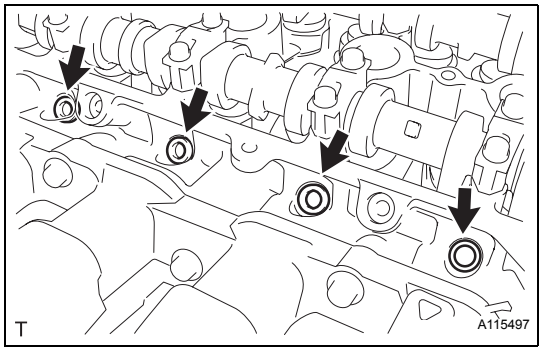

43. INSTALL INJECTOR VIBRATION INSULATOR

(a) Install 4 new injector vibration insulators onto the cylinder head.

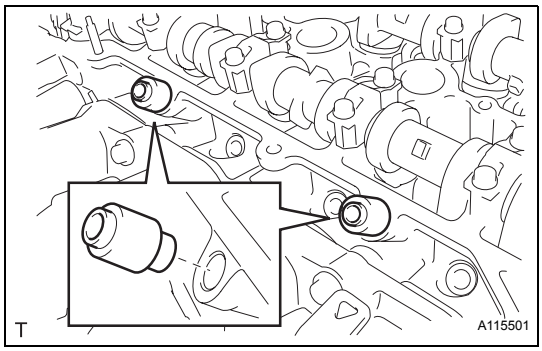

44. INSTALL DELIVERY PIPE NO. 1 SPACER

(a) Install the 2 delivery pipe No. 1 spacers onto the cylinder head.

NOTICE:

Install delivery pipe No. 1 spacer in the correct direction.

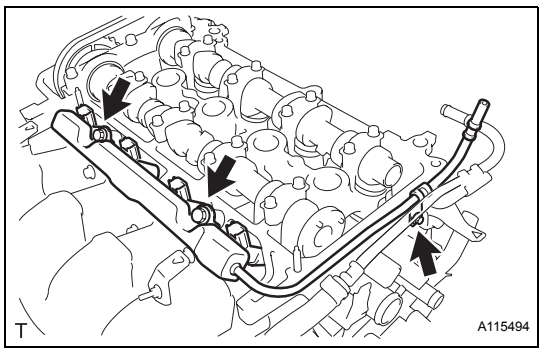

45. INSTALL FUEL DELIVERY PIPE SUB-ASSEMBLY

(a) Provisionally install the fuel delivery pipe sub-assembly and 4 fuel injectors with the 3 bolts.

NOTICE:

- **Do not drop the fuel injectors when installing the fuel delivery pipe sub-assembly.**
- **Check that the fuel injectors rotate smoothly after installing the fuel delivery pipe sub-assembly.**

EM

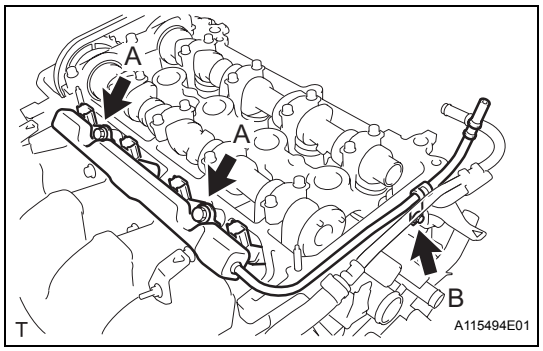

(b) Tighten the 3 bolts to the specified torque.
Torque: 19 N*m (194 kgf*cm, 14 ft.*lbf) for bolt A
9.0 N*m (92 kgf*cm, 80 in.*lbf) for bolt B

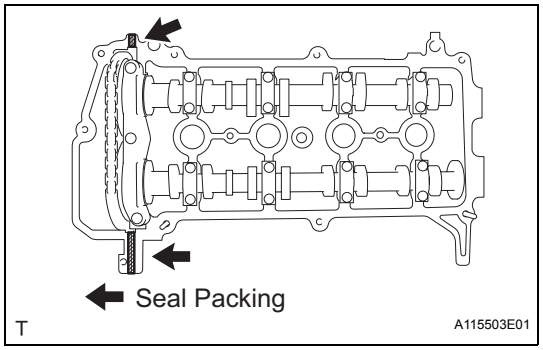

46. INSTALL CYLINDER HEAD COVER SUB-ASSEMBLY

(a) Install the gasket onto the cylinder head cover.

(b) Apply seal packing to the cylinder head, as shown in the illustration.
Seal Packing:
Toyota Genuine Seal Packing Black, Three Bond 1207B or Equivalent
NOTICE:
- **Remove any oil from the contact surface.**
- **Install the cylinder head cover sub-assembly within 3 minutes of applying the seal packing.**
- **Do not start engine for at least 2 hours after the installation.**

(c) Install the cylinder head cover sub-assembly with the 9 bolts, 2 nuts and 2 seal washers.

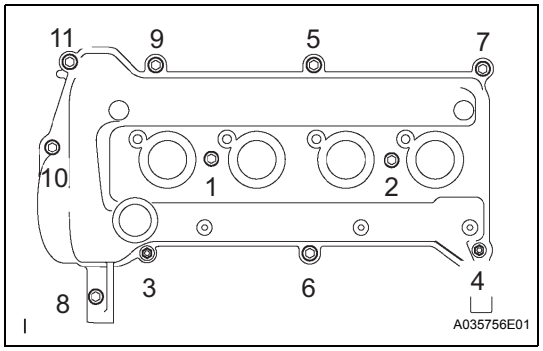

(d) Tighten the 9 bolts and 2 nuts in the sequence shown in the illustration.
Torque: 10 N*m (102 kgf*cm, 7.0 ft.*lbf)

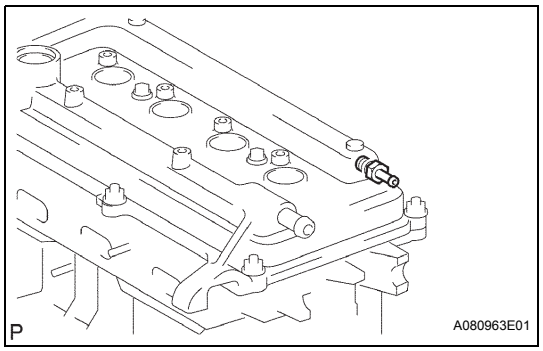

47. INSTALL VENTILATION VALVE SUB-ASSEMBLY

(a) Install the ventilation valve onto the cylinder head cover.
Torque: 27 N*m (275 kgf*cm, 20 ft.*lbf)

48. INSTALL OIL LEVEL GAUGE GUIDE

(a) Apply engine oil to a new O-ring.

(b) Install the oil level gauge guide with the bolt.
Torque: 9.0 N*m (92 kgf*cm, 80 in.*lbf)

49. INSTALL CRANKSHAFT POSITION SENSOR

(a) Apply a light coat of engine oil to the O-ring on the crankshaft position sensor.
NOTICE:
If the O-ring is damaged, replace the crankshaft position sensor.

(b) Install the crankshaft position sensor with the bolt.
Torque: 7.5 N*m (76 kgf*cm, 66 in.*lbf)

50. INSTALL OIL FILLER CAP GASKET

(a) Install the oil filler cap gasket onto the oil filler cap.

51. INSTALL OIL FILLER CAP SUB-ASSEMBLY

(a) Install the oil filler cap onto the cylinder head cover.

52. INSTALL THERMOSTAT

(a) Install a new gasket onto the thermostat.

(b) Install the thermostat with the jiggle valve facing upward.
HINT:
The jiggle valve may be set within 10°either side as shown in the illustration.

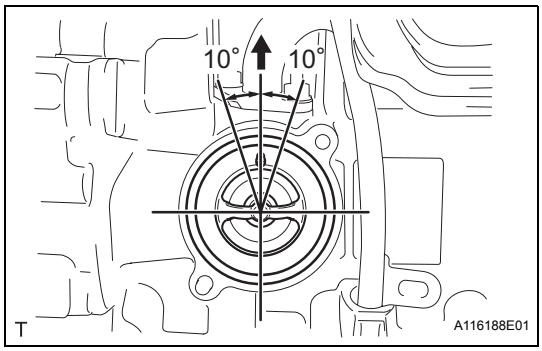

53. INSTALL WATER INLET

(a) Install the water inlet with the 2 nuts.
Torque: 9.0 N*m (92 kgf*cm, 80 in.*lbf)

54. INSTALL ENGINE COOLANT TEMPERATURE SENSOR

(a) Provisionally install the engine coolant temperature sensor through a new gasket.

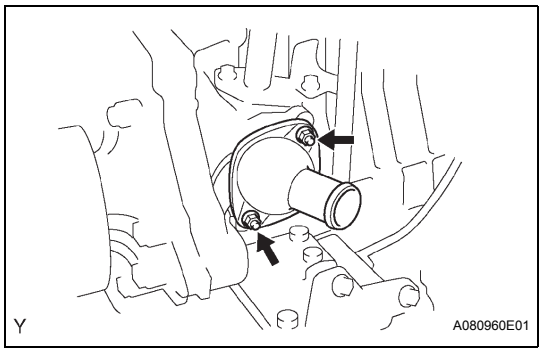

(b) Using SST, tighten the engine coolant temperature sensor.
SST 09817-33190
Torque: 20 N*m (204 kgf*cm, 15 ft.*lbf)

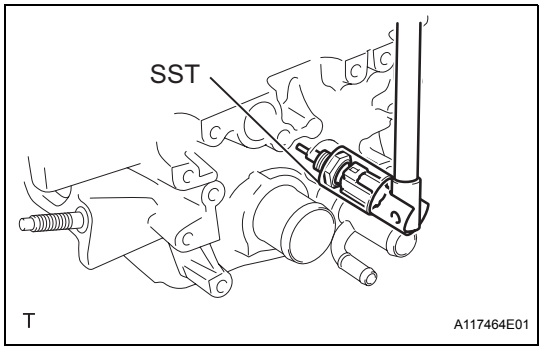

55. INSTALL ENGINE OIL PRESSURE SWITCH ASSEMBLY

(a) Apply adhesive to the end 2 or 3 threads of the oil pressure switch.
Adhesive:
Toyota Genuine Adhesive 1324, Three Bond 1324 or Equivalent

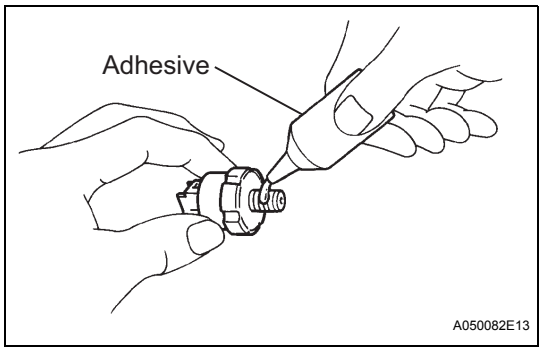

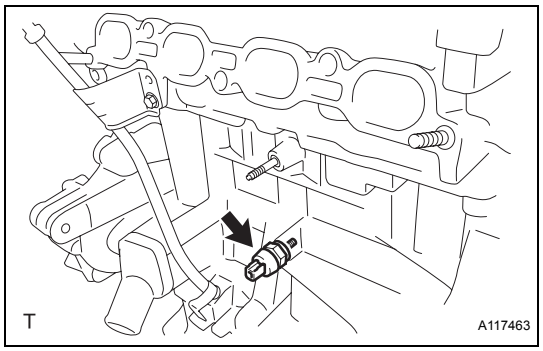

(b) Using a 24 mm deep socket wrench, install the oil pressure switch.
Torque: 15 N*m (153 kgf*cm, 11 ft.*lbf)

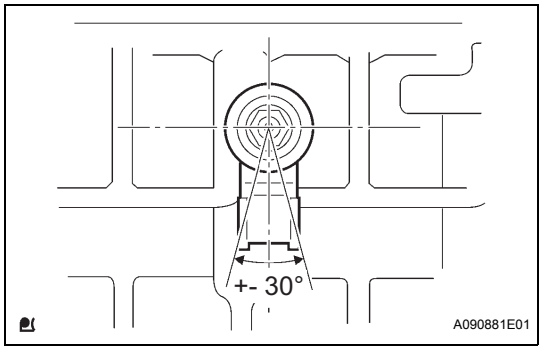

56. INSTALL KNOCK SENSOR

(a) Install the knock sensor with the nut as shown in the illustration.
Torque: 20 N*m (204 kgf*cm, 15 ft.*lbf)

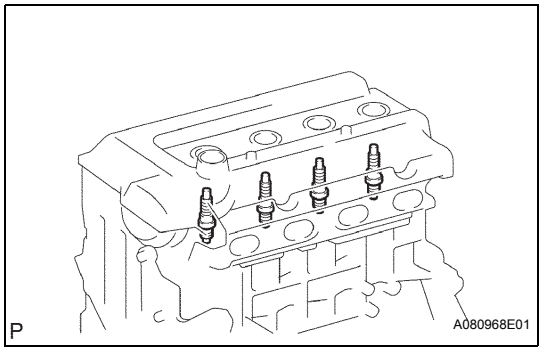

57. INSTALL SPARK PLUG

(a) Using a spark plug wrench, install the spark plugs.
Torque: 18 N*m (184 kgf*cm, 13 ft.*lbf)

EM

ENGINE

ON-VEHICLE INSPECTION

1. **INSPECT ENGINE COOLANT (See page CO-1)**
2. **INSPECT ENGINE OIL (See page LU-1)**
3. **INSPECT BATTERY (See page CH-4)**
4. **INSPECT AIR CLEANER FILTER ELEMENT SUB-ASSEMBLY**
   (a) Remove the air cleaner filter element sub-assembly.
   (b) Visually check that there is no dirt, blockage, or damage to the air cleaner filter element.
   HINT:
   - If there is any dirt or a blockage in the air cleaner filter element, clean it with compressed air.
   - If any dirt or a blockage remains even after cleaning the air cleaner filter element with compressed air, replace it.
5. **INSPECT SPARK PLUG (See page IG-5)**
6. **INSPECT IGNITION TIMING**
   (a) When using an intelligent tester:
      (1) Warm up and stop the engine.
      (2) Connect the intelligent tester to the DLC3.
      (3) Turn the ignition switch ON.
      (4) Select the following menu items:
      DIAGNOSIS / ENHANCED OBD II/ ACTIVE TEST / TC (TE1) / ON.
      HINT:
      Refer to the intelligent tester operator's manual for further details.
      (5) Inspect the ignition timing during idling.
      Ignition timing:
      8 to 12 degrees BTDC
      NOTICE:
      - **Turn all the electrical systems and the A/C off.**
      - **Inspect the ignition timing with the cooling fan off.**
      - **When checking the ignition timing, shift the transmission to the neutral position.**
      (6) Select the following menu items: TC (TE1) / OFF.
      (7) Turn the ignition switch OFF.
      (8) Disconnect the intelligent tester from the DLC3.
   (b) When not using an intelligent tester:
      (1) Remove cylinder head cover No. 2 (see page IG-9).

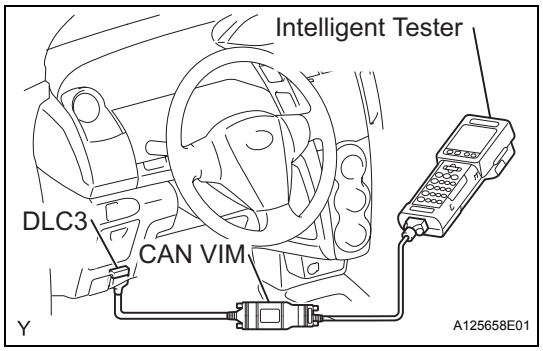

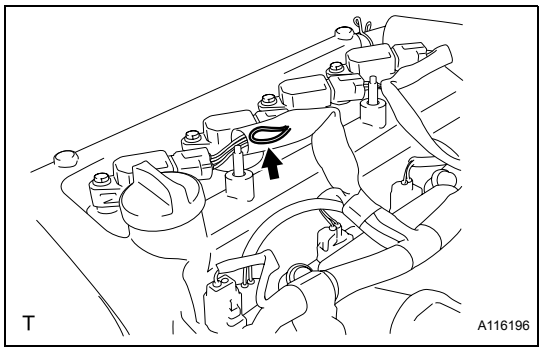

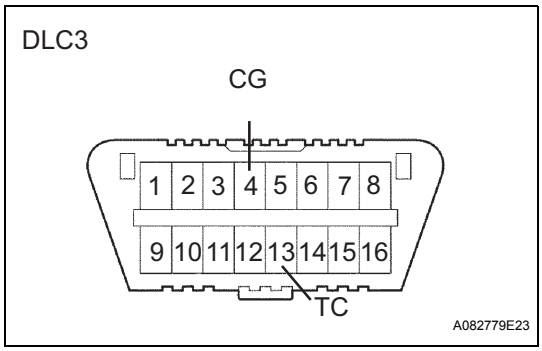

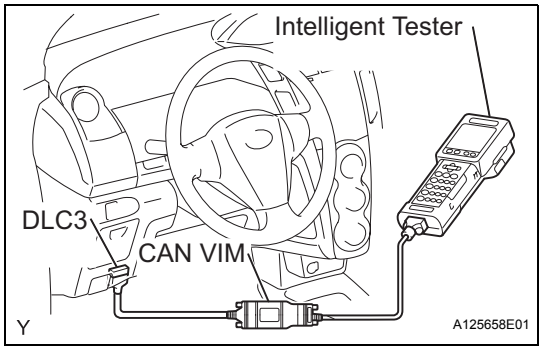

(2) Pull out the wire harness (brown) shown in the illustration.
NOTICE:
After checking, wrap the wire harness with tape.
(3) Warm up and stop the engine.
(4) Connect the clip of the timing light to the wire harness.
NOTICE:
Use a timing light that detects the first signal.
(5) Turn the ignition switch ON.
(6) Using SST, connect terminals 13 (TC) and 4 (CG) of the DLC3.
SST 09843-18040
NOTICE:
Examine the terminal numbers before connecting them. Connecting the wrong terminals could damage the engine.
(7) Inspect the ignition timing during idling.
Ignition timing:
8 to 12 degrees BTDC
NOTICE:
- **Turn all the electrical systems and the A/C off.**
- **Inspect the ignition timing with the cooling fan off.**
- **When checking the ignition timing, shift the transmission to the neutral position.**

(8) Disconnect terminals 13 (TC) and 4 (CG) of the DLC3.
(9) Turn the ignition switch OFF.
(10) Remove the timing light.
(11) Install cylinder head cover No. 2 (see page IG-10).

7. INSPECT ENGINE IDLING SPEED

(a) When using an intelligent tester:
(1) Warm up and stop the engine.
(2) Connect the intelligent tester to the DLC3.
(3) Turn the ignition switch ON.
(4) Select the following menu items:
DIAGNOSIS / ENHANCED OBD II/ DATA LIST / PRIMARY / ENGINE SPD.
HINT:
Refer to the intelligent tester operator's manual for further details.
(5) Inspect the engine idling speed.
Idling speed:
550 to 650 rpm for manual transaxle
650 to 750 rpm for automatic transaxle
NOTICE:
- **Turn all the electrical systems and the A/C off.**

- **Inspect the idling speed with the cooling fan off.**
- **When checking the idling speed, shift the transmission to either the neutral position or the parking position.**

(6) Turn the ignition switch OFF.
(7) Disconnect the intelligent tester from the DLC3.

(b) When not using an intelligent tester.
(1) Warm up and stop the engine.

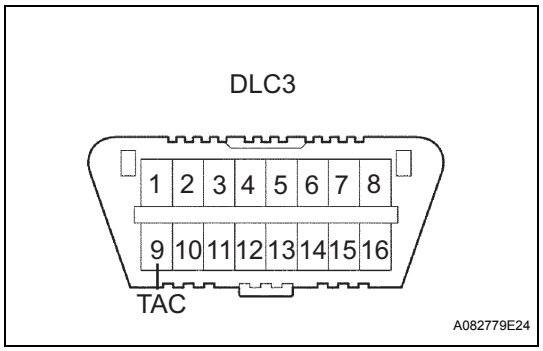

(2) Install SST to terminal 9 (TAC) of the DLC3, then connect a tachometer.
SST 09843-18040
NOTICE:
Examine the terminal numbers before connecting them. Connecting the wrong terminals could damage the engine.
(3) Turn the ignition switch ON.
(4) Inspect the engine idling speed.
Idling speed:
550 to 650 rpm for manual transaxle
650 to 750 rpm for automatic transaxle
(5) Turn the ignition switch OFF.
(6) Disconnect the tachometer.
(7) Remove SST from terminal 9 (TAC).

8. INSPECT COMPRESSION

(a) Warm up and stop the engine.
(b) Remove cylinder head cover No. 2 (see page IG-9).
(c) Remove the 4 ignition coils (see page IG-9).
(d) Remove the 4 spark plugs.
(e) Disconnect the 4 fuel injector connectors.

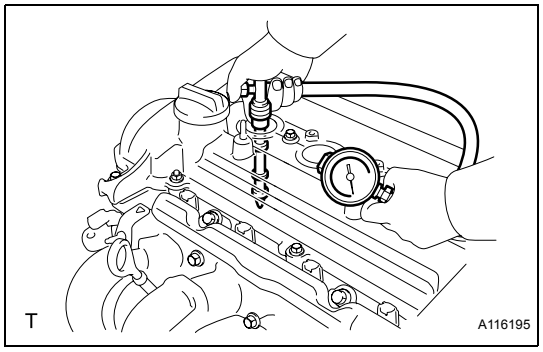

(f) Inspect the cylinder compression pressure.
(1) Insert a compression gauge into the spark plug hole.
(2) Fully open the throttle.
(3) While cranking the engine, measure the compression pressure.
Compression:
1,471kPa (15.0 kgf/cm^2, 213 psi)
Minimum pressure:
1,079 kPa (11.0 kgf/cm^2, 156 psi)
Difference between each cylinder:
98 kPa (1.0 kgf/cm^2, 14 psi) or less
NOTICE:
- **Use a fully-charged battery so the engine speed can be increased to 250 rpm or more.**
- **Inspect the other cylinders in the same way.**
- **Measure the compression in as short a time as possible.**

(4) If the cylinder compression is low, pour a light coat of engine oil into the cylinder through the spark plug hole, then inspect it again.
HINT:
- If adding oil increases the compression, the piston rings and/or cylinder bore may be worn or damaged.
- If the pressure stays low, the valve may be stuck or seated improperly, or there may be leakage from the gasket.

(g) Connect the 4 fuel injector connectors.
(h) Install the 4 spark plugs.
Torque: 18 N*m (184 kgf*cm, 13 ft.*lbf)
(i) Install the 4 ignition coils (see page IG-9).
(j) Install cylinder head cover No. 2 (see page IG-10).

EM

9. INSPECT CO/HC

(a) Start the engine.
(b) Run the engine at 2,500 rpm for approximately 180 seconds.
(c) Insert the CO/HC meter testing probe at least 40 cm (1.3 ft) into the tailpipe while idling.
(d) Check the CO/HC concentration during idling and when running at 2,500 rpm.
HINT:
When doing the 2 mode (with the engine idling/ running at 2,500 rpm) test, the measuring procedures are determined by applicable local regulations.
If the CO/HC concentration does not comply with the regulations, troubleshoot in the order given below.
(1) Check the heated oxygen sensor operation (see page ES-276).
(2) See the table below for possible causes, then inspect the applicable parts and repair them if necessary.

CO	HC	Problems	Possible Causes
Normal	High	Rough idling	1. Faulty ignition: – Incorrect timing – Fouled, shorted or improperly gapped plugs 2. Incorrect valve clearance 3. Leakage from intake and exhaust valves 4. Leakage from cylinders
Low	High	Rough idling (Fluctuating HC reading)	1. Vacuum leaks: – PCV hoses – Intake manifold – Throttle body – Brake booster line 2. Lean mixture causing misfire
High	High	Rough idling (Black smoke from exhaust)	1. Restricted air cleaner filter element 2. Plugged PCV valve 3. Faulty EFI systems: – Faulty pressure regulator – Faulty engine coolant temperature sensor – Faulty mass air flow meter – Faulty ECM – Faulty injectors – Throttle body

DRIVE BELT

COMPONENTS

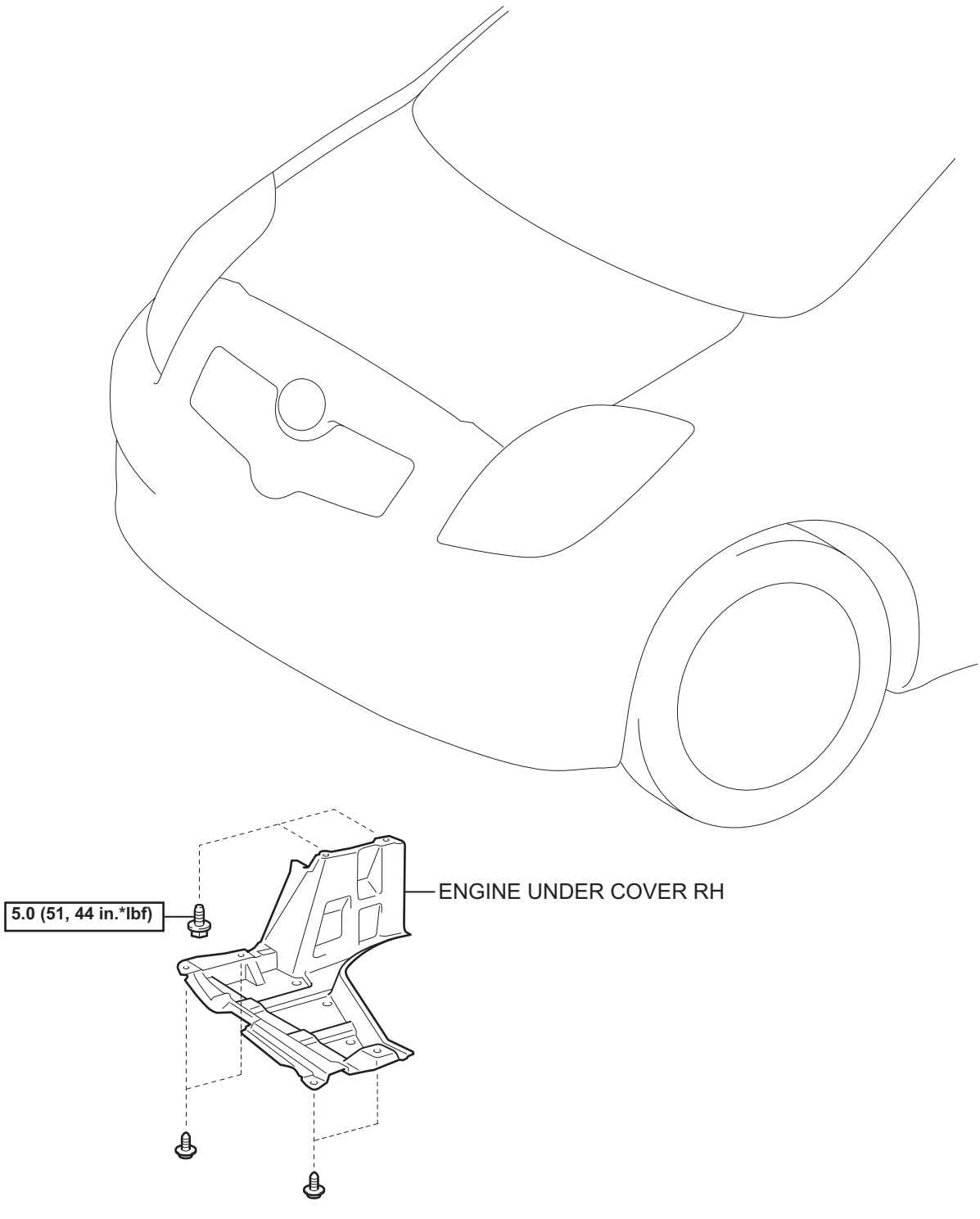

N*m (kgf*cm, ft.*lbf) : Specified torque

T

A115143E01

EM

EM

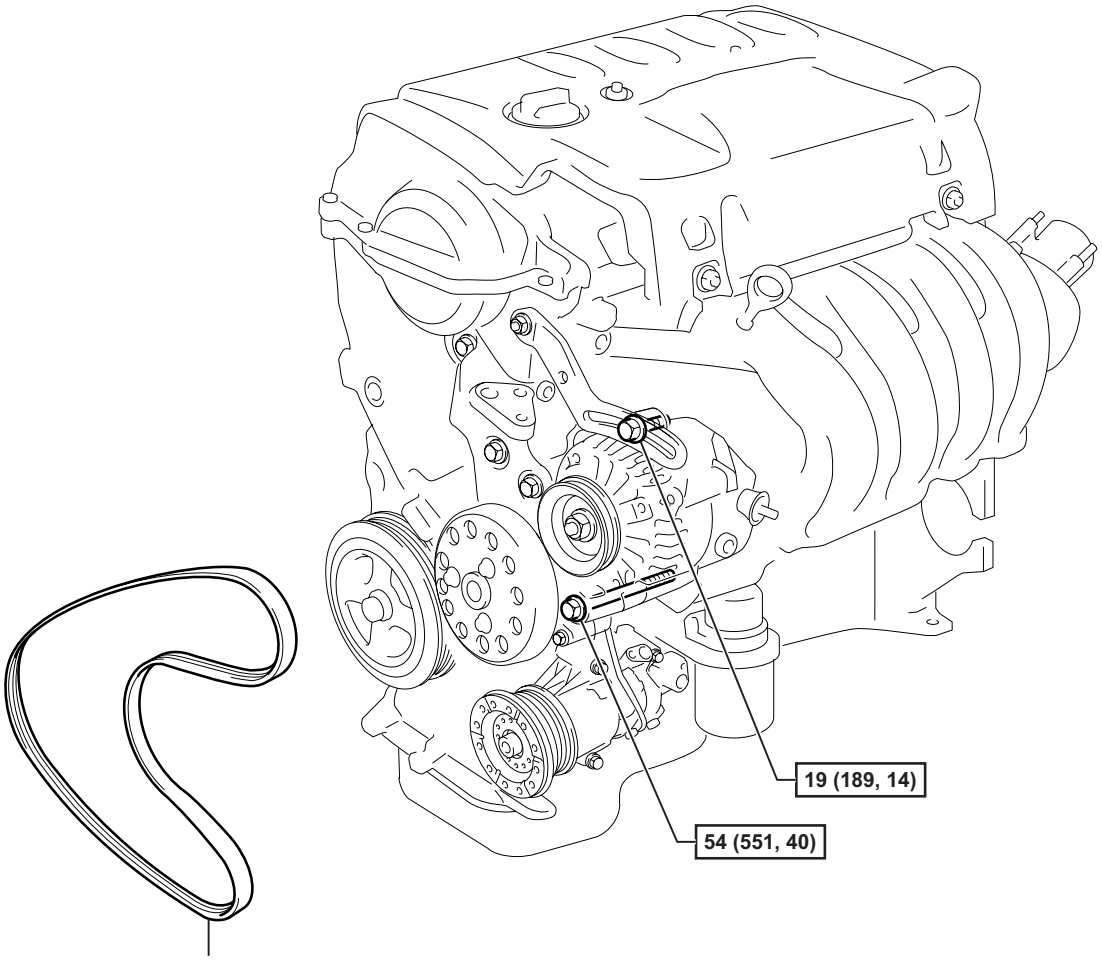

N*m (kgf*cm, ft.*lbf) : Specified torque

T

A116199E01

REMOVAL

1. REMOVE ENGINE UNDER COVER RH

2. REMOVE FAN AND GENERATOR V BELT

(a) Loosen bolts A and B.

(b) Release the fan and generator V belt tension and remove the fan and generator V belt.

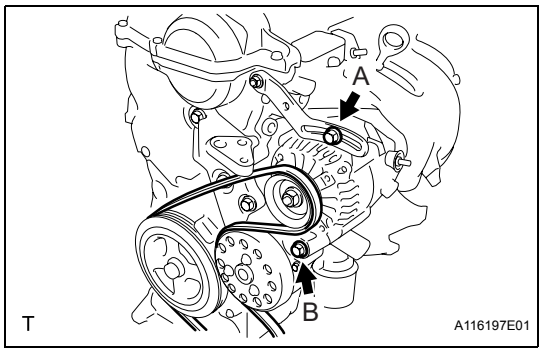

INSPECTION

1. INSPECT FAN AND GENERATOR V BELT

(a) Visually check the belt for excessive wear, frayed cords etc. If any defects are found, replace the belt.
HINT:
- If any defects are found, replace the belt.
- Cracks on the rib side of a belt are considered acceptable. If the belt has pieces missing from the ribs, it should be replaced.

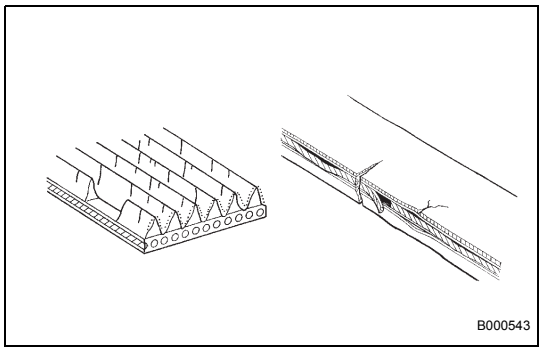

EM

INSTALLATION

1. INSTALL FAN AND GENERATOR V BELT

(a) Provisionally install the fan and generator V belt onto each pulley.

NOTICE:

Make sure that the V-belt is securely fitted into the rib groove of the pulley.

2. ADJUST FAN AND GENERATOR V BELT

(a) Insert an adjusting bar between the engine mounting bracket and generator assembly. Push the adjusting bar toward the vehicle front to adjust the generator V belt tension.

NOTICE:

Do not insert the adjusting bar between the camshaft timing oil control valve assembly and generator assembly. It could damage the camshaft timing oil control valve assembly.

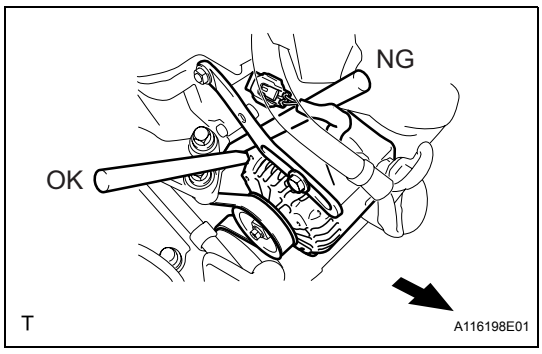

(b) First tighten bolt A, then tighten bolt B.

Torque: 19 N*m (189 kgf*cm, 14 ft.*lbf) for bolt A
54 N*m (551 kgf*cm, 40 ft.*lbf) for bolt B

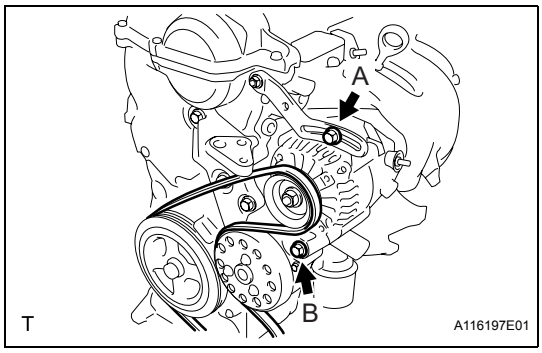

3. INSPECT FAN AND GENERATOR V BELT

(a) Check the V belt deflection and tension.

Deflection

Item	Specified Condition
New belt	7.0 to 8.5 mm (0.28 to 0.33 in)
Used belt	11 to 13 mm (0.43 to 0.51 in)

Tension

Item	Specified Condition
New belt	539 to 637 N (55 to 65 kg, 121 to 143 ld)
Used belt	245 to 392 N (25 to 40 kg, 55 to 88 ld)

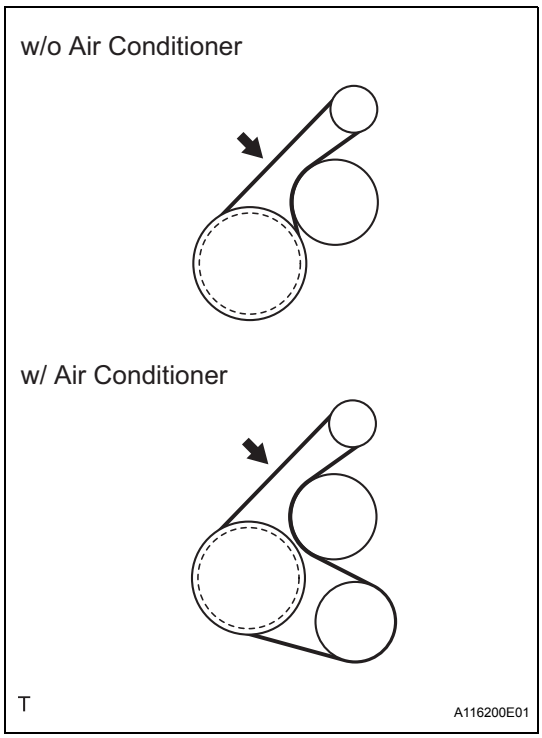

If the belt deflection is not as specified, adjust it.

HINT:

- Check the V belt deflection at the specified point.
- Check the drive belt deflection at the specified point.
- When installing a new belt, set its tension to the specified value.
- When inspecting a belt which has been used for over 5 minutes, apply the used belt specifications.

- When reinstalling a belt which has been used for over 5 minutes, adjust its deflection and tension to the intermediate values of each used belt specification.
- V-ribbed belt tension and deflection should be checked after 2 revolutions of engine cranking.
- When using a belt tension gauge, confirm its accuracy by using a master gauge first.

4. INSTALL ENGINE UNDER COVER RH

VALVE CLEARANCE

ADJUSTMENT

1. **DISCONNECT CABLE FROM NEGATIVE BATTERY TERMINAL**
2. **REMOVE ENGINE UNDER COVER RH**
3. **REMOVE CYLINDER HEAD COVER NO. 2 (See page IG-9)**
4. **REMOVE IGNITION COIL NO. 1 (See page IG-9)**
5. **DISCONNECT VENTILATION HOSE (See page FU-13)**
6. **DISCONNECT VENTILATION HOSE NO. 2 (See page FU-13)**
7. **REMOVE CYLINDER HEAD COVER SUB-ASSEMBLY (See page FU-13)**
8. **INSPECT VALVE CLEARANCE**

HINT:
Inspect the valve clearance when the engine is cold.

(a) Set the No. 1 cylinder to TDC/compression.
(1) Turn the crankshaft damper and align its timing notch with the timing mark "0" of the oil pump.

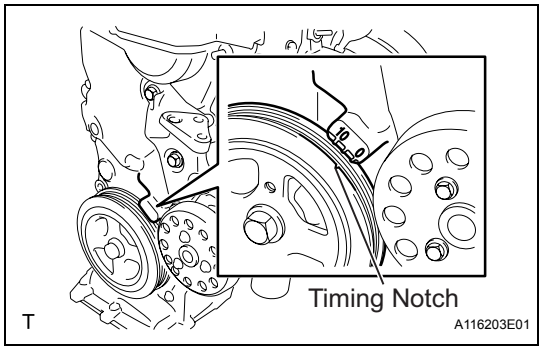

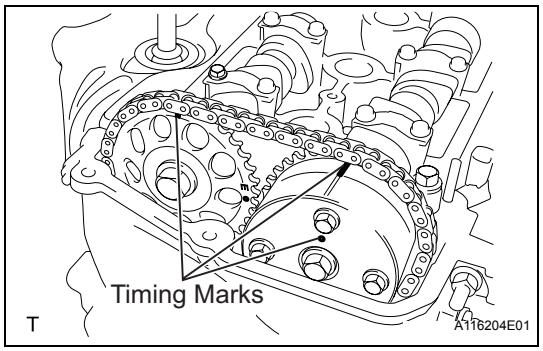

(2) Check that both timing marks on the camshaft timing sprocket and camshaft timing gear are facing upward, as shown in the illustration.
HINT:
If not, turn the crankshaft 1 complete revolution (360°) and align the marks as above.

(b) Check the valves indicated in the illustration.
(1) Using a feeler gauge, measure the clearance between the valve lifter and camshaft.
Valve clearance (cold):
for intake:
0.15 to 0.25 mm (0.006 to 0.010 in.)
for exhaust:
0.25 to 0.35 mm (0.010 to 0.014 in.)

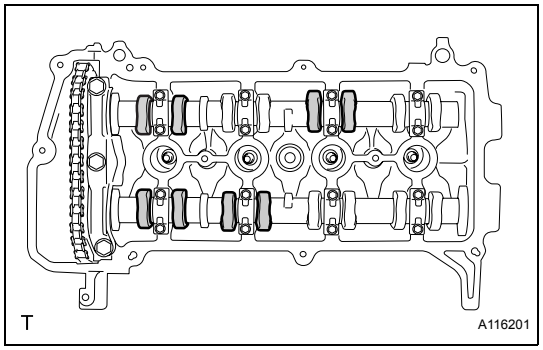

(2) Record any out-of-specification valve clearance measurements. They will be used later to determine the required replacement adjusting shim.

(c) Turn the crankshaft 1 complete revolution (360°) and align its timing notch with the timing mark "0" of the oil pump.

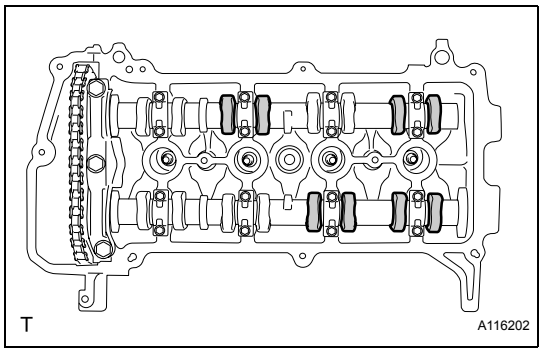

(d) Check the valves indicated in the illustration.

(1) Using a feeler gauge, measure the clearance between the valve lifter and camshaft.

Valve clearance (cold):
for intake:
0.15 to 0.25 mm (0.006 to 0.010 in.)
for exhaust:
0.25 to0.35 mm (0.010 to 0.014 in.)

(2) Record any out-of-specification valve clearance measurements. They will be used later to determine the required replacement adjusting shim.

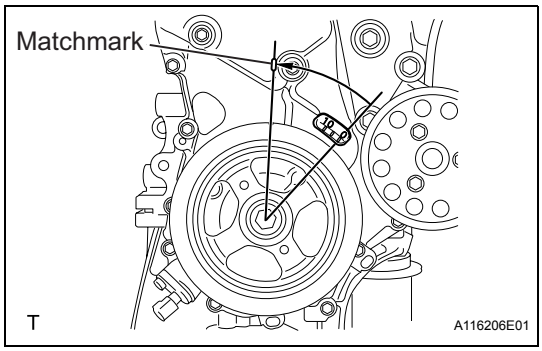

9. ADJUST VALVE CLEARANCE

NOTICE:
When rotating the camshaft with the timing chain removed, rotate the crankshaft damper counterclockwise 40° from the TDC and align its timing notch with the matchmark of the timing chain cover to prevent the pistons from coming into contact with the valves.

(a) Remove the fan and generator V belt (See page EM-7).

(b) Remove the engine mounting insulator sub-assembly RH (See page LU-17).

(c) Set the No. 1 cylinder to TDC/compression.

(1) Turn the crankshaft damper and align its timing notch with the timing mark "0" of the oil pump.

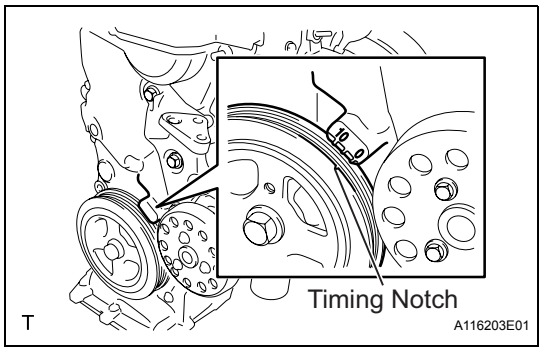

(2) Check that both timing marks on the camshaft timing sprocket and camshaft timing gear are facing upward, as shown in the illustration.
HINT:
If not, turn the crankshaft 1 complete revolution (360°) and align the marks as above.

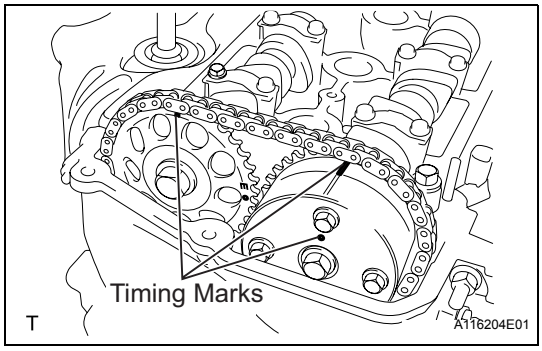

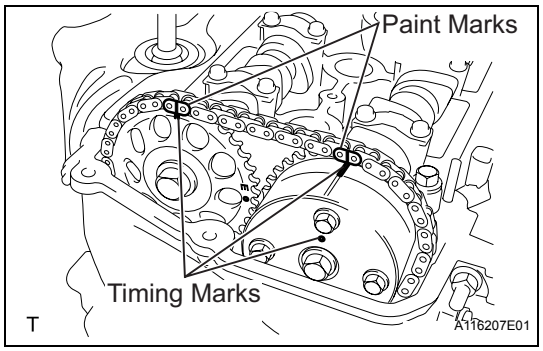

(d) Place paint marks on the chain in the places where the timing marks of the camshaft timing sprocket and the camshaft timing gear are located.

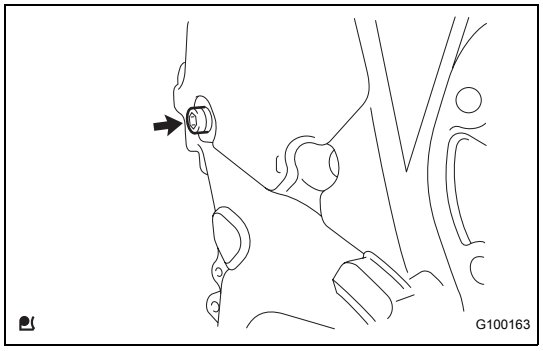

(e) Using an 8 mm hexagon wrench, remove the screw plug.

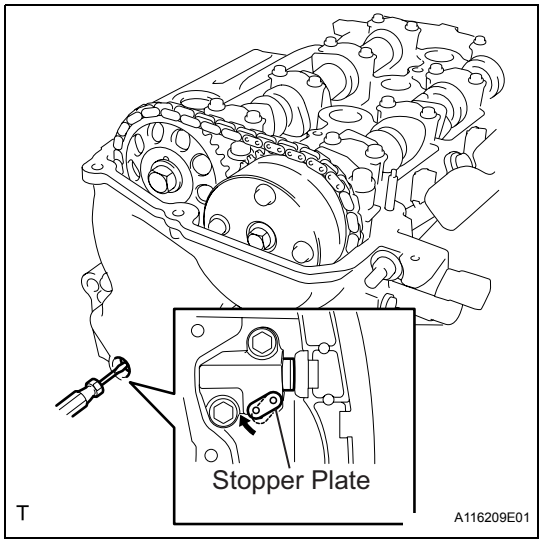

(f) Insert a screwdriver into the service hole in the chain tensioner to pull the stopper plate of the chain tensioner upward.

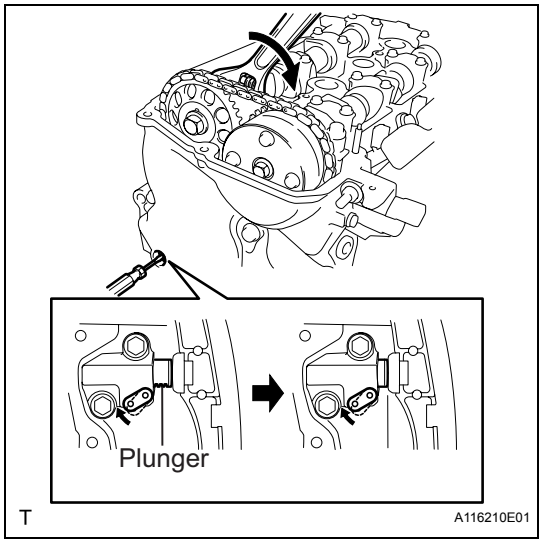

(g) Using a wrench, rotate camshaft No. 2 clockwise to push in the plunger of the chain tensioner.

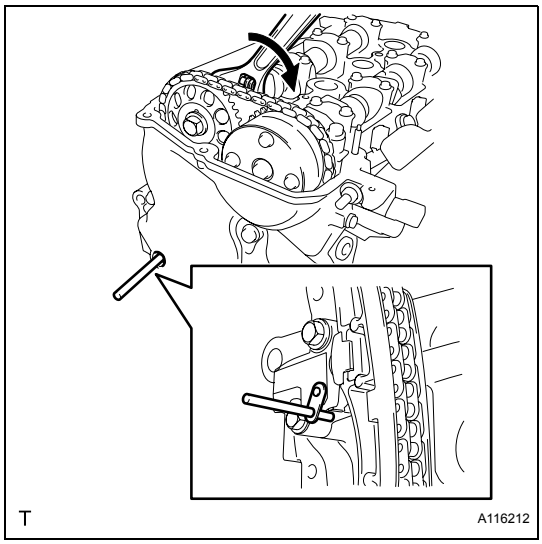

(h) Remove the screwdriver from the service hole, then align the hole in the stopper plate with the service hole and insert a 3 mm (0.12 in.) diameter bar into the holes to hold the stopper plate.
HINT:
- Fix the stopper plate using the bar while rotating the camshaft right and left slightly.
- Hold the bar with tape so that the bar does not come off.

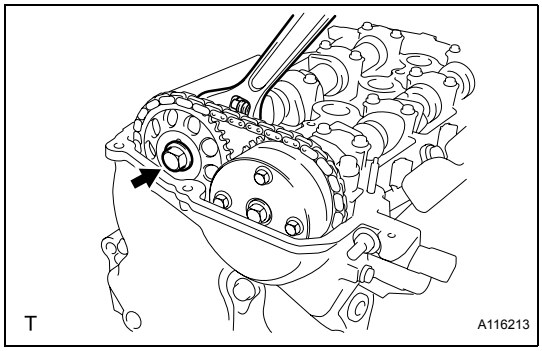

(i) Using a wrench, hold the hexagonal lobe of camshaft No. 2 and remove the fringe bolt.

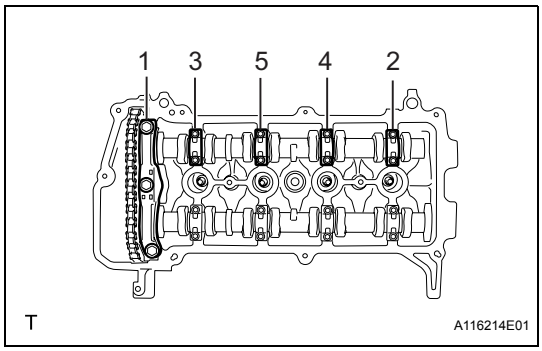

(j) Using several steps, loosen and remove the 11 bearing cap bolts uniformly in the sequence shown in the illustration, then remove camshaft bearing cap No. 1 and camshaft bearing cap No. 2.
NOTICE:
Loosen each bolt uniformly while keeping the camshaft level.

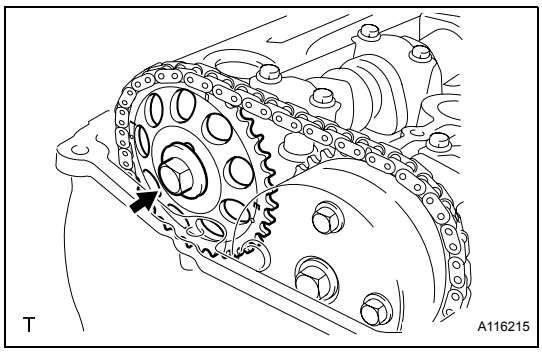

(k) Remove the fringe bolt and remove the camshaft timing sprocket.

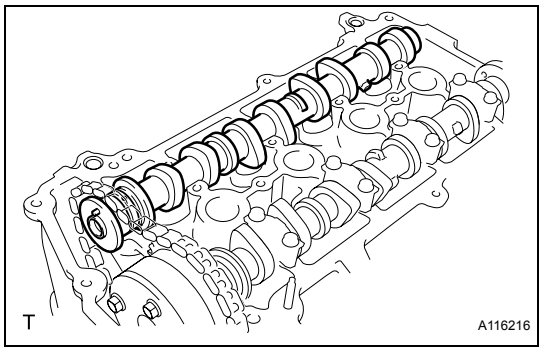

(l) Remove camshaft No. 2.

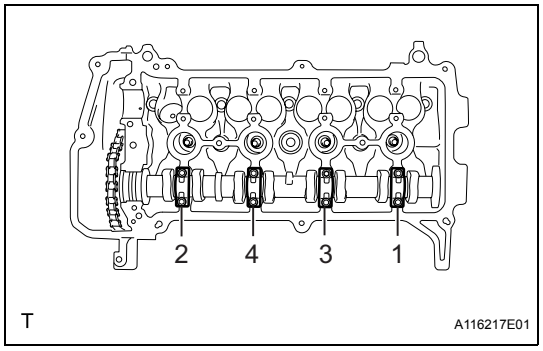

(m) Using several steps, loosen and remove the 8 bearing cap bolts uniformly in the sequence shown in the illustration, then remove camshaft bearing cap No. 2.
NOTICE:
Loosen each bolt uniformly while keeping the camshaft level.

EM

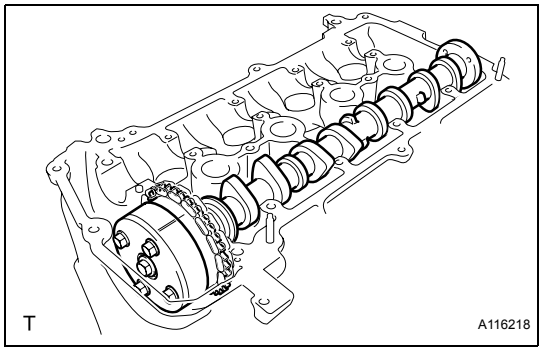

(n) Hold the chain by hand and remove the camshaft and the camshaft timing gear assembly.

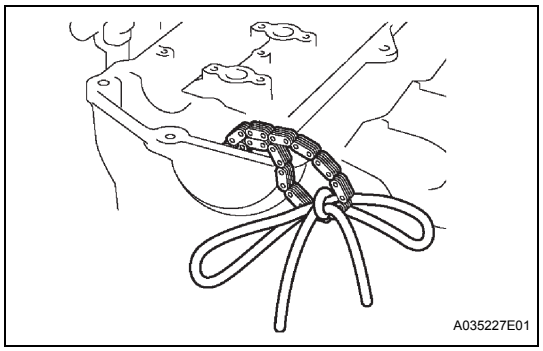

(o) Tie the chain with a piece of string as shown in the illustration.
(p) Remove the 16 valve lifters.

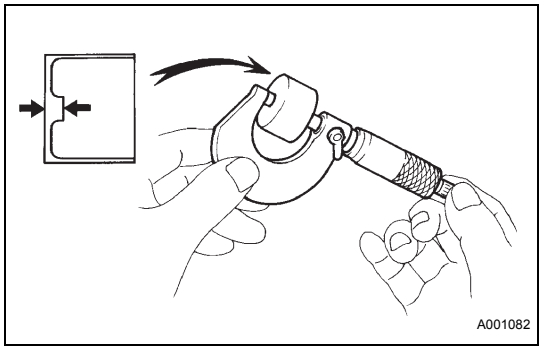

(q) Using a micrometer, measure the thickness of the removed lifter.
(r) Calculate the thickness of a new lifter so that the valve clearance comes to within the specified values.

A	Thickness of new lifter
B	Thickness of used lifter
C	Measured valve clearance

Valve clearance:
Intake A = B + (C - 0.20 mm (0.008 in.))
Exhaust A = B + (C - 0.30 mm (0.012 in.))

(s) Select a new lifter with a thickness as close to the calculated values as possible.
HINT:
Lifters are available in 35 sizes in increments of 0.020mm (0.0008 in.), from 5.060 mm (0.1992 in.) to 5.740 mm (0.2260 in.).

Measured clearance mm(in.) / Installed lifter thickness mm(in.)	0.000 - 0.030 (0.0000 - 0.0012)	0.031 - 0.050 (0.0012 - 0.0020)	0.051 - 0.070 (0.0020 - 0.0028)	0.071 - 0.090 (0.0028 - 0.0035)	0.091 - 0.110 (0.0036 - 0.0043)	0.111 - 0.130 (0.0044 - 0.0051)	0.131 - 0.149 (0.0052 - 0.0059)	0.150 - 0.250 (0.0059 - 0.0098)	0.251 - 0.270 (0.0099 - 0.0106)	0.271 - 0.290 (0.0107 - 0.0114)	0.291 - 0.310 (0.0115 - 0.0122)	0.311 - 0.330 (0.0122 - 0.0130)	0.331 - 0.350 (0.0130 - 0.0138)	0.351 - 0.370 (0.0138 - 0.0146)	0.371 - 0.390 (0.0146 - 0.0154)	0.391 - 0.410 (0.0154 - 0.0161)	0.411 - 0.430 (0.0162 - 0.0169)	0.431 - 0.450 (0.0170 - 0.0177)	0.451 - 0.470 (0.0178 - 0.0185)	0.471 - 0.490 (0.0185 - 0.0193)	0.491 - 0.510 (0.0193 - 0.0201)	0.511 - 0.530 (0.0201 - 0.0209)	0.531 - 0.550 (0.0209 - 0.0217)	0.551 - 0.570 (0.0217 - 0.0224)	0.571 - 0.590 (0.0225 - 0.0232)	0.591 - 0.610 (0.0233 - 0.0240)	0.611 - 0.630 (0.0241 - 0.0248)	0.631 - 0.650 (0.0248 - 0.0256)	0.651 - 0.670 (0.0256 - 0.0264)	0.671 - 0.690 (0.0264 - 0.0272)	0.691 - 0.710 (0.0272 - 0.0280)	0.711 - 0.730 (0.0280 - 0.0287)	0.731 - 0.750 (0.0288 - 0.0295)	0.751 - 0.770 (0.0296 - 0.0303)	0.771 - 0.790 (0.0304 - 0.0311)	0.791 - 0.810 (0.0311 - 0.0319)	0.811 - 0.830 (0.0319 - 0.0327)	0.831 - 0.850 (0.0327 - 0.0335)	0.851 - 0.870 (0.0335 - 0.0343)	0.871 - 0.890 (0.0343 - 0.0350)	0.891 - 0.910 (0.0351 - 0.0358)	0.911 - 0.930 (0.0359 - 0.0366)
5.060 (0.1992)									12	14	16	18	20	22	24	26	28	30	32	34	36	38	40	42	44	46	48	50	52	54	56	58	60	62	64	66	68	70	72	74	74	74
5.080 (0.2000)								06	14	16	18	20	22	24	26	28	30	32	34	36	38	40	42	44	46	48	50	52	54	56	58	60	62	64	66	68	70	72	74	74	74
5.100 (0.2008)							06	06	16	18	20	22	24	26	28	30	32	34	36	38	40	42	44	46	48	50	52	54	56	58	60	62	64	66	68	70	72	74	74	74	
5.120 (0.2016)						06	06	06	18	20	22	24	26	28	30	32	34	36	38	40	42	44	46	48	50	52	54	56	58	60	62	64	66	68	70	72	74	74	74		
5.140 (0.2024)					06	06	06	08	20	22	24	26	28	30	32	34	36	38	40	42	44	46	48	50	52	54	56	58	60	62	64	66	68	70	72	74	74	74			
5.160 (0.2031)				06	06	06	08	10	22	24	26	28	30	32	34	36	38	40	42	44	46	48	50	52	54	56	58	60	62	64	66	68	70	72	74	74	74				
5.180 (0.2039)			06	06	06	08	10	12	24	26	28	30	32	34	36	38	40	42	44	46	48	50	52	54	56	58	60	62	64	66	68	70	72	74	74	74					
5.200 (0.2047)			06	06	08	10	12	14	26	28	30	32	34	36	38	40	42	44	46	48	50	52	54	56	58	60	62	64	66	68	70	72	74	74	74						
5.210 (0.2051)	06	06	08	10	12	14	16		28	30	32	34	36	38	40	42	44	46	48	50	52	54	56	58	60	62	64	66	68	70	72	74	74	74							
5.220 (0.2055)	06	06	08	10	12	14	16		28	30	32	34	36	38	40	42	44	46	48	50	52	54	56	58	60	62	64	66	68	70	72	74	74	74							
5.230 (0.2059)	06	08	10	12	14	16	18		30	32	34	36	38	40	42	44	46	48	50	52	54	56	58	60	62	64	66	68	70	72	74	74	74								
5.240 (0.2063)	06	08	10	12	14	16	18		30	32	34	36	38	40	42	44	46	48	50	52	54	56	58	60	62	64	66	68	70	72	74	74	74								
5.250 (0.2067)	06	10	12	14	16	18	20		32	34	36	38	40	42	44	46	48	50	52	54	56	58	60	62	64	66	68	70	72	74	74	74									
5.260 (0.2071)	08	10	12	14	16	18	20		32	34	36	38	40	42	44	46	48	50	52	54	56	58	60	62	64	66	68	70	72	74	74	74									
5.270 (0.2075)	10	12	14	16	18	20	22		34	36	38	40	42	44	46	48	50	52	54	56	58	60	62	64	66	68	70	72	74	74	74										
5.280 (0.2079)	10	12	14	16	18	20	22		34	36	38	40	42	44	46	48	50	52	54	56	58	60	62	64	66	68	70	72	74	74	74										
5.290 (0.2083)	12	14	16	18	20	22	24		36	38	40	42	44	46	48	50	52	54	56	58	60	62	64	66	68	70	72	74	74	74											
5.300 (0.2087)	12	14	16	18	20	22	24		36	38	40	42	44	46	48	50	52	54	56	58	60	62	64	66	68	70	72	74	74	74											
5.310 (0.2091)	14	16	18	20	22	24	26		38	40	42	44	46	48	50	52	54	56	58	60	62	64	66	68	70	72	74	74	74												
5.320 (0.2094)	14	16	18	20	22	24	26		38	40	42	44	46	48	50	52	54	56	58	60	62	64	66	68	70	72	74	74	74												
5.330 (0.2098)	16	18	20	22	24	26	28		40	42	44	46	48	50	52	54	56	58	60	62	64	66	68	70	72	74	74	74													
5.340 (0.2102)	16	18	20	22	24	26	28		40	42	44	46	48	50	52	54	56	58	60	62	64	66	68	70	72	74	74	74													
5.350 (0.2106)	18	20	22	24	26	28	30		42	44	46	48	50	52	54	56	58	60	62	64	66	68	70	72	74	74	74														
5.360 (0.2110)	18	20	22	24	26	28	30		42	44	46	48	50	52	54	56	58	60	62	64	66	68	70	72	74	74	74														
5.370 (0.2114)	20	22	24	26	28	30	32		44	46	48	50	52	54	56	58	60	62	64	66	68	70	72	74	74	74															
5.380 (0.2118)	20	22	24	26	28	30	32		44	46	48	50	52	54	56	58	60	62	64	66	68	70	72	74	74	74															
5.390 (0.2122)	22	24	26	28	30	32	34		46	48	50	52	54	56	58	60	62	64	66	68	70	72	74	74	74																
5.400 (0.2126)	22	24	26	28	30	32	34		46	48	50	52	54	56	58	60	62	64	66	68	70	72	74	74	74																
5.410 (0.2130)	24	26	28	30	32	34	36		48	50	52	54	56	58	60	62	64	66	68	70	72	74	74	74																	
5.420 (0.2134)	24	26	28	30	32	34	36		48	50	52	54	56	58	60	62	64	66	68	70	72	74	74	74																	
5.430 (0.2138)	26	28	30	32	34	36	38		50	52	54	56	58	60	62	64	66	68	70	72	74	74	74																		
5.440 (0.2142)	26	28	30	32	34	36	38		50	52	54	56	58	60	62	64	66	68	70	72	74	74	74																		
5.450 (0.2146)	28	30	32	34	36	38	40		52	54	56	58	60	62	64	66	68	70	72	74	74	74																			
5.460 (0.2150)	28	30	32	34	36	38	40		52	54	56	58	60	62	64	66	68	70	72	74	74	74																			
5.470 (0.2154)	30	32	34	36	38	40	42		54	56	58	60	62	64	66	68	70	72	74	74	74																				
5.480 (0.2157)	30	32	34	36	38	40	42		54	56	58	60	62	64	66	68	70	72	74	74	74																				
5.490 (0.2161)	32	34	36	38	40	42	44		56	58	60	62	64	66	68	70	72	74	74	74																					
5.500 (0.2165)	32	34	36	38	40	42	44		56	58	60	62	64	66	68	70	72	74	74	74																					
5.510 (0.2169)	34	36	38	40	42	44	46		58	60	62	64	66	68	70	72	74	74	74																						
5.520 (0.2173)	34	36	38	40	42	44	46		58	60	62	64	66	68	70	72	74	74	74																						
5.530 (0.2177)	36	38	40	42	44	46	48		60	62	64	66	68	70	72	74	74	74																							
5.540 (0.2181)	36	38	40	42	44	46	48		60	62	64	66	68	70	72	74	74	74																							
5.550 (0.2185)	38	40	42	44	46	48	50		62	64	66	68	70	72	74	74	74																								
5.560 (0.2189)	38	40	42	44	46	48	50		62	64	66	68	70	72	74	74	74																								
5.570 (0.2193)	40	42	44	46	48	50	52		64	66	68	70	72	74	74	74																									
5.580 (0.2197)	40	42	44	46	48	50	52		64	66	68	70	72	74	74	74																									
5.590 (0.2201)	42	44	46	48	50	52	54		66	68	70	72	74	74	74	74																									
5.600 (0.2205)	42	44	46	48	50	52	54		66	68	70	72	74	74	74																										
5.620 (0.2213)	44	46	48	50	52	54	56		68	70	72	74	74	74																											
5.640 (0.2220)	46	48	50	52	54	56	58		70	72	74	74	74																												
5.660 (0.2228)	48	50	52	54	56	58	60		72	74	74	74																													
5.680 (0.2236)	50	52	54	56	58	60	62		74	74	74																														
5.700 (0.2244)	52	54	56	58	60	62	64		74	74																															
5.720 (0.2252)	54	56	58	60	62	64	66		74																																
5.740 (0.2260)	56	58	60	62	64	66	68																																		

T

A117457

EM

Intake valve clearance (cold):
0.15 to 0.25 mm (0.006 to 0.010 in.)
EXAMPLE:
A 5.250 mm (0.2067 in.) lifter is installed, and the measured clearance is 0.400 mm (0.0158 in.). Replace the 5.250 mm (0.2067 in.) lifter with a new No. 46 lifter.

New Shim Thickness

Shim No.	Thickness	Shim No.	Thickness	Shim No.	Thickness
06	5.060 (0.1992)	30	5.300 (0.2087)	54	5.540 (0.2181)
08	5.080 (0.2000)	32	5.320 (0.2094)	56	5.560 (0.2189)
10	5.100 (0.2008)	34	5.340 (0.2102)	58	5.580 (0.2197)
12	5.120 (0.2016)	36	5.360 (0.2110)	60	5.600 (0.2205)
14	5.140 (0.2024)	38	5.380 (0.2118)	62	5.620 (0.2213)
16	5.160 (0.2031)	40	5.400 (0.2126)	64	5.640 (0.2220)
18	5.180 (0.2039)	42	5.420 (0.2134)	66	5.660 (0.2228)
20	5.200 (0.2047)	44	5.440 (0.2142)	68	5.680 (0.2236)
22	5.220 (0.2055)	46	5.460 (0.2150)	70	5.700(0.2244)
24	5.240 (0.2063)	48	5.480 (0.2157)	72	5.720 (0.2252)
26	5.260 (0.2071)	50	5.500 (0.2165)	74	5.740 (0.2260)
28	5.280 (0.2079)	52	5.520 (0.2173)		

Measured clearance mm(in.) / Installed lifter thickness mm(in.)	0.000 - 0.030 (0.0000 - 0.0012)	0.031 - 0.050 (0.0012 - 0.0020)	0.051 - 0.070 (0.0020 - 0.0028)	0.071 - 0.090 (0.0028 - 0.0035)	0.091 - 0.110 (0.0036 - 0.0043)	0.111 - 0.130 (0.0044 - 0.0051)	0.131 - 0.150 (0.0052 - 0.0059)	0.151 - 0.170 (0.0059 - 0.0067)	0.171 - 0.190 (0.0067 - 0.0075)	0.191 - 0.210 (0.0075 - 0.0083)	0.211 - 0.230 (0.0083 - 0.0091)	0.231 - 0.249 (0.0091 - 0.0098)	0.250 - 0.350 (0.0098 - 0.0138)	0.351 - 0.370 (0.0138 - 0.0146)	0.371 - 0.390 (0.0146 - 0.0154)	0.391 - 0.410 (0.0154 - 0.0161)	0.411 - 0.430 (0.0162 - 0.0169)	0.431 - 0.450 (0.0170 - 0.0177)	0.451 - 0.470 (0.0178 - 0.0185)	0.471 - 0.490 (0.0185 - 0.0193)	0.491 - 0.510 (0.0193 - 0.0201)	0.511 - 0.530 (0.0201 - 0.0209)	0.531 - 0.550 (0.0209 - 0.0217)	0.551 - 0.570 (0.0217 - 0.0224)	0.571 - 0.590 (0.0225 - 0.0232)	0.591 - 0.610 (0.0233 - 0.0240)	0.611 - 0.630 (0.0241 - 0.0248)	0.631 - 0.650 (0.0248 - 0.0256)	0.651 - 0.670 (0.0256 - 0.0264)	0.671 - 0.690 (0.0264 - 0.0272)	0.691 - 0.710 (0.0272 - 0.0280)	0.711 - 0.730 (0.0280 - 0.0287)	0.731 - 0.750 (0.0288 - 0.0295)	0.751 - 0.770 (0.0296 - 0.0303)	0.771 - 0.790 (0.0304 - 0.0311)	0.791 - 0.810 (0.0311 - 0.0319)	0.811 - 0.830 (0.0319 - 0.0327)	0.831 - 0.850 (0.0327 - 0.0335)	0.851 - 0.870 (0.0335 - 0.0343)	0.871 - 0.890 (0.0343 - 0.0350)	0.891 - 0.910 (0.0351 - 0.0358)	0.911 - 0.930 (0.0359 - 0.0366)	0.931 - 0.950 (0.0367 - 0.0374)	0.951 - 0.970 (0.0374 - 0.0382)	0.971 - 0.990 (0.0382 - 0.0390)	0.991 - 1.010 (0.0390 - 0.0398)	1.011 - 1.030 (0.0398 - 0.0406)
5.060 (0.1992)														12	14	16	18	20	22	24	26	28	30	32	34	36	38	40	42	44	46	48	50	52	54	56	58	60	62	64	66	68	70	72	74	74	74
5.080 (0.2000)												06		14	16	18	20	22	24	26	28	30	32	34	36	38	40	42	44	46	48	50	52	54	56	58	60	62	64	66	68	70	72	74	74	74
5.100 (0.2008)											06	06		16	18	20	22	24	26	28	30	32	34	36	38	40	42	44	46	48	50	52	54	56	58	60	62	64	66	68	70	72	74	74	74	
5.120 (0.2016)										06	06	06		18	20	22	24	26	28	30	32	34	36	38	40	42	44	46	48	50	52	54	56	58	60	62	64	66	68	70	72	74	74	74		
5.140 (0.2024)									06	06	06	08		20	22	24	26	28	30	32	34	36	38	40	42	44	46	48	50	52	54	56	58	60	62	64	66	68	70	72	74	74	74			
5.160 (0.2031)								06	06	06	08	10		22	24	26	28	30	32	34	36	38	40	42	44	46	48	50	52	54	56	58	60	62	64	66	68	70	72	74	74	74				
5.180 (0.2039)								06	06	08	10	12		24	26	28	30	32	34	36	38	40	42	44	46	48	50	52	54	56	58	60	62	64	66	68	70	72	74	74	74					
5.200 (0.2047)							06	06	08	10	12	14		26	28	30	32	34	36	38	40	42	44	46	48	50	52	54	56	58	60	62	64	66	68	70	72	74	74	74						
5.210 (0.2051)						06	06	08	10	12	14	16		28	30	32	34	36	38	40	42	44	46	48	50	52	54	56	58	60	62	64	66	68	70	72	74	74	74							
5.220 (0.2055)						06	06	08	10	12	14	16		28	30	32	34	36	38	40	42	44	46	48	50	52	54	56	58	60	62	64	66	68	70	72	74	74	74							
5.230 (0.2059)				06	06	08	10	12	14	16	18			30	32	34	36	38	40	42	44	46	48	50	52	54	56	58	60	62	64	66	68	70	72	74	74	74								
5.240 (0.2063)			06	06	06	08	10	12	14	16	18			30	32	34	36	38	40	42	44	46	48	50	52	54	56	58	60	62	64	66	68	70	72	74	74	74								
5.250 (0.2067)			06	06	06	10	12	14	16	18	20			32	34	36	38	40	42	44	46	48	50	52	54	56	58	60	62	64	66	68	70	72	74	74	74									
5.260 (0.2071)		06	06	06	08	10	12	14	16	18	20			32	34	36	38	40	42	44	46	48	50	52	54	56	58	60	62	64	66	68	70	72	74	74	74									
5.270 (0.2075)		06	06	08	10	12	14	16	18	20	22			34	36	38	40	42	44	46	48	50	52	54	56	58	60	62	64	66	68	70	72	74	74	74										
5.280 (0.2079)	06	06	06	08	10	12	14	16	18	20	22			34	36	38	40	42	44	46	48	50	52	54	56	58	60	62	64	66	68	70	72	74	74	74										
5.290 (0.2083)	06	06	08	10	12	14	16	18	20	22	24			36	38	40	42	44	46	48	50	52	54	56	58	60	62	64	66	68	70	72	74	74	74											
5.300 (0.2087)	06	06	08	10	12	14	16	18	20	22	24			36	38	40	42	44	46	48	50	52	54	56	58	60	62	64	66	68	70	72	74	74	74											
5.310 (0.2091)	06	06	08	10	12	14	16	18	20	22	24	26		38	40	42	44	46	48	50	52	54	56	58	60	62	64	66	68	70	72	74	74	74												
5.320 (0.2094)	06	06	08	10	12	14	16	18	20	22	24	26		38	40	42	44	46	48	50	52	54	56	58	60	62	64	66	68	70	72	74	74	74												
5.330 (0.2098)	06	08	10	12	14	16	18	20	22	24	26	28		40	42	44	46	48	50	52	54	56	58	60	62	64	66	68	70	72	74	74	74													
5.340 (0.2102)	06	08	10	12	14	16	18	20	22	24	26	28		40	42	44	46	48	50	52	54	56	58	60	62	64	66	68	70	72	74	74	74													
5.350 (0.2106)	08	10	12	14	16	18	20	22	24	26	28	30		42	44	46	48	50	52	54	56	58	60	62	64	66	68	70	72	74	74	74														
5.360 (0.2110)	08	10	12	14	16	18	20	22	24	26	28	30		42	44	46	48	50	52	54	56	58	60	62	64	66	68	70	72	74	74	74														
5.370 (0.2114)	10	12	14	16	18	20	22	24	26	28	30	32		44	46	48	50	52	54	56	58	60	62	64	66	68	70	72	74	74	74															
5.380 (0.2118)	10	12	14	16	18	20	22	24	26	28	30	32		44	46	48	50	52	54	56	58	60	62	64	66	68	70	72	74	74	74															
5.390 (0.2122)	12	14	16	18	20	22	24	26	28	30	32	34		46	48	50	52	54	56	58	60	62	64	66	68	70	72	74	74	74																
5.400 (0.2126)	12	14	16	18	20	22	24	26	28	30	32	34		46	48	50	52	54	56	58	60	62	64	66	68	70	72	74	74	74																
5.410 (0.2130)	14	16	18	20	22	24	26	28	30	32	34	36		48	50	52	54	56	58	60	62	64	66	68	70	72	74	74	74																	
5.420 (0.2134)	14	16	18	20	22	24	26	28	30	32	34	36		48	50	52	54	56	58	60	62	64	66	68	70	72	74	74	74																	
5.430 (0.2138)	16	18	20	22	24	26	28	30	32	34	36	38		50	52	54	56	58	60	62	64	66	68	70	72	74	74	74																		
5.440 (0.2142)	16	18	20	22	24	26	28	30	32	34	36	38		50	52	54	56	58	60	62	64	66	68	70	72	74	74	74																		
5.450 (0.2146)	18	20	22	24	26	28	30	32	34	36	38	40		52	54	56	58	60	62	64	66	68	70	72	74	74	74	74																		
5.460 (0.2150)	18	20	22	24	26	28	30	32	34	36	38	40		52	54	56	58	60	62	64	66	68	70	72	74	74	74																			
5.470 (0.2154)	20	22	24	26	28	30	32	34	36	38	40	42		54	56	58	60	62	64	66	68	70	72	74	74	74																			
5.480 (0.2157)	20	22	24	26	28	30	32	34	36	38	40	42		54	56	58	60	62	64	66	68	70	72	74	74	74																			
5.490 (0.2161)	22	24	26	28	30	32	34	36	38	40	42	44		56	58	60	62	64	66	68	70	72	74	74	74																				
5.500 (0.2165)	22	24	26	28	30	32	34	36	38	40	42	44		56	58	60	62	64	66	68	70	72	74	74	74																				
5.510 (0.2169)	24	26	28	30	32	34	36	38	40	42	44	46		58	60	62	64	66	68	70	72	74	74	74																					
5.520 (0.2173)	24	26	28	30	32	34	36	38	40	42	44	46		58	60	62	64	66	68	70	72	74	74	74																					
5.530 (0.2177)	26	28	30	32	34	36	38	40	42	44	46	48		60	62	64	66	68	70	72	74	74	74																						
5.540 (0.2181)	26	28	30	32	34	36	38	40	42	44	46	48		60	62	64	66	68	70	72	74	74	74																						
5.550 (0.2185)	28	30	32	34	36	38	40	42	44	46	48	50		62	64	66	68	70	72	74	74	74																							
5.560 (0.2189)	28	30	32	34	36	38	40	42	44	46	48	50		62	64	66	68	70	72	74	74	74																							
5.570 (0.2193)	30	32	34	36	38	40	42	44	46	48	50	52		64	66	68	70	72	74	74	74																								
5.580 (0.2197)	30	32	34	36	38	40	42	44	46	48	50	52		64	66	68	70	72	74	74	74																								
5.590 (0.2201)	32	34	36	38	40	42	44	46	48	50	52	54		66	68	70	72	74	74	74																									
5.600 (0.2205)	34	36	38	40	42	42	44	46	48	50	52	54		66	68	70	72	74	74	74																									
5.620 (0.2213)	34	36	38	40	42	44	46	48	50	52	54	56		68	70	72	74	74	74																										
5.640 (0.2220)	36	38	40	42	44	46	48	50	52	54	56	58		70	72	74	74	74																											
5.660 (0.2228)	38	40	42	44	46	48	50	52	54	56	58	60		72	74	74	74																												
5.680 (0.2236)	40	42	44	46	48	50	52	54	56	58	60	62		74	74	74																													
5.700 (0.2244)	42	44	46	48	50	52	54	56	58	60	62	64		74	74																														
5.720 (0.2252)	44	46	48	50	52	54	56	58	60	62	64	66		74																														
5.740 (0.2260)	46	48	50	52	54	56	58	60	62	64	66	68																																

T

A117458

EM

Exhaust valve clearance (Cold):
0.25 to 0.35 mm (0.010 to 0.014 in.)
EXAMPLE:
A 5.340 mm (0.2102 in.) lifter is installed, and the measured clearance is 0.440 mm (0.0173 in.). Replace the 5.340 mm (0.2102 in.) lifter with a new No. 48 lifter.

New Shim Thickness

Shim No.	Thickness	Shim No.	Thickness	Shim No.	Thickness
06	5.060 (0.1992)	30	5.300 (0.2087)	54	5.540 (0.2181)
08	5.080 (0.2000)	32	5.320 (0.2094)	56	5.560 (0.2189)
10	5.100 (0.2008)	34	5.340 (0.2102)	58	5.580 (0.2197)
12	5.120 (0.2016)	36	5.360 (0.2110)	60	5.600 (0.2205)
14	5.140 (0.2024)	38	5.380 (0.2118)	62	5.620 (0.2213)
16	5.160 (0.2031)	40	5.400 (0.2126)	64	5.640 (0.2220)
18	5.180 (0.2039)	42	5.420 (0.2134)	66	5.660 (0.2228)
20	5.200 (0.2047)	44	5.440 (0.2142)	68	5.680 (0.2236)
22	5.220 (0.2055)	46	5.460 (0.2150)	70	5.700 (0.2244)
24	5.240 (0.2063)	48	5.480 (0.2157)	72	5.720 (0.2252)
26	5.260 (0.2071)	50	5.500 (0.2165)	74	5.740 (0.2260)
28	5.280 (0.2079)	52	5.520 (0.2173)		

(t) Install the selected valve lifter.
(u) Apply a light coat of engine oil to the camshaft and camshaft journals.

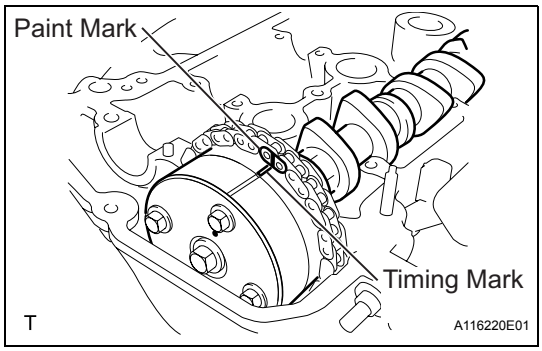

(v) Install the chain onto the camshaft timing gear with the paint mark and the timing mark aligned as shown in the illustration.

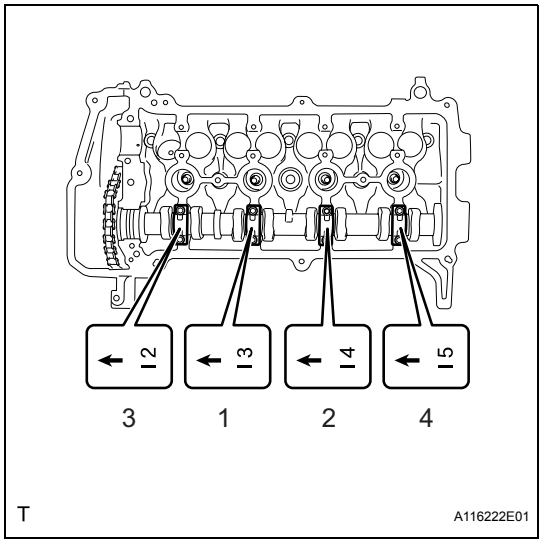

(w) Examine the front marks and the numbers on camshaft bearing cap No. 2 and check that the sequence is as shown in the illustration. Then uniformly tighten the bolts in several steps in the sequence shown in the illustration.
Torque: 13 N*m (129 kgf*cm, 9.4 ft.*lbf)
NOTICE:
Tighten each bolt uniformly while keeping the camshaft level.

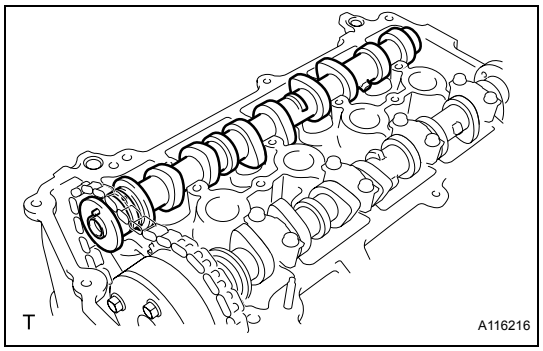

(x) Install camshaft No. 2.

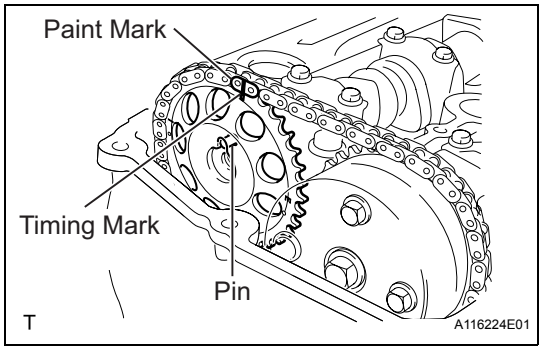

(y) Hold the chain, and align the timing mark on the camshaft timing sprocket with the paint mark of the chain.

(z) Align the alignment pin hole in the camshaft timing sprocket with the alignment pin of the camshaft, and install the sprocket onto the camshaft.

EM

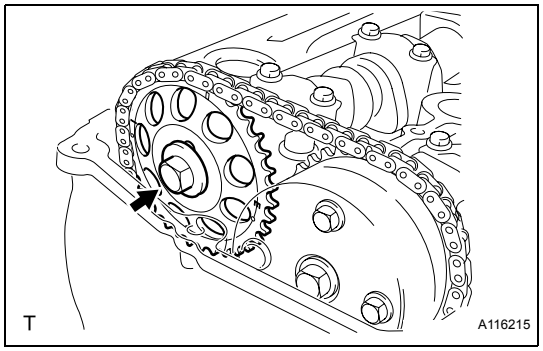

(aa) Provisionally install the flange bolt.

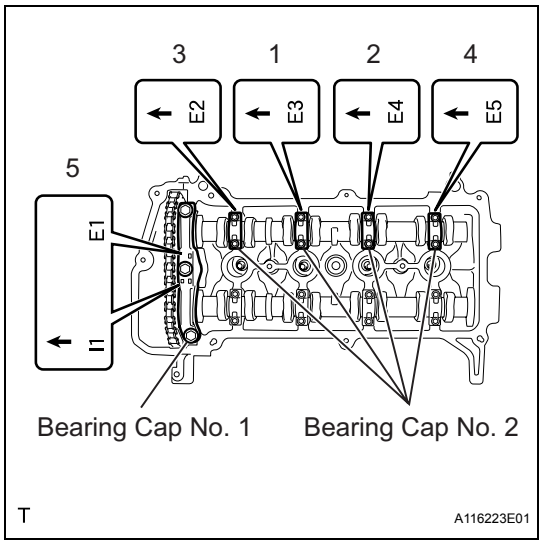

(ab) Examine the front marks and the numbers of camshaft bearing cap No. 1 and camshaft bearing cap No. 2 and check that the sequence is as shown in the illustration. Then uniformly tighten the bolts in several steps, in the sequence shown in the illustration.

Torque: for bearing cap No. 2
13 N*m (129 kgf*cm, 9.4 ft.*lbf)
for bearing cap No. 1
23 N*m (235 kgf*cm, 17 ft.*lbf)

NOTICE:
Tighten each bolt uniformly while keeping the camshaft level.

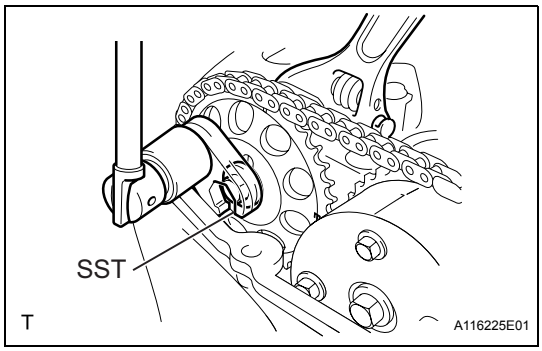

(ac) Using a wrench, hold the hexagonal lobe of camshaft No. 2 and install the flange bolt.
Torque: 64 N*m (653 kgf*cm, 47 ft.*lbf)
SST 09023-38400
(ad) Remove the bar from the timing chain tensioner.

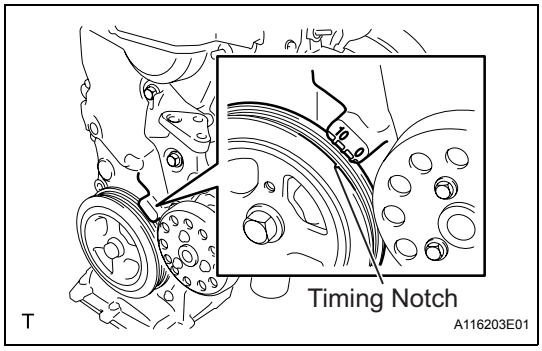

(ae) Turn the crankshaft damper and align its timing notch with the timing mark "0" of the oil pump.

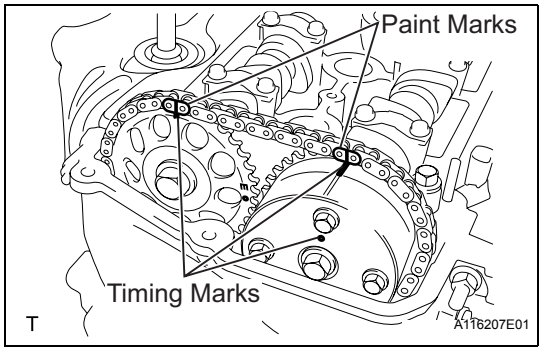

(af) Check that all the pairs of timing marks are aligned.
(ag) Apply adhesive to the 2 or 3 threads of the screw plug.
Adhesive:
Toyota Genuine Adhesive 1324, Three Bond 1324 or Equivalent

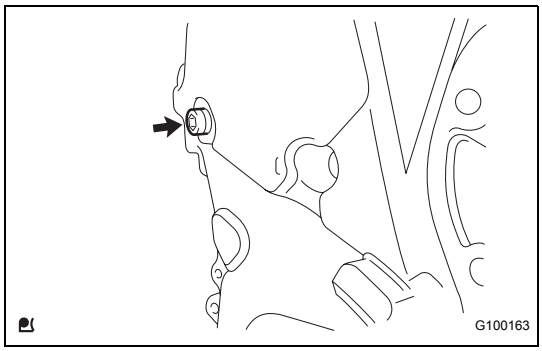

(ah) Using an 8 mm hexagon wrench, install the screw plug.
Torque: 15 N*m (153 kgf*cm, 11 ft.*lbf)
(ai) Install the engine mounting insulator sub-assembly RH (See page LU-26). (for Hatchback)
(aj) Install the engine mounting insulator sub-assembly RH (See page LU-26). (for Sedan)
(ak) Install the fan and generator V belt (See page EM-7).
(al) Adjust the fan and generator V belt (See page EM-7).
(am) Inspect the fan and generator V belt (See page EM-8).

10. **INSTALL CYLINDER HEAD COVER SUB-ASSEMBLY (See page FU-19)**
11. **CONNECT VENTILATION HOSE NO. 2 (See page FU-20)**
12. **CONNECT VENTILATION HOSE (See page FU-20)**
13. **INSTALL IGNITION COIL NO. 1 (See page IG-9)**

14. **CONNECT CABLE TO NEGATIVE BATTERY TERMINAL**
    Torque: 5.4 N*m (55 kgf*cm, 48 in.*lbf)
15. **CHECK FOR ENGINE OIL LEAKAGE**
16. **INSTALL CYLINDER HEAD COVER NO. 2 (See page IG-10)**
17. **INSTALL ENGINE UNDER COVER RH**

TIMING CHAIN

COMPONENTS

EM

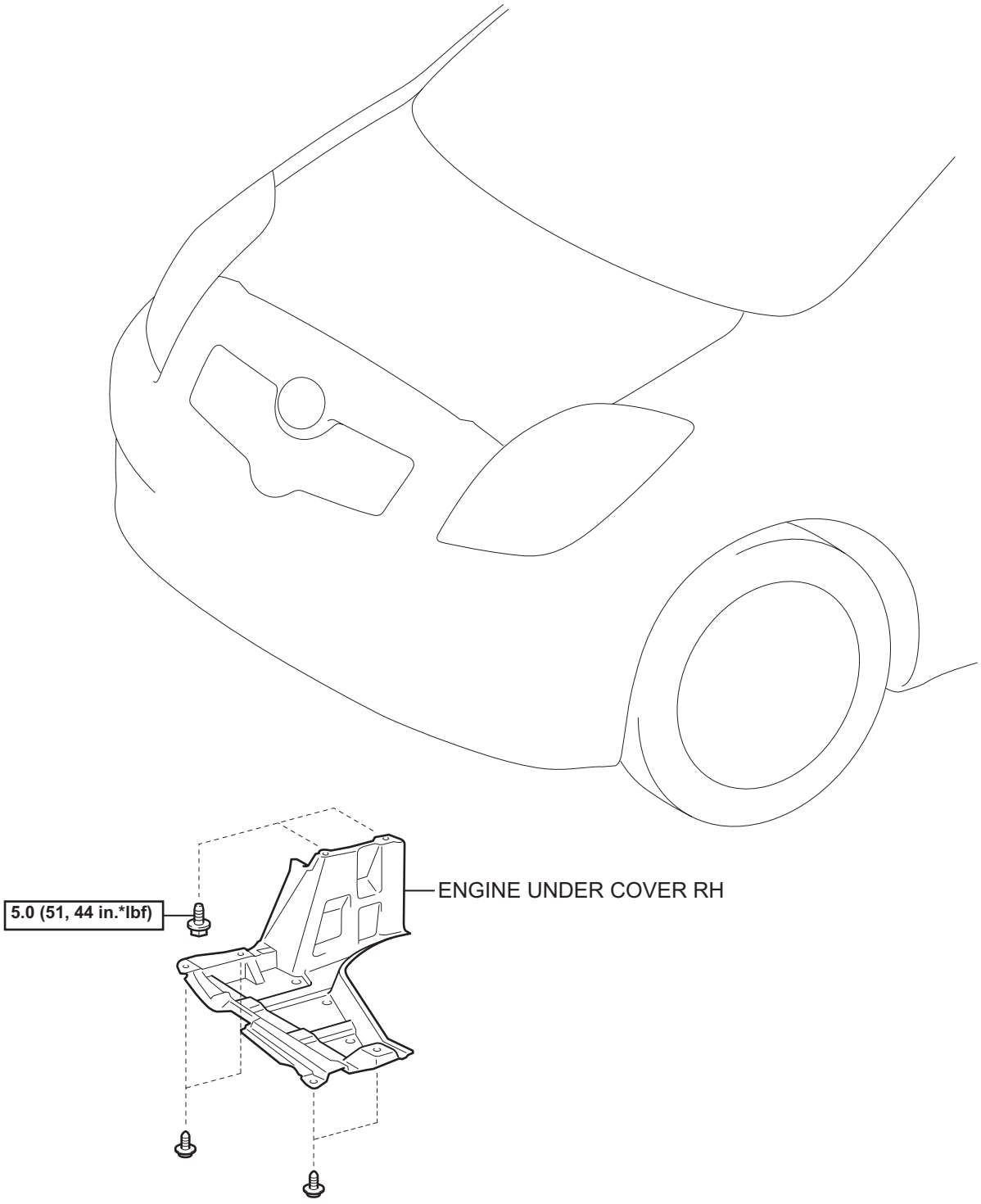

N*m (kgf*cm, ft.*lbf) : Specified torque

T

A115143E01

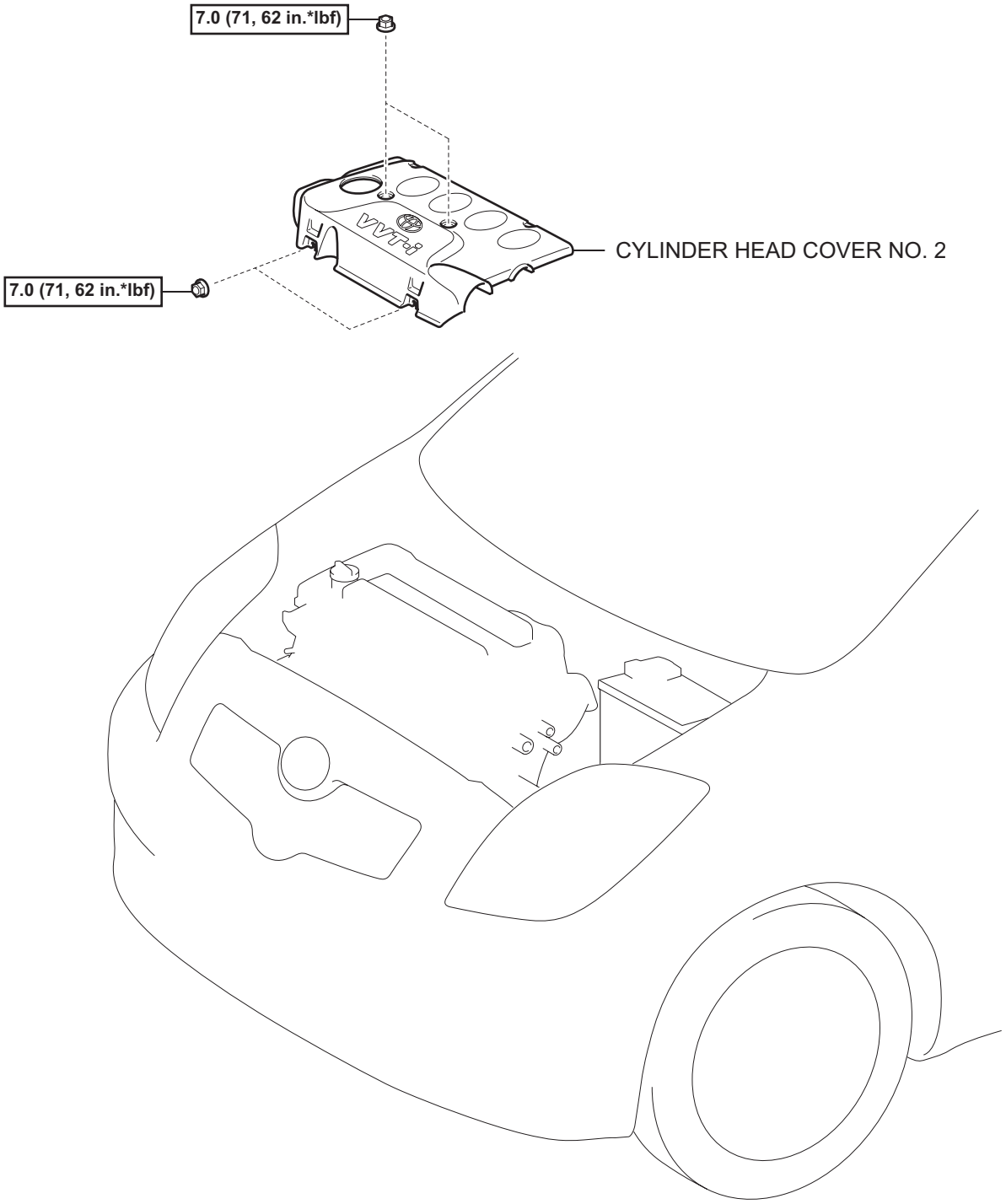

N*m (kgf*cm, ft.*lbf) : Specified torque

T

A115136E01

EM

EM

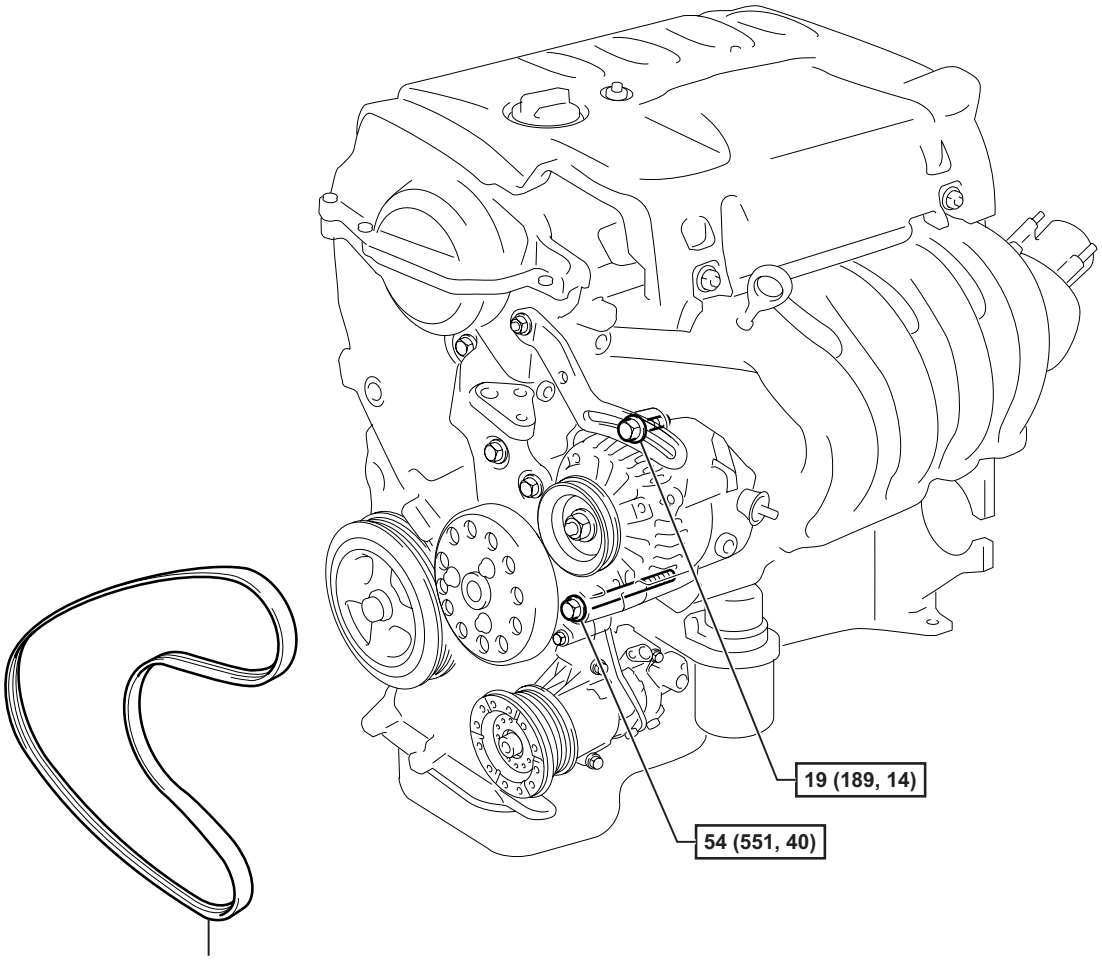

N*m (kgf*cm, ft.*lbf) : Specified torque

T

A116199E01

for Hatchback:

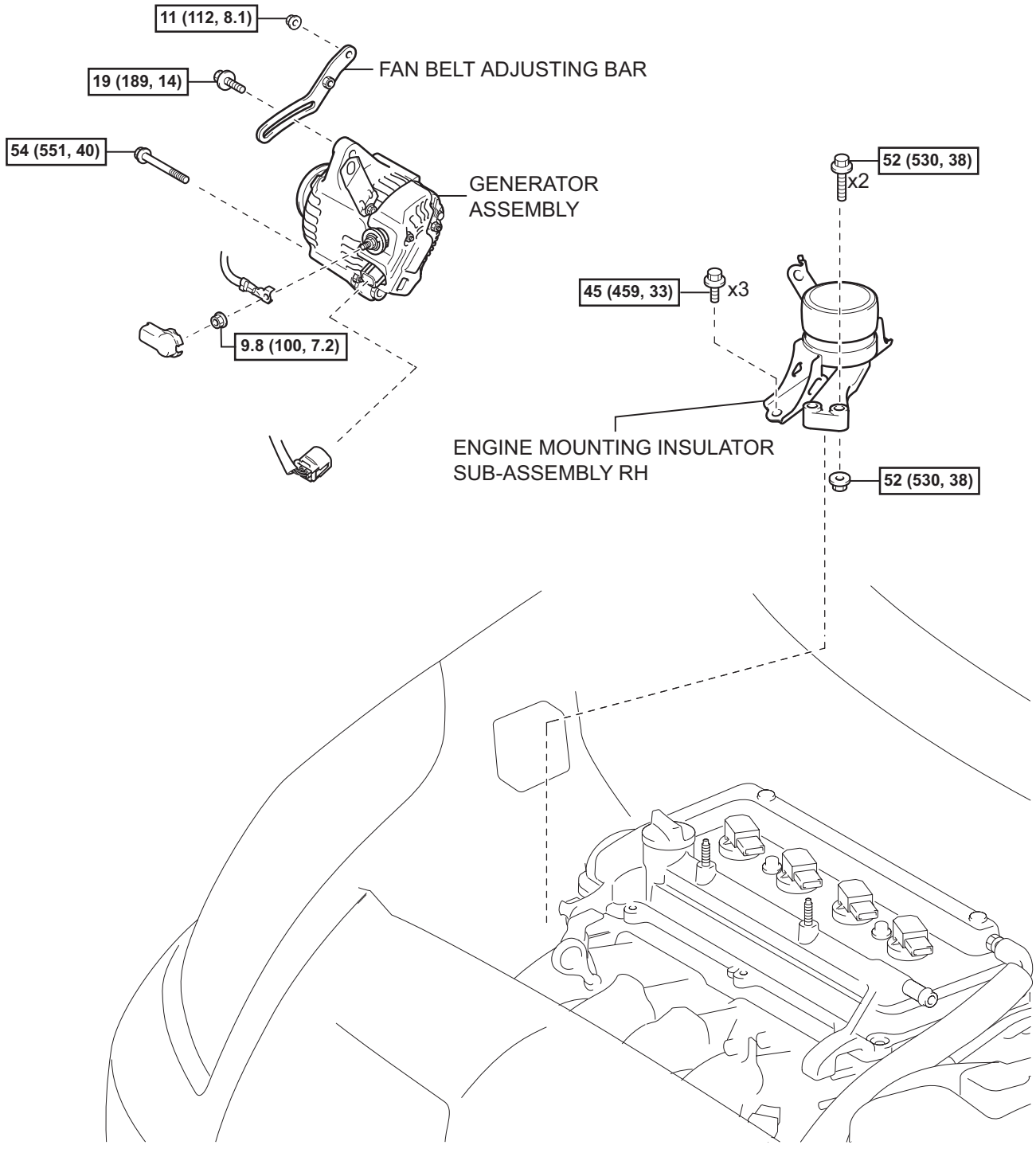

N*m (kgf*cm, ft.*lbf) : Specified torque

T

A116193E06

EM

for Sedan:

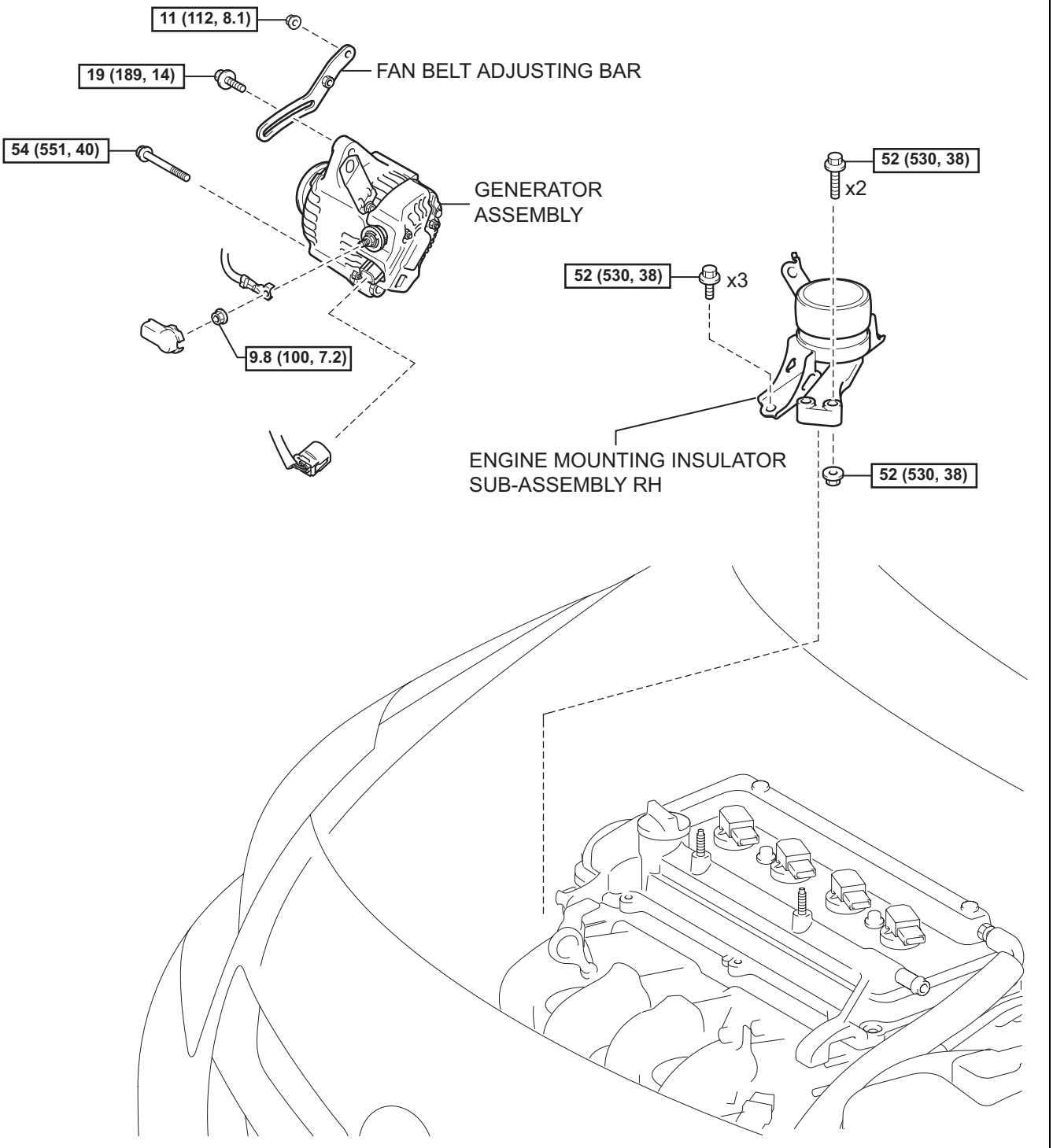

N*m (kgf*cm, ft*lbf) : Specified torque

T

A133594E01

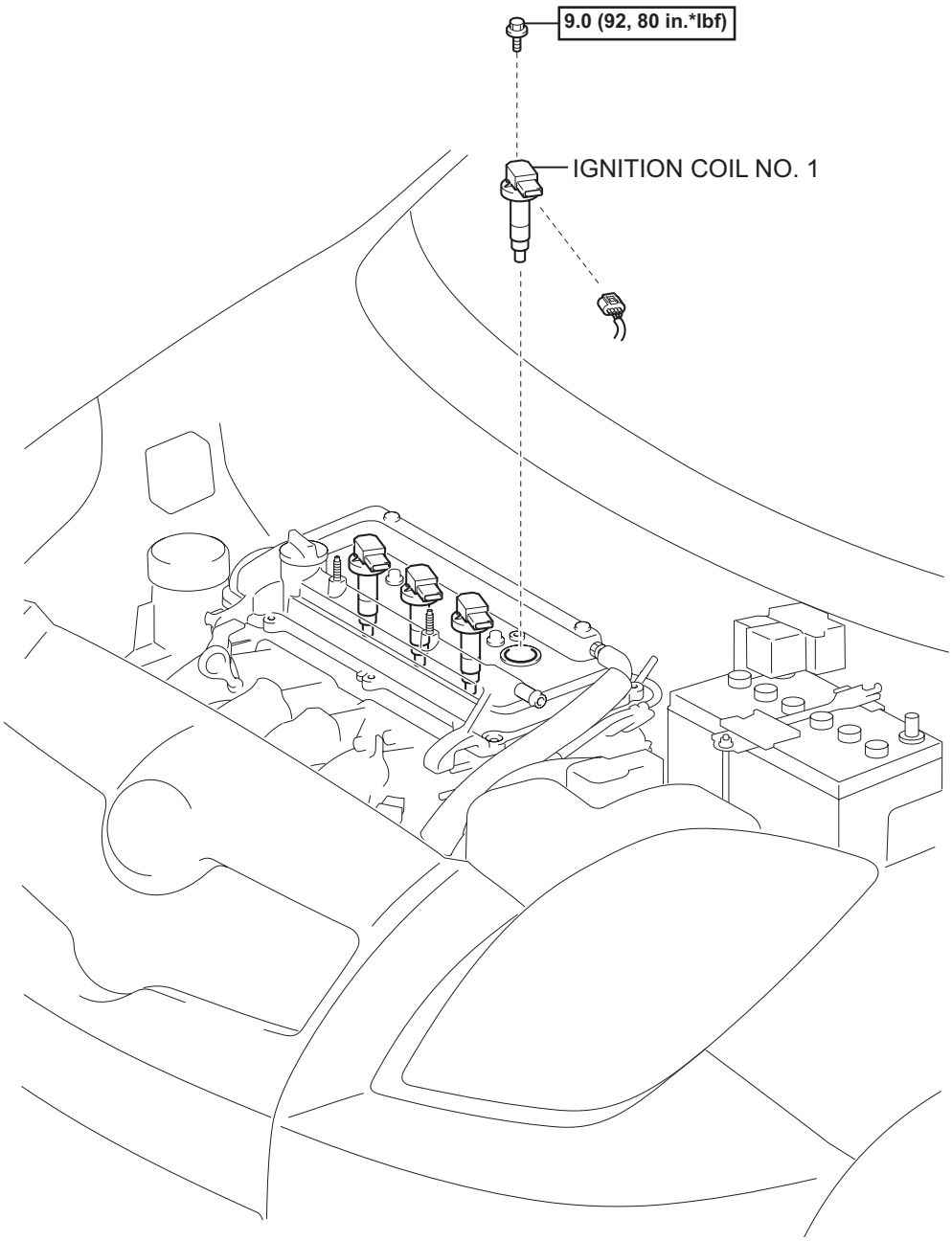

N*m (kgf*cm, ft.*lbf) : Specified torque

T

A115486E01

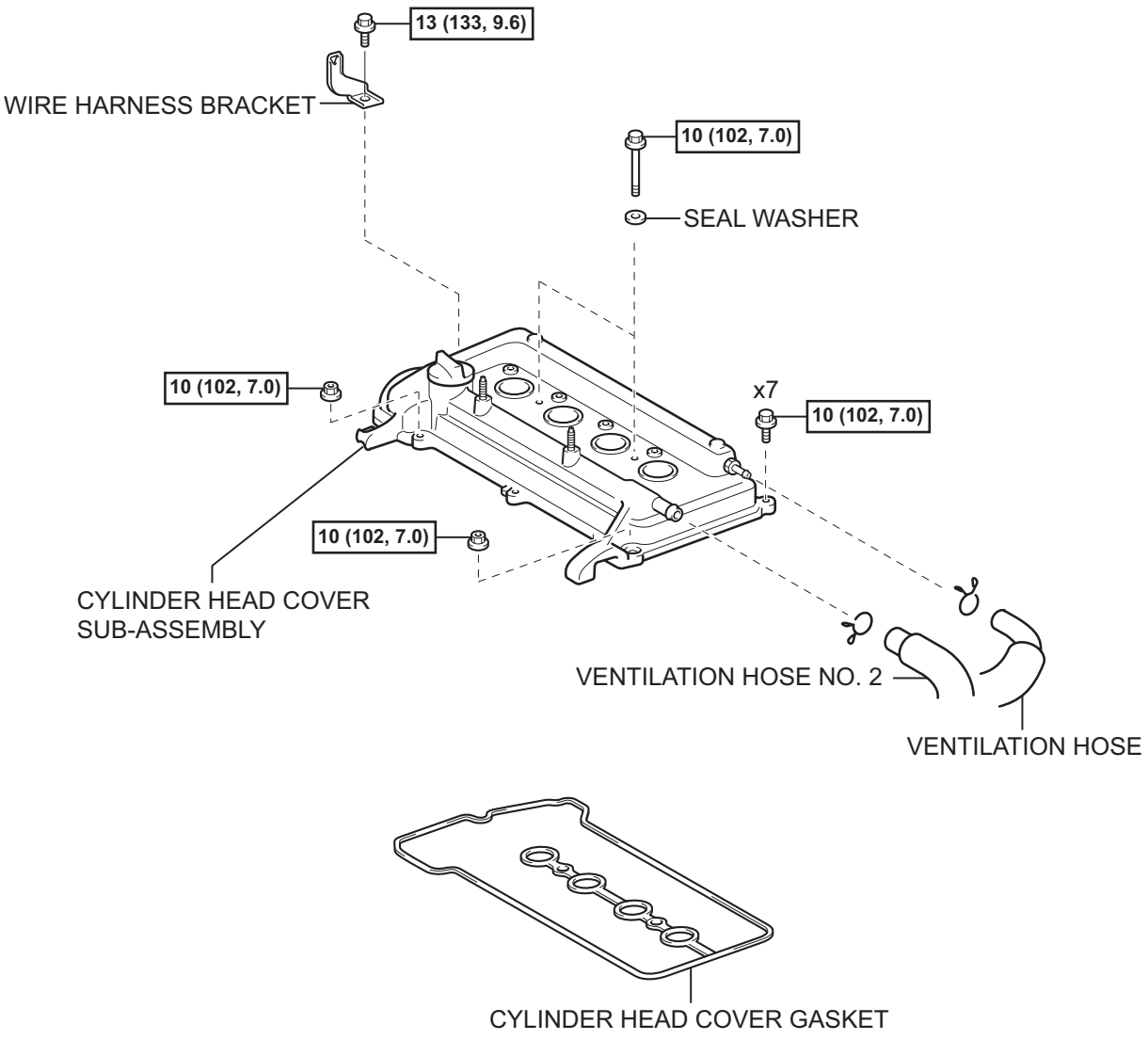

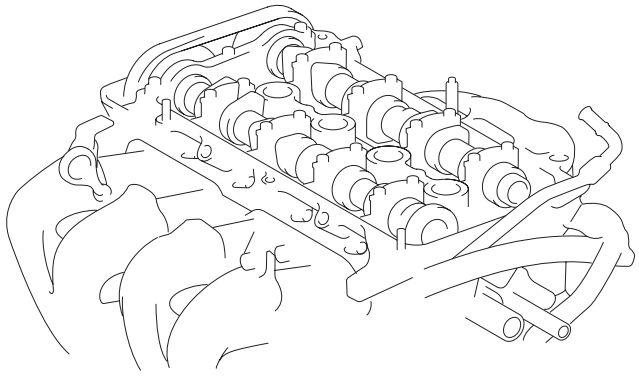

N*m (kgf*cm, ft.*lbf) : Specified torque

T

A115504E01

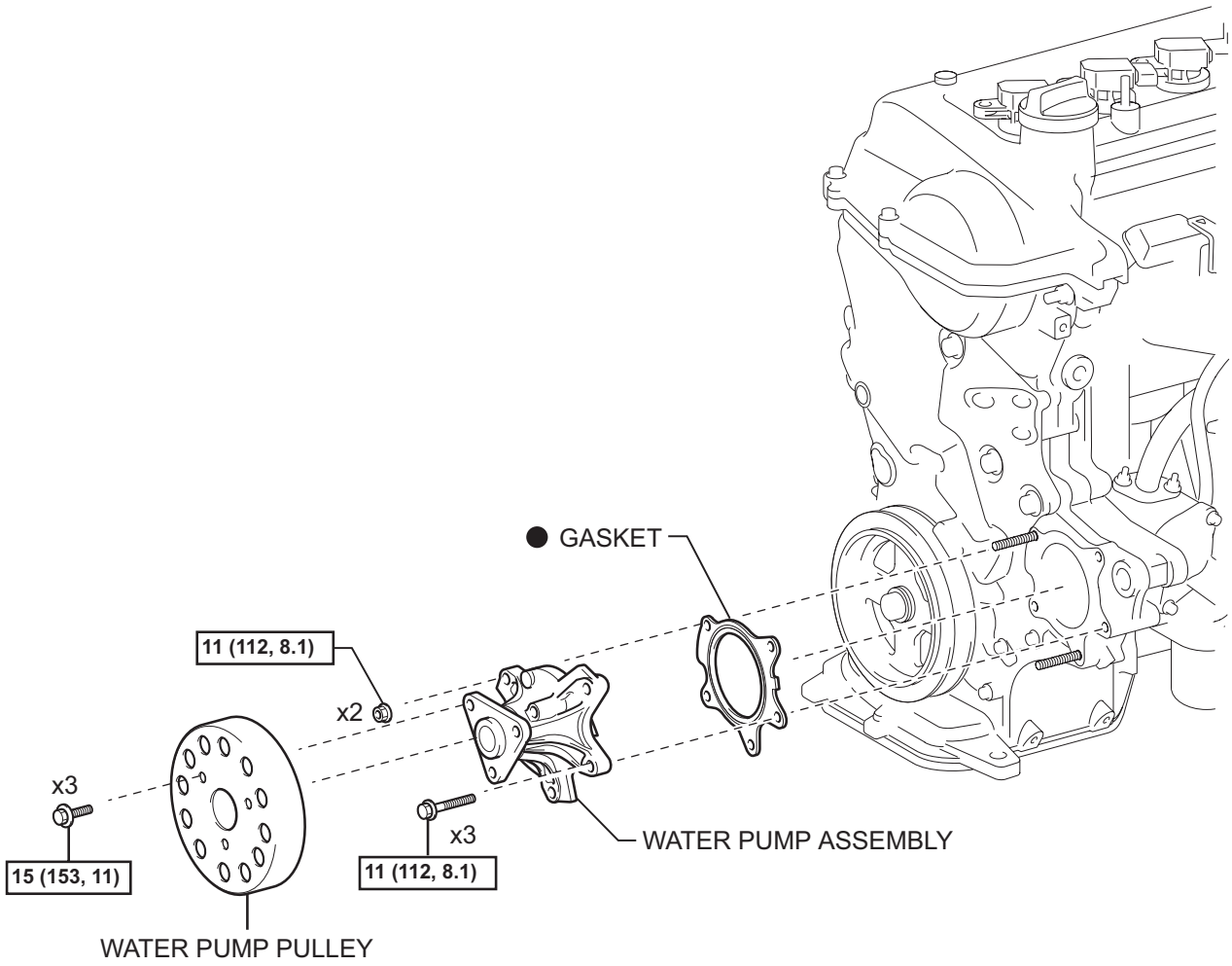

N*m (kgf*cm, ft.*lbf) : Specified torque

● Non-reusable part

T

A116194E01

EM

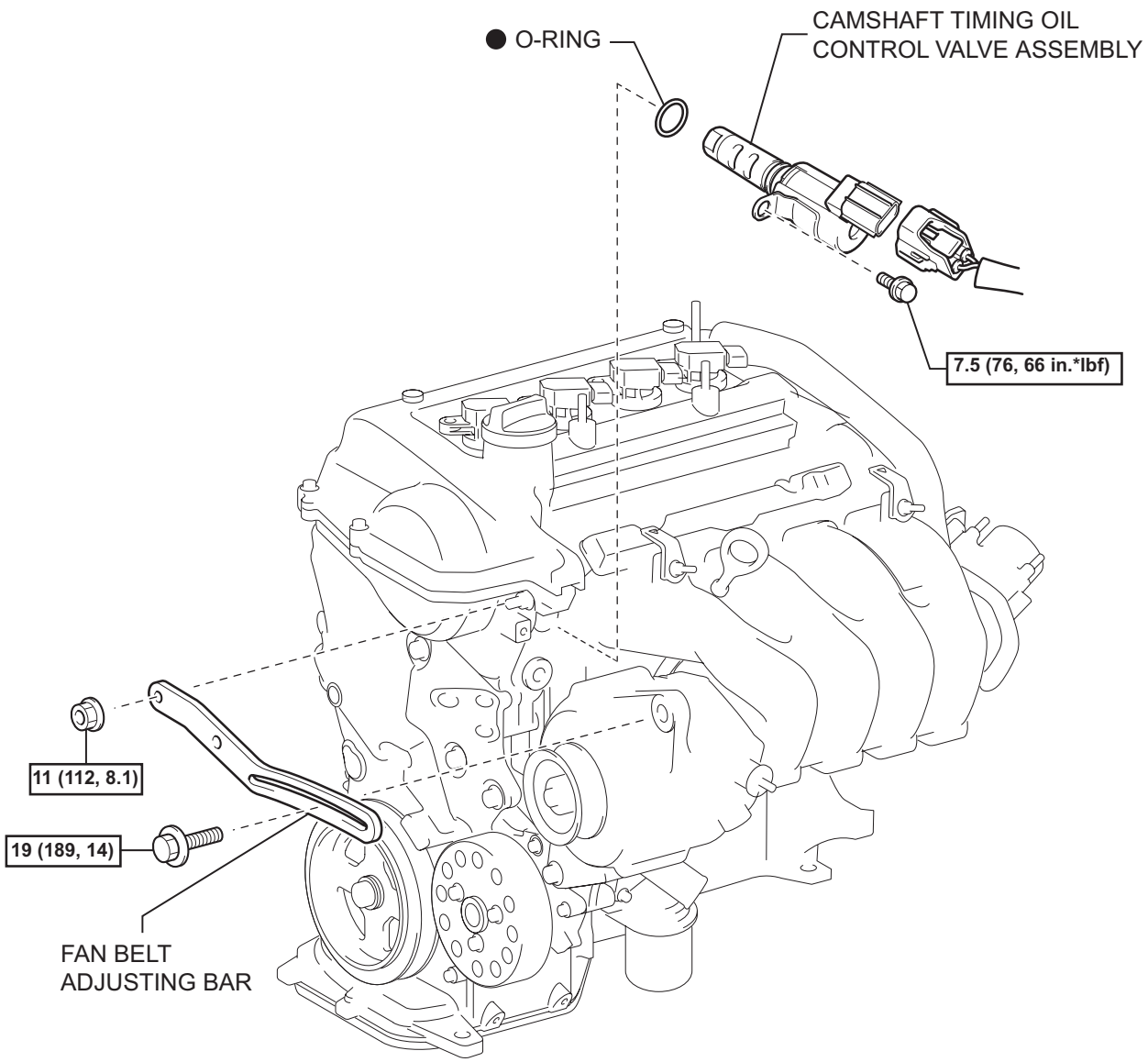

N*m (kgf*cm, ft.*lbf) : Specified torque

● Non-reusable part

T

A116180E01

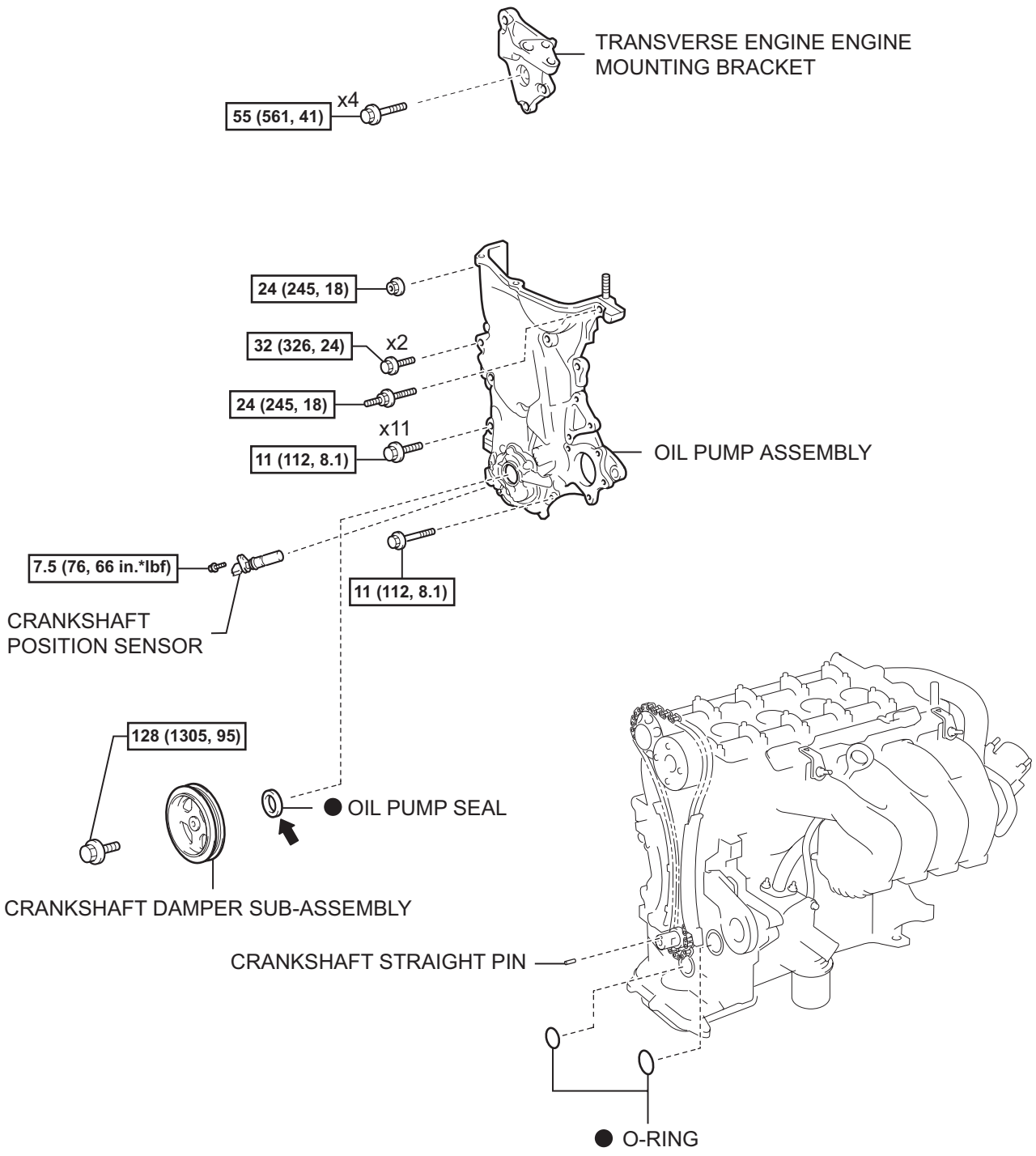

N*m (kgf*cm, ft.*lbf) : Specified torque

● Non-reusable part ⬅ Apply MP grease

T

A116559E01

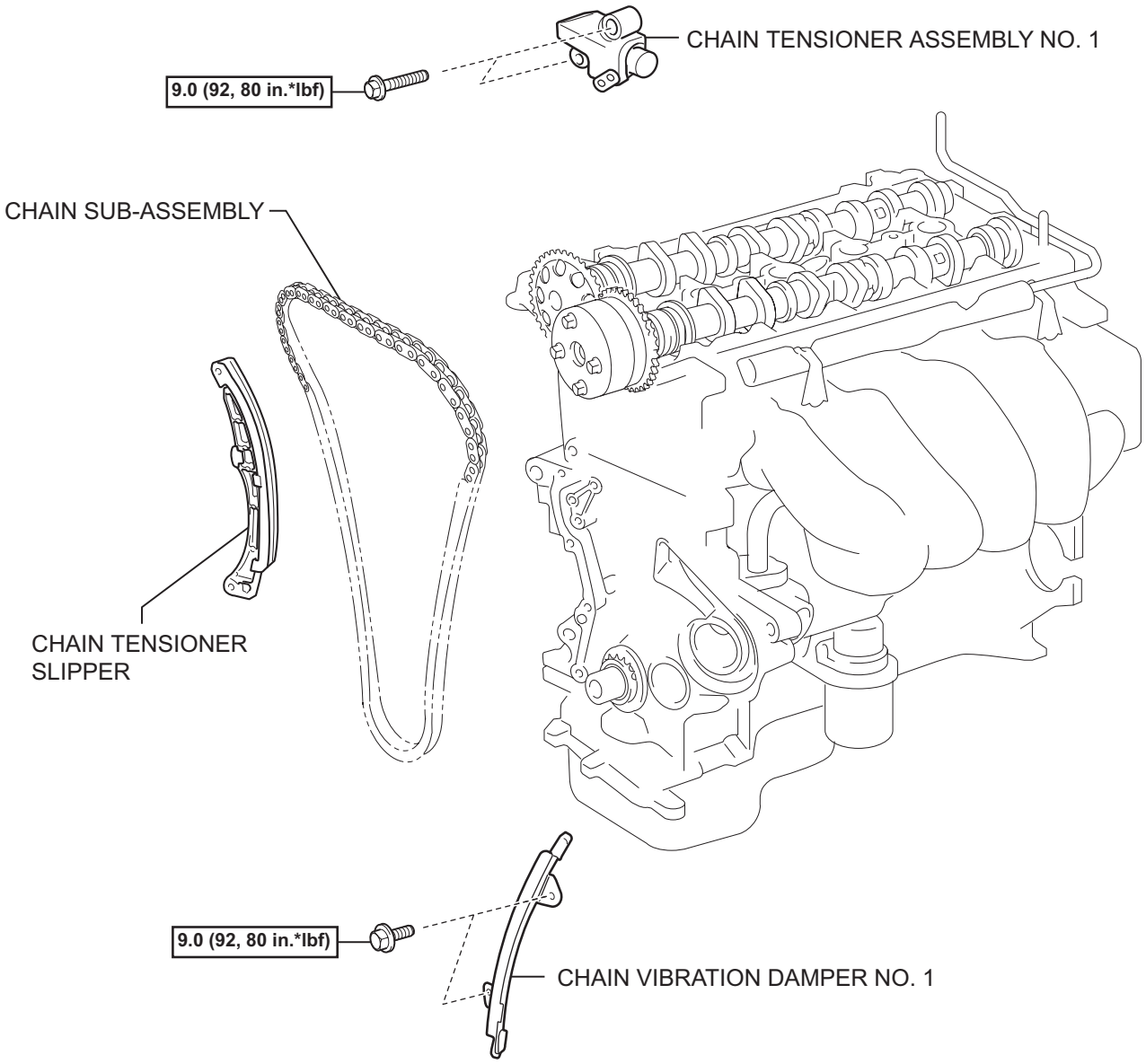

N*m (kgf*cm, ft.*lbf) : Specified torque

T

A116579E01

REMOVAL

1. DISCONNECT CABLE FROM NEGATIVE BATTERY TERMINAL
2. REMOVE FRONT WHEEL RH
3. REMOVE ENGINE UNDER COVER RH
4. DRAIN ENGINE OIL
5. DRAIN ENGINE COOLANT (See page CO-8)
6. REMOVE CYLINDER HEAD COVER NO. 2 (See page IG-9)
7. REMOVE FAN AND GENERATOR V BELT (See page EM-7)
8. REMOVE GENERATOR ASSEMBLY (See page CH-10)
9. REMOVE IGNITION COIL NO. 1 (See page IG-9)
10. DISCONNECT VENTILATION HOSE (See page FU-13)
11. DISCONNECT VENTILATION HOSE NO. 2 (See page FU-13)
12. REMOVE CYLINDER HEAD COVER SUB-ASSEMBLY (See page FU-13)
13. REMOVE ENGINE MOUNTING INSULATOR SUB-ASSEMBLY RH (See page LU-17)
14. REMOVE CRANKSHAFT DAMPER SUB-ASSEMBLY (See page LU-18)
15. REMOVE CRANKSHAFT POSITION SENSOR (See page ES-403)
16. REMOVE CAMSHAFT TIMING OIL CONTROL VALVE ASSEMBLY (See page ES-396)
17. REMOVE WATER PUMP PULLEY (See page CO-15)
18. REMOVE WATER PUMP ASSEMBLY (See page CO-15)
19. REMOVE TRANSVERSE ENGINE ENGINE MOUNTING BRACKET (See page LU-18)
20. REMOVE OIL PUMP ASSEMBLY (See page LU-19)
21. REMOVE OIL PUMP SEAL (See page LU-21)
22. REMOVE CHAIN TENSIONER ASSEMBLY NO. 1
    NOTICE:
    - Do not rotate the crankshaft with the chain tensioner removed.
    - When rotating the camshaft with the timing chain removed, rotate the crankshaft counterclockwise 40° from the TDC first.

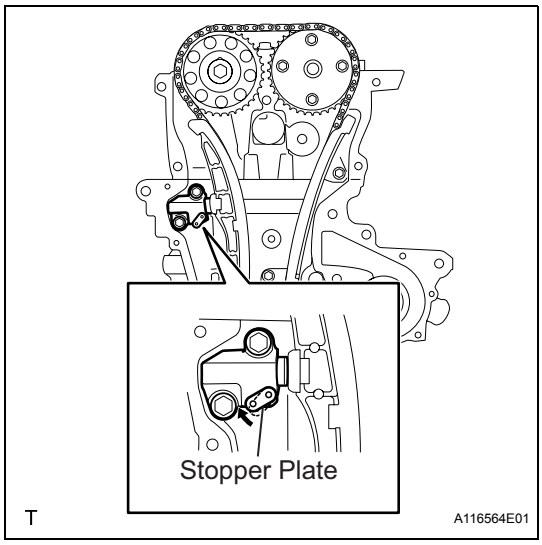

(a) Pull up the stopper plate and hold it with its lock released.

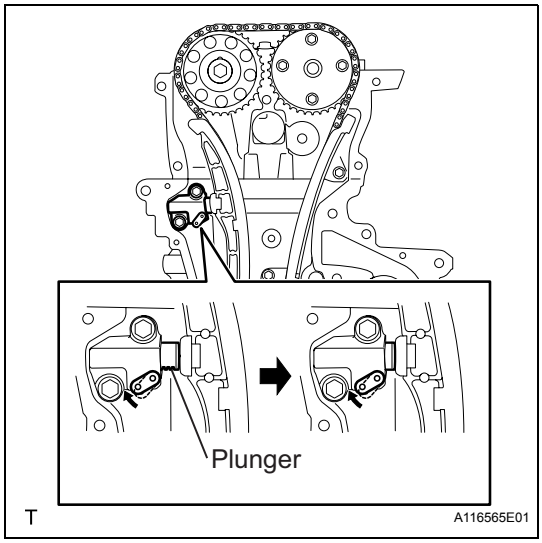

(b) Unlock the plunger of the tensioner and push it in to the end.

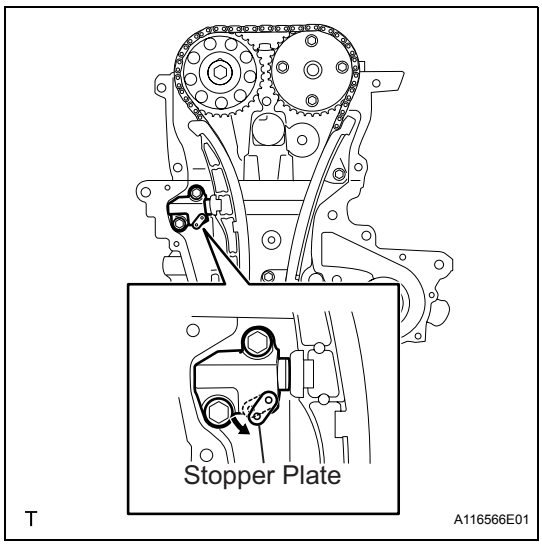

(c) Pull down the stopper plate with the plunger pushed to the end and lock the plunger.

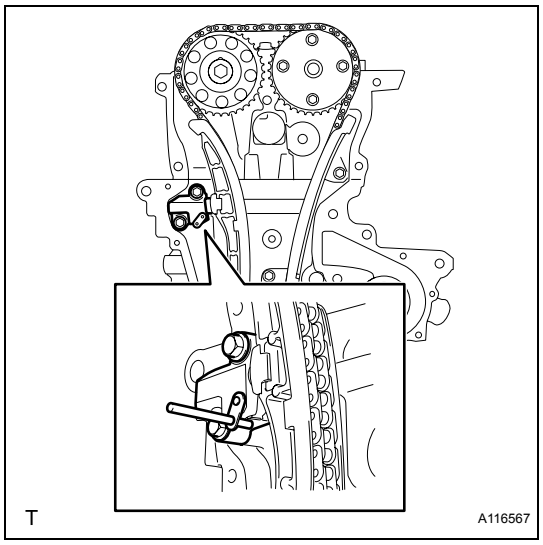

(d) Insert a 3 mm (0.12 in.) diameter bar into the hole in the stopper plate and lock the plunger.

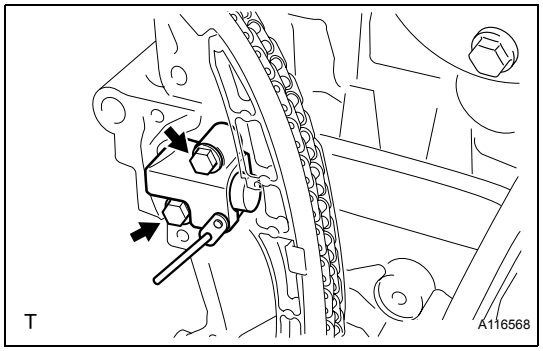

(e) Remove the 2 bolts and remove chain tensioner assembly No. 1.

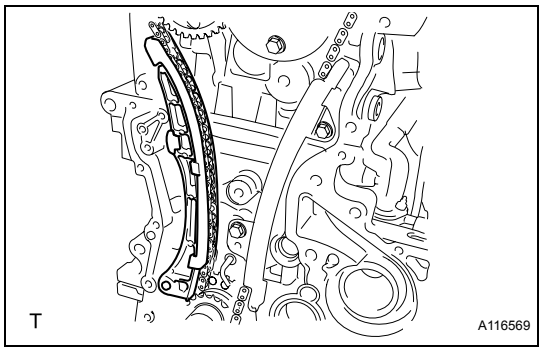

23. REMOVE CHAIN TENSIONER SLIPPER

(a) Remove the chain tensioner slipper.

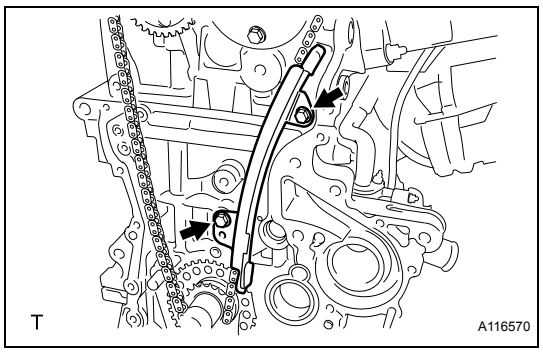

24. REMOVE CHAIN VIBRATION DAMPER NO. 1

(a) Remove the 2 bolts and remove chain vibration damper No. 1.

25. REMOVE CHAIN SUB-ASSEMBLY

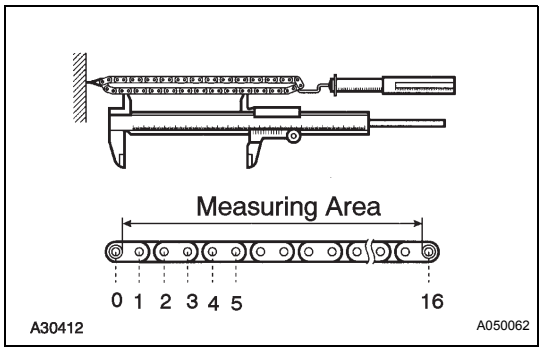

INSPECTION

1. INSPECT CHAIN SUB-ASSEMBLY

(a) Using a spring scale, apply 140 N (14.3 kgf, 31.5 lb) to the timing chain and measure its length.

Maximum chain elongation:

123.2 mm (4.850 in.)

If the elongation is greater than the maximum, replace the chain.

HINT:

Perform the same measurement at 3 or more random places and calculate the average length.

INSTALLATION

1. INSTALL CHAIN SUB-ASSEMBLY

(a) Make sure that all the timing marks are in the positions (TDC) shown in the illustration.

HINT:

The positions of the timing marks may differ from the predetermined positions due to the force of the valve spring.

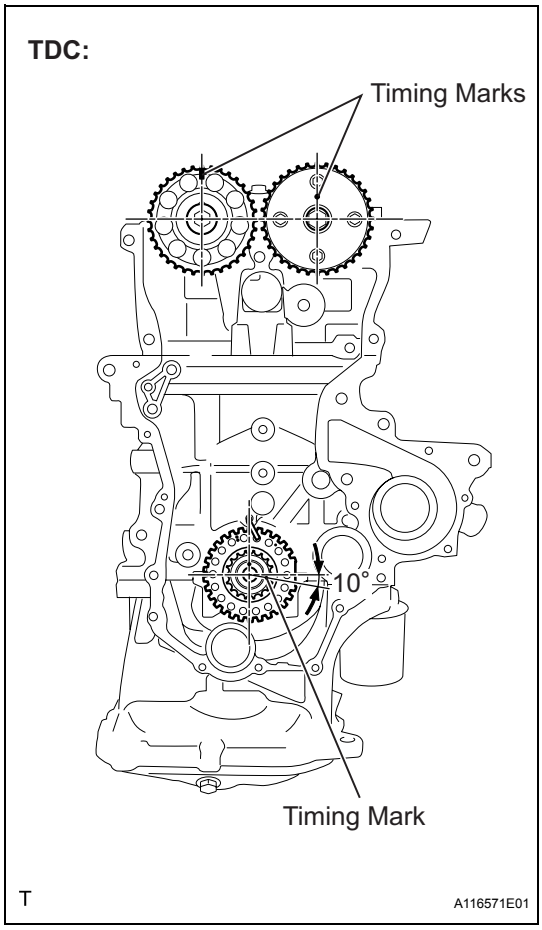

(b) Set the timing mark of the crankshaft in a position between 40 and 140°ATDC as illustrated.

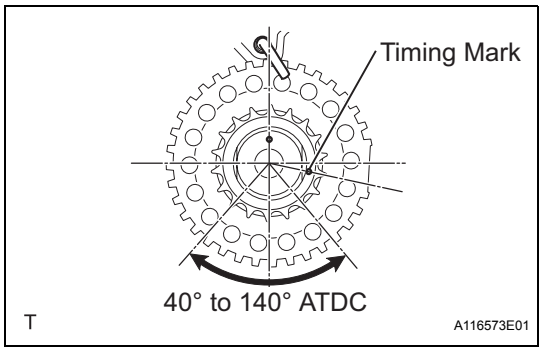

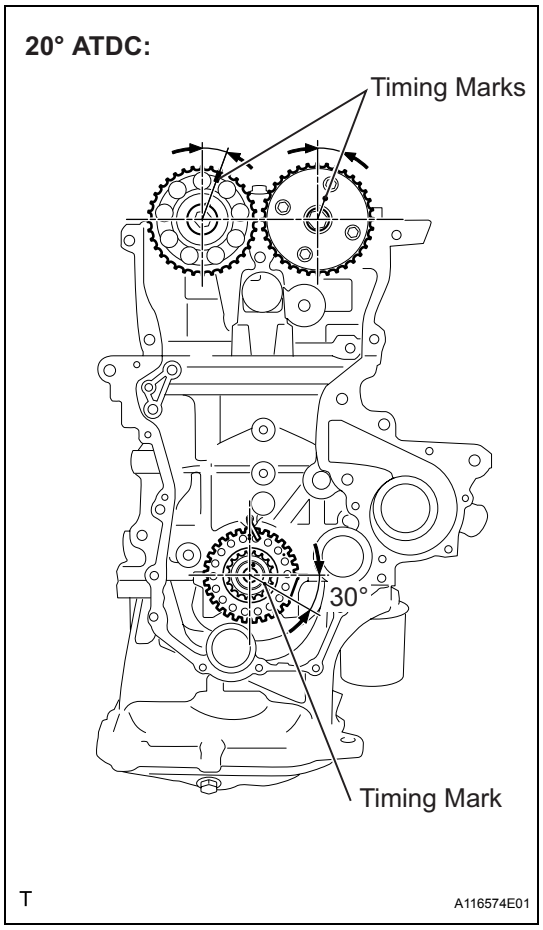

(c) Set the camshaft timing gear and the camshaft timing sprocket in the positions (20°ATDC) shown in the illustration.

(d) Set the crankshaft in the position (20°ATDC) shown in the illustration.

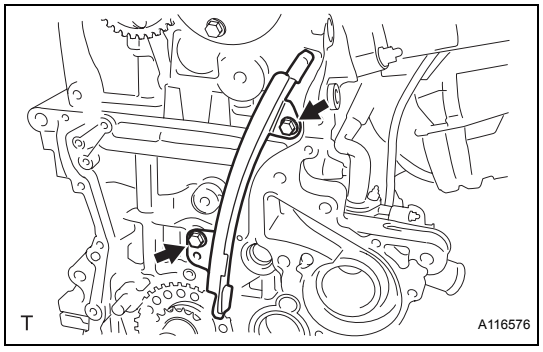

(e) Install chain vibration damper No. 1 with the 2 bolts.
Torque: 9.0 N*m (92 kgf*cm, 80 in.*lbf)

EM

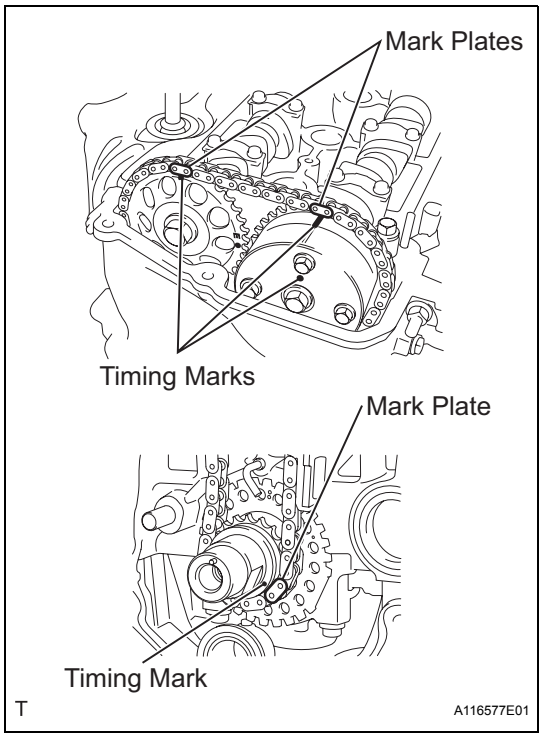

(f) Align the timing marks of the camshaft with the mark plates of the timing chain and install the timing chain.
HINT:
Align the timing marks with the mark plates while turning the hexagonal service portion of the camshaft using a wrench.

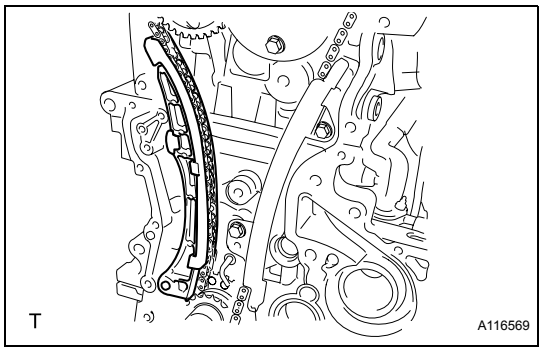

2. INSTALL CHAIN TENSIONER SLIPPER
(a) Install the chain tensioner slipper.

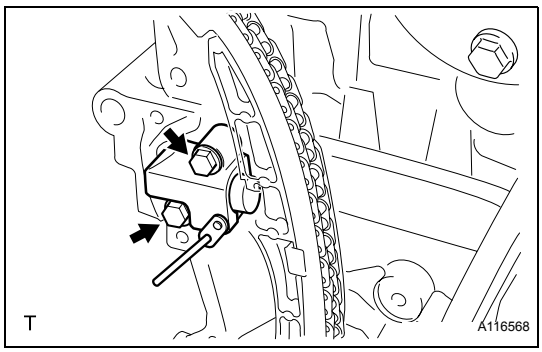

3. INSTALL CHAIN TENSIONER ASSEMBLY NO. 1
(a) Install chain tensioner assembly No. 1 with the 2 bolts.
Torque: 9.0 N*m (92 kgf*cm, 80 in.*lbf)
(b) Remove the bar from chain tensioner assembly No. 1.

4. INSTALL OIL PUMP SEAL (See page LU-21)

5. INSTALL OIL PUMP ASSEMBLY (See page LU-22)

6. INSTALL TRANSVERSE ENGINE ENGINE MOUNTING BRACKET (See page LU-26)

7. INSTALL WATER PUMP ASSEMBLY (See page CO-16)

8. INSTALL WATER PUMP PULLEY (See page CO-16)

9. INSTALL CAMSHAFT TIMING OIL CONTROL VALVE ASSEMBLY (See page ES-397)

10. INSTALL CRANKSHAFT POSITION SENSOR (See page ES-403)

11. INSTALL CRANKSHAFT DAMPER SUB-ASSEMBLY (See page LU-26)
12. INSTALL ENGINE MOUNTING INSULATOR SUB-ASSEMBLY RH (See page LU-26)
13. INSTALL CYLINDER HEAD COVER SUB-ASSEMBLY (See page FU-19)
14. CONNECT VENTILATION HOSE NO. 2 (See page FU-20)
15. CONNECT VENTILATION HOSE (See page FU-20)
16. INSTALL IGNITION COIL NO. 1 (See page IG-9)
17. INSTALL GENERATOR ASSEMBLY (See page CH-17)
18. INSTALL FAN AND GENERATOR V BELT (See page EM-7)
19. ADJUST FAN AND GENERATOR V BELT (See page EM-7)
20. INSPECT FAN AND GENERATOR V BELT (See page EM-8)
21. CONNECT CABLE TO NEGATIVE BATTERY TERMINAL
    Torque: 5.4 N*m (55 kgf*cm, 48 in.*lbf)
22. ADD ENGINE OIL
23. ADD ENGINE COOLANT (See page CO-8)
24. CHECK ENGINE OIL LEVEL (See page LU-1)
25. CHECK FOR ENGINE OIL LEAKAGE
26. CHECK FOR ENGINE COOLANT LEAKAGE (See page CO-1)
27. INSTALL CYLINDER HEAD COVER NO. 2 (See page IG-10)
28. INSTALL ENGINE UNDER COVER RH
29. INSTALL FRONT WHEEL RH
    Torque: 103 N*m (1050 kgf*cm, 76 ft.*lbf)

CAMSHAFT

COMPONENTS

EM

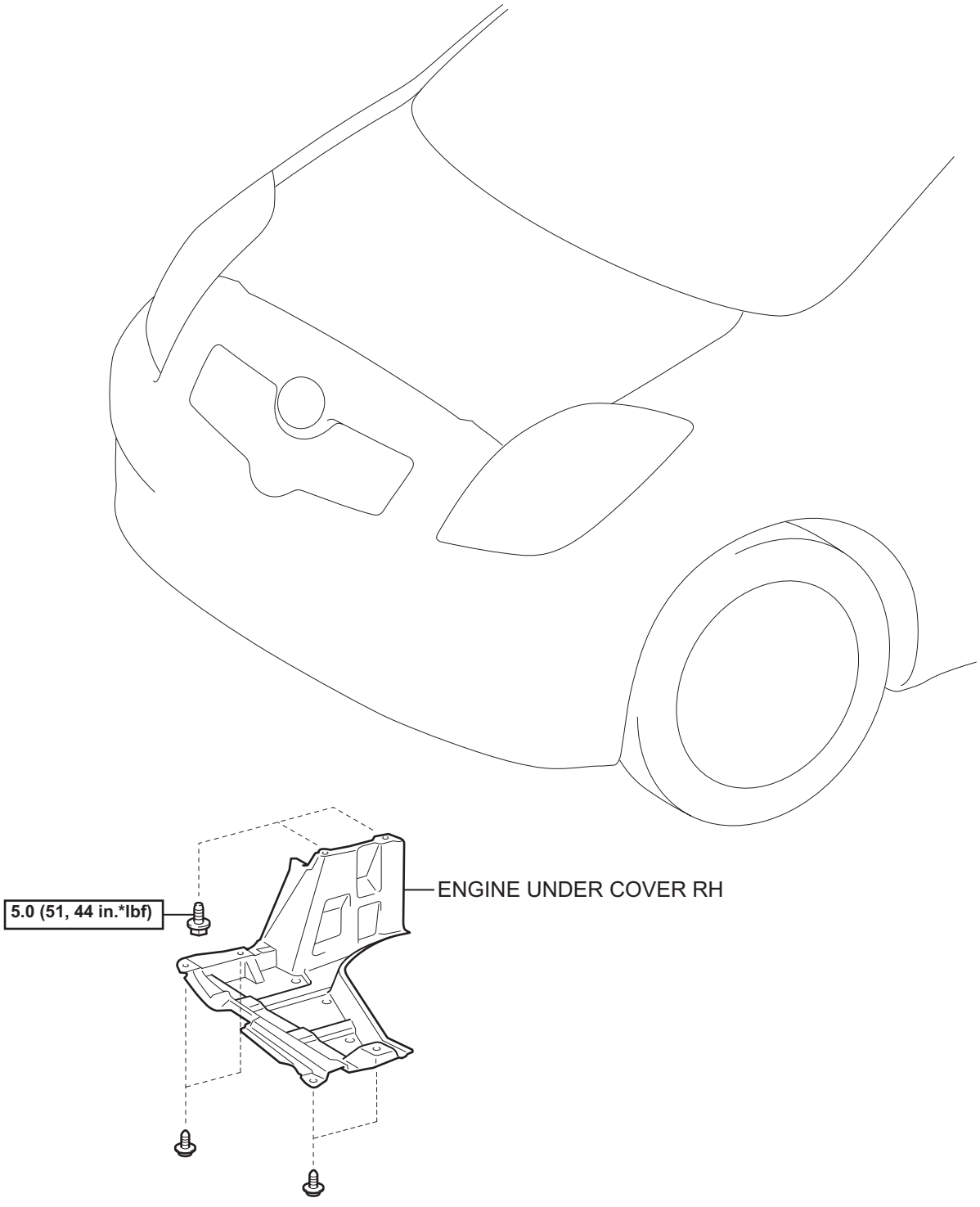

N*m (kgf*cm, ft.*lbf) : Specified torque

T

A115143E01

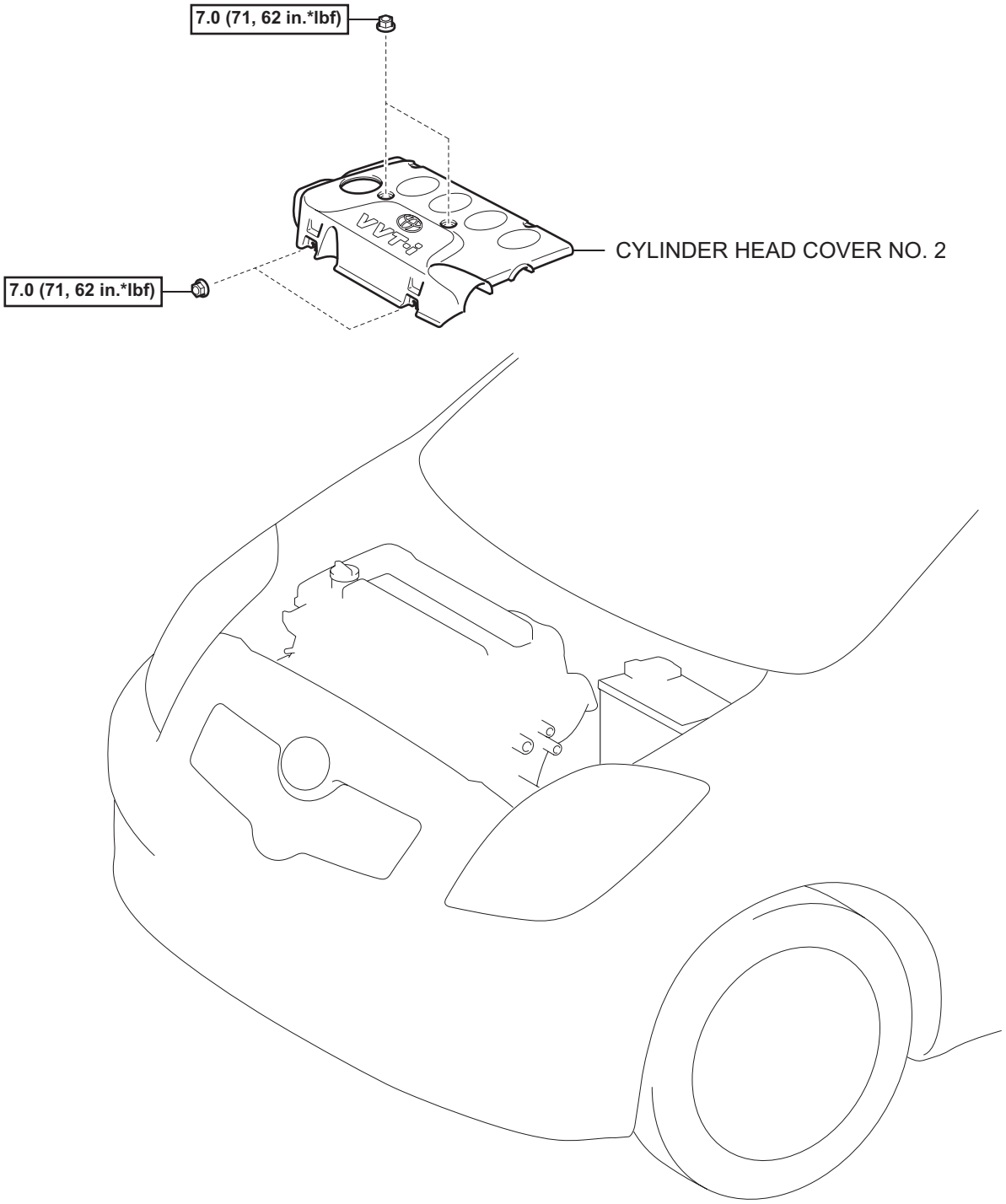

N*m (kgf*cm, ft.*lbf) : Specified torque

T

A115136E01

EM

for Hatchback:

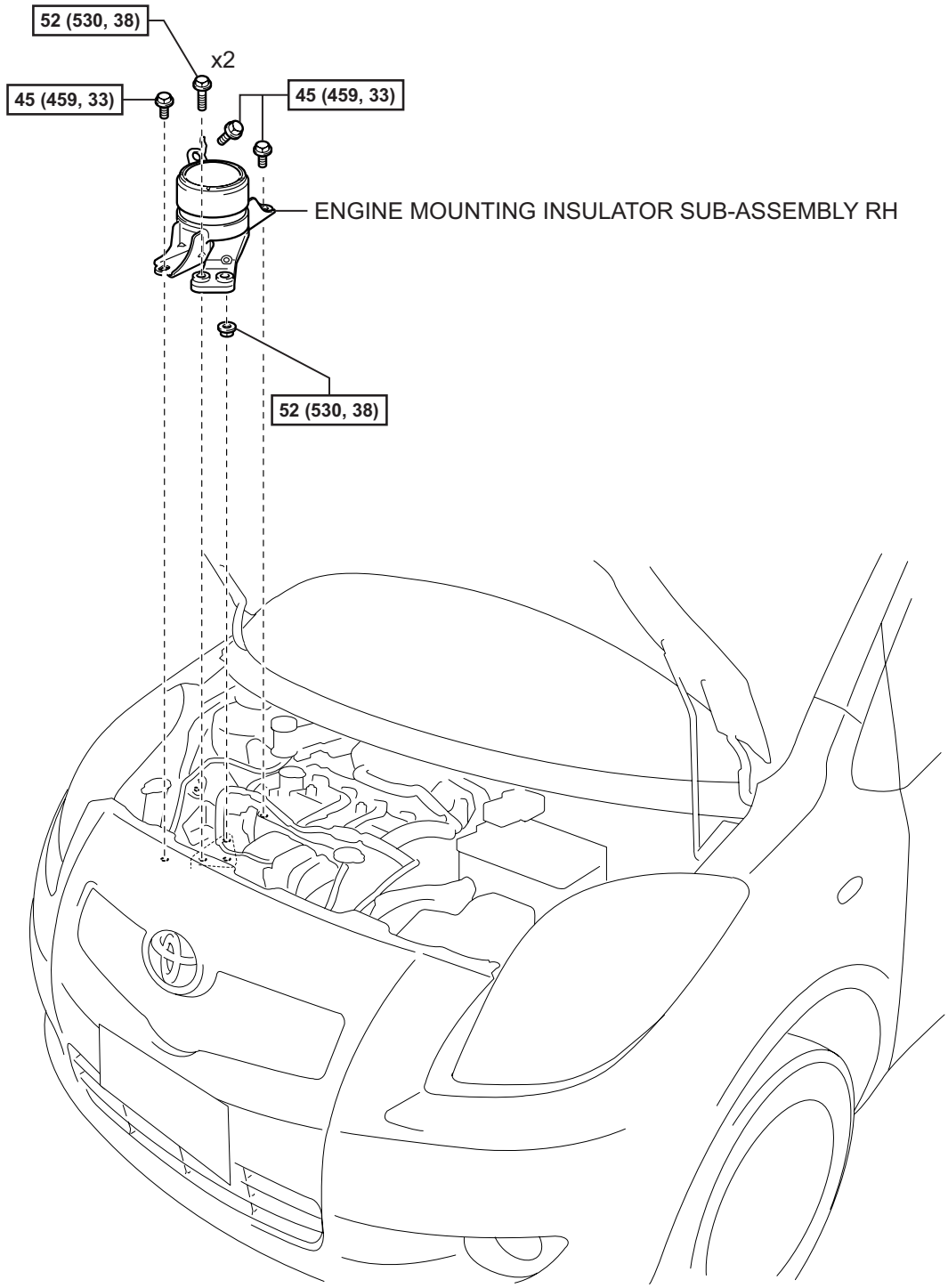

N*m (kgf*cm, ft.*lbf) : Specified torque

T

A116232E04

for Sedan:

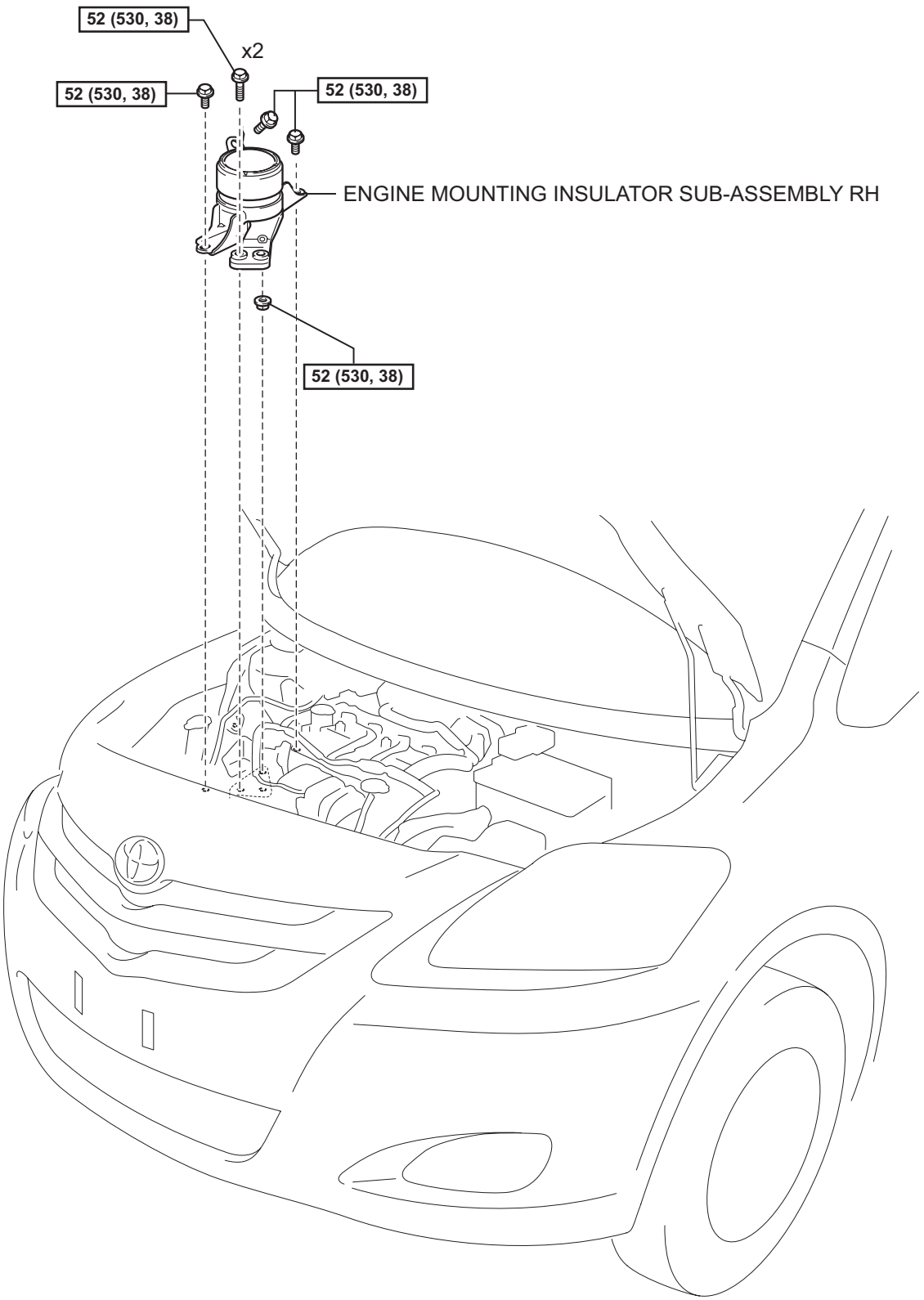

EM

N*m (kgf*cm, ft*lbf) : Specified torque

T

A133595E01

EM

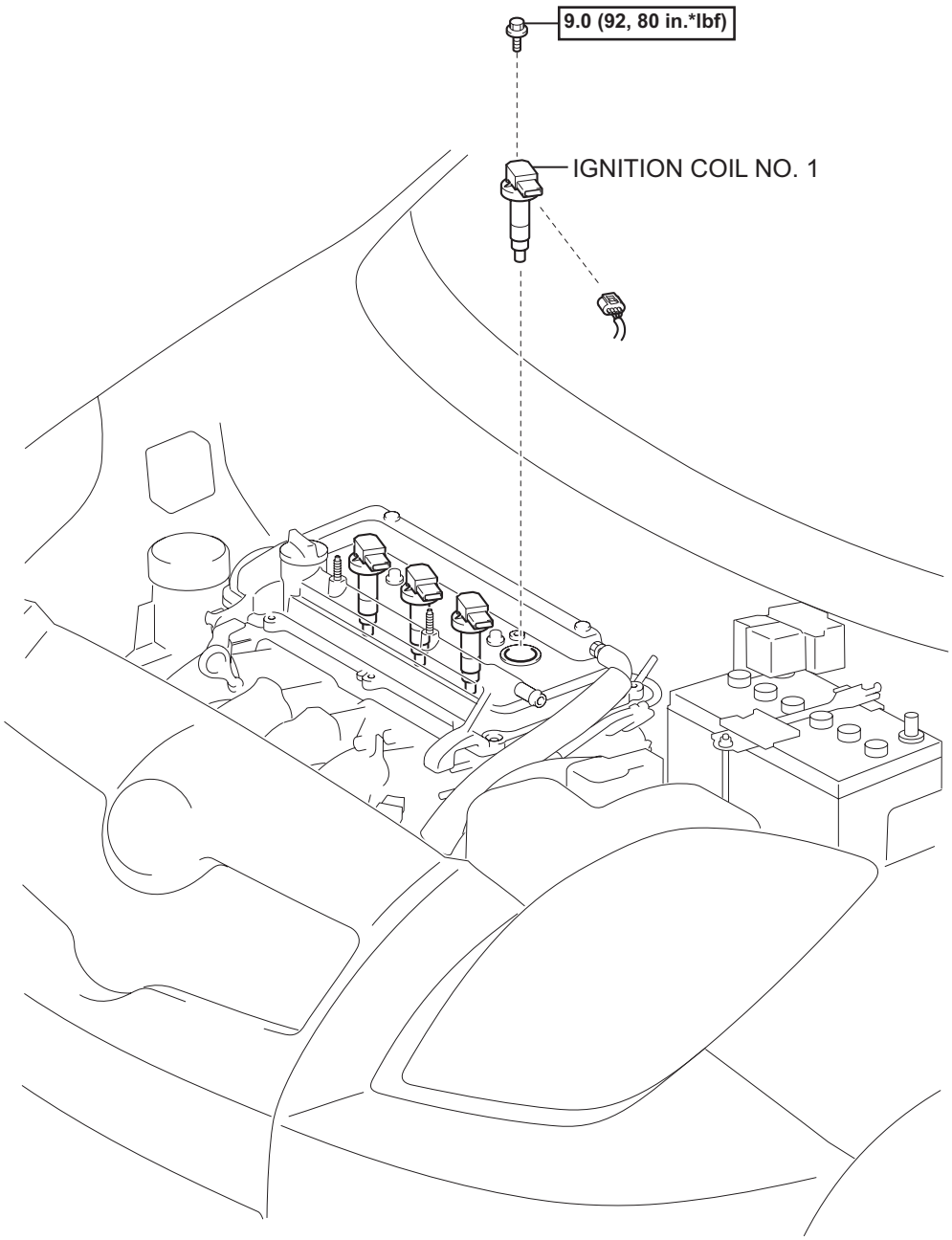

N*m (kgf*cm, ft.*lbf) : Specified torque

T

A115486E01

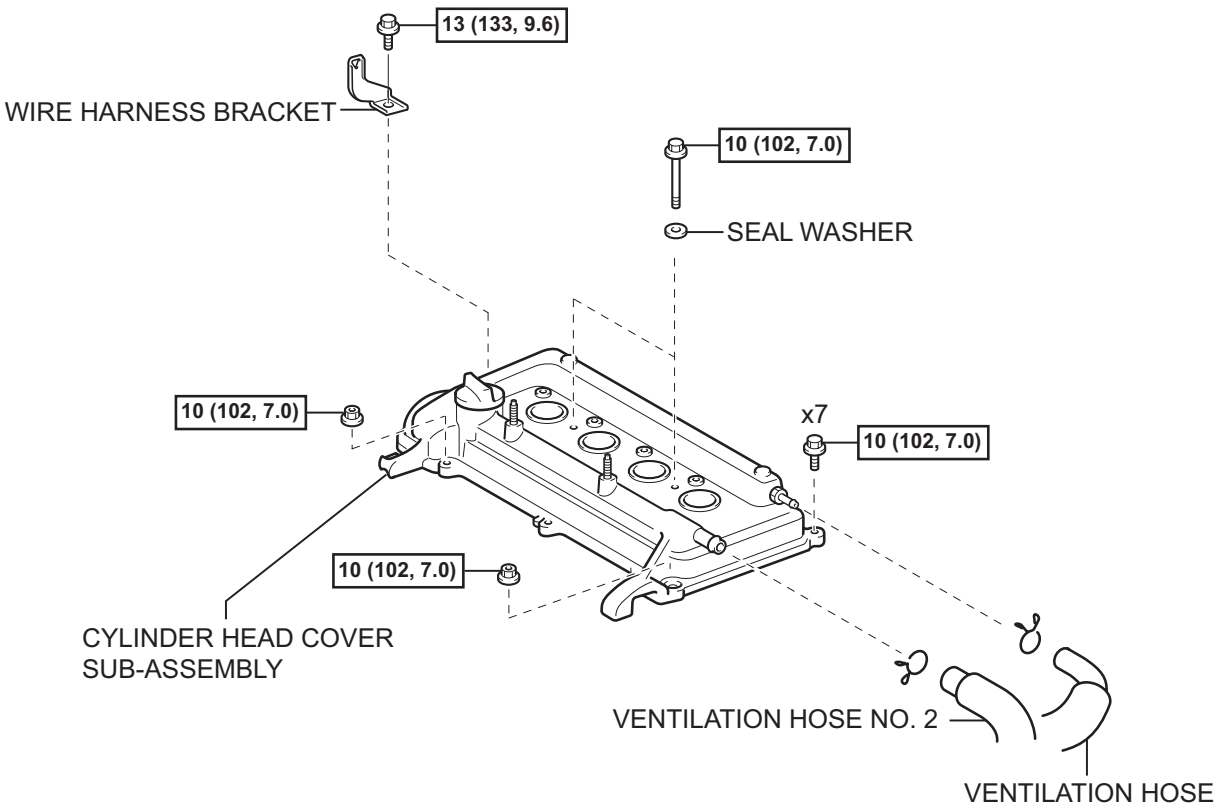

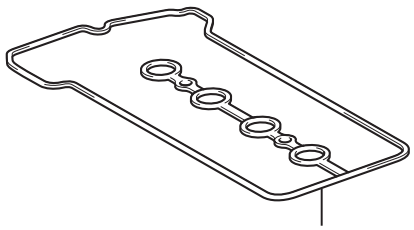

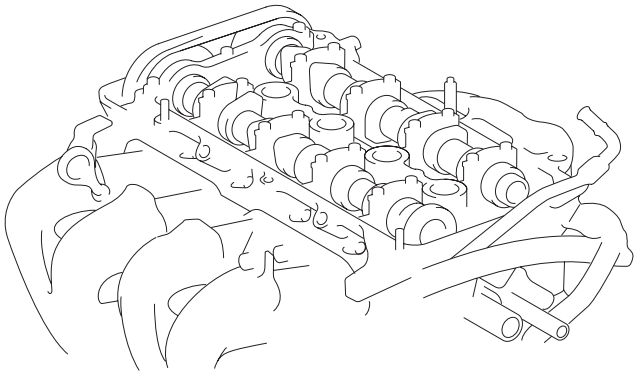

N*m (kgf*cm, ft.*lbf) : Specified torque

T

A115504E01

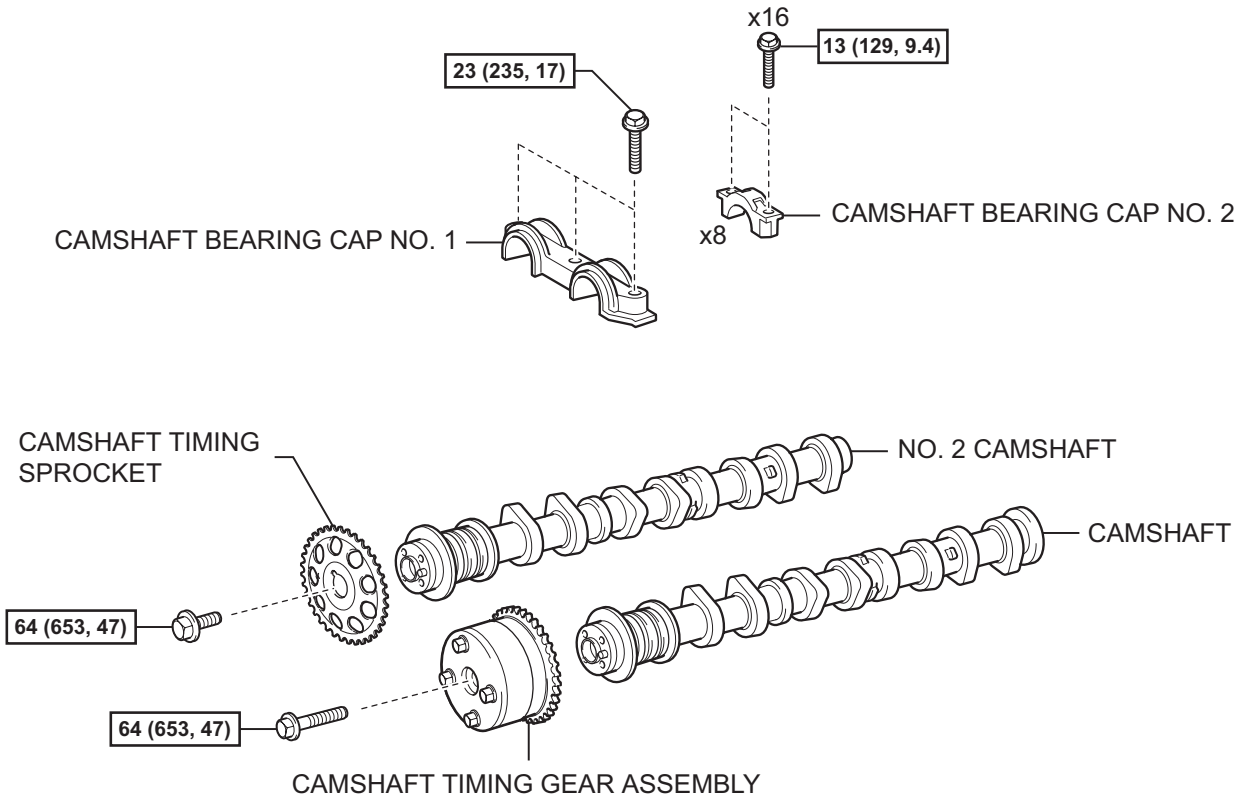

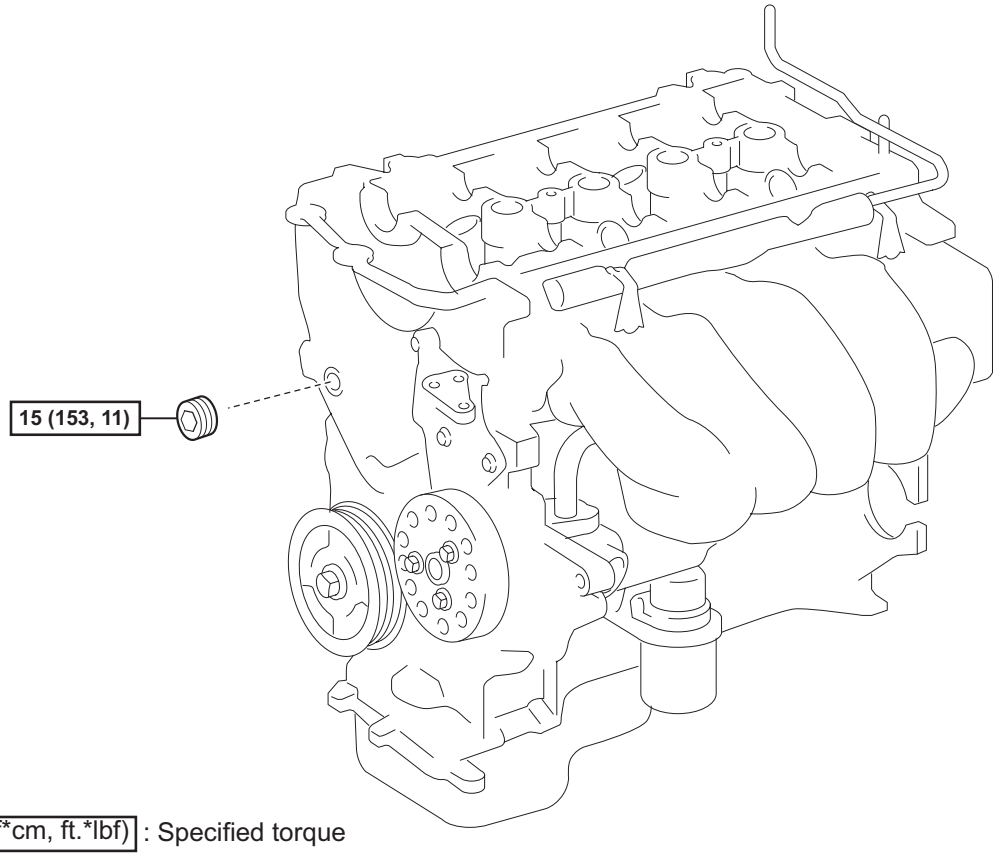

N*m (kgf*cm, ft.*lbf) : Specified torque

T

A116233E02

REMOVAL

1. **DISCONNECT CABLE FROM NEGATIVE BATTERY TERMINAL**
2. **REMOVE ENGINE UNDER COVER RH**
3. **REMOVE CYLINDER HEAD COVER NO. 2 (See page IG-9)**
4. **REMOVE IGNITION COIL NO. 1 (See page IG-9)**
5. **DISCONNECT VENTILATION HOSE (See page FU-13)**
6. **DISCONNECT VENTILATION HOSE NO. 2 (See page FU-13)**
7. **REMOVE CYLINDER HEAD COVER SUB-ASSEMBLY (See page FU-13)**
8. **REMOVE FAN AND GENERATOR V BELT (See page EM-7)**
9. **REMOVE ENGINE MOUNTING INSULATOR SUB-ASSEMBLY RH (See page LU-17)**
10. **REMOVE NO. 2 CAMSHAFT**

NOTICE:
When rotating the camshaft with the timing chain removed, rotate the crankshaft damper counterclockwise 40 ° from the TDC and align its timing notch with the matchmark of the timing chain cover to prevent the pistons from coming into contact with the valves.

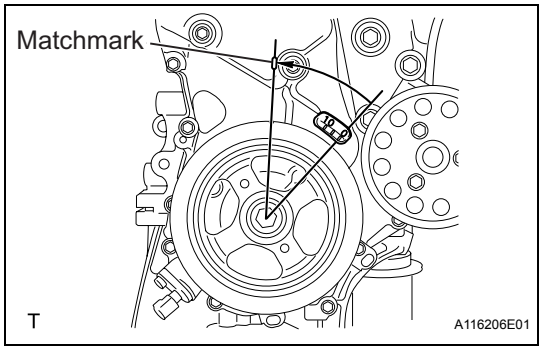

(a) Set the No. 1 cylinder to TDC / compression.
  (1) Turn the crankshaft damper, and align its timing notch with the timing mark "0" of the oil pump.

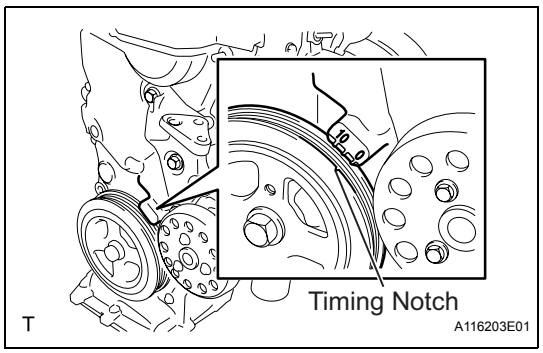

  (2) Check that the timing marks on both the camshaft timing sprocket and the camshaft timing gear are facing upward, as shown in the illustration.
  HINT:
  If not, turn the crankshaft 1 complete revolution (360°) and align the marks as above.

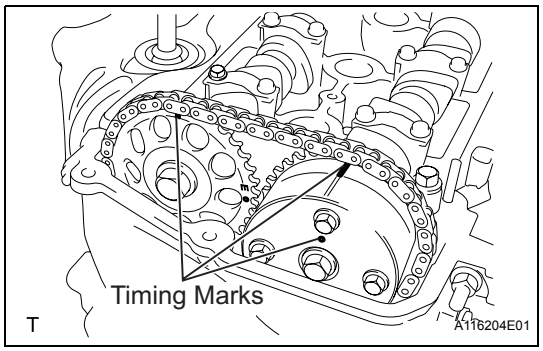

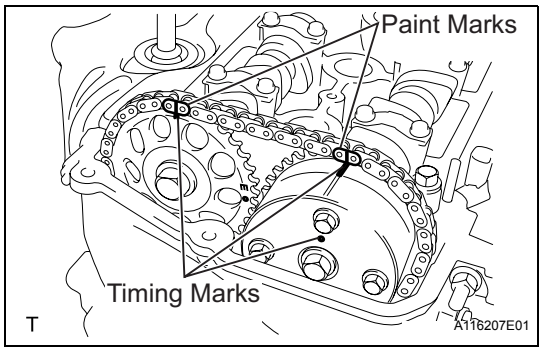

(b) Place paint marks on the chain in the places where the timing marks of the camshaft timing sprocket and the camshaft timing gear are located.

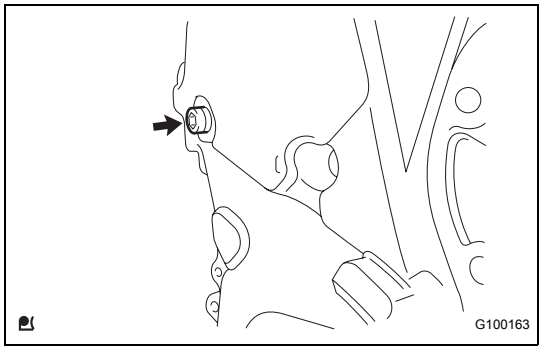

(c) Using an 8 mm hexagon wrench, remove the screw plug.

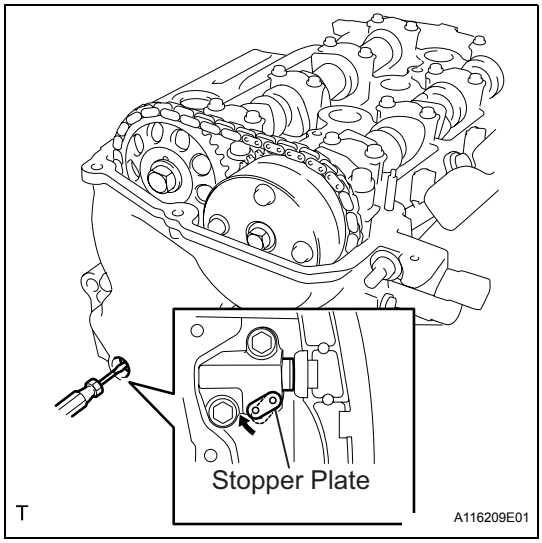

(d) Insert a screwdriver into the service hole in the chain tensioner to pull the stopper plate of the chain tensioner upward.

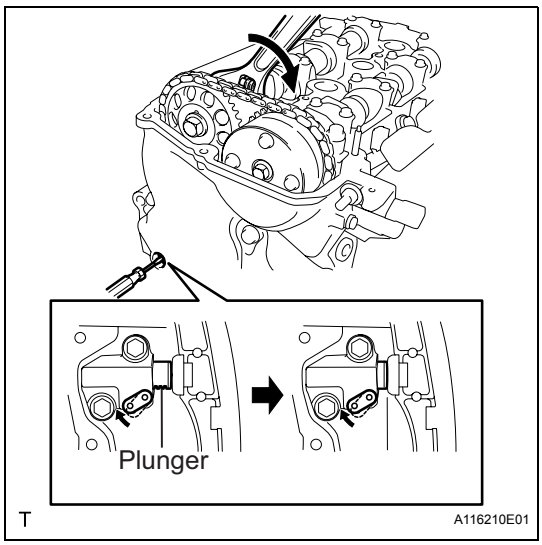

(e) Using a wrench, rotate camshaft No. 2 clockwise to push in the plunger of the chain tensioner.

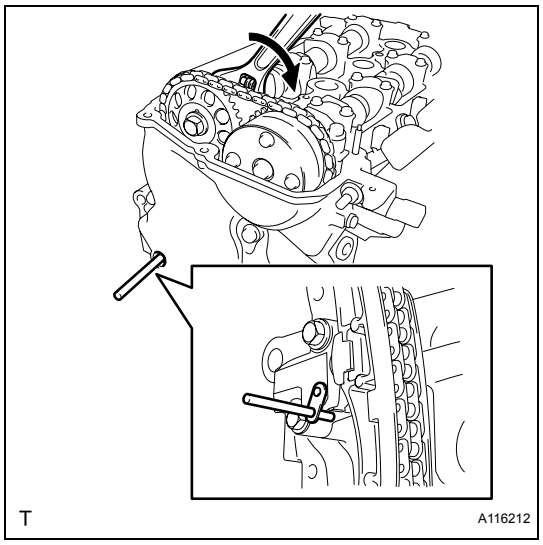

(f) Remove the screwdriver from the service hole, then align the hole in the stopper plate with the service hole and insert a 3 mm (0.12 in.) diameter bar into the holes to hold the stopper plate.
HINT:
- Fix the stopper plate using the bar while rotating the camshaft right and left slightly.
- Hold the bar with tape so that it does not come off.

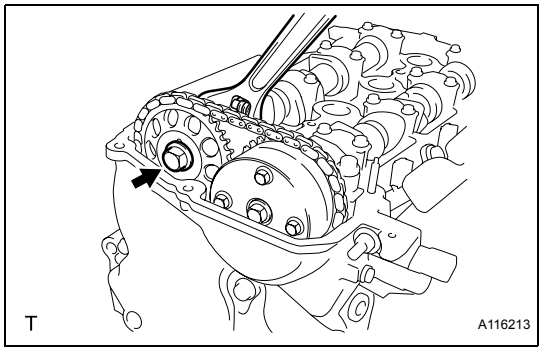

(g) Using a wrench, hold the hexagonal lobe of camshaft No. 2 and remove the flange bolt.

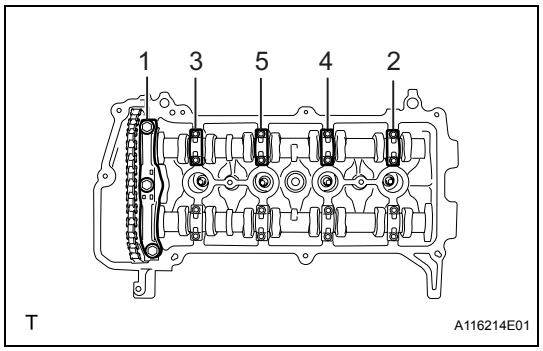

(h) Using several steps, loosen and remove the 11 bearing cap bolts uniformly in the sequence shown in the illustration, then remove camshaft bearing caps No. 1 and No. 2.
NOTICE:
Loosen the bolts uniformly while keeping the camshaft level.

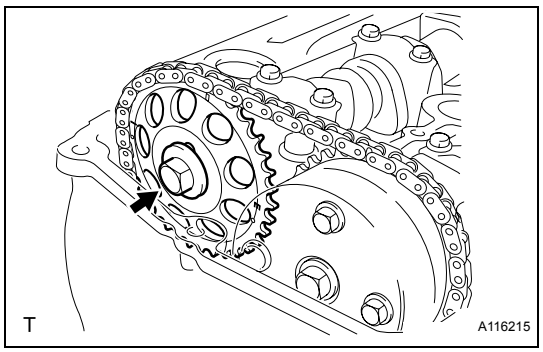

(i) Remove the flange bolt and remove the camshaft timing sprocket.

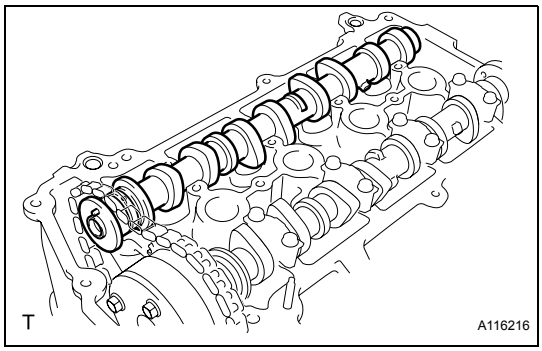

(j) Remove camshaft No. 2.

11. REMOVE CAMSHAFT

(a) Using several steps, loosen and remove the 8 bearing cap bolts uniformly in the sequence shown in the illustration, then remove camshaft bearing cap No. 2.

NOTICE:
Loosen each bolt uniformly while keeping the camshaft level.

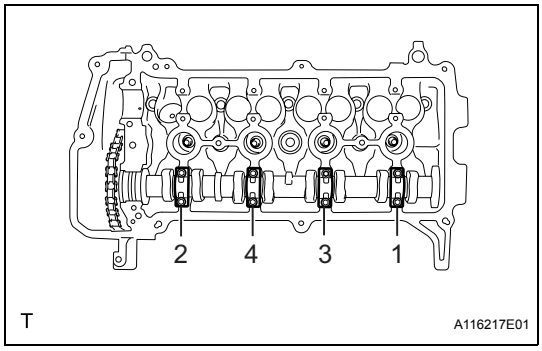

(b) Hold the chain by hand, and remove the camshaft and the camshaft timing gear assembly.

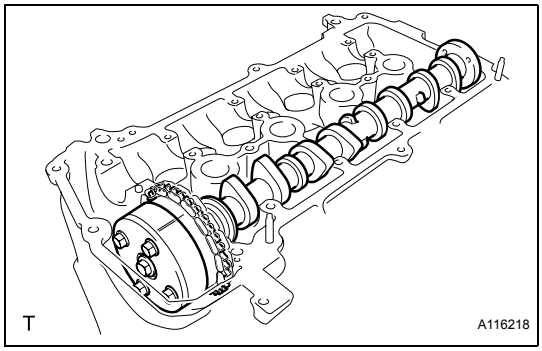

(c) Tie the chain with a piece of string as shown in the illustration.

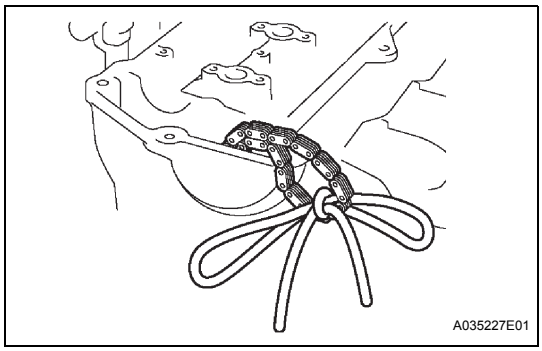

12. REMOVE CAMSHAFT TIMING GEAR ASSEMBLY

(a) Clamp the camshaft in a vise and confirm that it is locked.

NOTICE:
Do not damage the camshaft.

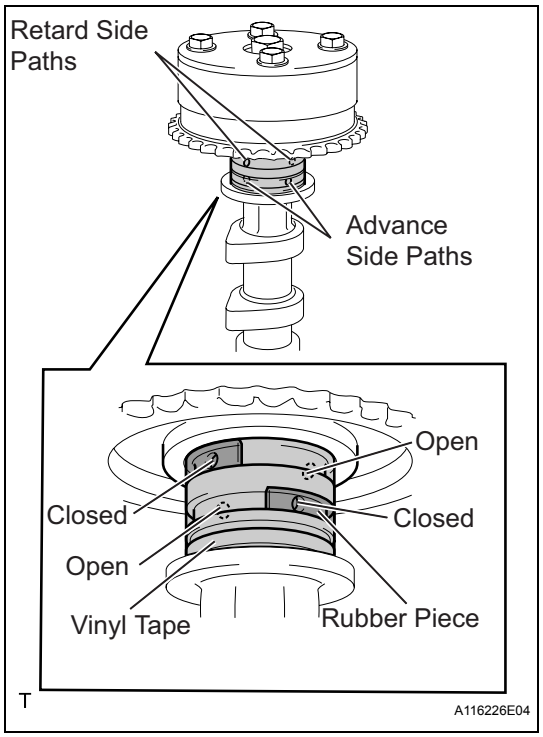

(b) Cover the 4 oil paths of the cam journal with tape as shown in the illustration.
HINT:
One of the 2 grooves located on the cam journal is for retarding cam timing (upper) and the other is for advancing cam timing (lower). Each groove has 2 oil paths. Plug one of the oil paths for each groove with a piece of rubber before wrapping the cam journal with the tape.

(c) Puncture the tape covering the advance oil path and the retard oil path on the opposite side from the advance oil path.

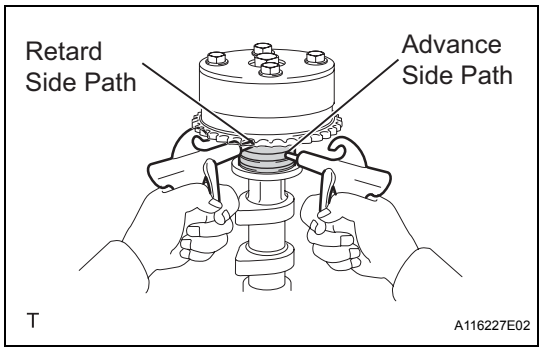

(d) Apply air at about 150 kPa (1.5 kgf*cm^2) pressure into the 2 broken paths (the advance side path and the retard side path).
NOTICE:
Cover the paths with a shop rag or piece of cloth to prevent oil splashes.

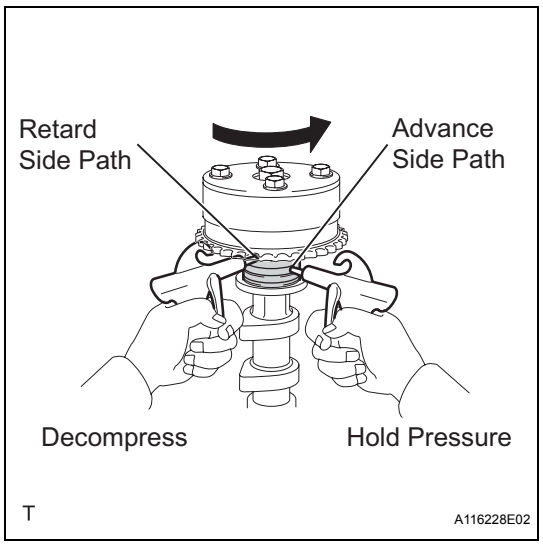

(e) Confirm that the camshaft timing gear assembly revolves in the timing advance direction when the air pressure on the timing retard path is reduced.
HINT:
The lock pin is released, and the camshaft timing gear revolves in the advance direction.

(f) When the camshaft timing gear reaches the most advanced position, release the air pressure on the timing retard side path, and then release the air pressure on the timing advance side path.
NOTICE:
The camshaft timing gear assembly occasionally shifts to the retard side abruptly, if the air pressure on the advance side path is released first. This often results in breakage of the lock pin.

EM

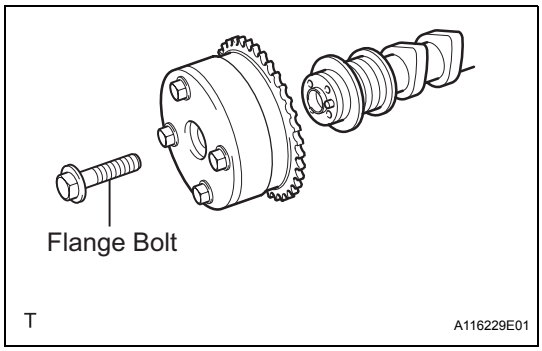

(g) Remove the flange bolt and remove the camshaft timing gear assembly.
NOTICE:
- **Do not remove the other 4 bolts.**
- **When reusing the camshaft timing gear, unlock the lock pin inside the camshaft timing gear first.**

INSPECTION

1. INSPECT CAMSHAFT TIMING GEAR ASSEMBLY

(a) Check the lock of camshaft timing gear.

(1) Clamp the camshaft in a vice, and check that the camshaft timing gear is locked.

NOTICE:
Do not damage the camshaft.

(b) Release the lock pin.

(1) Cover the 4 oil paths of the cam journal with tape as shown in the illustration.

HINT:
One of the 2 grooves located on the cam journal is for retarding cam timing (upper) and the other is for advancing cam timing (lower). Each groove has 2 oil paths. Plug one of the oil paths for each groove with a piece of rubber before wrapping the cam journal with the tape.

(2) Puncture the tape covering the advance oil path and the retard oil path on the opposite side from the advance oil path.

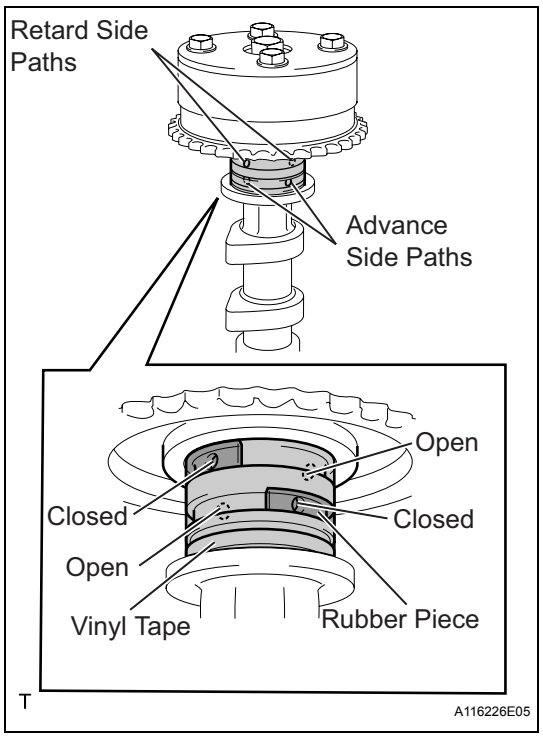

(3) Apply air at about 150 kPa (1.5kgf*cm^2) pressure into the 2 broken paths (the advance side path and the retard side path).

NOTICE:
Cover the paths with a shop rag or piece of cloth to prevent oil splashes.

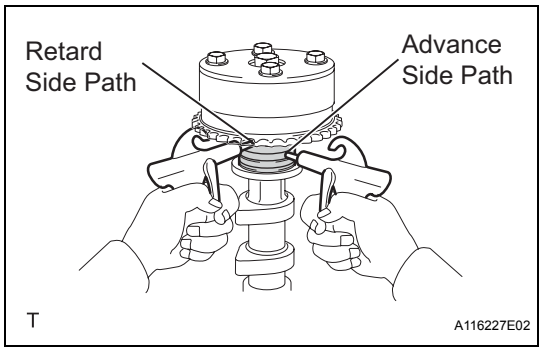

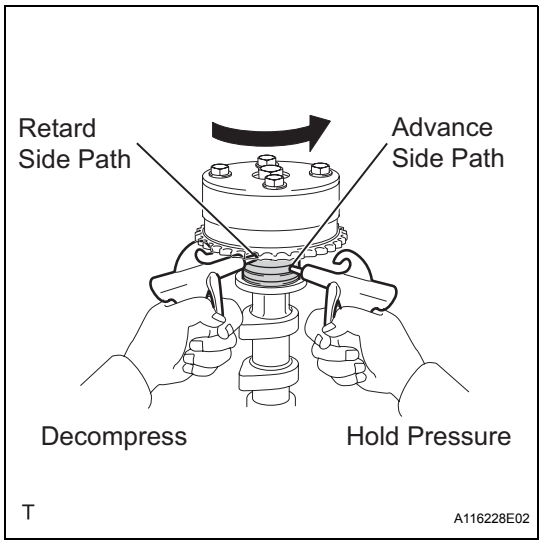

(4) Confirm that the camshaft timing gear assembly revolves in the timing advance direction when the air pressure on the timing retard path is reduced.
HINT:
The lock pin is released and the camshaft timing gear revolves in the advance direction.

(5) When the camshaft timing gear reaches the most advanced position, release the air pressure on the timing retard side path, and then release the air pressure on the timing advance side path.
NOTICE:
Camshaft timing gear assembly occasionally shifts to the retard side abruptly if the air pressure on the advance side path is released first. This often results in breakage of the lock pin.

(c) Check the revolution.

(1) Rotate the valve timing assembly back and forth several times, except where the lock pin meets it at the most retarded angle. Check the movable range and that it rotates smoothly.
Standard:
Smooth movable range is about 22.5°
NOTICE:
Perform this check by hand, instead of using air pressure.

(d) Check that the gear locks in the most retarded position.

(1) Confirm that the camshaft timing gear assembly is locked in the most retarded position.

INSTALLATION

1. INSTALL CAMSHAFT TIMING GEAR ASSEMBLY

NOTICE:

Install the camshaft timing gear assembly onto the camshaft with the lock pin of the camshaft timing gear assembly released.

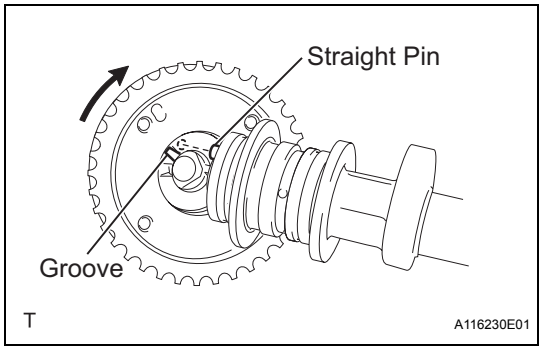

(a) Put the camshaft timing gear assembly and camshaft together with the straight pin of the groove.

(b) Turn the camshaft timing gear assembly clockwise while pushing it gently toward the camshaft. When the pin fits the groove, push to ensure a good fit.

NOTICE:

Do not turn the camshaft timing gear in the retard direction (clockwise).

(c) Check that there is no clearance between the gear flange and the camshaft.

(d) Tighten the flange bolt with the camshaft timing gear fixed.

Torque: 64 N*m (653 kgf*cm, 47 ft.*lbf)

NOTICE:

- **Do not lock the camshaft timing gear assembly when tightening the bolt.**
- **Release the lock pin of the camshaft timing gear assembly first, and tighten the bolt when the lock pin is locked in the most retarded position.**
- **Tightening the bolts with the lock pin locked could cause breakage of the lock pin.**

(e) Check that the camshaft timing gear assembly moves smoothly in the retard direction (clockwise) and is locked in the most retarded position.

2. INSTALL CAMSHAFT

(a) Apply a light coat of engine oil to the camshaft and camshaft journals.

(b) Install the chain onto the camshaft timing gear with the paint mark and the timing mark aligned as shown in the illustration.

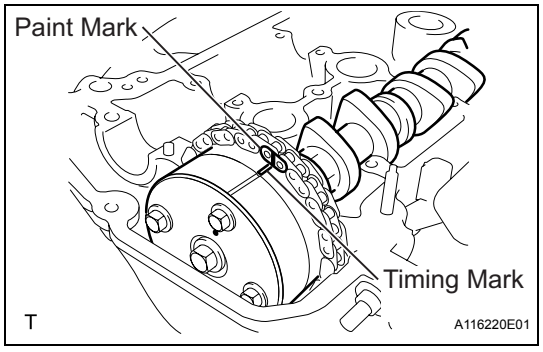

EM

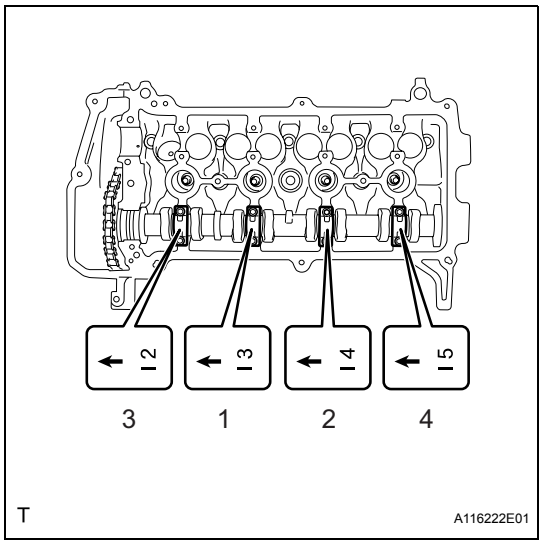

(c) Examine the front marks and numbers on camshaft bearing cap No. 2 and check that the sequence is as shown in the illustration. Then uniformly tighten the bolts, in several steps, in the sequence shown in the illustration.
Torque: 13 N*m (129 kgf*cm, 9.4 ft.*lbf)
NOTICE:
Tighten each bolt uniformly while keeping the camshaft level.

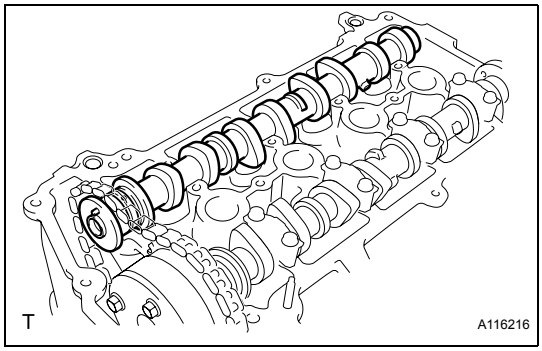

3. INSTALL NO. 2 CAMSHAFT

(a) Install camshaft No. 2.

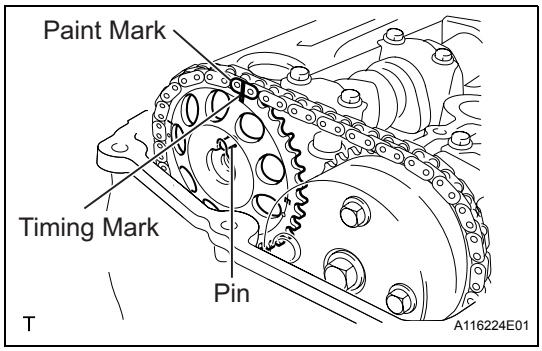

(b) Hold the chain and align the timing mark on the camshaft timing sprocket with the paint mark of the chain.

(c) Align the alignment pin hole in the camshaft timing sprocket with the alignment pin of the camshaft, and install the sprocket onto the camshaft.

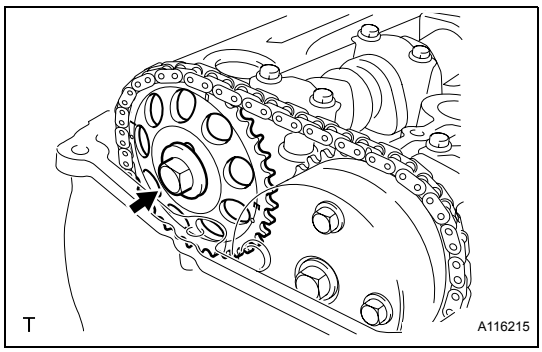

(d) Provisionally install the flange bolt.

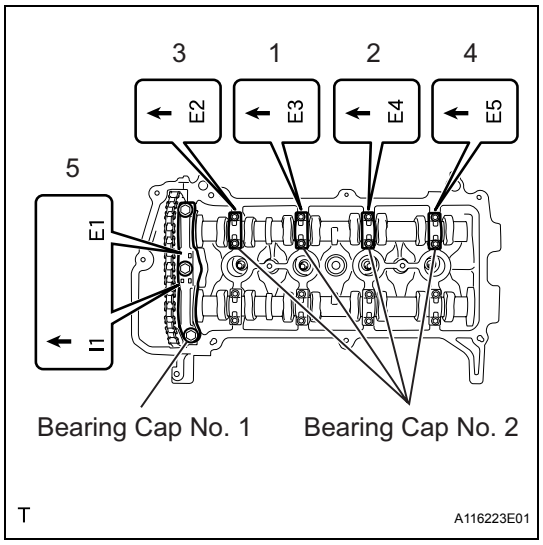

(e) Examine the front marks and numbers on camshaft bearing caps No. 1 and No. 2 and check that the sequence is as shown in the illustration. Then uniformly tighten the bolts, in several steps, in the sequence shown in the illustration.
Torque: for bearing cap No. 2
13 N*m (129 kgf*cm, 9.4 ft.*lbf)
for bearing cap No. 1
23 N*m (235 kgf*cm, 17 ft.*lbf)
NOTICE:
Tighten each bolt uniformly while keeping the camshaft level.

EM

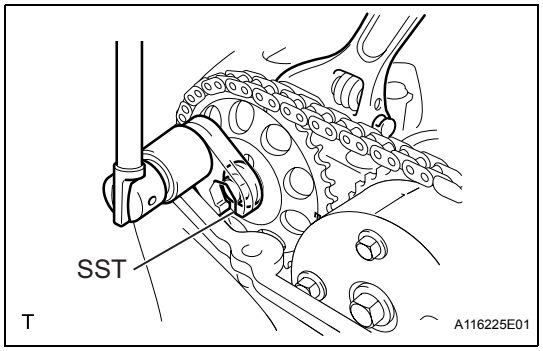

(f) Using a wrench, hold the hexagonal lobe of camshaft No. 2 and install the flange bolt.
SST 09023-38400
Torque: 64 N*m (653 kgf*cm, 47 ft.*lbf)
(g) Remove the bar from the timing chain tensioner.

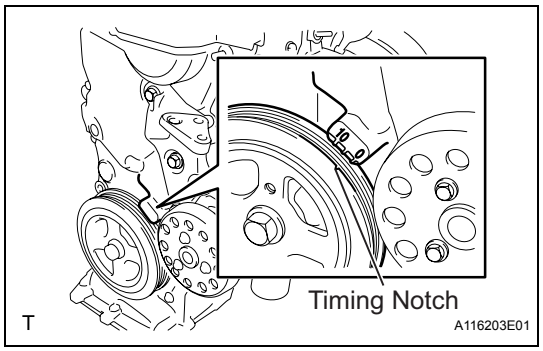

(h) Turn the crankshaft damper and align its timing notch with the timing mark "0" of the oil pump.

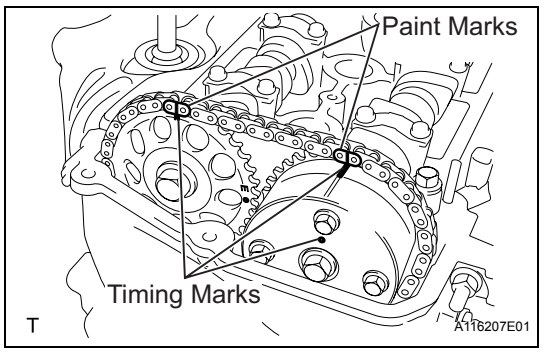

(i) Check that all the pairs of timing marks are aligned.
(j) Apply adhesive to the end 2 or 3 threads of the screw plug.
Adhesive:
Toyota Genuine Adhesive 1324, Three Bond 1324 or Equivalent

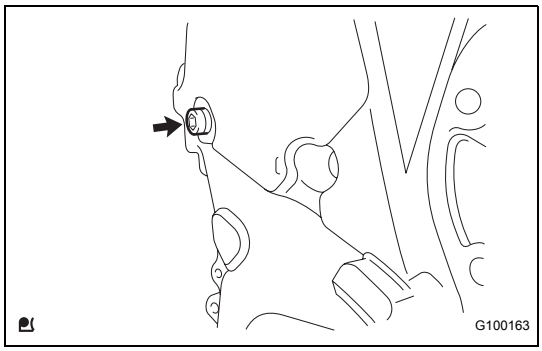

(k) Using an 8 mm hexagon wrench, install the screw plug.
Torque: 15 N*m (153 kgf*cm, 11 ft.*lbf)

4. **INSPECT VALVE CLEARANCE (See page EM-9)**
5. **ADJUST VALVE CLEARANCE (See page EM-10)**
6. **INSTALL ENGINE MOUNTING INSULATOR SUB-ASSEMBLY RH (See page LU-26)**
7. **INSTALL FAN AND GENERATOR V BELT (See page EM-7)**
8. **ADJUST FAN AND GENERATOR V BELT (See page EM-7)**
9. **INSPECT FAN AND GENERATOR V BELT (See page EM-8)**
10. **INSTALL CYLINDER HEAD COVER SUB-ASSEMBLY (See page FU-19)**
11. **CONNECT VENTILATION HOSE NO. 2 (See page FU-20)**
12. **CONNECT VENTILATION HOSE (See page FU-20)**
13. **INSTALL IGNITION COIL NO. 1 (See page IG-9)**
14. **CONNECT CABLE TO NEGATIVE BATTERY TERMINAL**
    Torque: 5.4 N*m (55 kgf*cm, 48 in.*lbf)
15. **CHECK FOR ENGINE OIL LEAKAGE**
16. **INSTALL CYLINDER HEAD COVER NO. 2 (See page IG-10)**
17. **INSTALL ENGINE UNDER COVER RH**

CYLINDER HEAD

COMPONENTS

for Hatchback:

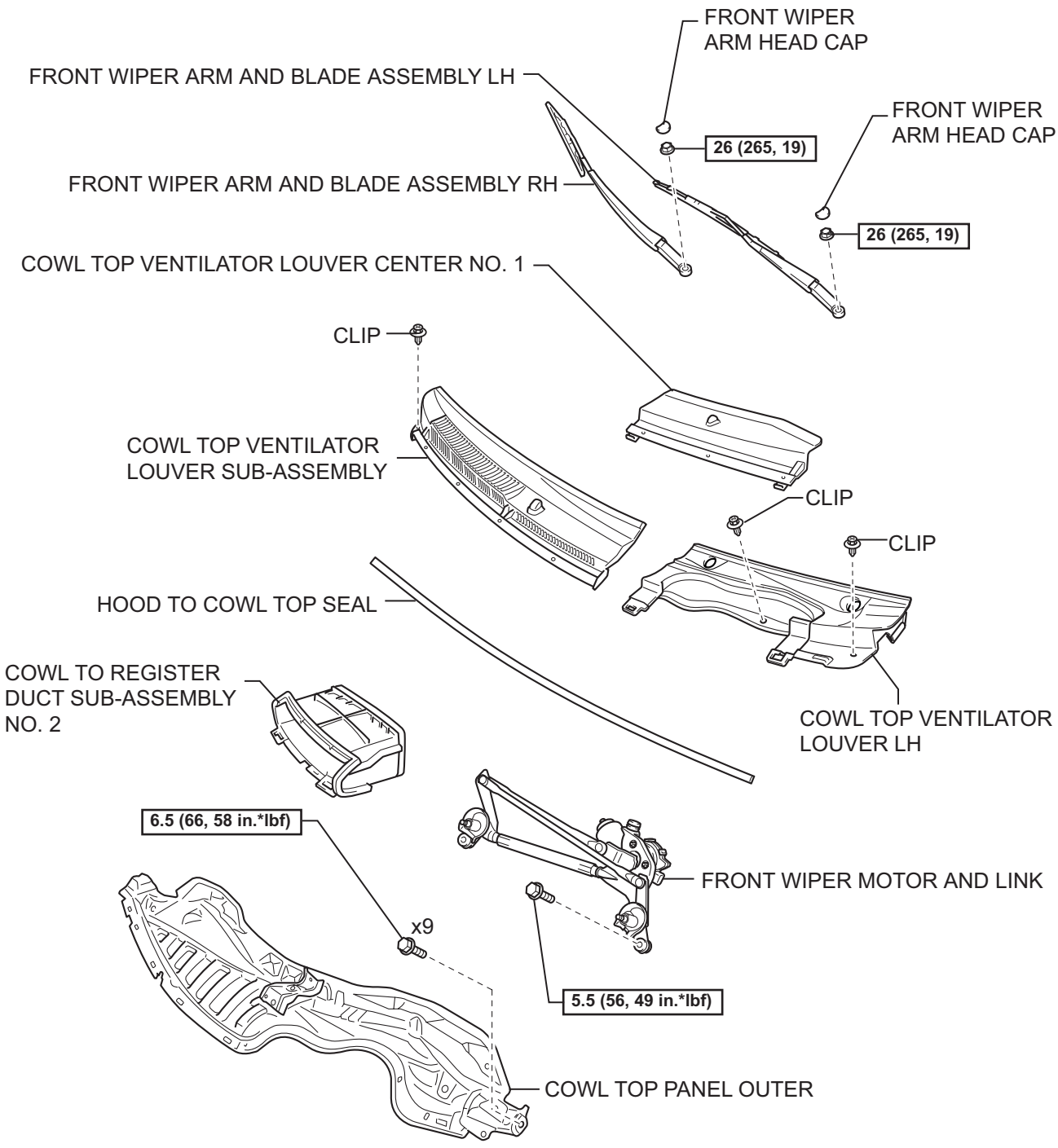

N*m (kgf*cm, ft*lbf) : Specified torque

Y

A118803E10

EM

for Sedan:

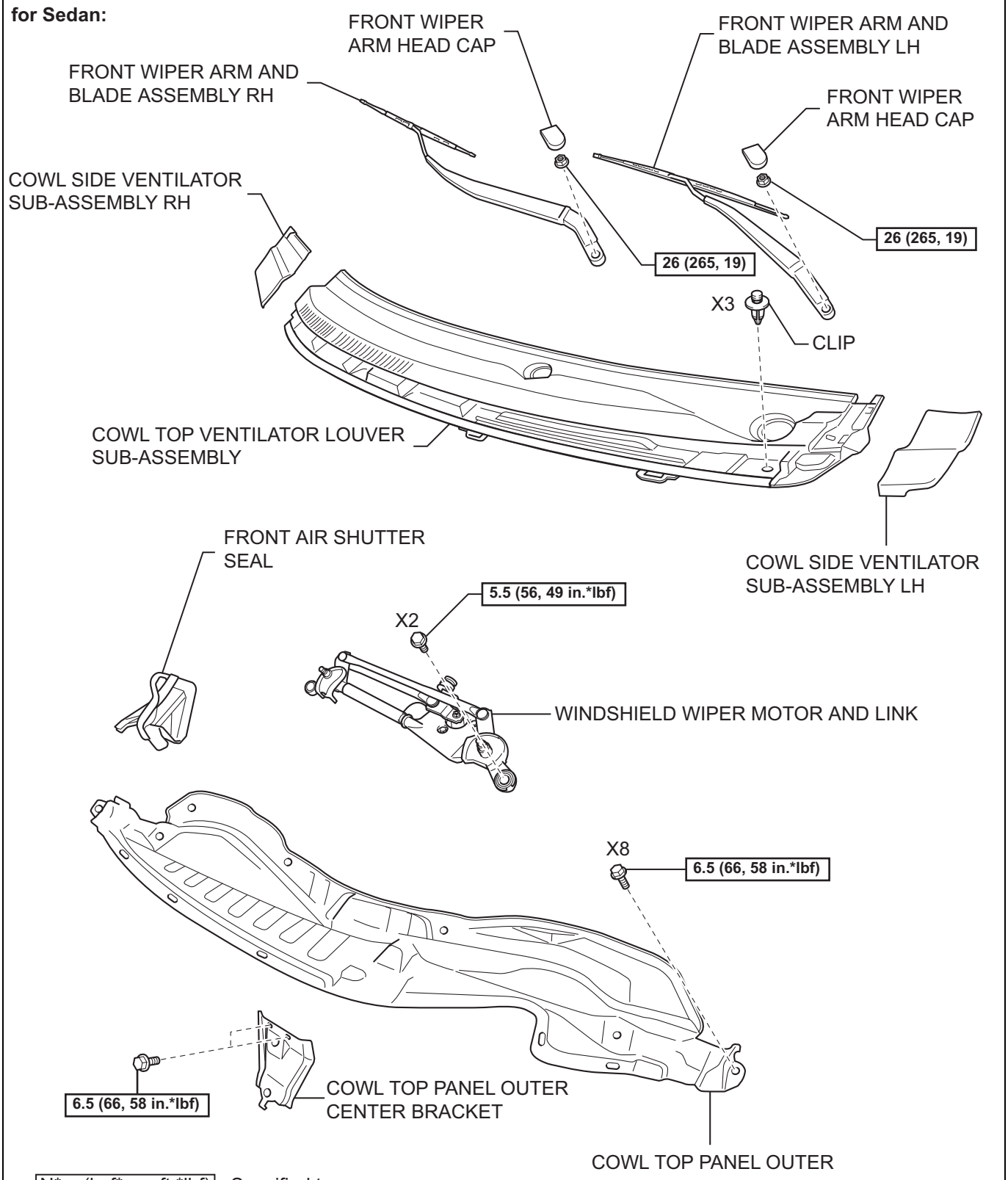

N*m (kgf*cm, ft.*lbf) : Specified torque

Y

A133320E03

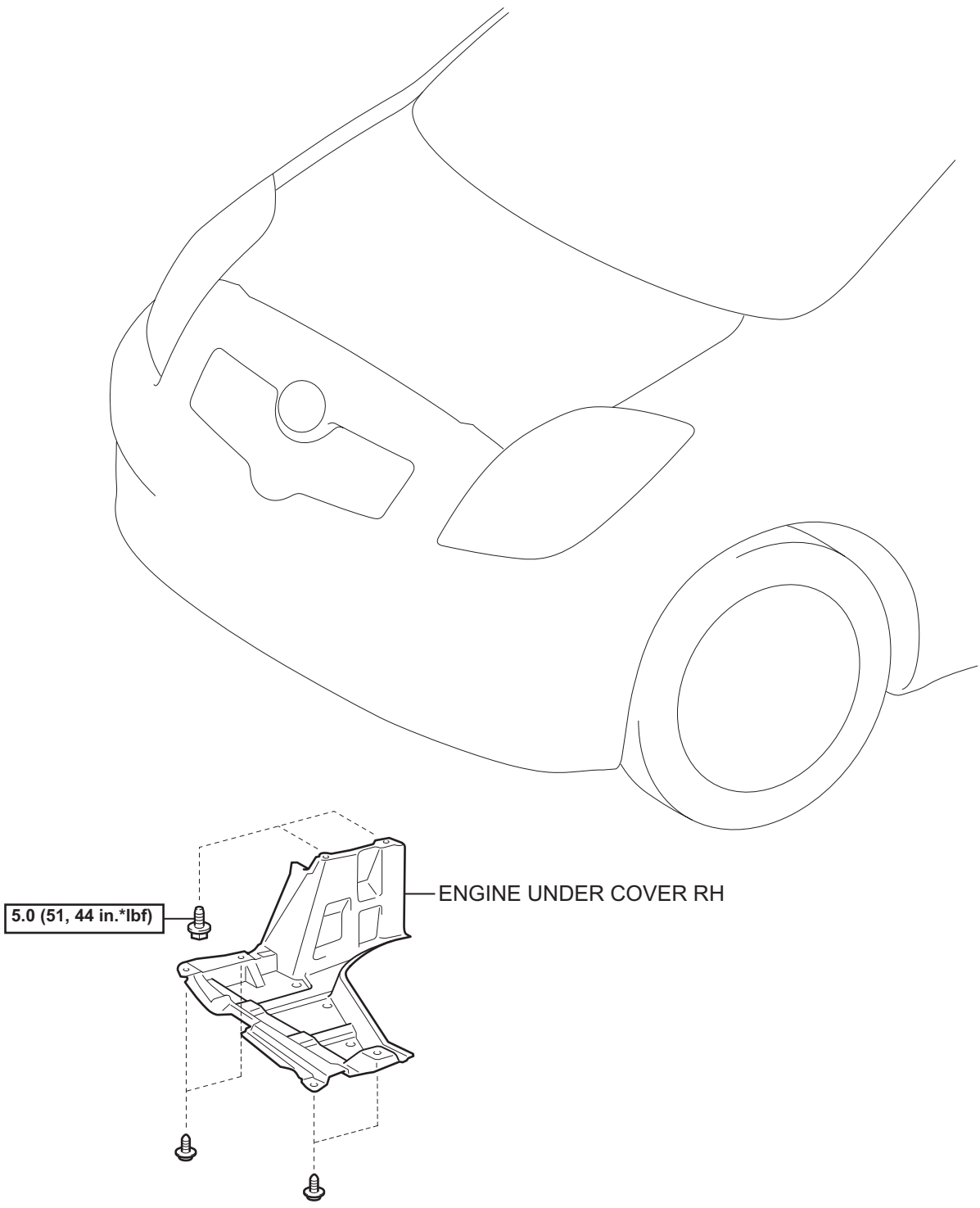

N*m (kgf*cm, ft.*lbf) : Specified torque

T

A115143E01

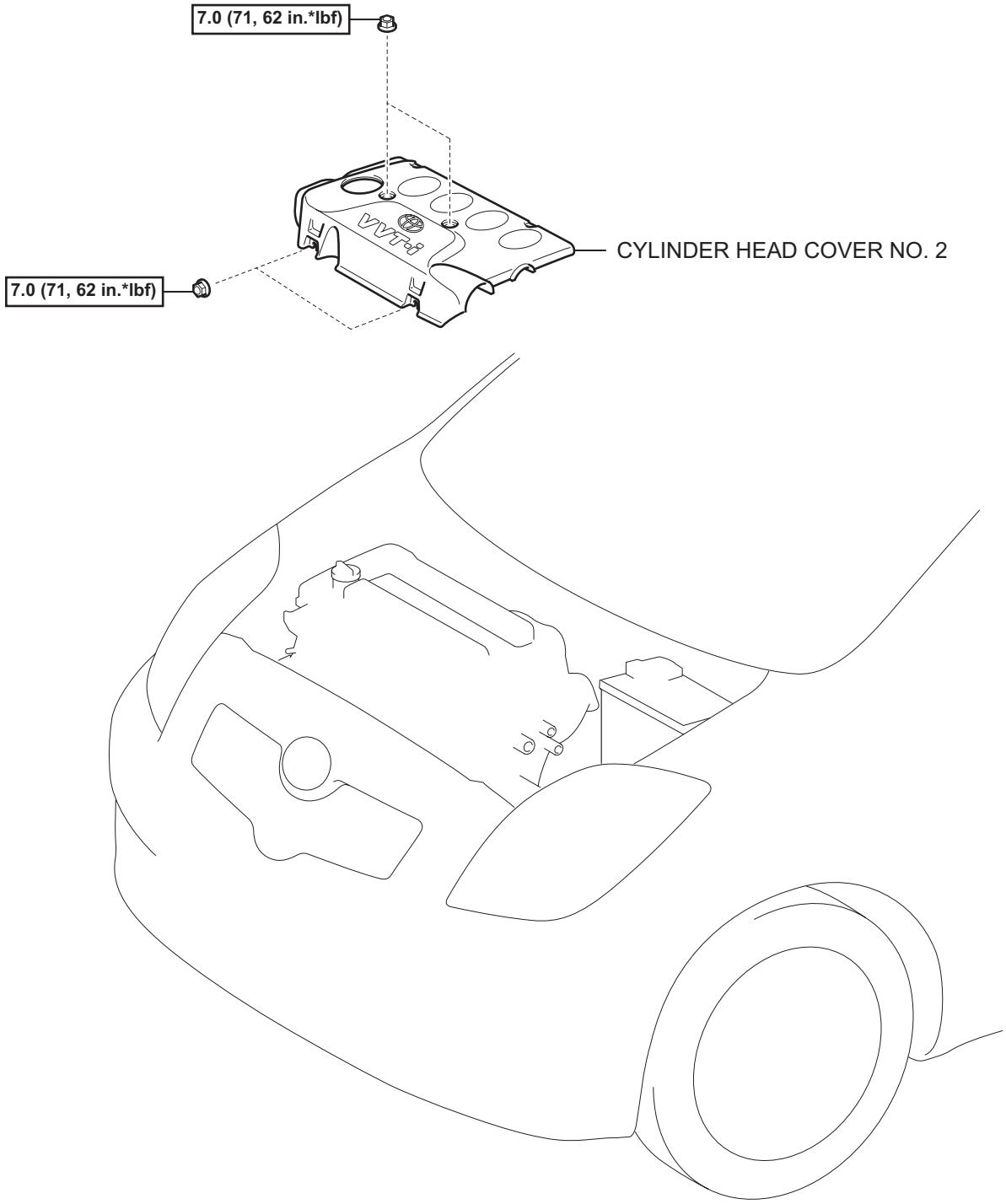

EM

N*m (kgf*cm, ft.*lbf) : Specified torque

T

A115136E01

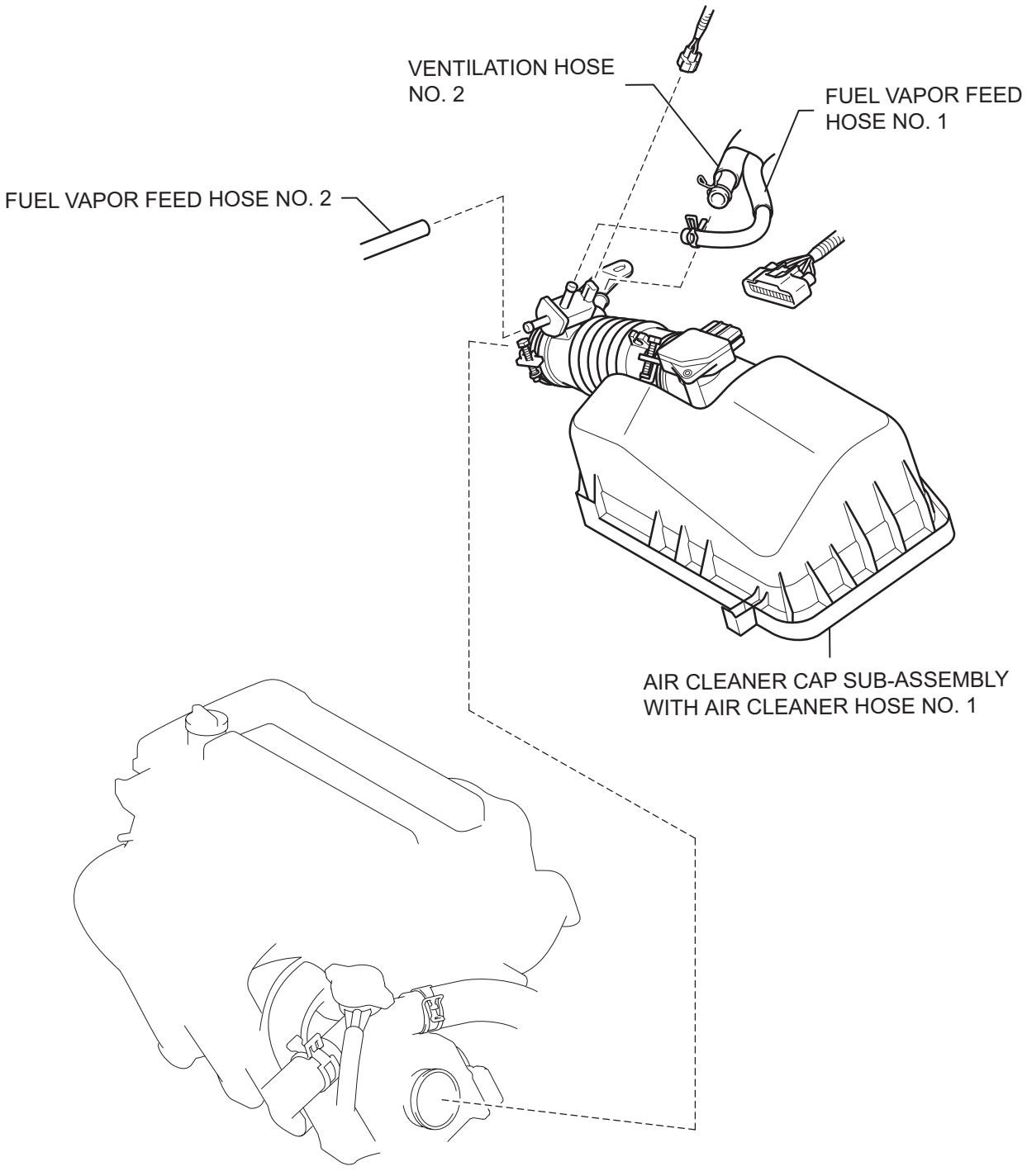

T

A133592E01

EM

EM

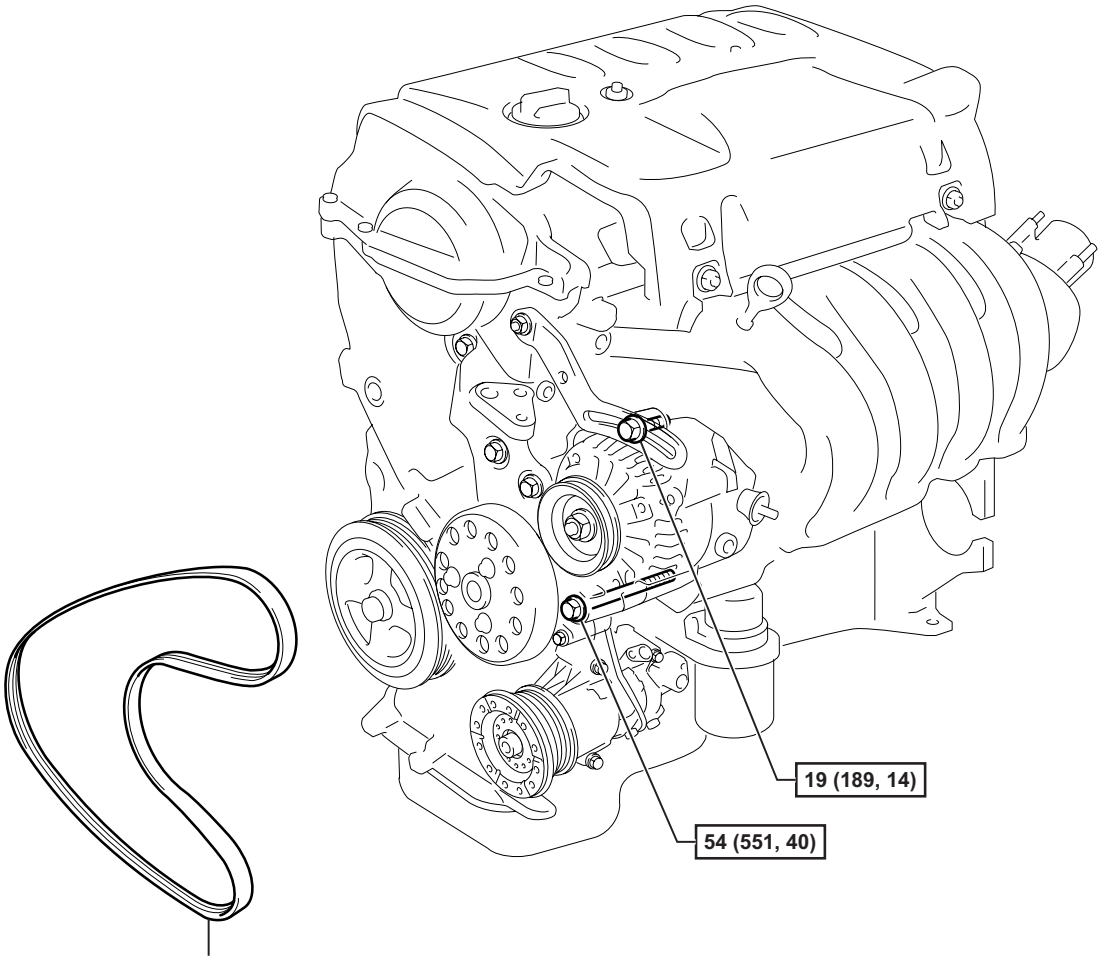

N*m (kgf*cm, ft.*lbf) : Specified torque

T

A116199E01

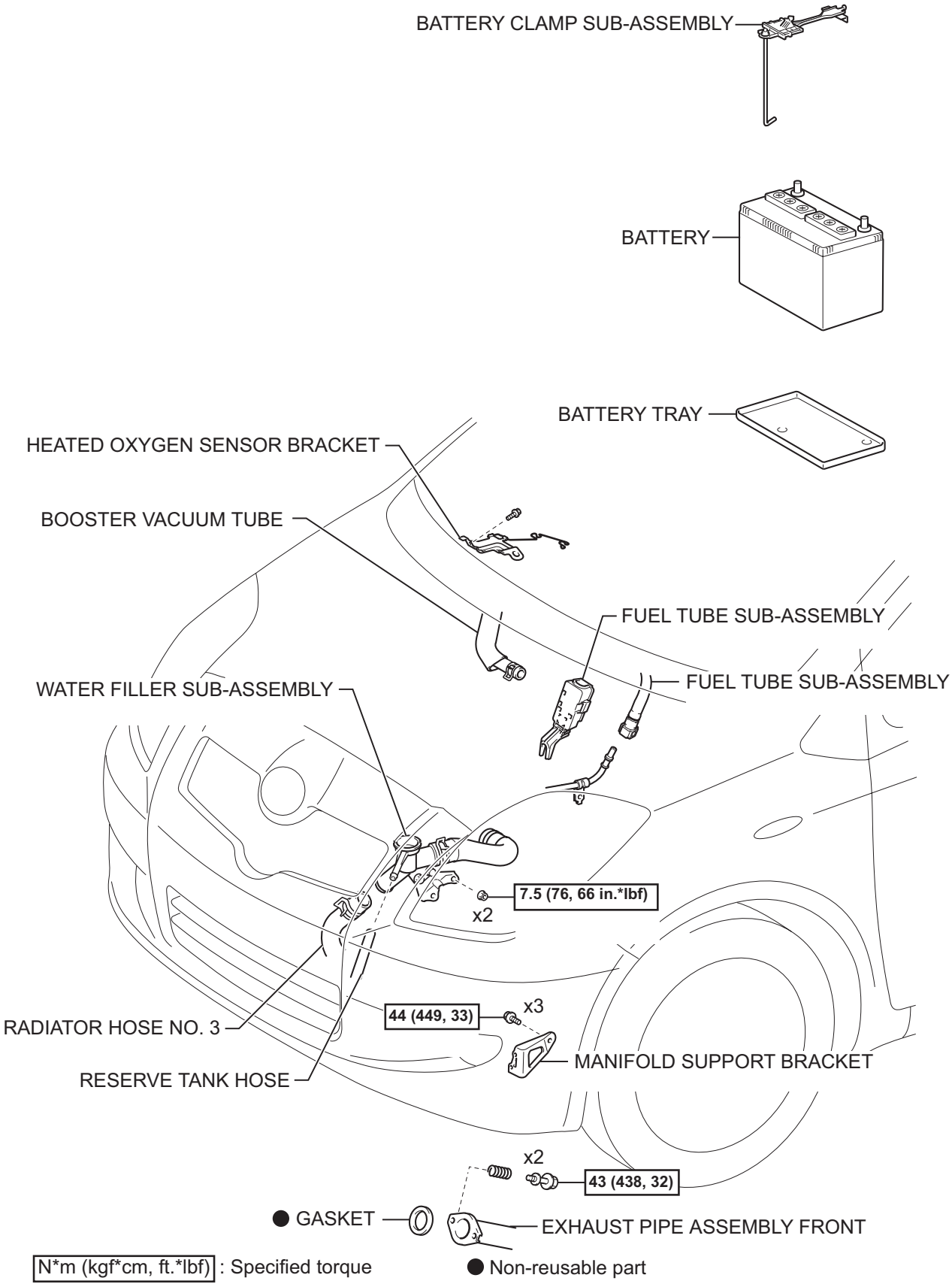

T

A116961E01

EM

for Hatchback:

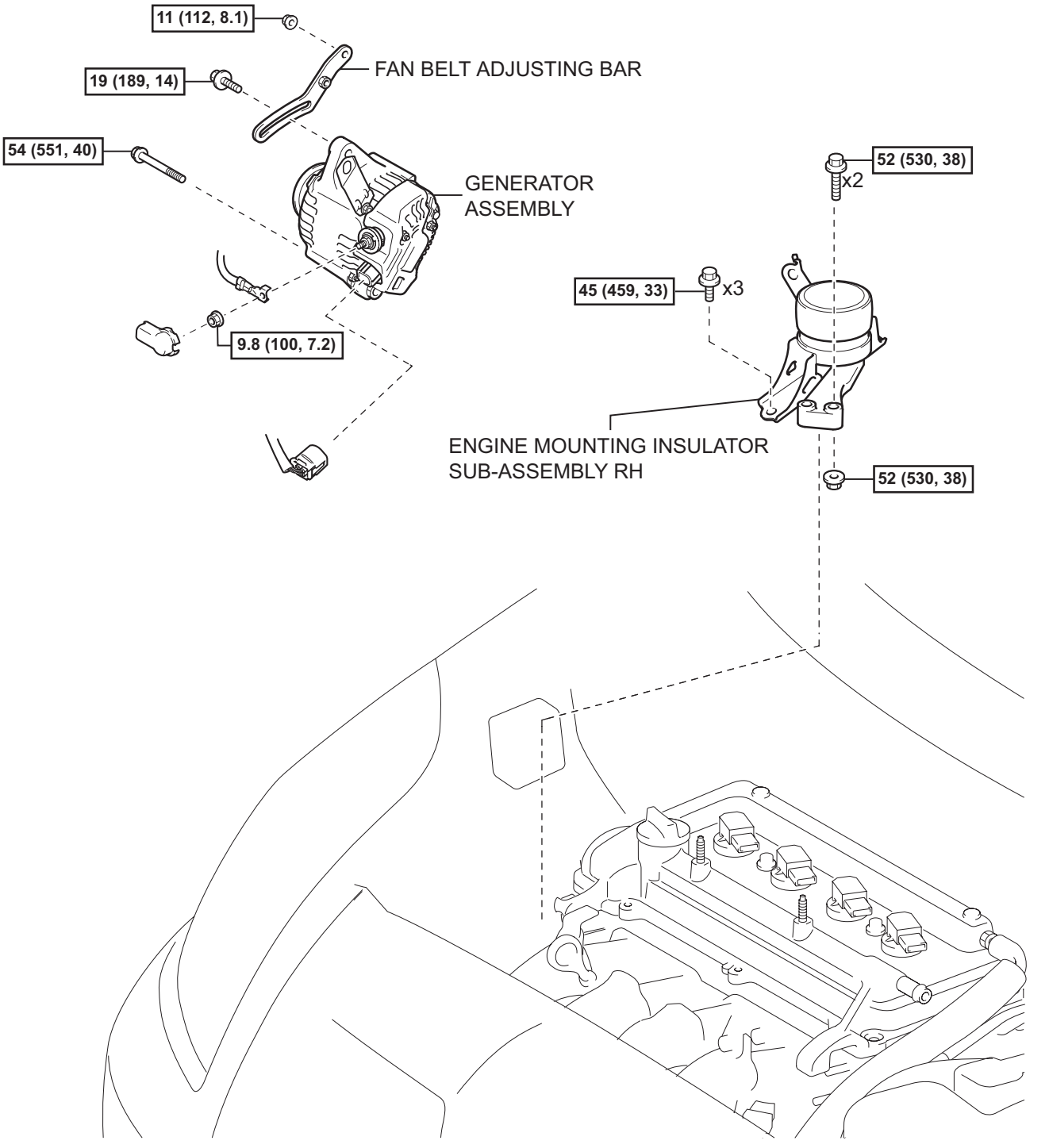

N*m (kgf*cm, ft.*lbf) : Specified torque

T

A116193E06

for Sedan:

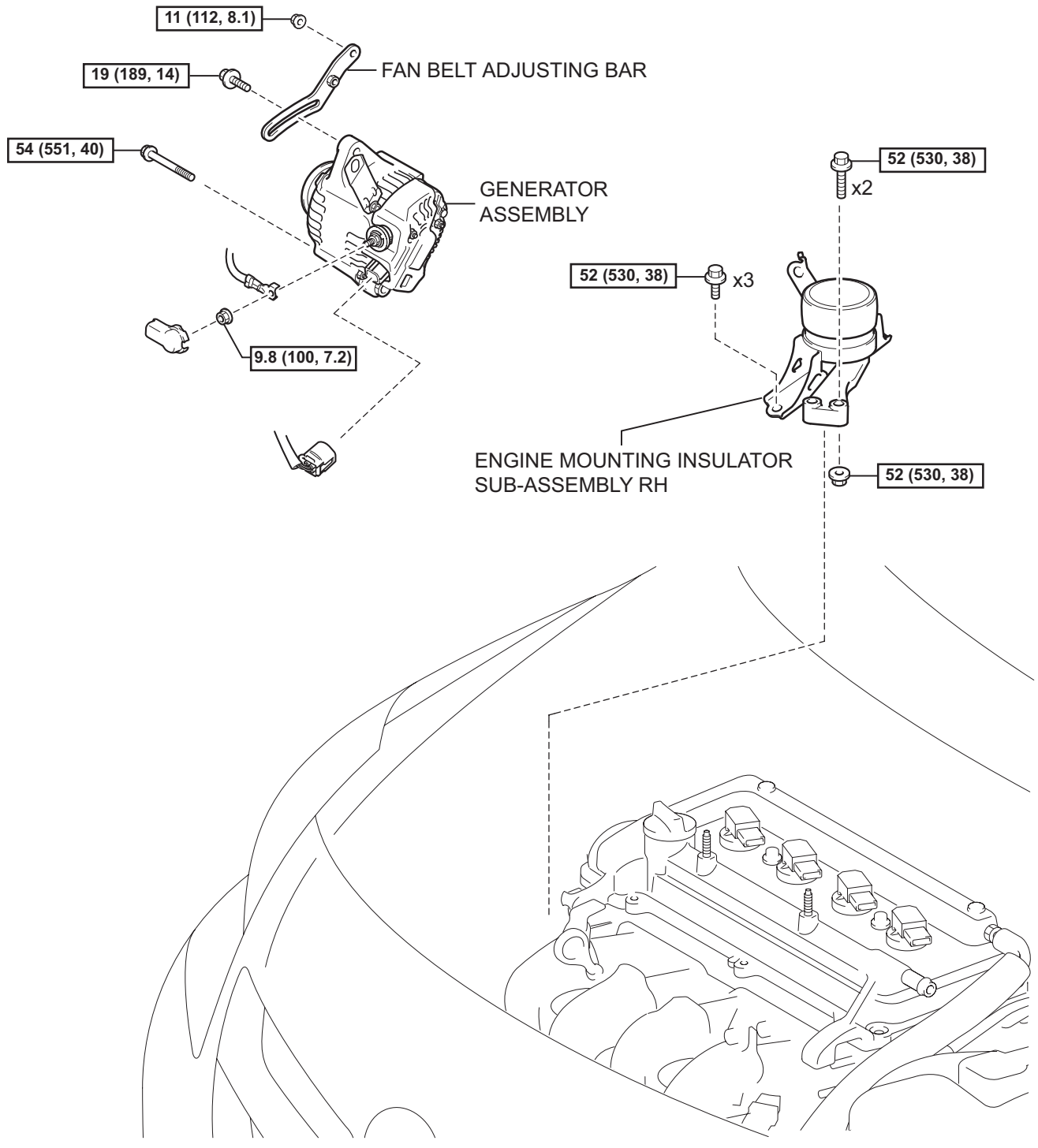

N*m (kgf*cm, ft*lbf) : Specified torque

T

A133594E01

EM

EM

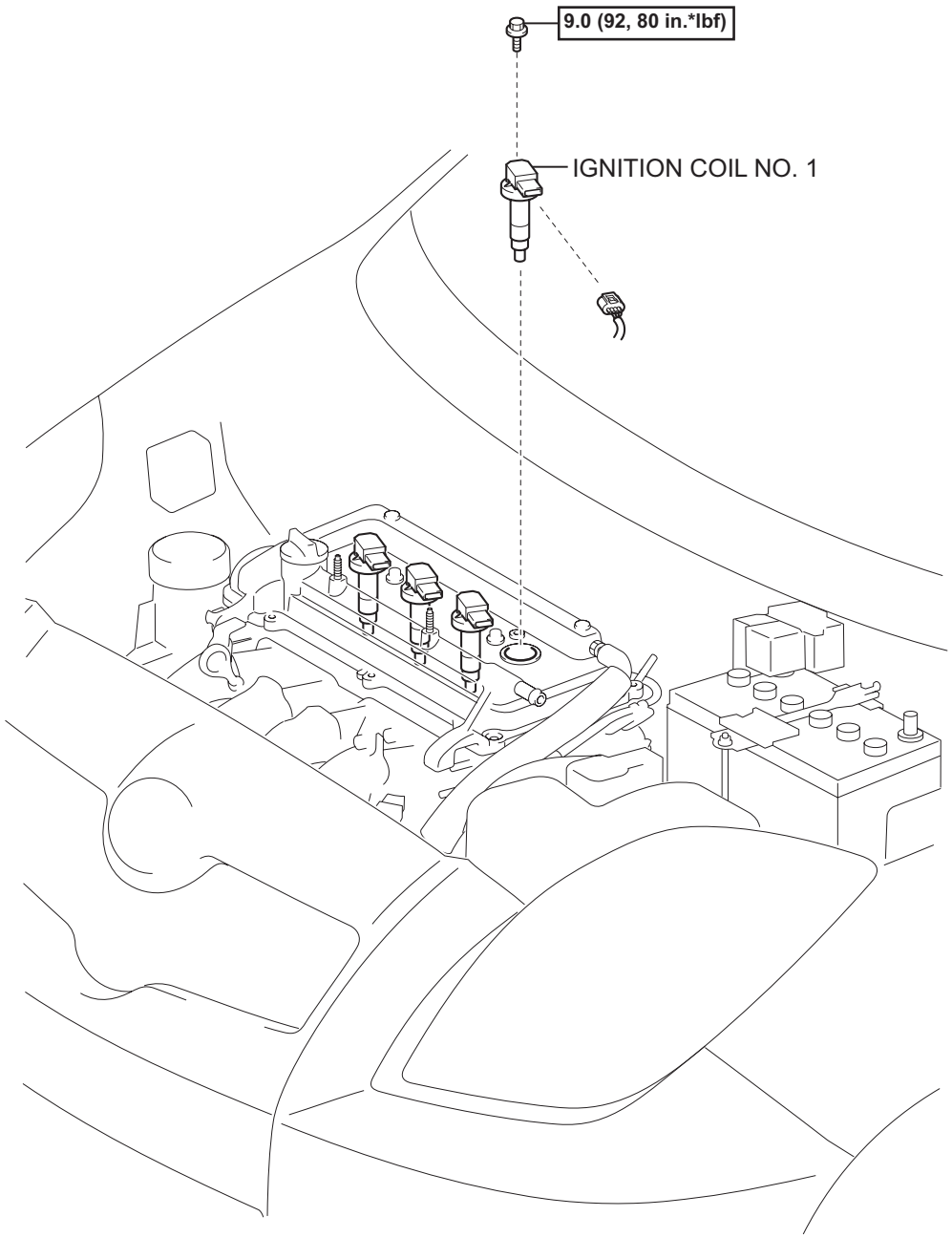

N*m (kgf*cm, ft.*lbf) : Specified torque

T

A115486E01

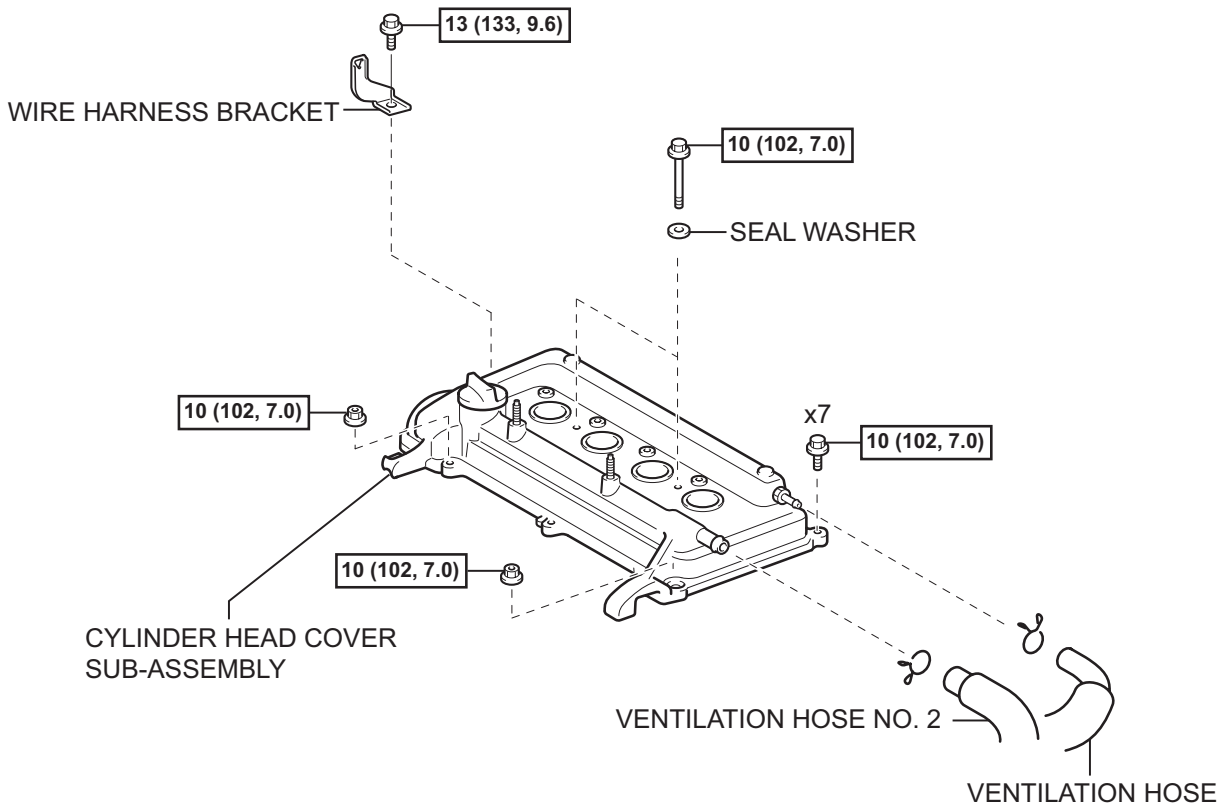

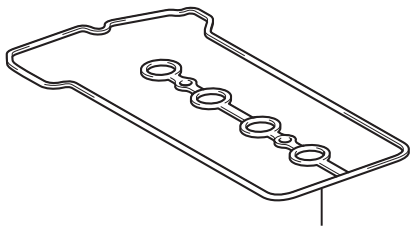

CYLINDER HEAD COVER GASKET

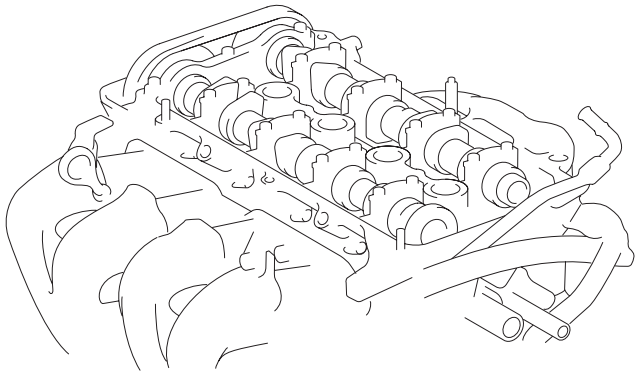

N*m (kgf*cm, ft.*lbf) : Specified torque

T

A115504E01

EM

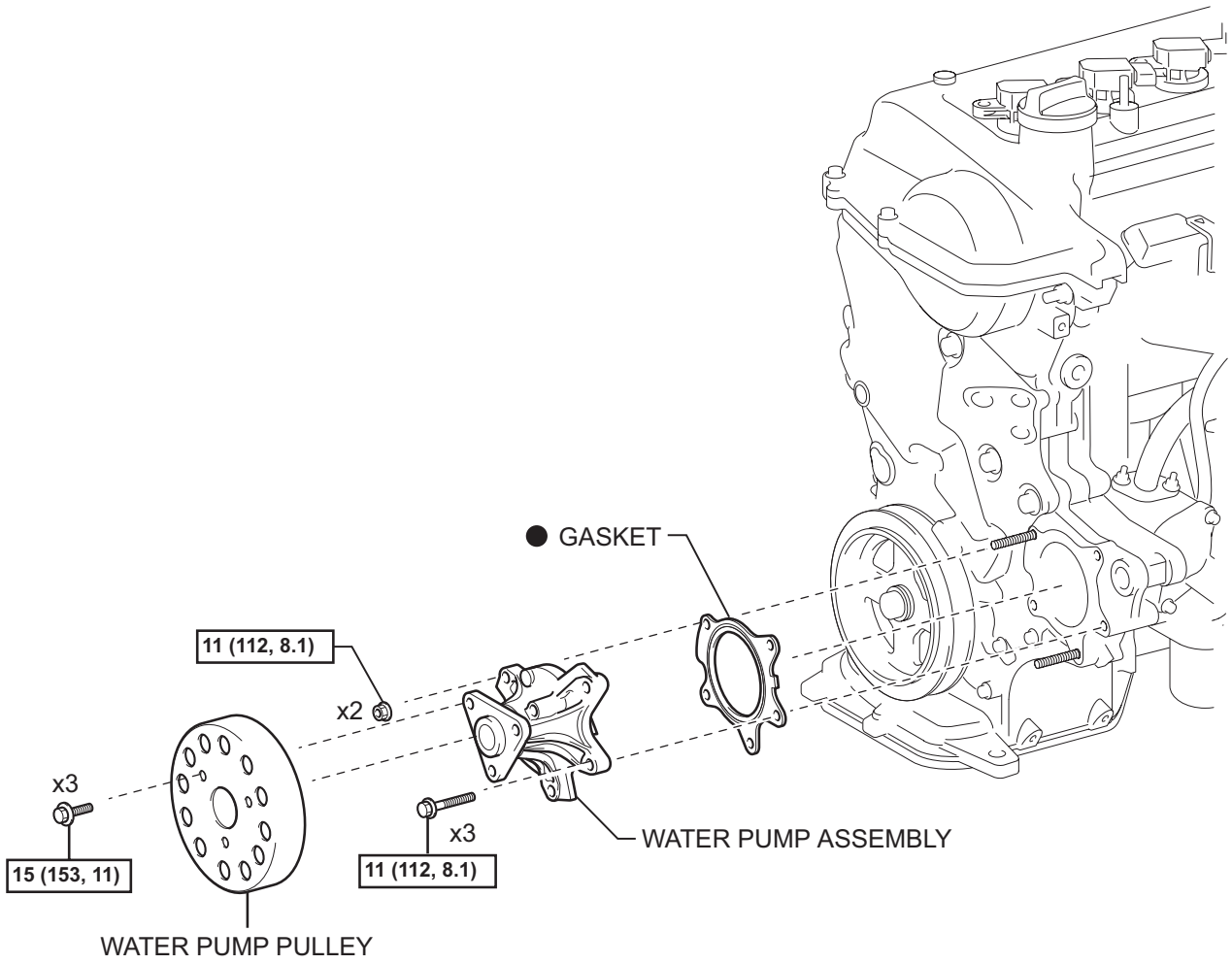

N*m (kgf*cm, ft.*lbf) : Specified torque

● Non-reusable part

T

A116194E01

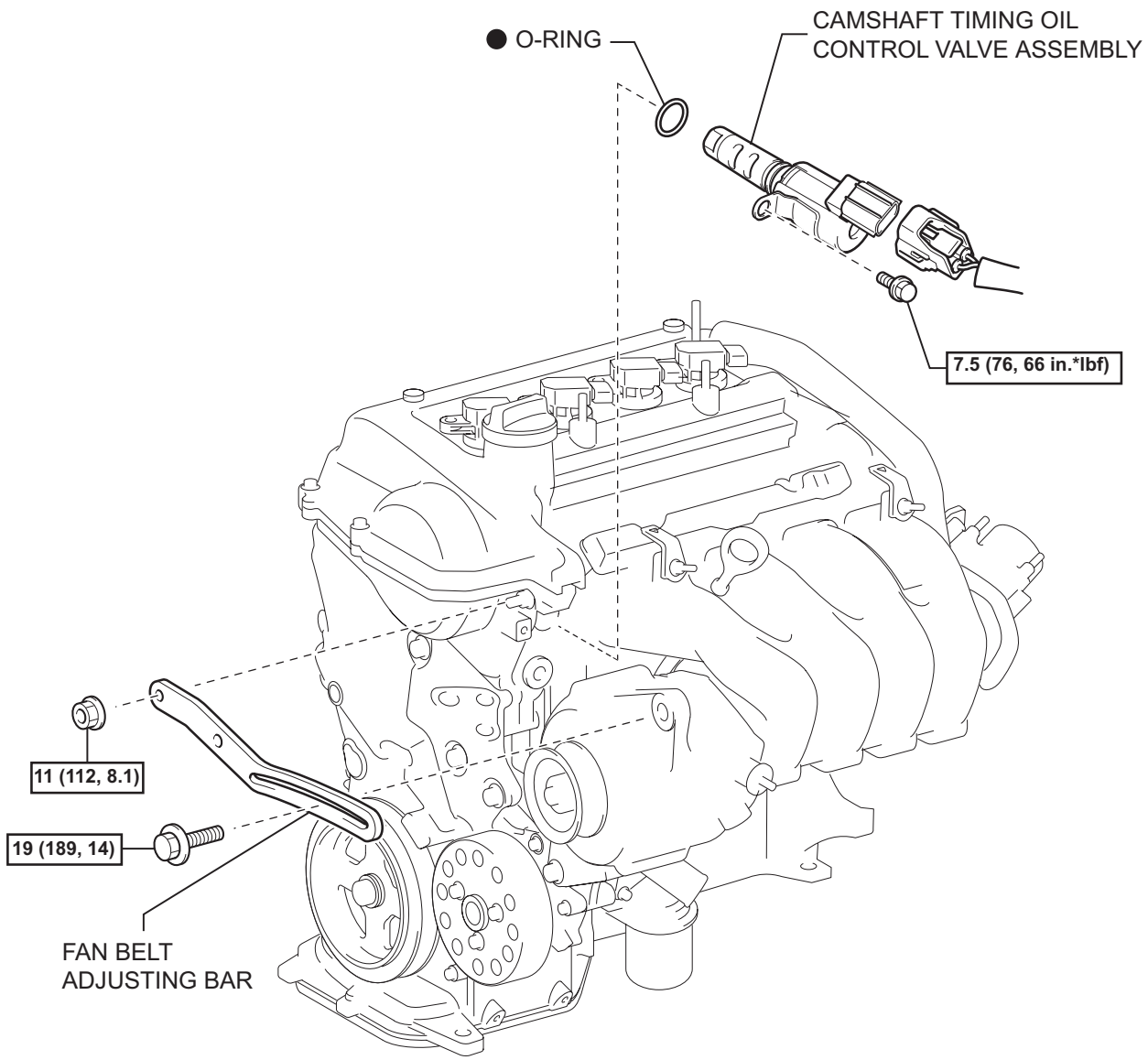

N*m (kgf*cm, ft.*lbf) : Specified torque

● Non-reusable part

T

A116180E01

EM

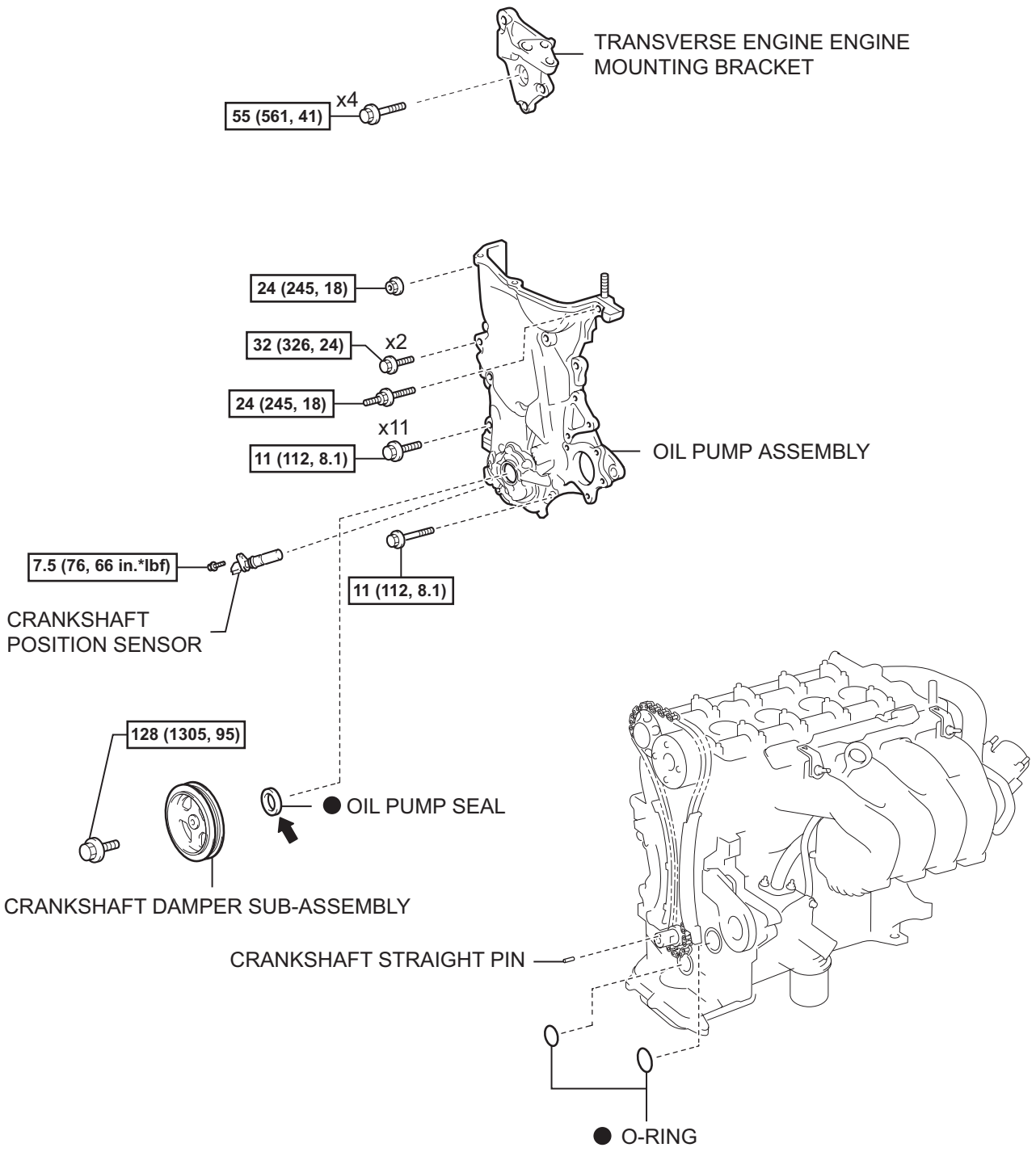

N*m (kgf*cm, ft.*lbf) : Specified torque

● Non-reusable part ⬅ Apply MP grease

T

A116559E01

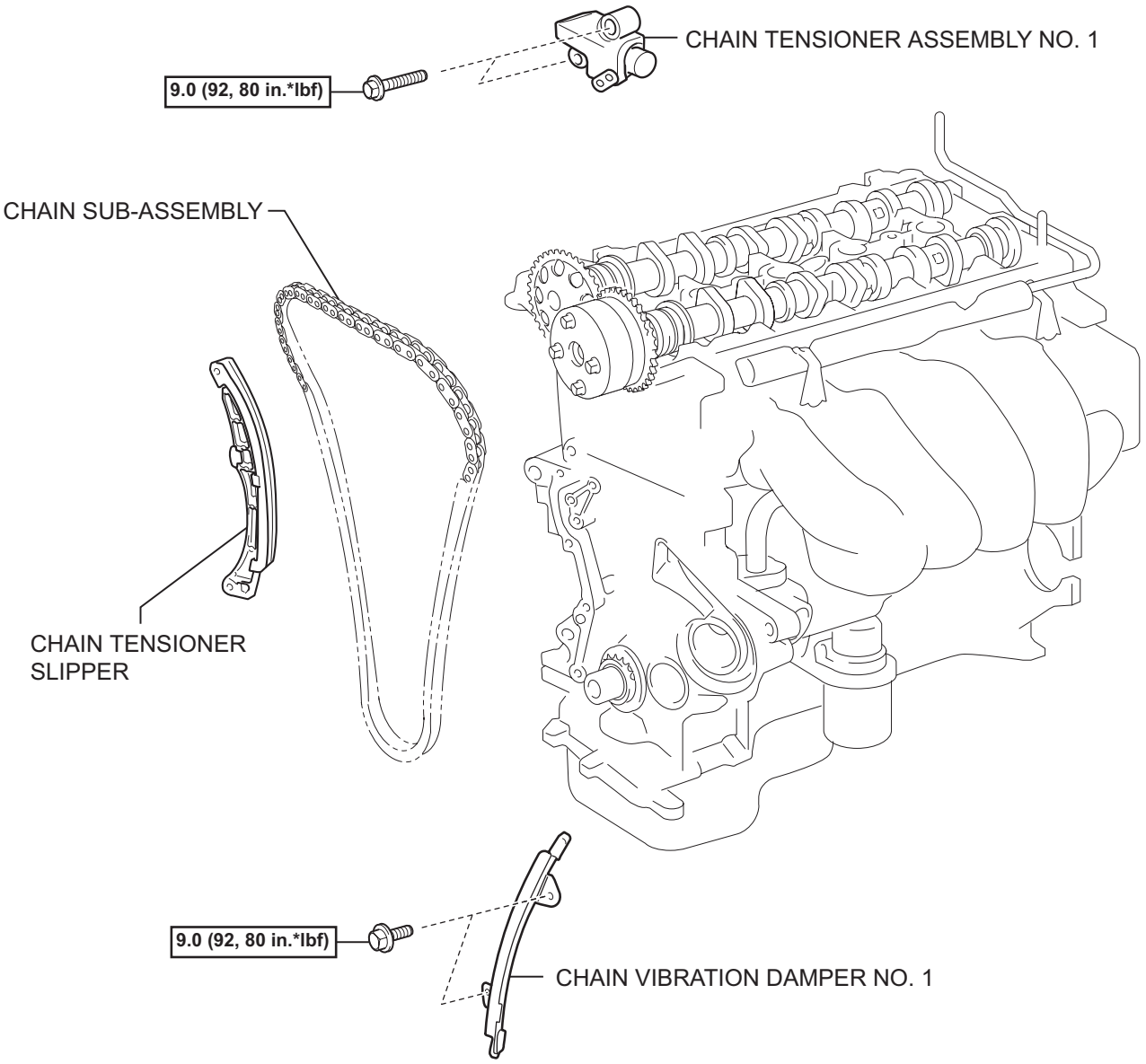

N*m (kgf*cm, ft.*lbf) : Specified torque

T

A116579E01

EM

EM

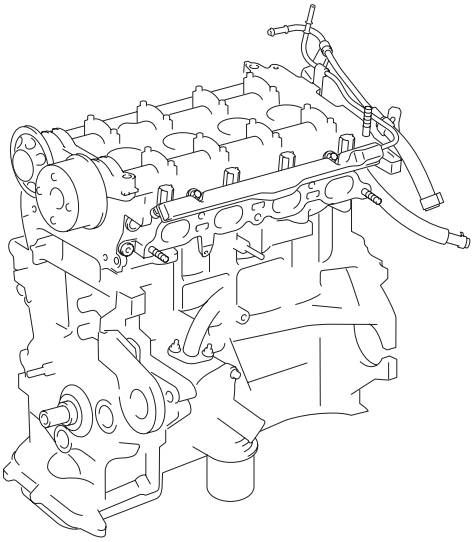

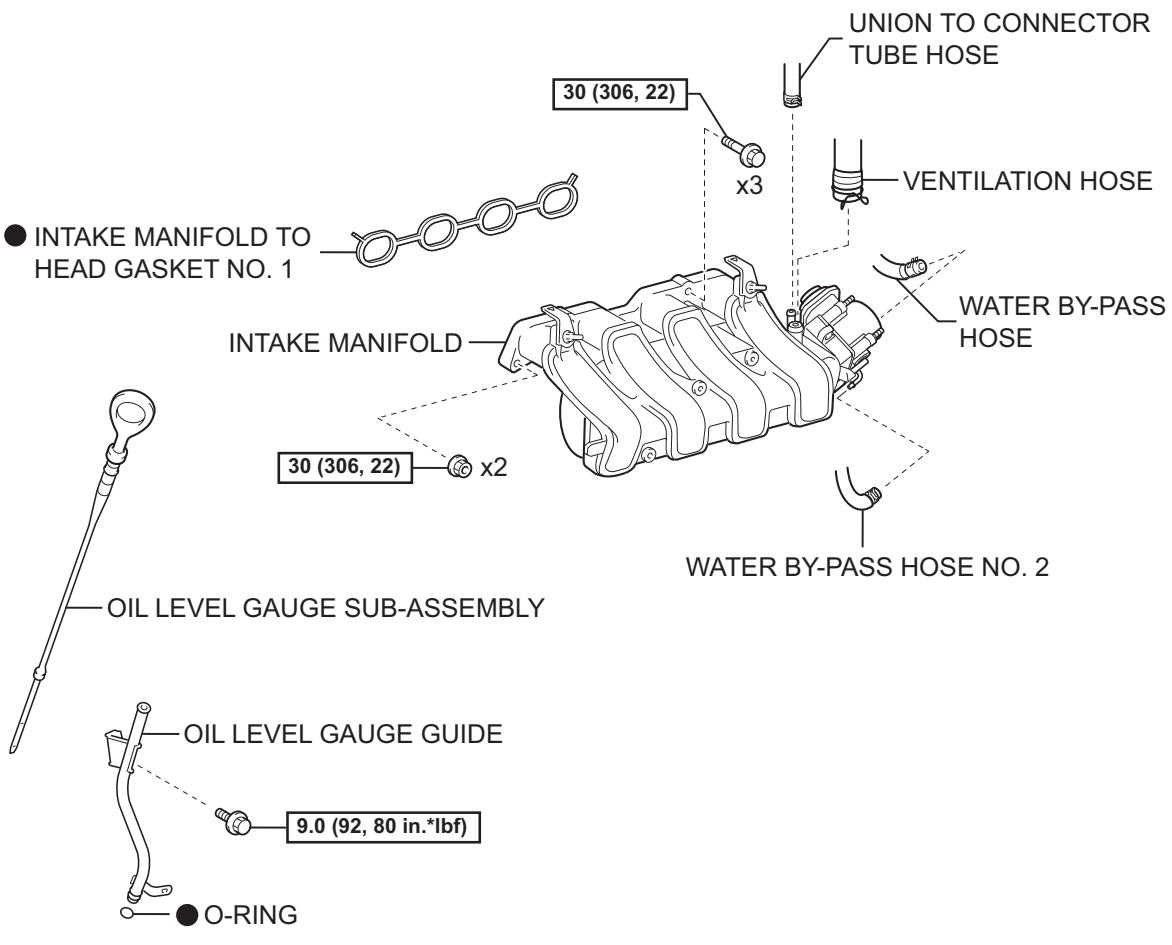

N*m (kgf*cm, ft*lbf) : Specified torque

● Non-reusable part

T

A121463E01

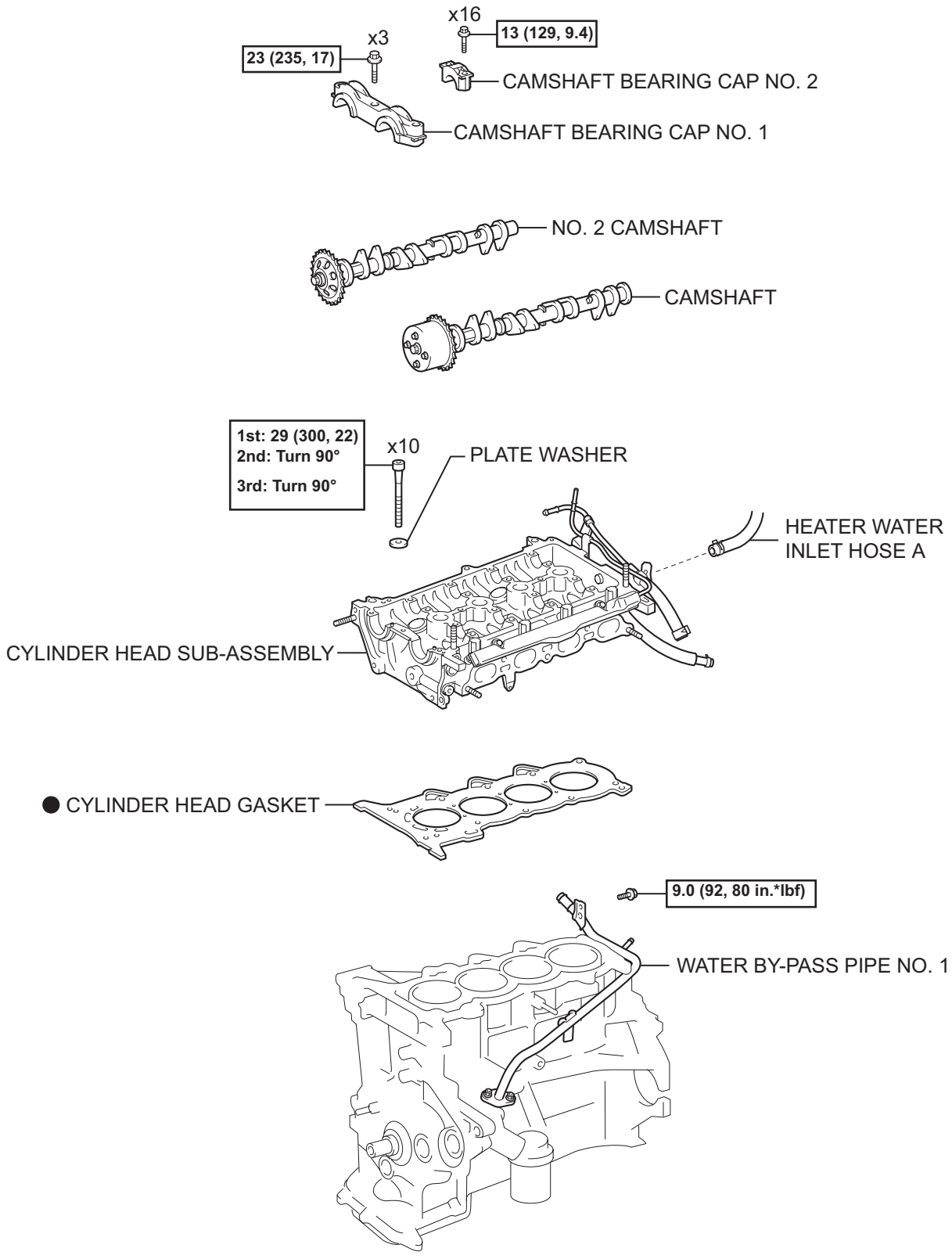

N*m (kgf*cm, ft.*lbf) : Specified torque

● Non-reusable part

T

A116963E01

EM

EM

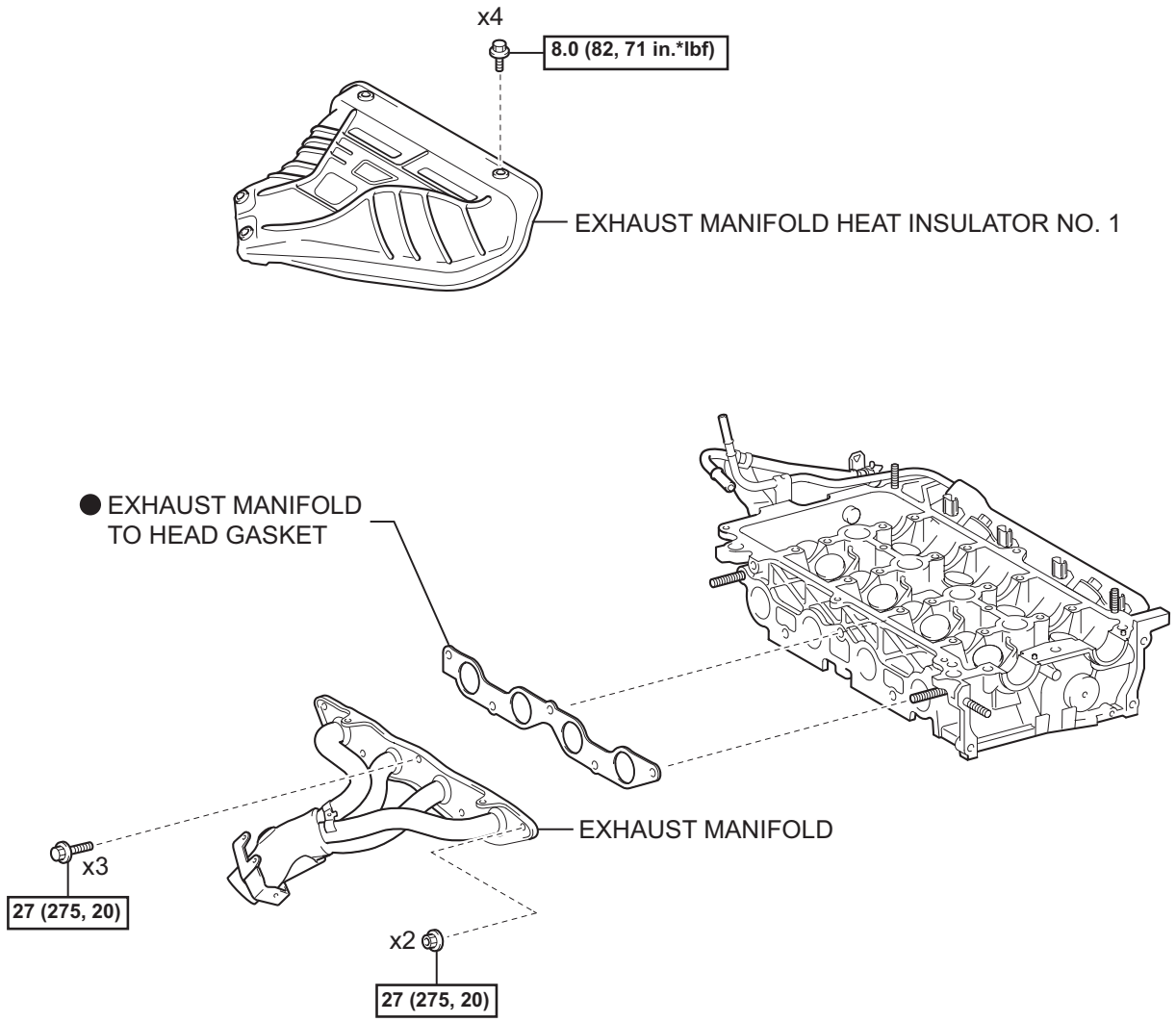

N*m (kgf*cm, ft.*lbf) : Specified torque

● Non-reusable part

T

A116967E01

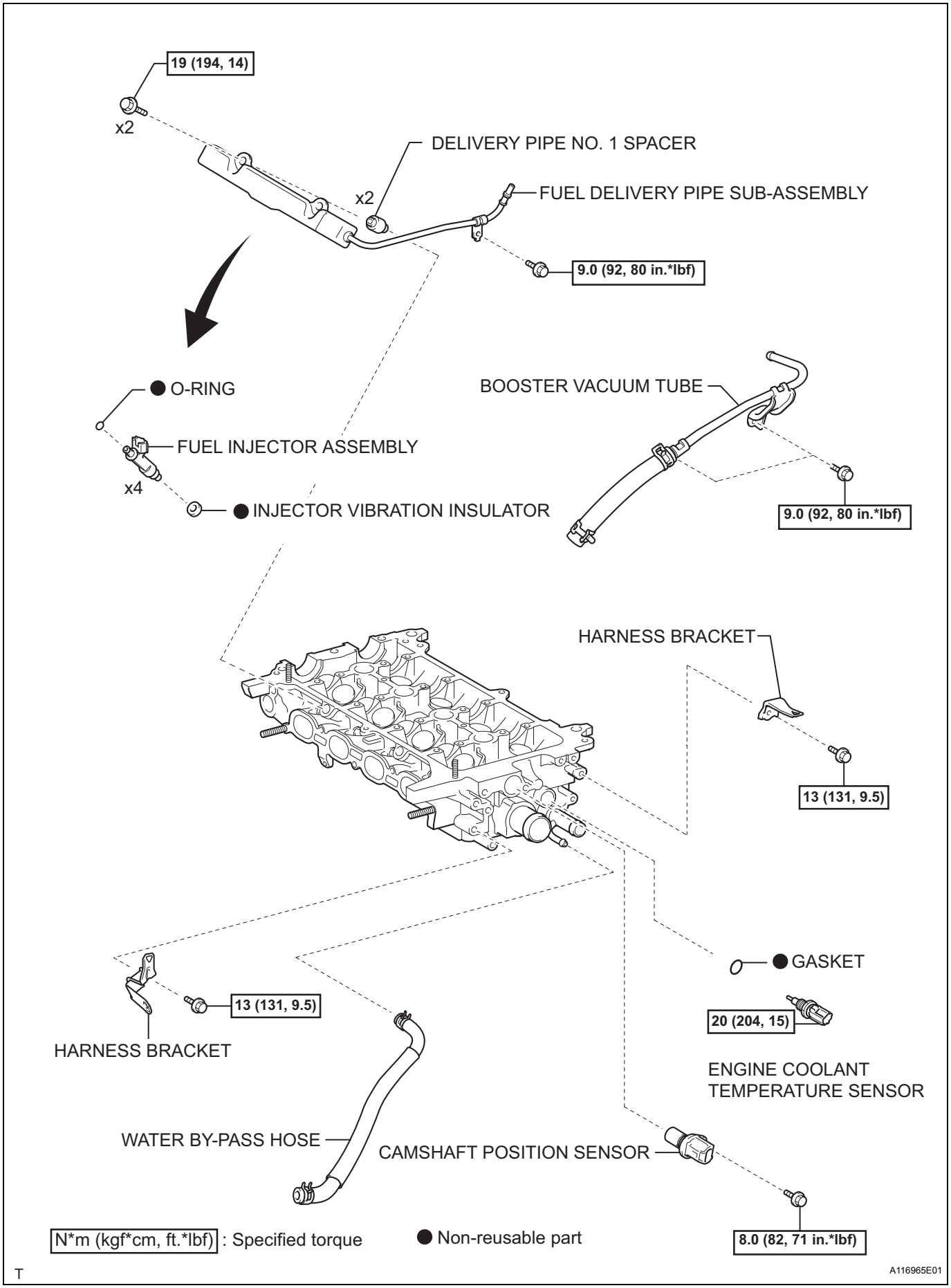
19 (194, 14)
x2
DELIVERY PIPE NO. 1 SPACER
x2
FUEL DELIVERY PIPE SUB-ASSEMBLY
9.0 (92, 80 in.*lbf)
O-RING
FUEL INJECTOR ASSEMBLY
x4
INJECTOR VIBRATION INSULATOR
BOOSTER VACUUM TUBE
9.0 (92, 80 in.*lbf)
HARNESS BRACKET
13 (131, 9.5)
GASKET
20 (204, 15)
ENGINE COOLANT TEMPERATURE SENSOR
13 (131, 9.5)
HARNESS BRACKET
WATER BY-PASS HOSE
CAMSHAFT POSITION SENSOR
8.0 (82, 71 in.*lbf)
N*m (kgf*cm, ft.*lbf) : Specified torque
Non-reusable part
T
A116965E01

EM

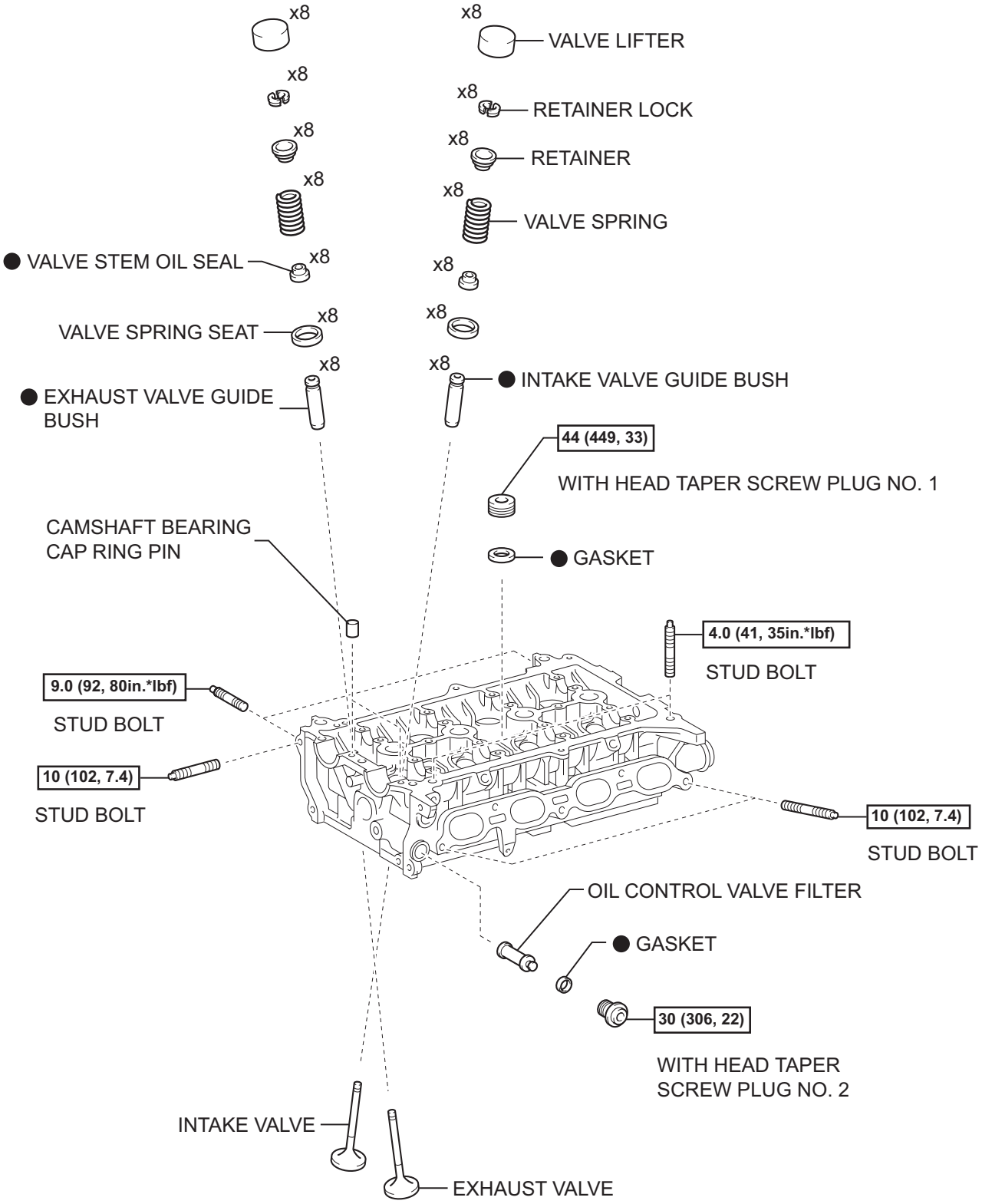

T

A117451E03

REMOVAL

1. **DISCHARGE FUEL SYSTEM PRESSURE** (See Page FU-1)
2. **DISCONNECT CABLE FROM NEGATIVE BATTERY TERMINAL**
3. **REMOVE FRONT WIPER ARM HEAD CAP (for Hatchback) (See page WW-17)**
4. **REMOVE FRONT WIPER ARM HEAD CAP (for Sedan) (See page WW-9)**
5. **REMOVE FRONT WIPER ARM AND BLADE ASSEMBLY LH (for Hatchback) (See page WW-17)**
6. **REMOVE FRONT WIPER ARM AND BLADE ASSEMBLY LH (for Sedan) (See page WW-9)**
7. **REMOVE FRONT WIPER ARM AND BLADE ASSEMBLY RH (for Hatchback) (See page WW-17)**
8. **REMOVE FRONT WIPER ARM AND BLADE ASSEMBLY RH (for Sedan) (See page WW-9)**
9. **REMOVE HOOD TO COWL TOP SEAL (for Hatchback) (See page WW-18)**
10. **REMOVE COWL TOP VENTILATOR LOUVER SUB-ASSEMBLY (for Hatchback) (See page WW-18)**
11. **REMOVE COWL TOP VENTILATOR LOUVER LH (for Hatchback) (See page WW-18)**
12. **REMOVE COWL SIDE VENTILATOR SUB-ASSEMBLY LH (for Sedan) (See page WW-10)**
13. **REMOVE COWL SIDE VENTILATOR SUB-ASSEMBLY RH (for Sedan) (See page WW-10)**
14. **REMOVE COWL TOP VENTILATOR LOUVER SUB-ASSEMBLY (for Sedan) (See page WW-10)**
15. **REMOVE FRONT WIPER MOTOR AND LINK (for Hatchback) (See page WW-19)**
16. **REMOVE FRONT WIPER MOTOR AND LINK (for Sedan) (See page WW-10)**
17. **REMOVE COWL TO REGISTER DUCT SUB-ASSEMBLY NO. 2 (for Hatchback) (See page EM-122)**
18. **REMOVE FRONT AIR SHUTTER SEAL RH (for Sedan) (See page ES-432)**
19. **REMOVE COWL TOP PANEL OUTER (for Hatchback) (See page EM-123)**
20. **REMOVE COWL TOP PANEL OUTER (for Sedan) (See page ES-432)**
21. **REMOVE BATTERY**
22. **REMOVE BATTERY TRAY**
23. **REMOVE FRONT WHEEL RH**

24. REMOVE ENGINE UNDER COVER RH

25. DRAIN ENGINE OIL

26. DRAIN ENGINE COOLANT (See page CO-8)

27. REMOVE CYLINDER HEAD COVER NO. 2 (See page IG-9)

28. REMOVE AIR CLEANER CAP SUB-ASSEMBLY WITH AIR CLEANER HOSE NO. 1 (See page ES-410)

29. DISCONNECT RADIATOR HOSE NO. 3

(a) Disconnect radiator hose No. 3.

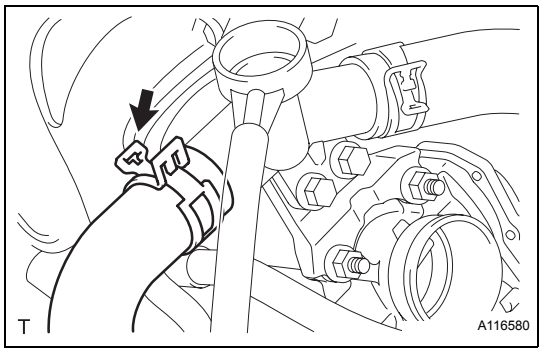

30. DISCONNECT RESERVE TANK HOSE

(a) Disconnect the reserve tank hose.

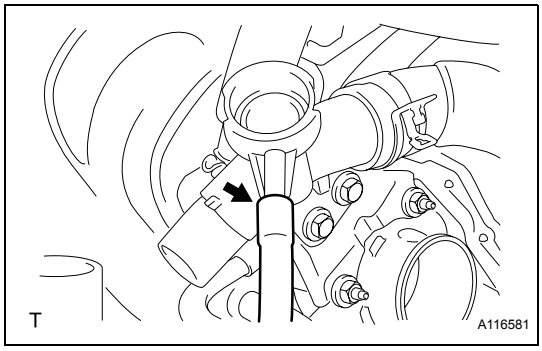

31. REMOVE WATER FILLER SUB-ASSEMBLY

(a) Separate radiator hose No. 1 from the cylinder head.

(b) Remove the 2 nuts and remove the water filler sub-assembly.

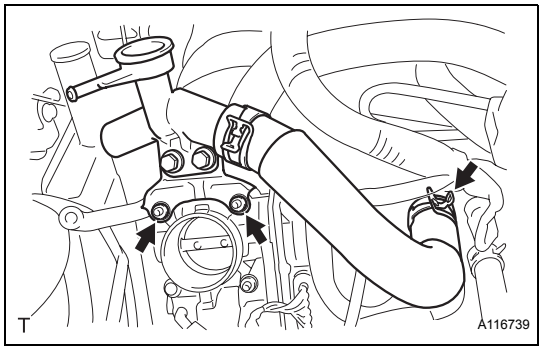

32. DISCONNECT WATER BY-PASS HOSE NO. 2

(a) Disconnect water by-pass hose No. 2.

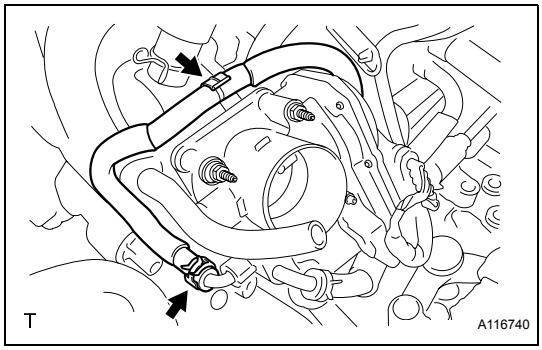

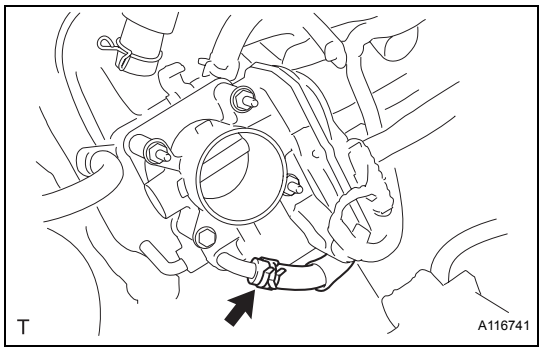

33. DISCONNECT WATER BY-PASS HOSE

(a) Disconnect the water by-pass hose.

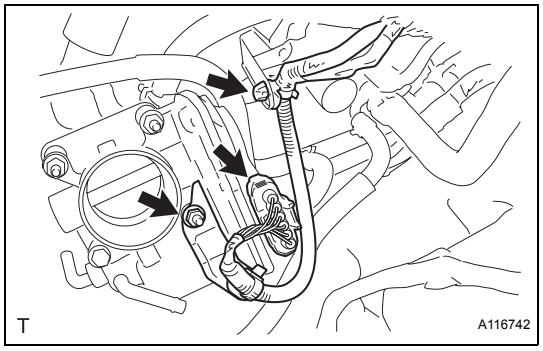

34. DISCONNECT THROTTLE WITH MOTOR BODY CONNECTOR

(a) Separate the wire harness clamp.

(b) Remove the nut and separate the throttle with motor body connector.

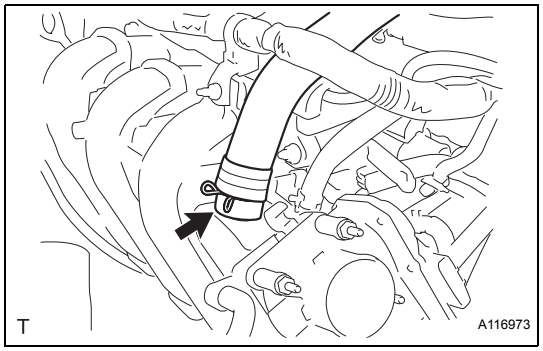

35. DISCONNECT VENTILATION HOSE

(a) Disconnect the ventilation hose.

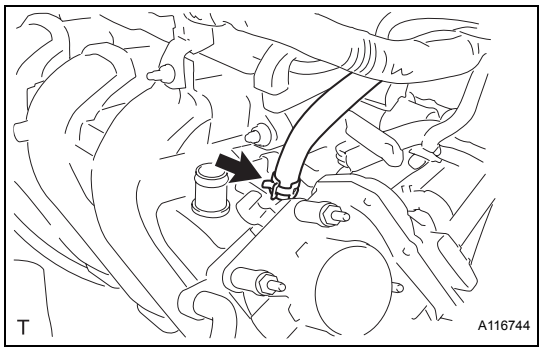

36. DISCONNECT UNION TO CONNECTOR TUBE HOSE

(a) Disconnect the union to connector tube hose.

37. REMOVE OIL LEVEL GAUGE SUB-ASSEMBLY

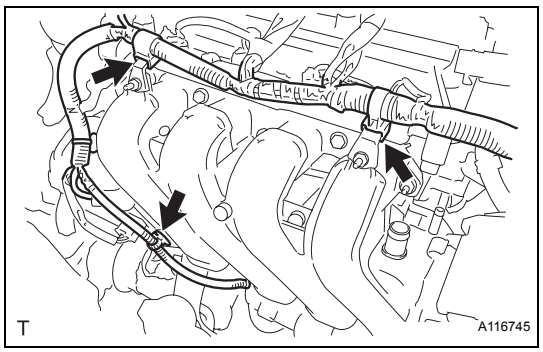

38. REMOVE INTAKE MANIFOLD

(a) Separate the 3 wire harness clamps shown in the illustration.

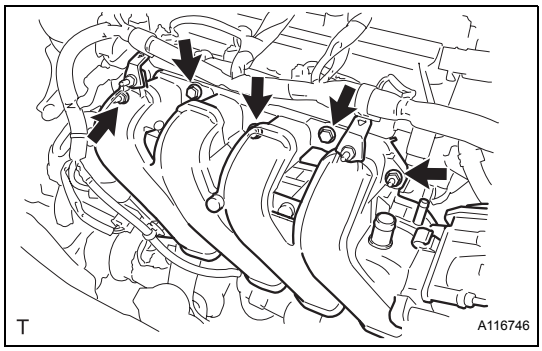

(b) Remove the 3 bolts and 2 nuts and remove the intake manifold.

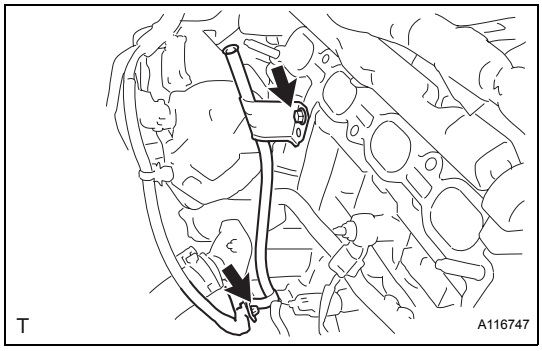

39. REMOVE OIL LEVEL GAUGE GUIDE

(a) Remove the wire harness clamp and the bolt and remove the oil level gauge guide.

40. DISCONNECT FUEL TUBE SUB-ASSEMBLY (See page FU-14)

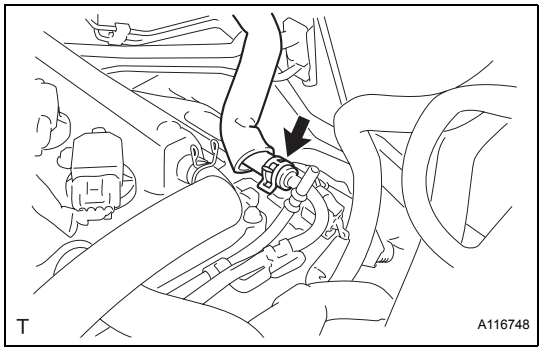

41. DISCONNECT BOOSTER VACUUM TUBE

(a) Disconnect the booster vacuum tube.

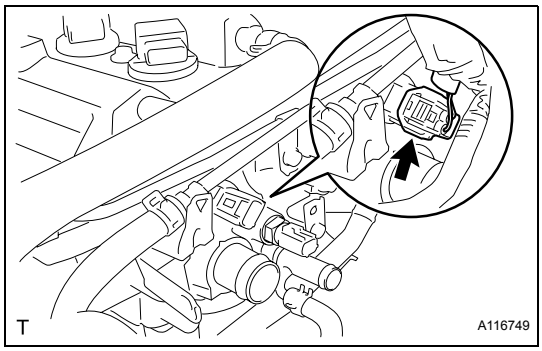

42. DISCONNECT CAMSHAFT POSITION SENSOR CONNECTOR

(a) Disconnect the camshaft position sensor connector.

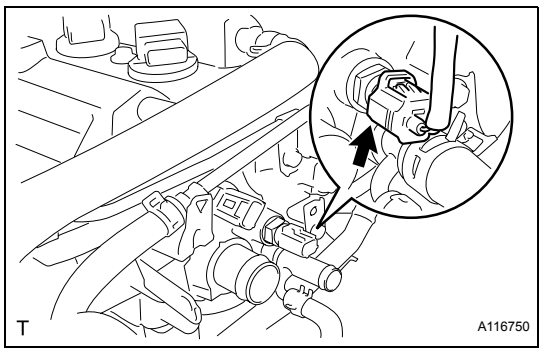

43. DISCONNECT ENGINE COOLANT TEMPERATURE SENSOR CONNECTOR

(a) Disconnect the engine coolant temperature sensor connector.

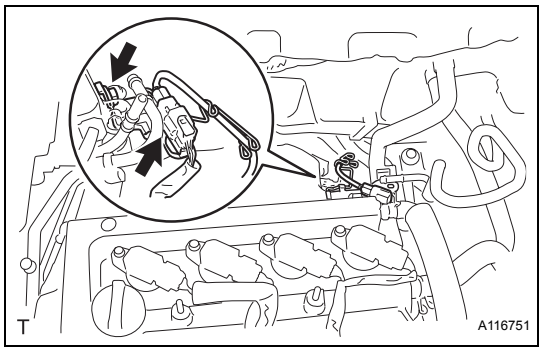

44. DISCONNECT HEATED OXYGEN SENSOR CONNECTOR

(a) Remove the bolts and separate the sensor bracket.
(b) Disconnect the heated oxygen sensor connector.

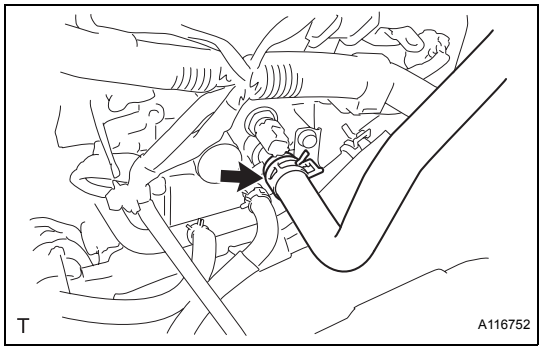

45. DISCONNECT HEATER WATER INLET HOSE A

(a) Disconnect heater water inlet hose A.

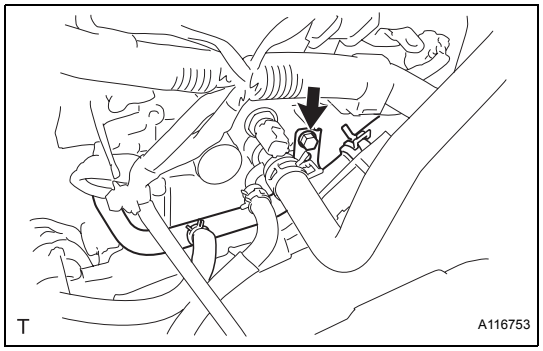

46. SEPARATE WATER BY-PASS PIPE NO. 1

(a) Remove the bolt and separate water by-pass pipe No. 1.

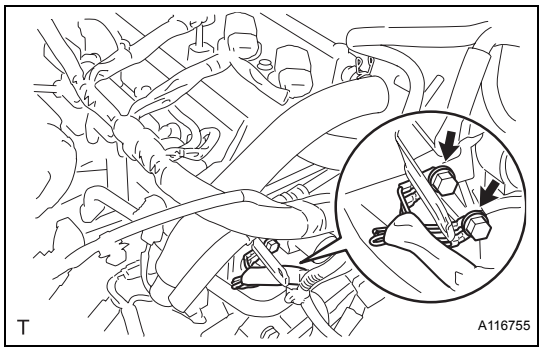

47. DISCONNECT WIRE HARNESS

(a) Remove the 2 bolts and disconnect the wire harness.

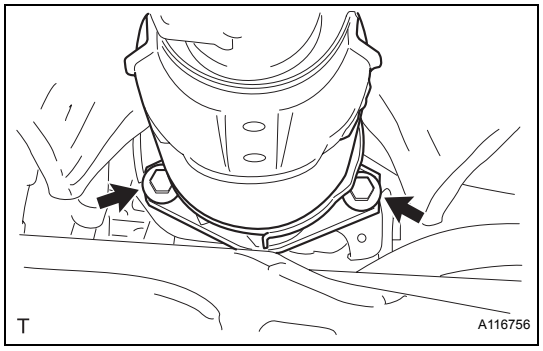

48. SEPARATE EXHAUST PIPE ASSEMBLY FRONT

(a) Remove the 2 bolts and 2 compression springs and separate the exhaust pipe assembly front.

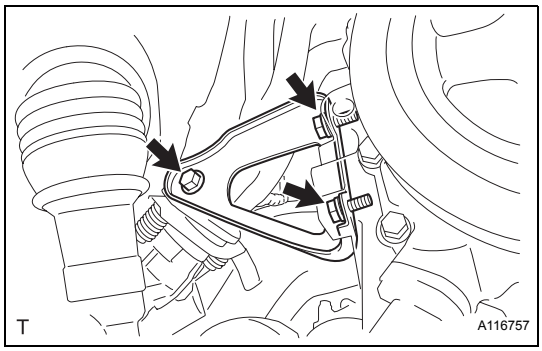

49. **REMOVE MANIFOLD SUPPORT BRACKET**
    (a) Remove the 3 bolts and remove the manifold support bracket.
50. **REMOVE FAN AND GENERATOR V BELT (See page EM-7)**
51. **REMOVE GENERATOR ASSEMBLY (See page CH-10)**
52. **REMOVE IGNITION COIL NO. 1 (See page IG-9)**
53. **REMOVE VENTILATION HOSE (See page FU-13)**
54. **REMOVE VENTILATION HOSE NO. 2 (See page FU-13)**
55. **REMOVE CYLINDER HEAD COVER SUB-ASSEMBLY (See page FU-13)**
56. **REMOVE ENGINE MOUNTING INSULATOR SUB-ASSEMBLY RH (See page LU-17)**
57. **REMOVE CRANKSHAFT DAMPER SUB-ASSEMBLY (See page LU-18)**
58. **REMOVE CRANKSHAFT POSITION SENSOR (See page ES-403)**
59. **REMOVE CAMSHAFT TIMING OIL CONTROL VALVE ASSEMBLY (See page ES-396)**
60. **REMOVE WATER PUMP PULLEY (See page CO-15)**
61. **REMOVE WATER PUMP ASSEMBLY (See page CO-15)**
62. **REMOVE TRANSVERSE ENGINE ENGINE MOUNTING BRACKET (See page LU-17)**
63. **REMOVE OIL PUMP ASSEMBLY (See page LU-19)**
64. **REMOVE OIL PUMP SEAL (See page LU-21)**
65. **REMOVE CHAIN TENSIONER ASSEMBLY NO. 1 (See page EM-33)**
66. **REMOVE CHAIN TENSIONER SLIPPER (See page EM-35)**
67. **REMOVE CHAIN VIBRATION DAMPER NO. 1 (See page EM-35)**
68. **REMOVE CHAIN SUB-ASSEMBLY**
69. **REMOVE CAMSHAFT**
    NOTICE:
    When rotating the camshaft with the timing chain removed, rotate the crankshaft counterclockwise 40° from the TDC first.

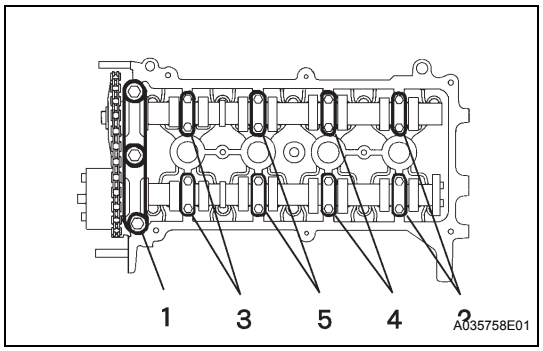

(a) Using several steps, uniformly loosen and remove the 19 bearing cap bolts in the sequence shown in the illustration, and then remove camshaft bearing cap No. 1 and camshaft bearing cap No. 2.
NOTICE:
Loosen each bolt uniformly while keeping the camshaft level.
(b) Remove the camshaft and camshaft No. 2.

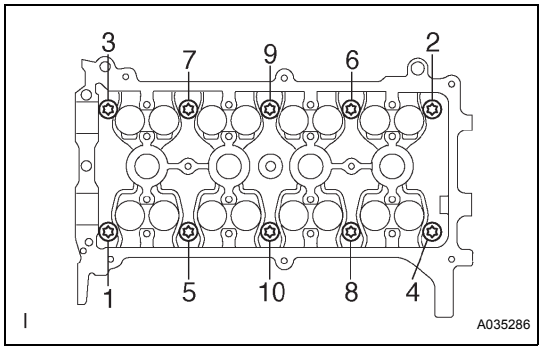

70. REMOVE CYLINDER HEAD SUB-ASSEMBLY

(a) Using several steps, uniformly loosen and remove the 10 cylinder head bolts with an 8 mm bi-hexagon wrench in the sequence shown in the illustration. Remove the 10 plate washers.
NOTICE:
- **Do not drop the washers into the cylinder head.**
- **Head warpage or cracking could result from removing the bolts in the wrong order.**

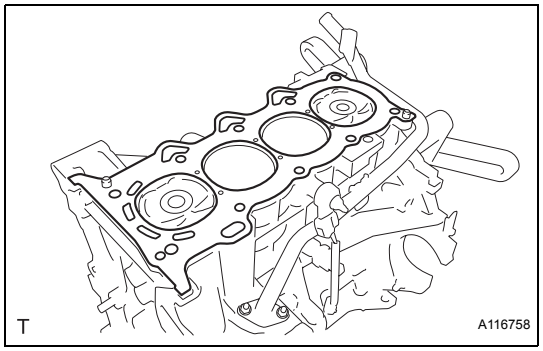

71. REMOVE CYLINDER HEAD GASKET

(a) Remove the cylinder head gasket.

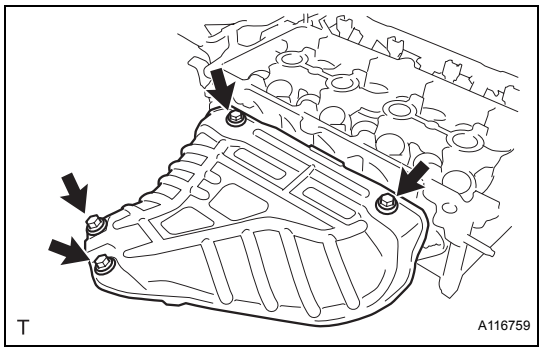

72. REMOVE EXHAUST MANIFOLD HEAT INSULATOR NO. 1

(a) Remove the 4 bolts and remove exhaust manifold heat insulator No. 1.

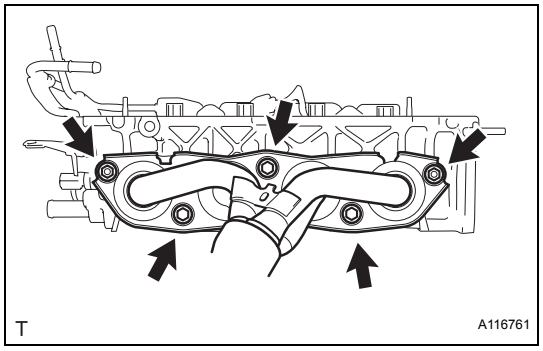

73. REMOVE EXHAUST MANIFOLD

(a) Remove the 3 bolts and 2 nuts and remove the exhaust manifold.

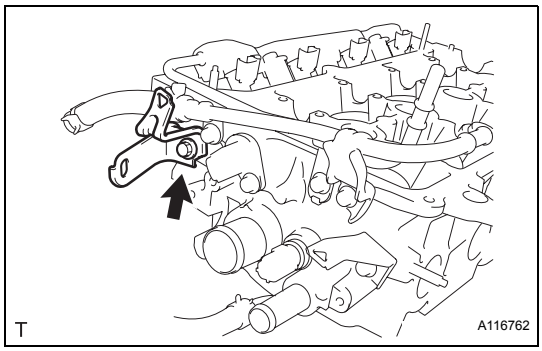

74. REMOVE HARNESS BRACKET

(a) Remove the bolt and remove the harness bracket.

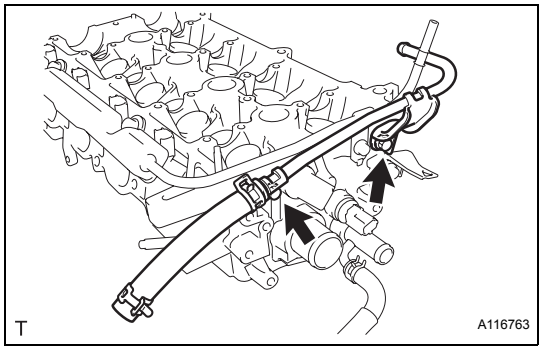

75. REMOVE BOOSTER VACUUM TUBE

(a) Remove the 2 bolts and remove the booster vacuum tube.

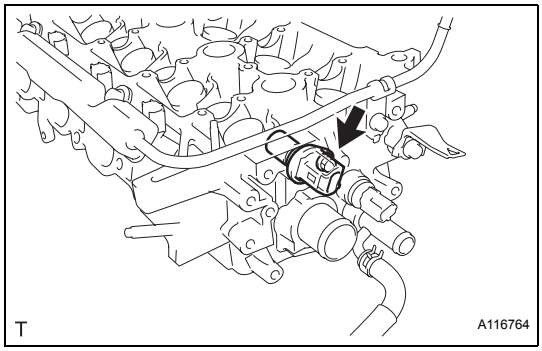

76. REMOVE CAMSHAFT POSITION SENSOR

(a) Remove the bolt and remove the camshaft position sensor.

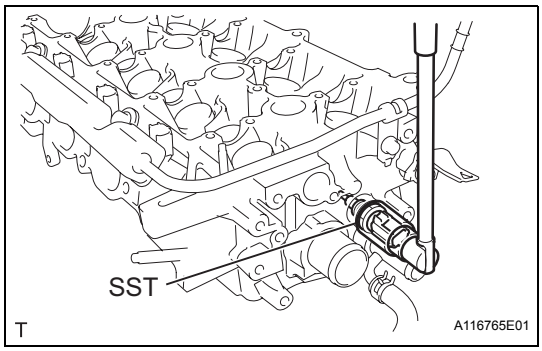

77. REMOVE ENGINE COOLANT TEMPERATURE SENSOR

(a) Using SST, remove the engine coolant temperature sensor connector.

SST 09817-33190

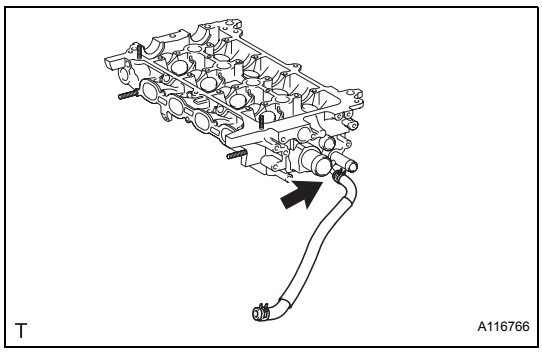

78. REMOVE WATER BY-PASS HOSE

(a) Remove the water by-pass hose.

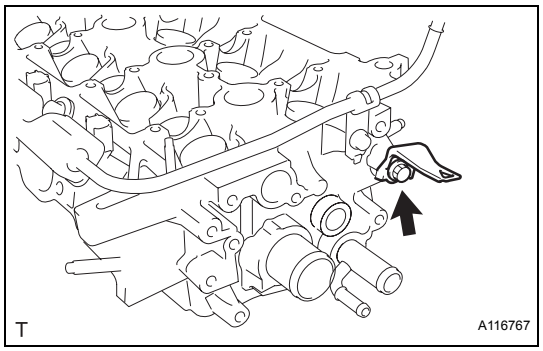

79. REMOVE HARNESS BRACKET

(a) Remove the bolt and remove the harness bracket.

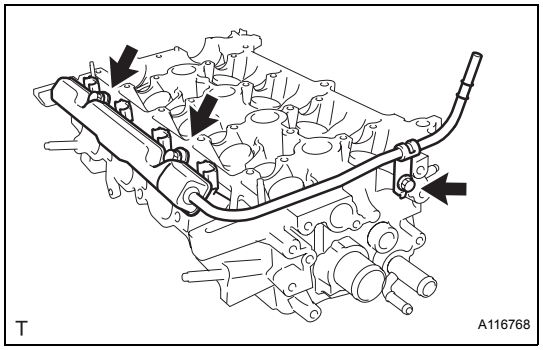

80. REMOVE FUEL DELIVERY PIPE SUB-ASSEMBLY

(a) Remove the 3 bolts and remove the fuel delivery pipe sub-assembly with 4 fuel injectors.

NOTICE:
Do not drop the fuel injectors when removing the fuel delivery pipe sub-assembly.

81. REMOVE FUEL INJECTOR ASSEMMBLY (See page FU-16)

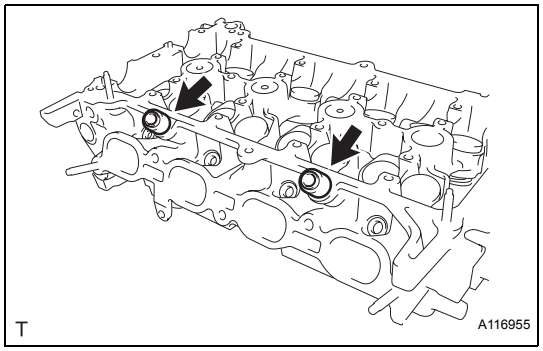

82. REMOVE DELIVERY PIPE NO. 1 SPACER

(a) Remove the 2 delivery pipe No. 1 spacers.

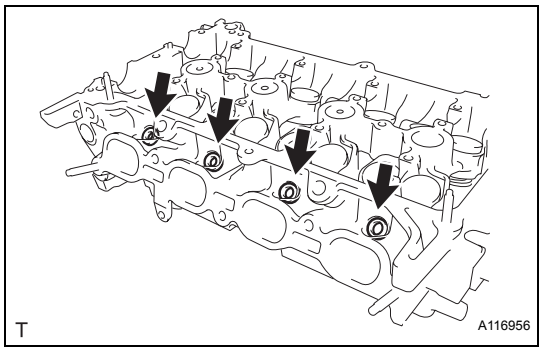

83. REMOVE INJECTOR VIBRATION INSULATOR

(a) Remove the 4 injector vibration insulators.

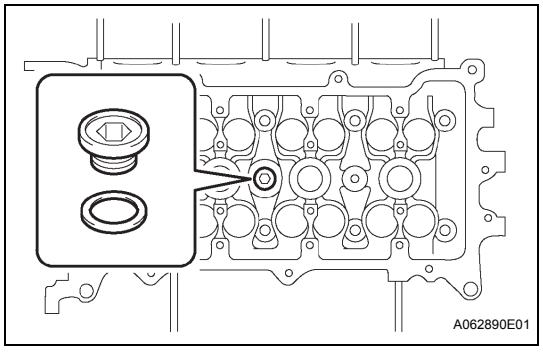

DISASSEMBLY

1. REMOVE WITH HEAD TAPER SCREW PLUG NO. 1

(a) Using a 10 mm socket hexagon wrench, remove the taper screw plug and the gasket.

2. REMOVE VALVE LIFTER

HINT:
Keep the valve lifters in the correct order so that they can be returned to their original locations when reassembled.

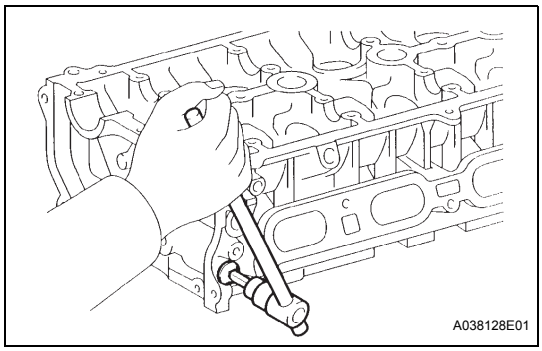

3. REMOVE WITH HEAD TAPER SCREW PLUG NO. 2

(a) Using an 8 mm hexagon wrench, remove the taper screw plug.

4. REMOVE OIL CONTROL VALVE FILTER

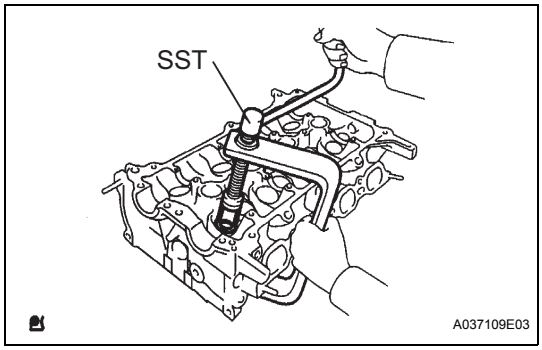

5. REMOVE INTAKE VALVE

(a) Using SST, compress the valve spring and remove the 2 retainer locks, retainer and valve spring.
SST 09202-70020 (09202-00010)
HINT:
Keep the valves, valve springs, spring seats and spring retainers in the correct order so that they can be returned to their original locations when reassembled.

6. REMOVE EXHAUST VALVE

(a) Using SST, compress the valve spring and remove the 2 retainer locks, retainer and valve spring.
SST 09202-70020 (09202-00010)
HINT:
Keep the valves, valve springs, spring seats and spring retainers in the correct order so that they can be returned to their original locations when reassembled.

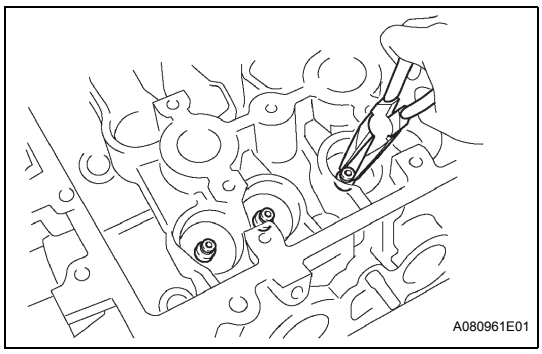

7. REMOVE VALVE STEM OIL SEAL

(a) Using needle-nose pliers, remove the oil seal.

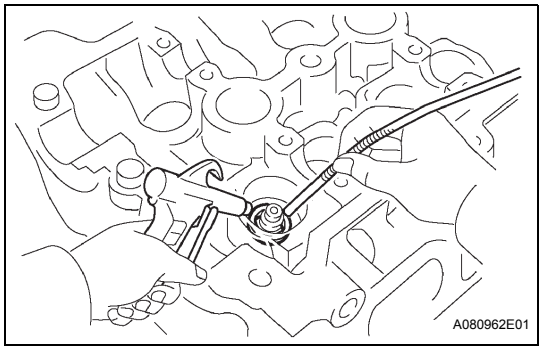

8. REMOVE VALVE SPRING SEAT

(a) Using compressed air and a magnetic finger, remove the valve spring seats.

9. REMOVE STUD BOLT

(a) Using "Torx" socket wrenches E5 and E7, remove the 7 stud bolts.

10. REMOVE CAMSHAFT BEARING CAP SETTING RING PIN

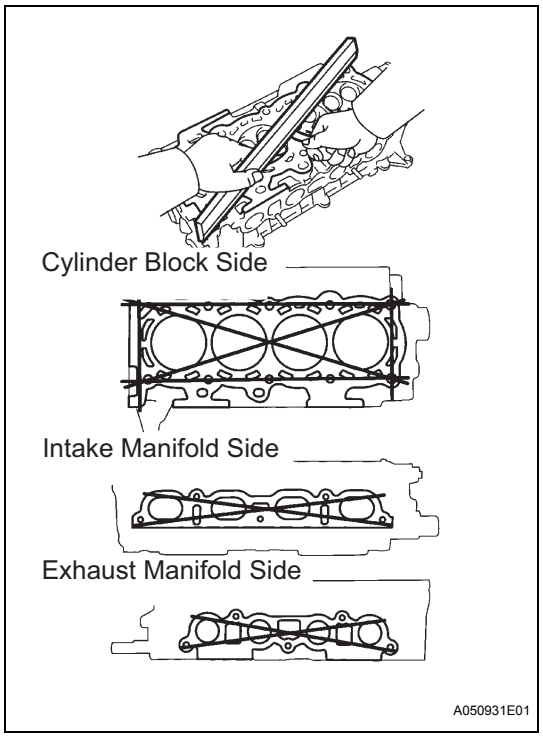

INSPECTION

1. INSPECT CYLINDER HEAD FOR WARPAGE

(a) Using a precision straightedge and feeler gauge, measure the warpage of the surface that is in contact with the cylinder block and the manifolds.

Maximum warpage

Surface	Specified Condition
Cylinder block side	0.05 mm (0.0020 in.)
Intake manifold side	0.10 mm (0.0039 in.)
Exhaust manifold side	0.10 mm (0.0039 in.)

If the warpage is greater than the maximum, replace the cylinder head.

EM

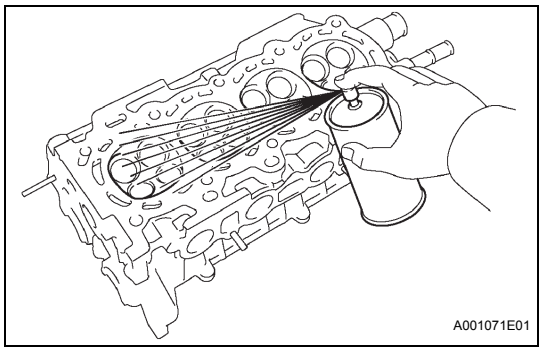

2. INSPECT CYLINDER HEAD FOR CRACKS

(a) Using a dye penetrate, check the combustion chamber, intake ports, exhaust ports and cylinder block surface for cracks.

If cracked, replace the cylinder head.

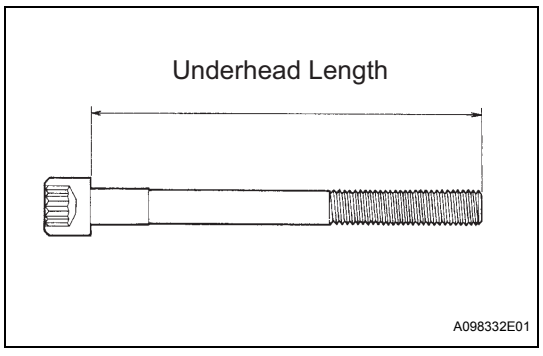

3. INSPECT CYLINDER HEAD SET BOLT

(a) Using vernier calipers, measure the length of the head bolts from the seat to the end.

Standard length:
142.8 to 144.2 mm (5.622 to 5.677 in.)
Maximum length:
147.1 mm (5.791 in.)

If the length is greater than the maximum, replace the bolt.

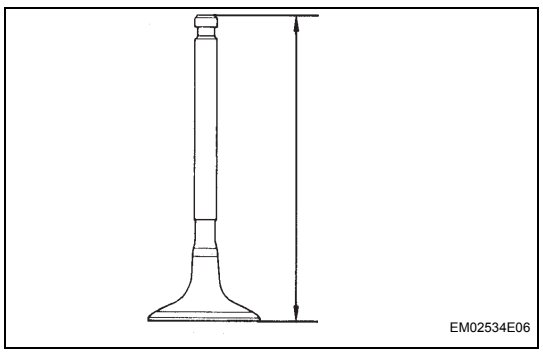

4. INSPECT INTAKE VALVE

(a) Check the overall valve length.

Standard overall length:
89.25 mm (3.5138 in.)
Minimum overall length:
88.75 mm (3.4941 in.)

If the overall length is less than the minimum, replace the valve.

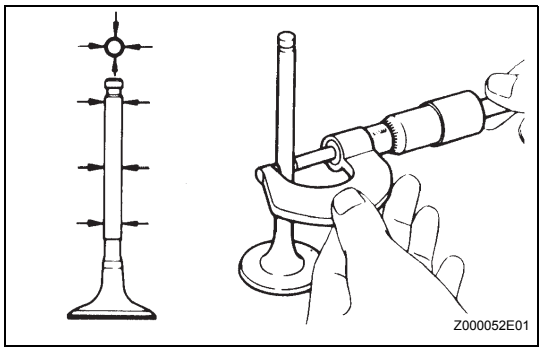

(b) Using a micrometer, measure the diameter of the valve stem.
Standard valve stem diameter:
4.970 to 4.985 mm (0.1957 to 0.1963 in.)

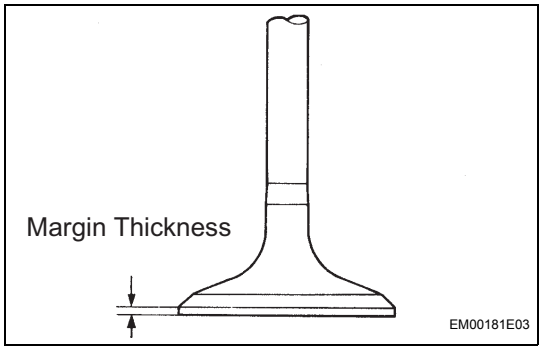

(c) Check the valve head margin thickness.
Standard margin thickness:
1.0 mm (0.039 in.)
Minimum margin thickness:
0.5 mm (0.020 in.)
If the margin thickness is less than the minimum, replace the valve.

5. INSPECT EXHAUST VALVE

(a) Check the overall valve length.
Standard overall length:
87.90 mm (3.4606 in.)
Minimum overall length:
87.40 mm (3.4409 in.)
If the overall length is less than the minimum, replace the valve.

(b) Using a micrometer, measure the diameter of the valve stem.
Standard valve stem diameter:
4.965 to 4.980 mm (0.1955 to 0.1961 in.)

(c) Check the valve head margin thickness.
Standard margin thickness:
1.15 mm (0.045 in.)
Minimum margin thickness:
0.5 mm (0.020 in.)
If the margin thickness is less than the minimum, replace the valve.

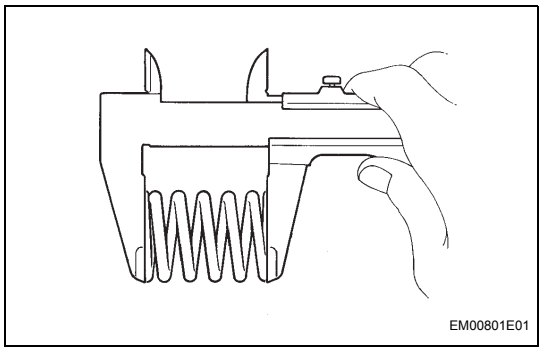

6. INSPECT VALVE SPRING

(a) Using vernier calipers, measure the free length of the valve spring.
Standard free length:
45.05 to 45.15 mm (1.774 to 1.778 in.)
If the free length is not as specified, replace the spring.

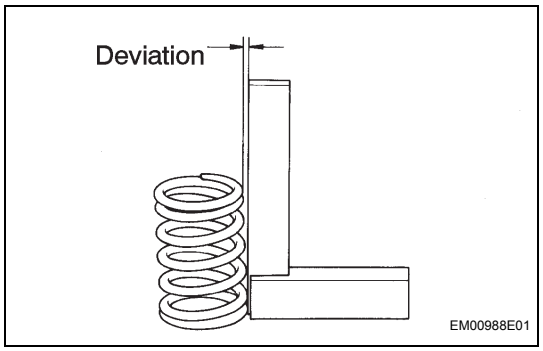

(b) Using a steel square, measure the deviation of the valve spring.
Maximum deviation:
1.6 mm (0.063 in.)
Maximum angle (reference):
2°
If the deviation is greater than the maximum, replace the spring.

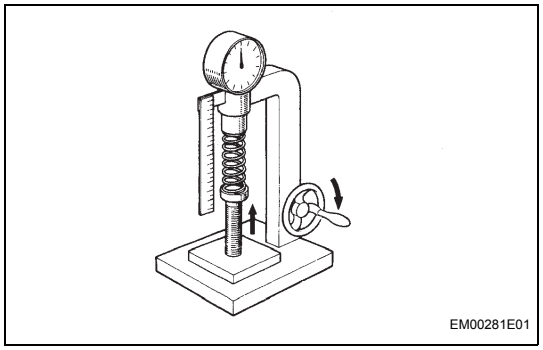

(c) Using a spring tester, measure the tension of the valve spring at the specified installed length.
Standard installed tension:
149 to 165 N (15.2 to 16.8 kgf, 33.5 to 37.1 lbf) at 32.5 mm (1.280 in.)
Maximum working tension:
286 to 316 N (29.1 to 32.2 kgf, 64.2 to 71.0 lbf) at 23.9 mm (0.941 in.)
If the installed tension is not as specified, replace the valve spring.

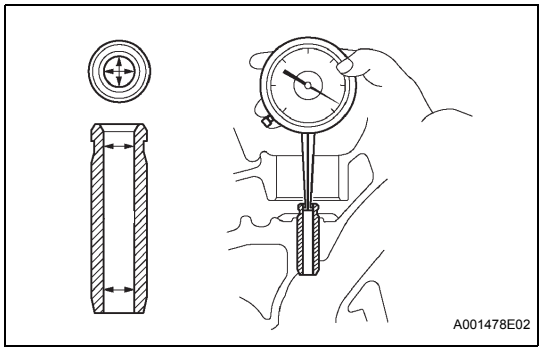

7. INSPECT VALVE GUIDE BUSH OIL CLEARANCE

(a) Using a caliper gauge, measure the inside diameter of the guide bush.
Bush inside diameter:
5.010 to 5.030 mm (0.1972 to 0.1980 in.)

(b) Subtract the valve stem diameter measurement from the guide bush inside diameter measurement to calculate the oil clearance.
Standard oil clearance

Guide Bush	Specified Condition
Intake	0.025 to 0.060 mm (0.0010 to 0.0024 in.)
Exhaust	0.030 to 0.065 mm (0.0012 to 0.0026 in.)

Maximum oil clearance

Guide Bush	Specified Condition
Intake	0.08 mm (0.0032 in.)
Exhaust	0.10 mm (0.0039 in.)

If the clearance is greater than the maximum, replace the valve and guide bush (see page EM-92).

8. INSPECT INTAKE VALVE SEAT

(a) Apply a light coat of prussian blue to the valve face.
(b) Lightly press the valve against the seat.

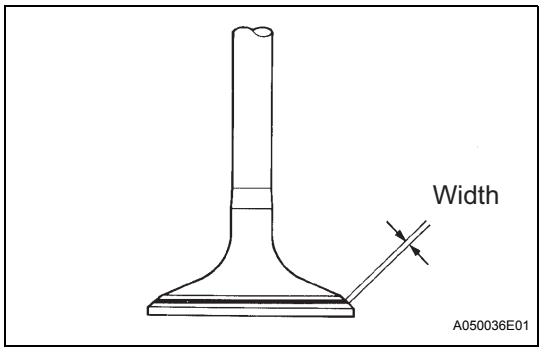

(c) Check the valve face and seat in accordance with the following procedure.
  (1) If blue appears 360° around the face, the valve is concentric. If not, replace the valve.
  (2) If blue appears 360° around the valve seat, the guide and face are concentric. If not, resurface the seat.
  (3) Check that the seat contact is in the middle of the valve face with the width between 1.0 to 1.4 mm (0.039 to 0.055 in.).

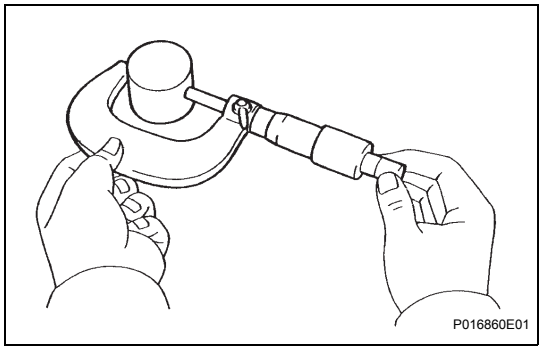

9. INSPECT VALVE LIFTER

(a) Using a micrometer, measure the lifter diameter.
Standard lifter diameter:
30.966 to 30.976 mm (1.2191 to 1.2195 in.)

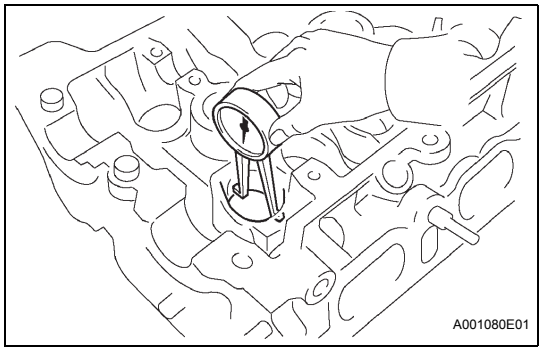

10. INSPECT VALVE LIFTER OIL CLEARANCE

(a) Using a caliper gauge, measure the lifter bore diameter of the cylinder head.
Standard lifter bore diameter:
31.000 to 31.025 mm (1.2205 to 1.2215 in.)

(b) Subtract the lifter diameter measurement from the lifter bore diameter measurement to calculate the oil clearance.
Standard oil clearance:
0.024 to 0.059 mm (0.0009 to 0.0023 in.)
Maximum oil clearance:
0.1 mm (0.0039 in.)
If the oil clearance is greater than the maximum, replace the lifter. If necessary, replace the cylinder head.

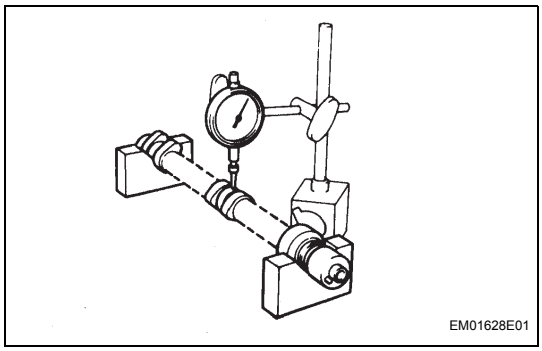

11. INSPECT CAMSHAFT

(a) Inspect the camshaft for runout.
  (1) Place the camshaft on V-blocks.
  (2) Using a dial indicator, measure the circle runout at the center journal.
  Maximum circle runout:
  0.03 mm (0.0012 in.)
  If the circle runout is greater than the maximum, replace the camshaft.

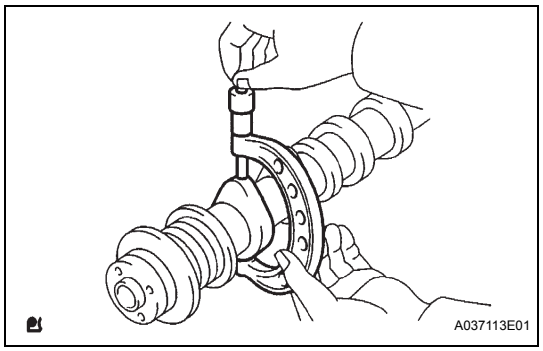

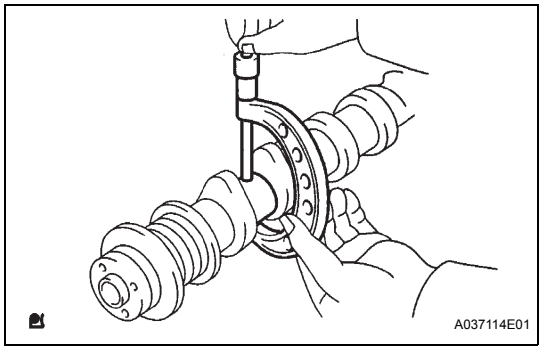

(b) Inspect the cam lobes.
(1) Using a micrometer, measure the cam lobe height.
Standard cam lobe height:
44.617 to 44.717 mm (1.7566 to 1.7605 in.)
Minimum cam lobe height:
43.16 mm (1.6992 in.)
If the cam lobe height is less than the minimum, replace the camshaft.

(c) Inspect the camshaft journals.
(1) Using a micrometer, measure the journal diameter.
Standard journal diameter

Journal	Specified Condition
No. 1 journal	34.449 to 34.465 mm (1.3563 to 1.3569 in.)
Other journals	22.949 to 22.965 mm (0.9035 to 0.9041 in.)

If the journal diameter is not as specified, check the oil clearance.

12. INSPECT NO. 2 CAMSHAFT

(a) Inspect the camshaft for runout.
(1) Place the camshaft on V-blocks.
(2) Using a dial indicator, measure the circle runout at the center journal.
Maximum circle runout:
0.03 mm (0.0012 in.)
If the circle runout is greater than the maximum, replace the camshaft.

(b) Inspect the cam lobes.
(1) Using a micrometer, measure the cam lobe height.
Standard cam lobe height:
44.666 to 44.766 (1.7585 to 1.7624 in.)
Minimum cam lobe height:
44.52 mm (1.7528 in.)
If the cam lobe height is less than the minimum, replace the camshaft.

(c) Inspect the camshaft journals.
(1) Using a micrometer, measure the journal diameter.
Standard journal diameter

Journal	Specified Condition
No. 1 journal	34.449 to 34.465 mm (1.3563 to 1.3569 in.)
Other journals	22.949 to 22.965 mm (0.9035 to 0.9041 in.)

If the journal diameter is not as specified, check the oil clearance.

EM

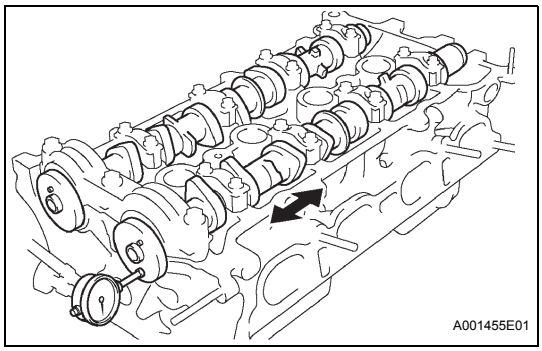

13. INSPECT CAMSHAFT THRUST CLEARANCE

(a) Install the camshafts.

(b) Using a dial indicator, measure the thrust clearance while moving the camshaft back and forth.
Standard thrust clearance:
0.040 to 0.095 mm (0.0016 to 0.0037 in.)
Maximum thrust clearance:
0.11 mm (0.0043 in.)
If the thrust clearance is greater than the maximum, replace the camshaft. If necessary, replace the bearing caps and the cylinder head together.

14. INSPECT CAMSHAFT OIL CLEARANCE

(a) Clean the bearing caps and the camshaft journals.

(b) Place the camshafts on the cylinder head.

(c) Lay a strip of Plastigage across each of the camshaft journals.

(d) Install the bearing caps (see page EM-97).
NOTICE:
Do not turn the camshaft.

(e) Remove the bearing caps.

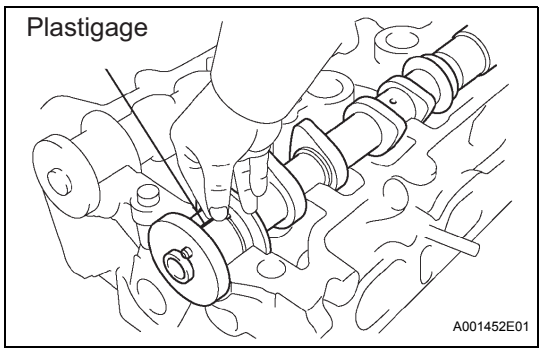

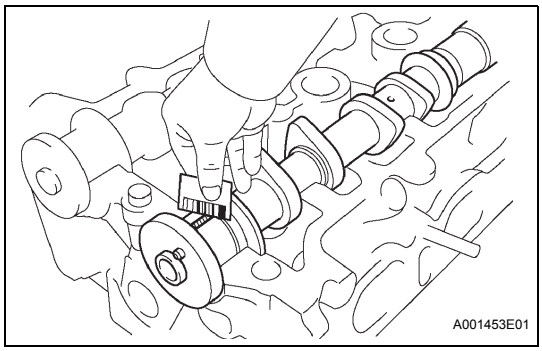

(f) Measure the Plastigage at its widest point.
Standard oil clearance:
0.035 to 0.072 mm (0.0014 to 0.0028 in.)
Maximum oil clearance:
0.08 mm (0.0031 in.)
If the oil clearance is greater than the maximum, replace the camshaft. If necessary, replace the bearing caps and the cylinder head together.
NOTICE:
Completely remove the Plastigage after the measurement.

REPLACEMENT

1. REMOVE INTAKE VALVE GUIDE BUSH

(a) Heat the cylinder head to 80 to 100°C (176 to 212°F).

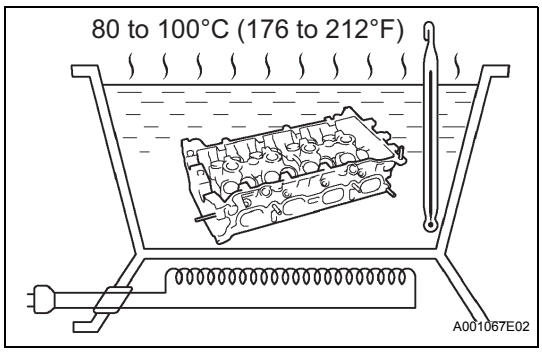

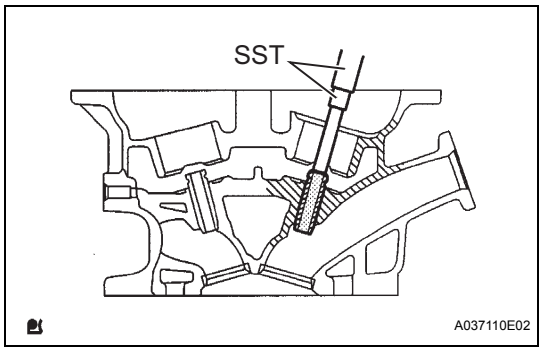

(b) Using SST and a hammer, tap out the guide bushing.
SST 09201-10000 (09201-01050), 09950-70010 (09951-07100)

2. REMOVE EXHAUST VALVE GUIDE BUSH

(a) Heat the cylinder head to 80 to 100°C (176 to 212°F).

(b) Using SST and a hammer, tap out the guide bushing.
SST 09201-10000 (09201-01050), 09950-70010 (09951-07100)

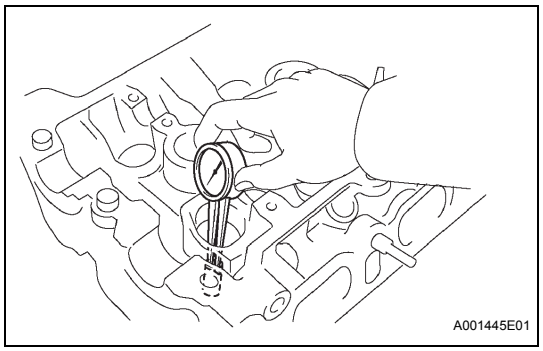

3. INSTALL INTAKE VALVE GUIDE BUSH

(a) Using a caliper gauge, measure the bushing bore diameter of the cylinder head.
Inside Diameter:
9.685 to 9.706 mm (0.3813 to 0.3821 in.)
If the bushing bore diameter of the cylinder head is greater than 9.706 mm (0.3821 in.), machine the bushing bore to the dimension of 9.735 to 9.755 mm (0.3833 to 0.3841 in.).

Bushing bore diameter mm (in.)	Bushing size
9.685 to 9.706 (0.3813 to 0.3821)	STD
9.735 to 9.755 (0.3833 to 0.3841)	O/S 0.05

(b) Heat the cylinder head to 80 to 100°C (176 to 212°F).

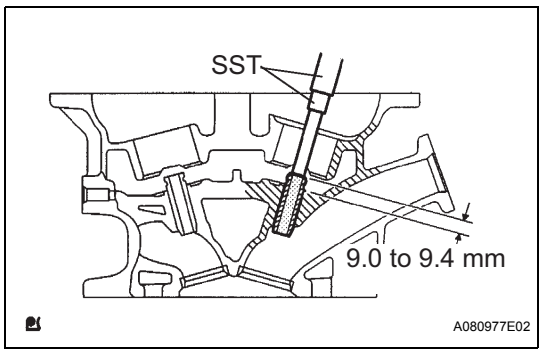

(c) Using SST and a hammer, tap a new guide bushing in to the specified protrusion height.
SST 09201-10000 (09201-01050), 09950-70010 (09951-07100)
Protrusion height:
9.0 to 9.4 mm (0.354 to 0.370 in.)

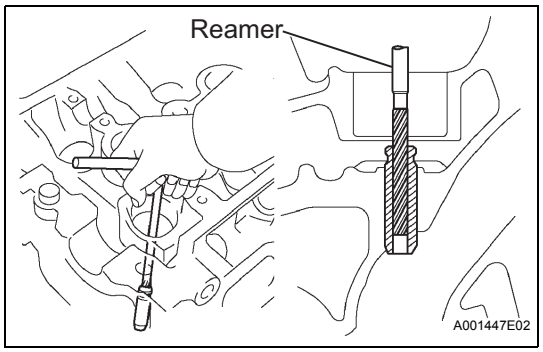

(d) Using a sharp 5 mm reamer, ream the guide bushing to obtain the standard oil clearance between the guide bushing and valve stem.
Standard oil clearance:
0.025 to 0.060 mm (0.0010 to 0.0024 in.)

4. INSTALL EXHAUST VALVE GUIDE BUSH

(a) Using a caliper gauge, measure the bushing bore diameter of the cylinder head.
Inside Diameter:
9.685 to 9.706 mm (0.3813 to 0.3821 in.)

If the bushing bore diameter of the cylinder head is greater than 9.706 mm (0.3821 in.), machine the bushing bore to the dimension of 9.735 to 9.755 mm (0.3833 to 0.3841 in.).

Bushing bore diameter mm (in.)	Bushing size
9.685 to 9.706 (0.3813 to 0.3821)	STD
9.735 to 9.755 (0.3833 to 0.3841)	O/S 0.05

(b) Heat the cylinder head to 80 to 100°C (176 to 212°F).

(c) Using SST and a hammer, tap a new guide bushing in to the specified protrusion height.
SST 09201-10000 (09201-01050), 09950-70010 (09951-07100)
Protrusion height:
9.0 to 9.4 mm (0.354 to 0.370 in.)

(d) Using a sharp 5 mm reamer, ream the guide bushing to obtain the standard oil clearance between the guide bushing and valve stem.
Standard oil clearance:
0.030 to 0.065 mm (0.0012 to 0.0026 in.)

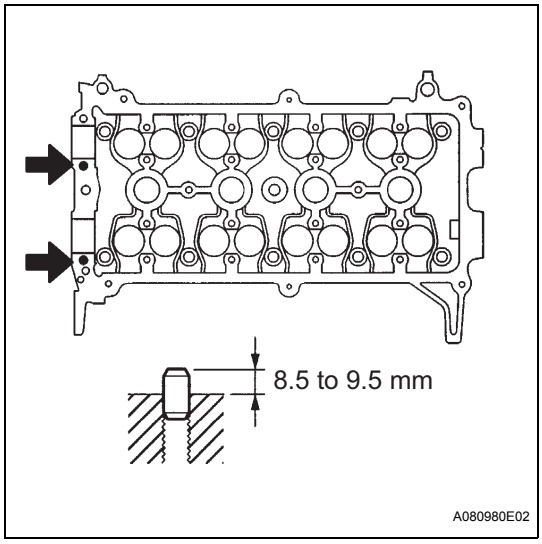

REASSEMBLY

1. INSTALL CAMSHAFT BEARING CAP SETTING RING PIN

(a) Using a plastic-faced hammer, tap a new ring pin in to the specified protrusion height.
Protrusion height:
8.5 to 9.5 mm (0.335 to 0.374 in.)

2. INSTALL STUD BOLT

(a) Using "Torx" socket wrenches E5 and E7, install the 7 stud bolts.
Torque:
Stud bolt A:
10 N*m (102 kgf*cm, 7.4 ft.*lbf)
Stud bolt B:
4.0 N*m (41 kgf*cm, 35 in.*lbf)
Stud bolt C:
10 N*m (102 kgf*cm, 7.4 ft.*lbf)
Stud bolt D:
9.0 N*m (92 kgf*cm, 80 in.*lbf)

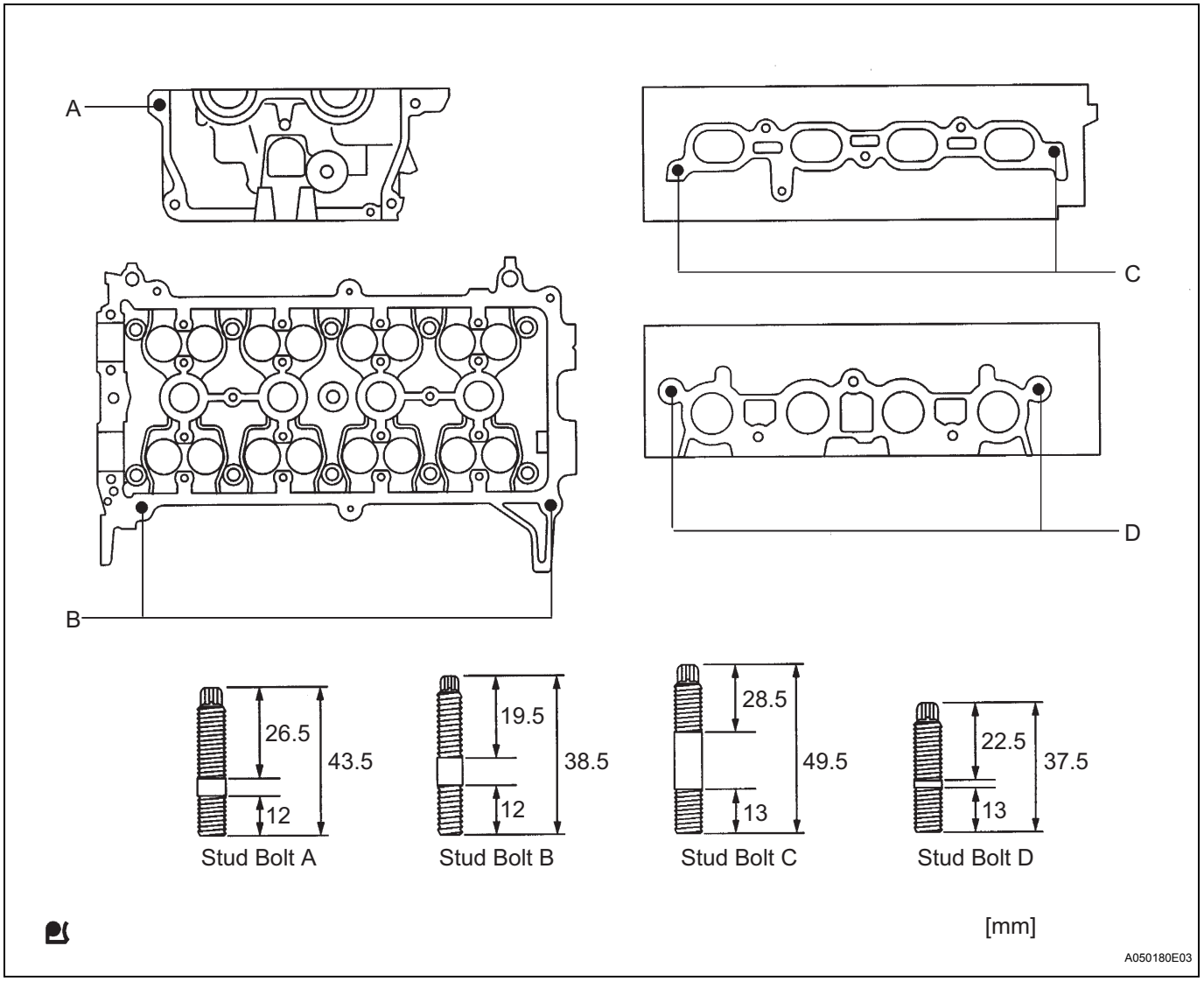

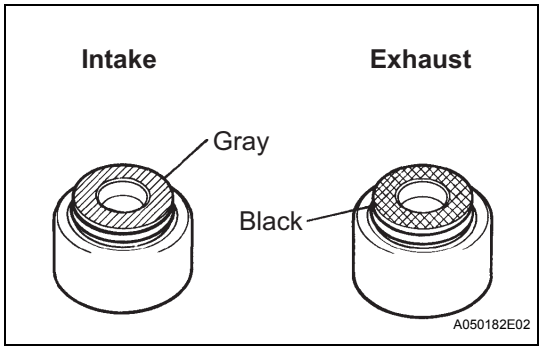

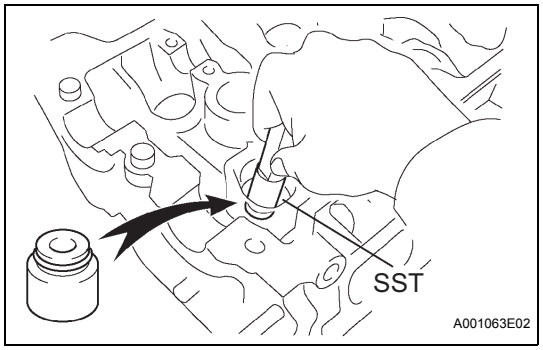

3. INSTALL VALVE STEM OIL SEAL

(a) Apply a light coat of engine oil to new valve stem oil seals.

NOTICE:

Installing the oil seals for the intake and exhaust onto the opposite valve guide bush as may cause failures.

HINT:

The intake valve oil seal is gray and the exhaust valve oil seal is black.

(b) Using SST, push in the oil seals.

SST 09201-41020

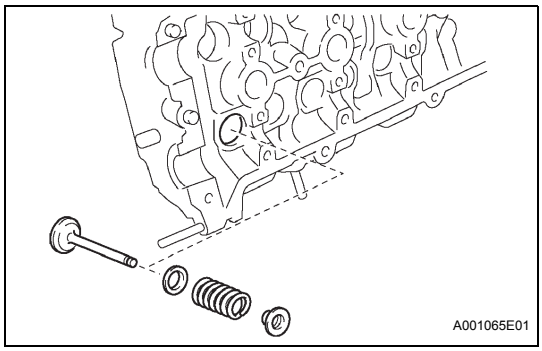

4. INSTALL INTAKE VALVE

(a) Install the valve, spring seat, valve spring, and spring retainer.
NOTICE:
Install the parts in their original locations in the original order.

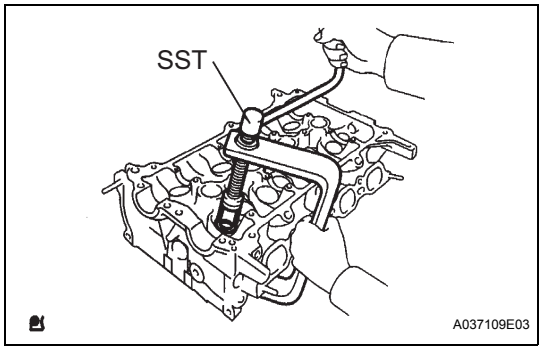

(b) Using SST, compress the valve spring and place the 2 retainer locks around the valve stem.
SST 09202-70020 (09202-00010)

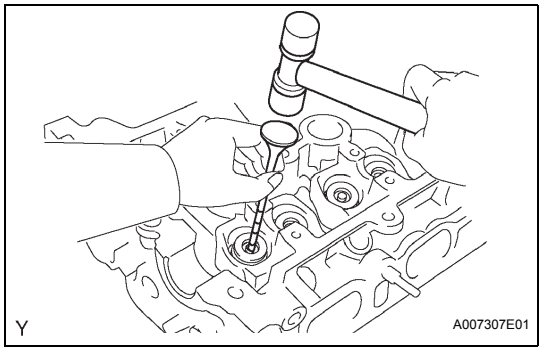

(c) Using a plastic-faced hammer and the valve stem (not in use) with its tip wrapped in tape, gently tap the valve stem tip to ensure a proper fit.
NOTICE:
Do not damage the valve stem tip.

5. INSTALL EXHAUST VALVE

(a) Install the valve, spring seat, valve spring, and spring retainer.
(b) Using SST, compress the valve spring and place the 2 retainer locks around the valve stem.
SST 09202-70020 (09202-00010)
(c) Using a plastic-faced hammer and the valve stem (not in use) with its tip wrapped in tape, lightly tap the valve stem tip to ensure a proper fit.
NOTICE:
Do not damage the valve stem tip.

6. INSTALL OIL CONTROL VALVE FILTER

(a) Install the oil control valve filter.

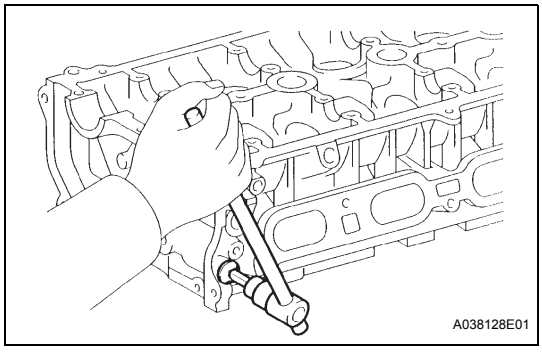

7. INSTALL WITH HEAD TAPER SCREW PLUG NO. 2

(a) Using an 8 mm hexagon wrench, install the taper screw plug and a new gasket.
Torque: 30 N*m (306 kgf*cm, 22 ft.*lbf)

8. INSTALL VALVE LIFTER

(a) Apply a light coat of engine oil to the 16 valve lifters.
(b) Install the 16 valve lifters.
(c) Check that the valve lifters rotate smoothly by hand.

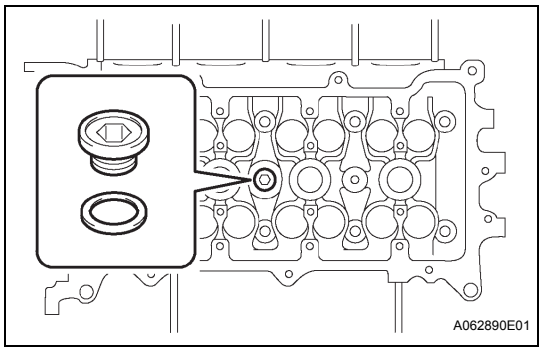

9. INSTALL WITH HEAD TAPER SCREW PLUG NO. 1

(a) Using a 10 mm socket hexagon wrench, install the taper screw plug with a new gasket.
Torque: 44 N*m (449 kgf*cm, 33 ft.*lbf)

INSTALLATION

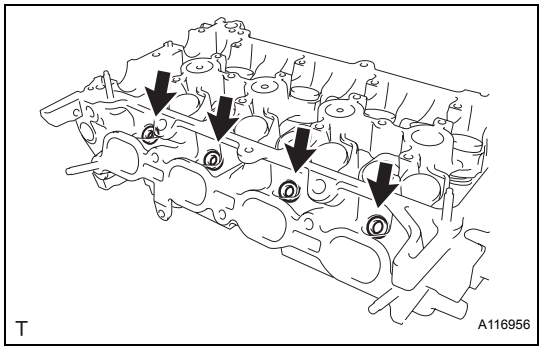

1. INSTALL INJECTOR VIBRATION INSULATOR

(a) Install 4 new injector vibration insulators onto the cylinder head.

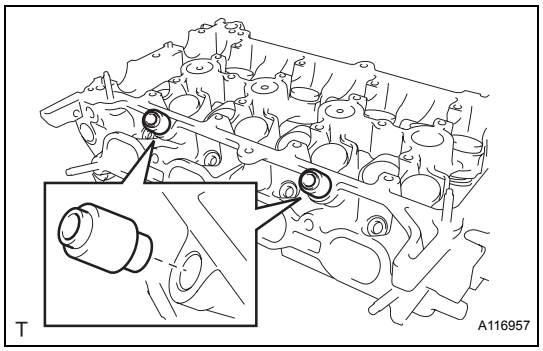

2. INSTALL DELIVERY PIPE NO. 1 SPACER

(a) Install the 2 delivery pipe No. 1 spacers onto the cylinder head.
NOTICE:
Install the delivery pipe No. 1 spacer in the correct direction.

3. INSTALL FUEL INJECTOR ASSEMBLY (See page FU-17)

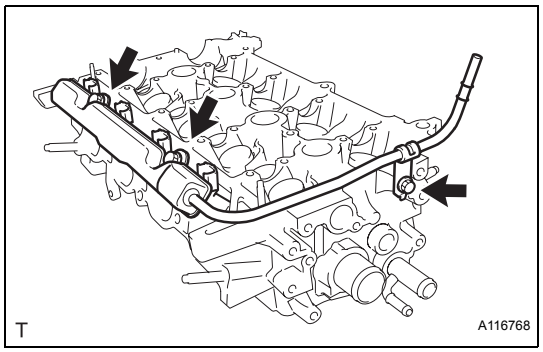

4. INSTALL FUEL DELIVERY PIPE SUB-ASSEMBLY

(a) Provisionally install the fuel delivery pipe sub-assembly with the 4 fuel injectors using the 3 bolts.
NOTICE:
- **Do not drop the fuel injectors when installing the fuel delivery pipe sub-assembly.**
- **Check that the fuel injectors rotate smoothly after installing the fuel delivery pipe sub-assembly.**

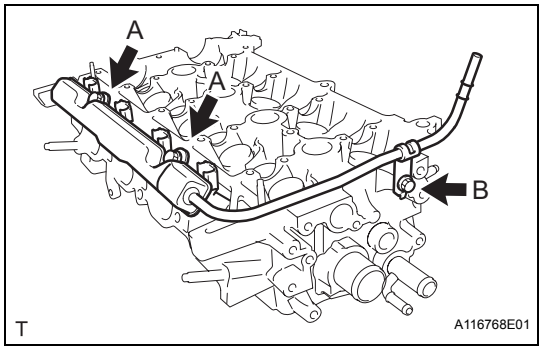

(b) Tighten the 3 bolts to the specified torque.
Torque: 19 N*m (194 kgf*cm, 14 ft.*lbf) for bolt A
9.0 N*m (92 kgf*cm, 80 in.*lbf) for bolt B

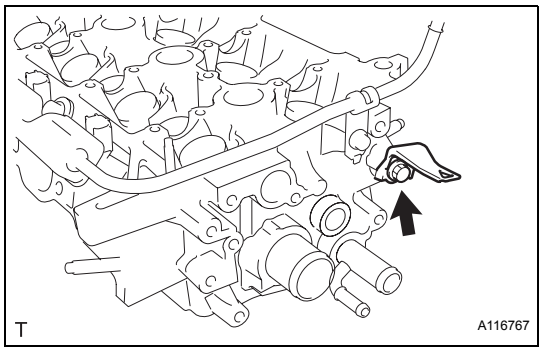

5. INSTALL HARNESS BRACKET

(a) Install the harness bracket with the bolt.
Torque: 13 N*m (131 kgf*cm, 9.5 ft.*lbf)

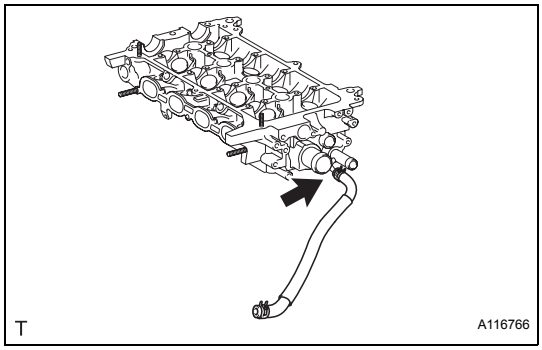

6. INSTALL WATER BY-PASS HOSE

(a) Install the water by-pass hose.

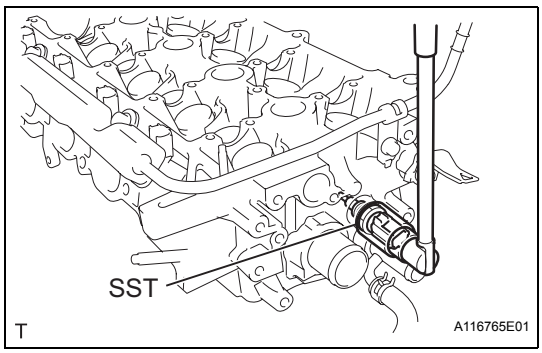

7. INSTALL ENGINE COOLANT TEMPERATURE SENSOR

(a) Provisionally install the engine coolant temperature sensor through a new gasket.
(b) Using SST, tighten the engine coolant temperature sensor.
SST 09817-33190
Torque: 20 N*m (204 kgf*cm, 15 ft.*lbf)

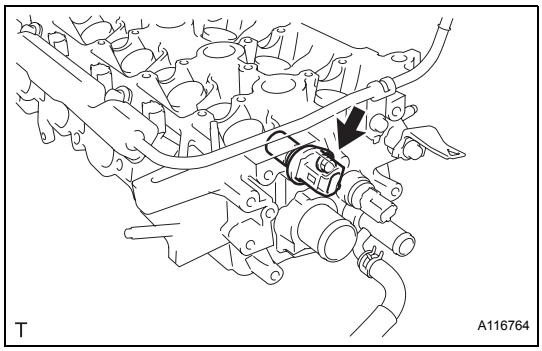

8. INSTALL CAMSHAFT POSITION SENSOR

(a) Apply a light coat of engine oil to the O-ring on the camshaft position sensor.
(b) Install the camshaft position sensor with the bolt.
Torque: 8.0 N*m (82 kgf*cm, 71 in.*lbf)
NOTICE:
Do not twist the O-ring.

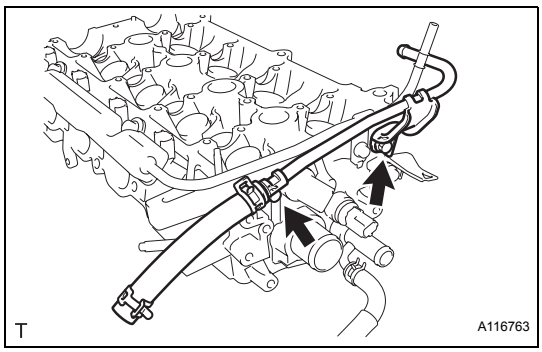

9. INSTALL BOOSTER VACUUM TUBE

(a) Install the booster vacuum tube with the 2 bolts.
Torque: 9.0 N*m (92 kgf*cm, 80 in.*lbf)

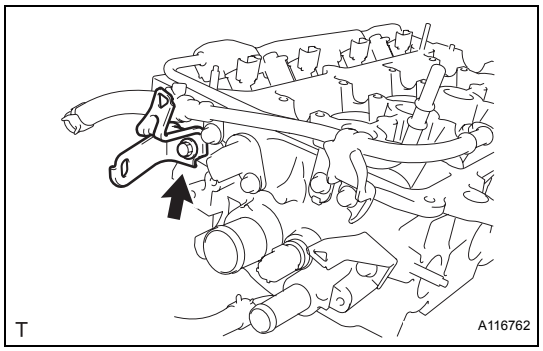

10. INSTALL HARNESS BRACKET

(a) Install the harness bracket with the bolt.
Torque: 13 N*m (131 kgf*cm, 9.5 ft.*lbf)

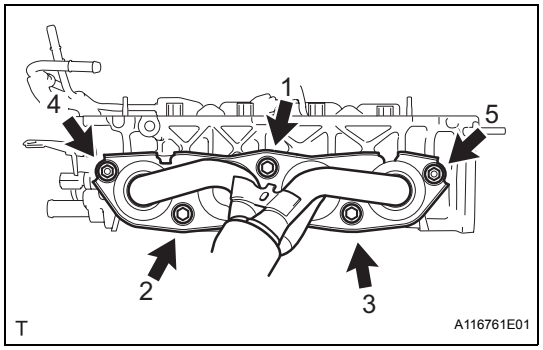

11. INSTALL EXHAUST MANIFOLD

(a) Using several steps, install a new exhaust manifold gasket and the exhaust manifold with the 3 bolts and 2 nuts in the sequence shown in the illustration.
Torque: 27 N*m (275 kgf*cm, 20 ft.*lbf)

EM

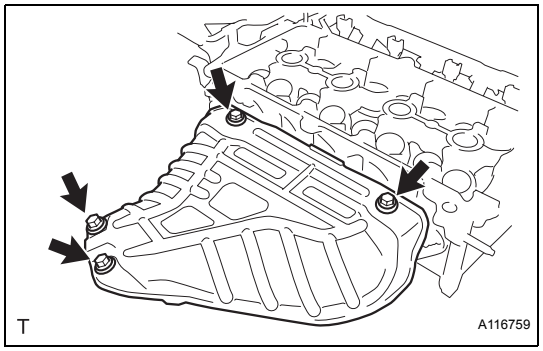

12. INSTALL EXHAUST MANIFOLD HEAT INSULATOR NO. 1

(a) Install exhaust manifold heat insulator No. 1 with the 4 bolts.
Torque: 8.0 N*m (82 kgf*cm, 71 in.*lbf)

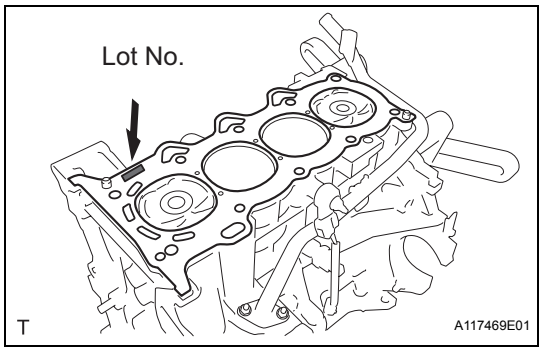

13. INSTALL CYLINDER HEAD GASKET

(a) Place a new cylinder head gasket on the cylinder block with the Lot No. stamp facing upward.
NOTICE:
- **Remove any oil from the contact surfaces.**
- **Check the mounting orientation of the cylinder head gasket.**
- **Place the cylinder head on the cylinder head gently in order not to damage the gasket.**

14. INSTALL CYLINDER HEAD SUB-ASSEMBLY

HINT:
The cylinder head bolts are tightened in 2 successive steps.

(a) Apply a light coat of engine oil to the threads of the cylinder head bolts.

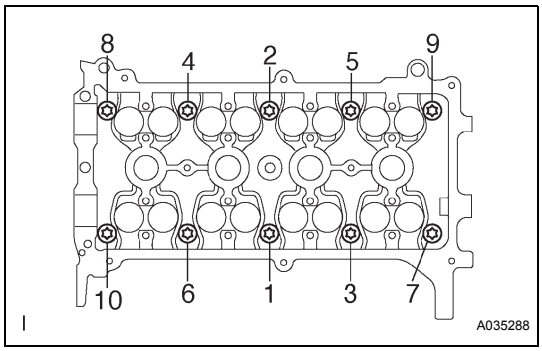

(b) Using several steps, install and tighten the 10 cylinder head bolts and plate washers uniformly with an 8 mm bi-hexagon wrench, in the sequence shown in the illustration.
Torque: 29 N*m (300 kgf*cm, 22 ft.*lbf)
(c) Mark the front of the cylinder head bolt with paint.

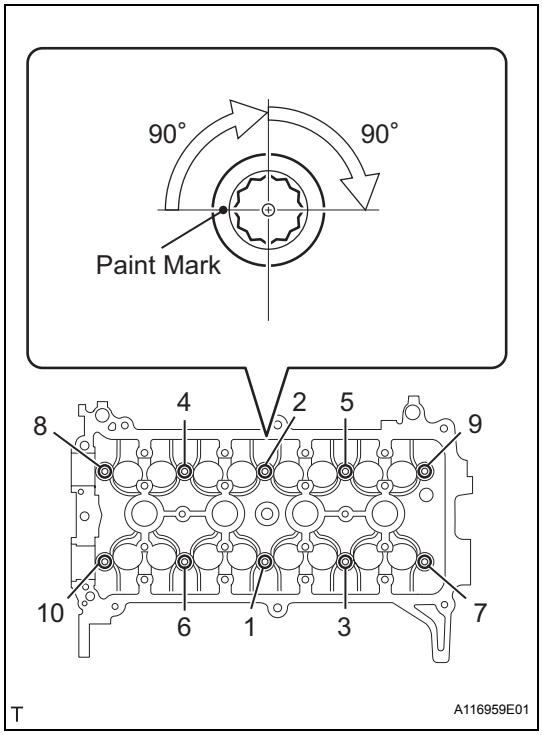

(d) Retighten the cylinder head bolts 90° and then an additional by 90° as shown in the illustration.
(e) Check that the paint mark is now at a 180° angle from the front.

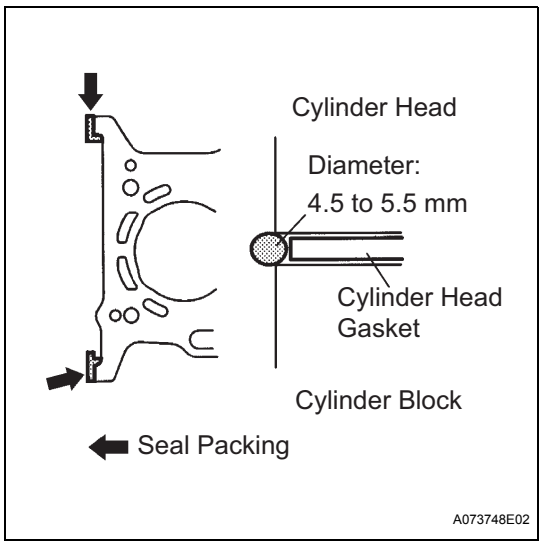

(f) Apply a continuous bead of seal packing (Diameter 4.5 to 5.5 mm (0.177 to 0.217 in.)) as shown in the illustration.
Seal Packing:
Toyota Genuine Seal Packing Black, Three Bond 1207B or Equivalent
NOTICE:
- **Remove any oil from the contact surfaces.**
- **Install the oil pump assembly within 3 minutes and tighten the bolts within 15 minutes of applying the seal packing.**

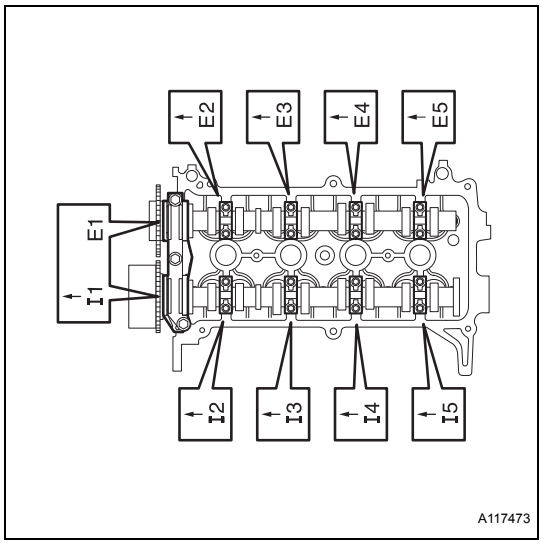

15. **INSTALL CAMSHAFT**
    (a) Examine the front marks and numbers and check that the sequence is as shown in the illustration. Then provisionally tighten the 19 bolts.

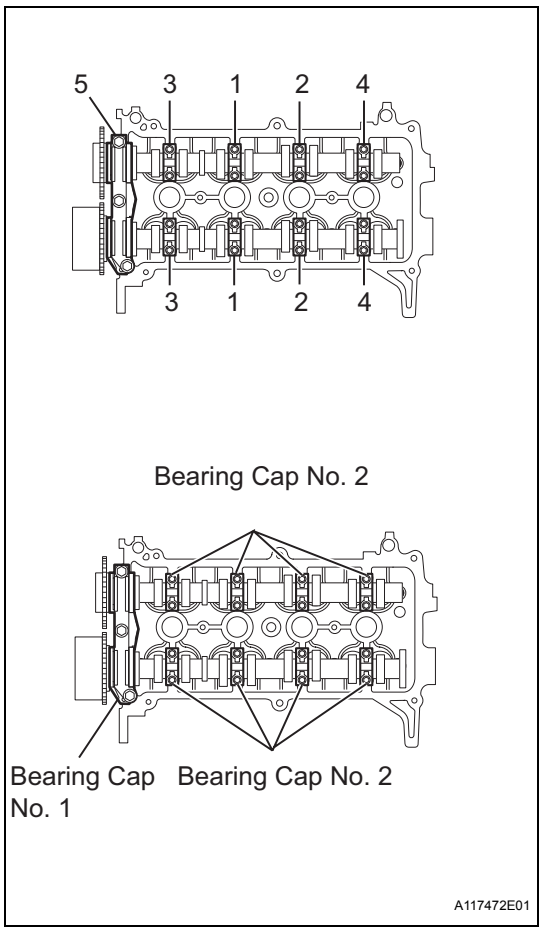

    (b) Uniformly tighten the bolts in several steps in the sequence shown in the illustration and install camshaft bearing cap No. 1 and camshaft bearing cap No. 2.
    Torque: Camshaft bearing cap No. 1
    23 N*m (235 kgf*cm, 17 ft.*lbf)
    Camshaft bearing cap No. 2
    13 N*m (129 kgf*cm, 9.4 ft.*lbf)
    NOTICE:
    Tighten each bolt uniformly while keeping the camshaft level.

16. **INSTALL CHAIN SUB-ASSEMBLY (See page EM-36)**
17. **INSTALL CHAIN TENSIONER SLIPPER (See page EM-38)**
18. **INSTALL CHAIN TENSIONER ASSEMBLY NO. 1 (See page EM-38)**
19. **INSTALL OIL PUMP SEAL (See page LU-21)**
20. **INSTALL OIL PUMP ASSEMBLY (See page LU-22)**
21. **INSTALL TRANSVERSE ENGINE ENGINE MOUNTING BRACKET (See page LU-26)**
22. **INSTALL WATER PUMP ASSEMBLY (See page CO-16)**
23. **INSTALL WATER PUMP PULLEY (See page CO-16)**
24. **INSTALL CAMSHAFT TIMING OIL CONTROL VALVE ASSEMBLY (See page ES-397)**
25. **INSTALL CRANKSHAFT POSITION SENSOR (See page ES-403)**
26. **INSTALL CRANKSHAFT DAMPER SUB-ASSEMBLY (See page LU-26)**
27. **INSTALL ENGINE MOUNTING INSULATOR SUB-ASSEMBLY RH (See page LU-26)**

EM

28. **INSTALL CYLINDER HEAD COVER SUB-ASSEMBLY (See page FU-19)**
29. **INSTALL VENTILATION HOSE NO. 2 (See page FU-20)**
30. **INSTALL VENTILATION HOSE (See page FU-20)**
31. **INSTALL IGNITION COIL NO. 1 (See page IG-9)**
32. **INSTALL GENERATOR ASSEMBLY (See page CH-17)**
33. **INSTALL FAN AND GENERATOR V BELT (See page EM-7)**
34. **ADJUST FAN AND GENERATOR V BELT (See page EM-7)**

EM

35. **INSPECT FAN AND GENERATOR V BELT (See page EM-8)**
36. **INSTALL MANIFOLD SUPPORT BRACKET**
    (a) Install the manifold support bracket with the 3 bolts.
    Torque: 44 N*m (449 kgf*cm, 33 ft.*lbf)

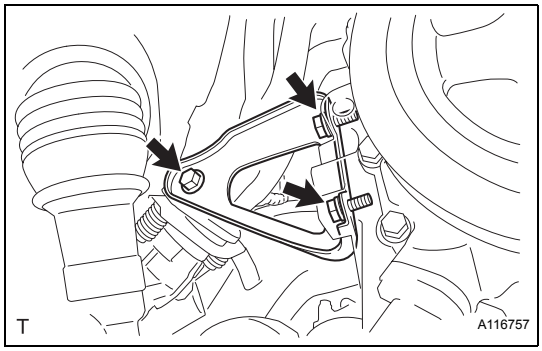

37. **INSTALL EXHAUST PIPE ASSEMBLY FRONT**
    (a) Using vernier calipers, measure the free length of the compression spring.
    Minimum length:
    40.5 mm (1.594 in.)
    If the length is not as specified, replace the compression spring.

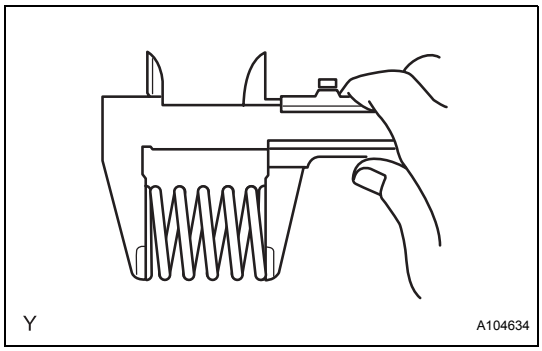

    (b) Using a plastic hammer and a wooden block, tap in a new exhaust pipe gasket until its surface is flush with the exhaust manifold.
    NOTICE:
    - **Install the exhaust pipe gasket in the correct direction.**
    - **Do not damage the outer surface of the exhaust pipe gasket.**
    - **Do not reuse the exhaust pipe gasket.**
    - **Do not push in the gasket with the exhaust pipe when installing.**

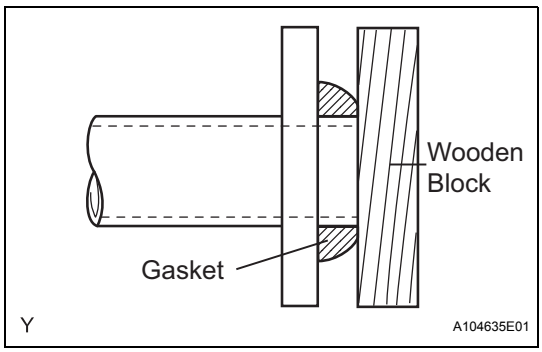

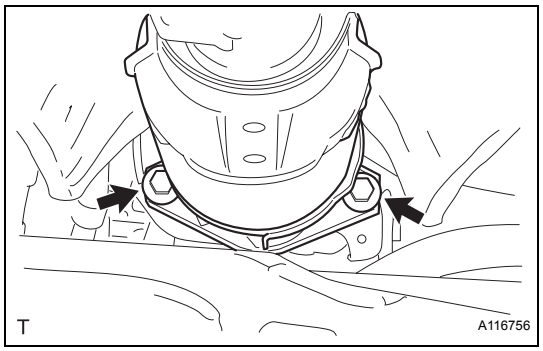

(c) Install the exhaust front pipe assembly with the 2 compression springs and 2 bolts.
Torque: 43 N*m (439 kgf*cm, 32 ft.*lbf)

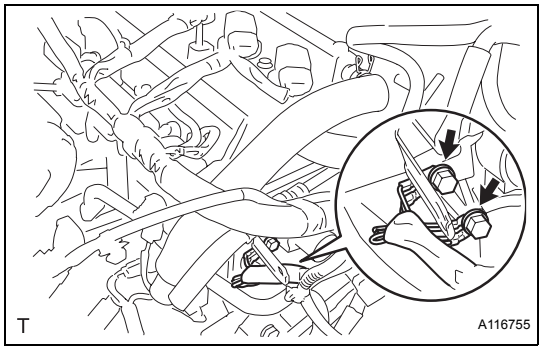

38. CONNECT WIRE HARNESS

(a) Connect the wire harness with the 2 bolts.
Torque: 13 N*m (133 kgf*cm, 10 ft.*lbf)

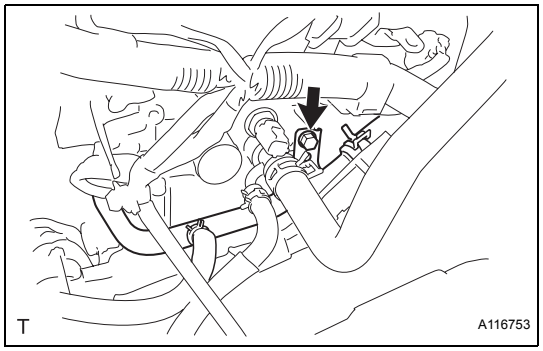

39. INSTALL WATER BY-PASS HOSE NO. 1

(a) Install water by-pass pipe No. 1 with the bolt.
Torque: 9.0 N*m (92 kgf*cm, 80 in.*lbf)

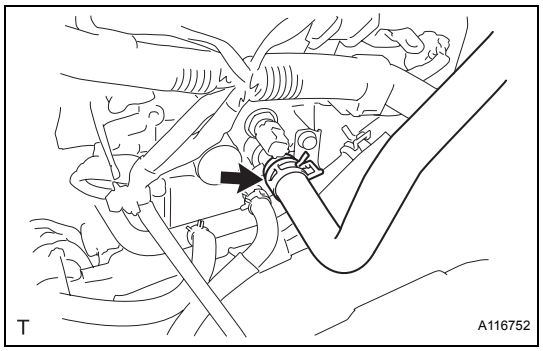

40. CONNECT HEATER WATER INLET HOSE A

(a) Connect heater water inlet hose A.

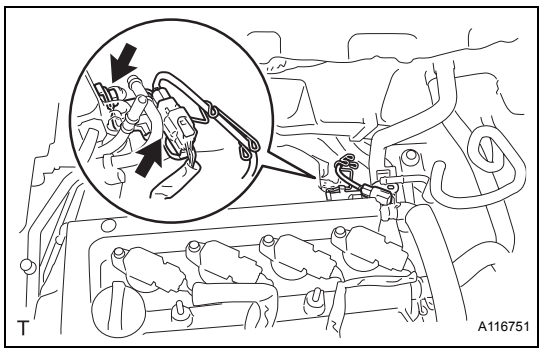

41. CONNECT HEATED OXYGEN SENSOR CONNECTOR

(a) Connect the heated oxygen sensor connector.
(b) Install the sensor bracket with the bolt.

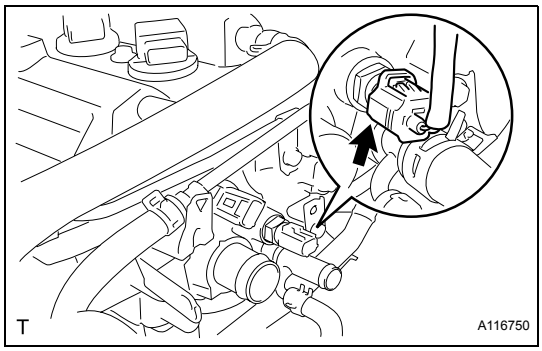

42. CONNECT ENGINE COOLANT TEMPERATURE SENSOR CONNECTOR

(a) Connect the engine coolant temperature sensor connector.

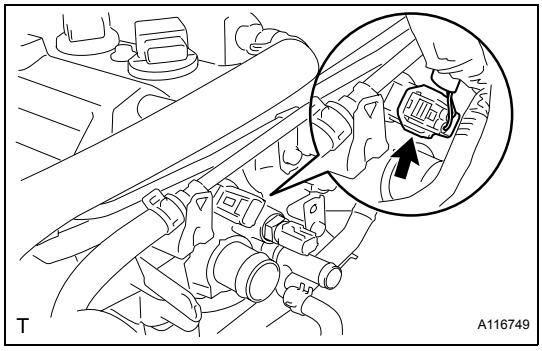

43. CONNECT CAMSHAFT POSITION SENSOR CONNECTOR

(a) Connect the camshaft position sensor connector.

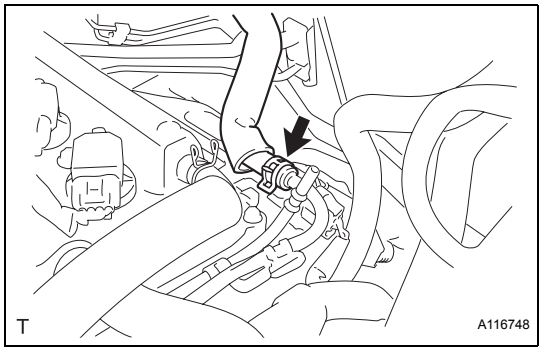

44. CONNECT BOOSTER VACUUM TUBE

(a) Connect the booster vacuum tube.

45. CONNECT FUEL TUBE SUB-ASSEMBLY (See page FU-18)

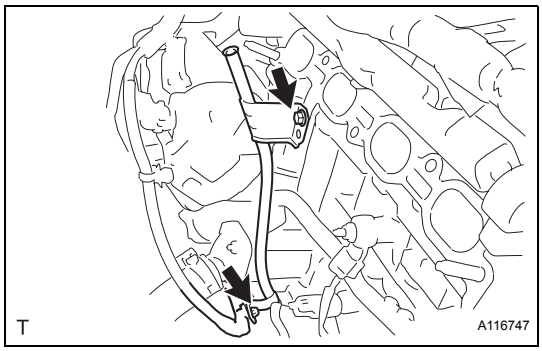

46. INSTALL OIL LEVEL GAUGE GUIDE

(a) Apply engine oil to a new O-ring.

(b) Install the oil level gauge guide with the bolt through a new O-ring.
Torque: 9.0 N*m (92 kgf*cm, 80 in.*lbf)

(c) Install the wire harness.

47. INSTALL INTAKE MANIFOLD

(a) Install a new gasket onto the intake manifold.

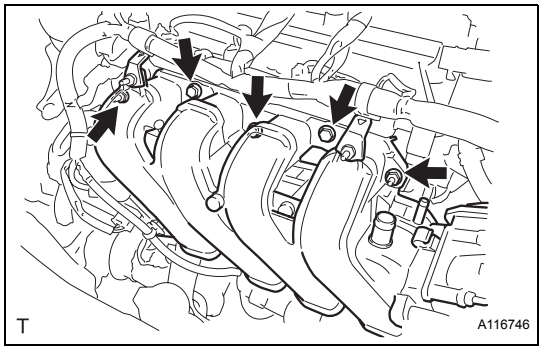

(b) Install the intake manifold with the 3 bolts and 2 nuts.
Torque: 30 N*m (306 kgf*cm, 22 ft.*lbf)

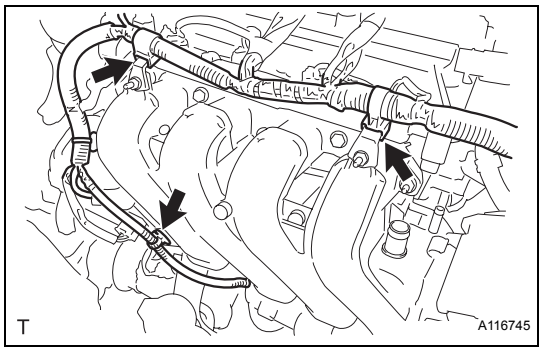

(c) Connect the 3 wire harness clamps shown in the illustration.

48. INSTALL OIL LEVEL GAUGE SUB-ASSEMBLY

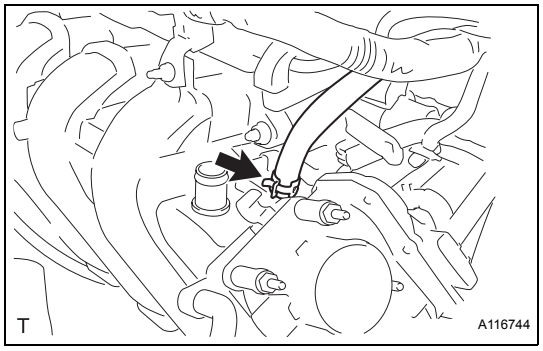

49. CONNECT UNION TO CONNECTOR TUBE HOSE

(a) Connect the union to connector tube hose.

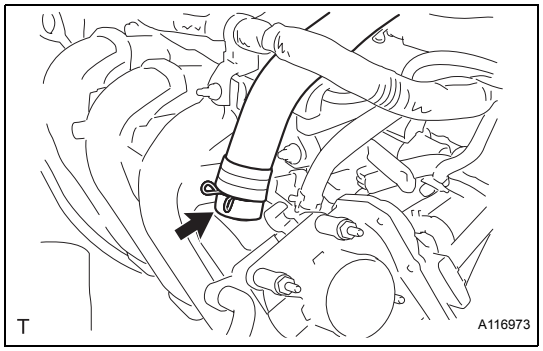

50. CONNECT VENTILATION HOSE

(a) Connect the ventilation hose.

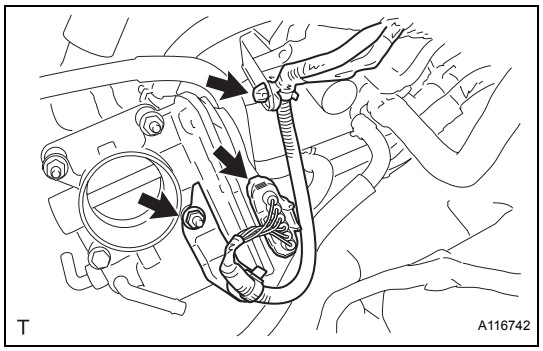

51. CONNECT THROTTLE WITH MOTOR BODY CONNECTOR

(a) Install the throttle with motor body connector bracket with the nut.
Torque: 9.0 N*m (92 kgf*cm, 80 in.*lbf)

(b) Connect the throttle with motor body connector.

(c) Connect the wire harness clamp.

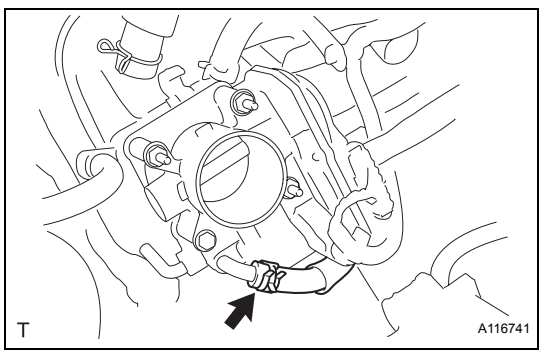

52. CONNECT WATER BY-PASS HOSE

(a) Connect the water by-pass hose.

EM

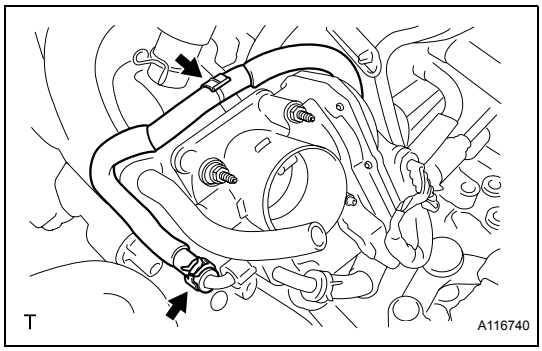

53. CONNECT WATER BY-PASS HOSE NO. 2

(a) Connect water by-pass hose No. 2.

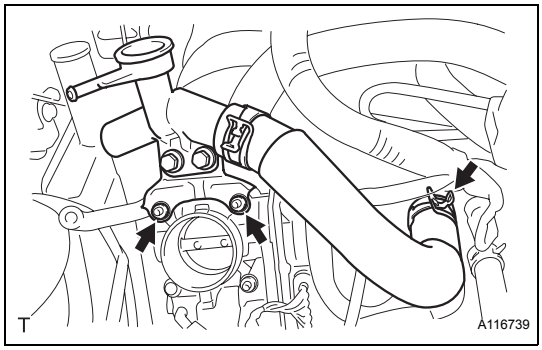

54. INSTALL WATER FILLER SUB-ASSEMBLY

(a) Install the water filler sub-assembly with the 2 nuts.
Torque: 7.5 N*m (76 kgf*cm, 66 in.*lbf)

(b) Connect radiator hose No. 1 to the cylinder head.

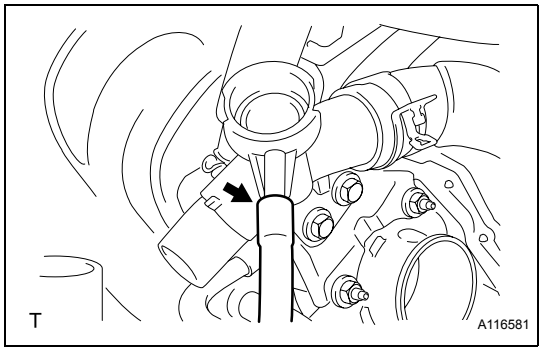

55. CONNECT RESERVE TANK HOSE

(a) Connect the reserve tank hose.

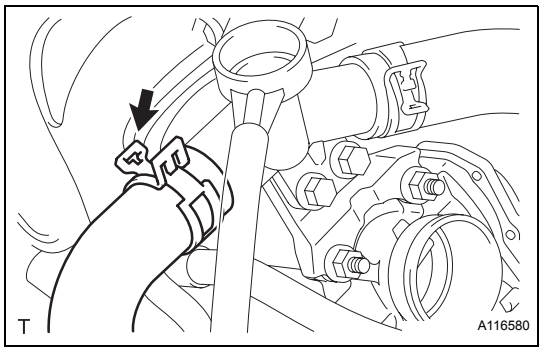

56. CONNECT RADIATOR HOSE NO. 3

(a) Connect radiator hose No. 3.

57. INSTALL AIR CLEANER CAP SUB-ASSEMBLY WITH AIR CLEANER HOSE NO. 1 (See page ES-414)

58. INSTALL BATTERY TRAY

59. INSTALL BATTERY

60. ADD ENGINE OIL

61. ADD ENGINE COOLANT (See page CO-8)

62. CHECK ENGINE OIL LEVEL (See page LU-1)

63. CHECK FOR ENGINE OIL LEAKAGE

64. CHECK FOR ENGINE COOLANT LEAKAGE (See page CO-1)

65. CHECK FOR EXHAUST GAS LEAKAGE

66. CHECK FOR FUEL LEAKAGE (See page FU-7)

67. INSTALL CYLINDER HEAD COVER NO. 2 (See page IG-10)

68. INSTALL ENGINE UNDER COVER RH
69. INSTALL FRONT WHEEL RH
70. INSTALL COWL TOP PANEL OUTER (for Hatchback) (See page EM-146)
71. INSTALL COWL TOP PANEL OUTER (for Sedan) (See page ES-434)
72. INSTALL COWL TO REGISTER DUCT SUB-ASSEMBLY NO. 2 (for Hatchback) (See page EM-147)
73. INSTALL FRONT AIR SHUTTER SEAL RH (for Sedan) (See page ES-435)
74. INSTALL FRONT WIPER MOTOR AND LINK (for Hatchback) (See page WW-21)
75. INSTALL FRONT WIPER MOTOR AND LINK (for Sedan) (See page WW-12)
76. INSTALL COWL TOP VENTILATOR LOUVER LH (for Hatchback) (See page WW-21)
77. INSTALL COWL TOP VENTILATOR LOUVER SUB-ASSEMBLY (for Hatchback) (See page WW-21)
78. INSTALL COWL TOP VENTILATOR LOUVER SUB-ASSEMBLY (for Sedan) (See page WW-12)
79. INSTALL COWL SIDE VENTILATOR SUB-ASSEMBLY LH (for Sedan) (See page WW-13)
80. INSTALL COWL SIDE VENTILATOR SUB-ASSEMBLY RH (for Sedan) (See page WW-13)
81. INSTALL HOOD TO COWL TOP SEAL (for Hatchback) (See page WW-22)
82. INSTALL FRONT WIPER ARM AND BLADE ASSEMBLY LH (for Hatchback) (See page WW-22)
83. INSTALL FRONT WIPER ARM AND BLADE ASSEMBLY LH (for Sedan) (See page WW-13)
84. INSTALL FRONT WIPER ARM AND BLADE ASSEMBLY RH (for Hatchback) (See page WW-23)
85. INSTALL FRONT WIPER ARM AND BLADE ASSEMBLY RH (for Sedan) (See page WW-14)
86. INSTALL FRONT WIPER ARM HEAD CAP (for Hatchback) (See page WW-23)
87. INSTALL FRONT WIPER ARM HEAD CAP (for Sedan) (See page WW-15)

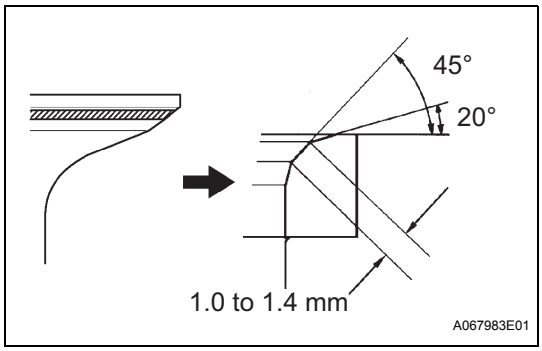

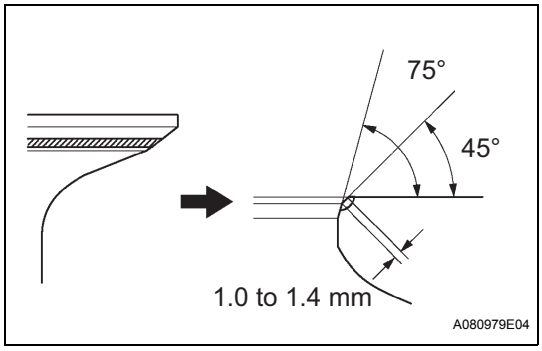

REPAIR

1. REPAIR INTAKE VALVE

(a) Repair the intake valve seat.
NOTICE:
Releasing the seat-cutter pressure gradually helps to make the valve seat face smoother.

(b) If the seating is too high on the valve face, use 20° and 45° cutters to correct the seat.

(c) If the seating is too low on the valve face, use 75° and 45° cutters to correct the seat.

(d) Hand-lap the valve and valve seat with an abrasive compound.

(e) Recheck the valve seating position.

2. REPAIR EXHAUST VALVE
NOTICE:
Releasing the seat-cutter pressure gradually helps to make the valve seat face smoother.

(a) If the seating is too high on the valve face, use 20° and 45° cutters to correct the seat.

(b) If the seating is too low on the valve face, use 75° and 45° cutters to correct the seat.

(c) Hand-lap the valve and valve seat with an abrasive compound.

(d) Recheck the valve seating position.

EM

ENGINE ASSEMBLY

COMPONENTS

for Hatchback:

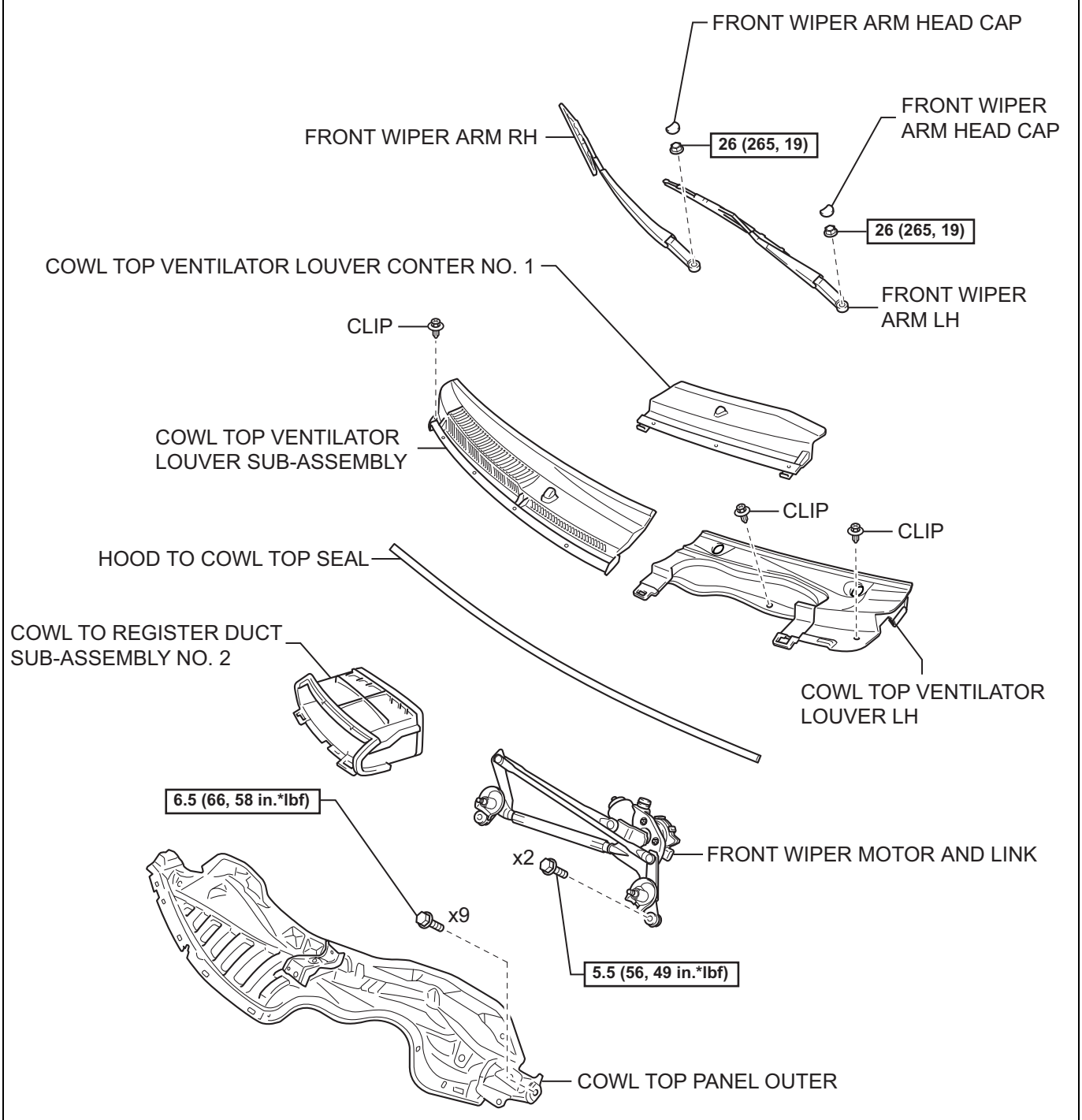

N*m (kgf*cm, ft*lbf) : Specified torque

Y

A118803E11

for Sedan:

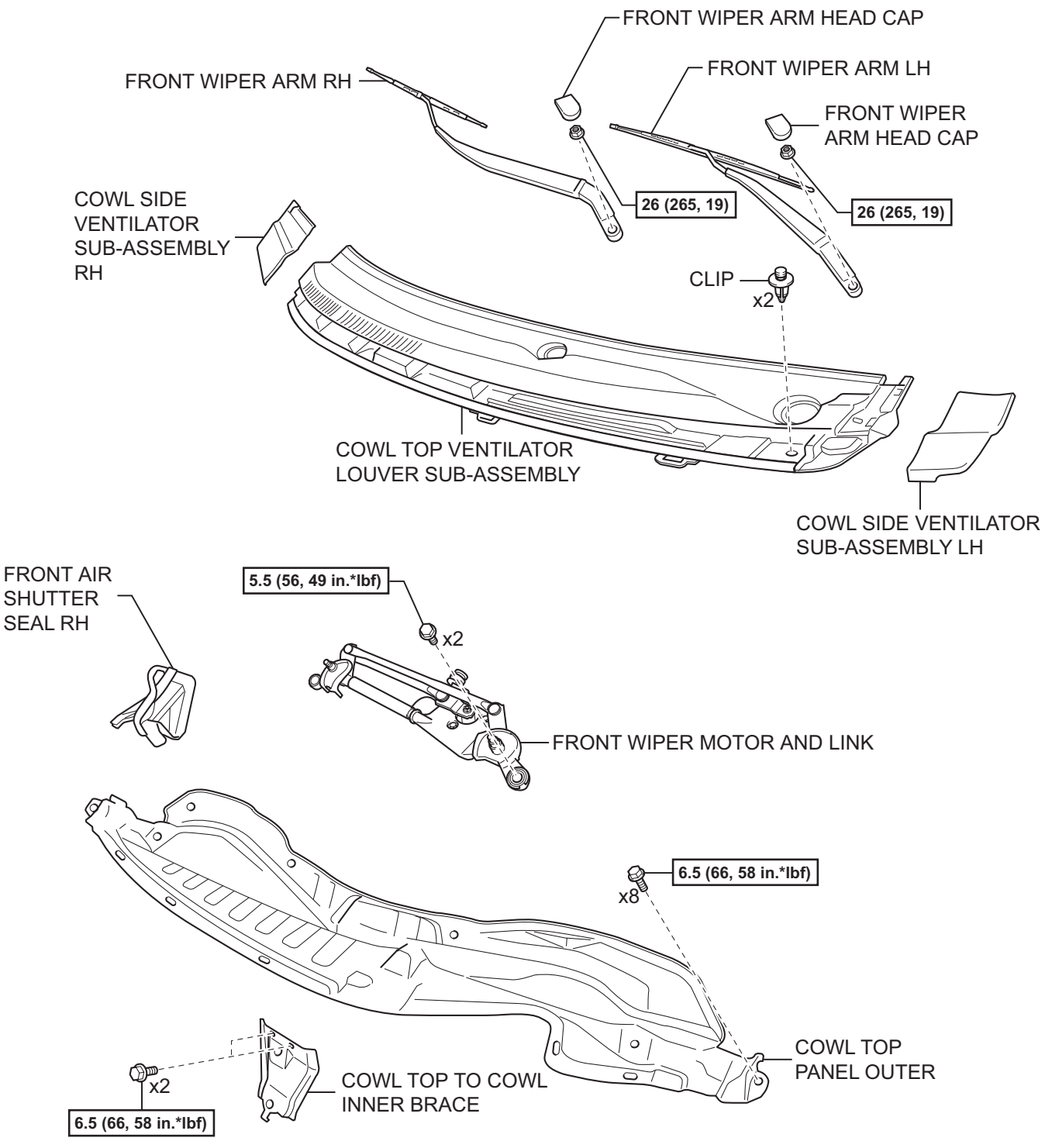

N*m (kgf*cm, ft*lbf) : Specified torque

Y

A133320E11

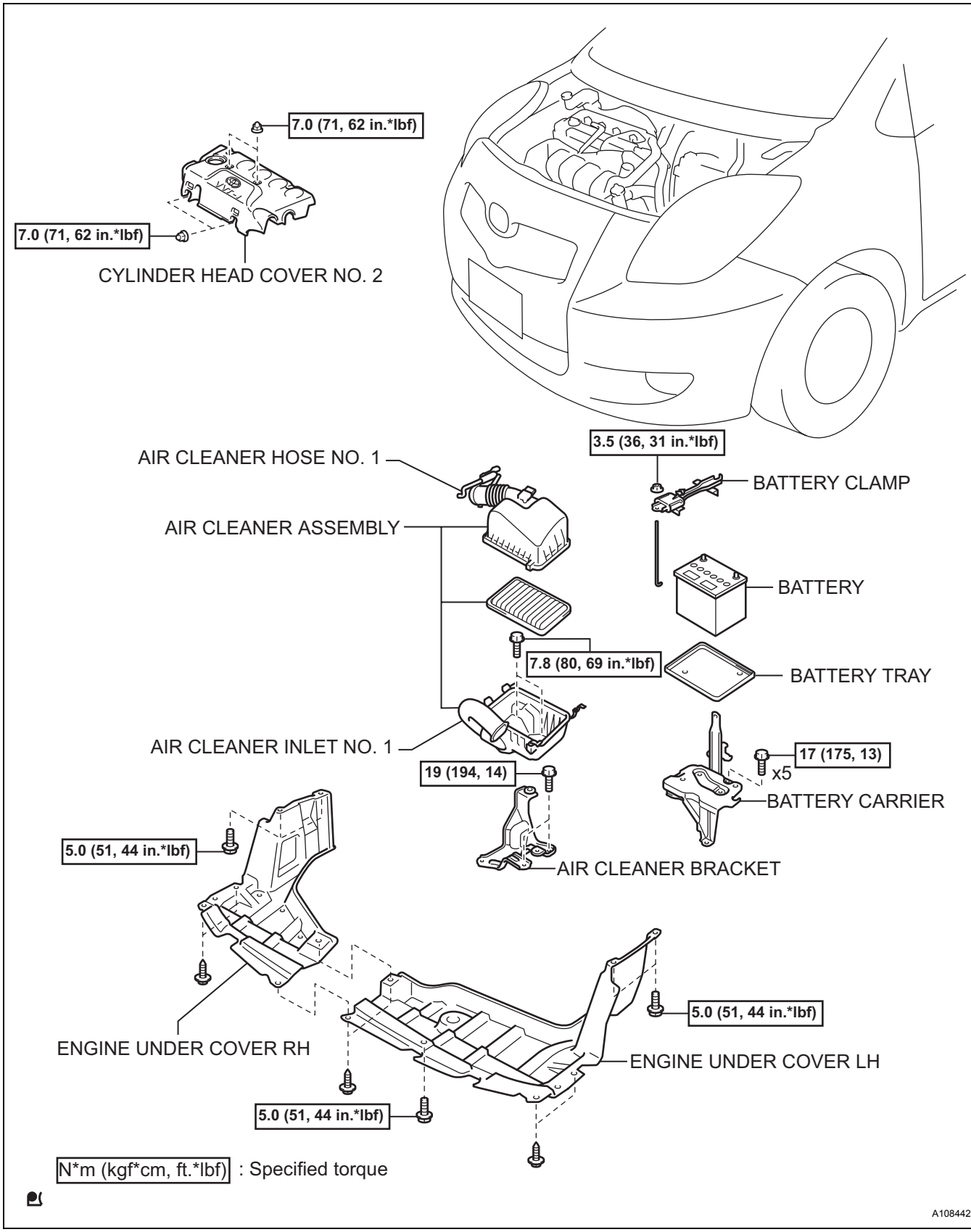
7.0 (71, 62 in.*lbf)
7.0 (71, 62 in.*lbf)
CYLINDER HEAD COVER NO. 2
3.5 (36, 31 in.*lbf)
BATTERY CLAMP
AIR CLEANER HOSE NO. 1
AIR CLEANER ASSEMBLY
BATTERY
7.8 (80, 69 in.*lbf)
BATTERY TRAY
AIR CLEANER INLET NO. 1
19 (194, 14)
17 (175, 13)
x5
BATTERY CARRIER
AIR CLEANER BRACKET
5.0 (51, 44 in.*lbf)
5.0 (51, 44 in.*lbf)
ENGINE UNDER COVER RH
ENGINE UNDER COVER LH
5.0 (51, 44 in.*lbf)
N*m (kgf*cm, ft.*lbf) : Specified torque
A108442E08

EM

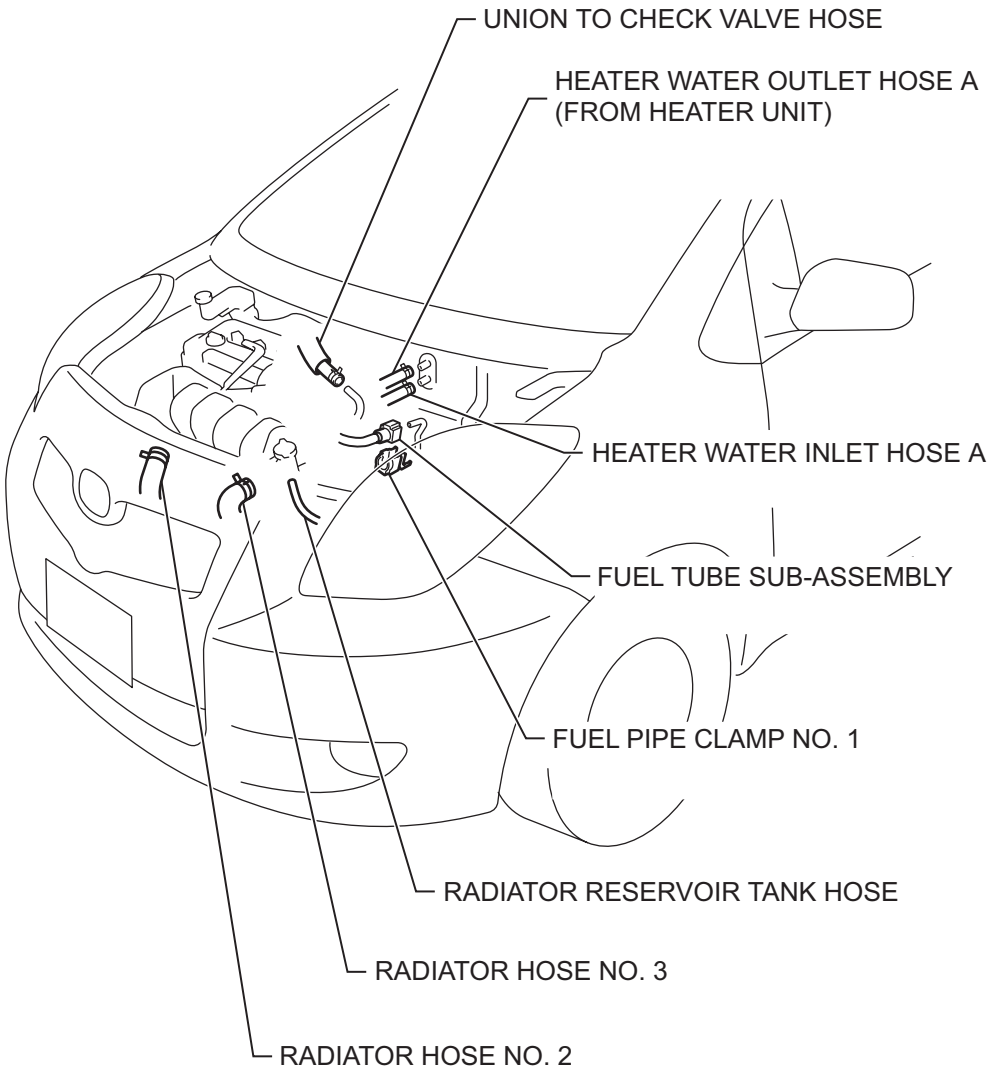

A108443E08

for Hatchback:

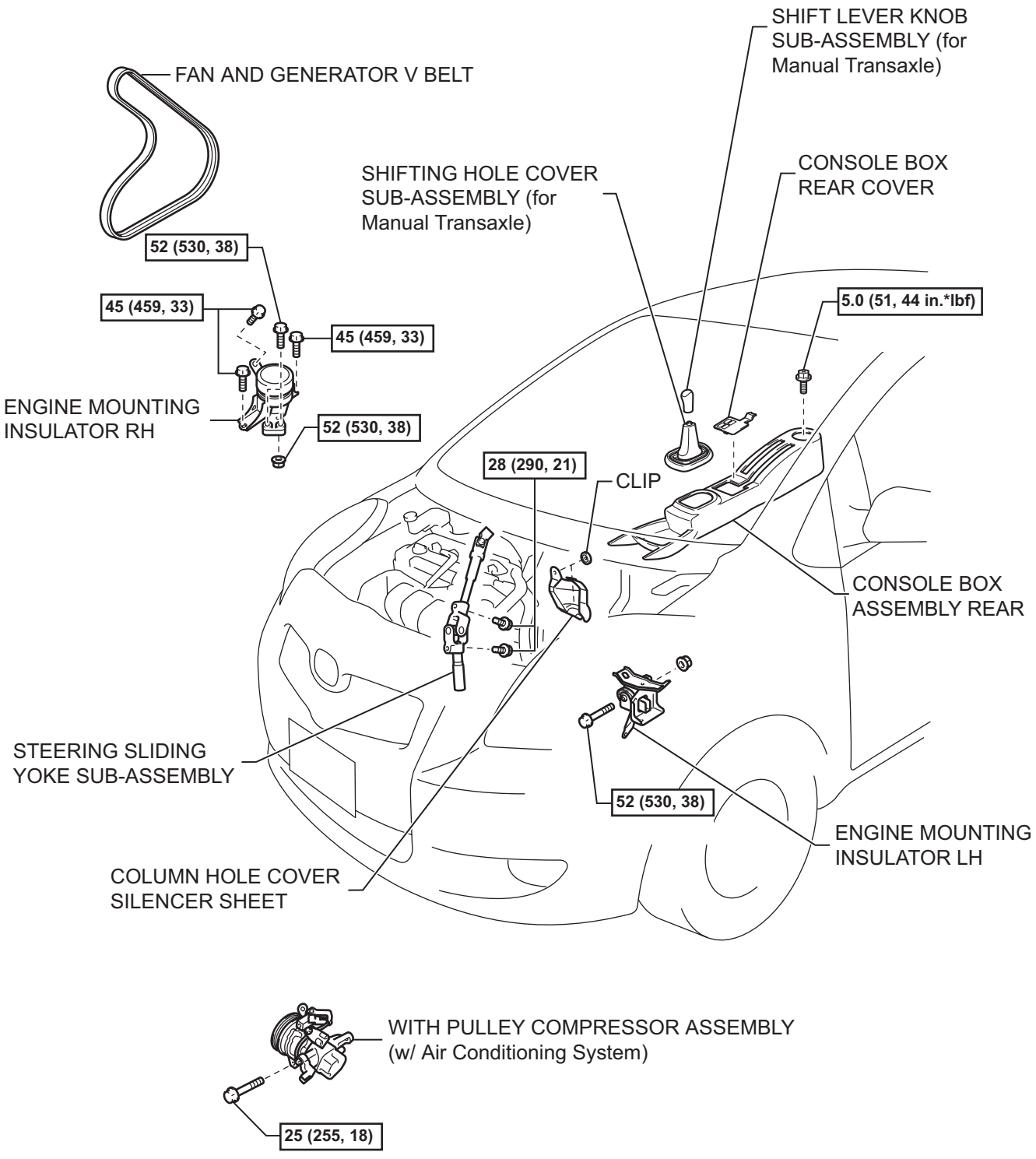

N*m (kgf*cm, ft.*lbf) : Specified torque

A108444E13

EM

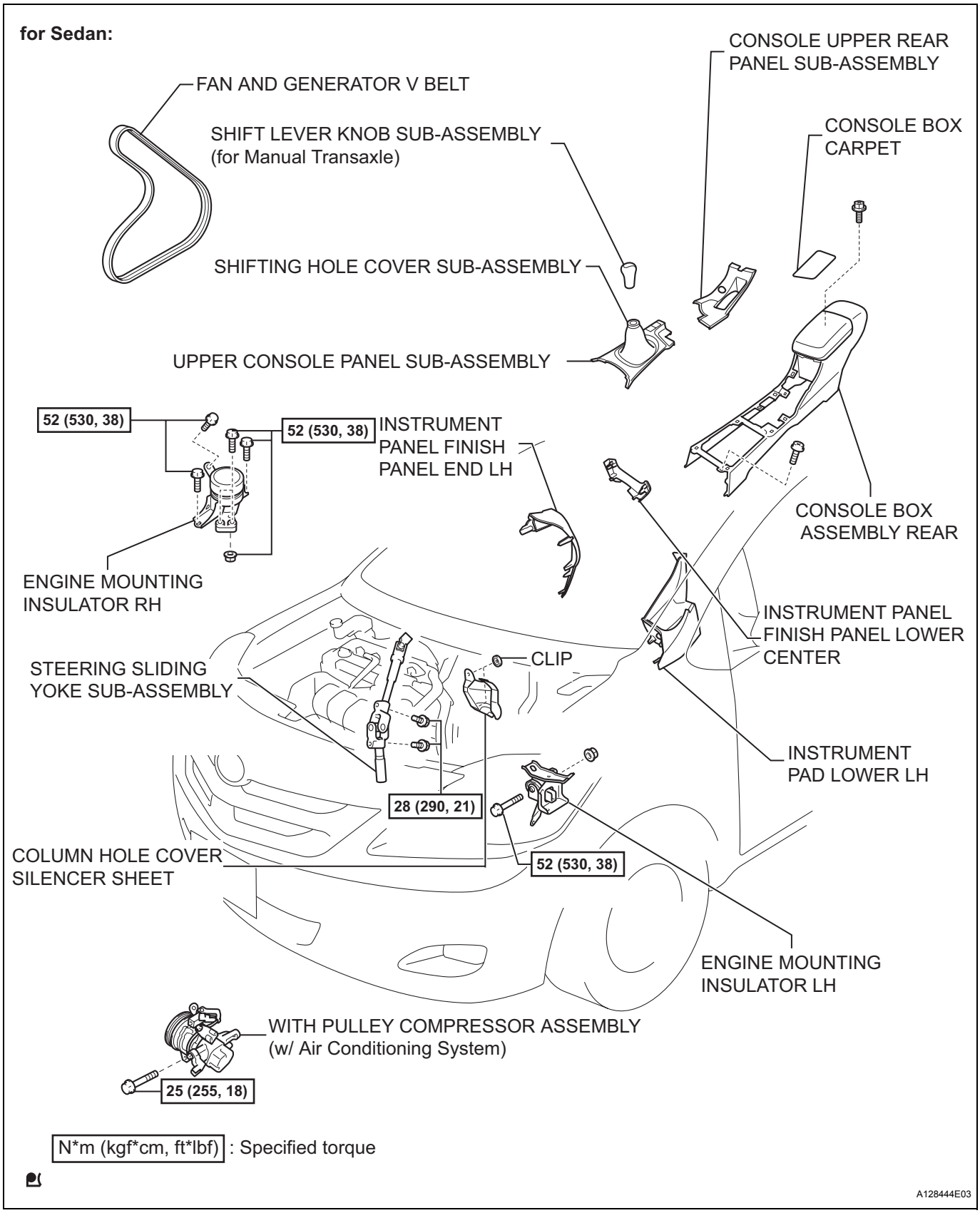
for Sedan:
CONSOLE UPPER REAR PANEL SUB-ASSEMBLY
FAN AND GENERATOR V BELT
SHIFT LEVER KNOB SUB-ASSEMBLY (for Manual Transaxle)
CONSOLE BOX CARPET
SHIFTING HOLE COVER SUB-ASSEMBLY
UPPER CONSOLE PANEL SUB-ASSEMBLY
52 (530, 38)
52 (530, 38)
INSTRUMENT PANEL FINISH PANEL END LH
CONSOLE BOX ASSEMBLY REAR
ENGINE MOUNTING INSULATOR RH
INSTRUMENT PANEL FINISH PANEL LOWER CENTER
CLIP
STEERING SLIDING YOKE SUB-ASSEMBLY
INSTRUMENT PAD LOWER LH
28 (290, 21)
COLUMN HOLE COVER SILENCER SHEET
52 (530, 38)
ENGINE MOUNTING INSULATOR LH
WITH PULLEY COMPRESSOR ASSEMBLY (w/ Air Conditioning System)
25 (255, 18)
N*m (kgf*cm, ft*lbf) : Specified torque
A128444E03

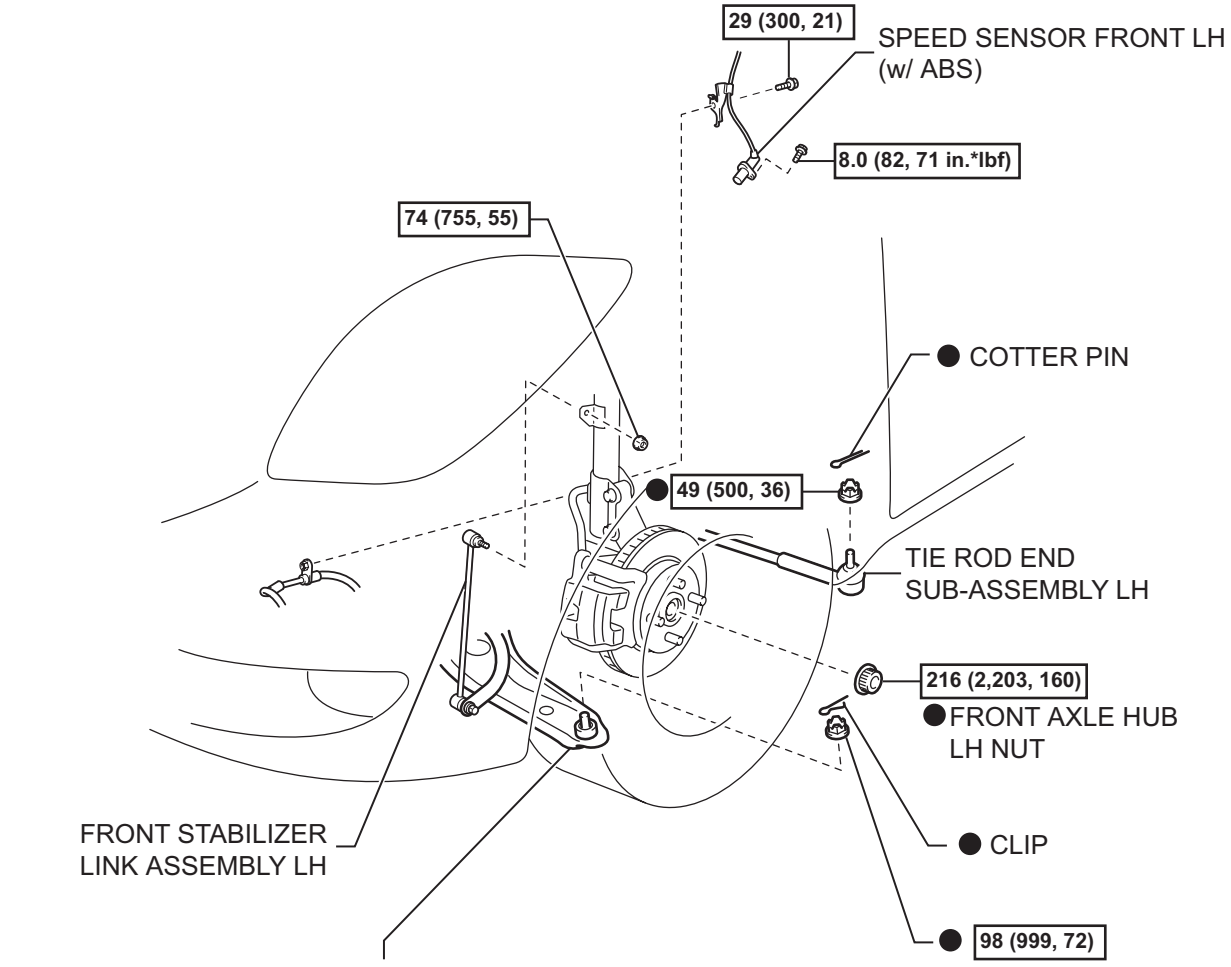

N*m (kgf*cm, ft.*lbf) : Specified torque ● Non-reusable part

A108449E06

EM

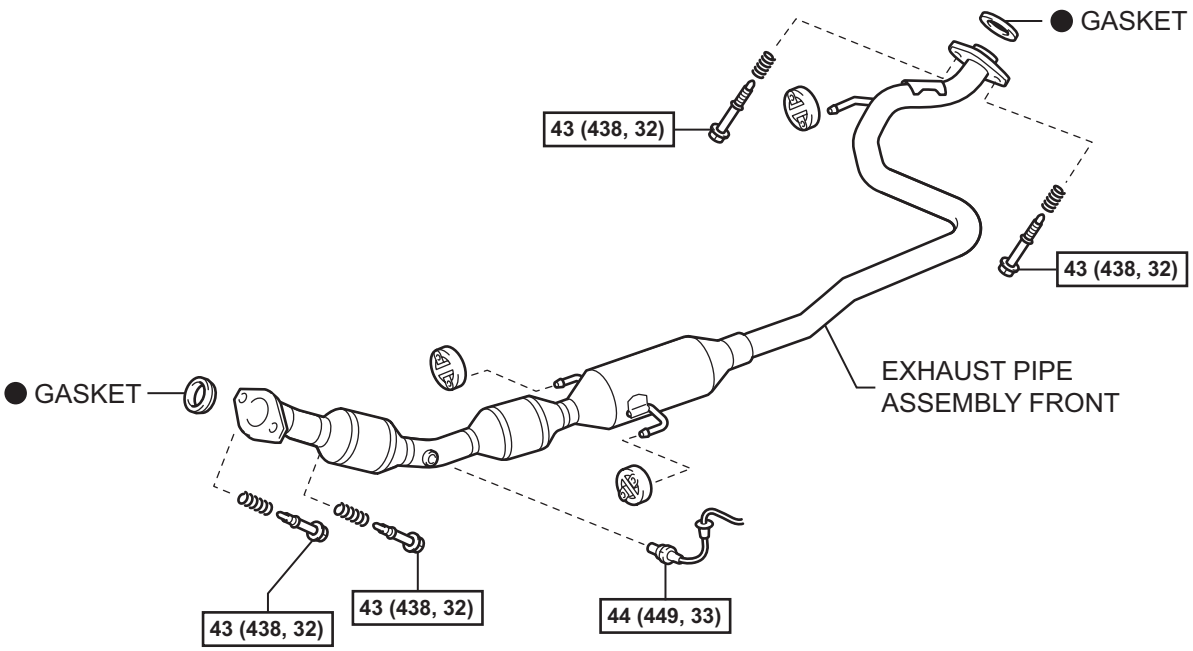

N*m (kgf*cm, ft*lbf) : Specified torque

● Non-reusable part

A136509E01

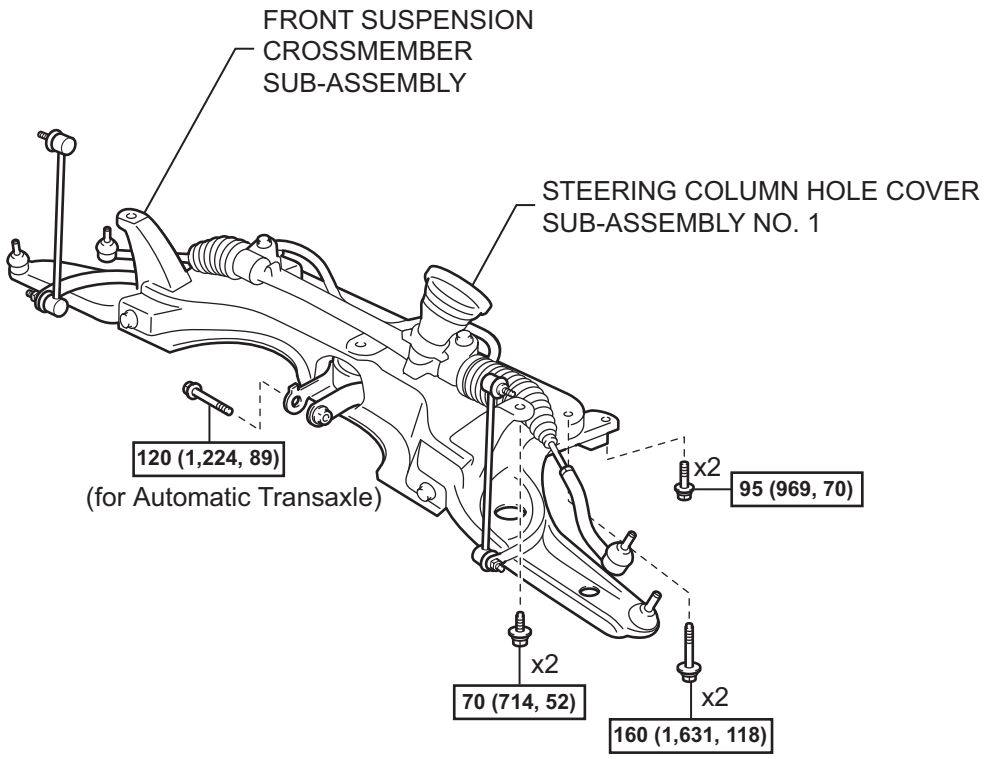

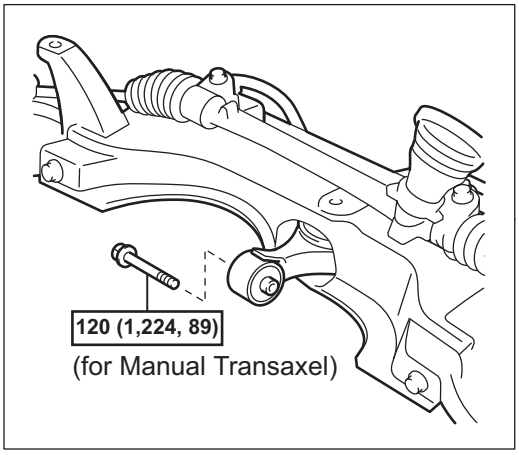

N*m (kgf*cm, ft.*lbf) : Specified torque

A108445E05

for Automatic Transaxle:

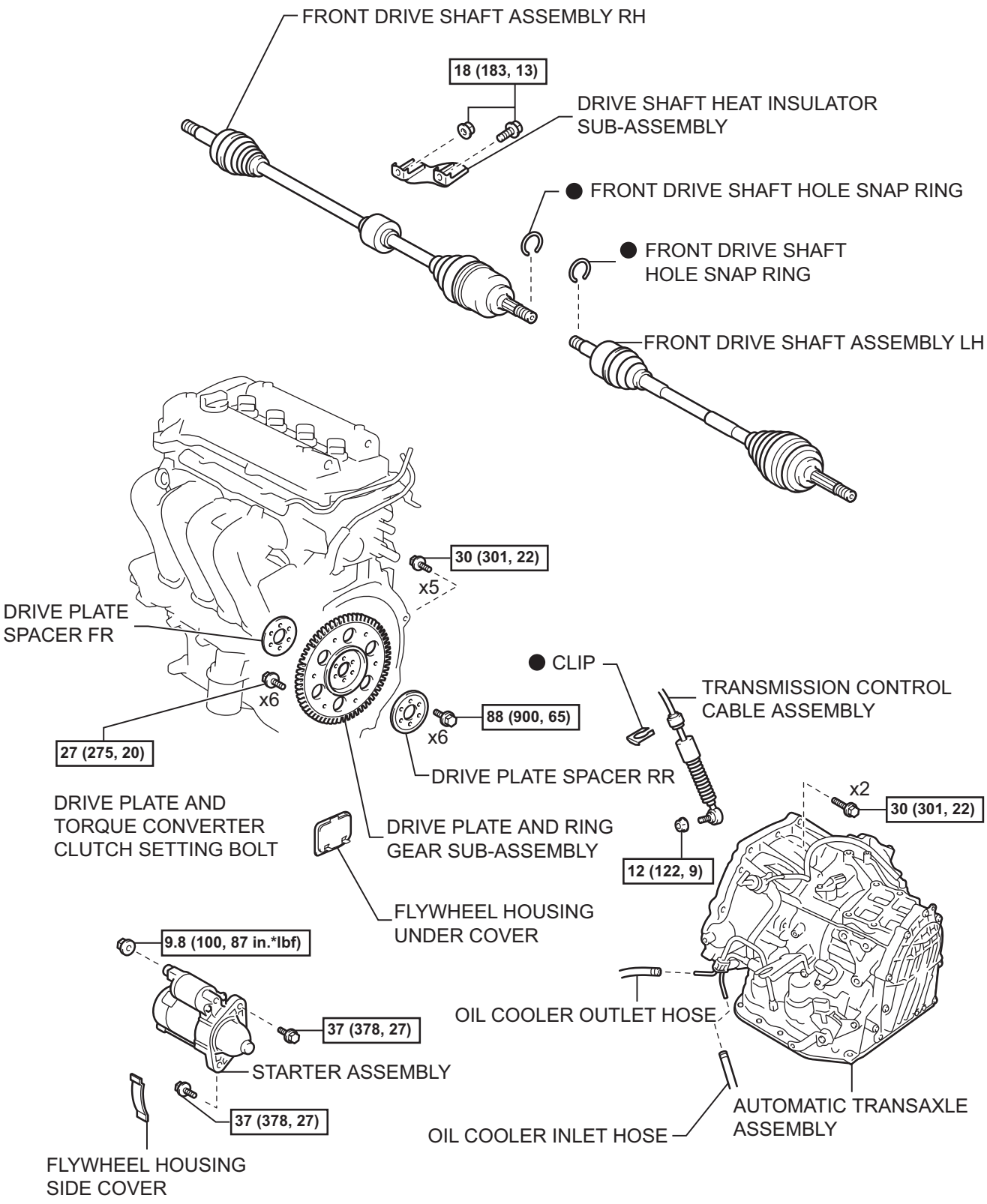

N*m (kgf*cm, ft.*lbf) : Specified torque ● Non-reusable part

A117318E08

for Manual Transaxle:

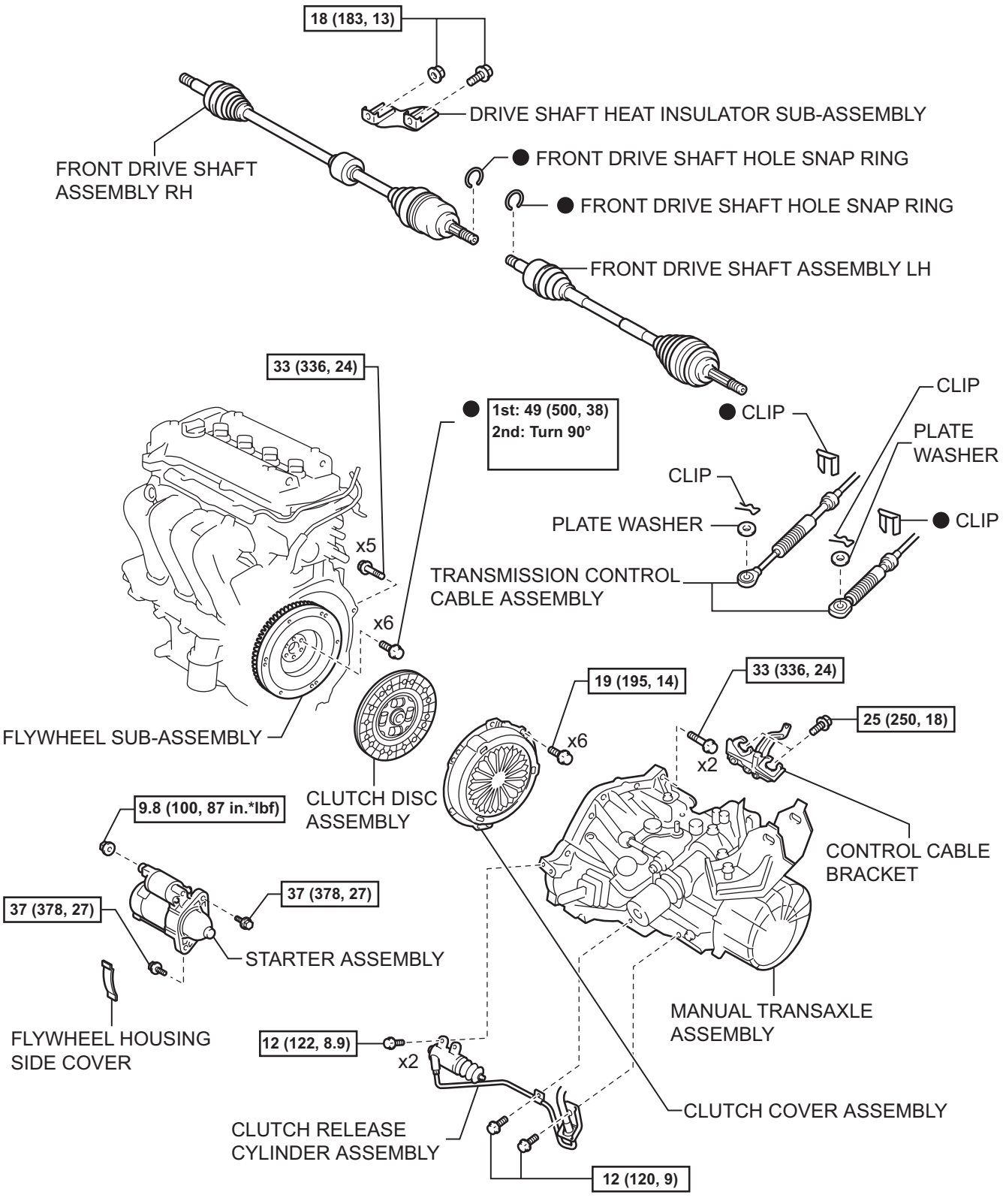

N*m (kgf*cm, ft*lbf) : Specified torque ● Non-reusable part

A117354E09

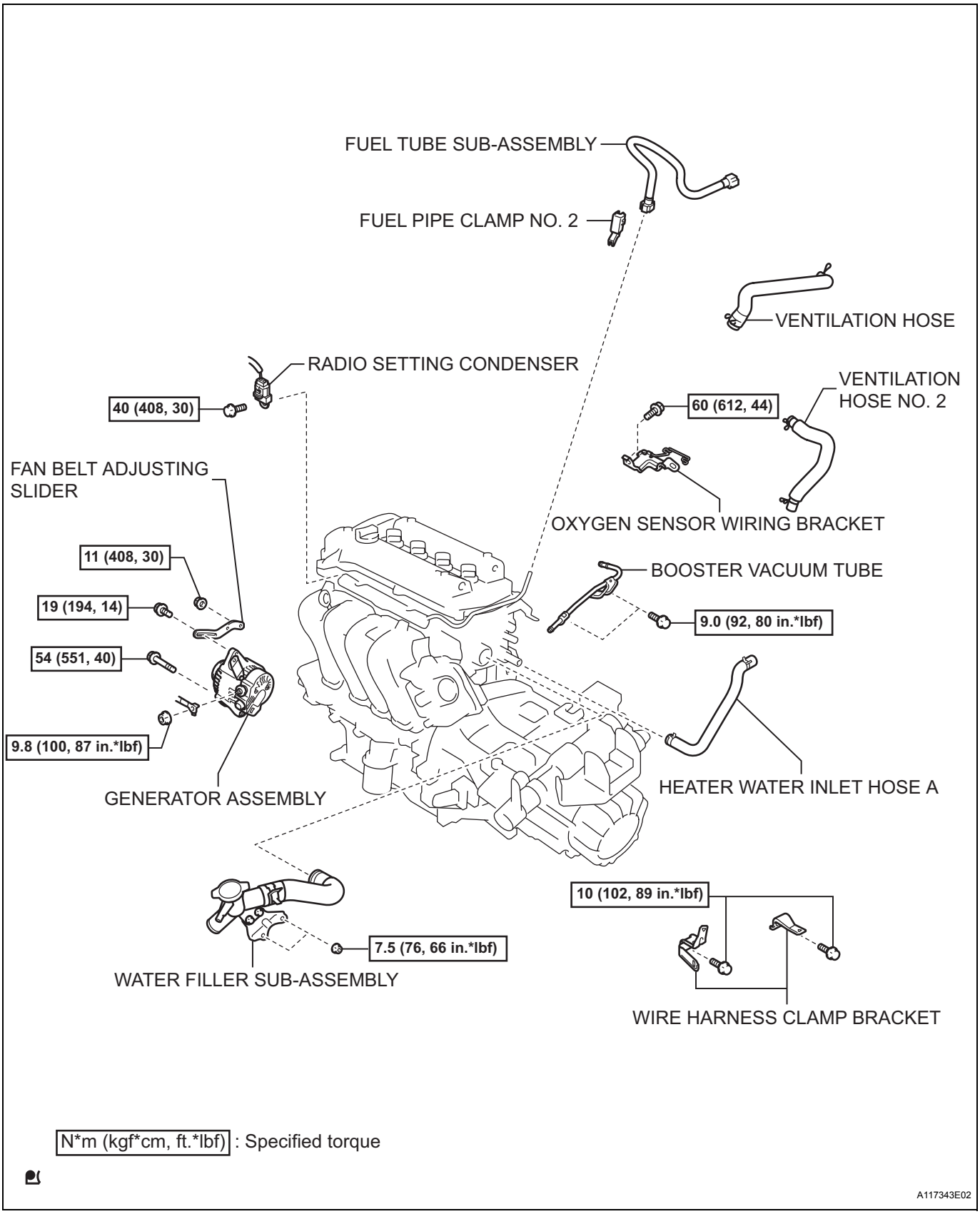
FUEL TUBE SUB-ASSEMBLY
FUEL PIPE CLAMP NO. 2
VENTILATION HOSE
RADIO SETTING CONDENSER
40 (408, 30)
60 (612, 44)
VENTILATION HOSE NO. 2
FAN BELT ADJUSTING SLIDER
OXYGEN SENSOR WIRING BRACKET
11 (408, 30)
BOOSTER VACUUM TUBE
19 (194, 14)
9.0 (92, 80 in.*lbf)
54 (551, 40)
9.8 (100, 87 in.*lbf)
GENERATOR ASSEMBLY
HEATER WATER INLET HOSE A
10 (102, 89 in.*lbf)
7.5 (76, 66 in.*lbf)
WATER FILLER SUB-ASSEMBLY
WIRE HARNESS CLAMP BRACKET
N*m (kgf*cm, ft.*lbf) : Specified torque
A117343E02

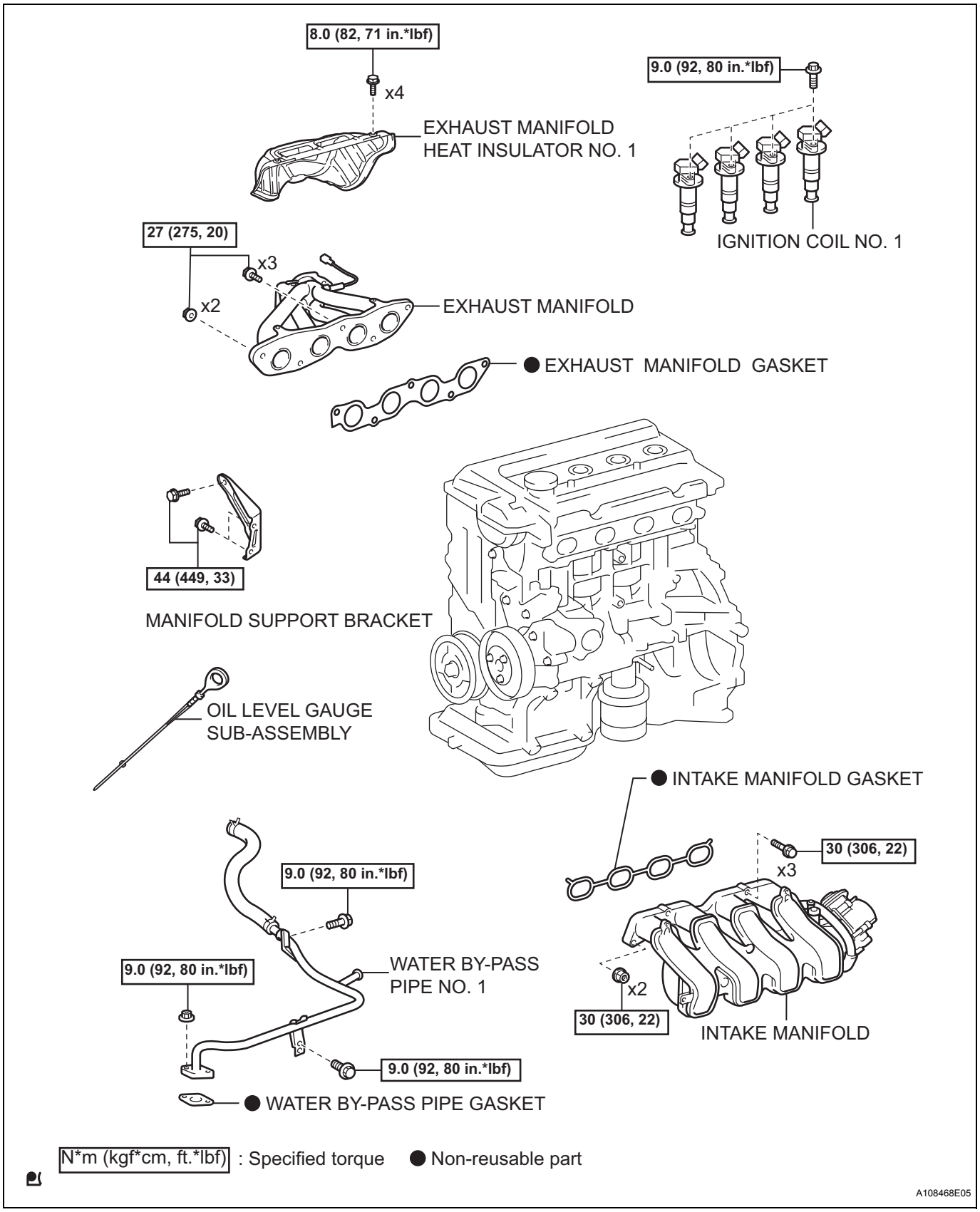
8.0 (82, 71 in.*lbf)
x4
EXHAUST MANIFOLD
HEAT INSULATOR NO. 1
9.0 (92, 80 in.*lbf)
IGNITION COIL NO. 1
27 (275, 20)
x3
x2
EXHAUST MANIFOLD
● EXHAUST MANIFOLD GASKET
44 (449, 33)
MANIFOLD SUPPORT BRACKET
OIL LEVEL GAUGE
SUB-ASSEMBLY
● INTAKE MANIFOLD GASKET
30 (306, 22)
x3
9.0 (92, 80 in.*lbf)
9.0 (92, 80 in.*lbf)
WATER BY-PASS
PIPE NO. 1
x2
30 (306, 22)
INTAKE MANIFOLD
9.0 (92, 80 in.*lbf)
● WATER BY-PASS PIPE GASKET
N*m (kgf*cm, ft.*lbf) : Specified torque
● Non-reusable part
A108468E05

EM

EM

REMOVAL

1. **DISCHARGE FUEL SYSTEM PRESSURE**
2. **REMOVE BATTERY**
   (a) Disconnect the cable from the battery terminal.
   (b) Loosen the nut and remove the battery clamp.
   (c) Remove the battery.
3. **REMOVE BATTERY TRAY**
4. **REMOVE FRONT WHEELS**
5. **REMOVE ENGINE UNDER COVER LH**
6. **REMOVE ENGINE UNDER COVER RH**
7. **DRAIN ENGINE COOLANT (See page CO-8)**
8. **DRAIN AUTOMATIC TRANSAXLE FLUID (for Automatic Transaxle) (See page AX-158)**
9. **DRAIN MANUAL TRANSAXLE OIL (for Manual Transaxle) (See page MX-26)**
10. **REMOVE FRONT WIPER ARM HEAD CAP (See page WW-9)**
11. **REMOVE FRONT WIPER ARM LH (See page WW-9)**
12. **REMOVE FRONT WIPER ARM RH (See page WW-9)**
13. **REMOVE HOOD TO COWL TOP SEAL (for Hatchback) (See page WW-18)**
14. **REMOVE COWL TOP VENTILATOR LOUVER SUB-ASSEMBLY (for Hatchback) (See page WW-18)**
15. **REMOVE COWL TOP VENTILATOR LOUVER LH (for Hatchback) (See page WW-18)**
16. **REMOVE COWL SIDE VENTILATOR SUB-ASSEMBLY LH (for Sedan) (See page WW-10)**
17. **REMOVE COWL SIDE VENTILATOR SUB-ASSEMBLY RH (for Sedan) (See page WW-10)**
18. **REMOVE COWL TOP VENTILATOR LOUVER SUB-ASSEMBLY (for Sedan) (See page WW-10)**
19. **REMOVE FRONT WIPER MOTOR AND LINK (See page WW-19)**
20. **REMOVE COWL TO REGISTER DUCT SUB-ASSEMBLY NO. 2 (for Hatchback)**
    (a) Disengage the claw and remove cowl to register duct sub-assembly No. 2.

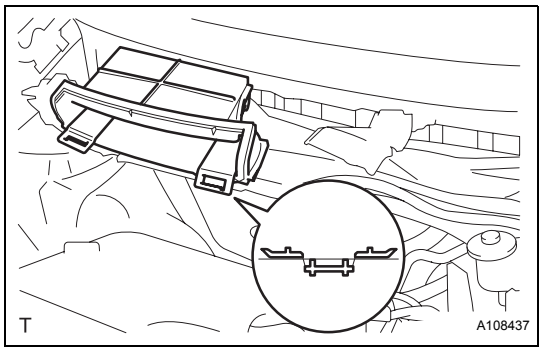

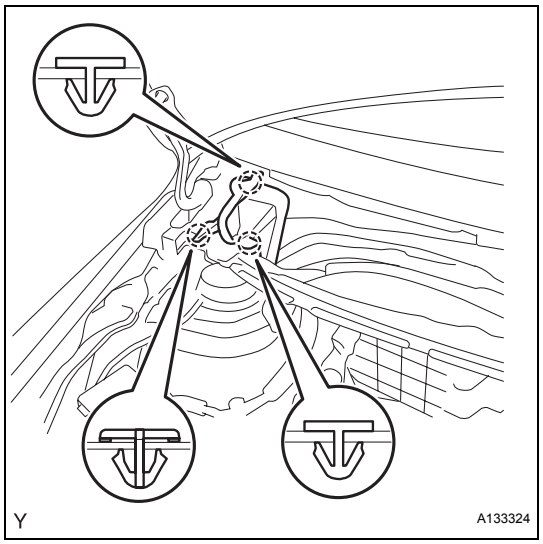

21. REMOVE FRONT AIR SHUTTER SEAL RH (for Sedan)

(a) Disengage the 3 claws and remove the front air shutter seal RH.

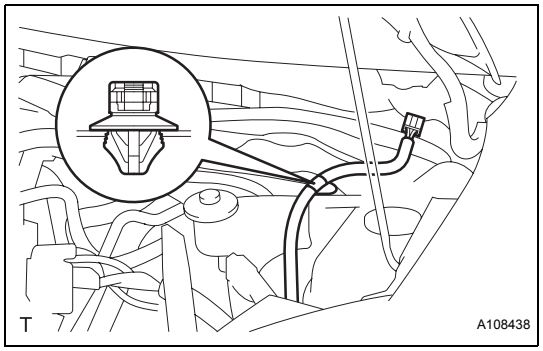

22. REMOVE COWL TOP PANEL OUTER (for Hatchback)

(a) Disengage the wire harness clamp.



(b) Remove the 9 bolts and remove the cowl top panel outer.

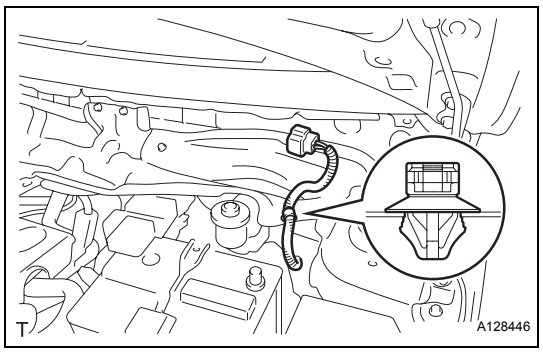

23. REMOVE COWL TOP PANEL OUTER (for Sedan)

(a) Disengage the wire harness clamp.

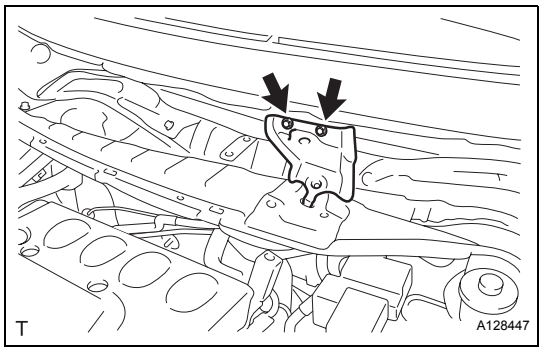

(b) Remove the 2 bolts and remove the cowl top to cowl inner brace.

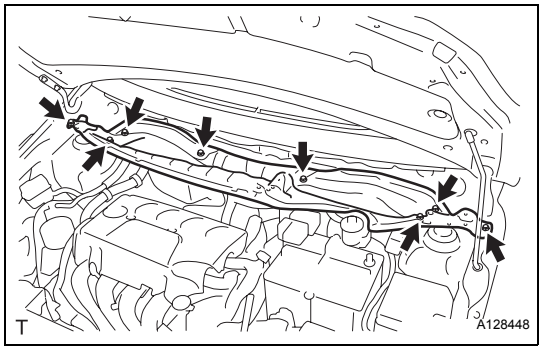

(c) Remove the 8 bolts and remove the cowl top panel outer.

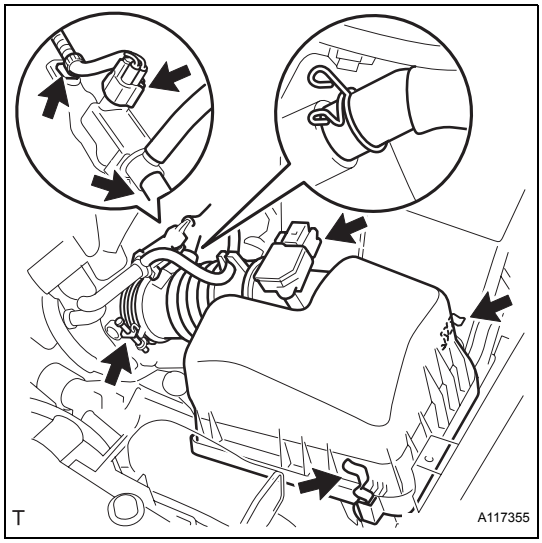

24. REMOVE AIR CLEANER ASSEMBLY

(a) Separate the intake air flow meter connector and the wire harness clamp.
(b) Separate the fuel vapor feed hose and fuel vapor feed hose No. 1 from the vacuum switching valve assembly.
(c) Separate the vacuum switching valve connector and the wire harness clamp.
(d) Separate the ventilation hose from the air cleaner hose.
(e) Release the air cleaner cap sub-assembly with air cleaner hose No. 1.
(f) Loosen the air cleaner hose clamp on the throttle body side and remove the air cleaner cap and the air cleaner hose.
(g) Remove the air cleaner element.

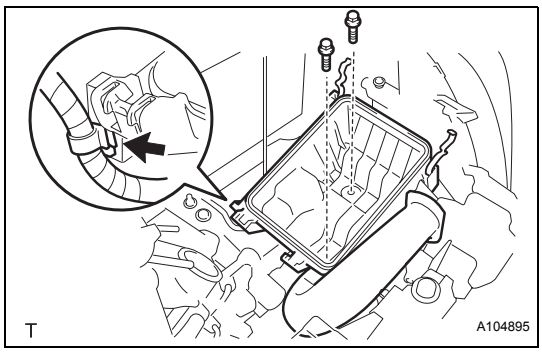

(h) Separate the wire harness clamp from the air cleaner case.
(i) Remove the 2 bolts and remove the air cleaner case with air cleaner inlet No. 1.

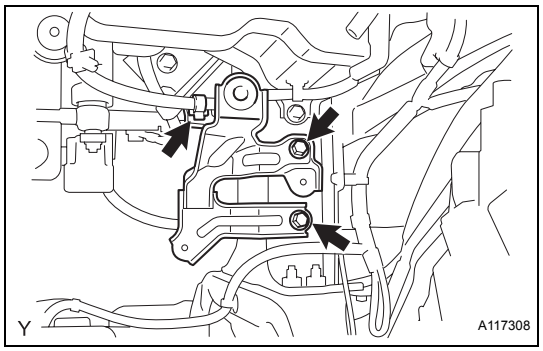

25. REMOVE AIR CLEANER BRACKET

(a) Separate the wire harness clamp from the air cleaner bracket.

(b) Remove the 2 bolts and remove the air cleaner bracket.

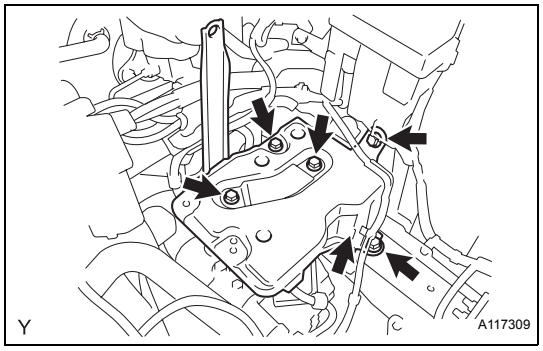

26. REMOVE BATTERY CARRIER

(a) Separate the wire harness clamp from the battery carrier.

(b) Remove the 5 bolts and remove the battery carrier.

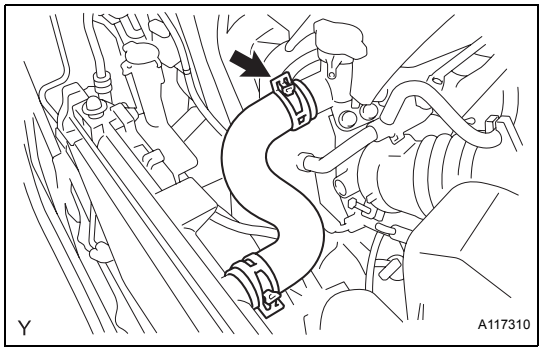

27. DISCONNECT RADIATOR HOSE NO. 3

(a) Disconnect radiator hose No. 3 from the water filler.

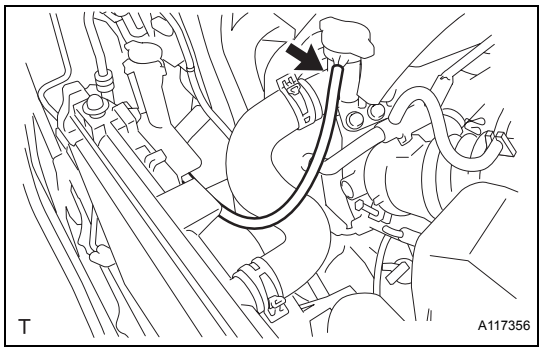

28. DISCONNECT RADIATOR RESERVOIR TANK HOSE

(a) Disconnect the radiator reservoir tank hose from the water filler.

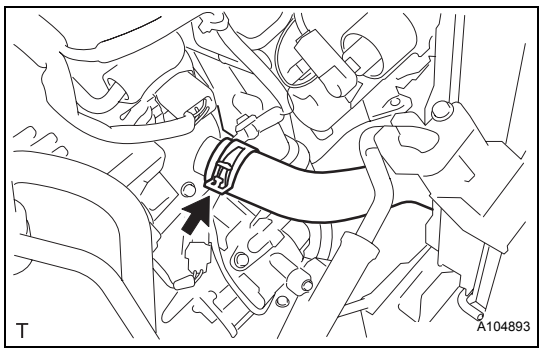

29. DISCONNECT RADIATOR HOSE NO. 2

(a) Disconnect radiator hose No. 2 from the water inlet.

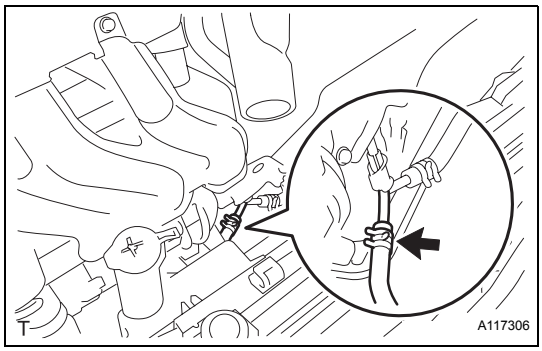

30. **DISCONNECT OIL COOLER OUTLET HOSE (for Automatic Transaxle)**
    (a) Loosen the clip and disconnect the oil cooler outlet hose.

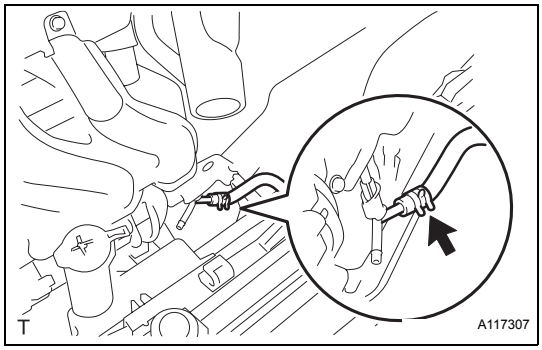

31. **DISCONNECT OIL COOLER INLET HOSE (for Automatic Transaxle)**
    (a) Loosen the clip and disconnect the oil cooler inlet hose.

32. **REMOVE CYLINDER HEAD COVER NO. 2 (See page IG-9)**

33. **SEPARATE TRANSMISSION CONTROL CABLE ASSEMBLY (for Automatic Transaxle) (See page AX-106)**

34. **SEPARATE TRANSMISSION CONTROL CABLE ASSEMBLY (for Manual Transaxle) (See page MX-27)**

35. **DISCONNECT UNION TO CHECK VALVE HOSE**
    (a) Disconnect the union to check valve hose from the booster vacuum tube.

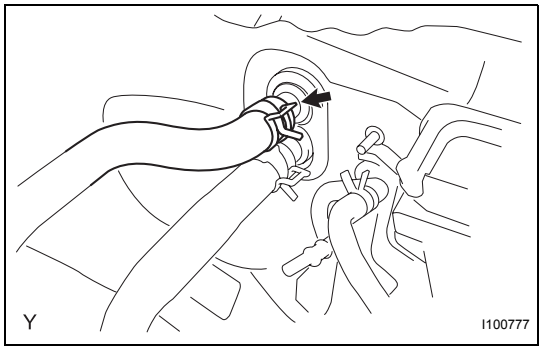

36. **DISCONNECT HEATER WATER OUTLET HOSE A (FROM HEATER UNIT)**
    (a) Disconnect heater water outlet hose A from the heater unit.

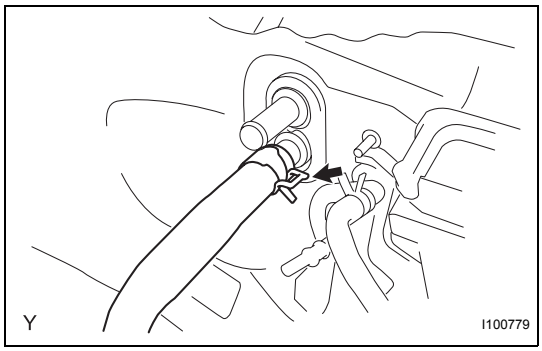

37. **DISCONNECT HEATER WATER INLET HOSE A**
    (a) Disconnect heater water inlet hose A from the heater unit.

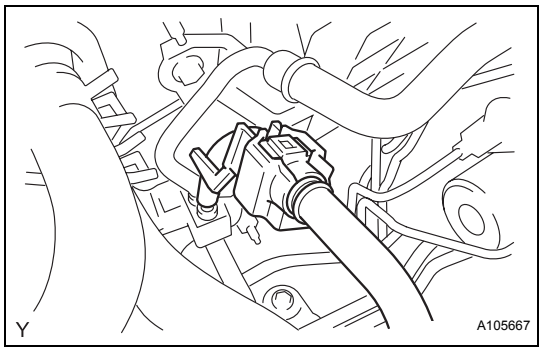

38. DISCONNECT FUEL TUBE SUB-ASSEMBLY

(a) Remove fuel pipe clamp No. 1.

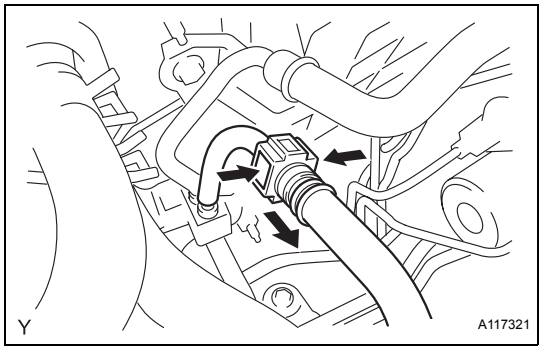

(b) Pinch the retainer as illustrated, then pull the fuel tube connector out of the pipe.

NOTICE:

- **Remove any dirt and foreign matter from the fuel tube connector before performing this work.**
- **Do not allow any scratches or foreign matter on the parts when disconnecting, as the fuel tube connector has the O-rings that seal the pipe.**
- **Perform this work by hand. Do not use any tools.**
- **Do not forcibly bend, twist or turn the nylon tube.**
- **Protect the disconnected parts by covering them with vinyl bags after disconnecting the fuel tube.**
- **If the fuel tube connector and pipe are stuck, push and pull to release them.**

39. REMOVE FAN AND GENERATOR V BELT (See page EM-7)

40. SEPARATE WITH PULLEY COMPRESSOR ASSEMBLY (w/ Air Conditioning System)

(a) Disconnect the connector.

(b) Remove the 4 bolts and separate the with pulley compressor assembly.

HINT:

Remove the compressor assembly together with the low and high pressure hoses, then suspend them from the body with a piece of rope.

41. SEPARATE CLUTCH RELEASE CYLINDER ASSEMBLY (for Manual Transaxle) (See page MX-27)

EM

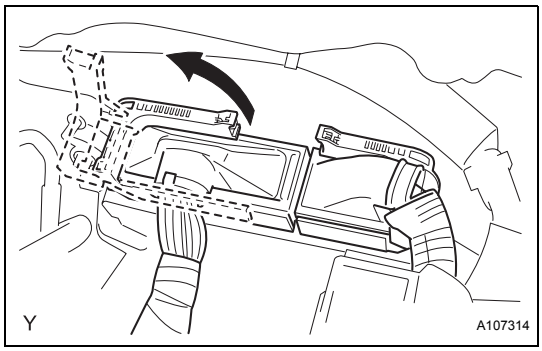

42. DISCONNECT ENGINE WIRE

(a) Pull up the lever and disconnect the connector of the engine control computer.

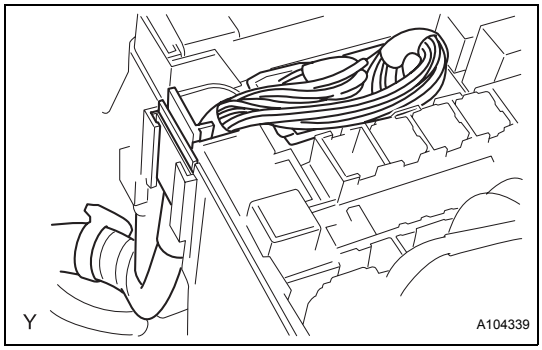

(b) Remove the 2 connectors and the clamp from the engine room junction block and disconnect the wire harness.

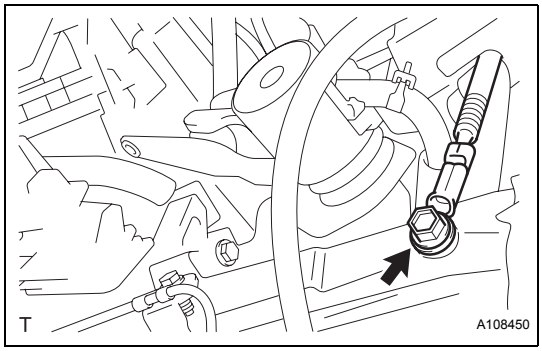

(c) Remove the bolt and separate the earth wire of the engine room wire harness.

(d) Disconnect all the wire harnesses and connectors. Make sure that no wire harness is connected between the body and engine.

43. REMOVE COLUMN HOLE COVER SILENCER SHEET (See page PS-74)

44. SEPARATE STEERING SLIDING YOKE SUB-ASSEMBLY (See page PS-74)

45. REMOVE STEERING COLUMN HOLE COVER SUB-ASSEMBLY NO. 1 (See page PS-75)

46. REMOVE SHIFT LEVER KNOB SUB-ASSEMBLY (for Manual Transaxle)

47. REMOVE SHIFTING HOLE COVER SUB-ASSEMBLY (for Manual Transaxle) (See page PB-6)

48. REMOVE CONSOLE BOX REAR COVER (for Hatchback) (See page PB-6)

49. REMOVE INSTRUMENT PANEL FINISH PANEL LOWER CENTER (for Sedan) (See page ME-138)

50. REMOVE INSTRUMENT PANEL FINISH PANEL END LH (for Sedan) (See page ME-138)

51. REMOVE INSTRUMENT PAD LOWER LH (for Sedan) (See page IP-44)

52. REMOVE UPPER CONSOLE PANEL SUB-ASSEMBLY (for Sedan) (See page IP-84)

53. REMOVE CONSOLE UPPER REAR PANEL SUB-ASSEMBLY (for Sedan) (See page IP-84)

54. REMOVE CONSOLE BOX CARPET (for Sedan) (See page PB-7)
55. REMOVE REAR CONSOLE BOX ASSEMBLY (See page PB-8)
56. REMOVE HEATED OXYGEN SENSOR (See page EC-22)
57. REMOVE EXHAUST PIPE ASSEMBLY FRONT (See page EX-5)
58. REMOVE FRONT AXLE HUB LH NUT (See page DS-3)
59. REMOVE FRONT AXLE HUB RH NUT (See page AX-159)
60. SEPARATE SPEED SENSOR FRONT LH (w/ ABS) (See page DS-3)
61. SEPARATE SPEED SENSOR FRONT RH (w/ ABS) (See page AX-159)
62. SEPARATE TIE ROD END SUB-ASSEMBLY LH (See page DS-3)
63. SEPARATE TIE ROD END SUB-ASSEMBLY RH (See page AX-160)
64. SEPARATE FRONT STABILIZER LINK ASSEMBLY LH (See page DS-4)
65. SEPARATE FRONT STABILIZER LINK ASSEMBLY RH (See page AX-160)
66. SEPARATE FRONT SUSPENSION ARM SUB-ASSEMBLY LOWER NO. 1 LH (See page DS-4)
67. SEPARATE FRONT SUSPENSION ARM SUB-ASSEMBLY LOWER NO. 1 RH (See page AX-160)
68. SEPARATE FRONT AXLE ASSEMBLY LH (See page DS-4)
69. SEPARATE FRONT AXLE ASSEMBLY RH (See page MX-29)
70. REMOVE FRONT DRIVE SHAFT ASSEMBLY LH (See page DS-5)
71. REMOVE FRONT DRIVE SHAFT ASSEMBLY RH (See page DS-5)
72. REMOVE FLYWHEEL HOUSING UNDER COVER (for Automatic Transaxle)

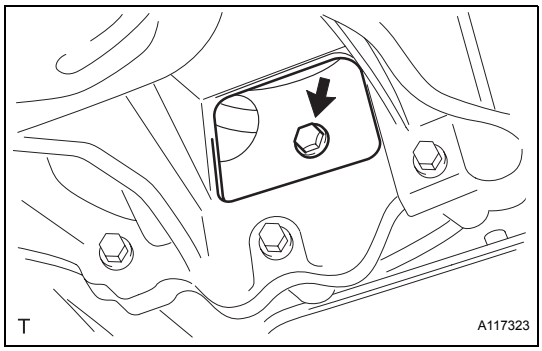

73. REMOVE DRIVE PLATE AND TORQUE CONVERTER CLUTCH SETTING BOLT (for Automatic Transaxle)

(a) Remove the 6 torque converter set bolts.

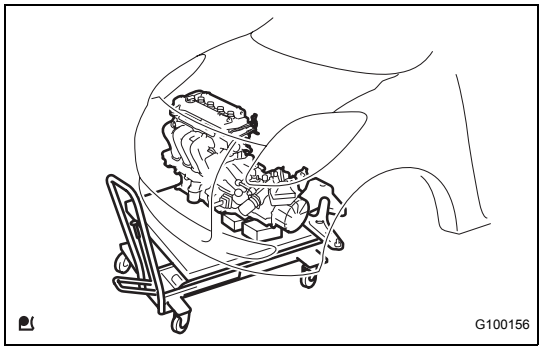

74. REMOVE ENGINE ASSEMBLY WITH TRANSAXLE

(a) Set the engine lifter.

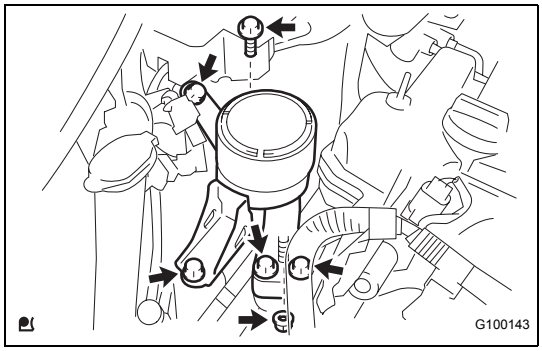

(b) Remove the 5 bolts and the nut and remove the engine mounting insulator RH.

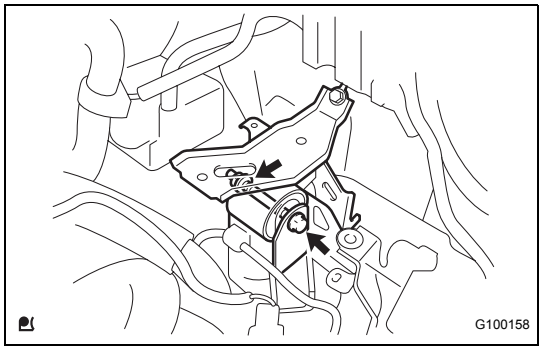

(c) Remove the through bolt and the nut and separate the engine mounting insulator LH.

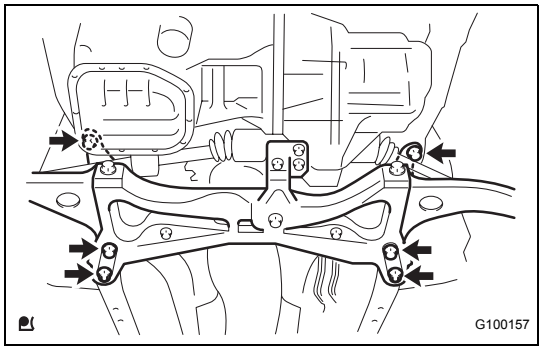

(d) Remove the 6 bolts, and remove the engine assembly with transaxle and the front suspension crossmember from the vehicle.

75. REMOVE FRONT SUSPENSION CROSSMEMBER SUB-ASSEMBLY

(a) Remove the bolt and remove the radio setting condenser.

(b) Remove the bolt and remove the oxygen sensor wiring bracket.

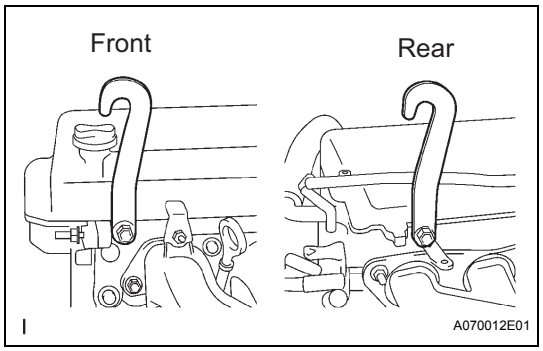

(c) Install the engine hangers with the bolts, as shown in the illustration.
Torque: 40 N*m (408 kgf*cm, 30 ft.*lbf)
Part No.:
12281-21010 for engine hanger
91642-81025 for bolt

(d) Using an engine sling device and a chain block, suspend the engine assembly with transaxle and front suspension crossmember.

(e) Remove the through bolt from the engine moving control rod and remove the front suspension crossmember.

76. REMOVE VENTILATION HOSE

(a) Loosen the 2 clips and remove the ventilation hose.

77. REMOVE VENTILATION HOSE NO. 2

(a) Loosen the clips and remove ventilation hose No. 2.

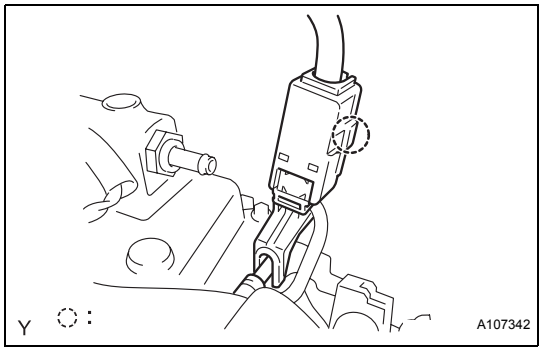

78. REMOVE FUEL TUBE SUB-ASSEMBLY

(a) Disengage the claw and remove fuel pipe clamp No. 2.

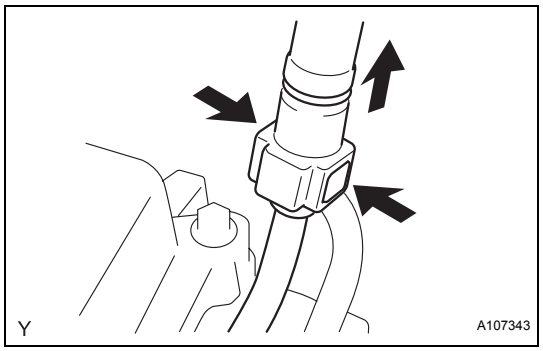

(b) Pinch the fuel tube connector retainer from both sides, disconnect the fuel tube connector and separate the fuel tube from the pipe.
NOTICE:
- **Remove any dirt and foreign matter from the fuel tube connector before performing this work.**
- **Do not allow any scratches or foreign matter on the parts when disconnecting, as the fuel tube connector has the O-rings that seal the pipe.**
- **Perform this work by hand. Do not use any tools.**
- **Do not forcibly bend, twist or turn the nylon tube.**
- **Protect the disconnected parts by covering them with vinyl bags after disconnecting the fuel tube.**
- **If the fuel tube connector and pipe are stuck, push and pull to release them.**

79. REMOVE WATER FILLER SUB-ASSEMBLY

(a) Disconnect radiator hose No. 1 from the cylinder head.

(b) Remove the 2 nuts and remove the water filler sub-assembly.

80. REMOVE HEATER WATER INLET HOSE A

(a) Disconnect heater water inlet hose A from the cylinder head.

81. REMOVE FLYWHEEL HOUSING SIDE COVER (See page ST-9)

82. REMOVE STARTER ASSEMBLY (See page ST-9)

83. REMOVE AUTOMATIC TRANSAXLE ASSEMBLY (for Automatic Transaxle)

(a) Remove the 7 bolts and remove the automatic transaxle with torque converter.

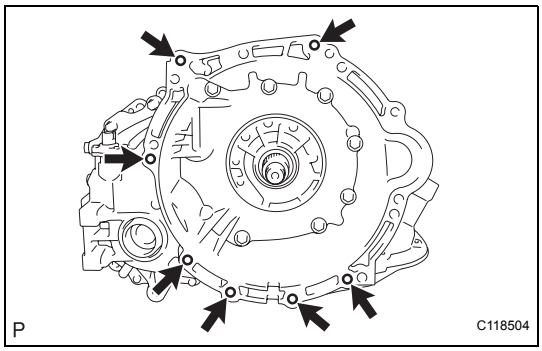

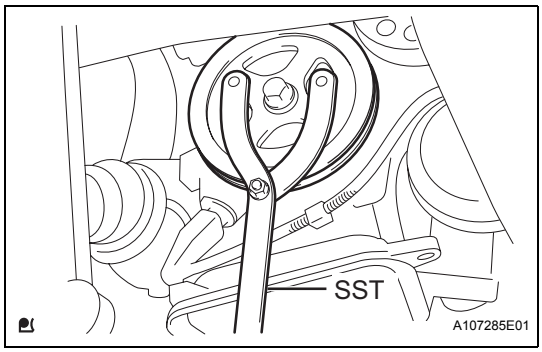

84. REMOVE DRIVE PLATE AND RING GEAR SUB-ASSEMBLY (for Automatic Transaxle)

(a) Hold the crankshaft with SST.
SST 09960-10010 (09962-01000, 09963-01000)

(b) Remove the 6 bolts, drive plate spacer FR, drive plate and ring gear sub-assembly and drive plate spacer RR.

85. REMOVE CONTROL CABLE BRACKET (for Manual Transaxle) (See page MX-28)

86. REMOVE MANUAL TRANSAXLE ASSEMBLY (for Manual Transaxle) (See page MX-30)

87. REMOVE CLUTCH COVER ASSEMBLY (for Manual Transaxle) (See page CL-15)

88. REMOVE CLUTCH DISC ASSEMBLY (for Manual Transaxle)

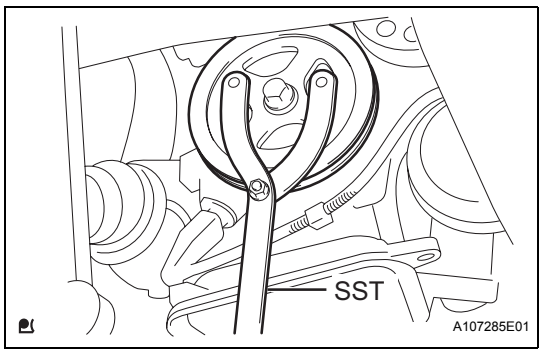

89. REMOVE FLYWHEEL SUB-ASSEMBLY (for Manual Transaxle)

(a) Hold the crankshaft with SST.
SST 09960-10010 (09962-01000, 09963-01000)

(b) Remove the 6 bolts and flywheel.

90. REMOVE OIL LEVEL GAUGE SUB-ASSEMBLY

91. REMOVE IGNITION COIL NO. 1

(a) Disconnect the connectors of the ignition coils.

(b) Remove the bolt and remove all the ignition coils.

92. REMOVE GENERATOR ASSEMBLY (See page CH-10)

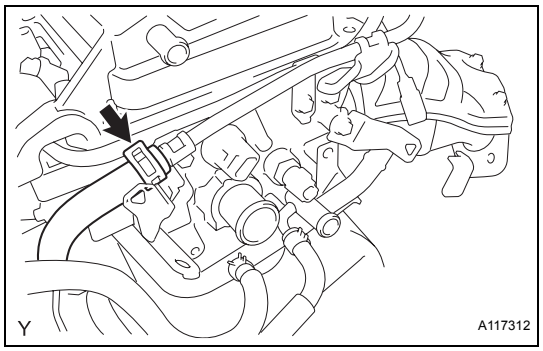

93. REMOVE INTAKE MANIFOLD

(a) Disconnect the union to connector tube hose from the booster vacuum tube.

(b) Disconnect the engine wire from the intake manifold.

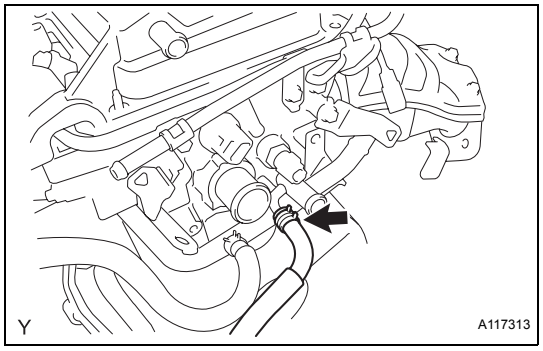

(c) Disconnect the water by-pass hose from the cylinder head.

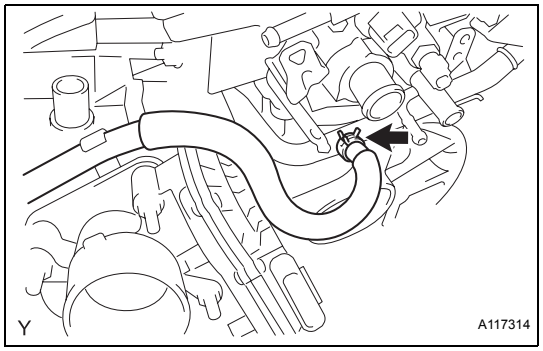

(d) Disconnect the water by-pass hose from water bypass pipe No. 1.

(e) Disconnect the throttle with motor body assembly connector.

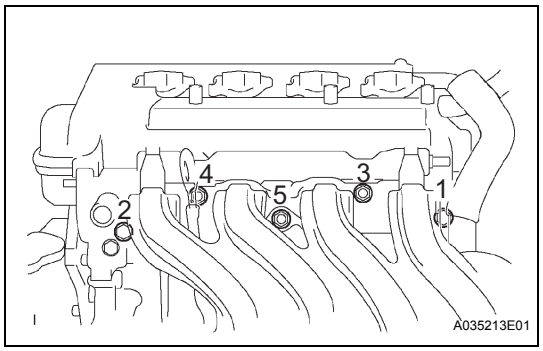

(f) Remove the 3 bolts and 2 nuts in the order shown in the illustration and remove the intake manifold.

(g) Remove the gasket from the intake manifold.

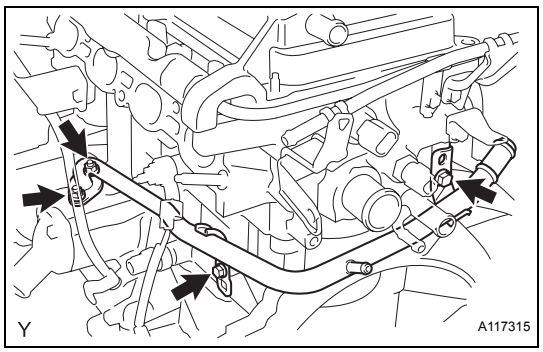

94. REMOVE WATER BY-PASS PIPE NO. 1

(a) Remove the 2 bolts and 2 nuts and remove water by-pass pipe No. 1.

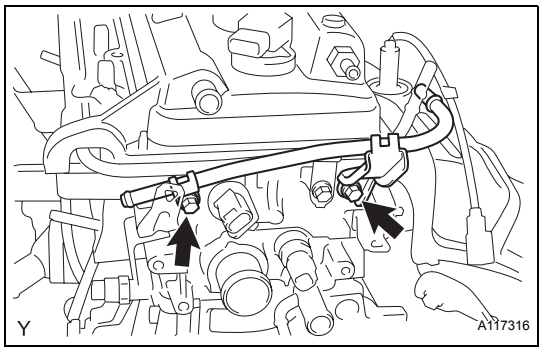

95. REMOVE BOOSTER VACUUM TUBE

(a) Remove the 2 bolts and remove the booster vacuum tube.

96. REMOVE ENGINE WIRE

(a) Disconnect all the sensor connectors and wire harness clamps from the engine assembly and remove the engine wire harness.

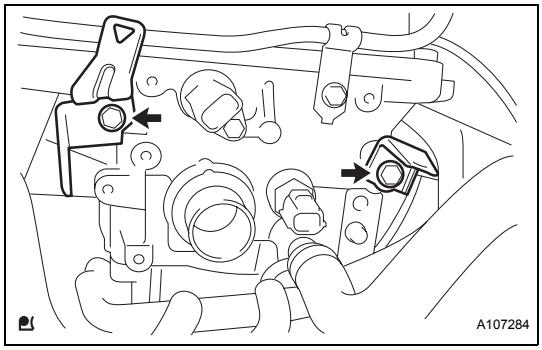

97. REMOVE WIRE HARNESS CLAMP BRACKET

(a) Remove the 2 bolts and remove the 2 wire harness clamp brackets.

98. REMOVE EXHAUST MANIFOLD HEAT INSULATOR NO. 1

(a) Remove the 4 bolts and remove the exhaust manifold heat insulator.

99. REMOVE MANIFOLD SUPPORT BRACKET

(a) Remove the 3 bolts and remove the manifold support bracket.

100. REMOVE EXHAUST MANIFOLD

(a) Remove the 3 bolts and 2 nuts and remove the exhaust manifold.

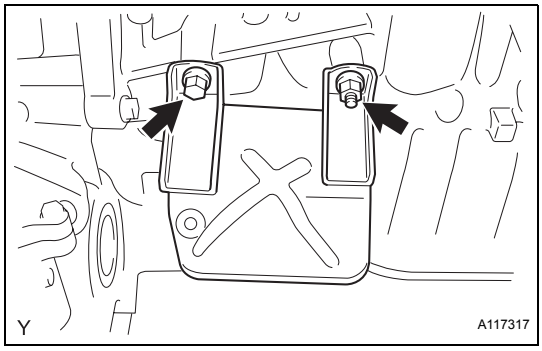

101. REMOVE DRIVE SHAFT HEAT INSULATOR SUB-ASSEMBLY

(a) Remove the bolt and nut and remove the drive shaft heat insulator.

INSTALLATION

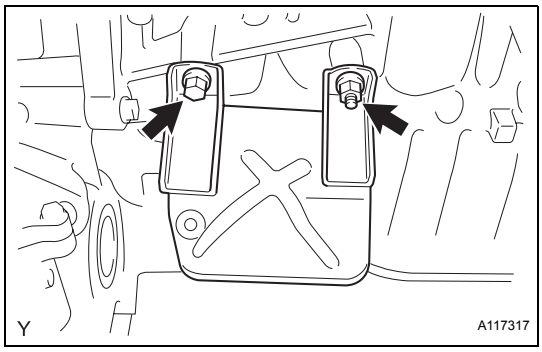

1. INSTALL DRIVE SHAFT HEAT INSULATOR SUB-ASSEMBLY

(a) Install the drive shaft heat insulator sub-assembly with the bolt and nut.
Torque: 18 N*m (183 kgf*cm, 13 ft.*lbf)

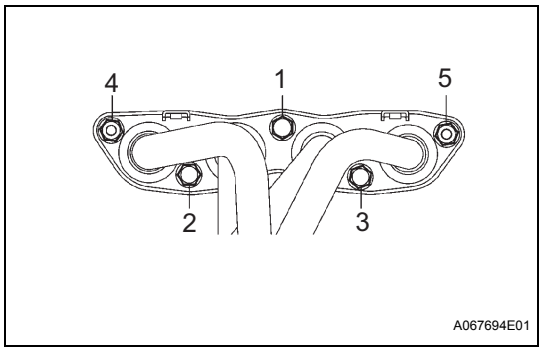

2. INSTALL EXHAUST MANIFOLD

(a) Tighten the exhaust manifold nuts and bolts, in the order shown in the illustration, through a new gasket.
Torque: 27 N*m (275 kgf*cm, 20 ft.*lbf)

3. INSTALL MANIFOLD SUPPORT BRACKET

(a) Install the manifold bracket with the 3 bolts.
Torque: 44 N*m (449 kgf*cm, 33 ft.*lbf)

4. INSTALL EXHAUST MANIFOLD HEAT INSULATOR NO.1

(a) Install the exhaust manifold insulator with the 4 bolts.
Torque: 8.0 N*m (82 kgf*cm, 71 in.*lbf)

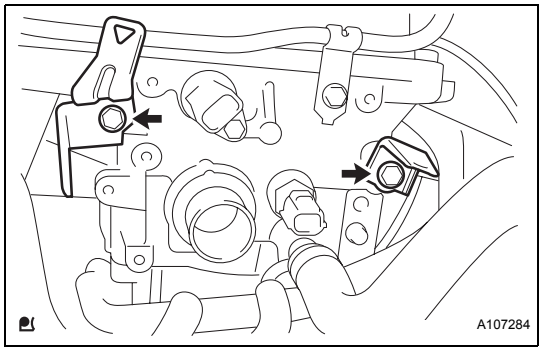

5. INSTALL WIRE HARNESS CLAMP BRACKET

(a) Install the 2 wire harness clamp brackets with the 2 bolts.
Torque: 10 N*m (102 kgf*cm, 89 in.*lbf)

6. INSTALL ENGINE WIRE

(a) Connect all the sensor connectors and wire harness clamps to the engine assembly and install the engine wire harness.

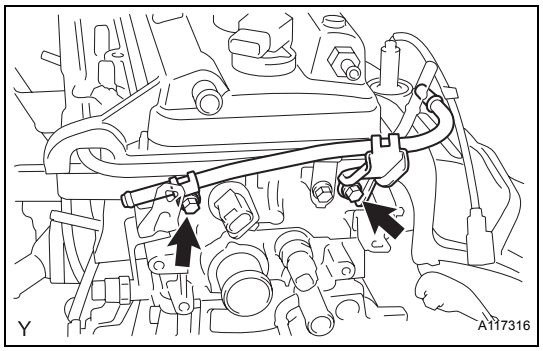

7. INSTALL BOOSTER VACUUM TUBE

(a) Install the booster vacuum tube with the 2 bolts.
Torque: 9.0 N*m (92 kgf*cm, 80 in.*lbf)

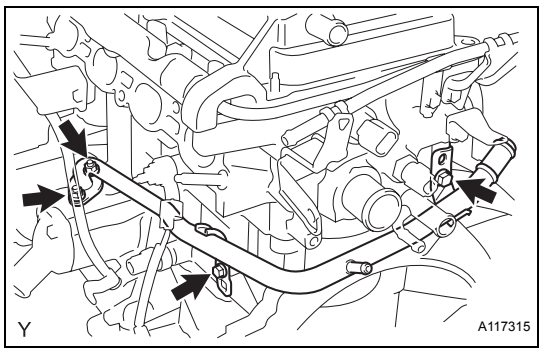

8. INSTALL WATER BY-PASS PIPE NO. 1

(a) Install water by-pass pipe No. 1 through a new gasket with the 2 bolts and 2 nuts.
Torque: 9.0 N*m (92 kgf*cm, 80 in.*lbf)

9. INSTALL INTAKE MANIFOLD

(a) Install a new gasket onto the intake manifold.

EM

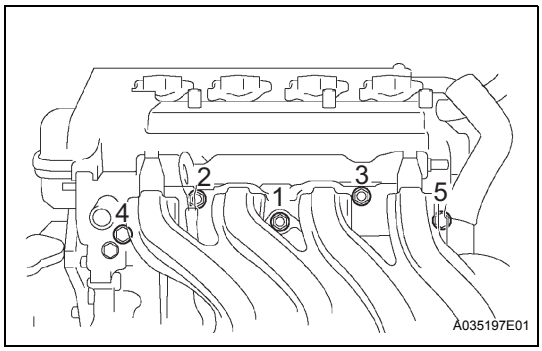

(b) Provisionally tighten the intake manifold nuts and bolts in the order shown in the illustration, and then tighten them to the specified torque.
Torque: 30 N*m (306 kgf*cm, 22 ft.*lbf)

(c) Connect the engine wire to the intake manifold.

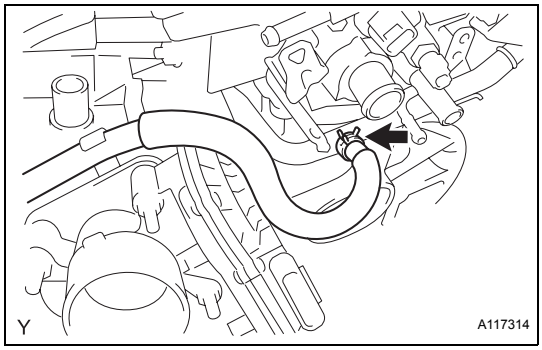

(d) Connect the water by-pass hose to water bypass pipe No. 1.

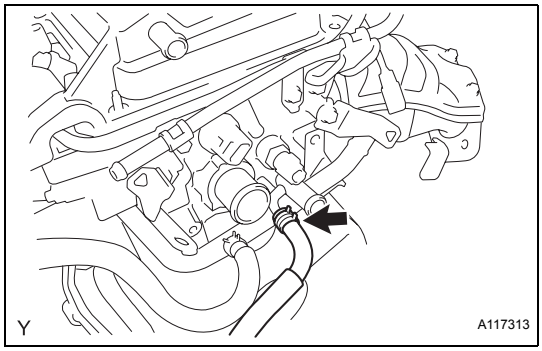

(e) Connect the water by-pass hose to the cylinder head.

(f) Connect the union to connector tube hose to the booster vacuum tube.

(g) Connect the throttle with motor body assembly connector.

10. INSTALL OIL LEVEL GAUGE SUB-ASSEMBLY

11. INSTALL GENERATOR ASSEMBLY (See page CH-17)

12. INSTALL IGNITION COIL NO.1 (See page IG-9)

13. INSTALL DRIVE PLATE AND RING GEAR SUB-ASSEMBLY (for Automatic Transaxle)

(a) Hold the crankshaft with SST.
SST 09960-10010 (09962-01000, 09963-01000)

(b) Clean the 6 bolts and their holes.

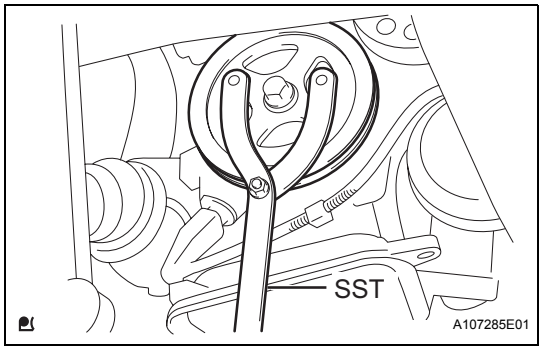

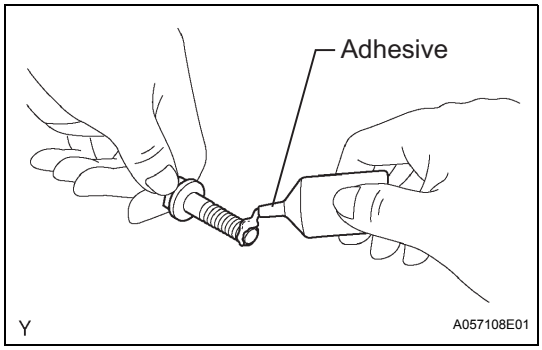

(c) Apply adhesive to the end 2 or 3 threads of the bolts.
Adhesive:
Part No. 08833-0070, three bond 1324 or the equivalent.

(d) Install the drive plate spacer RR, drive plate and ring gear sub-assembly and drive plate spacer FR.

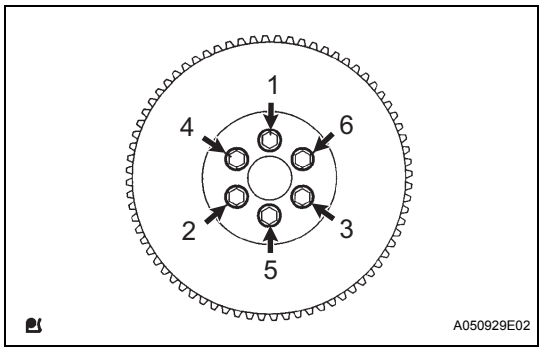

(e) Install and uniformly tighten the 6 bolts in several steps, in the sequence shown in the illustration.
Torque: 88 N*m (900 kgf*cm, 65 ft.*lbf)
NOTICE:
Do not start the engine for at least 1 hour after performing the installation.

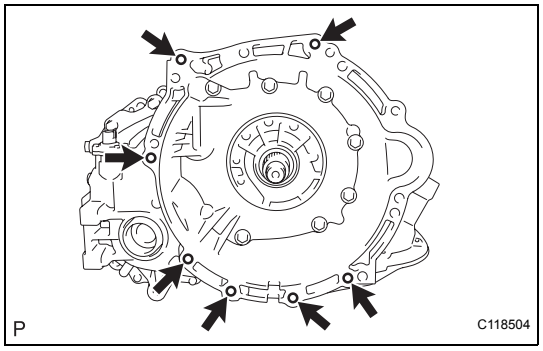

14. INSTALL AUTOMATIC TRANSAXLE ASSEMBLY (for Automatic Transaxle)

(a) Make sure that the knock pin is installed on the engine side.

(b) Install the automatic transaxle with torque converter with the 7 bolts.
Torque: 30 N*m (301 kgf*cm, 22 ft.*lbf)
CAUTION:
Make sure that the torque converter rotates.

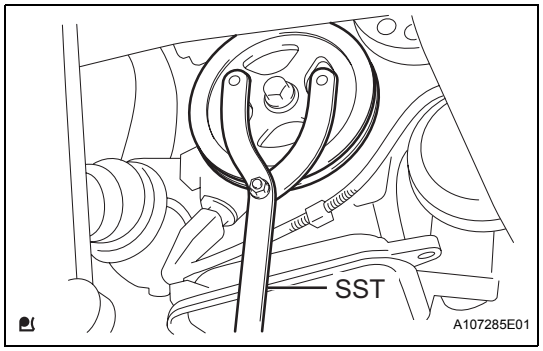

15. INSTALL FLYWHEEL SUB-ASSEMBLY (for Manual Transaxle)

(a) Hold the crankshaft with SST.
SST 09960-10010 (09962-01000, 09963-01000)

(b) Clean the 6 bolts and their holes.

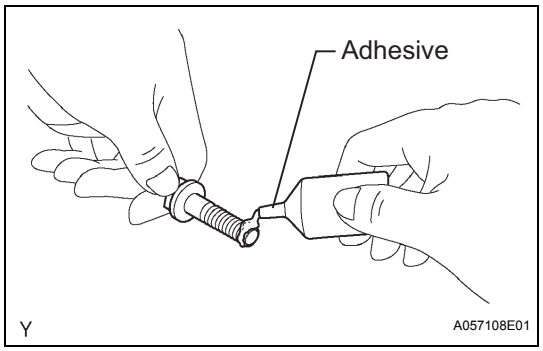

(c) Apply adhesive to the end 2 or 3 threads of new bolts.
Adhesive:
Part No. 08833-0070, three bond 1324 or the equivalent.

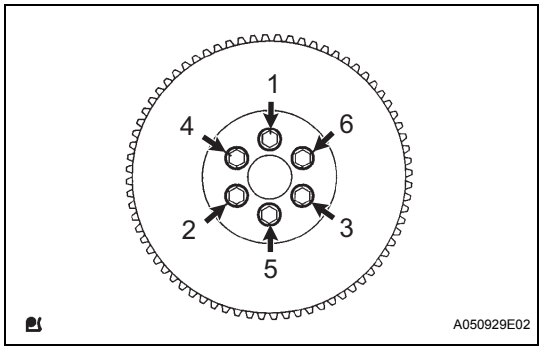

(d) Install the flywheel with the 6 bolts in the order shown in the illustration.
Torque: 49 N*m (500 kgf*cm, 38 ft.*lbf)

(e) Mark a paint mark on each bolt head on the engine upper side.

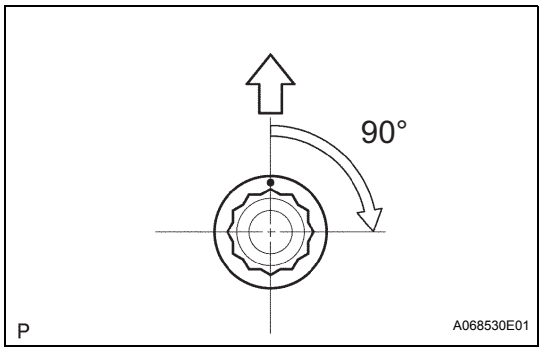

(f) Tighten the bolts 90° in the sequence shown in the illustration.
NOTICE:
Do not start the engine for at least 1 hour after performing the installation.

16. **INSTALL CLUTCH DISC ASSEMBLY (for Manual Transaxle) (See page CL-16)**
17. **INSTALL CLUTCH COVER ASSEMBLY (for Manual Transaxle) (See page CL-17)**
18. **INSPECT AND ADJUST CLUTCH COVER ASSEMBLY (for Manual Transaxle) (See page CL-17)**
19. **INSTALL MANUAL TRANSAXLE ASSEMBLY (for Manual Transaxle) (See page MX-30)**
20. **INSTALL CONTROL CABLE BRACKET (for Manual Transaxle) (See page MX-32)**
21. **INSTALL STARTER ASSEMBLY (See page ST-17)**
22. **INSTALL FLYWHEEL HOUSING SIDE COVER (See page ST-17)**
23. **CONNECT HEATER WATER INLET HOSE A**
    (a) Connect heater water inlet hose A to the cylinder head.
24. **INSTALL WATER FILLER SUB-ASSEMBLY**
    (a) Connect radiator hose No. 1 to the cylinder head.
    (b) Install the water filler sub-assembly with the 2 nuts.
    Torque: 7.5 N*m (76 kgf*cm, 66 in.*lbf)
    (c) Connect radiator hose No. 1 to the water filler.

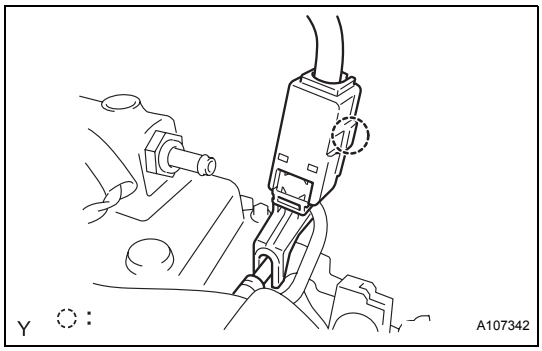

25. **INSTALL FUEL TUBE SUB-ASSEMBLY**
    (a) Connect the fuel tube connector and pipe and install fuel pipe clamp No. 2.
    CAUTION:
    Align the fuel tube connector with the pipe, then push the fuel tube connector in until the retainer makes a click sound. If the connection is tight, apply a small amount of engine oil to the the tip of the pipe. After connecting, pull the pipe and connector to make sure that they are securely connected.
26. **INSTALL VENTILATION HOSE NO. 2**
    (a) Install ventilation hose No. 2 with the clip.
27. **INSTALL VENTILATION HOSE**
    (a) Install the ventilation hose with the clip.
28. **INSTALL FRONT SUSPENSION CROSSMEMBER SUB-ASSEMBLY**
    (a) Install the engine moving control rod with the through bolt.
    Torque: 120 N*m (1,224 kgf*cm, 89 ft.*lbf)
    (b) Remove the 2 bolts and remove the 2 engine hangers.

(c) Install the oxygen sensor wiring bracket with the bolt.
Torque: 60 N*m (612 kgf*cm, 44 ft.*lbf)

(d) Install the radio setting condenser with the bolt.
Torque: 40 N*m (408 kgf*cm, 30 ft.*lbf)

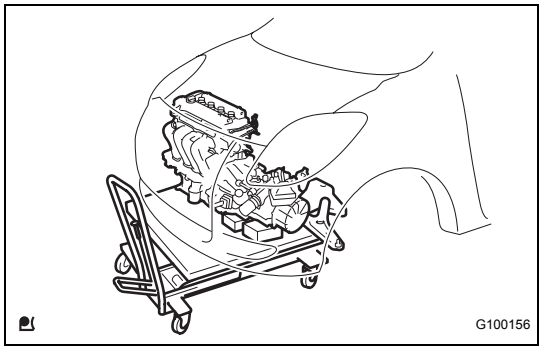

29. INSTALL ENGINE ASSEMBLY WITH TRANSAXLE (for Hatchback)

(a) Set the engine assembly with transaxle and front suspension crossmember on the engine lifter.

(b) Operate the engine lifter and lift the engine assembly with transaxle and front suspension crossmember to the position where the engine mounting insulators RH and LH can be installed.

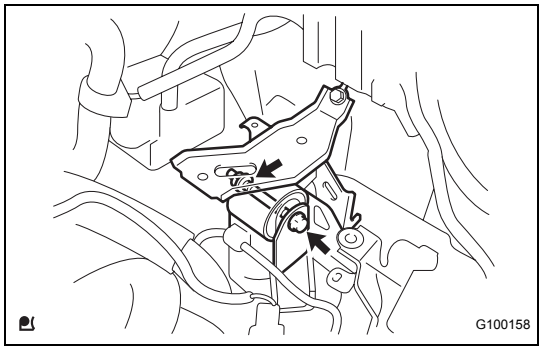

(c) Install the engine mounting insulator LH with the through bolt and nut.
Torque: 52 N*m (530 kgf*cm, 38 ft.*lbf)

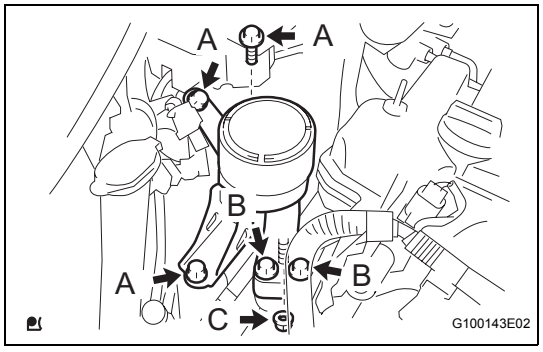

(d) Install the engine mounting insulator RH with the 5 bolts and nut.
Torque: 45 N*m (459 kgf*cm, 33 ft.*lbf) for Bolt A
52 N*m (530 kgf*cm, 38 ft.*lbf) for Bolt B
52 N*m (530 kgf*cm, 38 ft.*lbf) for Nut C

(e) Operate the engine lifter and provisionally install the front suspension crossmember onto the vehicle with the 6 bolts.

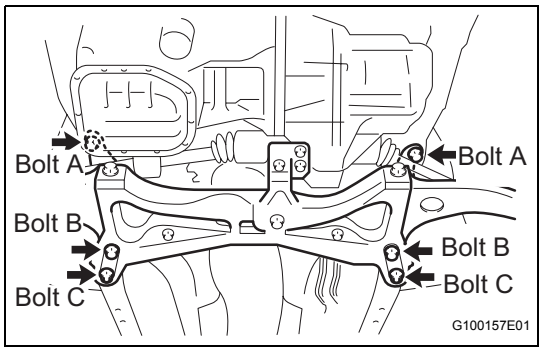

(f) Insert SST into the datum holes in the front suspension crossmembers RH and LH alternately and tighten bolts A, B and C on both sides in several sequences.
SST 09670-00010
Torque: 70 N*m (714 kgf*cm, 52 ft.*lbf) for Bolt A
160 N*m (1,631 kgf*cm, 118 ft.*lbf) for Bolt B
95 N*m (969 kgf*cm, 70 ft.*lbf) for Bolt C
CAUTION:
- **Insert SST into the datum hole vertically.**
- **If impossible to insert SST vertically, loosen all the bolts and then insert SST again.**

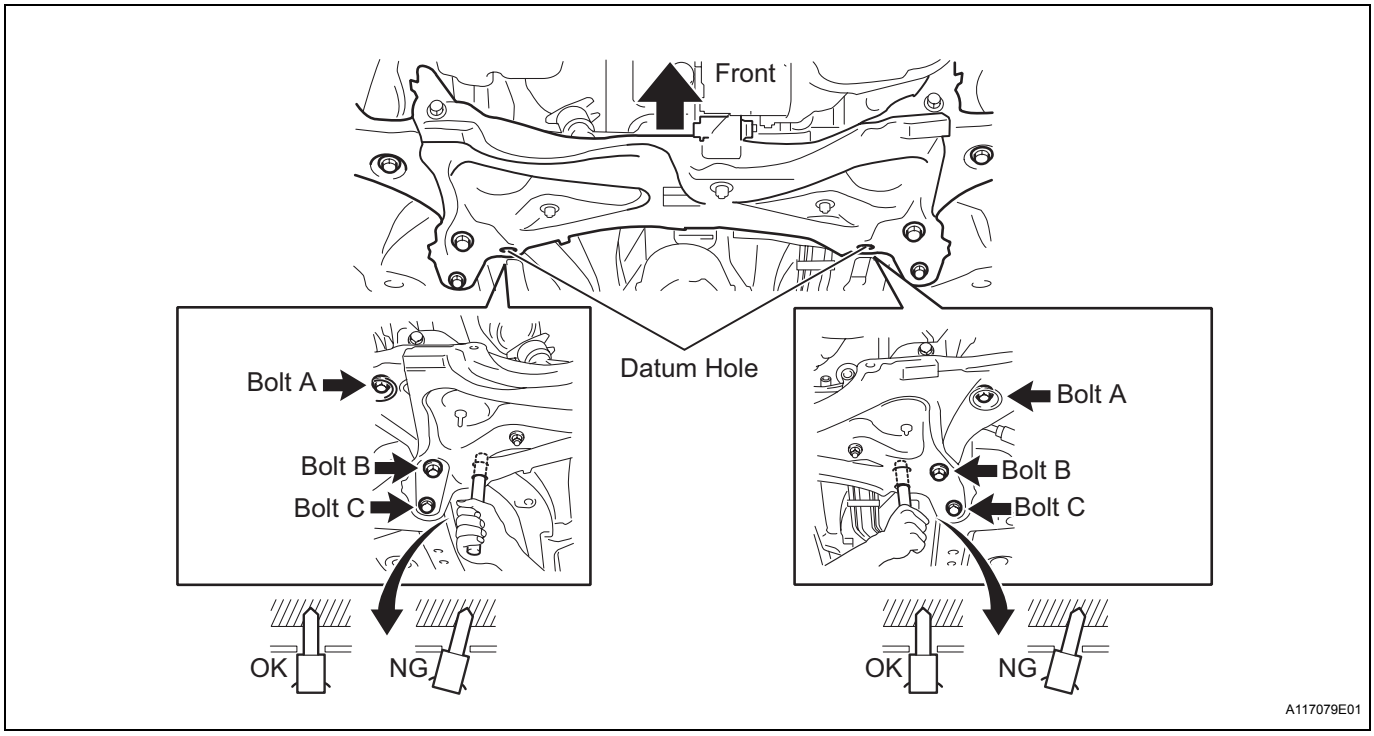

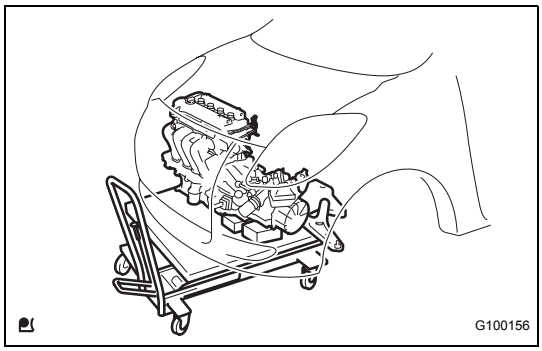

30. REMOVE ENGINE ASSEMBLY WITH TRANSAXLE (for Sedan)

(a) Set the engine assembly with transaxle and front suspension crossmember on the engine lifter.

(b) Operate the engine lifter and lift the engine assembly with transaxle and front suspension crossmember to the position where the engine mounting insulators RH and LH can be installed.

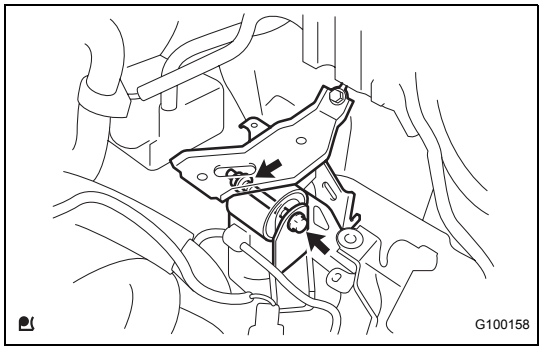

(c) Install the engine mounting insulator LH with the through bolt and nut.
Torque: 52 N*m (530 kgf*cm, 38 ft.*lbf)

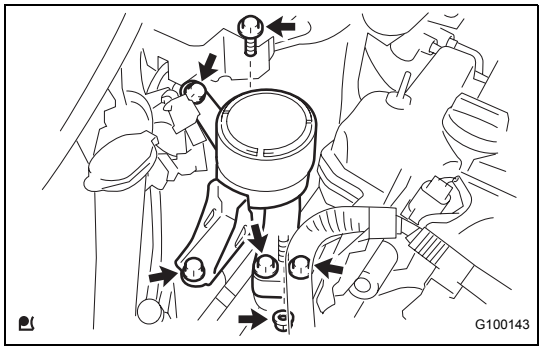

(d) Install the engine mounting insulator RH with the 5 bolts and nut.
Torque: 52 N*m (530 kgf*cm, 38 ft.*lbf)

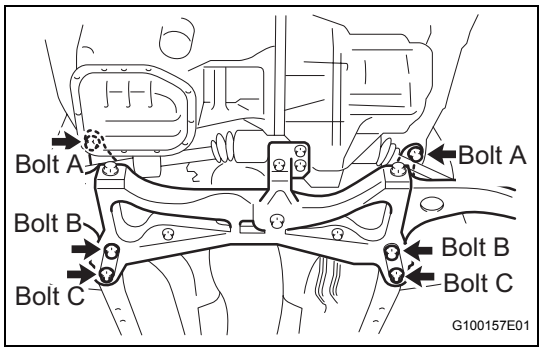

(e) Operate the engine lifter and provisionally install the engine assembly with transaxle and front suspension crossmember onto the vehicle with the 6 bolts.

(f) Insert SST into the datum holes of the front suspension crossmembers RH and LH alternately and tighten bolts A, B and C on both sides in several sequences.

SST 09670-00010

Torque: 70 N*m (714 kgf*cm, 52 ft.*lbf) for Bolt A
160 N*m (1,631 kgf*cm, 118 ft.*lbf) for Bolt B
95 N*m (969 kgf*cm, 70 ft.*lbf) for Bolt C

CAUTION:

- **Insert SST into the datum hole vertically.**
- **If impossible to insert SST vertically, loosen all the bolts and then insert SST again.**

EM

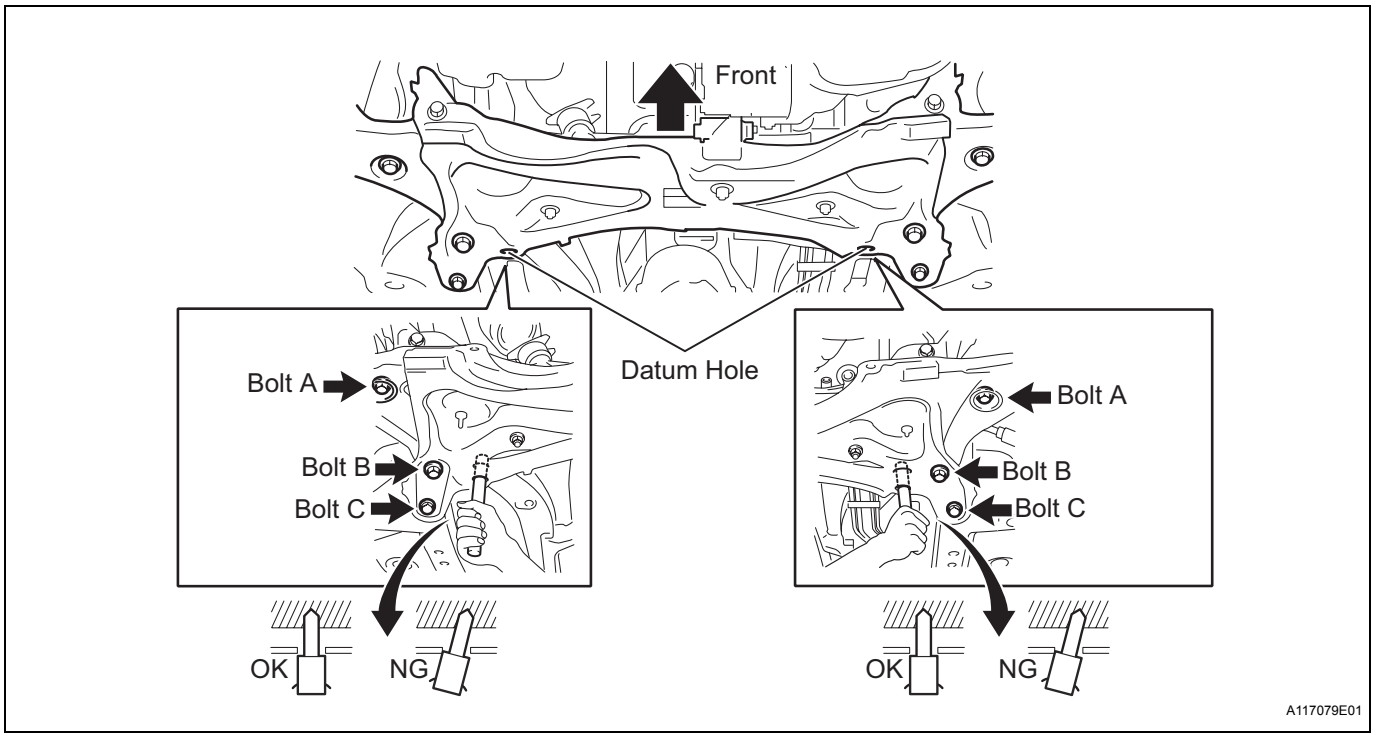

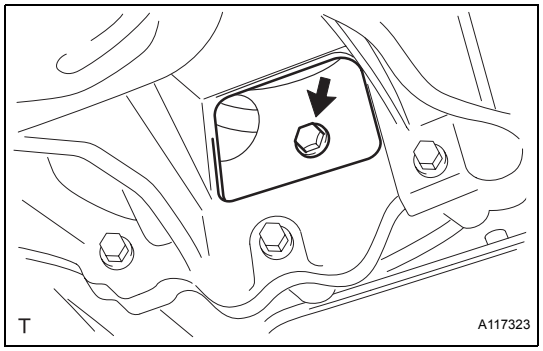

31. **INSTALL DRIVE PLATE AND TORQUE CONVERTER CLUTCH SETTING BOLT (for Automatic Transaxle)**
    (a) Tighten the 6 torque converter set bolts.
    Torque: 27 N*m (275 kgf*cm, 20 ft.*lbf)
32. **INSTALL FLYWHEEL HOUSING UNDER COVER**
33. **INSTALL FRONT DRIVE SHAFT ASSEMBLY LH (See page DS-13)**
34. **INSTALL FRONT DRIVE SHAFT ASSEMBLY RH (See page DS-14)**
35. **INSTALL FRONT AXLE ASSEMBLY LH (See page DS-14)**
36. **INSTALL FRONT AXLE ASSEMBLY RH (See page DS-14)**

37. INSTALL FRONT STABILIZER LINK ASSEMBLY LH (See page DS-14)
38. INSTALL FRONT STABILIZER LINK ASSEMBLY RH (See page MX-31)
39. INSTALL FRONT SUSPENSION ARM SUB-ASSEMBLY LOWER NO. 1 LH (See page DS-14)
40. INSTALL FRONT SUSPENSION ARM SUB-ASSEMBLY LOWER NO. 1 RH (See page MX-31)
41. INSTALL TIE ROD END SUB-ASSEMBLY LH (See page DS-15)
42. INSTALL TIE ROD END SUB-ASSEMBLY RH (See page MX-31)
43. INSTALL SPEED SENSOR FRONT LH (w/ ABS) (See page DS-15)
44. INSTALL SPEED SENSOR FRONT RH (w/ ABS) (See page MX-31)
45. INSTALL FRONT AXLE HUB LH NUT (See page DS-15)
46. INSTALL FRONT AXLE HUB RH NUT (See page MX-31)
47. INSTALL EXHAUST PIPE ASSEMBLY FRONT (See page EX-8)
48. INSTALL HEATED OXYGEN SENSOR (See page EC-23)
49. INSTALL CONSOLE BOX ASSEMBLY REAR (See page PB-10)
50. INSTALL CONSOLE BOX REAR COVER (for Hatchback) (See page PB-11)
51. INSTALL SHIFTING HOLE COVER SUB-ASSEMBLY (for Manual Transaxle) (See page PB-12)
52. INSTALL CONSOLE BOX CARPET (for Sedan) (See page PB-11)
53. INSTALL CONSOLE UPPER REAR PANEL SUB-ASSEMBLY (for Sedan) (See page IP-89)
54. INSTALL UPPER CONSOLE PANEL SUB-ASSEMBLY (for Sedan) (See page IP-89)
55. INSTALL INSTRUMENT PAD LOWER LH (for Sedan) (See page IP-55)
56. INSTALL INSTRUMENT PANEL FINISH PANEL END LH (for Sedan) (See page ME-141)
57. INSTALL INSTRUMENT PANEL FINISH PANEL LOWER CENTER (for Sedan) (See page ME-142)
58. INSTALL SHIFT LEVER KNOB SUB-ASSEMBLY (for Manual Transaxle)

59. **INSTALL STEERING COLUMN HOLE COVER SUB-ASSEMBLY NO. 1 (See page PS-79)**

60. **INSTALL STEERING SLIDING YOKE SUB-ASSEMBLY (See page PS-79)**

61. **INSTALL COLUMN HOLE COVER SILENCER SHEET (See page PS-79)**

62. **CONNECT ENGINE WIRE**

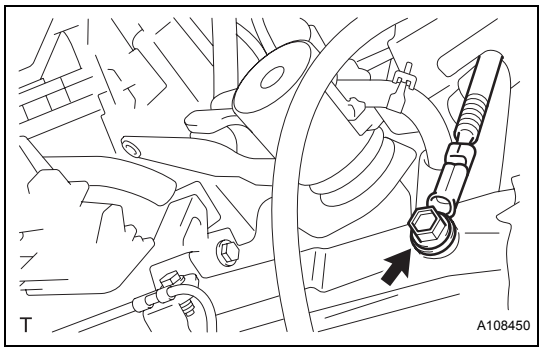

(a) Install the earth wire of the engine room wire harness with the bolt.

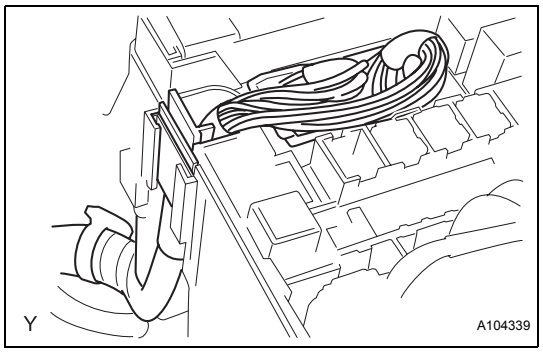

(b) Connect the 2 engine wire harness connectors and wire harness clamp to the engine room junction block.

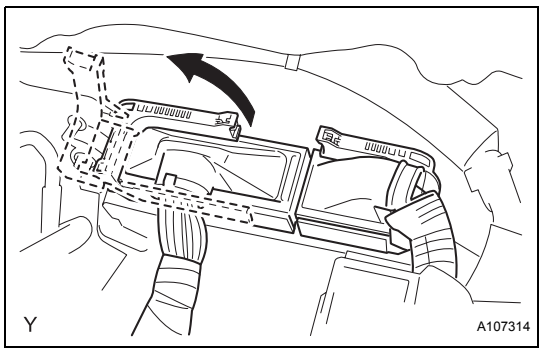

(c) Connect the engine wire harness connector to the ECM.

63. **INSTALL CLUTCH RELEASE CYLINDER ASSEMBLY (for Manual Transaxle) (See page MX-32)**

64. **INSTALL WITH PULLEY COMPRESSOR ASSEMBLY (w/ Air Conditioning System) (See page AC-209)**

65. **INSTALL FAN AND GENERATOR V BELT (See page EM-7)**

66. **ADJUST FAN AND GENERATOR V BELT (See page EM-7)**

67. **CONNECT FUEL TUBE SUB-ASSEMBLY**

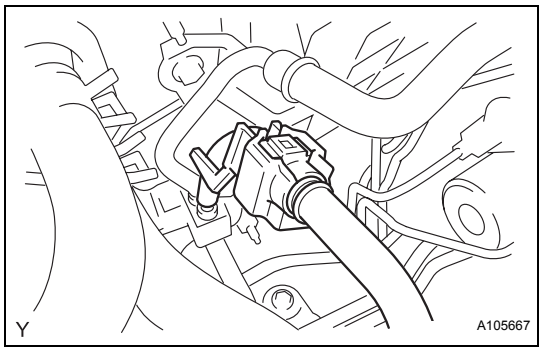

(a) Connect the fuel tube connector and fuel pipe, and install fuel pipe clamp No. 1.

CAUTION:

Align the fuel tube connector with the pipe, then push the fuel tube connector in until the retainer makes a click sound. If the connection is tight, apply a small amount of engine oil to the the tip of the pipe. After connecting, pull the pipe and connector to make sure that they are securely connected.

EM

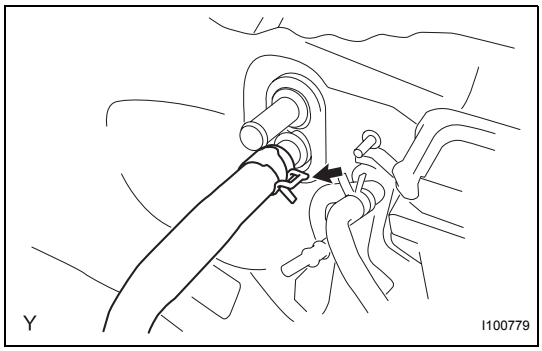

68. CONNECT HEATER WATER INLET HOSE A

(a) Connect heater water inlet hose A to the heater unit.

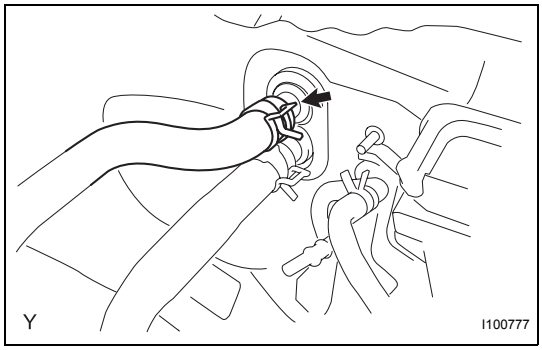

69. CONNECT HEATER WATER OUTLET HOSE A (FROM HEATER UNIT)

(a) Connect heater water outlet hose A to the heater unit.

70. CONNECT UNION TO CHECK VALVE HOSE

(a) Connect the union to check valve hose to the booster vacuum tube.

71. INSTALL TRANSMISSION CONTROL CABLE ASSEMBLY (for Automatic Transaxle) (See page AX-109)

72. INSTALL TRANSMISSION CONTROL CABLE ASSEMBLY (for Manual Transaxle) (See page MX-32)

73. INSTALL CYLINDER HEAD COVER NO. 2 (See page IG-10)

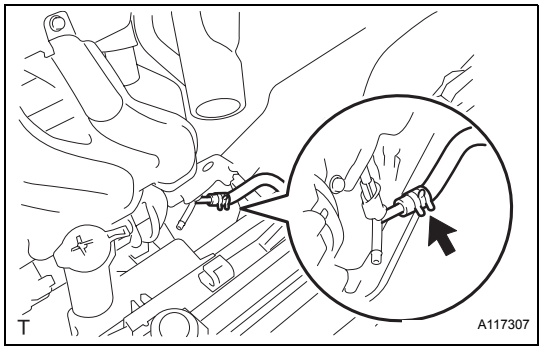

74. CONNECT OIL COOLER INLET HOSE (for Automatic Transaxle)

(a) Connect the oil cooler inlet hose with the clip.

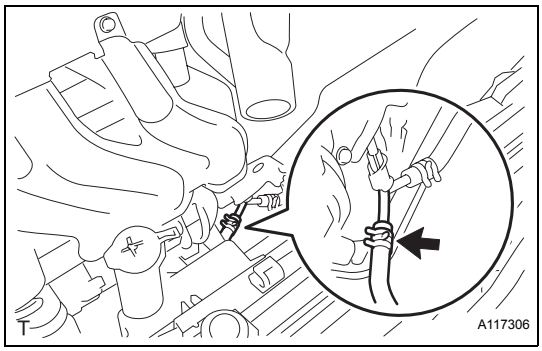

75. CONNECT OIL COOLER OUTLET HOSE (for Automatic Transaxle)

(a) Connect the oil cooler outlet hose with the clip.

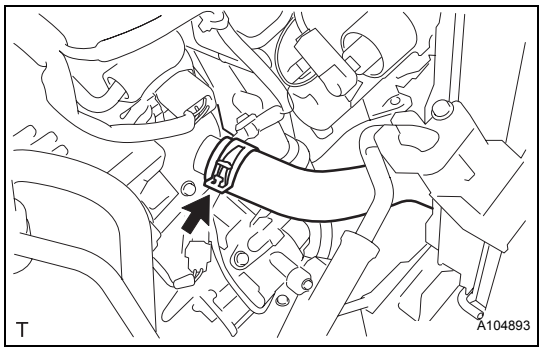

76. CONNECT RADIATOR HOSE NO. 2

(a) Connect radiator hose No. 2 to the water inlet.

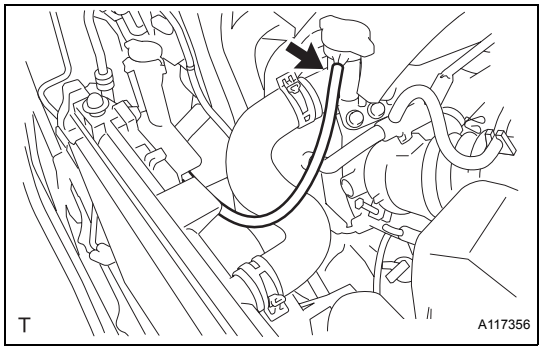

77. CONNECT RADIATOR RESERVOIR TANK HOSE

(a) Connect the radiator reservoir tank hose to the water filler.

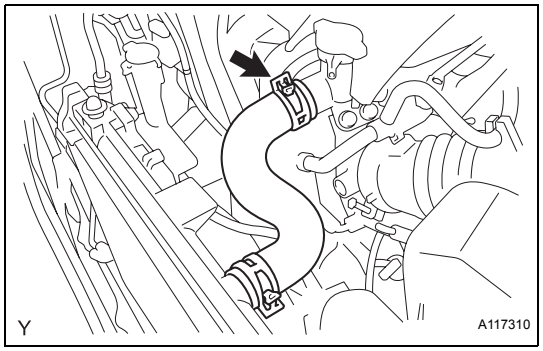

78. CONNECT RADIATOR HOSE NO. 3

(a) Connect radiator hose No. 3 to the water filler.

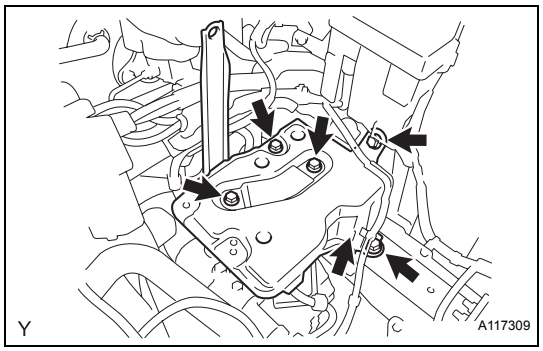

79. INSTALL BATTERY CARRIER

(a) Install the battery carrier with the 5 bolts.
Torque: 17 N*m (173 kgf*cm, 13 ft.*lbf)

(b) Install the clamp.

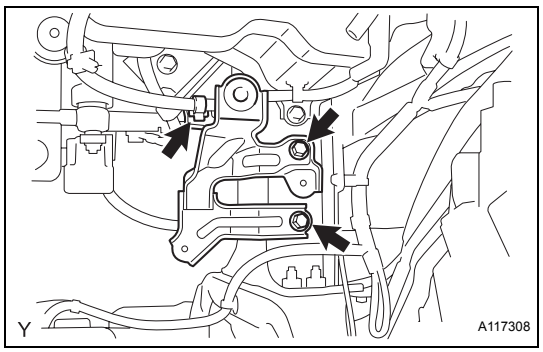

80. INSTALL AIR CLEANER BRACKET

(a) Install the air cleaner bracket with the 2 bolts.
Torque: 19 N*m (194 kgf*cm, 14 ft.*lbf)

(b) Connect the wire harness clamp to the air cleaner bracket.

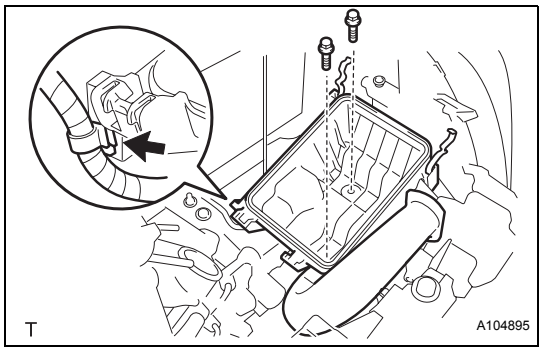

81. INSTALL AIR CLEANER ASSEMBLY

(a) Install the air cleaner case with air cleaner inlet No. 1 with the 2 bolts.
Torque: 7.8 N*m (80 kgf*cm, 69 in.*lbf)

(b) Connect the wire harness to the air cleaner case.

(c) Install the air cleaner element.

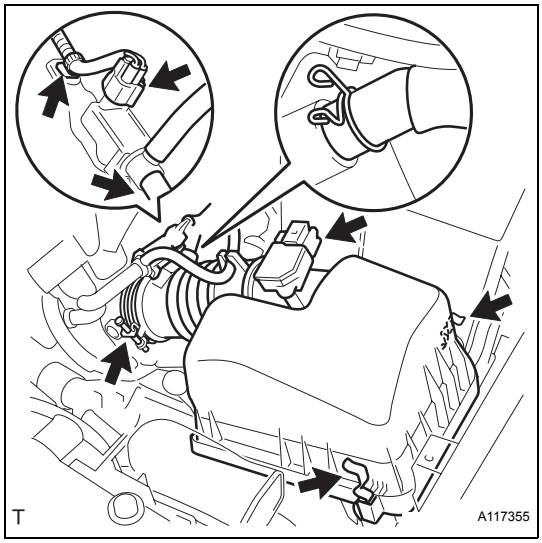

(d) Install and lock the air cleaner cap and the air cleaner hose and then tighten the air cleaner hose clamp.
Torque: 4.0 N*m (41 kgf*cm, 35 in.*lbf)

(e) Connect the ventilation hose to the air cleaner hose.

(f) Connect the vacuum switching valve connector and the wire harness clamp.

(g) Connect the fuel vapor feed hose and fuel vapor feed hose No. 1 to the vacuum switching valve assembly.

(h) Connect the intake air flow meter connector and the wire harness clamp.



82. INSTALL COWL TOP PANEL OUTER (for Hatchback)

(a) Install the cowl top panel with the 9 bolts.
Torque: 6.5 N*m (66 kgf*cm, 58 ft.*lbf)

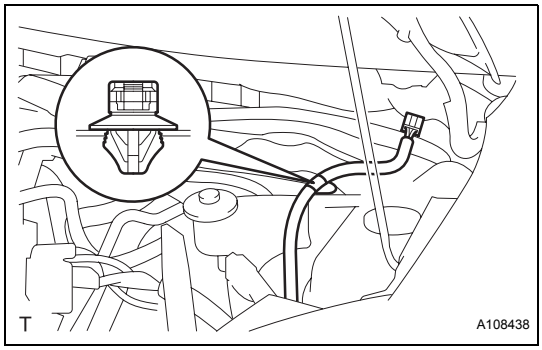

(b) Connect the wire harness clamp.

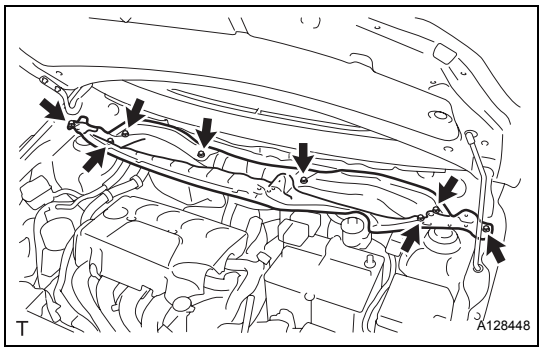

83. INSTALL COWL TOP PANEL OUTER (for Sedan)

(a) Install the cowl top panel outer with the 8 bolts.
Torque: 6.5 N*m (66 kgf*cm, 58 in.*lbf)

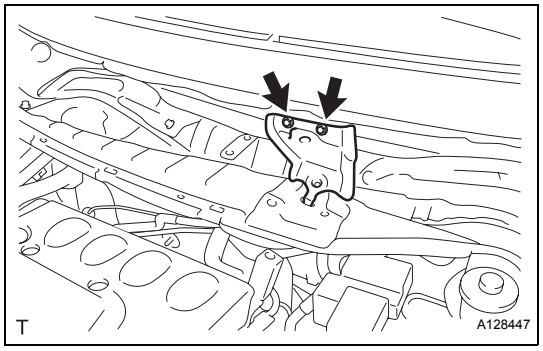

(b) Install the cowl top to cowl inner brace with the 2 bolts.
Torque: 6.5 N*m (66 kgf*cm, 58 in.*lbf)

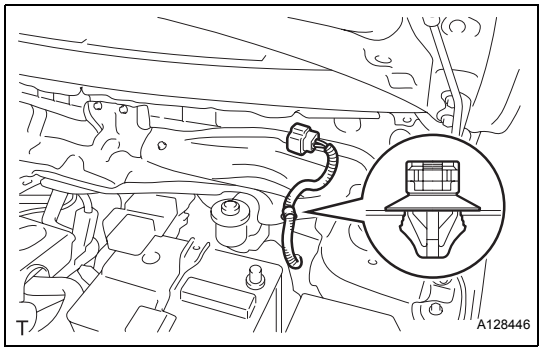

(c) Connect the wire harness clamp.

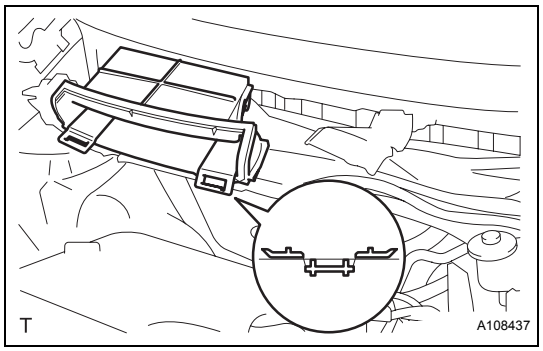

84. INSTALL COWL TO REGISTER DUCT SUB-ASSEMBLY NO. 2 (for Hatchback)

(a) Engage the claw and install cowl to register duct No. 2.

EM

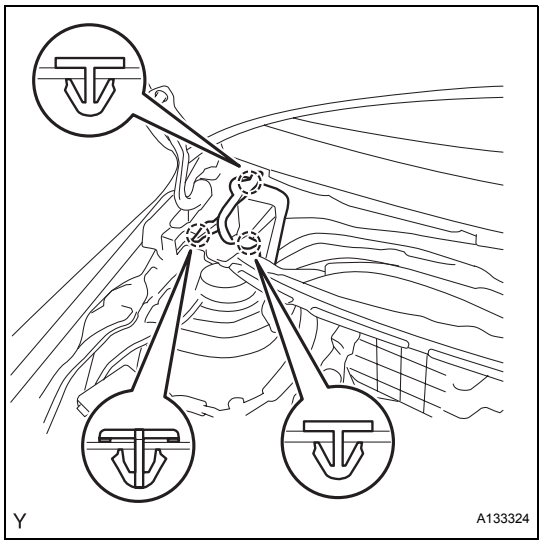

EM

85. **INSTALL FRONT AIR SHUTTER SEAL RH (for Sedan)**
    (a) Engage the 3 claws to install the front air shutter seal RH.
86. **INSTALL FRONT WIPER MOTOR AND LINK (See page WW-21)**
87. **INSTALL COWL TOP VENTILATOR LOUVER LH (for Hatchback) (See page WW-21)**
88. **INSTALL COWL TOP VENTILATOR LOUVER SUB-ASSEMBLY (for Hatchback) (See page WW-21)**
89. **INSTALL HOOD TO COWL TOP SEAL (for Hatchback) (See page WW-22)**
90. **INSTALL COWL TOP VENTILATOR LOUVER SUB-ASSEMBLY (for Sedan) (See page WW-12)**
91. **INSTALL COWL SIDE VENTILATOR SUB-ASSEMBLY LH (for Sedan) (See page WW-13)**
92. **INSTALL COWL SIDE VENTILATOR SUB-ASSEMBLY RH (for Sedan) (See page WW-13)**
93. **INSTALL FRONT WIPER ARM LH (See page WW-22)**
94. **INSTALL FRONT WIPER ARM RH (See page WW-23)**
95. **INSTALL FRONT WIPER ARM HEAD CAP (See page WW-23)**
96. **INSTALL BATTERY TRAY**
97. **INSTALL BATTERY**
    (a) Install the battery onto the vehicle with the battery clamp.
    Torque: 3.5 N*m (36 kgf*cm, 31 in.*lbf)
    (b) Connect the cable to the battery terminal.
    Torque: 5.4 N*m (55 kgf*cm, 48 in.*lbf)
98. **ADD ENGINE COOLANT (See page CO-8)**
99. **ADD AUTOMATIC TRANSAXLE FLUID (for Automatic Transaxle) (See page AX-169)**
100. **INSPECT AUTOMATIC TRANSAXLE FLUID (for Automatic Transaxle) (See page AX-93)**
101. **ADD MANUAL TRANSAXLE OIL (for Manual Transaxle)**
102. **INSPECT MANUAL TRANSAXLE OIL (for Manual Transaxle) (See page MX-2)**
103. **INSPECT FAN AND GENERATOR V BELT (See page EM-8)**
104. **CHECK FOR FUEL LEAKAGE (See page FU-7)**
105. **CHECK FOR ENGINE OIL LEAKAGE**
106. **CHECK FOR EXHAUST GAS LEAKAGE**
107. **CHECK FOR ENGINE COOLANT LEAKAGE (See page CO-1)**

108. INSTALL ENGINE UNDER COVER RH
109. INSTALL ENGINE UNDER COVER LH
110. INSTALL FRONT WHEELS
     Torque: 103 N*m (1,050 kgf*cm, 76 ft.*lbf)
111. INSPECT IGNITION TIMING (See page EM-1)
112. INSPECT ENGINE IDLING SPEED (See page EM-2)
113. INSPECT CO/HC (See page EM-4)
114. INSPECT FRONT WHEEL ALIGNMENT
115. INSPECT ABS SENSOR SIGNAL (w/ ABS)

ENGINE UNIT

COMPONENTS

EM

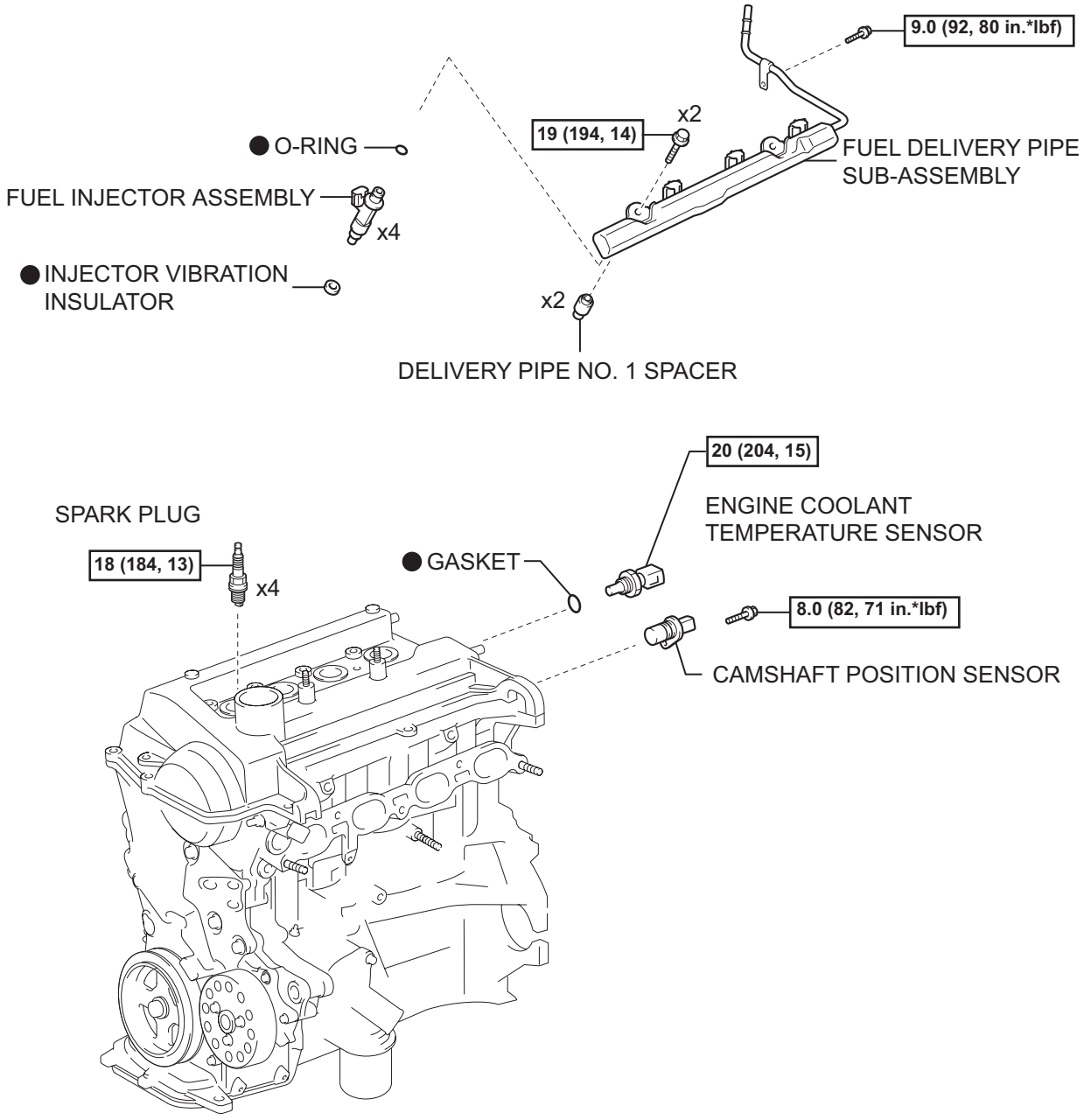

N*m (kgf*cm, ft.*lbf) : Specified torque

● Non-reusable part

A117466E01

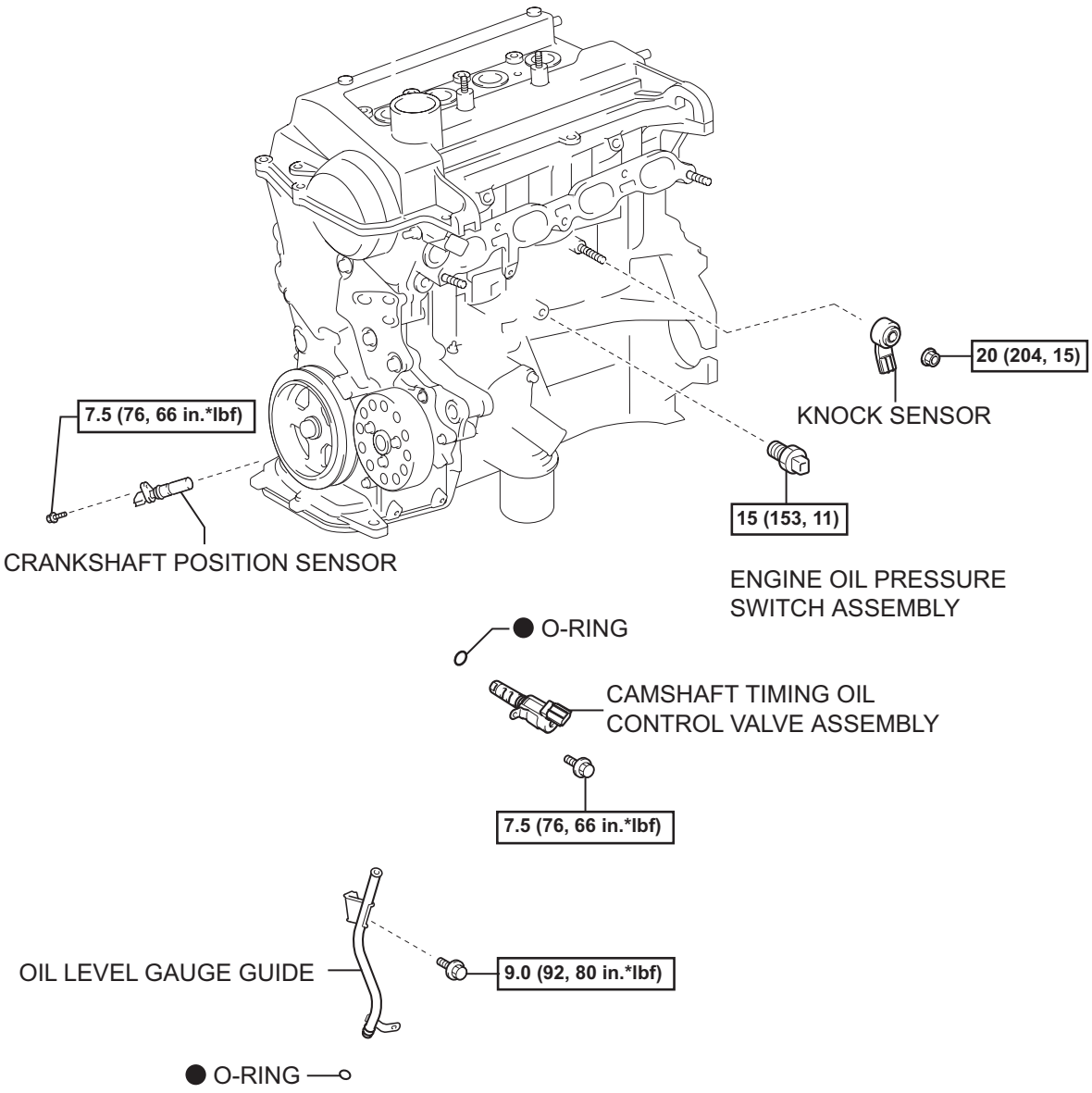

N*m (kgf*cm, ft.*lbf) : Specified torque

● Non-reusable part

A117467E01

EM

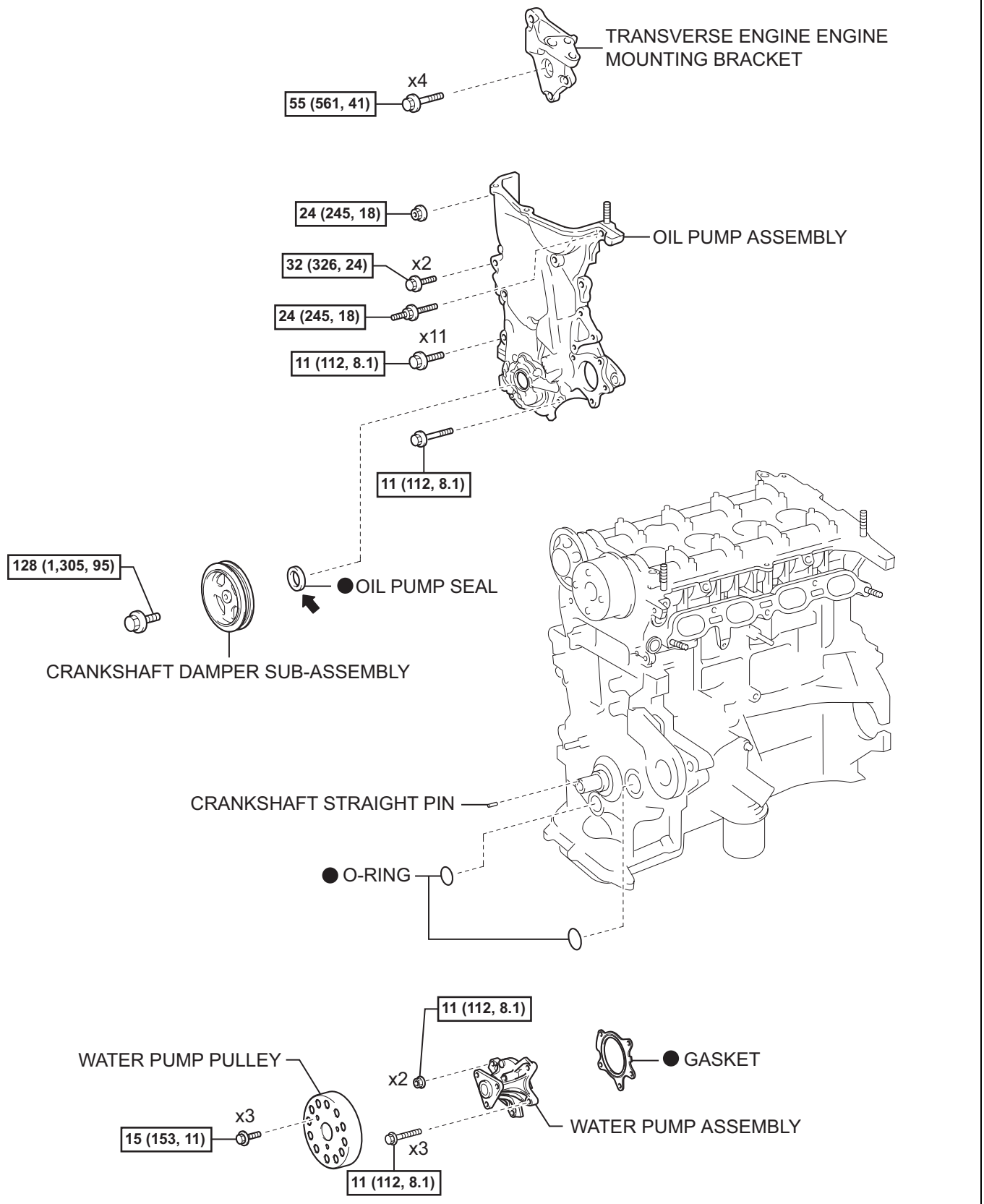

N*m (kgf*cm, ft.*lbf) : Specified torque ● Non-reusable part ⬅ Apply MP grease

T

A117447E01

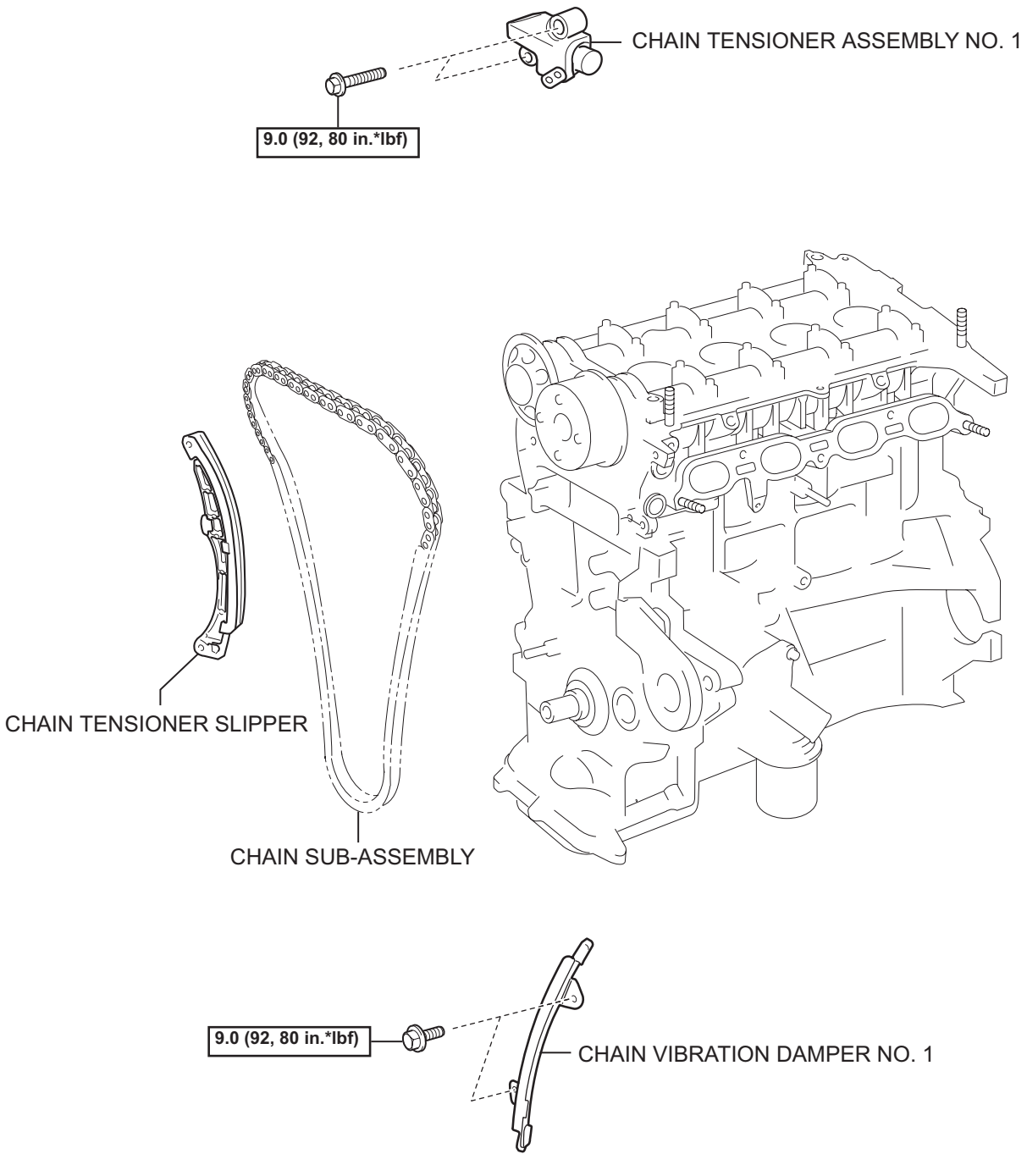

N*m (kgf*cm, ft.*lbf) : Specified torque

T

A117448E01

EM

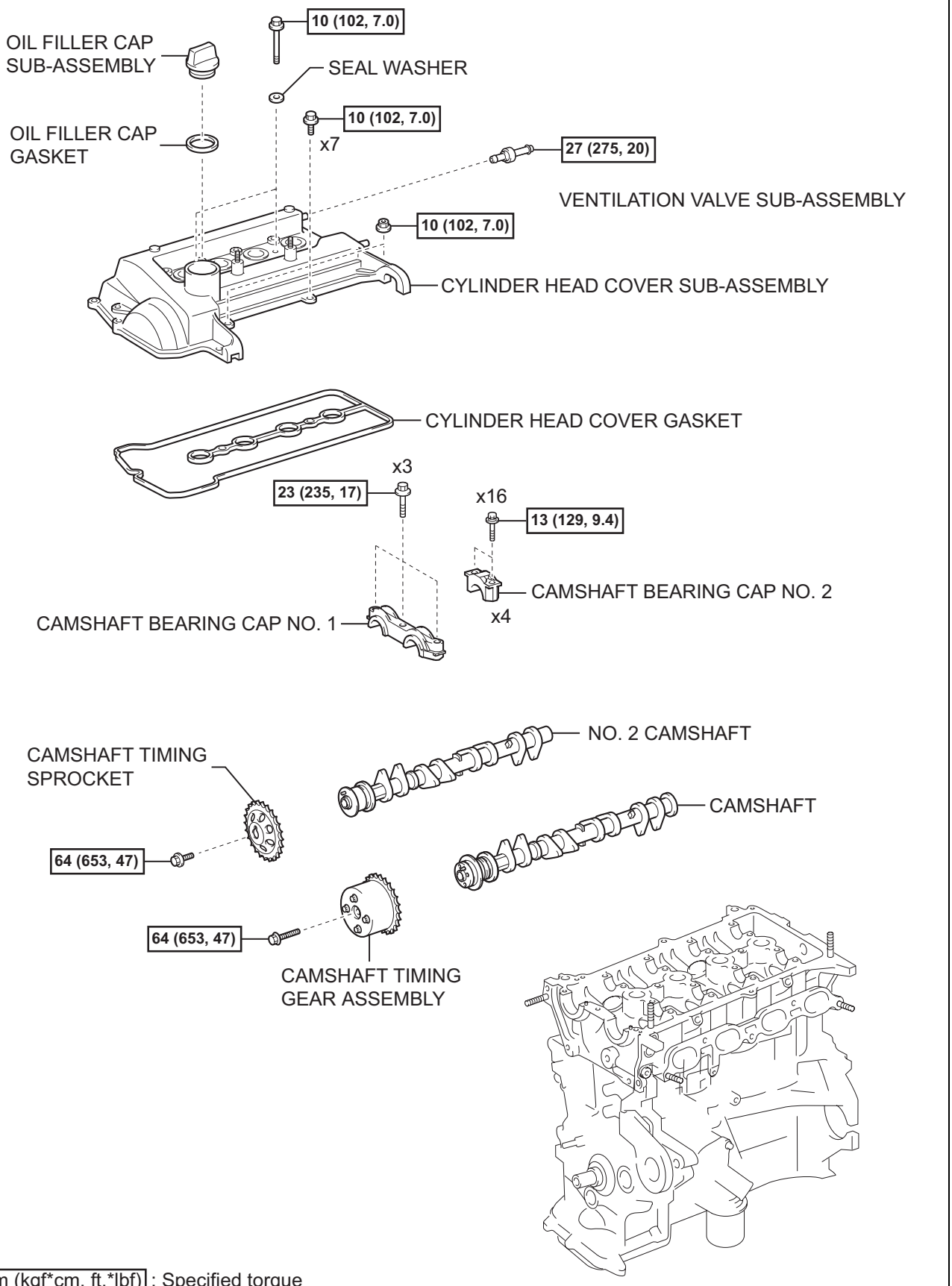

EM

N*m (kgf*cm, ft.*lbf) : Specified torque

T

A117449E01

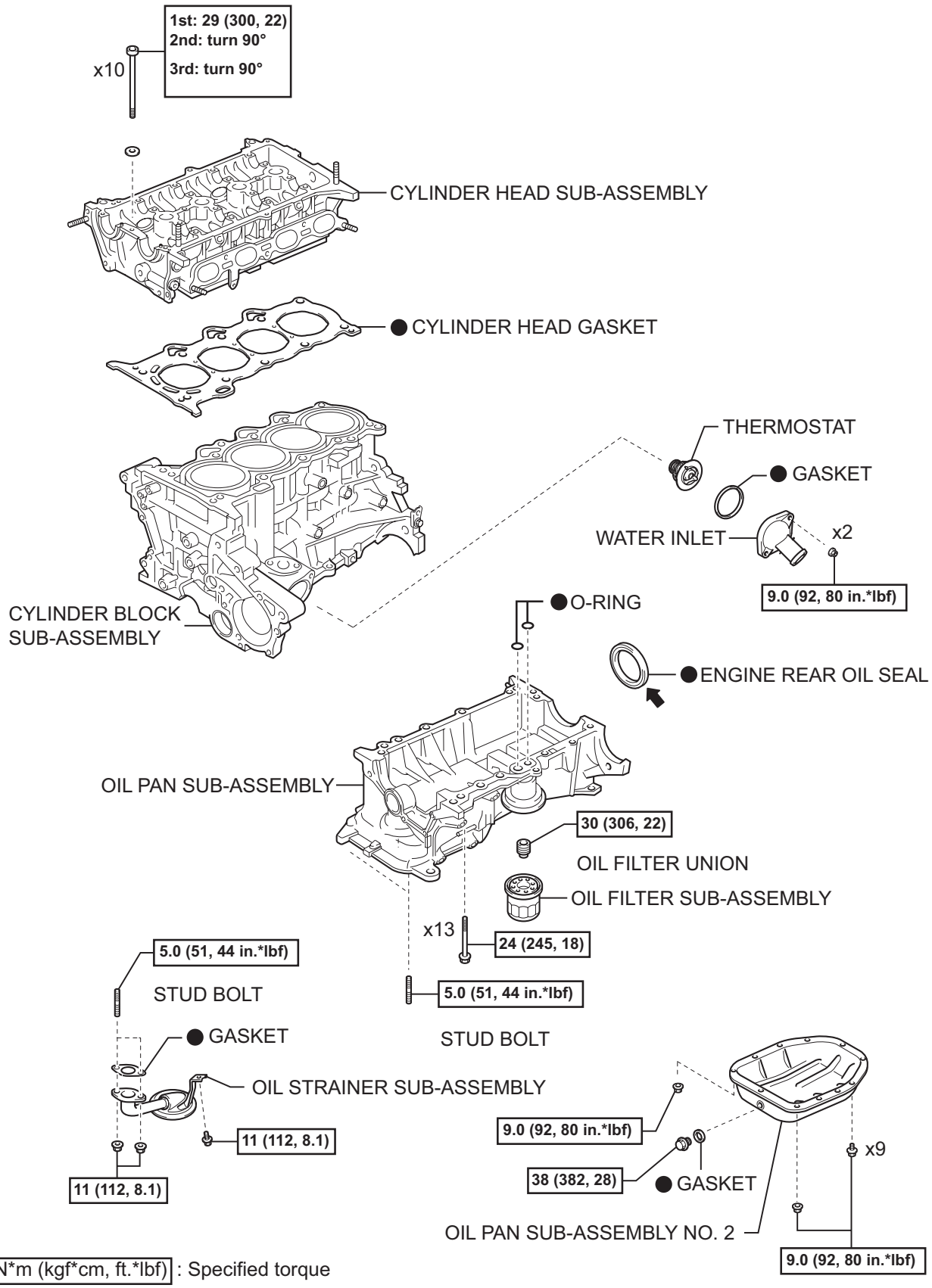
1st: 29 (300, 22)
2nd: turn 90°
3rd: turn 90°
x10
CYLINDER HEAD SUB-ASSEMBLY
● CYLINDER HEAD GASKET
THERMOSTAT
● GASKET
WATER INLET
x2
9.0 (92, 80 in.*lbf)
CYLINDER BLOCK SUB-ASSEMBLY
● O-RING
● ENGINE REAR OIL SEAL
OIL PAN SUB-ASSEMBLY
30 (306, 22)
OIL FILTER UNION
OIL FILTER SUB-ASSEMBLY
x13
24 (245, 18)
5.0 (51, 44 in.*lbf)
STUD BOLT
5.0 (51, 44 in.*lbf)
STUD BOLT
● GASKET
OIL STRAINER SUB-ASSEMBLY
11 (112, 8.1)
11 (112, 8.1)
9.0 (92, 80 in.*lbf)
38 (382, 28)
● GASKET
x9
OIL PAN SUB-ASSEMBLY NO. 2
9.0 (92, 80 in.*lbf)
N*m (kgf*cm, ft.*lbf) : Specified torque
● Non-reusable part
Apply MP grease
A117468E01

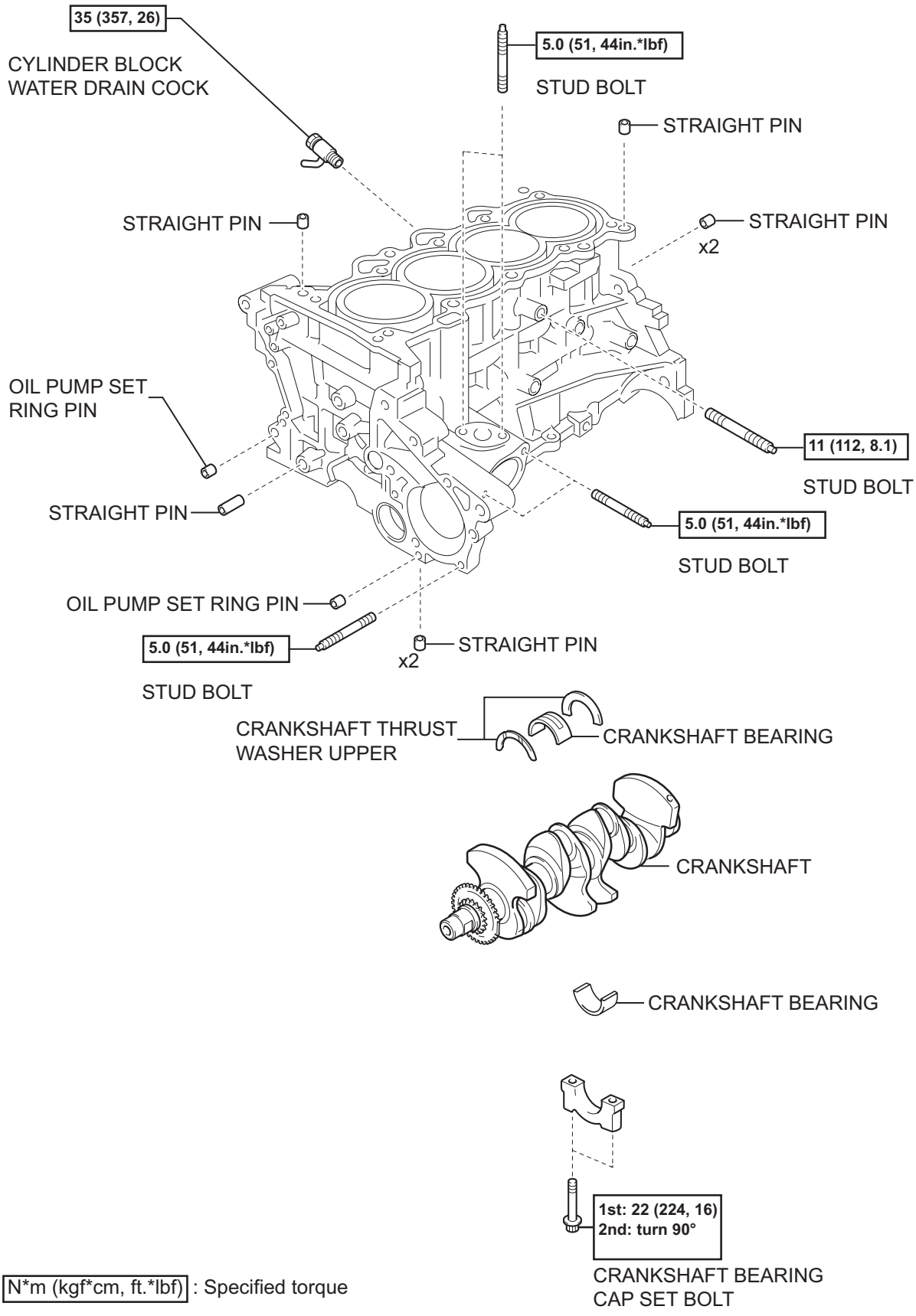
35 (357, 26)
CYLINDER BLOCK WATER DRAIN COCK
5.0 (51, 44in.*lbf)
STUD BOLT
STRAIGHT PIN
STRAIGHT PIN
STRAIGHT PIN
x2
OIL PUMP SET RING PIN
11 (112, 8.1)
STUD BOLT
STRAIGHT PIN
5.0 (51, 44in.*lbf)
STUD BOLT
OIL PUMP SET RING PIN
5.0 (51, 44in.*lbf)
STRAIGHT PIN
x2
STUD BOLT
CRANKSHAFT THRUST WASHER UPPER
CRANKSHAFT BEARING
CRANKSHAFT
CRANKSHAFT BEARING
1st: 22 (224, 16)
2nd: turn 90°
CRANKSHAFT BEARING CAP SET BOLT
N*m (kgf*cm, ft.*lbf) : Specified torque
T
A117453E02

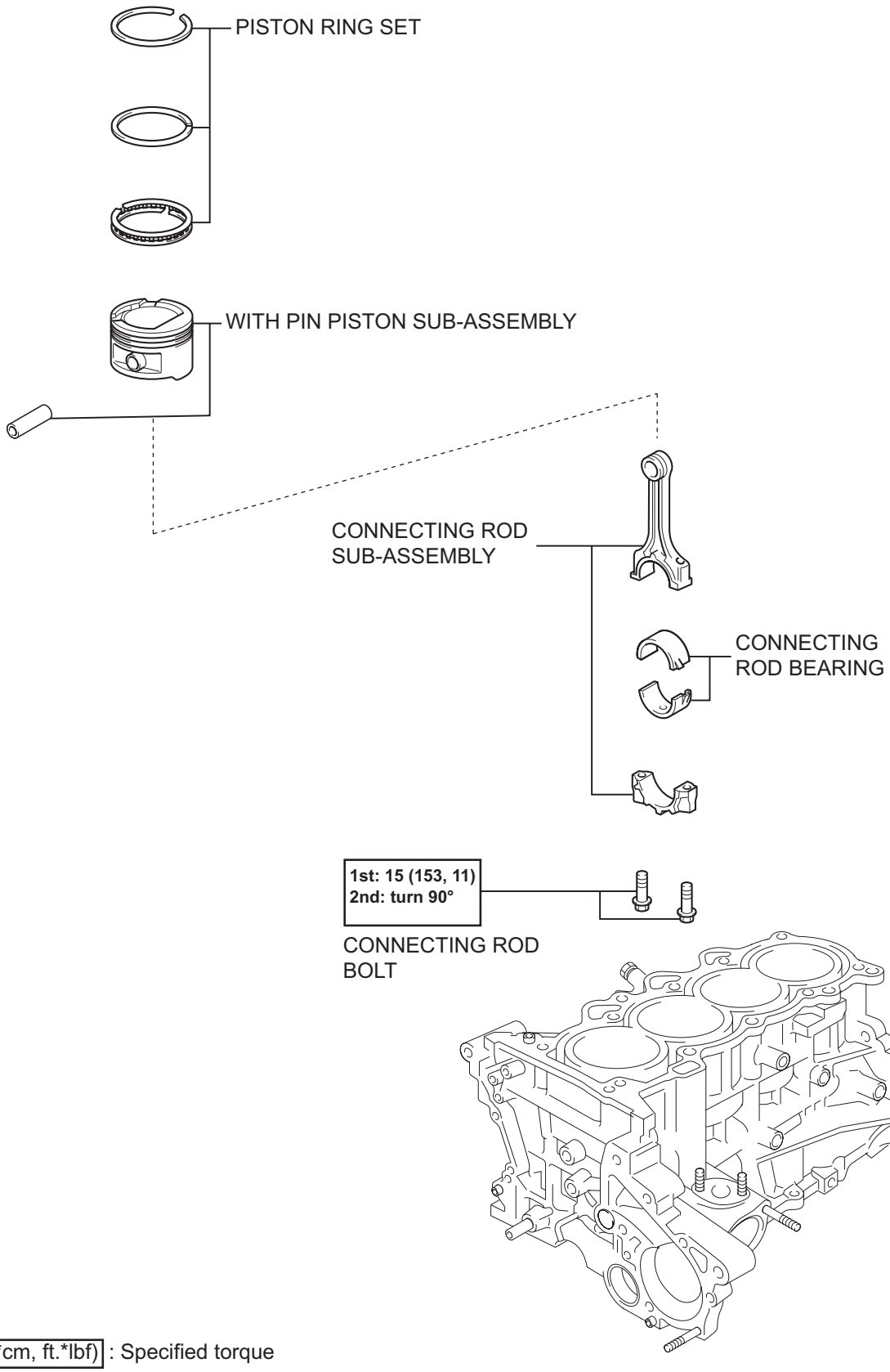

N*m (kgf*cm, ft.*lbf) : Specified torque

T

A117452E03

EM

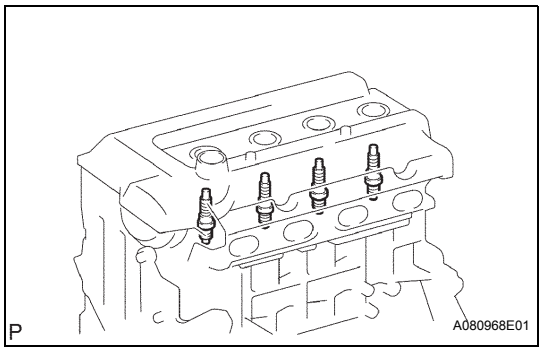

DISASSEMBLY

1. REMOVE SPARK PLUG

(a) Using a spark plug wrench, remove the 4 spark plugs.

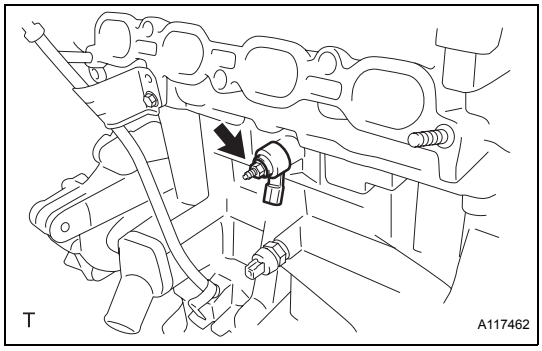

2. REMOVE KNOCK SENSOR

(a) Remove the nut and remove the knock sensor.

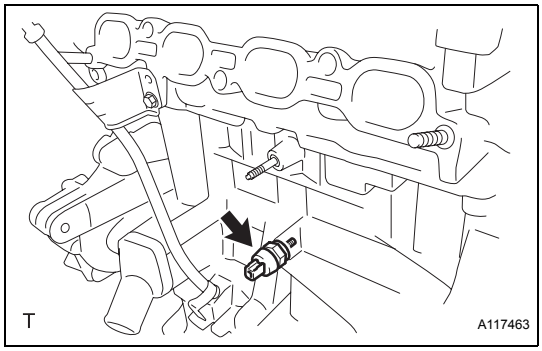

3. REMOVE ENGINE OIL PRESSURE SWITCH ASSEMBLY

(a) Using a 24 mm deep socket wrench, remove the oil pressure switch.

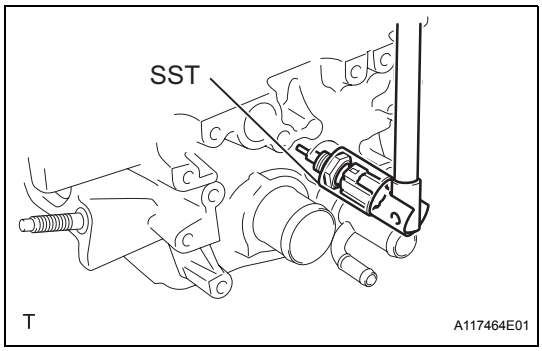

4. REMOVE ENGINE COOLANT TEMPERATURE SENSOR

(a) Using SST, remove the engine coolant temperature sensor.

SST 09817-33190

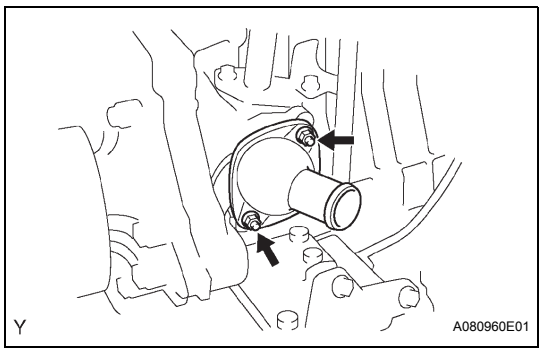

5. REMOVE WATER INLET

(a) Remove the 2 nuts and remove the water inlet.

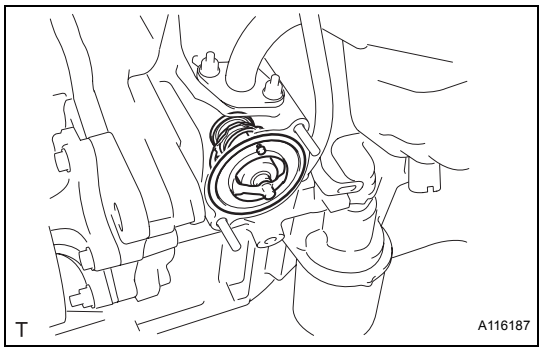

6. REMOVE THERMOSTAT

(a) Remove the thermostat.

(b) Remove the gasket from the thermostat.

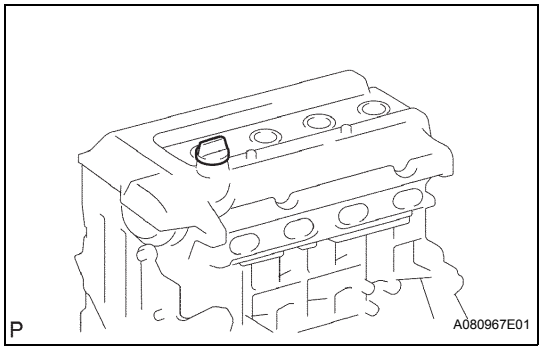

7. REMOVE OIL FILLER CAP SUB-ASSEMBLY

(a) Remove the oil filler cap from the cylinder head cover.

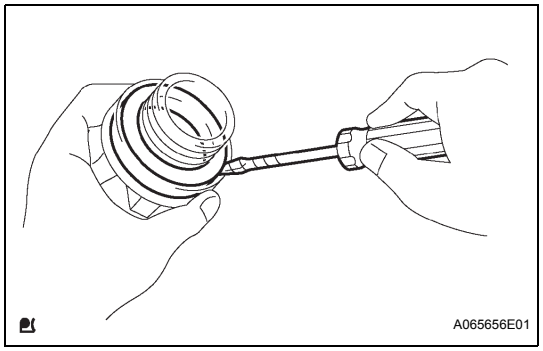

8. REMOVE OIL FILLER CAP GASKET

(a) Using a screwdriver, remove the gasket from the oil filler cap.

9. REMOVE CRANKSHAFT POSITION SENSOR

(a) Remove the bolt and the crankshaft position sensor.

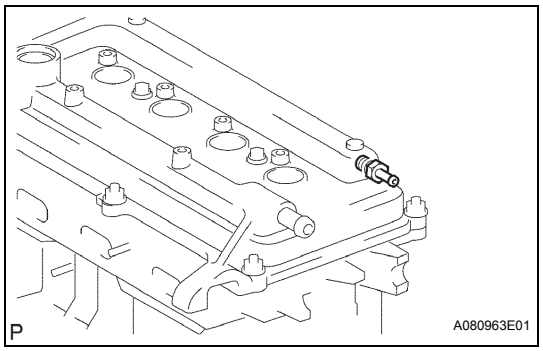

10. REMOVE VENTILATION VALVE SUB-ASSEMBLY

(a) Remove the ventilation valve from the cylinder head cover.

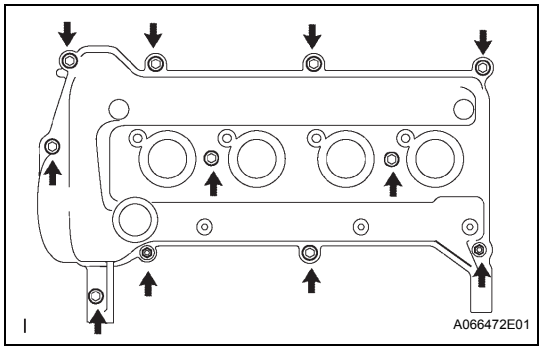

11. REMOVE CYLINDER HEAD COVER SUB-ASSEMBLY

(a) Remove the 9 bolts, 2 nuts and 2 seal washers and then remove the cylinder head cover sub-assembly.

12. REMOVE CYLINDER HEAD COVER GASKET

(a) Remove the gasket from the cylinder head cover.

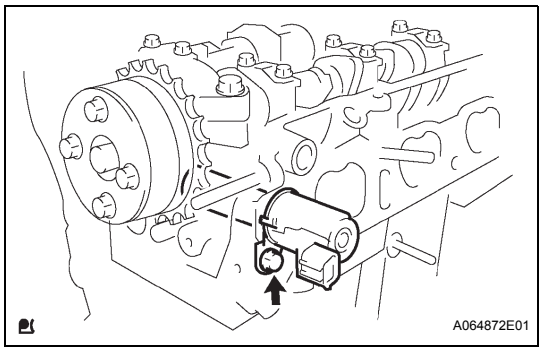

13. REMOVE CAMSHAFT TIMING OIL CONTROL VALVE ASSEMBLY

(a) Remove the bolt and the camshaft timing oil control valve.

14. REMOVE OIL LEVEL GAUGE GUIDE

(a) Remove the bolt and the oil level gauge guide.

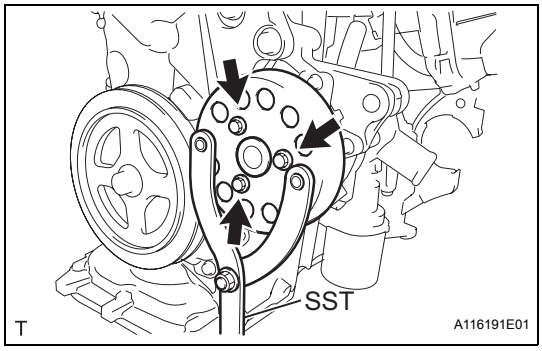

15. REMOVE WATER PUMP PULLEY

(a) Using SST, hold the pump pulley.
SST 09960-10010 (09962-01000, 09963-00700)

(b) Remove the 3 bolts and the pump pulley.

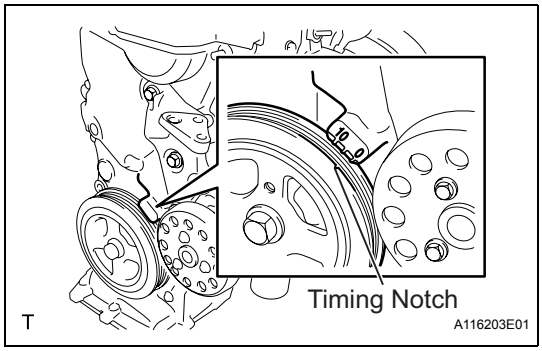

16. REMOVE CRANKSHAFT DAMPER SUB-ASSEMBLY

(a) Set cylinder No. 1 to TDC/compression.

(1) Turn the crankshaft damper sub-assembly, and align its timing notch with timing mark "0" of the oil pump.

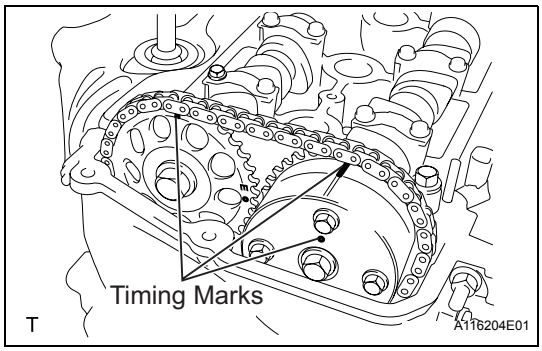

(2) Check that the timing marks on the camshaft timing sprocket and the camshaft timing gear are all facing upward, as shown in the illustration.
If not, turn the crankshaft 1 complete revolution (360°) and align the marks as above.

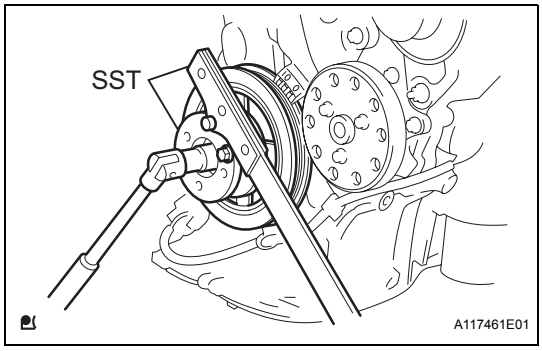

(b) Using 2 SSTs, loosen the bolt while holding the crankshaft damper sub-assembly.
SST 09213-14010 (91651-60865), 09330-00021
NOTICE:
Check the SST installation positions when installing them, to avoid the SST fixing bolts from coming into contact with the oil pump assembly.

(c) Remove the SSTs and the bolt.

(d) Remove the crankshaft damper sub-assembly.

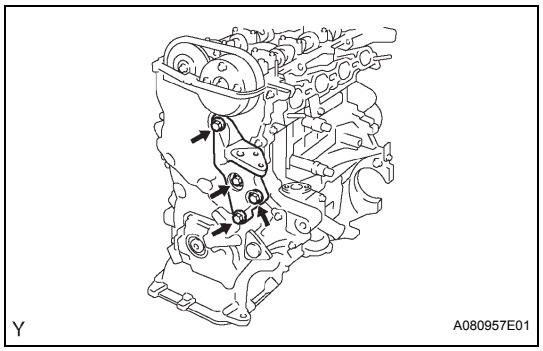

17. REMOVE TRANSVERSE ENGINE ENGINE MOUNTING BRACKET

(a) Remove the 4 bolts and remove the transverse engine mounting bracket.

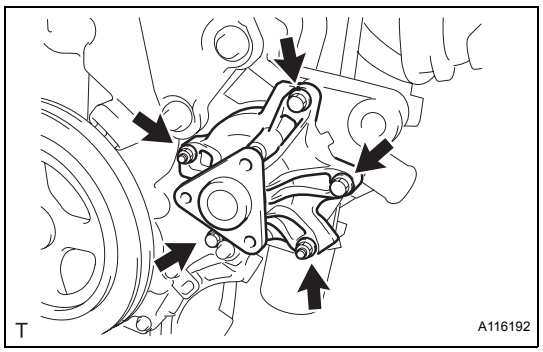

18. REMOVE WATER PUMP ASSEMBLY

(a) Remove the 3 bolts and the 2 nuts and remove the water pump and the gasket.

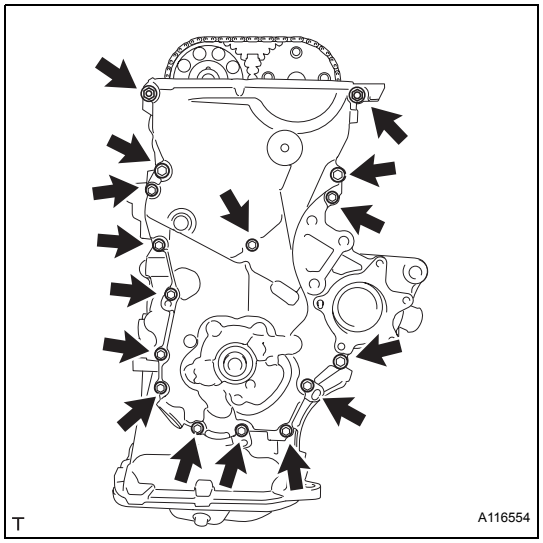

19. REMOVE OIL PUMP ASSEMBLY

(a) Remove the 15 bolts and the nut.

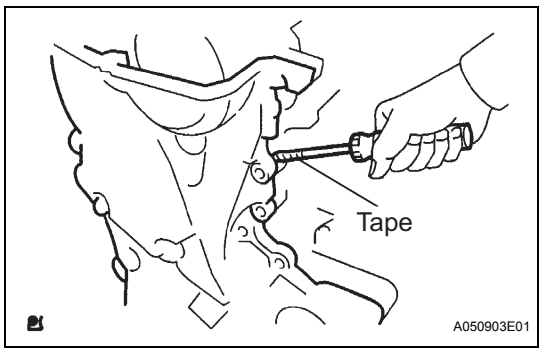

(b) Using a screwdriver with its tip wrapped in protective tape, prize the oil pump assembly to remove it.

NOTICE:

Do not damage the contact surface of the oil pump assembly and oil pan sub-assembly.

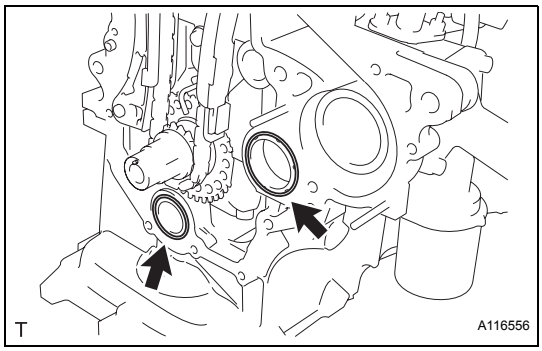

(c) Remove the 2 O-rings from the cylinder block and oil pan sub-assembly.

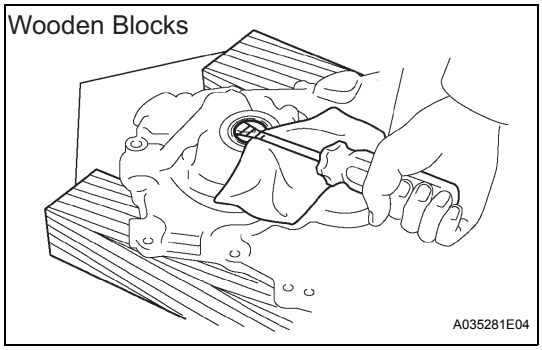

20. REMOVE OIL PUMP SEAL

(a) Using a screwdriver with its tip wrapped in tape, remove the oil seal.

21. REMOVE CHAIN TENSIONER ASSEMBLY NO. 1

NOTICE:

- **Do not rotate the crankshaft with the chain tensioner removed.**
- **When rotating the camshaft with the timing chain removed, rotate the crankshaft counterclockwise 40° from the TDC first.**

(a) Pull up the stopper plate and hold it with its lock released.

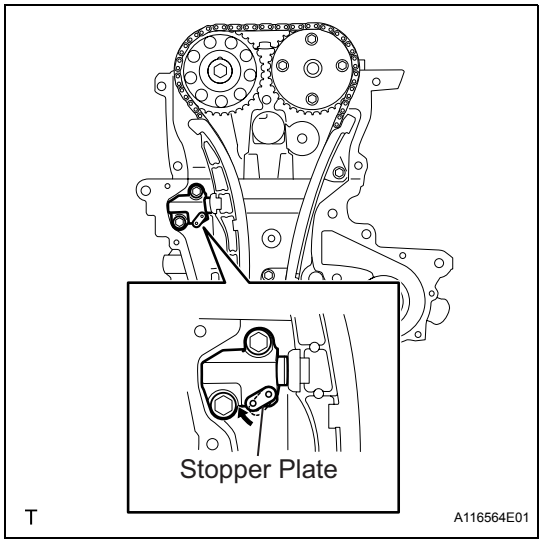

(b) Unlock the plunger of the tensioner and push it in to the end.

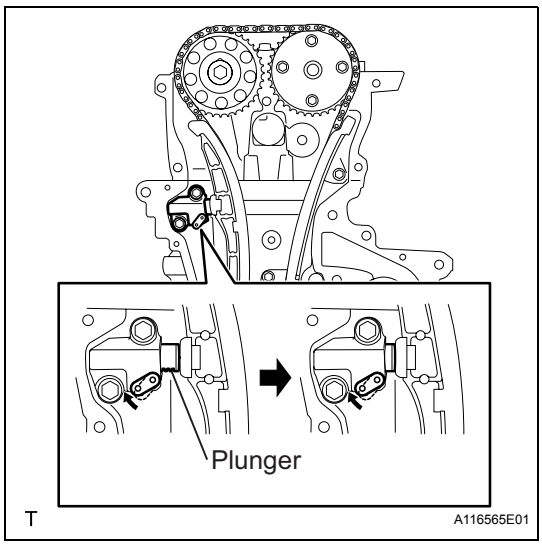

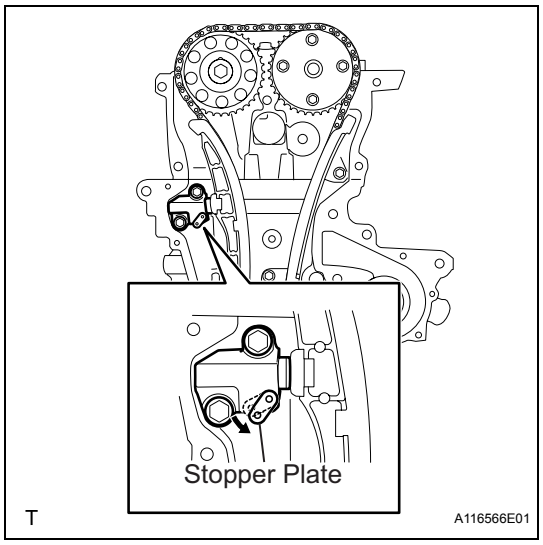

(c) Pull down the stopper plate with the plunger pushed to the end and lock the plunger.

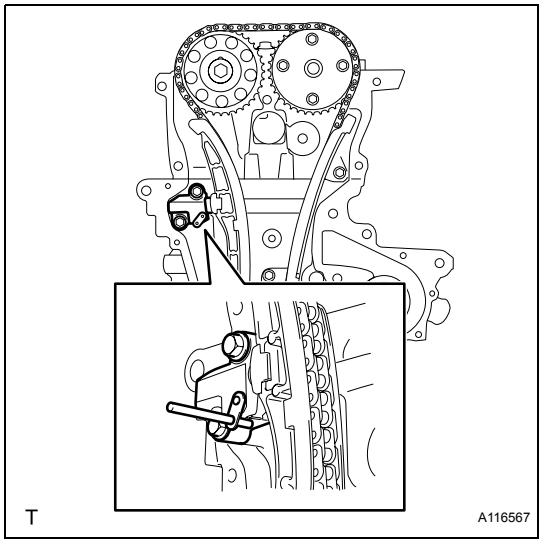

(d) Insert a 3 mm (0.12 in.) diameter bar into the hole in the stopper plate and lock the plunger.

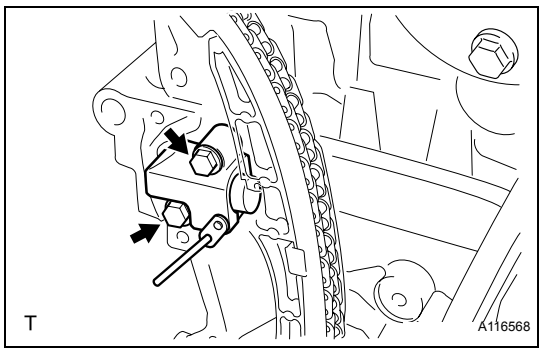

(e) Remove the 2 bolts and remove chain tensioner assembly No. 1.

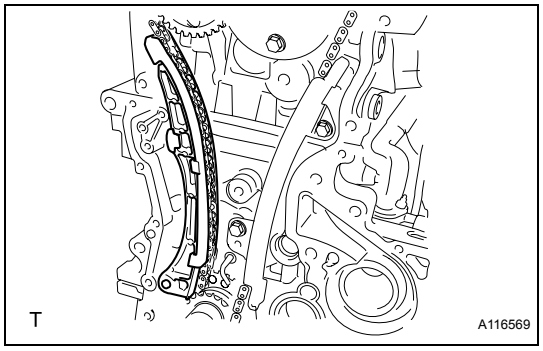

22. REMOVE CHAIN TENSIONER SLIPPER

(a) Remove the chain tensioner slipper.

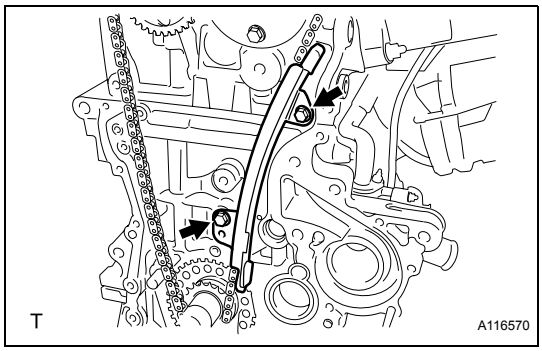

23. REMOVE CHAIN VIBRATION DAMPER NO. 1

(a) Remove the 2 bolts and remove chain vibration damper No. 1.

24. REMOVE CHAIN SUB-ASSEMBLY

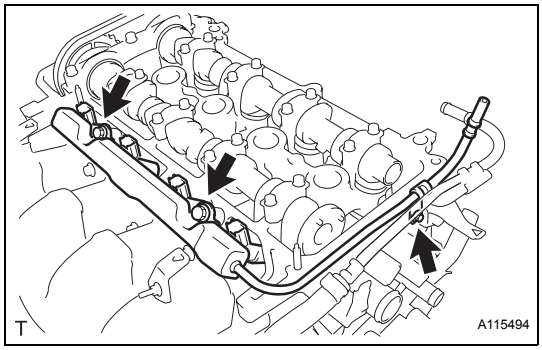

25. REMOVE FUEL DELIVERY PIPE SUB-ASSEMBLY

(a) Remove the 3 bolts and remove the fuel delivery pipe sub-assembly with 4 fuel injectors.

NOTICE:

Do not drop the fuel injectors when removing the fuel delivery pipe sub-assembly.

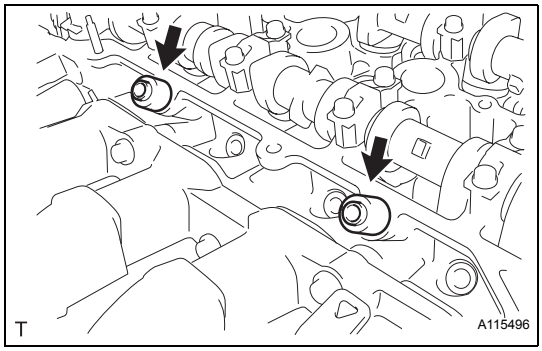

26. REMOVE DELIVERY PIPE NO. 1 SPACER

(a) Remove the 2 delivery pipe No. 1 spacers.

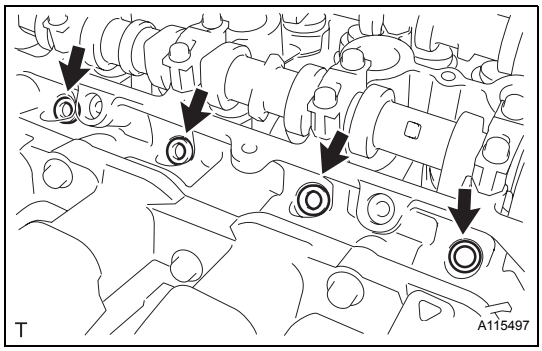

27. REMOVE INJECTOR VIBRATION INSULATOR

(a) Remove the 4 injector vibration insulators.

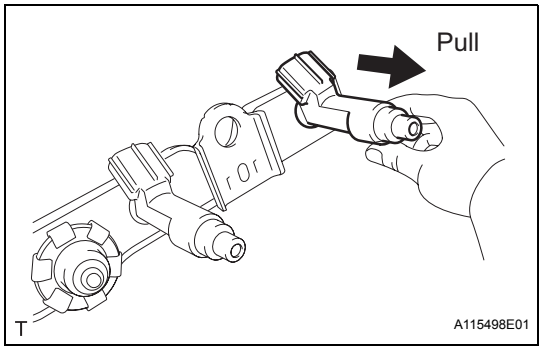

28. REMOVE FUEL INJECTOR ASSEMBLY

(a) Pull the 4 fuel injector assemblies out of the fuel delivery pipe sub-assembly.

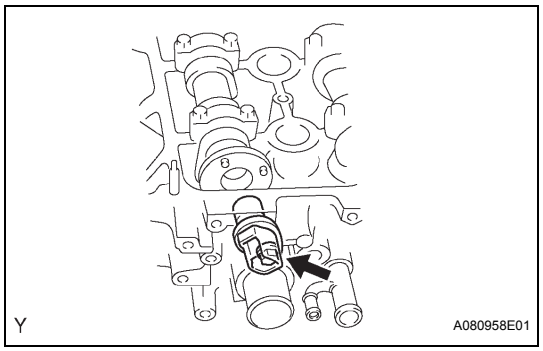

29. REMOVE CAMSHAFT POSITION SENSOR

(a) Remove the bolt and the camshaft position sensor.

30. REMOVE NO. 2 CAMSHAFT

NOTICE:

When rotating the camshaft with the timing chain removed, rotate the crankshaft counterclockwise 40° from the TDC first.

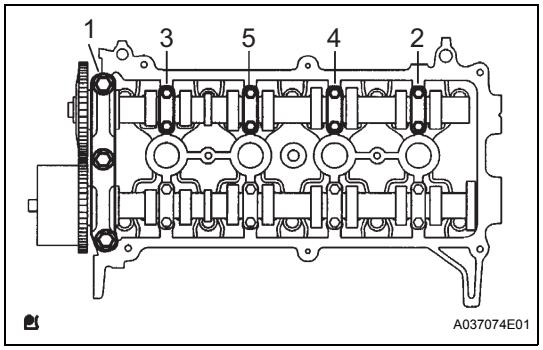

(a) Using several steps, uniformly loosen and remove the 11 bearing cap bolts in the sequence shown in the illustration, then remove camshaft bearing cap No. 1, camshaft bearing cap No. 2 and camshaft No. 2.

NOTICE:

Loosen each bolt uniformly while keeping the camshaft level.

EM

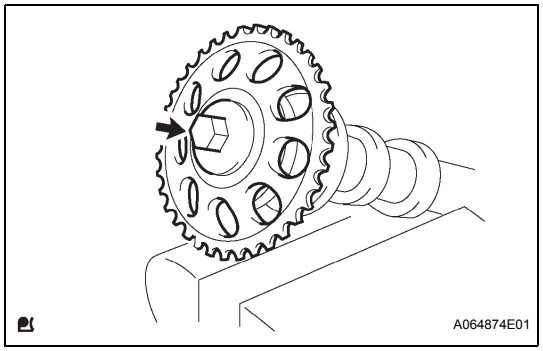

31. REMOVE CAMSHAFT TIMING SPROCKET

(a) Clamp the camshaft in a vice.

(b) Remove the flange bolt and the camshaft timing sprocket.

NOTICE:

Do not damage the camshaft.

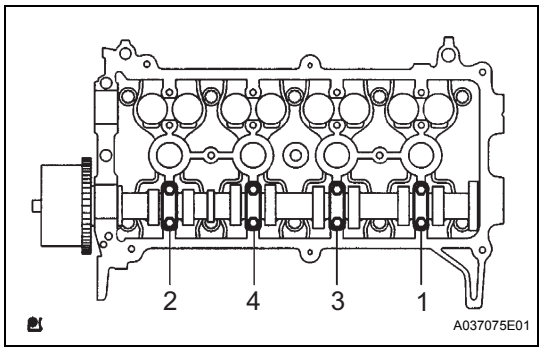

32. REMOVE CAMSHAFT

(a) Using several steps, uniformly loosen and remove the 8 bearing cap bolts in the sequence shown in the illustration, then remove camshaft bearing cap No. 2 and the camshaft.

NOTICE:

Loosen each bolt uniformly while keeping the camshaft level.

33. REMOVE CAMSHAFT TIMING GEAR ASSEMBLY

(a) Clamp the camshaft in a vise, and confirm that it is locked.

NOTICE:

Do not damage the camshaft.

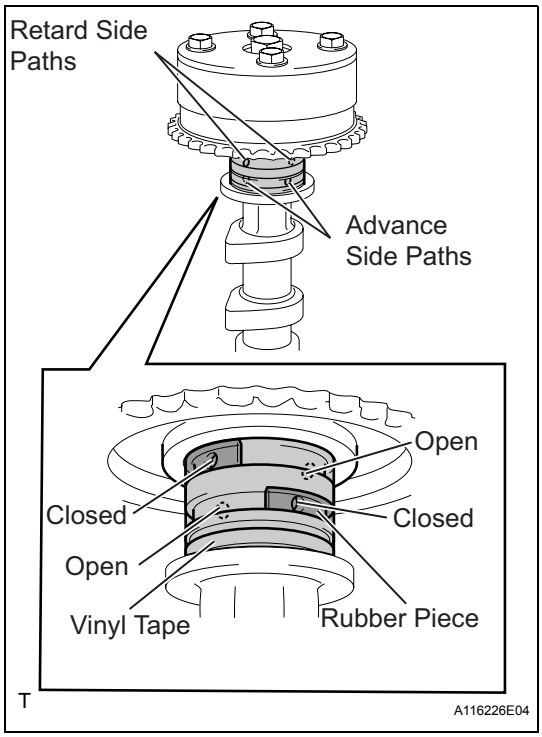

(b) Cover the 4 oil paths of the cam journal with tape as shown in the illustration.
HINT:
One of the 2 grooves located on the cam journal is for retarding cam timing (upper) and the other is for advancing cam timing (lower). Each groove has 2 oil paths. Plug one of the oil paths for each groove with a piece of rubber before wrapping the cam journal with the tape.

(c) Puncture the tape covering the advance oil path and the retard oil path on the opposite side from the advance oil path.

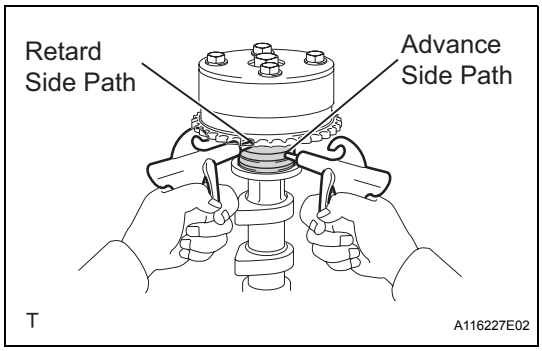

(d) Apply about 150 kPa (1.5 kgf*cm^2) air pressure into the 2 broken paths (the advance side path and the retard side path).
NOTICE:
Cover the paths with a shop rag or piece of cloth to prevent oil splashes.

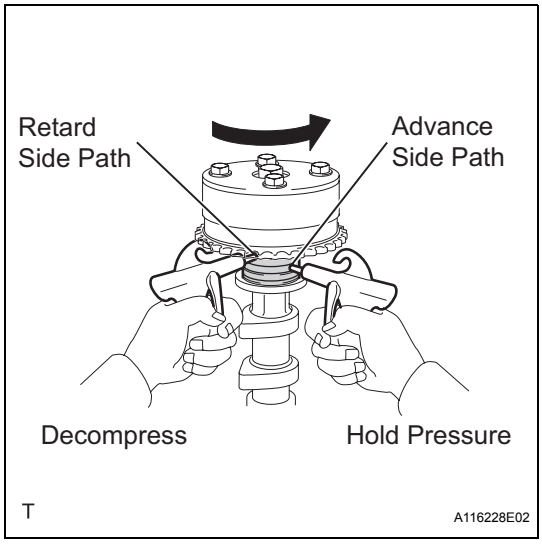

(e) Confirm that the camshaft timing gear assembly revolves in the timing advance direction when the air pressure on the timing retard path is reduced.
HINT:
The lock pin is released and the camshaft timing gear revolves in the advance direction.

(f) When the camshaft timing gear reaches the most advanced position, release the air pressure on the timing retard side path, and then release the air pressure on the timing advance side path.
NOTICE:
Camshaft timing gear assembly occasionally shifts to the retard side abruptly if the air pressure on the advance side path is released first. This often results in breakage of the lock pin.

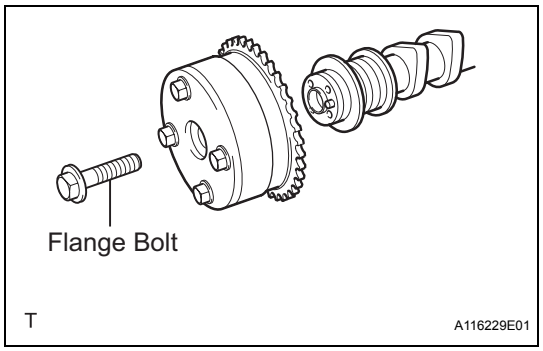

(g) Remove the flange bolt and remove the camshaft timing gear assembly.
NOTICE:
- **Do not remove the other 4 bolts.**
- **When reusing the camshaft timing gear, unlock the lock pin inside the camshaft timing gear first.**

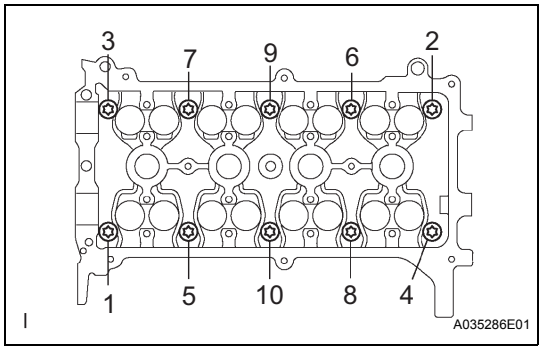

34. REMOVE CYLINDER HEAD SUB-ASSEMBLY

(a) Using several steps, uniformly loosen and remove the 10 cylinder head bolts with an 8 mm bi-hexagon wrench in the sequence shown in the illustration. Remove the 10 cylinder head bolts and the plate washers.
NOTICE:
- **Do not drop the washers into the cylinder head.**
- **Head warpage or cracking could result from removing bolts in the wrong order.**

35. REMOVE CYLINDER HEAD GASKET

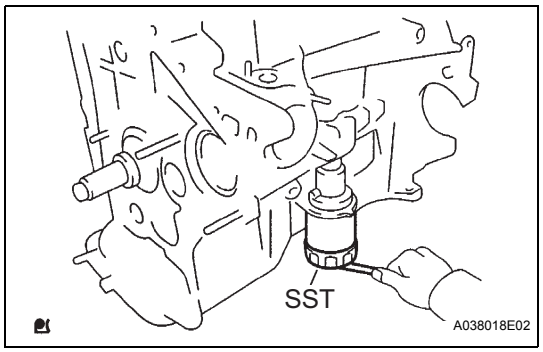

36. REMOVE OIL FILTER SUB-ASSEMBLY

(a) Using SST, remove the oil filter.
SST 09228-06501

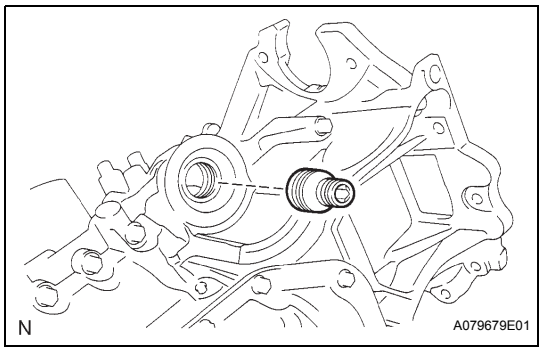

37. REMOVE OIL FILTER UNION

(a) Using a 12 mm hexagon wrench, remove the oil filter union.

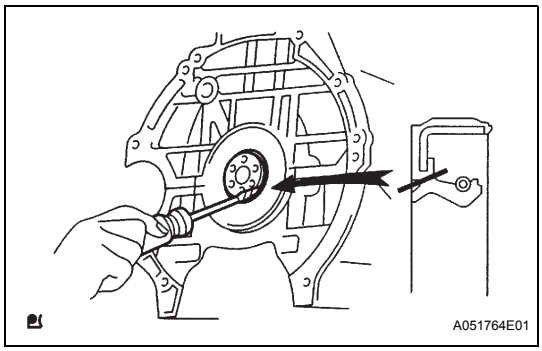

38. REMOVE ENGINE REAR OIL SEAL

(a) Using a knife, cut off the oil seal lip.

(b) Using a screwdriver with its tip wrapped in protective tape, pry out the oil seal.

NOTICE:

After removal, check the crankshaft for any damage. If damaged, smooth the surface with 400-grit sandpaper.

39. REMOVE OIL PAN SUB-ASSEMBLY NO. 2

(a) Remove the oil pan drain plug and gasket.

(b) Remove the 9 bolts and 2 nuts.

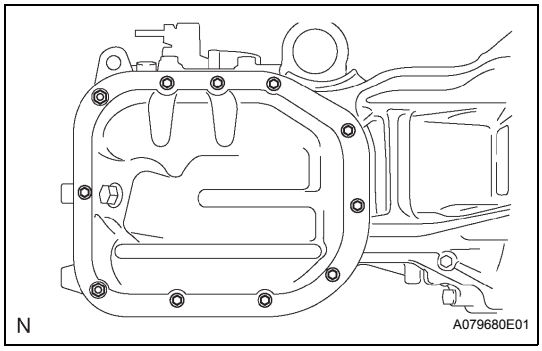

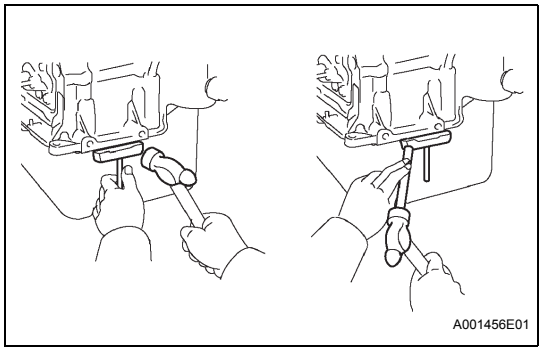

(c) Insert the blade of SST between oil pan No. 1 and oil pan No. 2, and cut off the applied sealer and remove oil pan No. 2.

SST 09032-00100

NOTICE:

Do not damage oil pan No. 1 or oil pan No. 2.

40. REMOVE OIL STRAINER SUB-ASSEMBLY

(a) Remove the bolt and 2 nuts.

(b) Remove the oil strainer and the gasket.

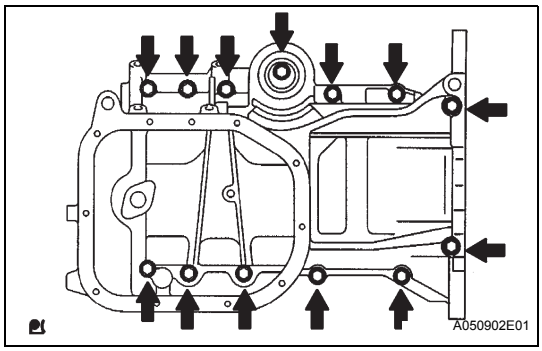

41. REMOVE OIL PAN SUB-ASSEMBLY

(a) Loosen and remove the 13 bolts uniformly in several steps.

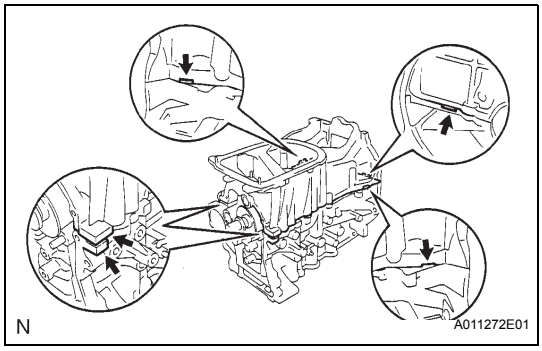

(b) Using a screwdriver, remove oil pan No. 1 by prying between the cylinder block and oil pan No. 1.

NOTICE:

Do not damage the contact surfaces of oil pan No. 1 or the cylinder block.

(c) Remove the 2 O-rings from the cylinder block.

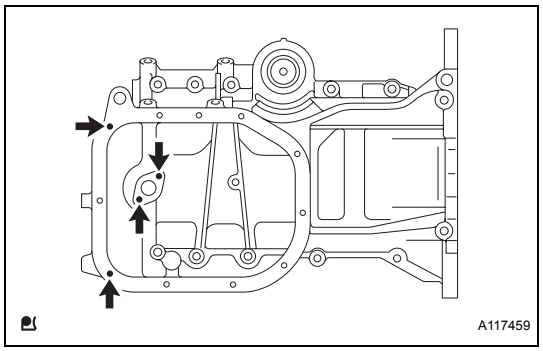

42. REMOVE STUD BOLT

(a) Remove the 4 stud bolts.

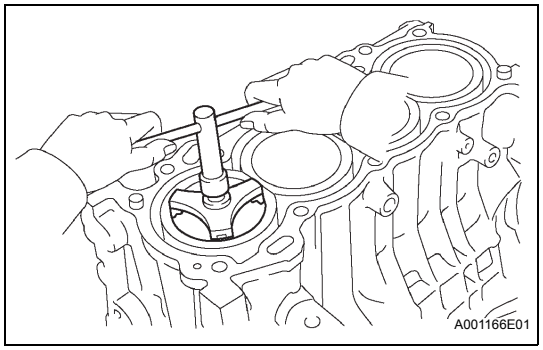

43. REMOVE PISTON SUB-ASSEMBLY WITH CONNECTING ROD

(a) Using a ridge reamer, remove all the carbon from the top of the cylinder.

(b) Push the piston, connecting rod assembly and upper bearing down through the top of the cylinder block to remove them.
HINT:
- Keep the bearing, connecting rod and cap together.
- Keep the piston and the connecting rod assemblies in the correct order so that they can be returned to their original locations when reassembled.

44. REMOVE CONNECTING ROD BEARING

45. REMOVE CRANKSHAFT

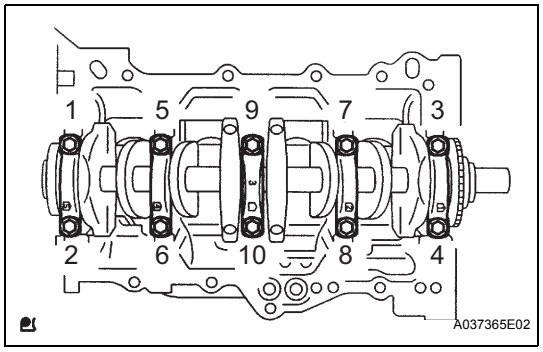

(a) Using several steps, loosen and remove the 10 bearing cap sub-assembly bolts uniformly with SST in the sequence shown in the illustration.
SST 09011-38121

(b) Remove the bearing cap and the crankshaft.

46. REMOVE CRANKSHAFT BEARING

47. REMOVE CRANKSHAFT THRUST WASHER UPPER

48. REMOVE PISTON RING SET

NOTICE:
Keep the piston rings in the correct combination and correct order so that they can be returned to their original locations when reassembled.

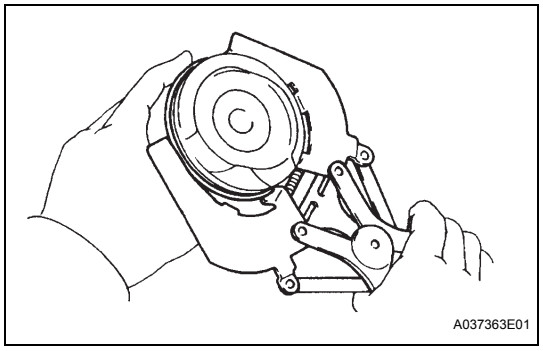

(a) Using a piston ring expander, remove the 2 compression rings.

(b) Remove the 2 side rails and the oil ring by hand.

EM

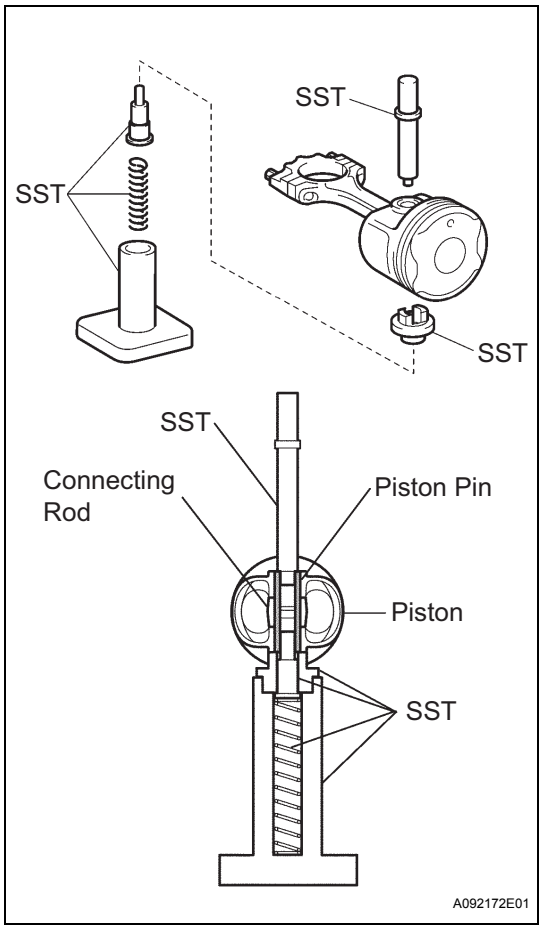

49. REMOVE WITH PIN PISTON SUB-ASSEMBLY

(a) Using SST, press the piston pin out of the piston.

SST 09221-25026 (09221-00021, 09221-00030, 09221-00090, 09221-00150, 09221-00100)

NOTICE:

Keep the pistons, pins, rings, connecting rods and bearings in the correct order so that they can be returned to their original locations when reassembled.

50. REMOVE CYLINDER BLOCK WATER DRAIN COCK SUB-ASSEMBLY

51. REMOVE STUD BOLT

(a) Using "Torx" socket wrench E5, remove the 7 stud bolts.

52. REMOVE RING PIN

53. REMOVE STRAIGHT PIN

EM

INSPECTION

1. INSPECT CAMSHAFT TIMING GEAR ASSEMBLY

(a) Check the lock of camshaft timing gear.

(1) Clamp the camshaft in a vice, and check that the camshaft timing gear is locked.

NOTICE:

Do not damage the camshaft.

(b) Release the lock pin.

(1) Cover the 4 oil paths of the cam journal with tape as shown in the illustration.

HINT:

One of the 2 grooves located on the cam journal is for retarding cam timing (upper) and the other is for advancing cam timing (lower). Each groove has 2 oil paths. Plug one of the oil paths for each groove with a piece of rubber before wrapping the cam journal with the tape.

(2) Puncture the tape covering the advance oil path and the retard oil path on the opposite side from the advance oil path.

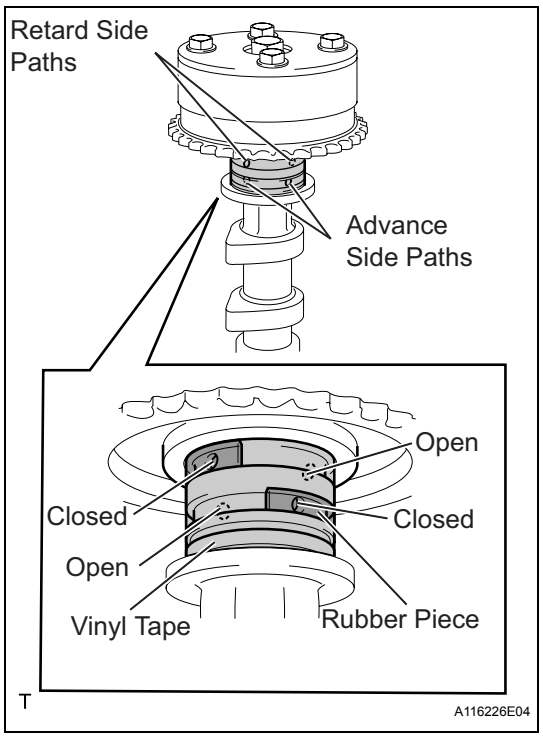

(3) Apply air at about 150 kPa (1.5 kgf*cm^2) pressure into the 2 broken paths (the advance side path and the retard side path).

NOTICE:

Cover the paths with a shop rag or piece of cloth to prevent oil splashes.

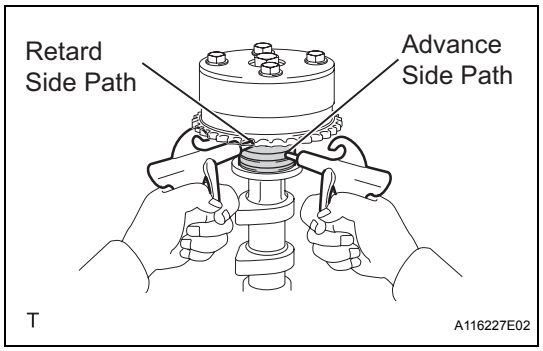

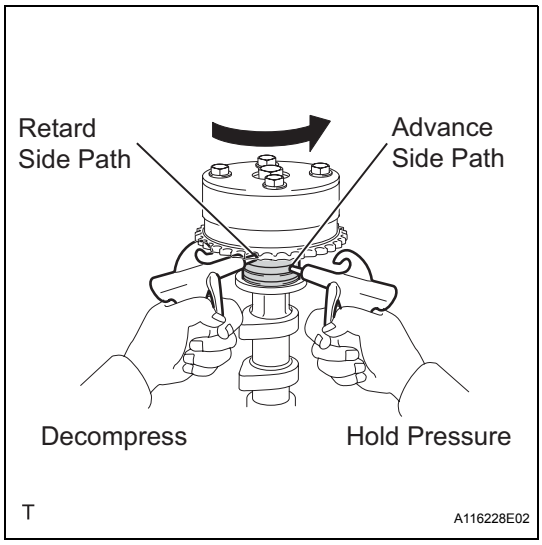

(4) Confirm that the camshaft timing gear assembly revolves in the timing advance direction when the air pressure on the timing retard path is reduced.
HINT:
The lock pin is released and the camshaft timing gear revolves in the advance direction.

(5) When the camshaft timing gear reaches the most advanced position, release the air pressure on the timing retard side path, and then release the air pressure on the timing advance side path.
NOTICE:
Camshaft timing gear assembly occasionally shifts to the retard side abruptly if the air pressure on the advance side path is released first. This often results in breakage of the lock pin.

(c) Check that the revolution is smooth.

(1) Rotate the valve timing assembly back and forth several times, except where the lock pin meets it at the most retarded angle. Check the movable range and that it rotates smoothly.
Standard:
Smooth movable range is about 22.5°
NOTICE:
Perform this check by hand, instead of using air pressure.

(d) Check that the gear locks in the most retarded position.

(1) Confirm that the camshaft timing gear assembly is locked in the most retarded position.

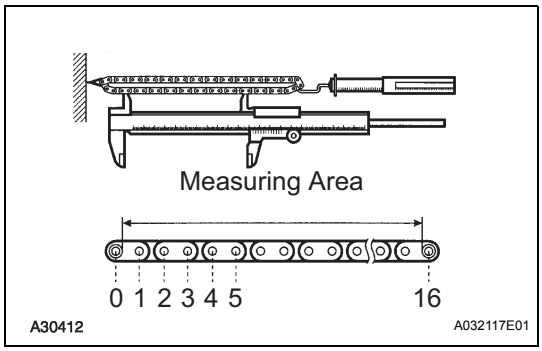

2. INSPECT CHAIN SUB-ASSEMBLY

(a) Using a spring scale, apply 140 N (14.3 kgf, 31.5 lb) to the timing chain and measure its length.
Maximum chain elongation:
123.2 mm (4.850 in.)
If the elongation is greater than the maximum, replace the chain.
HINT:
Perform the same measurement at 3 or more random places and calculate the average length.

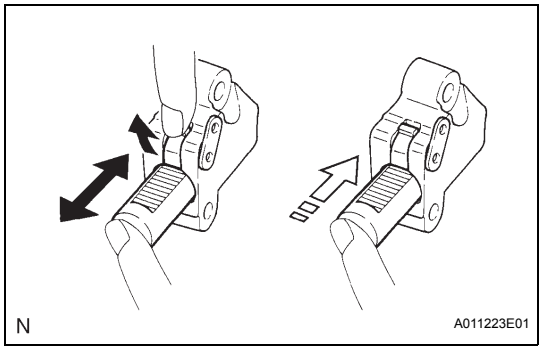

3. INSPECT CHAIN TENSIONER ASSEMBLY NO. 1

(a) Check that the plunger moves smoothly when the ratchet pawl is raised with your finger.

(b) Release the ratchet pawl and check that the plunger is locked in place by the ratchet pawl and does not move when pushed with your finger.

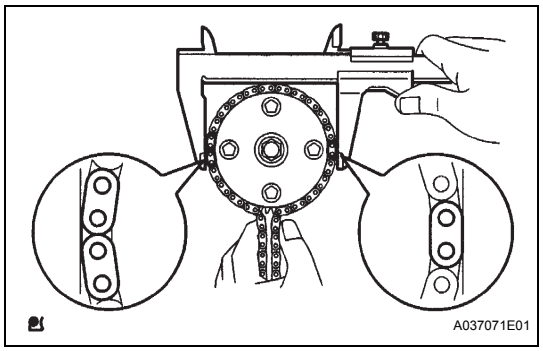

4. INSPECT CAMSHAFT TIMING GEAR ASSEMBLY

(a) Wrap the chain around the timing sprocket.

(b) Using vernier calipers, measure the diameter of the timing gear with the chain.

Minimum gear diameter (with chain):
96.2 mm (3.787 in.)

If the diameter is less than the minimum, replace the camshaft timing gear.

NOTICE:
Make sure that the vernier calipers are in contact with the chain link when measuring.

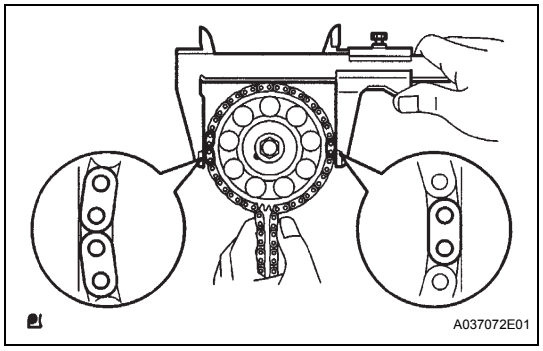

5. INSPECT CAMSHAFT TIMING SPROCKET

(a) Wrap the chain around the timing sprocket.

(b) Using vernier calipers, measure the diameter of the timing gear with the chain.

Minimum gear diameter (with chain):
96.2 mm (3.787 in.)

If the diameter is less than the minimum, replace the camshaft timing sprocket.

NOTICE:
Make sure that the vernier calipers are in contact with the chain link when measuring.

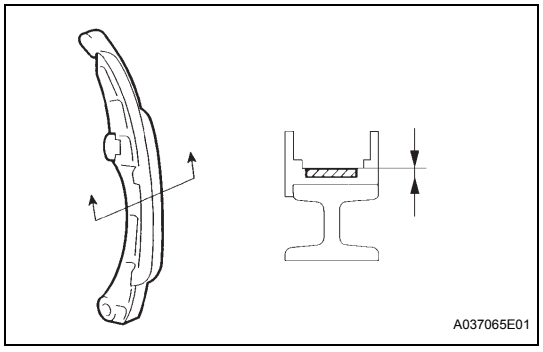

6. INSPECT CHAIN TENSIONER SLIPPER

(a) Check the chain tensioner slipper.

Minimum thickness:
1.0 mm (0.039 in.)

If the thickness is less than the minimum, replace the chain tensioner slipper.

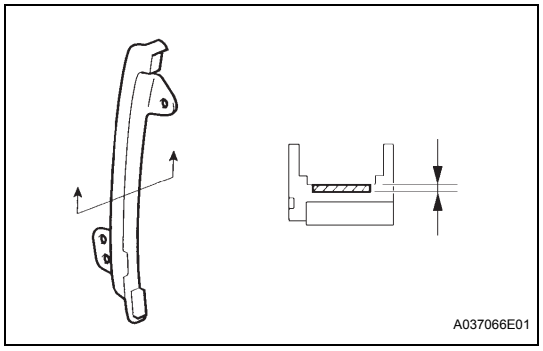

7. INSPECT CHAIN VIBRATION DAMPER NO. 1

(a) Check the vibration damper.

Minimum thickness:
1.0 mm (0.039 in.)

If the thickness is less than the minimum, replace the chain vibration damper.

EM

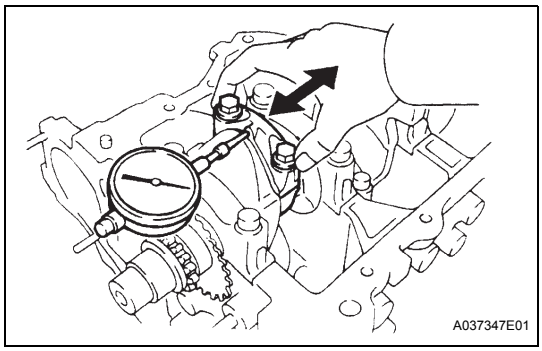

8. INSPECT CONNECTING ROD THRUST CLEARANCE

(a) Using a dial indicator, measure the thrust clearance while moving the connecting rod back and forth.
Standard thrust clearance:
0.16 to 0.36 mm (0.0063 to 0.0142 in.)
Maximum thrust clearance:
0.36 mm (0.0142 in.)

9. INSPECT CONNECTING ROD OIL CLEARANCE

(a) Check that the matchmarks on the connecting rod and cap are aligned to ensure correct reassembly.

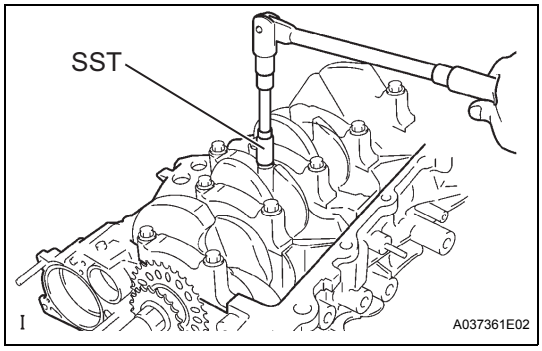

(b) Using SST, remove the 2 connecting rod cap bolts.
SST 09205-16010

(c) Clean the crank pin and bearing.

(d) Check the crank pin and bearing for pitting and scratches.

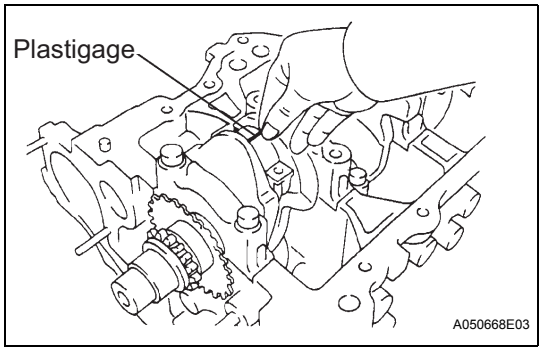

(e) Lay a strip of Plastigage across the crank pin.

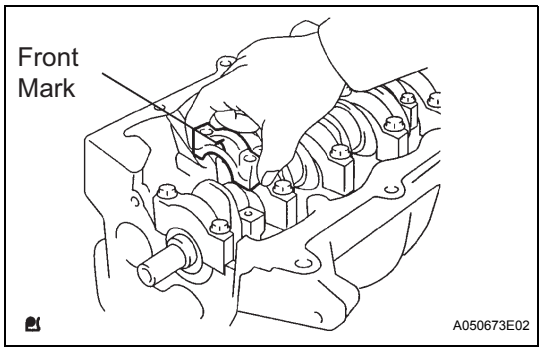

(f) Make sure that the connecting rod and its cap are in the correct combination and that the front mark of the cap is facing in the correct mounting orientation, then install the cap onto the connecting rod.

(g) Apply a light coat of engine oil to the threads of the connecting rod cap bolts.

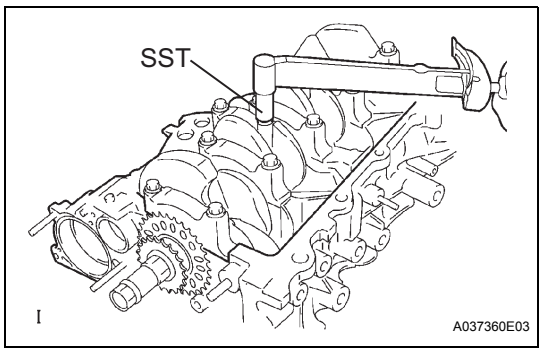

(h) Using SST, tighten the bolts in several steps to the specified torque.
SST 09205-16010
Torque: 15 N*m (153 kgf*cm, 11 ft.*lbf)

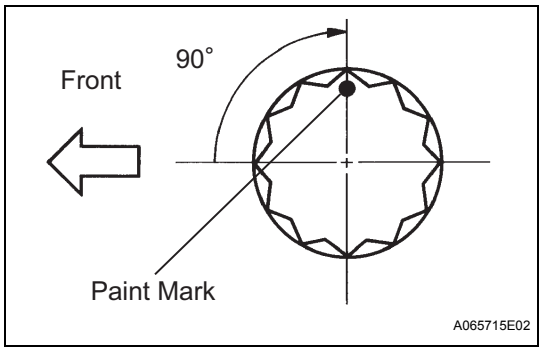

(i) Mark the front of the connecting cap bolts with paint.
(j) Retighten the cap bolts by 90° as shown in the illustration.
NOTICE:
Do not turn the crankshaft.
(k) Remove the 2 bolts, connecting rod cap and lower bearing.

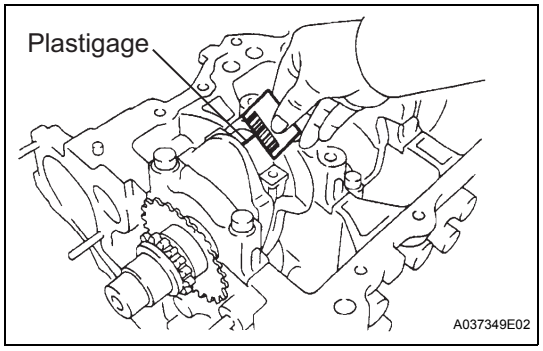

(l) Measure the Plastigage at its widest point.
Standard oil clearance:
0.012 to 0.038 mm (0.00047 to 0.00015 in.)
Maximum oil clearance:
0.058 mm (0.0028in.)
NOTICE:
Completely remove the Plastigage after the measurement.

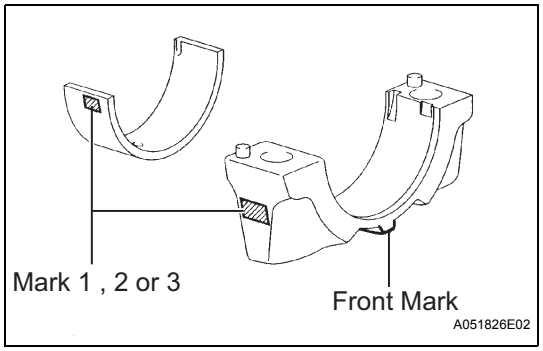

(m) When replacing a bearing, replace it with one with the same number as marked on the connecting rod. There are 3 sizes of standard bearings, marked 1, 2 and 3 accordingly.
Standard bearing center wall thickness

Mark	mm (in.)
1	1.491 to 1.494 (0.0587 to 0.0588)
2	1.494 to 1.497 (0.0588 to 0.0589)
3	1.497 to 1.500 (0.0589 to 0.0591)

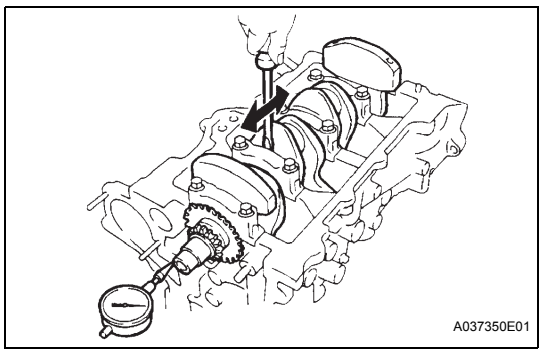

10. INSPECT CRANKSHAFT THRUST CLEARANCE

(a) Using a dial indicator, measure the thrust clearance while moving the crankshaft back and forth with a screwdriver.
Standard thrust clearance:
0.09 to 0.19 mm (0.0035 to 0.0075 in.)
Maximum thrust clearance:
0.30 mm (0.0118 in.)
If the thrust clearance is greater than the maximum, replace the thrust washers as a set. Check the crankshaft and block for wear. Repair or replace the parts if necessary.
HINT:
Thrust washer thickness: 2.43 to 2.48 mm (0.0957 to 0.976 in.)

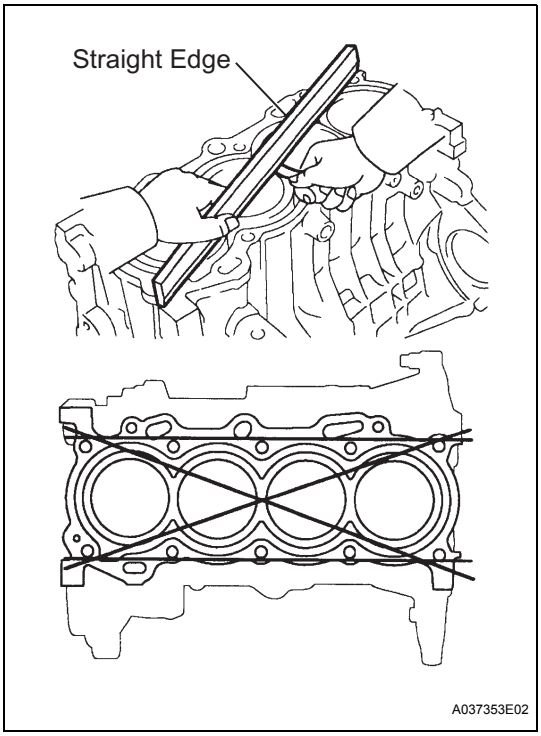

11. INSPECT CYLINDER BLOCK FOR WARPAGE

(a) Using a precision straight edge and feeler gauge, measure the warpage of the surface which is in contact with the cylinder head gasket.

Maximum warpage:

0.05 mm (0.0020 in.)

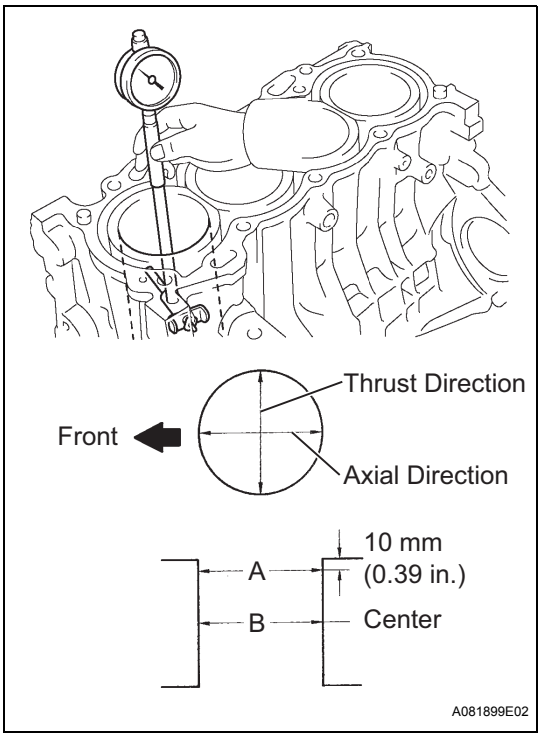

12. INSPECT CYLINDER BORE

(a) Using a cylinder gauge, measure the cylinder bore diameter at positions A and B in both the thrust and axial directions.

Standard Inside diameter:

75.000 to 75.013 mm (2.9528 to 2.9533 in.)

(b) Calculate the difference between the maximum diameter and the minimum diameter of the 4 measured values.

Difference limit:

0.10 mm (0.0039 in.)

If the difference is greater than the limit, replace the cylinder block.

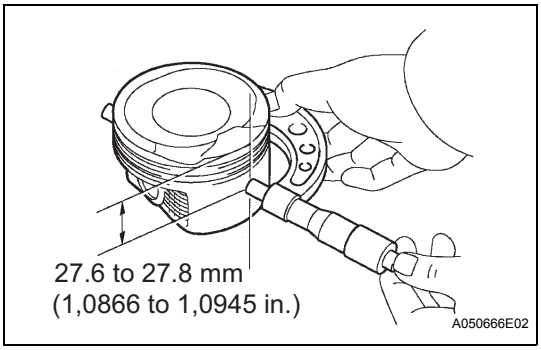

13. INSPECT WITH PIN PISTON SUB-ASSEMBLY

(a) Using a micrometer, measure the piston diameter at a right angle to the piston pin center line, and at the position 27.6 to 27.8 mm (1.0866 to 1.0945 in.) from the top of the piston head.

Piston diameter:

74.935 to 74.945 mm (2.9502 to 2.9506 in.)

(b) Using a caliper gauge, measure the piston pin hole diameter.
Piston pin hole diameter:
18.013 to 18.016 mm (0.7092 to 0.7093 in.) at 20°C (68°F)

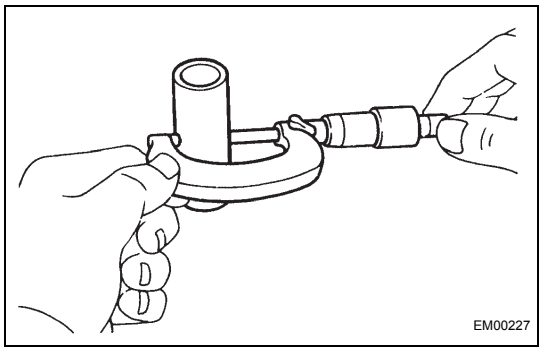

(c) Using a micrometer, measure the piston pin diameter.
Piston pin diameter:
18.001 to 18.004 mm (0.7087 to 0.7088 in.)

(d) Subtract the piston pin diameter measurement from the piston pin hole diameter measurement to calculate the oil clearance.
Standard oil clearance:
0.009 to 0.015 mm (0.0004 to 0.0006 in.)
Maximum oil clearance:
0.050 mm (0.0020 in.)
If necessary, replace the piston and piston pin together.

14. INSPECT PISTON CLEARANCE

(a) Subtract the piston diameter measurement from the cylinder bore diameter measurement.
Standard oil clearance:
0.045 to 0.068 mm (0.0018 to 0.0027 in.)
Maximum oil clearance:
0.08 mm (0.0032 in.)

15. INSPECT CONNECTING ROD SUB-ASSEMBLY

(a) Using a rod aligner and feeler gauge, check the connecting rod alignment.

(1) Check for misalignment.
Maximum misalignment:
0.05 mm (0.0020 in.) per 100 mm (3.94 in.)
If the misalignment is greater than the maximum, replace the connecting rod assembly.

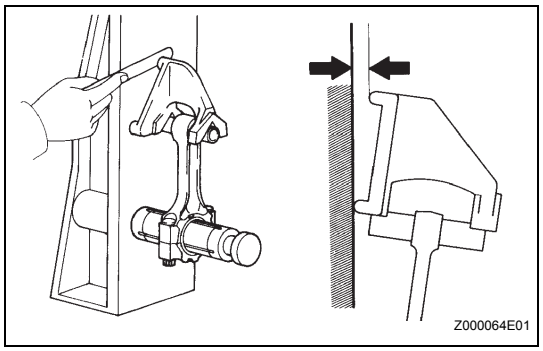

(2) Check for twist.
Maximum twist:
0.05 mm (0.0020 in.) per 100 mm (3.94 in.)
If the twist is greater than the maximum, replace the connecting rod assembly.

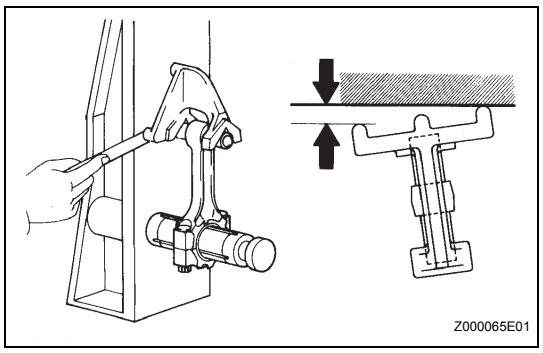

EM

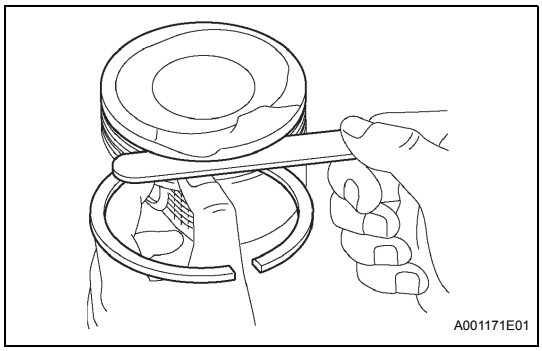

16. INSPECT RING GROOVE CLEARANCE

(a) Using a feeler gauge, measure the clearance between a new piston ring and the wall of the ring groove.

Ring groove clearance:

No. 1:

0.03 to 0.07 mm (0.0012 to 0.0028 in.)

No. 2:

0.02 to 0.06 mm (0.0008 to 0.0024 in.)

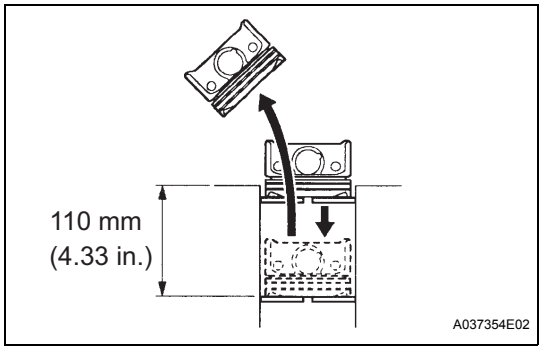

17. INSPECT PISTON RING END GAP

(a) Using a piston, push the piston ring, a little beyond the bottom of the ring travel, 110 mm (4.33 in.) from the top of the cylinder block.

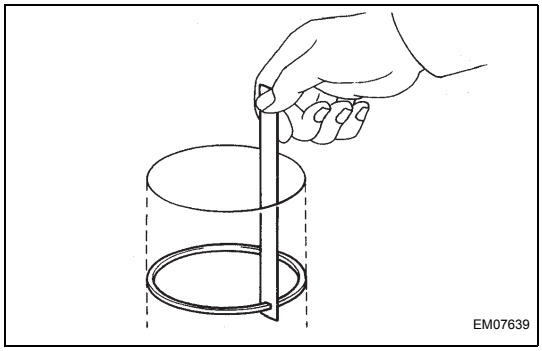

(b) Using a feeler gauge, measure the end gap.

Standard end gap:

No. 1:

0.25 to 0.35 mm (0.0098 to 0.0138 in.)

No. 2:

0.35 to 0.50 mm (0.0138 to 0.0197 in.)

Oil (Side Rail):

0.10 to 0.35 mm (0.0039 to 0.0138 in.)

Maximum end gap:

No. 1:

0.91 mm (0.0358 in.)

No. 2:

1.06 mm (0.0417 in.)

Oil (Side Rail):

0.82 mm (0.323 in.)

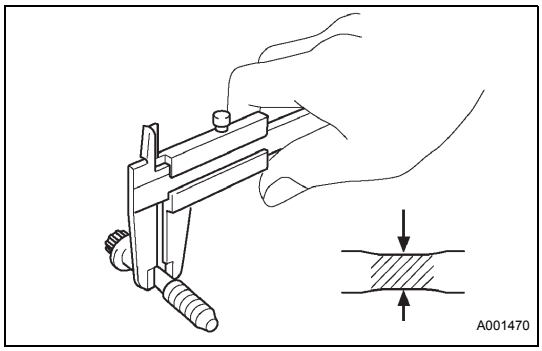

18. INSPECT CONNECTING ROD BOLT

(a) Using vernier calipers, measure the diameter of the bolt at the elongated portion.

Standard diameter:

6.6 to 6.7 mm (0.260 to 0.264 in.)

Minimum diameter:

6.4 mm (0.252 in.)

If the diameter is less than the minimum, replace the bolt.

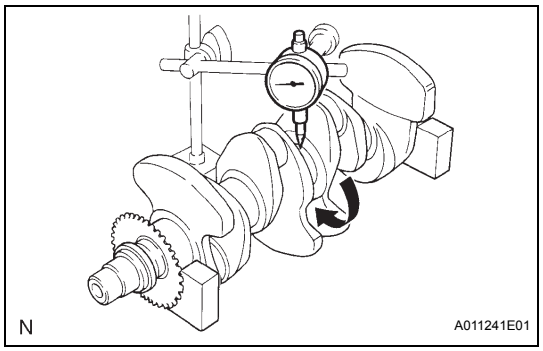

19. INSPECT CRANKSHAFT

(a) Using a dial indicator and V-blocks, measure the circle runout as shown in the illustration.
Maximum circle runout:
0.03 mm (0.0012 in.)

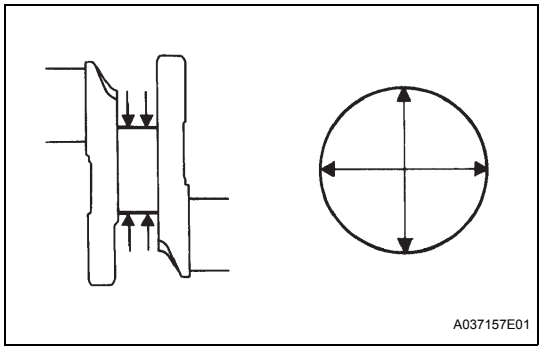

(b) Using a micrometer, measure the diameter of each main journal.
Outside diameter:
45.988 to 46.000 mm (1.8106 to 1.8110 in.)

(c) Check each main journal for taper and out-of-roundness as shown.
Maximum taper and out-of-roundness:
0.02 mm (0.0008 in.)

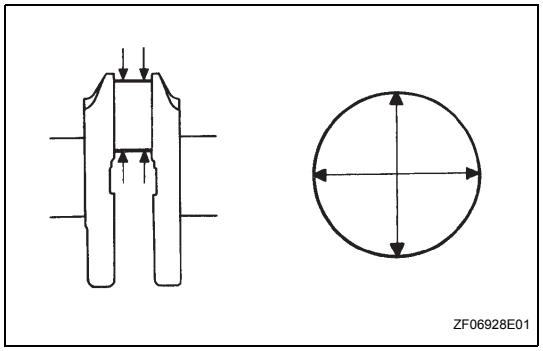

(d) Using a micrometer, measure the diameter of each crank pin.
Outside diameter:
39.992 to 40.000 mm (1.5745 to 1.5748 in.)

(e) Check each crank pin for taper and out-of-roundness as shown.
Maximum taper and out-of-roundness:
0.02 mm (0.0008 in.)

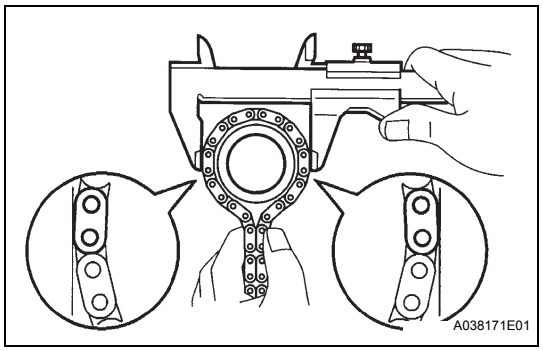

(f) Wrap the chain around the timing sprocket.

(g) Using vernier calipers, measure the timing sprocket diameter with the chain.
Standard sprocket diameter (with chain):
51.72 mm (2.0362 in.)
Minimum sprocket diameter (with chain):
50.5 mm (1.988 in.)
NOTICE:
Make sure that the vernier calipers are in contact with the chain rollers when measuring.

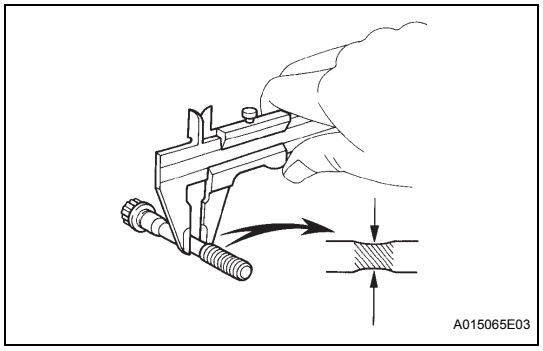

20. INSPECT CRANKSHAFT BEARING CAP SET BOLT

(a) Using vernier calipers, measure the tension portion diameter of the elongated portion.
Standard diameter:
7.3 to 7.5 mm (0.287 to 0.295 in.)
Minimum diameter:
7.2 mm (0.283 in.)
If the diameter is less than the minimum, replace the bolt.

EM

21. INSPECT CRANKSHAFT OIL CLEARANCE

(a) Clean each main journal and bearing.

(b) Install the bearing onto the cylinder block and bearing cap. (See page EM-183)

(c) Place the crankshaft onto the cylinder block.

(d) Lay a strip of Plastigage across each journal.

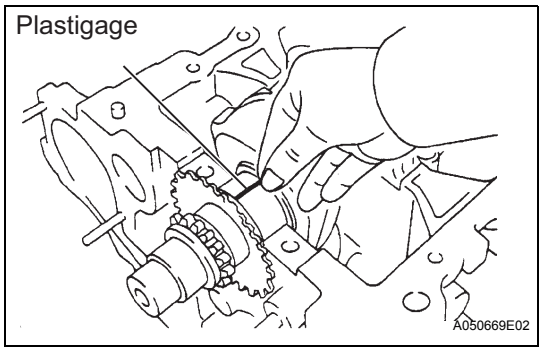

(e) Examine the front marks and numbers and install the bearing cap onto the cylinder block.

(f) Apply a light coat of engine oil to the threads of the bearing cap bolts.

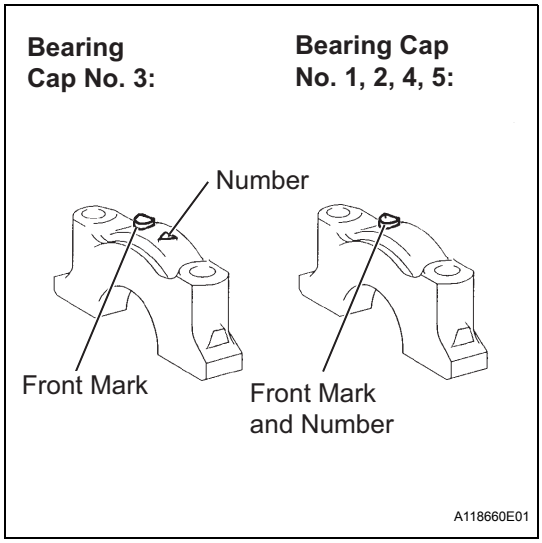

(g) Using SST, tighten the bolts in several steps to the specified torque in the sequence shown in the illustration. (*1)
SST 09011-38121
Torque: 22 N*m (224 kgf*cm, 16 ft.*lbf)

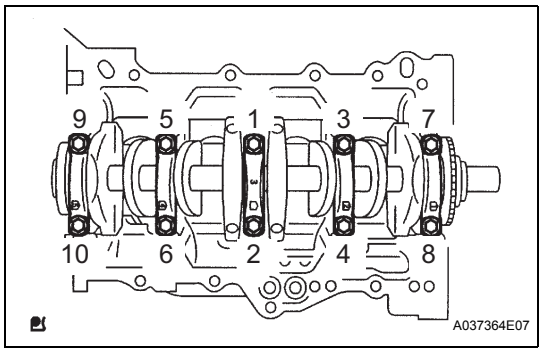

(h) Mark the front of the bearing cap bolts with paint.

(i) Retighten the bearing cap bolts by 90° in the same sequence as step (*1).

(j) Check that the painted mark is now at a 90° angle from the front.
NOTICE:
Do not turn the crankshaft.

(k) Remove the bearing cap sub-assembly.

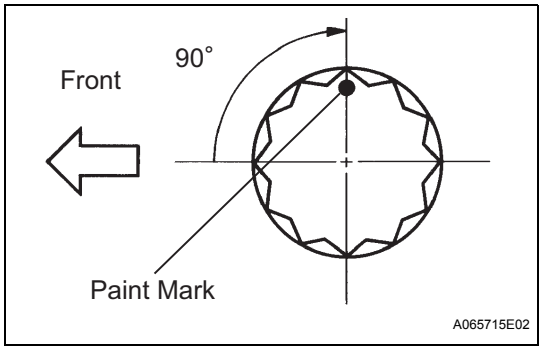

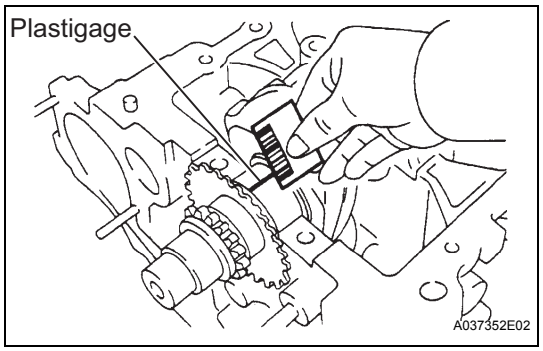

(l) Measure the Plastigage at its widest point.
Standard oil clearance:
0.01 to 0.023 mm (0.0004 to 0.0009 in.)
Maximum oil clearance:
0.07 mm (0.0028 in.)
NOTICE:
Completely remove the Plastigage after the mesurement.

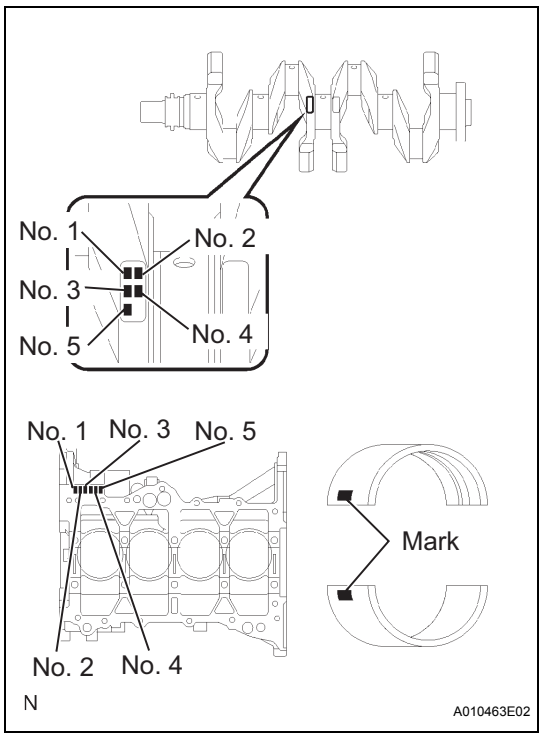

(m) When replacing a standard bearing, replace it with one with the same number. If the number of the bearing cannot be found, select the correct bearing by adding together the numbers imprinted on the cylinder block and crankshaft, then select the bearing with the same number as the total. There are 4 sizes of standard bearings, marked 1, 2, 3 and 4 accordingly.
EXAMPLE: Cylinder Block 4 (A) + Crankshaft 3 (B) = Total 7 (Use Bearing 3)

Cylinder Block (A) + Crankshaft (B)	0 to 2	3 to 5	6 to 8	9 to 11
Use Bearing	1	2	3	4

EM

Item	Mark	mm (in.)
Cylinder block main journal bore diameter (A)	0	50.000 to 50.003 (1.96850 to 1.96862)
	1	50.003 to 50.005 (1.96862 to 1.96870)
	2	50.005 to 50.007 (1.96870 to 1.96878)
	3	50.007 to 50.010 (1.96878 to 1.96890)
	4	50.010 to 50.012 (1.96890 to 1.96898)
	5	50.012 to 50.014 (1.96898 to 1.96906)
	6	50.014 to 50.016 (1.96906 to 1.96913)
Crankshaft main journal diameter (B)	0	45.998 to 46.000 (1.81094 to 1.81102)
	1	45.996 to 45.998 (1.81087 to 1.81094)
	2	45.994 to 45.996 (1.81079 to 1.81087)
	3	45.992 to 45.994 (1.81071 to 1.81079)
	4	45.990 to 45.992 (1.81063 to 1.81071)
	5	45.988 to 45.990 (1.81055 to 1.81063)
Standard bearing center wall thickness	1	1.992 to 1.995 (0.07843 to 0.07854)
	2	1.995 to 1.998 (0.07854 to 0.07866)
	3	1.998 to 2.001 (0.07866 to 0.07878)
	4	2.001 to 2.004 (0.07878 to 0.07890)

REASSEMBLY

1. INSTALL CYLINDER BLOCK WATER DRAIN COCK SUB-ASSEMBLY

(a) Apply adhesive to the end 2 or 3 threads of the drain union and install the water drain cock within 3 minutes of applying the adhesive.

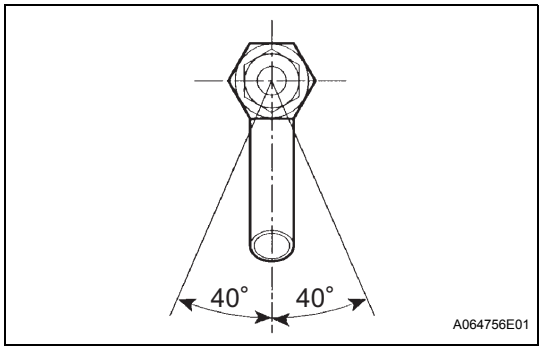

(b) After applying the specified torque, rotate the drain union clockwise until its drain port faces downward.
Torque: 35 N*m (357 kgf*cm, 26 ft.*lbf)
NOTICE:
- **Do not add coolant within 1 hour of installation.**
- **Do not rotate the drain union more than 360° in step (b), and never loosen it after setting the union correctly.**

2. INSTALL STRAIGHT PIN

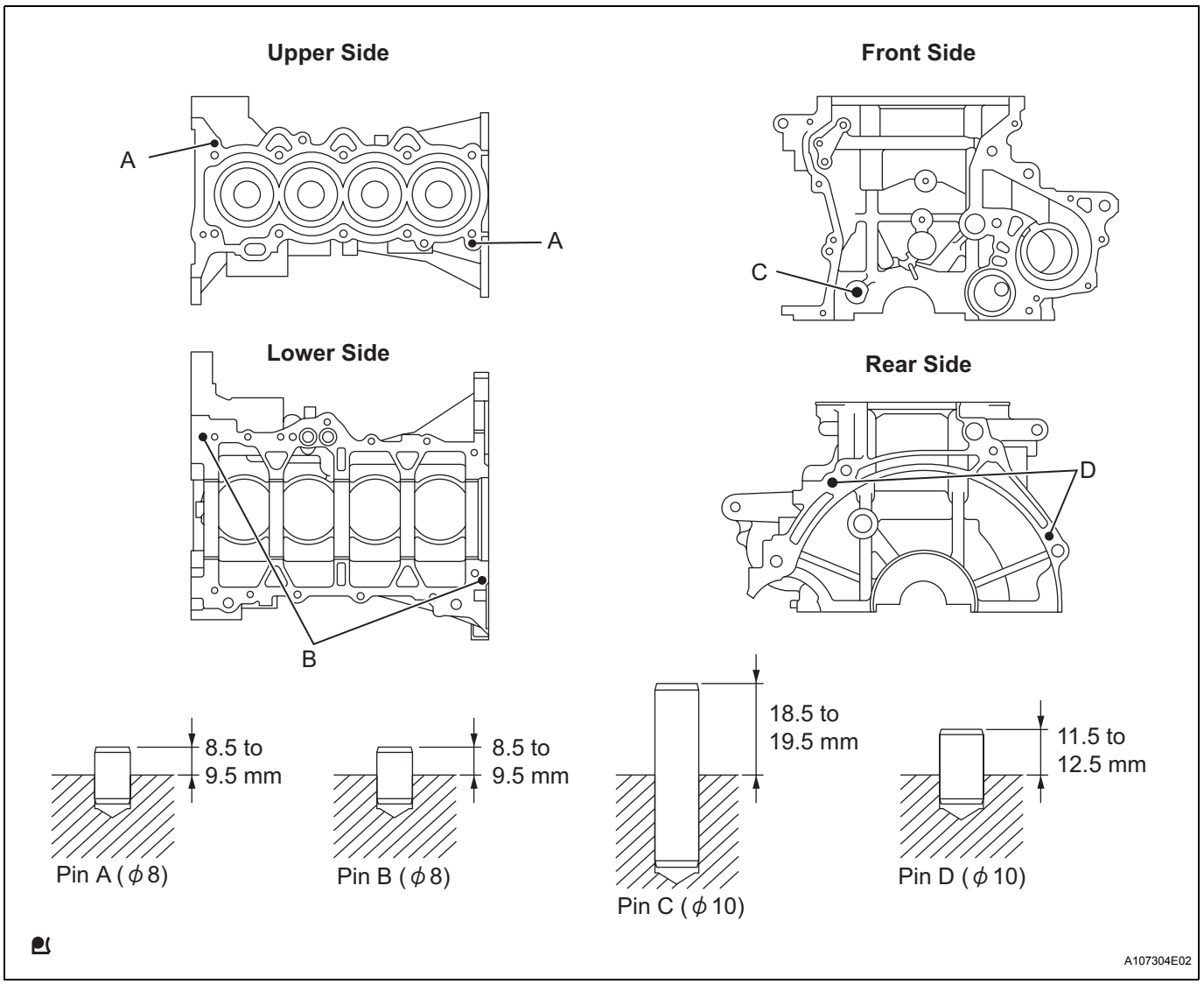

(a) Using a plastic-faced hammer, tap in the straight pin.
Standard protrusion:
Pin A:

8.5 to 9.5 mm (0.335 to 0.374 in.)
Pin B:
8.5 to 9.5 mm (0.335 to 0.374 in.)
Pin C:
18.5 to 19.5 mm (0.728 to 0.768 in.)
Pin D:
11.5 to 12.5 mm (0.453 to 0.492 in.)

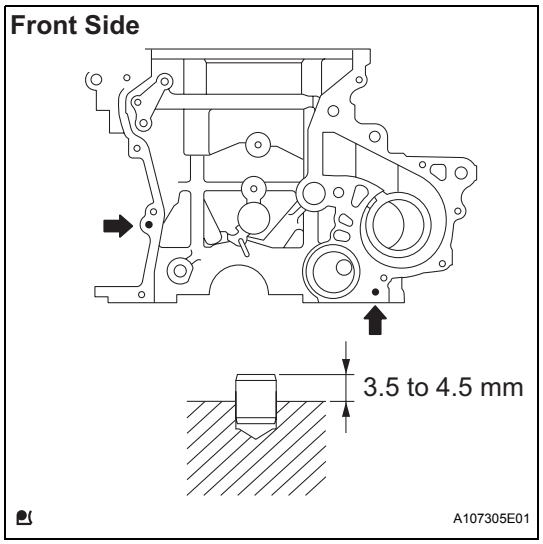

3. INSTALL OIL PUMP SET RING PIN

(a) Using a plastic-faced hammer, tap in a new ring pin.
Standard protrusion:
3.5 to 4.5 mm (0.138 to 0.177 in.)

4. INSTALL STUD BOLT

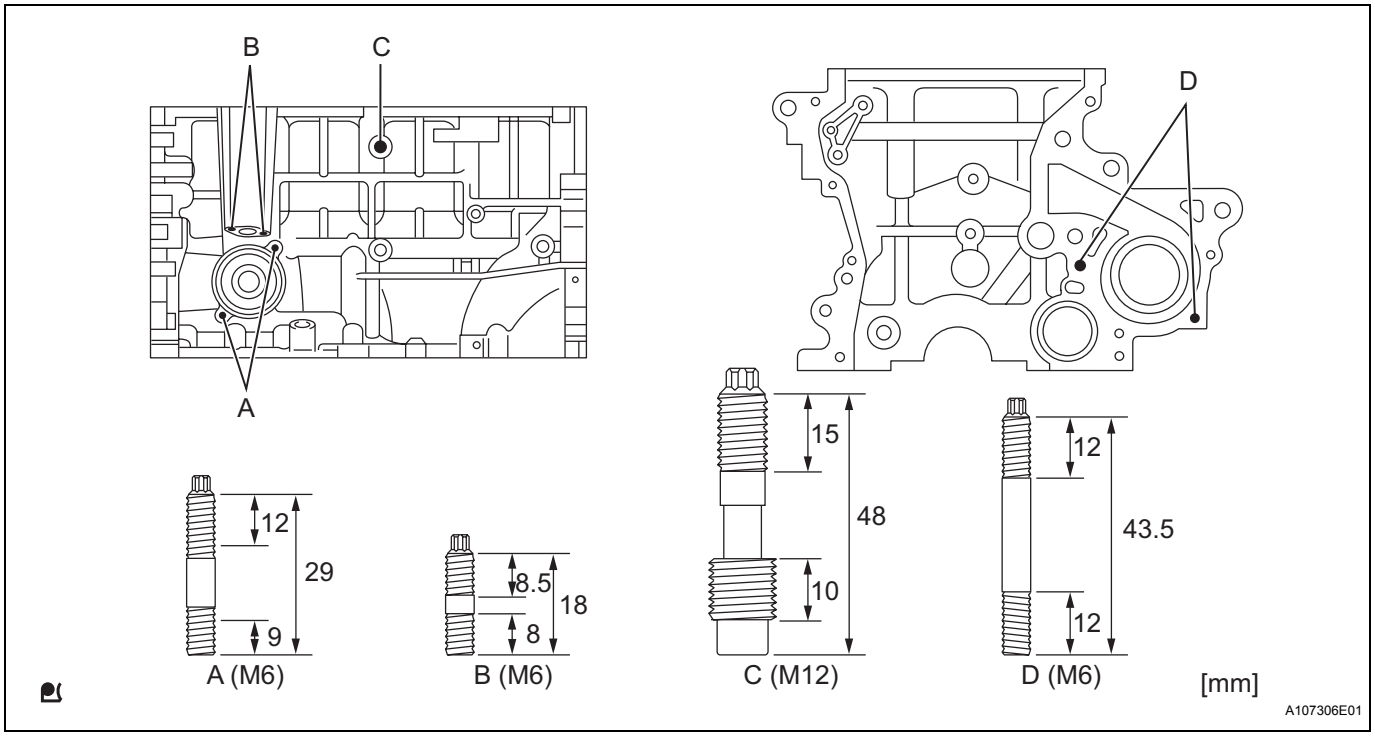

(a) Using "Torx" socket wrench E5, install the 7 stud bolts.
Torque: 5.0 N*m (51 kgf*cm, 44 in.*lbf) (for Stud bolt A, B and D)
11 N*m (112 kgf*cm, 8.1 ft.*lbf) (for Stud bolt C)
NOTICE:
The lower threads of the bolt are installed into the cylinder block.

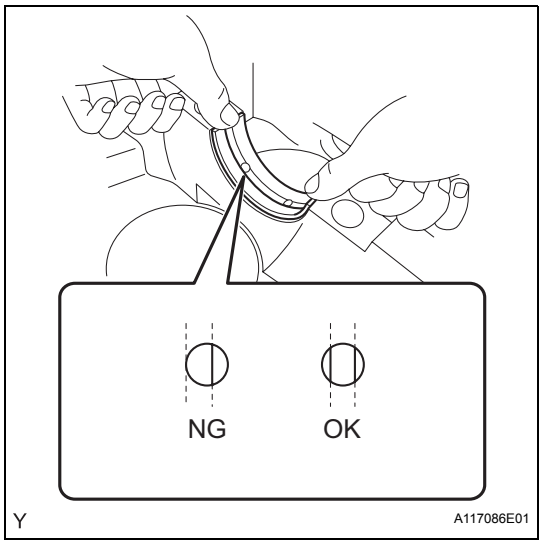

5. INSTALL CRANKSHAFT BEARING

(a) Align the crankshaft bearing (upper) with the oil hole of the cylinder block and install the bearing.
NOTICE:
Do not apply engine oil to the bearing or its contact surface.

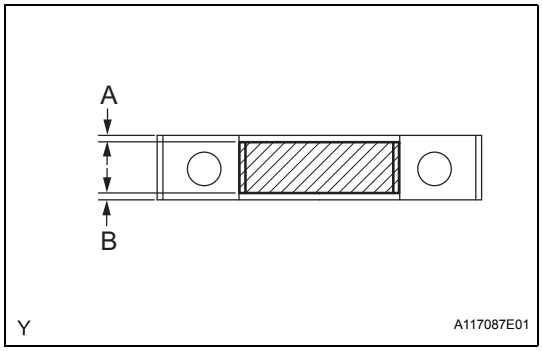

(b) Align the crankshaft bearing (lower) with the bearing cap and install the crankshaft bearing cap.
NOTICE:
- **Install the bearing cap so that the gap between A and B is less than 0.7 mm (0.028 in.).**
- **Do not apply engine oil to the bearing or its contact surface.**

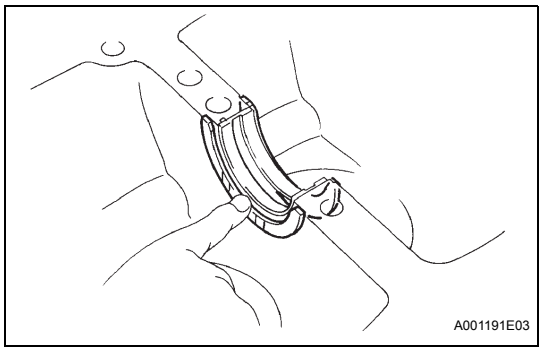

6. INSTALL CRANKSHAFT THRUST WASHER UPPER

(a) Install the 2 thrust washers onto the No. 3 journal position of the cylinder block with the oil grooves facing outward.
(b) Apply engine oil to the upper bearing and install the crankshaft onto the cylinder block.

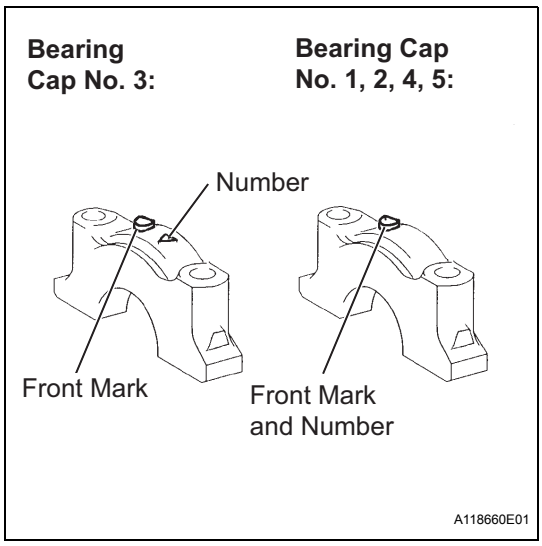

7. INSTALL CRANKSHAFT

(a) Examine the front marks and numbers and install the bearing caps onto the cylinder block.
(b) Apply a light coat of engine oil to the threads of the bearing cap bolts.

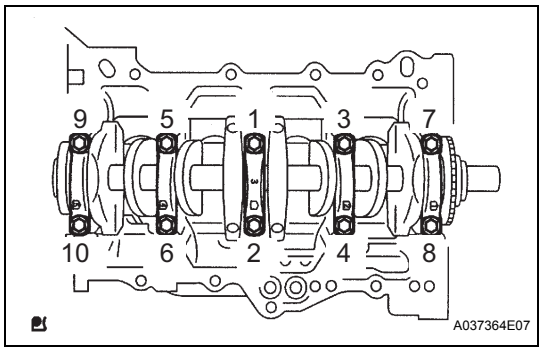

(c) Using SST, tighten the bolts in several steps to the specified torque in the sequence shown in the illustration (*1).
SST 09011-38121
Torque: 22 N*m (224 kgf*cm, 16 ft.*lbf)
NOTICE:
Check that the crankshaft turns smoothly.

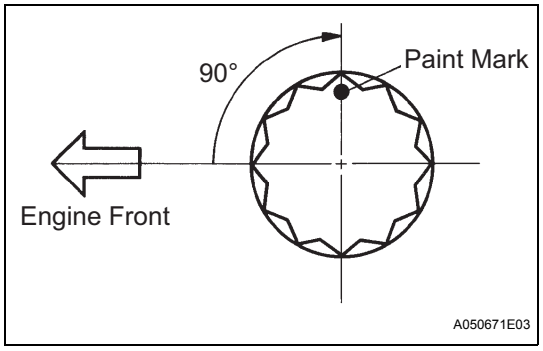

(d) Mark the front of the bearing cap bolts with paint.
(e) Retighten the bearing cap bolts by 90° in the same sequence as step (*1).
(f) Check that the painted mark is now at a 90° angle from the front.

8. INSPECT CRANKSHAFT THRUST CLEARANCE (See page EM-174)

9. INSPECT CRANKSHAFT OIL CLEARANCE (See page EM-179)

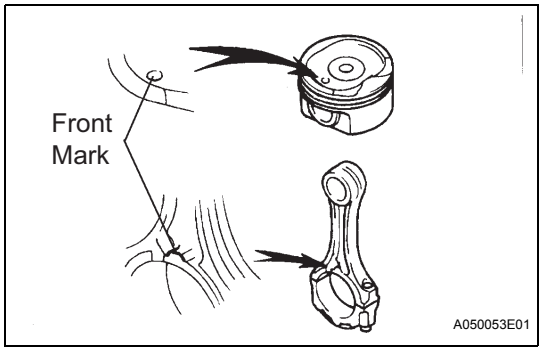

10. INSTALL WITH PIN PISTON SUB-ASSEMBLY
(a) Coat the piston pin and pin holes in the piston with engine oil.
(b) Align the cavity of the piston with the protruding portion on the connecting rod.

EM

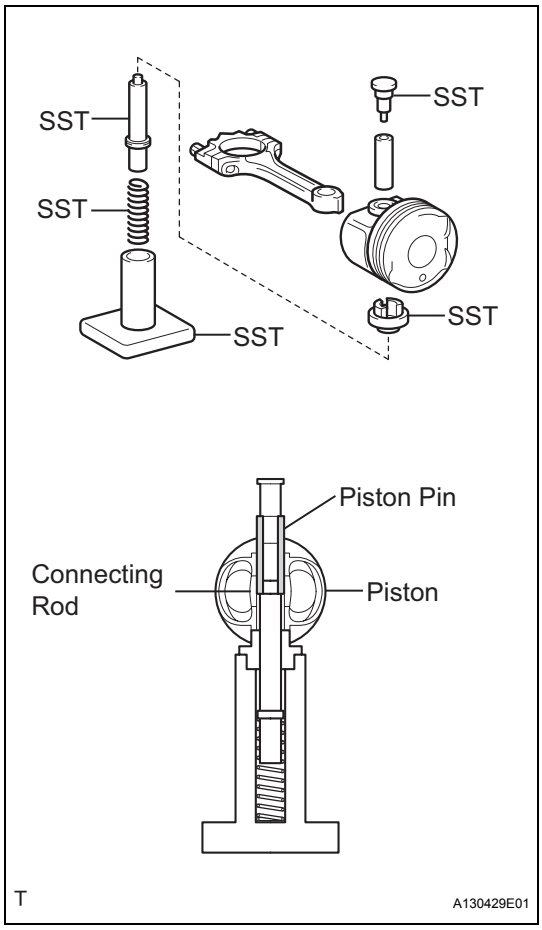

(c) Using SST, press in the piston pin.
SST 09221-25026 (09221-00021, 09221-00030, 09221-00090, 09221-00150, 09221-00100)
NOTICE:
Keep the pistons, pins, rings, connecting rods and bearings in the correct order so that they can be returned to the original locations when reassembled.

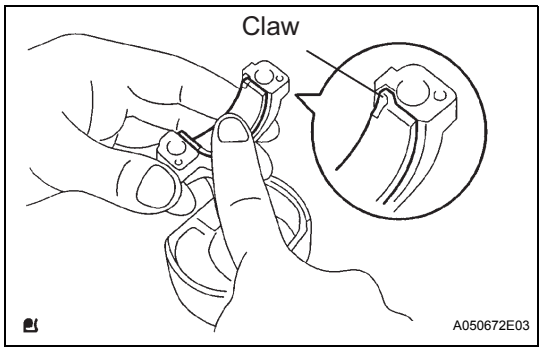

11. INSTALL CONNECTING ROD BEARING
(a) Align the bearing claw with the groove of the connecting rod or connecting cap.
NOTICE:
Clean the back side of the bearing and the bearing surface of the connecting rod and keep them free of oil.

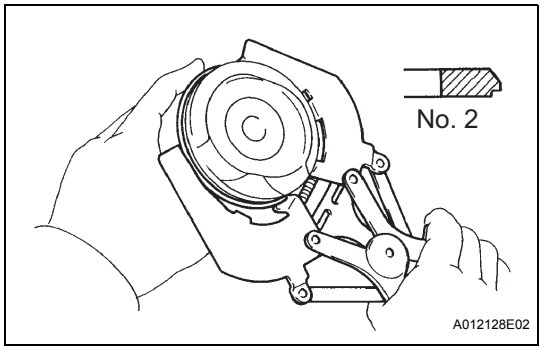

12. INSTALL PISTON RING SET
HINT:
When reusing the piston rings, install them onto the matched pistons with the surfaces facing correctly.
(a) Install the oil ring expander and 2 side rails by hand.
(b) Using a piston ring expander, install the 2 compression rings.

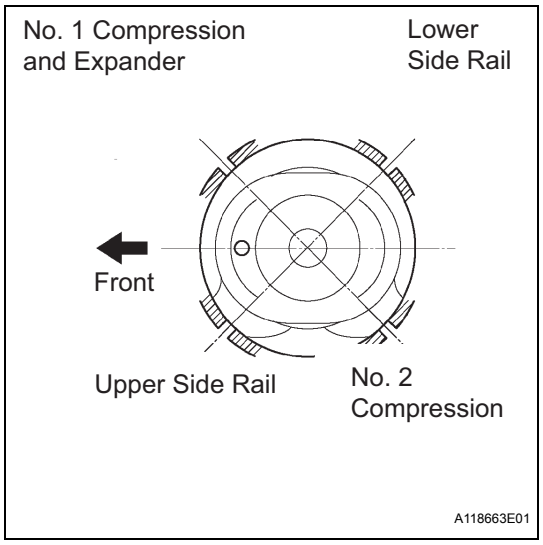

(c) Position the piston rings so that the ring ends are as shown.

13. INSTALL PISTON SUB-ASSEMBLY WITH CONNECTING ROD

(a) Apply engine oil to the cylinder walls, the pistons, and the surfaces of the connecting rod bearings.

(b) Check the position of the piston ring ends.

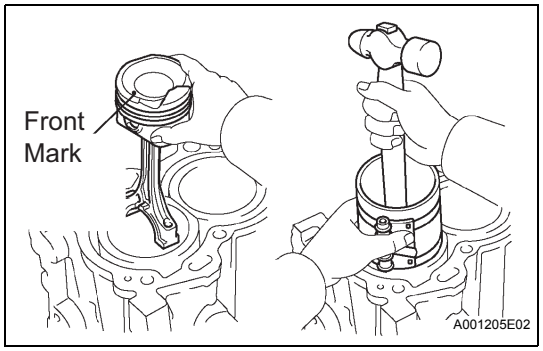

(c) Using a piston ring compressor, push the correctly numbered piston and connecting rod assemblies into each cylinder with the front mark on the piston facing forward.

NOTICE:

- **Clean the back side of the bearing and the bearing surface of the connecting rod cap and keep them free of oil.**
- **Match the numbered connecting rod cap with the connecting rod.**

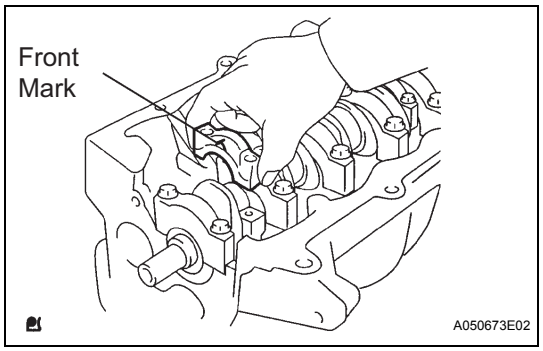

(d) Make sure that the connecting rod and its cap are in the correct combination and that the front mark of the cap is facing in the correct mounting orientation, then install the cap onto the connecting rod.

(e) Apply a light coat of engine oil to the threads of the connecting rod cap bolts.

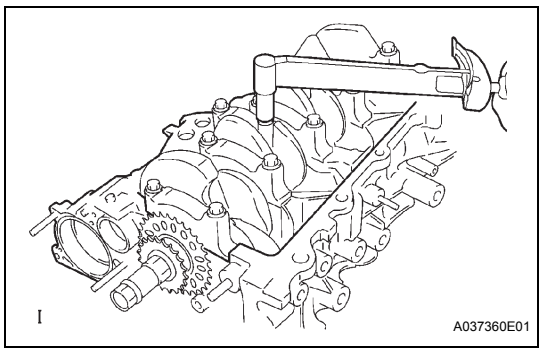

(f) Using SST, tighten the bolts in several steps to the specified torque.

SST 09205-16010

Torque: 15 N*m (153 kgf*cm, 11 ft.*lbf)

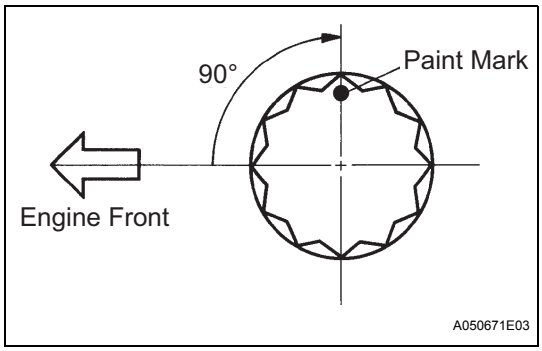

(g) Mark the front of the connecting cap bolts with paint.
(h) Retighten the cap bolts by 90° as shown.
(i) Check that the crankshaft turns smoothly.

14. INSPECT CONNECTING ROD THRUST CLEARANCE (See page EM-173)

15. INSPECT CONNECTING ROD OIL CLEARANCE (See page EM-173)

16. INSTALL STUD BOLT

(a) Using "Torx" socket wrench E5, install the 4 stud bolts.
Torque: 5.0 N*m (51 kgf*cm, 44 in.*lbf)

EM

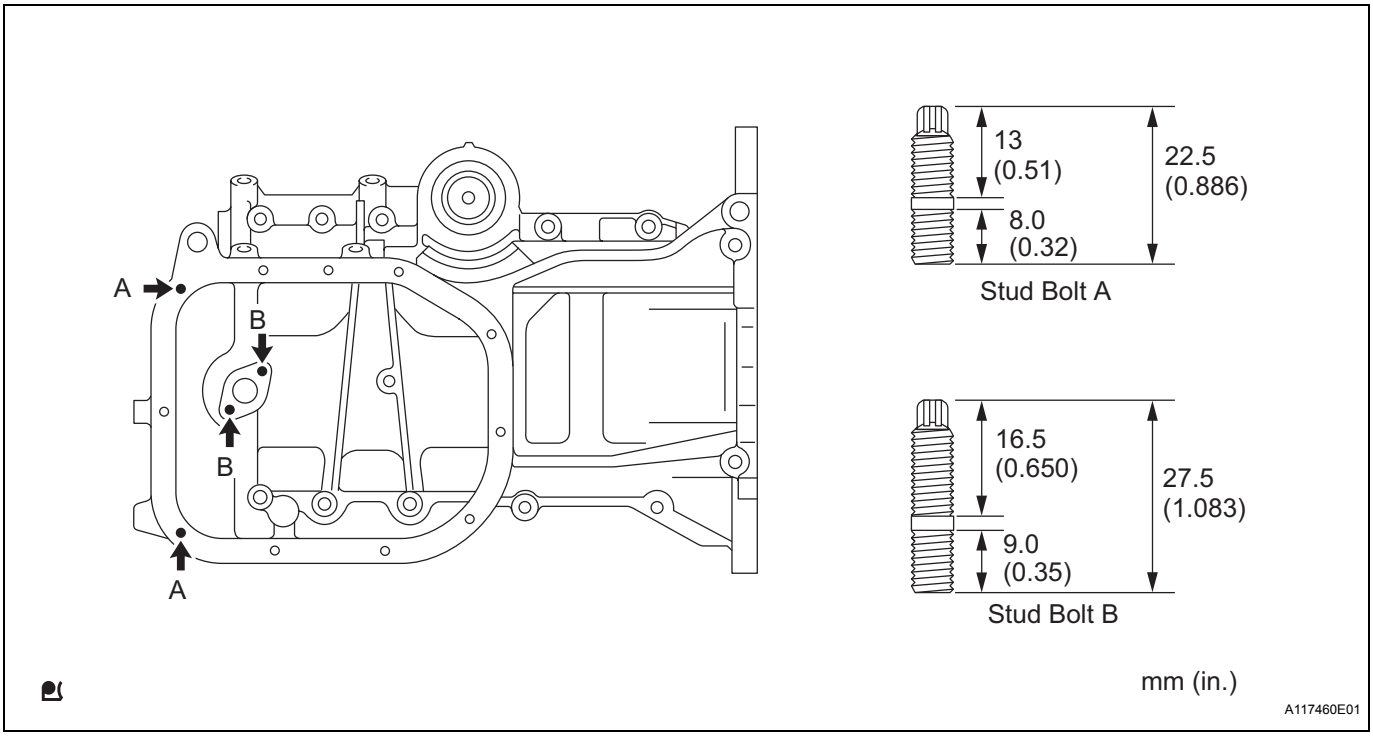

17. INSTALL OIL PAN SUB-ASSEMBLY

(a) Remove any old packing material from the contact surface.

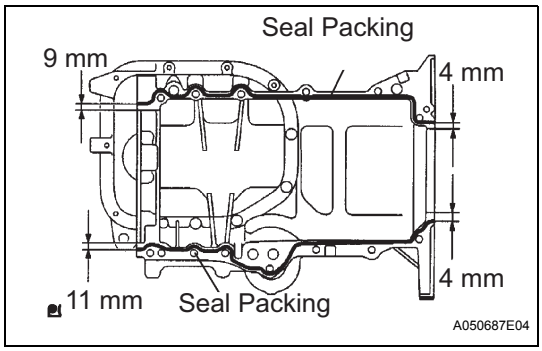

(b) Apply a continuous bead of seal packing (Diameter 2.0 mm to 3.0 mm (0.079 to 0.118 in.)) to the oil pan mating surface as shown in the illustration.
Seal packing:
Toyota Genuine Seal Packing Black, Three Bond 1207B or Equivalent
NOTICE:
- **Remove any oil from the contact surface.**
- **Install the oil pan within 3 minutes of applying the seal packing.**
- **Do not expose the seal to engine oil for at least within 2 hours after the installation.**

(c) Install 2 new O-rings onto the cylinder block.

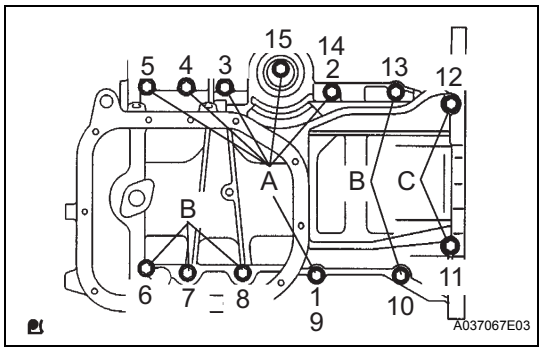

(d) Using several steps, install and tighten the 13 bolts uniformly in the sequence shown in the illustration.
Torque: 24 N*m (245 kgf*cm, 18 ft.*lbf)
HINT:
Each bolt length is as follows:
Bolt A 49 mm (1.93 in.)
Bolt B 88 mm (3.47 in.)
Bolt C 144 mm (5.67 in.)

18. INSTALL OIL STRAINER SUB-ASSEMBLY

(a) Install a new gasket and the oil strainer with the 2 nuts and the bolt.
Torque: 11 N*m (112 kgf*cm, 8.1 ft.*lbf)

19. INSTALL OIL PAN SUB-ASSEMBLY NO. 2

(a) Remove any old packing material from the contact surface.

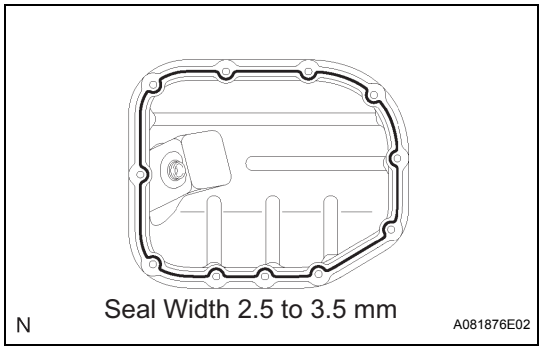

(b) Apply a continuous bead of seal packing (Diameter 2.5 to 3.5 mm (0.0984 to 0.1378 in.)) to the oil pan mating surface as shown in the illustration.
Seal packing:
Toyota Genuine Seal Packing Black, Three Bond 1207B or Equivalent
NOTICE:
- **Remove any oil from the contact surface.**
- **Install the oil pan within 3 minutes of applying the seal packing.**
- **Do not expose the seal to engine oil for at least 2 hours after the installation.**
- **Do not start the engine for at least 2 hours after the installation.**

(c) Install oil pan No. 2 with the 9 bolts and the 2 nuts.
Torque: 9.0 N*m (92 kgf*cm, 80 in.*lbf)

(d) Install the drain plug with a new gasket.
Torque: 38 N*m (382 kgf*cm, 28 ft.*lbf)

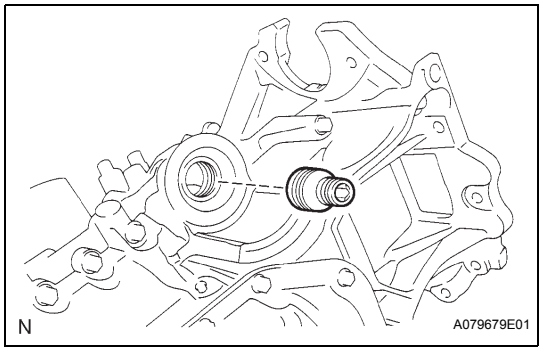

20. INSTALL OIL FILTER UNION

(a) Using a 12 mm hexagon wrench, install the oil filter union.
Torque: 30 N*m (306 kgf*cm, 22 ft.*lbf)

21. INSTALL OIL FILTER SUB-ASSEMBLY

(a) Check and clean the oil filter installation surface.

(b) Apply clean engine oil to the gasket of a new oil filter.

(c) Gently screw the oil filter into place, and tighten it until the gasket comes into contact with the seat.

EM

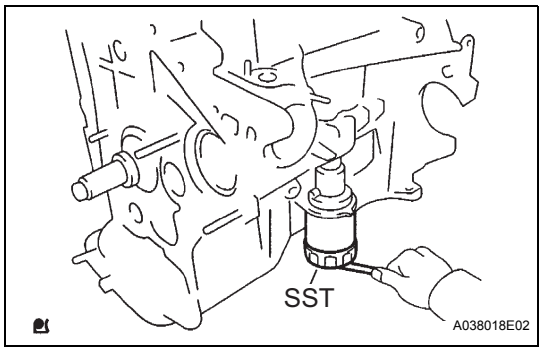

(d) Using SST, tighten it an additional 3/4 turn.
SST 09228-06501
HINT:
When using a torque wrench, tighten it to the specified torque.
Torque: 13 N*m (133 kgf*cm, 9.5 ft.*lbf)

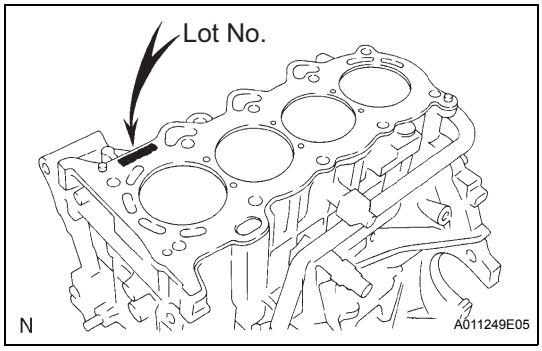

22. INSTALL CYLINDER HEAD GASKET

(a) Place a new cylinder head gasket on the cylinder block with the Lot No. stamp facing upward.
NOTICE:
- **Remove any oil from the contact surface.**
- **Pay attention to the mounting orientation of the cylinder head gasket.**
- **Place the cylinder head on the cylinder head gently in order not to damage the gasket.**

23. INSTALL CYLINDER HEAD SUB-ASSEMBLY

HINT:
The cylinder head bolts are tightened in 2 successive steps.

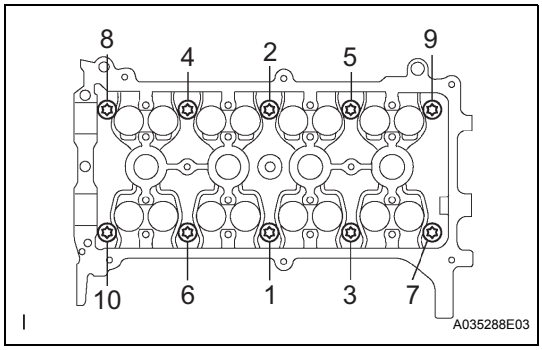

(a) Apply a light coat of engine oil to the threads of the cylinder head bolts.
(b) Using several steps, install and tighten the 10 cylinder head bolts and plate washers uniformly with an 8 mm bi-hexagon wrench in the sequence shown in the illustration.
Torque: 29 N*m (300 kgf*cm, 22 ft.*lbf)
(c) Mark the front of the cylinder head bolt with paint.

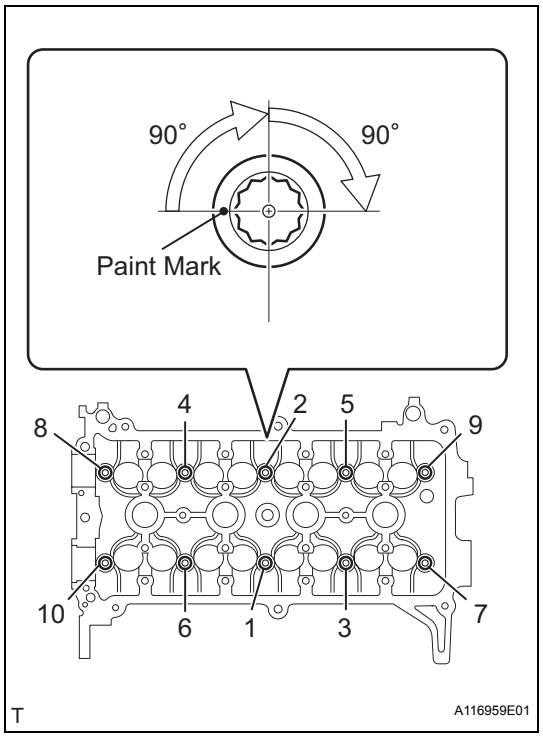

(d) Retighten the cylinder head bolts by 90° and then an additional 90° as shown in the illustration.
(e) Check that the paint mark is now at a 180° angle from the front.

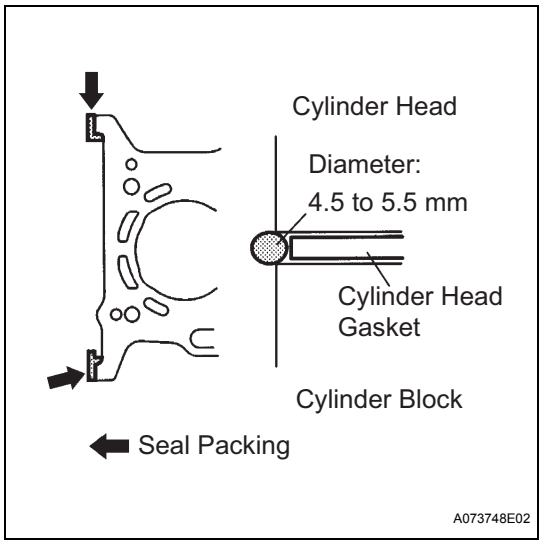

(f) Apply a continuous bead of seal packing (Diameter 4.5 to 5.5 mm (0.177 to 0.217 in.)) as shown in the illustration.
Seal Packing:
Toyota Genuine Seal Packing Black, Three Bond 1207B or Equivalent
NOTICE:
- **Remove any oil from the contact surface.**
- **Install the oil pump assembly within 3 minutes and tighten the bolts within 15 minutes of applying seal packing.**

24. INSTALL ENGINE REAR OIL SEAL

(a) Apply MP grease to a new oil seal lip.
NOTICE:
Keep the seal lip free of foreign matter.

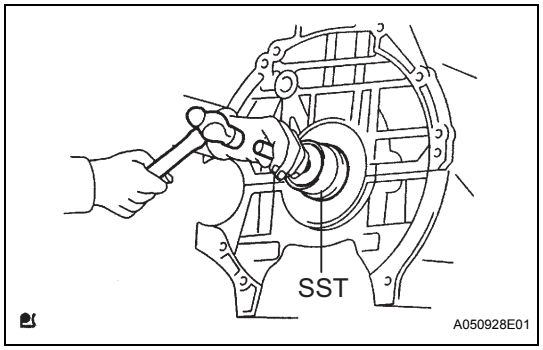

(b) Using SST and a hammer, tap in the oil seal until its surface is flush with the rear oil seal retainer edge.
SST 09223-56010
NOTICE:
- **Do not tap the oil seal at an angle.**
- **Wipe any extra grease off the crankshaft.**

25. INSTALL CAMSHAFT TIMING GEAR ASSEMBLY
NOTICE:
Install the camshaft timing gear assembly onto the camshaft with the lock pin of the camshaft timing gear assembly released.

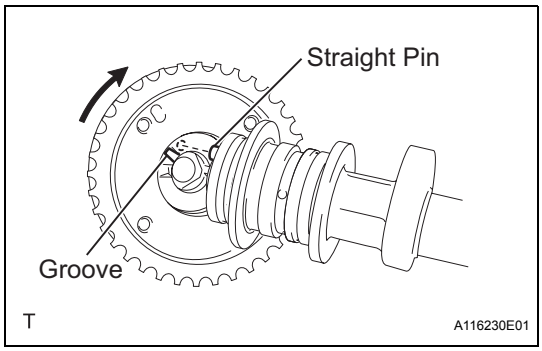

(a) Put the camshaft timing gear assembly and camshaft together with the straight pin of the groove.
(b) Turn the camshaft timing gear assembly clockwise while pushing it gently toward the camshaft. When the pin fits into the groove, push to ensure a good fit.
NOTICE:
Do not turn the camshaft timing gear in the retard direction (clockwise).
(c) Check that there is no clearance between the gear fringe and the camshaft.
(d) Tighten the flange bolt with the camshaft timing gear fixed.
Torque: 64 N*m (653 kgf*cm, 47 ft.*lbf)
NOTICE:
- **Do not lock the camshaft timing gear assembly when tightening the bolt.**
- **Release the lock pin of the camshaft timing gear assembly first, and tighten the bolt when the lock pin is locked in the most retarded position.**
- **Tightening the bolts with the lock pin locked could cause breakage of the lock pin.**

(e) Check that the camshaft timing gear assembly moves smoothly in the retard direction (clockwise) and is locked in the most retarded position.

26. INSTALL CAMSHAFT

(a) Apply a light coat of engine oil to the camshaft journals.
(b) Place the camshaft on the cylinder head with the timing mark on the camshaft timing gear facing upward.

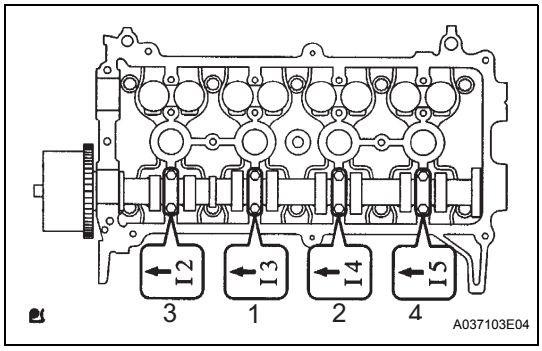

(c) Examine the front marks and numbers and tighten the bolts in the sequence shown in the illustration.
Torque: 13 N*m (129 kgf*cm, 9.4 ft.*lbf)
NOTICE:
Tighten each bolt uniformly while keeping the camshaft level.

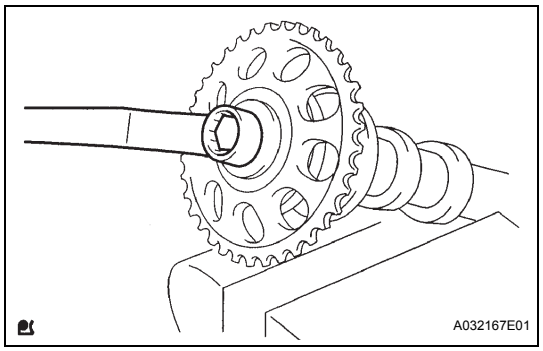

27. INSTALL CAMSHAFT TIMING SPROCKET

(a) Clamp the camshaft in a vice.

(b) Align the knock pin hole in the camshaft timing sprocket with the knock pin of the camshaft, and install the camshaft timing sprocket.
Torque: 64 N*m (653 kgf*cm, 47 ft.*lbf)
NOTICE:
Do not damage the camshaft.

28. INSTALL NO. 2 CAMSHAFT

(a) Apply a light coat of engine oil to the camshaft journals.

(b) Place the camshaft on the cylinder head with the timing mark on the camshaft timing gear facing upward.

(c) Examine the front marks and numbers on camshaft bearing caps No. 1 and No. 2 and check that the sequence is as shown in the illustration. Then uniformly tighten the bolts, in several steps, in the sequence shown in the illustration.
Torque: 13 N*m (129 kgf*cm, 9.4 ft.*lbf) for bearing cap No. 2
23 N*m (235 kgf*cm, 17 ft.*lbf) for bearing cap No. 1
NOTICE:
Tighten each bolt uniformly while keeping the camshaft level.

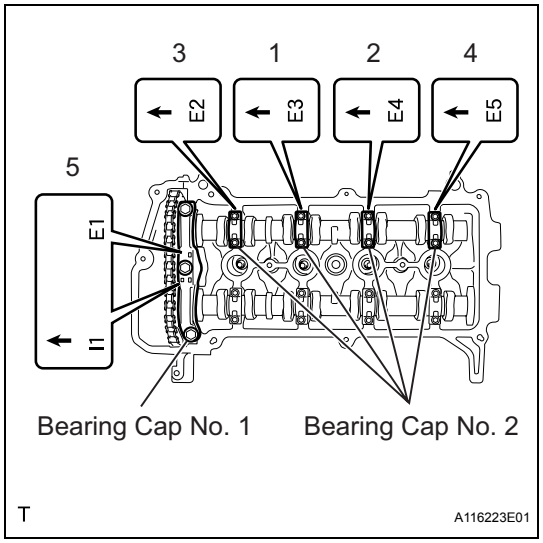

29. INSTALL CAMSHAFT POSITION SENSOR

(a) Apply engine oil to the O-ring.
NOTICE:
If the O-ring is damaged, replace the camshaft position sensor.

(b) Install the camshaft position sensor with the bolt.
Torque: 8.0 N*m (82 kgf*cm, 71 in.*lbf)

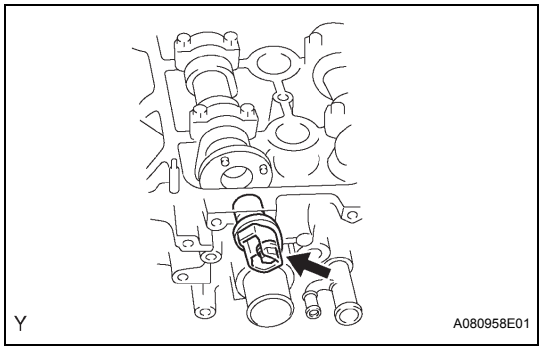

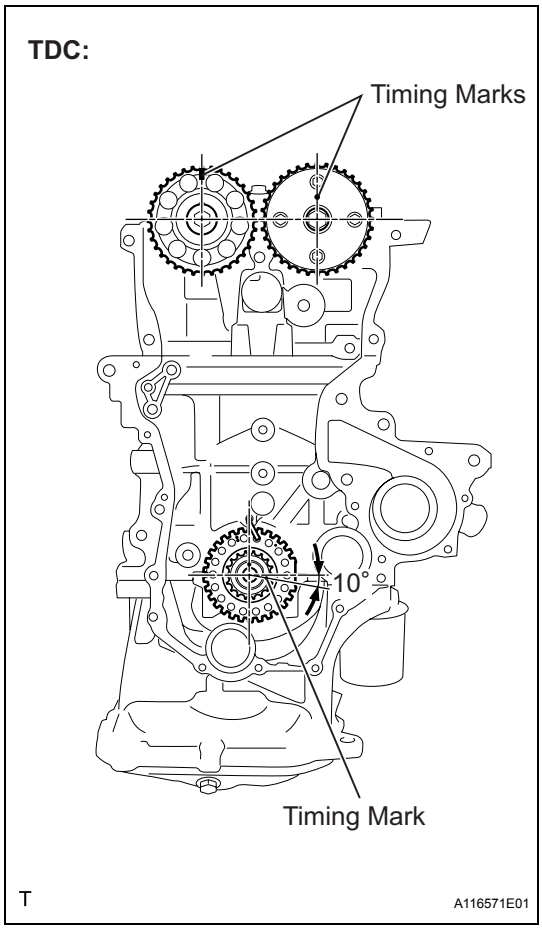

30. INSTALL CHAIN SUB-ASSEMBLY

(a) Make sure that all the timing marks are in the positions (TDC) shown in the illustration.
HINT:
The positions of the timing marks may differ from the predetermined positions due to the force of the valve spring.

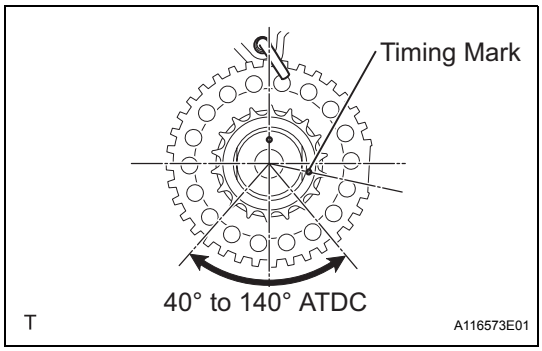

(b) Set the timing mark of the crankshaft in a position between 40 and 140°ATDC, as illustrated.

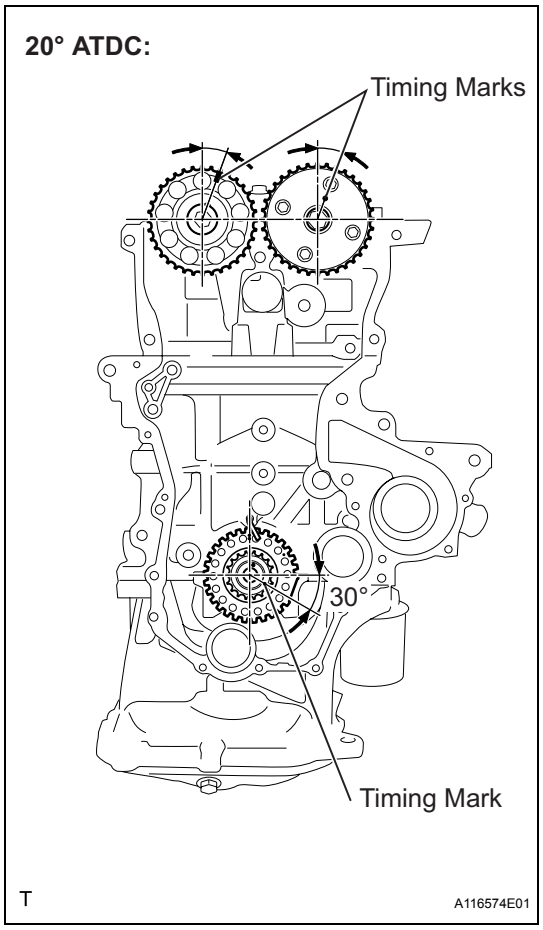

(c) Set the camshaft timing gear and the camshaft timing sprocket in the positions (20°ATDC) shown in the illustration.

(d) Set the crankshaft in the position (20°ATDC) shown in the illustration.

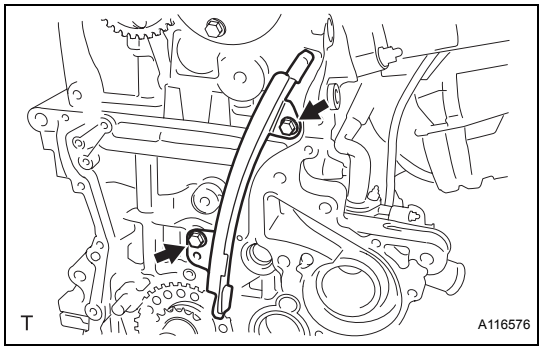

(e) Install chain vibration damper No. 1 with the 2 bolts.
Torque: 9.0 N*m (92 kgf*cm, 80 in.*lbf)

EM

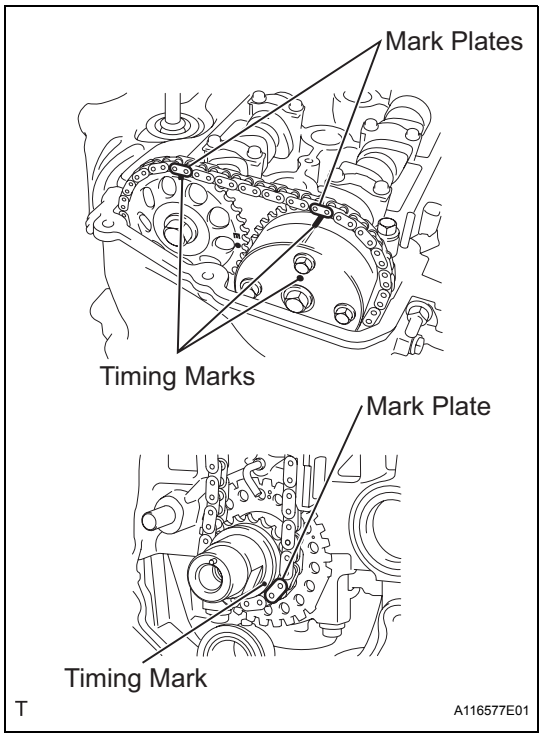

(f) Align the timing marks of the camshaft with the mark plates of the timing chain and install the timing chain.
HINT:
Align the timing marks with the mark plates while turning the hexagonal service portion of the camshaft using a wrench.

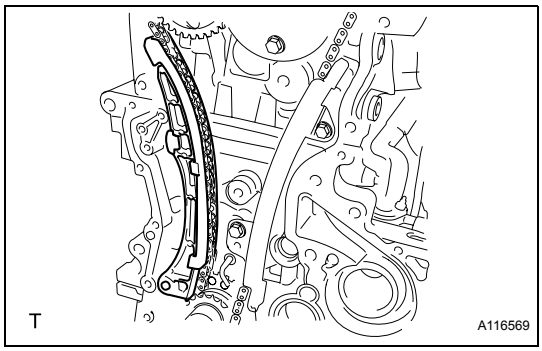

31. INSTALL CHAIN TENSIONER SLIPPER

(a) Install the chain tensioner slipper.

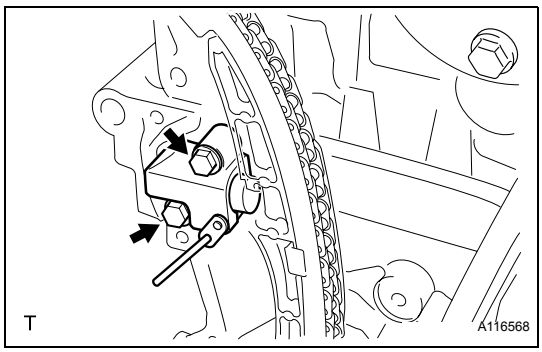

32. INSTALL CHAIN TENSIONER ASSEMBLY NO. 1

(a) Install chain tensioner assembly No. 1 with the 2 bolts.
Torque: 9.0 N*m (92 kgf*cm, 80 in.*lbf)

(b) Remove the bar from chain tensioner assembly No. 1.

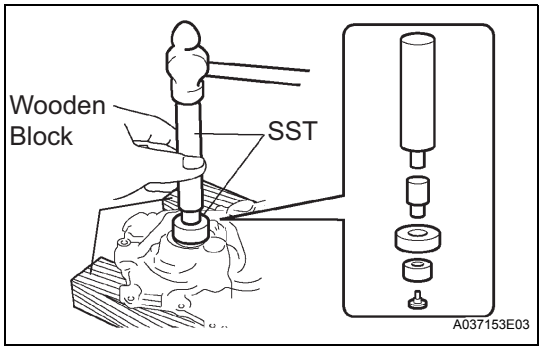

33. INSTALL OIL PUMP SEAL

(a) Using SST and a hammer, tap in a new oil seal until its surface is flush with the timing chain cover edge.
SST 09950-60010 (09951-00250, 09951-00380, 09952-06010), 09950-70010 (09951-07100)
NOTICE:
- **Do not tap the oil seal at an angle.**
- **Keep the seal lip free of foreign matter.**

(b) Apply MP grease to the oil seal lip.

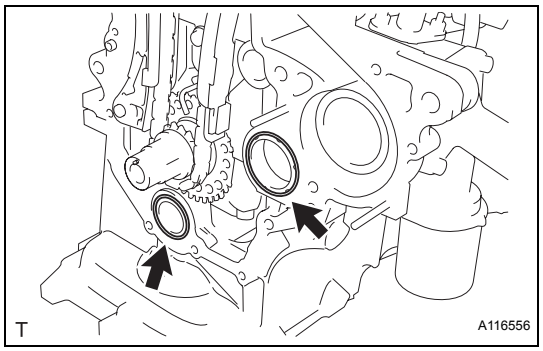

34. INSTALL OIL PUMP ASSEMBLY

(a) Install 2 new O-rings in the 2 locations shown in the illustration.

(b) Apply seal packing to the oil pump assembly, cylinder head and cylinder block as shown in the illustration.

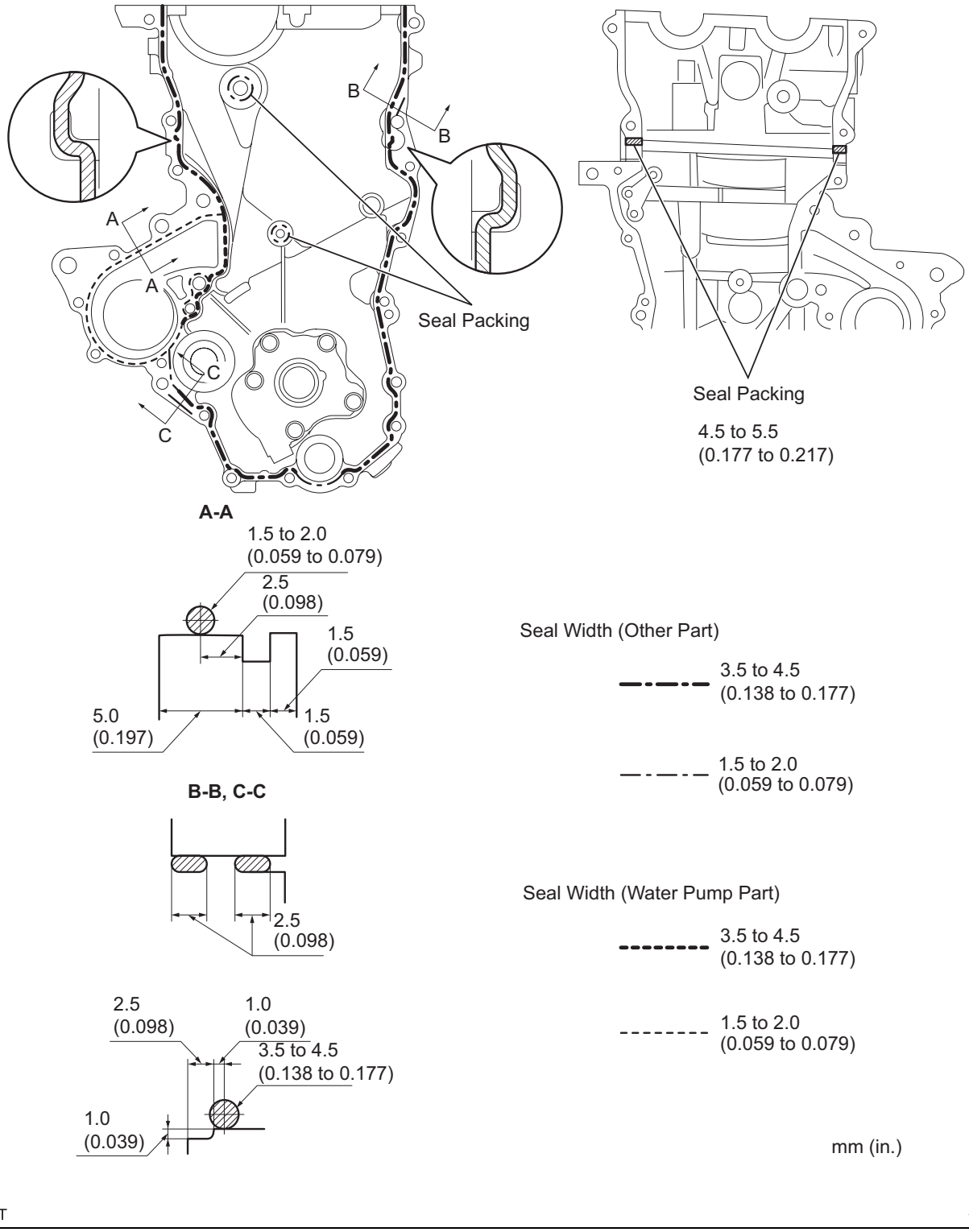

Seal packing:
Water pump part Toyota Genuine Seal Packing 1282B, Three Bond 1282B or Equivalent
Other part Toyota Genuine Seal Packing Black, Three Bond 1207B or Equivalent

NOTICE:
- **Remove any oil from the contact surface.**
- **Install the oil pump assembly within 3 minutes and tighten the bolts and nut within 15 minutes of applying the the seal packing.**
- **Do not expose the seal to engine oil for at least 2 hours after the installation.**

(c) Align the keyway of the oil pump rotor with the rectangular portion of the crankshaft, and slide the oil pump into place.

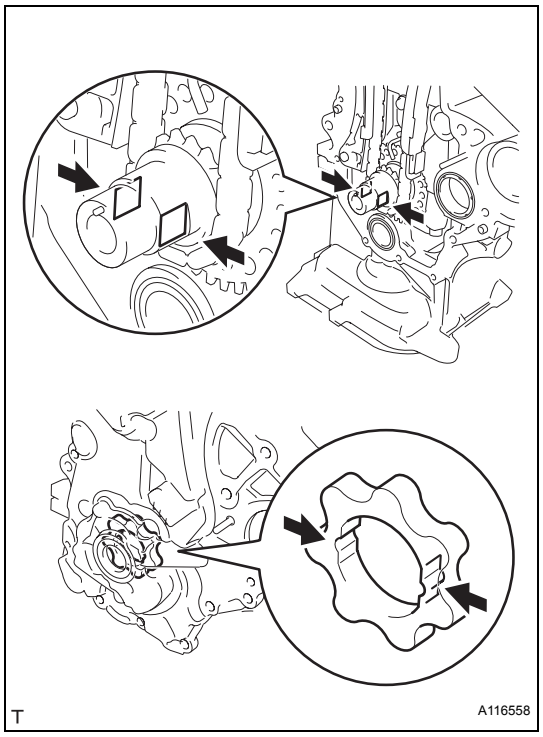

(d) Install the oil pump assembly with the 15 bolts and nut. Tighten the bolts and nut uniformly in several steps.

Torque: 32 N*m (326 kgf*cm, 24 ft.*lbf) for bolt A
11 N*m (112 kgf*cm, 8.1 ft.*lbf) for bolt B
11 N*m (112 kgf*cm, 8.1 ft.*lbf) for bolt C
24 N*m (245 kgf*cm, 18 ft.*lbf) for nut D
24 N*m (245 kgf*cm, 18 ft.*lbf) for bolt E

NOTICE:
Install the mounting bracket and water pump within 15 minutes of installing the oil pump assembly.

HINT:
Each bolt length is as follows.
A: 30 mm (1.181 in.)
B: 35 mm (1.378 in.)
C: 20 mm (0.787 in.)
E: 20 to 14 mm (0.787 to 0.551 in.) Double ended bolt

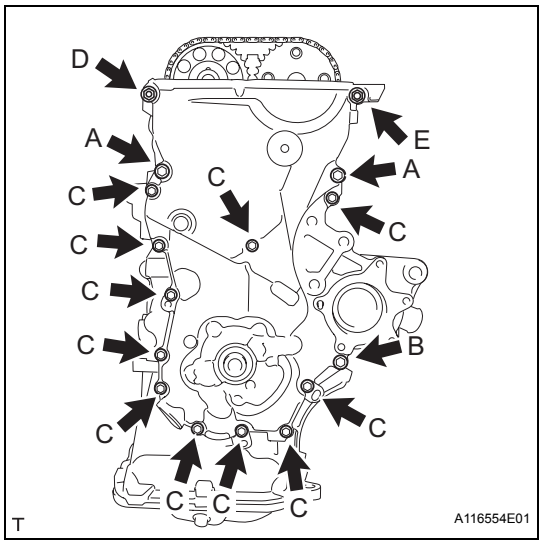

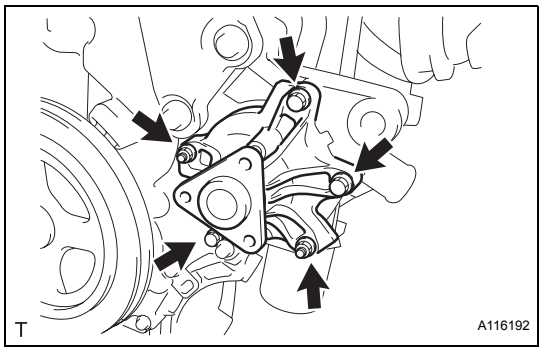

35. INSTALL WATER PUMP ASSEMBLY

(a) Install the water pump and a new gasket with the 3 bolts and 2 nuts.
Torque: 11 N*m (112 kgf*cm, 8.1 ft.*lbf)

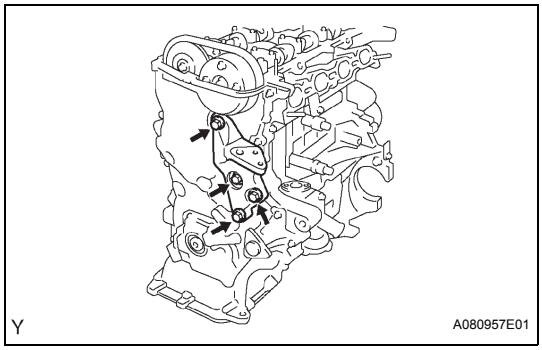

36. INSTALL TRANSVERSE ENGINE ENGINE MOUNTING BRACKET

(a) Install the transverse engine mounting bracket with the 4 bolts.
Torque: 55 N*m (561 kgf*cm, 41 ft.*lbf)

37. INSTALL CRANKSHAFT DAMPER SUB-ASSEMBLY

(a) Align the pin hole in the crankshaft damper with the pin position and install the crankshaft damper sub-assembly.

(b) Provisionally install the bolt.

(c) Using 2 SSTs, tighten the bolt while holding the crankshaft damper sub-assembly.
SST 09213-14010 (91651-60865), 09330-00021
Torque: 128 N*m (1305 kgf*cm, 95 ft.*lbf)
NOTICE:
Check the SST installation positions when installing them, to avoid the SST fixing bolts from coming into contact with the oil pump assembly.

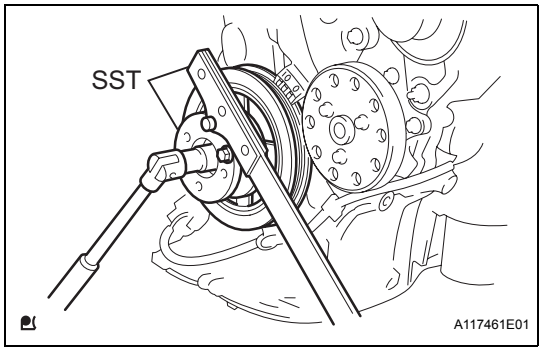

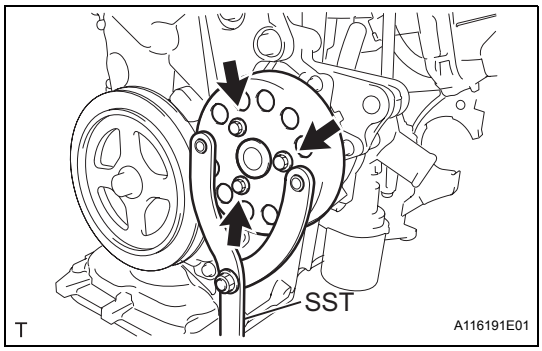

38. INSTALL WATER PUMP PULLEY

(a) Using SST, install the pump pulley with the 3 bolts.
SST 09960-10010 (09962-01000, 09963-00700)
Torque: 15 N*m (153 kgf*cm, 11 ft.*lbf)

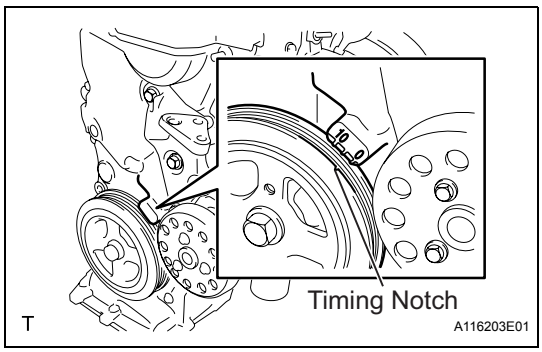

39. INSPECT VALVE CLEARANCE

(a) Set the No. 1 cylinder to TDC/compression.

(1) Turn the crankshaft damper, and align its timing notch with the timing mark "0" of the oil pump.

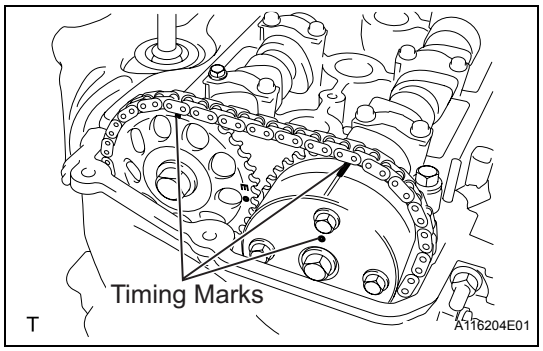

(2) Check that the timing marks on the camshaft timing sprocket and camshaft timing gear are all facing upward, as shown in the illustration.
HINT:
If not, turn the crankshaft 1 complete revolution (360°) and align the marks as above.

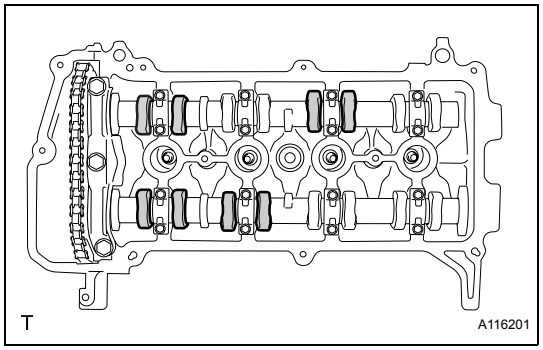

(b) Check the valves indicated in the illustration.
(1) Using a feeler gauge, measure the clearance between the valve lifter and camshaft.
Valve clearance (cold):
for intake:
0.15 to 0.25 mm (0.006 to 0.010 in.)
for exhaust:
0.25 to 0.35 mm (0.010 to 0.014 in.)
(2) Record any out-of-specification valve clearance measurements. They will be used later to determine the required replacement adjusting shim.

(c) Turn the crankshaft 1 complete revolution (360°) and align its timing notch with timing mark "0" of the oil pump.

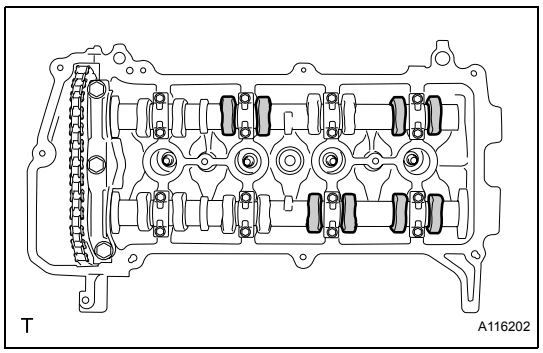

(d) Check the valves indicated in the illustration.
(1) Using a feeler gauge, measure the clearance between the valve lifter and camshaft.
Valve clearance (cold):
for Intake:
0.15 to 0.25 mm (0.006 to 0.010 in.)
for Exhaust:
0.25 to 0.35 mm (0.010 to 0.014 in.)
(2) Record any out-of-specification valve clearance measurements. They will be used later to determine the required replacement adjusting shim.

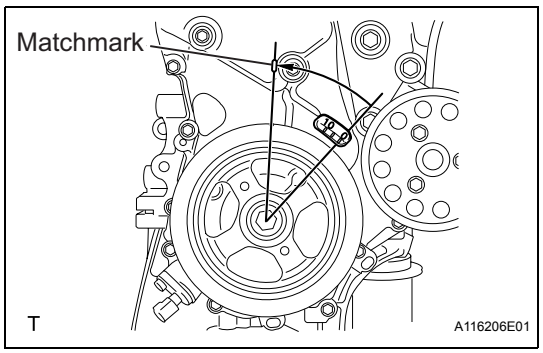

40. ADJUST VALVE CLEARANCE
NOTICE:
When rotating the camshaft with the timing chain removed, rotate the crankshaft damper counterclockwise 40° from the TDC and align its timing notch with the matchmark of the timing chain cover to prevent the pistons from coming into contact with the valves.

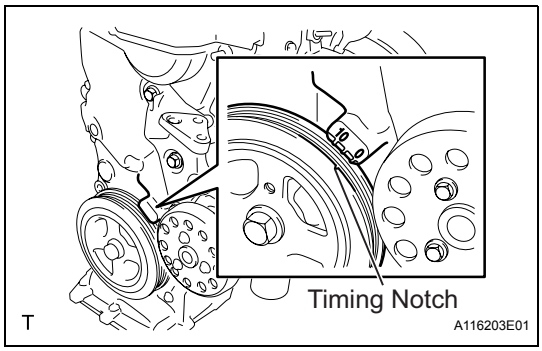

(a) Set the No. 1 cylinder to TDC/compression.
(1) Turn the crankshaft damper, and align its timing notch with timing mark "0" of the oil pump.

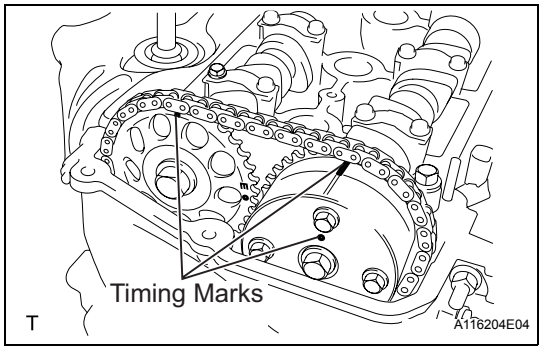

(2) Check that the timing marks on the camshaft timing sprocket and camshaft timing gear are all facing upward as shown in the illustration.
HINT:
If not, turn the crankshaft 1 complete revolution (360°) and align the marks as above.

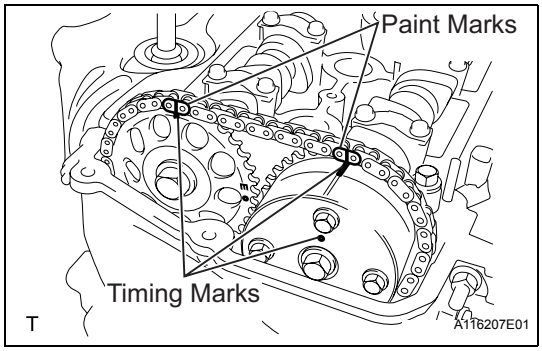

(b) Put paint marks on the chain in the places where the timing marks of the camshaft timing sprocket and the camshaft timing gear are located.

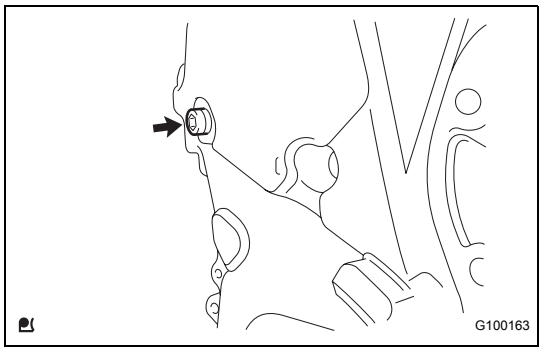

(c) Using an 8 mm hexagon wrench, remove the screw plug.

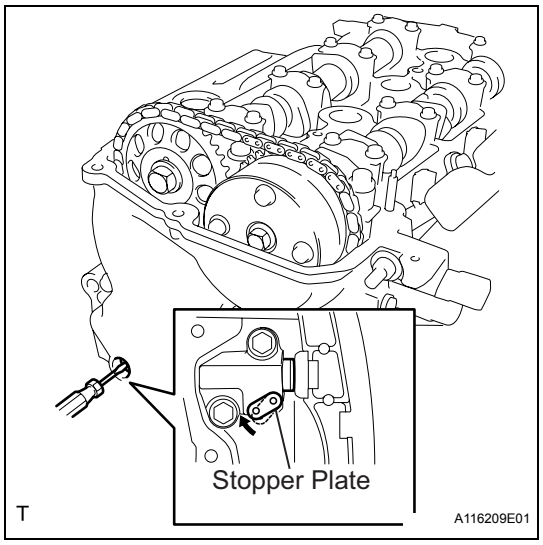

(d) Insert a screwdriver into the service hole in the chain tensioner to pull the stopper plate of the chain tensioner upward.

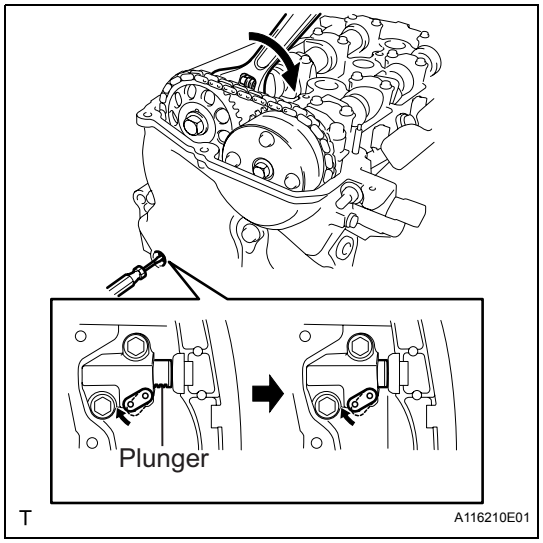

(e) Using a wrench, rotate the No. 2 camshaft clockwise to push in the plunger of the chain tensioner.

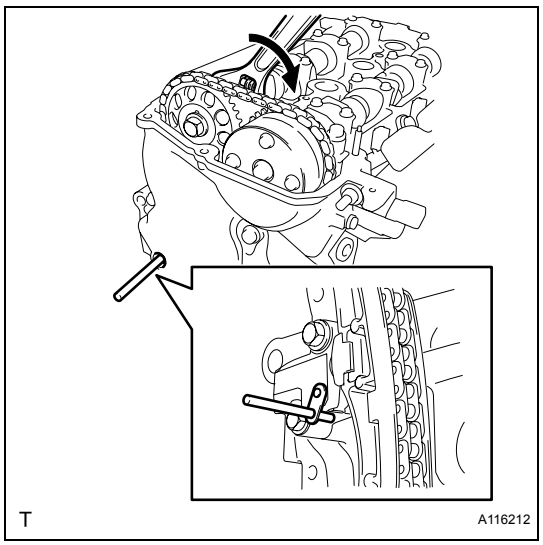

(f) Remove the screwdriver from the service hole, then align the hole in the stopper plate with the service hole and insert a 3 mm (0.12 in.) diameter bar into the holes to hold the stopper plate.
HINT:
- Fix the stopper plate using the bar while rotating the camshaft right and left slightly.
- Hold the bar with tape so that it does not come out.

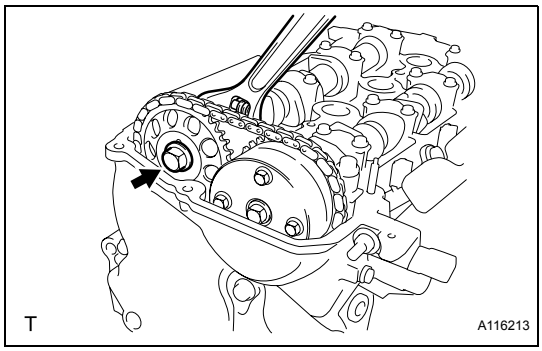

(g) Using a wrench, hold the hexagonal lobe of No. 2 camshaft and remove the flange bolt.

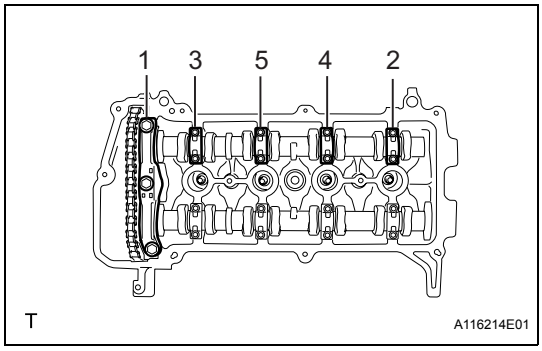

(h) Using several steps, loosen and remove the 11 bearing cap bolts uniformly in the sequence shown in the illustration, then remove camshaft bearing cap No. 1 and camshaft bearing cap No. 2.
NOTICE:
Loosen each bolt uniformly while keeping the camshaft level.

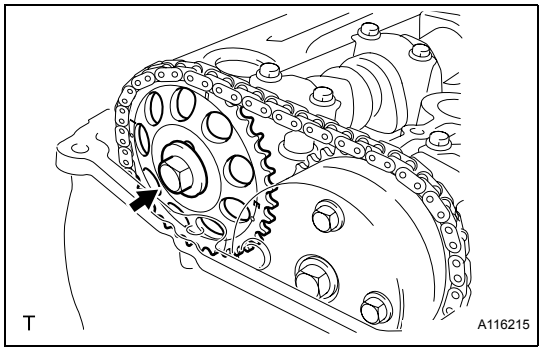

(i) Remove the flange bolt and remove the camshaft timing sprocket.

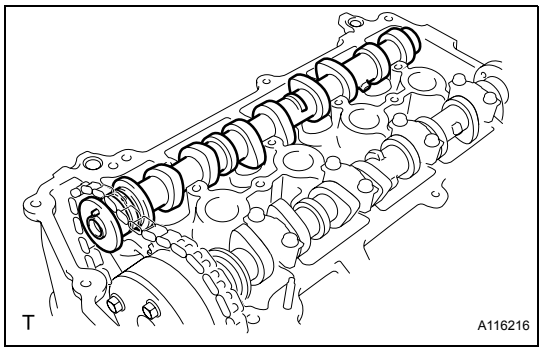

(j) Remove the No. 2 camshaft.

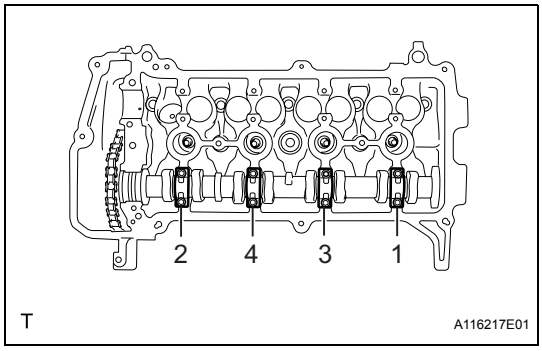

(k) Using several steps, loosen and remove the 8 bearing cap bolts uniformly in the sequence shown in the illustration, then remove camshaft bearing cap No. 2.
NOTICE:
Loosen the bolts uniformly while keeping the camshaft level.

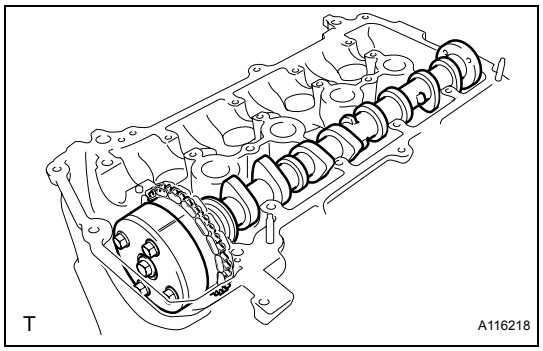

(l) Hold the chain by hand, and remove the camshaft and the camshaft timing gear assembly.

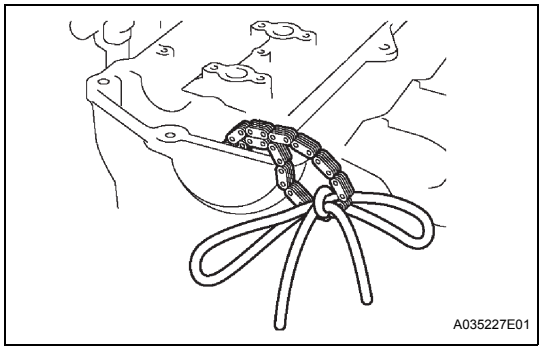

(m) Tie the chain with a piece of string as shown in the illustration.
(n) Remove the valve lifters.

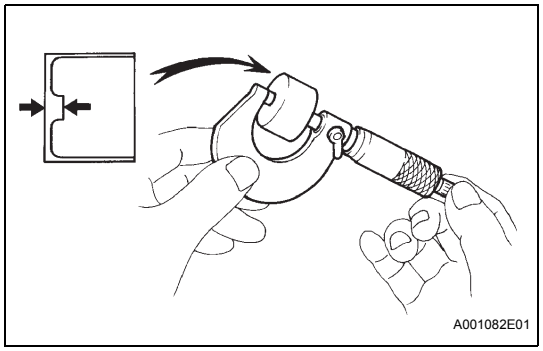

(o) Using a micrometer, measure the thickness of the removed lifter.
(p) Calculate the thickness of the new lifter so that the valve clearance comes to within the specified values.

A	Thickness of new lifter
B	Thickness of used lifter
C	Measured valve clearance

Valve clearance:
Intake A = B + (C - 0.20 mm (0.008 in.))
Exhaust A = B + (C - 0.30 mm (0.012 in.))

(q) Select a new lifter with a thickness as close to the calculated values as possible.
HINT:
Lifters are available in 35 sizes in increments of 0.020 mm (0.0008 in.), from 5.060 mm (0.1992 in.) to 5.740 mm (0.2260 in.).

EM

EM

Installed lifter thickness mm(in.) \ Measured clearance mm(in.)	0.000 - 0.030 (0.0000 - 0.0012)	0.031 - 0.050 (0.0012 - 0.0020)	0.051 - 0.070 (0.0020 - 0.0028)	0.071 - 0.090 (0.0028 - 0.0035)	0.091 - 0.110 (0.0036 - 0.0043)	0.111 - 0.130 (0.0044 - 0.0051)	0.131 - 0.149 (0.0052 - 0.0059)	0.150 - 0.250 (0.0059 - 0.0098)	0.251 - 0.270 (0.0099 - 0.0106)	0.271 - 0.290 (0.0107 - 0.0114)	0.291 - 0.310 (0.0115 - 0.0122)	0.311 - 0.330 (0.0122 - 0.0130)	0.331 - 0.350 (0.0130 - 0.0138)	0.351 - 0.370 (0.0138 - 0.0146)	0.371 - 0.390 (0.0146 - 0.0154)	0.391 - 0.410 (0.0154 - 0.0161)	0.411 - 0.430 (0.0162 - 0.0169)	0.431 - 0.450 (0.0170 - 0.0177)	0.451 - 0.470 (0.0178 - 0.0185)	0.471 - 0.490 (0.0185 - 0.0193)	0.491 - 0.510 (0.0193 - 0.0201)	0.511 - 0.530 (0.0201 - 0.0209)	0.531 - 0.550 (0.0209 - 0.0217)	0.551 - 0.570 (0.0217 - 0.0224)	0.571 - 0.590 (0.0225 - 0.0232)	0.591 - 0.610 (0.0233 - 0.0240)	0.611 - 0.630 (0.0241 - 0.0248)	0.631 - 0.650 (0.0248 - 0.0256)	0.651 - 0.670 (0.0256 - 0.0264)	0.671 - 0.690 (0.0264 - 0.0272)	0.691 - 0.710 (0.0272 - 0.0280)	0.711 - 0.730 (0.0280 - 0.0287)	0.731 - 0.750 (0.0288 - 0.0295)	0.751 - 0.770 (0.0296 - 0.0303)	0.771 - 0.790 (0.0304 - 0.0311)	0.791 - 0.810 (0.0311 - 0.0319)	0.811 - 0.830 (0.0319 - 0.0327)	0.831 - 0.850 (0.0327 - 0.0335)	0.851 - 0.870 (0.0335 - 0.0343)	0.871 - 0.890 (0.0343 - 0.0350)	0.891 - 0.910 (0.0351 - 0.0358)	0.911 - 0.930 (0.0359 - 0.0366)
5.060 (0.1992)									12	14	16	18	20	22	24	26	28	30	32	34	36	38	40	42	44	46	48	50	52	54	56	58	60	62	64	66	68	70	72	74	74	74	74
5.080 (0.2000)							06		14	16	18	20	22	24	26	28	30	32	34	36	38	40	42	44	46	48	50	52	54	56	58	60	62	64	66	68	70	72	74	74	74	
5.100 (0.2008)						06	06		16	18	20	22	24	26	28	30	32	34	36	38	40	42	44	46	48	50	52	54	56	58	60	62	64	66	68	70	72	74	74	74		
5.120 (0.2016)					06	06	06		18	20	22	24	26	28	30	32	34	36	38	40	42	44	46	48	50	52	54	56	58	60	62	64	66	68	70	72	74	74	74			
5.140 (0.2024)				06	06	06	08		20	22	24	26	28	30	32	34	36	38	40	42	44	46	48	50	52	54	56	58	60	62	64	66	68	70	72	74	74	74				
5.160 (0.2031)			06	06	06	08	10		22	24	26	28	30	32	34	36	38	40	42	44	46	48	50	52	54	56	58	60	62	64	66	68	70	72	74	74	74					
5.180 (0.2039)		06	06	06	08	10	12		24	26	28	30	32	34	36	38	40	42	44	46	48	50	52	54	56	58	60	62	64	66	68	70	72	74	74	74						
5.200 (0.2047)		06	06	08	10	12	14		26	28	30	32	34	36	38	40	42	44	46	48	50	52	54	56	58	60	62	64	66	68	70	72	74	74	74							
5.210 (0.2051)	06	06	08	10	12	14	16		28	30	32	34	36	38	40	42	44	46	48	50	52	54	56	58	60	62	64	66	68	70	72	74	74	74								
5.220 (0.2055)	06	06	08	10	12	14	16		28	30	32	34	36	38	40	42	44	46	48	50	52	54	56	58	60	62	64	66	68	70	72	74	74	74								
5.230 (0.2059)	06	08	10	12	14	16	18		30	32	34	36	38	40	42	44	46	48	50	52	54	56	58	60	62	64	66	68	70	72	74	74	74									
5.240 (0.2063)	06	08	10	12	14	16	18		30	32	34	36	38	40	42	44	46	48	50	52	54	56	58	60	62	64	66	68	70	72	74	74	74									
5.250 (0.2067)	06	10	12	14	16	18	20		32	34	36	38	40	42	44	46	48	50	52	54	56	58	60	62	64	66	68	70	72	74	74	74										
5.260 (0.2071)	08	10	12	14	16	18	20		32	34	36	38	40	42	44	46	48	50	52	54	56	58	60	62	64	66	68	70	72	74	74	74										
5.270 (0.2075)	10	12	14	16	18	20	22		34	36	38	40	42	44	46	48	50	52	54	56	58	60	62	64	66	68	70	72	74	74	74											
5.280 (0.2079)	10	12	14	16	18	20	22		34	36	38	40	42	44	46	48	50	52	54	56	58	60	62	64	66	68	70	72	74	74	74											
5.290 (0.2083)	12	14	16	18	20	22	24		36	38	40	42	44	46	48	50	52	54	56	58	60	62	64	66	68	70	72	74	74	74												
5.300 (0.2087)	12	14	16	18	20	22	24		36	38	40	42	44	46	48	50	52	54	56	58	60	62	64	66	68	70	72	74	74	74												
5.310 (0.2091)	14	16	18	20	22	24	26		38	40	42	44	46	48	50	52	54	56	58	60	62	64	66	68	70	72	74	74	74													
5.320 (0.2094)	14	16	18	20	22	24	26		38	40	42	44	46	48	50	52	54	56	58	60	62	64	66	68	70	72	74	74	74													
5.330 (0.2098)	16	18	20	22	24	26	28		40	42	44	46	48	50	52	54	56	58	60	62	64	66	68	70	72	74	74	74														
5.340 (0.2102)	16	18	20	22	24	26	28		40	42	44	46	48	50	52	54	56	58	60	62	64	66	68	70	72	74	74	74														
5.350 (0.2106)	18	20	22	24	26	28	30		42	44	46	48	50	52	54	56	58	60	62	64	66	68	70	72	74	74	74															
5.360 (0.2110)	18	20	22	24	26	28	30		42	44	46	48	50	52	54	56	58	60	62	64	66	68	70	72	74	74	74															
5.370 (0.2114)	20	22	24	26	28	30	32		44	46	48	50	52	54	56	58	60	62	64	66	68	70	72	74	74	74																
5.380 (0.2118)	20	22	24	26	28	30	32		44	46	48	50	52	54	56	58	60	62	64	66	68	70	72	74	74	74																
5.390 (0.2122)	22	24	26	28	30	32	34		46	48	50	52	54	56	58	60	62	64	66	68	70	72	74	74	74																	
5.400 (0.2126)	22	24	26	28	30	32	34		46	48	50	52	54	56	58	60	62	64	66	68	70	72	74	74	74																	
5.410 (0.2130)	24	26	28	30	32	34	36		48	50	52	54	56	58	60	62	64	66	68	70	72	74	74	74																		
5.420 (0.2134)	24	26	28	30	32	34	36		48	50	52	54	56	58	60	62	64	66	68	70	72	74	74	74																		
5.430 (0.2138)	26	28	30	32	34	36	38		50	52	54	56	58	60	62	64	66	68	70	72	74	74	74																			
5.440 (0.2142)	26	28	30	32	34	36	38		50	52	54	56	58	60	62	64	66	68	70	72	74	74	74																			
5.450 (0.2146)	28	30	32	34	36	38	40		52	54	56	58	60	62	64	66	68	70	72	74	74	74																				
5.460 (0.2150)	28	30	32	34	36	38	40		52	54	56	58	60	62	64	66	68	70	72	74	74	74																				
5.470 (0.2154)	30	32	34	36	38	40	42		54	56	58	60	62	64	66	68	70	72	74	74	74																					
5.480 (0.2157)	30	32	34	36	38	40	42		54	56	58	60	62	64	66	68	70	72	74	74	74																					
5.490 (0.2161)	32	34	36	38	40	42	44		56	58	60	62	64	66	68	70	72	74	74	74																						
5.500 (0.2165)	32	34	36	38	40	42	44		56	58	60	62	64	66	68	70	72	74	74	74																						
5.510 (0.2169)	34	36	38	40	42	44	46		58	60	62	64	66	68	70	72	74	74	74																							
5.520 (0.2173)	34	36	38	40	42	44	46		58	60	62	64	66	68	70	72	74	74	74																							
5.530 (0.2177)	36	38	40	42	44	46	48		60	62	64	66	68	70	72	74	74	74																								
5.540 (0.2181)	36	38	40	42	44	46	48		60	62	64	66	68	70	72	74	74	74																								
5.550 (0.2185)	38	40	42	44	46	48	50		62	64	66	68	70	72	74	74	74																									
5.560 (0.2189)	38	40	42	44	46	48	50		62	64	66	68	70	72	74	74	74																									
5.570 (0.2193)	40	42	44	46	48	50	52		64	66	68	70	72	74	74	74																										
5.580 (0.2197)	40	42	44	46	48	50	52		64	66	68	70	72	74	74	74																										
5.590 (0.2201)	42	44	46	48	50	52	54		66	68	70	72	74	74	74	74																										
5.600 (0.2205)	42	44	46	48	50	52	54		66	68	70	72	74	74	74																										
5.620 (0.2213)	44	46	48	50	52	54	56		68	70	72	74	74	74																										
5.640 (0.2220)	46	48	50	52	54	56	58		70	72	74	74	74																										
5.660 (0.2228)	48	50	52	54	56	58	60		72	74	74	74																										
5.680 (0.2236)	50	52	54	56	58	60	62		74	74	74																										
5.700 (0.2244)	52	54	56	58	60	62	64		74	74																											
5.720 (0.2252)	54	56	58	60	62	64	66		74																												
5.740 (0.2260)	56	58	60	62	64	66	68																														

T

A117457

Intake valve clearance (cold):
0.15 to 0.25 mm (0.006 to 0.010 in.)
EXAMPLE:
A 5.250 mm (0.2067 in.) lifter is installed, and the measured clearance is 0.400 mm (0.0158 in.). Replace the 5.250 mm (0.2067 in.) lifter with a new No. 46 lifter.

New Shim Thickness

Shim No.	Thickness	Shim No.	Thickness	Shim No.	Thickness
06	5.060 (0.1992)	30	5.300 (0.2087)	54	5.540 (0.2181)
08	5.080 (0.2000)	32	5.320 (0.2094)	56	5.560 (0.2189)
10	5.100 (0.2008)	34	5.340 (0.2102)	58	5.580 (0.2197)
12	5.120 (0.2016)	36	5.360 (0.2110)	60	5.600 (0.2205)
14	5.140 (0.2024)	38	5.380 (0.2118)	62	5.620 (0.2213)
16	5.160 (0.2031)	40	5.400 (0.2126)	64	5.640 (0.2220)
18	5.180 (0.2039)	42	5.420 (0.2134)	66	5.660 (0.2228)
20	5.200 (0.2047)	44	5.440 (0.2142)	68	5.680 (0.2236)
22	5.220 (0.2055)	46	5.460 (0.2150)	70	5.700 (0.2244)
24	5.240 (0.2063)	48	5.480 (0.2157)	72	5.720 (0.2252)
26	5.260 (0.2071)	50	5.500 (0.2165)	74	5.740 (0.2260)
28	5.280 (0.2079)	52	5.520 (0.2173)		

EM

Installed lifter thickness mm(in.) \ Measured clearance mm(in.)	0.000 - 0.030 (0.0000 - 0.0012)	0.031 - 0.050 (0.0012 - 0.0020)	0.051 - 0.070 (0.0020 - 0.0028)	0.071 - 0.090 (0.0028 - 0.0035)	0.091 - 0.110 (0.0036 - 0.0043)	0.111 - 0.130 (0.0044 - 0.0051)	0.131 - 0.150 (0.0052 - 0.0059)	0.151 - 0.170 (0.0059 - 0.0067)	0.171 - 0.190 (0.0067 - 0.0075)	0.191 - 0.210 (0.0075 - 0.0083)	0.211 - 0.230 (0.0083 - 0.0091)	0.231 - 0.249 (0.0091 - 0.0098)	0.250 - 0.350 (0.0098 - 0.0138)	0.351 - 0.370 (0.0138 - 0.0146)	0.371 - 0.390 (0.0146 - 0.0154)	0.391 - 0.410 (0.0154 - 0.0161)	0.411 - 0.430 (0.0162 - 0.0169)	0.431 - 0.450 (0.0170 - 0.0177)	0.451 - 0.470 (0.0178 - 0.0185)	0.471 - 0.490 (0.0185 - 0.0193)	0.491 - 0.510 (0.0193 - 0.0201)	0.511 - 0.530 (0.0201 - 0.0209)	0.531 - 0.550 (0.0209 - 0.0217)	0.551 - 0.570 (0.0217 - 0.0224)	0.571 - 0.590 (0.0225 - 0.0232)	0.591 - 0.610 (0.0233 - 0.0240)	0.611 - 0.630 (0.0241 - 0.0248)	0.631 - 0.650 (0.0248 - 0.0256)	0.651 - 0.670 (0.0256 - 0.0264)	0.671 - 0.690 (0.0264 - 0.0272)	0.691 - 0.710 (0.0272 - 0.0280)	0.711 - 0.730 (0.0280 - 0.0287)	0.731 - 0.750 (0.0288 - 0.0295)	0.751 - 0.770 (0.0296 - 0.0303)	0.771 - 0.790 (0.0304 - 0.0311)	0.791 - 0.810 (0.0311 - 0.0319)	0.811 - 0.830 (0.0319 - 0.0327)	0.831 - 0.850 (0.0327 - 0.0335)	0.851 - 0.870 (0.0335 - 0.0343)	0.871 - 0.890 (0.0343 - 0.0350)	0.891 - 0.910 (0.0351 - 0.0358)	0.911 - 0.930 (0.0359 - 0.0366)	0.931 - 0.950 (0.0367 - 0.0374)	0.951 - 0.970 (0.0374 - 0.0382)	0.971 - 0.990 (0.0382 - 0.0390)	0.991 - 1.010 (0.0390 - 0.0398)	1.011 - 1.030 (0.0398 - 0.0406)
5.060 (0.1992)														12	14	16	18	20	22	24	26	28	30	32	34	36	38	40	42	44	46	48	50	52	54	56	58	60	62	64	66	68	70	72	74	74	74
5.080 (0.2000)												06		14	16	18	20	22	24	26	28	30	32	34	36	38	40	42	44	46	48	50	52	54	56	58	60	62	64	66	68	70	72	74	74	74	
5.100 (0.2008)											06	06		16	18	20	22	24	26	28	30	32	34	36	38	40	42	44	46	48	50	52	54	56	58	60	62	64	66	68	70	72	74	74	74		
5.120 (0.2016)										06	06	06		18	20	22	24	26	28	30	32	34	36	38	40	42	44	46	48	50	52	54	56	58	60	62	64	66	68	70	72	74	74	74			
5.140 (0.2024)									06	06	06	08		20	22	24	26	28	30	32	34	36	38	40	42	44	46	48	50	52	54	56	58	60	62	64	66	68	70	72	74	74	74				
5.160 (0.2031)								06	06	06	08	10		22	24	26	28	30	32	34	36	38	40	42	44	46	48	50	52	54	56	58	60	62	64	66	68	70	72	74	74	74					
5.180 (0.2039)								06	06	08	10	12		24	26	28	30	32	34	36	38	40	42	44	46	48	50	52	54	56	58	60	62	64	66	68	70	72	74	74	74						
5.200 (0.2047)							06	06	08	10	12	14		26	28	30	32	34	36	38	40	42	44	46	48	50	52	54	56	58	60	62	64	66	68	70	72	74	74	74							
5.210 (0.2051)						06	06	08	10	12	14	16		28	30	32	34	36	38	40	42	44	46	48	50	52	54	56	58	60	62	64	66	68	70	72	74	74	74								
5.220 (0.2055)						06	06	08	10	12	14	16		28	30	32	34	36	38	40	42	44	46	48	50	52	54	56	58	60	62	64	66	68	70	72	74	74	74								
5.230 (0.2059)				06	06	08	10	12	14	16	18			30	32	34	36	38	40	42	44	46	48	50	52	54	56	58	60	62	64	66	68	70	72	74	74	74									
5.240 (0.2063)				06	06	06	08	10	12	14	16	18		30	32	34	36	38	40	42	44	46	48	50	52	54	56	58	60	62	64	66	68	70	72	74	74	74									
5.250 (0.2067)				06	06	06	10	12	14	16	18	20		32	34	36	38	40	42	44	46	48	50	52	54	56	58	60	62	64	66	68	70	72	74	74	74										
5.260 (0.2071)			06	06	06	08	10	12	14	16	18	20		32	34	36	38	40	42	44	46	48	50	52	54	56	58	60	62	64	66	68	70	72	74	74	74										
5.270 (0.2075)			06	06	08	10	12	14	16	18	20	22		34	36	38	40	42	44	46	48	50	52	54	56	58	60	62	64	66	68	70	72	74	74	74											
5.280 (0.2079)		06	06	06	08	10	12	14	16	18	20	22		34	36	38	40	42	44	46	48	50	52	54	56	58	60	62	64	66	68	70	72	74	74	74											
5.290 (0.2083)		06	06	08	10	12	14	16	18	20	22	24		36	38	40	42	44	46	48	50	52	54	56	58	60	62	64	66	68	70	72	74	74	74												
5.300 (0.2087)		06	06	08	10	12	14	16	18	20	22	24		36	38	40	42	44	46	48	50	52	54	56	58	60	62	64	66	68	70	72	74	74	74												
5.310 (0.2091)	06	06	08	10	12	14	16	18	20	22	24	26		38	40	42	44	46	48	50	52	54	56	58	60	62	64	66	68	70	72	74	74	74													
5.320 (0.2094)	06	06	08	10	12	14	16	18	20	22	24	26		38	40	42	44	46	48	50	52	54	56	58	60	62	64	66	68	70	72	74	74	74													
5.330 (0.2098)	06	08	10	12	14	16	18	20	22	24	26	28		40	42	44	46	48	50	52	54	56	58	60	62	64	66	68	70	72	74	74	74														
5.340 (0.2102)	06	08	10	12	14	16	18	20	22	24	26	28		40	42	44	46	48	50	52	54	56	58	60	62	64	66	68	70	72	74	74	74														
5.350 (0.2106)	08	10	12	14	16	18	20	22	24	26	28	30		42	44	46	48	50	52	54	56	58	60	62	64	66	68	70	72	74	74	74															
5.360 (0.2110)	08	10	12	14	16	18	20	22	24	26	28	30		42	44	46	48	50	52	54	56	58	60	62	64	66	68	70	72	74	74	74															
5.370 (0.2114)	10	12	14	16	18	20	22	24	26	28	30	32		44	46	48	50	52	54	56	58	60	62	64	66	68	70	72	74	74	74																
5.380 (0.2118)	10	12	14	16	18	20	22	24	26	28	30	32		44	46	48	50	52	54	56	58	60	62	64	66	68	70	72	74	74	74																
5.390 (0.2122)	12	14	16	18	20	22	24	26	28	30	32	34		46	48	50	52	54	56	58	60	62	64	66	68	70	72	74	74	74																	
5.400 (0.2126)	12	14	16	18	20	22	24	26	28	30	32	34		46	48	50	52	54	56	58	60	62	64	66	68	70	72	74	74	74																	
5.410 (0.2130)	14	16	18	20	22	24	26	28	30	32	34	36		48	50	52	54	56	58	60	62	64	66	68	70	72	74	74	74																		
5.420 (0.2134)	14	16	18	20	22	24	26	28	30	32	34	36		48	50	52	54	56	58	60	62	64	66	68	70	72	74	74	74																		
5.430 (0.2138)	16	18	20	22	24	26	28	30	32	34	36	38		50	52	54	56	58	60	62	64	66	68	70	72	74	74	74																			
5.440 (0.2142)	16	18	20	22	24	26	28	30	32	34	36	38		50	52	54	56	58	60	62	64	66	68	70	72	74	74	74																			
5.450 (0.2146)	18	20	22	24	26	28	30	32	34	36	38	40		52	54	56	58	60	62	64	66	68	70	72	74	74	74	74																			
5.460 (0.2150)	18	20	22	24	26	28	30	32	34	36	38	40		52	54	56	58	60	62	64	66	68	70	72	74	74	74																				
5.470 (0.2154)	20	22	24	26	28	30	32	34	36	38	40	42		54	56	58	60	62	64	66	68	70	72	74	74	74																				
5.480 (0.2157)	20	22	24	26	28	30	32	34	36	38	40	42		54	56	58	60	62	64	66	68	70	72	74	74	74																				
5.490 (0.2161)	22	24	26	28	30	32	34	36	38	40	42	44		56	58	60	62	64	66	68	70	72	74	74	74																					
5.500 (0.2165)	22	24	26	28	30	32	34	36	38	40	42	44		56	58	60	62	64	66	68	70	72	74	74	74																					
5.510 (0.2169)	24	26	28	30	32	34	36	38	40	42	44	46		58	60	62	64	66	68	70	72	74	74	74																						
5.520 (0.2173)	24	26	28	30	32	34	36	38	40	42	44	46		58	60	62	64	66	68	70	72	74	74	74																						
5.530 (0.2177)	26	28	30	32	34	36	38	40	42	44	46	48		60	62	64	66	68	70	72	74	74	74																							
5.540 (0.2181)	26	28	30	32	34	36	38	40	42	44	46	48		60	62	64	66	68	70	72	74	74	74																							
5.550 (0.2185)	28	30	32	34	36	38	40	42	44	46	48	50		62	64	66	68	70	72	74	74	74																								
5.560 (0.2189)	28	30	32	34	36	38	40	42	44	46	48	50		62	64	66	68	70	72	74	74	74																								
5.570 (0.2193)	30	32	34	36	38	40	42	44	46	48	50	52		64	66	68	70	72	74	74	74																									
5.580 (0.2197)	30	32	34	36	38	40	42	44	46	48	50	52		64	66	68	70	72	74	74	74																									
5.590 (0.2201)	32	34	36	38	40	42	44	46	48	50	52	54		66	68	70	72	74	74	74																									
5.600 (0.2205)	34	36	38	40	42	42	44	46	48	50	52	54		66	68	70	72	74	74	74																									
5.620 (0.2213)	34	36	38	40	42	44	46	48	50	52	54	56		68	70	72	74	74	74																									
5.640 (0.2220)	36	38	40	42	44	46	48	50	52	54	56	58		70	72	74	74	74																									
5.660 (0.2228)	38	40	42	44	46	48	50	52	54	56	58	60		72	74	74	74																									
5.680 (0.2236)	40	42	44	46	48	50	52	54	56	58	60	62		74	74	74																									
5.700 (0.2244)	42	44	46	48	50	52	54	56	58	60	62	64		74	74																									
5.720 (0.2252)	44	46	48	50	52	54	56	58	60	62	64	66		74																									
5.740 (0.2260)	46	48	50	52	54	56	58	60	62	64	66	68																											

T

A117458

Exhaust valve clearance (cold):
0.25 to 0.35 mm (0.010 to 0.014 in.)
EXAMPLE:
A 5.340 mm (0.2102 in.) lifter is installed, and the measured clearance is 0.440 mm (0.0173 in.). Replace the 5.340 mm (0.2102 in.) lifter with a new No. 48 lifter.

New Shim Thickness

Shim No.	Thickness	Shim No.	Thickness	Shim No.	Thickness
06	5.060 (0.1992)	30	5.300 (0.2087)	54	5.540 (0.2181)
08	5.080 (0.2000)	32	5.320 (0.2094)	56	5.560 (0.2189)
10	5.100 (0.2008)	34	5.340 (0.2102)	58	5.580 (0.2197)
12	5.120 (0.2016)	36	5.360 (0.2110)	60	5.600 (0.2205)
14	5.140 (0.2024)	38	5.380 (0.2118)	62	5.620 (0.2213)
16	5.160 (0.2031)	40	5.400 (0.2126)	64	5.640 (0.2220)
18	5.180 (0.2039)	42	5.420 (0.2134)	66	5.660 (0.2228)
20	5.200 (0.2047)	44	5.440 (0.2142)	68	5.680 (0.2236)
22	5.220 (0.2055)	46	5.460 (0.2150)	70	5.700 (0.2244)
24	5.240 (0.2063)	48	5.480 (0.2157)	72	5.720 (0.2252)
26	5.260 (0.2071)	50	5.500 (0.2165)	74	5.740 (0.2260)
28	5.280 (0.2079)	52	5.520 (0.2173)		

(r) Install the selected valve lifter.
(s) Apply a light coat of engine oil to the camshaft and camshaft journals.

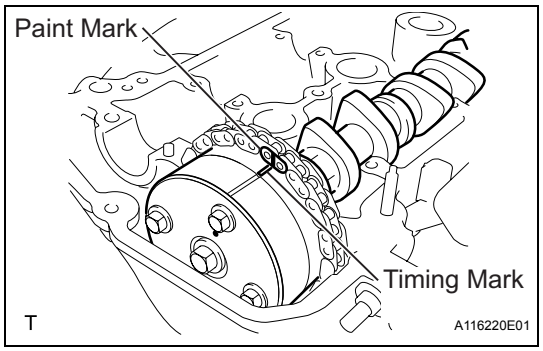

(t) Install the chain onto the camshaft timing gear with the paint mark and the timing mark aligned, as shown in the illustration.

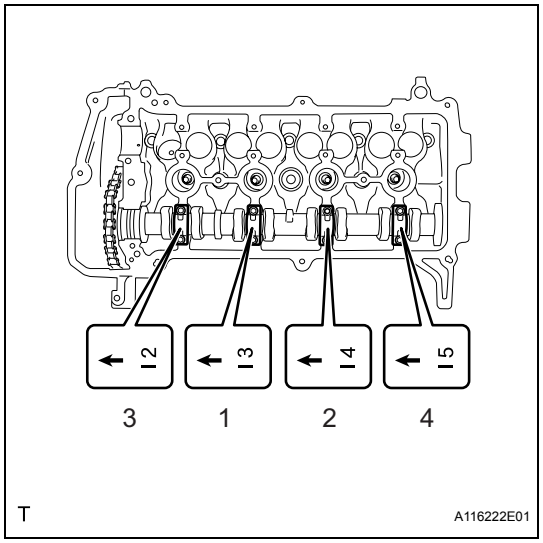

(u) Examine the front marks and the numbers on camshaft bearing cap No. 2 and check that the sequence is as shown in the illustration. Then uniformly tighten the bolts in several steps in the sequence shown in the illustration.
Torque: 13 N*m (129 kgf*cm, 9.4 ft.*lbf)
NOTICE:
Tighten the bolts uniformly while keeping the camshaft level.

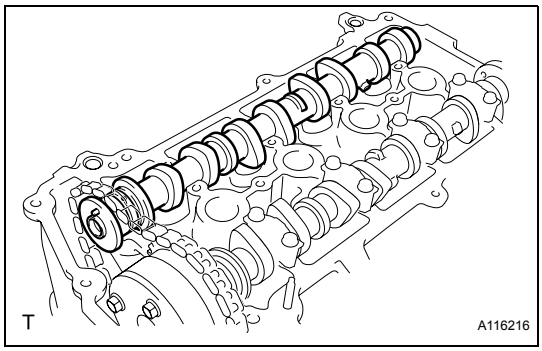

(v) Install camshaft No. 2.

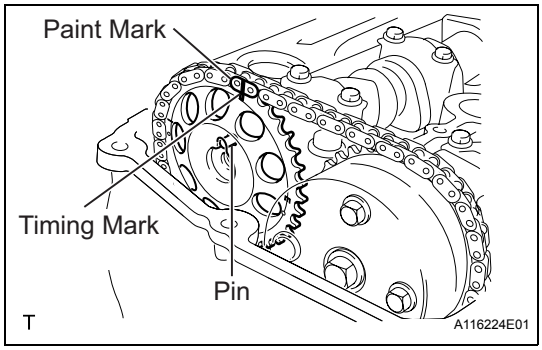

(w) Hold the chain, and align the timing mark on the camshaft timing sprocket with the paint mark of the chain.
(x) Align the alignment pin hole in the camshaft timing sprocket with the alignment pin of the camshaft, and install the sprocket onto the camshaft.

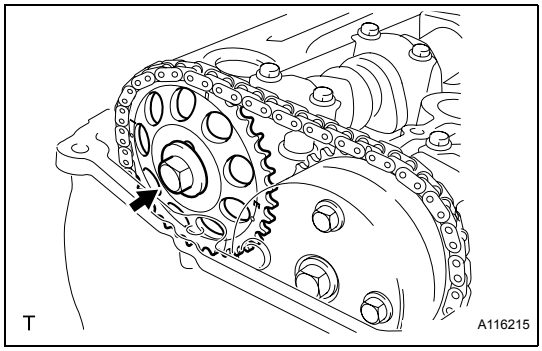

(y) Provisionally install the flange bolt.

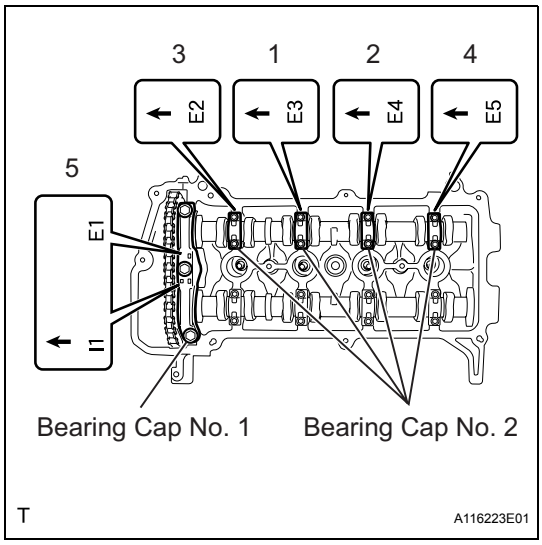

(z) Examine the front marks and the numbers of camshaft bearing cap No. 1 and camshaft bearing cap No. 2 and check that the sequence is as shown in the illustration. Then uniformly tighten the bolts, in several steps, in the sequence shown in the illustration.

Torque: 13 N*m (129 kgf*cm, 9.4 ft.*lbf) for bearing cap No. 2
23 N*m (235 kgf*cm, 17 ft.*lbf) for bearing cap No. 1

NOTICE:
Tighten the bolts uniformly while keeping the camshaft level.

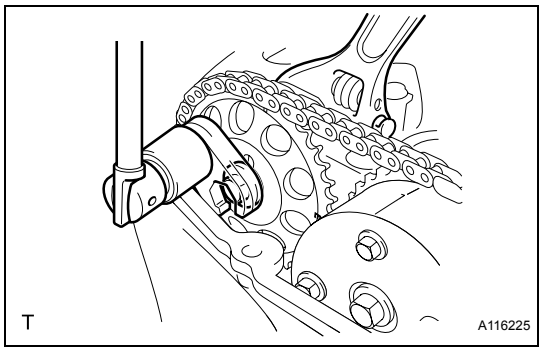

(aa) Using a wrench, hold the hexagonal lobe of camshaft No. 2, and install the flange bolt.
Torque: 64 N*m (653 kgf*cm, 47 ft.*lbf)
SST 09023-38400
(ab) Remove the bar from the timing chain tensioner.

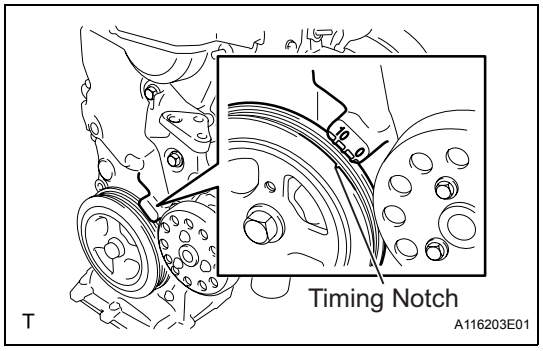

(ac) Turn the crankshaft damper, and align its timing notch with the timing mark "0" of the oil pump.

EM

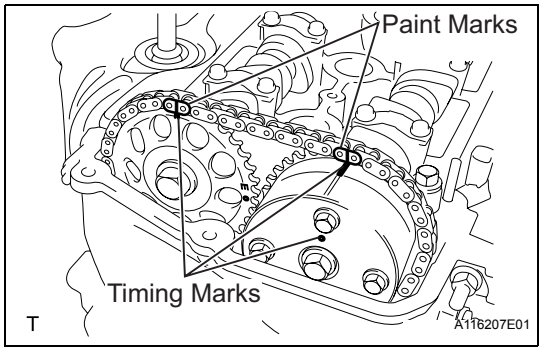

(ad) Check that all the pairs of timing marks are aligned.
(ae) Apply adhesive to the end 2 or 3 threads of the screw plug.
Adhesive:
Toyota Genuine Adhesive 1324, Three Bond 1324 or Equivalent

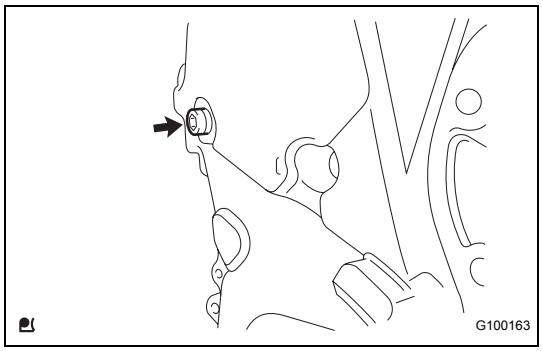

(af) Using an 8 mm hexagon wrench, install the screw plug.
Torque: 15 N*m (153 kgf*cm, 11 ft.*lbf)

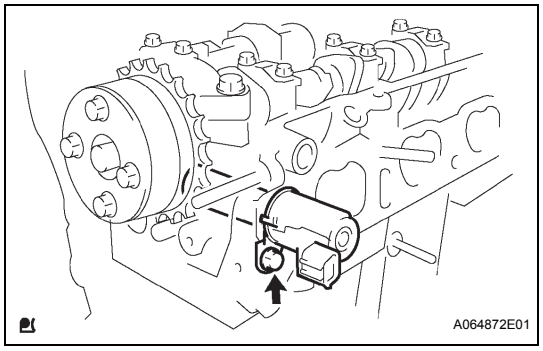

41. INSTALL CAMSHAFT TIMING OIL CONTROL VALVE ASSEMBLY
(a) Apply a light coat of engine oil to a new O-ring, and install it onto the camshaft timing oil control valve.
(b) Install the camshaft timing oil control valve with the bolt.
Torque: 7.5 N*m (76 kgf*cm, 66 in.*lbf)
NOTICE:
Do not twist the O-ring.

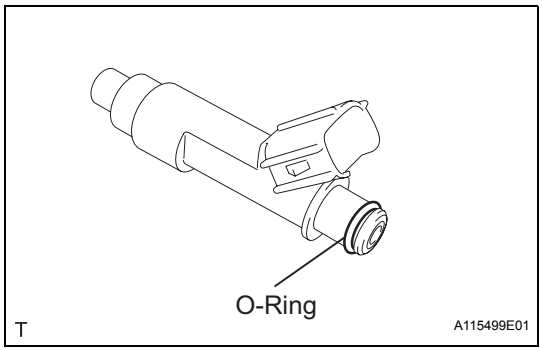

42. INSTALL FUEL INJECTOR ASSEMBLY

(a) Apply a light coat of gasoline or spindle oil to new O-rings, then install one onto each fuel injector.

(b) Apply a light coat of gasoline or spindle oil to the contact surfaces of the fuel delivery pipe and the O-ring of the fuel injector.

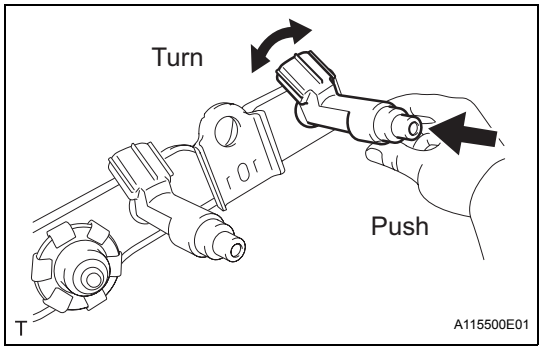

(c) While turning the fuel injector left and right, install it onto the fuel delivery pipe.

NOTICE:

- **Do not twist the O-ring.**
- **After installing the fuel injectors, check that they turn smoothly. If not, replace the O-ring with a new one.**

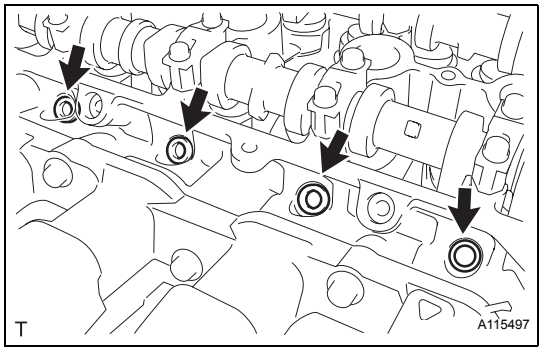

43. INSTALL INJECTOR VIBRATION INSULATOR

(a) Install 4 new injector vibration insulators onto the cylinder head.

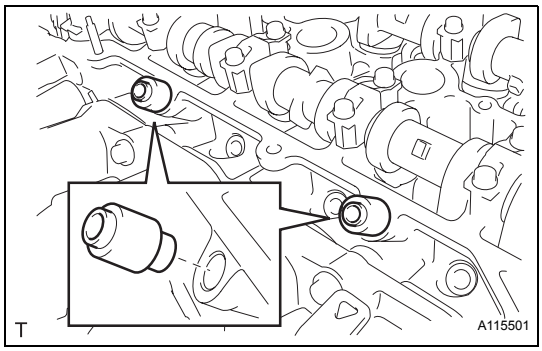

44. INSTALL DELIVERY PIPE NO. 1 SPACER

(a) Install the 2 delivery pipe No. 1 spacers onto the cylinder head.

NOTICE:

Install delivery pipe No. 1 spacer in the correct direction.

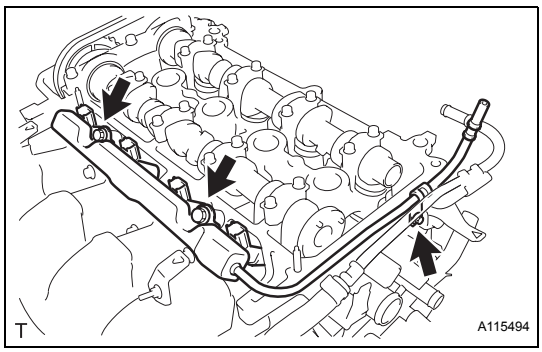

45. INSTALL FUEL DELIVERY PIPE SUB-ASSEMBLY

(a) Provisionally install the fuel delivery pipe sub-assembly and 4 fuel injectors with the 3 bolts.

NOTICE:

- **Do not drop the fuel injectors when installing the fuel delivery pipe sub-assembly.**
- **Check that the fuel injectors rotate smoothly after installing the fuel delivery pipe sub-assembly.**

EM

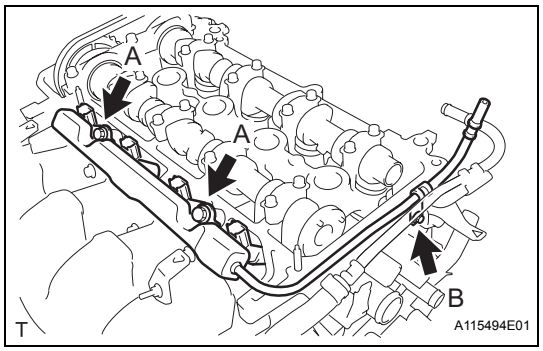

(b) Tighten the 3 bolts to the specified torque.
Torque: 19 N*m (194 kgf*cm, 14 ft.*lbf) for bolt A
9.0 N*m (92 kgf*cm, 80 in.*lbf) for bolt B

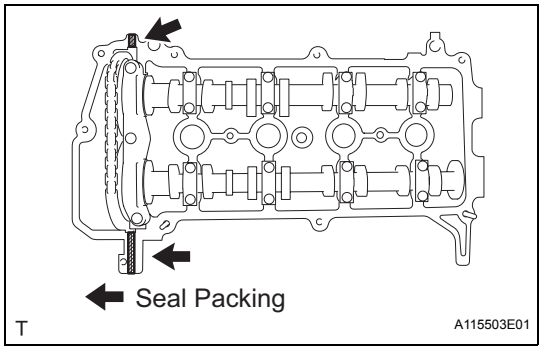

46. INSTALL CYLINDER HEAD COVER SUB-ASSEMBLY

(a) Install the gasket onto the cylinder head cover.

(b) Apply seal packing to the cylinder head, as shown in the illustration.
Seal Packing:
Toyota Genuine Seal Packing Black, Three Bond 1207B or Equivalent
NOTICE:
- **Remove any oil from the contact surface.**
- **Install the cylinder head cover sub-assembly within 3 minutes of applying the seal packing.**
- **Do not start engine for at least 2 hours after the installation.**

(c) Install the cylinder head cover sub-assembly with the 9 bolts, 2 nuts and 2 seal washers.

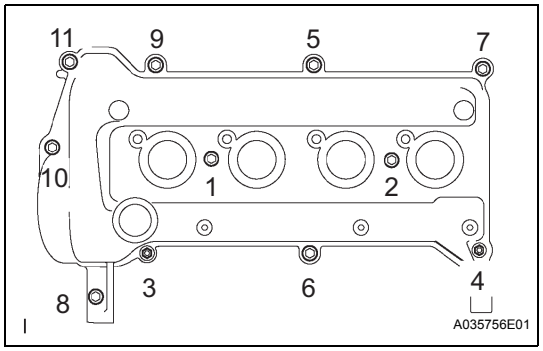

(d) Tighten the 9 bolts and 2 nuts in the sequence shown in the illustration.
Torque: 10 N*m (102 kgf*cm, 7.0 ft.*lbf)

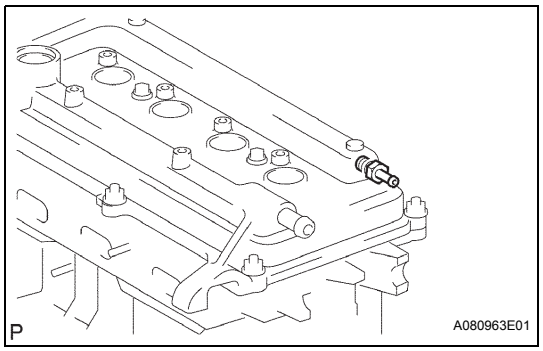

47. INSTALL VENTILATION VALVE SUB-ASSEMBLY

(a) Install the ventilation valve onto the cylinder head cover.
Torque: 27 N*m (275 kgf*cm, 20 ft.*lbf)

48. INSTALL OIL LEVEL GAUGE GUIDE

(a) Apply engine oil to a new O-ring.

(b) Install the oil level gauge guide with the bolt.
Torque: 9.0 N*m (92 kgf*cm, 80 in.*lbf)

49. INSTALL CRANKSHAFT POSITION SENSOR

(a) Apply a light coat of engine oil to the O-ring on the crankshaft position sensor.
NOTICE:
If the O-ring is damaged, replace the crankshaft position sensor.

(b) Install the crankshaft position sensor with the bolt.
Torque: 7.5 N*m (76 kgf*cm, 66 in.*lbf)

50. INSTALL OIL FILLER CAP GASKET

(a) Install the oil filler cap gasket onto the oil filler cap.

51. INSTALL OIL FILLER CAP SUB-ASSEMBLY

(a) Install the oil filler cap onto the cylinder head cover.

52. INSTALL THERMOSTAT

(a) Install a new gasket onto the thermostat.

(b) Install the thermostat with the jiggle valve facing upward.
HINT:
The jiggle valve may be set within 10°either side as shown in the illustration.

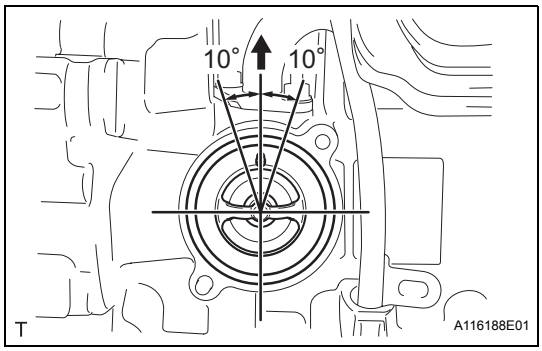

53. INSTALL WATER INLET

(a) Install the water inlet with the 2 nuts.
Torque: 9.0 N*m (92 kgf*cm, 80 in.*lbf)

54. INSTALL ENGINE COOLANT TEMPERATURE SENSOR

(a) Provisionally install the engine coolant temperature sensor through a new gasket.

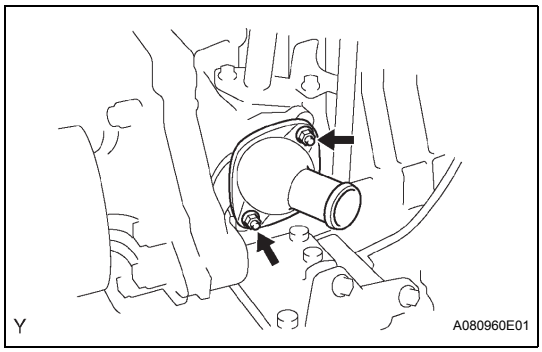

(b) Using SST, tighten the engine coolant temperature sensor.
SST 09817-33190
Torque: 20 N*m (204 kgf*cm, 15 ft.*lbf)

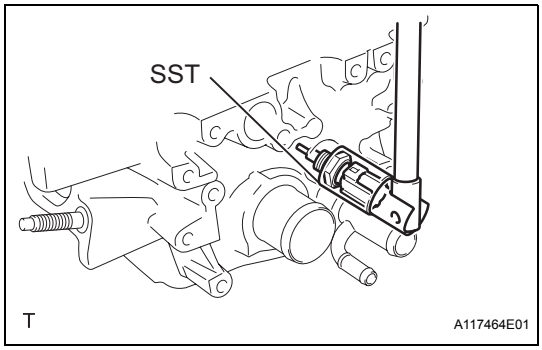

55. INSTALL ENGINE OIL PRESSURE SWITCH ASSEMBLY

(a) Apply adhesive to the end 2 or 3 threads of the oil pressure switch.
Adhesive:
Toyota Genuine Adhesive 1324, Three Bond 1324 or Equivalent

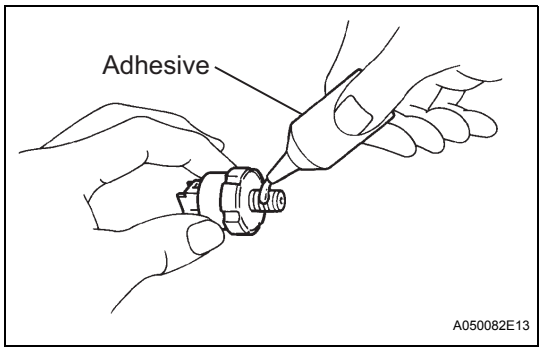

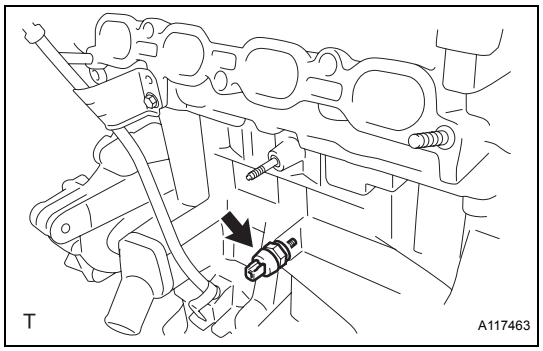

(b) Using a 24 mm deep socket wrench, install the oil pressure switch.
Torque: 15 N*m (153 kgf*cm, 11 ft.*lbf)

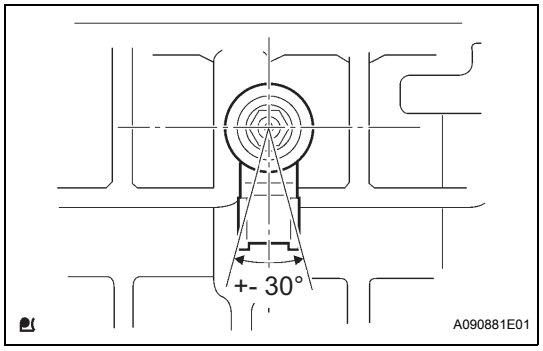

56. INSTALL KNOCK SENSOR

(a) Install the knock sensor with the nut as shown in the illustration.
Torque: 20 N*m (204 kgf*cm, 15 ft.*lbf)

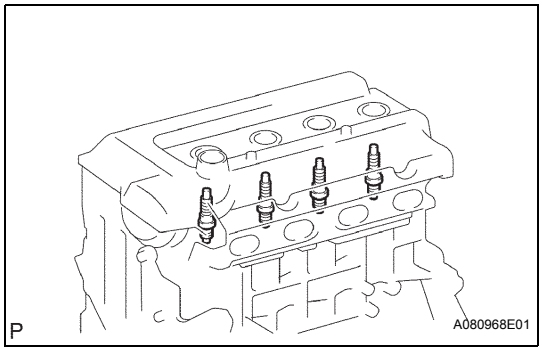

57. INSTALL SPARK PLUG

(a) Using a spark plug wrench, install the spark plugs.
Torque: 18 N*m (184 kgf*cm, 13 ft.*lbf)

EM

FUEL SYSTEM

PRECAUTION

1. PRECAUTIONS

(a) Before working on the fuel system, disconnect the cable from the negative battery terminal.

(b) Do not work on the fuel system near any naked flames. Never smoke during the work.

(c) Keep rubber and leather parts away from gasoline.

2. DISCHARGE FUEL SYSTEM PRESSURE

CAUTION:

- **Before removing any fuel system parts, take precautions to prevent gasoline spillage.**
- **As some pressure remains in the fuel line even after taking precautions to prevent gasoline spillage, use a shop rag or piece of cloth to prevent gasoline splashes when disconnecting the fuel line.**

(a) Remove the rear seat cushion (for Hatchback) (See page SE-114).

(b) Remove the rear seat assembly (for Hatchback) (See page SE-70).

(c) Remove the rear seat cushion (for Sedan) (See page SE-46).

(d) Remove the rear floor service hole cover.

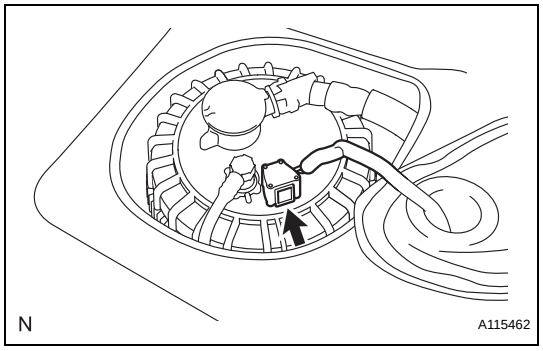

(e) Disconnect the connector from the fuel pump assembly.

(f) Start the engine. After the engine stops naturally, turn the ignition switch OFF.

HINT:

DTC P0171 may be set.

(g) Crank the engine again and make sure that the engine does not start.

(h) Remove the fuel tank cap and discharge the pressure.

(i) Disconnect the cable from the negative battery terminal.

(j) Connect the connector of the fuel pump assembly.

3. FUEL SYSTEM

(a) When disconnecting the high-pressure fuel line, a large amount of gasoline will splash. So take the following precautions.

(1) Discharge the fuel system pressure.

(2) Disconnect the fuel tube.

FU

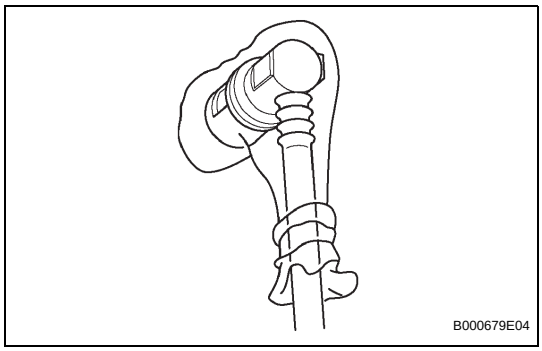

(3) Drain the fuel remaining inside the fuel pump tube.
(4) Cover the disconnected fuel tube connector and pipe with a vinyl bag to prevent damage and the intrusion of foreign matter.

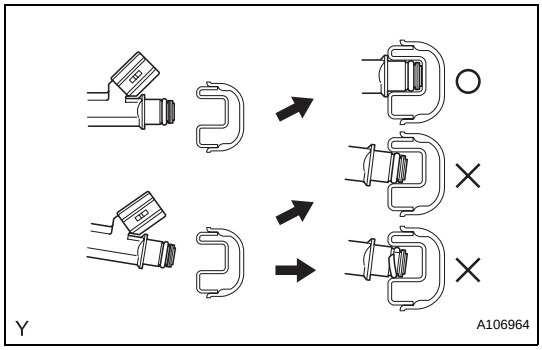

(b) Observe the following precautions when removing and installing the fuel injector.
(1) Do not reuse the O-ring.
(2) When placing a new O-ring onto the injector, do not damage the O-ring.
(3) Coat the new O-ring with grease or gasoline before installing it. Do not use engine, gear or brake oil.

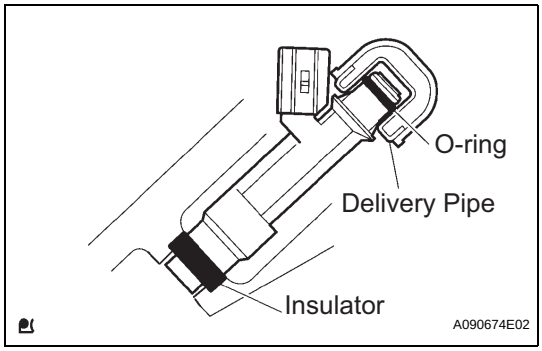

(c) Install the injector into the delivery pipe and cylinder head, as shown in the illustration. Apply grease or gasoline oil to the contact surfaces of the delivery pipe and injector before installing the injector.

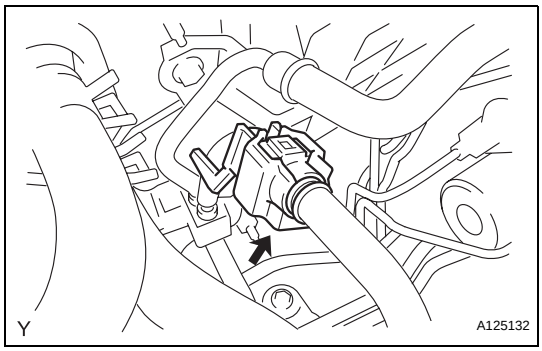

(d) Observe these precautions when disconnecting the fuel tube connector.
(1) Remove the fuel pipe clamp No.1.
(2) Check whether there is any dirt in the pipe around the connector before disconnecting it and remove the dirt as necessary.

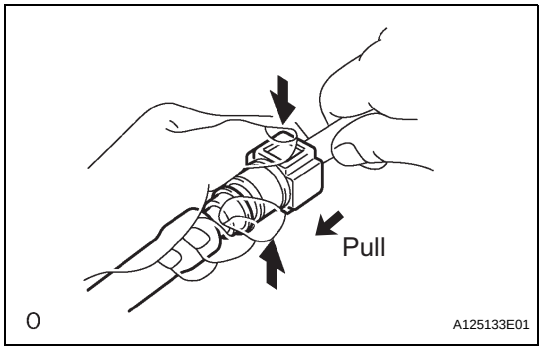

(3) If the connector and pipe are stuck, pinch the retainer with your hand, then push and pull the connector to disconnect them. Do not use any tools.
(4) Check the sealing surface of the pipe for dirt and mud. If dirty, wipe it with a shop rag or piece of cloth.

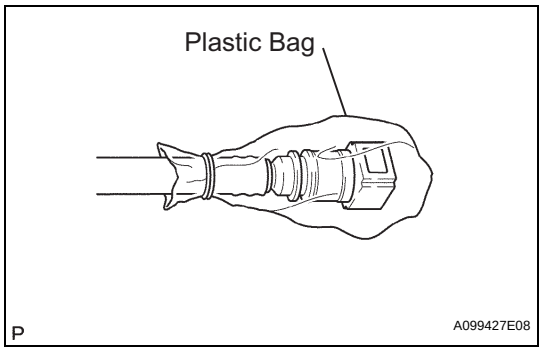

(5) Cover the disconnected fuel tube connector and pipe with a vinyl bag to prevent damage and the intrusion of foreign matter.

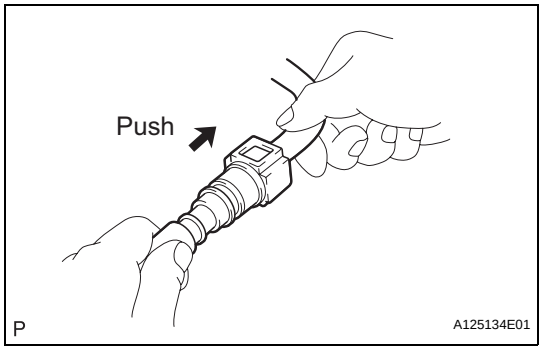

(e) Observe the following precautions when connecting the fuel tube connector.
(1) Check that there is no damage or foreign matter on the part of the pipe that comes into contact with the connector.
(2) Align the axis of the connector with the axis of the pipe. Push the pipe into the connector until the connector makes a click sound. If the connection is too tight, apply a small amount of fresh engine oil to the tip of the pipe.

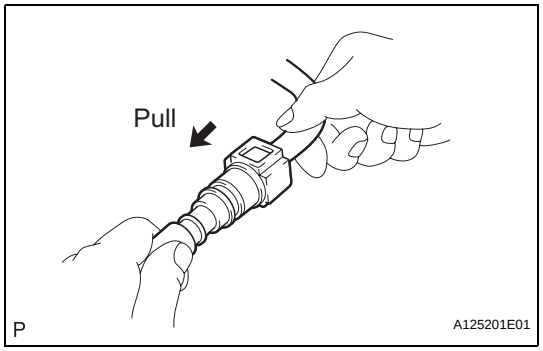

(3) After connecting the pipe and connector, try to pull them apart to confirm that they are securely connected.
(4) Attach the lock claws to the connector by pushing down on the cover.

4. CHECK FOR FUEL LEAKAGE

(a) Check that there is no fuel leakage after performing maintenance anywhere on the fuel system (See page FU-7).

FU

PARTS LOCATION

for Hatchback:

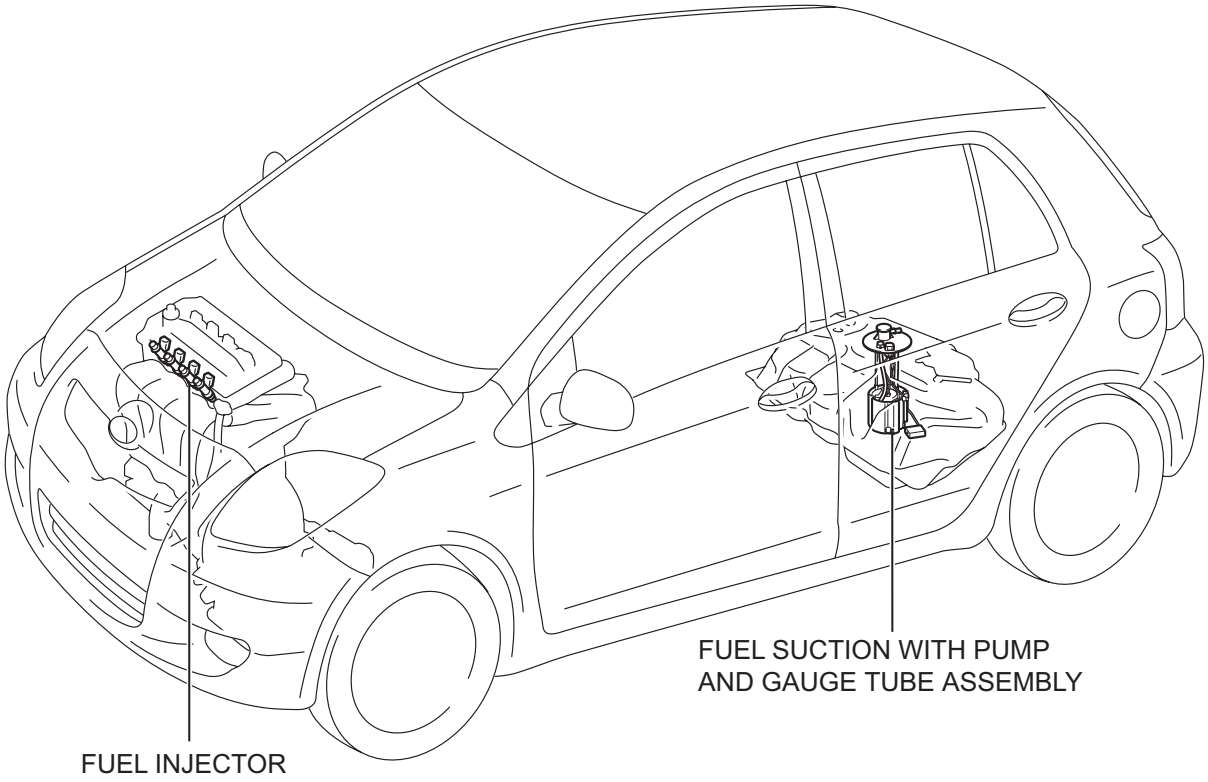

N

A119137E02

for Sedan:

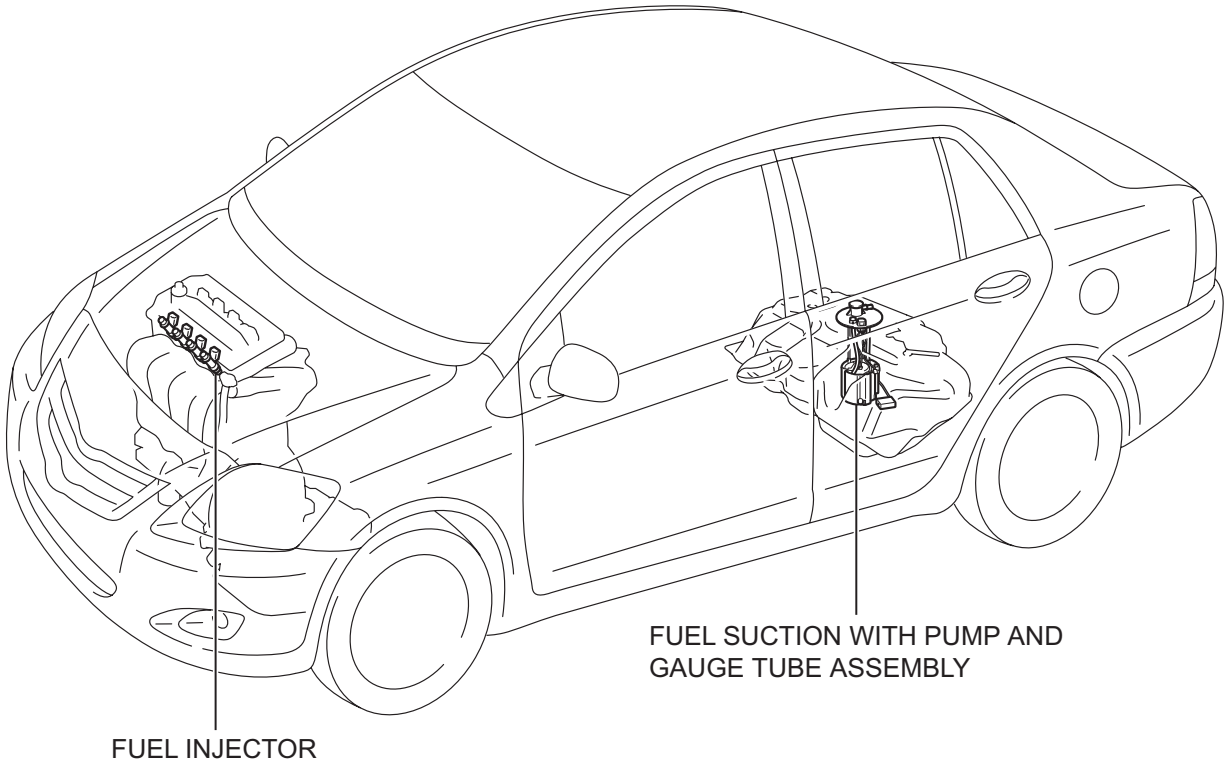

N

A133330E01

SYSTEM DIAGRAM

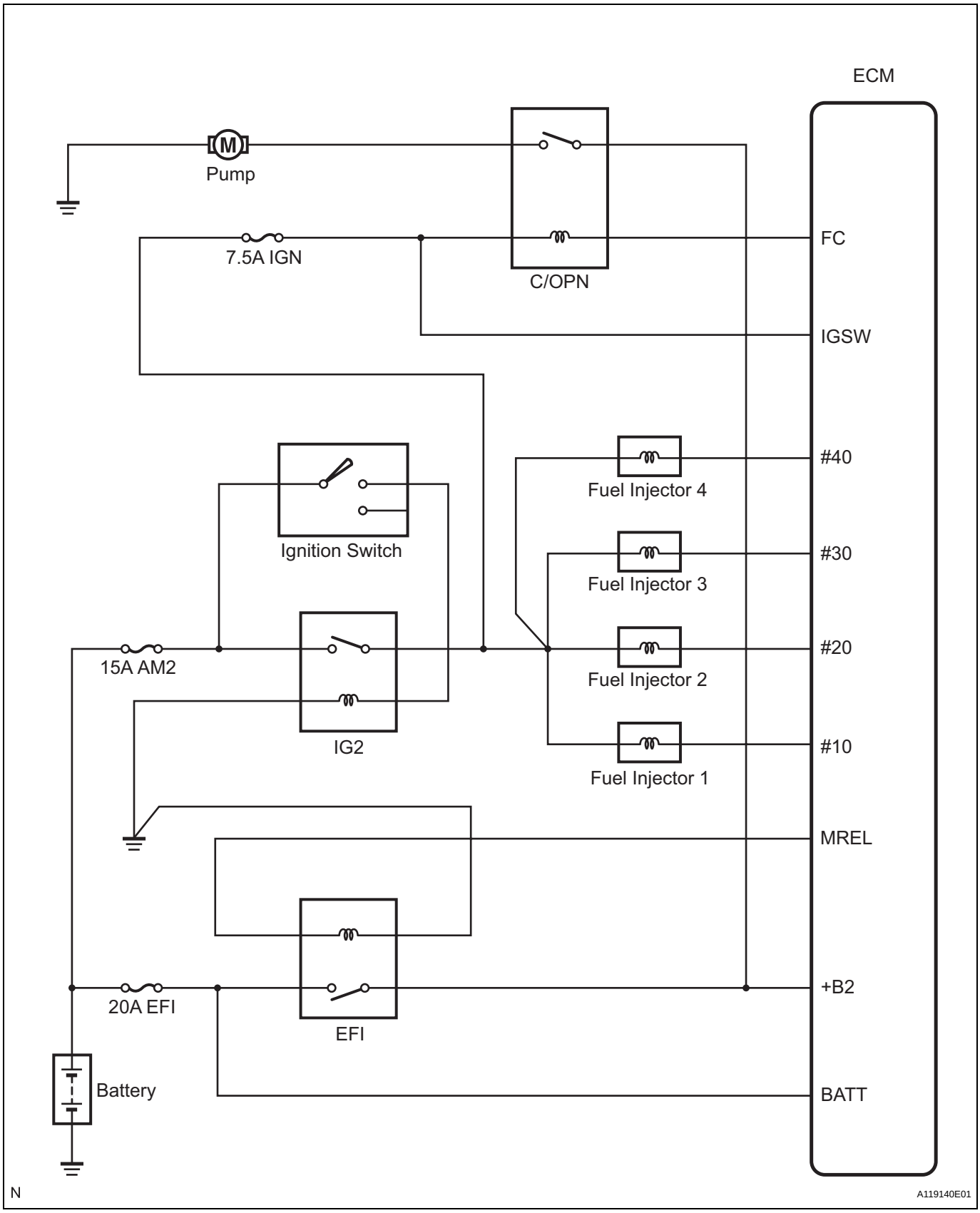

ON-VEHICLE INSPECTION

1. CHECK FUEL PUMP OPERATION AND FUEL LEAKAGE

(a) When using the intelligent tester.
  (1) Connect the intelligent tester to the DLC3.
  (2) Turn the ignition switch on (IG) and the intelligent tester main switch on.
  NOTICE:
  Do not start the engine.
  (3) Select the Active Test mode on the intelligent tester.
  HINT:
  Refer to the intelligent tester operator's manual for further details.

(b) Check that there is no fuel leakage anywhere on the fuel system after doing maintenance.

2. CHECK FUEL PRESSURE

(a) Discharge the fuel system pressure (See page FU-1).

(b) Using a voltmeter, measure the battery voltage.
  Standard voltage:
  11 to 14 V

(c) Disconnect the negative (-) battery terminal cable.

(d) Remove fuel pipe clamp No. 1 from the fuel tube connector.

(e) Disconnect the fuel hose from the fuel main tube.

(f) Install SST (pressure gauge and fuel tube connector) as shown in the illustration.
  SST 09268-45014 (09268-41200, 09268-41220, 09268-41250), 09268-41047 (90467-13001, 95336-08070, 09268-41500)

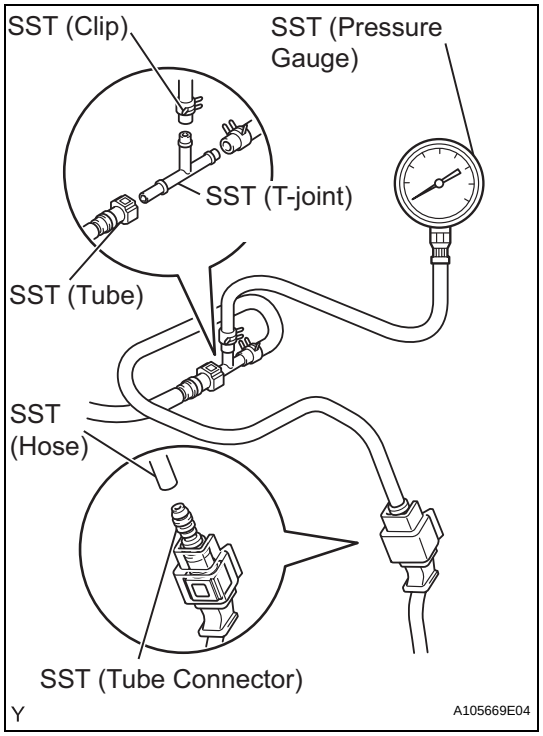

(g) Wipe off any spilt gasoline.

(h) Reconnect the negative (-) battery terminal cable.

(i) Connect the intelligent tester to the DLC3 (see step 1 in check fuel pump operation).

(j) Measure the fuel pressure.
  Fuel pressure:
  304 to 343 kPa (3.1 to 3.5 kgf*cm^2, 44.1 to 49.7 psi)
  If the pressure is high, replace the fuel pressure regulator.
  If the pressure is low, check the fuel hoses, fuel hose connections, fuel pump and fuel pressure regulator.

(k) Disconnect the intelligent tester from the DLC3.

(l) Start the engine.

(m) Measure the fuel pressure while the engine is idling.
  Fuel pressure:
  304 to 343 kPa (3.1 to 3.5 kgf*cm^2, 44.1 to 49.7 psi)
  If the pressure is not as specified, check the vacuum sensing hose and the fuel pressure regulator.

(n) Stop the engine.
(o) Check that the fuel pressure remains as specified for 5 minutes after the engine stops.
Fuel pressure:

147 kPa (1.5 kgf*cm^2, 21 psi) or more

If the pressure is not as specified, check the fuel pump, pressure regulator and injectors.
(p) After checking the fuel pressure, disconnect the negative (-) battery terminal cable and carefully remove SST to prevent gasoline splashes.
(q) Reconnect the fuel tube to the fuel main tube.
(r) Install fuel pipe clamp No. 1 onto the fuel tube connector.
(s) Check for fuel leakage (step 1).

FUEL INJECTOR

COMPONENTS

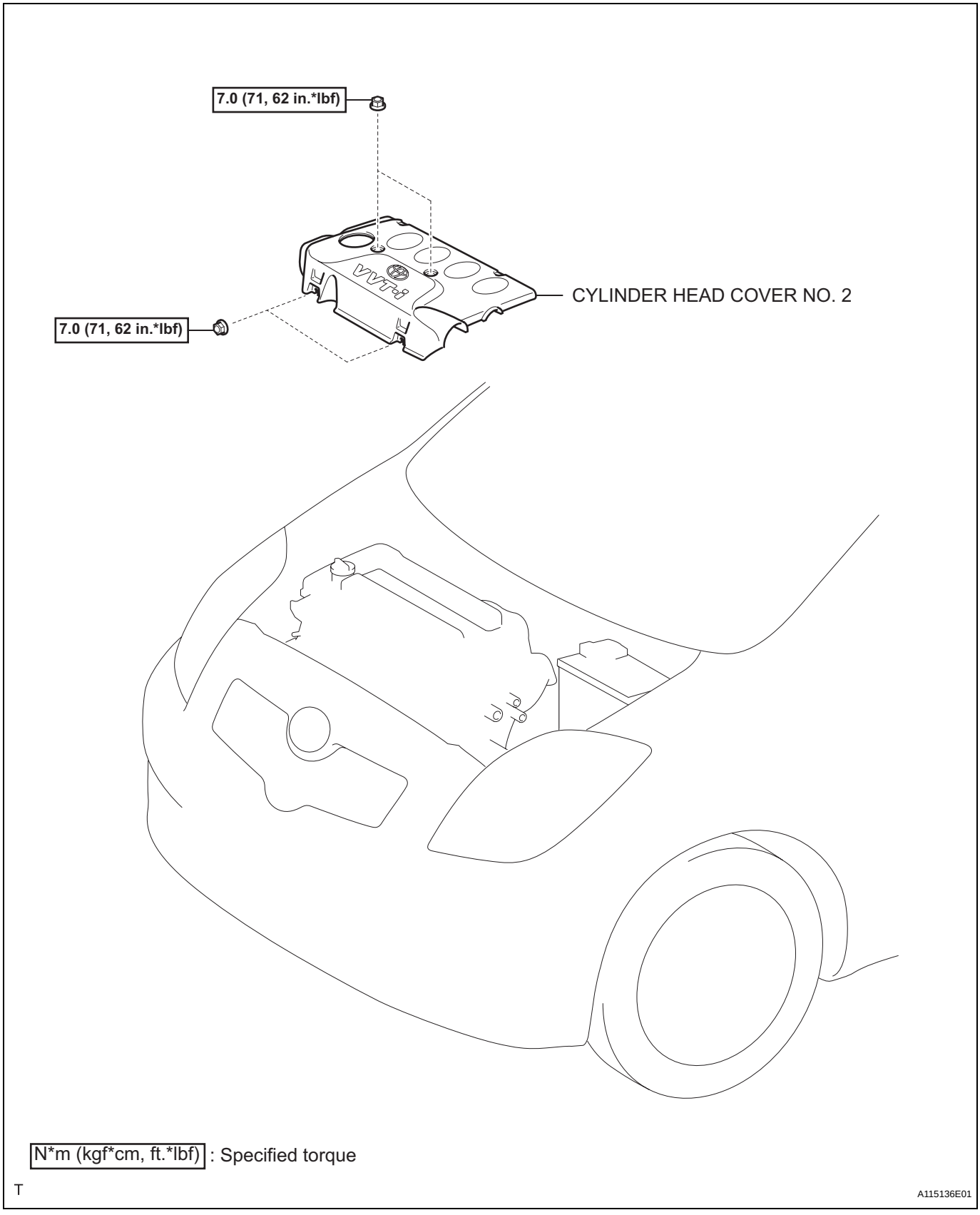

FU

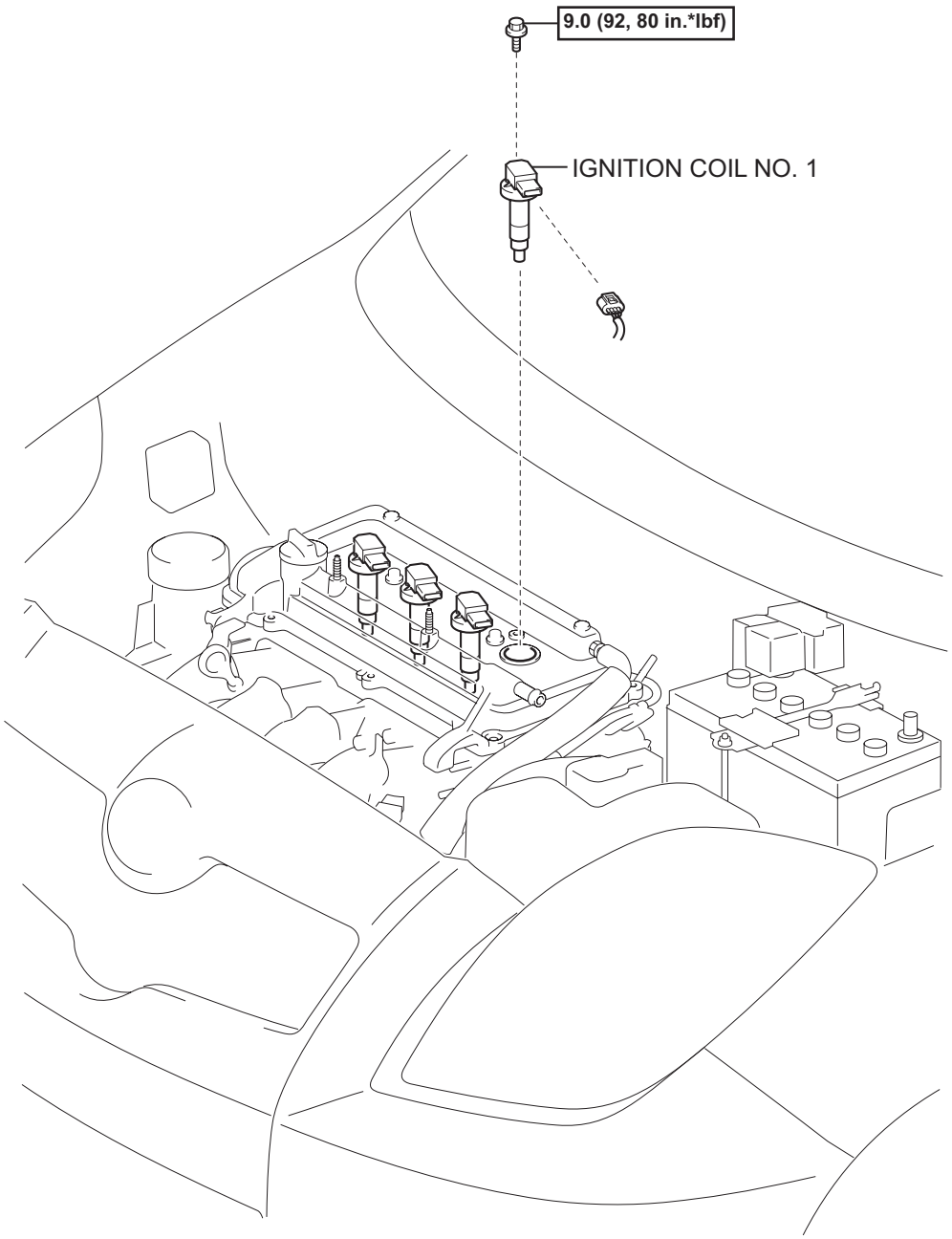

N*m (kgf*cm, ft.*lbf) : Specified torque

T

A115486E01

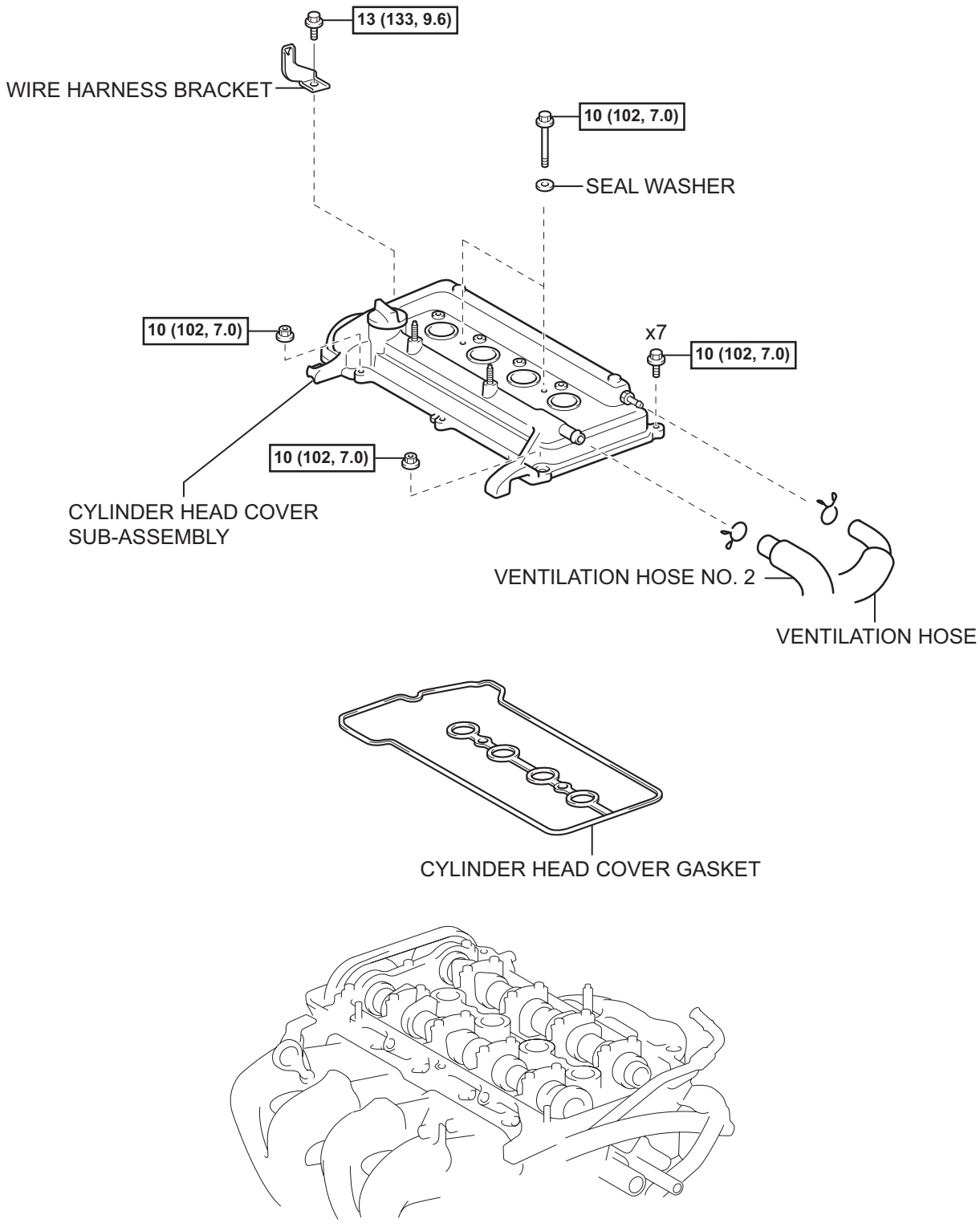

N*m (kgf*cm, ft.*lbf) : Specified torque

T

A115504E01

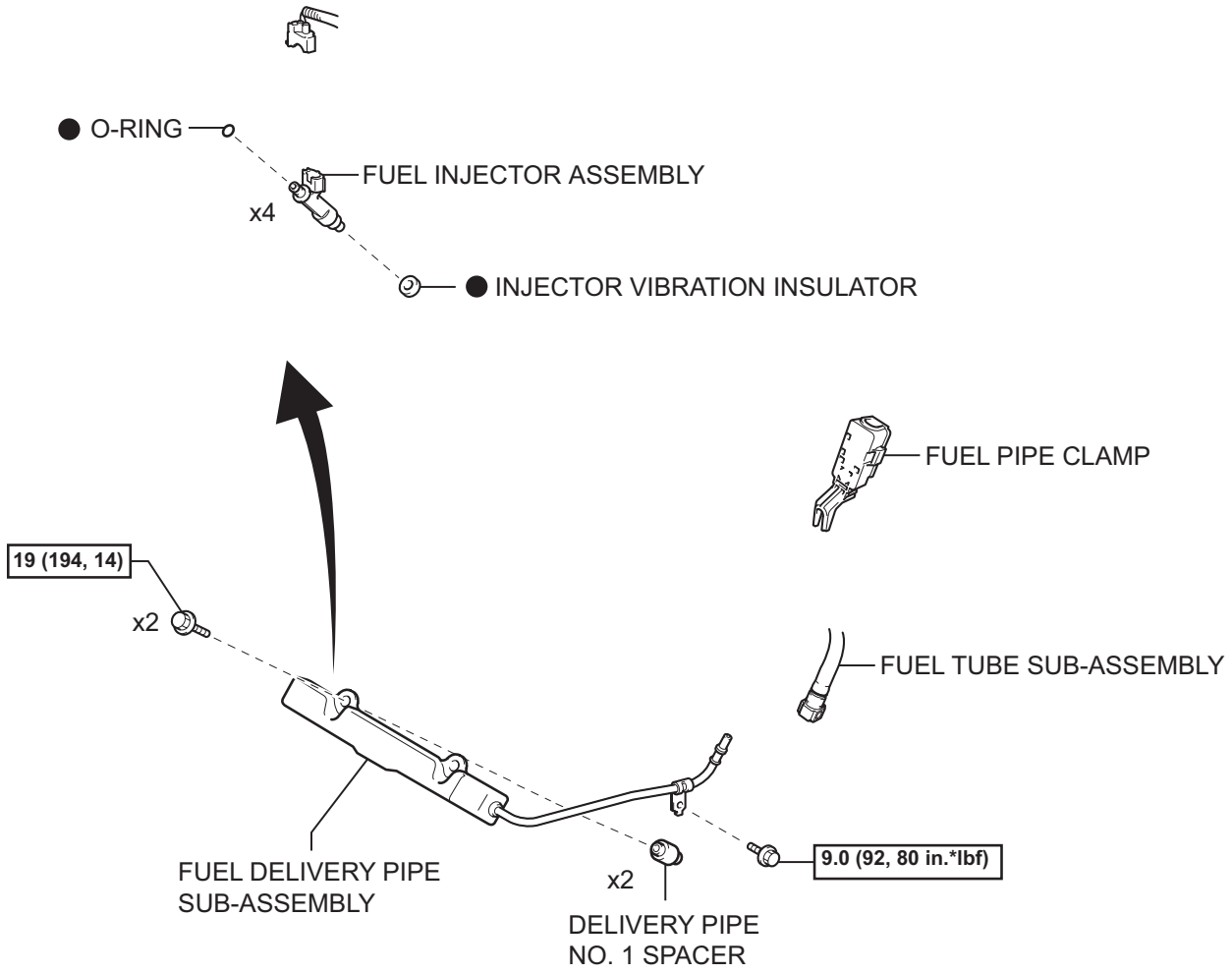

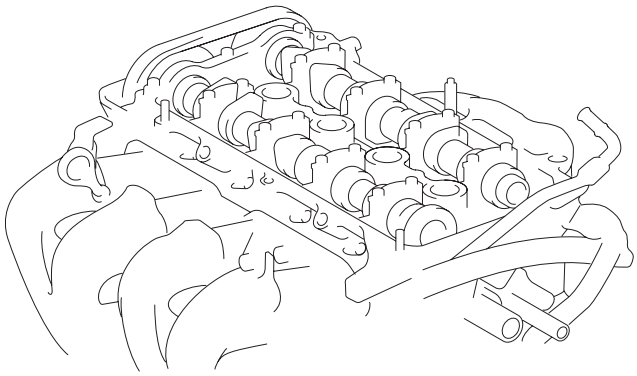

N*m (kgf*cm, ft.*lbf) : Specified torque

● Non-reusable part

T

A115505E01

REMOVAL

1. **DISCHARGE FUEL SYSTEM PRESSURE**
   (See page FU-1)
2. **DISCONNECT CABLE FROM NEGATIVE BATTERY TERMINAL**
3. **REMOVE CYLINDER HEAD COVER NO. 2 (See page IG-9)**
4. **REMOVE IGNITION COIL NO. 1 (See page IG-9)**
5. **REMOVE VENTILATION HOSE**
   (a) Disconnect the ventilation hose.

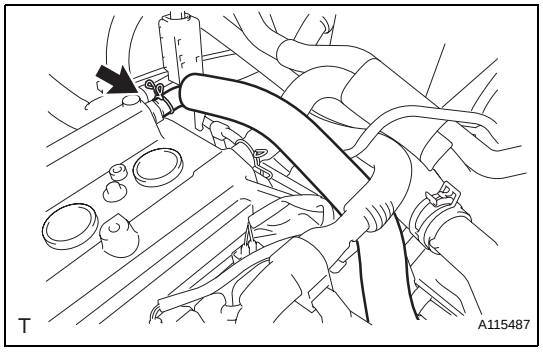

6. **REMOVE VENTILATION HOSE NO. 2**
   (a) Disconnect ventilation hose No. 2.

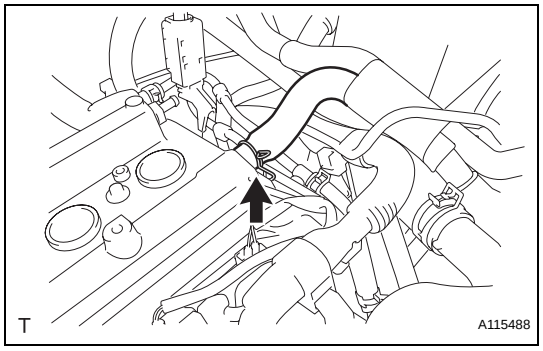

7. **REMOVE CYLINDER HEAD COVER SUB-ASSEMBLY**
   (a) Disconnect the fuel injector connectors.

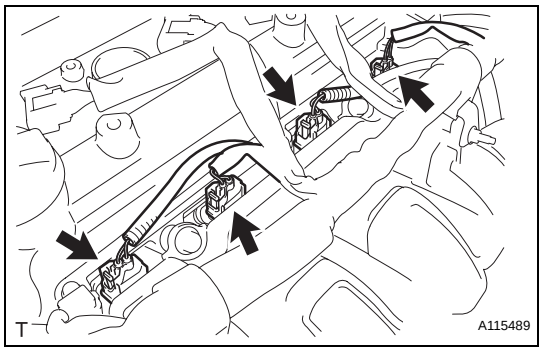

FU

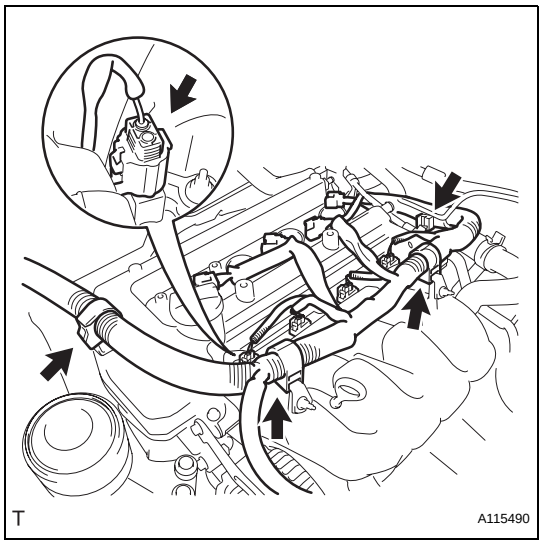

(b) Disconnect the connector and 3 wire harness clamps shown in the illustration and disconnect the engine wire harness.

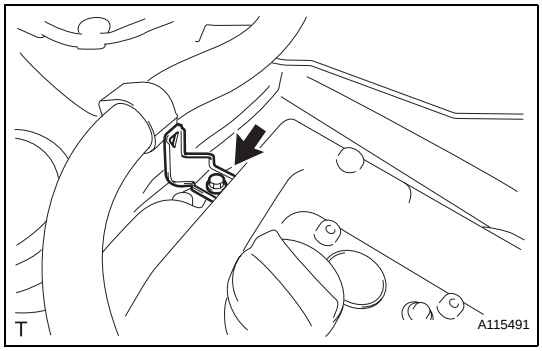

(c) Remove the bolt and remove the wire harness bracket.

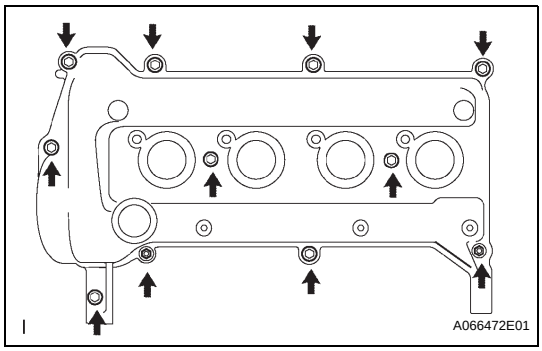

(d) Remove the 9 bolts, 2 nuts and 2 seal washers and then remove the cylinder head cover sub-assembly.

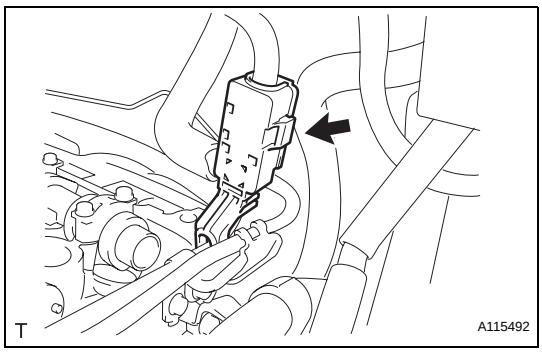

8. DISCONNECT FUEL TUBE SUB-ASSEMBLY

(a) Remove the fuel pipe clamp.

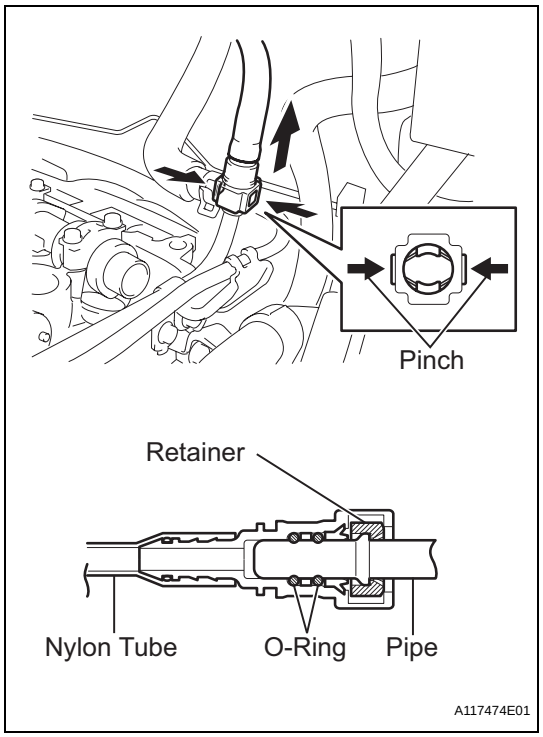

(b) Pinch the retainer of the fuel tube connector, then pull the fuel tube connector to disconnect the fuel tube out of the fuel delivery pipe sub-assembly.

NOTICE:

- **Remove any dirt and foreign matter from the fuel tube connector before performing this work.**
- **Do not allow any scratches or foreign matter on the parts when disconnecting, as the fuel tube connector has the O-ring that seals the pipe.**
- **Perform this work by hand. Do not use any tools.**
- **Do not forcibly bend, twist or turn the nylon tube.**
- **Protect the disconnected parts by covering them with a vinyl bag after disconnecting the fuel tube.**
- **If the fuel tube connector and pipe are stuck, push and pull to release them.**

FU

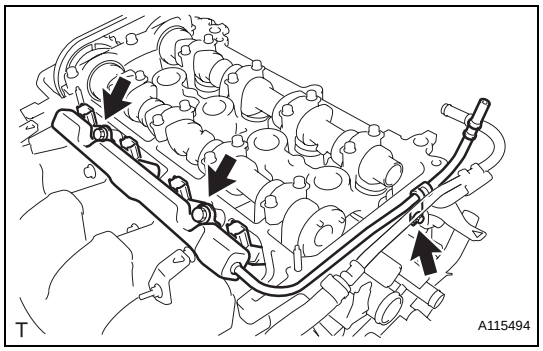

9. REMOVE FUEL DELIVERY PIPE SUB-ASSEMBLY

(a) Remove the 3 bolts and remove the fuel delivery pipe sub-assembly with 4 fuel injectors.

NOTICE:

Do not drop the fuel injectors when removing the fuel delivery pipe sub-assembly.

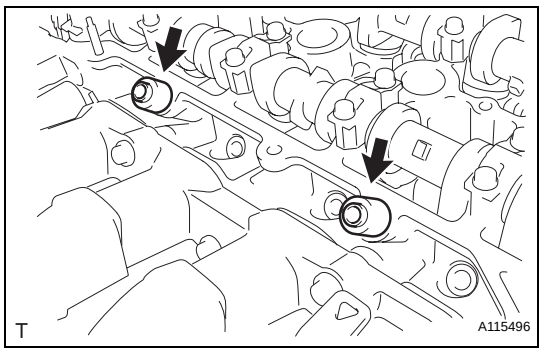

10. REMOVE DELIVERY PIPE NO. 1 SPACER

(a) Remove the 2 delivery pipe No. 1 spacers.

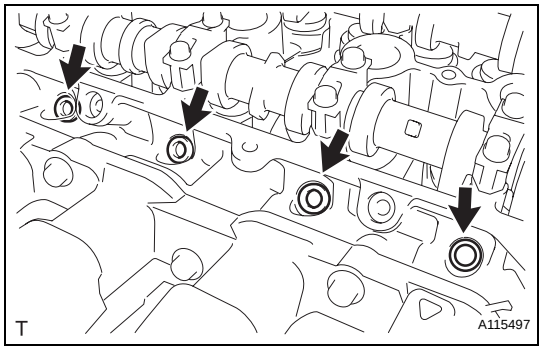

11. REMOVE INJECTOR VIBRATION INSULATOR

(a) Remove the 4 injector vibration insulators.

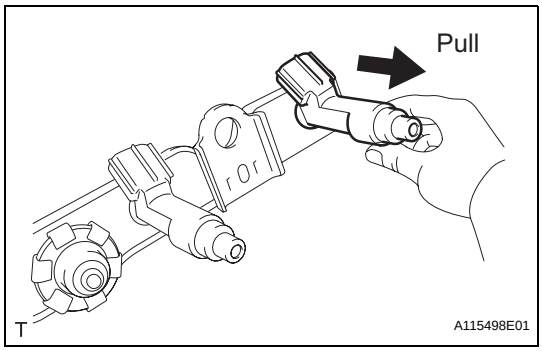

12. REMOVE FUEL INJECTOR ASSEMBLY

(a) Pull the 4 fuel injector assemblies out of the fuel delivery pipe sub-assembly.

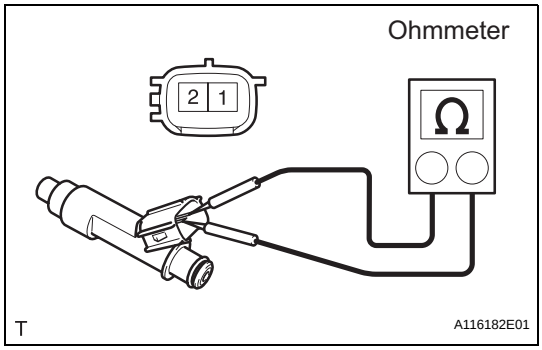

INSPECTION

1. INSPECT FUEL INJECTOR ASSEMBLY

(a) Check the resistance.

(1) Using an ohmmeter, measure the resistance between the terminals.

Standard resistance:

11.6 to 12.4 Ω at 20°C (68°F)

If the result is not as specified, replace the injector assembly.

(b) Check the operation.

CAUTION:

Perform the inspection in a well-ventilated area. Do not perform the inspection near any naked flames.

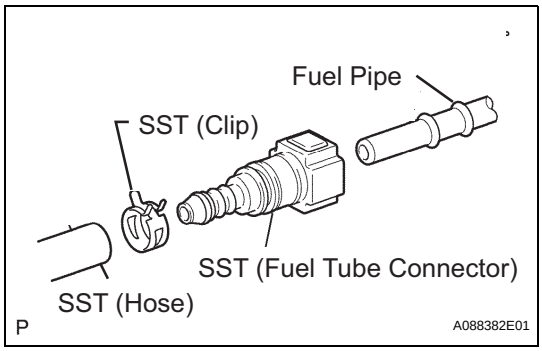

(1) Connect SST (fuel tube connector) to SST (hose), then connect them to the fuel pipe (vehicle side).

SST 09268-41048 (90467-13001, 95336-08070, 09268-41500)

(2) Install the O-ring onto the fuel injector assembly.

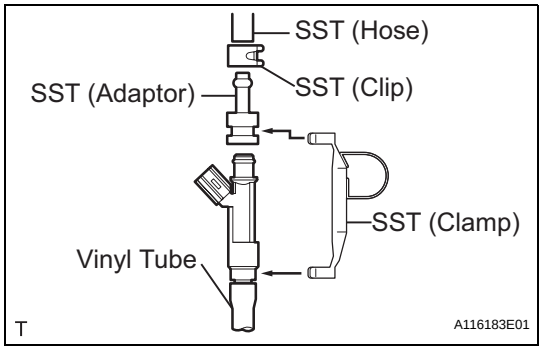

(3) Connect SST (adaptor and hose) to the injector assembly, and hold the injector assembly and union with SST (clamp).

SST 09268-41048 (09268-41110, 90467-13001, 95336-08070, 09268-41310)

(4) Set the injector assembly in a graduated cylinder.

CAUTION:

Install a suitable vinyl tube onto the injector assembly to prevent gasoline splashes.

(5) Operate the fuel pump (see page FU-7).

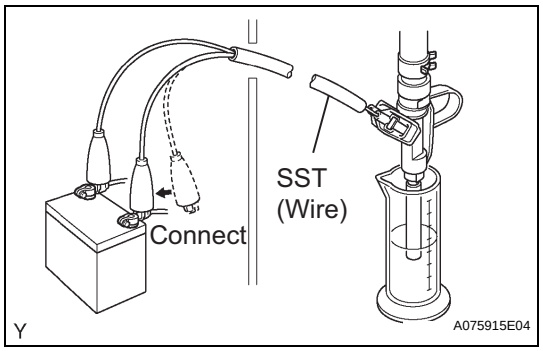

(6) Connect SST (wire) to the injector assembly and the battery for 15 seconds, and measure the injection volume with the graduated cylinder. Test each injector 2 or 3 times.
SST 09842-30080
Injection volume:
47 to 58 cm^3 (2.9 to 3.5 cu in.) per 15 seconds
Difference between each injector:
11 cm^3 (0.6 cu in.) or less
NOTICE:
Always do the switching at the battery side.
If the injection volume is not as specified, replace the injector assembly.

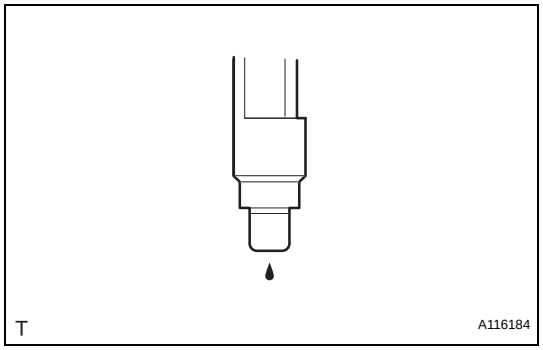

(c) Check the leakage.
(1) In the condition above, disconnect the test probes of SST (wire) from the battery and check the injector for fuel leakage.
Fuel drop:
1 drop or less every 12 minutes

FU

INSTALLATION

1. INSTALL FUEL INJECTOR ASSEMBLY

(a) Apply a light coat of gasoline or spindle oil to new O-rings, then install one onto each fuel injector.
(b) Apply a light coat of gasoline or spindle oil to the contact surfaces of the fuel delivery pipe and the O-ring of the fuel injector.

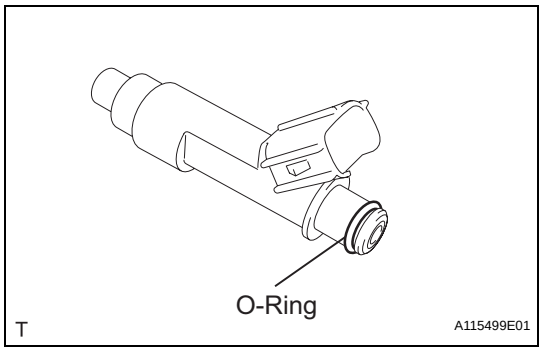

(c) While turning the fuel injector left and right, install it onto the fuel delivery pipe.
NOTICE:
- **Do not twist the O-ring.**
- **After installing the fuel injectors, check that they turn smoothly. If not, replace the O-ring with a new one.**

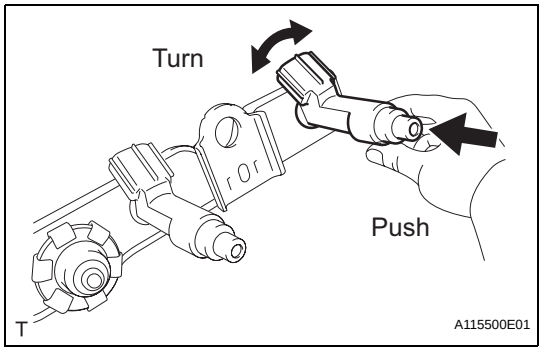

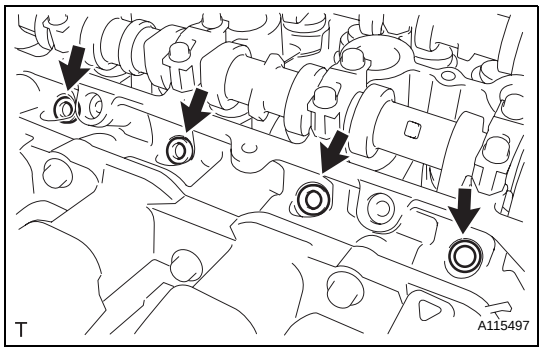

2. INSTALL INJECTOR VIBRATION INSULATOR

(a) Install 4 new injector vibration insulators onto the cylinder head.

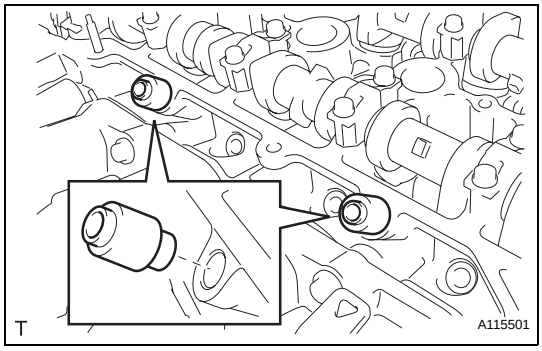

3. INSTALL DELIVERY PIPE NO. 1 SPACER

(a) Install the 2 No. 1 delivery pipe spacers onto the cylinder head.

NOTICE:

Install the delivery pipe No. 1 spacer in the correct direction.

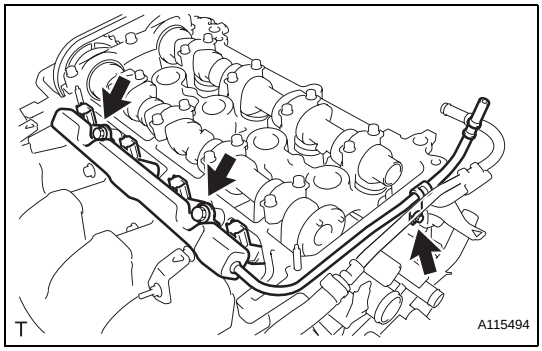

4. INSTALL FUEL DELIVERY PIPE SUB-ASSEMBLY

(a) Install the fuel delivery pipe sub-assembly with the 4 fuel injectors, then provisionally install the 3 bolts.

NOTICE:

- **Do not drop the fuel injectors when installing the fuel delivery pipe sub-assembly.**
- **Check that the fuel injectors rotate smoothly after installing the fuel delivery pipe sub-assembly.**

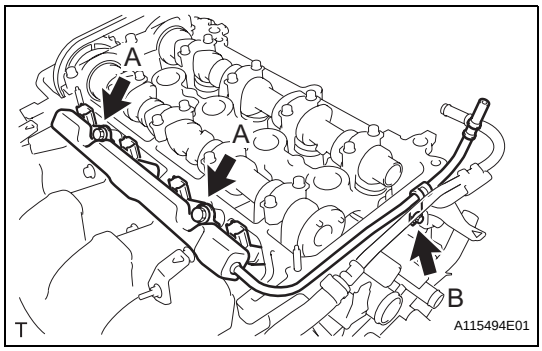

(b) Tighten the 3 bolts to the specified torque.

Torque: 19 N*m (194 kgf*cm, 14 ft.*lbf) for bolt A
9.0 N*m (92 kgf*cm, 80 in.*lbf) for bolt B

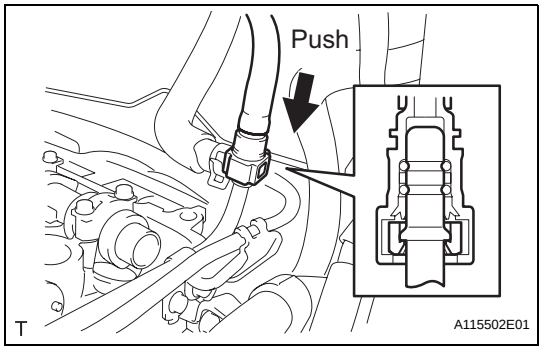

5. CONNECT FUEL TUBE SUB-ASSEMBLY

(a) Insert the fuel tube connector into the fuel delivery pipe until a click sound can be heard.

NOTICE:

- **Check that there are no scratches or foreign matter around the disconnected parts of the fuel tube connector and pipe before performing this work.**
- **After connecting the fuel tube, check that the fuel tube connector and pipe are securely connected by pulling them.**

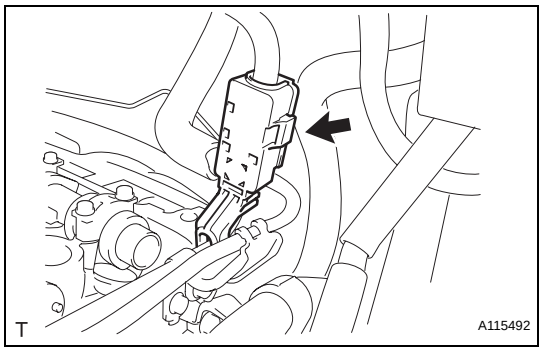

(b) Install the fuel pipe clamp.

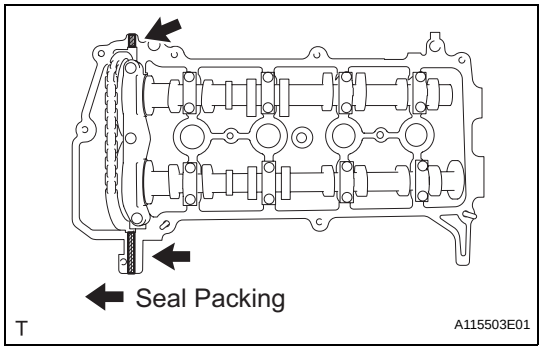

6. INSTALL CYLINDER HEAD COVER SUB-ASSEMBLY

(a) Apply seal packing to the cylinder head as shown in the illustration.

Seal Packing:

Toyota Genuine Seal Packing Black, Three Bond 1207B or Equivalent

NOTICE:

- **Remove any oil from the contact surface.**
- **Install the cylinder head cover sub-assembly within 3 minutes of applying the seal packing.**
- **Do not start the engine for at least 2 hours after the installation.**

(b) Install the cylinder head cover sub-assembly with the 9 bolts, 2 nuts and 2 seal washers.

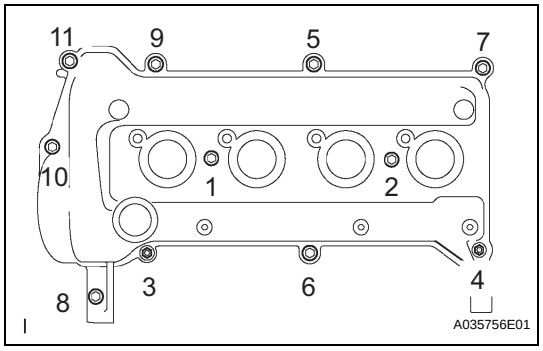

(c) Tighten the 9 bolts and 2 nuts in the sequence shown in the illustration.

Torque: 10 N*m (102 kgf*cm, 7.0 ft.*lbf)

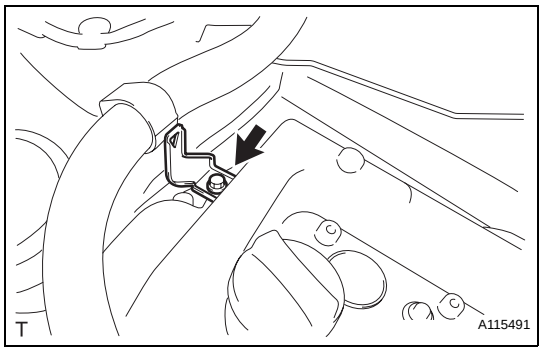

(d) Install the wire harness bracket with the bolt.

Torque: 13 N*m (133 kgf*cm, 9.6 ft.*lbf)

FU

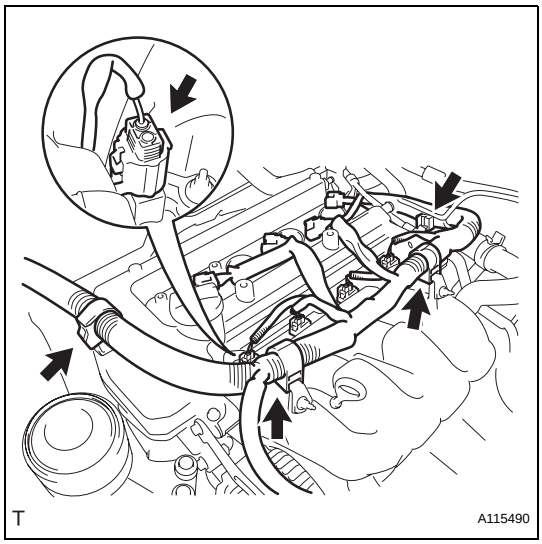

(e) Connect the connector and wire harness clamp shown in the illustration and connect the engine wire harness.

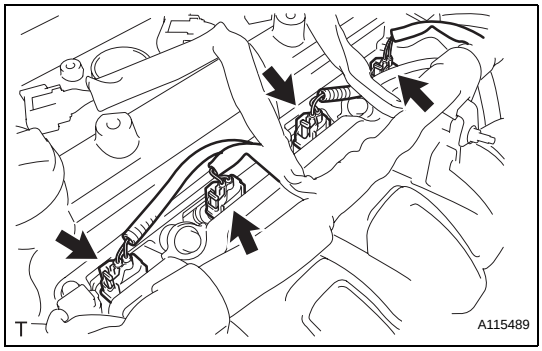

(f) Connect the fuel injector connectors.

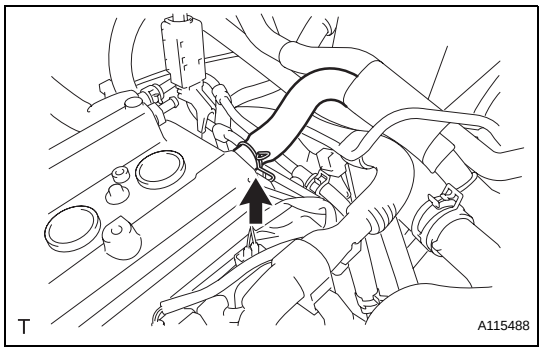

7. CONNECT VENTILATION HOSE NO. 2
(a) Connect ventilation hose No. 2.

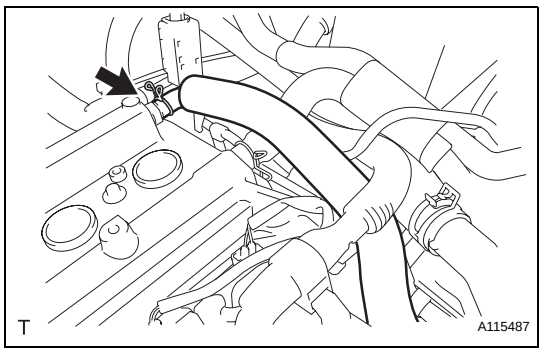

8. CONNECT VENTILATION HOSE
(a) Connect the ventilation hose.

9. INSTALL IGNITION COIL NO. 1 (See page IG-9)

10. CONNECT CABLE TO NEGATIVE BATTERY TERMINAL
Torque: 5.4 N*m (55 kgf*cm, 48 in.*lbf)

11. CHECK FOR FUEL LEAKAGE (See page FU-7)

12. CHECK FOR ENGINE OIL LEAKAGE

13. INSTALL CYLINDER HEAD COVER NO. 2 (See page IG-10)

FUEL PUMP

COMPONENTS

for Hatchback:

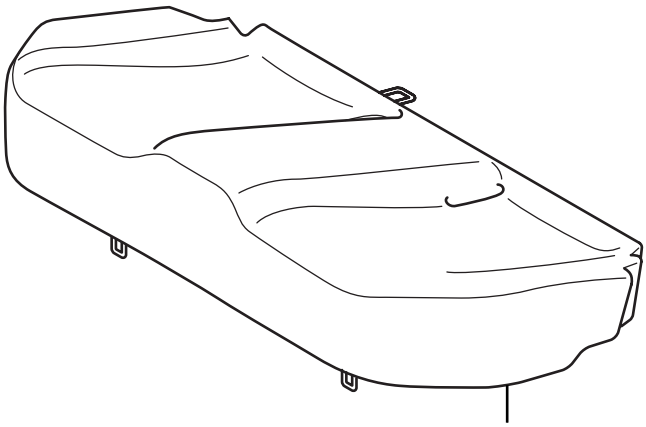

REAR SEAT CUSHION COVER PAD

H

A119203E03

for Sedan:

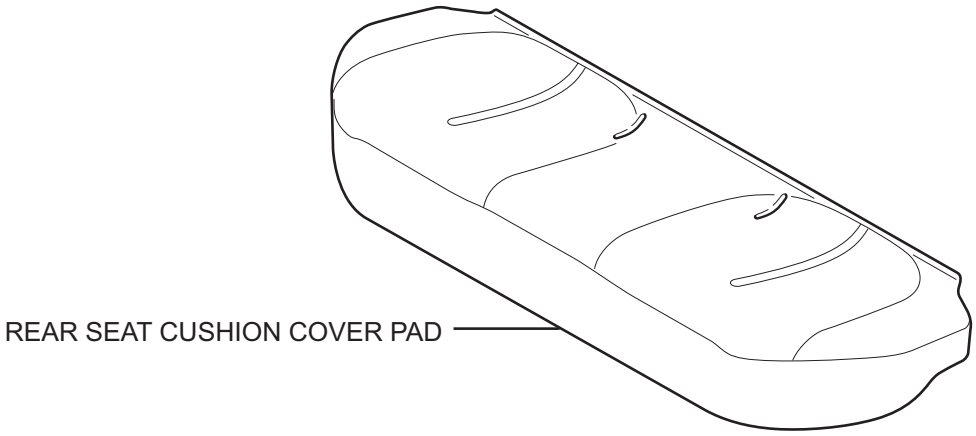

T

A133348E01

for Hatchback:

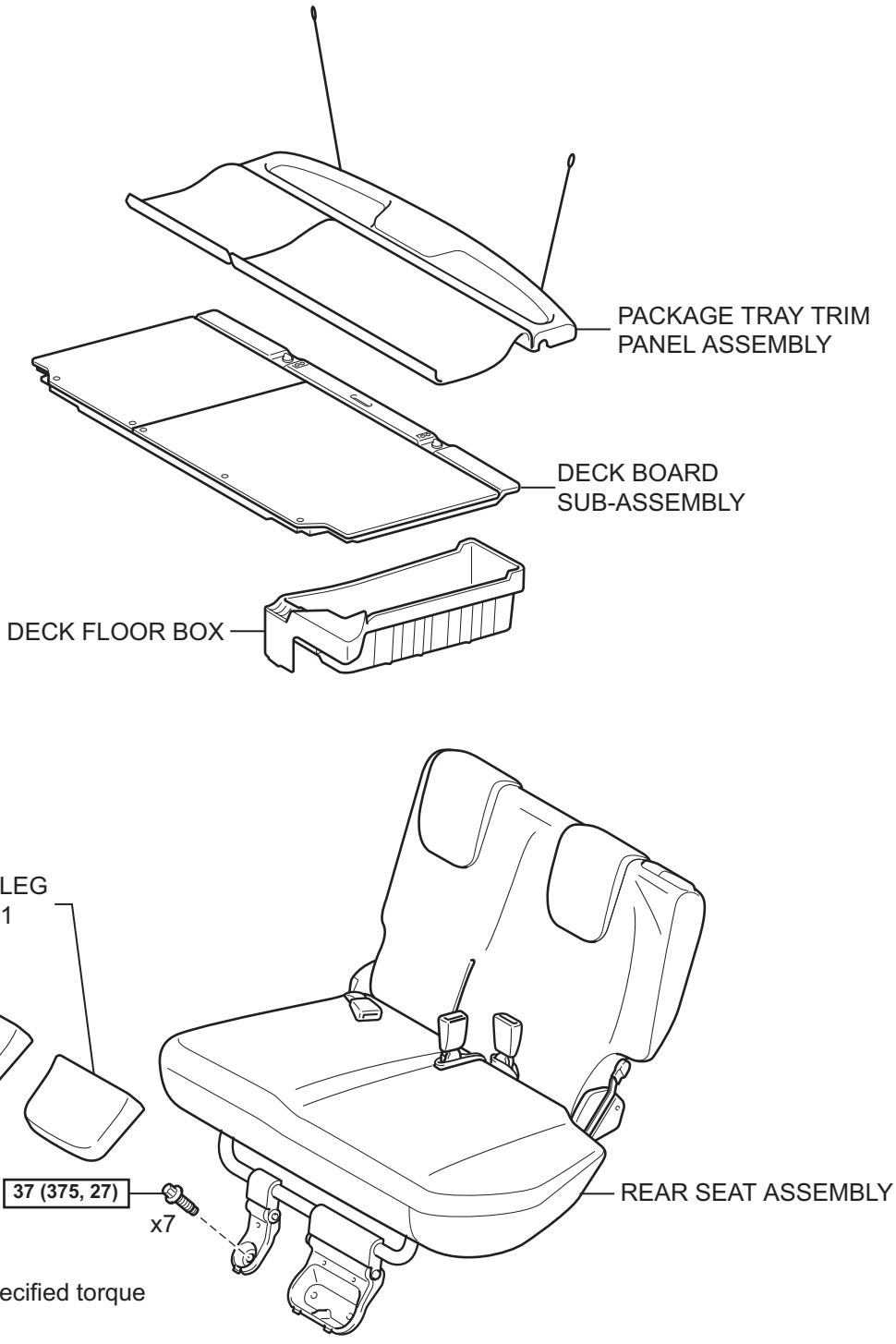

FU

FU

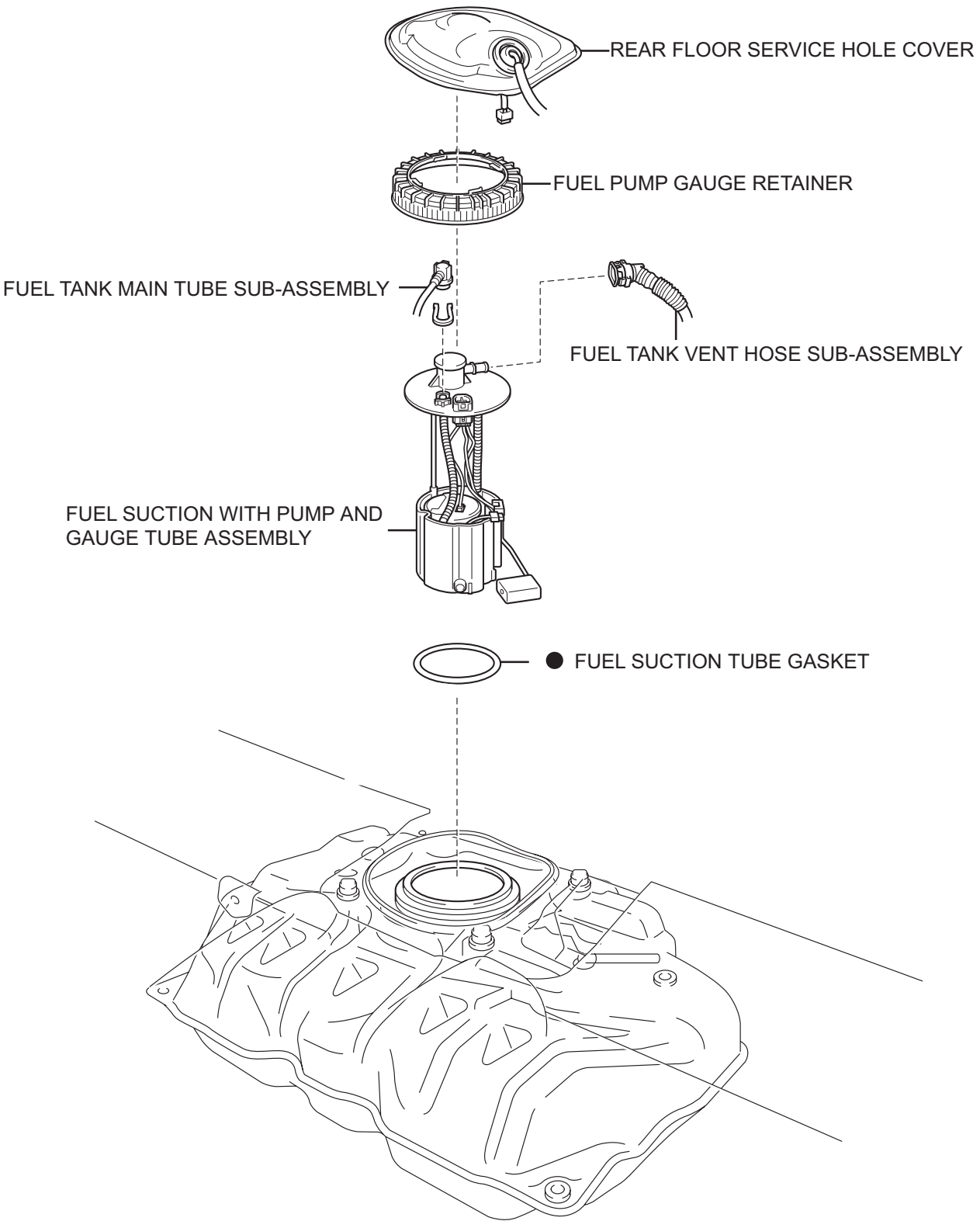

N

A115458E01

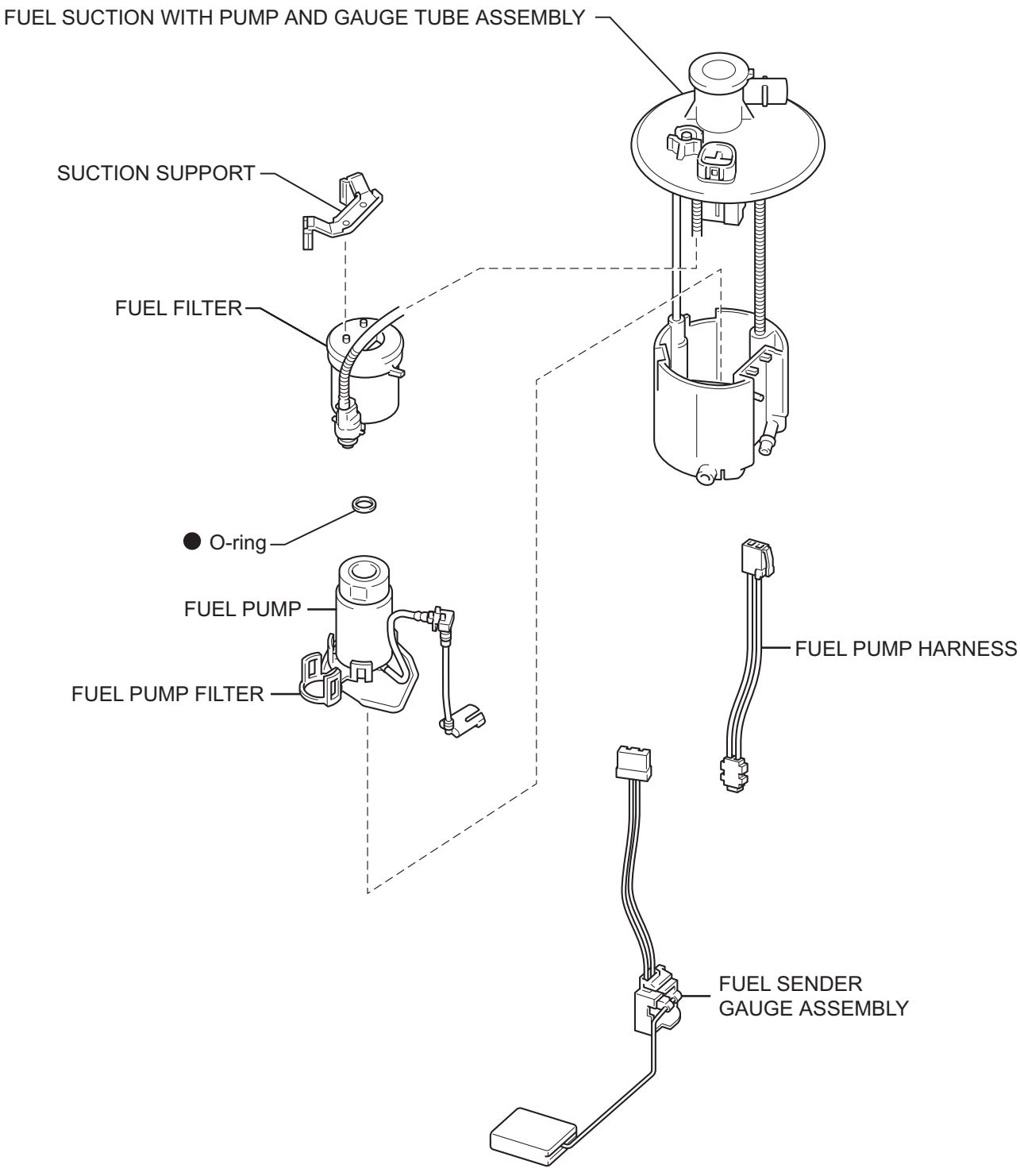
FUEL SUCTION WITH PUMP AND GAUGE TUBE ASSEMBLY
SUCTION SUPPORT
FUEL FILTER
● O-ring
FUEL PUMP
FUEL PUMP FILTER
FUEL PUMP HARNESS
FUEL SENDER GAUGE ASSEMBLY
● Non-reusable part
N
A115459E01

FU

REMOVAL

NOTICE:
Always use "Torx" socket wrench E10 when removing the rear seat.

1. **REMOVE REAR SEAT CUSHION COVER PAD (for Hatchback) (See page SE-114)**
2. **REMOVE REAR SEAT CUSHION COVER PAD (for Sedan) (See page SE-46)**
3. **REMOVE PACKAGE TRAY TRIM PANEL ASSEMBLY (for Hatchback) (See page IR-48)**
4. **REMOVE DECK BOARD SUB-ASSEMBLY (for Hatchback) (See page IR-48)**
5. **REMOVE DECK FLOOR BOX (for Hatchback) (See page SE-70)**
6. **REMOVE REAR SEAT LEG COVER NO. 1 (for Hatchback) (See page SE-70)**
7. **REMOVE REAR SEAT LEG COVER NO. 2 (for Hatchback) (See page SE-70)**
8. **REMOVE REAR SEAT ASSEMBLY (for Hatchback) (See page SE-71)**
9. **REMOVE REAR FLOOR SERVICE HOLE COVER**
   (a) Remove the rear floor service hole cover.

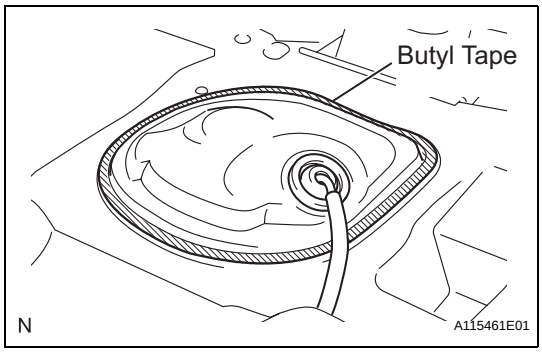

   (b) Disconnect the fuel pump connector.

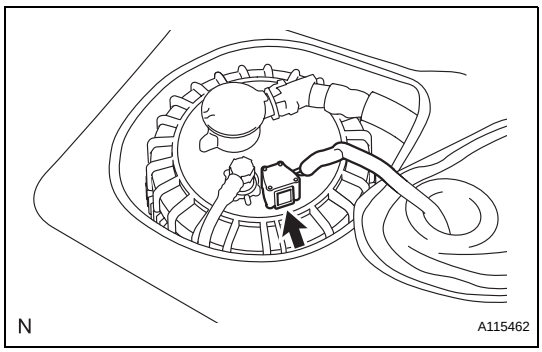

10. **DISCHARGE FUEL SYSTEM PRESSURE**
    (a) Discharge the fuel system pressure (See page FU-1).
11. **DISCONNECT CABLE FROM NEGATIVE BATTERY TERMINAL**

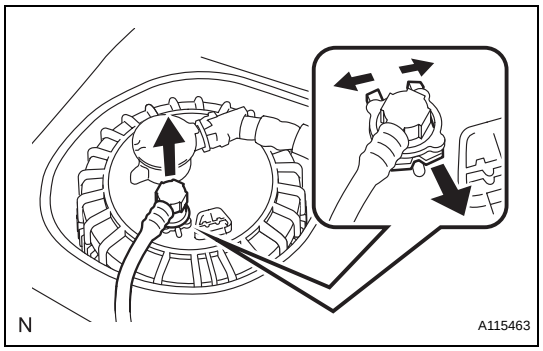

12. DISCONNECT FUEL TANK MAIN TUBE SUB-ASSEMBLY

(a) Widen the tip of the tube joint clip and pull out the clip in the direction indicated by the arrow.

(b) Disconnect the fuel tank main tube.

NOTICE:

- **Keep the O-ring free of any foreign matter, as it becomes contaminated easily.**
- **Do not use any tools in this procedure.**
- **Do not forcefully bend or twist the tube.**
- **Put the tube in a plastic bag to prevent damage and contamination.**
- **If the fuel suction plate and tube are stuck together, pinch the tube and turn it carefully to disconnect them.**
- **Do not damage any clips. If a clip is damaged, replace it.**

FU

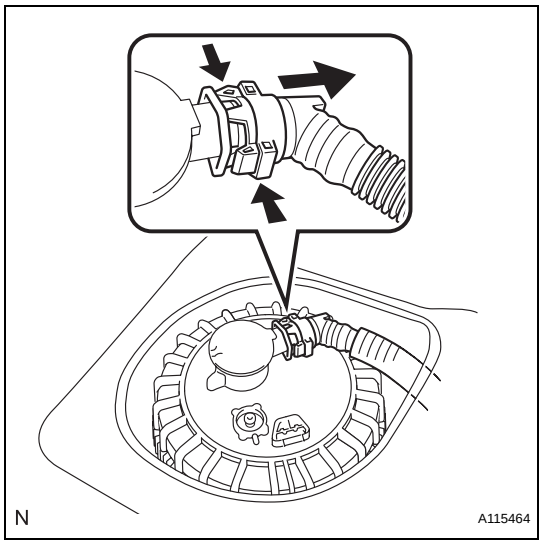

13. DISCONNECT FUEL TANK VENT HOSE SUB-ASSEMBLY

(a) Disconnect the fuel tank vent hose.

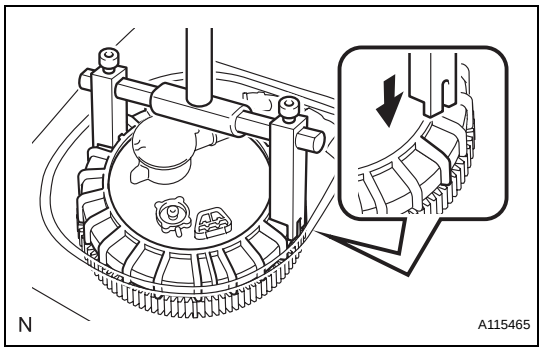

14. REMOVE FUEL PUMP GAUGE RETAINER

(a) Using SST, remove the fuel pump gauge retainer.

SST 09808-14020 (09808-01410, 09808-01420, 09808-01430)

HINT:

Align the claws of the fuel pump gauge retainer with the tips of SST.

15. REMOVE FUEL SUCTION WITH PUMP AND GAUGE TUBE ASSEMBLY

(a) Remove the fuel suction with pump and gauge tube.

NOTICE:

Do not bend the arm of the sender gauge.

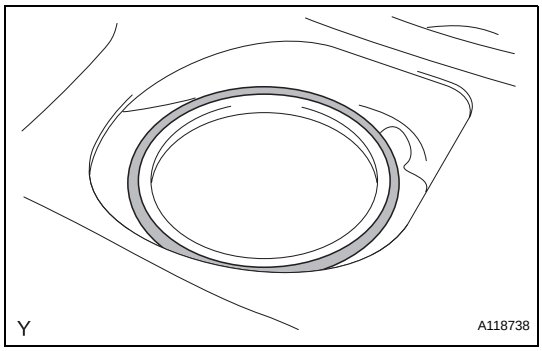

(b) Remove the fuel suction tube gasket from the fuel tank.

DISASSEMBLY

1. REMOVE FUEL SENDER GAUGE ASSEMBLY

(a) Disconnect the connector of the fuel sender gauge.

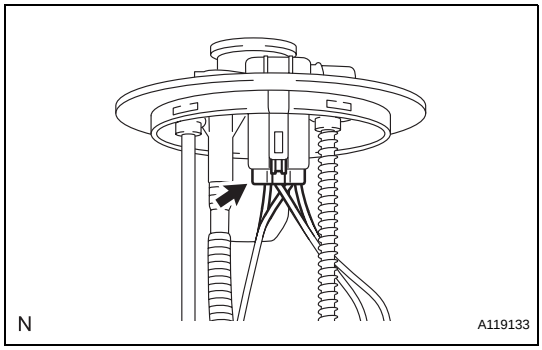

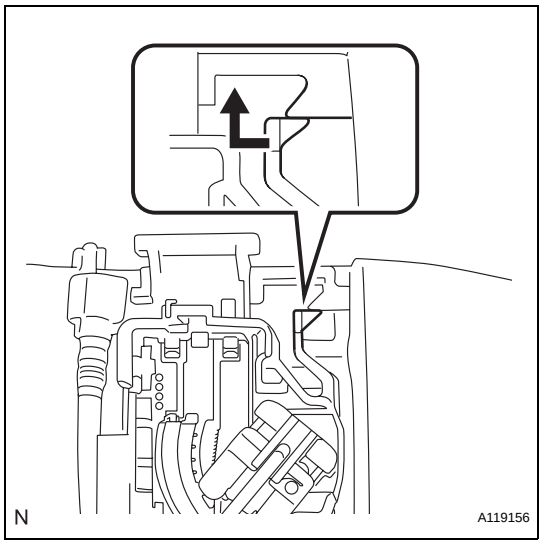

(b) Release the lock as shown in the illustration and slide the fuel sender gauge to remove it.

2. REMOVE FUEL PUMP

(a) Disconnect the connector of the fuel pump harness.

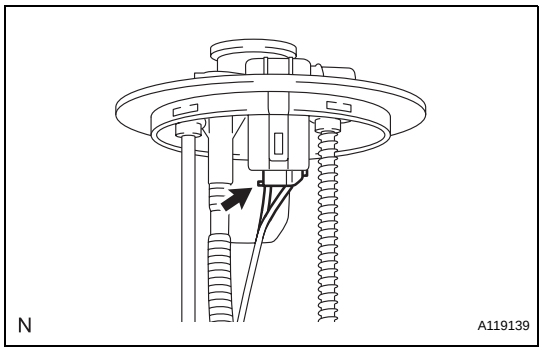

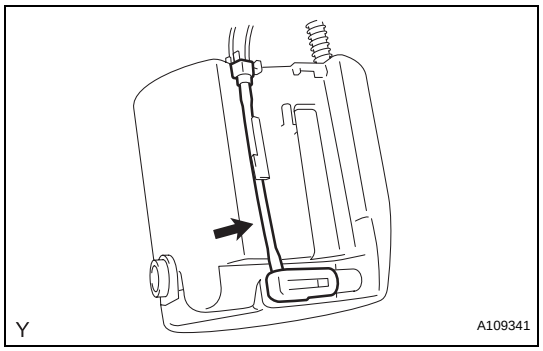

(b) Disconnect the fuel pump filter hose.

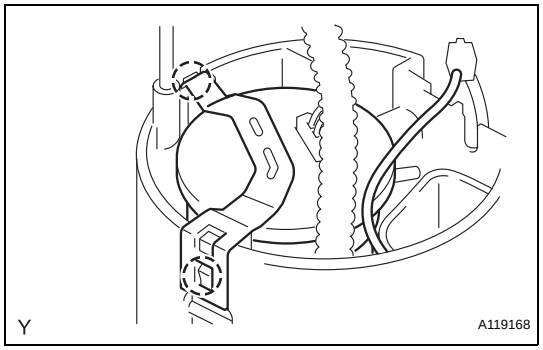

(c) Using a screwdriver with its tip wrapped in protective tape, disengage the 2 claws, and remove the fuel filter and fuel pump.

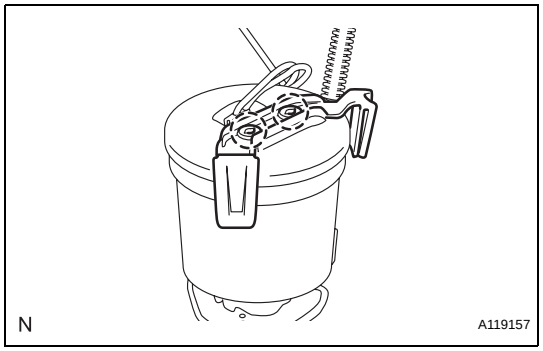

(d) Disengage the 2 claws and remove the fuel suction support.

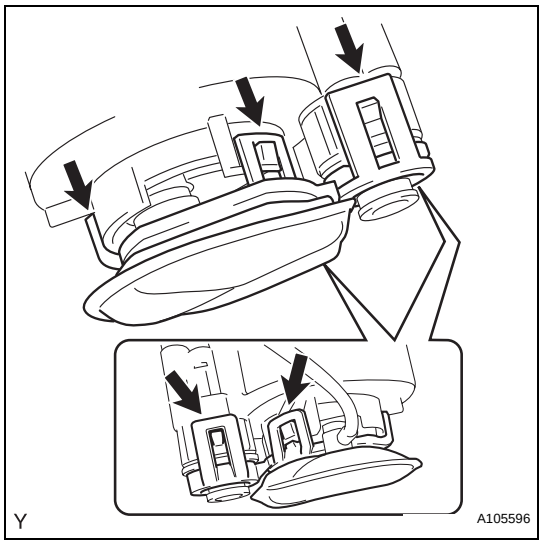

(e) Using a screwdriver with its tip wrapped in protective tape, disengage the 5 claws, and remove the fuel pump filter and fuel pump from the fuel filter.
NOTICE:
- **Do not damage the fuel pump filter.**
- **Do not remove the suction filter.**
- **Do not use either the fuel pump or the suction filter if the suction filter is removed from the fuel pump.**

FU

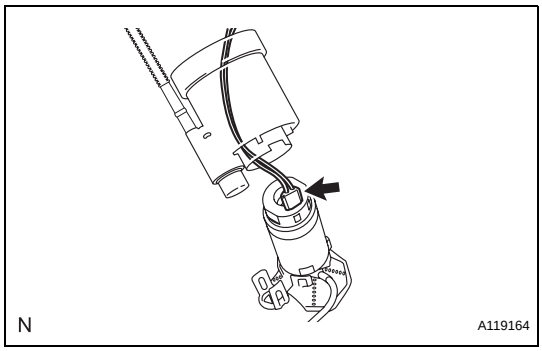

(f) Disconnect the fuel pump harness.

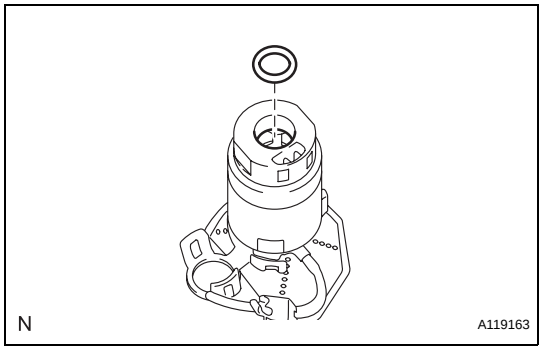

(g) Remove the O-ring.

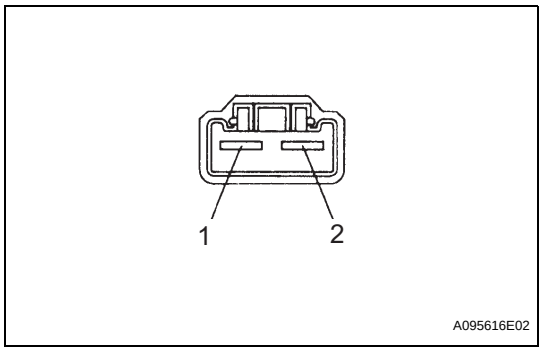

INSPECTION

1. INSPECT FUEL PUMP

(a) Check the resistance of the fuel pump.

(1) Using an ohmmeter, measure the resistance between terminals 1 and 2.

Standard resistance:

0.2 to 3.0 Ω at 20 °C (68°F)

(b) Inspect the operation of the fuel pump.

(1) Connect the positive (+) battery lead to terminal 1 of the connector, and the negative (-) lead to terminal 2. Check that the fuel pump operates.

NOTICE:

- **These tests must be performed within 10 seconds of connecting the battery to prevent the coil from burning out.**
- **Keep the fuel pump as far away from the battery as possible.**
- **Turn the voltage on and off on the battery side, not the fuel pump side.**

REASSEMBLY

1. INSTALL FUEL PUMP

(a) Apply gasoline to a new O-ring, and then install it into the fuel filter.

NOTICE:

- **Do not disassemble the fuel pump or the suction filter because they are nonreusable parts.**

(b) Connect the fuel pump harness.

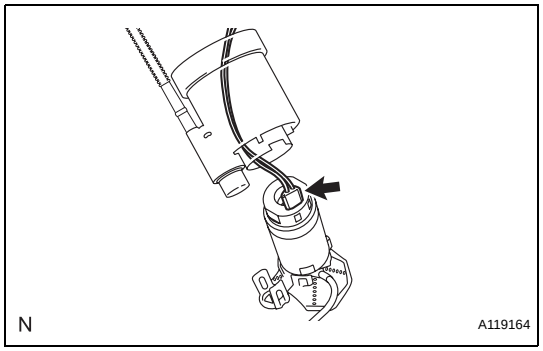

2. INSTALL FUEL PUMP FILTER

(a) Engage the 5 claws of the fuel pump.

NOTICE:

- **Do not remove the suction filter.**
- **Do not use either the fuel pump or the suction filter if the suction filter is removed from the fuel pump.**

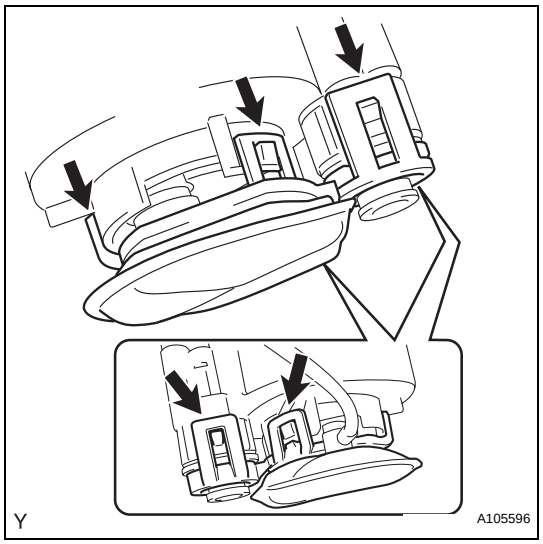

(b) Engage the 2 claws of the fuel suction support.

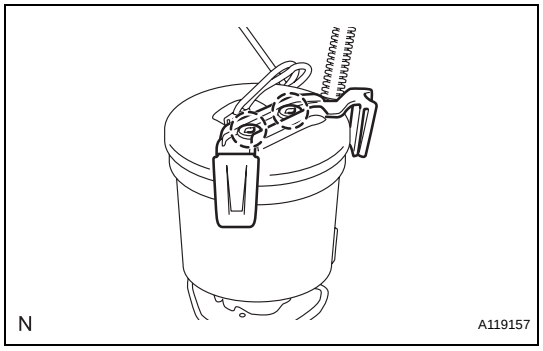

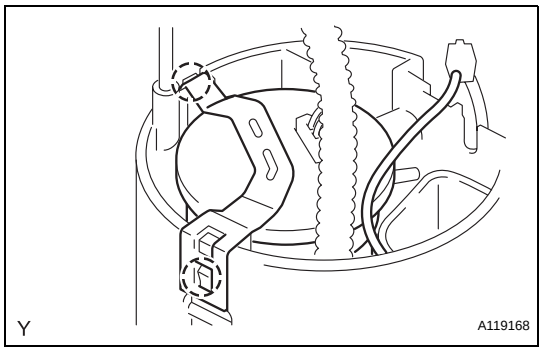

(c) Engage the 2 claws of the fuel suction support and install the fuel filter and the fuel pump onto the fuel sub-tank.

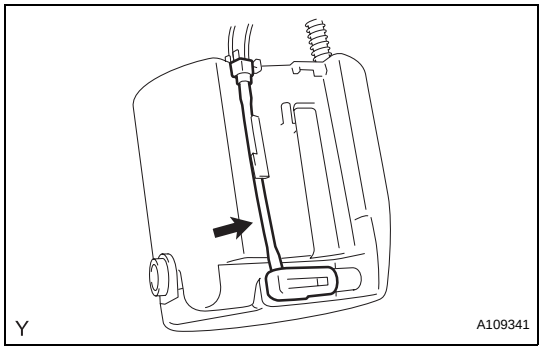

(d) Connect the fuel pump filter hose.

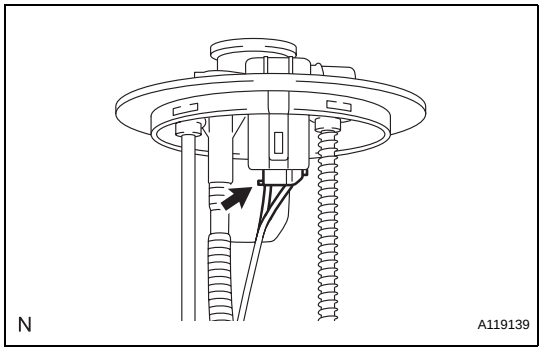

(e) Connect the connector of the fuel pump harness.

3. INSTALL FUEL SENDER GAUGE ASSEMBLY

(a) Install the fuel sender gauge by sliding it downward.

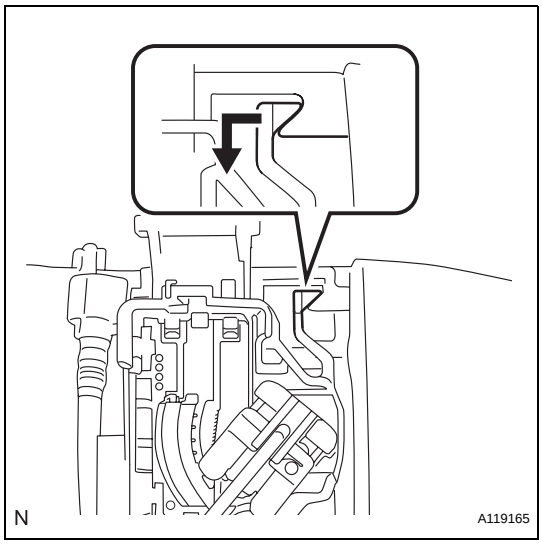

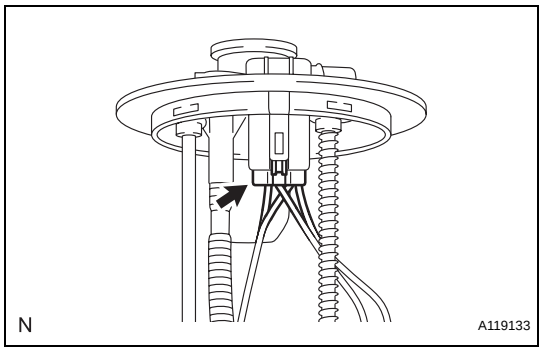

(b) Connect the connector of the fuel sender gauge.

INSTALLATION

NOTICE:
Always use "Torx" socket wrench E10 when installing the rear seat.

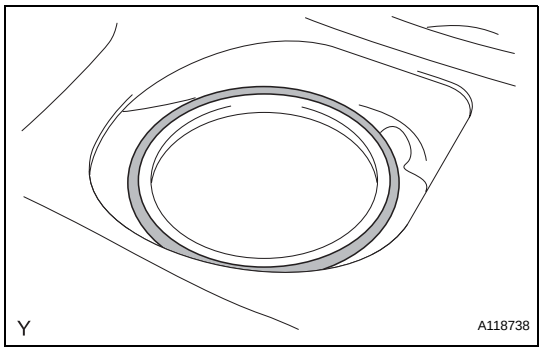

1. INSTALL FUEL SUCTION WITH PUMP AND GAUGE TUBE ASSEMBLY

(a) Install a new fuel suction tube gasket onto the fuel tank.

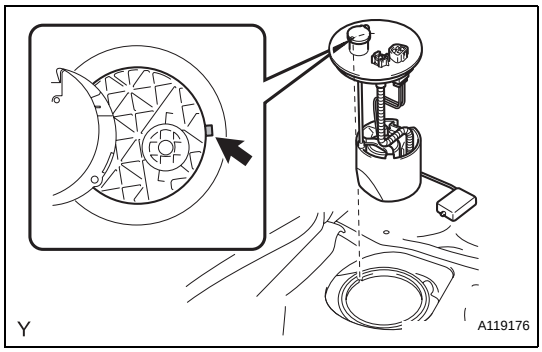

(b) Align the protrusion of the fuel pump with the cutout of the fuel tank and install the fuel suction with pump and gauge tube assembly.
NOTICE:
The arm of the sender gauge should not be bent.

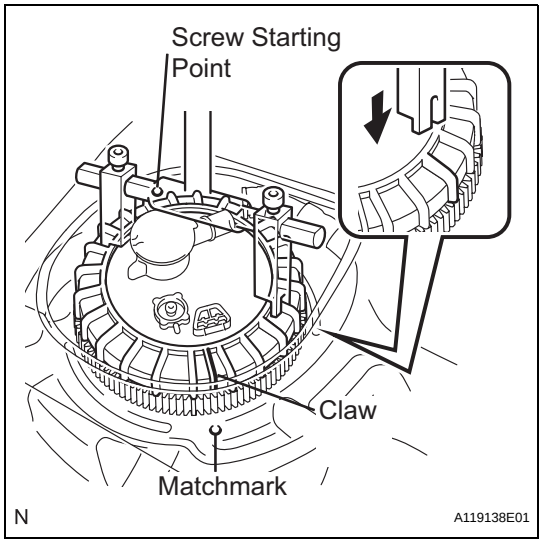

2. INSTALL FUEL PUMP GAUGE RETAINER

(a) Using SST, turn the retainer 540° clockwise from the screw starting point and align the claw of the retainer with the matchmark on the fuel tank.
SST 09808-14020 (09808-01410, 09808-01420, 09808-01430)
NOTICE:
Replace the fuel pump gauge retainer with a new one if not installed properly.
Part No. 77144-52040
HINT:
- Align the claws of the fuel pump gauge retainer with the tips of SST.
- At the point where the retainer is turned 90° from the start of the thread, push the retainer in from the opposite side to the start of the thread. Check that the thread of the retainer is properly engaged with that on the tank.

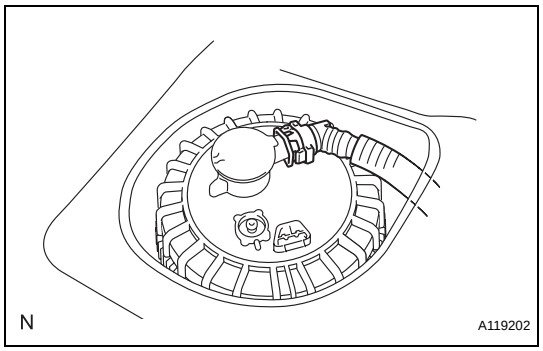

3. CONNECT FUEL TANK VENT HOSE SUB-ASSEMBLY

(a) Connect the fuel tank vent hose.

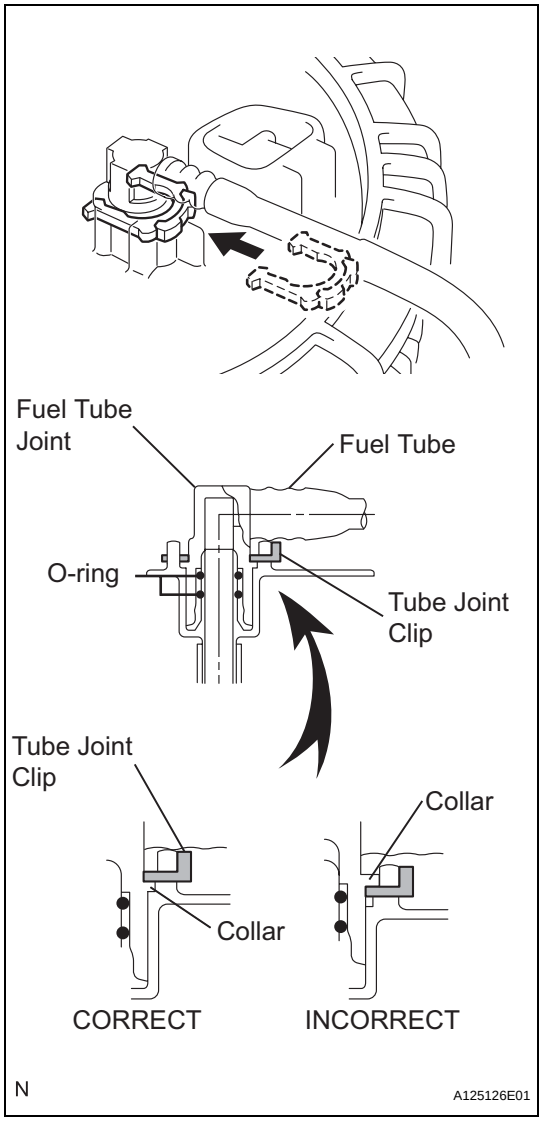

4. CONNECT FUEL TANK MAIN TUBE SUB-ASSEMBLY

(a) Insert the fuel tank main tube.

(b) Install the tube joint clip.

NOTICE:

- **Check that there are no scratches or foreign matter on the connecting parts.**
- **Check that the fuel tube joint is inserted securely.**
- **After installing the tube joint clip, check that the fuel tube joint has not been pulled off.**
- **Do not damage any clips. If a clip is damaged, replace it.**

FU

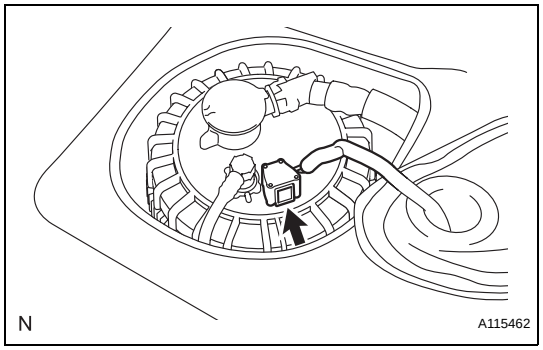

5. INSTALL REAR FLOOR SERVICE HOLE COVER

(a) Connect the fuel pump connector.

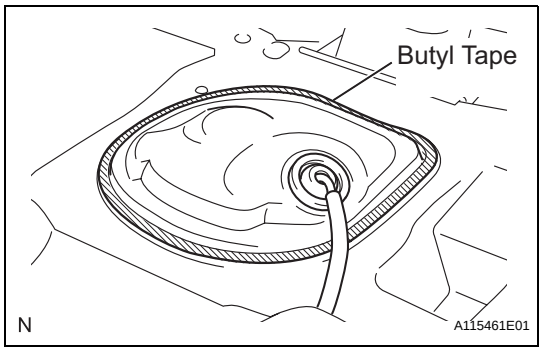

(b) Install the rear service hole cover with new butyl tape.

6. **INSTALL REAR SEAT ASSEMBLY (for Hatchback) (See page SE-84)**
7. **INSTALL REAR SEAT LEG COVER NO. 2 (for Hatchback) (See page SE-85)**
8. **INSTALL REAR SEAT LEG COVER NO. 1 (for Hatchback) (See page SE-85)**
9. **INSTALL DECK FLOOR BOX (for Hatchback) (See page SE-85)**
10. **INSTALL DECK BOARD SUB-ASSEMBLY (for Hatchback) (See page IR-83)**
11. **INSTALL PACKAGE TRAY TRIM PANEL ASSEMBLY (for Hatchback) (See page IR-83)**
12. **INSTALL REAR SEAT CUSHION COVER PAD (for Sedan) (See page SE-53)**
13. **INSTALL REAR SEAT CUSHION COVER PAD (for Hatchback) (See page SE-123)**
14. **CONNECT CABLE TO NEGATIVE BATTERY TERMINAL**
    Torque: 5.4 N*m (55 kgf*cm, 48 in.*lbf)
15. **CHECK FOR FUEL LEAKAGE (See page FU-7)**

FU

FUEL TANK

COMPONENTS

for Hatchback:

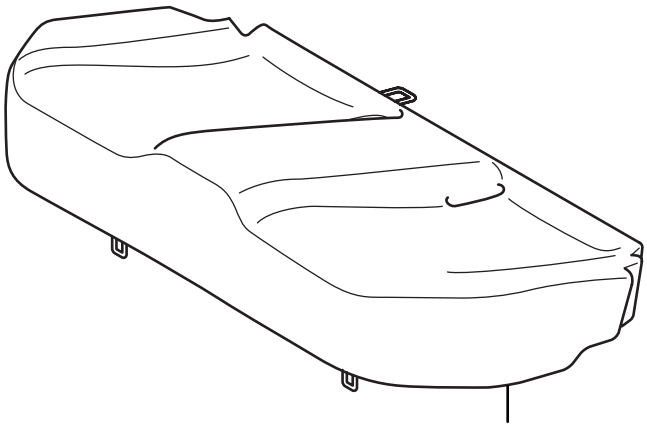

REAR SEAT CUSHION COVER PAD

H

A119203E03

for Sedan:

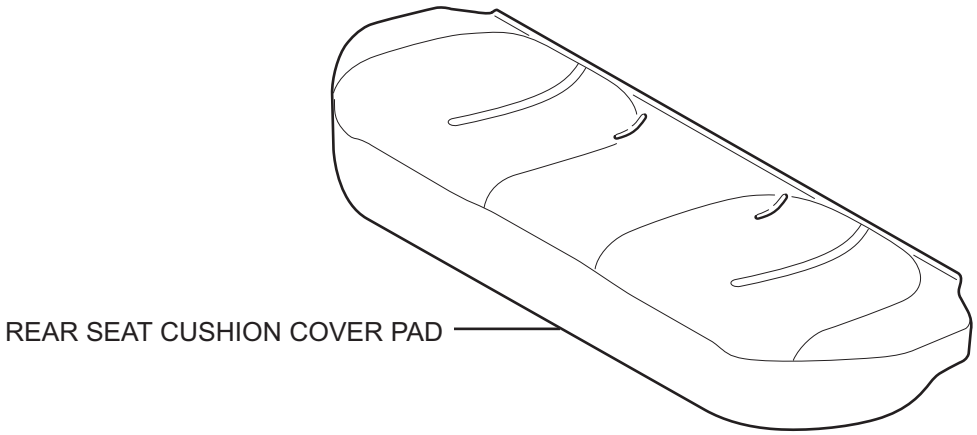

T

A133348E01

for Hatchback:

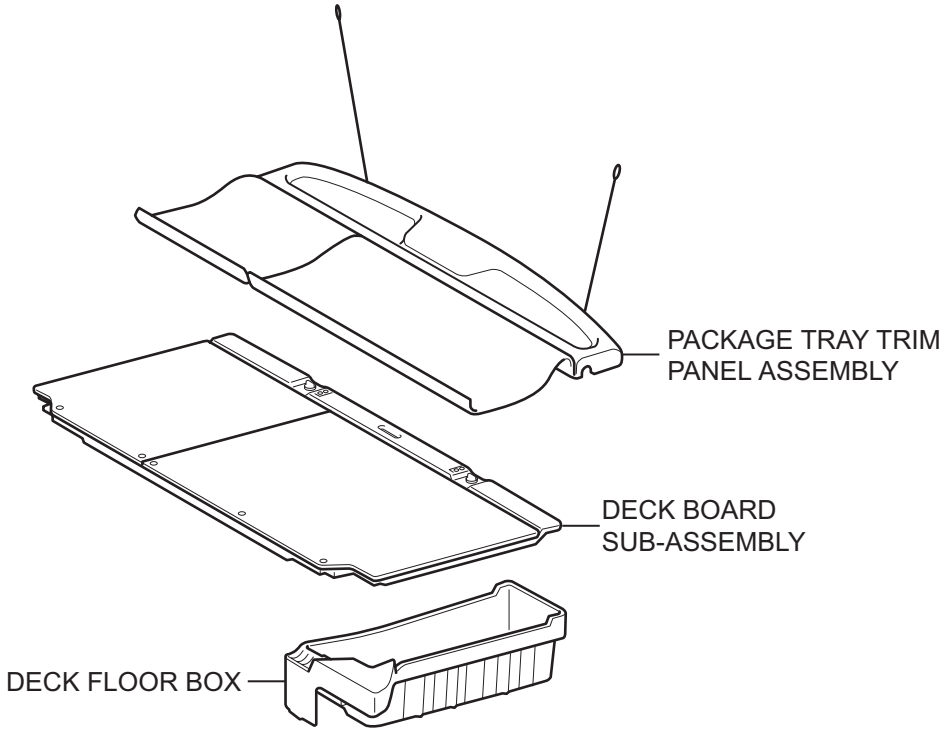

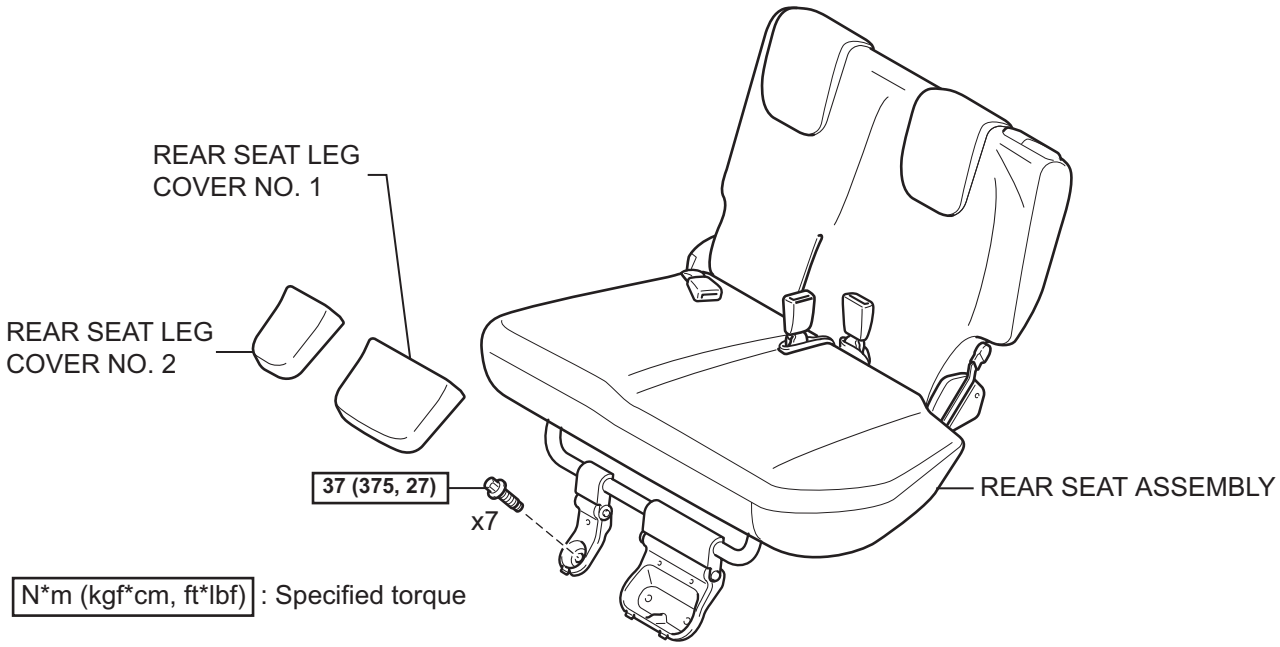

N*m (kgf*cm, ft*lbf) : Specified torque

T

B114737E04

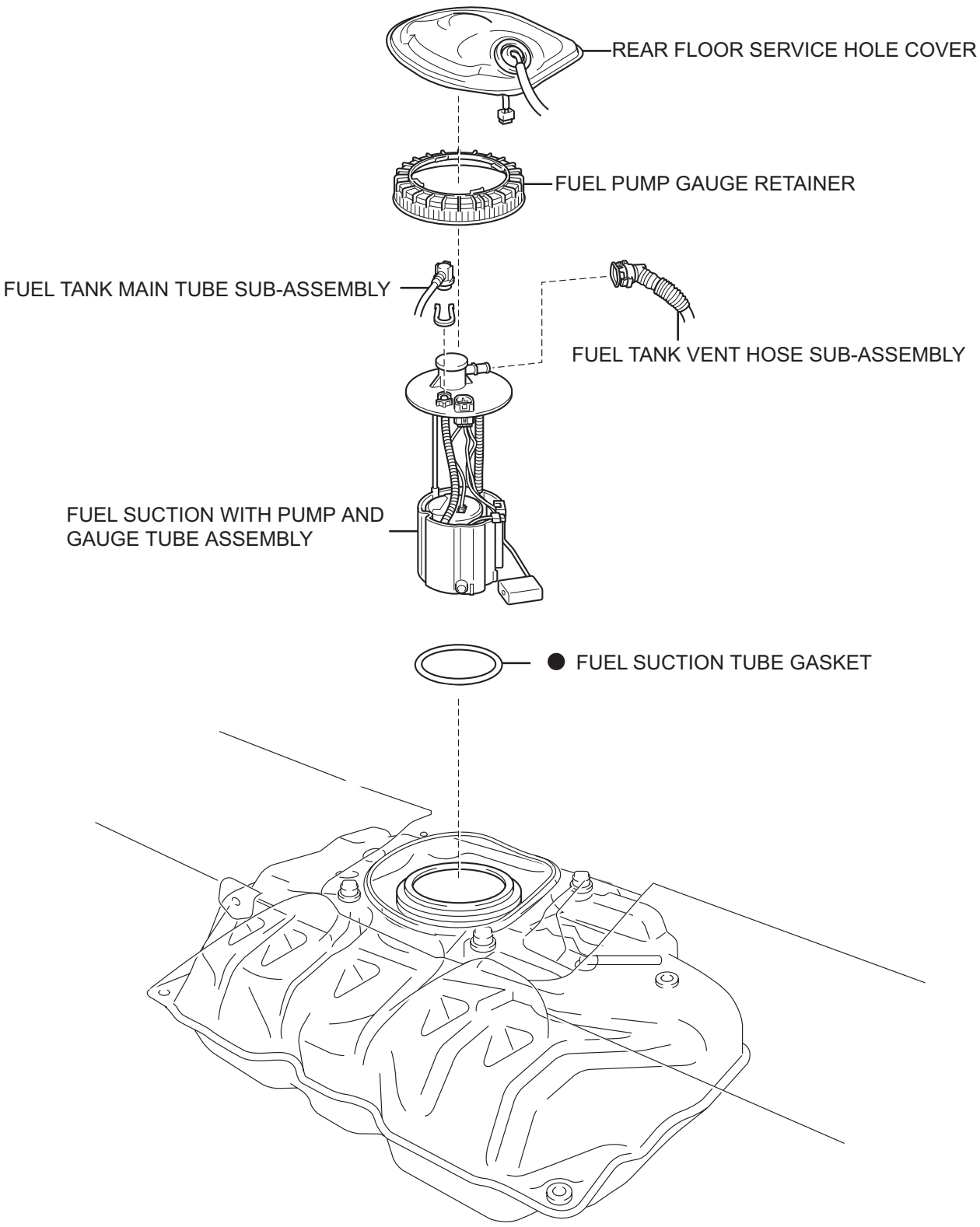

N

A115458E01

FU

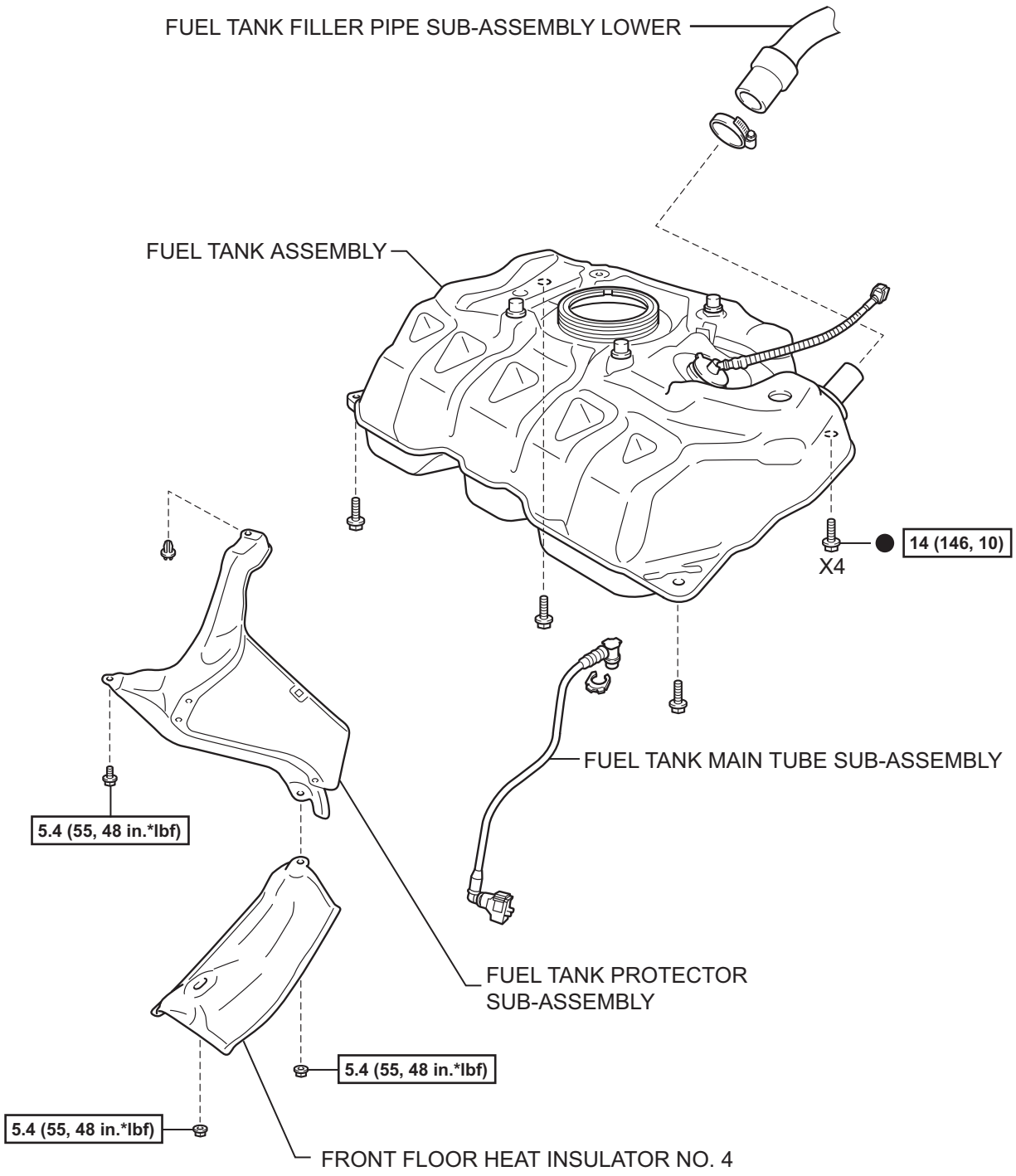

N*m (kgf*cm, ft.*lbf) : Specified torque ● Non-reusable part

N

A117806E01

REMOVAL

NOTICE:
Always use "Torx" socket wrench E10 when removing the rear seat.

1. **REMOVE REAR SEAT CUSHION COVER PAD (for Hatchback) (See page SE-114)**
2. **REMOVE REAR SEAT CUSHION COVER PAD (for Sedan) (See page SE-46)**
3. **REMOVE PACKAGE TRAY TRIM PANEL ASSEMBLY (for Hatchback) (See page IR-48)**
4. **REMOVE DECK BOARD SUB-ASSEMBLY (for Hatchback) (See page IR-48)**
5. **REMOVE DECK FLOOR BOX (for Hatchback) (See page SE-70)**
6. **REMOVE REAR SEAT LEG COVER NO. 1 (for Hatchback) (See page SE-70)**
7. **REMOVE REAR SEAT LEG COVER NO. 2 (for Hatchback) (See page SE-70)**
8. **REMOVE REAR SEAT ASSEMBLY (for Hatchback) (See page SE-71)**
9. **REMOVE REAR FLOOR SERVICE HOLE COVER (See page FU-26)**
10. **DISCHARGE FUEL SYSTEM PRESSURE** (See page FU-1)
11. **DISCONNECT CABLE FROM NEGATIVE BATTERY TERMINAL**
12. **DISCONNECT FUEL TANK MAIN TUBE SUB-ASSEMBLY (See page FU-27)**
13. **DISCONNECT FUEL TANK VENT HOSE SUB-ASSEMBLY (See page FU-27)**
14. **REMOVE FUEL PUMP GAUGE RETAINER (See page FU-27)**
15. **REMOVE FUEL SUCTION WITH PUMP AND GAUGE TUBE ASSEMBLY (See page FU-27)**
16. **DRAIN FUEL**
17. **REMOVE FRONT FLOOR HEAT INSULATOR NO. 4**
    (a) Remove the 2 nuts together with the insulator.

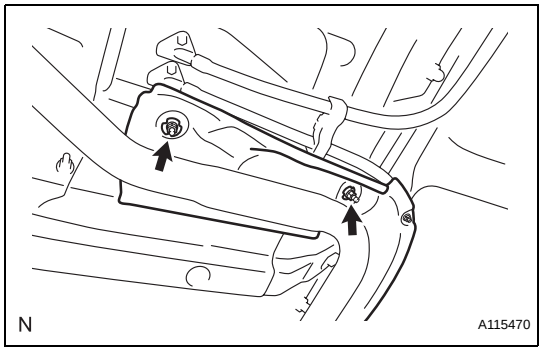

FU

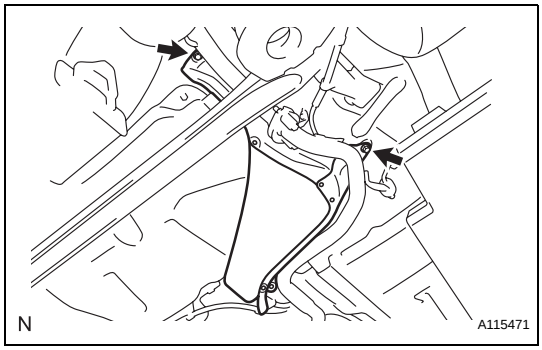

18. REMOVE FUEL TANK PROTECTOR SUB-ASSEMBLY

(a) Remove the bolt together with the clip.

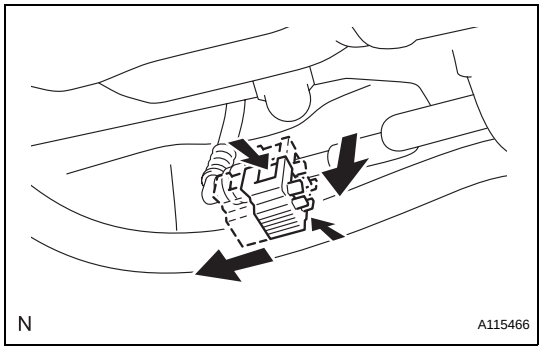

19. DISCONNECT FUEL TANK MAIN TUBE SUB-ASSEMBLY

(a) Release the lock as shown in the illustration, then pull and remove the fuel tank main tube.

NOTICE:

- **Remove any dirt and foreign matter from the clip before performing this work.**
- **Avoid any scratches or foreign matter on the parts when disconnecting them, as the quick connector has the O-ring that seals the plug.**
- **Perform this work by hand. Do not use any tools.**
- **Do not forcibly bend, twist or turn the nylon tube.**
- **Protect the disconnected parts by covering them with a plastic bag.**
- **If the connector and pipe are stuck, disconnect the nylon tube by turning it by hand to release them.**

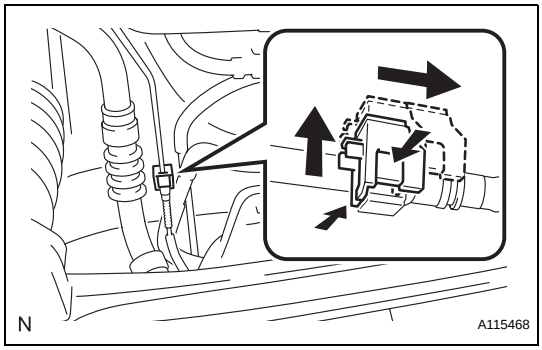

20. DISCONNECT FUEL TANK BREATHER HOSE

(a) Release the lock as shown in the illustration, then pull and remove the fuel tank breather hose.

NOTICE:

- **Remove any dirt and foreign matter from the clip before performing this work.**
- **Avoid any scratches or foreign matter on the parts when disconnecting, as the quick connector has the O-ring that seals the plug.**
- **Perform this work by hand. Do not use any tools.**
- **Do not forcibly bend, twist or turn the nylon tube.**
- **Protect the disconnected parts by covering them with a plastic bag.**
- **If the connector and pipe are stuck, disconnect the nylon tube by turning it by hand to release them.**

FU

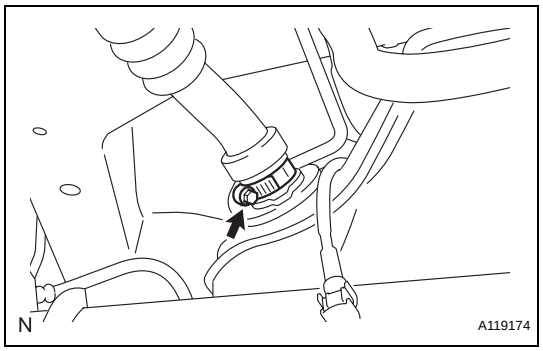

21. DISCONNECT FUEL TANK FILLER PIPE SUB-ASSEMBLY LOWER

(a) Loosen the clamp and disconnect the fuel tank filler pipe.

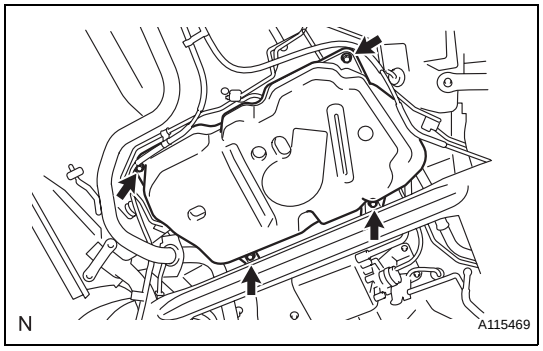

22. REMOVE FUEL TANK ASSEMBLY

(a) Remove the 4 bolts and remove the fuel tank.

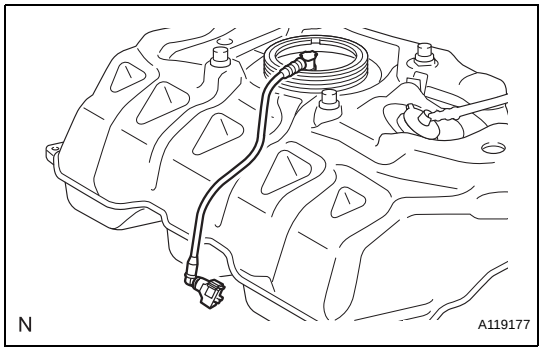

(b) Remove the fuel tank main tube from the fuel tank.

FU

INSTALLATION

NOTICE:
Always use "Torx" socket wrench E10 when removing the rear seat.

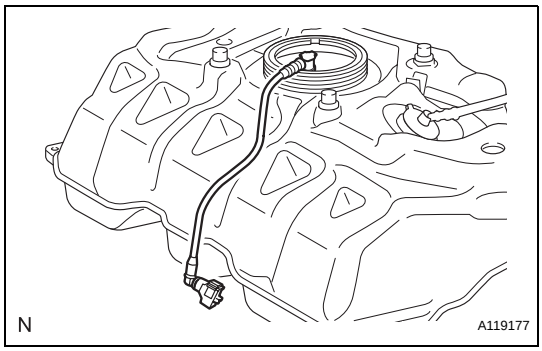

1. INSTALL FUEL TANK ASSEMBLY

(a) Install the fuel tank main tube onto the fuel tank.

(b) Clean the bolt hole and remove any grease.

FU

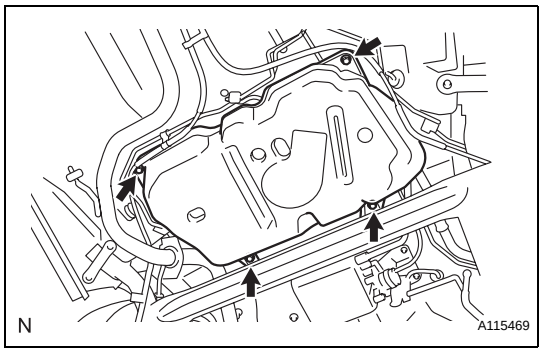

(c) Install the fuel tank with 4 new bolts.
Torque: 14 N*m (146 kgf*cm, 10 ft.*lbf)

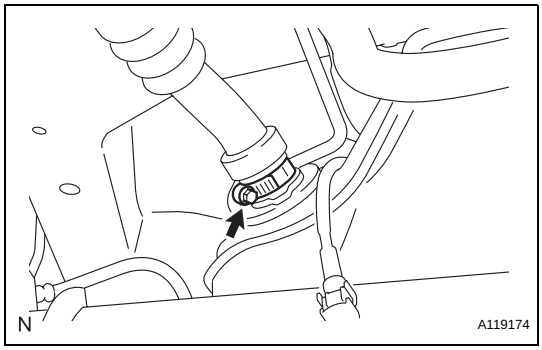

2. CONNECT FUEL TANK FILLER PIPE SUB-ASSEMBLY LOWER

(a) Connect the fuel tank filler pipe and install the clamp.

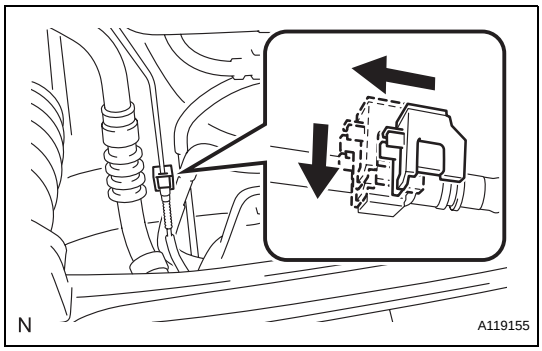

3. CONNECT FUEL TANK BREATHER TUBE

(a) Align the fuel tank breather tube connector with the pipe, push the fuel tube connector in until the retainer makes a click sound, then lock the cover of the connector.
NOTICE:
- **Check that there are no scratches or foreign matter on the disconnected parts of the fuel tank breather tube connector and pipe before performing this work.**
- **After connecting, pull the pipe and fuel tank breather connector to make sure that they are securely connected.**

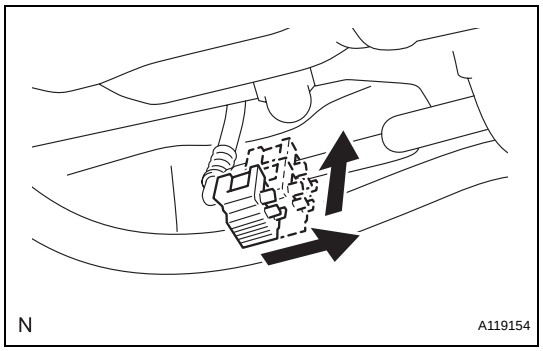

4. **CONNECT FUEL TANK MAIN TUBE SUB-ASSEMBLY**
   (a) Align the fuel tube connector with the pipe, push the fuel tube connector in until the retainer makes a click sound, then lock the cover of the connector.
   NOTICE:
   - **Check that there are no scratches or foreign matter on the disconnected parts of the fuel tube connector and pipe before performing this work.**
   - **After connecting, pull the pipe and fuel tube connector to make sure that they are securely connected.**

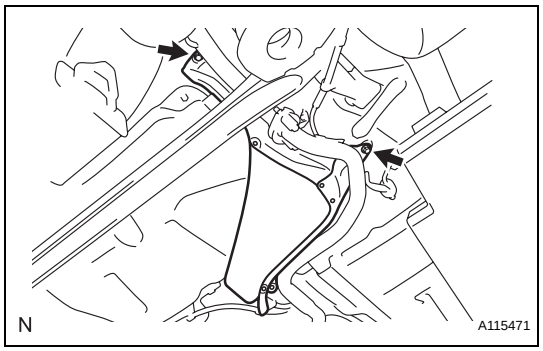

5. **INSTALL FUEL TANK PROTECTOR SUB-ASSEMBLY**
   (a) Install the fuel tank protector sub-assembly with the bolt and clip.
   Torque: 5.4 N*m (55 kgf*cm, 48 in.*lbf)

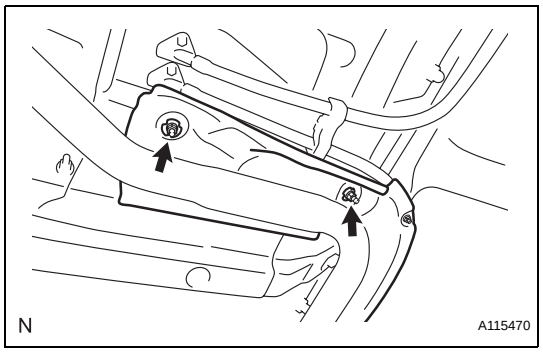

6. **INSTALL FRONT FLOOR HEAT INSULATOR NO. 4**
   (a) Install the 2 nuts.
   Torque: 5.4 N*m (55 kgf*cm, 48 in.*lbf)
7. **INSTALL FUEL SUCTION WITH PUMP AND GAUGE TUBE ASSEMBLY (See page FU-33)**
8. **INSTALL FUEL PUMP GAUGE RETAINER (See page FU-33)**
9. **CONNECT FUEL TANK VENT HOSE SUB-ASSEMBLY (See page FU-33)**
10. **CONNECT FUEL TANK MAIN TUBE SUB-ASSEMBLY (See page FU-34)**
11. **CONNECT REAR FLOOR SERVICE HOLE COVER (See page FU-34)**
12. **INSTALL REAR SEAT ASSEMBLY (for Hatchback) (See page SE-84)**
13. **INSTALL REAR SEAT LEG COVER NO. 2 (for Hatchback) (See page SE-85)**
14. **INSTALL REAR SEAT LEG COVER NO. 1 (for Hatchback) (See page SE-85)**
15. **INSTALL DECK FLOOR BOX (for Hatchback) (See page SE-85)**
16. **INSTALL DECK BOARD SUB-ASSEMBLY (for Hatchback) (See page IR-83)**
17. **INSTALL PACKAGE TRAY TRIM PANEL ASSEMBLY (for Hatchback) (See page IR-83)**

18. **INSTALL REAR SEAT CUSHION COVER PAD (for Sedan) (See page SE-53)**
19. **INSTALL REAR SEAT CUSHION COVER PAD (for Hatchback) (See page SE-123)**
20. **ADD FUEL**
21. **CONNECT CABLE TO NEGATIVE BATTERY TERMINAL**
    Torque: 5.4 N*m (55 kgf*cm, 48 in.*lbf)
22. **CHECK FOR FUEL LEAKAGE (See page FU-7)**

EMISSION CONTROL SYSTEM

PARTS LOCATION

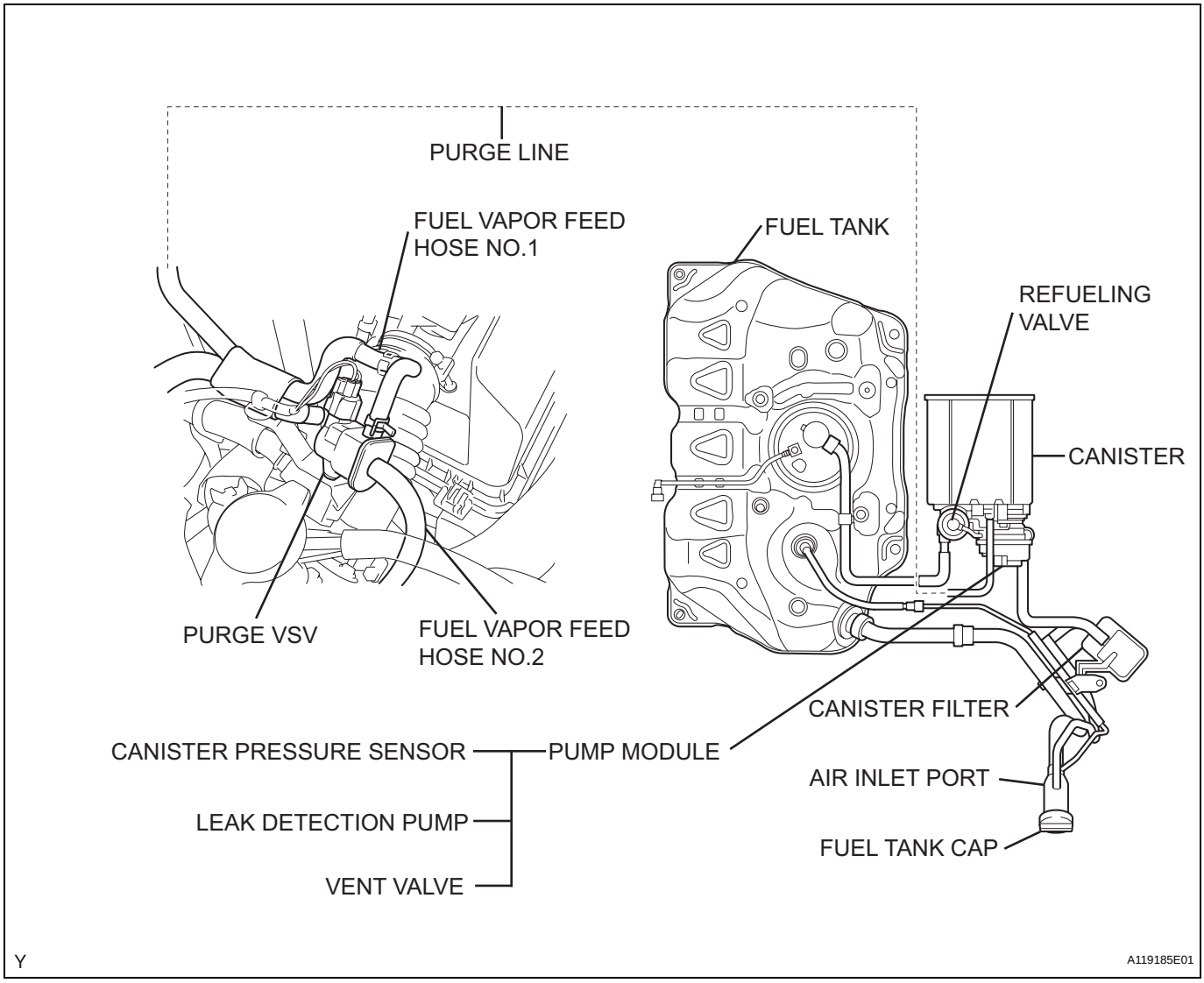

EC

for Hatchback:

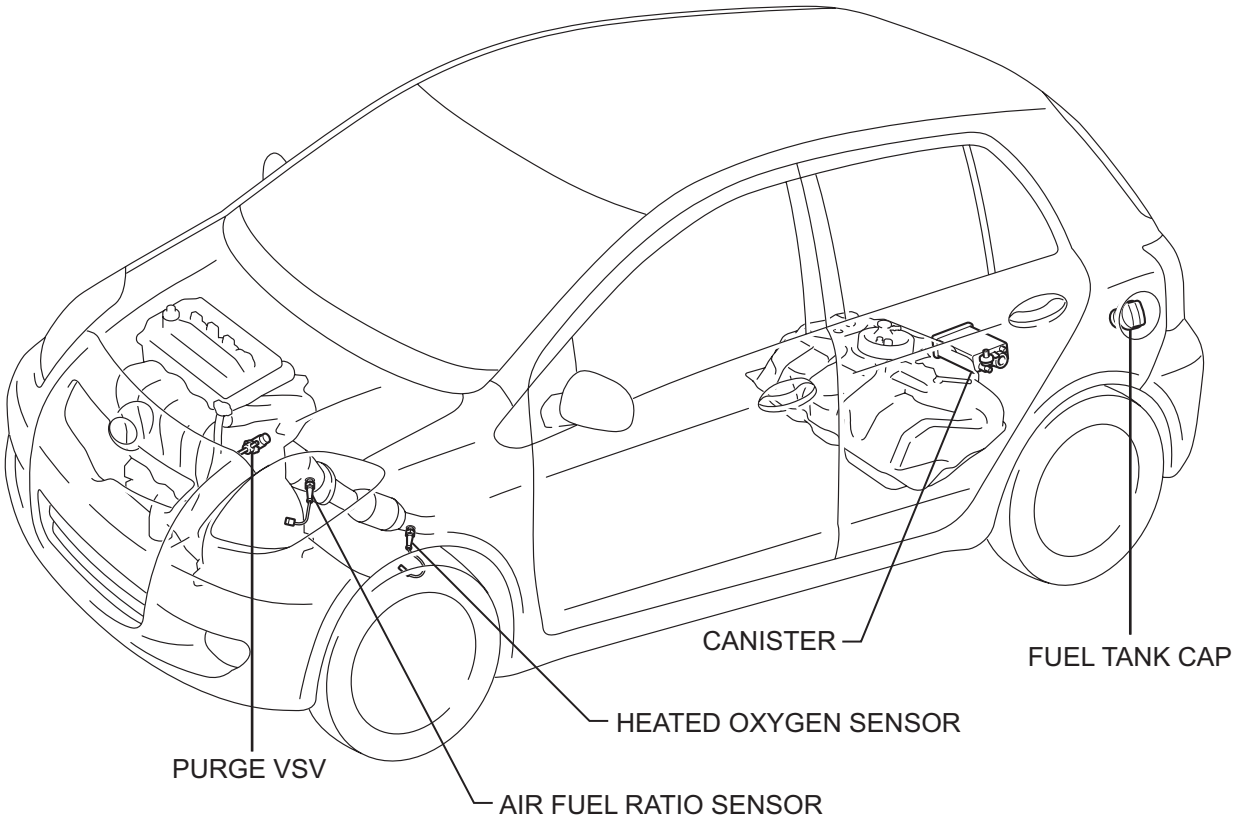

N

A117786E01

for Sedan:

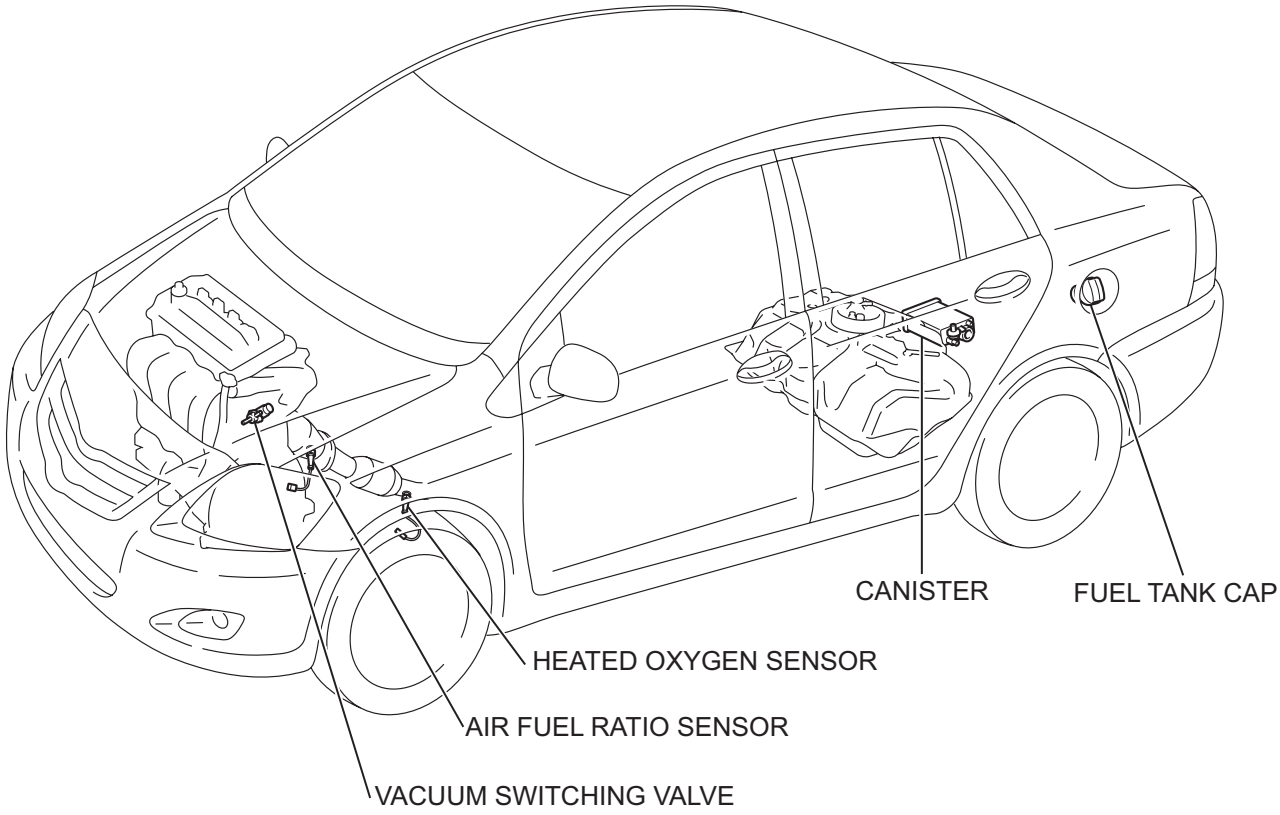

N

A133333E01

EC

ON-VEHICLE INSPECTION

1. INSPECT FUEL CUT-OFF RPM

(a) Start and warm up the engine.
(b) Increase the engine speed to approximately 3,500 rpm.
(c) Using a sound scope, check the operation sound of the injector.
(d) Release the accelerator pedal. Check that the operation noise stops momentarily and then resumes.

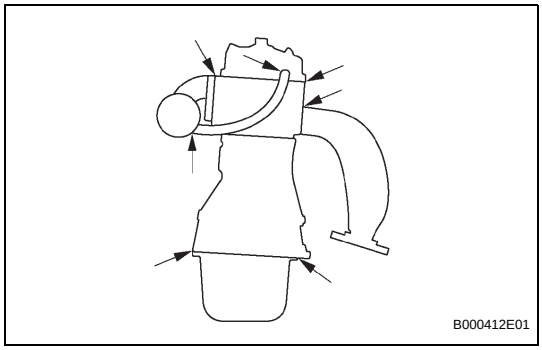

2. VISUALLY INSPECT HOSES, CONNECTIONS AND GASKETS

(a) Check that there are no cracks, leakage or scratches on the hoses, connections or gaskets.
HINT:
- Removing the oil level gauge, oil filter cap or PCV hose may cause the engine to malfunction or stall.
- Disconnections, looseness or cracks in the parts of the air induction system between the intake system and cylinder head will allow air suction and cause the engine to run improperly.

3. CHECK LINE AND CONNECTORS

(a) Visually check for loose connections, sharp bends and damage.

4. CHECK FUEL TANK ASSEMBLY

(a) Visually check for deformation, cracks and fuel leakage.

5. CHECK FUEL TANK AND VENT LINE

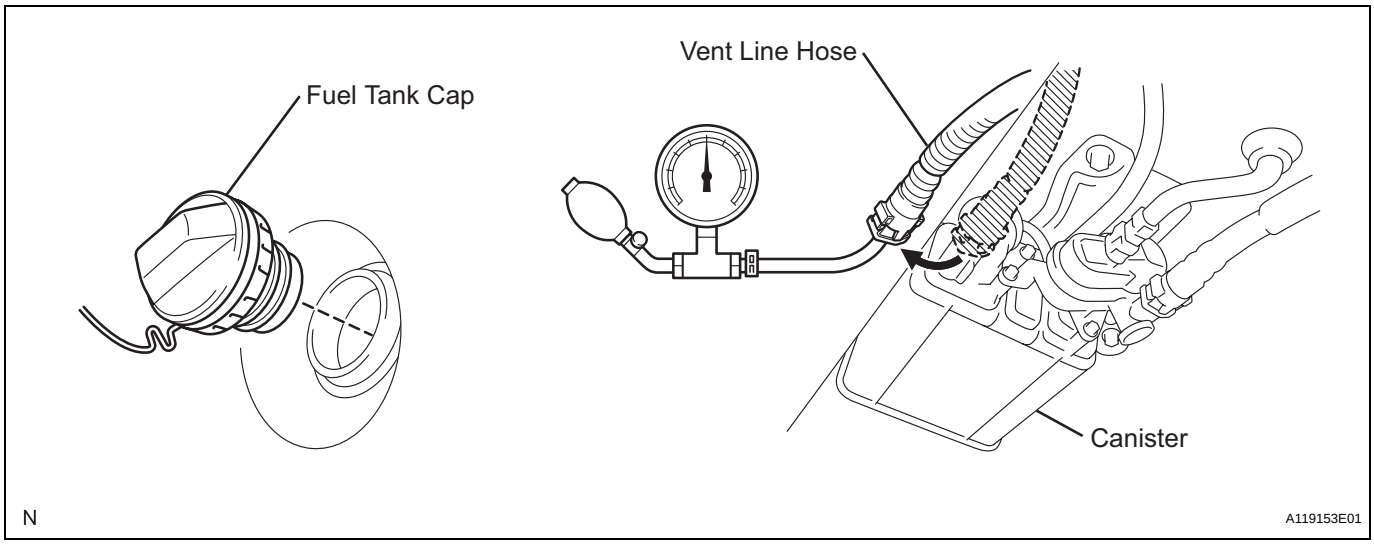

(a) Disconnect the vent line hose from the canister.
(b) Connect the pressure gauge to the vent line hose.

(c) Apply 4 kPa (41 kgf/cm2, 30 mmHg) of pressure to the vent line of the fuel tank.
HINT:
Perform this inspection with the fuel tank less than 90% full. When the fuel tank is full, the fuel cutoff valve closes and the pressure is released through the 2 mm orifice. As a result, when the fuel tank cap is removed, the pressure does not decrease smoothly.

(d) Check that the fuel tank pressure is maintained for some time, and does not decrease immediately.
HINT:
If the pressure decreases immediately, one of the following may apply:
- The fuel tank cap is not completely tightened.
- The fuel tank cap is damaged.
- Air is leaking from the vent line.
- The fuel tank is damaged.

(e) When the fuel tank cap is removed, check that the pressure is released smoothly.
HINT:
If the pressure does not drop, replace the fuel tank assembly.

(f) Reconnect the vent line hose to the canister.

6. CHECK AIR INLET LINE

(a) Disconnect the air inlet line hose from the canister.

(b) Check that air flows freely into the air inlet line.
HINT:
If air does not flow freely into the air inlet line, repair or replace it.

(c) Reconnect the air inlet line hose to the canister.

CANISTER

COMPONENTS

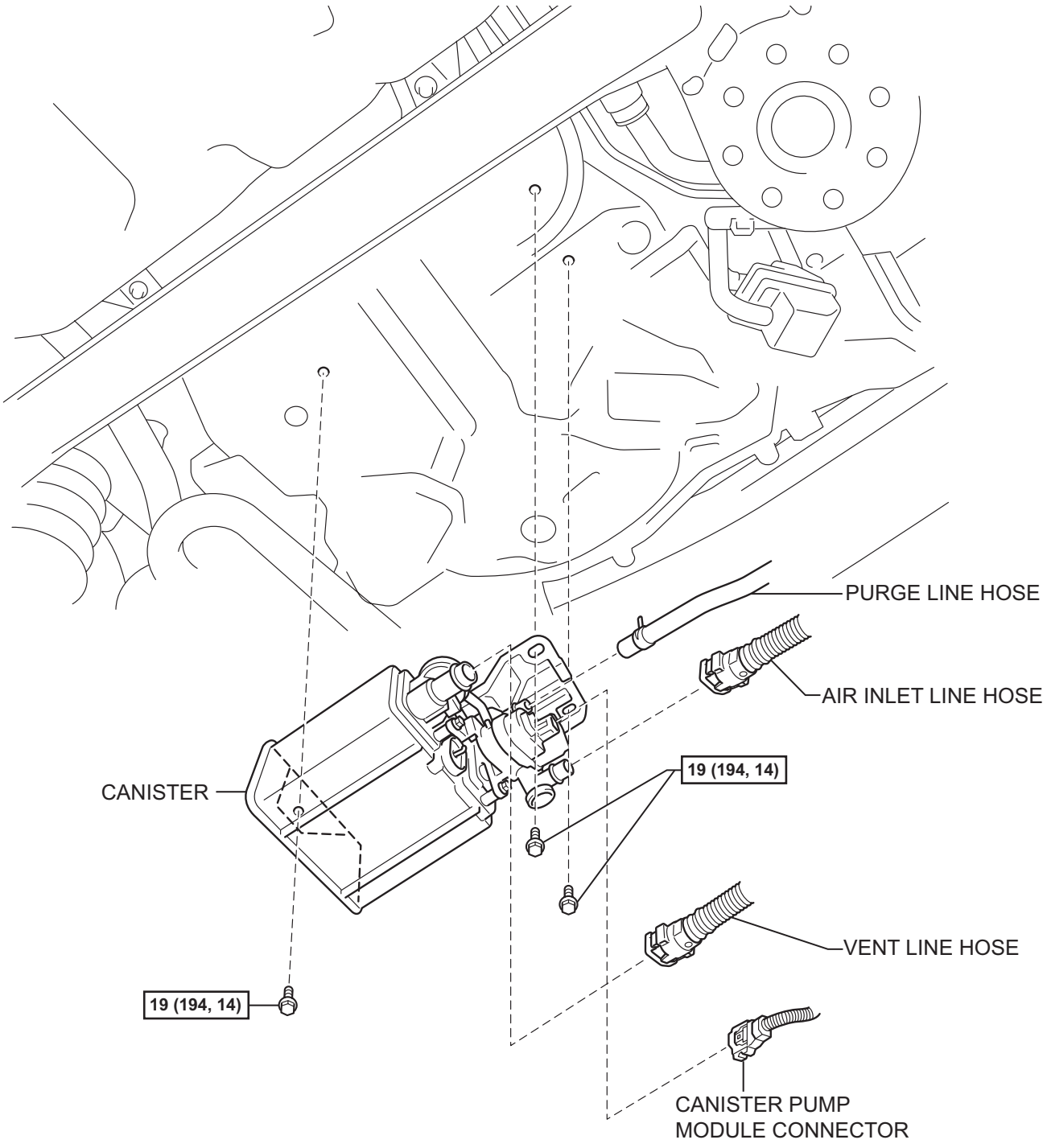

N*m (kgf*cm, ft.*lbf) : Specified torque

N

A115460E01

REMOVAL

1. DISCONNECT CABLE FROM NEGATIVE BATTERY TERMINAL

2. REMOVE CANISTER

(a) Disconnect the connector.

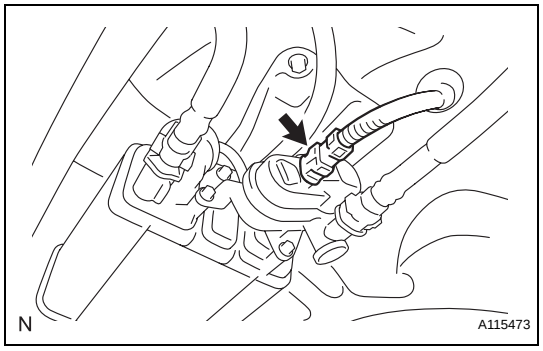

(b) Disconnect the purge line hose.
(c) Disconnect the air inlet line hose from the leak detection pump.
(d) Disconnect the vent line hose from the canister.

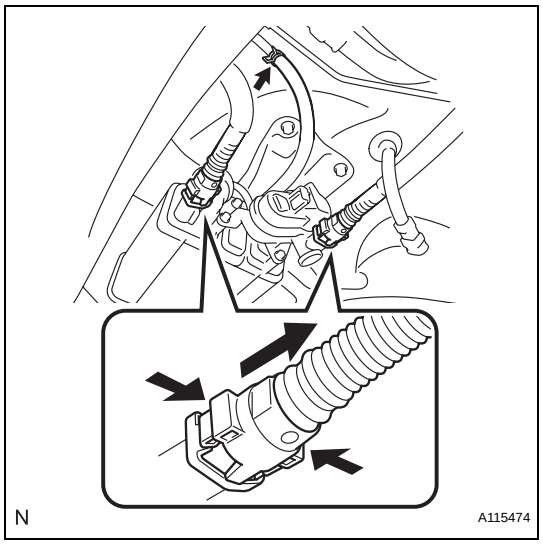

(e) Remove the 3 bolts and the canister assembly.

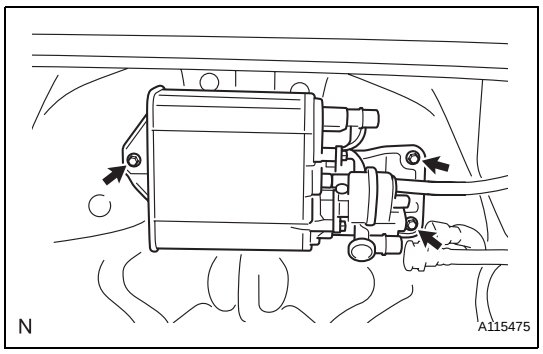

INSPECTION

1. INSPECT CANISTER

(a) Visually check the canister for cracks and damage. If cracks or damage are found, replace the canister.

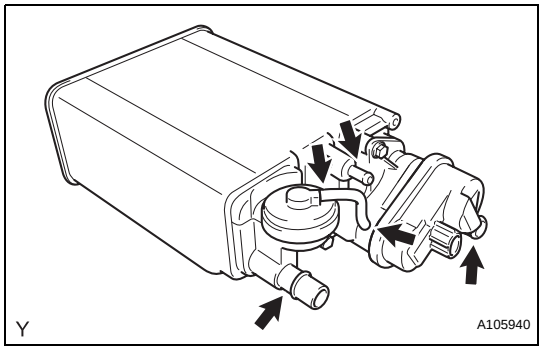

EC

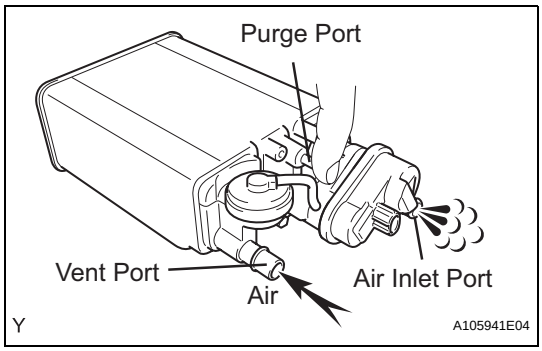

(b) Check the canister operation.
(1) While holding the purge port closed, blow air at 0.39 kPa (4.0 kgf/cm^2, 3 mmHg) into the vent port, and check that air flows from the air inlet port.
If the result is not as specified, replace the canister.

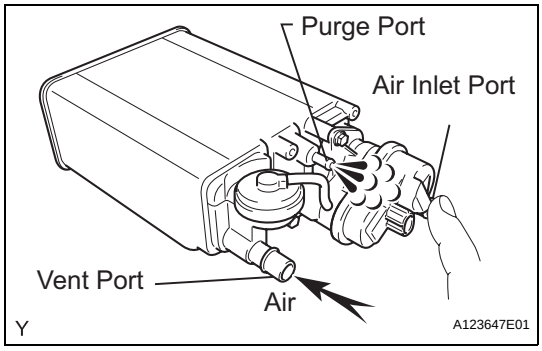

(2) While holding the air inlet port closed, blow air at 0.39 kPa (4.0 kgf/cm^2, 3 mmHg) into the vent port, and check that air flows from the purge port.
If the result is not as specified, replace the canister.

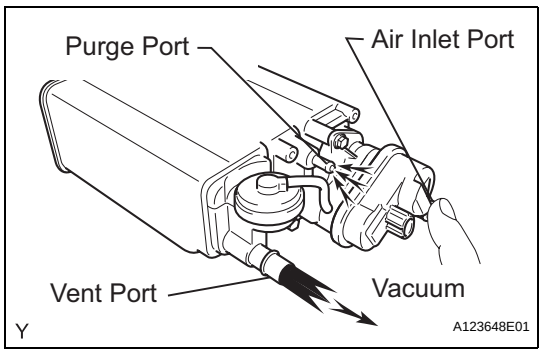

(3) While holding the air inlet port closed, apply vacuum at 3.43 kPa (35.0 kgf/cm^2, 25.7 mmHg) into the vent port, and check that air is sucked into the purge port.
If the result is not as specified, replace the canister.

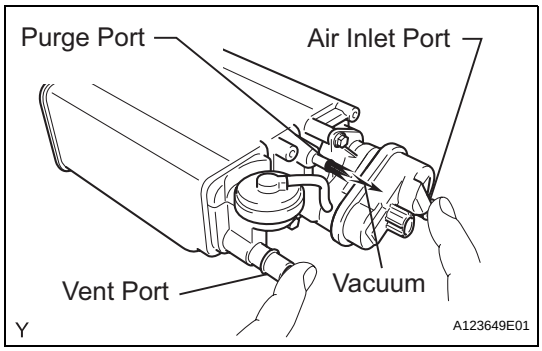

(c) Check the air tightness.
(1) While holding the vent and air inlet ports closed, apply vacuum at 3.43 kPa (35.0 kgf/cm^2, 25.7 mmHg) into the purge port, and check that the vacuum is maintained for 1 minute.
If the result is not as specified, replace the canister.

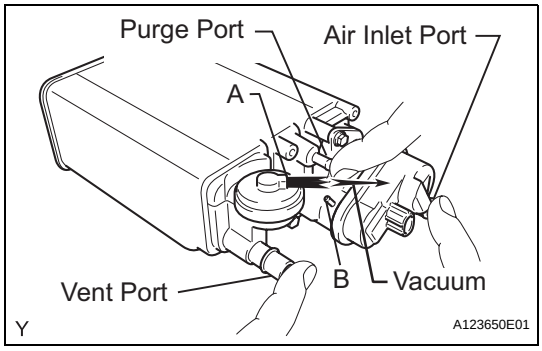

(d) Check the diaphragm.
(1) Remove the air hose between ports A and B.
(2) While holding the vent, purge and air inlet ports closed, apply vacuum at 1.42 kPa (14.5 kgf/cm^2, 10.6 mmHg) into port A, and check that air is not sucked into port B.

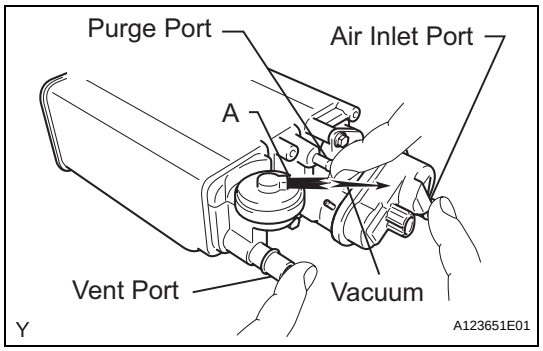

(3) While holding the vent, purge and air inlet ports closed, apply vacuum at 1.42 kPa (14.5 kgf/cm^2, 10.6 mmHg) into port A, and measure how long it takes for the vacuum to drop.
Vacuum drop time:
10 seconds or more
If the result is not as specified, replace the canister.

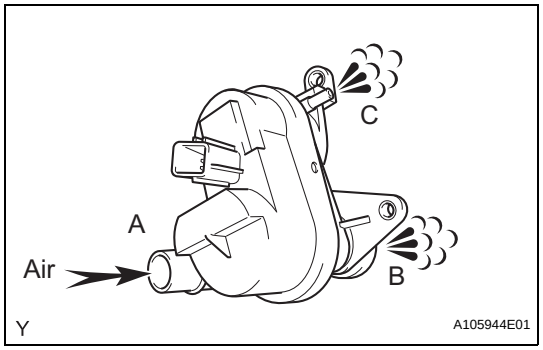

(e) Check the leak detection pump.
(1) Check that air flows from port A to ports B and C.
If the result is not as specified, replace the canister.

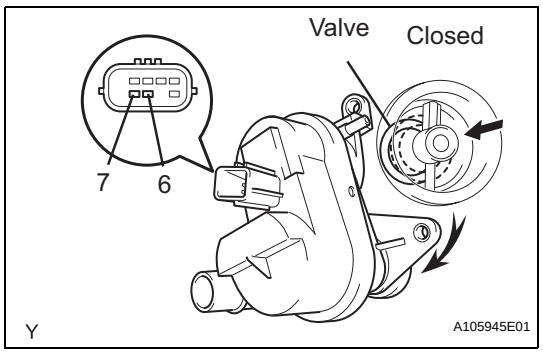

(2) Connect the positive (+) lead of the battery to terminal 7 and the negative (-) lead to terminal 6.
(3) Check that the valve is closed.
If the result is not as specified, replace the canister.
(4) Install the canister pump module.

INSTALLATION

1. INSTALL CANISTER

(a) Install the canister with the 3 bolts.
Torque: 19 N*m (194 kgf*cm, 14 ft.*lbf)

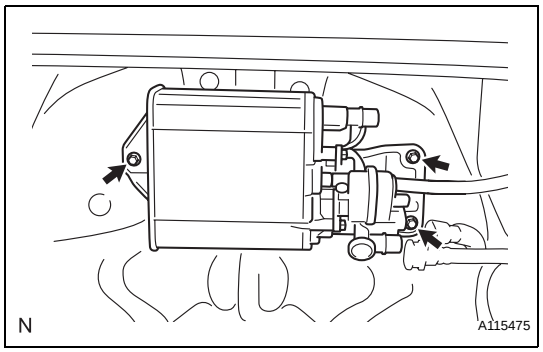

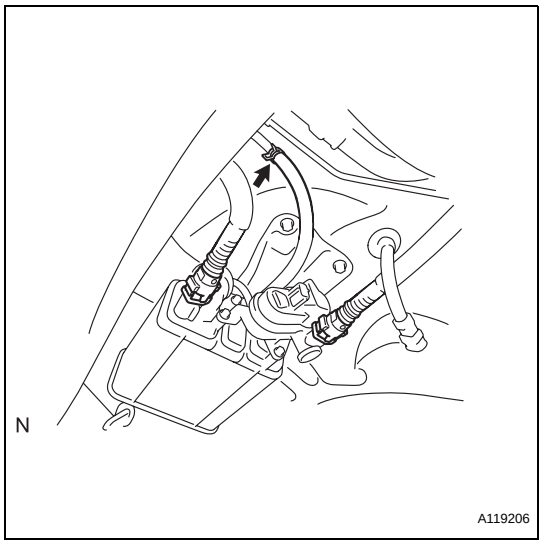

(b) Connect the vent line hose to the canister.
(c) Connect the air inlet line hose to the leak detection pump.
(d) Connect the purge line hose.

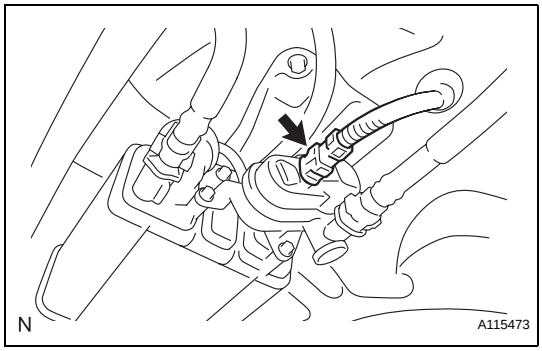

(e) Connect the connector.

2. CONNECT CABLE TO NEGATIVE BATTERY TERMINAL
Torque: 5.4 N*m (55 kgf*cm, 48 in.*lbf)

EC

VACUUM SWITCHING VALVE

COMPONENTS

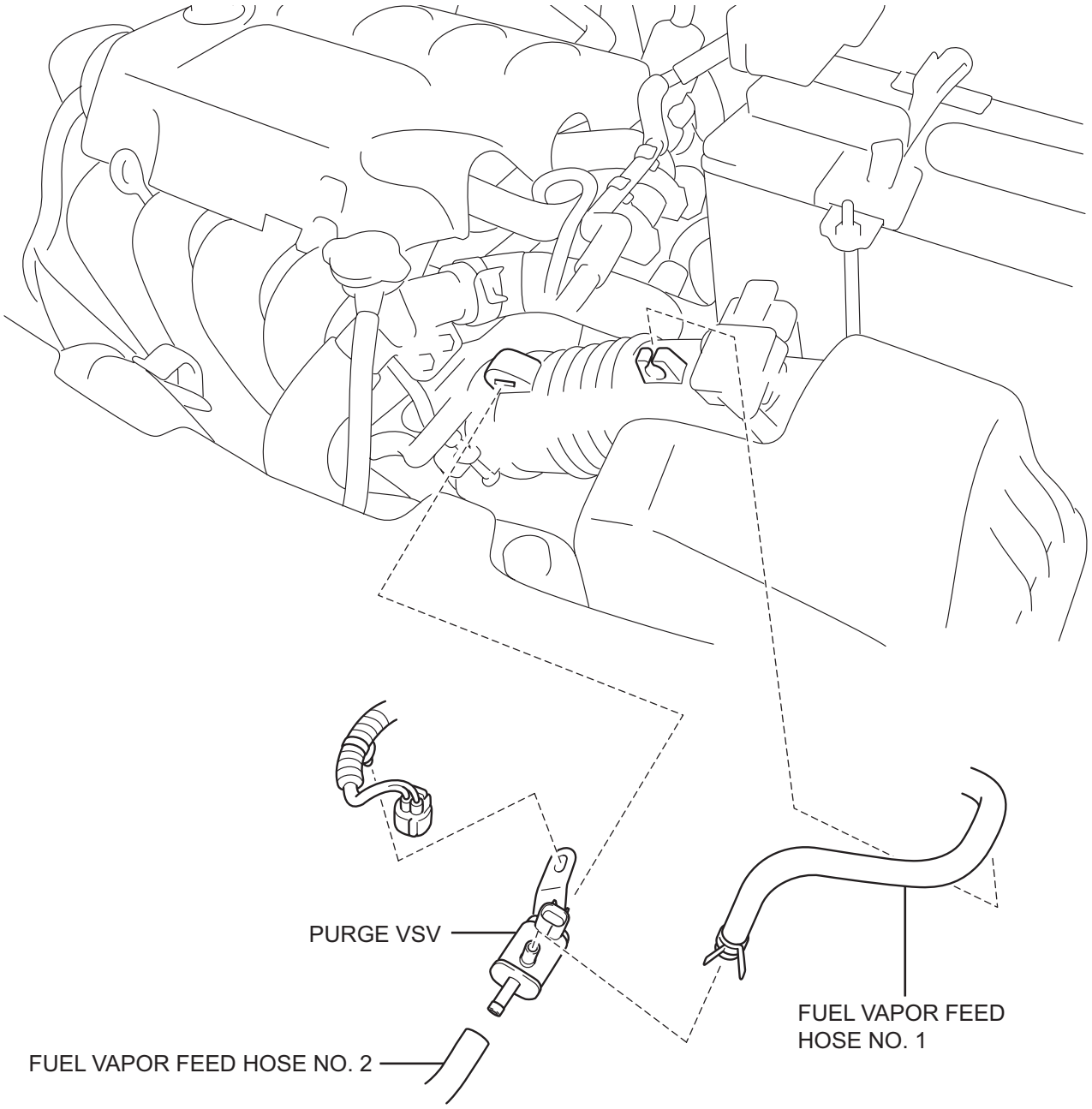

EC

REMOVAL

1. DISCONNECT CABLE FROM NEGATIVE BATTERY TERMINAL

2. DISCONNECT FUEL VAPOR FEED HOSE NO. 1

(a) Disconnect fuel vapor feed hose No. 1.

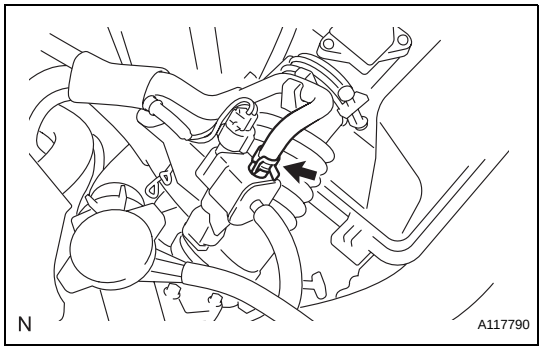

3. DISCONNECT FUEL VAPOR FEED HOSE NO. 2

(a) Disconnect fuel vapor feed hose No. 2.

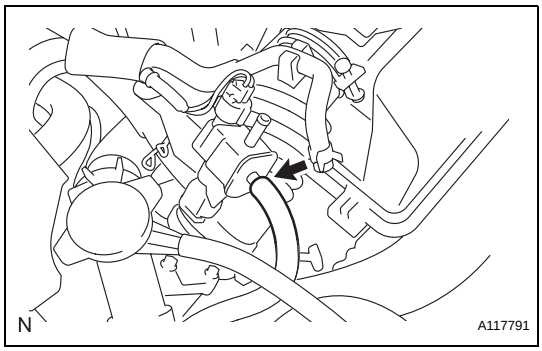

4. REMOVE PURGE VSV

(a) Disconnect the purge VSV connector and disengage the clip.

(b) Remove the purge VSV.

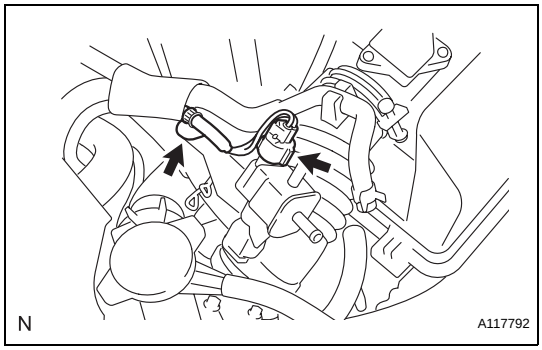

INSPECTION

1. INSPECT PURGE VSV

(a) Check the resistance.

(1) Using an ohmmeter, measure the resistance between the terminals.

Standard resistance

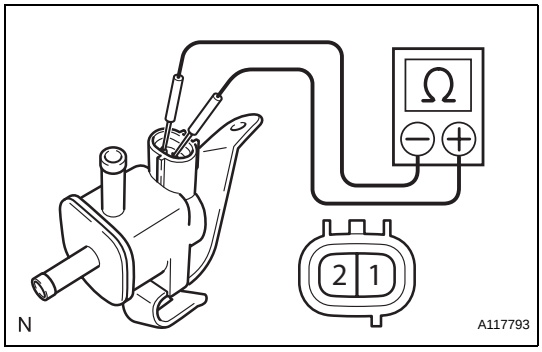

Tester Connection	Specified Condition
1 - 2	23 to 26 Ω at 20°C (68°F)

If the resistance is not as specified, replace the purge VSV.

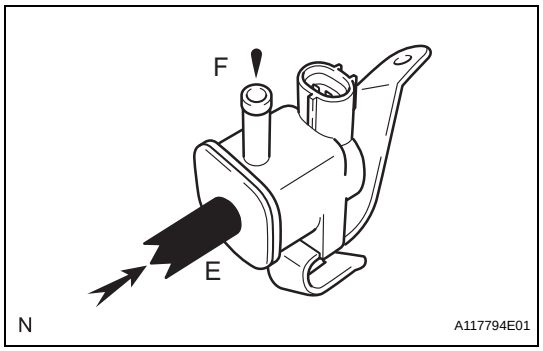

(b) Check the operation.
(1) Check that air does not flow from port E to F.

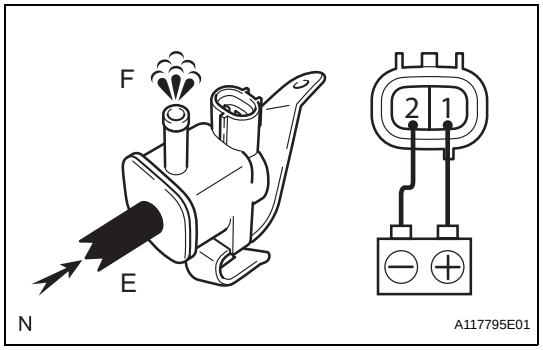

(2) Apply battery voltage across the terminals.
(3) Check that air flows from port E to F.
If the operation is not as specified, replace the purge VSV.

INSTALLATION

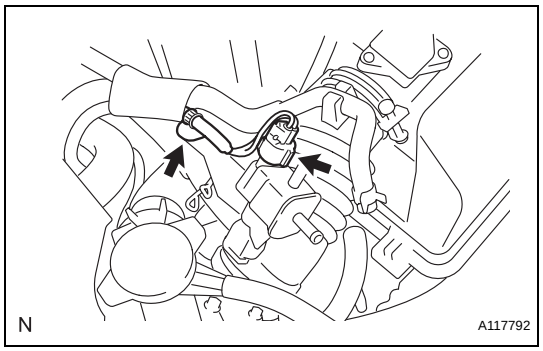

1. INSTALL PURGE VSV
(a) Install the purge VSV.
(b) Engage the clip and connect the purge VSV connector.

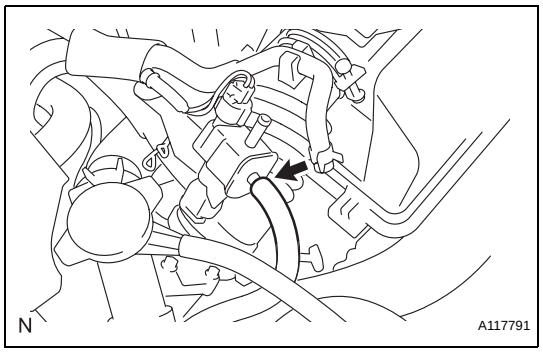

2. CONNECT FUEL VAPOR FEED HOSE NO. 2
(a) Connect fuel vapor feed hose No. 2.

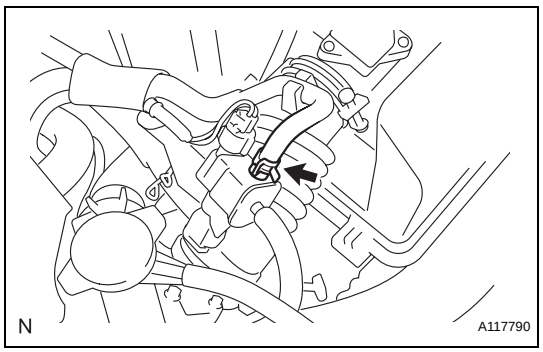

3. CONNECT FUEL VAPOR FEED HOSE NO. 1
(a) Connect fuel vapor feed hose No. 1.

4. CONNECT CABLE TO NEGATIVE BATTERY TERMINAL
Torque: 5.4 N*m (55 kgf*cm, 48 in.*lbf)

VENTILATION VALVE

COMPONENTS

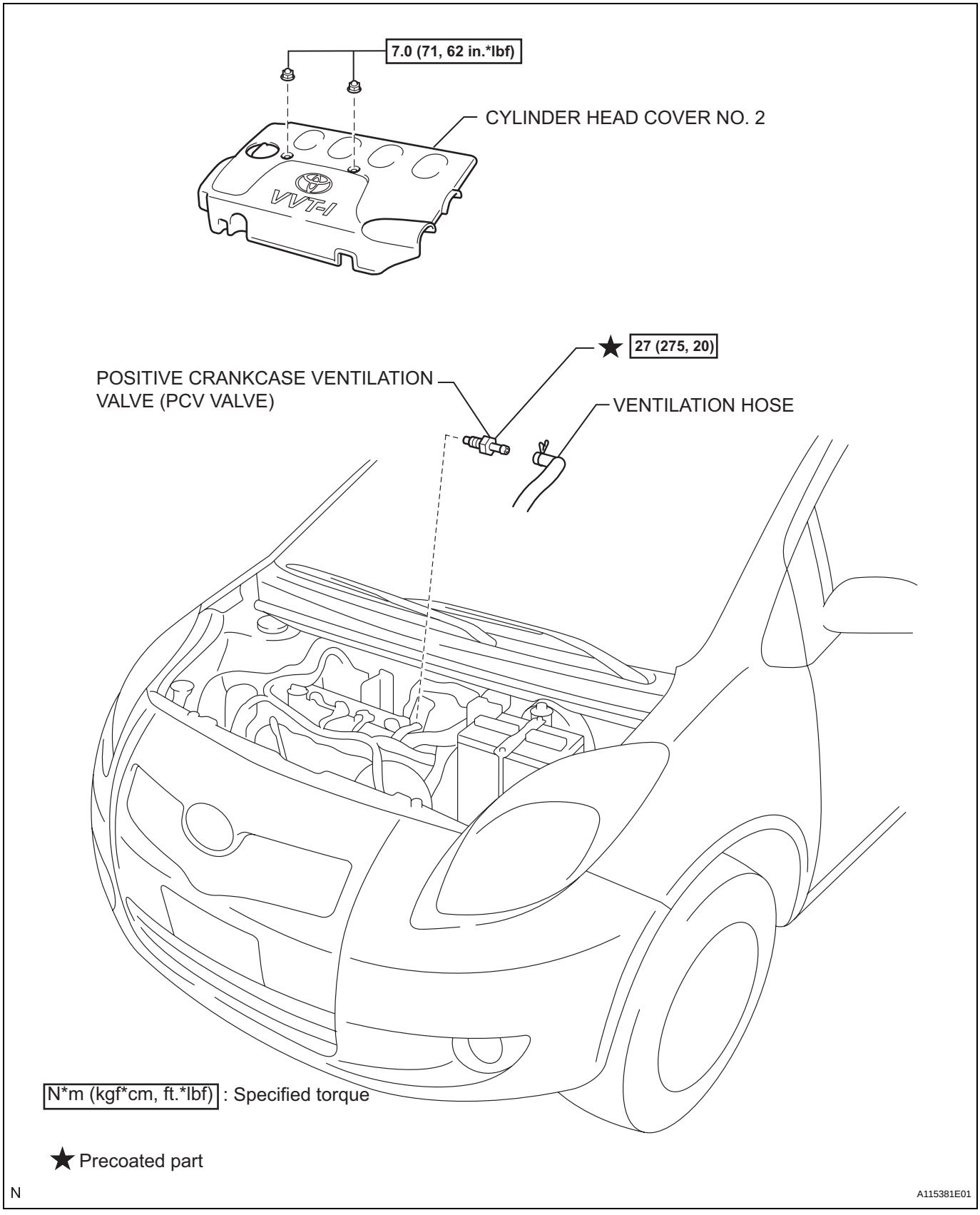

REMOVAL

1. **REMOVE CYLINDER HEAD COVER NO. 2 (See page IG-9)**
2. **DISCONNECT VENTILATION HOSE**

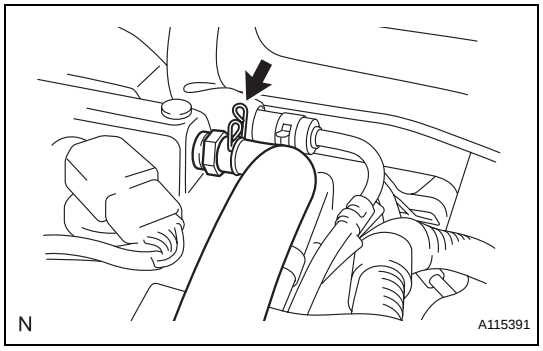

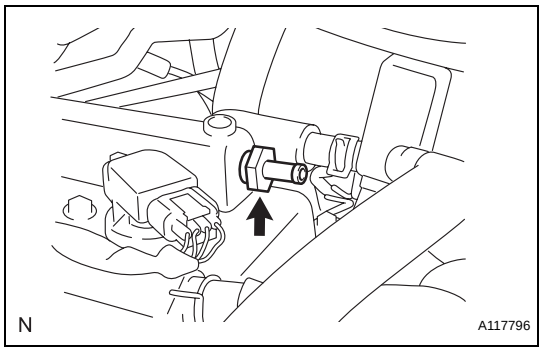

3. **REMOVE POSITIVE CRANKCASE VENTILATION VALVE (PCV VALVE)**
   (a) Remove the positive crankcase ventilation valve (PCV valve).

EC

INSPECTION

1. **INSPECT POSITIVE CRANKCASE VENTILATION VALVE (PCV VALVE)**
   (a) Install the hose onto the positive crankcase ventilation valve (PCV valve).
   (b) Check the ventilation.
      (1) Check the ventilation when air is applied from the cylinder head side.
      Standard:
      Air flows.
      CAUTION:
      Do not inhale the air from the ventilation valve because it is harmful.

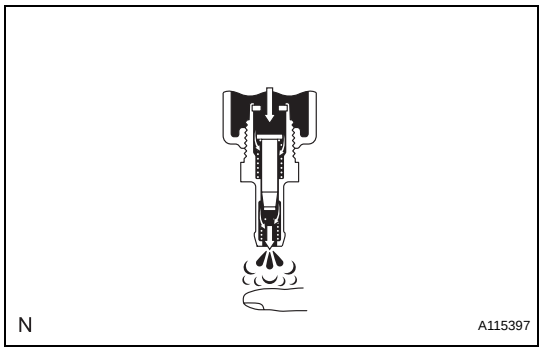

      (2) Check the ventilation when air is applied from the intake manifold side.
      Standard:
      Air does not flow.
      If the ventilation is not as specified, replace the positive crankcase ventilation valve (PCV valve).

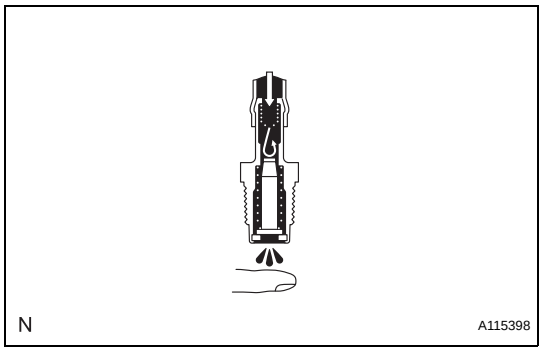

   (c) Remove the hose from the positive crankcase ventilation valve (PCV valve).

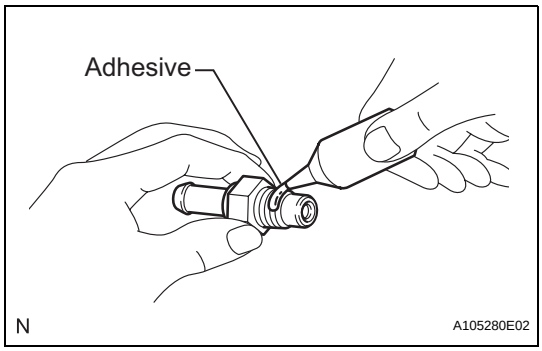

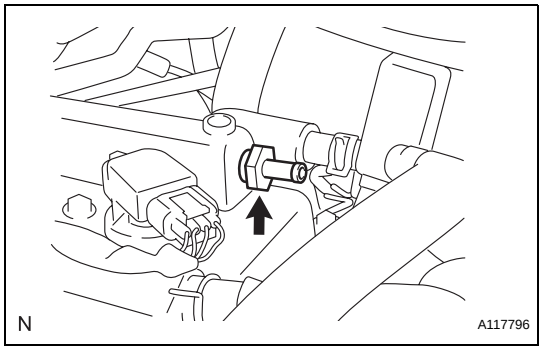

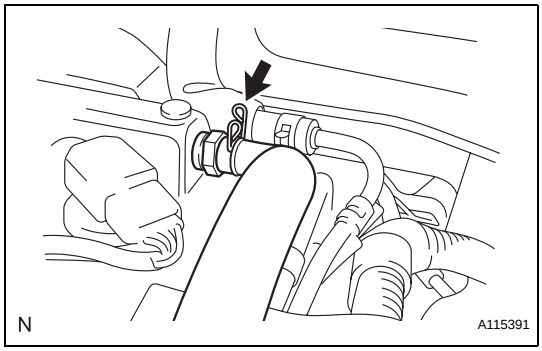

INSTALLATION

1. INSTALL POSITIVE CRANKCASE VENTILATION VALVE (PCV VALVE)

(a) Install the positive crankcase ventilation valve (PCV valve).

(1) Apply adhesive to the end 2 or 3 threads of the bolt.

Adhesive:
Toyota Genuine Adhesive 1324, Three Bond 1324 or the equivalent.

(2) Install the positive crankcase ventilation valve (PCV valve).

Torque: 27 N*m (275 kgf*cm, 20 ft.*lbf)

2. CONNECT VENTILATION HOSE

3. INSTALL CYLINDER HEAD COVER NO. 2 (See page IG-10)

EC

AIR FUEL RATIO SENSOR

COMPONENTS

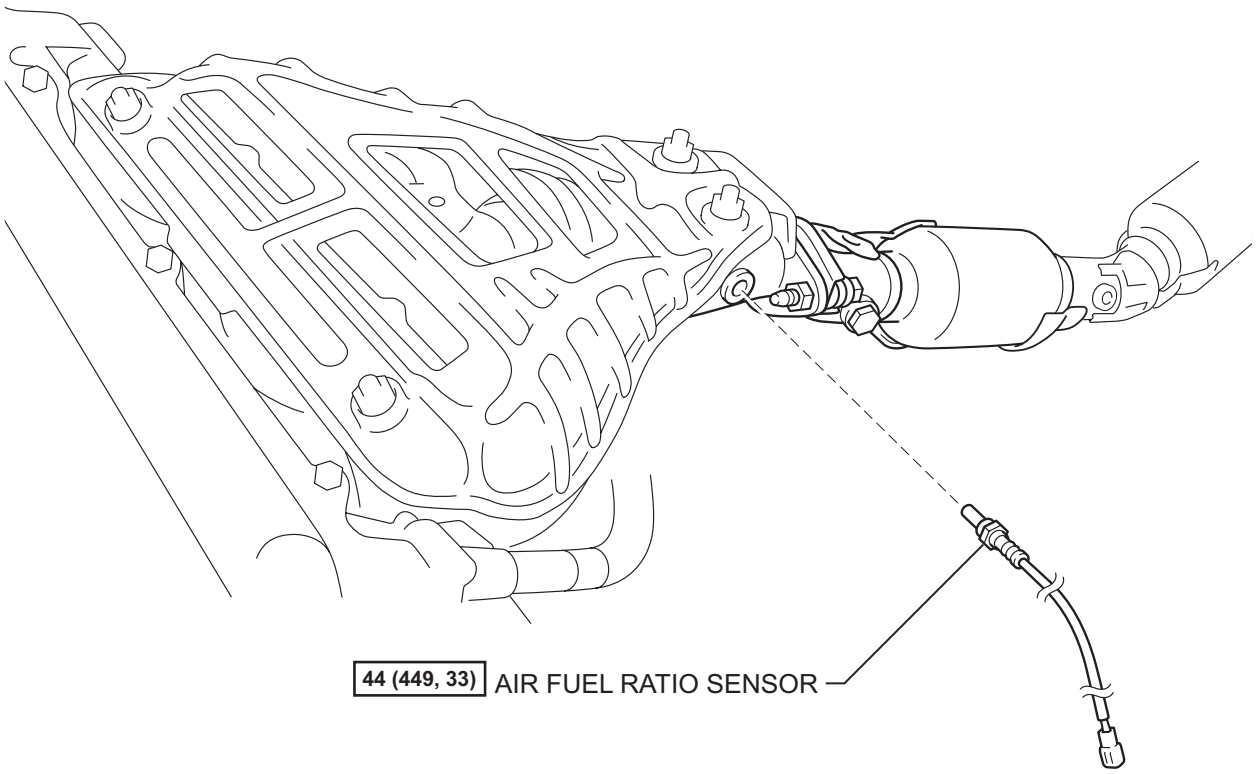

N*m (kgf*cm, ft.*lbf) : Specified torque

N

A115422E02

REMOVAL

1. DISCONNECT CABLE FROM NEGATIVE BATTERY TERMINAL

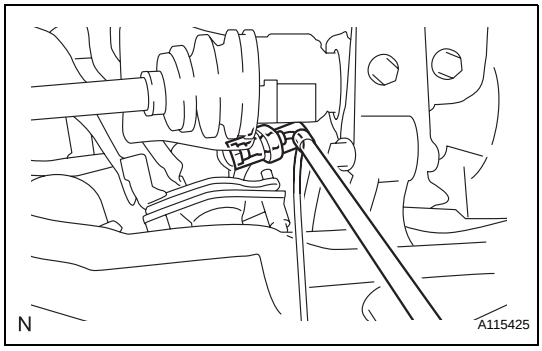

2. REMOVE AIR FUEL RATIO SENSOR

(a) Disconnect the air fuel ratio sensor connector and clamp.

(b) Using SST, remove the heated oxygen sensor.
SST 09224-00010

INSPECTION

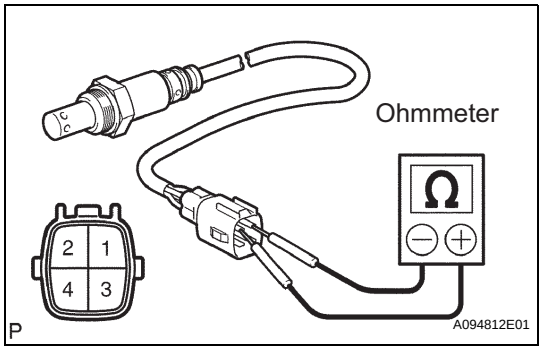

1. INSPECT AIR FUEL RATIO SENSOR

(a) Check the resistance.

(1) Using an ohmmeter, measure the resistance between the terminals.
Standard resistance

Tester Connection	Specified Condition
1 (HA1A) - 2 (+B)	1.8 to 3.4 Ω at 20°C (68°F)
1 (HA1A) - 4 (E2)	10 kΩ or higher

If the resistance is not as specified, replace the sensor.

INSTALLATION

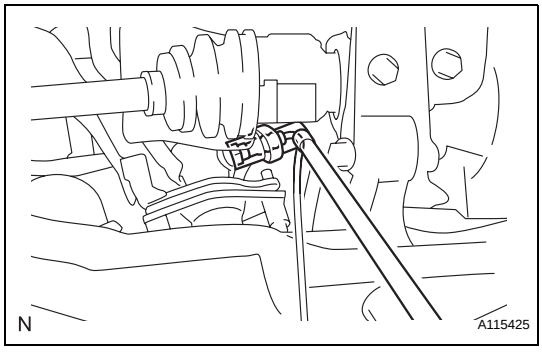

1. INSTALL AIR FUEL RATIO SENSOR

(a) Using SST, install the air fuel ratio sensor.
SST 09224-00010
Torque: 44 N*m (449 kgf*cm, 33 ft.*lbf) (without SST)
Torque: 40 N*m (408 kgf*cm, 30 ft.*lbf) (with SST)
HINT:
Use a torque wrench with a fulcrum length of 300 mm (11.81 in.).

(b) Connect the air fuel ratio sensor connector and the clamp.

2. CONNECT CABLE TO NEGATIVE BATTERY TERMINAL
Torque: 5.4 N*m (55 kgf*cm, 48 in.*lbf)

3. CHECK FOR EXHAUST GAS LEAKAGE

HEATED OXYGEN SENSOR

COMPONENTS

for Hatchback:

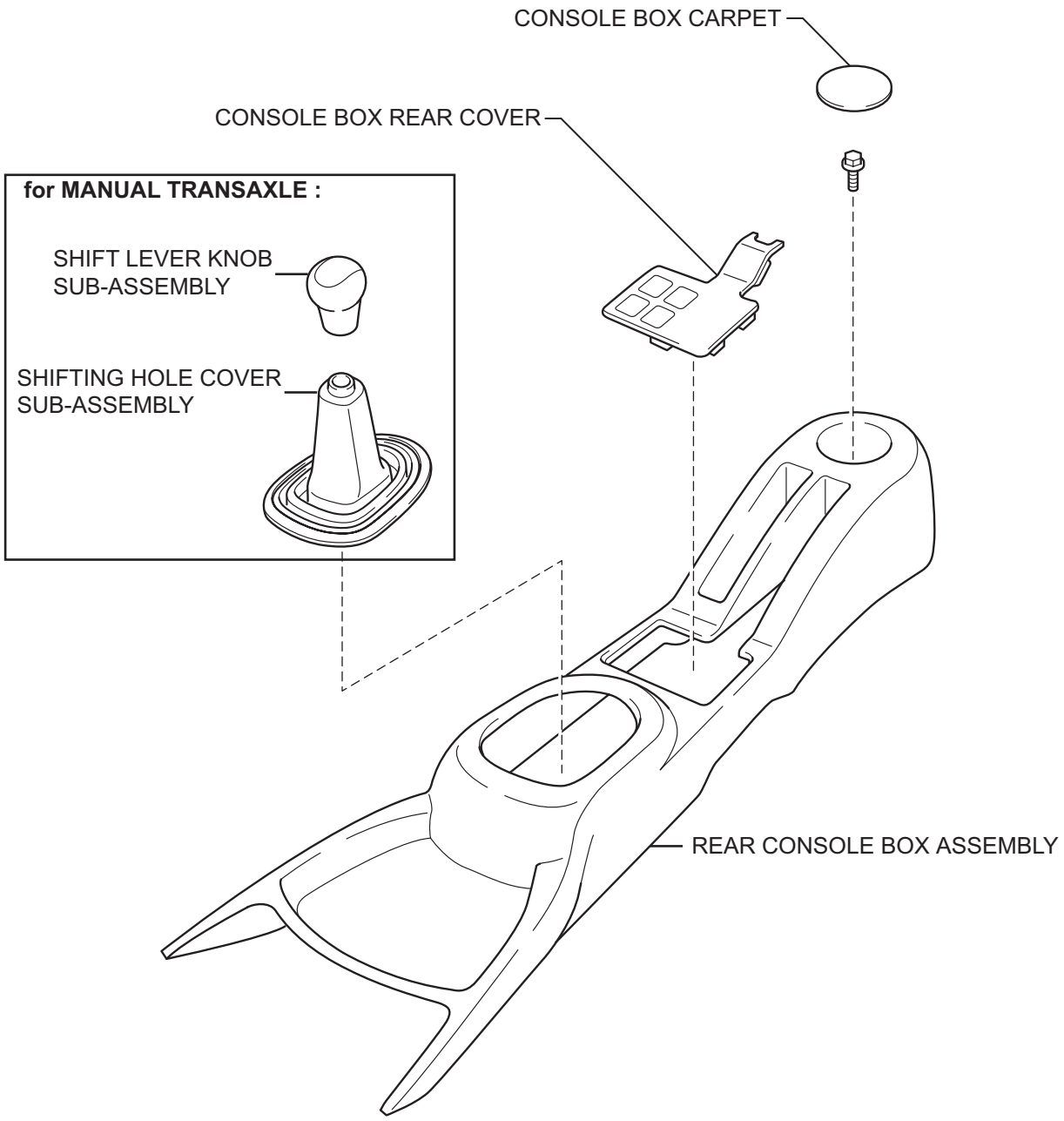

N

A115408E06

EC

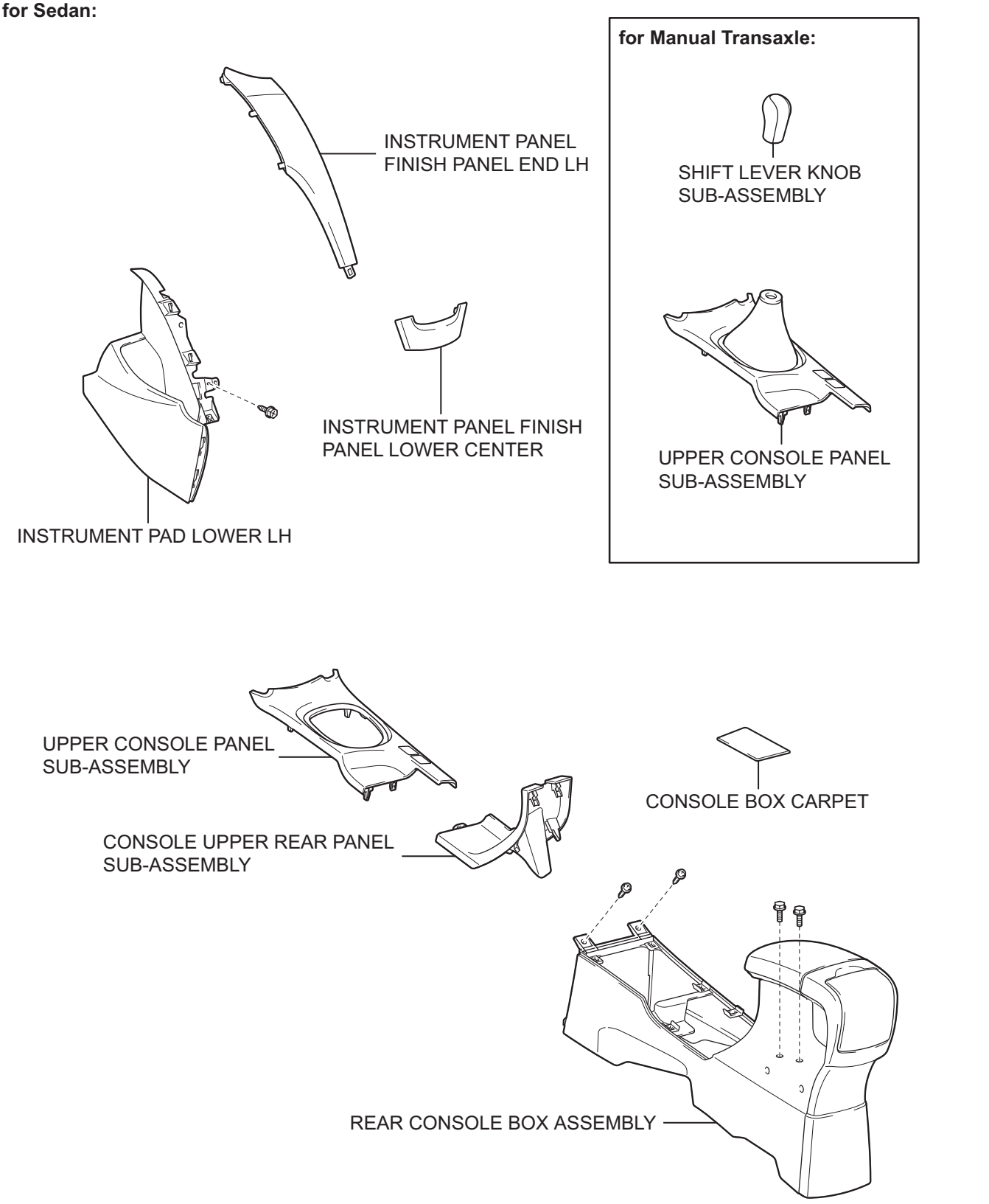

EC

P

A133341E02

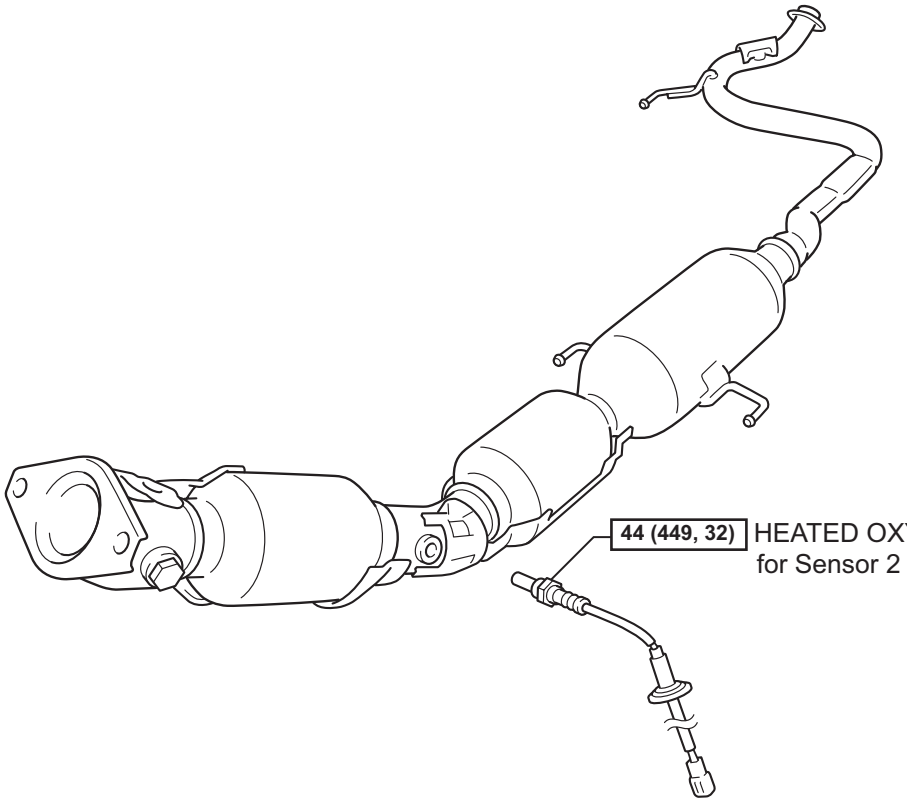

N*m (kgf*cm, ft.*lbf) : Specified torque

N

A137395E01

EC

EC

REMOVAL

1. **DISCONNECT CABLE FROM NEGATIVE BATTERY TERMINAL**
2. **REMOVE INSTRUMENT PANEL FINISH PANEL LOWER CENTER (for Sedan) (See page ME-138)**
3. **REMOVE INSTRUMENT PANEL FINISH PANEL END LH (for Sedan) (See page ME-138)**
4. **REMOVE SHIFT LEVER KNOB SUB-ASSEMBLY (for Manual Transaxle)**
5. **REMOVE SHIFTING HOLE COVER SUB-ASSEMBLY (for Hatchback Manual Transaxle) (See page PB-6)**
6. **REMOVE UPPER CONSOLE PANEL SUB-ASSEMBLY (for Sedan) (See page IP-84)**
7. **REMOVE CONSOLE BOX REAR COVER (for Hatchback) (See page PB-6)**
8. **REMOVE CONSOLE UPPER REAR PANEL SUB-ASSEMBLY (for Sedan) (See page IP-84)**
9. **REMOVE CONSOLE BOX CARPET (See page PB-7)**
10. **REMOVE REAR CONSOLE BOX ASSEMBLY (See page PB-8)**
11. **REMOVE INSTRUMENT PAD LOWER LH (for Sedan) (See page IP-55)**
12. **REMOVE HEATED OXYGEN SENSOR**
    (a) Disconnect the sensor connector.
    (b) Remove the grommet and pass the sensor connector out of the cabin through the floor panel.
    (c) Using SST, remove heated oxygen sensor No. 2.
    SST 09224-00010

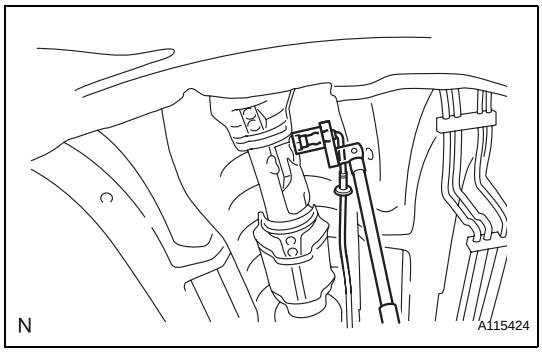

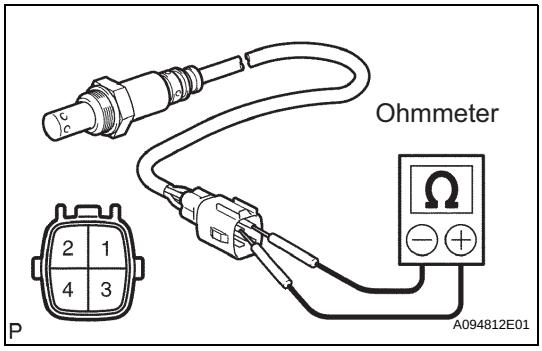

INSPECTION

1. **INSPECT HEATED OXYGEN SENSOR**
   (a) Check the resistance.
   (1) Using an ohmmeter, measure the resistance between the terminals.
   Standard resistance

Tester Connection	Specified Condition
1 (HT1B) - 2 (+B)	11 to 16 Ω at 20°C (68°F)
1 (HT1B) - 4 (E2)	10 kΩ or higher

If the resistance is not as specified, replace the sensor.

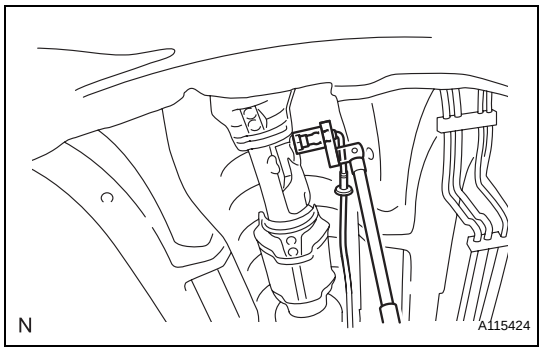

INSTALLATION

1. **INSTALL HEATED OXYGEN SENSOR**
   (a) Using SST, install the sensor onto the front exhaust pipe.
   SST 09224-00010
   Torque: 44 N*m (449 kgf*cm, 32 ft.*lbf) (without SST)
   Torque: 40 N*m (408 kgf*cm, 30 ft.*lbf) (with SST)
   HINT:
   Use a torque wrench with a fulcrum length of 300 mm (11.81 in.).
   (b) Pass the sensor connector through the floor panel and install the grommet.
   (c) Connect the sensor connector.
2. **INSTALL INSTRUMENT PAD LOWER LH (for Sedan) (See page IP-55)**
3. **INSTALL REAR CONSOLE BOX ASSEMBLY (See page PB-10)**
4. **INSTALL CONSOLE BOX CARPET (See page PB-11)**
5. **INSTALL CONSOLE BOX REAR COVER (for Hatchback) (See page PB-11)**
6. **INSTALL CONSOLE UPPER REAR PANEL SUB-ASSEMBLY (for Sedan) (See page IP-89)**
7. **INSTALL SHIFTING HOLE COVER SUB-ASSEMBLY (for Hatchback Manual Transaxle) (See page PB-12)**
8. **INSTALL UPPER CONSOLE PANEL SUB-ASSEMBLY (for Sedan) (See page IP-89)**
9. **INSTALL SHIFT LEVER KNOB SUB-ASSEMBLY (for Manual Transaxle)**
10. **INSTALL INSTRUMENT PANEL FINISH PANEL END LH (for Sedan) (See page ME-141)**
11. **INSTALL INSTRUMENT PANEL FINISH PANEL LOWER CENTER (for Sedan) (See page ME-142)**
12. **CONNECT CABLE TO NEGATIVE BATTERY TERMINAL**
    Torque: 5.4 N*m (55 kgf*cm, 48 in.*lbf)
13. **CHECK FOR EXHAUST GAS LEAKAGE**

EC

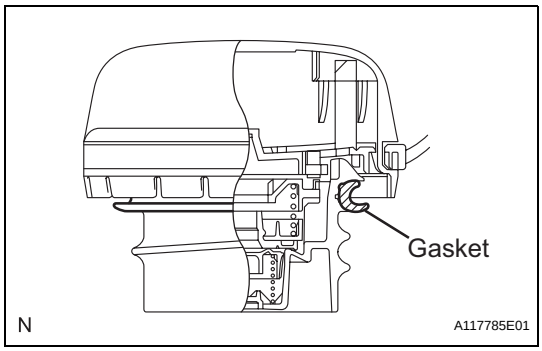

FUEL TANK CAP

ON-VEHICLE INSPECTION

1. INSPECT FUEL TANK CAP ASSEMBLY

(a) Check that there is no deformation or damage to the fuel tank cap or gasket. If necessary, replace the fuel tank cap.

EXHAUST PIPE

COMPONENTS

for Hatchback:

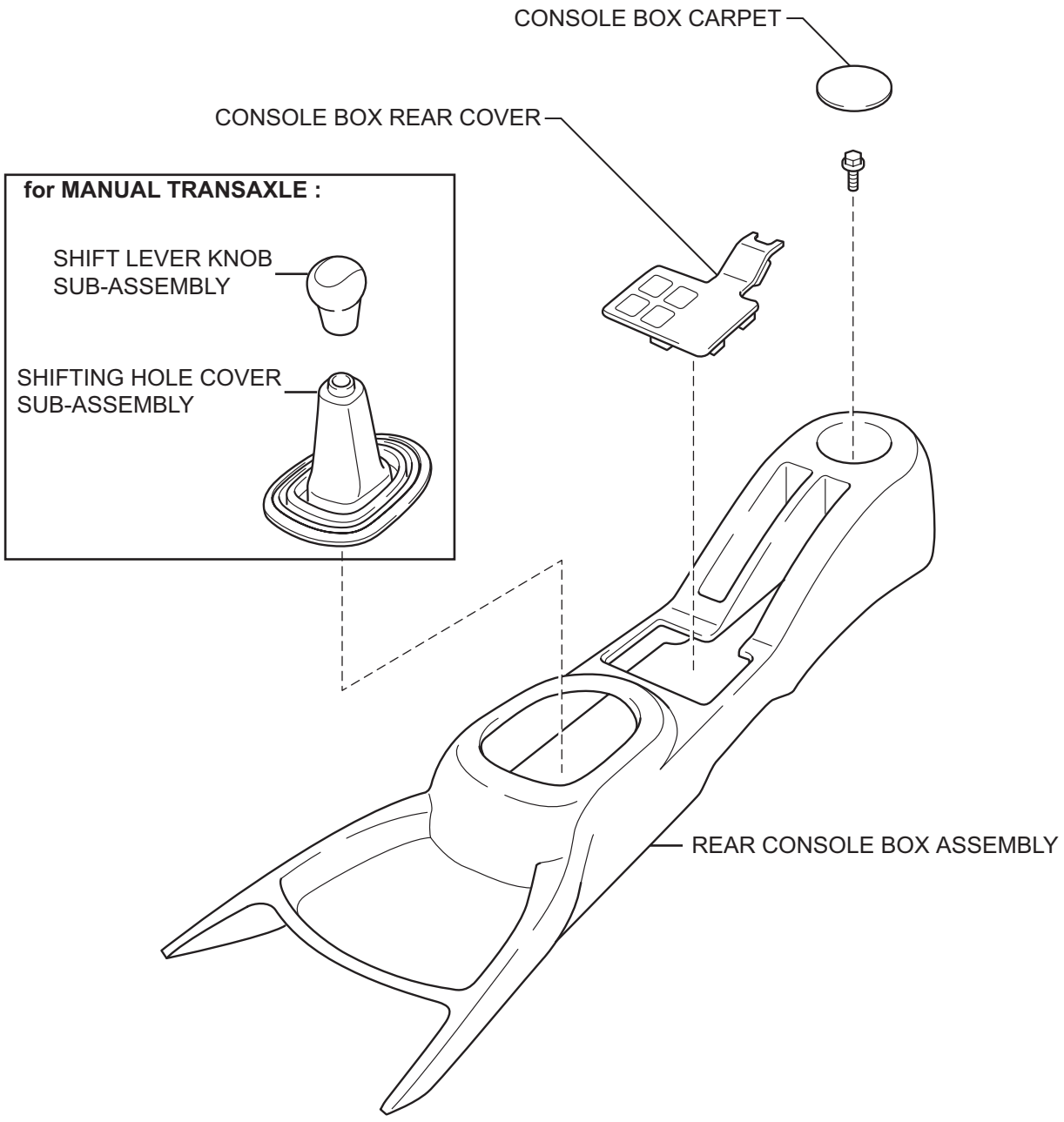

N

A115408E06

EX

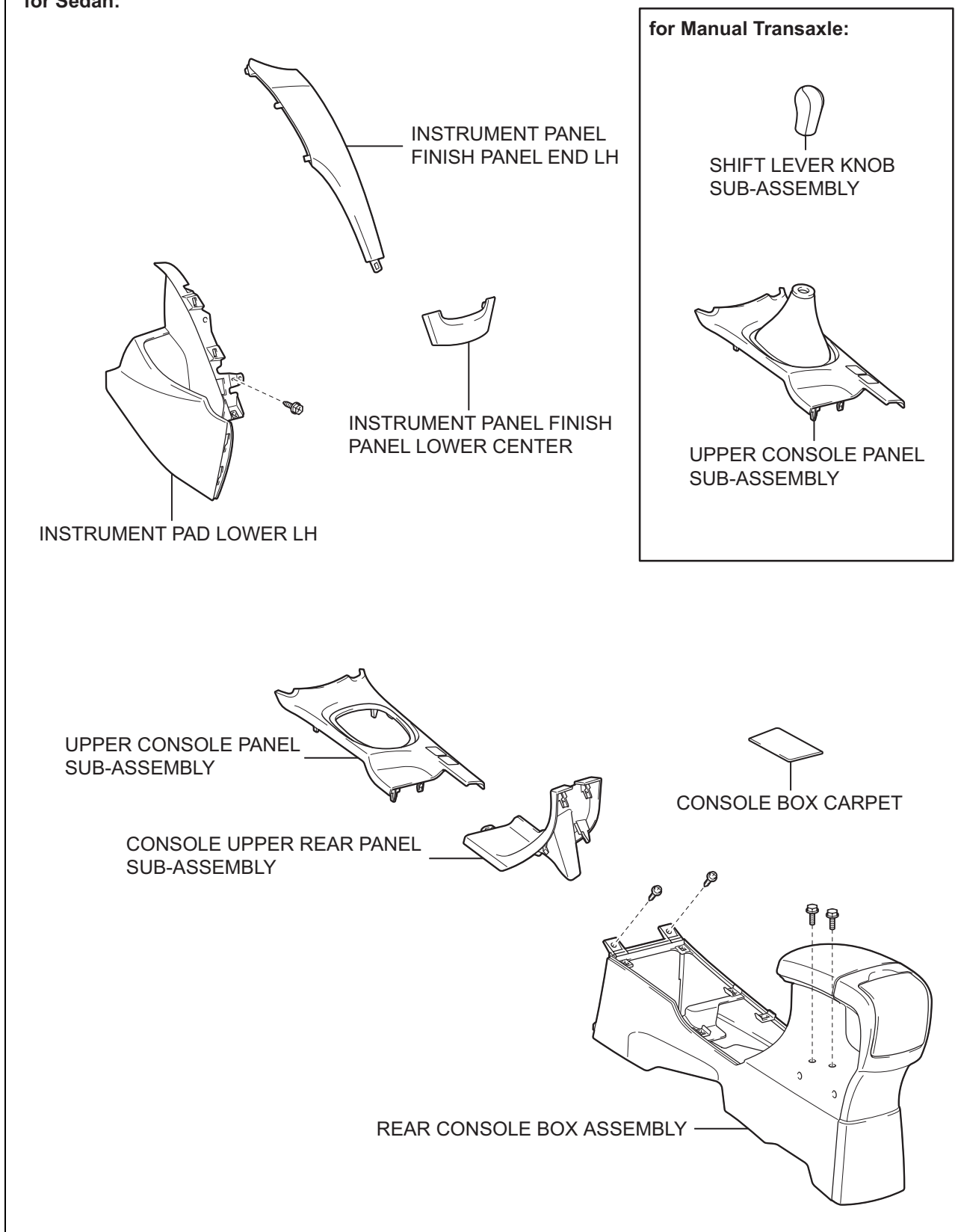

EX

P

A133341E02

for Hatchback:

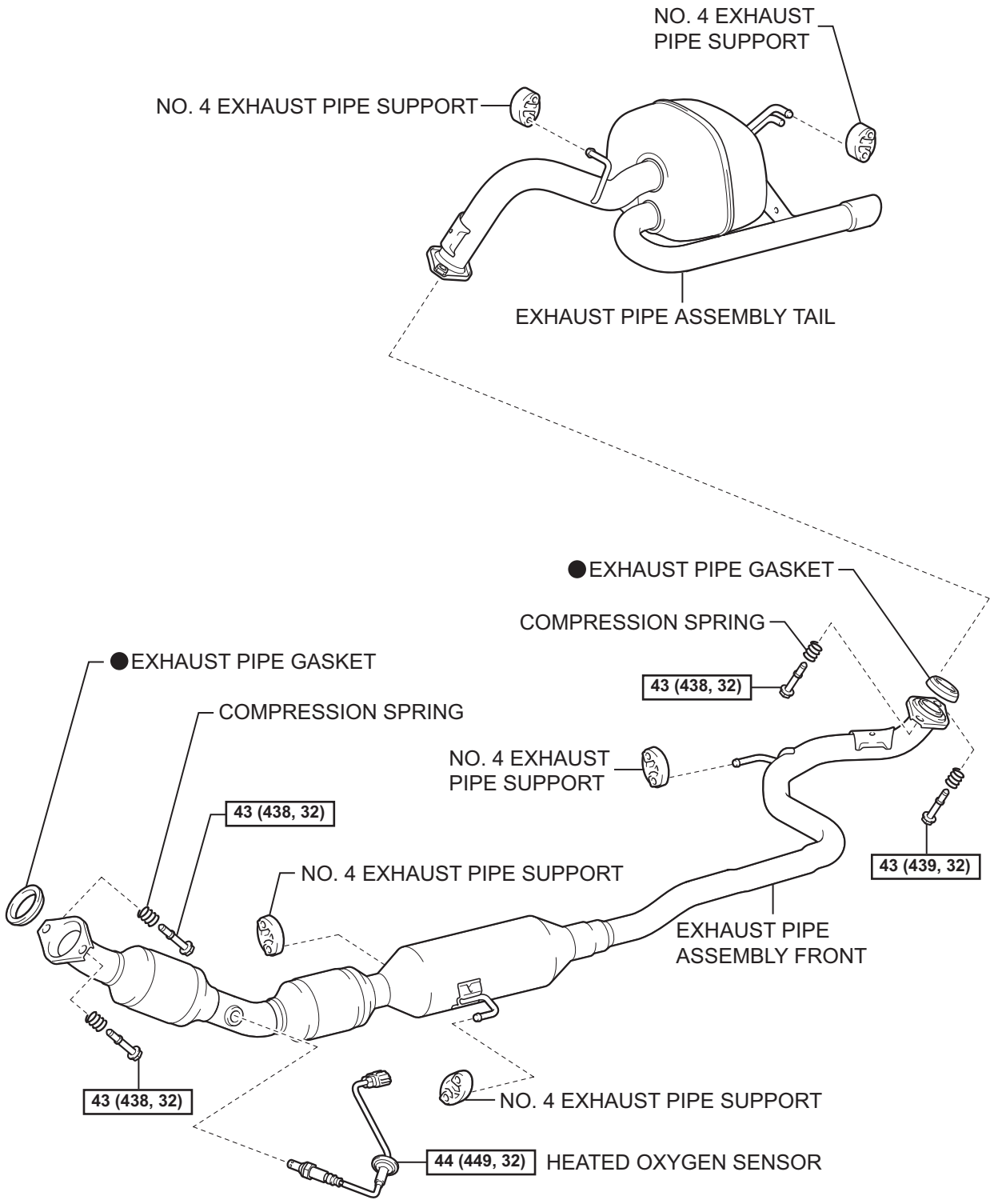

N*m (kgf*cm, ft.*lbf) : Specified torque ● Non-reusable part

P

A137398E01

EX

for Sedan:

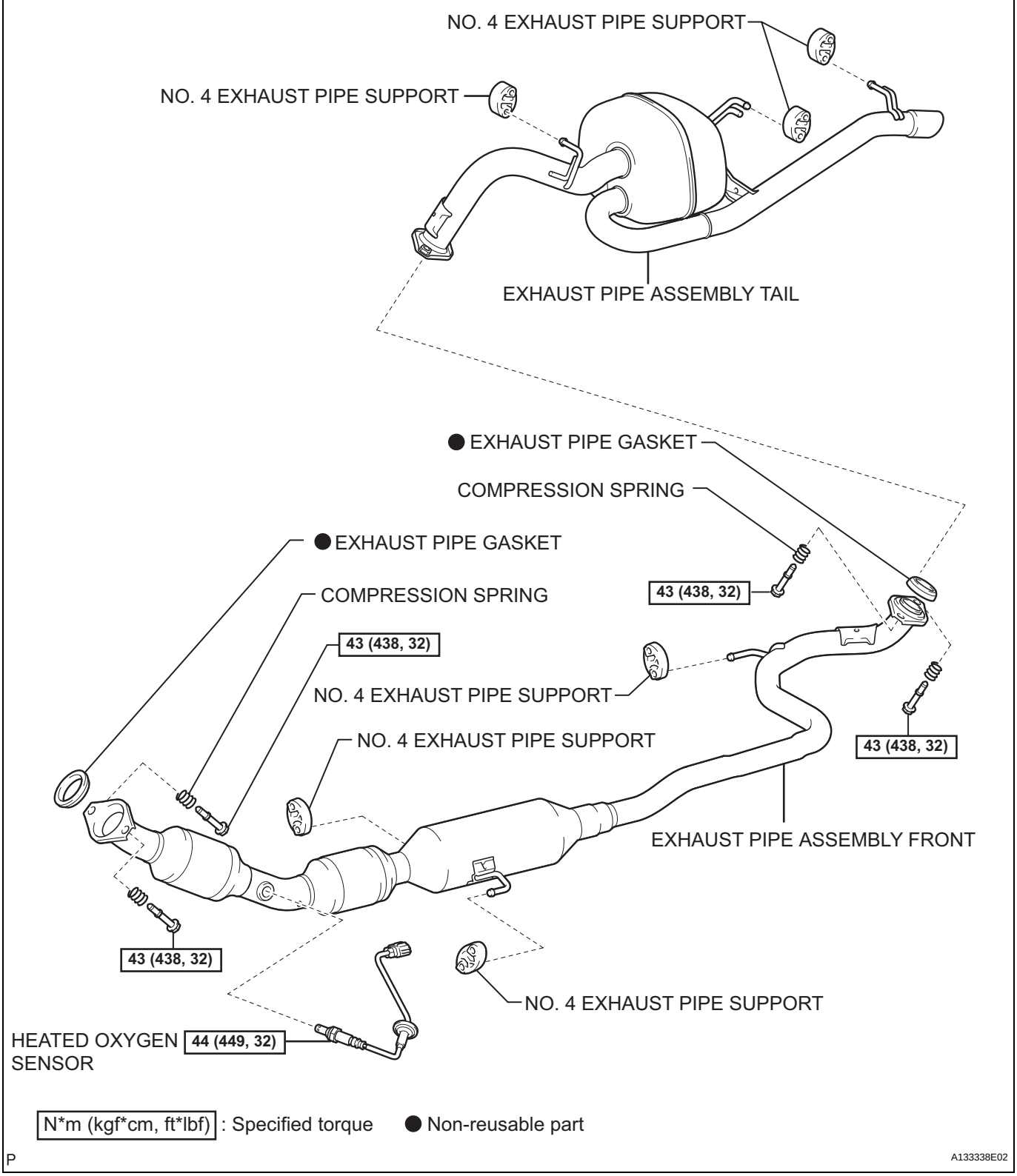

N*m (kgf*cm, ft*lbf) : Specified torque ● Non-reusable part

P

A133338E02

REMOVAL

1. **DISCONNECT CABLE FROM NEGATIVE BATTERY TERMINAL**
2. **REMOVE INSTRUMENT PANEL FINISH PANEL LOWER CENTER (for Sedan) (See page ME-138)**
3. **REMOVE INSTRUMENT PANEL FINISH PANEL END LH (for Sedan) (See page ME-138)**
4. **REMOVE SHIFT LEVER KNOB SUB-ASSEMBLY (for Manual Transaxle)**
5. **REMOVE SHIFTING HOLE COVER SUB-ASSEMBLY (for Hatchback Manual Transaxle) (See page PB-6)**
6. **REMOVE UPPER CONSOLE PANEL SUB-ASSEMBLY (for Sedan) (See page IP-84)**
7. **REMOVE CONSOLE BOX REAR COVER (for Hatchback) (See page PB-6)**
8. **REMOVE CONSOLE UPPER REAR PANEL SUB-ASSEMBLY (for Sedan) (See page IP-84)**
9. **REMOVE CONSOLE BOX CARPET (See page PB-7)**
10. **REMOVE REAR CONSOLE BOX ASSEMBLY (See page PB-8)**
11. **REMOVE INSTRUMENT PAD LOWER LH (for Sedan) (See page IP-44)**
12. **REMOVE HEATED OXYGEN SENSOR (See page EC-22)**
13. **REMOVE EXHAUST PIPE ASSEMBLY FRONT**
    (a) Remove the 4 bolts and 4 compression springs.

(b) Remove exhaust pipe support No. 4 and the exhaust front pipe assembly.

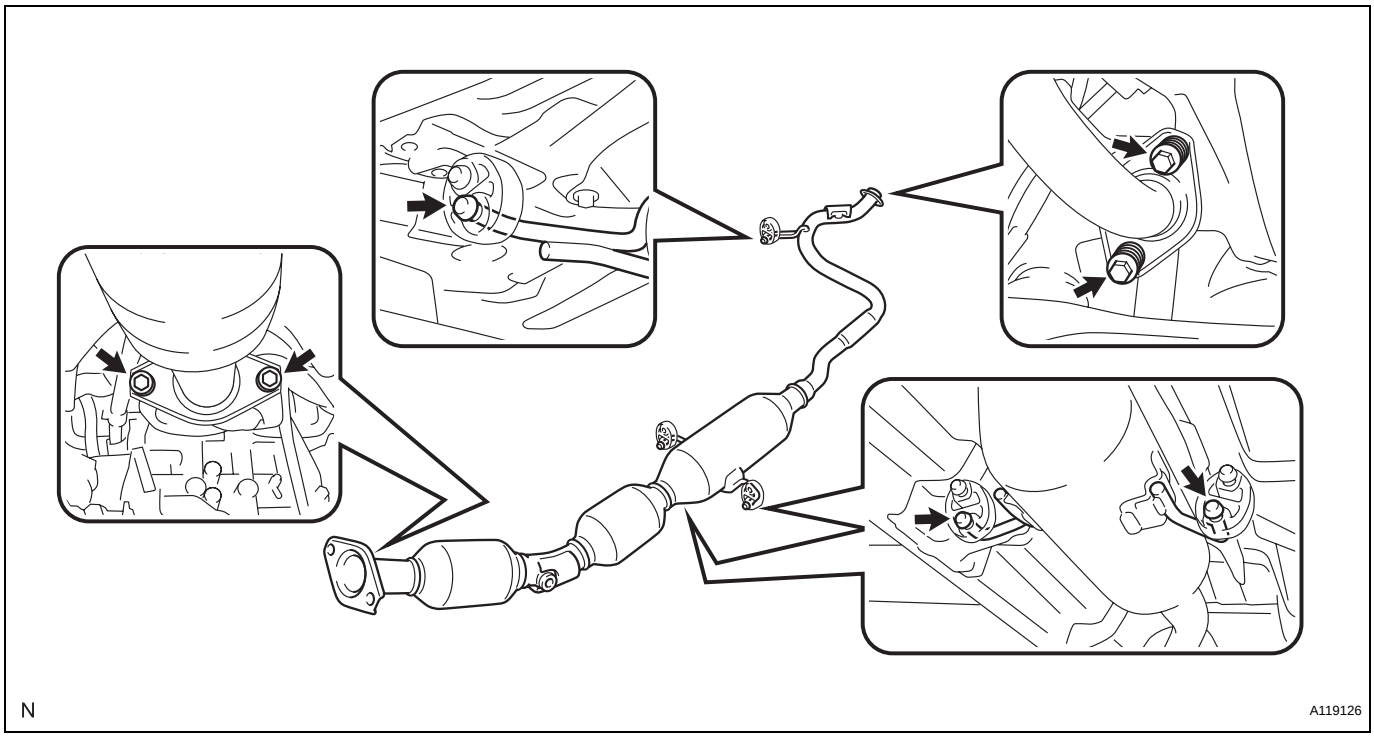

(c) Remove the 2 exhaust pipe gaskets.

14. REMOVE EXHAUST PIPE ASSEMBLY TAIL

(a) Remove the 2 No. 4 exhaust pipe supports and the exhaust tail pipe assembly. (for Hatchback)

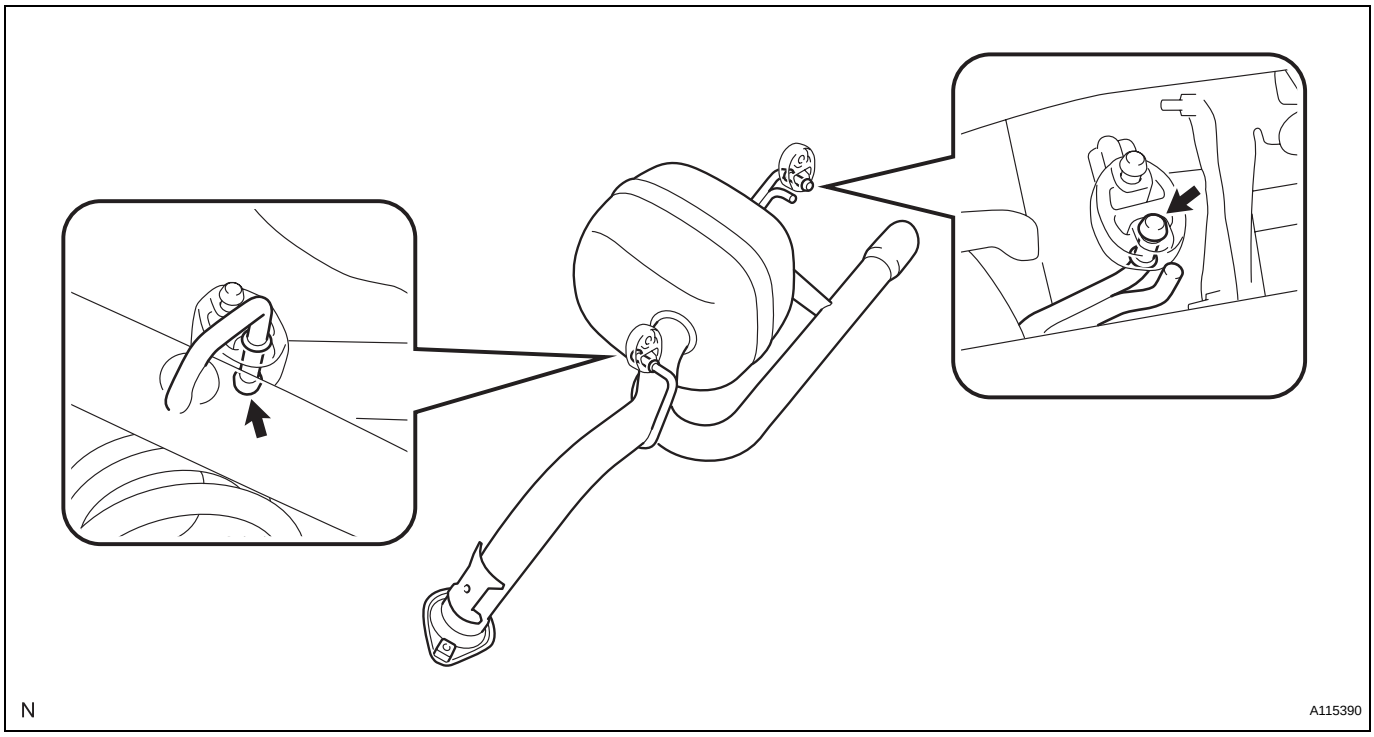

(b) Remove the 3 No. 4 exhaust pipe supports and the exhaust tail pipe assembly. (for Sedan)

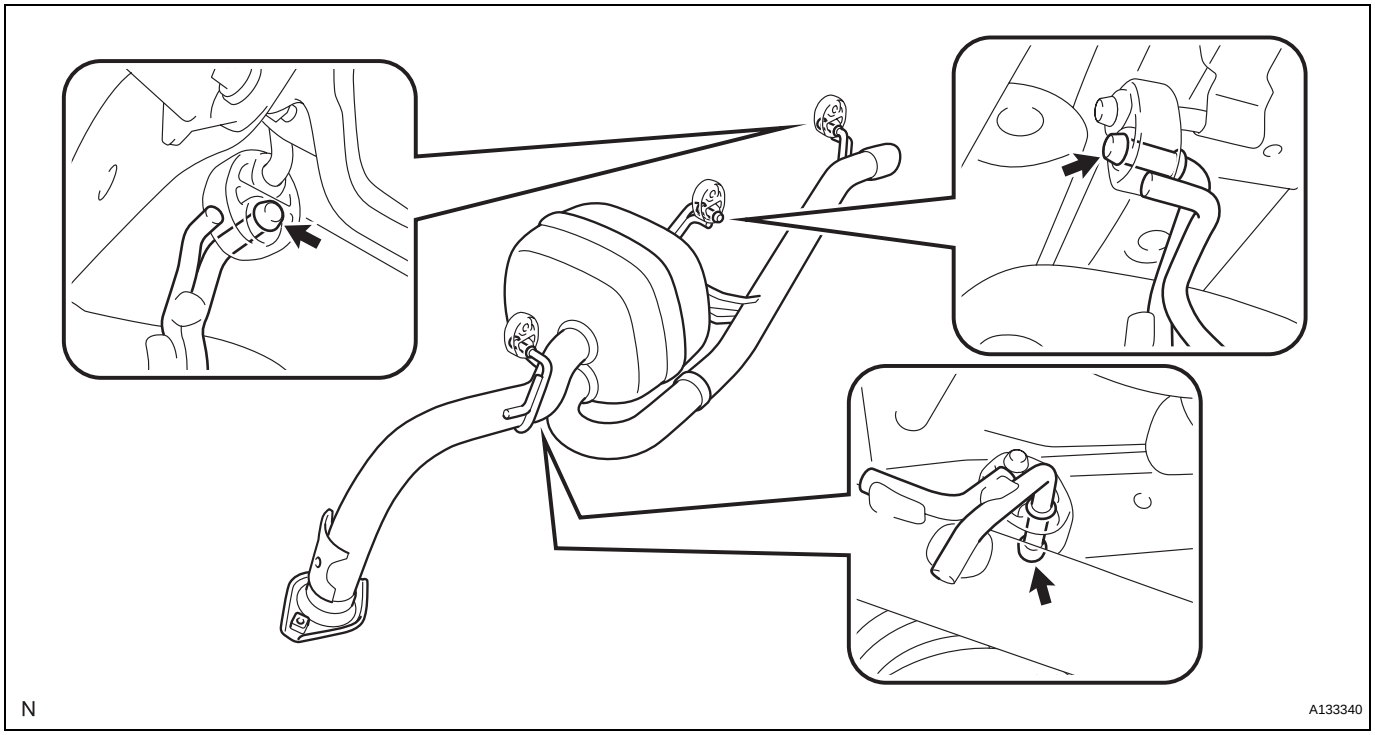

N

A133340

INSTALLATION

1. INSTALL EXHAUST PIPE ASSEMBLY TAIL

(a) Install the 2 No. 4 exhaust pipe supports and the exhaust tail pipe assembly. (for Hatchback)

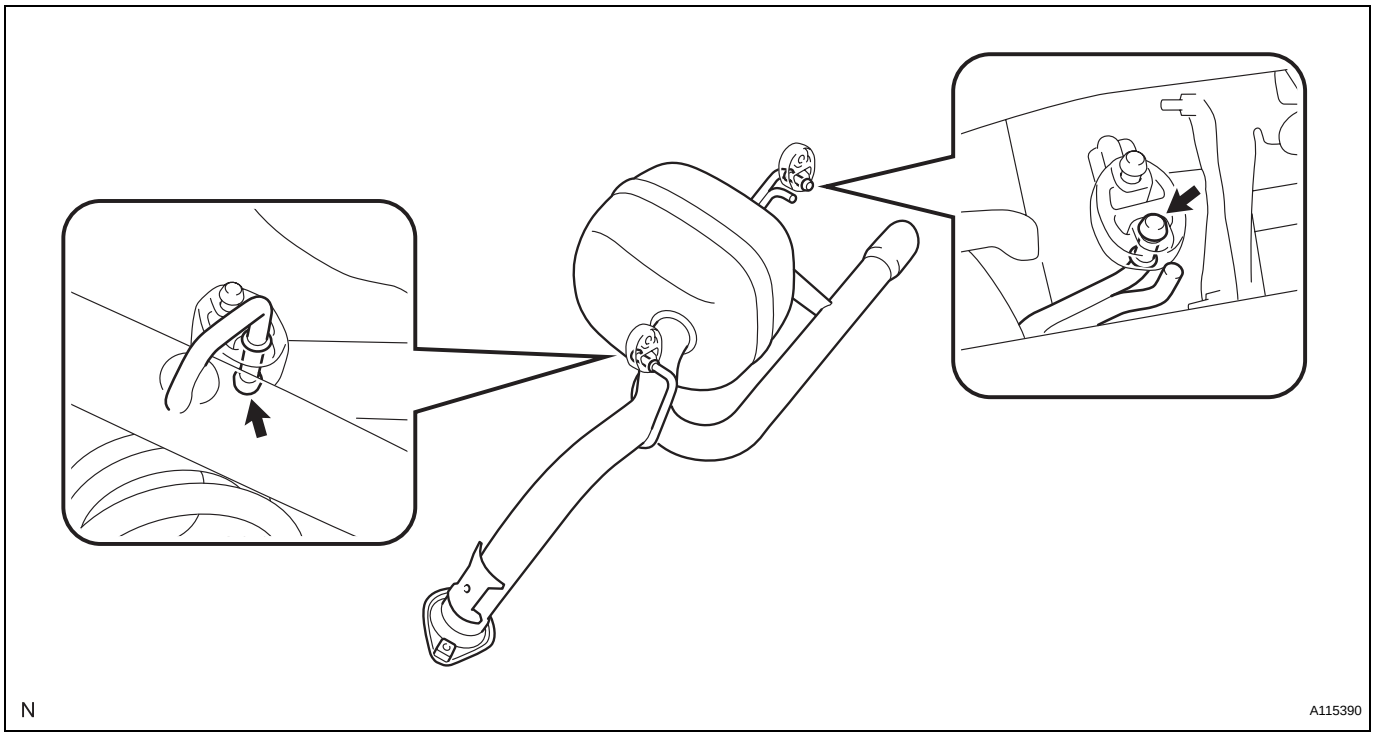

(b) Install the 3 No. 4 exhaust pipe supports and the exhaust tail pipe assembly. (for Sedan)

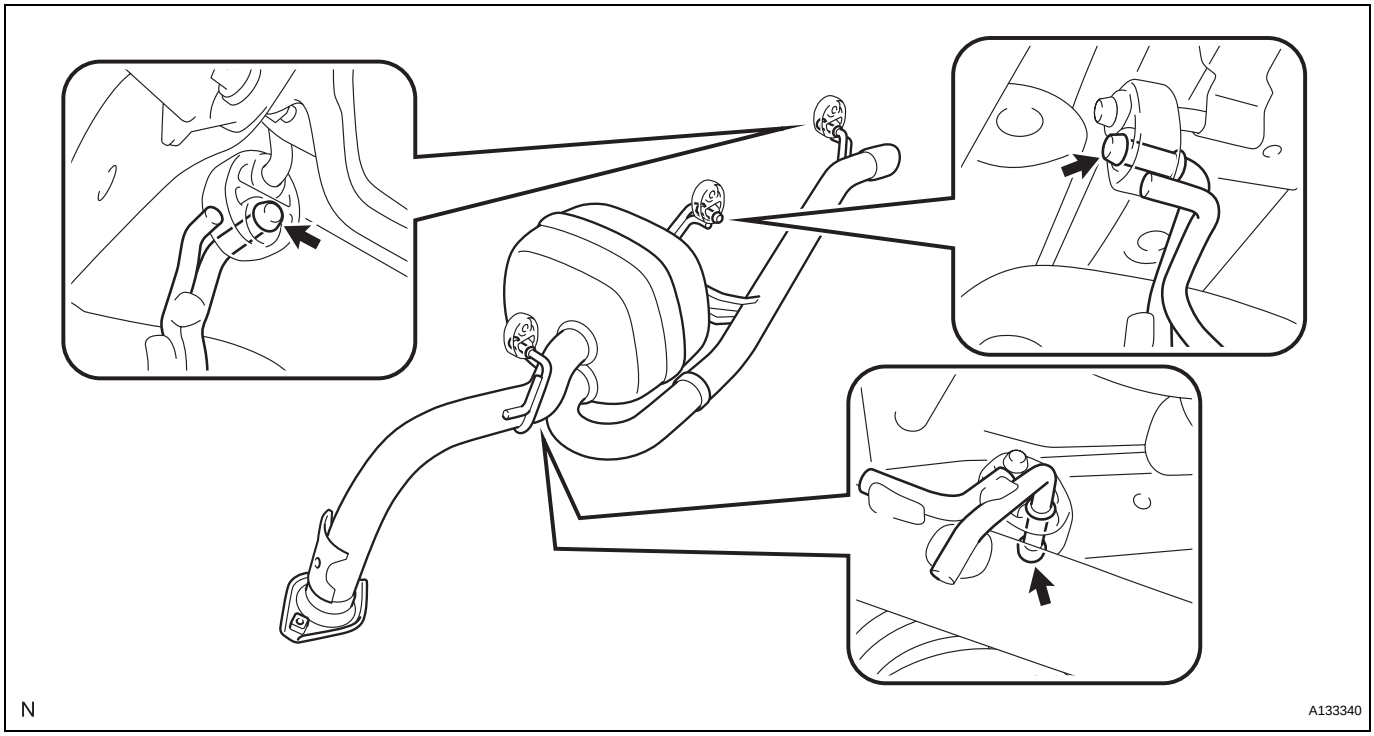

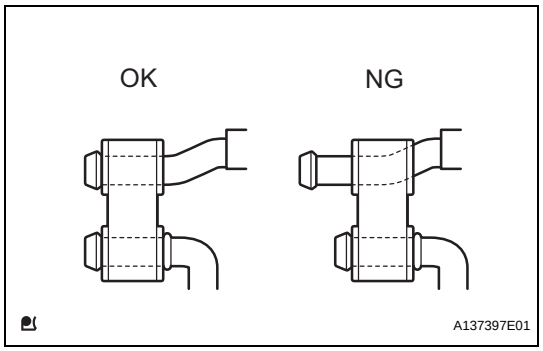

(c) Check the No. 4 exhaust pipe supports.
NOTICE:
Install No. 4 exhaust pipe support onto the pipe retaining support.

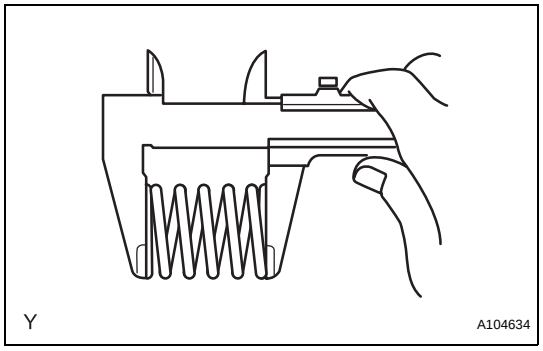

2. INSTALL EXHAUST PIPE ASSEMBLY FRONT

(a) Using vernier calipers, measure the free length of the compression spring.
Minimum length (Front Side):
40.5 mm (1.594 in.)
Minimum length (Rear Side):
38.5 mm (1.516 in.)
If the length is not as specified, replace the compression spring.

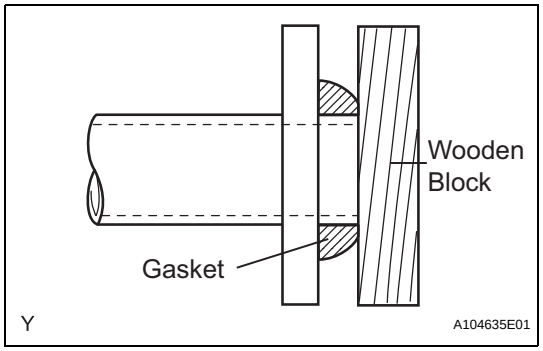

(b) Using a plastic hammer and a wooden block, tap in a new exhaust pipe gasket until its surface is flush with the exhaust manifold.
NOTICE:
- **Install the exhaust pipe gasket in the correct direction.**
- **Do not damage the outer surface of the exhaust pipe gasket.**
- **Do not reuse the exhaust pipe gasket.**
- **Do not push in the gasket with the exhaust pipe when connecting it.**

(c) Install the 3 No. 4 exhaust pipe supports.
(d) Install the exhaust front pipe assembly and a new exhaust pipe gasket with the 4 compression springs and 4 bolts.
Torque: 43 N*m (439 kgf*cm, 32 ft.*lbf)

EX

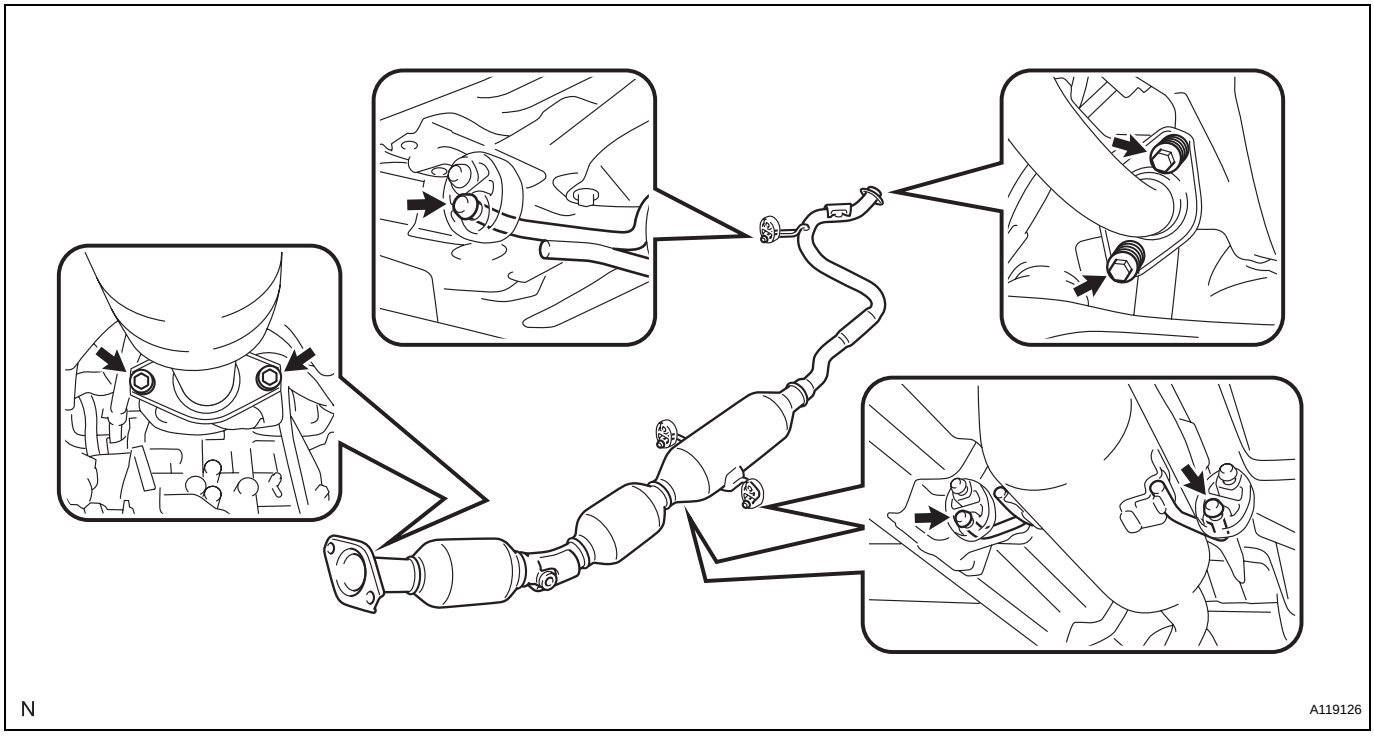

EX

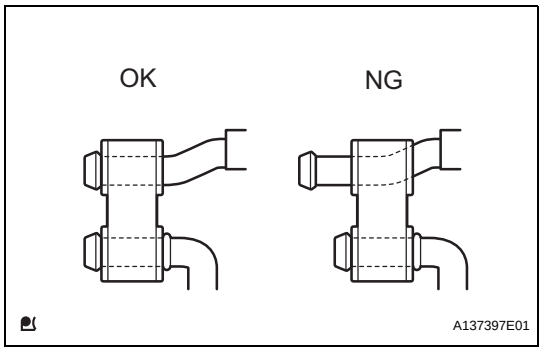

(e) Check the No. 4 exhaust pipe supports.
NOTICE:
Install No. 4 exhaust pipe support onto the pipe retaining support.

3. **INSTALL HEATED OXYGEN SENSOR (See page EC-23)**
4. **INSTALL INSTRUMENT PAD LOWER LH (for Sedan) (See page IP-55)**
5. **INSTALL REAR CONSOLE BOX ASSEMBLY (See page PB-10)**
6. **INSTALL CONSOLE BOX CARPET (See page PB-11)**
7. **INSTALL CONSOLE BOX REAR COVER (for Hatchback) (See page PB-11)**
8. **INSTALL CONSOLE UPPER REAR PANEL SUB-ASSEMBLY (for Sedan) (See page IP-89)**
9. **INSTALL SHIFTING HOLE COVER SUB-ASSEMBLY (for Hatchback Manual Transaxle) (See page PB-12)**
10. **INSTALL UPPER CONSOLE PANEL SUB-ASSEMBLY (for Sedan) (See page IP-89)**
11. **INSTALL SHIFT LEVER KNOB SUB-ASSEMBLY (for Manual Transaxle)**
12. **INSTALL INSTRUMENT PANEL FINISH PANEL END LH (for Sedan) (See page ME-141)**
13. **INSTALL INSTRUMENT PANEL FINISH PANEL LOWER CENTER (for Sedan) (See page ME-142)**

14. **CONNECT CABLE TO NEGATIVE BATTERY TERMINAL**
    Torque: 5.4 N*m (55 kgf*cm, 48 in.*lbf)
15. **CHECK FOR EXHAUST GAS LEAKAGE**

COOLING SYSTEM

ON-VEHICLE INSPECTION

CAUTION:
Be sure that the ignition is off if you work near the electric cooling fans or radiator grille. With the ignition on the electric cooling fans may automatically start to run if the engine coolant temperature is high and/or the air conditioning is on.

1. CHECK COOLING SYSTEM FOR LEAKAGE

CAUTION:
To avoid the danger of being burned, do not remove the radiator cap sub-assembly while the engine and radiator assembly are still hot. Thermal expansion will cause hot engine coolant and steam to blow out from the radiator assembly.

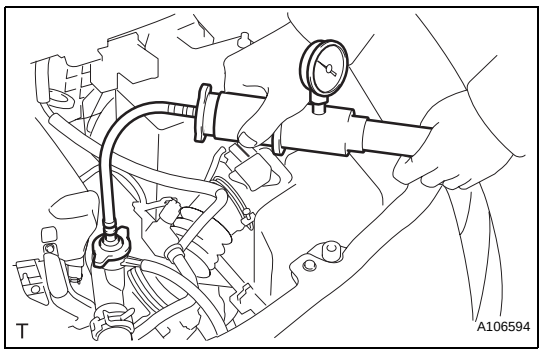

(a) Fill the radiator assembly with engine coolant, then attach a radiator cap tester.

(b) Pump the tester to 137 kPa (1.4 kgf/cm^2, 19.9 psi), then check that the pressure does not drop.
If the pressure drops, check the hoses, radiator assembly and water pump assembly for leakage. If there are no signs or traces of external engine coolant leakage, check the heater core, cylinder block and head.

2. INSPECT RESERVOIR TANK ENGINE COOLANT LEVEL

(a) The engine coolant should be between the LOW and FULL lines when the engine is cold.
HINT:
If it is below the LOW line, check for leakage and add Toyota Super Long Life Coolant or similar high quality ethylene glycol based non-silicate, non-amine, non-nitrite, and non-borate coolant with long-life hybrid organic acid technology up to the FULL line.

3. INSPECT ENGINE COOLANT QUALITY

(a) Remove the radiator cap sub-assembly.
CAUTION:
To avoid the danger of being burned, do not remove the radiator cap sub-assembly while the engine and radiator assembly are still hot. Thermal expansion will cause hot engine coolant and steam to blow out from the radiator assembly.

(b) Check for excessive deposits of rust or scale around the radiator cap sub-assembly and radiator filler hole. The engine coolant should be free of oil.
If excessively dirty, replace the engine coolant.

(c) Reinstall the radiator cap sub-assembly.

CO

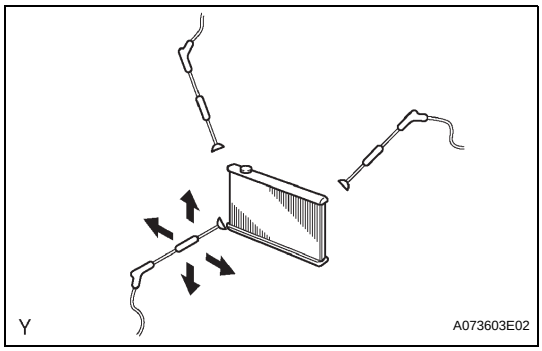

4. INSPECT FINS FOR BLOCKAGE

(a) If the fins are clogged, wash them with water or a steam cleaner and dry them with compressed air.

NOTICE:

- **To avoid damaging the fins, the injection direction should be at right angles to the core surface.**
- **If the steam cleaner is too close to the core, there is a possibility of damaging the fins, so keep to the following injection distances.**

Injection Pressure kPa (kgf*cm^2, psi)	Injection Distance mm (in.)
2.942 to 4.903 (30 to 50, 427 to 711)	300 (11.811)
4.903 to 7.845 (50 to 80, 711 to 1.138)	500 (19.685)

- **If the fins are bent, straighten them with a screwdriver or pliers.**
- **Do not expose electronic components to water.**

COOLING FAN SYSTEM

PARTS LOCATION

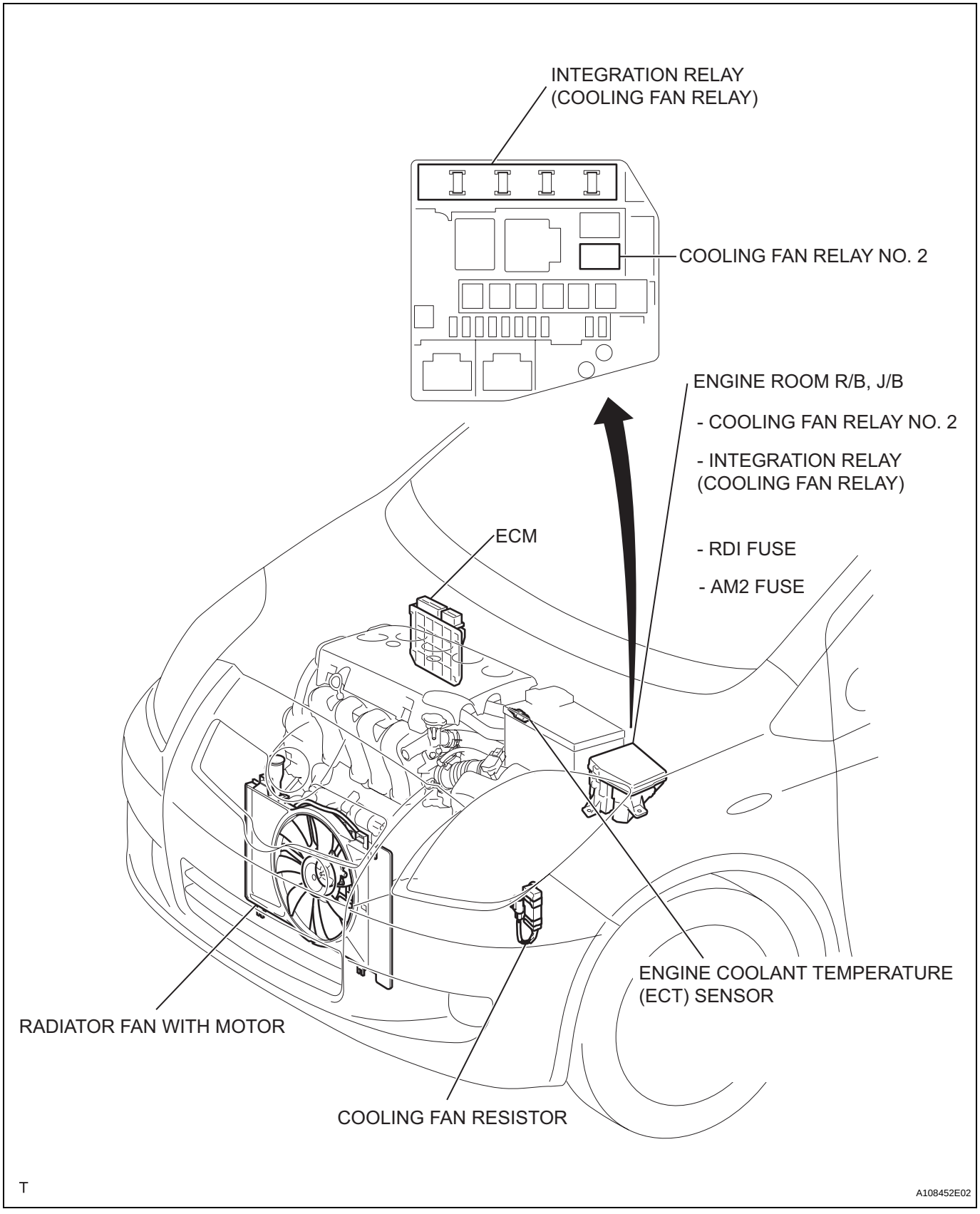

CO

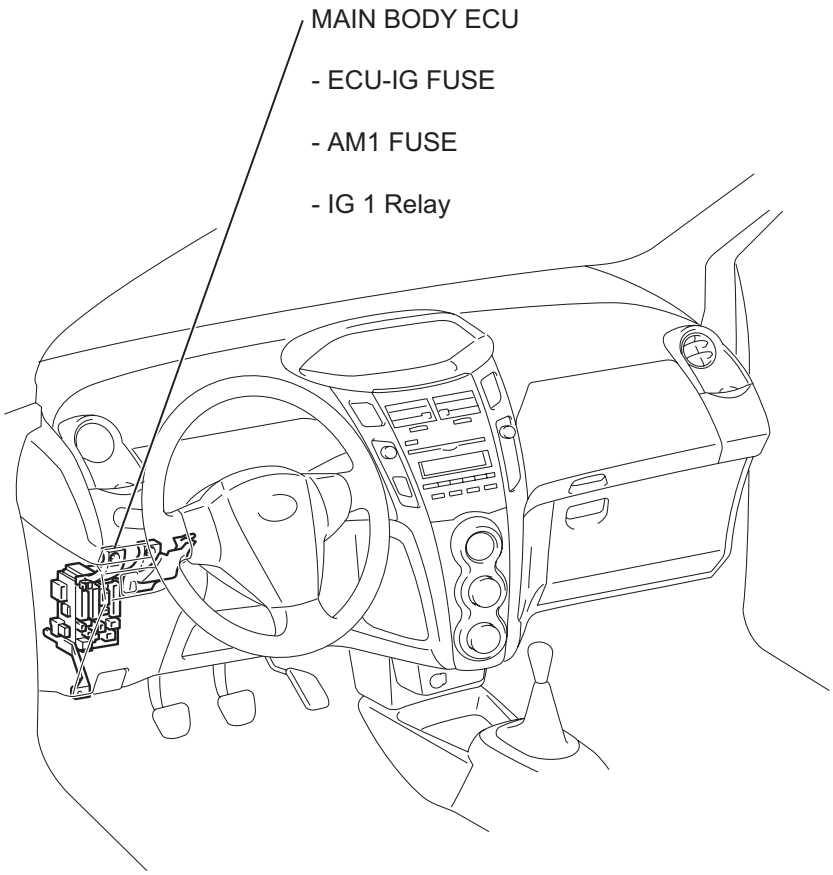

Y

A117368E03

SYSTEM DIAGRAM

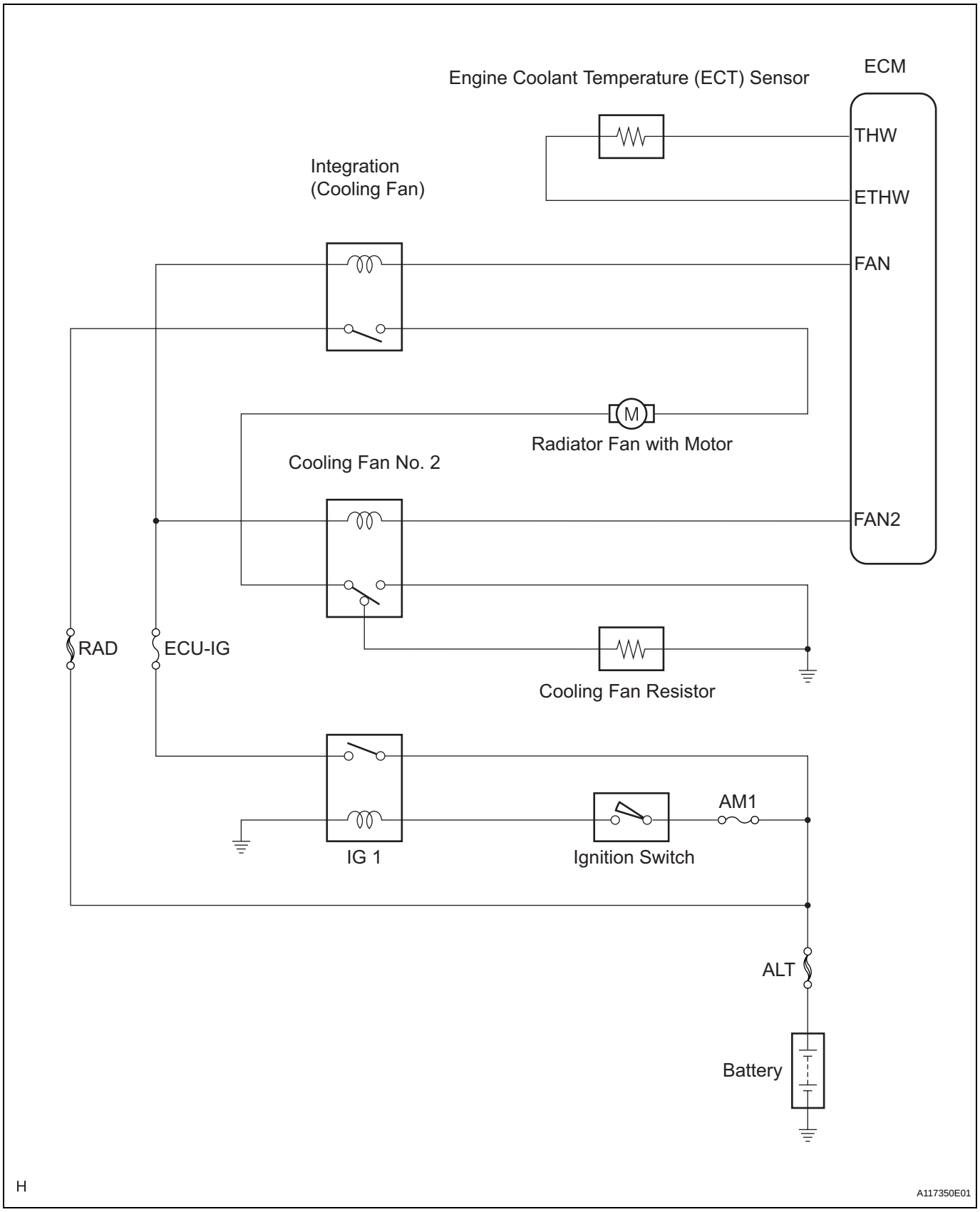

CO

ON-VEHICLE INSPECTION

CAUTION:
Be sure that the ignition is off if you work near the electric cooling fans or radiator grille. With the ignition on the electric cooling fans may automatically start to run if the engine coolant temperature is high and/or the air conditioning is on.

1. INSPECT COOLING FAN OPERATION AT LOW TEMPERATURES (Below 83°C (181°F))

(a) Turn the ignition switch on (IG) and air conditioning switch off.
(b) Check that the cooling fan stops.
If not, check the cooling fan relay and engine coolant temperature sensor, and check whether there is disconnection or an open circuit between them.
(c) Disconnect the engine coolant temperature sensor connector.
(d) Check that the cooling fan rotates.
If not, check the fuses, cooling fan relay, ECM and cooling fan, and check for a short circuit between the cooing fan relay and the engine coolant temperature sensor.
(e) Reconnect the engine coolant temperature sensor connector.

2. INSPECT COOLING FAN OPERATION AT HIGH TEMPERATURES (Above 93°C (199°F))

(a) Start the engine and air conditioning switch off, and raise the engine coolant temperature to above 93°C (199°F).
HINT:
Engine coolant temperature is detected by the engine coolant temperature sensor on the water outlet.
(b) Check that the cooling fan rotates.
If not, replace the engine coolant temperature sensor.

3. INSPECT COOLING FAN MOTOR

(a) Disconnect the cooling fan motor connector.
(b) Connect the cooling fan connector to the battery and check that the fan motor moves smoothly.

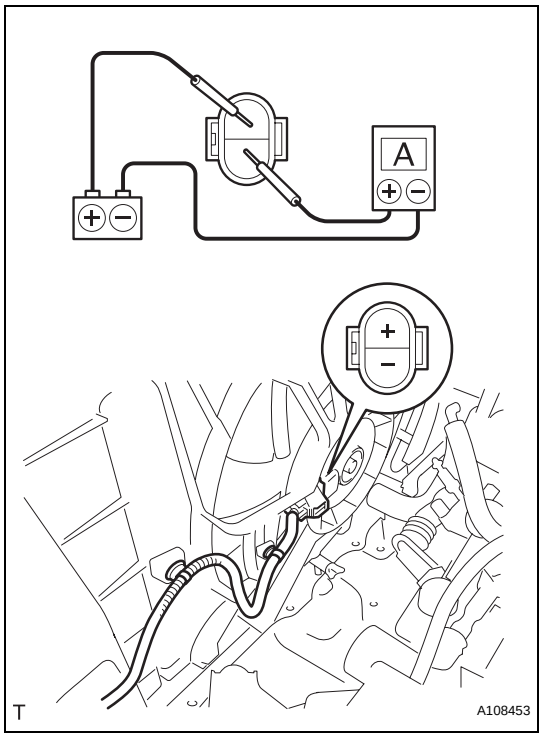

(c) Using an ammeter, measure the current between the terminals.
Standard Current:
w/ A/C 11.8 to 14.8 A (at 12 V)
w/o A/C 7.9 to 10.9 A (at 12 V)

(d) Connect the cooling fan motor connector.

COOLANT

REPLACEMENT

CAUTION:
Be sure that the ignition is off if you work near the electric cooling fans or radiator grille. With the ignition on the electric cooling fans may automatically start to run if the engine coolant temperature is high and/or the air conditioning is on.

1. DRAIN ENGINE COOLANT

NOTICE:
To avoid the danger of being burned, do not remove the radiator cap sub-assembly while the engine and radiator assembly are still hot. Thermal expansion will cause hot engine coolant and steam to blow out from the radiator assembly.

(a) Loosen the radiator drain cock plug.
(b) Remove the radiator cap sub-assembly.
(c) Loosen the cylinder block drain cock plug, then drain the coolant.

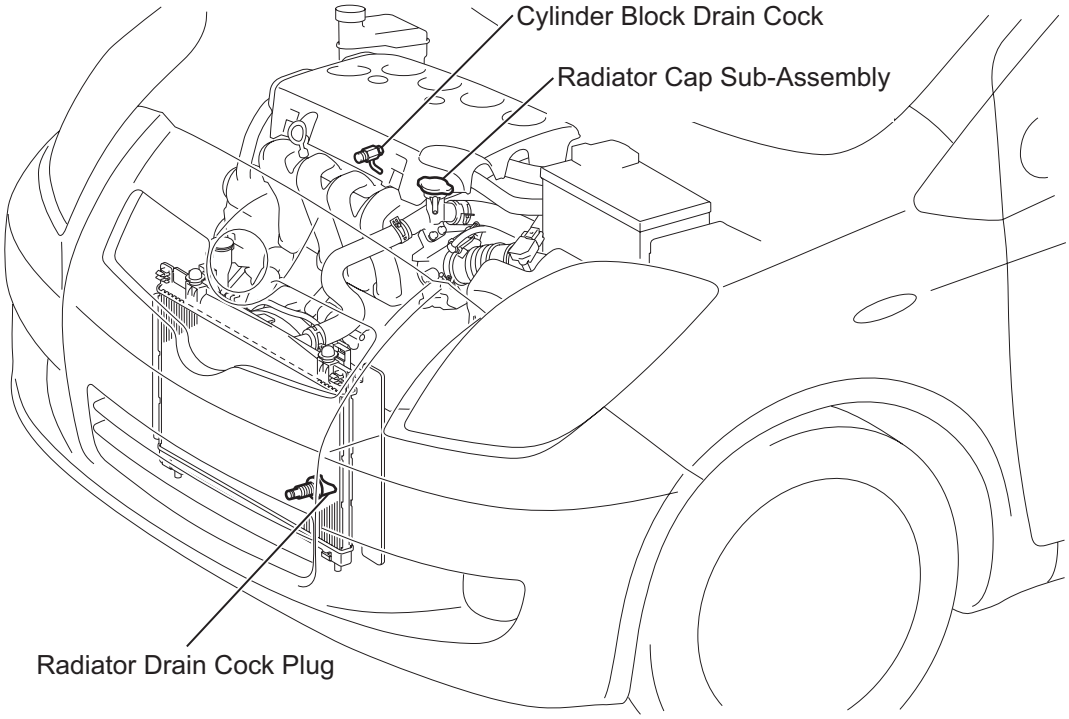

2. ADD ENGINE COOLANT

(a) Tighten all the plugs.

(b) Pour engine coolant into the radiator assembly until it overflows.
Capacity:
M/T 4.8 liters (5.1 USqts, 4.5 lmp. qts)
A/T 4.7 liters (5.0 USqts, 4.4 lmp. qts)
NOTICE:
Do not substitute water for engine coolant.
HINT:
- Use of improper engine coolant may damage the engine coolant system.
- Use only Toyota Super Long Life Coolant or similar high quality ethylene glycol based non-silicate, non-amine, non-nitrite, and non-borate engine coolant with long-life hybrid organic acid technology (coolant with long-life hybrid organic acid technology consists of a combination of low phosphates and organic acids).

(c) Check the engine coolant level inside the radiator assembly by squeezing the inlet and outlet radiator hoses several times by hand. If the engine coolant level goes down, add engine coolant.
(d) Install the radiator cap sub-assembly securely.
(e) Slowly pour engine coolant into the radiator reservoir until it reaches the FULL line.
(f) Warm up the engine until the cooling fan operates.
(1) Set the air conditioning as follows while warming up the engine.

Item	Manual air conditioning system	Automatic air conditioning system
Set control as follows	Fan speed - Any setting except "OFF" Temperature - Toward WARM Air conditioning switch "OFF"	Fan speed - Any setting except "OFF" Temperature - To the highest temperature Air conditioning switch "OFF" "AUTO" switch "OFF"

(2) Maintain the engine speed at 2,000 to 2,500 rpm and warm up the engine until the cooling fan operates.
(g) Stop the engine and wait until the coolant cools down.
(h) If the engine coolant level is below the full level, perform steps (b) through (g) again and repeat the operation until the engine coolant level stays at the full level.
(i) Recheck the engine coolant level inside the radiator reservoir tank assembly. If it is below the full level, add engine coolant.

3. CHECK FOR ENGINE COOLANT LEAKAGE (See page CO-1)

WATER PUMP

COMPONENTS

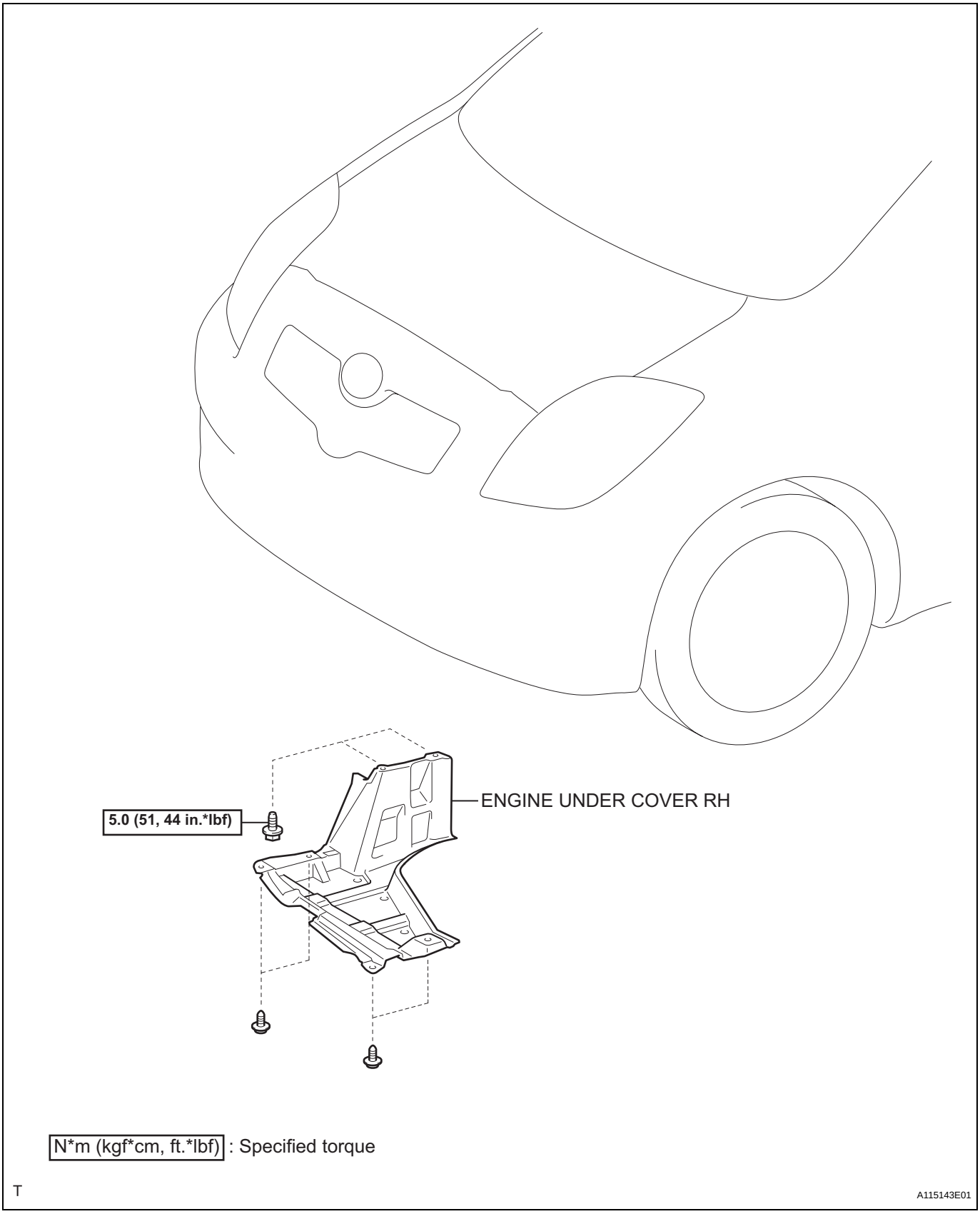

N*m (kgf*cm, ft.*lbf) : Specified torque

T

A115143E01

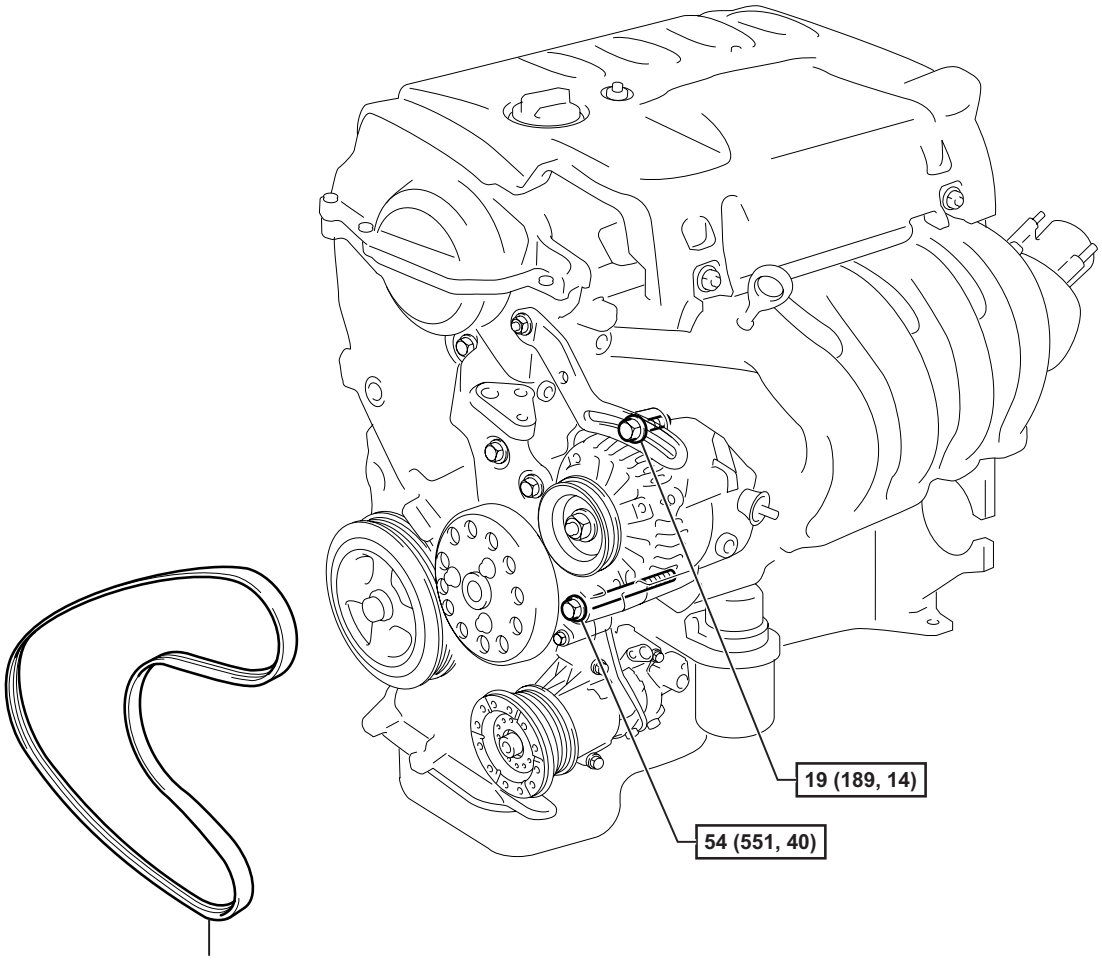

N*m (kgf*cm, ft.*lbf) : Specified torque

T

A116199E01

for Hatchback:

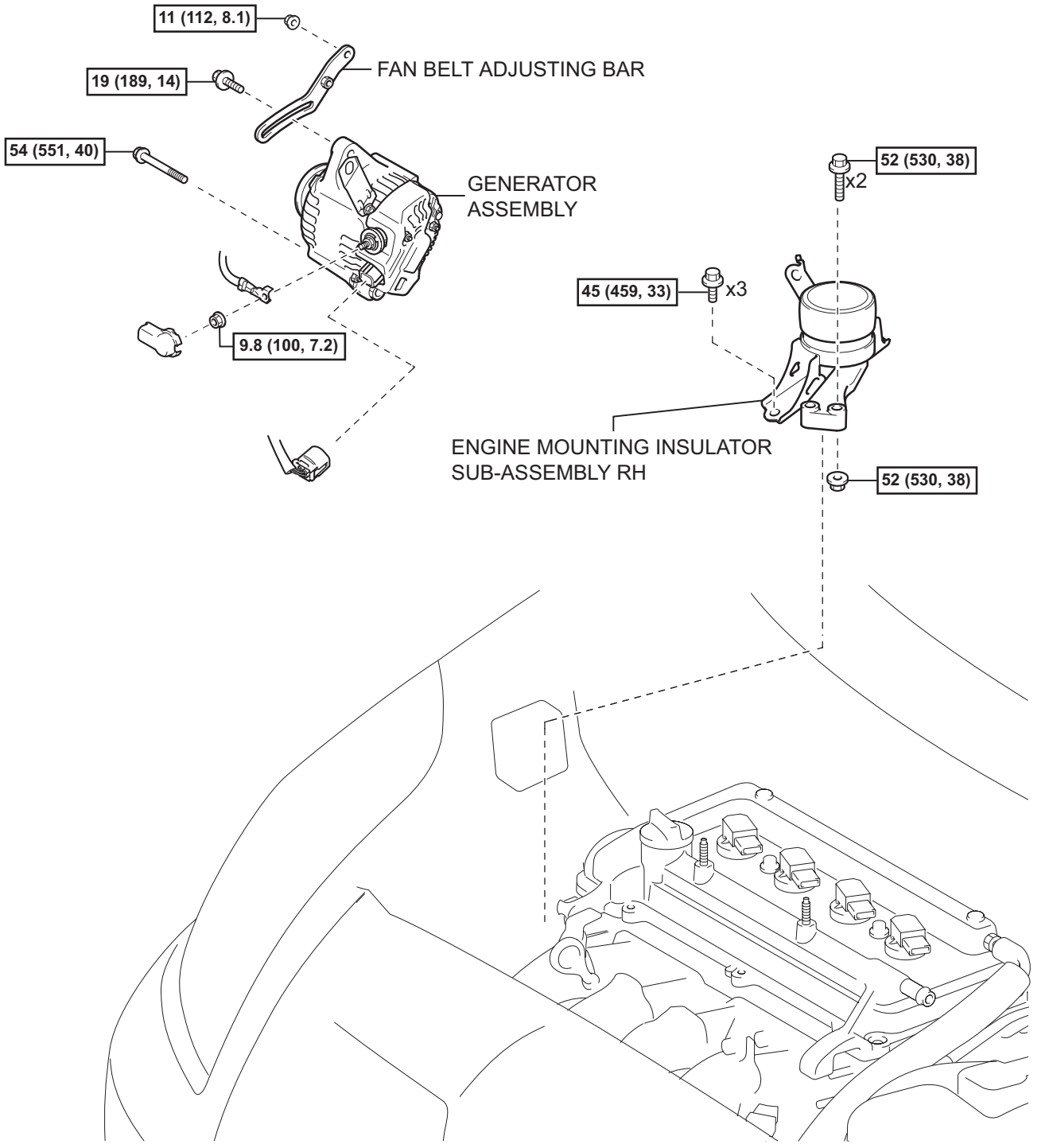

N*m (kgf*cm, ft.*lbf) : Specified torque

T

A116193E06

CO

for Sedan:

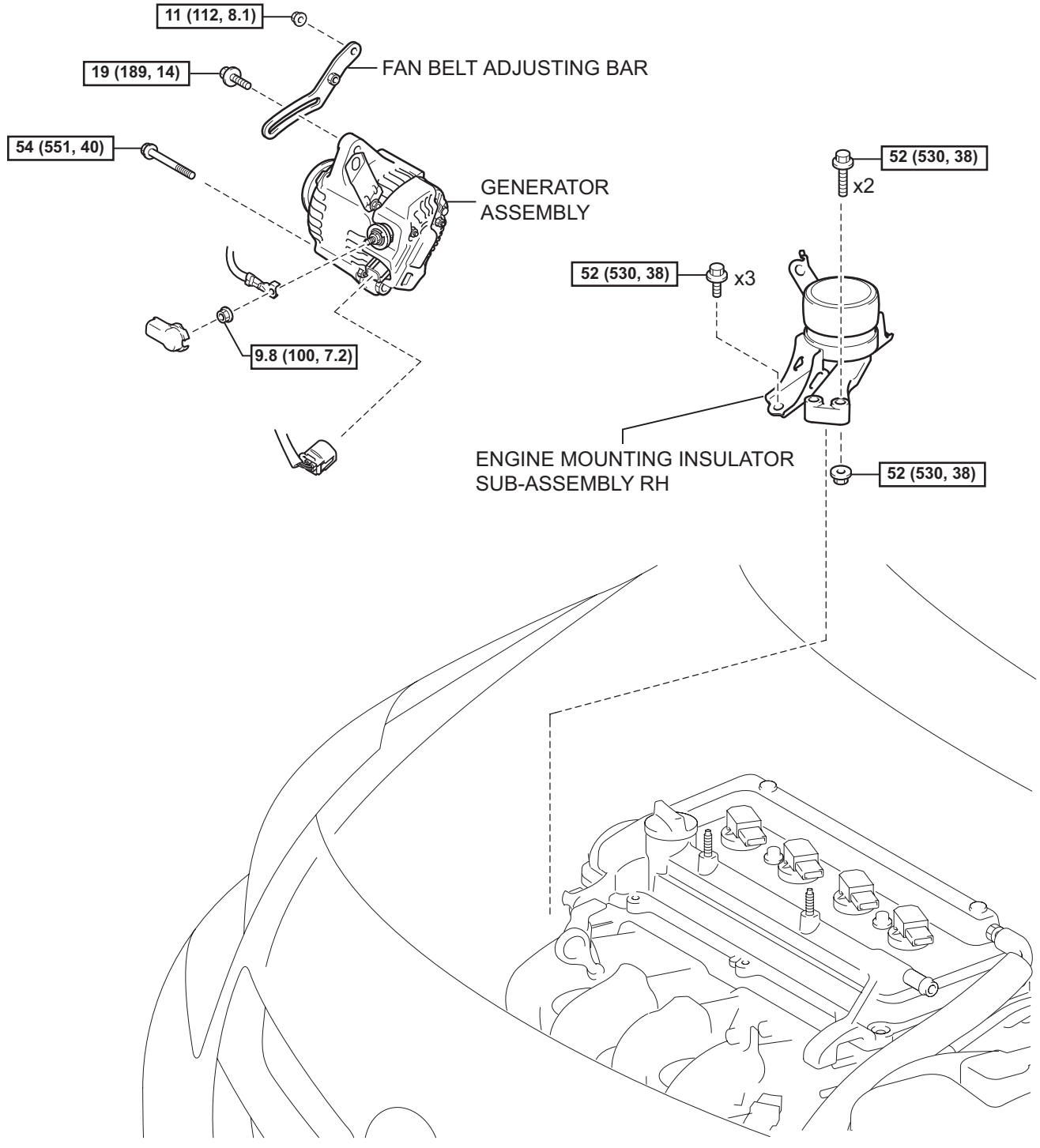

N*m (kgf*cm, ft*lbf) : Specified torque

T

A133594E01

CO

CO

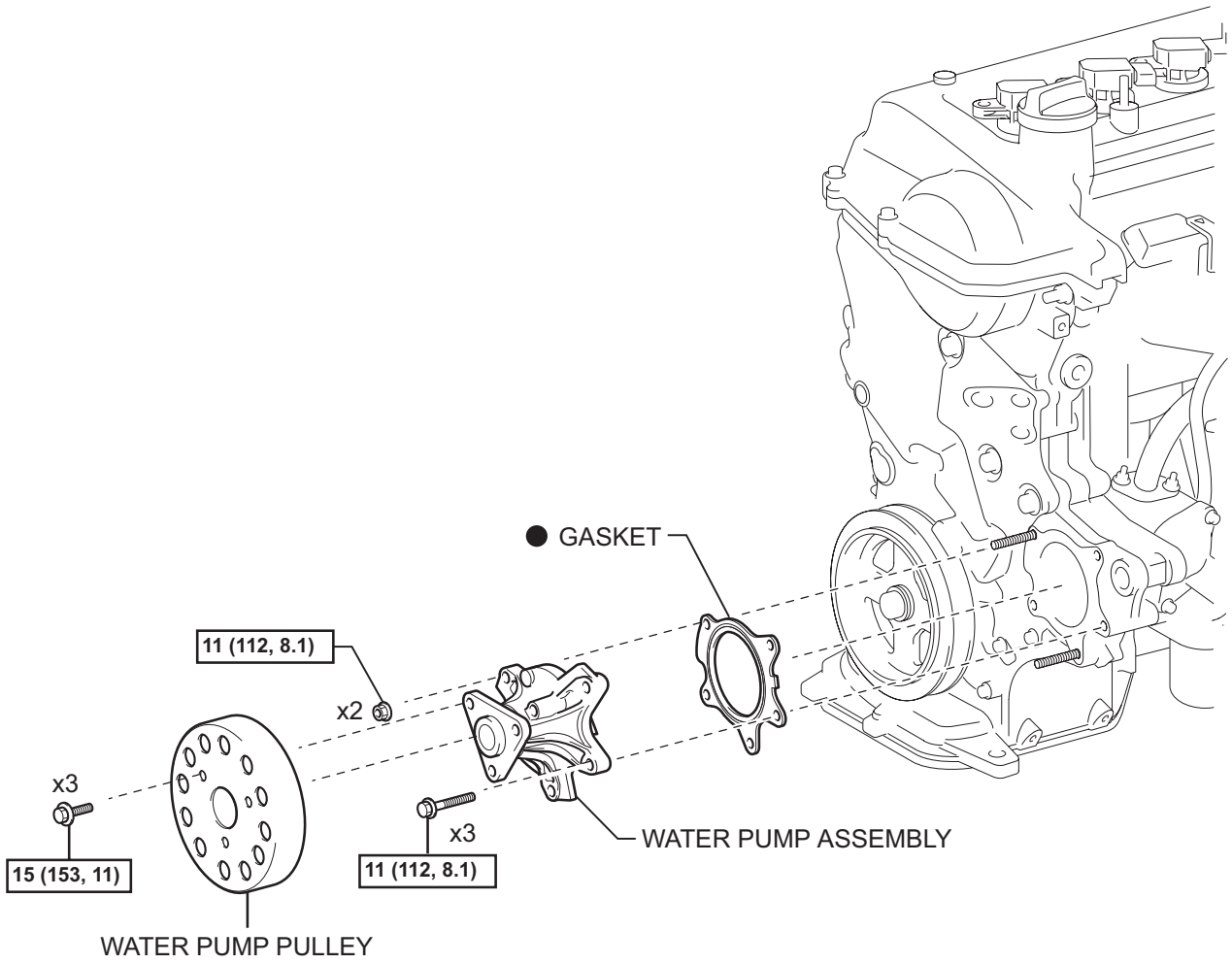

N*m (kgf*cm, ft.*lbf) : Specified torque

● Non-reusable part

T

A116194E01

REMOVAL

1. **DISCONNECT CABLE FROM NEGATIVE BATTERY TERMINAL**
2. **REMOVE ENGINE COOLANT (See page CO-8)**
3. **REMOVE ENGINE UNDER COVER RH**
4. **REMOVE FAN AND GENERATOR V BELT (See page EM-7)**
5. **REMOVE GENERATOR ASSEMBLY (See page CH-10)**
6. **REMOVE ENGINE MOUNTING INSULATOR SUB-ASSEMBLY RH (See page LU-17)**
7. **REMOVE WATER PUMP PULLEY**
   (a) Using SST, hold the water pump pulley.
   SST 09960-10010 (09962-01000, 09963-00700)
   (b) Remove the 3 bolts and remove the water pump pulley.

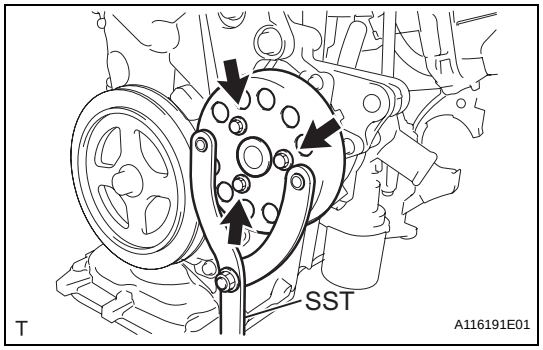

8. **REMOVE WATER PUMP ASSEMBLY**
   (a) Remove the 3 bolts and 2 nuts and remove the water pump assembly and gasket.

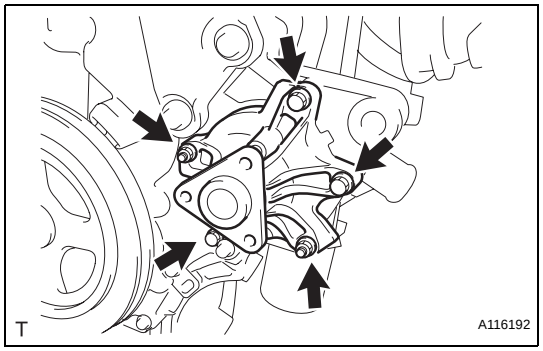

CO

INSPECTION

1. **INSPECT WATER PUMP ASSEMBLY**
   (a) Visually check the drain hole for coolant leakage.
   (b) Turn the pulley and check that the water pump bearing moves smoothly and does not make any noise.
   If necessary, replace the water pump assembly.

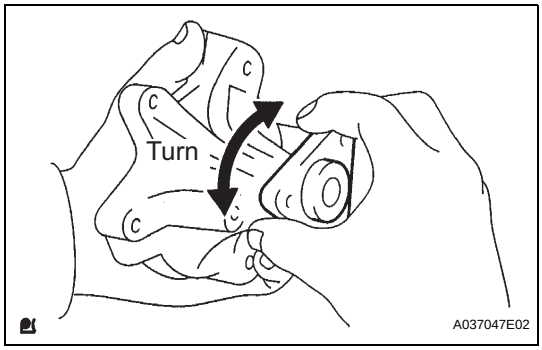

INSTALLATION

1. **INSTALL WATER PUMP ASSEMBLY**
   (a) Install the water pump assembly through a new gasket with the 3 bolts and 2 nuts.
   Torque: 11 N*m (112 kgf*cm, 8.1 ft.*lbf)

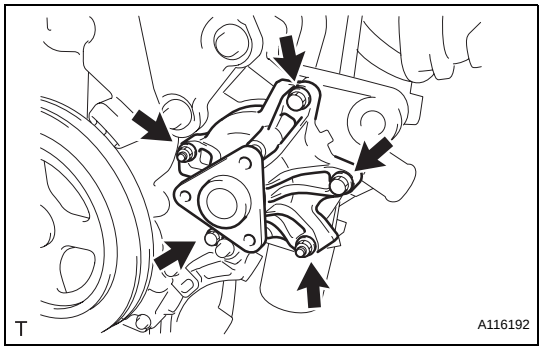

2. **INSTALL WATER PUMP PULLEY**
   (a) Provisionally install the water pump pulley with the 3 bolts.
   (b) Using SST, hold the water pump pulley.
   SST 09960-10010 (09962-01000, 09963-00700)
   (c) Tighten the 3 bolts to the specified torque.
   Torque: 15 N*m (153 kgf*cm, 11 ft.*lbf)

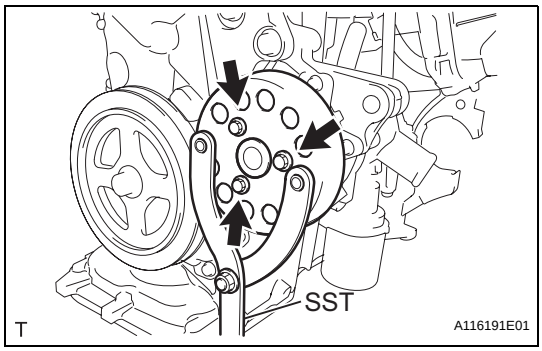

3. **INSTALL ENGINE MOUNTING INSULATOR SUB-ASSEMBLY RH (for Hatchback) (See page LU-26)**
4. **INSTALL ENGINE MOUNTING INSULATOR SUB-ASSEMBLY RH (for Sedan) (See page LU-26)**
5. **INSTALL GENERATOR ASSEMBLY (See page CH-17)**
6. **INSTALL FAN AND GENERATOR V BELT (See page EM-7)**
7. **ADJUST FAN AND GENERATOR V BELT (See page EM-7)**
8. **INSPECT FAN AND GENERATOR V BELT (See page EM-8)**
9. **CONNECT CABLE TO NEGATIVE BATTERY TERMINAL**
   Torque: 5.4 N*m (55 kgf*cm, 48 in.*lbf)
10. **ADD ENGINE COOLANT (See page CO-8)**
11. **CHECK FOR ENGINE COOLANT LEAKAGE (See page CO-1)**
12. **INSTALL ENGINE UNDER COVER RH**

CO

THERMOSTAT

COMPONENTS

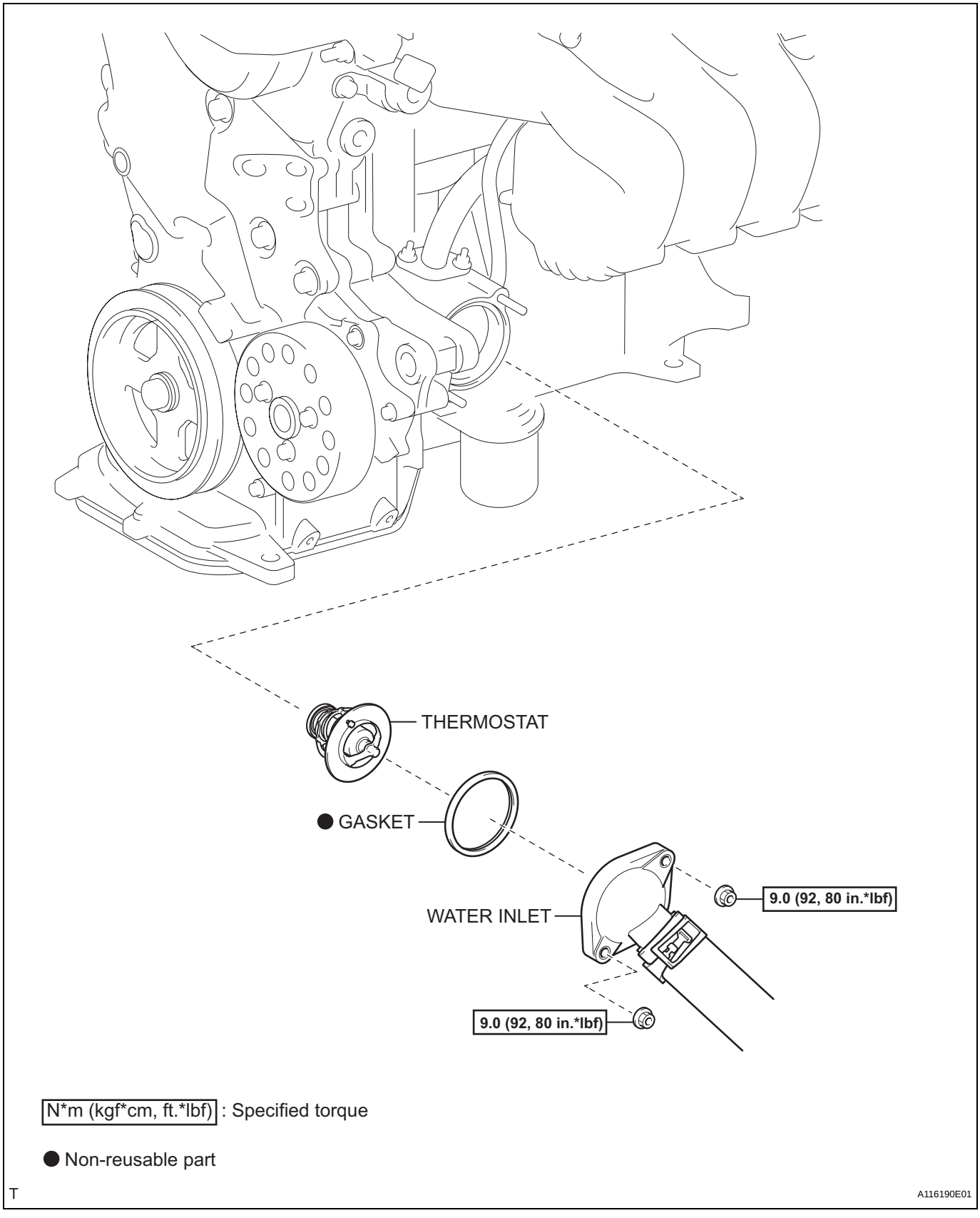

REMOVAL

1. **DRAIN ENGINE COOLANT (See page CO-8)**

2. **REMOVE WATER INLET**
   (a) Remove the 2 nuts and separate the water inlet with radiator hose from the cylinder block.

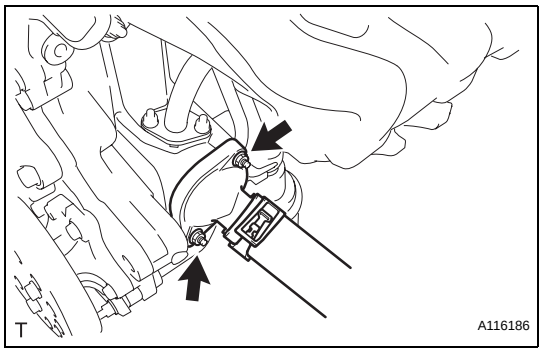

3. **REMOVE THERMOSTAT**
   (a) Remove the thermostat from the cylinder block.
   (b) Remove the gasket from the thermostat.

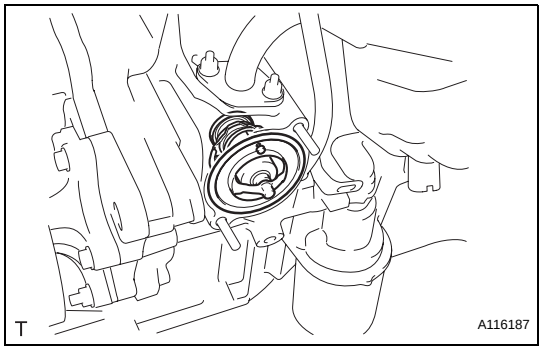

INSPECTION

1. **INSPECT THERMOSTAT**
   HINT:
   The valve opening temperature is inscribed on the thermostat.

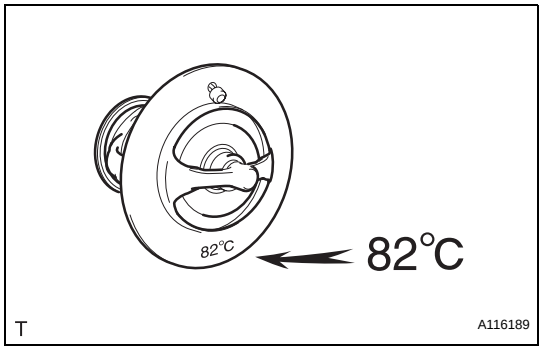

   (a) Immerse the thermostat in water and gradually heat the water.
   (b) Check the valve opening temperature of the thermostat.
   Valve opening temperature:
   80 to 84°C (176 to 183°F)
   If the valve opening temperature is not as specified, replace the thermostat.

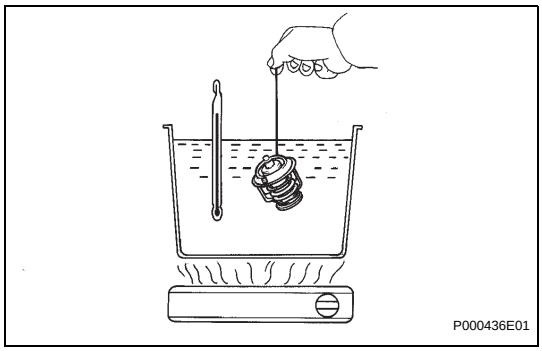

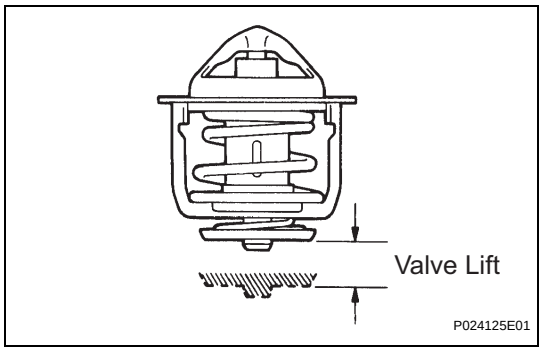

(c) Check the valve lift.
Valve lift:
8.5 mm (0.335 in.) or more at 95°C (203°F)
If the valve lift is not as specified, replace the thermostat.

(d) Check that the valve is fully closed when the thermostat is at low temperatures (below 77°C (171°F))
If not fully closed, replace the thermostat.

INSTALLATION

1. INSTALL THERMOSTAT

(a) Install a new gasket onto the thermostat.

(b) Install the thermostat with the jiggle valve facing upward.
HINT:
The jiggle valve may be set within 10° on either side, as shown in the illustration.

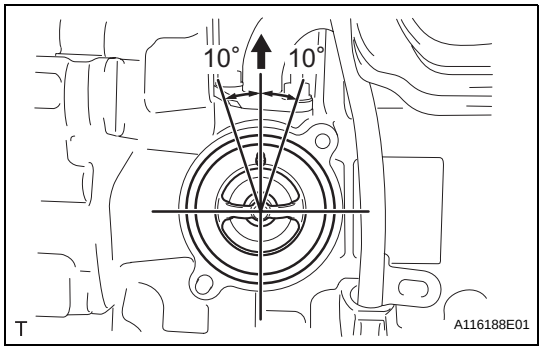

2. INSTALL WATER INLET

(a) Install the water inlet with radiator hose with the 2 nuts.
Torque: 9.0 N*m (92 kgf*cm, 80 in.*lbf)

3. ADD ENGINE COOLANT (See page CO-8)

4. CHECK FOR ENGINE COOLANT LEAKAGE (See page CO-1)

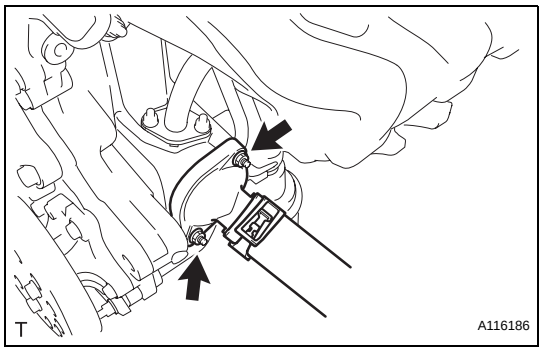

CO

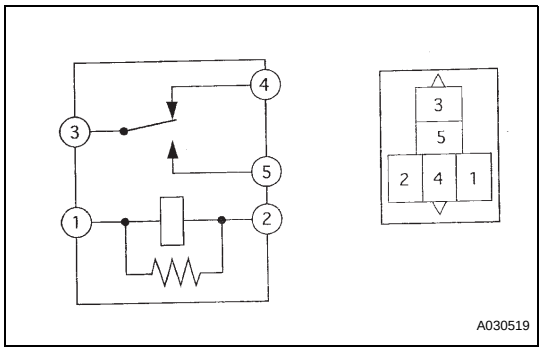

COOLING FAN RELAY

ON-VEHICLE INSPECTION

1. INSPECT COOLING FAN RELAY NO. 2

(a) Check the resistance.

(1) Using an ohmmeter, measure the resistance between the terminals.

Standard resistance

Tester Connection	Specified Condition
3 - 4	Below 1 Ω
3 - 4	10 kΩ or higher (When battery voltage applied to terminals 1 and 2)
3 - 5	10 kΩ or higher
3 - 5	Below 1 Ω (when battery voltage applied to terminals 1 and 2)

If the result is not as specified, replace the relay.

INTEGRATION RELAY

COMPONENTS

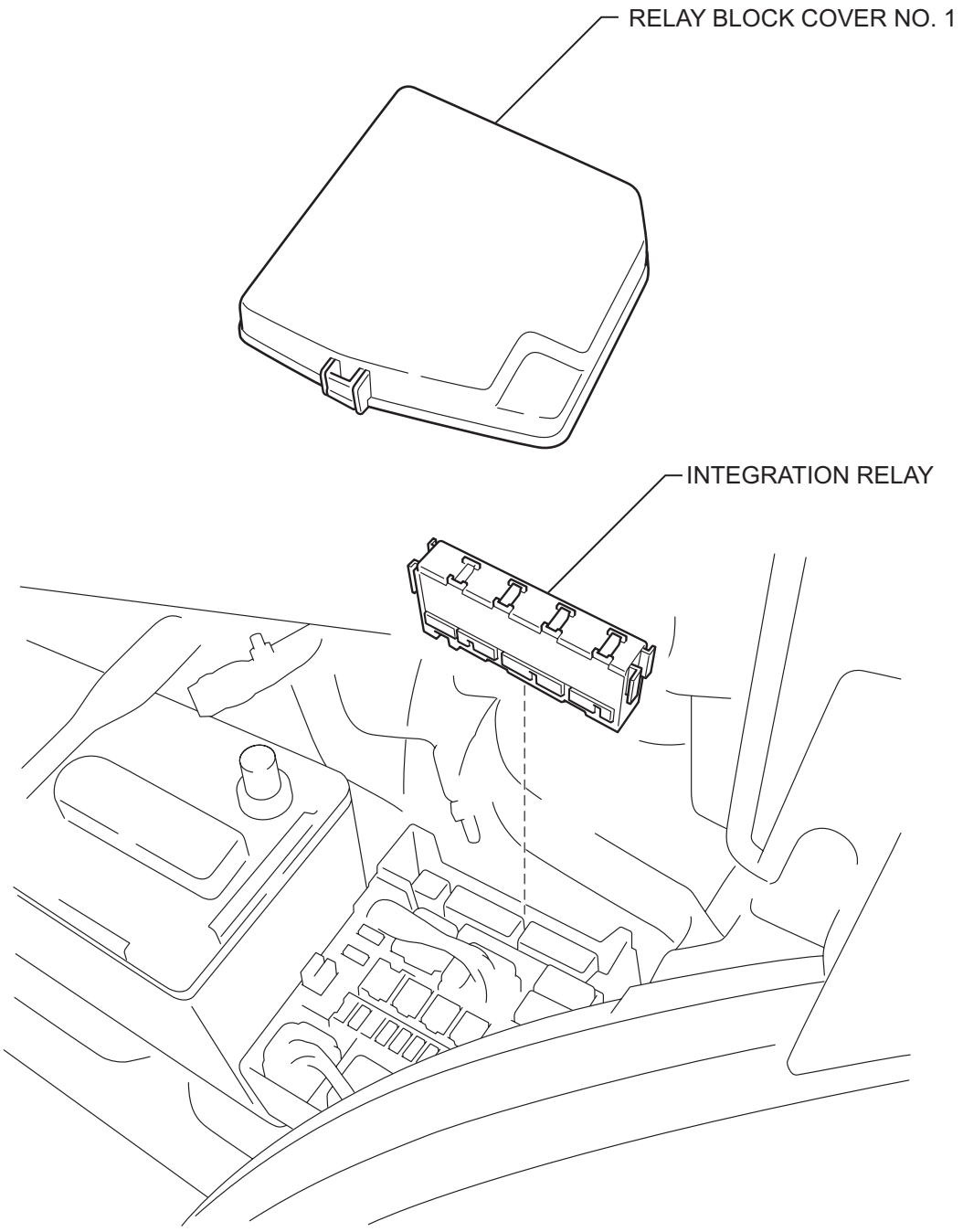

N

A115401E01

REMOVAL

1. **DISCONNECT CABLE FROM NEGATIVE BATTERY TERMINAL**
2. **REMOVE RELAY BLOCK COVER NO. 1**
3. **REMOVE INTEGRATION RELAY**
   (a) Using a screwdriver with its tip wrapped in protective tape, disengage the 2 claws and disconnect the integration relay.
   (b) Disconnect the 3 connectors.

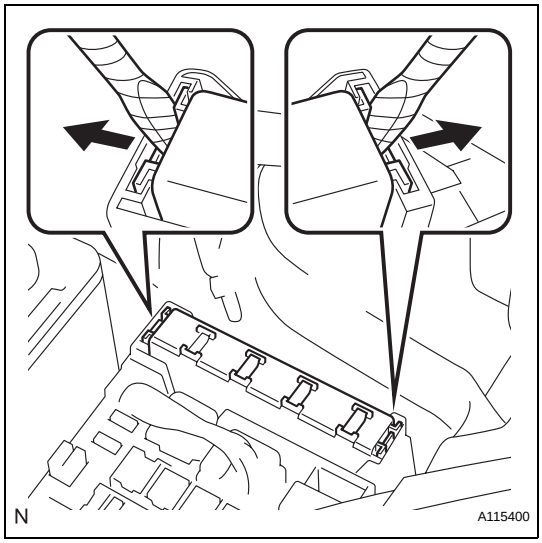

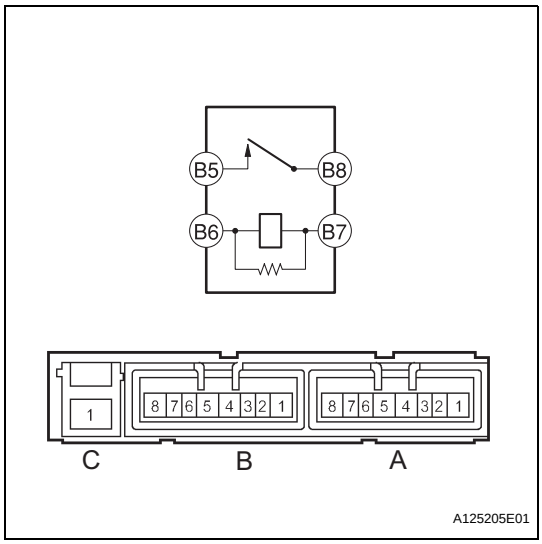

INSPECTION

1. **INSPECT INTEGRATION RELAY**
   (a) Inspect the cooling fan relay.
      (1) Using an ohmmeter, measure the resistance between the terminals.
      Standard resistance

Tester connection	Specified condition
B5 - B8	10 kΩ or higher
B5 - B8	Below 1 Ω (Battery voltage applied between terminals B6 and B7)

NOTICE:
While using the battery for the inspection, do not bring the positive and negative tester probes too close to each other as a short circuit may occur.

INSTALLATION

1. **INSTALL INTEGRATION RELAY**
   (a) Connect the 3 connectors.
   (b) Attach the integration relay to the engine room relay block.
2. **INSTALL RELAY BLOCK COVER NO. 1**
3. **CONNECT CABLE TO NEGATIVE BATTERY TERMINAL**
   Torque: 5.4 N*m (55 kgf*cm, 4.8 in.*lbf)

COOLING FAN RESISTOR

COMPONENTS

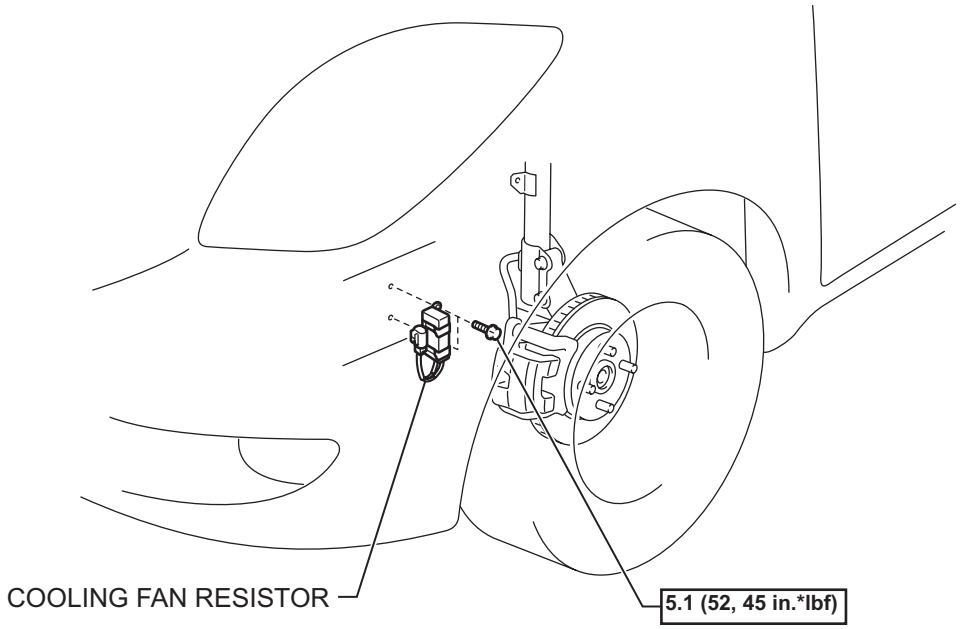

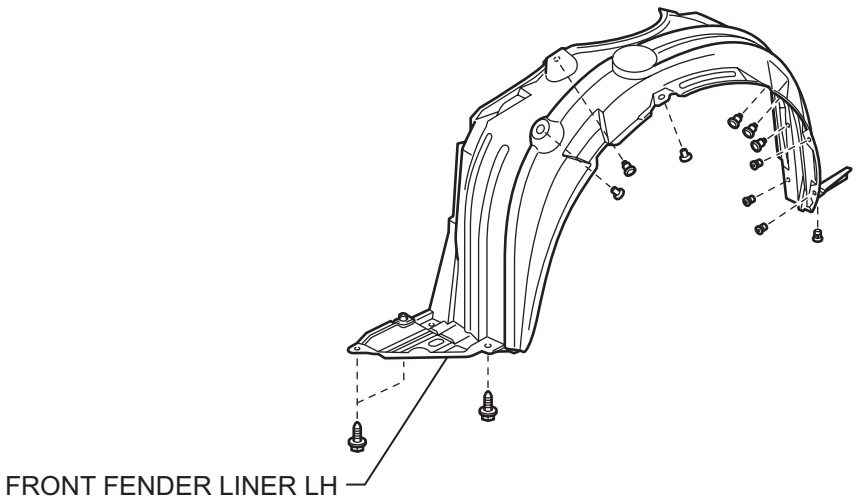

N*m (kgf*cm, ft.*lbf) : Specified torque

A108462E10

REMOVAL

1. **DISCONNECT CABLE FROM NEGATIVE BATTERY TERMINAL**
2. **REMOVE FRONT WHEEL LH**
3. **REMOVE FRONT FENDER LINER LH (See page BC-95)**
4. **REMOVE COOLING FAN RESISTOR**
   (a) Disconnect the connector from the cooling fan resistor.
   (b) Remove the 2 bolts and the cooling fan resistor.

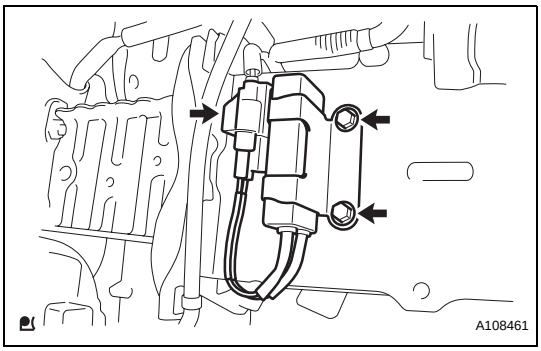

INSPECTION

1. **INSPECT COOLING FAN RESISTOR**
   (a) Using an ohmmeter, measure the resistance between the terminals.
   Standard resistance:
   1.17 to 1.43 Ω at 20°C (68°F)

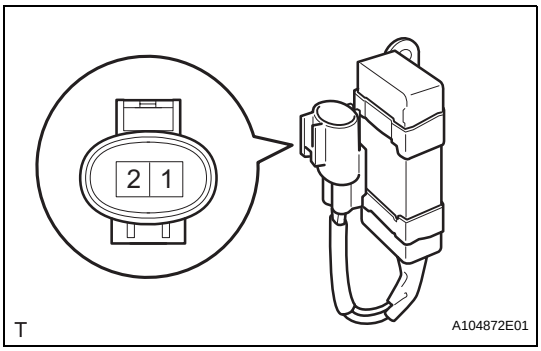

INSTALLATION

1. **INSTALL COOLING FAN RESISTOR**
   (a) Install the cooling fan resistor with the 2 bolts.
   Torque: 5.1 N*m (52 kgf*cm, 45 in.*lbf)
   (b) Connect the cooling fan resistor connector.
2. **INSTALL FRONT FENDER LINER LH (See page BC-96)**
3. **INSTALL FRONT WHEEL LH**
4. **CONNECT CABLE TO NEGATIVE BATTERY TERMINAL**
   Torque: 5.4 N*m (55 kgf*cm, 48 in.*lbf)

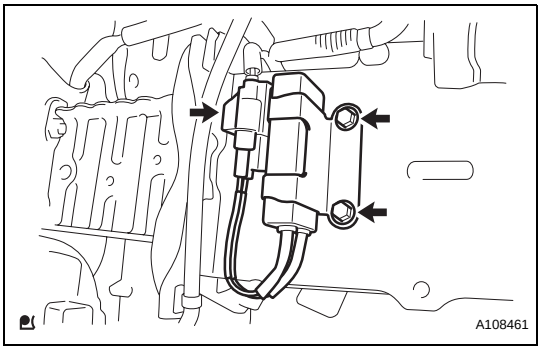

RADIATOR

COMPONENTS

for Hatchback:

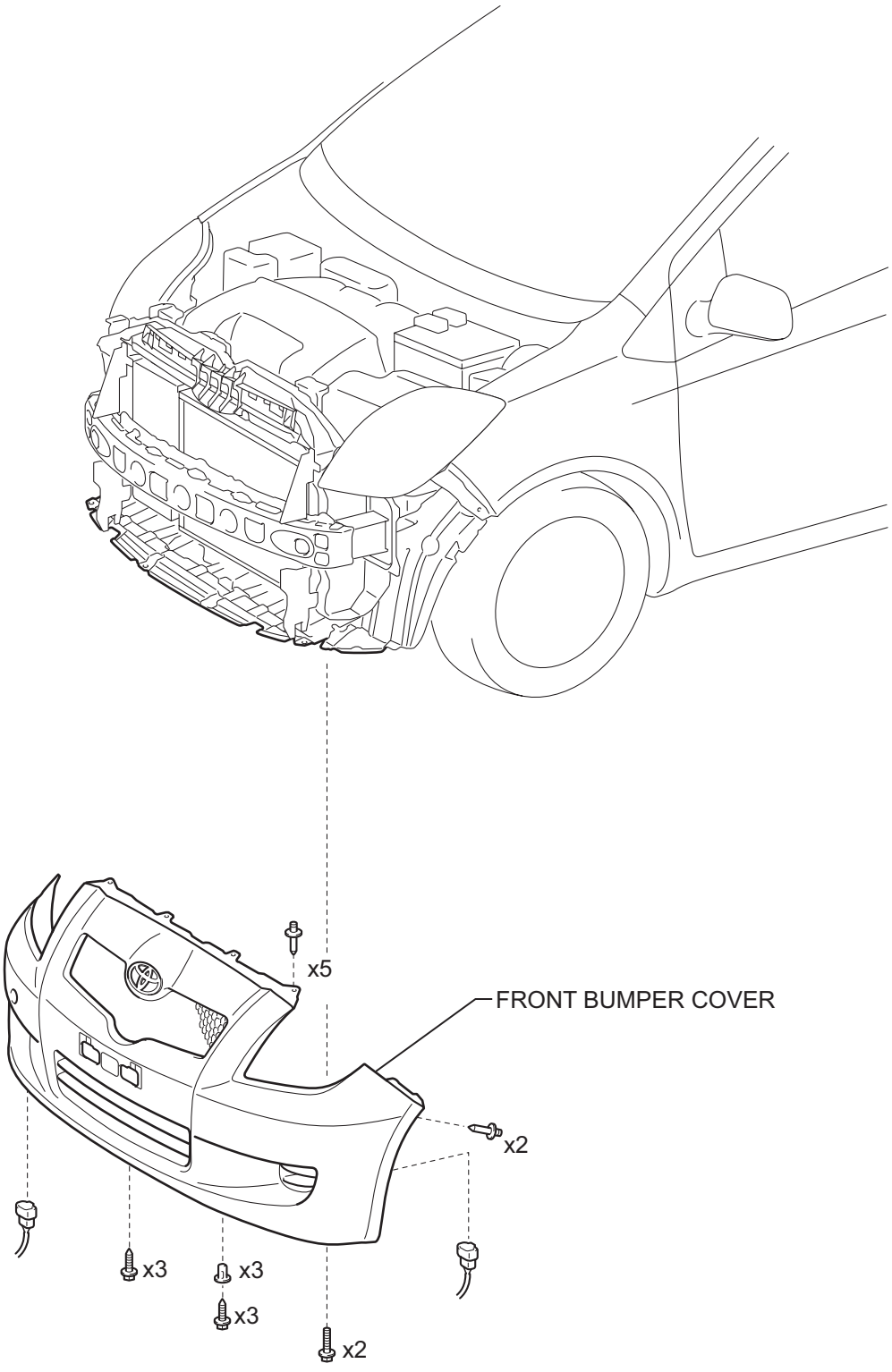

for Sedan:

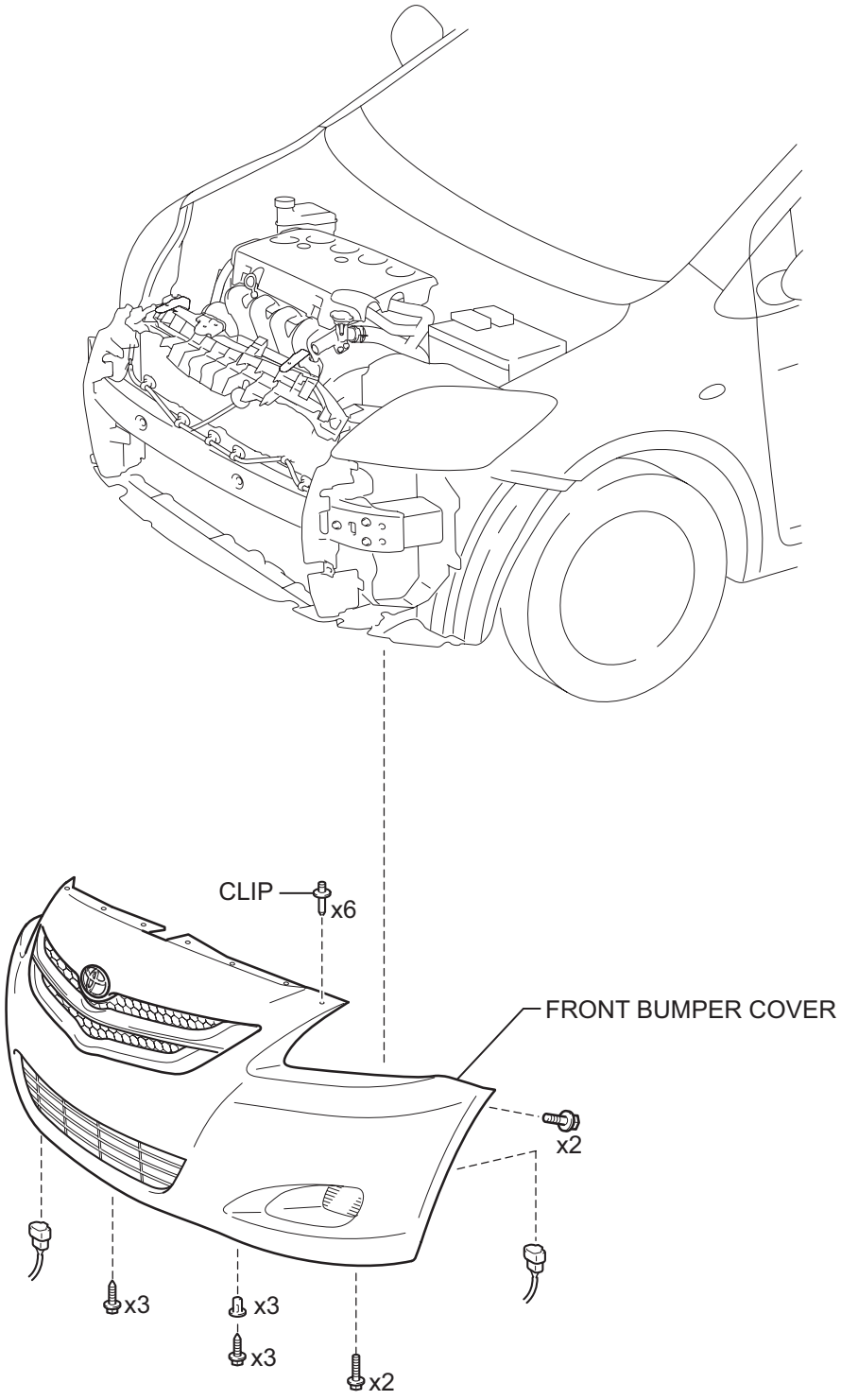

T

A128449E06

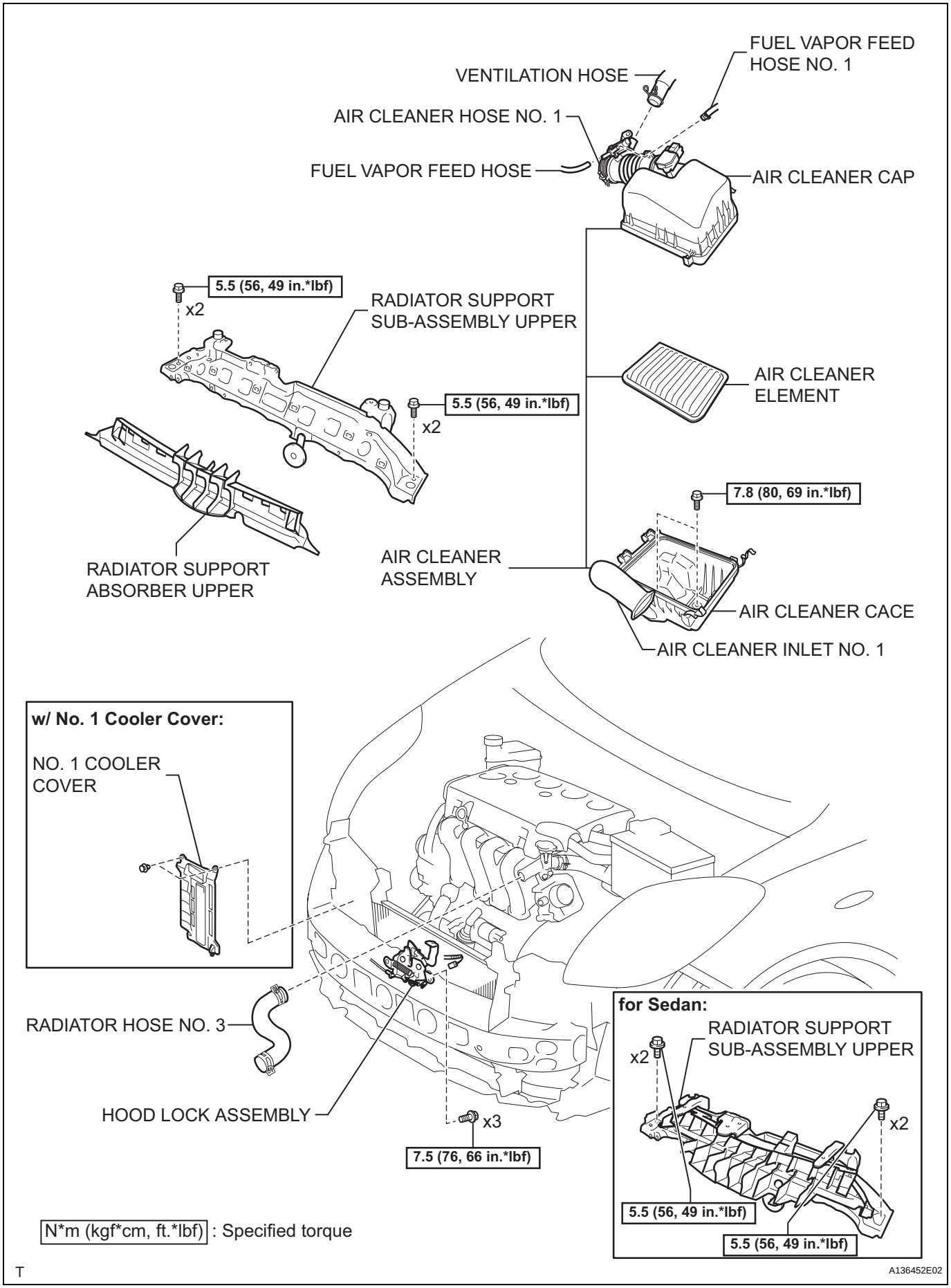
FUEL VAPOR FEED HOSE NO. 1
VENTILATION HOSE
AIR CLEANER HOSE NO. 1
FUEL VAPOR FEED HOSE
AIR CLEANER CAP
5.5 (56, 49 in.*lbf)
x2
RADIATOR SUPPORT SUB-ASSEMBLY UPPER
AIR CLEANER ELEMENT
5.5 (56, 49 in.*lbf)
x2
7.8 (80, 69 in.*lbf)
RADIATOR SUPPORT ABSORBER UPPER
AIR CLEANER ASSEMBLY
AIR CLEANER CACE
AIR CLEANER INLET NO. 1
w/ No. 1 Cooler Cover:
NO. 1 COOLER COVER
RADIATOR HOSE NO. 3
HOOD LOCK ASSEMBLY
x3
7.5 (76, 66 in.*lbf)
for Sedan:
RADIATOR SUPPORT SUB-ASSEMBLY UPPER
x2
x2
5.5 (56, 49 in.*lbf)
5.5 (56, 49 in.*lbf)
N*m (kgf*cm, ft.*lbf) : Specified torque
T
A136452E02

CO

for Automatic Transaxle:

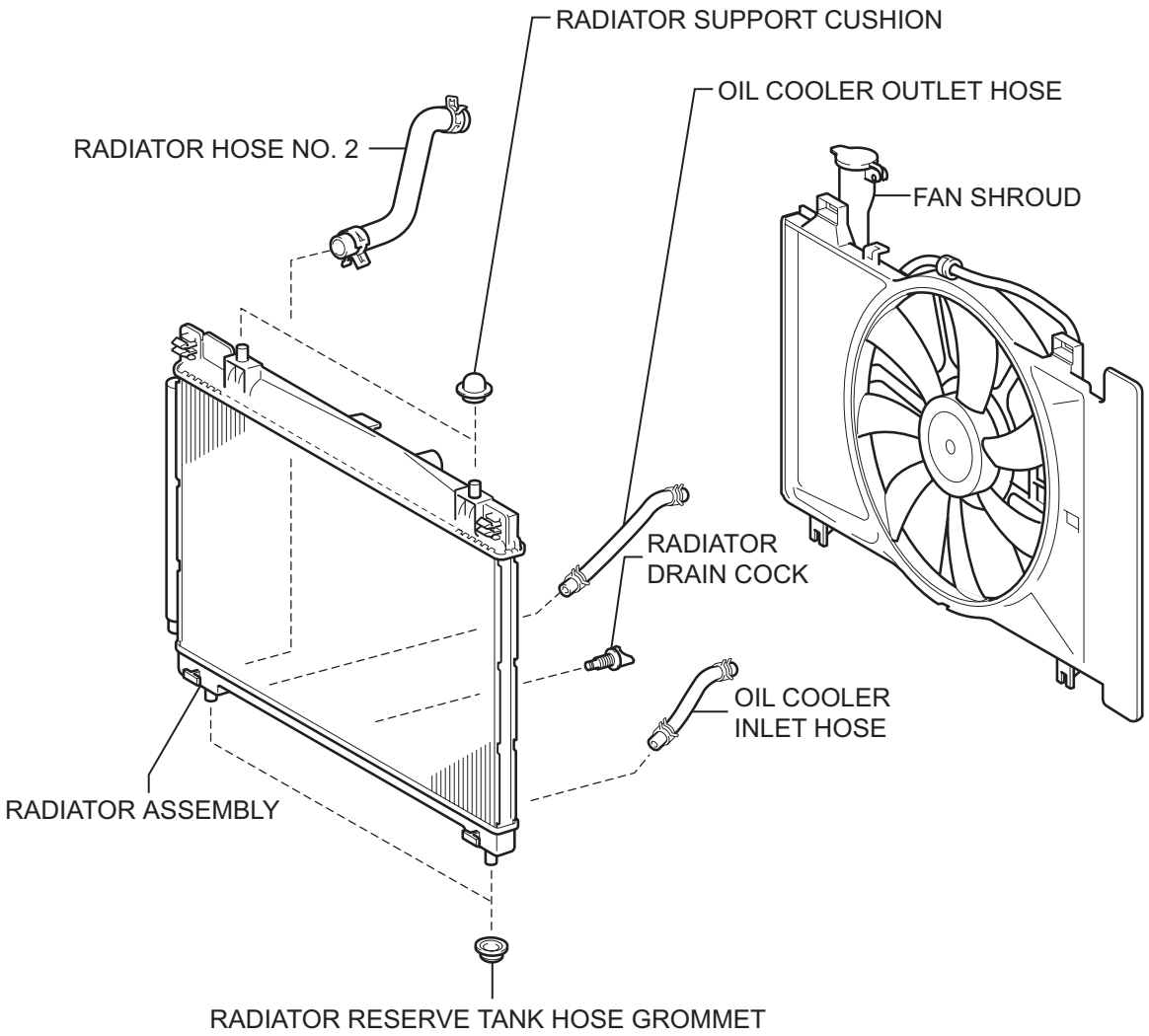

T

A117357E05

for Manual Transaxle:

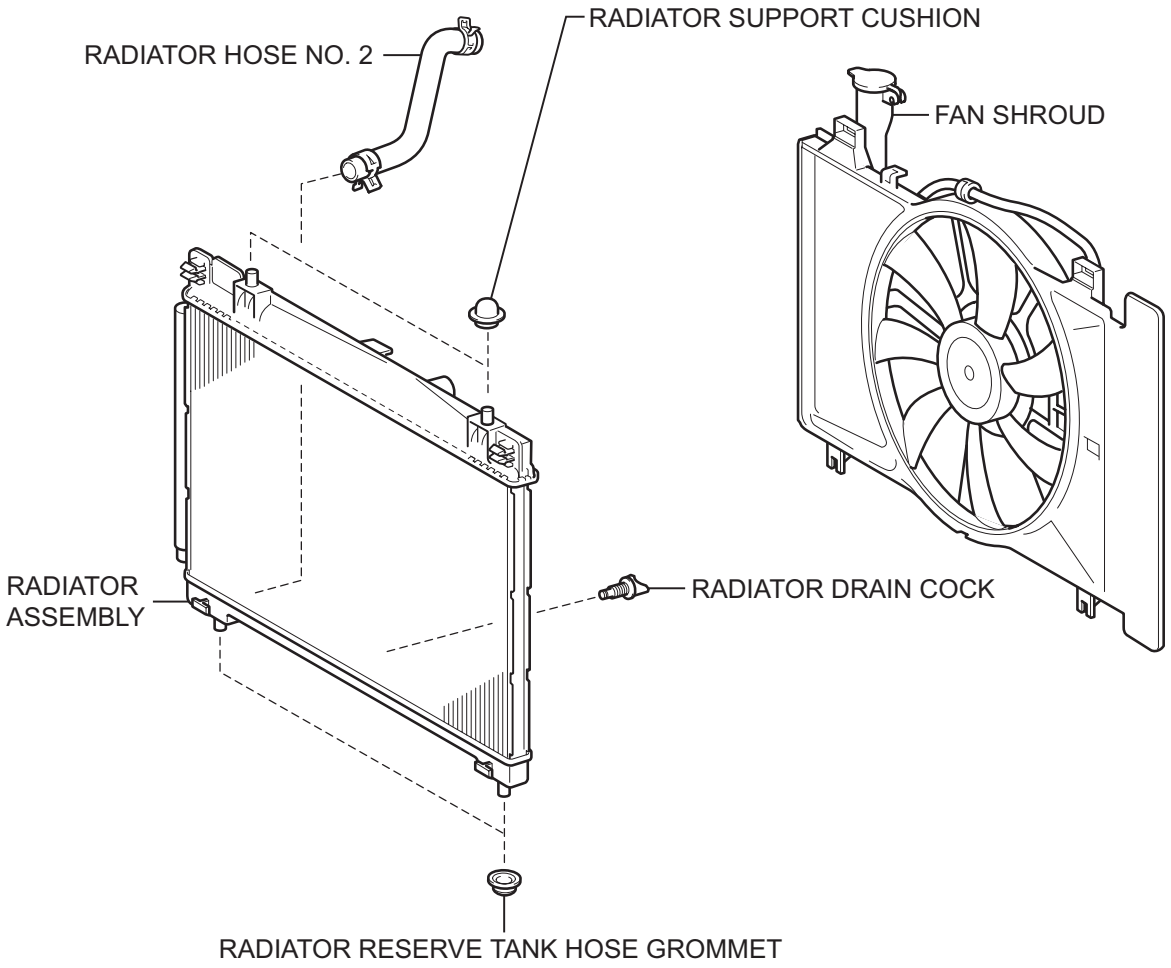

T

A117358E04

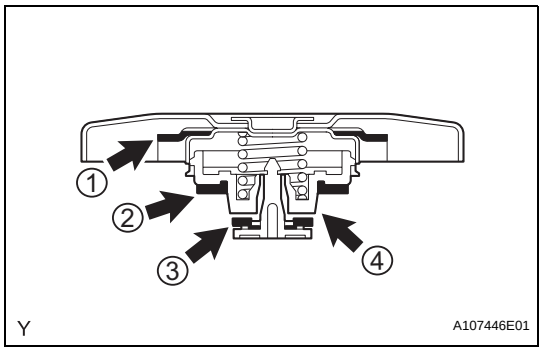

ON-VEHICLE INSPECTION

1. CHECK RADIATOR CAP SUB-ASSEMBLY

(a) Measure the valve opening pressure.

(1) If there are water stains or foreign matter on rubber packings 1, 2 or 3, clean the part(s) with water and finger scouring.

(2) Check that rubber packings 1, 2 and 3 are not deformed, cracked or swollen.

(3) Check that rubber packings 3 and 4 are not stuck together.

(4) Apply engine coolant to rubber packings 2 and 3 before using a radiator cap tester.

(5) When using the cap tester, tilt it to 30° or more above the horizontal.

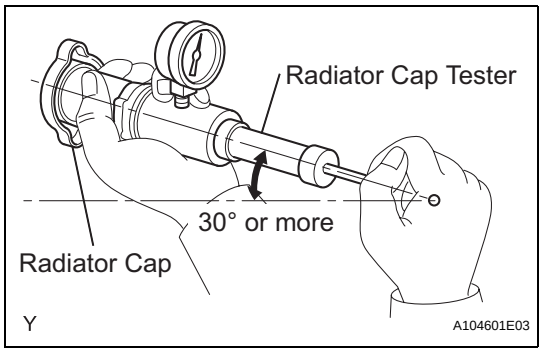

(6) Pump the cap tester several times, and check the maximum pressure *1.

Pumping speed:

1 pumps every second

*1: Even if the cap cannot maintain the maximum pressure, it is not a defect.

Judgment Criteria

Item	Specified Condition
Standard valve (for brand-new cap)	**93.3 to 122.7 kPa (0.95 to 1.25 kgf/cm^2, 13.5 to 17.8 psi)**
Minimum standard valve (after using cap)	**78.5 kPa (0.8 kgf/cm^2, 11.4 psi)**

If the maximum pressure is less than the specified pressure for the minimum standard valve, replace the radiator cap sub-assembly.

CO

REMOVAL

CAUTION:
Be sure that the ignition is off if you work near the electric cooling fans or radiator grille. With the ignition on the electric cooling fans may automatically start to run if the engine coolant temperature is high and/or the air conditioning is on.

1. **DISCONNECT CABLE FROM NEGATIVE BATTERY TERMINAL**
2. **DRAIN ENGINE COOLANT (See page CO-8)**
3. **REMOVE FRONT BUMPER COVER (for Hatchback) (See page ET-24)**
4. **REMOVE FRONT BUMPER COVER (for Sedan) (See page ET-6)**
5. **REMOVE AIR CLEANER ASSEMBLY**
   (a) Separate the intake air flow meter connector and the wire harness clamp.
   (b) Separate the fuel vapor feed hose and fuel vapor feed hose No. 1 from the vacuum switching valve assembly.
   (c) Separate the vacuum switching valve connector and the wire harness clamp.
   (d) Separate the ventilation hose from the air cleaner hose.
   (e) Release the air cleaner cap with air cleaner hose No. 1.
   (f) Loosen the air cleaner hose clamp on the throttle body side and remove the air cleaner cap and the air cleaner hose.
   (g) Remove the air cleaner element.
   (h) Separate the wire harness clamp from the air cleaner case.
   (i) Remove the 2 bolts and remove the air cleaner case with air cleaner inlet No. 1.

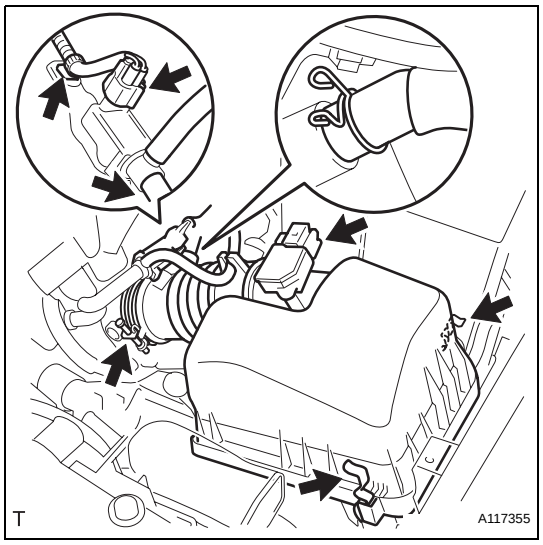

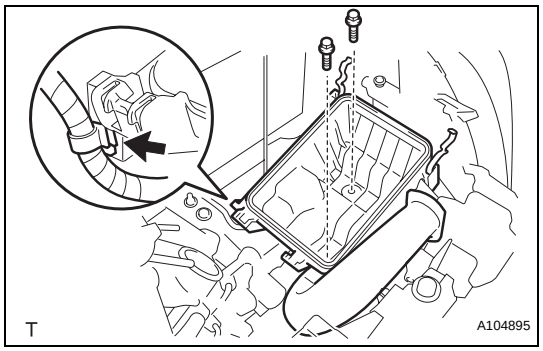

6. **REMOVE RADIATOR SUPPORT ABSORBER UPPER (for Hatchback)**
   (a) Disengage the 6 claws and remove the radiator support absorber upper.

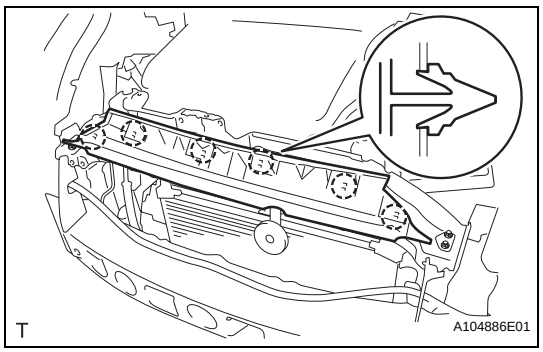

CO

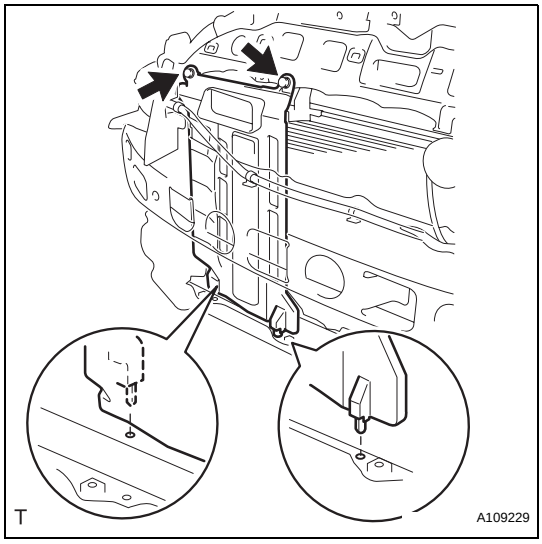

7. REMOVE NO. 1 COOLER COVER (w/ No. 1 Cooler Cover)

(a) Remove the 2 clips and No. 1 cooler cover.

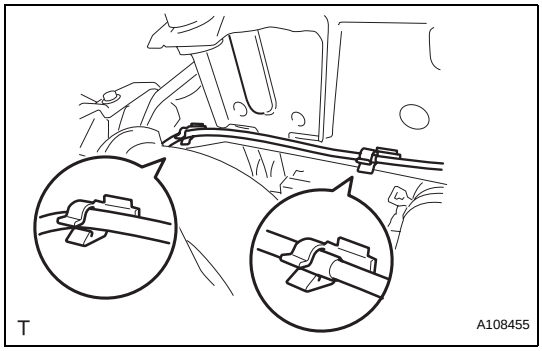

8. REMOVE HOOD LOCK ASSEMBLY (w/ Theft Deterrent System)

(a) Separate the hood lock control cable assembly from the 2 clamps.

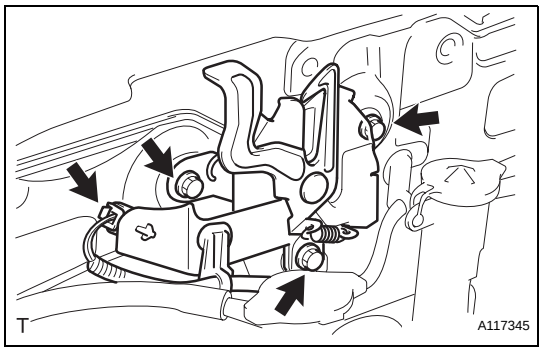

(b) Separate the engine hood courtesy switch connector.

(c) Remove the 3 bolts and remove the hood lock assembly.

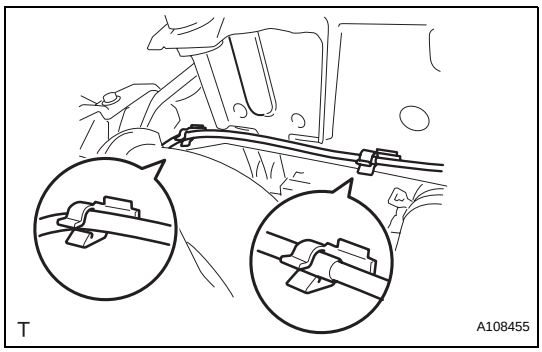

9. REMOVE HOOD LOCK ASSEMBLY (w/o Theft Deterrent System)

(a) Separate the hood lock control cable assembly from the 2 clamps.

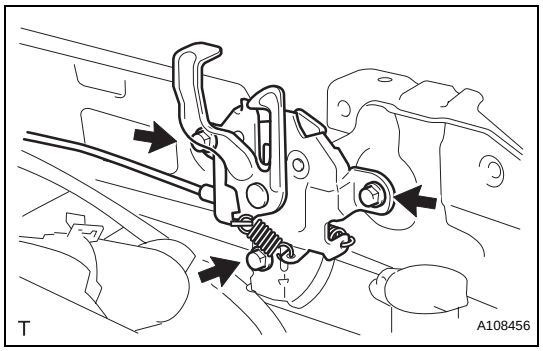

(b) Remove the 3 bolts and remove the hood lock assembly.

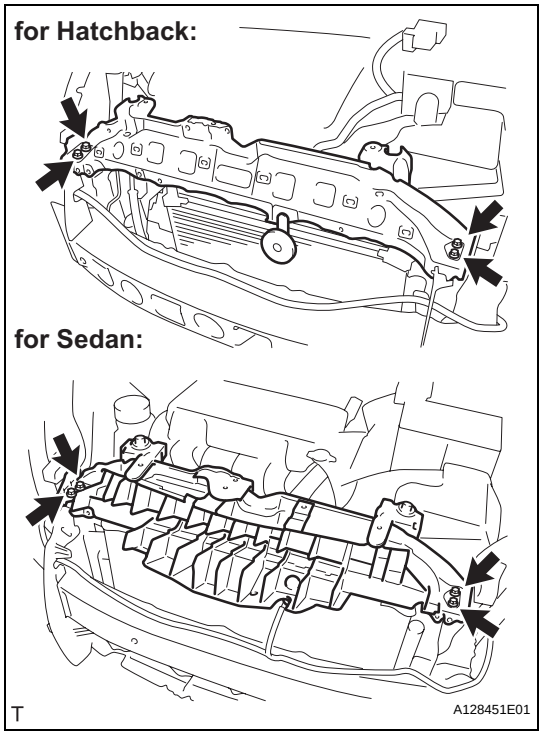

10. REMOVE RADIATOR SUPPORT SUB-ASSEMBLY UPPER

(a) Separate the horn assembly connector.

(b) Remove the 4 bolts and remove the radiator support sub-assembly upper.

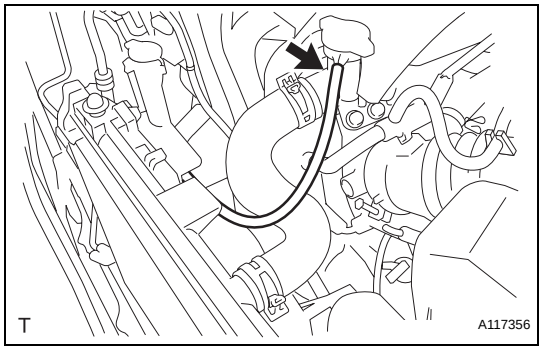

11. DISCONNECT RADIATOR RESERVOIR TANK HOSE

(a) Disconnect the radiator reservoir tank hose from the water filler.

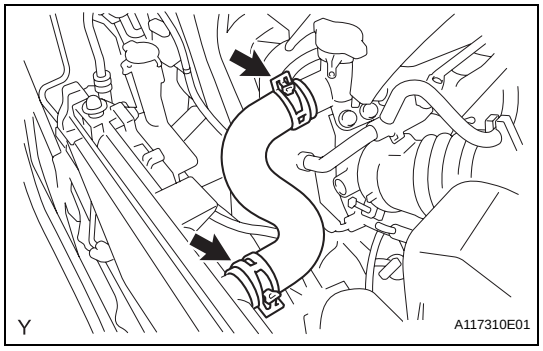

12. REMOVE RADIATOR HOSE NO. 3

(a) Loosen the 2 clips and remove radiator hose No. 3.

CO

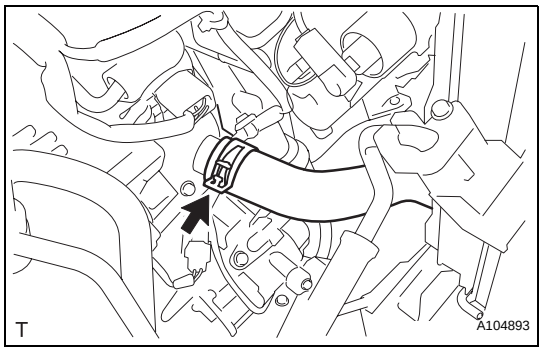

13. DISCONNECT RADIATOR HOSE NO. 2

(a) Loosen the clip and disconnect radiator hose No. 2.

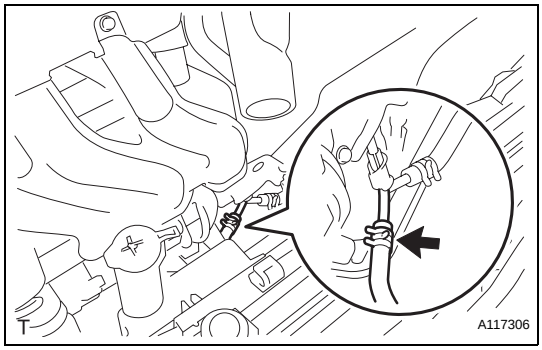

14. DISCONNECT OIL COOLER OUTLET HOSE (for Automatic Transaxle)

(a) Loosen the clip and disconnect the oil cooler outlet hose.

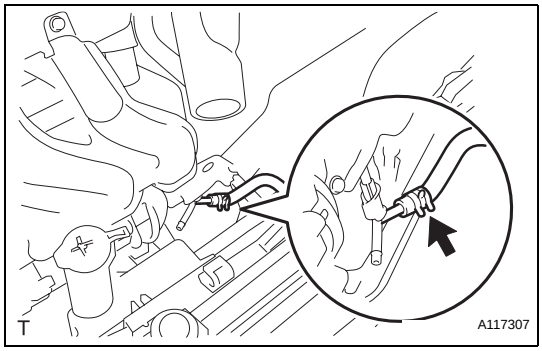

15. DISCONNECT OIL COOLER INLET HOSE (for Automatic Transaxle)

(a) Loosen the clip and disconnect the oil cooler inlet hose.

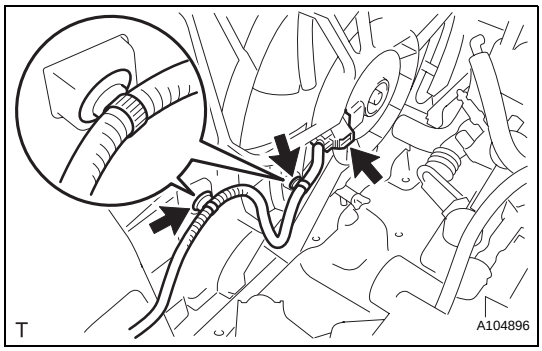

16. REMOVE RADIATOR ASSEMBLY (w/ Air Conditioning System)

(a) Separate the cooling fan motor connector and wire harness clamps.

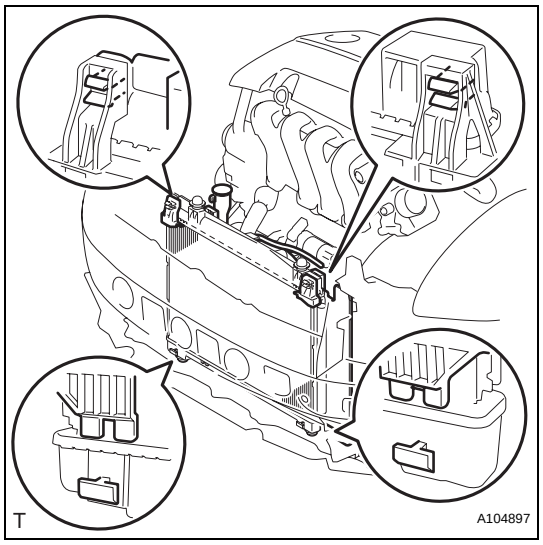

(b) Disengage the 2 claws and remove the radiator assembly from the vehicle.
NOTICE:
Do not apply excessive force to the cooler condenser assembly or piping when removing the radiator assembly.

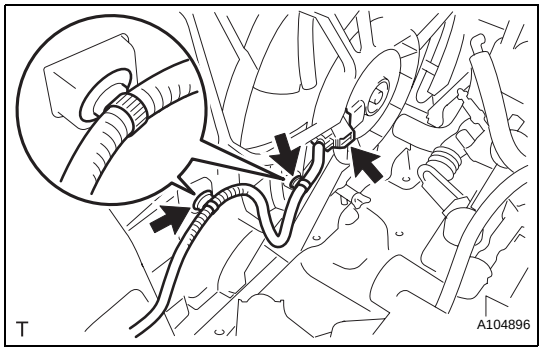

17. REMOVE RADIATOR ASSEMBLY (w/o Air Conditioning System)
(a) Separate the cooling fan motor connector and wire harness clamps.
(b) Remove the radiator assembly from the vehicle.

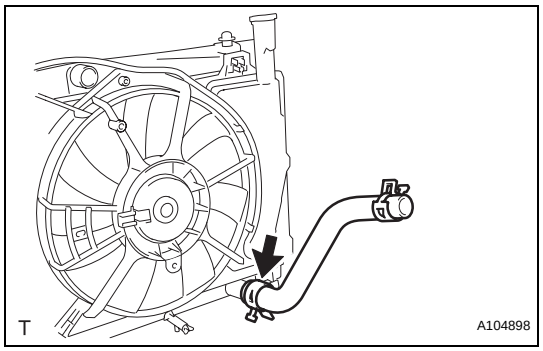

18. REMOVE RADIATOR HOSE NO. 2
(a) Loosen the clip and remove radiator hose No. 2.

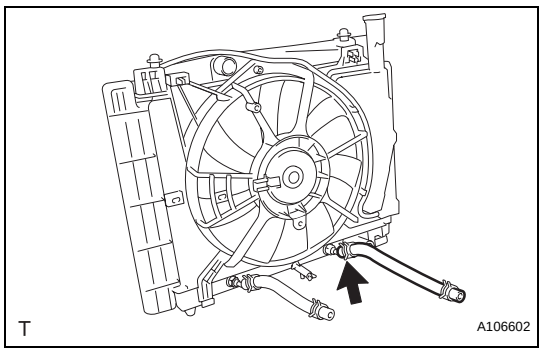

19. REMOVE OIL COOLER OUTLET HOSE (for Automatic Transaxle)
(a) Loosen the clip and remove the cooler outlet hose.

CO

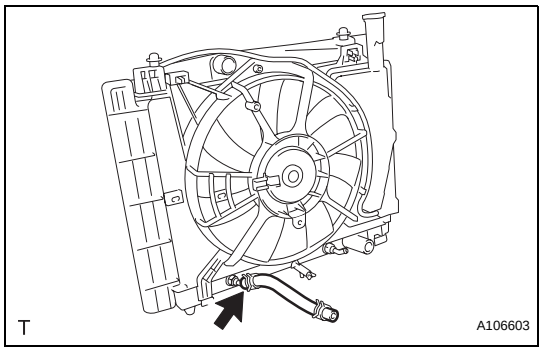

20. REMOVE OIL COOLER INLET HOSE (for Automatic Transaxle)

(a) Loosen the clip and remove the cooler inlet hose.

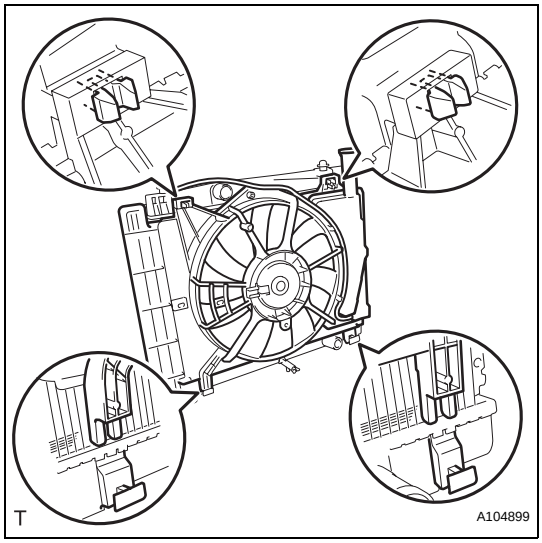

21. REMOVE FAN SHROUD

(a) Disengage the 2 claws and remove the fan shroud.

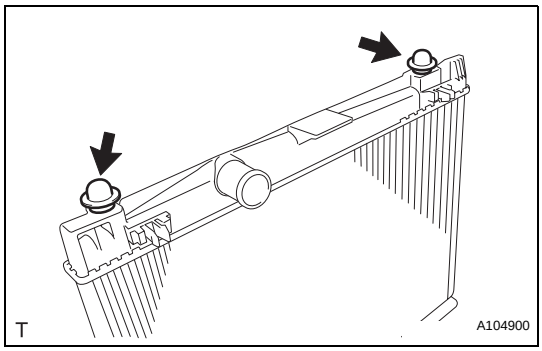

22. REMOVE RADIATOR SUPPORT CUSHION

(a) Remove the 2 radiator support cushions from the radiator assembly.

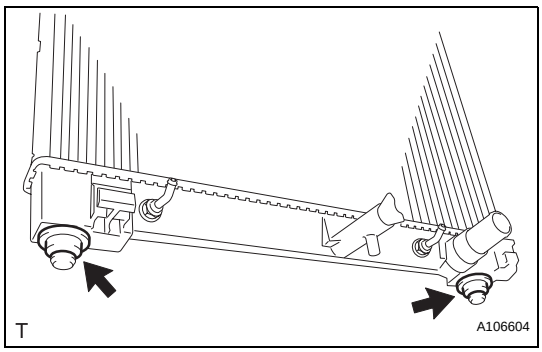

23. REMOVE RADIATOR RESERVE TANK HOSE GROMMET

(a) Remove the 2 radiator reserve tank hose grommets from the radiator assembly.

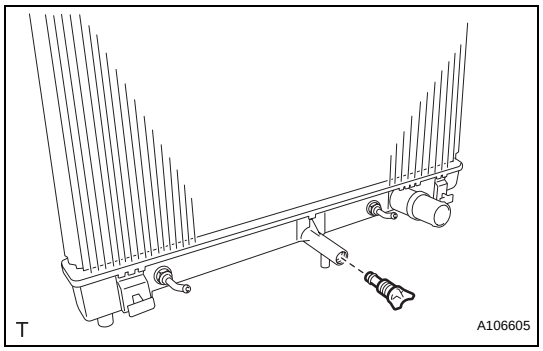

24. REMOVE RADIATOR DRAIN COCK

(a) Remove the radiator drain cock from the radiator assembly.

INSTALLATION

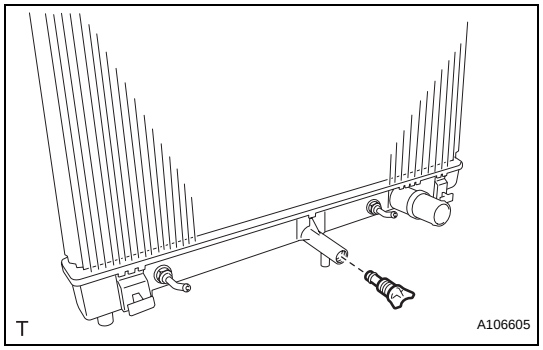

1. INSTALL RADIATOR DRAIN COCK

(a) Install the radiator drain cock onto the radiator assembly.

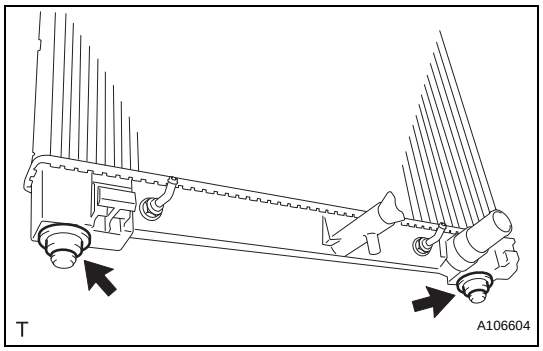

2. INSTALL RADIATOR RESERVE TANK HOSE GROMMET

(a) Install the 2 radiator reserve tank hose grommets onto the radiator assembly.

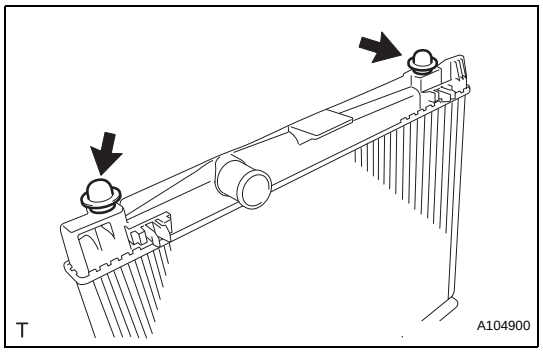

3. INSTALL RADIATOR SUPPORT CUSHION

(a) Install the 2 radiator support cushions onto the radiator assembly.

CO

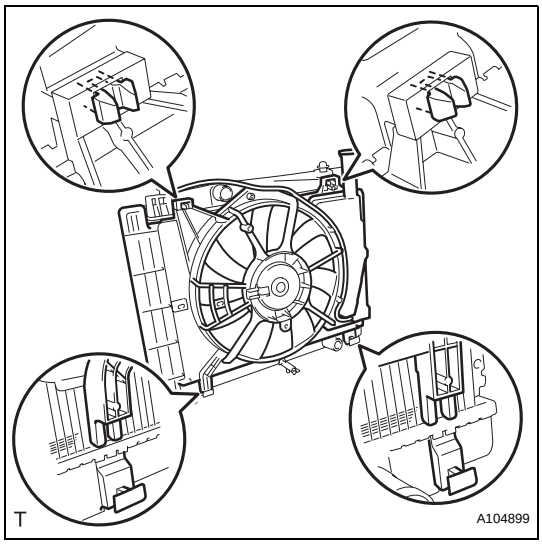

4. INSTALL FAN SHROUD

(a) Engage the 2 claws and install the fan shroud.

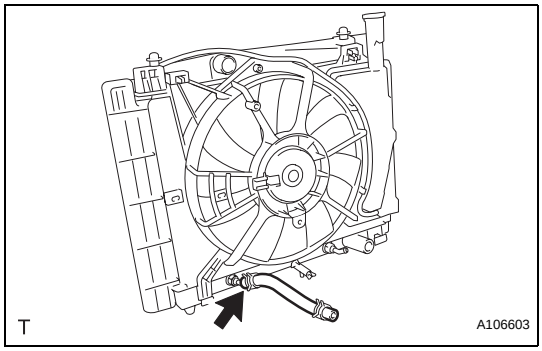

5. INSTALL OIL COOLER INLET HOSE (for Automatic Transaxle)

(a) Install the oil cooler inlet hose with the clip.

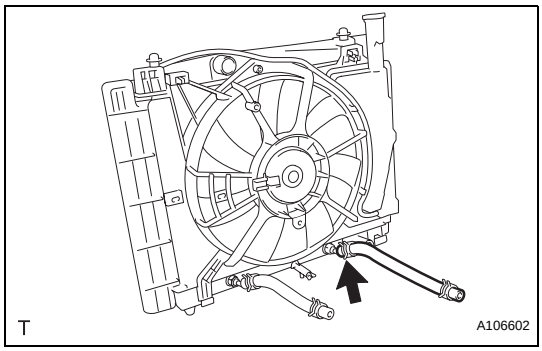

6. INSTALL OIL COOLER OUTLET HOSE (for Automatic Transaxle)

(a) Install the oil cooler outlet hose with the clip.

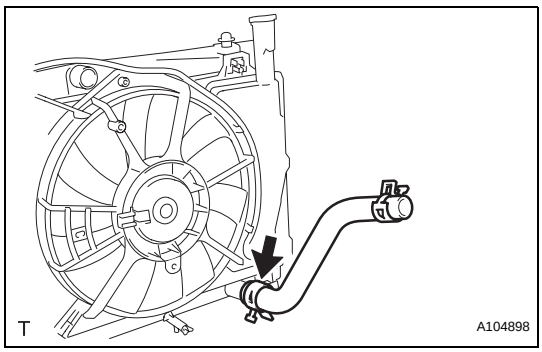

7. INSTALL RADIATOR HOSE NO. 2

(a) Install radiator hose No. 2 with the clip.

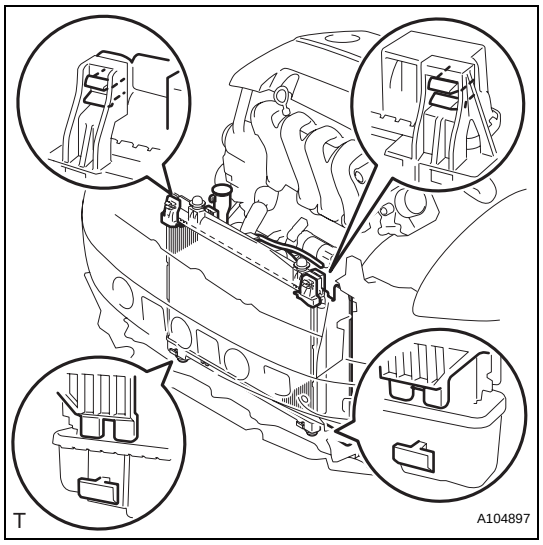

8. INSTALL RADIATOR ASSEMBLY (w/ Air Conditioning System)

(a) Engage the 2 claws and install the radiator assembly into the vehicle.

NOTICE:

Do not apply excessive force to the cooler condenser assembly or piping when installing the radiator assembly.

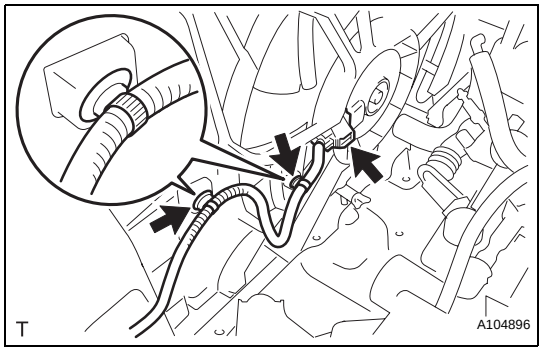

(b) Connect the cooling fan motor connector and wire harness clamps.

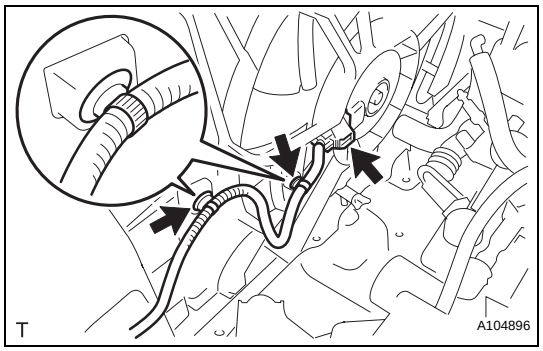

9. INSTALL RADIATOR ASSEMBLY (w/o Air Conditioning System)

(a) Install the radiator assembly into the vehicle.

(b) Connect the cooling fan motor connector and wire harness clamps.

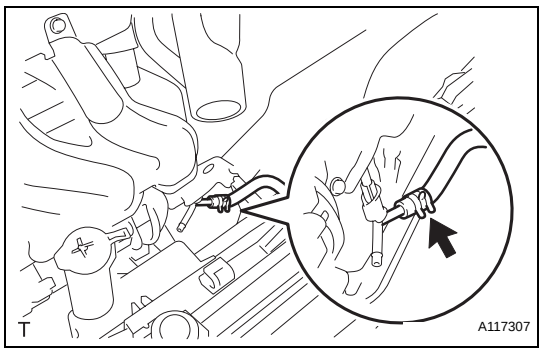

10. CONNECT OIL COOLER INLET HOSE (for Automatic Transaxle)

(a) Connect the oil cooler inlet hose with the clip.

CO

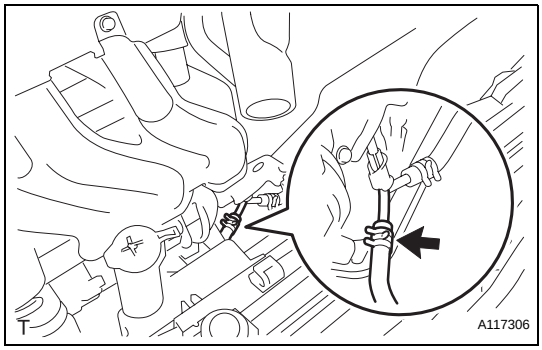

11. CONNECT OIL COOLER OUTLET HOSE (for Automatic Transaxle)

(a) Connect the oil cooler outlet hose with the clip.

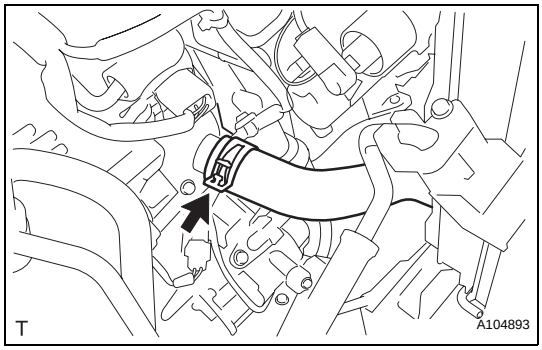

12. CONNECT RADIATOR HOSE NO. 2

(a) Connect radiator hose No. 2 with the clip.

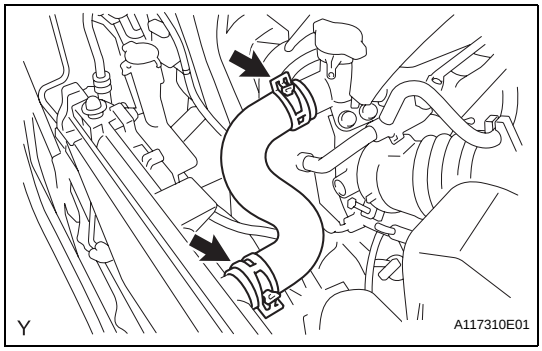

13. INSTALL RADIATOR HOSE NO. 3

(a) Install radiator hose No. 3 with the 2 clips.

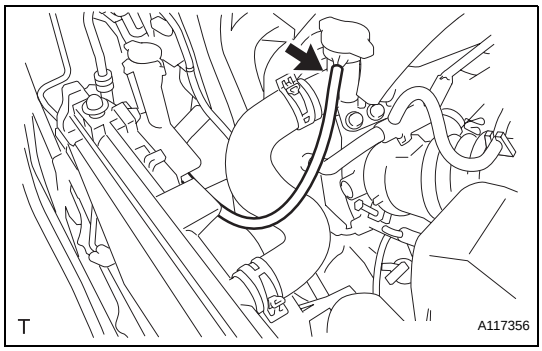

14. CONNECT RADIATOR RESERVOIR TANK HOSE

(a) Connect the radiator reservoir tank hose to the water filler.

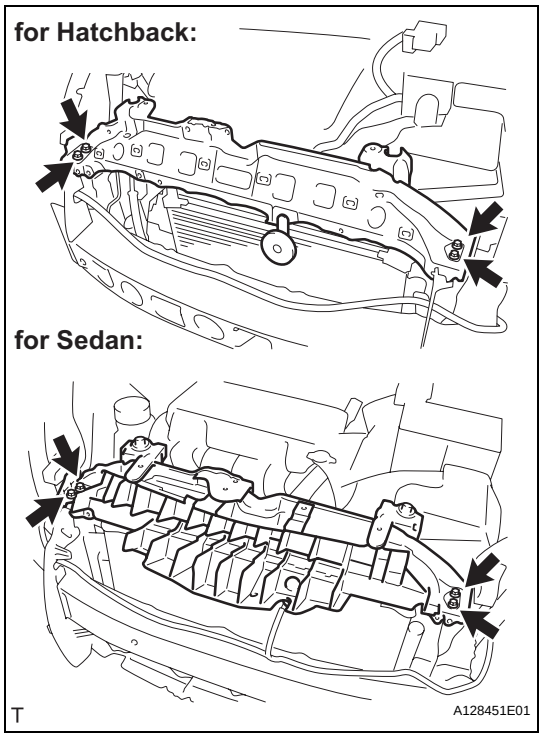

15. INSTALL RADIATOR SUPPORT SUB-ASSEMBLY UPPER

(a) Install the radiator support sub-assembly upper with the 4 bolts.
Torque: 5.5 N*m (56 kgf*cm, 49 in.*lbf)

(b) Connect the horn assembly connector.

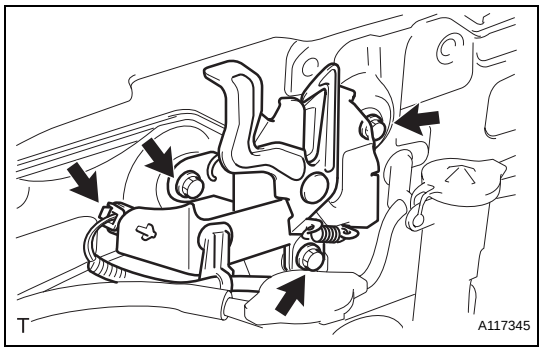

16. INSTALL HOOD LOCK ASSEMBLY (w/ Theft Deterrent System)

(a) Temporarily install the hood lock assembly with the 3 bolts.

(b) Connect the engine hood courtesy switch connector.

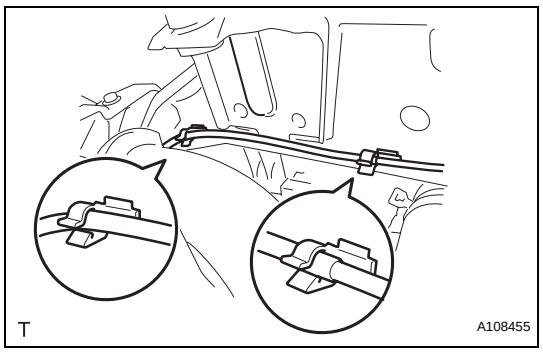

(c) Connect the hood lock control cable assembly to the 2 clamps.

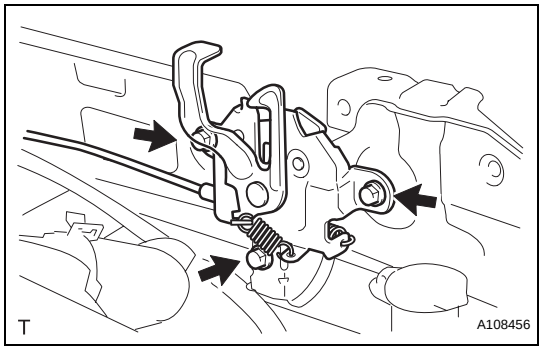

17. INSTALL HOOD LOCK ASSEMBLY (w/o Theft Deterrent System)

(a) Temporarily install the hood lock assembly with the 3 bolts.

CO

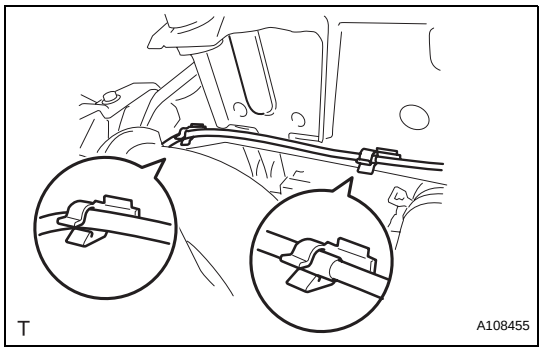

(b) Connect the hood lock control cable assembly to the 2 clamps.

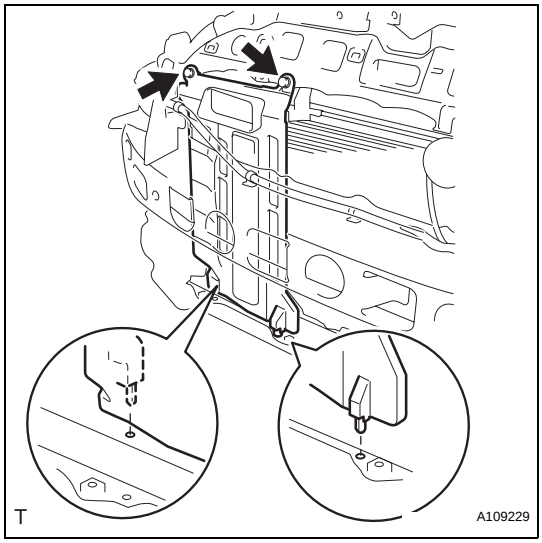

18. INSTALL NO. 1 COOLER COVER (w/ No. 1 Cooler Cover)

(a) Insert the 2 pins of No. 1 cooler cover into the radiator support LWR.
(b) Install No. 1 cooler cover with the 2 clips.

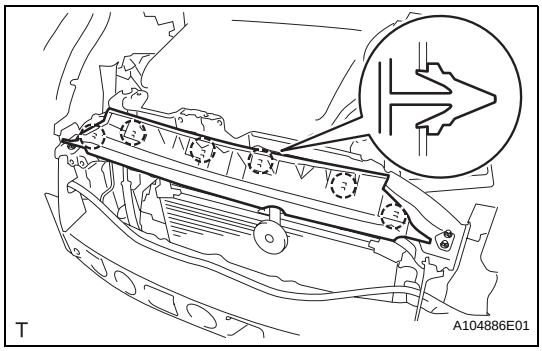

19. INSTALL RADIATOR SUPPORT ABSORBER UPPER (for Hatchback)

(a) Engage the 6 claws and install the radiator support absorber upper.

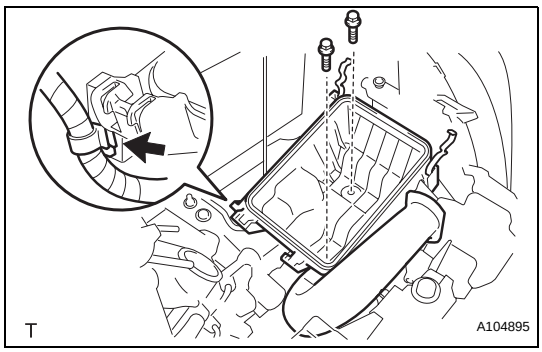

20. INSTALL AIR CLEANER ASSEMBLY

(a) Install the air cleaner case with air cleaner inlet No. 1 with the 2 bolts.
Torque: 7.8 N*m (80 kgf*cm, 69 in.*lbf)
(b) Connect the wire harness to the air cleaner case.
(c) Install the air cleaner element.

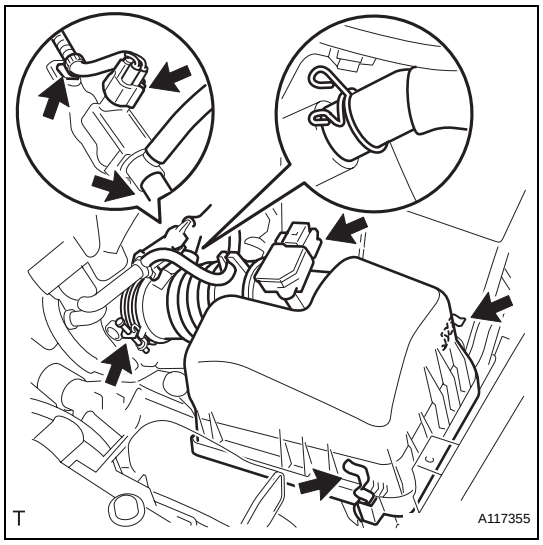

(d) Install and lock the air cleaner cap and air cleaner hose and then tighten the air cleaner hose clamp.
Torque: 4.0 N*m (41 kgf*cm, 35 in.*lbf)
(e) Connect the ventilation hose to the air cleaner hose.
(f) Connect the vacuum switching valve connector and wire harness clamp.
(g) Connect the fuel vapor feed hose and fuel vapor feed hose No. 1 to the vacuum switching valve assembly.
(h) Connect the intake air flow meter connector and wire harness clamp.

21. INSTALL FRONT BUMPER COVER (for Hatchback) (See page ET-33)

22. INSTALL FRONT BUMPER COVER (for Sedan) (See page ET-16)

23. CONNECT CABLE TO NEGATIVE BATTERY TERMINAL
Torque: 5.4 N*m (55 kgf*cm, 48 in.*lbf)

24. ADD ENGINE COOLANT (See page CO-8)

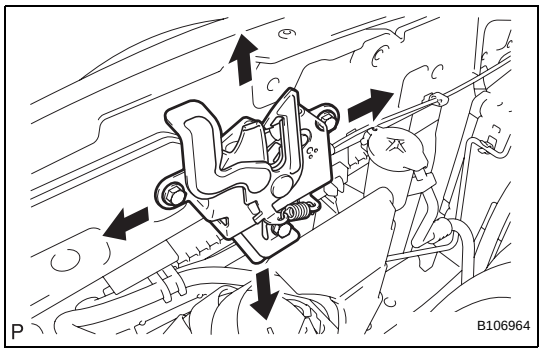

25. ADJUST HOOD LOCK ASSEMBLY
(a) Loosen the 3 bolts.
(b) Adjust the hood lock position so that the striker can enter it smoothly.
(c) Tighten the 3 bolts after the adjustment.
Torque: 7.5 N*m (76 kgf*cm, 66 in.*lbf)

26. CHECK FOR ENGINE COOLANT LEAKAGE (See page CO-1)

CO

LUBRICATION SYSTEM

ON-VEHICLE INSPECTION

1. CHECK ENGINE OIL LEVEL

(a) Warm up the engine, then stop the engine and wait for 5 minutes. Check that the engine oil level is between the low and full marks on the oil level gauge.
If the engine oil level is low, check for oil leakage and add engine oil up to the full level mark.
NOTICE:
Do not add engine oil to above the full level mark.

2. CHECK ENGINE OIL QUALITY

(a) Check the oil for deterioration, water intrusion, discoloration and thinning.
Oil grade:
Use ILSAC multigrade engine oil.
SAE 5W-30 is the best choice for good fuel economy and good starting in cold weather.

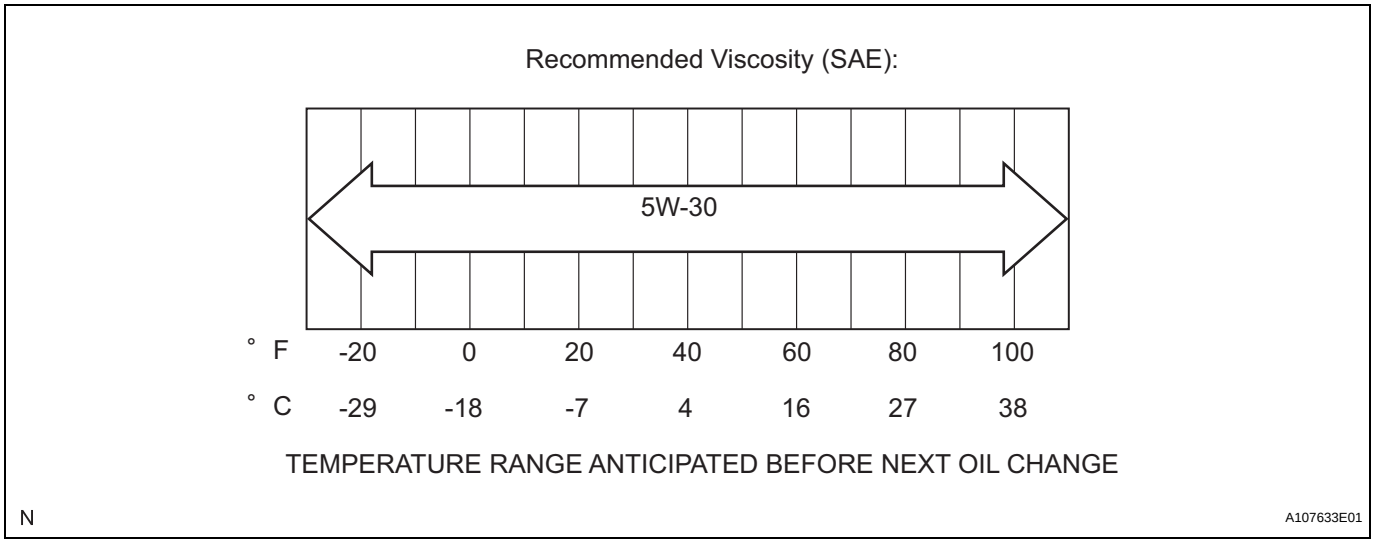

LU

3. REMOVE ENGINE OIL PRESSURE SWITCH ASSEMBLY

(a) Remove the engine under cover LH.
(b) Remove the engine under cover RH.
(c) Disconnect the engine oil pressure switch assembly connector.

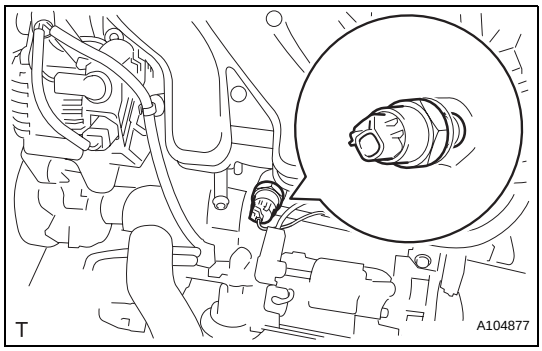

(d) Using a 24 mm deep socket wrench, remove the oil pressure switch.

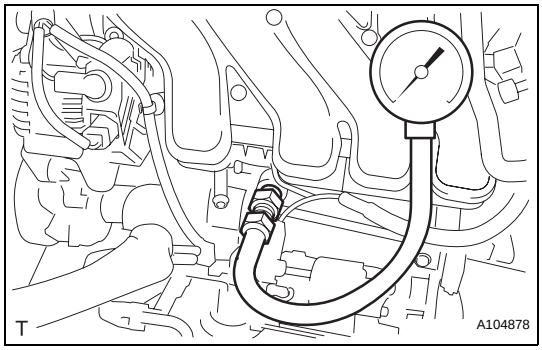

4. INSTALL OIL PRESSURE GAUGE

(a) Install the oil pressure gauge.

5. CHECK OIL PRESSURE

(a) Warm up the engine.

(b) Check the oil pressure.

Standard oil pressure

Engine rpm	Oil Pressure
When idling	29 kPa (0.3 kgf/cm^2, 4.3 psi) or more
At 3,000 rpm	150 to 550 kPa (1.5 to 5.6 kgf/cm^2, 22 to 80 psi) or more

6. REMOVE OIL PRESSURE GAUGE

(a) Remove the oil pressure gauge.

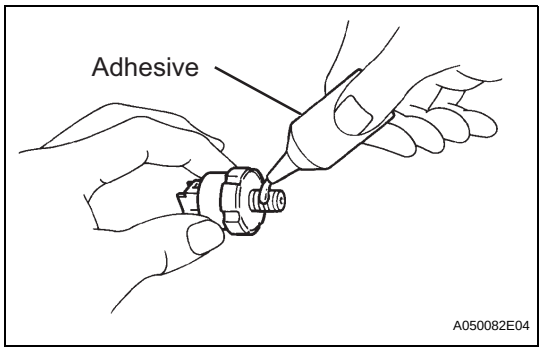

7. INSTALL ENGINE OIL PRESSURE SWITCH ASSEMBLY

(a) Apply adhesive to the end 2 or 3 threads of the oil pressure switch.

Adhesive:

Toyota Genuine Adhesive 1324, Three Bond 1324 or Equivalent

(b) Using a 24 mm deep socket wrench, install the oil pressure switch.

Torque: 15 N*m (153 kgf*cm, 11 ft.*lbf)

NOTICE:

Do not start the engine for at least 1 hour after the installation.

(c) Connect the oil pressure switch assembly connector.

(d) Install the engine under cover RH.

(e) Install the engine under cover LH.

8. CHECK FOR ENGINE OIL LEAKAGE

LU

OIL FILTER

COMPONENTS

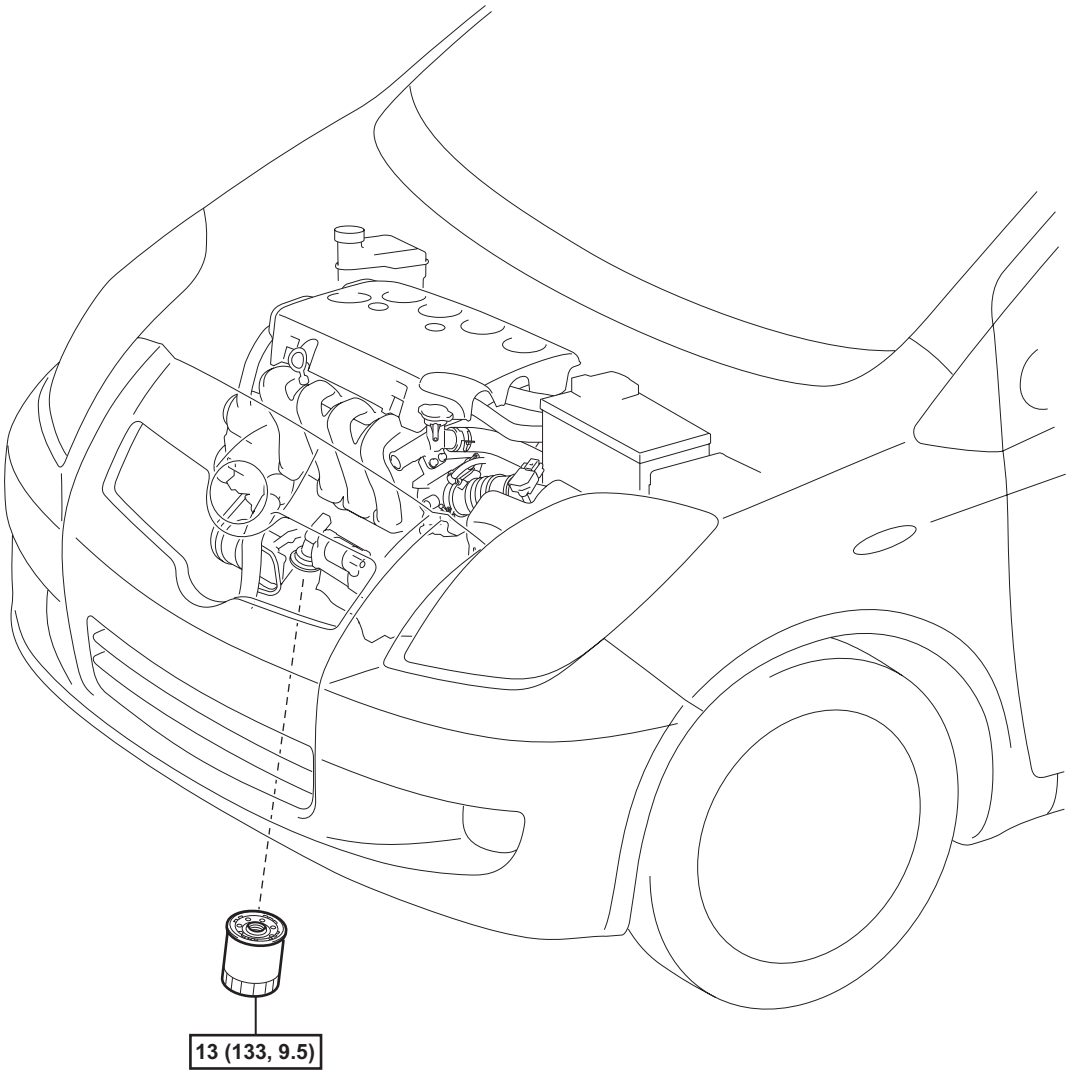

● OIL FILTER SUB-ASSEMBLY

N*m (kgf*cm, ft.*lbf) : Specified torque ● Non-reusable part

T

A106606E04

REPLACEMENT

CAUTION:

- **Prolonged and repeated contact with engine oil will result in the removal of natural oils from the skin, leading to dryness, irritation and dermatitis. Used engine oil contains potentially harmful contaminants which may cause skin cancer.**
- **Take precautions when replacing engine oil to minimize the risk of your skin making contact with used engine oil. Wear protective clothing and gloves that cannot be penetrated by oil. Wash skin with soap and water, or use waterless hand cleaner, to remove any used engine oil completely. Do not use gasoline, thinner, or solvents.**
- **Dispose of used oil and used oil filters at designated disposal sites in order to preserve the environment.**

1. DRAIN ENGINE OIL

(a) Remove the oil pan drain plug and drain the engine oil.

(b) Clean the oil pan drain plug and install it with a new gasket.

Torque: 38 N*m (382 kgf*cm, 28 ft.*lbf)

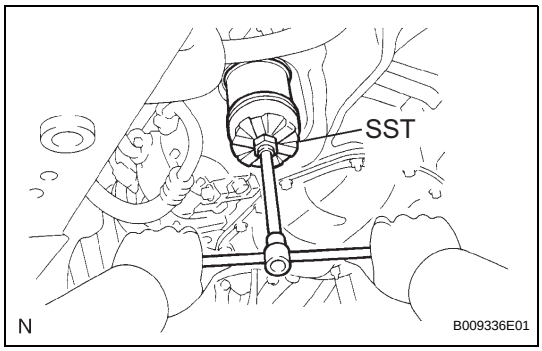

2. REMOVE OIL FILTER SUB-ASSEMBLY

(a) Using SST, remove the oil filter.

SST 09228-06501

3. INSTALL OIL FILTER SUB-ASSEMBLY

(a) Check and clean the oil filter installation surface.

(b) Apply clean engine oil to the gasket of a new oil filter.

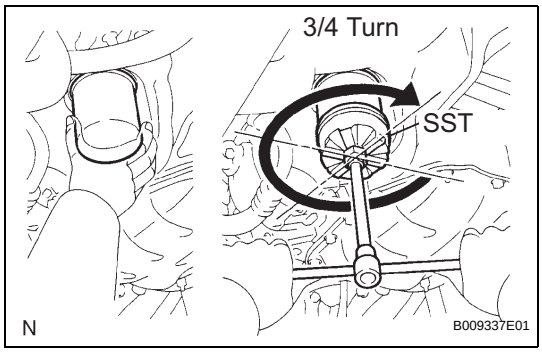

(c) Gently screw the oil filter into place, then tighten it until the gasket comes into contact with the seat.

(d) Using SST, tighten the oil filter.

SST 09228-06501

(1) Depending on the available workspace, choose from the following procedures.

If enough space is available, use a torque wrench to tighten the oil filter.

Torque:

13 N*m (133 kgf*cm, 9.5 ft.*lbf)

If the available workspace is insufficient to use a torque wrench, tighten the oil filter a 3/4 turn by hand or use a common wrench.

4. ADD ENGINE OIL

(a) Fill with new engine oil.

Oil capacity

Item	Capacity
With oil filter change	3.7 liters (3.9 US qts, 3.4 Imp. qts)
Without oil filter change	3.4 liters (3.6 US qts, 3.1 Imp. qts)

Item	Capacity
Dry fill	4.1 liters (4.3 US qts, 3.8 lmp. qts)

5. CHECK FOR ENGINE OIL LEAKS

6. CHECK ENGINE OIL LEVEL

OIL PUMP

COMPONENTS

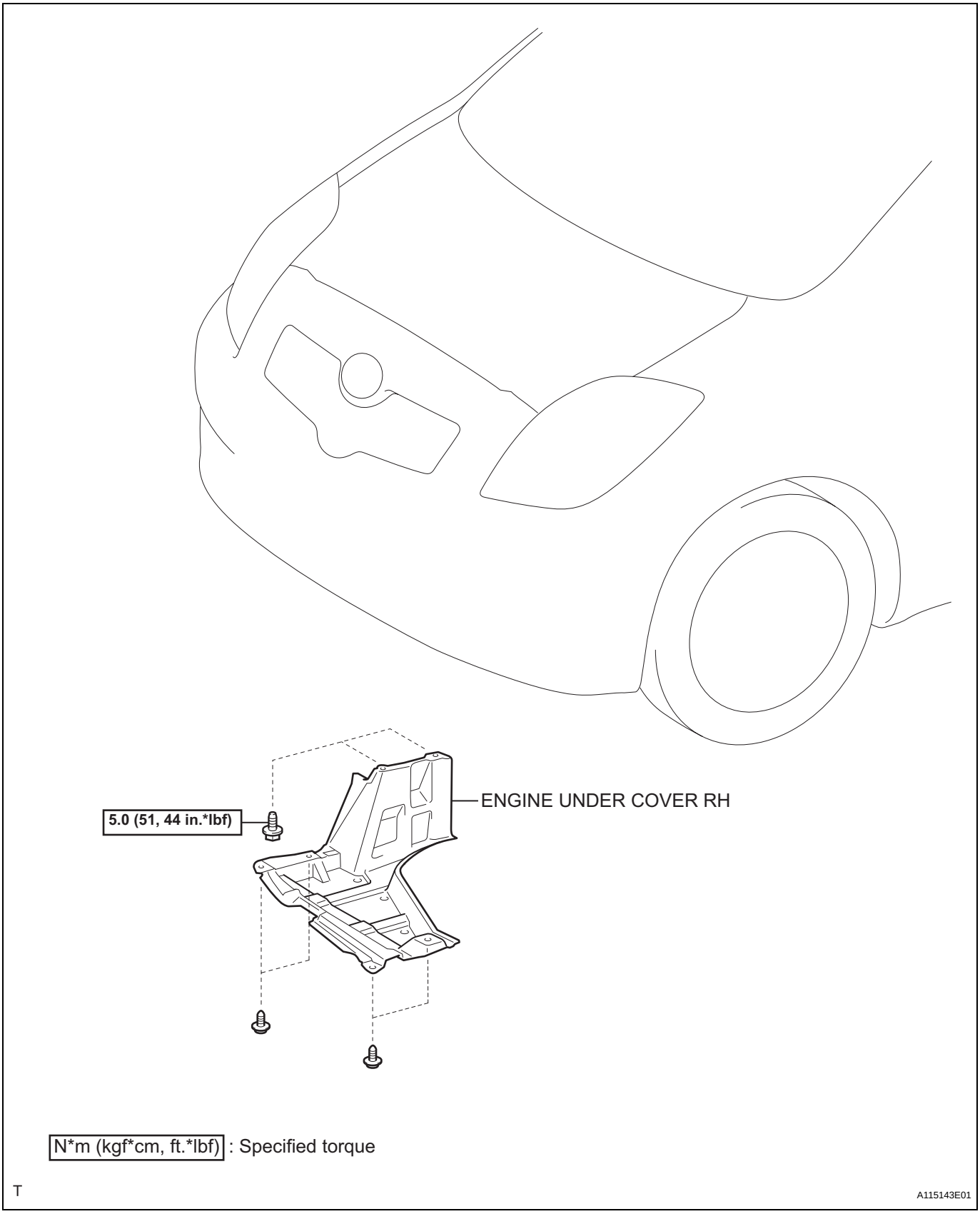

N*m (kgf*cm, ft.*lbf) : Specified torque

T

A115143E01

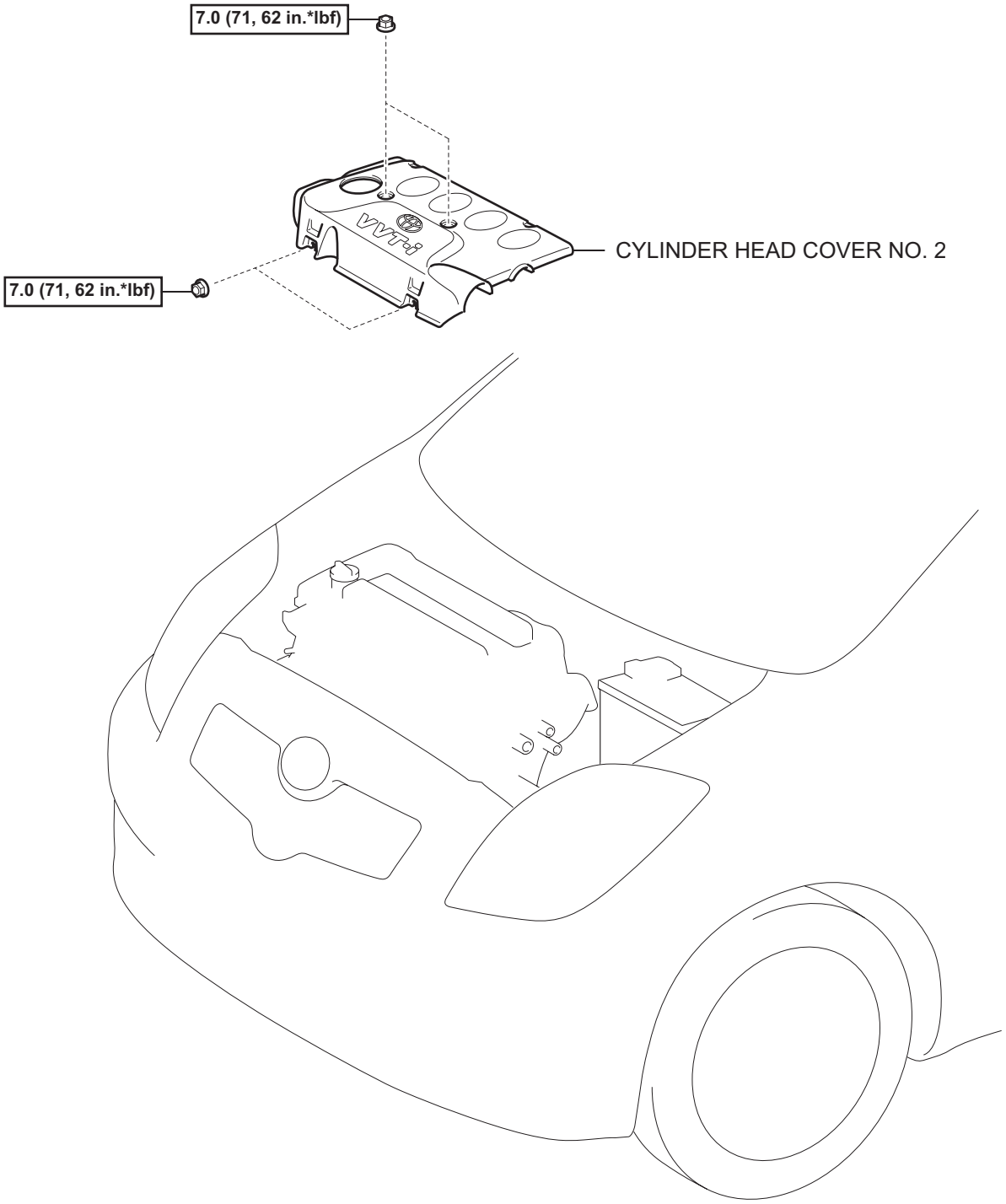

N*m (kgf*cm, ft.*lbf) : Specified torque

T

A115136E01

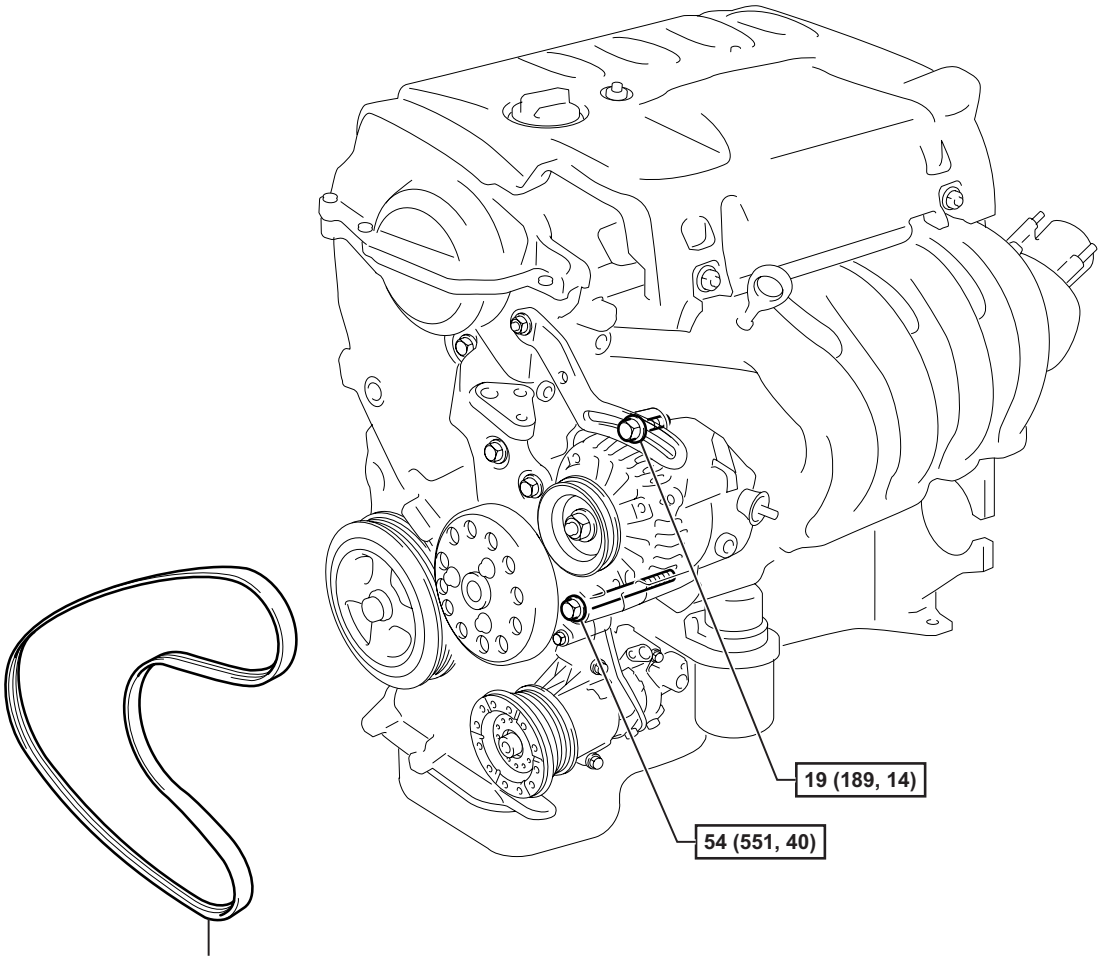

N*m (kgf*cm, ft.*lbf) : Specified torque

T

A116199E01

for Hatchback:

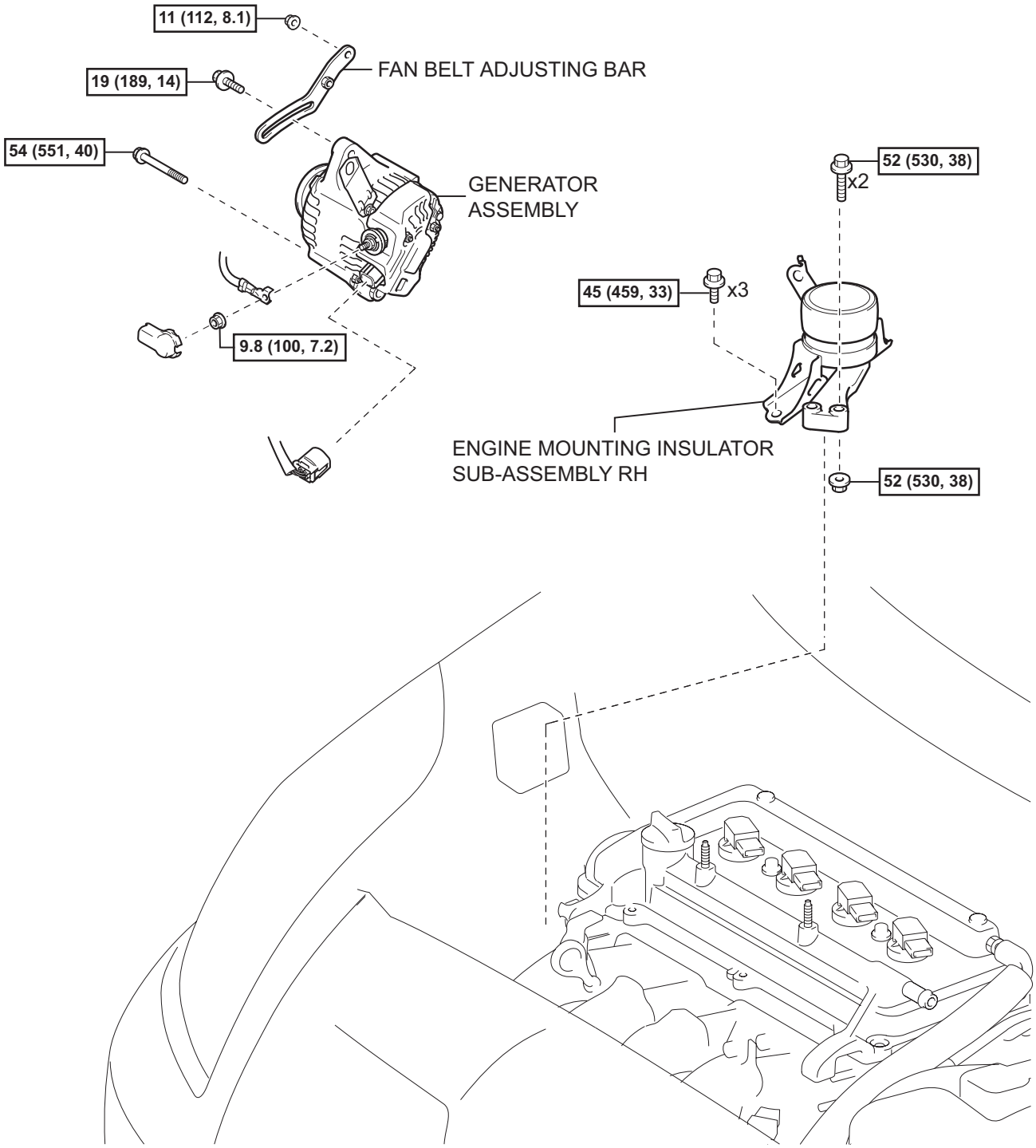

N*m (kgf*cm, ft.*lbf) : Specified torque

T

A116193E06

LU

for Sedan:

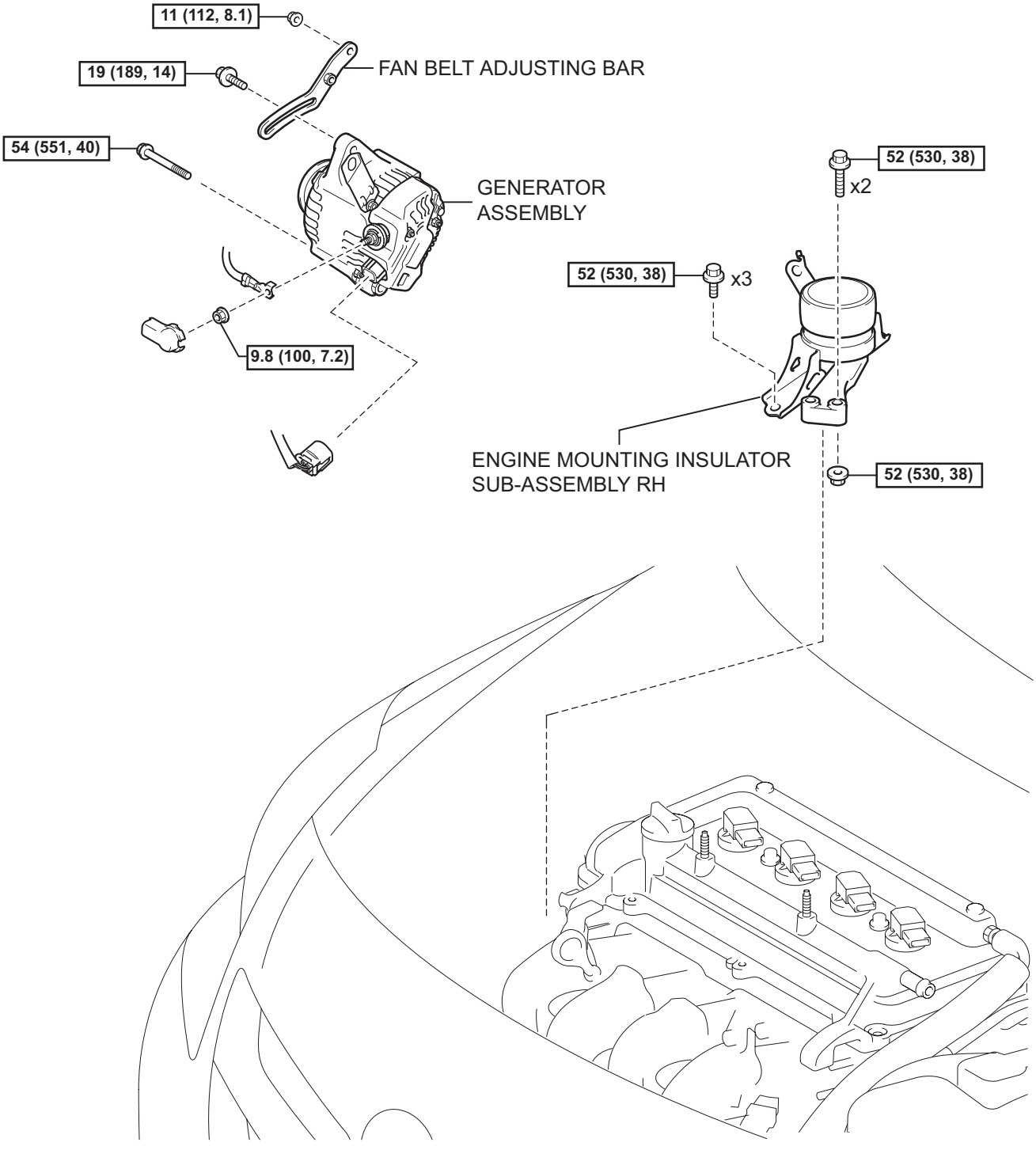

N*m (kgf*cm, ft*lbf) : Specified torque

T

A133594E01

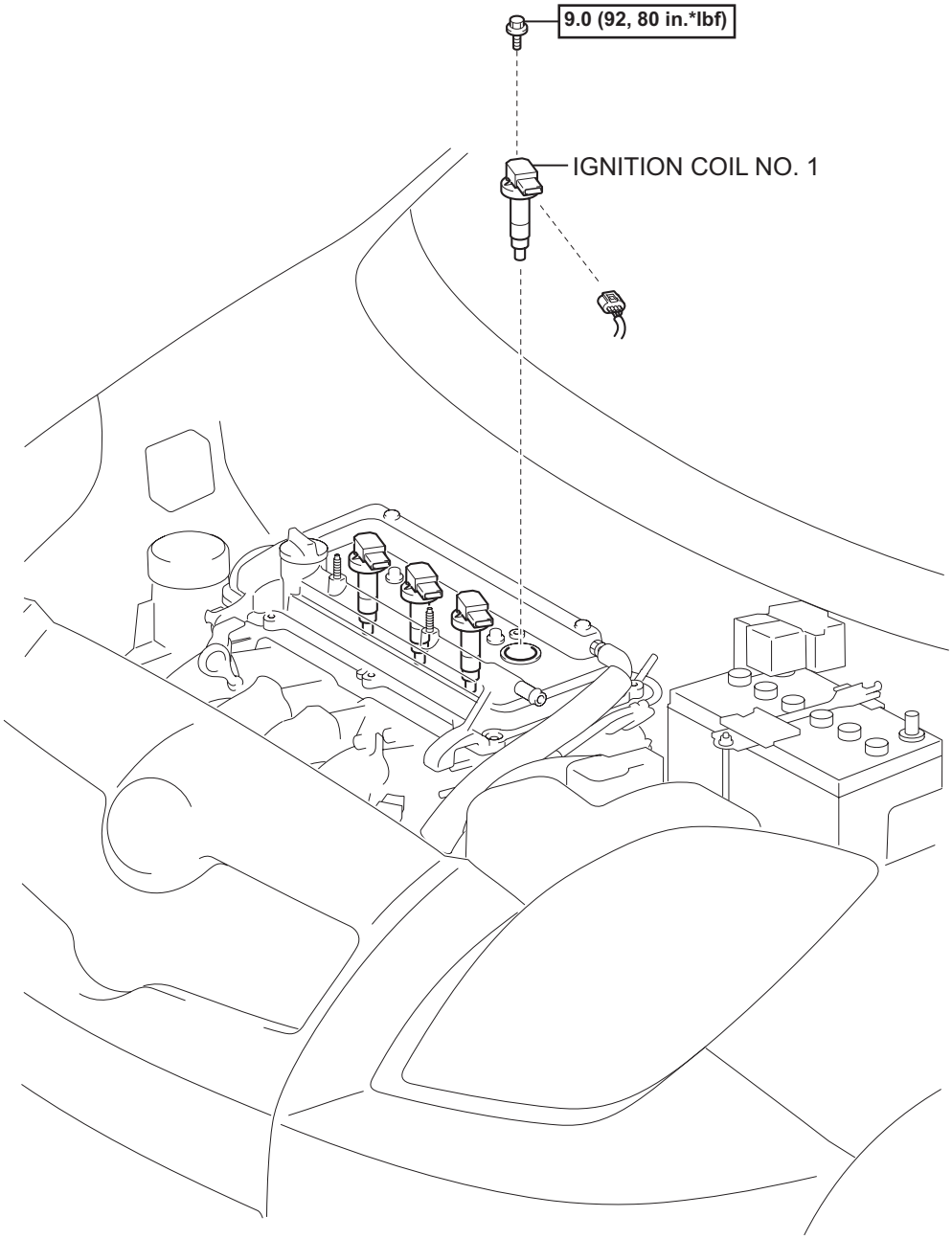

N*m (kgf*cm, ft.*lbf) : Specified torque

T

A115486E01

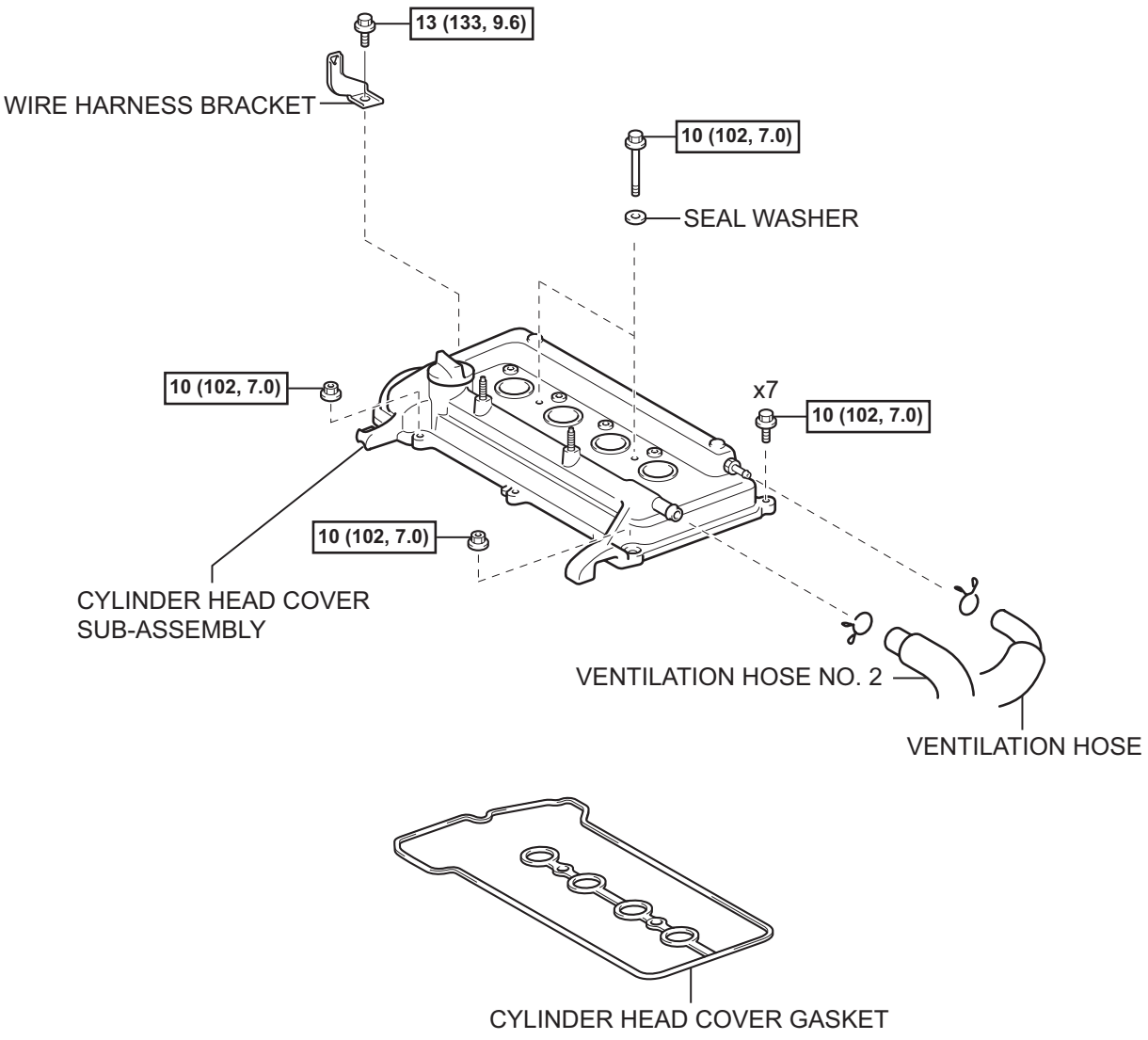

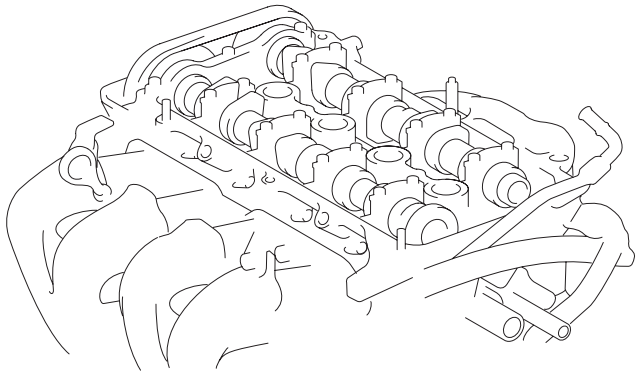

N*m (kgf*cm, ft.*lbf) : Specified torque

A115504E01

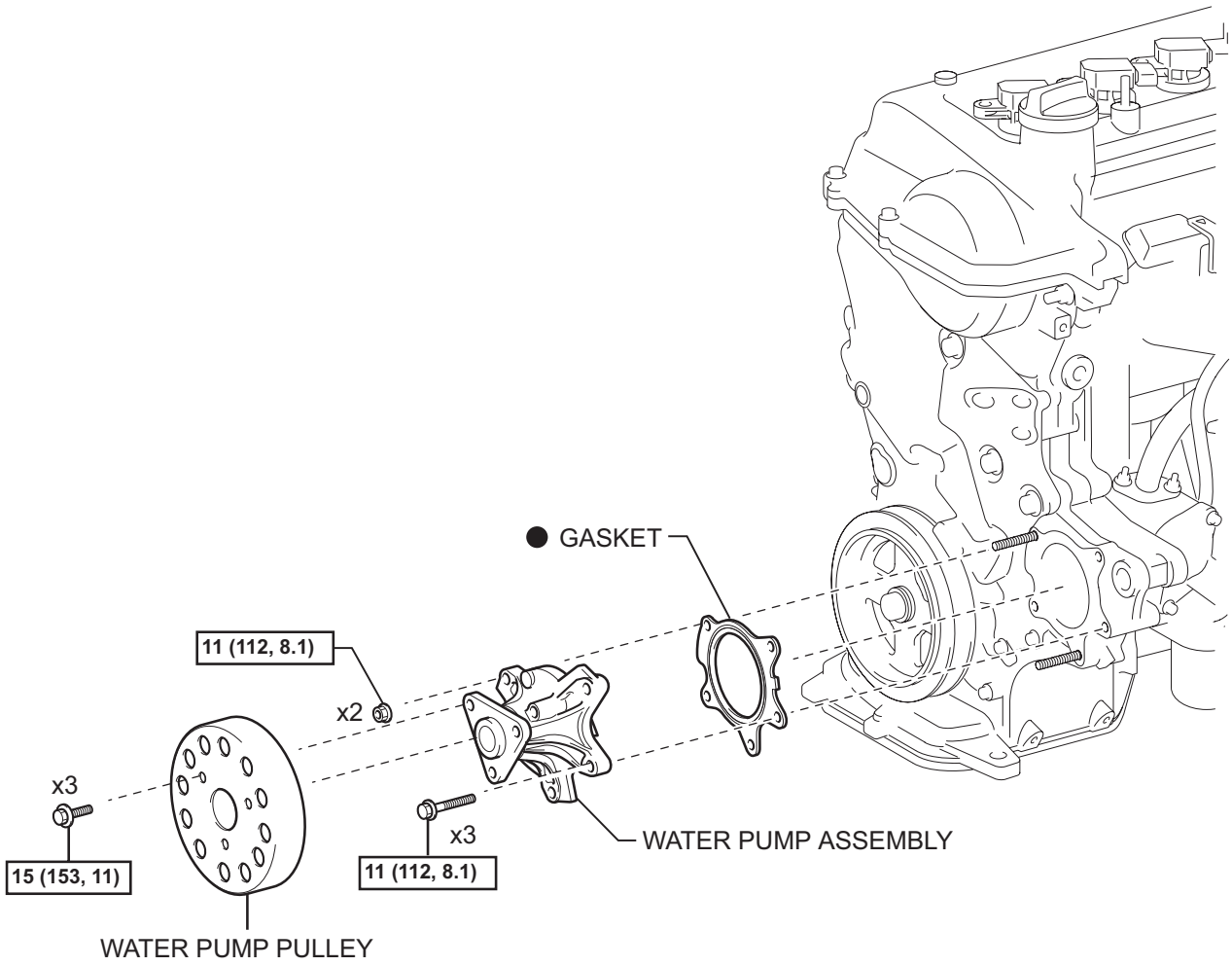

N*m (kgf*cm, ft.*lbf) : Specified torque

● Non-reusable part

T

A116194E01

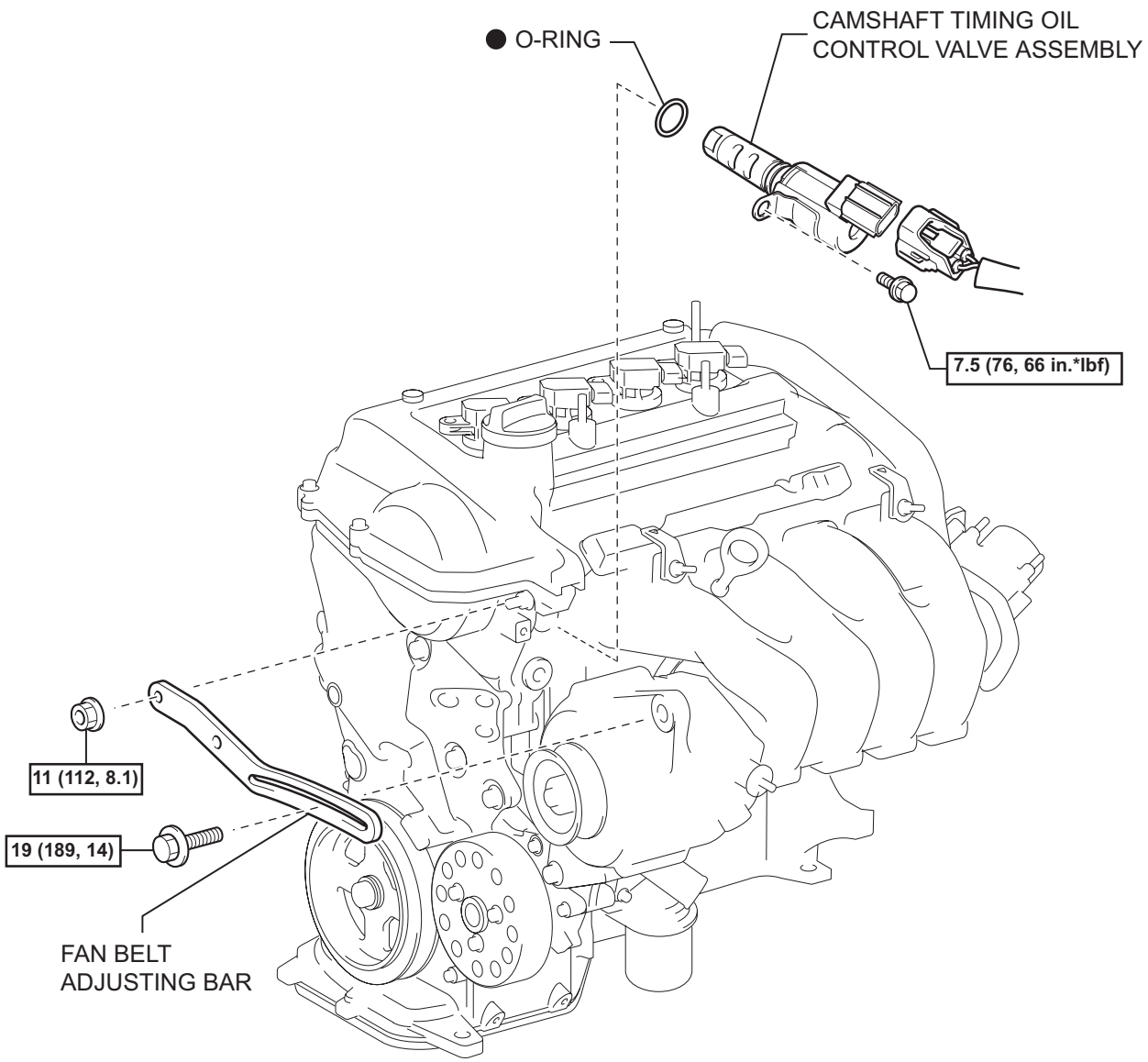

N*m (kgf*cm, ft.*lbf) : Specified torque

● Non-reusable part

T

A116180E01

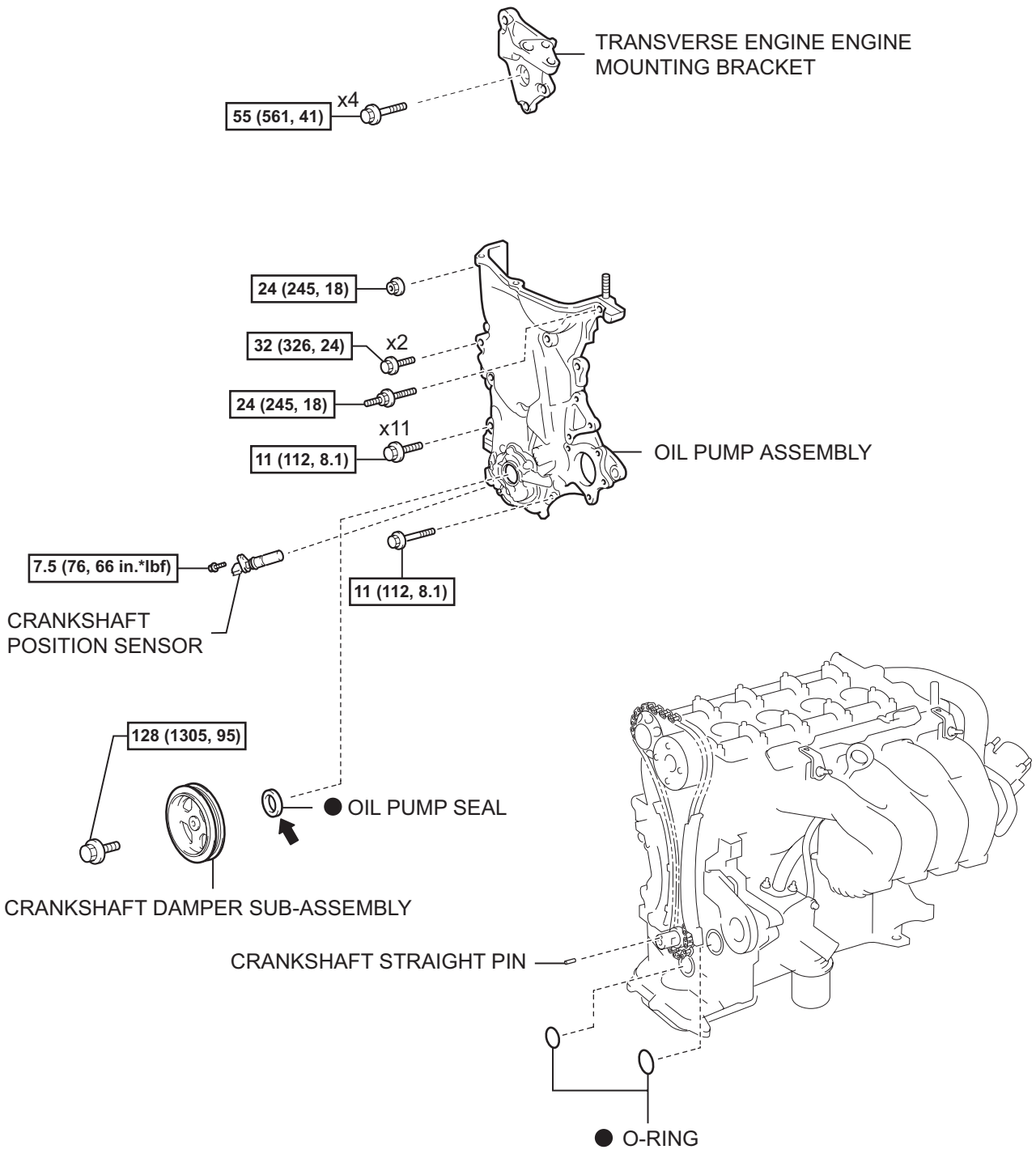

N*m (kgf*cm, ft.*lbf) : Specified torque

● Non-reusable part ⬅ Apply MP grease

T

A116559E01

LU

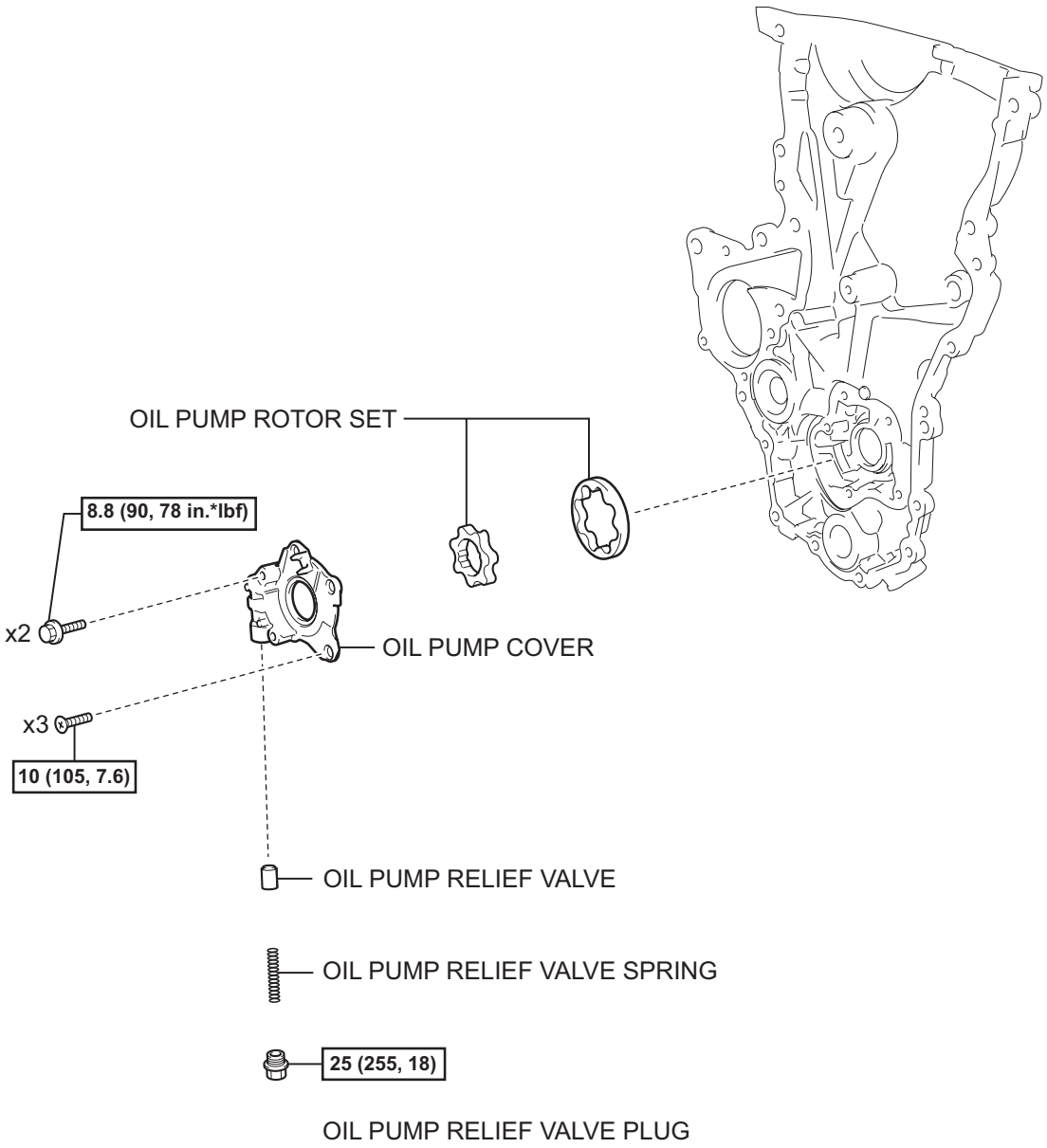

N*m (kgf*cm, ft.*lbf) : Specified torque

T

A116563E01

REMOVAL

1. **DISCONNECT CABLE FROM NEGATIVE BATTERY TERMINAL**
2. **REMOVE FRONT WHEEL RH**
3. **REMOVE ENGINE UNDER COVER RH**
4. **DRAIN ENGINE OIL**
5. **DRAIN ENGINE COOLANT (See page CO-8)**
6. **REMOVE CYLINDER HEAD COVER NO. 2 (See page IG-9)**
7. **REMOVE FAN AND GENERATOR V BELT (See page EM-7)**
8. **REMOVE GENERATOR ASSEMBLY (See page CH-12)**
9. **REMOVE IGNITION COIL NO. 1 (See page IG-9)**
10. **DISCONNECT VENTILATION HOSE (See page FU-13)**
11. **DISCONNECT VENTILATION HOSE NO. 2 (See page FU-13)**
12. **REMOVE CYLINDER HEAD COVER SUB-ASSEMBLY (See page FU-13)**
13. **REMOVE ENGINE MOUNTING INSULATOR SUB-ASSEMBLY RH**

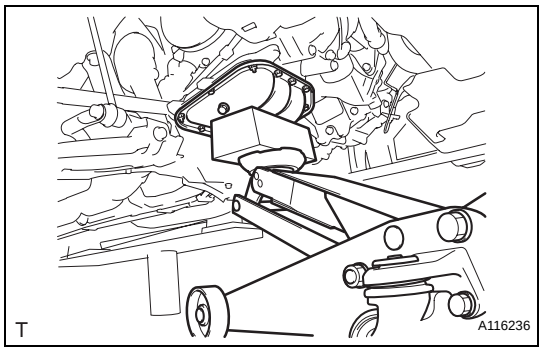

(a) Place a wooden block on a jack underneath the engine.

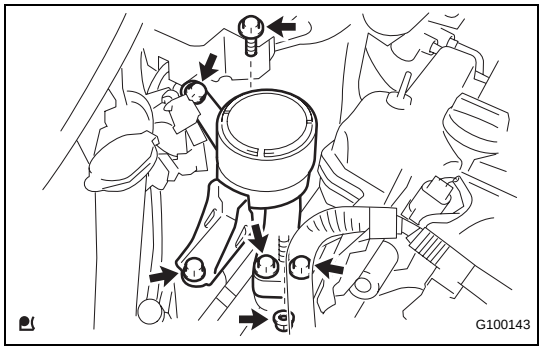

(b) Remove the 5 bolts and nut and remove the engine mounting insulator sub-assembly RH.

LU

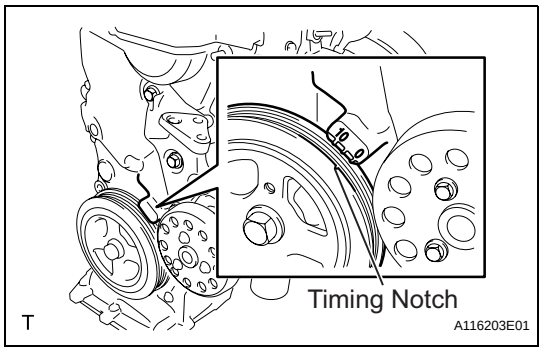

14. REMOVE CRANKSHAFT DAMPER SUB-ASSEMBLY

(a) Set cylinder No. 1 to TDC/compression.

(1) Turn the crankshaft damper sub-assembly, and align its timing notch with timing mark "0" of the oil pump.

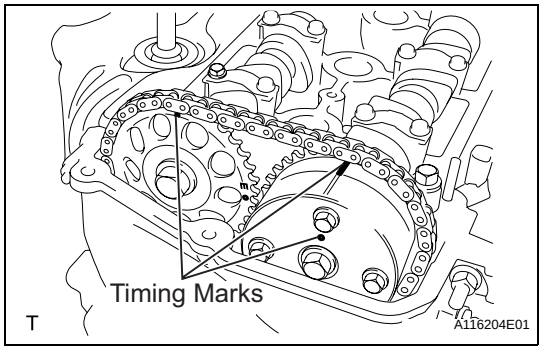

(2) Check that the timing marks on the camshaft timing sprocket and the camshaft timing gear are all facing upward as shown in the illustration.
If not, turn the crankshaft 1 complete revolution (360°) and align the marks as above.

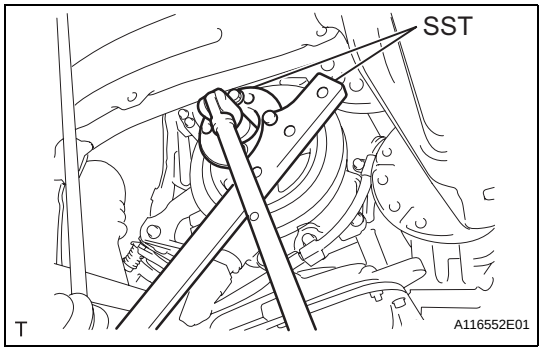

(b) Using 2 SSTs, loosen the bolt while holding the crankshaft damper sub-assembly.
SST 09213-14010 (91651-60865), 09330-00021
NOTICE:
Check the SST installation positions when installing them, to avoid the SST fixing bolts from coming into contact with the oil pump assembly.

(c) Remove the SSTs and the bolt.

(d) Remove the crankshaft damper sub-assembly.

15. REMOVE CRANKSHAFT POSITION SENSOR (See page ES-403)

16. REMOVE CAMSHAFT TIMING OIL CONTROL VALVE ASSEMBLY (See page ES-396)

17. REMOVE WATER PUMP PULLEY (See page CO-15)

18. REMOVE WATER PUMP ASSEMBLY (See page CO-15)

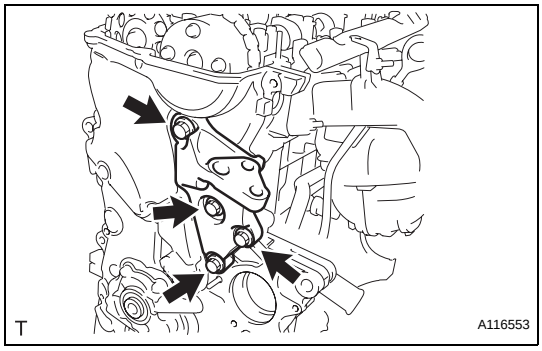

19. REMOVE TRANSVERSE ENGINE ENGINE MOUNTING BRACKET

(a) Remove the 4 bolts and remove the transverse engine engine mounting bracket.

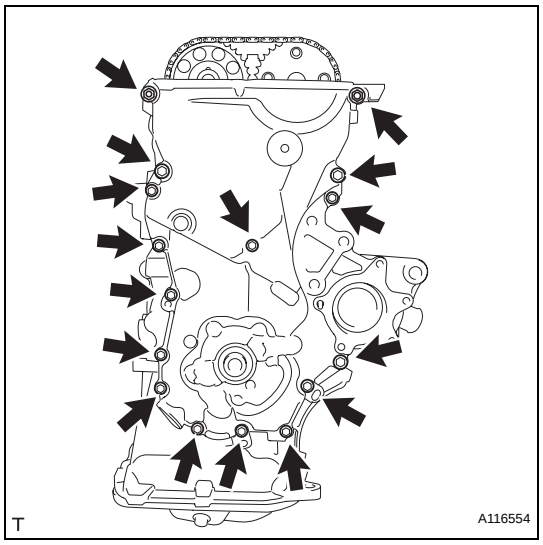

20. REMOVE OIL PUMP ASSEMBLY

(a) Remove the 15 bolts and the nut.

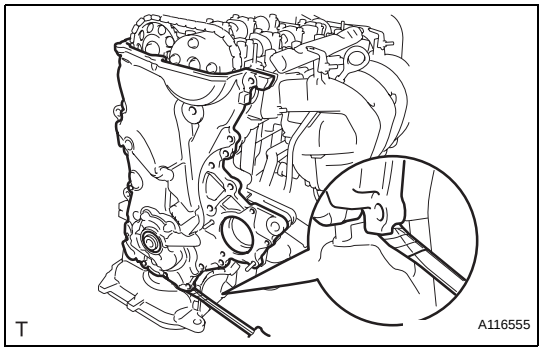

(b) Using a screwdriver with its tip wrapped in protective tape, prize the oil pump assembly to remove it.

NOTICE:

Do not damage the contact surfaces of the oil pump assembly or oil pan sub-assembly.

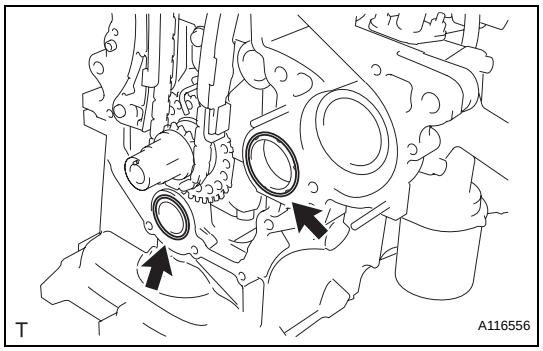

(c) Remove the 2 O-rings from the cylinder block and oil pan sub-assembly.

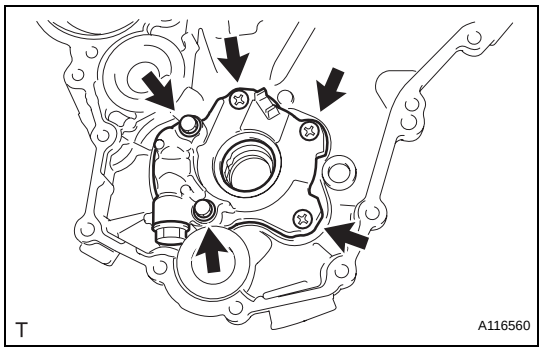

DISASSEMBLY

1. REMOVE OIL PUMP COVER

(a) Remove the 2 bolts and 3 screws and remove the oil pump cover.

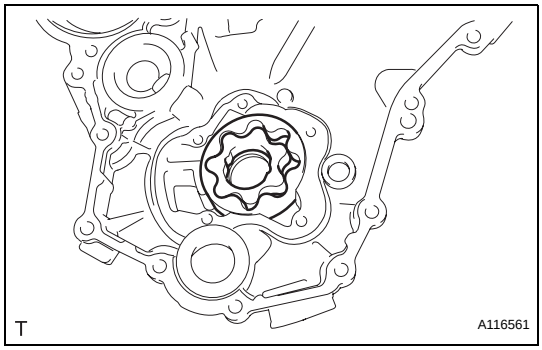

2. REMOVE OIL PUMP ROTOR SET

(a) Remove the oil pump rotor set.

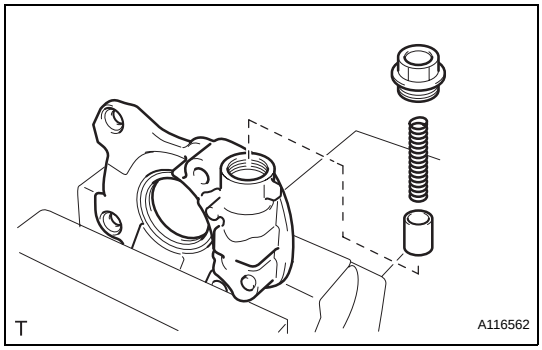

3. REMOVE OIL PUMP RELIEF VALVE

(a) Remove the oil pump relief valve plug, oil pump relief valve spring and oil pump relief valve.

INSPECTION

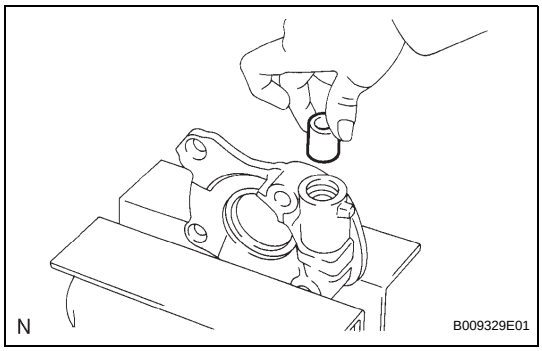

1. INSPECT OIL PUMP RELIEF VALVE

(a) Coat the oil pump relief valve with engine oil and check that it falls smoothly into the valve hole under its own weight.
If not, replace the oil pump relief valve. If necessary, replace the oil pump assembly.

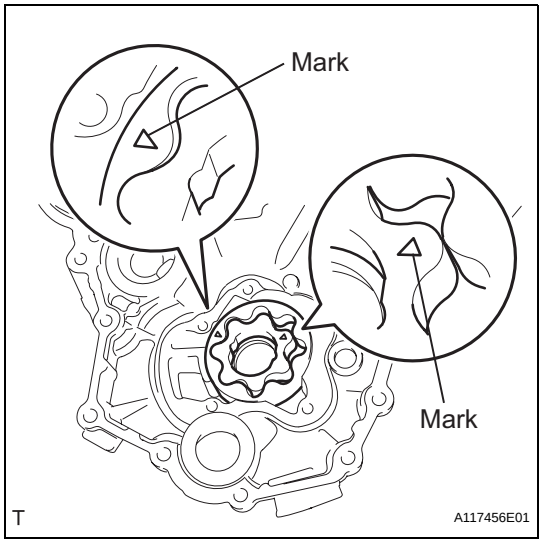

2. INSPECT OIL PUMP ROTOR SET

(a) Install the 2 rotors with both of the marks facing the oil pump cover side.

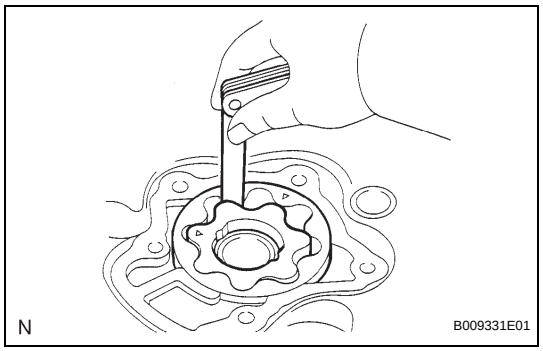

(b) Check the rotor tip clearance.
(1) Using a feeler gauge, measure the clearance between the drive and driven rotor tips.
Standard tip clearance:
0.060 to 0.180 mm (0.0024 to 0.0071 in.)
Maximum tip clearance:
0.28 mm (0.0110 in.)
If the tip clearance is greater than the maximum, replace the oil pump assembly.

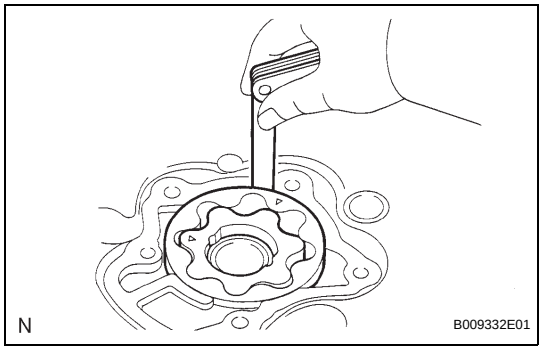

(c) Check the rotor body clearance.
(1) Using a feeler gauge, measure the clearance between the driven rotor and the oil pump body.
Standard body clearance:
0.250 to 0.325 mm (0.0098 to 0.0128 in.)
Maximum body clearance:
0.425 mm (0.0167 in.)
If the body clearance is greater than the maximum, replace the oil pump assembly.

REPLACEMENT

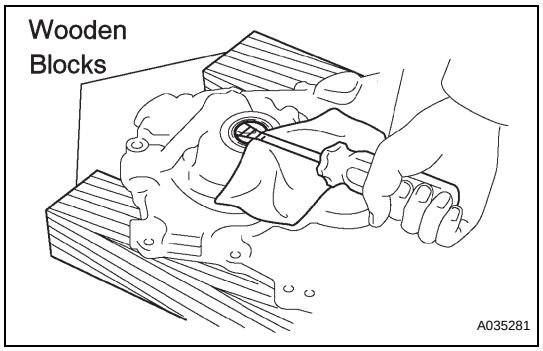

1. REMOVE OIL PUMP SEAL
(a) Using a screwdriver with its tip wrapped in protective tape, remove the oil pump seal.

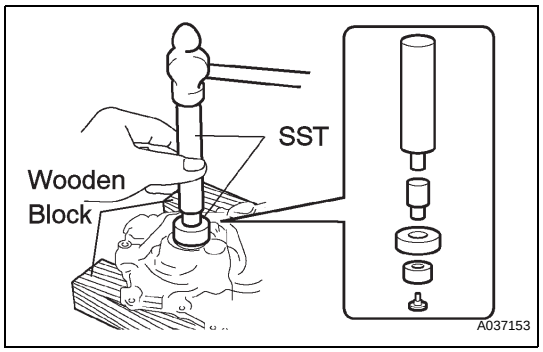

2. INSTALL OIL PUMP SEAL
(a) Using SST and a hammer, tap in a new oil seal until its surface is flush with the timing chain cover edge.
SST 09950-60010 (09951-00250, 09951-00410, 09952-06010), 09950-70010 (09951-07100)
NOTICE:
Do not tap the oil seal at an angle.
(b) Apply a light coat of MP grease to the oil pump seal lip.
NOTICE:
Keep the seal lip free of foreign matter.

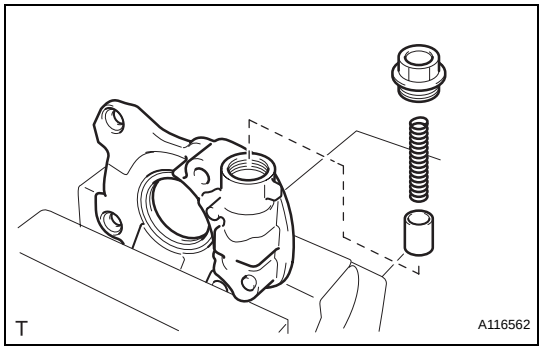

REASSEMBLY

1. INSTALL OIL PUMP RELIEF VALVE
(a) Coat the oil pump relief valve with engine oil and insert the oil pump relief valve and oil pump relief valve spring into the oil pump cover.
(b) Install the oil pump relief valve plug.
Torque: 25 N*m (255 kgf*cm, 18 ft.*lbf)

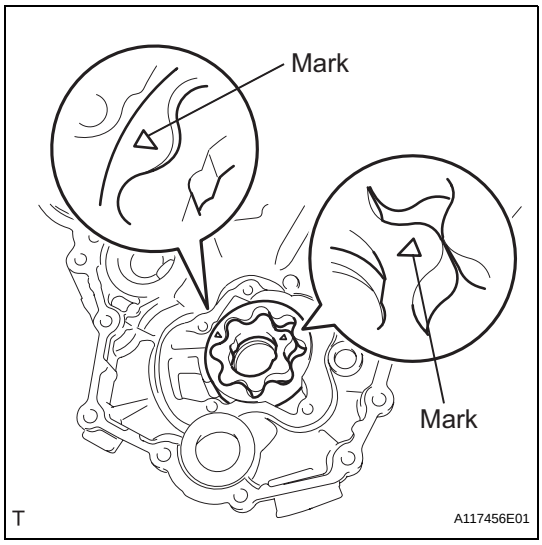

2. INSTALL OIL PUMP ROTOR SET

(a) Coat the oil pump rotor set with engine oil and place it into the oil pump body with the marks facing the oil pump cover side.

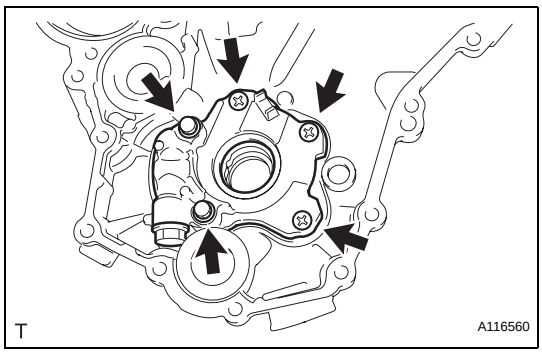

3. INSTALL OIL PUMP COVER

(a) Install the oil pump cover with the 2 bolts and 3 screws.

Torque: 8.8 N*m (90 kgf*cm, 78 in.*lbf) for bolt
10 N*m (105 kgf*cm, 7.6 ft.*lbf) for screw

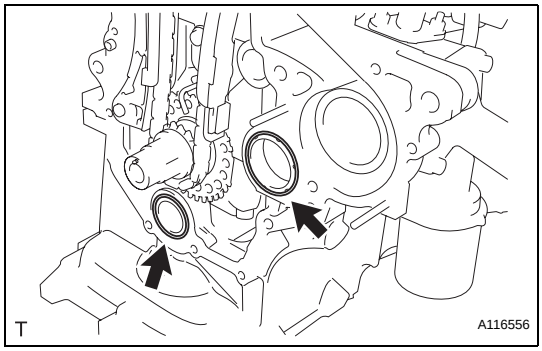

INSTALLATION

1. INSTALL OIL PUMP ASSEMBLY

(a) Install 2 new O-rings in the 2 locations shown in the illustration.

(b) Apply seal packing to the oil pump assembly, cylinder head and cylinder block as shown in the illustration.

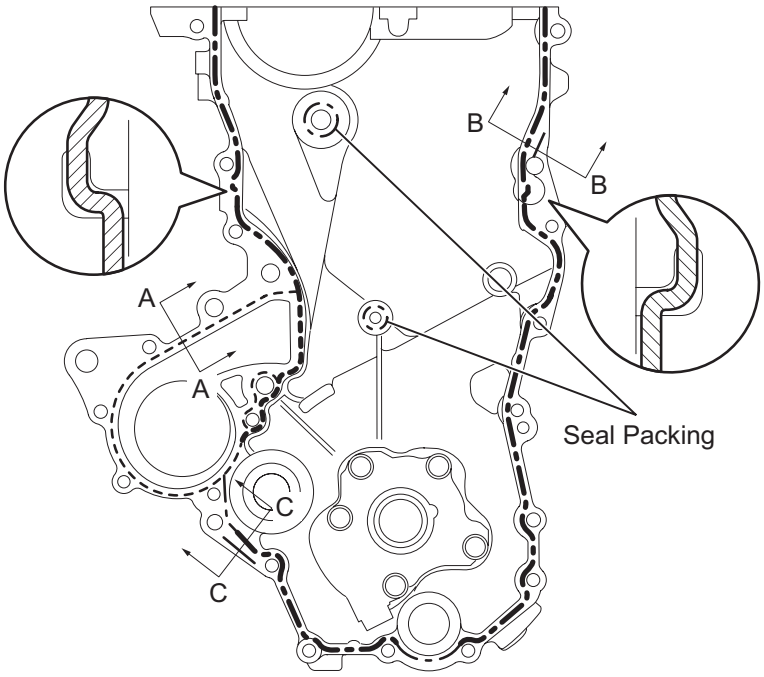

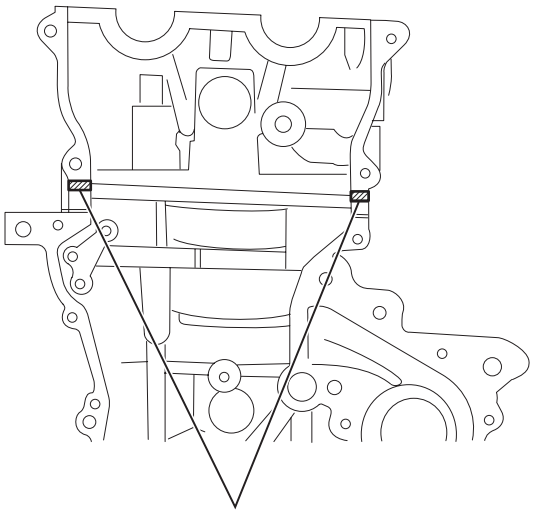

A-A

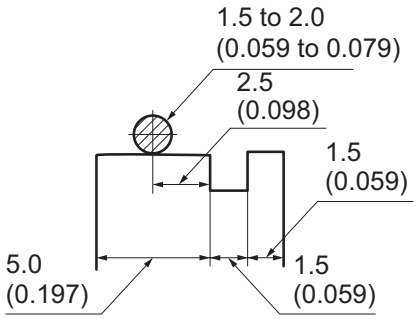

B-B, C-C

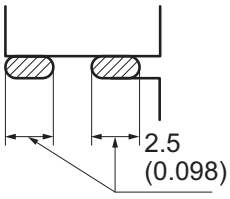

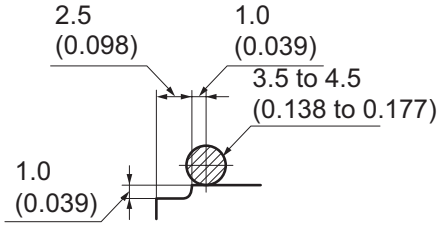

Seal Width (Other Part)

3.5 to 4.5 (0.138 to 0.177)

1.5 to 2.0 (0.059 to 0.079)

Seal Width (Water Pump Part)

3.5 to 4.5 (0.138 to 0.177)

1.5 to 2.0 (0.059 to 0.079)

mm (in.)

T

A116557E01

Seal packing:
Water pump part Toyota Genuine Seal Packing 1282B, Three Bond 1282B or Equivalent
Other part Toyota Genuine Seal Packing Black, Three Bond 1207B or Equivalent

NOTICE:
- **Remove any oil from the contact surfaces.**
- **Install the oil pump assembly within 3 minutes and tighten the bolts and nut within 15 minutes of applying the seal packing.**
- **Do not expose the seal to engine oil for at least 2 hours after the installation.**

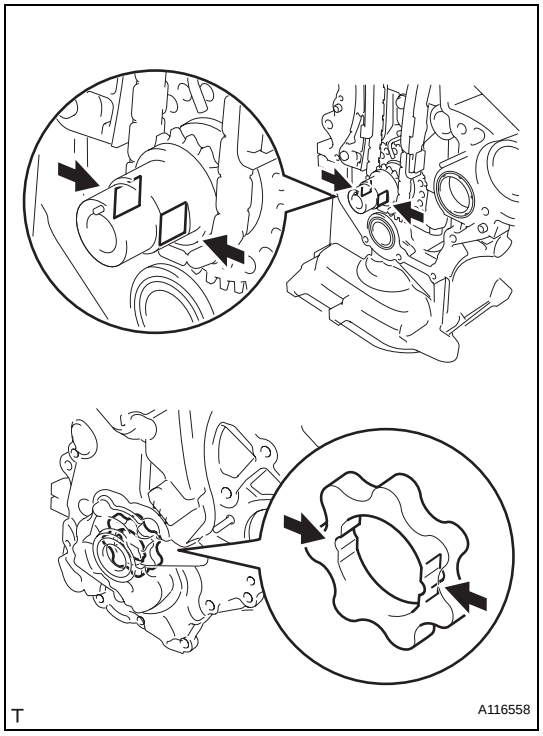

(c) Align the keyway of the oil pump rotor with the rectangular portion of the crankshaft, and slide the oil pump into place.

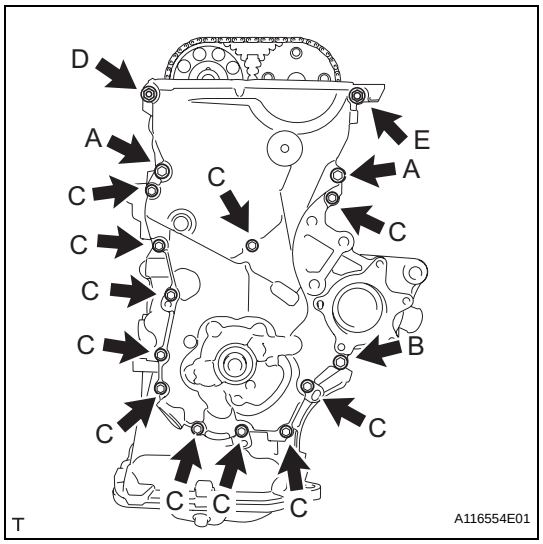

(d) Install the oil pump assembly with the 15 bolts and the nut. Tighten the bolts and nut uniformly in several steps.

Torque: 32 N*m (326 kgf*cm, 24 ft.*lbf) for bolt A
11 N*m (112 kgf*cm, 8.1 ft.*lbf) for bolt B
11 N*m (112 kgf*cm, 8.1 ft.*lbf) for bolt C
24 N*m (245 kgf*cm, 18 ft.*lbf) for nut D
24 N*m (245 kgf*cm, 18 ft.*lbf) for bolt E

NOTICE:
After installing the oil pump assembly, install the mounting bracket and water pump within 15 minutes.

HINT:
Each bolt length is as follows.
A: 30 mm (1.181 in.)
B: 35 mm (1.378 in.)
C: 20 mm (0.787 in.)

LU

E: 14 to 20 mm (0.551 to 0.787 in.), Double ended bolt

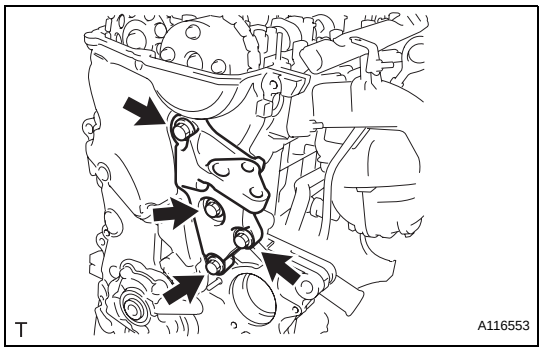

2. **INSTALL TRANSVERSE ENGINE ENGINE MOUNTING BRACKET**
   (a) Install the transverse engine engine mounting bracket with the 4 bolts.
   Torque: 55 N*m (561 kgf*cm, 41 ft.*lbf)

3. **INSTALL WATER PUMP ASSEMBLY (See page CO-16)**

4. **INSTALL WATER PUMP PULLEY (See page CO-16)**

5. **INSTALL CAMSHAFT TIMING OIL CONTROL VALVE ASSEMBLY (See page ES-397)**

6. **INSTALL CRANKSHAFT POSITION SENSOR (See page ES-400)**

7. **INSTALL CRANKSHAFT DAMPER SUB-ASSEMBLY**
   (a) Align the pin hole in the crankshaft damper with the pin and install the crankshaft damper sub-assembly.
   (b) Provisionally install the bolt.
   (c) Using 2 SSTs, tighten the bolt while holding the crankshaft damper sub-assembly.
   SST 09213-14010 (91651-60865), 09330-00021
   Torque: 128 N*m (1,305 kgf*cm, 95 ft.*lbf)
   NOTICE:
   Check the SST installation positions when installing them, to avoid the SST fixing bolts from coming into contact with the oil pump assembly.

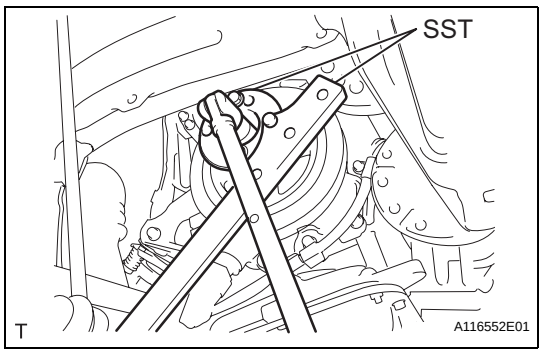

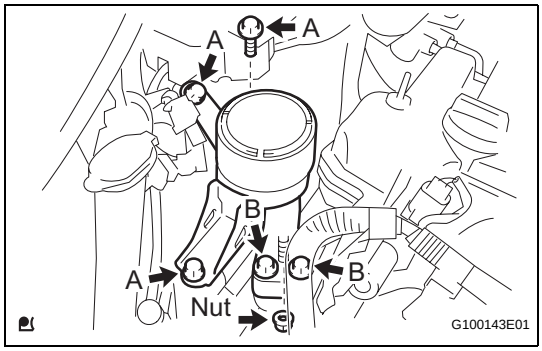

8. **INSTALL ENGINE MOUNTING INSULATOR SUB-ASSEMBLY RH (for Hatchback)**
   (a) Install the engine mounting insulator sub-assembly RH with the 5 bolts and nut.
   Torque: 45 N*m (459 kgf*cm, 33 ft.*lbf) for bolt A
   52 N*m (530 kgf*cm, 38 ft.*lbf) for bolt B and nut

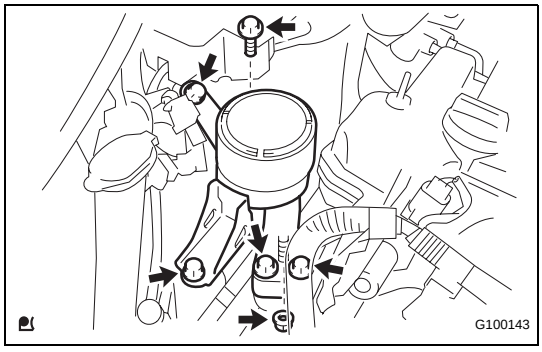

9. **INSTALL ENGINE MOUNTING INSULATOR SUB-ASSEMBLY RH (for Sedan)**
   (a) Install the engine mounting insulator sub-assembly RH with the 5 bolts and nut.
   Torque: 52 N*m (530 kgf*cm, 38 ft.*lbf)

10. **INSTALL CYLINDER HEAD COVER SUB-ASSEMBLY (See page FU-19)**

11. **INSTALL VENTILATION HOSE NO. 2 (See page FU-20)**

12. **INSTALL VENTILATION HOSE (See page FU-20)**

13. INSTALL IGNITION COIL NO. 1 (See page IG-9)
14. INSTALL GENERATOR ASSEMBLY (See page CH-17)
15. INSTALL FAN AND GENERATOR V BELT (See page EM-7)
16. ADJUST FAN AND GENERATOR V BELT (See page EM-7)
17. INSPECT FAN AND GENERATOR V BELT (See page EM-8)
18. CONNECT CABLE TO NEGATIVE BATTERY TERMINAL
    Torque: 5.4 N*m (55 kgf*cm, 48 in.*lbf)
19. ADD ENGINE OIL
20. ADD ENGINE COOLANT (See page CO-8)
21. CHECK ENGINE OIL LEVEL (See page LU-1)
22. CHECK FOR ENGINE OIL LEAKAGE
23. CHECK FOR ENGINE COOLANT LEAKAGE (See page CO-1)
24. INSTALL CYLINDER HEAD COVER NO. 2 (See page IG-10)
25. INSTALL ENGINE UNDER COVER RH
26. INSTALL FRONT WHEEL RH
    Torque: 103 N*m (1050 kgf*cm, 76 ft.*lbf)

IGNITION SYSTEM

PARTS LOCATION

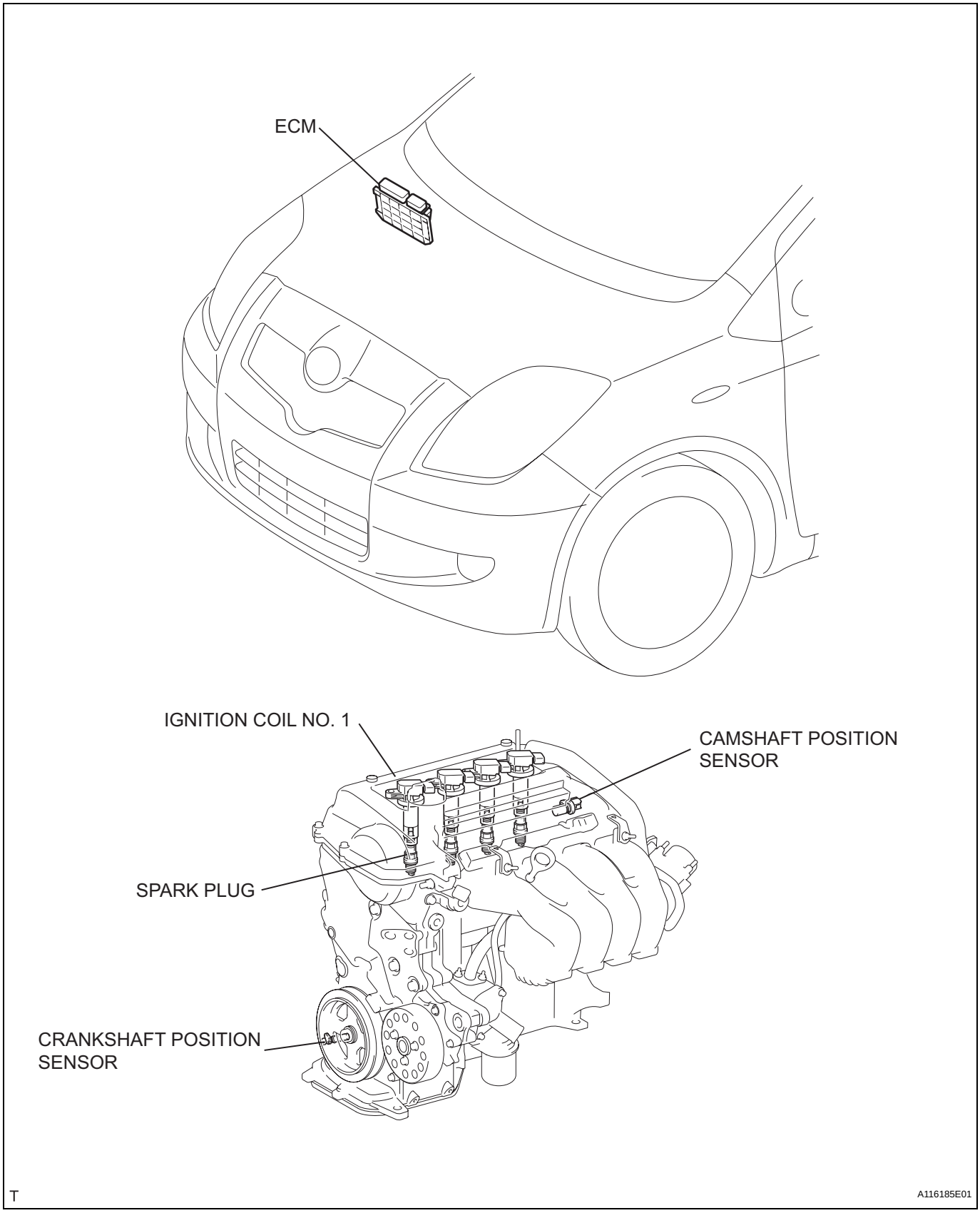

SYSTEM DIAGRAM

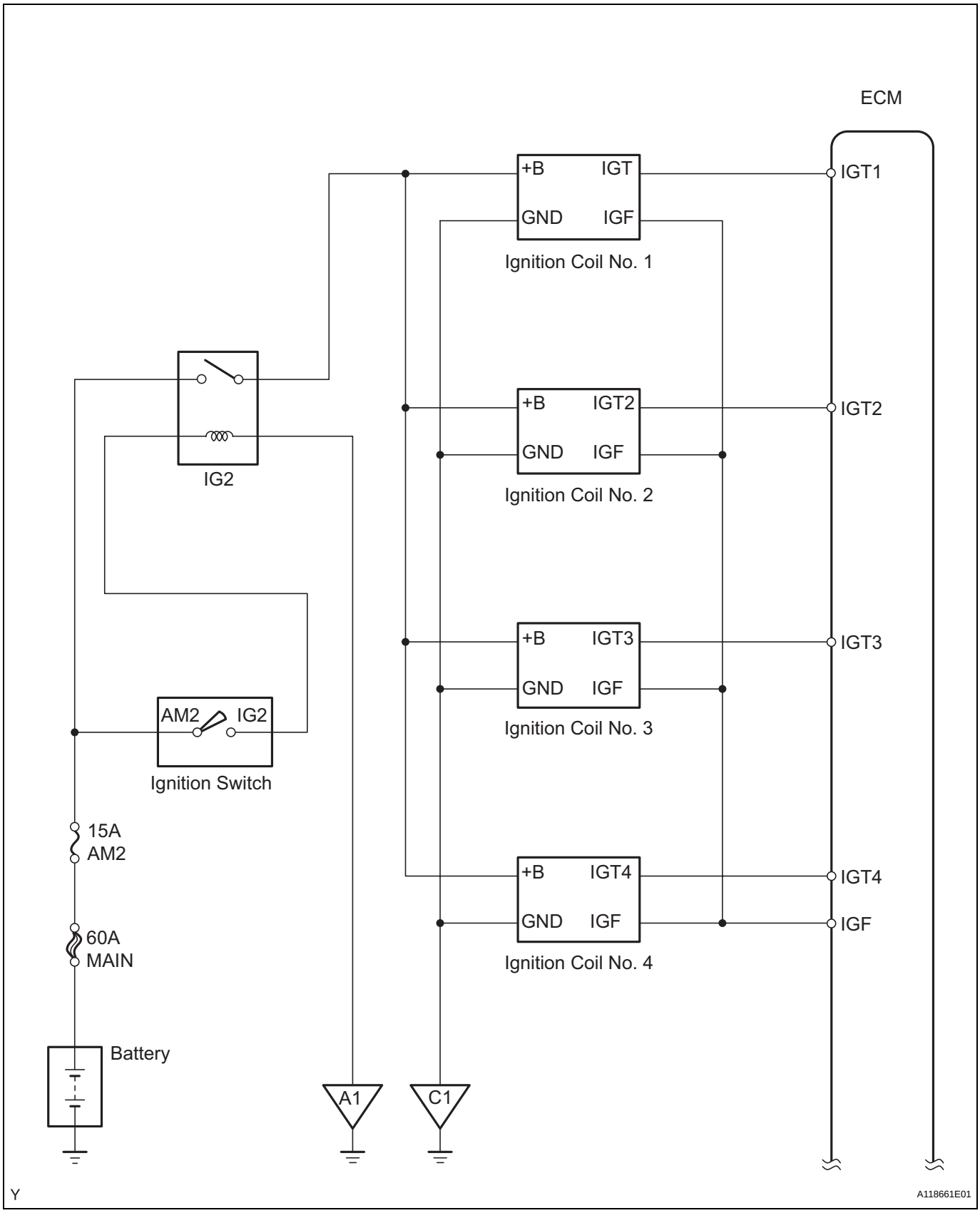

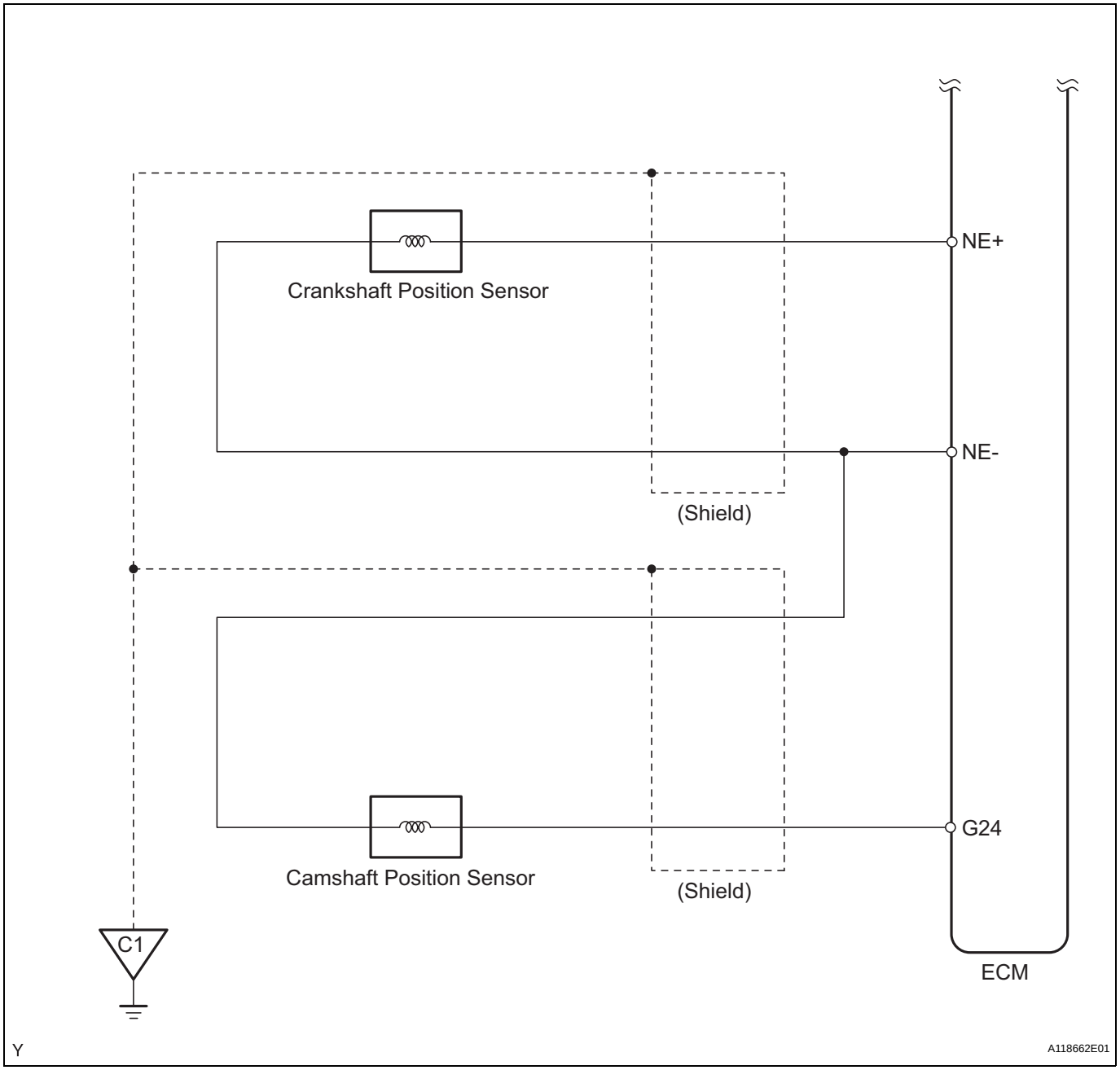
NE+
NE-
G24
Crankshaft Position Sensor
Camshaft Position Sensor
(Shield)
(Shield)
C1
ECM
Y
A118662E01

ON-VEHICLE INSPECTION

HINT:
In this section, the terms Cold and Hot refer to the temperature of the coils. Cold means approximately -10 to 50 °C (14 to 122 °F). Hot means approximately 50 to 100 °C (122 to 212 °F).

1. INSPECT IGNITION COIL AND SPARK TEST

(a) Check for DTCs.

NOTICE:

If a DTC is present, perform troubleshooting in accordance with the procedure for that DTC.

(b) Check whether sparks occur.

(1) Remove cylinder head cover No. 2 (See page IG-9).

(2) Remove the 4 ignition coils (See page IG-9).

(3) Using a 16 mm (0.63 in) plug wrench, remove the 4 spark plugs.

(4) Install the spark plug onto each ignition coil and connect the ignition coil connectors.

(5) Disconnect the 4 injector connectors.

(6) Ground the spark plugs.

(7) Check that sparks occur while the engine is being cranked.

NOTICE:

- **Ground the spark plug when checking it.**
- **Replace any ignition coils that have been subjected to any physical impact.**
- **Do not crank the engine for more than 2 seconds.**

If sparks do not occur, perform the following procedure.

(c) Perform the spark test in accordance with the following procedure.

(1) Check that the wire harness side connector of the ignition coil with igniter is securely connected.

Result

Result	Proceed to
NG	Connect securely
OK	Go to next step

(2) Perform a spark test on each ignition coil with igniter.

1. Replace the ignition coil with igniter with a functioning one.
2. Perform the spark test again.

Result

Result	Proceed to
OK	Replace ignition coil with igniter
NG	Go to next step

(3) Check that the power is supplied to the ignition coil with igniter.
1. Turn the engine switch ON.
2. Check that the battery voltage is applied to the positive (+) terminal of the ignition coil (See page ES-172).

Result

Result	Proceed to
NG	Check wiring between ignition switch and ignition coil with igniter
OK	Go to next step

(4) Check the resistance of the camshaft position sensor.

Standard resistance

Temperature	Specified Condition
Cold	1,630 to 2,740 Ω
Hot	2,065 to 3,225 Ω

Result

Result	Proceed to
NG	Replace camshaft position sensor
OK	Go to next step

(5) Check the resistance of the crankshaft position sensor.

Standard resistance

Temperature	Specified Condition
Cold	985 to 1,600 Ω
Hot	1,265 to 1,890 Ω

Result

Result	Proceed to
NG	Replace crankshaft position sensor
OK	Go to next step

(6) Check the IGT from the ECM (See page ES-172).

Result

Result	Proceed to
NG	Check ECM
OK	Repair wiring between ignition coil and ECM

(d) Connect the 4 injector connectors.
(e) Using a 16 mm (0.63 in) plug wrench, install the 4 spark plugs.
Torque: 18 N*m (184 kgf*cm, 13 ft.*lbf)
(f) Install the 4 ignition coils (See page IG-9).
(g) Install cylinder head cover No. 2 (See page IG-10).

2. INSPECT SPARK PLUG

NOTICE:
Do not use a wire brush for cleaning.

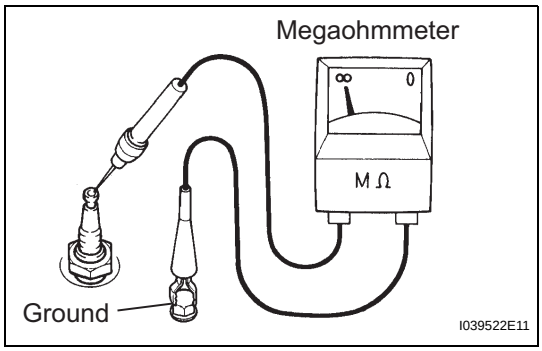

(a) Check the electrode.
(1) Using a megaohmmeter, measure the insulation resistance.
Standard resistance:
10 MΩ or more
HINT:
- If the result is not as specified, clean the spark plug with a spark plug cleaner and measure the resistance again.
- If a megaohmmeter is not available, perform the following simple inspection instead.

(b) Alternative inspection method:
(1) Quickly accelerate the engine to 4,000 rpm 5 times.
(2) Remove the spark plug.
(3) Visually check the spark plug.
If the electrode is dry, the spark plug is functioning properly. If the electrode is damp, proceed to the next step.

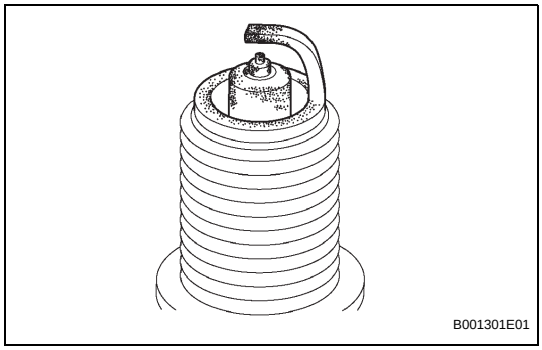

(c) Check the spark plug for any damage to its thread and insulator.
If there is damage, replace the spark plug.
Recommended spark plug

Manufacturer	Product
DENSO	SK16R11
NGK	IFR5A11

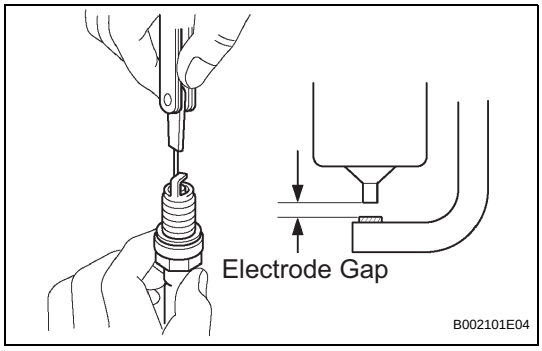

(d) Check the spark plug electrode gap.
Maximum electrode gap for used spark plug:
1.3 mm (0.051 in.)
If the gap is greater than the maximum, replace the spark plug.
Electrode gap for new spark plug:
1.0 to 1.1 mm (0.039 to 0.043 in.)

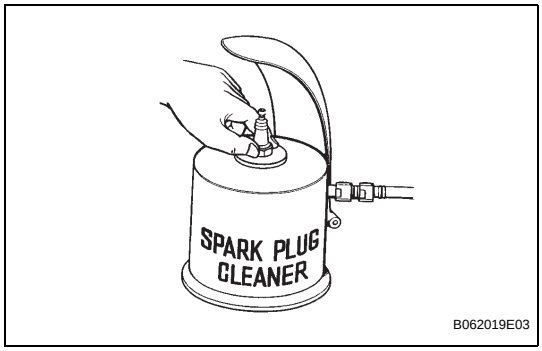

(e) Clean the spark plug.
If the electrode has traces of wet carbon, clean the electrode with a spark plug cleaner and then dry it.
Air pressure:
588 kPa (6 kgf/cm^2, 85 psi)
Duration:
20 seconds or less
HINT:
Only use the spark plug cleaner when the electrode is free of oil. If the electrode has traces of oil, use gasoline to clean off the oil before using the spark plug cleaner.

IG

IGNITION COIL

COMPONENTS

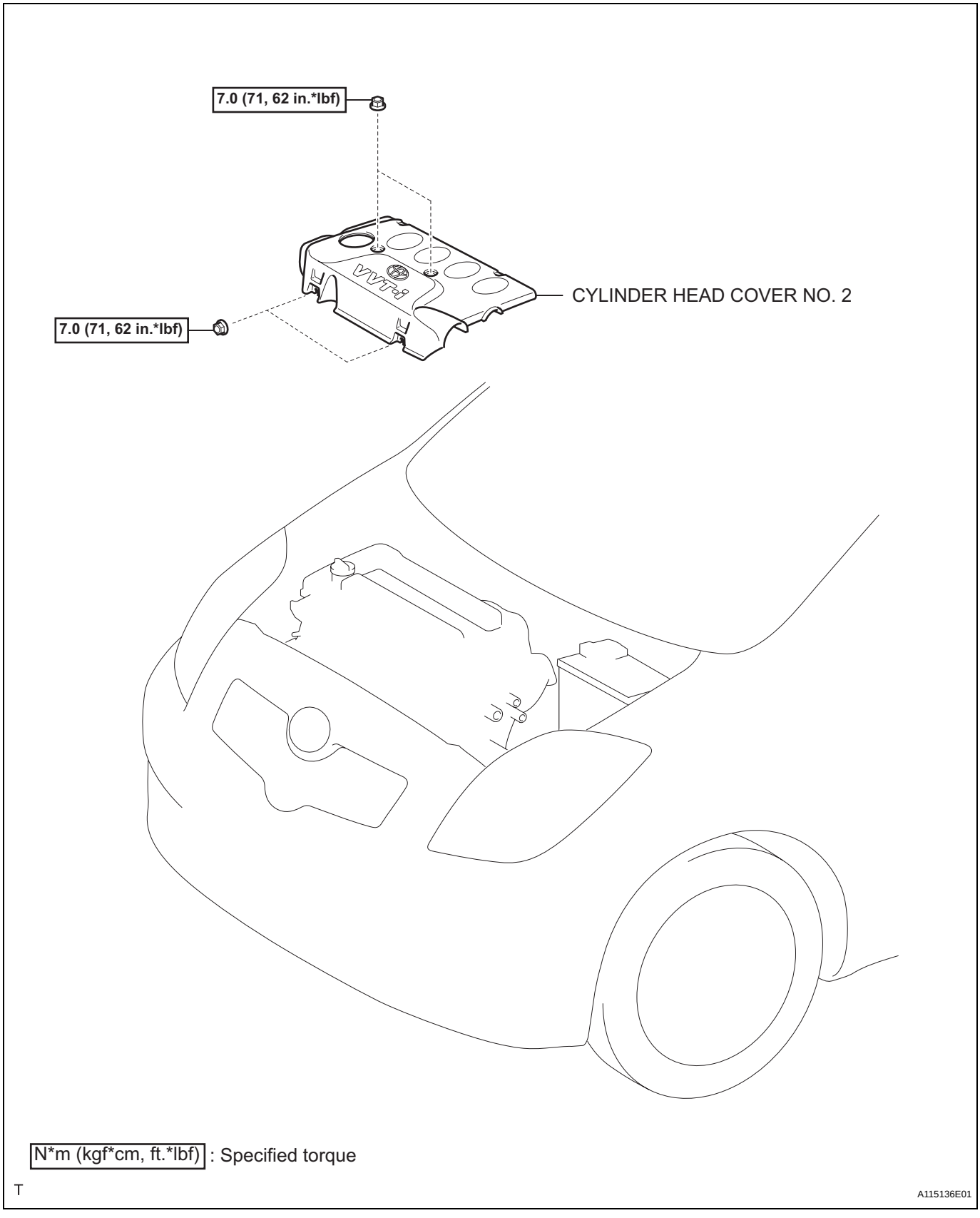

N*m (kgf*cm, ft.*lbf) : Specified torque

T

A115136E01

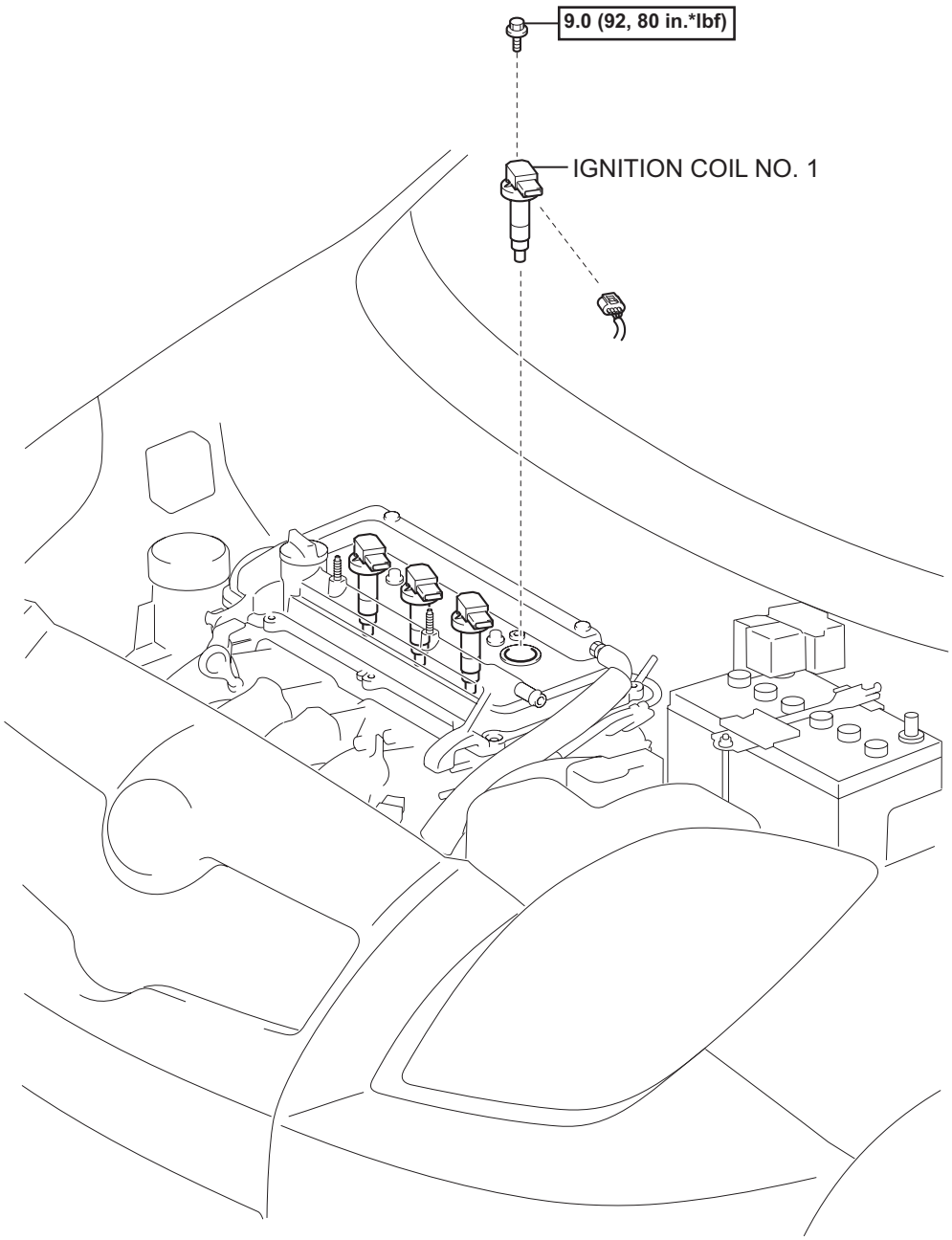

N*m (kgf*cm, ft.*lbf) : Specified torque

T

A115486E01

REMOVAL

1. DISCONNECT CABLE FROM NEGATIVE BATTERY TERMIANL

2. REMOVE CYLINDER HEAD COVER NO. 2

(a) Remove the 4 nuts and cylinder head cover No. 2.

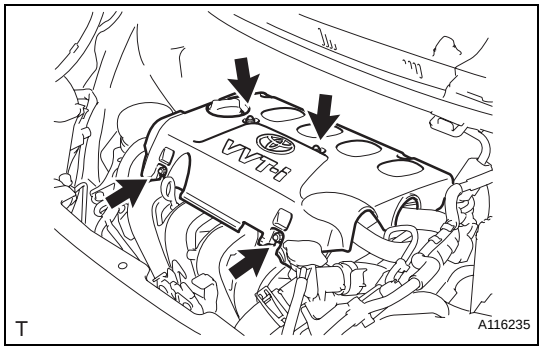

3. REMOVE IGNITION COIL NO. 1

(a) Disconnect the 4 ignition coil connectors.

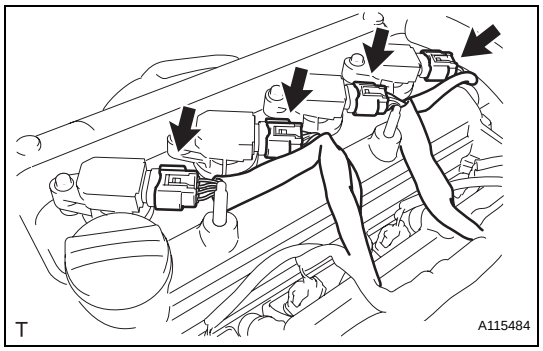

(b) Remove the 4 bolts and 4 ignition coils.

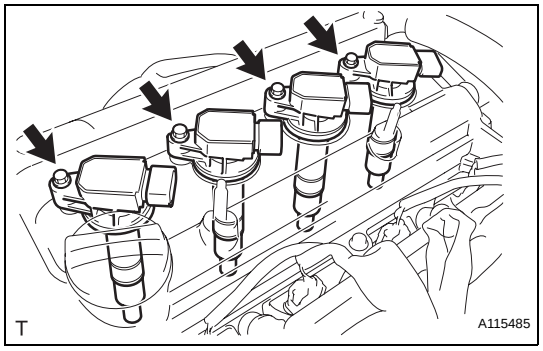

INSTALLATION

1. INSTALL IGNITION COIL NO. 1

(a) Install the 4 ignition coils with the 4 bolts.
Torque: 9.0 N*m (92 kgf*cm, 80 in.*lbf)

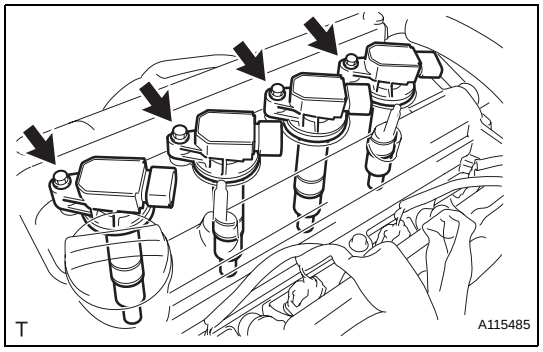

IG

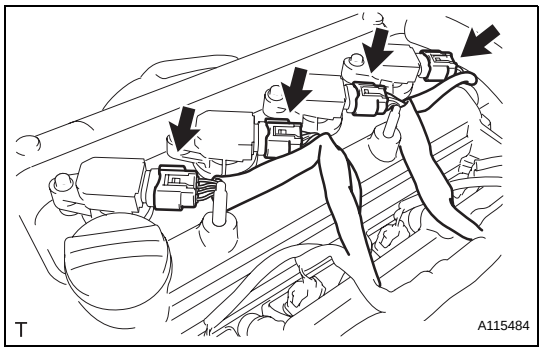

(b) Connect the 4 ignition coil connectors.

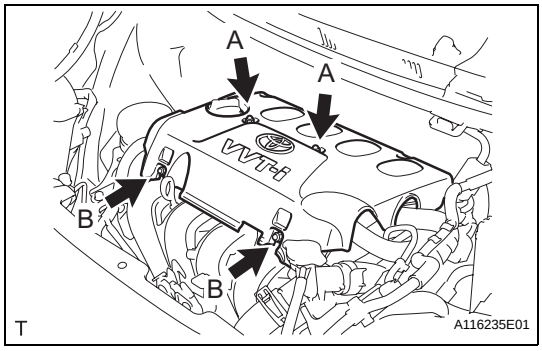

2. INSTALL CYLINDER HEAD COVER NO. 2

(a) Tighten the 2 A nuts, then the 2 B nuts.
Torque: 7.0 N*m (71 kgf*cm, 62 in.*lbf)

3. CONNECT CABLE TO NEGATIVE BATTERY TERMINAL
Torque: 5.4 N*m (55 kgf*cm, 48 in.*lbf)

STARTING SYSTEM (for 0.8 kW Type)

PARTS LOCATION

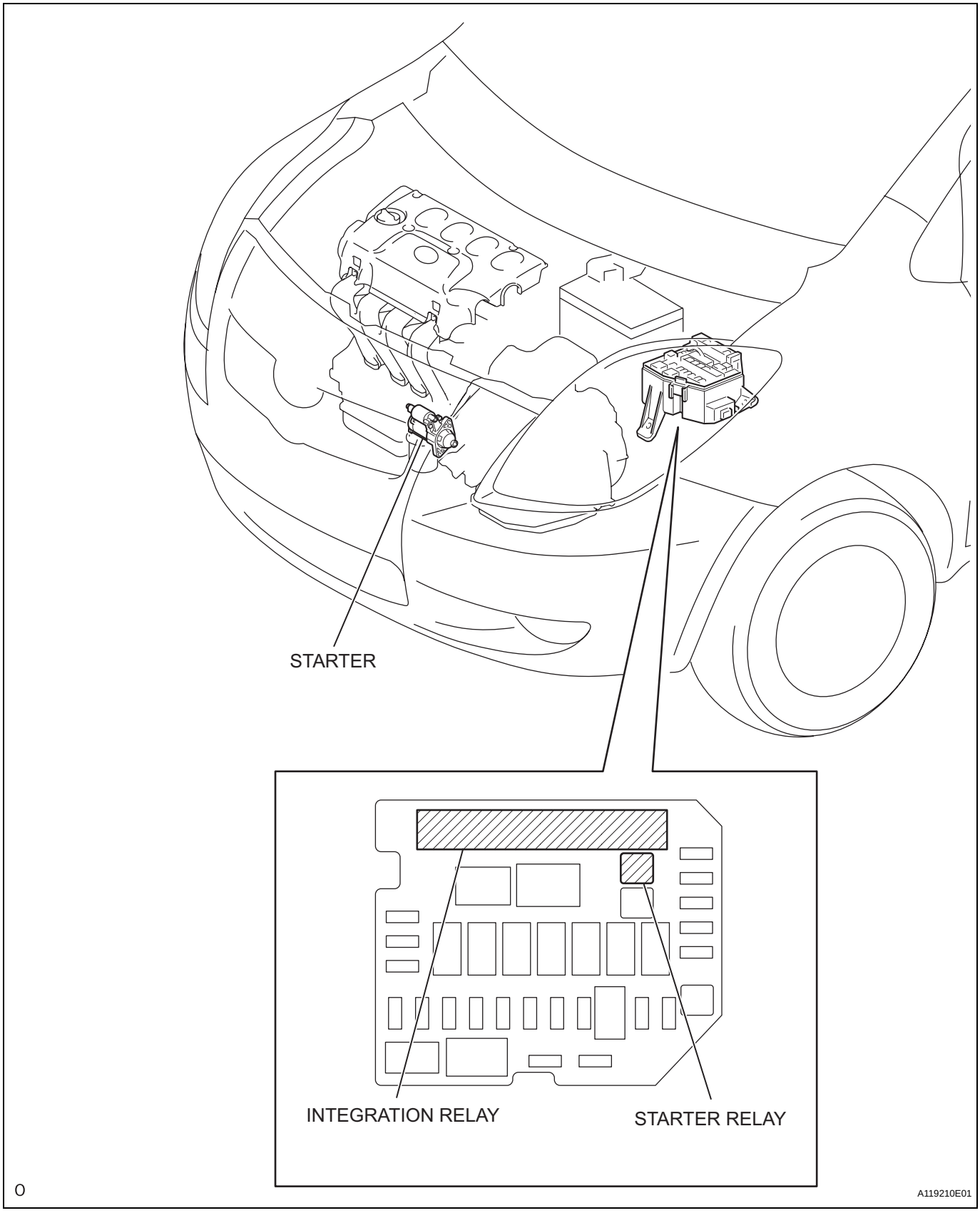

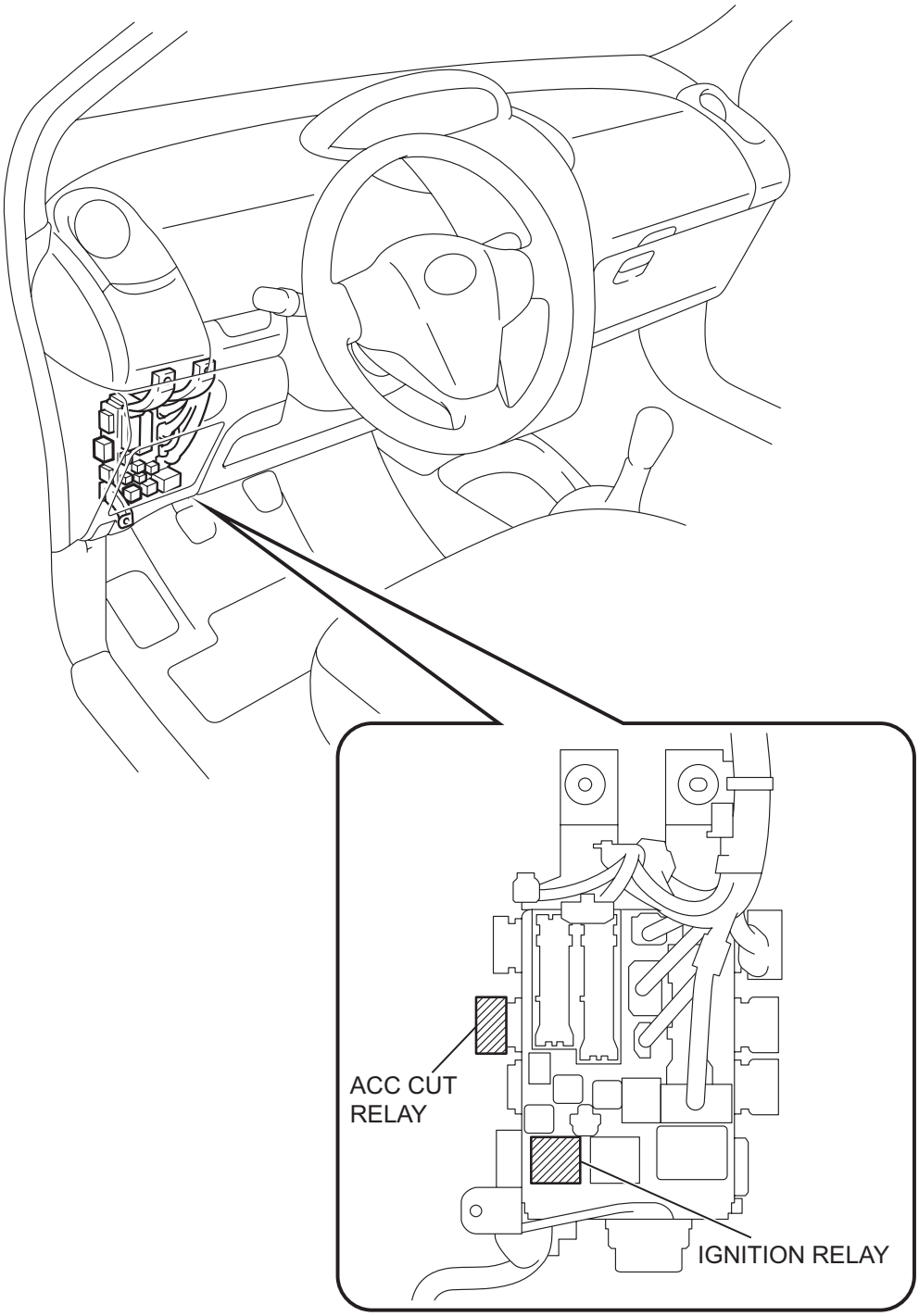

ST

N

A119205E01

SYSTEM DIAGRAM

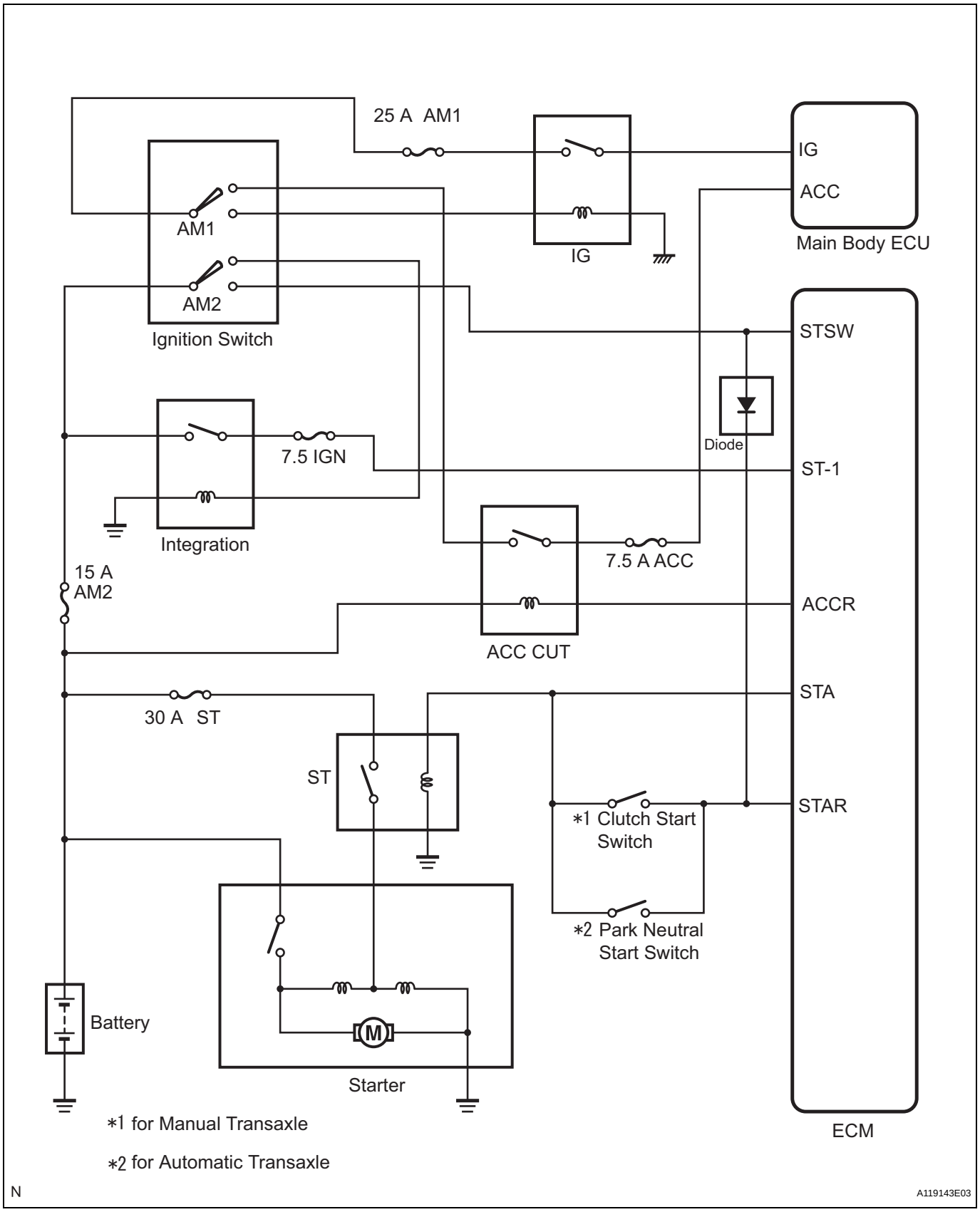

ST

STARTING SYSTEM (for 1.6 kW Type)

PARTS LOCATION

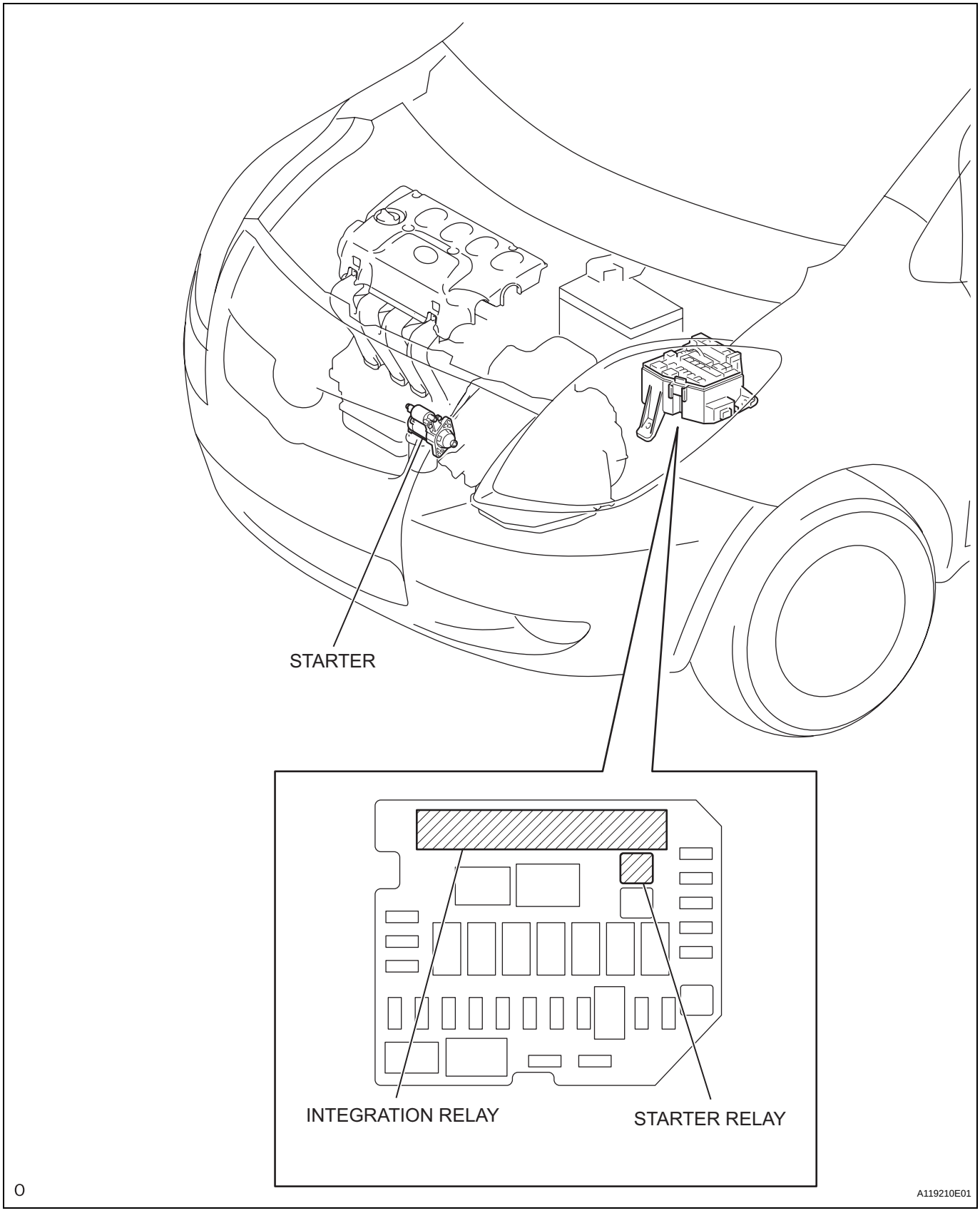

ST

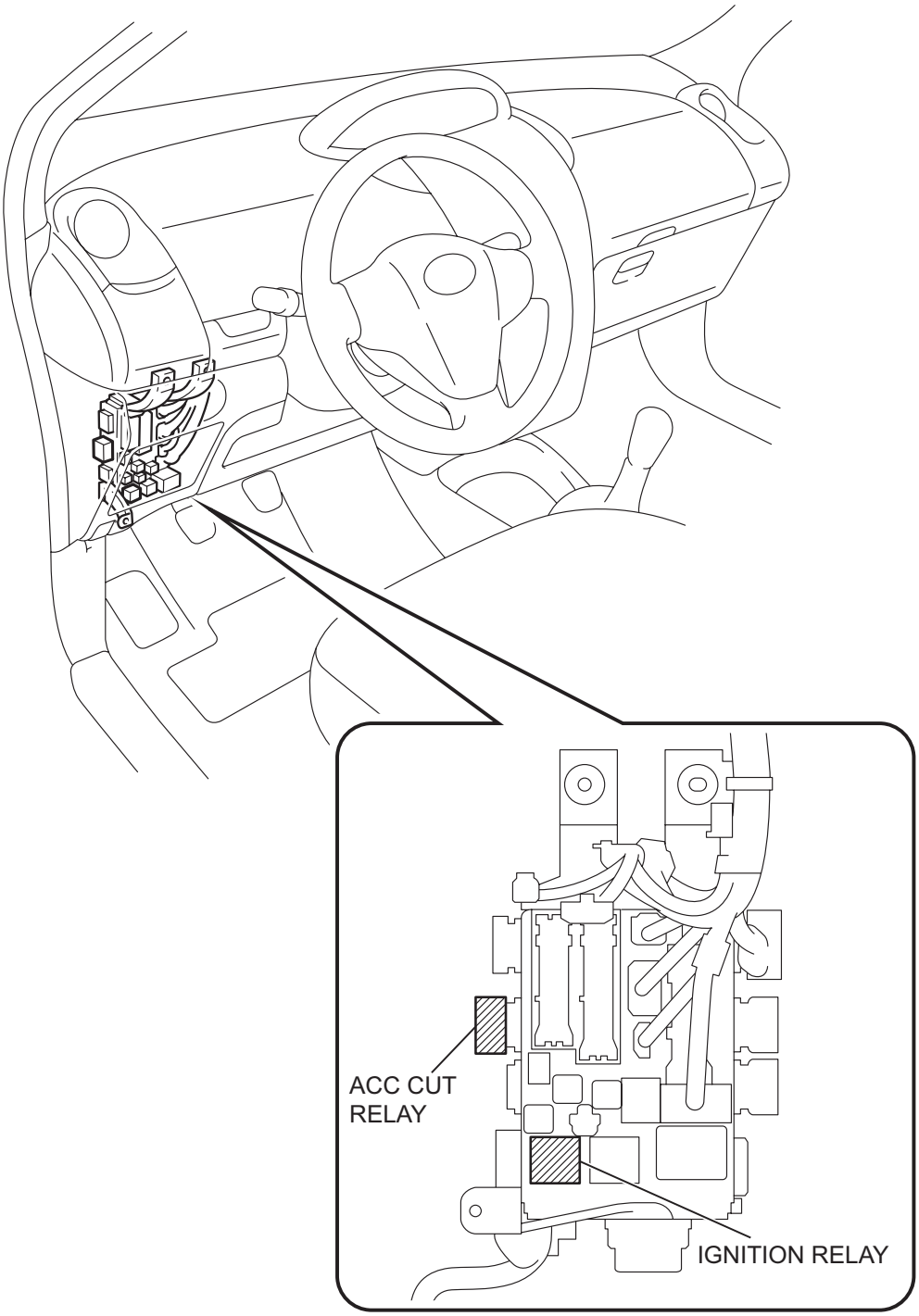

ST

N

A119205E01

SYSTEM DIAGRAM

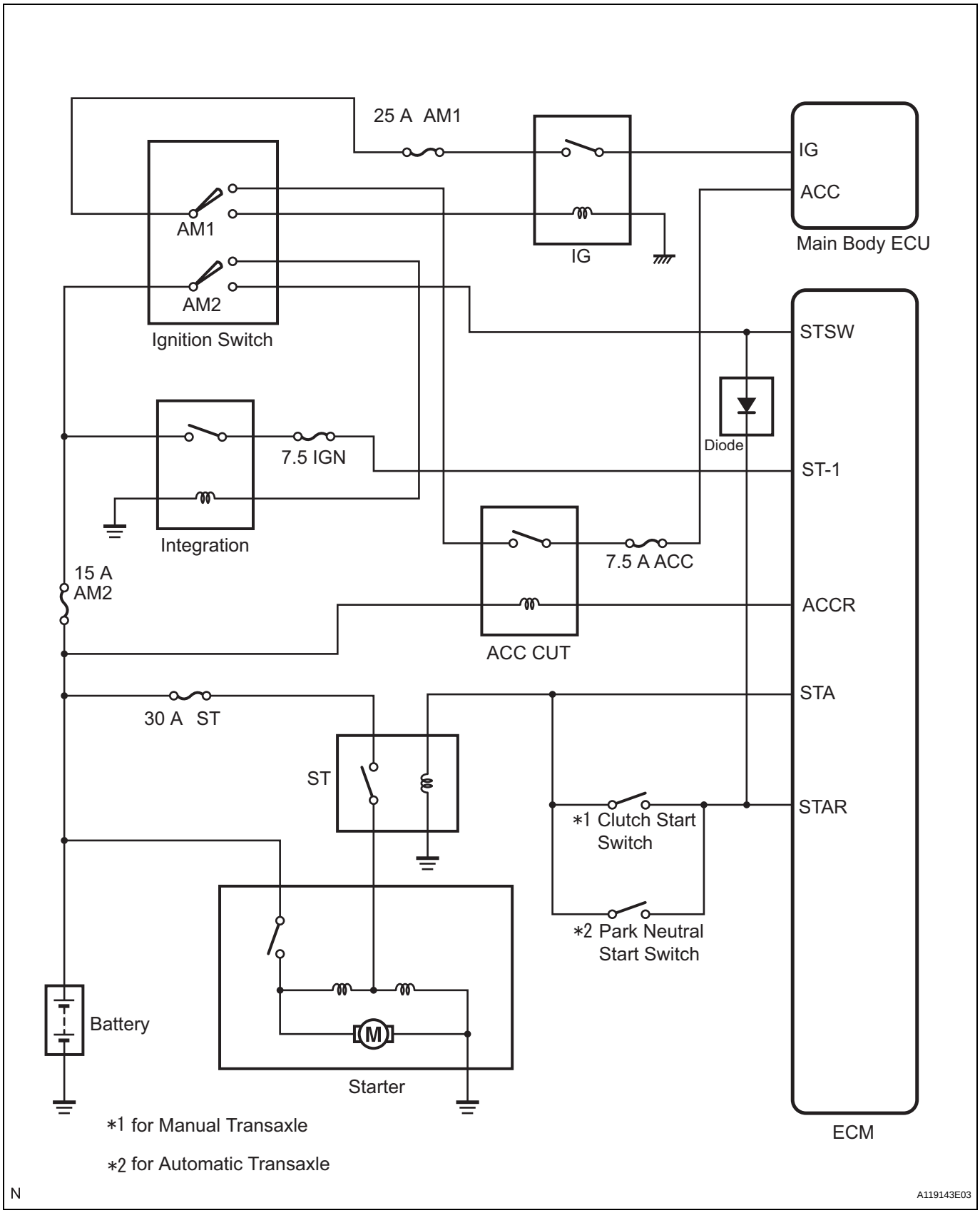

ST

STARTER (for 0.8 kW Type)

COMPONENTS

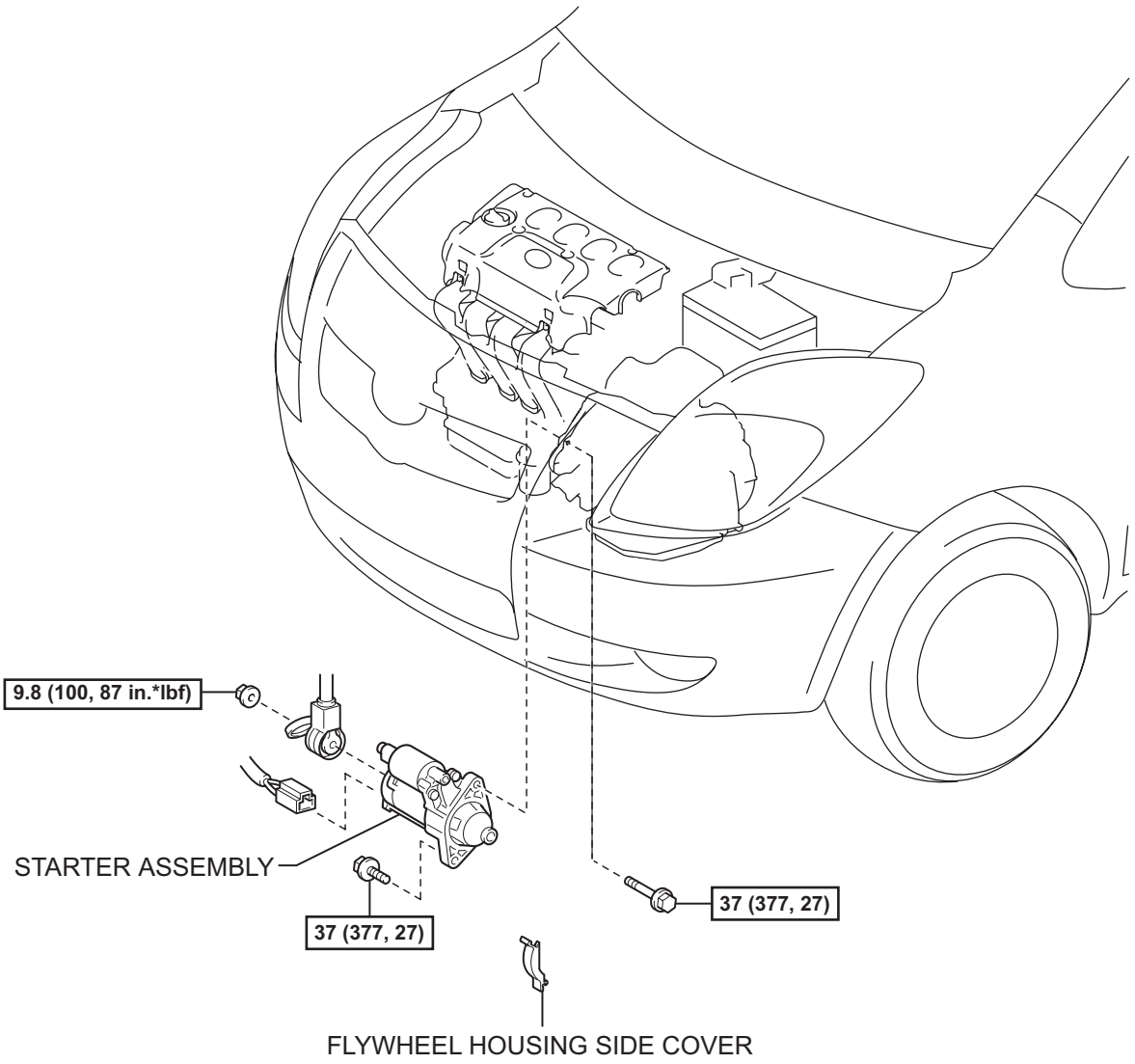

N*m (kgf*cm, ft*lbf) : Specified torque

A119211E02

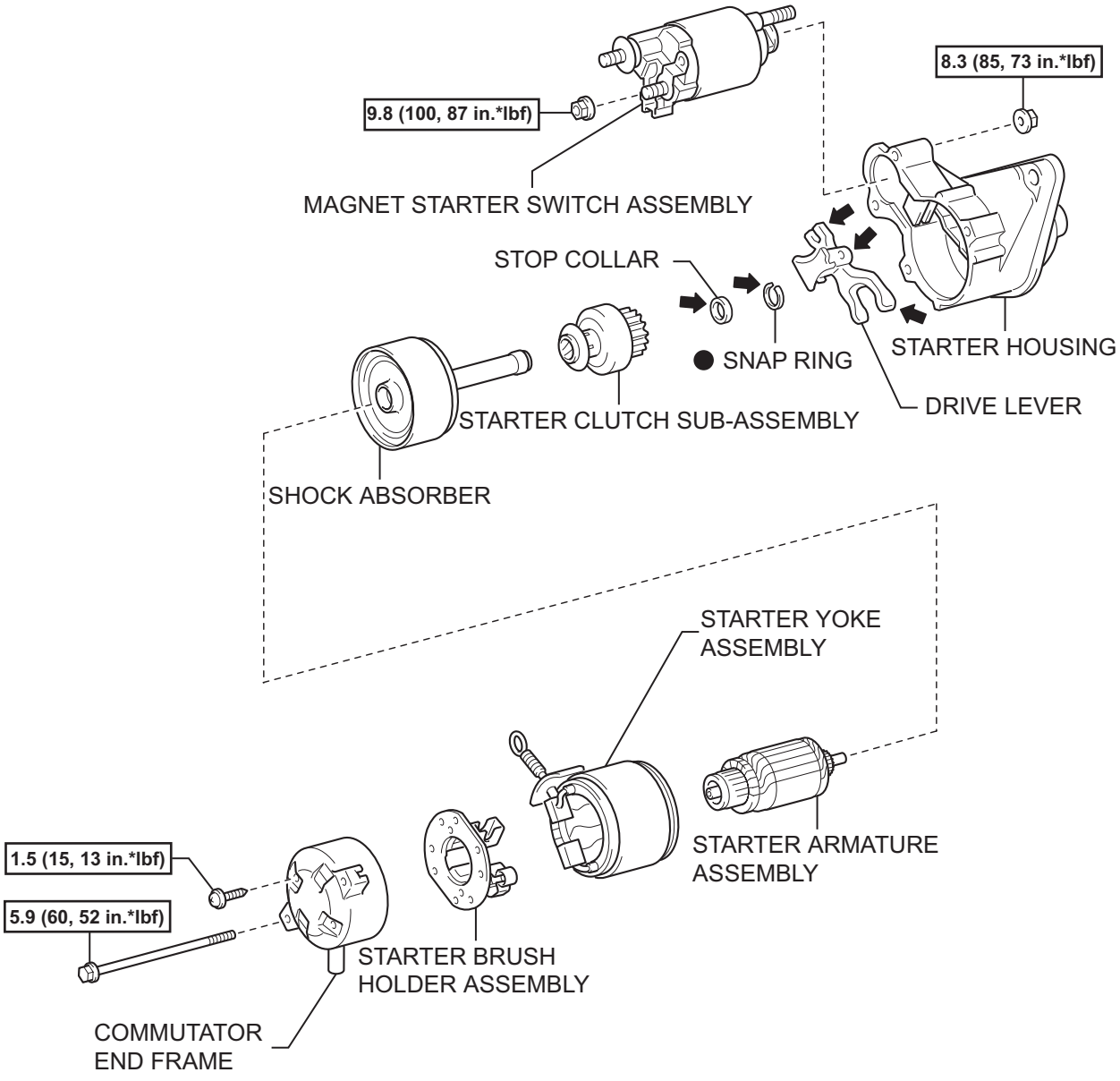

N*m (kgf*cm, ft.*lbf) : Specified torque ● Non-reusable part ⬅ Apply grease

A104524E06

ST

REMOVAL

1. DISCONNECT CABLE FROM NEGATIVE BATTERY TERMINAL

2. REMOVE FLYWHEEL HOUSING SIDE COVER

(a) Disengage the claw while pushing it upward and remove the flywheel housing side cover.

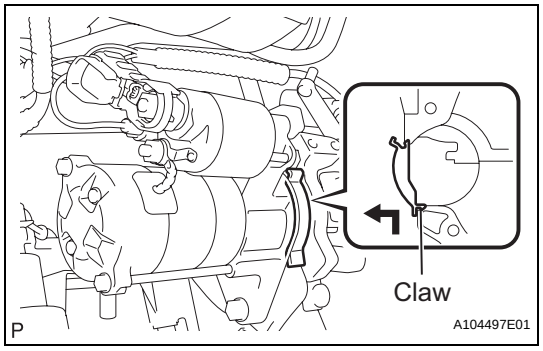

3. REMOVE STARTER ASSEMBLY

(a) Remove the terminal cap.
(b) Remove the nut and remove terminal 30.
(c) Disconnect the connector.
(d) Remove the 2 bolts and remove the starter assembly.

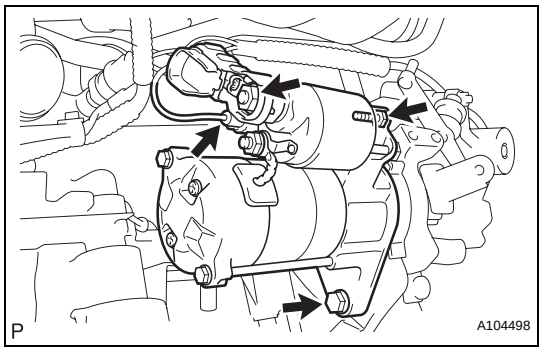

DISASSEMBLY

1. REMOVE MAGNET STARTER SWITCH ASSEMBLY

(a) Remove the nut, and disconnect the lead wire from the magnet starter switch assembly terminal.

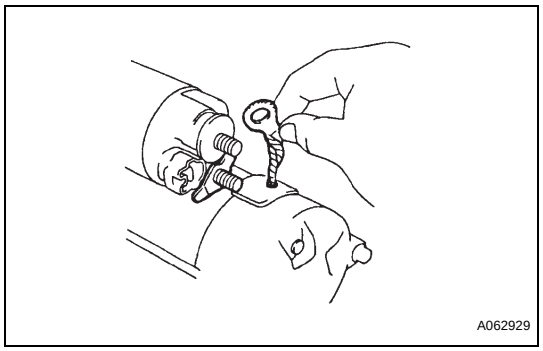

(b) Loosen the 2 nuts holding the magnet starter switch assembly onto the starter housing.

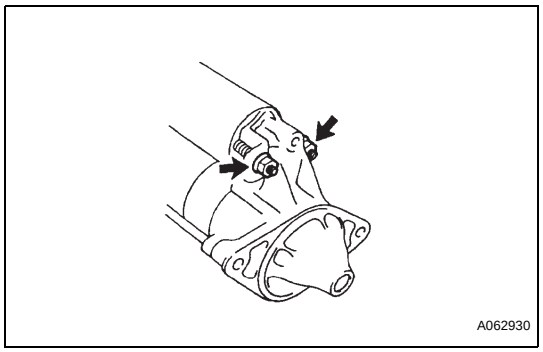

ST

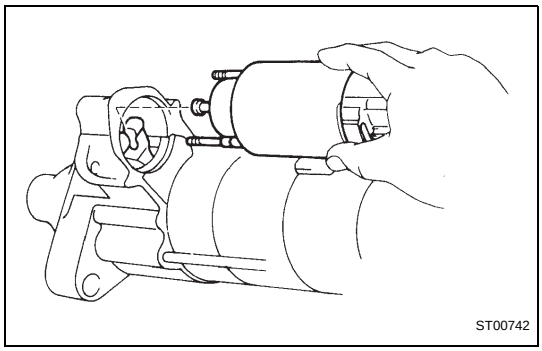

(c) Pull the magnet starter switch assembly and while lifting the front part of the magnet starter switch assembly, release the plunger hook from the driver lever, then remove the magnet starter switch assembly.

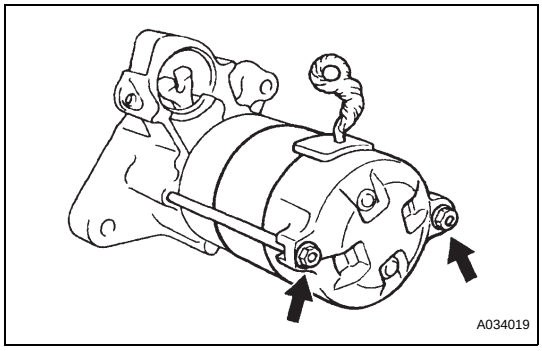

2. REMOVE STARTER YOKE ASSEMBLY

(a) Remove the 2 through bolts, and pull out the field frame together with the armature.

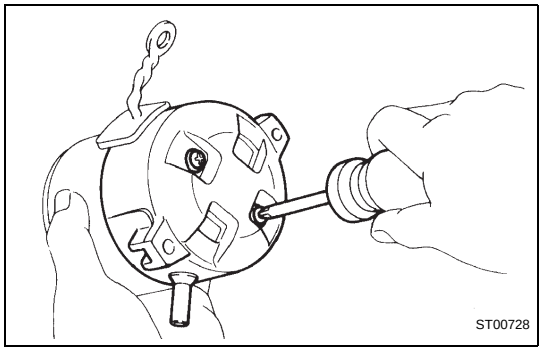

3. REMOVE STARTER BRUSH HOLDER ASSEMBLY

(a) Remove the 2 screws and the commutator end frame, and hold down the lead wire while releasing the commutator end frame.

NOTICE:

To avoid interference between the brush holder and the dust protector, pull the commutator end frame away at an angle.

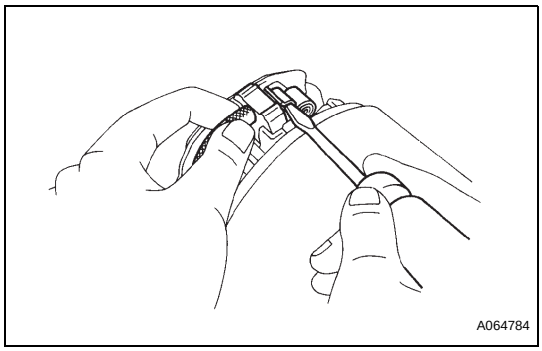

(b) Using a screwdriver, hold the spring back and disconnect the brush holder.

(c) Disconnect the 4 brushes, and remove the brush holder.

4. REMOVE STARTER ARMATURE ASSEMBLY

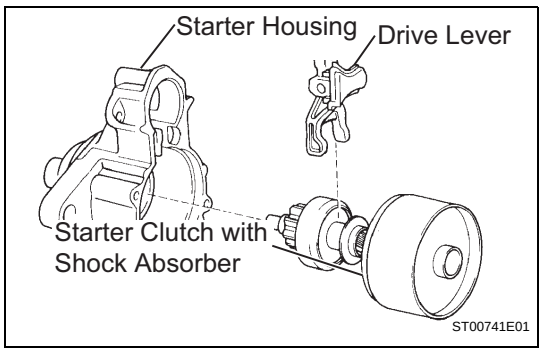

5. REMOVE STARTER CLUTCH SUB-ASSEMBLY

(a) Remove the drive lever and starter clutch with shock absorber from starter housing.

ST

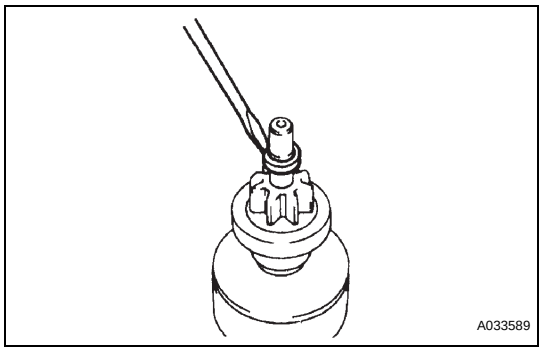

(b) Using a screwdriver, tap in the stop collar toward the starter clutch.

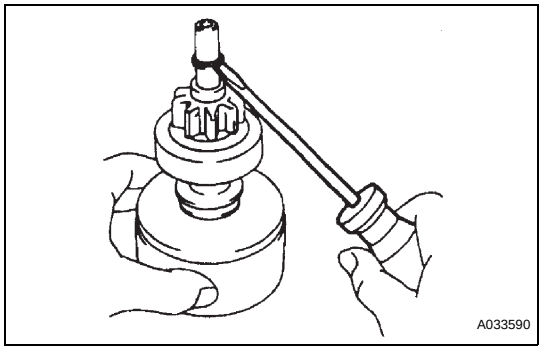

(c) Using a screwdriver, pry off the snap ring.
(d) Remove the stop collar and starter clutch from the planetary shaft.

INSPECTION

1. INSPECT STARTER ASSEMBLY

NOTICE:

Perform each of the following tests within 3 to 5 seconds.

(a) Perform pull-in test.

(1) Disconnect the field coil lead wire from terminal C.

(2) Connect the battery to the starter magnetic switch as shown in the illustration and check that the pinion gear is extended.

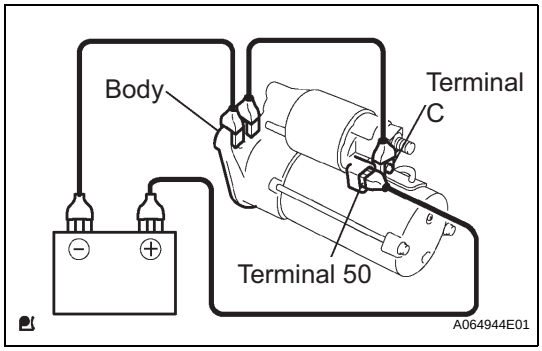

(b) Perform holding test.

(1) Check that the pinion gear does not return inward after the cable of terminal C is disconnected.

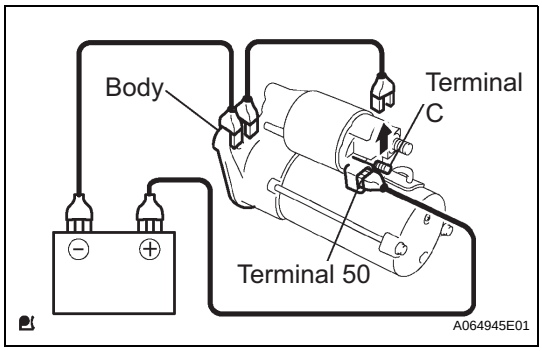

(c) Inspect the clutch pinion gear return.

(1) Disconnect the negative (-) lead from the starter body and move the pinion gear toward the armature.

(d) Perform the operation test without load.

(1) Connect the field coil lead wire to terminal C.
Torque: 9.8 N*m (100 kgf*cm, 87 in.*lbf)

(2) Clamp the starter in a vise.

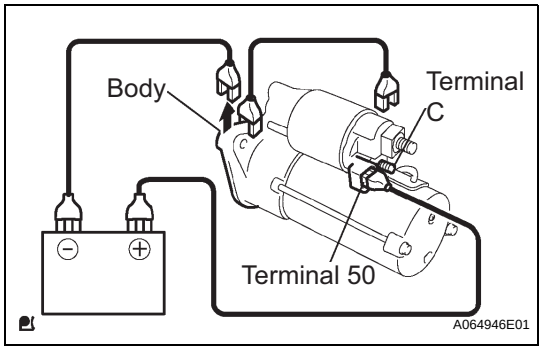

ST

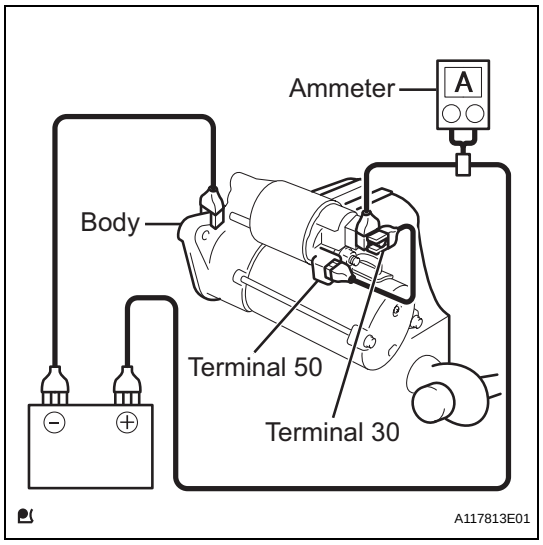

(3) Connect the battery and ammeter to the starter as shown in the illustration.
(4) Check that the ammeter indicates the specified current.
Standard current:
90A or less at 11.5V

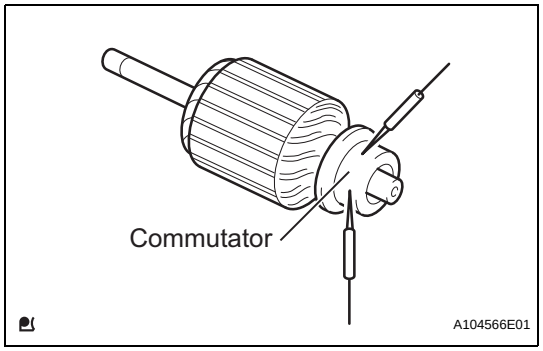

2. INSPECT STARTER ARMATURE ASSEMBLY

(a) Check the commutator for open circuits.
(1) Using an ohmmeter, check the resistance between the segments of the commutator.
Standard resistance:
Below 1 Ω
If the result is not as specified, replace the starter armature assembly.

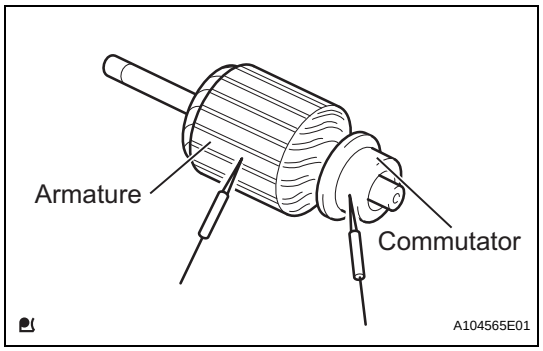

(b) Check the commutator for ground.
(1) Using an ohmmeter, check the resistance between the commutator and the armature core.
Standard resistance:
10 kΩ or higher
If the result is not as specified, replace the starter armature assembly.

(c) Check the commutator surface for dirt and burns.
If the surface is dirty or burnt, restore it with sandpaper (No. 400) or a lathe.

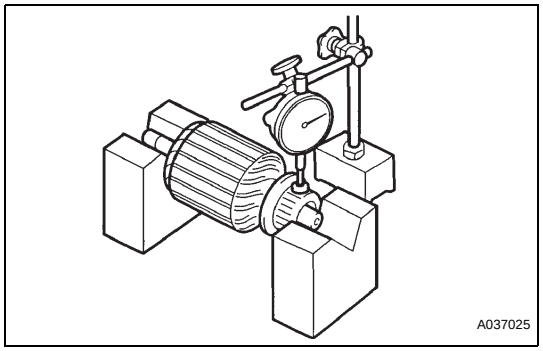

(d) Check for the commutator cirumference runout.
(1) Place the commutator on V-blocks.
(2) Using a dial indicator, measure the cirumference runout.
Maximum runout:
0.05 mm (0.0020 in.)
If the runout is greater than the maximum, replace the starter armature assembly.

ST

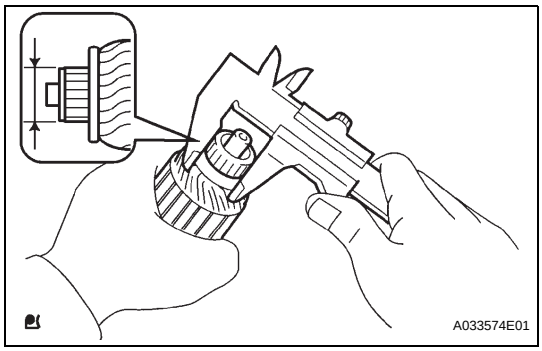

(e) Using vernier calipers, measure the commutator diameter.
Standard diameter:
28.0 mm (1.1024 in.)
Minimum diameter:
27.0 mm (1.0630 in.)
If the diameter is less than the minimum, replace the starter armature assembly.

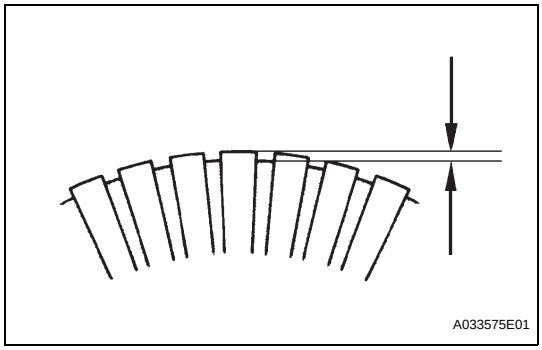

(f) Check that the undercut portion between the segments is free of foreign matter and measure its depth.
Standard undercut depth:
0.6 mm (0.0236 in.)
Minimum undercut depth:
0.2 mm (0.0079 in.)
If the undercut depth is less than the minimum, adjust it with a hacksaw blade.

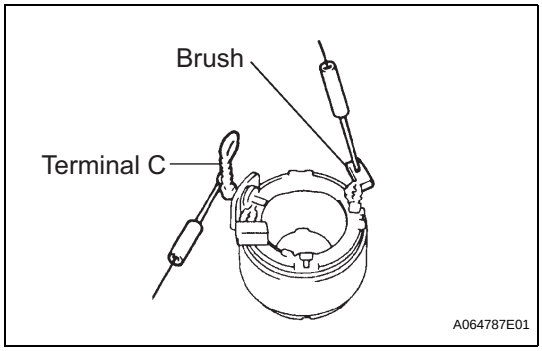

3. INSPECT STARTER YOKE ASSEMBLY

(a) Using an ohmmeter, check the resistance between terminal C and the field coil brush lead.
Standard resistance:
Below 1 Ω
If the result is not as specified, replace the starter yoke assembly.

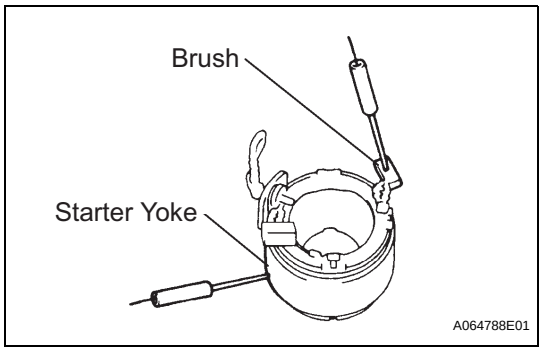

(b) Using an ohmmeter, check the resistance between the brush lead and the starter yoke.
Standard resistance:
10 kΩ or higher
If the result is not as specified, replace the starter yoke assembly.

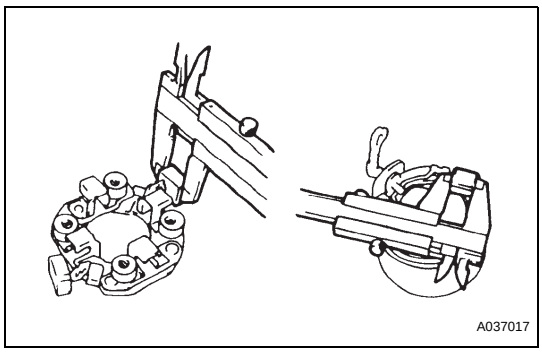

4. INSPECT BRUSH

(a) Using vernier calipers, measure the brush length.
Standard length:
14 mm (0.5511 in.)
Minimum length:
9 mm (0.3543 in.)
If the length is less than the minimum, replace the starter brush holder assembly and the starter yoke assembly.

ST

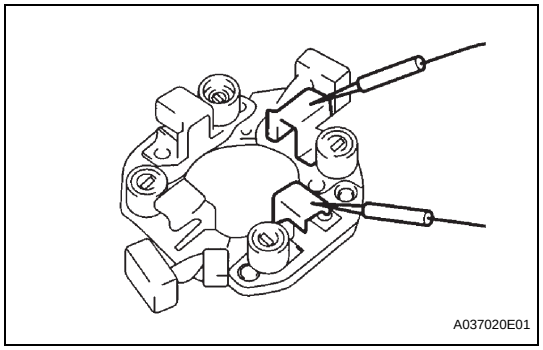

5. INSPECT STARTER BRUSH HOLDER ASSEMBLY

(a) Using an ohmmeter, measure the resistance between the positive (+) and negative (-) brush holders.

Standard resistance:

10 kΩ or higher

If the result is not as specified, replace the starter brush holder assembly.

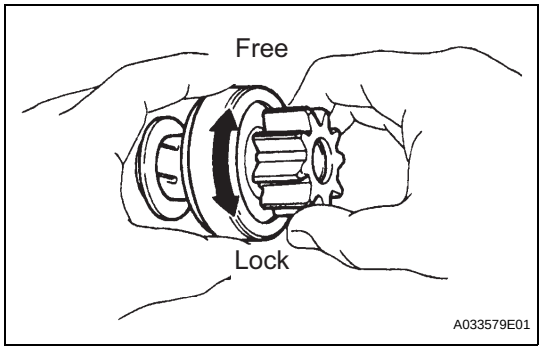

6. INSPECT STARTER CLUTCH SUB-ASSEMBLY

(a) Hold the starter clutch and rotate the pinion gear clockwise, and check that it turns freely. Try to rotate the pinion gear counterclockwise and check that it locks.

If necessary, replace the starter clutch sub-assembly.

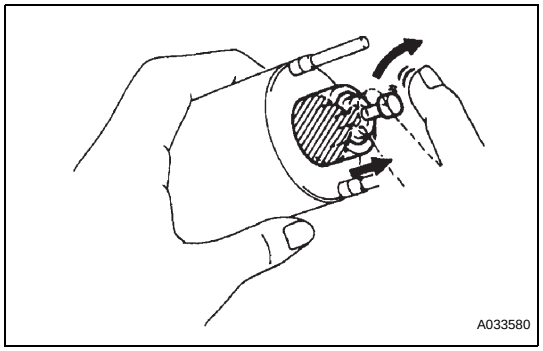

7. INSPECT MAGNET STARTER SWITCH ASSEMBLY

(a) Check the plunger.

(1) Push in the plunger and check that it returns quickly to its original position.

If necessary, replace the magnet starter switch assembly.

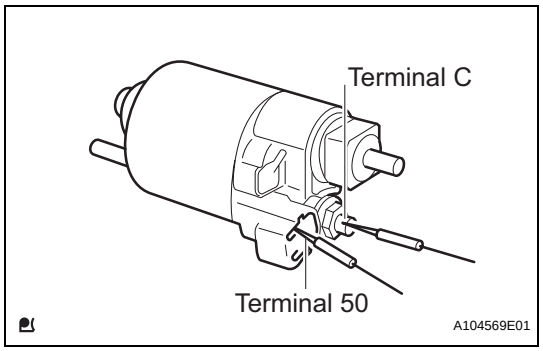

(b) Check the pull-in coil for open circuits.

(1) Using an ohmmeter, check the resistance between terminals 50 and C.

Standard resistance:

Below 1 Ω

If the result is not as specified, replace the magnet starter switch assembly.

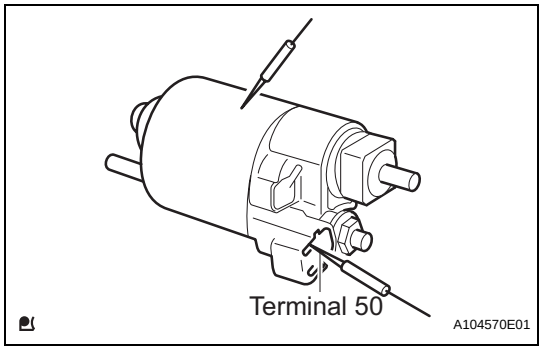

(c) Check whether the holding coil has open circuit.

(1) Using an ohmmeter, check the resistance between terminal 50 and the switch body.

Standard resistance:

Below 2 Ω

If the result is not as specified, replace the magnet starter switch assembly.

ST

REASSEMBLY

1. INSTALL STARTER CLUTCH SUB-ASSEMBLY

(a) Apply grease to the bushing and spline of the starter clutch and stop collar.

(b) Place the starter clutch and stop collar on the planetary shaft.

(c) Apply grease to a new snap ring, and install it onto the planetary shaft groove.

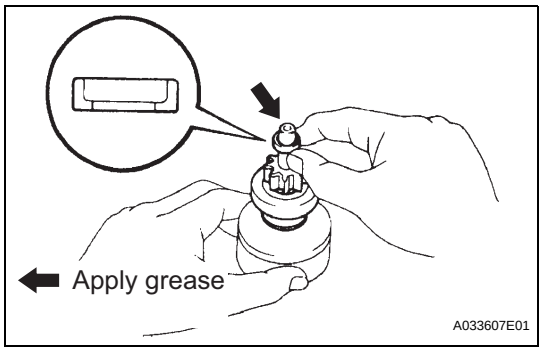

(d) Using a vise, compress the snap ring.

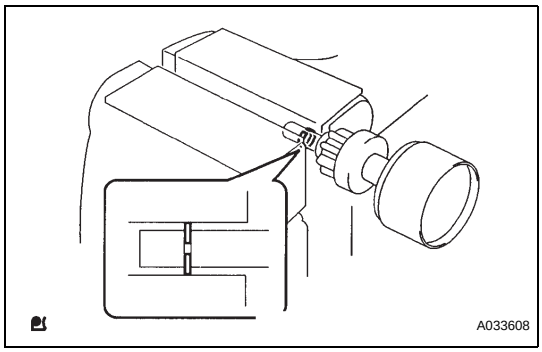

(e) Hold the starter clutch, tap the planetary shaft and install the stop collar onto the snap ring with a plastic-faced hammer.

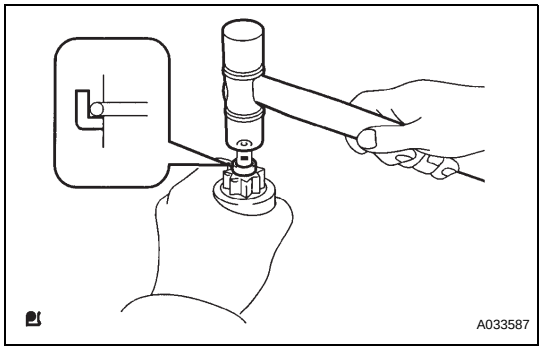

(f) Apply grease to the drive lever which is in contact with the starter pivot part of the drive lever.

(g) Install the drive lever onto the starter clutch.

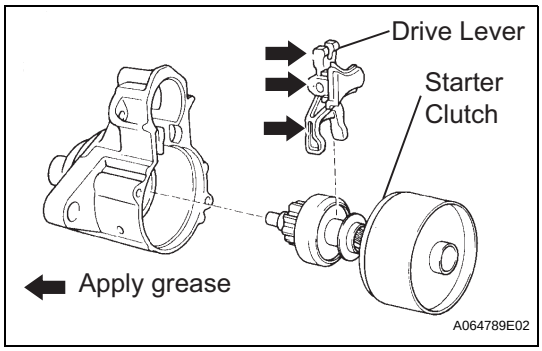

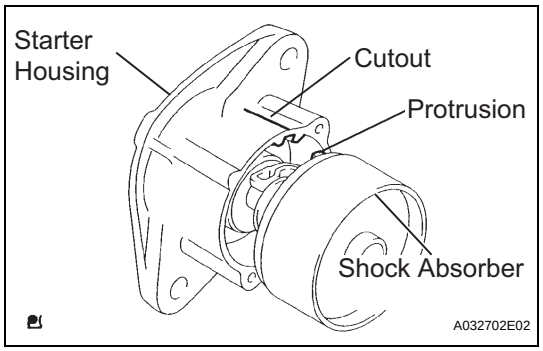

(h) Align the protrusion of the shock absorber with the cutout of the starter housing and install it.

2. INSTALL STARTER ARMATURE ASSEMBLY

3. INSTALL STARTER BRUSH HOLDER ASSEMBLY

(a) Install the brush holder.

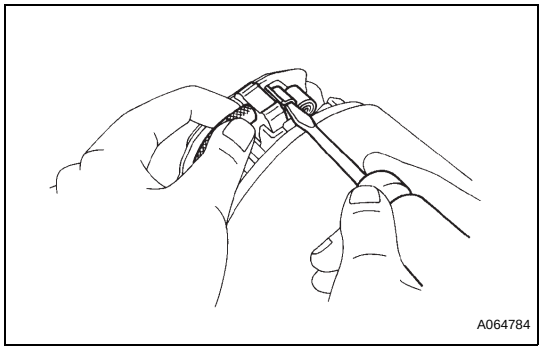

(b) Using a screwdriver, hold the brush spring back, and install the 4 brushes into the brush holder.

(c) Apply turbine oil with additives to the bearing of the end frame.

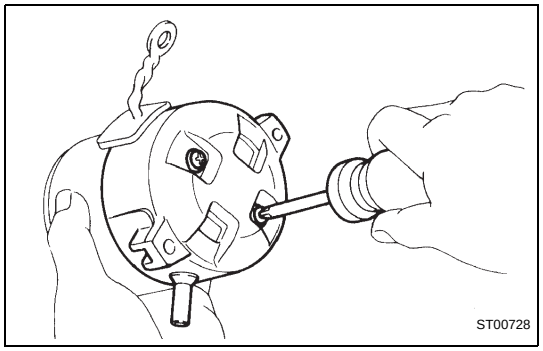

(d) Install the end frame with 2 new screws.
Torque: 1.5 N*m (15 kgf*cm, 13 in.*lbf)
NOTICE:
To avoid interference between the brush holder and the dust protector, push the commutator end frame away at an angle.

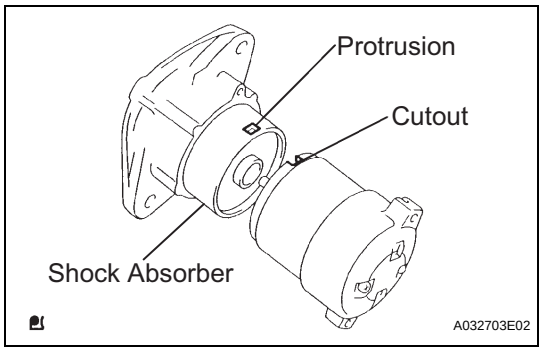

4. INSTALL STARTER YOKE ASSEMBLY

(a) Align the cutout of the field frame with the protrusion of the shock absorber.

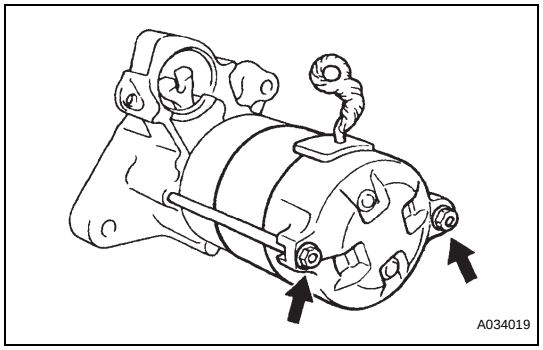

(b) Install the field frame and the armature assembly with the 2 through bolts.
Torque: 5.9 N*m (60 kgf*cm, 52 in.*lbf)

ST

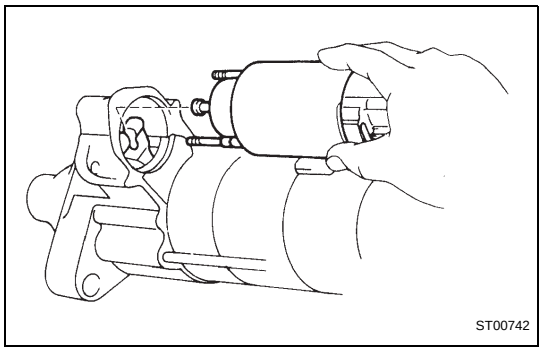

5. INSTALL MAGNET STARTER SWITCH ASSEMBLY

(a) Hang the plunger of the magnet starter switch assembly onto the driver lever from the upper side.

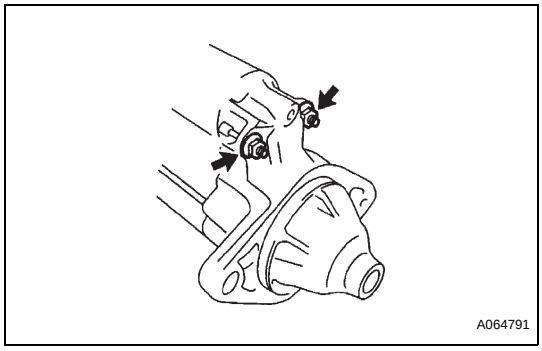

(b) Install the magnet starter switch assembly with the 2 nuts.
Torque: 8.3 N*m (85 kgf*cm, 73 in.*lbf)

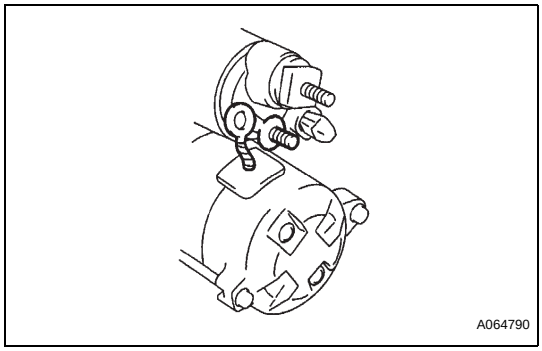

(c) Connect the lead wire to the terminal with the nut.
Torque: 9.8 N*m (100 kgf*cm, 87 in.*lbf)

ST

INSTALLATION

1. INSTALL STARTER ASSEMBLY

(a) Install the starter assembly with the 2 bolts.
Torque: 37 N*m (377 kgf*cm, 27 ft.*lbf)

(b) Connect the connector.

(c) Connect terminal 30 with the nut.
Torque: 9.8 N*m (100 kgf*cm, 87 in.*lbf)

(d) Close the terminal cap.

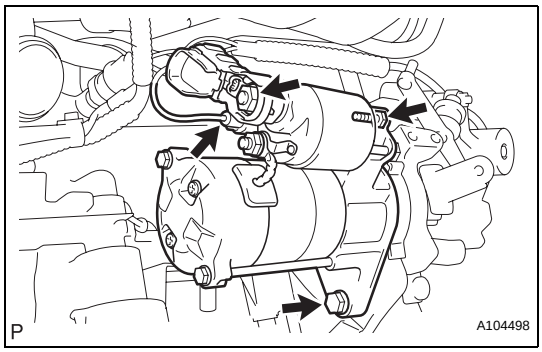

2. INSTALL FLYWHEEL HOUSING SIDE COVER

(a) Insert the protruding portion into the end of the cylinder block and while pushing it along the cylinder block, fit the 2 claws into the cylinder block.
NOTICE:
- **Make sure that the claw makes a click sound, indicating that it fits tightly.**
- **Replace the claw with a new one if it does not fit tightly or is deformed.**

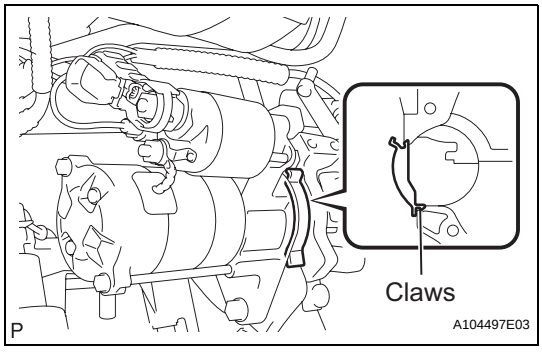

3. CONNECT CABLE TO NEGATIVE BATTERY TERMINAL
Torque: 5.4 N*m (55 kgf*cm, 48 in.*lbf)

STARTER (for 1.6 kW Type)

COMPONENTS

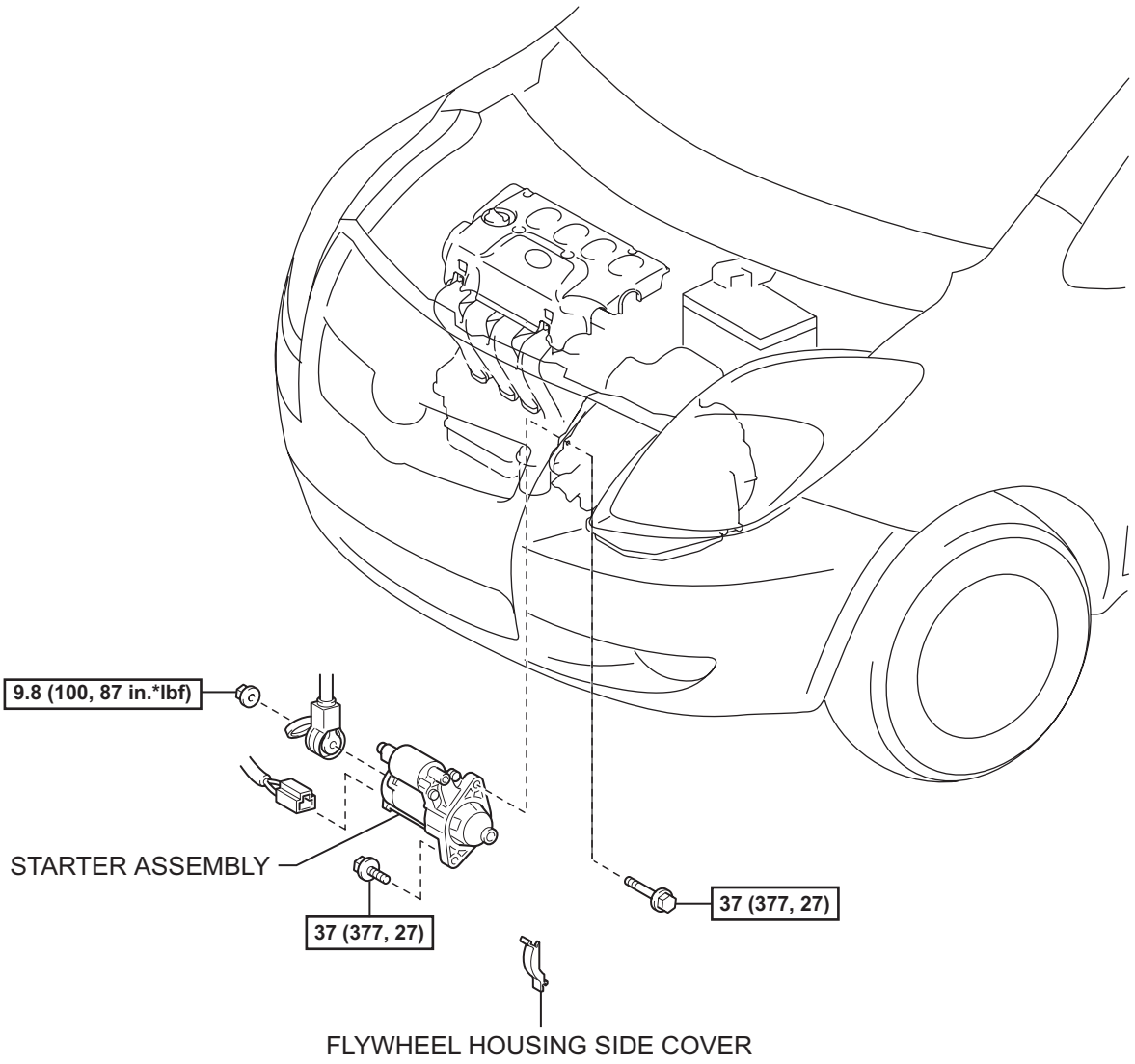

N*m (kgf*cm, ft*lbf) : Specified torque

A119211E03

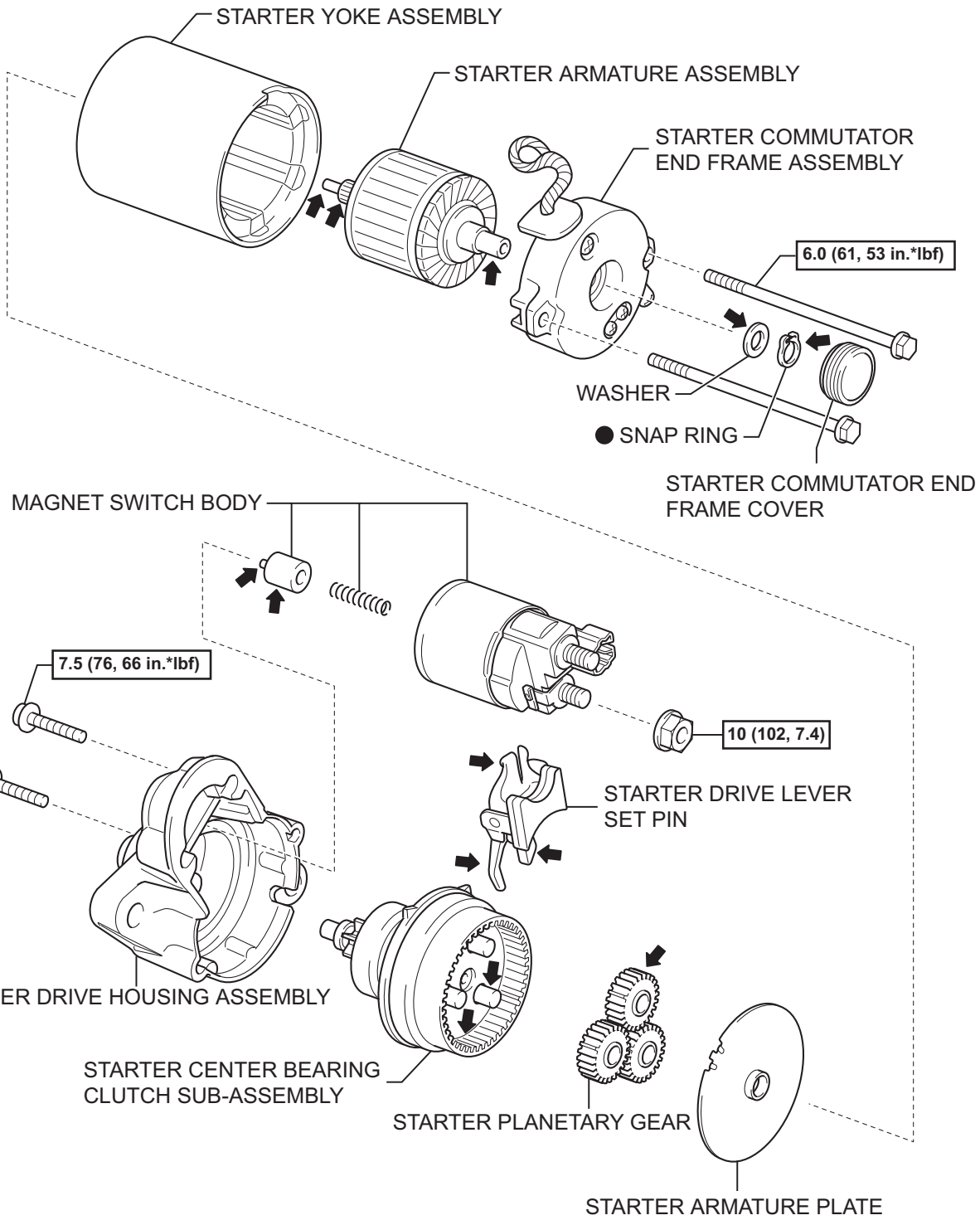

ST

N*m (kgf*cm, ft.*lbf) : Specified torque ⬅ Apply grease ● Non-reusable part

Y

A117346E03

REMOVAL

1. DISCONNECT CABLE FROM NEGATIVE BATTERY TERMINAL

2. REMOVE FLYWHEEL HOUSING SIDE COVER

(a) Disengage the claw while pushing it upward and remove the flywheel housing side cover.

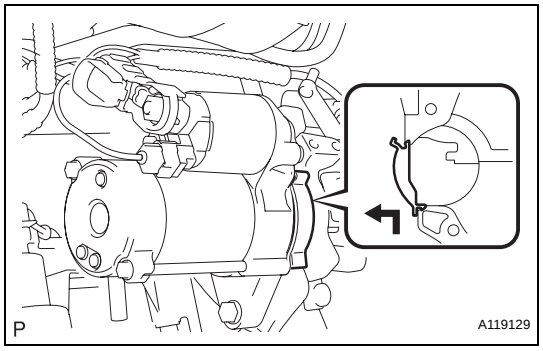

3. REMOVE STARTER ASSEMBLY

(a) Remove the terminal cap.
(b) Remove the nut and remove terminal 30.
(c) Disconnect the connector.
(d) Remove the 2 bolts and remove the starter assembly.

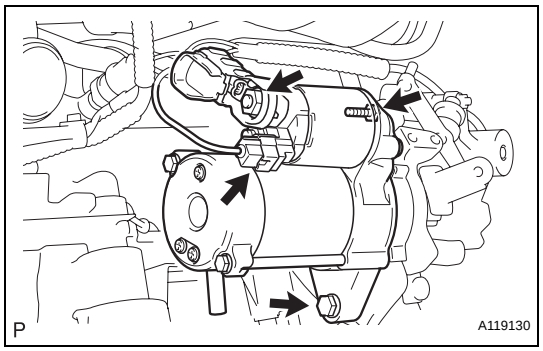

DISASSEMBLY

1. REMOVE MAGNET SWITCH BODY

(a) Remove the nut, and disconnect the lead wire from the magnet switch body.

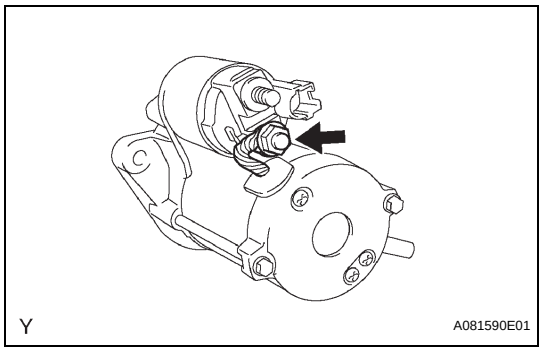

(b) Remove the 2 screws holding the magnet switch body onto the starter drive housing assembly.
(c) Remove the magnet switch body.
(d) Remove the return spring and the plunger.

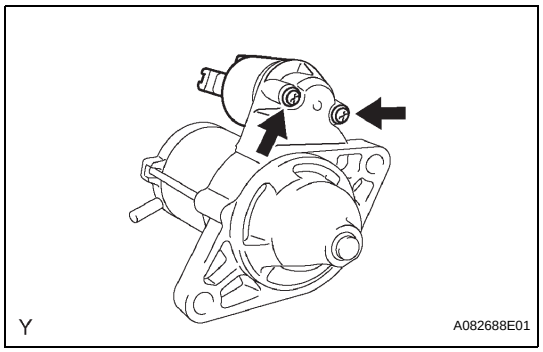

ST

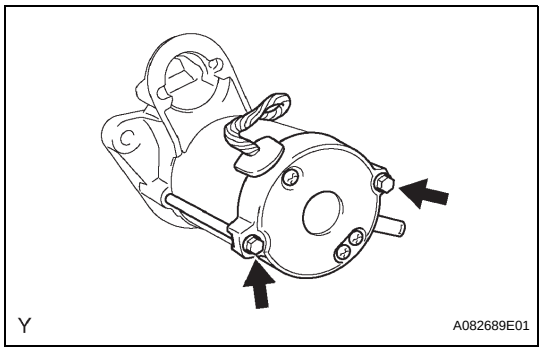

2. REMOVE STARTER YOKE ASSEMBLY

(a) Remove the 2 through bolts, and pull out the starter yoke assembly and starter commutator end frame assembly together.

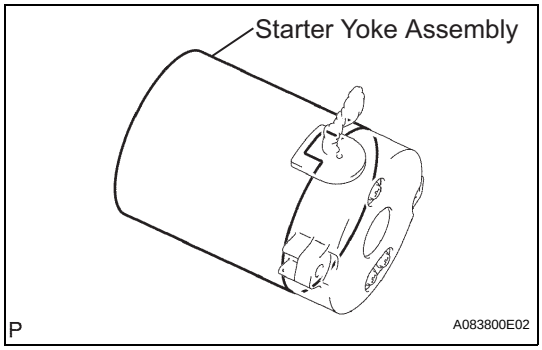

(b) Remove the starter yoke assembly from the starter commutator end frame assembly.

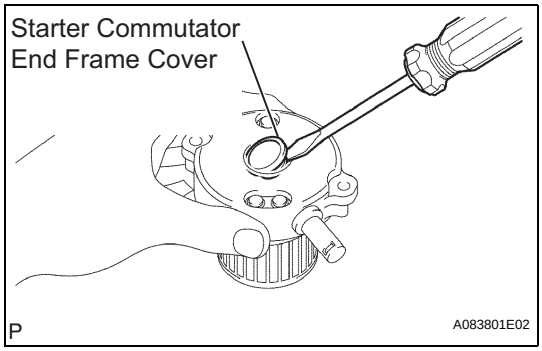

3. REMOVE STARTER COMMUTATOR END FRAME COVER

(a) Using a screwdriver, remove the starter commutator end frame cover.

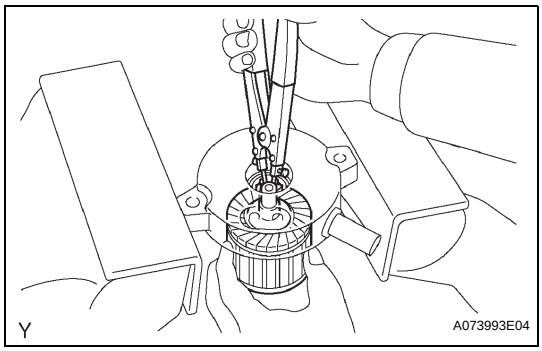

4. REMOVE STARTER ARMATURE ASSEMBLY

(a) Using snap ring pliers, remove the snap ring and the plate washer.

(b) Remove the starter armature assembly from the commutator end frame assembly.

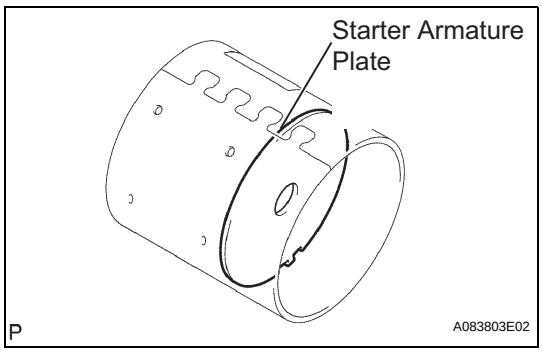

5. REMOVE STARTER ARMATURE PLATE

(a) Remove the starter armature plate from the starter yoke assembly.

ST

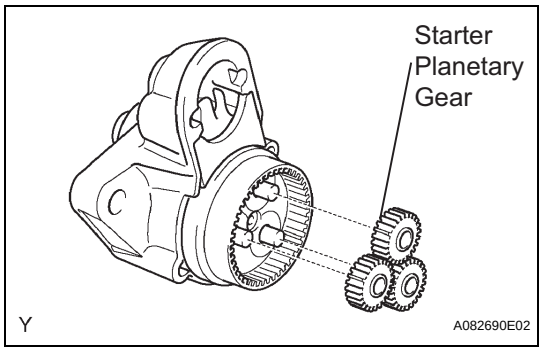

6. REMOVE STARTER PLANETARY GEAR

(a) Remove the 3 planetary gears.

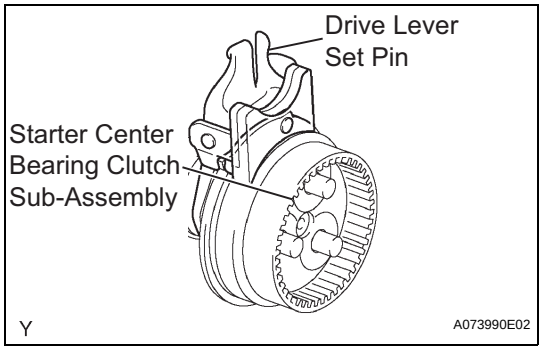

7. REMOVE STARTER CENTER BEARING CLUTCH SUB-ASSEMBLY

(a) Remove the starter center bearing clutch sub-assembly with drive lever set pin from the starter drive housing assembly.

(b) Remove the drive lever set pin from the starter center bearing clutch sub-assembly.

INSPECTION

1. INSPECT STARTER ASSEMBLY

CAUTION:
Perform each of the following tests within 3 to 5 seconds to prevent the coil from burning out.

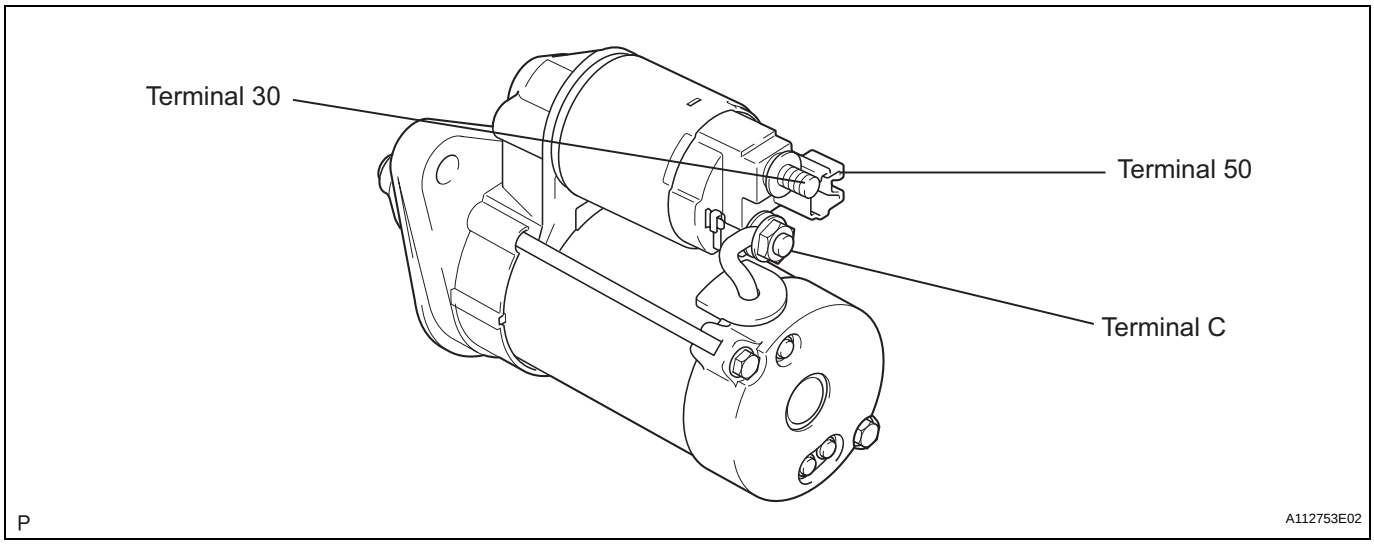

(a) Perform pull-in / holding test.

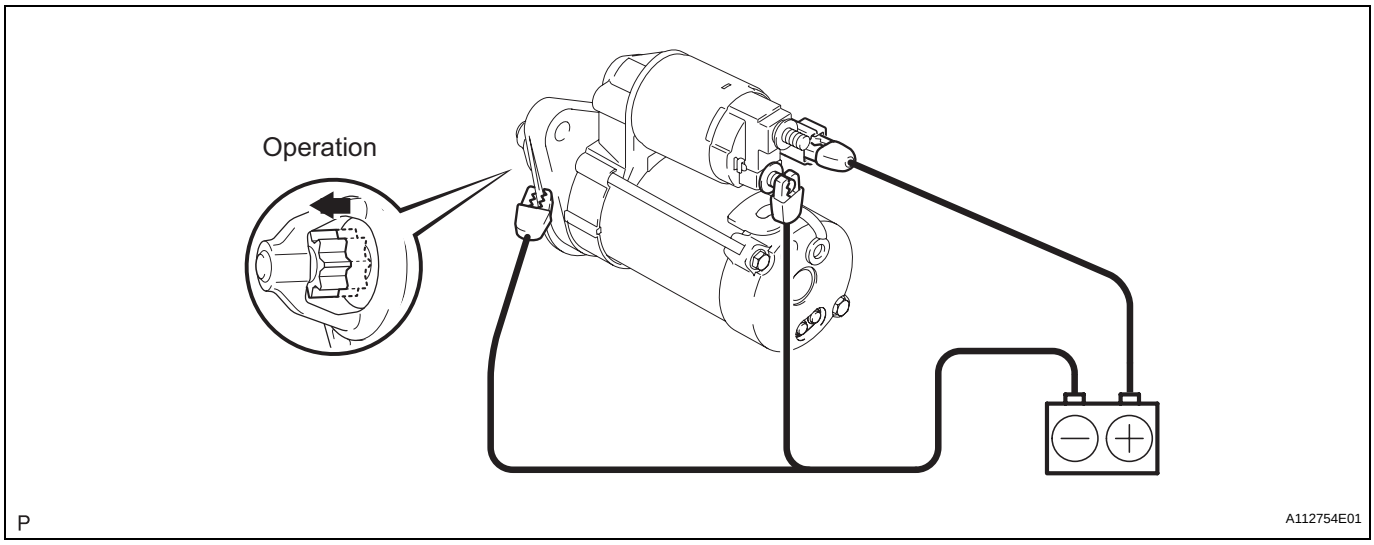

(1) Disconnect the lead wire from terminal C.
(2) Connect the battery to the magnet switch body as shown in the illustration. Then check that the clutch pinion gear moves outward.
If the result is not as specified, replace the magnet switch body.
(3) Disconnect the negative (-) lead from terminal C. Check that the pinion gear remains extended.
If the result is not as specified, replace the magnet switch body.

ST

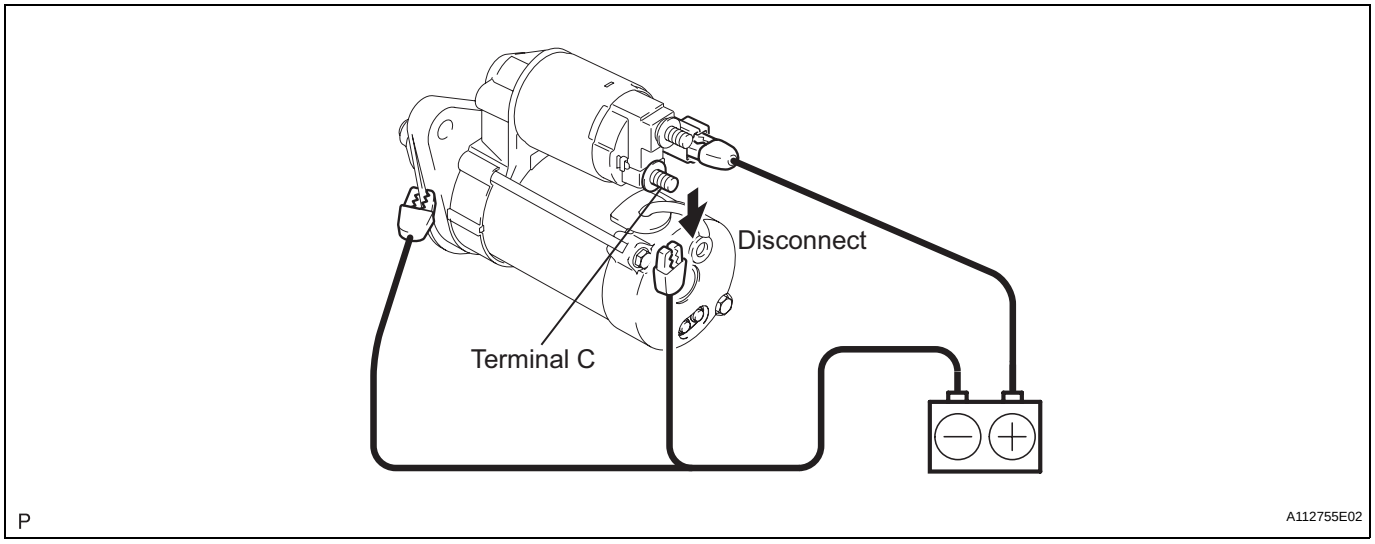

(4) Disconnect the negative (-) lead from the starter body. Check that the clutch pinion gear returns inward.
If the result is not as specified, replace the magnet switch body.

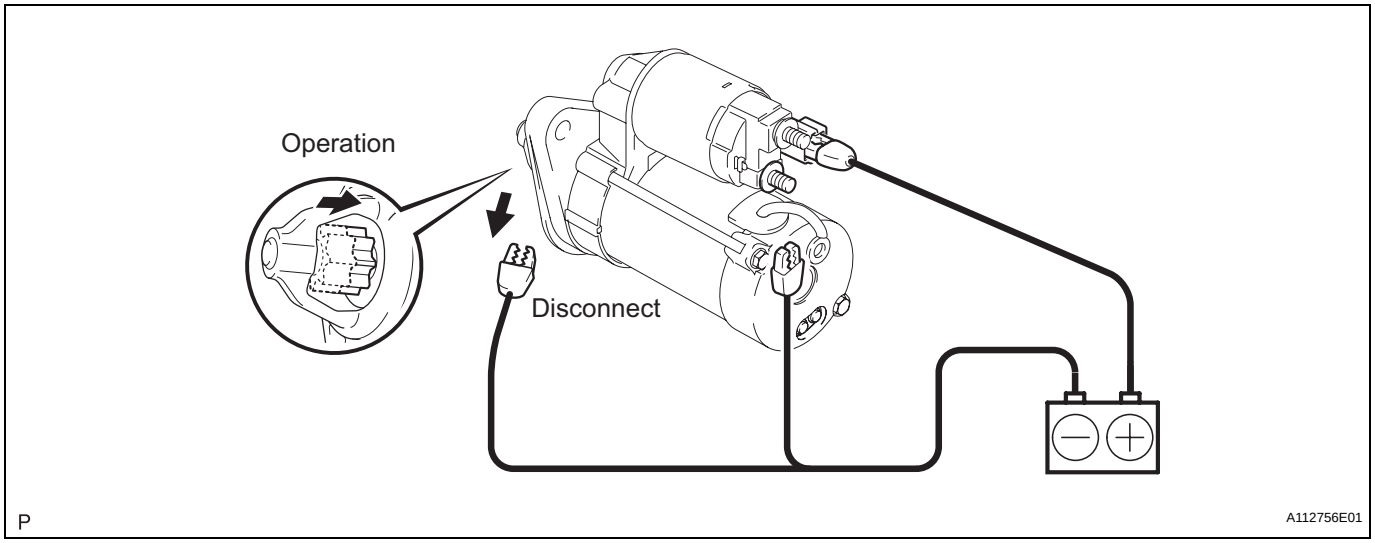

(b) Perform operation test without load.
(1) Connect the lead wire to terminal C.
Torque: 9.8 N*m (100 kgf*cm, 87 in.*lbf)
(2) Clamp the starter in a vise.
(3) Connect the battery and ammeter to the starter as shown in the illustration.
(4) Check that the starter rotates smoothly while the pinion gear is extended. Then measure the current.
Standard current:
90A or less at 11.5V
If the result is not as specified, replace the magnet switch body.

ST

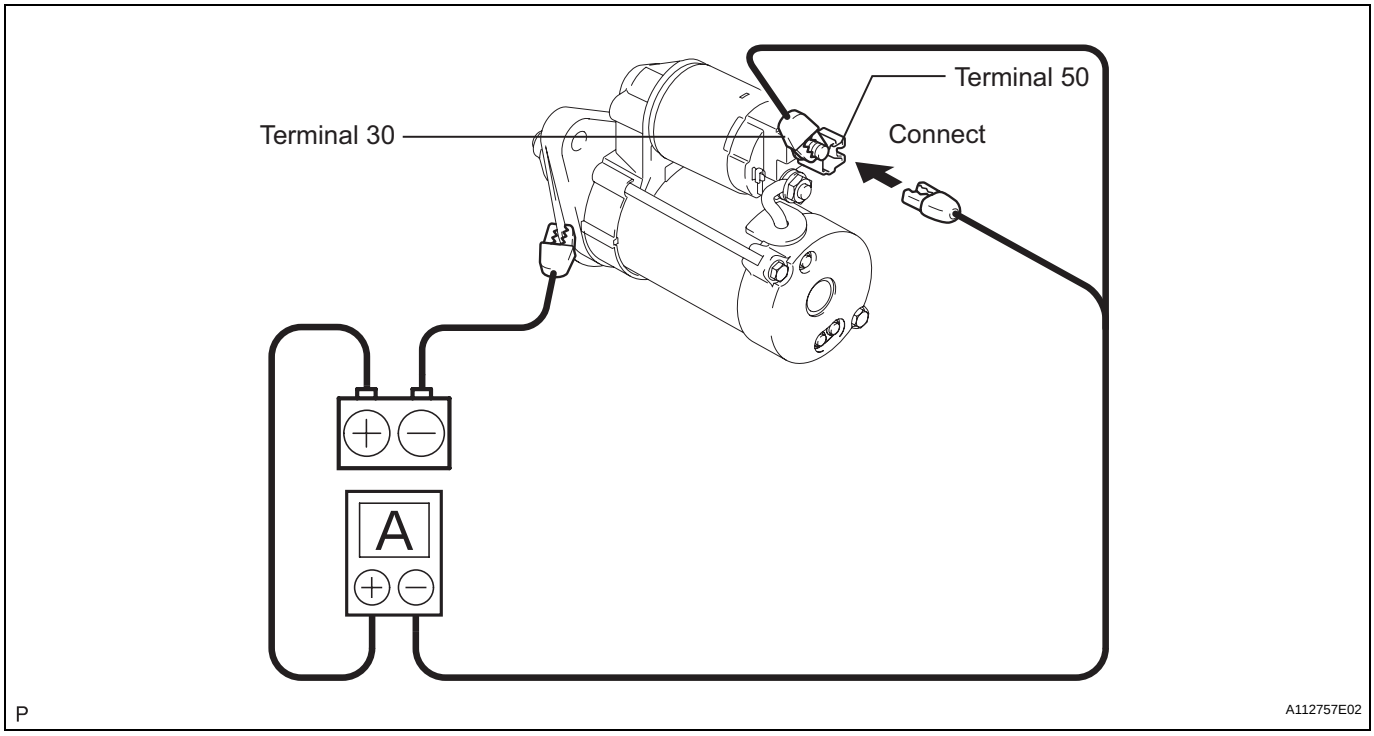

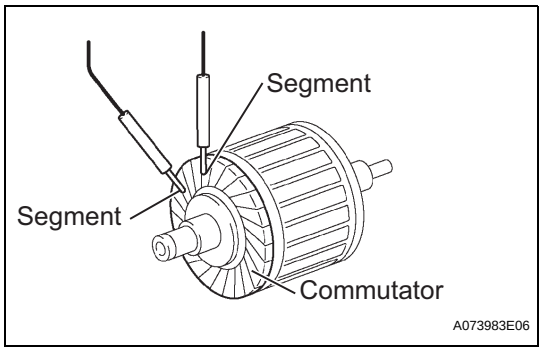

2. INSPECT STARTER ARMATURE ASSEMBLY

(a) Inspect the commutator for open circuits.

(1) Using an ohmmeter, check the resistance between the segments of the commutator.

Standard resistance:

1Ω or lower

If the result is not as specified, replace the starter armature assembly.

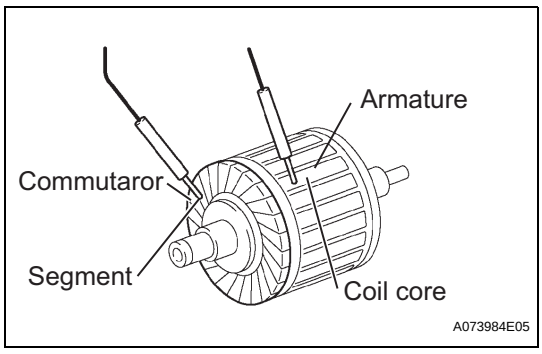

(b) Inspect the commutator for ground.

(1) Using an ohmmeter, check the resistance between the commutator and armature coil core.

Standard resistance:

10 kΩ or higher

If the result is not as specified, replace the starter armature assembly.

(c) Inspect the commutator surface for dirt and burns.

If the surface is dirty or burnt, restore it with 400-grit sandpaper.

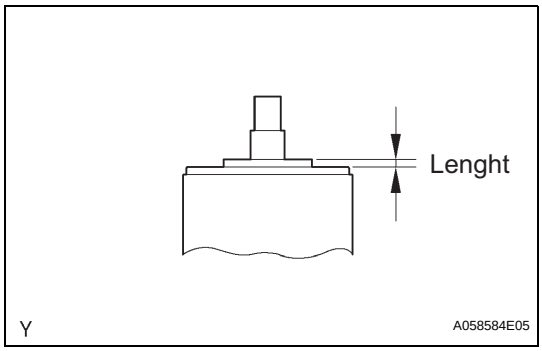

(d) Using vernier calipers, measure the commutator length.

Standard length:

3.1 mm (0.122 in.)

Maximum length:

3.8 mm (0.150 in.)

If the length is greater than the maximum, replace the armature assembly.

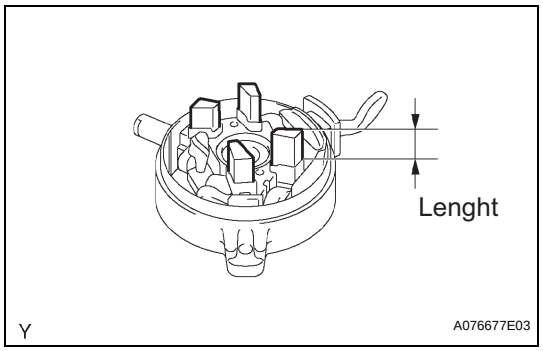

3. INSPECT STARTER COMMUTATOR END FRAME ASSEMBLY

(a) Using vernier calipers, measure the brush length.

Standard length:
9.0 mm (0.354 in.)
Minimum length:
4.0 mm (0.158 in.)

If the length is less than the minimum, replace the starter commutator end frame assembly.

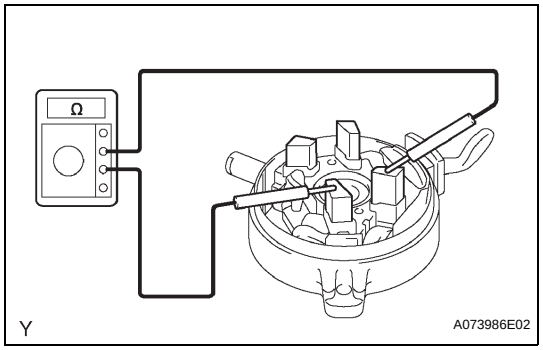

(b) Inspect the brush holder.

(1) Using an ohmmeter, check the resistance between the positive (+) and negative (-) brushes.

Standard resistance:
10 kΩ or higher

If the result is not as specified, replace the starter commutator end frame assembly.

4. INSPECT STARTER CENTER BEARING CLUTCH SUB-ASSEMBLY

(a) Inspect the gear teeth on the planetary gear, internal gear and starter clutch for wear and damage.
If damaged, replace the starter planetary gear or starter center bearing clutch sub-assembly. Also check the starter planetary gear for wear or damage.

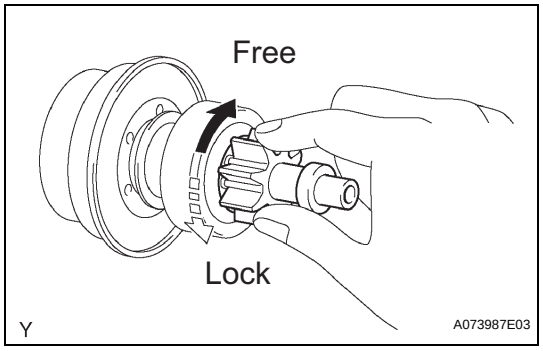

(b) Inspect the starter clutch.

(1) Rotate the clutch pinion gear clockwise and check that it turns freely. Try to rotate the clutch pinion gear counterclockwise and check that it locks.
If necessary, replace the starter center bearing clutch sub-assembly.

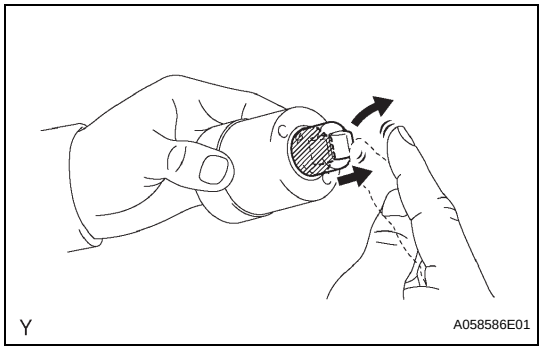

5. INSPECT MAGNET SWITCH BODY

(a) Inspect the plunger.

(1) Push in the plunger and check that it returns quickly to its original position.
If necessary, replace the magnet switch body.

ST

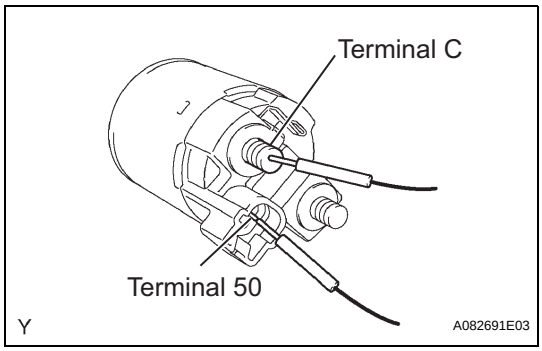

(b) Inspect the pull-in coil for open circuits.
(1) Using an ohmmeter, check the resistance between terminals 50 and C.
Standard resistance:
1Ω or lower
If the result is not as specified, replace the magnet switch body.

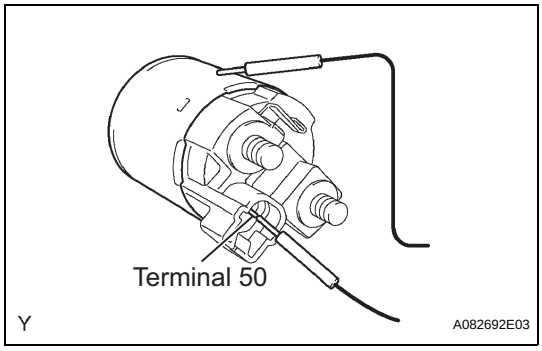

(c) Check whether the holding coil has an open circuit.
(1) Using an ohmmeter, check the resistance between terminal 50 and the magnet switch body.
Standard resistance:
2Ω or lower
If the result is not as specified, replace the magnet switch body.

REASSEMBLY

1. INSTALL STARTER CENTER BEARING CLUTCH SUB-ASSEMBLY

(a) Apply grease to the drive lever set pin which is in contact with the starter pivot part of the drive lever set pin.

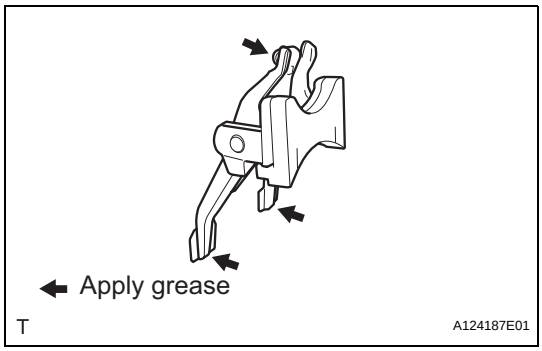

(b) Install the drive lever set pin into the starter center bearing clutch sub-assembly.

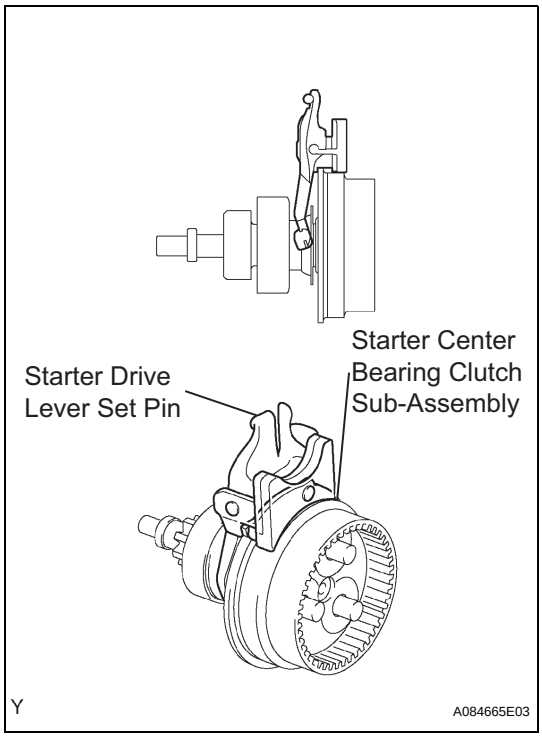

ST

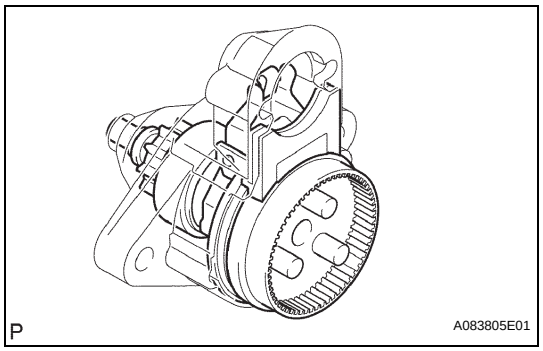

(c) Install the starter center bearing clutch sub-assembly together with the starter drive lever set pin into the starter drive housing assembly.

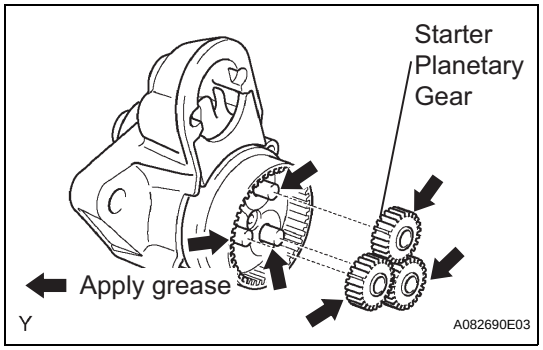

2. INSTALL STARTER PLANETARY GEAR

(a) Apply grease to the planetary gears and pin parts of the planetary shaft.

(b) Install the 3 planetary gears.

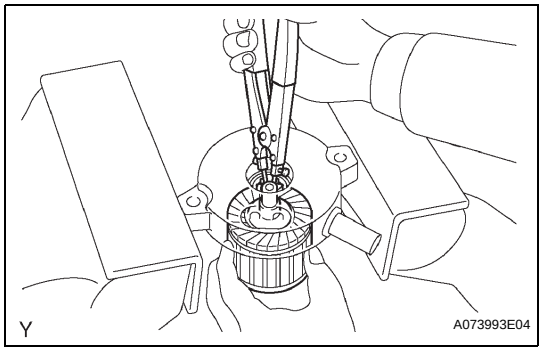

3. INSTALL STARTER ARMATURE ASSEMBLY

(a) Apply grease to the washer plate and the armature shaft.

(b) Install the armature shaft onto the starter commutator end frame assembly.

(c) Using snap ring pliers, install the plate washer and a new snap ring.

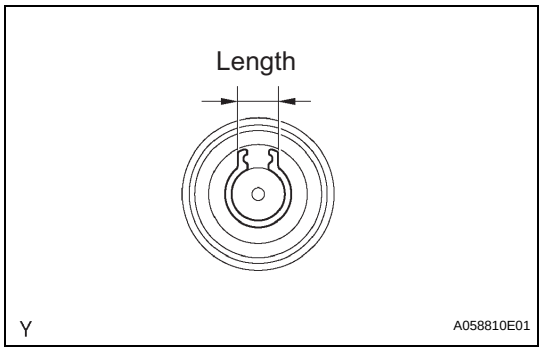

(d) Using vernier calipers, measure the snap ring.
Maximum length:
5.0 mm (0.197 in.)
If the length is greater than the maximum, replace the snap ring.

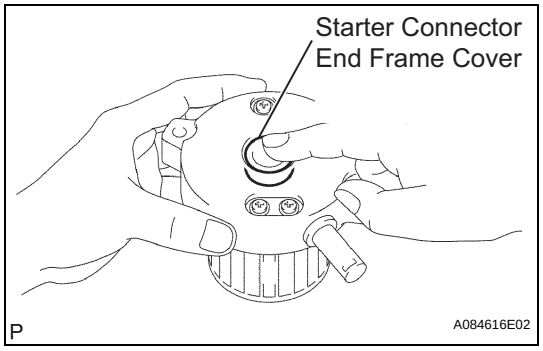

4. INSTALL STARTER COMMUTATOR END FRAME COVER

(a) Install the starter commutator end frame cover onto the starter commutator end frame assembly.

ST

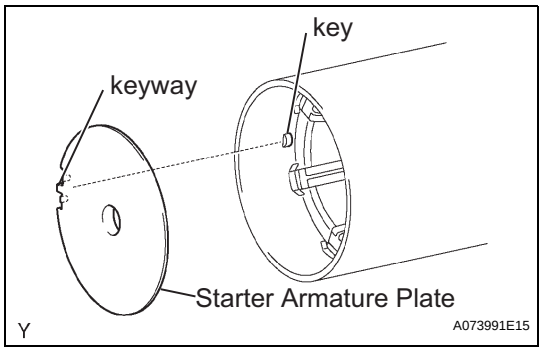

5. INSTALL STARTER ARMATURE PLATE

(a) Insert the starter armature plate into the starter yoke assembly.

(b) Align the cutout of the plate with the inside protrusion of the starter yoke assembly, and install the plate.

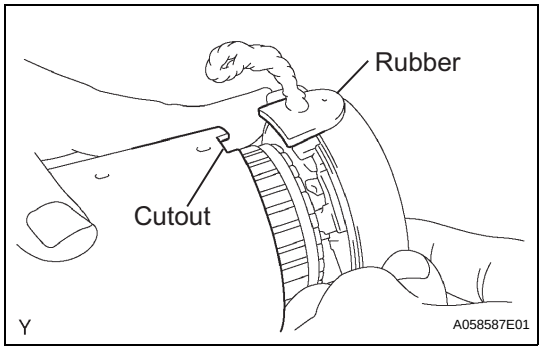

6. INSTALL STARTER COMMUTATOR END FRAME ASSEMBLY

(a) Align the starter commutator rubber end frame with the cutout of the starter yoke assembly.

(b) Install the starter yoke assembly onto the starter commutator end frame assembly.

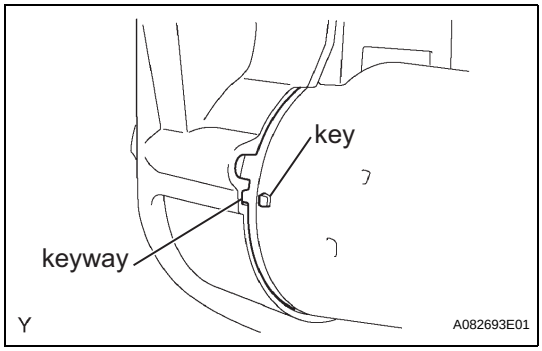

7. INSTALL STARTER YOKE ASSEMBLY

(a) Align the key located on the starter yoke assembly with the keyway of the starter drive housing assembly.

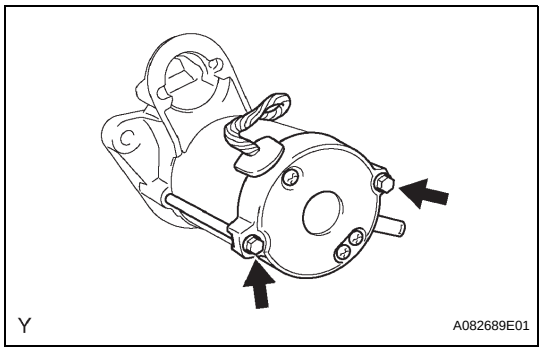

(b) Install the starter yoke assembly with the 2 through bolts.
Torque: 6.0 N*m (61 kgf*cm, 53 in.*lbf)

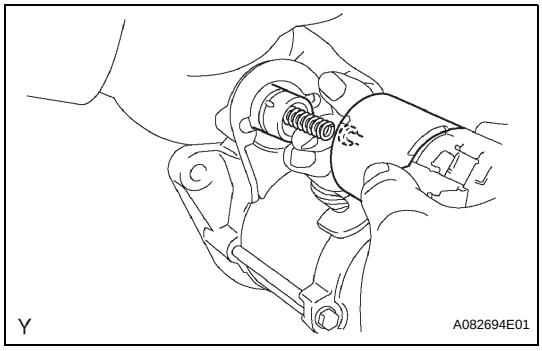

8. INSTALL MAGNET SWITCH BODY

(a) Apply grease to the plunger and the hook.

(b) Put the plunger hook of the magnet switch body on the starter drive lever set pin.

(c) Install the plunger and the return spring as shown in the illustration.

ST

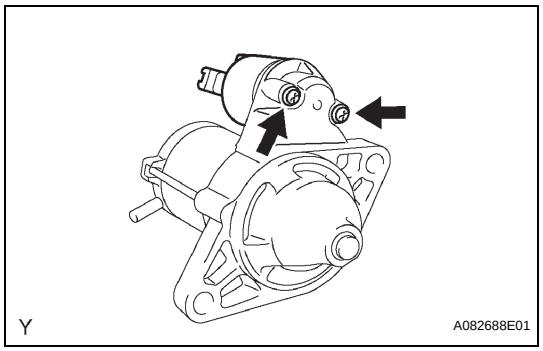

(d) Install the magnet switch body with the 2 screws.
Torque: 7.5 N*m (76 kgf*cm, 66 in.*lbf)

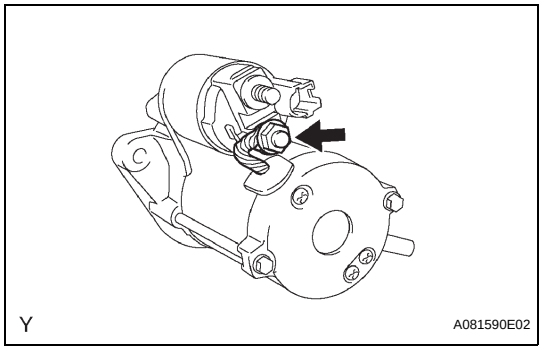

(e) Connect the lead wire to the terminal C with the nut.
Torque: 10 N*m (102 kgf*cm, 7.4 ft.*lbf)

INSTALLATION

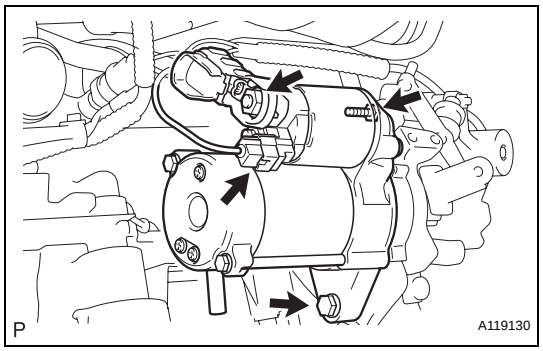

1. INSTALL STARTER ASSEMBLY

(a) Install the starter assembly with the 2 bolts.
Torque: 37 N*m (377 kgf*cm, 27 ft.*lbf)

(b) Connect the connector.

(c) Connect terminal 30 with the nut.
Torque: 9.8 N*m (100 kgf*cm, 87 in.*lbf)

(d) Close the terminal cap.

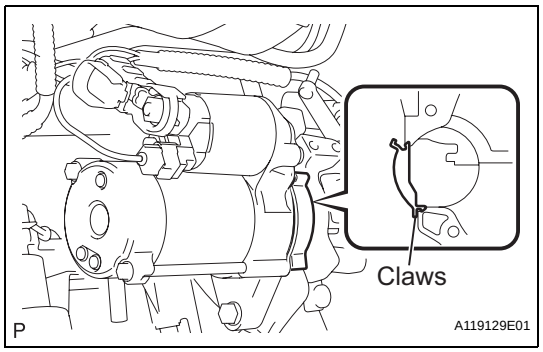

2. INSTALL FLYWHEEL HOUSING SIDE COVER

(a) Insert the protruding portion into the end of the cylinder block and while pushing it along the cylinder block, fit the 2 claws into the cylinder block.
NOTICE:
- **Make sure that the claw makes a click sound, indicating that it fits tightly.**
- **Replace the claw with a new one if it does not fit tightly or is deformed.**

3. CONNECT CABLE TO NEGATIVE BATTERY TERMINAL
Torque: 5.4 N*m (55 kgf*cm, 48 in.*lbf)

ST

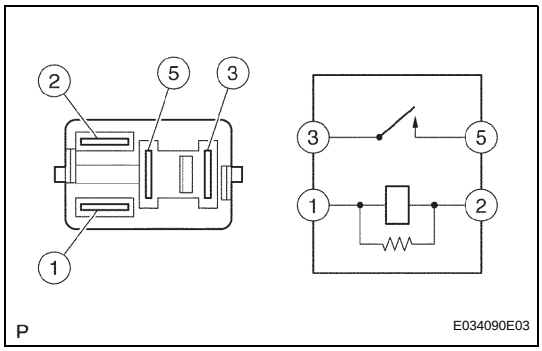

STARTER RELAY

ON-VEHICLE INSPECTION

1. INSPECT STARTER RELAY ASSEMBLY

(a) Check the resistance.

(1) Using an ohmmeter, measure the resistance between the terminals.

Standard resistance

Tester Connection	Specified Condition
3 - 5	Below 1 Ω (when battery voltage applied to terminals 1 and 2)
	10 kΩ or higher

If the result is not as specified, replace the relay.

ACC CUT RELAY

COMPONENTS

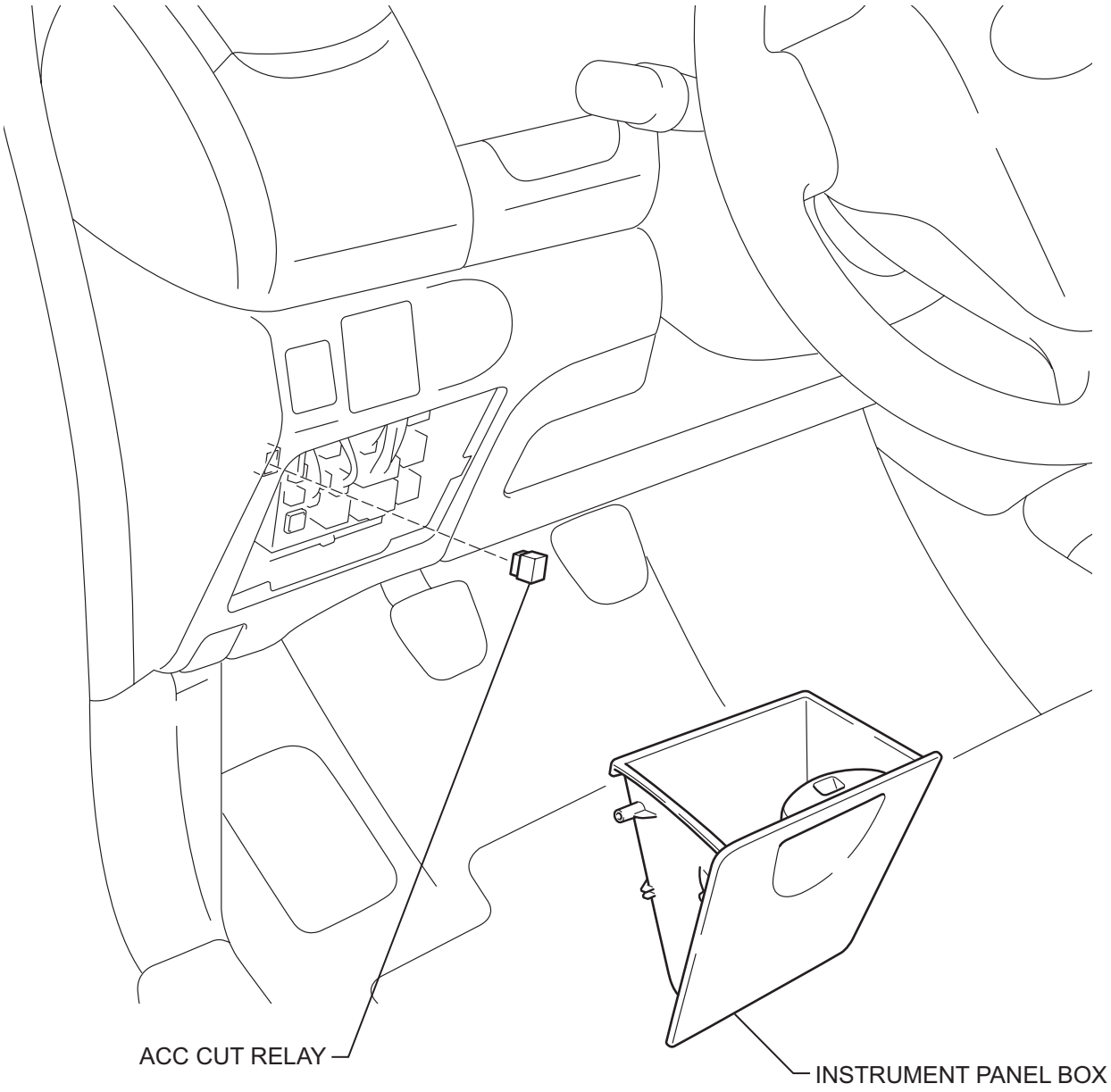

N

A115434E02

REMOVAL

1. **DISCONNECT CABLE FROM NEGATIVE BATTERY TERMINAL**
2. **REMOVE INSTRUMENT PANEL BOX (See page IP-70)**
3. **REMOVE ACC CUT RELAY**
   (a) Remove the ACC cut relay.

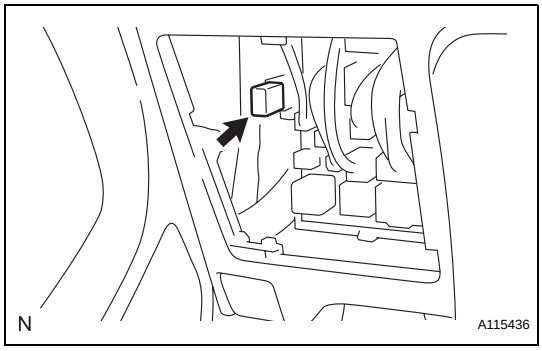

INSPECTION

1. **INSPECT ACC CUT RELAY**
   (a) Check the resistance.
      (1) Using an ohmmeter, measure the resistance between the terminals.
      Standard resistence

Tester Connection	Specified Condition
3 - 4	Below 1 Ω
	10 kΩ or higher (when battery voltage applied to terminals 1 and 2)
3 - 5	Below 1 Ω (when battery voltage applied to terminals 1 and 2)
	10 kΩ or higher

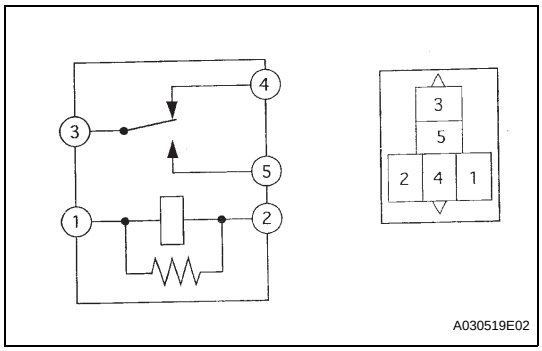

If the result is not as specified, replace the relay.

INSTALLATION

1. **INSTALL ACC CUT RELAY**
   (a) Install the ACC cut relay.
2. **INSTALL INSTRUMENT PANEL BOX (See page IP-78)**
3. **CONNECT CABLE TO NEGATIVE BATTERY TERMINAL**
   Torque: 5.4 N*m (55 kgf*cm, 48 in.*lbf)

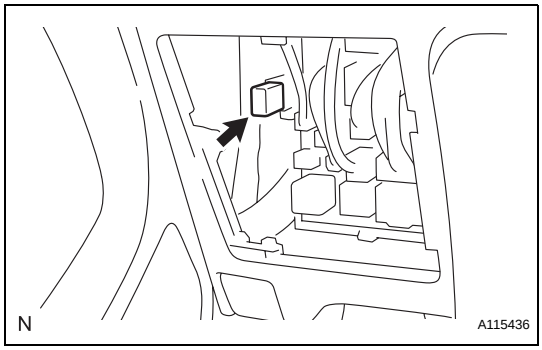

ST

INTEGRATION RELAY

COMPONENTS

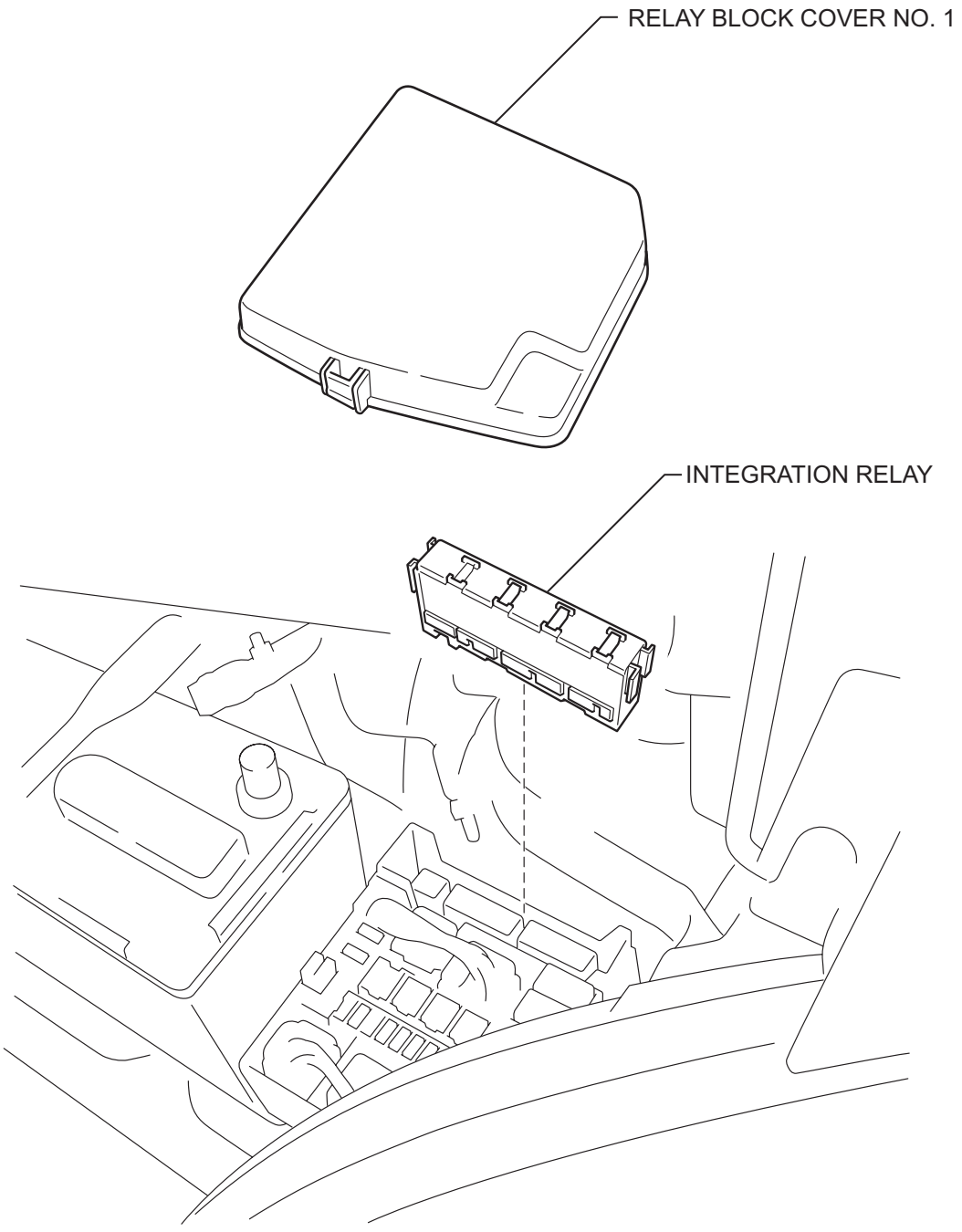

N

A115401E01

REMOVAL

1. **DISCONNECT CABLE FROM NEGATIVE BATTERY TERMINAL**
2. **REMOVE RELAY BLOCK COVER NO. 1**
3. **REMOVE INTEGRATION RELAY**
   (a) Using a screwdriver with its tip wrapped in protective tape, disengage the 2 claws and disconnect the integration relay.
   (b) Disconnect the 3 connectors.

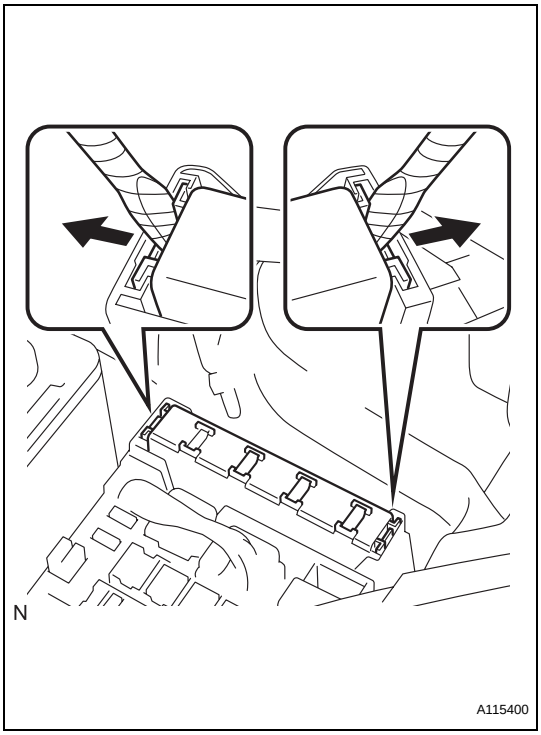

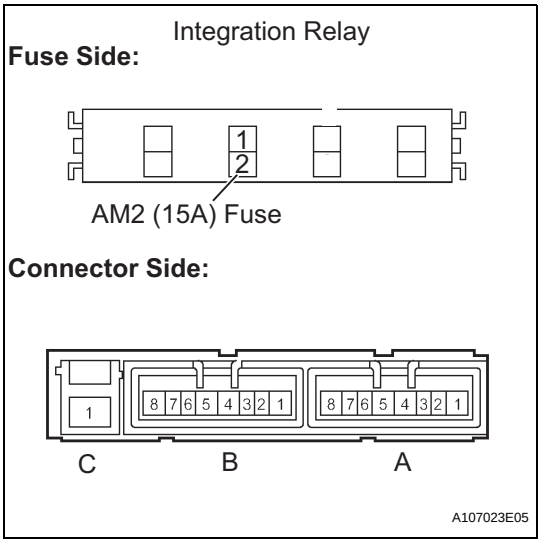

INSPECTION

1. **INSPECT INTEGRATION RELAY**
   (a) Inspect the AM2 (15A) fuse.
      (1) Disconnect the fuse. Using an ohmmeter, measure the resistance of the fuse.
      Standard resistance

Tester Connection	Specified condition
1 - 2	Below 1 Ω

   (b) Inspect the IG2 relay.
      (1) Using an ohmmeter, measure the resistance between the terminals.
      Standard resistance

Tester Connection	Specified condition
B1 - C1	Below 1 Ω
B4 - C1	Below 1 Ω (when battery voltage applied to terminals 1 and 2)
	10 kΩ or higher

NOTICE:
While using the battery for the inspection, do not bring the positive and negative tester probes too close to each other as a short circuit may occur.

INSTALLATION

1. **INSTALL INTEGRATION RELAY**
   (a) Connect the 3 connectors.
   (b) Attach the integration relay to the engine room relay block.
2. **INSTALL RELAY BLOCK COVER NO. 1**
3. **CONNECT CABLE TO NEGATIVE BATTERY TERMINAL**
   Torque: 5.4 N*m (55 kgf*cm, 48 in.*lbf)

IGNITION RELAY

COMPONENTS

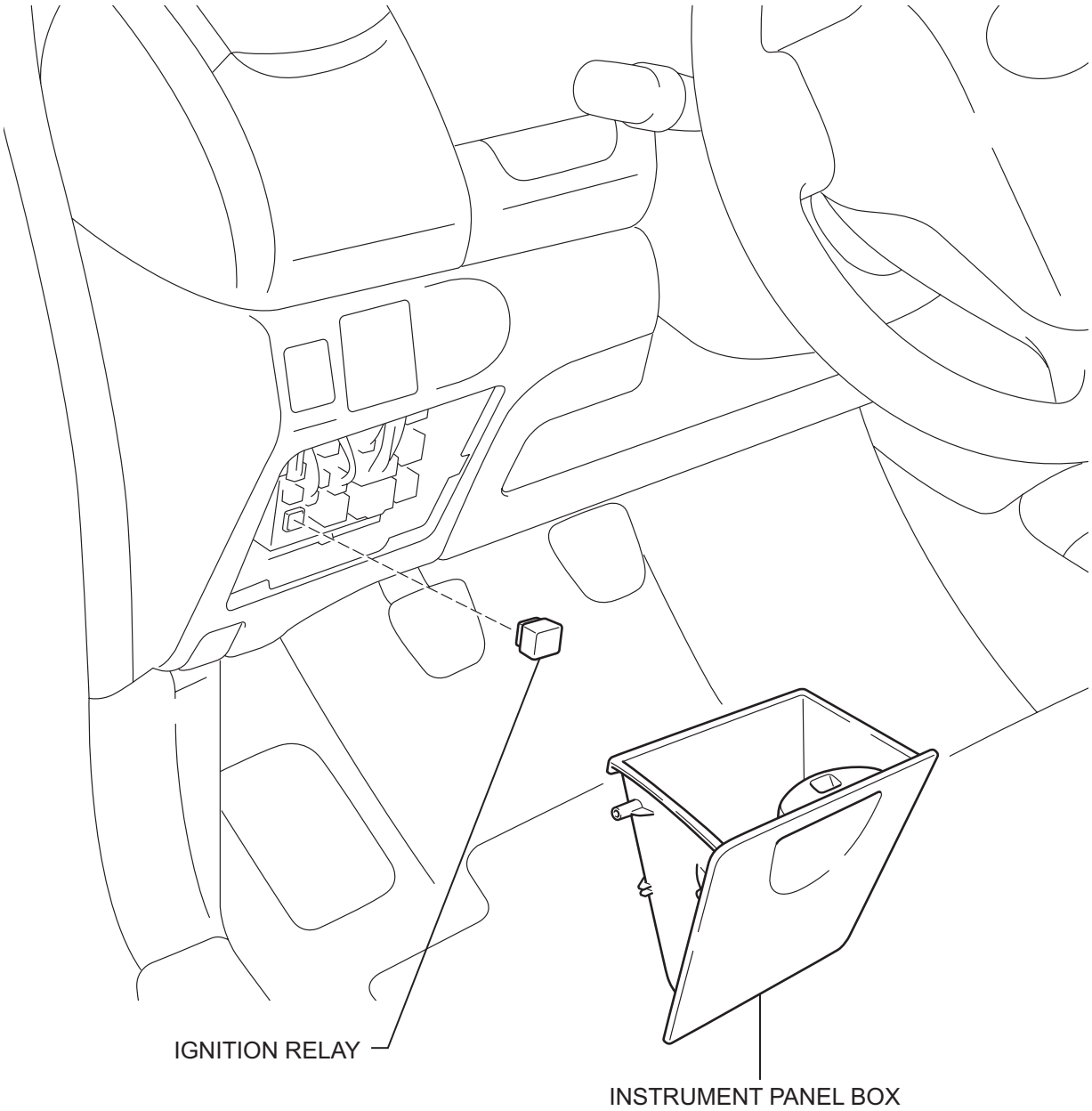

N

A115435E01

REMOVAL

1. **DISCONNECT CABLE FROM NEGATIVE BATTERY TERMINAL**
2. **REMOVE INSTRUMENT PANEL BOX (See page IP-70)**
3. **REMOVE IGNITION RELAY**
   (a) Remove the ignition relay.

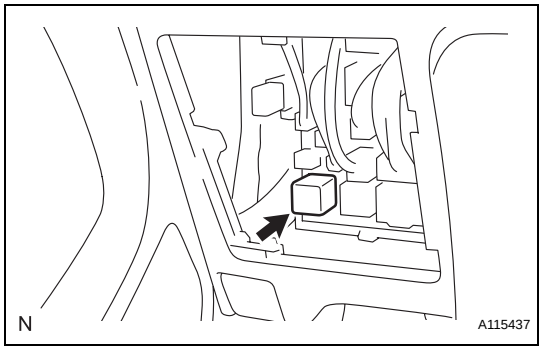

INSPECTION

1. **INSPECT IGNITION RELAY**
   (a) Check the resistance.
      (1) Using an ohmmeter, measure the resistance between the terminals.
      Standard resistance

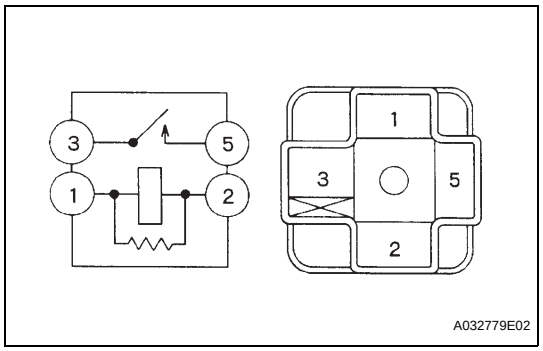

Tester Connection	Specified Condition
3 - 5	Below 1 Ω (when battery voltage applied to terminals 1 and 2)
	10 kΩ or higher

If the result is not as specified, replace the relay.

INSTALLATION

1. **INSTALL IGNITION RELAY**
   (a) Install the ignition relay.
2. **INSTALL INSTRUMENT PANEL BOX (See page IP-78)**
3. **CONNECT CABLE TO NEGATIVE BATTERY TERMINAL**
   Torque: 5.4 N*m (55 kgf*cm, 48 in.*lbf)

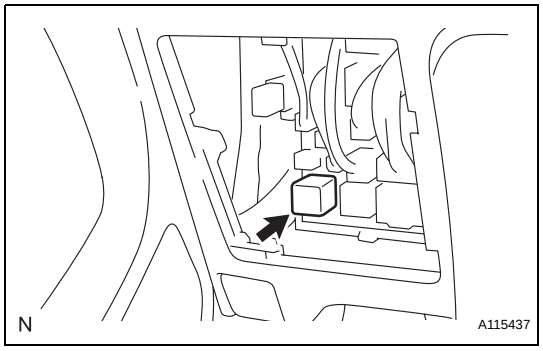

ST

IGNITION SWITCH

COMPONENTS

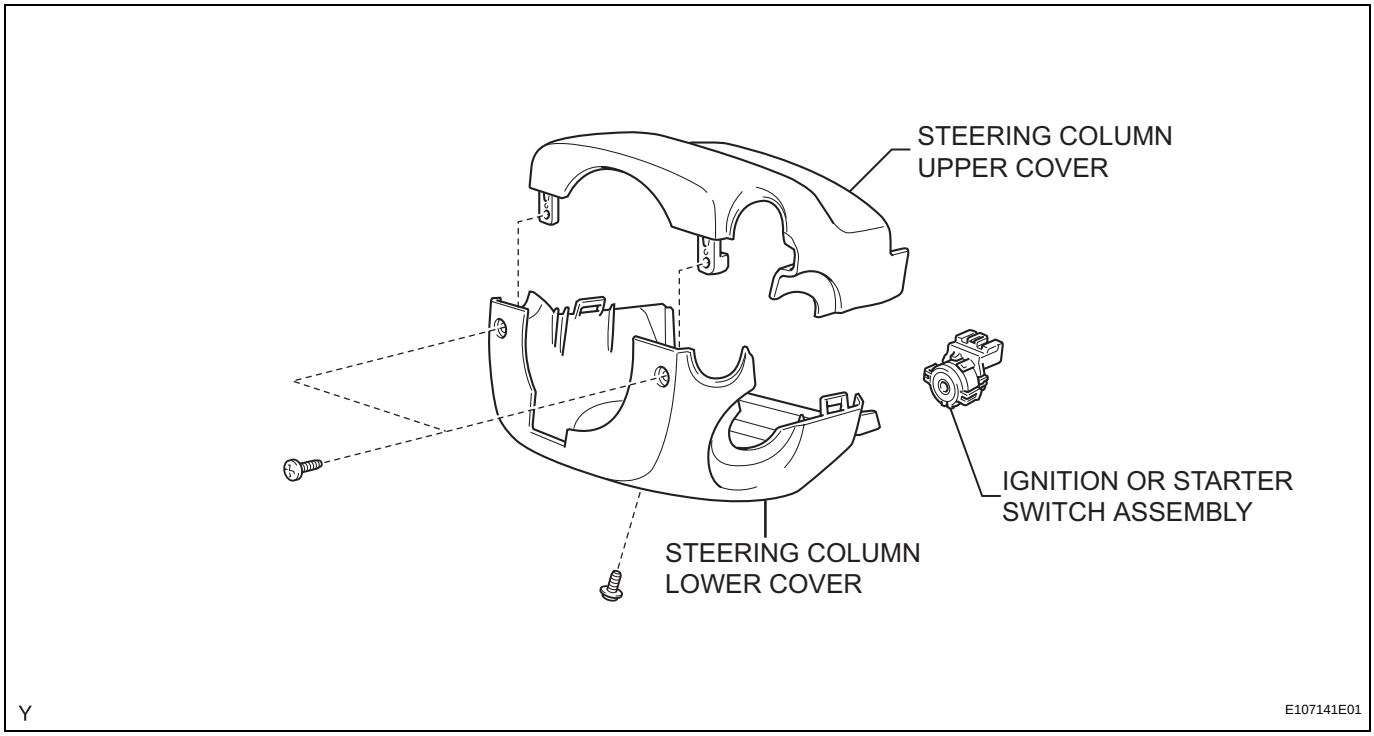

REMOVAL

1. DISCONNECT CABLE FROM NEGATIVE BATTERY TERMINAL

2. REMOVE STEERING COLUMN COVER

(a) Turn the steering wheel to the right and remove the screw indicated in the illustration.

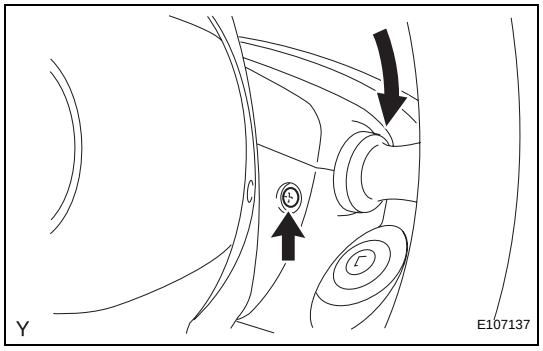

(b) Turn the steering wheel to the left and remove the screw indicated in the illustration.

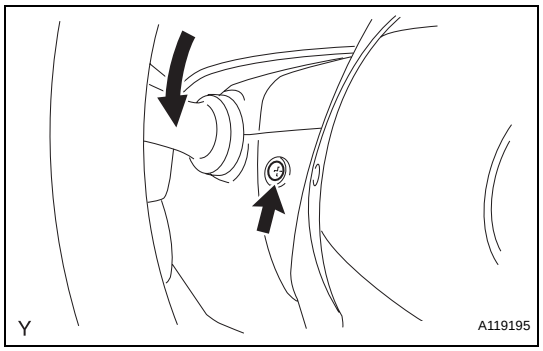

(c) Remove the screw indicated in the illustration and remove the steering column cover.

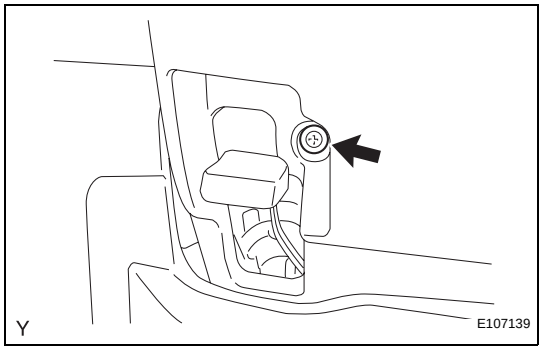

3. REMOVE IGNITION OR STARTER SWITCH ASSEMBLY

(a) Disconnect the connector.

(b) Disengage the 2 claws and remove the ignition or starter switch assembly.

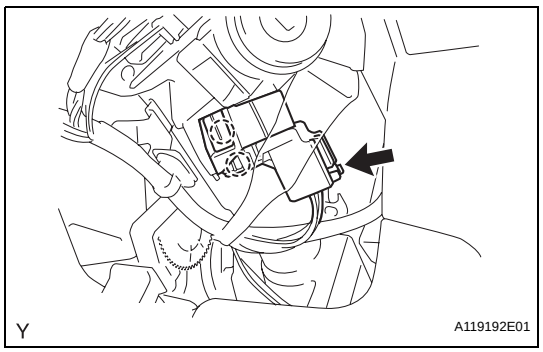

ST

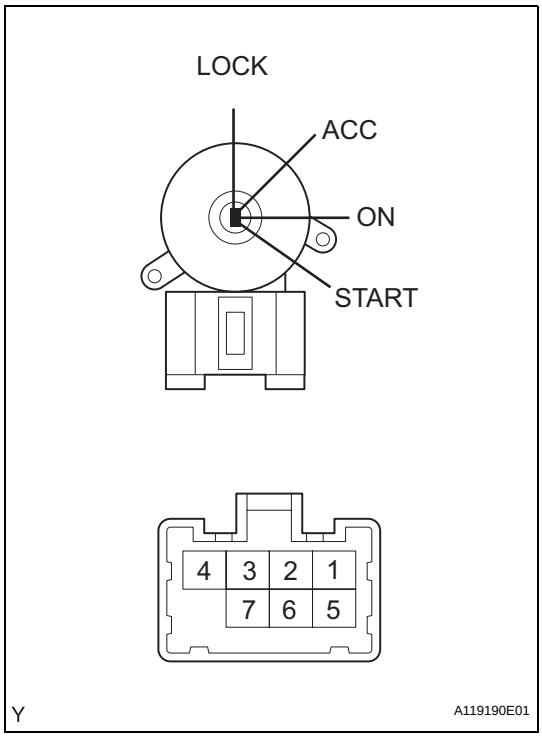

INSPECTION

1. INSPECT IGNITION OR STARTER SWITCH ASSEMBLY

(a) Check the resistance.

(1) Using an ohmmeter, measure the resistance between the terminals.

Standard resistance

Condition	Tester Connection	Standard
LOCK	Between all terminals	10 kΩ or higher
ACC	2-4	Below 1 Ω
ON	1-2-4	Below 1 Ω
	5-6	
START	1-3-4	Below 1 Ω
	5-6-7	

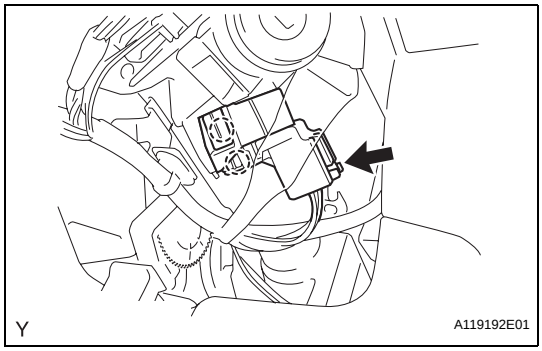

INSTALLATION

1. INSTALL IGNITION OR STARTER SWITCH ASSEMBLY

(a) Engage the 2 claws and install the ignition or starter switch assembly.

(b) Connect the connector.

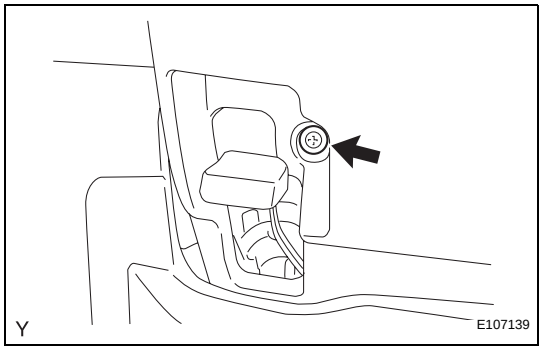

2. INSTALL STEERING COLUMN COVER

(a) Install the screw indicated in the illustration.

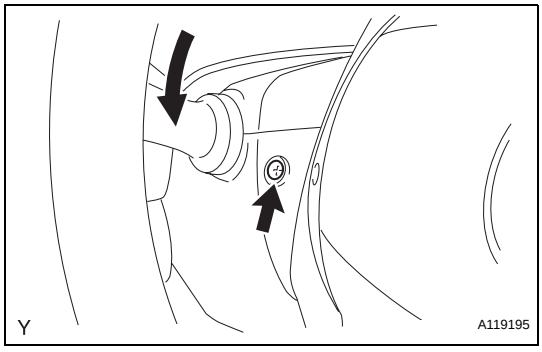

(b) Turn the steering wheel to the left and install the screw indicated in the illustration.

ST

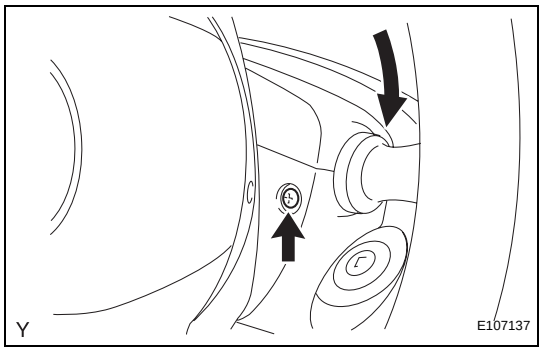

(c) Turn the steering wheel to the right, and install the screw indicated in the illustration.

3. CONNECT CABLE TO NEGATIVE BATTERY TERMINAL
Torque: 5.4 N*m (55 kgf*cm, 48 in.*lbf)

CHARGING SYSTEM

PRECAUTION

1. **Check that the battery cables are connected to the correct terminals.**
2. **Disconnect the battery cables when the battery is given a quick charge.**
3. **Never disconnect the battery while the engine is running.**
4. **Check that the charging cable is tightly connected to terminal B of the generator.**

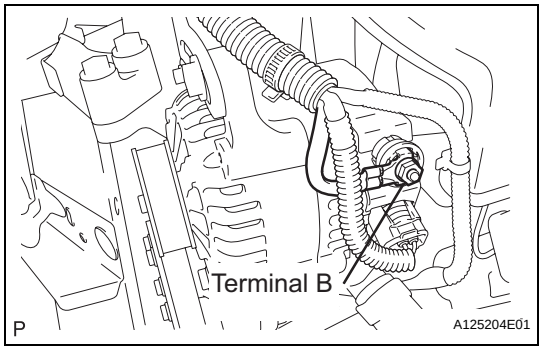

CH

PARTS LOCATION

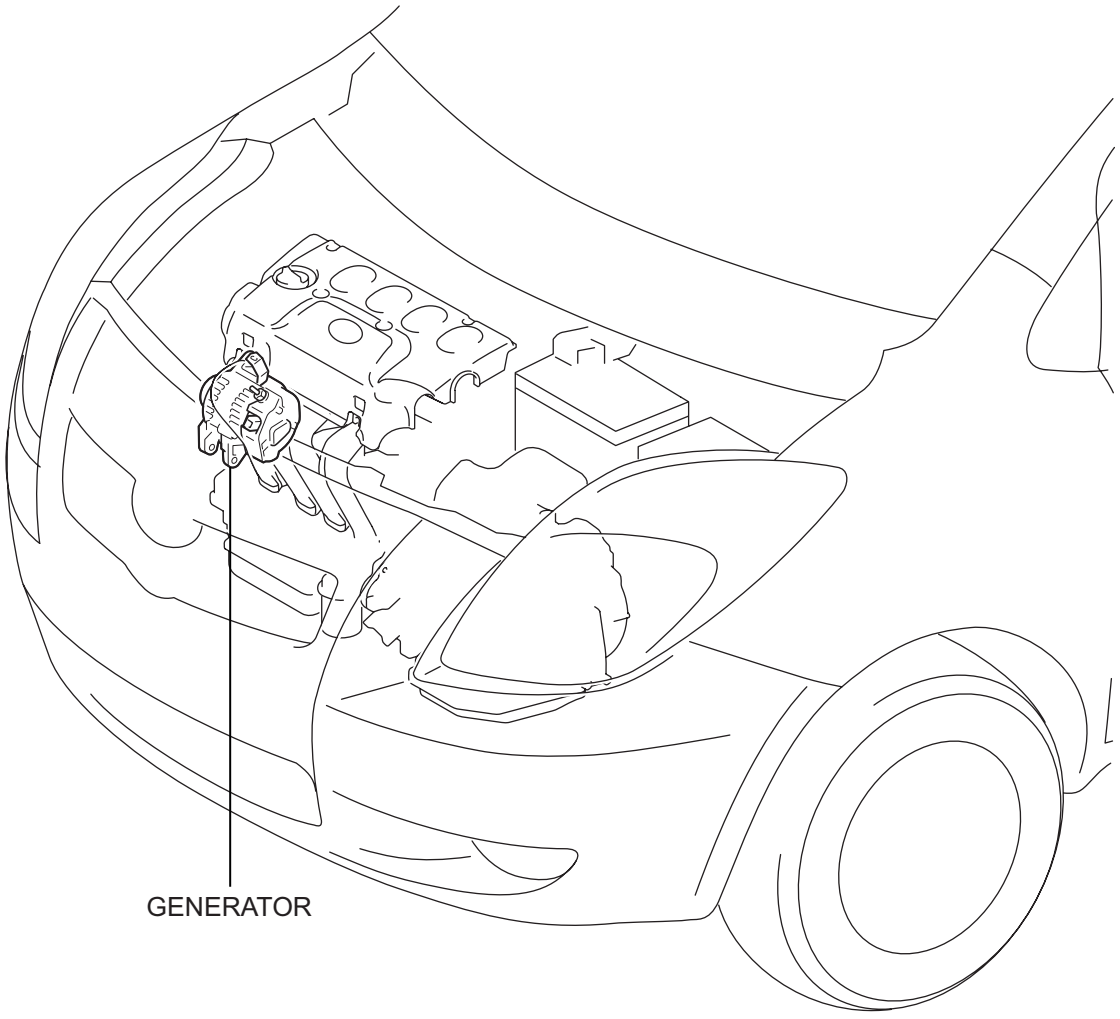

A119213E01

SYSTEM DIAGRAM

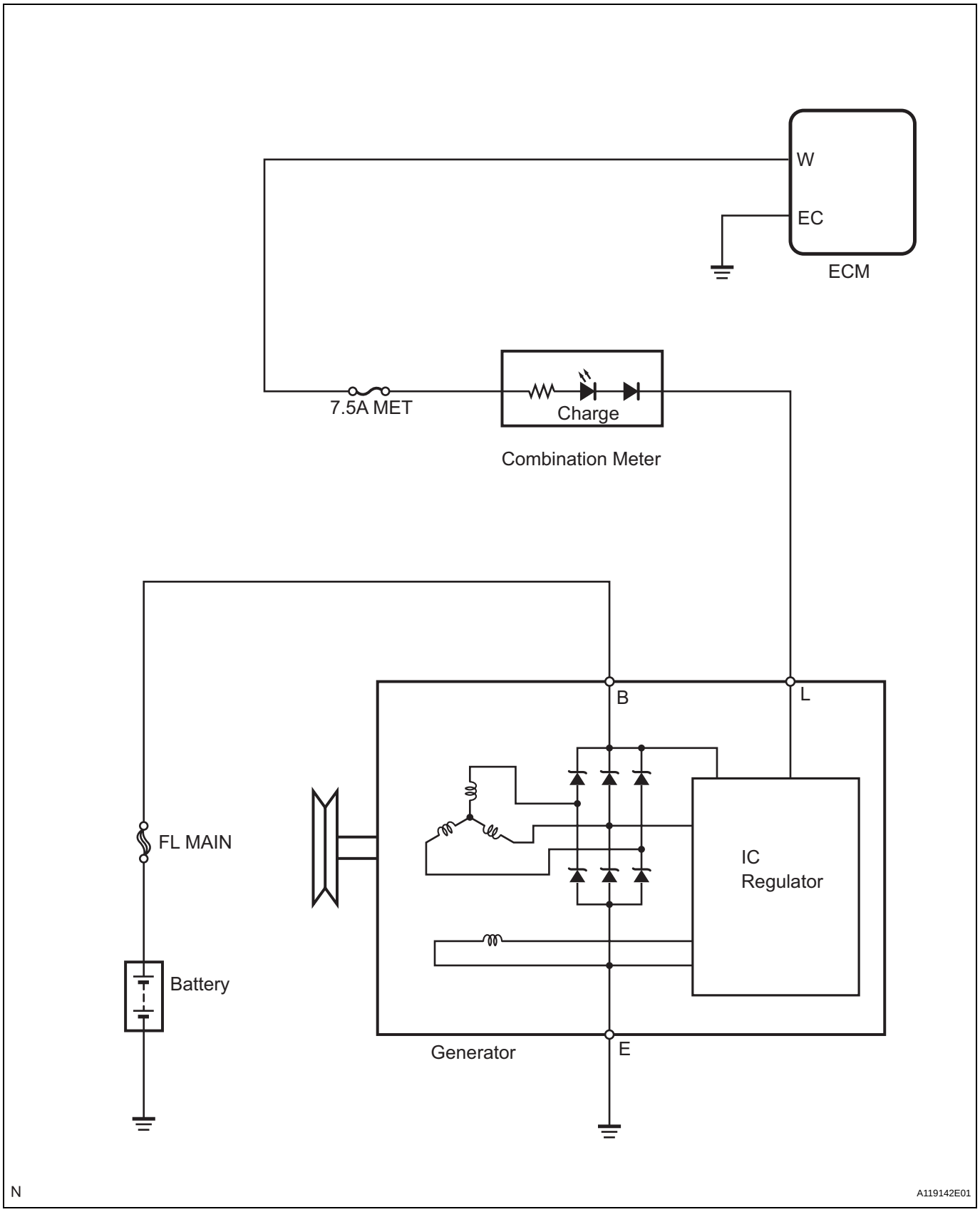

ON-VEHICLE INSPECTION

CAUTION:
If the battery is weak or if the engine is difficult to start, recharge the battery and perform the inspections again before returning the vehicle to the customer.

1. CHECK BATTERY CONDITION

(a) Check the battery for damage and deformation. If severe damage, deformation or leakage is found, replace the battery.

(b) Check the volume of electrolyte in each cell.

(1) For batteries that are maintenance-free:

- If the electrolyte volume is below the lower line, replace the battery.
- If the electrolyte volume is above the lower line, check the battery voltage when cranking the engine.
- If the voltage is less than 9.6 V, recharge or replace the battery.

HINT:
Before checking the battery voltage, turn off all the electrical systems (headlights, blower motor, etc.).

(2) For batteries that are not maintenance-free:

- If the electrolyte volume is below the lower line, add distilled water to each cell. Then, recharge the battery and check the specific gravity of the electrolyte.

Standard specific gravity:
1.25 to 1.29 at 20 °C (68 °F)

If the electrolyte volume is above the lower line, check the battery voltage when cranking the engine. If the voltage is less than 9.6 V, recharge or replace the battery.
HINT:
Before checking the battery voltage, turn off all the electrical systems (headlights, blower motor, rear defogger, etc.).

2. CHECK BATTERY TERMINAL AND FUSE

(a) Check that the battery terminals are not loose or corroded.
If the terminals are corroded, clean the terminals.

(b) Measure the resistance of the H-fuse and fuses.
Standard resistance:
Below 1 Ω
If the results are not as specified, replace the fuses as necessary.

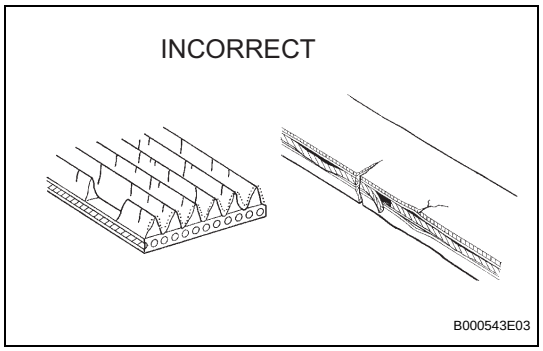

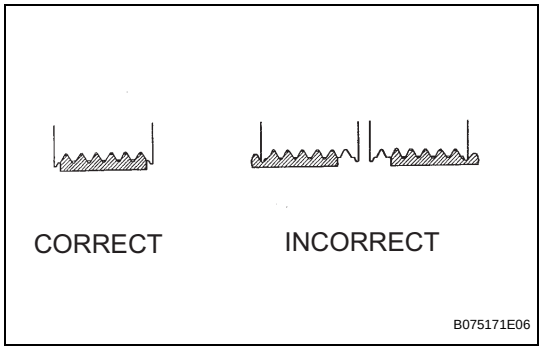

3. CHECK V-RIBBED BELT

(a) Check the belt for wear, cracks and other signs of damage.
If any defects are found, replace the V-ribbed belt.
HINT:
Replace the drive belt if any of the following defects are found:
- The belt is worn out and the wire is exposed.
- The cracks reach the wire in more than one place.
- The belt has pieces missing from the ribs.

(b) Check that the belt fits properly into the ribbed grooves.
HINT:
With your hand, confirm that the belt has not slipped out of the grooves on the bottom of the pulley.

4. VISUALLY CHECK GENERATOR WIRING

(a) Check that the wiring is in good condition.

5. LISTEN FOR ABNORMAL NOISES FROM GENERATOR

(a) Check that the generator does not emit any abnormal noise while the engine is running.

6. CHECK CHARGE WARNING LIGHT CIRCUIT

(a) Turn the ignition switch on (IG). Check that the charge warning light turns on.

(b) Start the engine and check that the light turns off. If the light does not operate as specified, troubleshoot the charge warning light circuit.

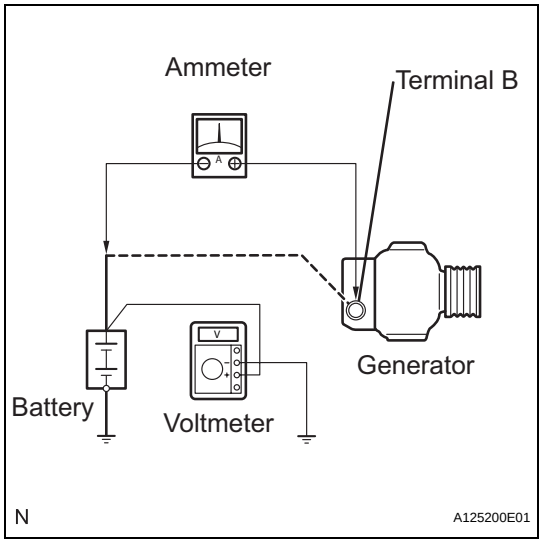

7. CHECK CHARGING CIRCUIT WITHOUT LOAD

(a) Connect a voltmeter and an ammeter to the charging circuit as follows.
HINT:
If a battery/generator tester is available, connect the tester to the charging circuit in accordance with the manufacturer's instructions.
(1) Disconnect the wire from terminal B of the generator and connect it to the negative (-) ammeter lead.
(2) Connect the positive (+) ammeter lead to terminal B of the generator.
(3) Connect the positive (+) voltmeter lead to positive (+) battery terminal.
(4) Ground the negative (-) voltmeter lead.

(b) Check the charging circuit.
(1) Keep the engine speed at 2,000 rpm and check the reading on the ammeter and voltmeter.
Standard current:
10 A or less
Standard voltage:
13.2 to 14.8 V
If the result is not as specified, replace the generator.

HINT:
If the battery is not fully charged, the ammeter reading will sometimes be more than the standard amperage.

8. CHECK CHARGING CIRCUIT WITH LOAD

(a) With the engine running at 2,000 rpm, turn on the high beam headlights and turn the heater blower switch to the HI position.

(b) Check the reading on the ammeter.

Standard current:

30 A or more

If the ammeter reading is less than the standard current, replace the generator.

HINT:
If the battery is fully charged, the ammeter reading will sometimes be less than the standard current. In this case, operate the wiper motor and the window defogger to increase the load and then check the charging circuit again.

GENERATOR

COMPONENTS

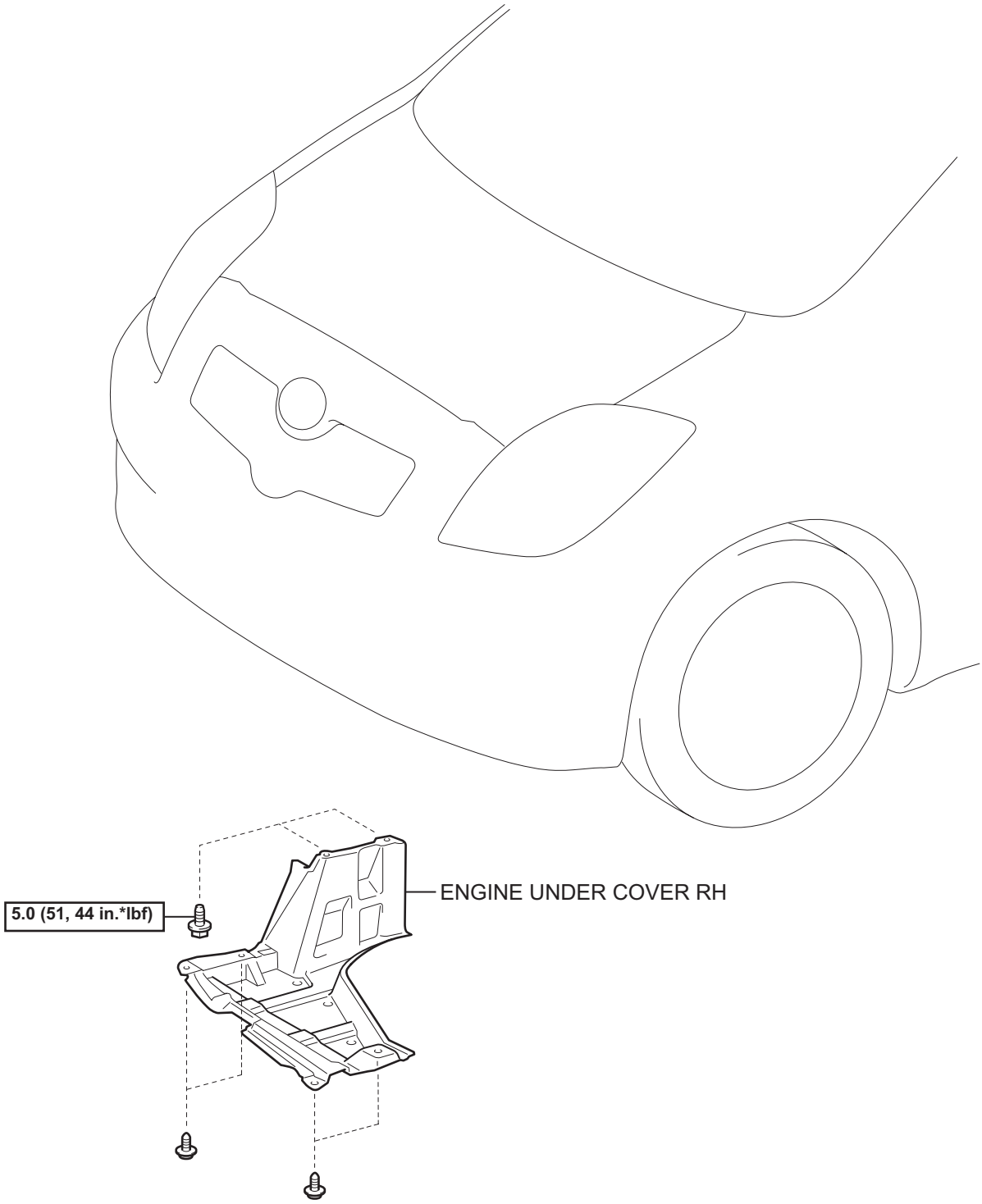

N*m (kgf*cm, ft.*lbf) : Specified torque

T

A115143E04

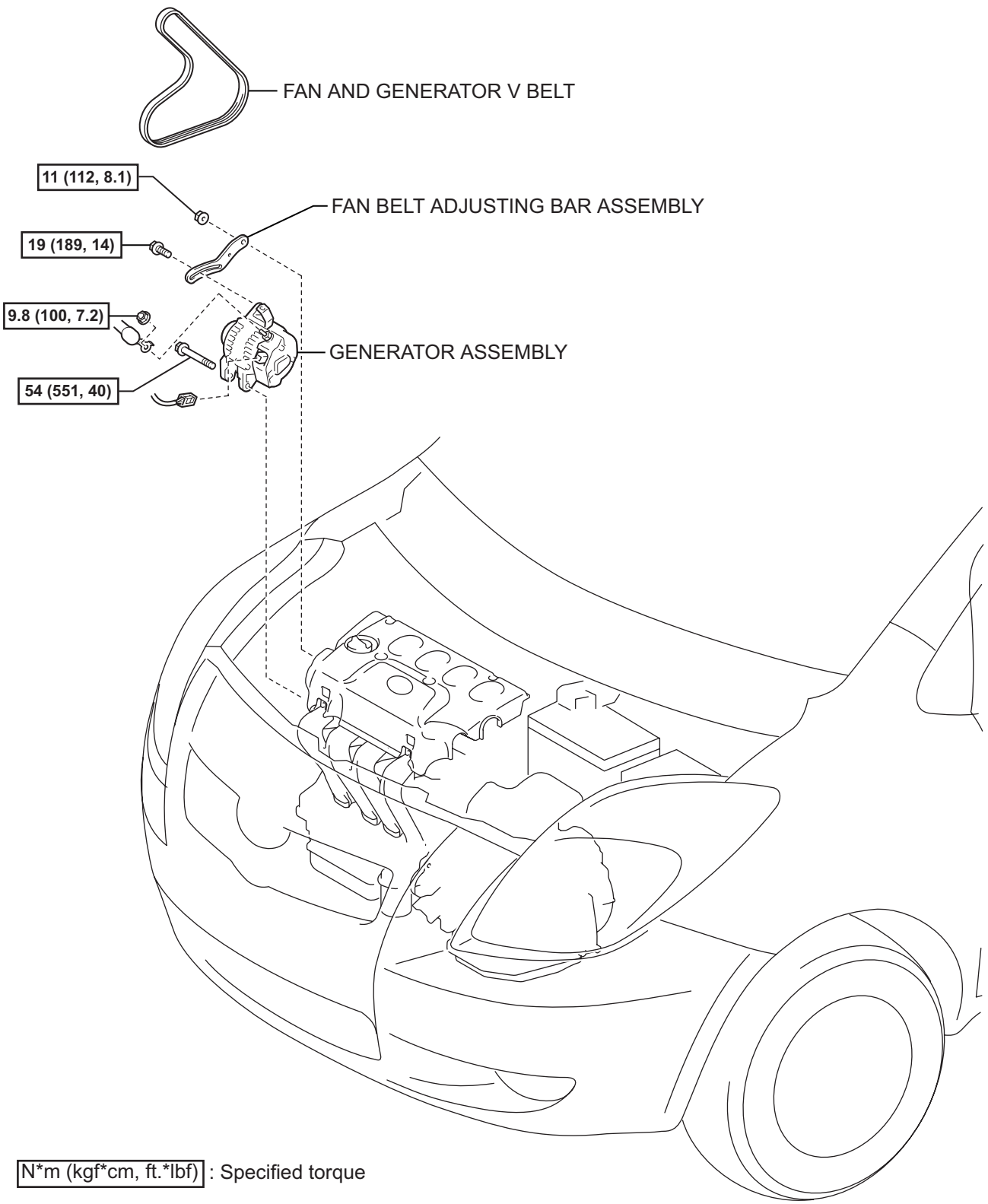
FAN AND GENERATOR V BELT
11 (112, 8.1)
FAN BELT ADJUSTING BAR ASSEMBLY
19 (189, 14)
9.8 (100, 7.2)
GENERATOR ASSEMBLY
54 (551, 40)
N*m (kgf*cm, ft.*lbf) : Specified torque
A104514E03

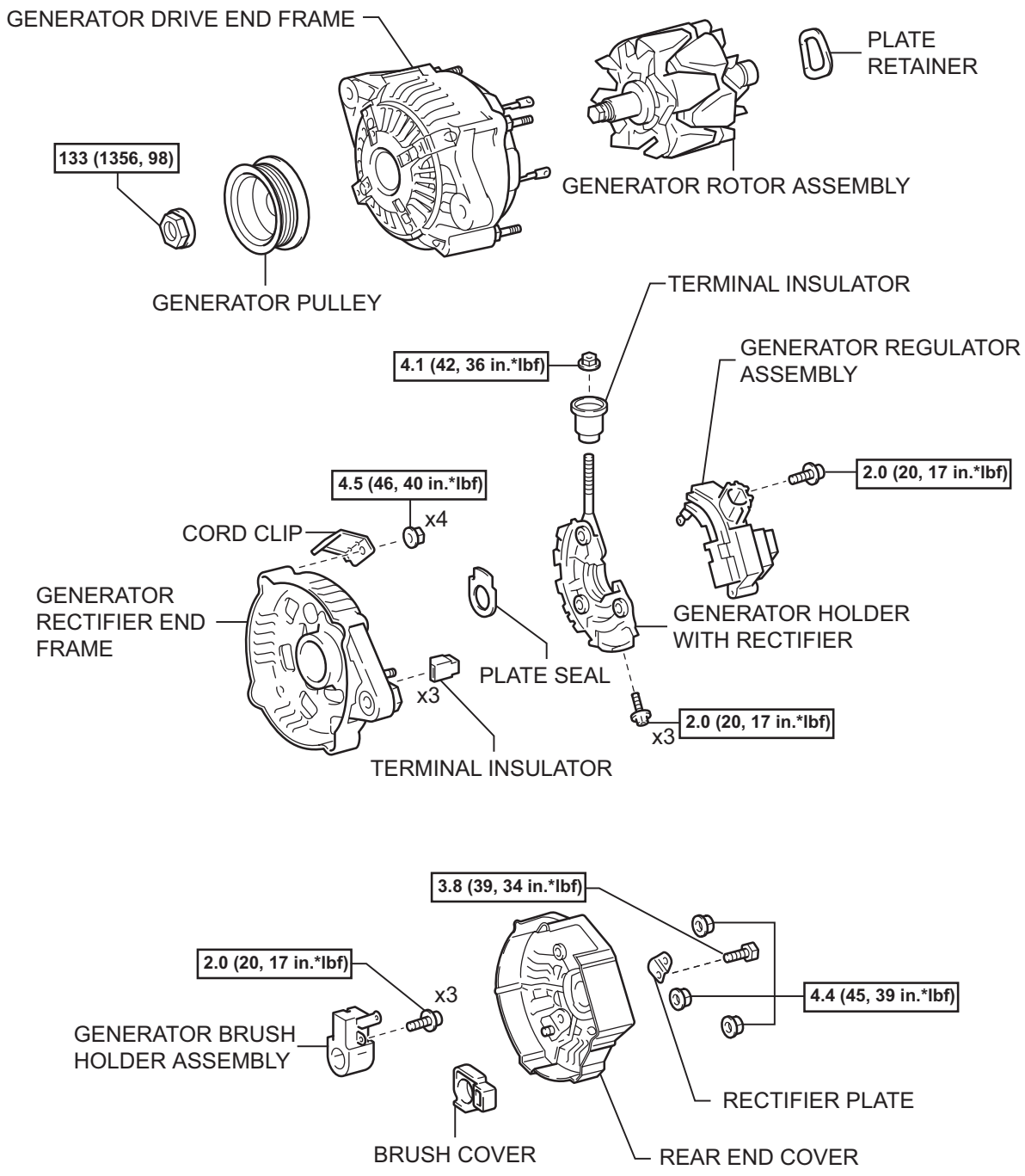

N*m (kgf*cm, ft.*lbf) : Specified torque

A117298E08

CH

REMOVAL

1. **DISCONNECT CABLE FROM NEGATIVE BATTERY TERMINAL**
2. **REMOVE ENGINE UNDER COVER RH**
3. **REMOVE FAN AND GENERATOR V BELT (See page EM-7)**
4. **REMOVE GENERATOR ASSEMBLY**
   (a) Remove the terminal cap.
   (b) Separate the connector and the harness clamp.
   (c) Remove the nut and remove terminal B.

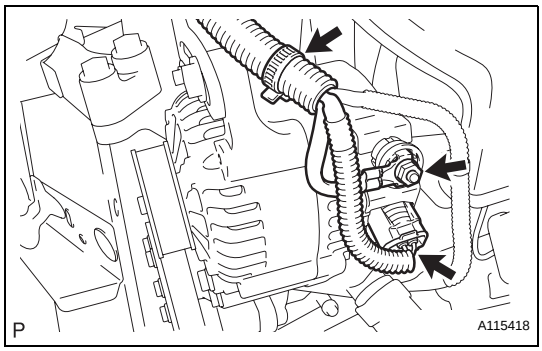

   (d) Remove fan belt adjusting slider fixing bolts A and B and remove the fan belt adjusting slider.

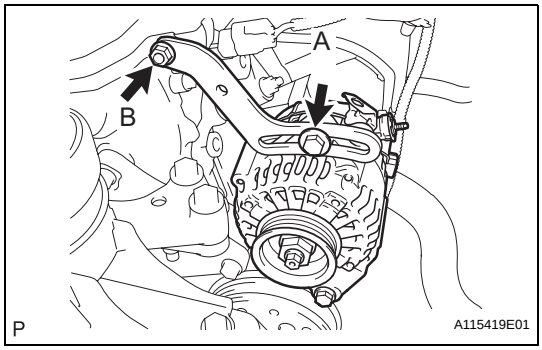

   (e) Remove fixing bolt B and remove the generator.

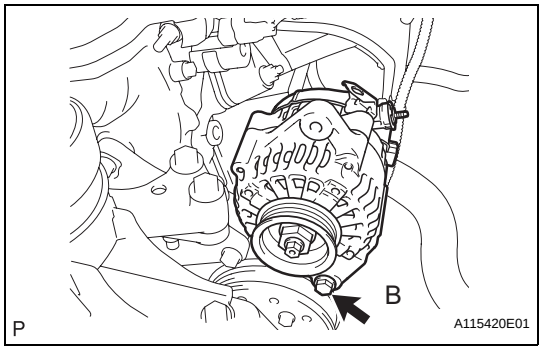

DISASSEMBLY

1. **REMOVE GENERATOR PULLEY**
   SST 09820-63010 (09820-06010, 09820-06020)
   HINT:

SST 1-A and B	09820 - 06010
SST 2	09820 - 06020

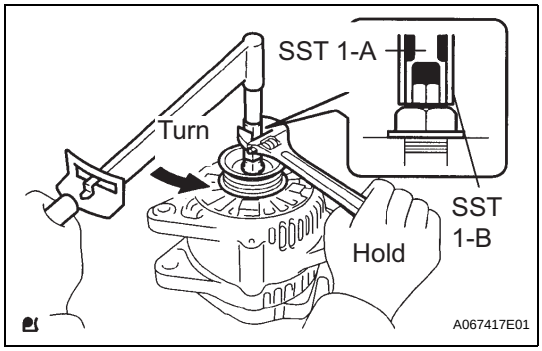

   (a) Hold SST 1-A with a torque wrench, and tighten SST 1-B clockwise to the specified torque.
   Torque: 39 N*m (400 kgf*cm, 29 ft.*lbf)
   NOTICE:
   Check that SST is securely fitted onto the generator rotor shaft.

CH

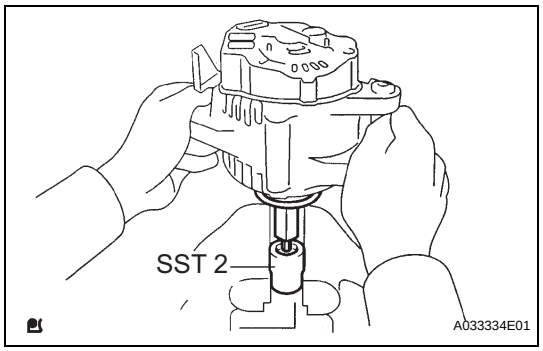

(b) Mount SST 2 in a vise.
(c) Insert SST 1-A and B into SST 2, and attach the generator pulley nut to SST 2.

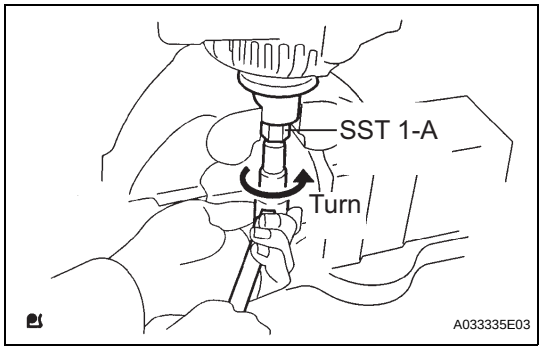

(d) To loosen the generator pulley nut, turn SST 1-A in the direction shown in the illustration.
NOTICE:
To prevent damage to the rotor shaft, do not loosen the generator pulley nut by more than one-half turn.
(e) Remove the generator from SST 2.

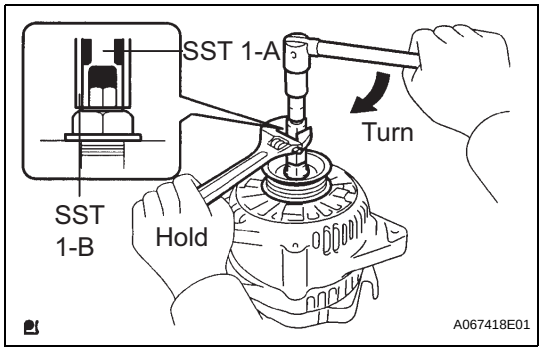

(f) Turn SST 1-B, and remove SST 1-A and B.
(g) Remove the generator pulley nut and generator pulley.

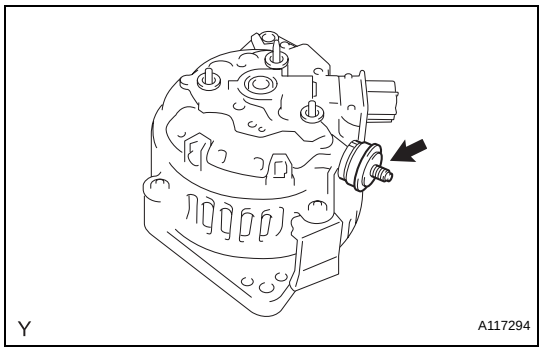

2. REMOVE GENERATOR BRUSH HOLDER ASSEMBLY
(a) Remove the nut and terminal insulator.
(b) Remove the nut, screw and rectifier plate.
(c) Remove the 2 nuts and the rear end cover.

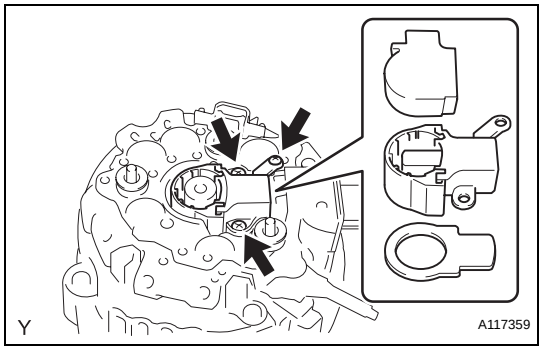

(d) Remove the brush cover from the generator brush holder assembly.
(e) Remove the 3 screws and the generator brush holder assembly.
(f) Remove the plate seal.

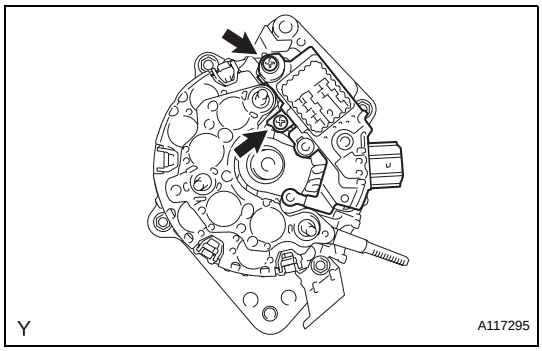

3. REMOVE GENERATOR REGULATOR ASSEMBLY

(a) Remove the 2 screws and the generator regulator assembly.

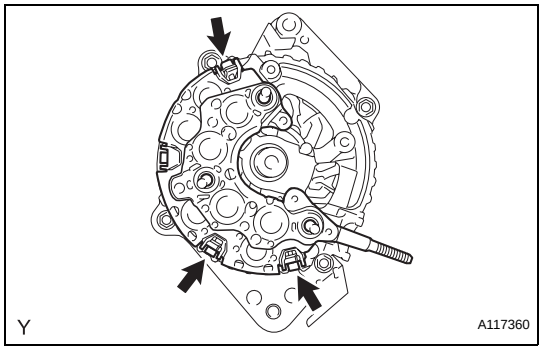

4. REMOVE GENERATOR HOLDER WITH RECTIFIER

(a) Remove the 3 screws and the generator holder with rectifier.

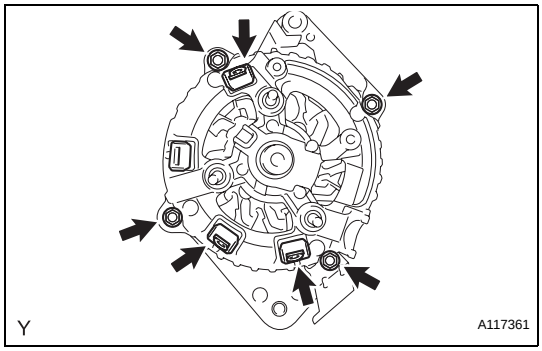

5. REMOVE GENERATOR ROTOR ASSEMBLY

(a) Remove the 3 terminal insulators from the generator rectifier end frame.

(b) Remove the 4 nuts and the cord clip.

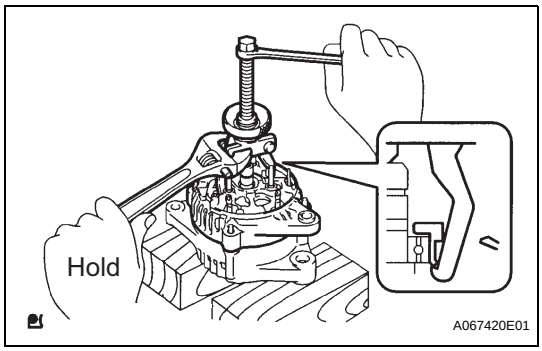

(c) Using SST, remove the generator rectifier end frame.
SST 09286-46011

(d) Remove the plate retainer.

(e) Remove the generator rotor assembly from the generator drive end frame.
NOTICE:
Do not drop the generator rotor assembly.
HINT:
If the generator rotor is engaged too firmly, gently tap the generator rotor shaft to remove it using a plastic hammer.

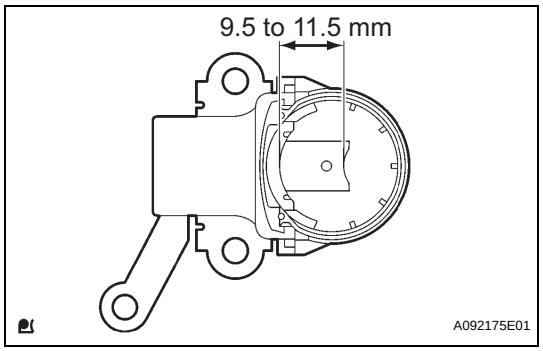

INSPECTION

1. INSPECT GENERATOR BRUSH HOLDER ASSEMBLY

(a) Using vernier calipers, measure the exposed brush length.

Standard exposed length:
9.5 to 11.5 mm (0.374 to 0.453 in.)
Minimum exposed length:
1.5 mm (0.059 in.)

If the exposed length is less than the minimum, replace the generator brush holder assembly.

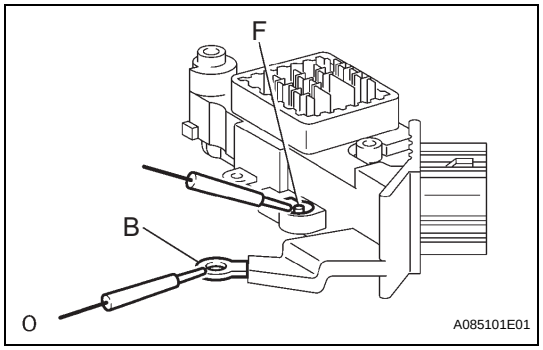

2. INSPECT GENERATOR REGULATOR ASSEMBLY

(a) Using an ohmmeter, check the continuity between terminals F and B.

Standard:
When the positive and negative poles between terminals F and B are exchanged, there is continuity in one direction but no continuity in the other direction.

If the continuity is not as specified, replace the generator regulator assembly.

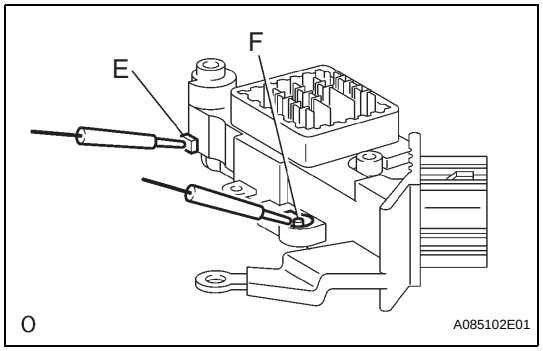

(b) Using an ohmmeter, check the continuity between terminals F and E.

Standard:
When the positive and negative poles between terminals F and E are exchanged, there is continuity in one direction but no continuity in the other direction.

If the continuity is not as specified, replace the generator regulator assembly.

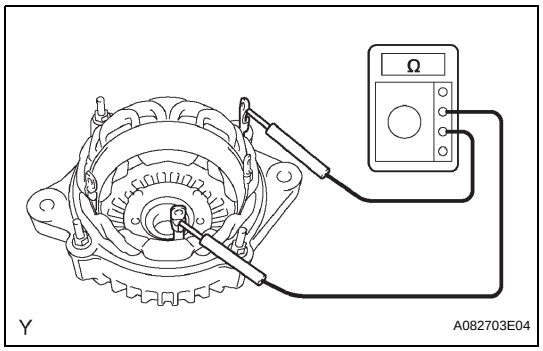

3. INSPECT GENERATOR DRIVE END FRAME

(a) Check the stator coil for open circuits.

(1) Using an ohmmeter, check the resistance between the coil leads.

Standard resistance:
Below 1 Ω

If the result is not as specified, replace the generator assembly.

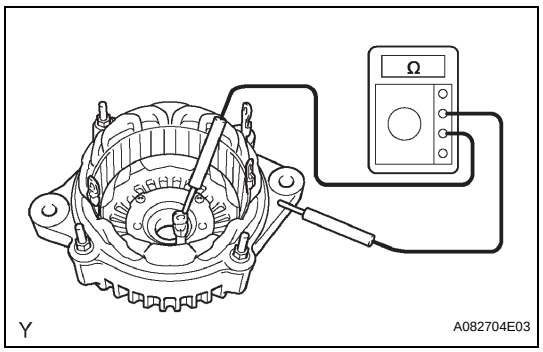

(b) Inspect the stator for ground.

(1) Using an ohmmeter, check the resistance between the coil lead and drive end frame.

Standard resistance:
10 kΩ or higher

If the result is not as specified, replace the generator assembly.

(c) Inspect the bearing.

(1) Make sure that the bearing is not rough or worn.

If necessary, replace the generator assembly.

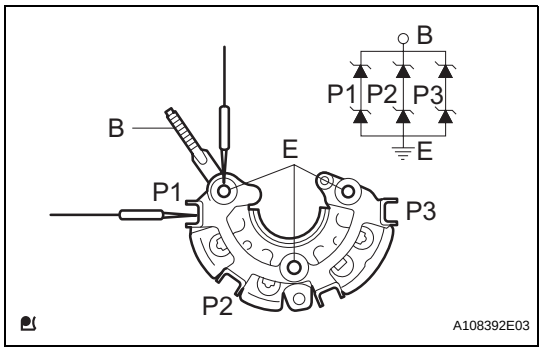

4. INSPECT GENERATOR HOLDER WITH RECTIFIER

(a) Using an ohmmeter, check the continuity among terminals P1, P2, P3 and B, and among P1, P2, P3 and E.

Standard:

When the positive and negative poles among terminals P1, P2, P3 and B are exchanged, there is continuity in one direction but no continuity in the other direction.

When the positive and negative poles among terminals P1, P2, P3 and E are exchanged, there is continuity in one direction but no continuity in the other direction.

If the continuity is not as specified, replace the generator holder with rectifier.

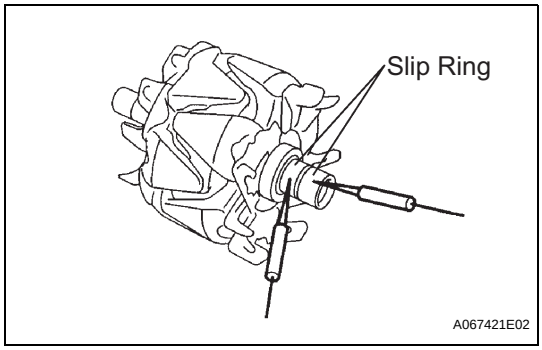

5. INSPECT GENERATOR ROTOR ASSEMBLY

(a) Check the generator rotor for open circuits.

(1) Using an ohmmeter, measure the resistance between the slip rings.

Standard resistance:

1.7 to 2.1 Ω at 20°C (68°F)

If the resistance is not as specified, replace the generator rotor assembly.

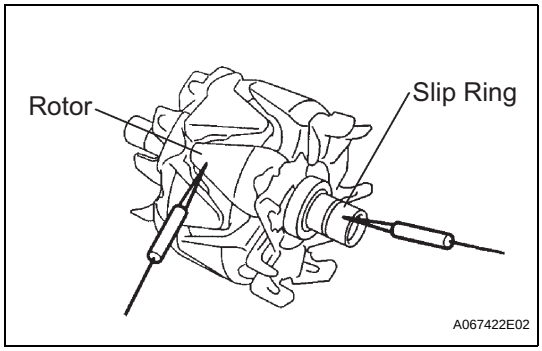

(b) Check the generator rotor for short circuits.

(1) Using an ohmmeter, check the resistance between the slip ring and generator rotor assembly.

Standard resistance:

10 kΩ or higher

If the result is not as specified, replace the generator rotor assembly.

(c) Inspect the slip rings.

(1) Make sure that the slip rings are not rough or scored.

If rough or scored, replace the generator rotor assembly.

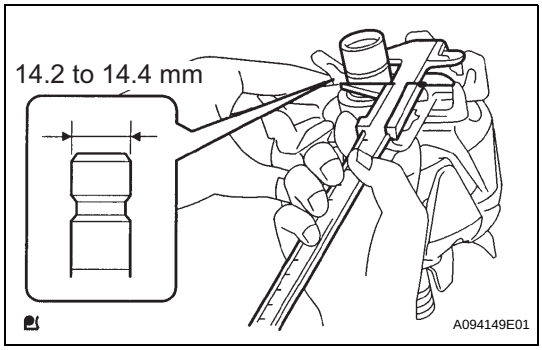

(2) Using vernier calipers, measure the slip ring diameter.

Standard diameter:

14.2 to 14.4 mm (0.559 to 0.567 in.)

Minimum diameter:

12.8 mm (0.504 in.)

If the diameter is less than the minimum, replace the generator rotor assembly.

CH

REASSEMBLY

1. INSTALL GENERATOR ROTOR ASSEMBLY

(a) Place the generator drive end frame on the generator rotor assembly.
NOTICE:
Do not drop the generator rotor assembly.

(b) Install the generator rotor assembly and the plate retainer.

(c) Using a 30 mm socket wrench and press, slowly press in the generator rectifier end frame.

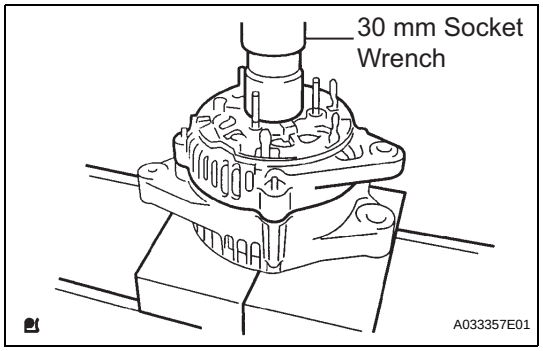

(d) Install the 4 nuts and the cord clip.
Torque: 4.5 N*m (46 kgf*cm, 40 in.*lbf)

(e) Install the 3 terminal insulators onto the generator rectifier end frame.

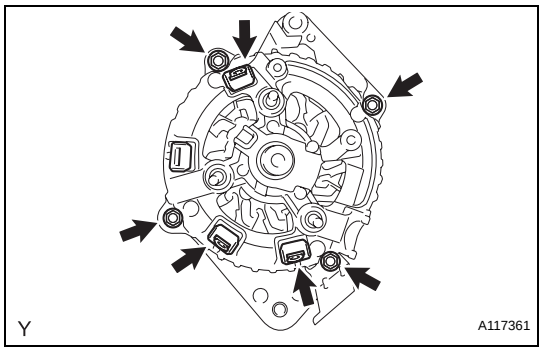

2. INSTALL GENERATOR HOLDER WITH RECTIFIER

(a) Install the generator holder with rectifier with the 3 screws.
Torque: 2.0 N*m (20 kgf*cm, 17 in.*lbf)

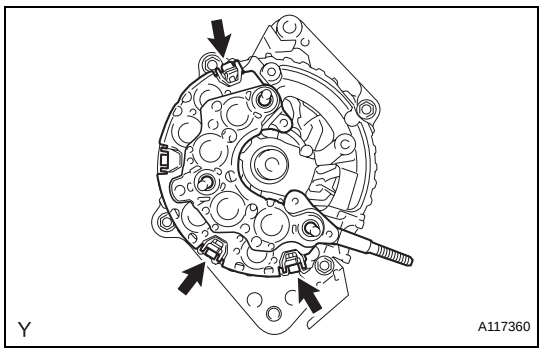

3. INSTALL GENERATOR REGULATOR ASSEMBLY

(a) Install the generator regulator assembly with the 2 screws.
Torque: 2.0 N*m (20 kgf*cm, 17 in.*lbf)

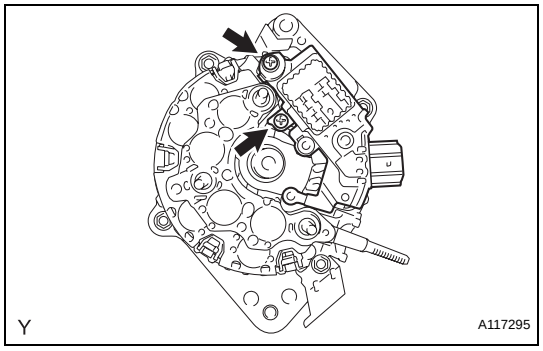

CH

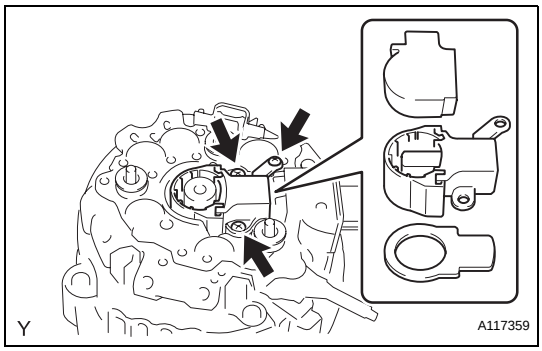

4. INSTALL GENERATOR BRUSH HOLDER ASSEMBLY

(a) Install the plate seal.

(b) Install the generator brush holder assembly with the 3 screws.
Torque: 2.0 N*m (20 kgf*cm, 17 in.*lbf)

(c) Install the brush cover onto the generator brush holder assembly.

(d) Install the rear end cover with the 2 nuts.
Torque: 4.4 N*m (45 kgf*cm, 39 in.*lbf)

(e) Install the rectifier plate with the nut and screw.
Torque: 4.4 N*m (45 kgf*cm, 39 in.*lbf) for nut
Torque: 3.8 N*m (39 kgf*cm, 34 in.*lbf) for bolt

(f) Install the terminal insulator with the nut.
Torque: 4.1 N*m (42 kgf*cm, 36 in.*lbf)

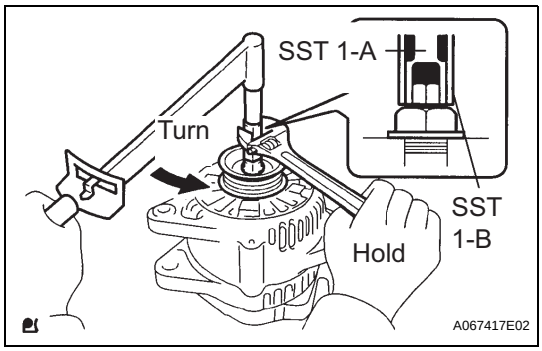

5. INSTALL GENERATOR PULLEY
SST 09820-63010 (09820-06010, 09820-06020)
HINT:

SST 1-A and B	09820 - 06010
SST 2	09820 - 06020

(a) Install the generator pulley onto the generator rotor shaft by tightening the generator pulley nut by hand.

(b) Hold SST 1-A with a torque wrench, and tighten SST 1-B clockwise to the specified torque.
Torque: 39 N*m (398 kgf*cm, 29 ft.*lbf)
NOTICE:
Check that SST is securely fitted onto the generator rotor shaft.

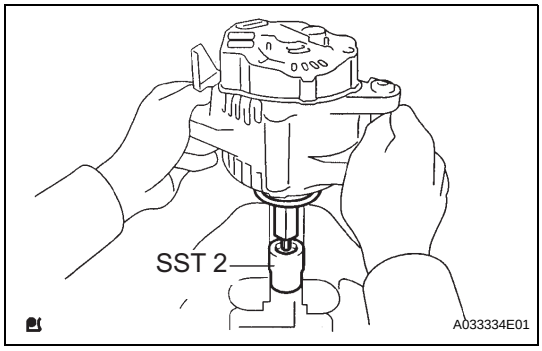

(c) Mount SST 2 in a vise.

(d) Insert SST 1-A and B into SST 2, and attach the generator pulley nut to SST 2.

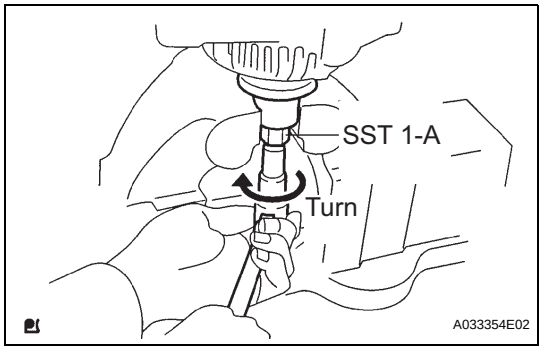

(e) Tighten the generator pulley nut by turning SST 1-A in the direction shown in the illustration.
Torque: 133 N*m (1,356 kgf*cm, 98 ft.*lbf)

(f) Remove the generator from SST 2.

CH

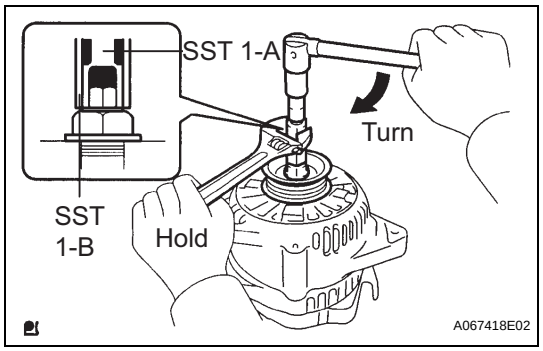

(g) Turn SST 1-B, and remove SST 1-A and B.
(h) Turn the generator pulley, and check that the generator pulley moves smoothly.

INSTALLATION

1. INSTALL GENERATOR ASSEMBLY

(a) Provisionally install the generator with fixing bolt B.

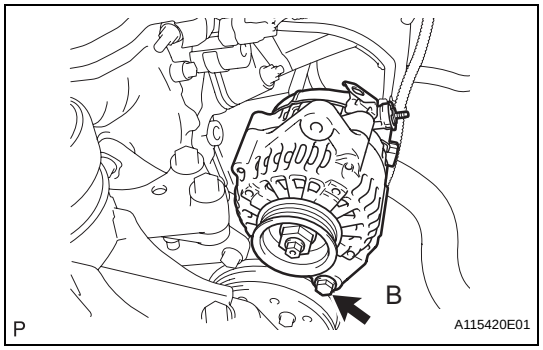

(b) Provisionally install the fan belt adjusting slider with fan belt adjusting slider fixing bolts A and B, then move the generator toward the cylinder block and tighten bolt B.
Torque: 11 N*m (112 kgf*cm, 8.1 ft.*lbf)

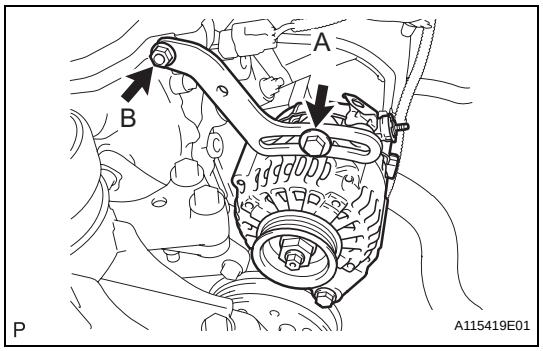

(c) Install the connector and the wire harness clamp.
(d) Install terminal B with the nut.
Torque: 9.8 N*m (100 kgf*cm, 7.2 ft.*lbf)
(e) Install the terminal cap.

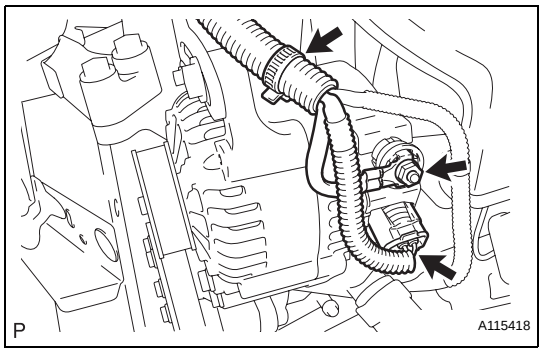

2. INSTALL FAN AND GENERATOR V BELT (See page EM-7)

3. ADJUST FAN AND GENERATOR V BELT (See page EM-7)

4. INSPECT FAN AND GENERATOR V BELT (See page EM-8)

5. INSTALL ENGINE UNDER COVER RH

6. CONNECT CABLE TO NEGATIVE BATTERY TERMINAL
Torque: 5.4 N*m (55 kgf*cm, 48 in.*lbf)

CH

AUTOMATIC TRANSAXLE SYSTEM

PRECAUTION

NOTICE:

- **Perform the RESET MEMORY (AT initialization) when replacing the automatic transaxle assembly, engine assembly or ECM (See page AX-14).**
- **Perform the REGISTRATION (VIN registration) when replacing the ECM (See page ES-13).**

HINT:
The RESET MEMORY cannot be completed by only disconnecting the battery cable.

CAUTION:
When using compressed air, always aim away from yourself to prevent Automatic Transmission Fluid (ATF) or kerosene from spraying on your face.

NOTICE:

- **The automatic transaxle is composed of high precision parts which need careful inspection before reassembly. Even a small nick could cause fluid leakage or affect the performance. The instructions here are organized so that you work on only one component group at a time. This will help avoid confusion caused by similar-looking parts of different sub-assemblies being on your workbench at the same time. The component groups are inspected and repaired from the converter housing side. As far as possible, complete the inspection, repair and reassembly before proceeding to the next component group. If a defect is found in a certain component group during reassembly, inspect and repair that group immediately. If a component group cannot be assembled because some parts are on order, be sure to keep all parts of the group in a separate container while proceeding with disassembly, inspection, repair and reassembly of other component groups.**
- **When changing the automatic transmission fluid, use only "Toyota Genuine ATF WS" (ATF JWS3324 or NWS9638).**
- **All disassembled parts should be washed clean and any fluid passages and holes should be blown through with compressed air.**
- **Dry all parts with compressed air. Never use a shop rag or a piece of cloth to dry them.**
- **Only recommended ATF or kerosene should be used for cleaning.**
- **After cleaning, the parts should be arranged in the correct order for efficient inspection, repair, and reassembly.**
- **When disassembling a valve body, be sure to match each valve with the corresponding spring.**

- **New brake and clutch discs that are to be used for replacement must be soaked in ATF for at least 15 minutes before reassembly.**
- **All oil seal rings, clutch discs, clutch plates, rotating parts, and sliding surfaces should be coated with ATF prior to reassembly.**
- **All gaskets and rubber O-rings should be replaced with new ones.**
- **Do not apply adhesive cements to gaskets or similar parts.**
- **Make sure that the ends of snap rings are not aligned with any cutouts and are installed in the grooves correctly.**
- **When replacing a worn bushing, the sub-assembly containing the bushing must also be replaced.**
- **Check thrust bearings and races for wear and damage. Replace them as necessary.**
- **When working with FIPG material, you must observe the following:**
  - **Using a razor blade and a gasket scraper, remove all the old packing (FIPG) material from the gasket surface.**
  - **Clean both sealing surfaces with a non-residue solvent.**
  - **Parts must be reassembled within 10 minutes of application. Otherwise, the packing (FIPG) material must be removed and reapplied.**

DEFINITION OF TERMS

Term	Definition
Monitor description	Description of what the ECM monitors and how it detects malfunctions (monitoring purpose and its details).
Related DTCs	A group of diagnostic trouble codes that are output by the ECM based on the same malfunction detection logic.
Typical enabling conditions	Preconditions that allow the ECM to detect malfunctions. With all preconditions satisfied, the ECM sets the DTC when the monitored value(s) exceeds the malfunction threshold(s).
Sequence of operation	The priority order that is applied to monitoring, if multiple sensors and components are used to detect the malfunction. While one sensor is being monitored, the next sensor or component is not monitored until the current monitoring is concluded.
Required sensor/components	The sensors and components that are used by the ECM to detect malfunctions.
Frequency of operation	The number of times that the ECM checks for malfunctions per driving cycle. "Once per driving cycle" means that the ECM detects malfunctions only one time during a single driving cycle. "Continuous" means that the ECM detects malfunctions every time the enabling conditions are met.
Duration	The minimum time that the ECM must sense a continuous deviation in the monitored value(s) before setting a DTC. This timing begins when the typical enabling conditions are met.
Malfunction thresholds	Beyond this value, the ECM concludes that there is a malfunction and sets a DTC.
MIL operation	MIL illumination timing after a defect is detected. "Immediate" means that the ECM illuminates the MIL the instant the ECM determines that there is a malfunction. "2 driving cycle" means that the ECM illuminates the MIL if the same malfunction is detected again in the next driving cycle.
Component operating range	Normal operating ranges of sensors and solenoids under normal driving conditions. Use these ranges as references. They cannot be used to judge if a sensor or solenoid is defective or not.

PARTS LOCATION

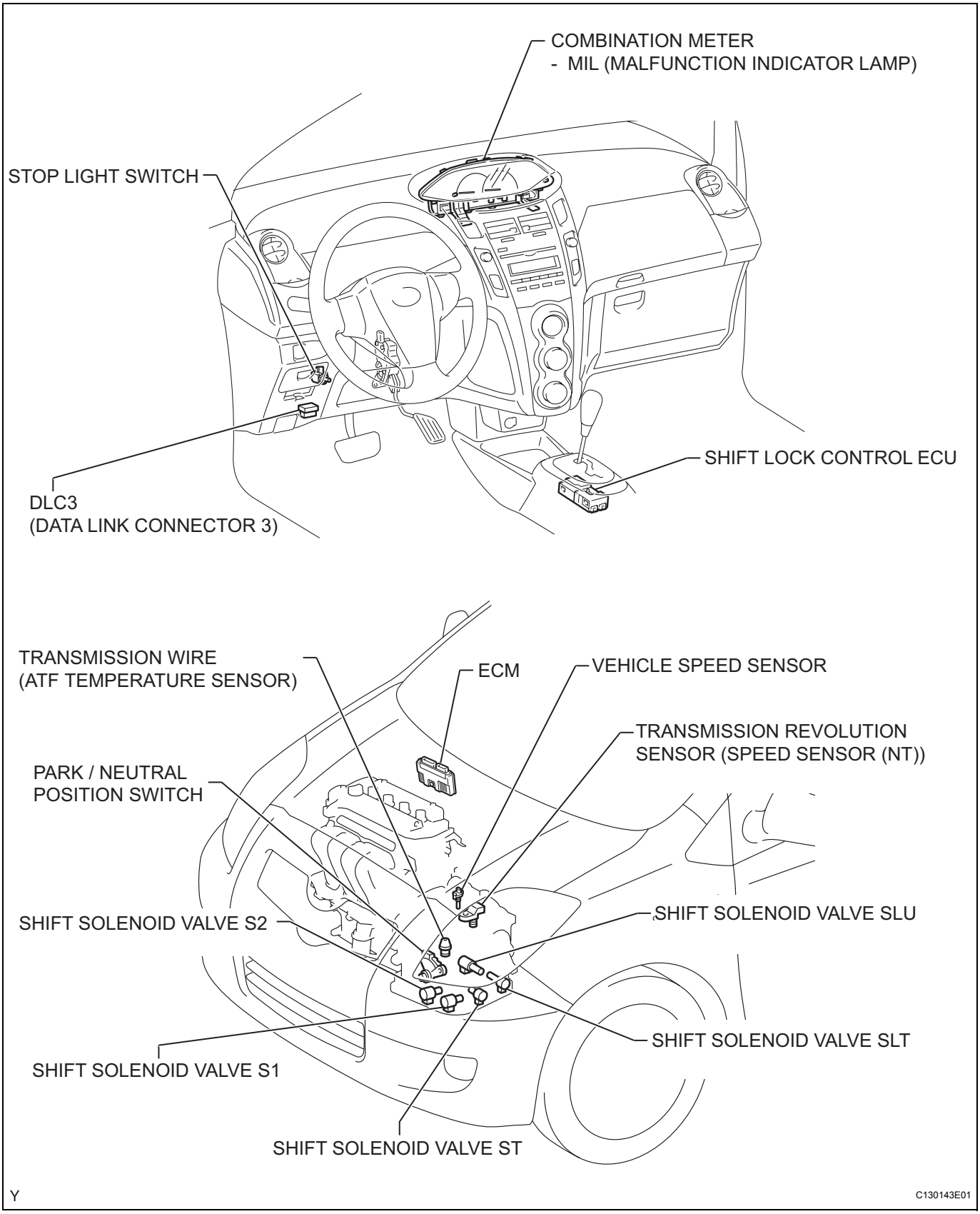

AX

SYSTEM DIAGRAM

The configuration of the electronic control system in the U340E automatic transaxle is as shown in the following chart.

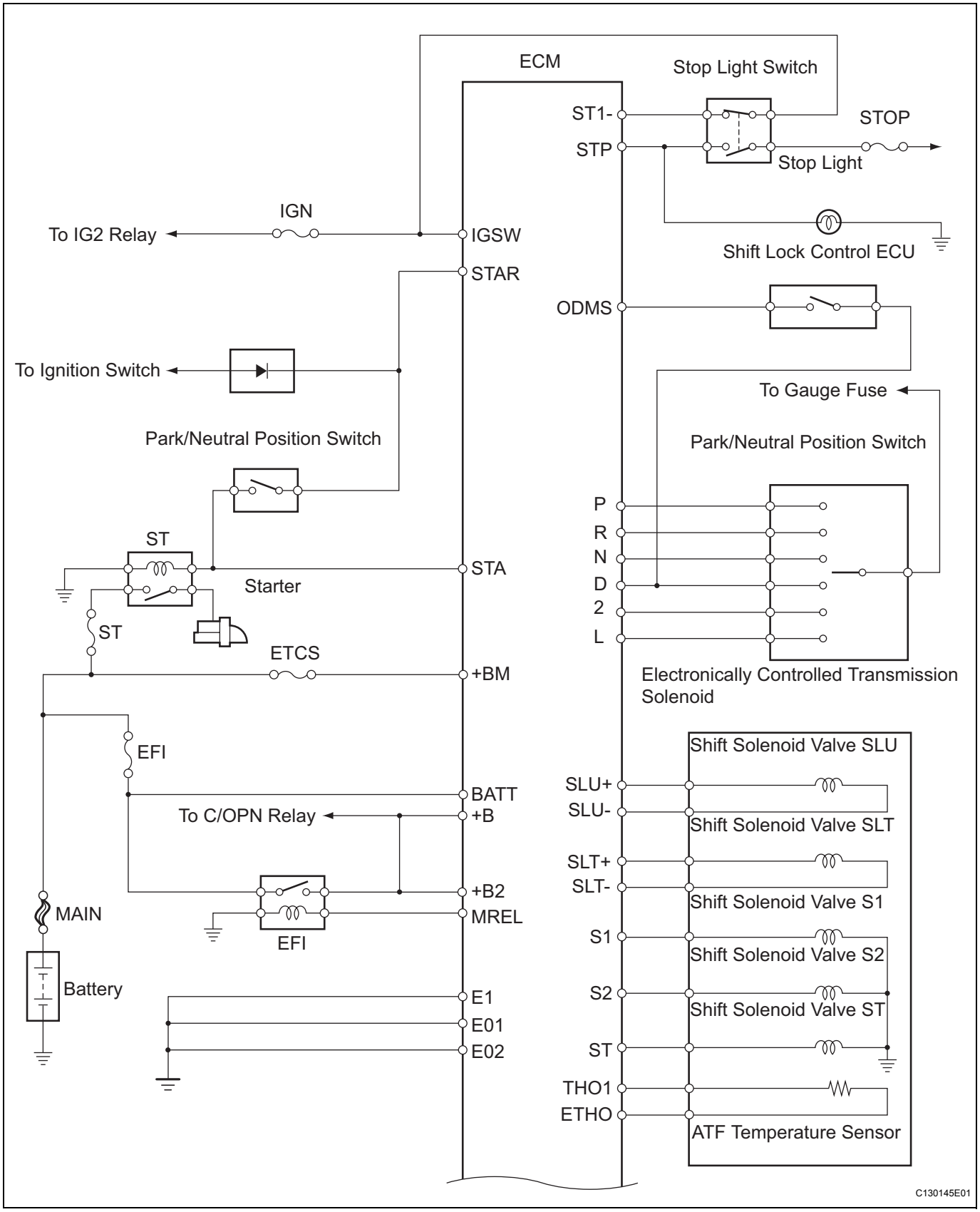

AX

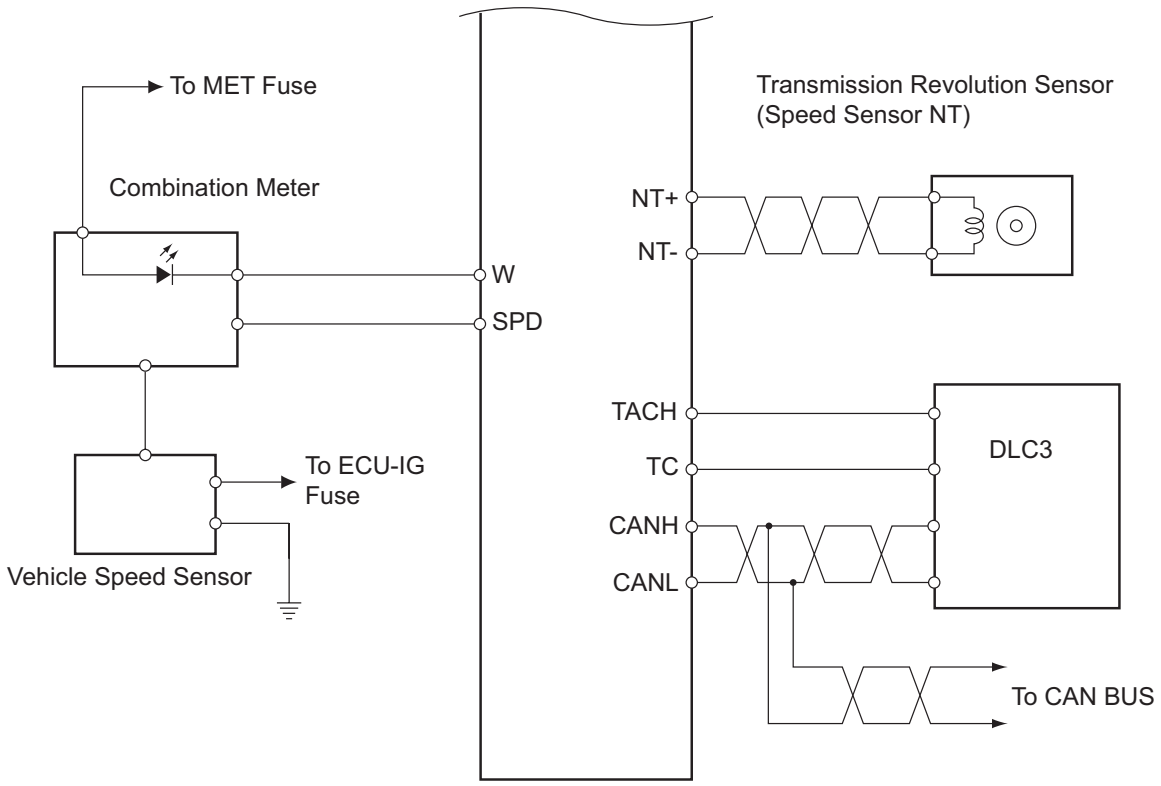
To MET Fuse
Combination Meter
W
SPD
To ECU-IG Fuse
Vehicle Speed Sensor
Transmission Revolution Sensor (Speed Sensor NT)
NT+
NT-
TACH
TC
CANH
CANL
DLC3
To CAN BUS
C130144E01

SYSTEM DESCRIPTION

1. SYSTEM DESCRIPTION

(a) The ECT (Electronic Controlled automatic Transmission/Transaxle) is an automatic transmission/transaxle that electronically controls shift timing using the ECM. The ECM detects electrical signals that indicate engine and driving conditions, and controls the shift point, based on driver habits and road conditions. As a result, fuel efficiency and power transmission/transaxle performance are improved.
Shift shock has been reduced by controlling the engine and transmission simultaneously.
In addition, the ECT has features such as the following:

- Diagnostic function
- Fail-safe function when a malfunction occurs

HOW TO PROCEED WITH TROUBLESHOOTING

HINT:

- The ECM of this system is connected to the CAN communication system. Therefore, before starting troubleshooting, be sure to check that there is no trouble in the CAN communication system.
- The intelligent tester can be used in steps 3, 4, 6, and 9.

1	**Vehicle Brought to Workshop**

NEXT

2	**Customer Problem Analysis**

NEXT

3	**Connect Intelligent Tester to DLC3**

NEXT

4	**Check and Clear DTCs and Freeze Frame Data**

HINT:
(See page AX-25).

AX

NEXT

5	**Visual Inspection**

NEXT

6	**Setting Check Mode Diagnosis**

HINT:
(See page AX-26).

NEXT

7	**Problem Symptom Confirmation**

HINT:
(See page AX-9).

	Symptom does not occur: Go to step 8
	Symptom occurs: Go to step 9

8	Symptom Simulation

HINT:
(See page IN-26).

NEXT

9	DTC Check

HINT:
(See page AX-25).

DTC is not output: Go to step 10

DTC is output: Go to step 17

10	Basic Inspection

HINT:
(See page AX-93, AX-106 and AX-107).

NG → Go to step 19

OK

11	Mechanical System Test

HINT:
(See page AX-11).

NG → Go to step 16

OK

12	Hydraulic Test

HINT:
(See page AX-13).

NG → Go to step 16

OK

13	Manual Shifting Test

HINT:
(See page AX-14).

NG → Go to step 15

OK

AX

14	Problem Symptoms Table Chapter 1

HINT:
(See page AX-17).

NG → Go to step 18

OK

15	Problem Symptoms Table Chapter 2

HINT:
(See page AX-17).

NEXT

16	Part Inspection

→ Go to step 19

17	DTC Chart

HINT:
(See page AX-32).

NEXT

AX

18	Circuit Inspection

NEXT

19	Repair or Replace

NEXT

20	Confirmation Test

NEXT

End

ROAD TEST

1. PROBLEM SYMPTOM CONFIRMATION

(a) Based on the result of the customer problem analysis, try to reproduce the symptoms. If the problem is that the transaxle does not shift up, shift down, or the shift point is too high or too low, conduct the following road test referring to the automatic shift schedule and simulate the problem symptoms.

2. PERFORM ROAD TEST

NOTICE:

Perform the test at the ATF (Automatic Transmission Fluid) temperature 50° to 80 °C (122° to 176 °F) in the normal operation.

(a) D position test

Shift into the D position, fully depress the accelerator pedal and check the following points.

(1) Check up-shift operation.

Check that 1st to 2nd, 2nd to 3rd and 3rd to 4th up-shifts take place, and that the shift points conform to the automatic shift schedule (See page SS-19).

HINT:

4th Gear Up-shift Prohibition Control

- Engine coolant temperature is 60 °C (140 °F) or less.
- ATF temperature is 10 °C (50 °F) or less.

4th Gear Lock-up Prohibition Control

- Brake pedal is depressed.
- Accelerator pedal is released.
- Engine coolant temperature is 60 °C (140 °F) or less.
- ATF temperature is 10 °C (50 °F) or less.

(2) Check for shift shock and slippage.

Check for shock and slippage when up-shifting from 1st to 2nd, 2nd to 3rd and 3rd to 4th.

(3) Check for abnormal noises and vibration.

Check for abnormal noise and vibration when up-shifting from 1st to 2nd, 2nd to 3rd and 3rd to 4th while driving with the shift lever in the D position, and also check while driving in the lock-up condition.

HINT:

The cause of abnormal noises and vibration must be checked very thoroughly as it could also cause loss of balance in parts, such as the differential and torque converter.

(4) Check kick-down operation.
Check the possible kick-down vehicle speeds when the 2nd to 1st, 3rd to 2nd and 4th to 3rd kick-downs take place while driving with the shift lever in the D position. Confirm that each takes place within the applicable vehicle speed range indicated in the automatic shift schedule (See page SS-19).
(5) Check for abnormal shock and slippage during kick-down.
(6) Check the lock-up mechanism.
- Drive in the D position (4th gear) at a constant speed (lock-up ON) of approximately 37 mph (60 km/h).
- Lightly depress the accelerator pedal and check that the engine speed does not change abruptly.

HINT:
- There is no lock-up function in the 1st, 2nd and 3rd gears in the D position.
- If there is a sudden increase in engine speed, lock-up has not occurred.

(b) 3 position test
Shift into the 3 position, fully depress the accelerator pedal and check the following points:
(1) Check the transmission control switch operation.
While driving in the D position (4th gear), shift the shift lever into the 3 position, and check that the 4th to 3rd down-shift takes place.
(2) Check up-shift operation.
Check that the 1st to 2nd and 2nd to 3rd up-shifts take place, and that the shift points conform to the automatic shift schedule (See page SS-19).
HINT:
There is no 3rd to 4th up-shift in the 3 position.
(3) Check engine braking.
While driving in the 3 position and 3rd gear, release the accelerator pedal and check the engine braking effect.

(c) 2 position test
Shift into the 2 position and fully depress the accelerator pedal and check the following points.
(1) Check up-shift operation.
Check that the 1st to 2nd up-shift takes place and that the shift point conforms to the automatic shift schedule (See page SS-19).
HINT:
There is no lock-up function in the 2 position.
(2) Check engine braking.
While driving in the 2 position and 2nd gear, release the accelerator pedal and check the engine braking effect.

(3) Check for abnormal noises during acceleration and deceleration, and for shock during up-shift and down-shift.

(d) L position test
Shift into the L position, fully depress the accelerator pedal and check the following points.
(1) Check that no up-shift takes place.
While driving in the L position, check that there is no up-shift to 2nd gear.
(2) Check engine braking.
While driving in the L position, release the accelerator pedal and check the engine braking effect.
(3) Check for abnormal noises during acceleration and deceleration.

(e) R position test
Shift into the R position, fully depress the accelerator pedal and check for slippage.
CAUTION:
Before conducting this test, ensure that the test area is free from people and obstructions.

(f) P position test
Stop the vehicle on a slope (more than 5°), shift into the P position and release the parking brake. Check that the vehicle does not move.

MECHANICAL SYSTEM TESTS

1. STALL SPEED TEST

HINT:

This test is to check the overall performance of the engine and transaxle by measuring the stall speeds in the D position.

NOTICE:

- **Do not perform the stall speed test for longer than 5 seconds.**
- **To ensure safety, perform this test in a wide, clear level area which provides good traction.**
- **The stall speed test must always be carried out by pairs of technicians. One technician must watch the wheels and wheel stoppers from outside the vehicle to make sure they do not slip, while the other performs the test.**

(a) Connect the intelligent tester to the DLC3.

(b) Run the vehicle until the ATF (Automatic Transmission Fluid) temperature reaches 50° to 80°C (122° to 176°F).

(c) Allow the engine to idle with the air conditioning OFF.

(d) Chock all 4 wheels.

(e) Set the parking brake and keep the brake pedal firmly depressed with your left foot.

(f) Shift the shift lever to the D position.

(g) Depress the accelerator pedal all the way down with your right foot.

(h) Read the engine rpm (stall speed) and release the accelerator pedal immediately.

Standard value:

1,850 to 2,450 rpm

AX

Evaluation:

Test Result	Possible Cause
Stall speed is lower than standard value	• Stator one-way clutch is not operating properly • Torque converter is faulty (Stall speed is less than standard value by 600 rpm or more.) • Engine power is insufficient
Stall speed is higher than standard value	• Line pressure is too low • Forward clutch (C1) is slipping • No. 2 one-way clutch (F2) is not operating properly

2. SHIFT TIME LAG TEST

HINT:

This test is to check the conditions of the direct clutch, forward clutch, 1st brake and reverse brake.

(a) Connect the intelligent tester to the DLC3.

(b) Run the vehicle until the ATF (Automatic Transmission Fluid) temperature reaches 50° to 80°C (122° to 176°F).

(c) Allow the engine to idle with the air conditioning OFF.

(d) Set the parking brake and keep the brake pedal firmly depressed with your left foot.

(e) Check the D range time lag.
(1) Shift the shift lever into the N position and wait for 1 minute. (*1)
(2) Shift the shift lever into the D position and measure the time until the shock is felt. (*2)
(3) Repeat procedures (*1) and (*2) three times, and calculate the average time of the three tests.

(f) Check the R range time lag.
(1) Shift the shift lever into the N position and wait for 1 minute. (*3)
(2) Shift the shift lever into the R position and measure the time until the shock is felt. (*4)
(3) Repeat procedures (*3) and (*4) three times, and calculate the average time of the three tests.
Standard value:
D range time lag is less than 1.2 seconds
R range time lag is less than 1.5 seconds

Evaluation :

Test Result	Possible Cause
D range time lag exceeds standard value	• Line pressure is too low • Forward clutch (C1) is worn • No. 2 one-way clutch (F2) is not operating properly
R range time lag exceeds standard value	• Line pressure is too low • Reverse clutch (C3) is worn • 1st and reverse brake (B3) is worn

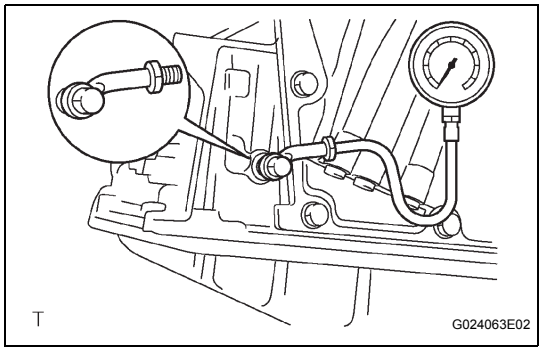

HYDRAULIC TEST

1. PERFORM HYDRAULIC TEST

(a) Measure the line pressure.
NOTICE:
- **Perform the test at the normal operating ATF (Automatic Transmission Fluid) temperature 50° to 80°C (122° to 176°F).**
- **The line pressure test must always be carried out by pairs of technicians. One technician must observe the condition of the wheels and wheel stoppers outside the vehicle, while the other is performing the test.**
- **Prevent the SST hose from interfering with the exhaust pipe.**
- **This test must be conducted after checking and adjusting the engine.**
- **Perform this test with the air conditioning OFF.**
- **Do not continue the stall test for more than 5 seconds.**

(1) Warm up the ATF.
(2) Lift the vehicle up.
(3) Remove the engine under cover.
(4) Remove the test plug on the transmission case center right side and connect SST.
SST 09992-00095 (09992-00231, 09992-00271)
(5) Connect the intelligent tester to the DLC3.

AX

(6) Fully apply the parking brake and chock all 4 wheels.
(7) Start the engine and check the idling speed.
(8) Keep your left foot pressing firmly on the brake pedal and shift into the D position.
(9) Measure the line pressure when the engine is idling.
(10) Depress the accelerator pedal all the way down. Quickly read the highest line pressure when engine speed reaches stall speed.
(11) Perform the test in the R position in the same manner.

Standard line pressure

Condition	D position kPa (kgf / cm^2, psi)	R position kPa (kgf / cm^2, psi)
Idling	**372 to 412 kPa (3.8 to 4.2 kgf/cm^2, 54 to 60 psi)**	**553 to 623 kPa (5.6 to 6.4 kgf/cm^2, 80 to 90 psi)**
Stall	**1,126 to 1,226 kPa (11.5 to 12.5 kgf/cm^2, 163 to 178 psi)**	**1,664 to 1,864 kPa (17.0 to 19.0 kgf/cm^2, 241 to 270 psi)**

Evaluation:

Problem	Possible Cause
Measured values are higher than specified values in all positions	• Shift solenoid valve SLT defective • Regulator valve defective
Measured values are lower than specified values in all positions	• Shift solenoid valve SLT defective • Regulator valve defective • Oil pump defective
Pressure is low in D position only	• D position circuit fluid leak • Forward clutch defective
Pressure is low in R position only	• R position circuit fluid leak • Reverse clutch defective • 1st and reverse brake defective

MANUAL SHIFTING TEST

1. PERFORM MANUAL SHIFTING TEST

HINT:

- This test can be used to determine whether the trouble is occurring in the electrical circuit or is a mechanical problem in the transaxle.
- If any abnormalities are found in the following test, the problem is in the transaxle itself.

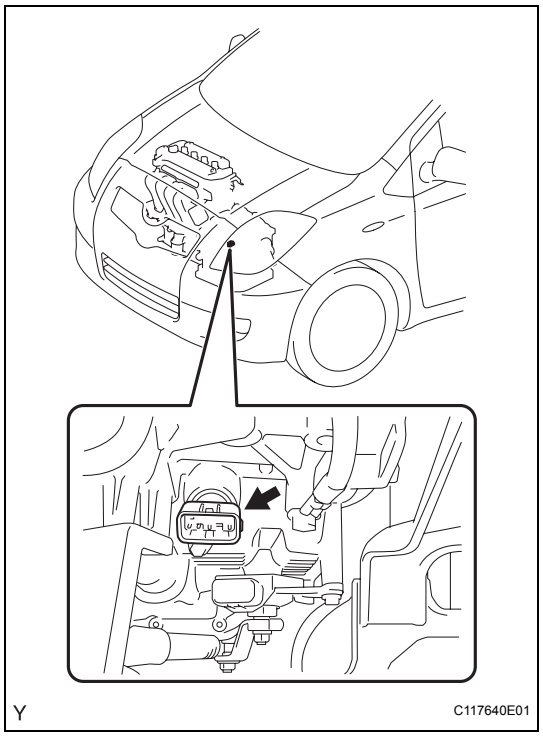

(a) Disconnect the transmission wire connector.
HINT:
It is possible to deactivate the electrical shift control by disconnecting the transmission wire. In this way, it is possible to change gear positions by mechanical shift change using the shift lever.

(b) Drive with the transmission wire disconnected. Shift the shift lever into each position to check whether the gear position changes as shown in the table below.

Shift Position	Shifting Condition
D	3rd
3	3rd
2	3rd
L	3rd
R	Reverse
P	Pawl Lock

(c) Connect the transmission wire connector.

(d) Clear the DTC (See page AX-25).

AX

INITIALIZATION

1. RESET MEMORY

NOTICE:

- **Perform the RESET MEMORY (AT initialization) when replacing the automatic transaxle assembly, engine assembly or ECM.**
- **The RESET MEMORY can only be performed using an intelligent tester.**

HINT:

The ECM stores the conditions that the ECT controls the automatic transaxle assembly and engine assembly in accordance with those characteristics. Therefore, when the automatic transaxle assembly, engine assembly, or ECM is replaced, it is necessary to reset the memory so that the ECM can store the new information.

The reset procedure is as follows.

(a) Turn the ignition switch off.

(b) Connect the intelligent tester to the DLC3.

(c) Turn the ignition switch to the ON position and push the intelligent tester main switch on.

(d) Select the following items: DIAGNOSIS / ENHANCED OBD II.

(e) Perform the reset memory procedure from the ENGINE menu.

CAUTION:

After performing the RESET MEMORY, be sure to perform the ROAD TEST (See page AX-9) as described earlier.

HINT:

The ECM stores learned values by performing the ROAD TEST.

(1) Tester menu flow:

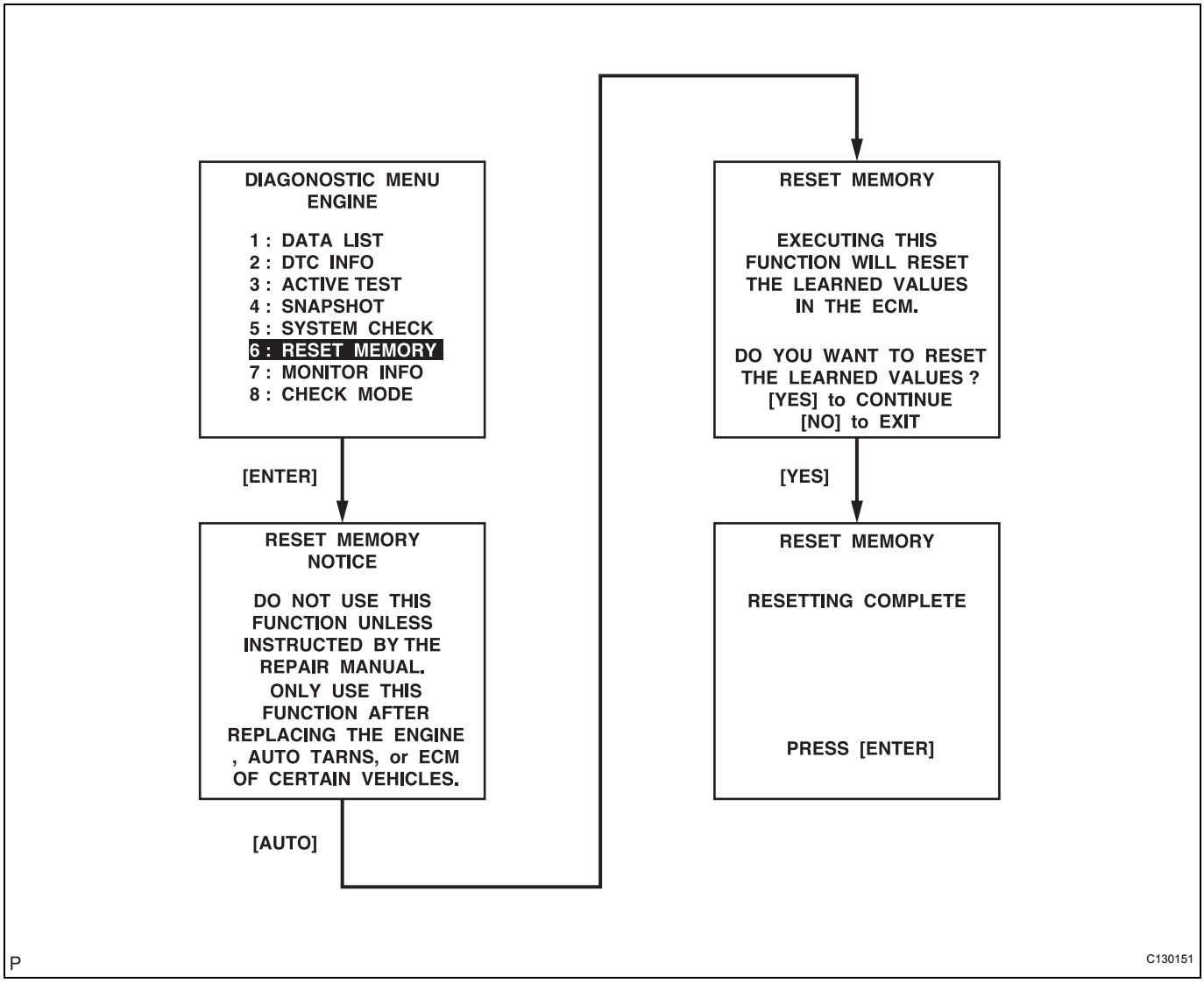
DIAGONOSTIC MENU
ENGINE
1 : DATA LIST
2 : DTC INFO
3 : ACTIVE TEST
4 : SNAPSHOT
5 : SYSTEM CHECK
6 : RESET MEMORY
7 : MONITOR INFO
8 : CHECK MODE
[ENTER]
RESET MEMORY
NOTICE
DO NOT USE THIS FUNCTION UNLESS INSTRUCTED BY THE REPAIR MANUAL.
ONLY USE THIS FUNCTION AFTER REPLACING THE ENGINE , AUTO TARNS, or ECM OF CERTAIN VEHICLES.
[AUTO]
RESET MEMORY
EXECUTING THIS FUNCTION WILL RESET THE LEARNED VALUES IN THE ECM.
DO YOU WANT TO RESET THE LEARNED VALUES ?
[YES] to CONTINUE
[NO] to EXIT
[YES]
RESET MEMORY
RESETTING COMPLETE
PRESS [ENTER]
P
C130151

AX

MONITOR DRIVE PATTERN

1. MONITOR DRIVE PATTERN FOR ECT TEST

(a) Perform this drive pattern as one method to simulate the detection conditions of ECT malfunctions. (The DTCs may not be detected due to the actual driving conditions. And some DTCs may not be detected through this drive pattern.)

HINT:

Preparation for driving

- Warm up the engine. (Engine coolant temperature is 60°C (140°F) or higher.)
- Drive the vehicle when the atmospheric temperature is -10°C (14°F) or higher. (Malfunction is not detected when the atmospheric temperature is less than -10°C (14°F).)

Driving note

- Drive the vehicle through all gears. Stop → 1st → 2nd → 3rd → 4th (lock-up ON).
- Repeat the above driving pattern three times or more.

NOTICE:

- **The monitor status can be checked using the intelligent tester. When using an intelligent tester, monitor status can be found in the ENHANCED OBD II / DATA LIST or under CARB OBD II.**
- **In the event that the drive pattern must be interrupted (possibly due to traffic conditions or other factors), the drive pattern can be resumed and, in most cases, the monitor can be completed.**

CAUTION:

Perform this drive pattern on as level a road as possible and strictly observe the posted speed limits and traffic laws while driving.

AX

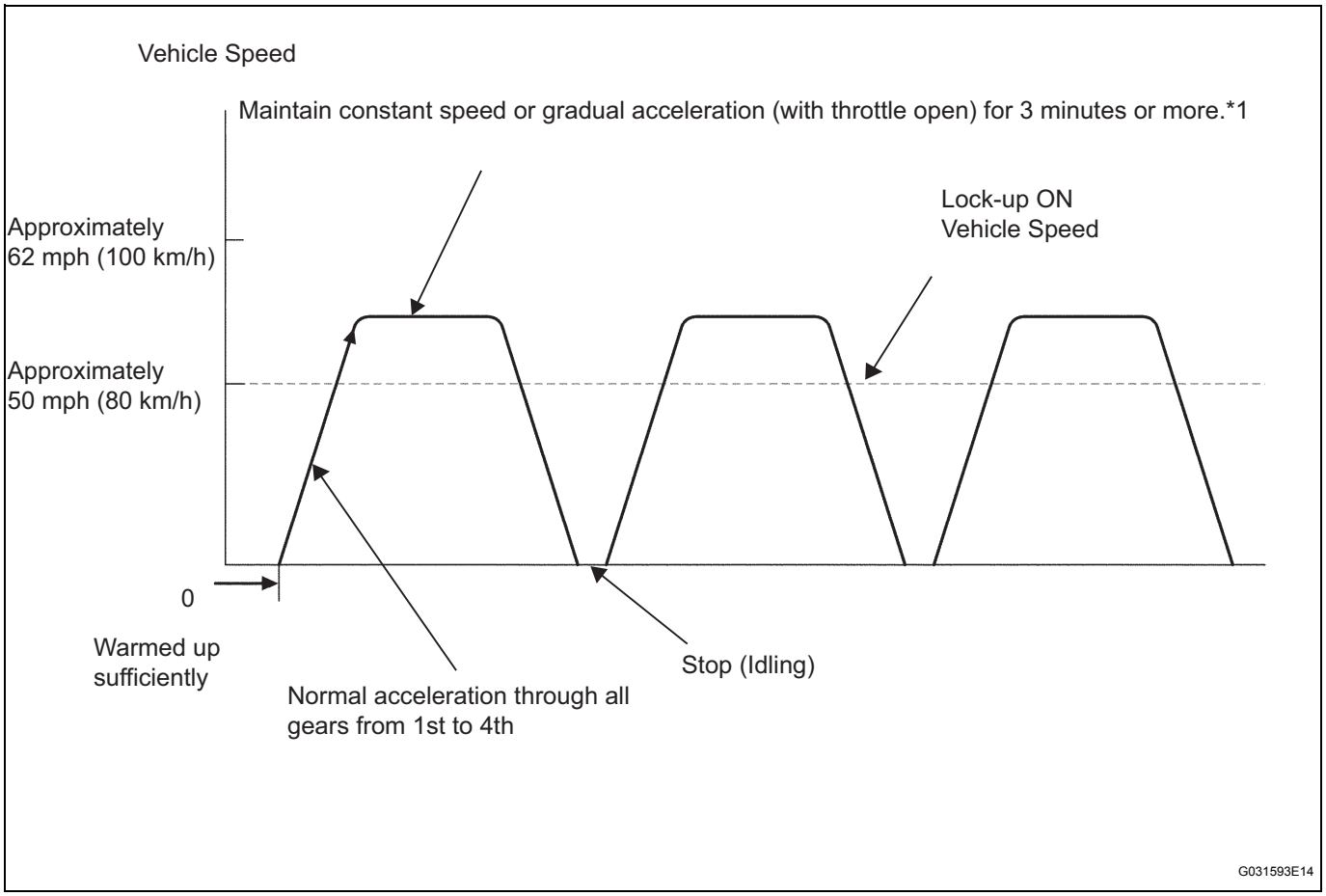

HINT:
*1: Drive at such a speed in the uppermost gear, to engage lock-up. The vehicle can be driven at a speed lower than that in the above diagram under the lock-up condition.

NOTICE:
To detect DTC P0711 (ATF temperature sensor malfunction), drive the vehicle for approximately 30 minutes.

AX

PROBLEM SYMPTOMS TABLE

HINT:

- If a normal code is displayed during the DTC check although the trouble still occurs, check the electrical circuits for each symptom in the order given in the following charts and proceed to the page given for troubleshooting.
- The Matrix Chart is divided into 2 chapters.
- When the circuit on which *1 is attached malfunctions, a DTC could be output.

Chapter 1: Electronic Circuit Matrix Chart

Refer to the table below when the trouble cause is considered to be electrical. If the trouble still occurs even though there are no abnormalities in any of the other circuits, then check and replace the ECM.

Symptom	Suspected area	See page
No up-shift (Particular gear, from 1st to 3rd gear, is not up-shifted)	ECM	IN-34
No up-shift (From 3rd to 4th)	1. Shift lock control unit circuit	AX-47
	2. ECM	IN-34
No down-shift (From 4th to 3rd)	1. Shift lock control unit circuit	AX-47
	2. ECM	IN-34
No down-shift (Particular gear, from 1st to 3rd gear, is not down-shifted)	ECM	IN-34
No lock-up or No lock-up off	1. Stop light switch circuit *1	ES-48
	2. Engine coolant temperature sensor circuit *1	ES-48
	3. Vehicle speed sensor circuit *1	ES-48
	4. Speed sensor (NT) circuit *1	AX-50
	5. ATF temperature sensor circuit *1	AX-42
	6. Shift solenoid valve S1 *1	AX-67
	7. Shift solenoid valve S2 *1	AX-71
	8. Shift solenoid valve SLU *1	AX-89
	9. Throttle position sensor circuit *1	ES-48
	10. ECM	IN-34
Shift point too high or too low	1. Throttle position sensor circuit *1	ES-48
	2. ECM	IN-34
Up-shift to 2nd while in L position	ECM	IN-34
Up-shift to 3nd while in 2 position	ECM	IN-34
Up-shift from 3rd to 4th in 3 position	1. Shift lock control unit circuit	AX-47
	2. Park/neutral position switch *1	AX-35
	3. ECM	IN-34
Up-shift from 3rd to 4th while engine is cold	1. Engine coolant temperature sensor circuit *1	ES-48
	2. ECM	IN-34
Harsh engagement (From N to D)	1. Park/neutral position switch *1	AX-35
	2. ECM	IN-34
Harsh engagement (From 3rd to 4th)	1. Shift solenoid valve ST *1	AX-63
	2. ECM	IN-34
Harsh engagement (Lock-up)	1. Shift solenoid valve SLU *1	AX-89
	2. ECM	IN-34
Harsh engagement (Any driving position)	1. Throttle position sensor circuit *1	ES-48
	2. ECM	IN-34
Poor acceleration	ECM	IN-34
No kick-down	ECM	IN-34

Symptom	Suspected area	See page
Engine stalls when starting off or stopping	ECM	IN-34
Malfunction in shifting	1. Park/neutral position switch *1	AX-35
	2. Shift lock control unit circuit	AX-47
	3. ECM	IN-34

Chapter 2: On-Vehicle Repair and Off-Vehicle Repair

Symptom	Suspected area	See page
Vehicle does not move in any forward positions or in R position	1. Manual valve	AX-253
	2. Valve body assembly	AX-113
	3. Planetary gear unit	AX-173
	4. Forward clutch (C1)	AX-173
	5. No. 2 one-way clutch (F2)	AX-173
	6. Reverse clutch (C3)	AX-173
	7. 1st and reverse brake (B3)	AX-173
Vehicle does not move in R position	1. Manual valve	AX-253
	2. Valve body assembly	AX-113
	3. Planetary gear unit	AX-173
	4. Reverse clutch (C3)	AX-173
	5. 1st and reverse brake (B3)	AX-173
No up-shift (From 1st to 2nd)	1. Valve body assembly	AX-113
	2. 2nd brake (B2)	AX-173
	3. No. 1 one-way clutch (F1)	AX-173
No up-shift (From 2nd to 3rd)	1. Valve body assembly	AX-113
	2. Direct clutch (C2)	AX-173
No up-shift (From 3rd to 4th)	1. Valve body assembly	AX-113
	2. O/D and 2nd brake (B1)	AX-173
No down-shift (From 4th to 3rd)	Valve body assembly	AX-113
No down-shift (From 3rd to 2nd)	Valve body assembly	AX-113
No down-shift (From 2nd to 1st)	Valve body assembly	AX-113
No lock-up or No lock-up off	1. Valve body assembly	AX-113
	2. Torque converter clutch	AX-171
Harsh engagement (From N to D)	1. Valve body assembly	AX-113
	2. Forward clutch (C1)	AX-173
	3. No. 2 one-way clutch (F2)	AX-173
Harsh engagement (Lock-up)	1. Valve body assembly	AX-113
	2. Torque converter clutch	AX-171
Harsh engagement (From N to R)	1. Valve body assembly	AX-113
	2. C3 accumulator	AX-173
	3. Reverse clutch (C3)	AX-173
	4. 1st and reverse brake (B3)	AX-173
Harsh engagement (From 1st to 2nd)	1. B2 accumulator	AX-173
	2. Valve body assembly	AX-113
	3. 2nd brake (B2)	AX-173
	4. No. 1 one-way clutch (F1)	AX-173
Harsh engagement (From 2nd to 3rd)	1. C2 accumulator	AX-173
	2. Valve body assembly	AX-113
	3. Direct clutch (C2)	AX-173
Harsh engagement (From 3rd to 4th)	1. Shift solenoid valve ST	AX-63
	2. Valve body assembly	AX-113
	3. O/D and 2nd brake (B1)	AX-173

Symptom	Suspected area	See page
Harsh engagement (From 4th to 3rd)	1. Shift solenoid valve ST	AX-63
	2. Valve body assembly	AX-113
Harsh engagement (D, 2, L position)	Valve body assembly	AX-113
Slippage or shuddering (Forward position)	1. Valve body assembly	AX-113
	2. Oil strainer	AX-113
	3. Torque converter clutch	AX-171
	4. Forward clutch (C1)	AX-173
	5. Direct clutch (C2)	AX-173
	6. O/D and 2nd brake (B1)	AX-173
	7. 2nd brake (B2)	AX-173
	8. No. 1 one-way clutch (F1)	AX-173
	9. No. 2 one-way clutch (F2)	AX-173
Slippage or shuddering (R position)	1. Valve body assembly	AX-113
	2. Oil strainer	AX-113
	3. Reverse clutch (C3)	AX-173
	4. 1st and reverse brake (B3)	AX-173
Slippage or shuddering (1st)	No. 2 one-way clutch (F2)	AX-173
Slippage or shuddering (2nd)	1. 2nd brake (B2)	AX-173
	2. No.1 one-way clutch (F1)	AX-173
Slippage or shuddering (3rd)	Direct clutch (C2)	AX-173
Slippage or shuddering (4th)	O/D and 2nd brake (B1)	AX-173
No engine braking (1st: L position)	1. Valve body assembly	AX-113
	2. 1st and reverse brake (B3)	AX-173
No engine braking (2nd: 2 position)	1. Valve body assembly	AX-113
	2. 2nd and O/D brake (B1)	AX-173
No kick-down	Valve body assembly	AX-113
Poor acceleration	1. Valve body assembly	AX-113
	2. Torque converter clutch	AX-171
Engine stalls when starting off or stopping	Torque converter clutch	AX-171

TERMINALS OF ECM

1. ECM

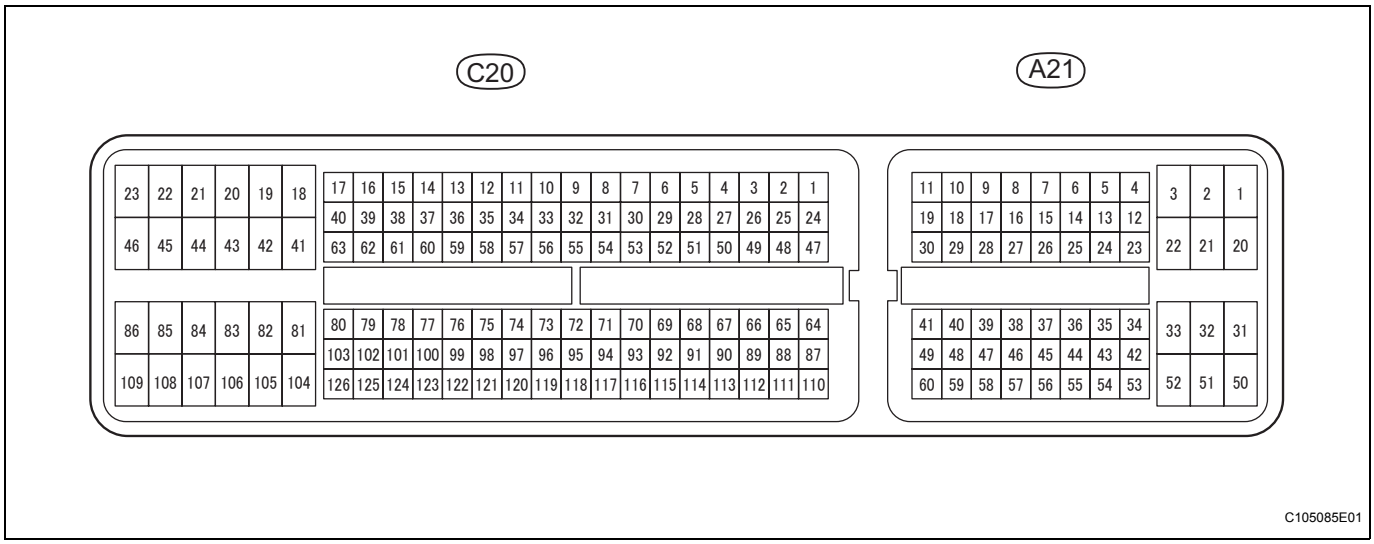

HINT:
Each ECM terminal's standard voltage is shown in the table below.
In the table, first follow the information under "Condition". Look under "Symbols (Terminal No.)" for the terminals to be inspected. The standard voltage between the terminals is shown under "Specific Condition".
Use the illustration above as a reference for the ECM terminals.

Symbols (Terminals No.)	Wiring Color	Terminal Description	Condition	Specified Condition
L (C20-74) - E1 (C20-104)	V - W	L shift position switch signal	Ignition switch ON and shift lever L position	11 to 14 V
			Ignition switch ON and shift lever other than L position	Below 1 V
2 (C20-55) - E1 (C20-104)	G - W	2 shift position switch signal	Ignition switch ON and shift lever 2 position	11 to 14 V
			Ignition switch ON and shift lever other than 2 position	Below 1 V
ODMS (A21-26) - E1 (C20-104)	O - W	3 shift position switch signal	Ignition switch ON and shift lever 3 position	11 to 14 V
			Ignition switch ON and shift lever other than 3 position	Below 1 V
D (C20-56) - E1 (C20-104)	L - W	D shift position switch signal	Ignition switch ON and shift lever D or 3 position	11 to 14 V
			Ignition switch ON and shift lever other than D and 3 positions	Below 1 V
R (C20-53) - E1 (C20-104)	R - W	R shift position switch signal	Ignition switch ON and shift lever R position	11 to 14 V
			Ignition switch ON and shift lever other than R position	Below 1 V

Symbols (Terminals No.)	Wiring Color	Terminal Description	Condition	Specified Condition
N (C20-54) - E1 (C20-104)	SB - W	N shift position switch signal	Ignition switch ON and shift lever N position	11 to 14 V
			Ignition switch ON and shift lever other than N position	Below 1 V
P (C20-73) - E1 (C20-104)	R - W	P shift position switch signal	Ignition switch ON and shift lever P position	11 to 14 V
			Ignition switch ON and shift lever other than P position	Below 1 V
NT+ (C20-125) - NT- (C20-124)	B - G	Speed sensor (NT) signal	Engine running	Pulse generation (See waveform 1)
STP (A21-36) - E1 (C20-104)	G - W	Stop light switch signal	Brake pedal depressed	7.5 to 14 V
			Brake pedal released	Below 1.5 V
SPD (A21-8) - E1 (C20-104)	V - W	Speed signal	Ignition switch ON and driving wheel rotating slowly	Pulse generation (See waveform 2)
S1 (C20-79) - E1 (C20-104)	SB - W	S1 solenoid signal	Ignition switch ON	11 to 14 V
			1st or 2nd gear	11 to 14 V
			3rd or 4th gear	Below 1 V
S2 (C20-78) - E1 (C20-104)	L - W	S2 solenoid signal	Ignition switch ON	Below 1 V
			1st or 4th gear	11 to 14 V
			2nd or 3rd gear	Below 1 V
ST (C20-80) - E1 (C20-104)	GR - W	ST solenoid signal	D position (3rd gear ⟷ 4th gear)	Below 1 V ⟷ 11 to 14 V
SLT+ (C20-76) - SLT- (C20-75)	G - W	SLT solenoid signal	Engine idling speed	Pulse generation (See waveform 3)
SLU+ (C20-57) - SLU- (C20-77)	P - O	SLU solenoid signal	Engine idling speed	Pulse generation (See waveform 4)
THO1 (C20-72) - ETHO (C20-95)	Y - B	ATF (Automatic Transmission Fluid) temperature sensor signal	ATF temperature: 10°C (50°F) to 145°C (293°F)	4 to 0 V

AX

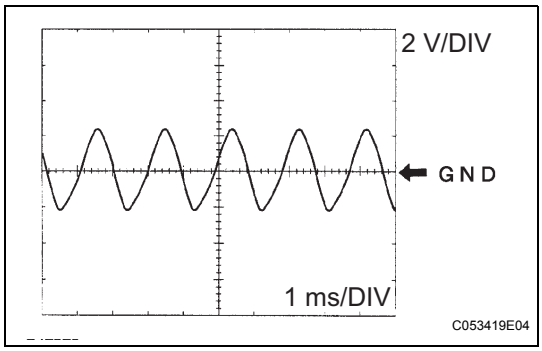

(a) Waveform 1

Terminal	NT+ - NT-
Tool setting	2 V/DIV, 1ms/DIV
Vehicle conditions	Driving at approximately 12 mph (20 km/h)

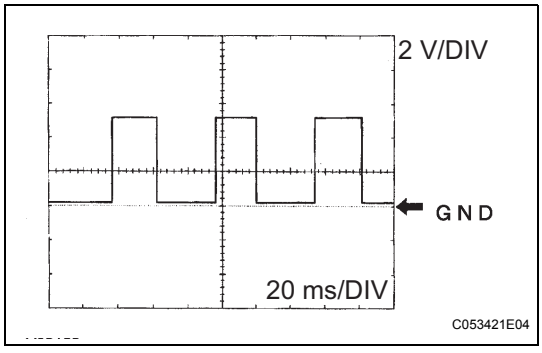

(b) Waveform 2

Terminal	SPD - E1
Tool setting	2 V/DIV, 20 ms/DIV
Vehicle conditions	Driving at approximately 12 mph (20 km/h)

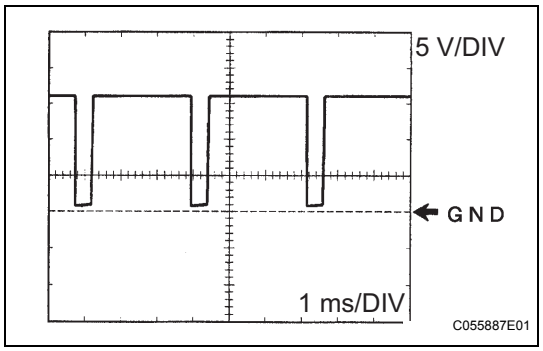

(c) Waveform 3

Terminal	SLT+ - SLT-
Tool setting	5 V/DIV, 1 ms/DIV
Vehicle conditions	Engine idling speed

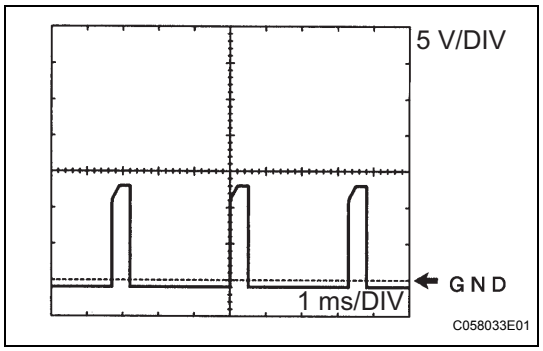

(d) Waveform 4

Terminal	SLU+ - SLU-
Tool setting	5 V/DIV, 1 ms/DIV
Vehicle conditions	Engine idling speed

DIAGNOSIS SYSTEM

1. DESCRIPTION

(a) When troubleshooting OBD II vehicles, the only difference from the usual troubleshooting procedure is to connect an intelligent tester (complying with SAE J1987) to the vehicle, and read off various data output by the vehicle's ECM.

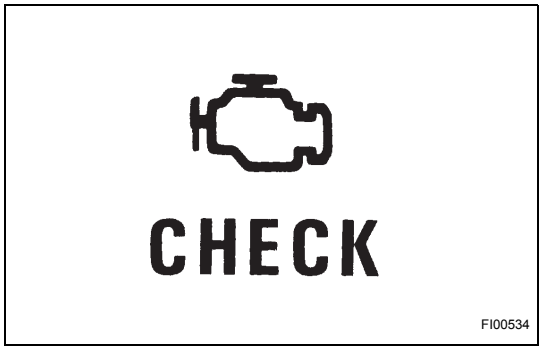

(b) OBD II regulations require that the vehicle's on-board computer illuminate the Malfunction Indicator Lamp (MIL) on the instrument panel when the computer detects a malfunction in the computer itself or in the drive system components which affect the vehicle emissions. In addition to illuminating the MIL when a malfunction is detected, the applicable DTCs prescribed by SAE J2012 are recorded in the ECM memory (See page AX-32).
If the malfunction does not occur in 3 consecutive trips, the MIL goes off but the DTCs remain in the ECM memory.

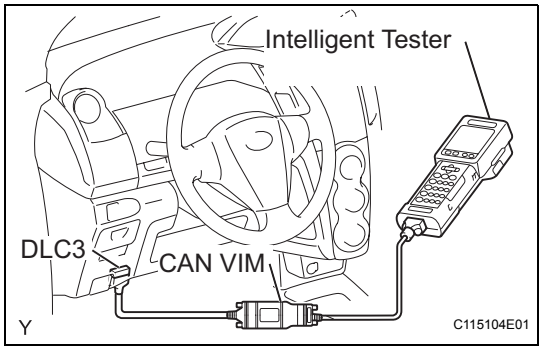

(c) To check the DTCs, connect the intelligent tester to the DLC3 of the vehicle. The intelligent tester also enables you to erase the DTCs and check freeze frame data and various forms of engine data (For operating instructions, see the instruction book).

(d) The DTCs include SAE controlled codes and manufacturer controlled codes. SAE controlled codes must be set as prescribed by the SAE, while manufacturer controlled codes can be set freely by the manufacturer within the prescribed limits (See page AX-32).

(e) The diagnosis system operates in normal mode during normal vehicle use. In normal mode, 2-trip detection logic is used to ensure accurate detection of malfunctions. Check mode is also available to technicians as an option. In check mode, 1-trip detection logic is used for simulating malfunction symptoms and increasing the system's ability to detect malfunctions, including intermittent malfunctions.

(f) 2-trip detection logic: When a malfunction is first detected, the malfunction is temporarily stored in the ECM memory (1st trip). If the ignition switch is turned off and then turned to the ON position again, and same malfunction is detected again, the MIL illuminates.

(g) Freeze frame data records the engine conditions, such as fuel system, calculated load, engine coolant temperature, fuel trim, engine speed and vehicle speed when a malfunction is detected. When troubleshooting, freeze frame data can help determine if the vehicle was running or stopped, if the engine was warmed up or not, if the air/fuel ratio was lean or rich, and other data from the time the malfunction occurred.

(h) The intelligent tester records freeze frame data in five different instances: 1) 3 times before the DTC is set, 2) once when the DTC is set, and 3) once after the DTC is set. These data can be used to simulate the vehicle's conditions around the time when the malfunction occurred. The data may help find the cause of the malfunction, or judge if the DTC is being caused by a temporary malfunction or not.

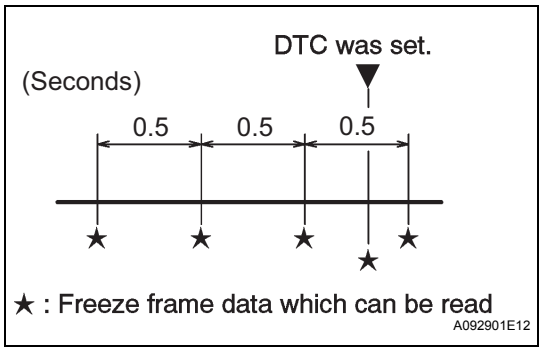

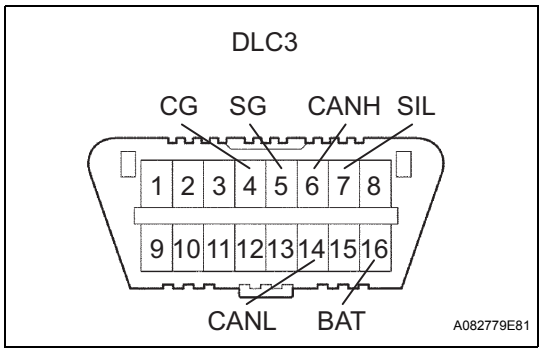

2. INSPECT DLC3

(a) The ECM uses ISO 15765-4 for communication. The terminal arrangement of the DLC3 complies with SAE J1962 and matches the ISO 15765-4 format.

AX

Symbols (Terminal No.)	Terminal Description	Condition	Specified Condition
SIL (7) - SG (5)	Bus "+" line	During transmission	Pulse generation
CG (4) - Body ground	Chassis ground	Always	Below 1 Ω
SG (5) - Body ground	Signal ground	Always	Below 1 Ω
BAT (16) - Body ground	Battery positive	Always	11 to 14 V
CANH (6) - CANL (14)	CAN bus line	Ignition switch OFF*	54 to 69 Ω
CANH (6) - CG (4)	HIGH-level CAN bus line	Ignition switch OFF*	200 Ω or higher
CANL (14) - CG (4)	LOW-level CAN bus line	Ignition switch OFF*	200 Ω or higher
CANH (6) - BAT (16)	HIGH-level CAN bus line	Ignition switch OFF*	6 kΩ or higher
CANL (14) - BAT (16)	LOW-level CAN bus line	Ignition switch OFF*	6 kΩ or higher

NOTICE:

***: Before measuring the resistance, leave the vehicle as is for at least 1 minute and do not operate the ignition switch, any other switches or the doors.**

If the result is not as specified, the DLC3 may have a malfunction. Repair or replace the harness and connector.

HINT:

If your display shows UNABLE TO CONNECT TO VEHICLE when you have connected the cable of the intelligent tester to the DLC3, turned the ignition switch to the ON position and operated the tester, there is a problem with the vehicle or the tester.

- If the communication is normal when the tester is connected to another vehicle, inspect the DLC3 on the original vehicle.
- If the communication is still impossible when the tester is connected to another vehicle, the problem is probably in the tester itself. Consult the Service Department listed in the tester's instruction manual.

3. CHECK BATTERY VOLTAGE

(a) Measure the battery voltage.

Standard voltage:

11 to 14 V

If the voltage is below 11 V, replace the battery before proceeding.

4. CHECK MIL

(a) The MIL comes on when the ignition switch is turned to the ON position and the engine is not running.

HINT:

If the MIL does not light up, troubleshoot the combination meter.

(b) When the engine is started, the MIL should go off. If the lamp remains on, it means that the diagnosis system has detected a malfunction or abnormality in the system.

DTC CHECK / CLEAR

1. DTC CHECK (NORMAL MODE)

NOTICE:

When the diagnostic system is switched from normal mode to check mode, all the DTCs and freeze frame data recorded in normal mode are erased. So before switching modes, always check the DTCs and freeze frame data, and note them down.

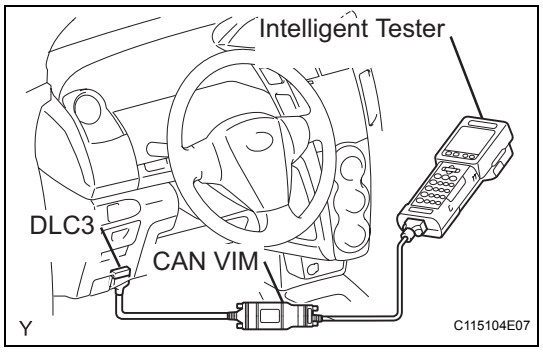

(a) Check DTCs using an intelligent tester.
  (1) Turn the ignition switch off.
  (2) Connect the intelligent tester to the DLC3.
  (3) Turn the ignition switch to the ON position and turn the intelligent tester main switch on.
  (4) Select the following items: DIAGNOSIS / ENHANCED OBD II / DTC INFO / CURRENT CODES.
  (5) Read the DTCs and freeze frame data displayed on the tester and note them down.

  NOTICE:

  When simulating symptoms with an intelligent tester to check the DTCs, use normal mode. For DTCs in the DTC chart, which are subject to 2-trip detection logic, perform the following.

  Turn the ignition switch off after the symptom is simulated once. Then repeat the simulation process again. When the problem has been simulated twice, the MIL illuminates and the DTCs are recorded in the ECM.

2. DTC CLEAR

(a) Clear the DTCs: When using an intelligent tester.
  (1) Connect the intelligent tester to the DLC3.
  (2) Turn the ignition switch to the ON position and turn the intelligent tester main switch on.
  (3) Select the following items: DIAGNOSIS / ENHANCED OBD II / DTC INFO / CLEAR CODES [YES] button.

  HINT:

  When operating the intelligent tester to erase the DTCs, the freeze frame data are also erased.

(b) Clear the DTCs: When not using an intelligent tester.
  (1) Disconnect the battery terminal or remove the EFI and ETCS fuses from the engine room J/B for 60 seconds or more.

AX

CHECK MODE PROCEDURE

1. DESCRIPTION

(a) Check mode has a higher sensitivity to malfunctions and can detect malfunctions that normal mode cannot detect. Check mode can also detect all the malfunctions that normal mode can detect. In check mode, DTCs are detected with 1-trip detection logic.

2. DTC CHECK (CHECK MODE)

HINT:

Intelligent tester only: Compared to normal mode, check mode is more sensitive for detecting malfunctions. Furthermore, the same diagnostic items which are detected in normal mode can also be detected in check mode.

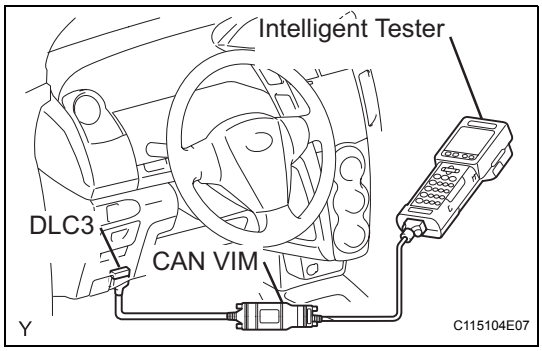

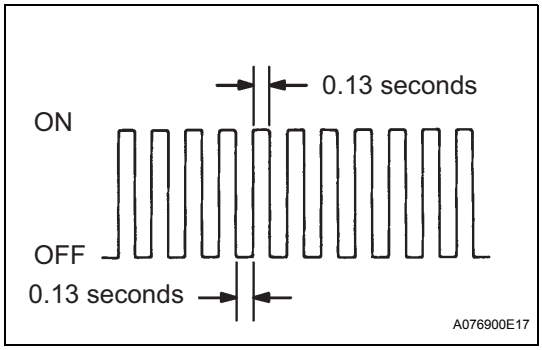

(a) Procedure for check mode using the intelligent tester.

(1) Check the initial conditions.
- Battery positive voltage 11 V or more
- Throttle valve fully closed
- Transaxle in the P or N position
- A/C switched OFF

(2) Turn the ignition switch off.

(3) Connect the intelligent tester to the DLC3.

(4) Turn the ignition switch to the ON position and turn the intelligent tester main switch on.

(5) Select the following items: DIAGNOSIS / ENHANCED OBD II / CHECK MODE (Check that the MIL flashes as shown in the illustration).
NOTICE:
All DTCs and freeze frame data recorded are erased if: 1) the intelligent tester is used to change the ECM from normal mode to check mode or vice-versa; or 2) during check mode, the ignition switch is turned from the ON position to the ACC or LOCK position.

(6) Start the engine (the MIL goes off after the engine starts).

(7) Perform MONITOR DRIVE PATTERN for the ECT test (See page AX-16), or simulate the conditions of the malfunction described by the customer.
NOTICE:
Leave the ignition switch in the ON position until you have checked the DTCs.

(8) After simulating malfunction conditions, use the intelligent tester to check the DTCs and freeze frame data.

AX

FAIL-SAFE CHART

1. FAIL-SAFE

(a) This function minimizes the loss of ECT functions when any malfunction occurs in the sensors or solenoids.

Malfunction Part	Function
Vehicle Speed Sensor	During vehicle speed sensor signal malfunction, 4th up-shift is prohibited.
Transmission Revolution Sensor (Speed Sensor (NT))	During transmission revolution sensor (NT) signal malfunction, 4th up-shift is prohibited.
ATF (Automatic Transmission Fluid) Temperature Sensor	During ATF temperature sensor malfunction, 4th up-shift is prohibited.
Shift Solenoid Valve S1 or S2	During shift solenoid valve S1 or S2 malfunction, current to faulty shift solenoid valve is cut off and control is effected by operating normal solenoid valve. Shift control effect depends on failed solenoid as described in table below.
Shift Solenoid Valve ST	During shift solenoid valve ST malfunction, 4th up-shift is prohibited.
Shift Solenoid Valve SLT	During shift solenoid valve SLT malfunction, 4th up-shift is prohibited.
Engine Coolant Temperature Sensor, Knock Sensor or Throttle Position Sensor	During engine coolant temperature sensor, knock sensor or throttle position sensor malfunction, 4th up-shift is prohibited.

(b) Fail-safe chart for shift solenoid valve S1 and/or S2:
Fail safe function:
If either of the shift solenoid valve circuits develops an open or short, the ECM turns the other shift solenoid ON or OFF in order to shift into the gear positions shown in the table below.
Manual shifting as shown in the following table must be done (In case of a short circuit, the ECM stops sending the current to the short circuit solenoid).
Even if starting the engine in fail-safe mode, the gear position remains in the same position.

AX

Normal:

Shift Lever Position		Shift Solenoid Valve S1	Shift Solenoid Valve S2	Gear
D	1st	ON	ON	1st
	2nd	ON	OFF	2nd
	3rd	OFF	OFF	3rd
	4th	OFF	ON	4th
3	1st	ON	ON	1st
	2nd	ON	OFF	2nd
	3rd	OFF	OFF	3rd
2	1st	ON	ON	1st
	2nd	ON	OFF	2nd
L	1st	ON	ON	1st

Shift Solenoid Valve S1 malfunction:

Shift Lever Position		Shift Solenoid Valve S1	Shift Solenoid Valve S2	Gear
D	1st	X	OFF	3rd
	2nd	X	OFF	3rd
	3rd	X	OFF	3rd
	4th	X	ON	4th
3	1st	X	OFF	3rd
	2nd	X	OFF	3rd
	3rd	X	OFF	3rd

Shift Lever Position		Shift Solenoid Valve S1	Shift Solenoid Valve S2	Gear
2	1st	X	OFF	3rd
	2nd	X	OFF	3rd
L	1st	X	OFF	3rd

X: Malfunctions

Shift Solenoid Valve S2 malfunction:

Shift Lever Position		Shift Solenoid Valve S1	Shift Solenoid Valve S2	Gear
D	1st	ON	X	2nd
	2nd	ON	X	2nd
	3rd	OFF	X	3rd
	4th	OFF	X	3rd
3	1st	ON	X	2nd
	2nd	ON	X	2nd
	3rd	OFF	X	3rd
2	1st	ON	X	2nd
	2nd	ON	X	2nd
L	1st	ON	X	2nd

X: Malfunctions

Shift Solenoid Valve S1 and S2 malfunction:

Shift Lever Position		Shift Solenoid Valve S1	Shift Solenoid Valve S2	Gear
D	1st	X	X	3rd
	2nd	X	X	3rd
	3rd	X	X	3rd
	4th	X	X	3rd
3	1st	X	X	3rd
	2nd	X	X	3rd
	3rd	X	X	3rd
2	1st	X	X	3rd
	2nd	X	X	3rd
L	1st	X	X	3rd

X: Malfunctions

DATA LIST / ACTIVE TEST

1. DATA LIST

HINT:

Using the DATA LIST displayed by the intelligent tester, you can read the values of the switches, sensors, actuators and so on without parts removal. Reading the DATA LIST as the first step of troubleshooting is one method of shortening labor time.

NOTICE:

In the table below, the values listed under "Normal Condition" are reference values. Do not depend solely on these reference values when deciding whether a part is faulty or not.

(a) Warm up the engine.

(b) Turn the ignition switch off.

(c) Connect the intelligent tester together with the CAN VIM (Controller Area Network Vehicle Interface Module) to the DLC3.

(d) Turn the ignition switch to the ON position.

(e) Turn on the tester.

(f) Select the following items: DIAGNOSIS / ENHANCED OBD II / DATA LIST.

(g) In accordance with the display on the tester, read the DATA LIST.

Item	Measurement Item/ Range (display)	Normal Condition	Diagnostic Note
VEHICLE SPD	Vehicle Speed display/ min.: 0 mph (0 km/h) max.: 158 mph (255 km/h)	• Vehicle stopped: 0 mph (0 km/h) • Same as speedometer reading	-
SPD (NT)	Input Turbine Speed/ display: 50 rpm min.: 0 rpm max.: 12750 rpm	HINT: • Lock-Up ON (After warming up engine): Input turbine speed (NT) equal to engine speed • Lock-Up OFF (Idling at P or N position): Input turbine speed (NT) nearly equal to engine speed • Vehicle stopped in D position: 0 rpm	-
PNP SW [NSW]	PNP SW Status/ ON or OFF	Shift lever position; P or N: ON Except P and N: OFF	When shift lever position displayed on intelligent tester differs from actual position, adjustment of PNP switch or shift cable may be incorrect. HINT: When failure still occurs even after adjusting these parts, see page AX-35.
STOP LIGHT SW	Stop Light SW Status/ ON or OFF	• Brake pedal is depressed: ON • Brake pedal is released: OFF	-
SHIFT	ECM Gearshift Command/ 1st, 2nd, 3rd or 4th	Shift lever position; • L: 1st • 2: 1st or 2nd • 3: 1st, 2nd or 3rd • D: 1st, 2nd, 3rd or 4th	-

Item	Measurement Item/ Range (display)	Normal Condition	Diagnostic Note
REVERSE	PNP SW Status/ ON or OFF	Shift lever position; R: ON Except R: OFF	When shift lever position displayed on intelligent tester differs from actual position, adjustment of PNP switch or shift cable may be incorrect. HINT: When failure still occurs even after adjusting these parts, see page AX-35.
PARKING	PNP SW Status/ ON or OFF	Shift lever position; P: ON Except P: OFF	
NEUTRAL	PNP SW Status/ ON or OFF	Shift lever position; N: ON Except N: OFF	
DRIVE	PNP SW Status/ ON or OFF	Shift lever position; D or 3: ON Except D and 3: OFF	
3RD	PNP SW Status/ ON or OFF	Shift lever position; 3: ON Except 3: OFF	-
2ND	PNP SW Status/ ON or OFF	Shift lever position; 2: ON Except 2: OFF	When shift lever position displayed on intelligent tester differs from actual position, adjustment of PNP switch or shift cable may be incorrect. HINT: When failure still occurs even after adjusting these parts, see page AX-35.
LOW	PNP SW Status/ ON or OFF	Shift lever position; L: ON Except L: OFF	
A/T OIL TEMP1	ATF (Automatic Transmission Fluid) Temperature Sensor Value/ min.: -40°C (-40°F) max.: 215°C (419°F)	• After Stall Test; Approximately 80°C (176°F) • Equal to ambient temperature when cold soak	If value is "-40°C (-40°F)" or " 150°C (302°F) or more ", ATF temperature sensor circuit is open or short.
ATF	ATF Condition	ATF Condition; NG: ON OK: OFF	Replace ATF when ATF condition is ON.
LOCK UP	Lock Up Status/ ON or OFF	• Lock Up: ON • Except Lock Up: OFF	-
LOCK UP SOL	Lock Up Solenoid Status/ ON or OFF	• Lock up solenoid ON: ON • Lock up solenoid OFF: OFF	-
SOLENOID (ST)	Shift Solenoid ST Status/ ON or OFF	Up-shifting and down-shifting between 3rd and 4th gears while driving: OFF → ON → OFF	-
SOLENOID (SLU)	Shift Solenoid SLU Status/ ON or OFF	• Lock Up: ON • Except Lock Up: OFF	-
SOLENOID (SLT)	Shift Solenoid SLT Status/ ON or OFF	• Accelerator pedal is depressed: OFF • Accelerator pedal is released: ON	-

AX

2. ACTIVE TEST

HINT:

Performing the ACTIVE TEST using the intelligent tester allows the relay, VSV, actuator and so on to operate without parts removal. Performing the ACTIVE TEST as the first step of troubleshooting is one method to shorten labor time.

It is possible to display the DATA LIST during the ACTIVE TEST.

(a) Warm up the engine.

(b) Turn the ignition switch off.

(c) Connect the intelligent tester together with the CAN VIM (Controller Area Network Vehicle Interface Module) to the DLC3.
(d) Turn the ignition switch to the ON position.
(e) Turn on the tester.
(f) Select the following items: DIAGNOSIS / ENHANCED OBD II / ACTIVE TEST.
(g) In accordance with the display on the tester, perform the ACTIVE TEST.

Item	Test Details	Diagnostic Note
SOLENOID (SLU)	[Test Details] Operate shift solenoid SLU [Vehicle Condition] • Vehicle Stopped • Shift lever P or N position	-
SOLENOID (SLT)*	[Test Details] Operate shift solenoid SLT and raise the line pressure. [Vehicle Condition] • Vehicle Stopped • IDL: ON HINT: OFF: Line pressure up (When the active test of "SOLENOID (SLT)" is performed, ECM commands SLT solenoid to turn off.) ON: No action (normal operation)	-
SOLENOID (S1)	[Test Details] Operate shift solenoid S1 [Vehicle Condition] • Vehicle Stopped • Shift lever P or N position	-
SOLENOID (S2)	[Test Details] Operate shift solenoid S2 [Vehicle Condition] • Vehicle Stopped • Shift lever P or N position	-
LOCK UP	[Test Details] Control shift solenoid SLU to set automatic transaxle to lock-up condition. [Vehicle Condition] Vehicle Speed: 36 mph (60 km/h) or more, and 4th gear	Possible to check SLU operation.
SHIFT	[Test Details] Operate shift solenoid valve and set each shift position manually. [Vehicle Condition] Vehicle Speed: Less than 30 mph (50 km/h) [Others] • Press →button: Shift up • Press ←button: Shift down	Possible to check operation of shift solenoid valves.
SOLENOID (ST)	[Test Details] Operate shift solenoid ST [Vehicle Condition] • Vehicle Stopped • IDL: ON	-

*: SOLENOID (SLT) in the ACTIVE TEST is performed to check the line pressure changes by connecting SST to the automatic transaxle, which is used in the HYDRAULIC TEST (See page AX-13) as well.
HINT:
The pressure values in ACTIVE TEST and HYDRAULIC TEST are different from each other.

DIAGNOSTIC TROUBLE CODE CHART

If a DTC is displayed during the DTC check, check the parts listed in the table below and proceed to the page given.
HINT:

- *1: "Comes on" means the MIL (Malfunction Indicator Lamp) illuminates.
- *2: "DTC stored" means the ECM stores the malfunction code if the ECM detects the DTC detection condition.
- These DTCs may be output when the clutch, brake and gear components inside the automatic transaxle are damaged.

AUTOMATIC TRANSMISSION SYSTEM

DTC No.	Detection Item	Trouble Area	MIL *1	Memory *2	See page
P0705	Transmission Range Sensor Circuit Malfunction (PRNDL Input)	1. Open or short in park/neutral position switch circuit 2. Park/neutral position switch 3. Shift lock control ECU 4. ECM	Comes on	DTC stored	AX-35
P0710	Transmission Fluid Temperature Sensor "A" Circuit	1. Open or short in ATF temperature sensor circuit 2. Transmission wire (ATF temperature sensor) 3. ECM	Comes on	DTC stored	AX-42
P0711	Transmission Fluid Temperature Sensor "A" Performance	1. ATF level 2. Transmission wire (ATF temperature sensor) 3. ECM	Comes on	DTC stored	AX-47
P0712	Transmission Fluid Temperature Sensor "A" Circuit Low Input	1. Short in ATF temperature sensor circuit 2. Transmission wire (ATF temperature sensor) 3. ECM	Comes on	DTC stored	AX-42
P0713	Transmission Fluid Temperature Sensor "A" Circuit High Input	1. Open in ATF temperature sensor circuit 2. Transmission wire (ATF temperature sensor) 3. ECM	Comes on	DTC stored	AX-42
P0717	Turbine Speed Sensor Circuit No Signal	1. Open or short in transmission revolution sensor (Speed sensor (NT)) circuit 2. Transmission revolution sensor 3. Automatic transaxle (clutch, brake or gear etc.) 4. ECM	Comes on	DTC stored	AX-50

DTC No.	Detection Item	Trouble Area	MIL *1	Memory *2	See page
P0751	Shift Solenoid "A" Performance (Shift Solenoid Valve S1)	1. Shift solenoid valve S1 remains open or closed 2. Valve body is blocked 3. Shift solenoid valve S1 4. Automatic transaxle (clutch, brake or gear etc.) 5. ECM	Comes on	DTC stored	AX-53
P0756	Shift Solenoid "B" Performance (Shift Solenoid Valve S2)	1. Shift solenoid valve S2 remains open or closed 2. Valve body is blocked 3. Shift solenoid valve S2 4. Automatic transaxle (clutch, brake or gear etc.) 5. ECM	Comes on	DTC stored	AX-58
P0787	Shift / Timing Solenoid Low (Shift Solenoid Valve ST)	1. Short in shift solenoid valve ST circuit 2. Shift solenoid valve ST 3. ECM	Comes on	DTC stored	AX-63
P0788	Shift / Timing Solenoid High (Shift Solenoid Valve ST)	1. Open in shift solenoid valve ST circuit 2. Shift solenoid valve ST 3. ECM	Comes on	DTC stored	AX-63
P0973	Shift Solenoid "A" Control Circuit Low (Shift Solenoid Valve S1)	1. Short in shift solenoid valve S1 circuit 2. Shift solenoid valve S1 3. ECM	Comes on	DTC stored	AX-67
P0974	Shift Solenoid "A" Control Circuit High (Shift Solenoid Valve S1)	1. Open in shift solenoid valve S1 circuit 2. Shift solenoid valve S1 3. ECM	Comes on	DTC stored	AX-67
P0976	Shift Solenoid "B" Control Circuit Low (Shift Solenoid Valve S2)	1. Short in shift solenoid valve S2 circuit 2. Shift solenoid valve S2 3. ECM	Comes on	DTC stored	AX-71
P0977	Shift Solenoid "B" Control Circuit High (Shift Solenoid Valve S2)	1. Open in shift solenoid valve S2 circuit 2. Shift solenoid valve S2 3. ECM	Comes on	DTC stored	AX-71

DTC No.	Detection Item	Trouble Area	MIL *1	Memory *2	See page
P2714	Pressure Control Solenoid "D" Performance (Shift Solenoid Valve SLT)	1. Shift solenoid valve SLT remains open or closed 2. Valve body is blocked 3. Torque converter clutch 4. Automatic transaxle (clutch, brake or gear etc.) 5. ECM	Comes on	DTC stored	AX-75
P2716	Pressure Control Solenoid "D" Electrical (Shift Solenoid Valve SLT)	1. Open or short in shift solenoid valve SLT circuit 2. Shift solenoid valve SLT 3. ECM	Comes on	DTC stored	AX-80
P2757	Torque Converter Clutch Pressure Control Solenoid Performance (Shift Solenoid Valve SLU)	1. Shift solenoid valve SLU remains open or closed 2. Valve body is blocked 3. Shift solenoid valve SLU 4. Torque converter clutch 5. Automatic transaxle (clutch, brake or gear etc.) 6. Line pressure is too low 7. ECM	Comes on	DTC stored	AX-84
P2759	Torque Converter Clutch Pressure Control Solenoid Control Circuit Electrical (Shift Solenoid Valve SLU)	1. Open or short in shift solenoid valve SLU circuit 2. Shift solenoid valve SLU 3. ECM	Comes on	DTC stored	AX-89

DTC	P0705	Transmission Range Sensor Circuit Malfunction (PRNDL Input)

DESCRIPTION

The park/neutral position switch detects the shift lever position and sends signals to the ECM.

DTC No.	DTC Detection Condition	Trouble Area
P0705	(a) Any 2 or more of following signals are ON simultaneously. (2-trip detection logic) • P input signal • R input signal • N input signal • D input signal • 2 input signal • L input signal (b) All switches are OFF simultaneously for P, R, N, D, 2 and L positions. (2-trip detection logic) (c) L or 3 input signal is ON for P, R or N position. (2-trip detection logic)	• Open or short in park/neutral position switch circuit • Park/neutral position switch • Shift lock control ECU • ECM

MONITOR DESCRIPTION

This DTC indicates a problem with the park/neutral position switch and the wire harness in the park/neutral position switch circuit.
The park/neutral position switch detects the shift lever position and sends a signal to the ECM.
For safety, the park/neutral position switch detects the shift lever position so that the engine can be started only when the shift lever is in the P or N position.
The park/neutral position switch sends a signal to the ECM according to the shift position (P, R, N, D, 2 or L). The ECM determines that there is a problem with the switch or related parts if it receives 2 or more position signals simultaneously. The ECM turns on the MIL and stores the DTC.

MONITOR STRATEGY

AX

Related DTCs	P0705: Park/neutral position switch/Verify switch input
Required sensors/Components	Park/neutral position switch
Frequency of operation	Continuous
Duration	Condition (a) and (c): 2 seconds Condition (b): 60 seconds
MIL operation	2 driving cycles
Sequence of operation	None

TYPICAL ENABLING CONDITIONS

The monitor runs whenever the following DTCs are not present.	None
Ignition switch	ON
Battery voltage	10.5 V or more

TYPICAL MALFUNCTION THRESHOLDS

One of the following conditions is met: Condition (a), (b) or (c)

Condition (a):

Number of following signals input simultaneously	2 or more
P switch	ON
R switch	ON
N switch	ON
D switch	ON

2 switch	ON
L switch	ON

Condition (b):
All of the following conditions are met.

P switch	OFF
R switch	OFF
N switch	OFF
D switch	OFF
2 switch	OFF
L switch	OFF

Condition (c):
When shift lever is in P, R or N position, either of following conditions is met.

3 switch	ON
L switch	ON

COMPONENT OPERATING RANGE

Park/neutral position switch	The park/neutral position switch sends only one signal to the ECM.

WIRING DIAGRAM

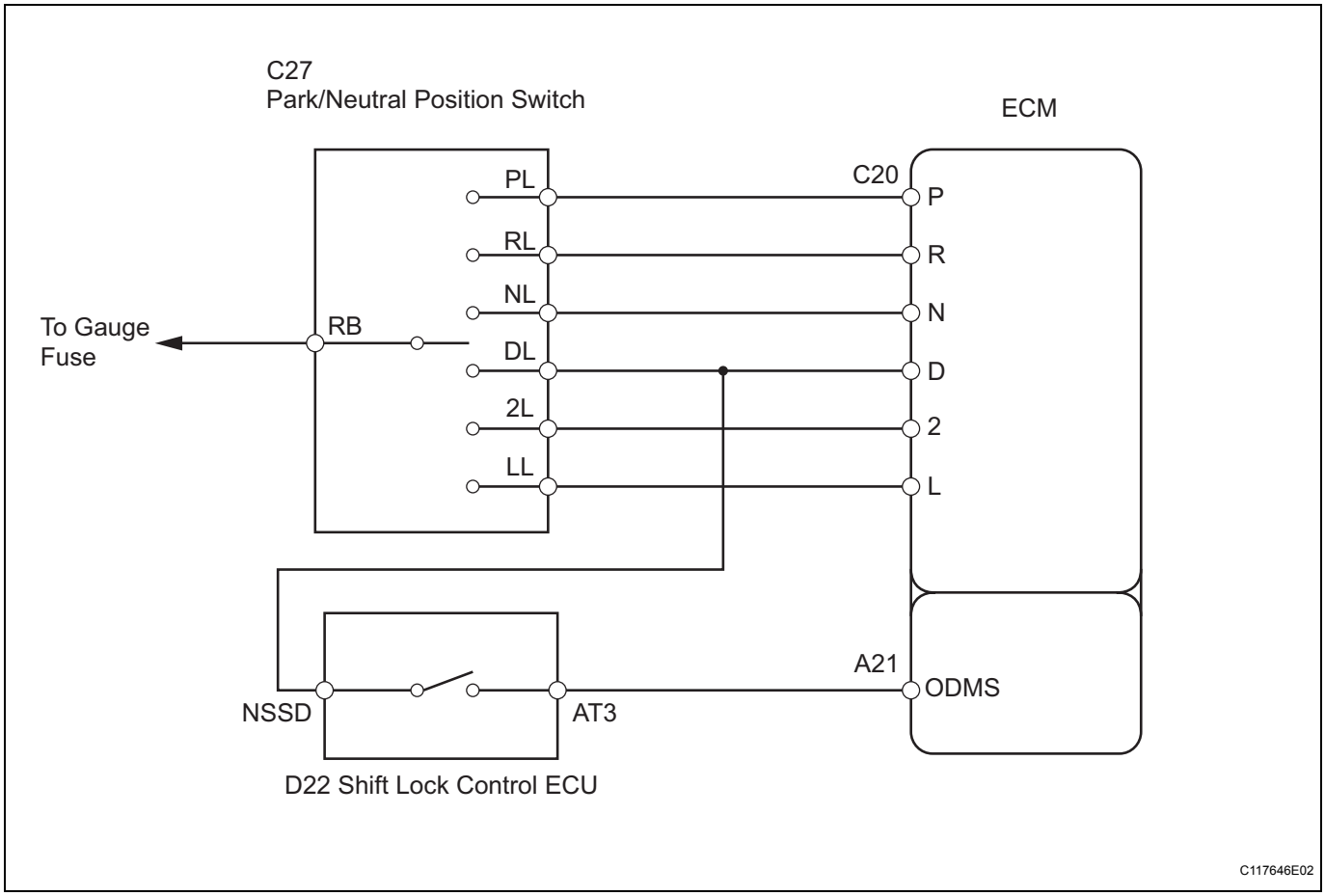

AX

INSPECTION PROCEDURE

1. DATA LIST

HINT:

Using the DATA LIST displayed by the intelligent tester, you can read the values of the switches, sensors, actuators and so on without parts removal. Reading the DATA LIST as the first step of troubleshooting is one method of shortening labor time.

(a) Turn the ignition switch off.
(b) Connect the intelligent tester together with the CAN VIM (Controller Area Network Vehicle Interface Module) to the DLC3.
(c) Turn the ignition switch to the ON position.
(d) Turn on the tester.
(e) Select the following items: DIAGNOSIS / ENHANCED OBD II / DATA LIST.
(f) In accordance with the display on the tester, read the DATA LIST.

Item	Measurement Item/ Range (display)	Normal Condition	Diagnostic Note
REVERSE	PNP (Park/Neutral Position) SW Status/ ON or OFF	Shift lever position; R: ON Except R: OFF	When shift lever position displayed on intelligent tester differs from actual position, adjustment of PNP switch or shift cable may be incorrect.
PARKING	PNP SW Status/ ON or OFF	Shift lever position; P: ON Except P: OFF	
NEUTRAL	PNP SW Status/ ON or OFF	Shift lever position; N: ON Except N: OFF	
DRIVE	PNP SW Status/ ON or OFF	Shift lever position; D or 3: ON Except D and 3: OFF	
3RD	PNP SW Status/ ON or OFF	Shift lever position; 3: ON Except 3: OFF	-
2ND	PNP SW Status/ ON or OFF	Shift lever position; 2: ON Except 2: OFF	When shift lever position displayed on intelligent tester differs from actual position, adjustment of PNP switch or shift cable may be incorrect.
LOW	PNP SW Status/ ON or OFF	Shift lever position; L: ON Except L: OFF	

1	READ VALUE OF DATA LIST (PARK/NEUTRAL POSITION SWITCH)

(a) Connect the intelligent tester to the DLC3.
(b) Turn the ignition switch to the ON position.
(c) Turn on the intelligent tester.
(d) Select the following items: DIAGNOSIS / ENHANCED OBD II / DATA LIST.

AX

(e) In accordance with the display on the tester, read the DATA LIST.

Item	Measurement Item/ Range (display)	Normal Condition	Diagnostic Note
REVERSE	PNP (Park/Neutral Position) SW Status/ ON or OFF	Shift lever position; R: ON Except R: OFF	When shift lever position displayed on intelligent tester differs from actual position, adjustment of PNP switch or shift cable may be incorrect.
PARKING	PNP SW Status/ ON or OFF	Shift lever position; P: ON Except P: OFF	
NEUTRAL	PNP SW Status/ ON or OFF	Shift lever position; N: ON Except N: OFF	
DRIVE	PNP SW Status/ ON or OFF	Shift lever position; D or 3: ON Except D and 3: OFF	
2ND	PNP SW Status/ ON or OFF	Shift lever position; 2: ON Except 2: OFF	
LOW	PNP SW Status/ ON or OFF	Shift lever position; L: ON Except L: OFF	

OK → **Go to step 5**

NG

2 CHECK HARNESS AND CONNECTOR (POWER SOURCE OF PARK/NEUTRAL POSITION SWITCH)

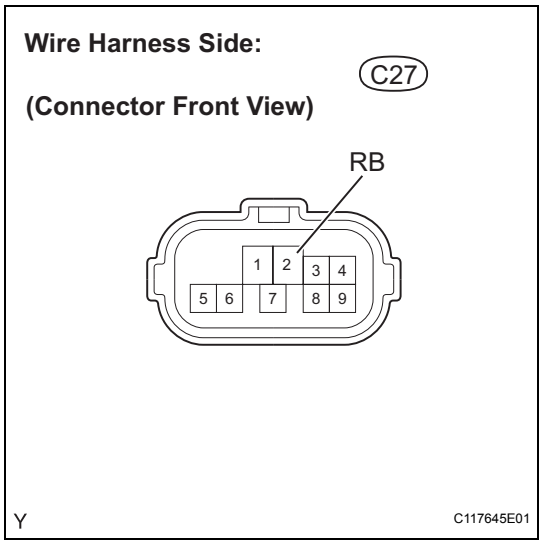

(a) Disconnect the park/neutral position switch connector.
(b) Turn the ignition switch to the ON position, and measure the voltage.

Standard voltage

Tester Connection	Specified Condition
2 (RB) - Body ground	11 to 14 V

NG → **CHECK POWER SOURCE OF ECM**

OK

AX

3 INSPECT PARK/NEUTRAL POSITION SWITCH ASSEMBLY

Component Side:

(Connector Front View)

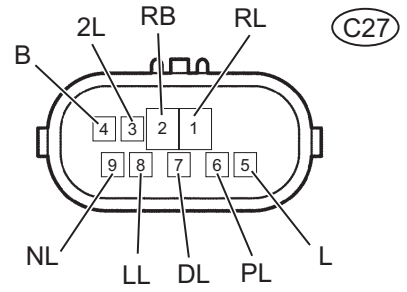

C130119E04

(a) Disconnect the park/neutral position switch connector.
(b) Measure the resistance when the shift lever is moved to each position.

Standard resistance

Shift Position	Tester Connection	Specified Condition
P or N	4 (B) - 5 (L)	Below 1 Ω
Except P and N	4 (B) - 5 (L)	10 kΩ or higher
P	2 (RB) - 6 (PL)	Below 1 Ω
Except P	2 (RB) - 6 (PL)	10 kΩ or higher
R	1 (RL) - 2 (RB)	Below 1 Ω
Except R	1 (RL) - 2 (RB)	10 kΩ or higher
N	2 (RB) - 9 (NL)	Below 1 Ω
Except N	2 (RB) - 9 (NL)	10 kΩ or higher
D or 3	2 (RB) - 7 (DL)	Below 1 Ω
Except D and 3	2 (RB) - 7 (DL)	10 kΩ or higher
2	2 (RB) - 3 (2L)	Below 1 Ω
Except 2	2 (RB) - 3 (2L)	10 kΩ or higher
L	2 (RB) - 8 (LL)	Below 1 Ω
Except L	2 (RB) - 8 (LL)	10 kΩ or higher

NG → **REPLACE PARK/NEUTRAL POSITION SWITCH ASSEMBLY**

OK

AX

4 CHECK HARNESS AND CONNECTOR (PARK/NEUTRAL POSITION SWITCH - ECM)

Wire Harness Side:

C20

(Connector Front View)

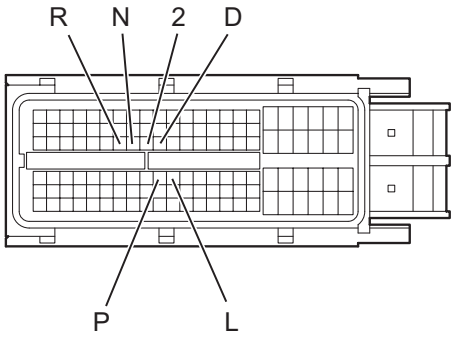

C130155E01

(a) Connect the park/neutral position switch connector.
(b) Disconnect the ECM connector.
(c) Turn the ignition switch to the ON position, and measure the voltage when the shift lever is moved to each position.

Standard voltage

Shift Position	Tester Connection	Specified Condition
P	73 (P) - Body ground	11 to 14 V
Except P	73 (P) - Body ground	Below 1 V
R	53 (R) - Body ground	11 to 14 V*
Except R	53 (R) - Body ground	Below 1 V
N	54 (N) - Body ground	11 to 14 V
Except N	54 (N) - Body ground	Below 1 V
D or 3	56 (D) - Body ground	11 to 14 V
Except D and 3	56 (D) - Body ground	Below 1 V
2	55 (2) - Body ground	11 to 14 V
Except 2	55 (2) - Body ground	Below 1 V
L	74 (L) - Body ground	11 to 14 V
Except L	74 (L) - Body ground	Below 1 V

HINT:
*: The voltage will drop slightly due to the back up light being turned on.

NG → REPAIR OR REPLACE HARNESS OR CONNECTOR

OK

5 READ VALUE OF DATA LIST (PARK/NEUTRAL POSITION SWITCH)

(a) Connect the ECM connector.
(b) Turn the ignition switch to the ON position.
(c) Turn on the intelligent tester.
(d) Select the following items: DIAGNOSIS / ENHANCED OBD II / DATA LIST.
(e) In accordance with the display on the tester, read the DATA LIST.

Item	Measurement Item/ Range (display)	Normal Condition
3RD	PNP SW Status/ ON or OFF	Shift lever position; 3: ON Except 3: OFF

OK → CHECK FOR INTERMITTENT PROBLEMS

NG

6 CHECK HARNESS AND CONNECTOR (PARK/NEUTRAL POSITION SWITCH - SHIFT LOCK CONTROL ECU)

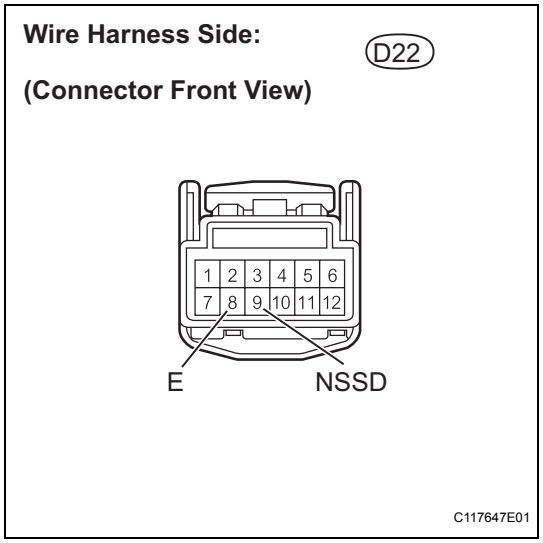

(a) Disconnect the shift lock control ECU connector.
(b) Turn the ignition switch to the ON position, and measure the voltage when the shift lever is moved to each position.

Standard voltage

Shift Position	Tester Connection	Specified Condition
D or 3	9 (NSSD) - 8 (E)	11 to 14 V
Except D and 3	9 (NSSD) - 8 (E)	Below 1 V

NG → REPAIR OR REPLACE HARNESS OR CONNECTOR

OK

AX

7	INSPECT SHIFT LOCK CONTROL ECU SUB-ASSEMBLY

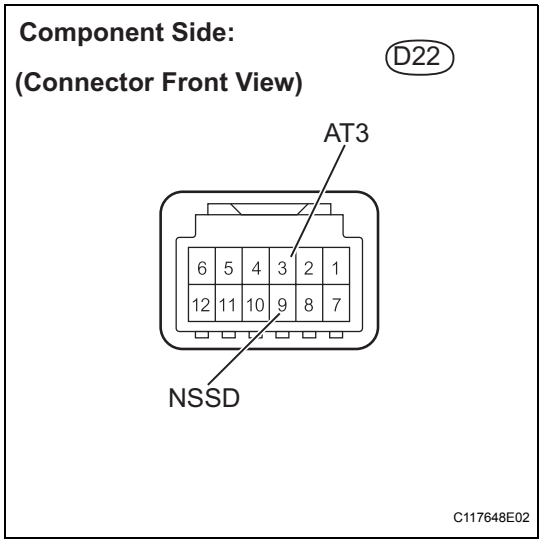

(a) Disconnect the shift lock control ECU connector.
(b) Measure the resistance when the shift lever is moved to each position.

Standard resistance

Shift Position	Tester Connection	Specified Condition
3	3 (AT3) - 9 (NSSD)	Below 1 Ω
D	3 (AT3) - 9 (NSSD)	10 kΩ or higher

NG → **REPLACE SHIFT LOCK CONTROL ECU SUB-ASSEMBLY**

OK

8	CHECK HARNESS AND CONNECTOR (SHIFT LOCK CONTROL ECU - ECM)

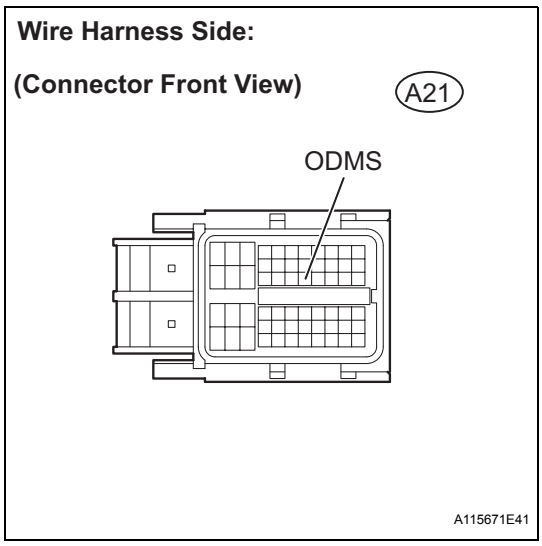

(a) Connect the shift lock control ECU connector.
(b) Disconnect the ECM connectors.
(c) Turn the ignition switch to the ON position, and measure the voltage.

Standard voltage

Shift Position	Tester Connection	Specified Condition
3	26 (ODMS) - Body ground	11 to 14 V
Except 3	26 (ODMS) - Body ground	Below 1 V

NG → **REPAIR OR REPLACE HARNESS OR CONNECTOR**

OK

REPLACE ECM

AX

DTC	P0710	Transmission Fluid Temperature Sensor "A" Circuit

DTC	P0712	Transmission Fluid Temperature Sensor "A" Circuit Low Input

DTC	P0713	Transmission Fluid Temperature Sensor "A" Circuit High Input

DESCRIPTION

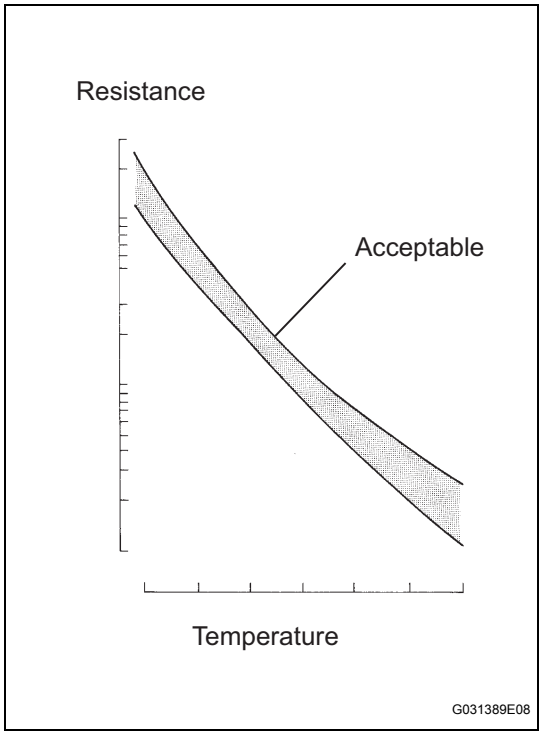

The ATF (Automatic Transmission Fluid) temperature sensor converts the fluid temperature into a resistance value which is input to the ECM.
The sensor resistance changes with the transmission fluid temperature. As the temperature rises, the sensor resistance decreases. The ECM applies a voltage to the temperature sensor through ECM terminal THO1, and the ECM calculates the fluid temperature based on the voltage signal.
HINT:

- The ATF temperature is likely to increase under conditions such as towing, climbing hills and in heavy traffic.
- When the ATF temperature sensor is normal, the transmission locks up in 4th gear with the shift lever in the D position and in 3rd gear with the shift lever in the 3rd position.

DTC No.	DTC Detection Condition	Trouble Area
P0710	Both (a) and (b) are detected momentarily within 0.5 seconds when neither P0712 nor P0713 is detected. (1-trip detection logic) (a) ATF temperature sensor resistance is less than 79 Ω. (b) ATF temperature sensor resistance is more than 156 kΩ. HINT: Within 0.5 seconds, malfunction switches from (a) to (b) or from (b) to (a).	• Open or short in ATF temperature sensor circuit • Transmission wire (ATF temperature sensor) • ECM

DTC No.	DTC Detection Condition	Trouble Area
P0712	ATF temperature sensor resistance is less than 79 Ω for 0.5 seconds or more. (1-trip detection logic)	• Short in ATF temperature sensor circuit • Transmission wire (ATF temperature sensor) • ECM
P0713	Following condition continues for 0.5 seconds or more. (1-trip detection logic) ATF temperature sensor resistance is more than 156 kΩ after 15 minutes or more after starting engine.	• Open in ATF temperature sensor circuit • Transmission wire (ATF temperature sensor) • ECM

MONITOR DESCRIPTION

The ATF temperature sensor converts the ATF temperature to an electrical resistance value. Based on the resistance, the ECM determines the ATF temperature and detects opens or shorts in the ATF temperature circuit. If the resistance value of the ATF temperature is less than 79 Ω*1 or more than 156 kΩ*2, the ECM interprets this as a fault in the ATF sensor or wiring. The ECM turns on the MIL and stores the DTC.

*1: 150°C (302°F) or more is indicated regardless of the actual ATF temperature.

*2: -40°C (-40°F) is indicated regardless of the actual ATF temperature.

HINT:

The ATF temperature can be checked on the intelligent tester display.

MONITOR STRATEGY

Related DTCs	P0710: ATF temperature sensor/Range check (Fluttering) P0712: ATF temperature sensor/Range check (Low resistance) P0713: ATF temperature sensor/Range check (High resistance)
Required sensors/Components	ATF temperature sensor (TFT*1 sensor)
Frequency of operation	Continuous
Duration	0.5 seconds
MIL operation	Immediate
Sequence of operation	None

AX

*1: Transmission Fluid Temperature

TYPICAL ENABLING CONDITIONS

P0710: Range check (Fluttering)

The monitor runs whenever the following DTCs are not present.	None
The typical enabling conditions are not available.	-

P0712: Range check (Low resistance)

The monitor runs whenever the following DTCs are not present.	None
The typical enabling conditions are not available.	-

P0713: Range check (High resistance)

The monitor runs whenever the following DTCs are not present.	None
Time after engine start	15 minutes or more

TYPICAL MALFUNCTION THRESHOLDS

P0710: Range check (Fluttering)

ATF temperature sensor (TFT sensor) resistance	Less than 79 Ω or More than 156 kΩ

P0712: Range check (Low resistance)

ATF temperature sensor (TFT sensor) resistance	Less than 79 Ω

P0713: Range check (High resistance)

ATF temperature sensor (TFT sensor) resistance	More than 156 kΩ

COMPONENT OPERATING RANGE

ATF temperature sensor (TFT sensor) resistance	Resistance: 79 Ω to 156 kΩ

WIRING DIAGRAM

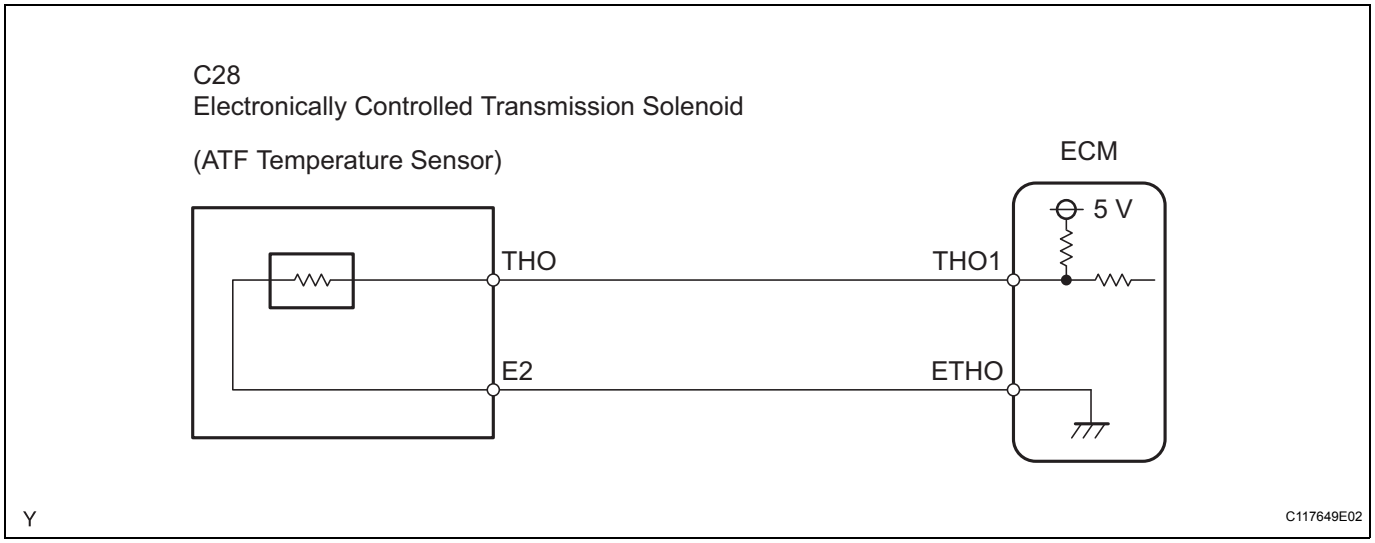

INSPECTION PROCEDURE

1. DATA LIST

HINT:

Using the DATA LIST displayed by the intelligent tester, you can read the values of the switches, sensors, actuators and so on without parts removal. Reading the DATA LIST as the first step of troubleshooting is one method of shortening labor time.

NOTICE:

In the table below, the values listed under "Normal Condition" are reference values. Do not depend solely on these reference values when deciding whether a part is faulty or not.

(a) Warm up the engine.
(b) Turn the ignition switch off.
(c) Connect the intelligent tester together with the CAN VIM (Controller Area Network Vehicle Interface Module) to the DLC3.
(d) Turn the ignition switch to the ON position.
(e) Turn on the tester.
(f) Select the following items: DIAGNOSIS / ENHANCED OBD II / DATA LIST.
(g) In accordance with the display on the tester, read the DATA LIST.

Item	Measurement Item/ Range (display)	Normal Condition	Diagnostic Note
A/T OIL TEMP1	ATF Temperature Sensor Value/ min.: -40°C (-40°F) max.: 215°C (419°F)	• After Stall Test; Approximately 80°C (176°F) • Equal to ambient temperature when cold soak	If value is -40°C (-40°F) or 150°C (302°F) or more, ATF temperature sensor circuit is open or short.

HINT:

When DTC P0712 is output and the intelligent tester reading is 150°C (302°F) or more, there is a short circuit.

When DTC P0713 is output and the intelligent tester reading is -40°C (-40°F), there is an open circuit.

AX

Measure the resistance between terminal THO1 and the body ground.

Temperature Displayed	Malfunction
-40°C (-40°F)	Open circuit
150°C (302°F) or more	Short circuit

HINT:
If a circuit related to the ATF (Automatic Transmission Fluid) temperature sensor becomes open, P0713 is immediately set (within 0.5 seconds).

1 INSPECT TRANSMISSION WIRE (ATF TEMPERATURE SENSOR)

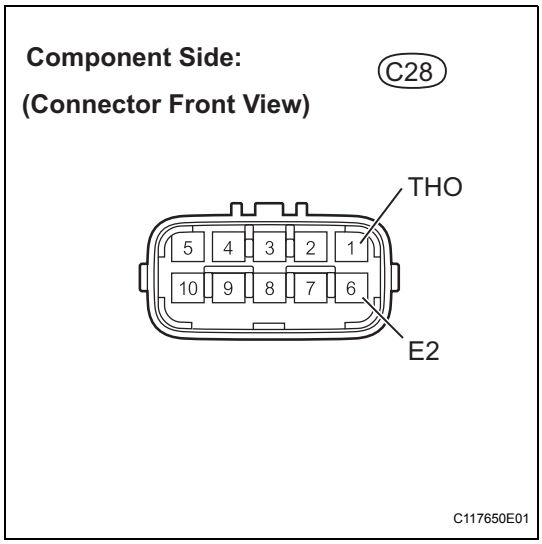

(a) Disconnect the transmission wire connector from the transaxle.
(b) Measure the resistance.
Standard resistance

Tester Connection	Specified Condition
1 (THO) - 6 (E2)	79 Ω to 156 kΩ
1 (THO) - Body ground	10 kΩ or higher
6 (E2) - Body ground	10 kΩ or higher

HINT:
If the resistance is outside the specified range at either of the ATF temperatures shown in the table below, the driveability of the vehicle may be affected.
Standard resistance

ATF Temperature	Specified Condition
20°C (68°F)	3 to 4 kΩ
110°C (230°F)	0.22 to 0.28 kΩ

AX

NG → **REPAIR OR REPLACE TRANSMISSION WIRE**

OK

2 CHECK HARNESS AND CONNECTOR (TRANSMISSION WIRE - ECM)

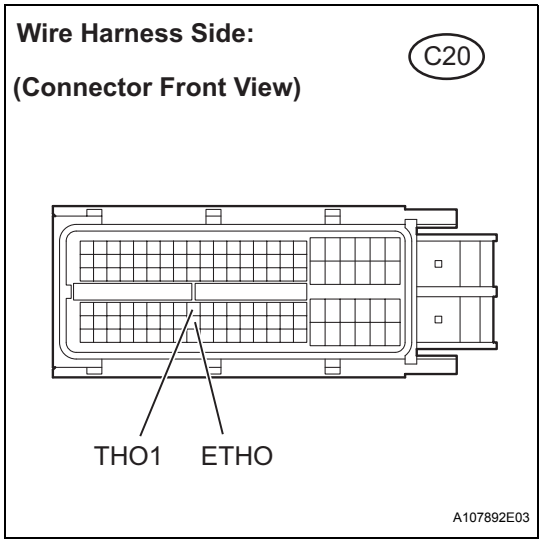

(a) Connect the transmission wire connector to the transaxle.
(b) Disconnect the ECM connector.
(c) Measure the resistance.
Standard resistance

Tester Connection	Specified Condition
72 (THO1) - 95 (ETHO)	79 Ω to 156 kΩ
72 (THO1) - Body ground	10 kΩ or higher
95 (ETHO) - Body ground	10 kΩ or higher

NG → **REPAIR OR REPLACE HARNESS OR CONNECTOR**

OK

REPLACE ECM

DTC	P0711	Transmission Fluid Temperature Sensor "A" Performance

DESCRIPTION

The ATF (Automatic Transmission Fluid) temperature sensor converts the fluid temperature into a resistance value which is input to the ECM.
The sensor resistance changes with the transmission fluid temperature. As the temperature rises, the sensor resistance decreases. The ECM applies a voltage to the temperature sensor through ECM terminal THO1, and the ECM calculates the fluid temperature based on the voltage signal.
HINT:

- The ATF temperature is likely to increase under conditions such as towing, climbing hills and in traffic.
- When the ATF temperature sensor is normal, the transmission locks up in 4th gear with the shift lever in the D position and in 3rd gear with the shift lever in the 3rd position.

DTC No.	DTC Detection Condition	Trouble Area
P0711	Either of the following Condition (A) or (B) is met: Condition (A): All of (a), (b) and (c) are detected (2-trip detection logic): (a) Intake air and engine coolant temperatures are more than -10°C (14°F) at engine start. (b) After normal driving for over 9 minutes and 5.6 miles (9 km) or more, ATF temperature is less than 20°C (68°F). (c) 19 minutes or more have elapsed after engine start. Condition (B): Both (a) and (b) are detected (2-trip detection logic) (a) Engine coolant temperature is less than 35°C (95°F) at engine start. (b) ATF temperature is 100°C (212°F) or more when engine coolant temperature reaches 60°C (140°F).	• ATF level • Transmission wire (ATF temperature sensor) • ECM

AX

MONITOR DESCRIPTION

The ATF temperature sensor converts the ATF temperature to an electrical resistance value. Based on the resistance, the ECM determines the ATF temperature and detects opens or shorts in the ATF temperature circuit or a fault of the ATF temperature sensor.
After running the vehicle for a certain period, the ATF temperature should increase. If the ATF temperature is below 20°C (68°F) after running the vehicle for a certain period, the ECM interprets this as a fault, and turns on the MIL.
When the ATF temperature is 100°C (212°F) or more and engine coolant temperature reaches 60°C (140°F) after cold start, the ECM also determines this as a fault, turns on the MIL, and stores the DTC.

MONITOR STRATEGY

Related DTCs	P0711: ATF temperature sensor/Rationality check
Required sensors/Components	ATF temperature sensor (TFT* sensor)
Frequency of operation	Continuous
Duration	Condition (A): 3 seconds Condition (B): 10 seconds
MIL operation	2 driving cycles
Sequence of operation	None

*: Transmission Fluid Temperature

TYPICAL ENABLING CONDITIONS

The following conditions are common to Condition (A) and (B).

The monitor runs whenever the following DTCs are not present.	None
ATF temperature sensor (TFT sensor) circuit	No circuit malfunction
ECT (Engine Coolant Temperature) sensor circuit	No circuit malfunction
IAT (Intake Air Temperature) sensor circuit	No circuit malfunction
Electronic Throttle Control System (if applicable)	No circuit malfunction

Condition (A):

Time after engine start	18 minutes and 20 seconds or more
Driving distance after engine start	5.6 mile (9 km) or more
Accumulated driving time	9 minutes and 10 seconds or more
ECT	-15°C (5°F) or more
IAT (12 seconds after engine start)	-10°C (14°F) or more
ECT (12 seconds after engine start)	-10°C (14°F) or more

Condition (B):

ECT (Current temperature)	60°C (140°F) or more
ECT (12 seconds after engine start)	Less than 35°C (95°F)
ATF temperature (12 seconds after engine start)	100°C (212°F) or more

TYPICAL MALFUNCTION THRESHOLDS

Either of the following conditions is met: Condition (A) or (B)

Condition (A):

ATF temperature	Less than 20°C (68°F)

Condition (B):

ATF temperature	100°C (212°F) or more

AX

COMPONENT OPERATING RANGE

ATF temperature	20°C (68°F) or more and less than 100°C (212°F) under specific condition

INSPECTION PROCEDURE

1. DATA LIST

HINT:

Using the DATA LIST displayed by the intelligent tester, you can read the values of the switches, sensors, actuators and so on without parts removal. Reading the DATA LIST as the first step of troubleshooting is one method of shortening labor time.

NOTICE:

In the table below, the values listed under "Normal Condition" are reference values. Do not depend solely on these reference values when deciding whether a part is faulty or not.

(a) Warm up the engine.
(b) Turn the ignition switch off.
(c) Connect the intelligent tester together with the CAN VIM (Controller Area Network Vehicle Interface Module) to the DLC3.
(d) Turn the ignition switch to the ON position.
(e) Turn on the tester.
(f) Select the following items: DIAGNOSIS / ENHANCED OBD II / DATA LIST.

(g) In accordance with the display on the tester, read the DATA LIST.

Item	Measurement Item/ Range (display)	Normal Condition
A/T OIL TEMP1	ATF Temperature Sensor Value/ min.: -40°C (-40°F) max.: 215°C (419°F)	• After Stall Test; Approximately 80°C (176°F) • Equal to ambient temperature when cold soak

HINT:
When DTC P0712 is output and intelligent tester reading is 150°C (302°F) or more, there is a short circuit.
When DTC P0713 is output and intelligent tester reading is -40°C (-40°F), there is an open circuit.
Measure the resistance between terminal THO1 and the body ground.

Temperature Displayed	Malfunction
-40°C (-40°F)	Open circuit
150°C (302°F) or more	Short circuit

HINT:
If a circuit related to the ATF (Automatic Transmission Fluid) temperature sensor becomes open, P0713 is immediately set (within 0.5 seconds).
It is not necessary to inspect the circuit when P0711 is set.

1 CHECK OTHER DTCS OUTPUT (IN ADDITION TO DTC P0711)

(a) Connect the intelligent tester to the DLC3.
(b) Turn the ignition switch to the ON position.
(c) Turn on the tester.
(d) Select the following items: DIAGNOSIS / ENHANCED OBD II / DTC INFO / CURRENT CODES.
(e) Read the DTCs using the tester.

AX

Result

Display (DTC output)	Proceed to
P0711	A
P0711 and other DTCs	B

HINT:
If any DTCs codes besides P0711 are output, perform troubleshooting for those DTCs first.

B → **GO TO DTC CHART**

A

2 CHECK TRANSMISSION FLUID LEVEL

OK:
Automatic transmission fluid level is correct.

NG → **ADD FLUID**

OK

REPLACE TRANSMISSION WIRE (ATF TEMPERATURE SENSOR)

DTC	P0717	Turbine Speed Sensor Circuit No Signal

DESCRIPTION

This sensor detects the rotation speed of the input turbine. By comparing the input turbine speed signal (NT) with the speed sensor signal (SPD), the ECM detects the shift timing of the gears and appropriately controls the engine torque and hydraulic pressure in response to various conditions, thus performing smooth gear shifting.

DTC No.	DTC Detection Condition	Trouble Area
P0717	All conditions below are detected for 5 seconds or more. (1-trip detection logic) (a) Gear change is not being performed. (b) Gear position: 3rd or 4th (c) T/M input shaft rpm: 300 rpm or less (d) T/M output shaft rpm: 1,000 rpm or more (e) Park/neutral position switch (NSW, R and L) is OFF. (f) Shift solenoid valves, park/neutral position switch and vehicle speed sensor are in normal operation.	• Open or short in transmission revolution sensor (Speed sensor (NT)) circuit • Transmission revolution sensor • Automatic transaxle (clutch, brake or gear etc.) • ECM

MONITOR DESCRIPTION

The ECM detects the revolving signal from the transmission revolution sensor (input RPM). The ECM outputs a gearshift signal by comparing the transmission revolution sensor signal with the speed sensor signal (SPD). While the vehicle is operating in the 3rd or 4th gear position in the shift position of D, if the input shaft revolution is less than 300 rpm*1 although the output shaft revolution is more than 1,000 rpm*2, the ECM detects the malfunction, illuminates the MIL and stores the DTC.

*1: Pulse is not output or is irregularly output.

*2: The vehicle speed is 31 mph (50 km/h) or more.

MONITOR STRATEGY

Related DTCs	P0717: Turbine speed sensor/Verify pulse input
Required sensors/Components	Transmission revolution sensor (Speed sensor (NT))
Frequency of operation	Continuous
Duration	5 seconds
MIL operation	Immediate
Sequence of operation	None

AX

TYPICAL ENABLING CONDITIONS

The monitor runs whenever the following DTCs are not present.	P0500 (VSS) P0748 - P0798 (Trans solenoid (range))
Shift change	After shift change is completed and before starting next shift change operation
ECM selected gear	3rd or 4th
Output shaft rpm	1,000 rpm or more
Park/neutral position switch	OFF
R switch	OFF
L switch	OFF
Transmission range switch fail	Not detected
Battery voltage	8 V or more
Ignition switch	ON
Starter	OFF
Engine	Running

TYPICAL MALFUNCTION THRESHOLDS

Sensor signal rpm	Less than 300 rpm

COMPONENT OPERATING RANGE

Transmission revolution sensor (speed sensor (NT))	Input turbine speed is equal to engine speed when lock-up ON

WIRING DIAGRAM

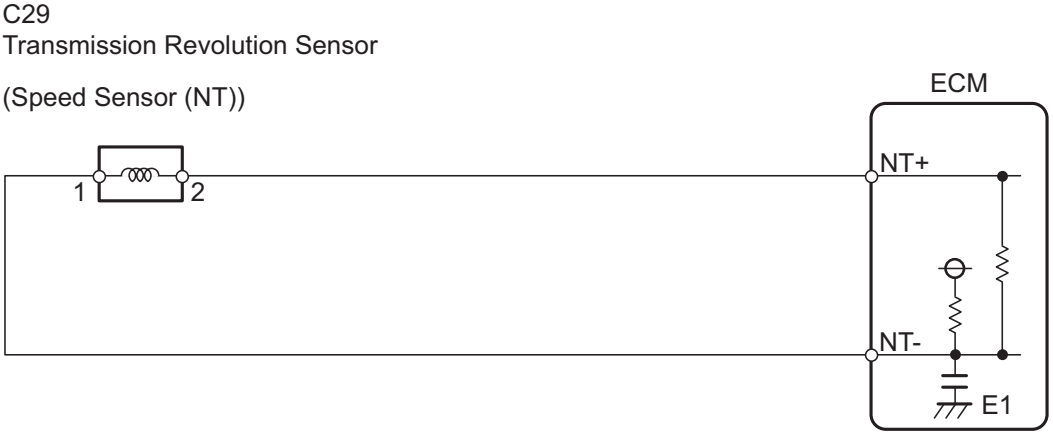

INSPECTION PROCEDURE

AX

1	INSPECT TRANSMISSION REVOLUTION SENSOR (NT) INSTALLATION

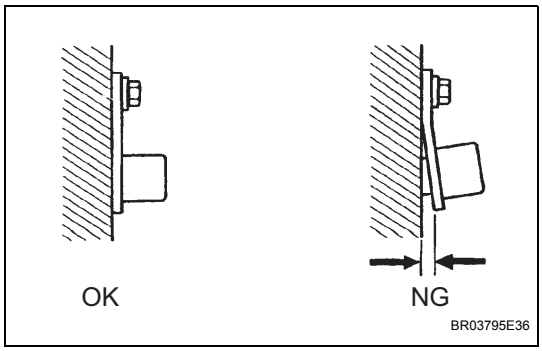

(a) Check the transmission revolution sensor installation.
OK:
The installation bolt is tightened properly and there is no clearance between the sensor and transmission case.

NG → **SECURELY INSTALL OR REPLACE TRANSMISSION REVOLUTION SENSOR**

OK

2	INSPECT TRANSMISSION REVOLUTION SENSOR

Sensor Side:

(Connector Front View):

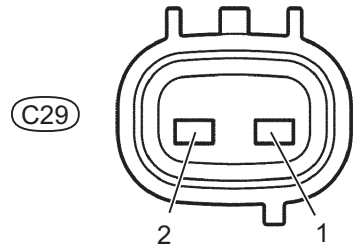

C110343E29

(a) Disconnect the transmission revolution sensor connector from the transaxle.
(b) Measure the resistance.
Standard resistance

Tester Connection	Specified Condition
1 - 2	560 Ω to 680 kΩ at 20°C (68°F)

NG → **SECURELY INSTALL OR REPLACE TRANSMISSION REVOLUTION SENSOR**

OK

3	CHECK HARNESS AND CONNECTOR (TRANSMISSION REVOLUTION SENSOR - ECM)

Wire Harness Side:

(Connector Front View)

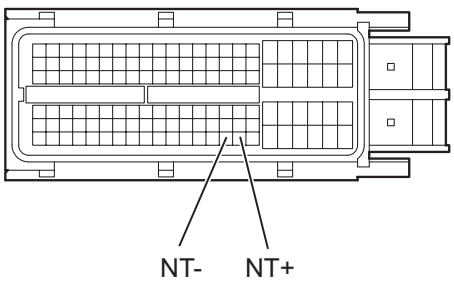

A107892E04

(a) Connect the transmission revolution sensor connector.
(b) Disconnect the ECM connector.
(c) Measure the resistance.
Standard resistance

Tester Connection	Specified Condition
125 (NT+) - 124 (NT-)	560 to 680 kΩ at 20°C (68°F)
125 (NT+) - Body ground	10 kΩ or higher
124 (NT-) - Body ground	10 kΩ or higher

NG → **REPAIR OR REPLACE HARNESS OR CONNECTOR**

OK

REPLACE ECM

AX

DTC	P0751	Shift Solenoid "A" Performance (Shift Solenoid Valve S1)

DESCRIPTION

The ECM uses signals from the vehicle speed sensor and speed sensor NT to detect the actual gear position (1st, 2nd, 3rd or 4th).
Then the ECM compares the actual gear with the shift schedule in the ECM memory to detect the mechanical problems of the shift solenoid valves, the valve body or automatic transaxle (clutch, brake or gear etc.).

DTC No.	DTC Detection Condition	Trouble Area
P0751	S1 stuck OFF malfunction*1: ECM determines there is malfunction when both of following conditions are met: (2-trip detection logic) (a) When ECM directs gearshift to switch to 1st gear, actual gear is shifted to 4th. (b) When ECM directs gearshift to switch to 4th gear, actual gear is shifted to 4th.	• Shift solenoid valve S1 remains closed • Valve body is blocked • Shift solenoid valve S1 • Automatic transaxle (clutch, brake or gear etc.) • ECM
P0751	S1 stuck ON malfunction*2: ECM determines that there is malfunction when both of following conditions are met: (2-trip detection logic) (a) When ECM directs gearshift to switch from 3rd to 4th gear, actual gear is not shifted as above. (b) When ECM directs gearshift to switch to 4th gear, engine speed surges 1,100 rpm or more.	• Shift solenoid valve S1 remains open • Valve body is blocked • Shift solenoid valve S1 • Automatic transaxle (clutch, brake or gear etc.) • ECM

HINT:
Gear positions in the event of a solenoid valve mechanical problem:

Gearshift controlled by ECM	1st	2nd	3rd	4th
*1: Actual gear position under S1 stuck OFF malfunction	4th	3rd	3rd	4th
*2: Actual gear position under S1 stuck ON malfunction	1st	2nd	2nd	1st

AX

MONITOR DESCRIPTION

This DTC indicates "stuck ON malfunction" or "stuck OFF malfunction" of shift solenoid valve S1.
The ECM controls the gearshifts by turning the shift solenoid valves ON/OFF. When the gear position directed by the ECM and the actual gear position do not match, the ECM illuminates the MIL and stores the DTC.

MONITOR STRATEGY

Related DTCs	P0751: Shift solenoid valve S1/OFF malfunction Shift solenoid valve S1/ON malfunction
Required sensors/Components	Shift solenoid valve S1, Speed sensor (NT), Speed sensor (SPD)
Frequency of operation	Continuous
Duration	OFF malfunction (a): 0.85 seconds OFF malfunction (b): 0.8 seconds ON malfunction (a): 0.8 seconds ON malfunction (b): 0.8 seconds
MIL operation	2 driving cycle
Sequence of operation	None

TYPICAL ENABLING CONDITIONS

The following conditions are common to all OFF malfunctions and ON malfunctions.

The monitor runs whenever the following DTCs are not present.	P0115 - P0118 (ECT sensor) P0125 (Insufficient ECT for closed loop) P0500 (VSS) P0748 - P0798 (Trans solenoid (range))
ECT (Engine Coolant Temperature)	60°C (140°F) or more
Time after shifting N to D	4.5 seconds or more
Transmission shift position	D
Shift solenoid valve S1 circuit	No circuit malfunction
Shift solenoid valve S2 circuit	No circuit malfunction
ECT sensor circuit	No circuit malfunction
Electronic Throttle Control System (if applicable)	No circuit malfunction
Speed sensor (NT) circuit	No circuit malfunction
Speed sensor (SPD) circuit	No circuit malfunction

OFF malfunction (a):

ECM gearshift command	1st
Vehicle speed	5.6 mph (9 km/h) or more and Less than 24.9 mph (40 km/h)
Throttle valve opening angle	25 % or more and 7.0 % or more at engine speed of 1,900 rpm (Conditions vary with engine speed)

OFF malfunction (b):

ECM gearshift command	4th
Last ECM selected gear	3rd

ON malfunction (a):

ECM gearshift command	4th
Last ECM selected gear	3rd

ON malfunction (b):

ECM gearshift command	4th
V current - V last V current: Vehicle speed at current ECM selected gear V last: Vehicle speed at last ECM selected gear	Less than 9.3 mph (15 km/h)
TH current - TH last TH current: Throttle valve opening angle at current ECM selected gear TH last: Throttle valve opening angle at last ECM selected gear	Less than 30 %
Vehicle speed (current)	Less than 52.8 mph (85 km/h)
Throttle valve opening angle (current)	Less than 45 %
Engine speed (current)	3,200 rpm or more

TYPICAL MALFUNCTION THRESHOLDS

[OFF malfunction]

Both of the following conditions met: OFF malfunctions (a) and (b)
2 detections are necessary per driving cycle.
1st detection: Temporary flag ON
2nd detection: Pending fault code ON

OFF malfunction (a):

Input speed/Output speed (NT/NO) NT: Input (turbine) speed NO: Internal counter shaft speed	0.64 or more and less than 0.78 (Current) (This means actual gear is 4th)

OFF malfunction (b):

Input speed/Output speed (NT/NO)	Changes as follows 0.95 or more and less than 1.09 (Last) (This means actual gear is 3rd) to 0.64 or more and less than 0.78 (Current) (This means actual gear is 4th)

[ON malfunction]

Both of the following conditions met: ON malfunctions (a) and (b)

ON malfunction (a):

Input speed/Output speed (NT/NO)	No change as follows 0.95 or more and less than 1.09 (Last) (This means actual gear is 3rd) to 0.64 or more and less than 0.78 (Current) (This means actual gear is 4th)

ON malfunction (b):

NE change HINT: NE current - NE last NE current: Engine speed at current ECM selected gear NE last: Engine speed at last ECM selected gear	1,100 rpm or more

INSPECTION PROCEDURE

1. ACTIVE TEST

HINT:

Performing the ACTIVE TEST using the intelligent tester allows components, such as the relay, VSV, and actuator, to be operated without removing any parts. Performing the ACTIVE TEST as the first step of troubleshooting is one method of shortening labor time.

It is possible to display the DATA LIST during the ACTIVE TEST.

(a) Warm up the engine.

(b) Turn the ignition switch off.

(c) Connect the intelligent tester together with the CAN VIM (Controller Area Network Vehicle Interface Module) to the DLC3.

(d) Turn the ignition switch to the ON position.

(e) Turn on the tester.

(f) Select the following items: DIAGNOSIS / ENHANCED OBD II / ACTIVE TEST / SHIFT.

(g) In accordance with the display on the tester, perform the ACTIVE TEST.

HINT:

While driving, the shift position can be forcibly changed using the intelligent tester. Comparing the shift position commanded by the ACTIVE TEST with the actual shift position enables you to confirm the problem (See page AX-27).

Item	Test Details	Diagnostic Note
SHIFT	[Test Details] Operate shift solenoid valve and set each shift position. [Vehicle Condition] • IDL: ON • 30 mph (50 km/h) or less [Others] • Press "→" button: Shift up • Press "←" button: Shift down	Possible to check operation of shift solenoid valves.

HINT:

- This test can be conducted when the vehicle speed is 30 mph (50 km/h) or less.
- The 3rd to 4th up-shifting must be performed with the accelerator pedal released.
- The 4th to 3rd down-shifting must be performed with the accelerator pedal released.
- Do not operate the accelerator pedal for at least 2 seconds after shifting and do not shift more than once in succession.
- The shift position directed by the ECM is shown in the DATA LIST / SHIFT display on the intelligent tester.
- Shift solenoid valve S1 is turned on/off normally when the shift lever is in the D position:

Gearshift controlled by ECM	1st	2nd	3rd	4th
Shift solenoid valve S1	ON	ON	OFF	OFF

1	CHECK OTHER DTCS OUTPUT (IN ADDITION TO DTC P0751)

(a) Connect the intelligent tester to the DLC3.
(b) Turn the ignition switch to the ON position.
(c) Turn on the tester.
(d) Select the following items: DIAGNOSIS / ENHANCED OBD II / DTC INFO / CURRENT CODES.
(e) Read the DTCs using the tester.

Result

Display (DTC output)	Proceed to
P0751	A
P0751 and other DTCs	B

HINT:
If any DTCs besides P0751 are output, perform troubleshooting for those DTCs first.

B → GO TO DTC CHART

A

2	INSPECT SHIFT SOLENOID VALVE S1

Shift Solenoid Valve S1:

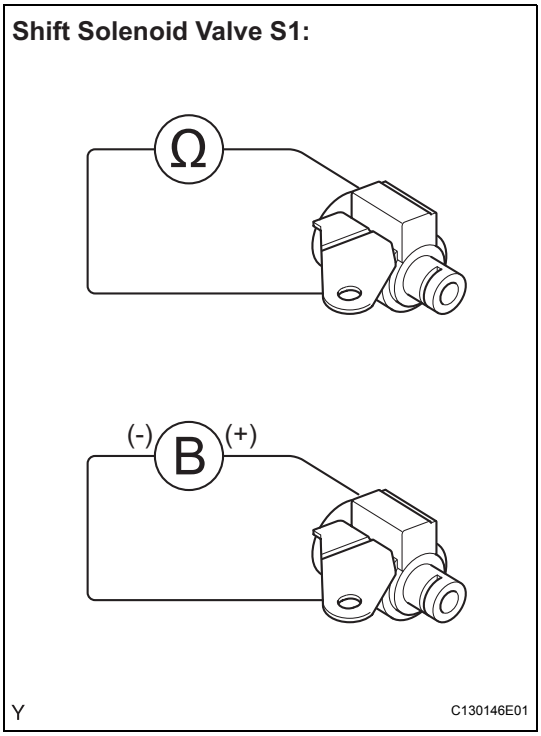

(a) Remove shift solenoid valve S1.
(b) Measure the resistance.
Standard resistance

Tester Connection	Specified Condition
Solenoid Connector (S1) - Solenoid Body (S1)	11 to 15 Ω at 20°C (68°F)

(c) Connect the positive (+) lead to the terminal of the solenoid connector and the negative (-) lead to the solenoid body to check the solenoid valve operation.
OK:
The solenoid makes operating sounds.

NG → **REPLACE SHIFT SOLENOID VALVE S1**

OK

3	INSPECT TRANSMISSION VALVE BODY ASSEMBLY

AX

OK:
There are no foreign objects on any valves and they operate smoothly.

NG → **REPAIR OR REPLACE TRANSMISSION VALVE BODY ASSEMBLY**

OK

REPAIR OR REPLACE AUTOMATIC TRANSAXLE ASSEMBLY

DTC	P0756	Shift Solenoid "B" Performance (Shift Solenoid Valve S2)

DESCRIPTION

The ECM uses signals from the vehicle speed sensor and speed sensor NT to detect the actual gear position (1st, 2nd, 3rd or 4th).
Then the ECM compares the actual gear with the shift schedule in the ECM memory to detect the mechanical problems of the shift solenoid valves, the valve body or automatic transaxle (clutch, brake or gear etc.).

DTC No.	DTC Detection Condition	Trouble Area
P0756	S2 stuck OFF malfunction*1: Shifting to 1st and 4th gears is impossible. ECM determines that there is malfunction when all of following conditions are met: (2-trip detection logic) (a) When ECM directs gearshift to switch to 1st gear, actual gear is shifted to 2nd. (b) When ECM directs gearshift to switch to 3rd gear, actual gear is shifted to 3rd. (c) When ECM directs gearshift to switch to 4th gear, actual gear is shifted to 3rd.	• Shift solenoid valve S2 remains closed • Valve body is blocked • Shift solenoid valve S2 • Automatic transaxle (clutch, brake or gear etc.) • ECM
P0756	S2 stuck ON malfunction*2: Shifting to 2nd gear and 3rd gear is impossible. ECM determines that there is malfunction when all of following conditions are met: (2-trip detection logic) (a) When ECM directs gearshift to switch to 2nd gear, actual gear is shifted to 1st. (b) When ECM directs gearshift to switch to 3rd gear, actual gear is shifted to 4th. (c) When ECM directs gearshift to switch to 4th gear, actual gear is shifted to 4th.	• Shift solenoid valve S2 remains open • Valve body is blocked • Shift solenoid valve S2 • Automatic transaxle (clutch, brake or gear etc.) • ECM

HINT:
Gear positions in the event of a solenoid valve mechanical problem:

Gearshift controlled by ECM	1st	2nd	3rd	4th
*1: Actual gear position under S2 stuck OFF malfunction	2nd	2nd	3rd	3rd
*2: Actual gear position under S2 stuck ON malfunction	1st	1st	4th	4th

AX

MONITOR DESCRIPTION

This DTC indicates "stuck ON malfunction" or "stuck OFF malfunction" of shift solenoid valve S2.
The ECM controls the gearshifts by turning the shift solenoid valves ON/OFF. When the gear position directed by the ECM and the actual gear position do not match, the ECM illuminates the MIL and stores the DTC.

MONITOR STRATEGY

Related DTCs	P0756: Shift solenoid valve S2/OFF malfunction Shift solenoid valve S2/ON malfunction
Required sensors/Components	Shift solenoid valve S2, Speed sensor (NT), Speed sensor (SPD)
Frequency of operation	Continuous
Duration	0.85 seconds
MIL operation	2 driving cycle
Sequence of operation	None

TYPICAL ENABLING CONDITIONS

The following conditions are common to all OFF malfunctions and ON malfunctions.

The monitor runs whenever the following DTCs are not present.	P0115 - P0118 (ECT sensor) P0125 (Insufficient ECT for closed loop) P0500 (VSS) P0748 - P0798 (Trans solenoid (range))
ECT (Engine Coolant Temperature)	60°C (140°F) or more
Transmission shift position	D
Time after shifting N to D	4.5 seconds or more
Shift solenoid valve S1 circuit	No circuit malfunction
Shift solenoid valve S2 circuit	No circuit malfunction
ECT sensor circuit	No circuit malfunction
Electronic Throttle Control System (if applicable)	No circuit malfunction
Speed sensor (NT) circuit	No circuit malfunction
Speed sensor (SPD) circuit	No circuit malfunction

OFF malfunction (a):

ECM gearshift command	1st
Vehicle speed	5.6 mph (9 km/h) or more and less than 24.9 mph (40 km/h)
Throttle valve opening angle	7.0 % or more at engine speed of 1,900 rpm (Conditions vary with engine speed)

OFF malfunction (b):

ECM gearshift command	3rd
Vehicle speed	5.6 mph (9 km/h) or more
Throttle valve opening angle	7.0 % or more at engine speed of 1,900 rpm (Conditions vary with engine speed)

OFF malfunction (c):

ECM gearshift command	4th
Vehicle speed	5.6 mph (9 km/h) or more
Throttle valve opening angle	7.0 % or more at engine speed of 1,900 rpm (Conditions vary with engine speed)

ON malfunction (a):

ECM gearshift command	2nd
Vehicle speed	5.6 mph (9 km/h) or more
Throttle valve opening angle	7.0 % or more at engine speed of 1,900 rpm (Conditions vary with engine speed)

ON malfunction (b):

ECM gearshift command	3rd
Vehicle speed	5.6 mph (9 km/h) or more
Throttle valve opening angle	7.0 % or more at engine speed of 1,900 rpm (Conditions vary with engine speed)

ON malfunction (c):

ECM gearshift command	4th
Vehicle speed	5.6 mph (9 km/h) or more
Throttle valve opening angle	7.0 % or more at engine speed of 1,900 rpm (Conditions vary with engine speed)

TYPICAL MALFUNCTION THRESHOLDS

[OFF malfunction]

All of the following conditions met: OFF malfunctions (a), (b) and (c)
2 detections are necessary per driving cycle.
1st detection: Temporary flag ON
2nd detection: Pending fault code ON

OFF malfunction (a):

Input speed/Output speed (NT/NO) NT: Input (turbine) speed NO: Internal counter shaft speed	1.50 or more and less than 1.80 (This means actual gear is 2nd)

OFF malfunction (b):

Input speed/Output speed (NT/NO)	0.95 or more and less than 1.09 (This means actual gear is 3rd)

OFF malfunction (c):

Input speed/Output speed (NT/NO)	0.95 or more and less than 1.09 (This means actual gear is 3rd)

[ON malfunction]

All of the following conditions met: ON malfunctions (a), (b) and (c)

ON malfunction (a):

Input speed/Output speed (NT/NO)	2.75 or more and less than 3.35 (This means actual gear is 1st)

ON malfunction (b):

Input speed/Output speed (NT/NO)	0.64 or more and less than 0.78 (This means actual gear is 4th)

ON malfunction (c):

Input speed/Output speed (NT/NO)	0.64 or more and less than 0.78 (This means actual gear is 4th)

AX

INSPECTION PROCEDURE

1. ACTIVE TEST

HINT:
Performing the ACTIVE TEST using the intelligent tester allows components, such as the relay, VSV, and actuator, to be operated without removing any parts. Performing the ACTIVE TEST as the first step of troubleshooting is one method of shortening labor time.
It is possible to display the DATA LIST during the ACTIVE TEST.

(a) Warm up the engine.
(b) Turn the ignition switch off.
(c) Connect the intelligent tester together with the CAN VIM (Controller Area Network Vehicle Interface Module) to the DLC3.
(d) Turn the ignition switch to the ON position.
(e) Turn on the tester.
(f) Select the following items: DIAGNOSIS / ENHANCED OBD II / ACTIVE TEST / SHIFT.
(g) In accordance with the display on the tester, perform the ACTIVE TEST.
HINT:
While driving, the shift position can be forcibly changed using the intelligent tester.
Comparing the shift position commanded by the ACTIVE TEST with the actual shift position enables you to confirm the problem (See page AX-27).

Item	Test Details	Diagnostic Note
SHIFT	[Test Details] Operate shift solenoid valve and set each shift position. [Vehicle Condition] • IDL: ON • 30 mph (50 km/h) or less [Others] • Press "→" button: Shift up • Press "←" button: Shift down	Possible to check operation of shift solenoid valves.

HINT:
- This test can be conducted when the vehicle speed is 30 mph (50 km/h) or less.
- The 3rd to 4th up-shifting must be performed with the accelerator pedal released.
- The 4th to 3rd down-shifting must be performed with the accelerator pedal released.
- Do not operate the accelerator pedal for at least 2 seconds after shifting and do not shift more than once in succession.
- The shift position directed by the ECM is shown in the DATA LIST/ SHIFT display on the intelligent tester.
- Shift solenoid valve S2 is turned on/off normally when the shift lever is in the D position:

Gearshift controlled by ECM	1st	2nd	3rd	4th
Shift solenoid valve S2	ON	OFF	OFF	ON

1 CHECK OTHER DTCS OUTPUT (IN ADDITION TO DTC P0756)

(a) Connect the intelligent tester to the DLC3.
(b) Turn the ignition switch to the ON position.
(c) Turn on the tester.
(d) Select the following items: DIAGNOSIS / ENHANCED OBD II / DTC INFO / CURRENT CODES.
(e) Read the DTCs using the tester.

AX

Result

Display (DTC output)	Proceed to
P0756	A
P0756 and other DTCs	B

HINT:
If any other DTCs besides P0756 are output, perform troubleshooting for those DTCs first.

B → GO TO DTC CHART

A

2	INSPECT SHIFT SOLENOID VALVE S2

Shift Solenoid Valve S2:

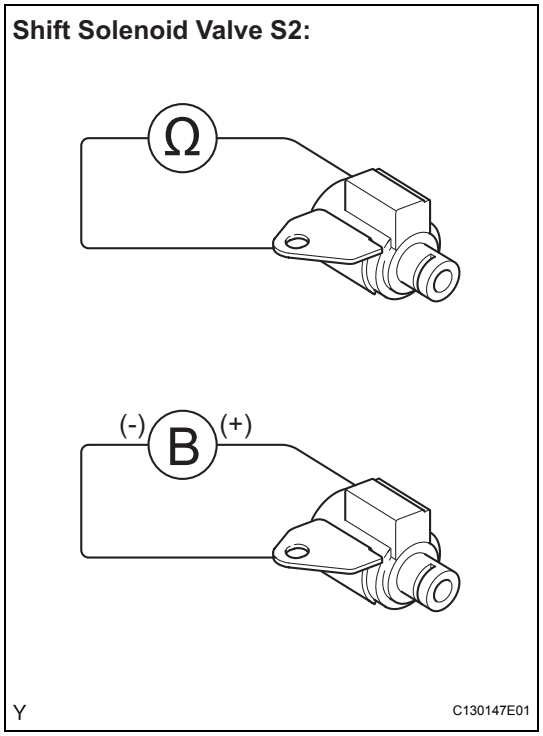

(a) Remove shift solenoid valve S2.
(b) Measure the resistance.
Standard resistance

Tester Connection	Specified Condition
Solenoid Connector (S2) - Solenoid Body (S2)	11 to 15 Ω at 20°C (68°F)

(c) Connect the positive (+) lead to the terminal of the solenoid connector and the negative (-) lead to the solenoid body to check the solenoid valve operation.
OK:
The solenoid makes operating sounds.

NG → **REPLACE SHIFT SOLENOID VALVE S2**

OK

3	INSPECT TRANSMISSION VALVE BODY ASSEMBLY

OK:
There are no foreign objects on any valves and they operate smoothly.

NG → **REPAIR OR REPLACE TRANSMISSION VALVE BODY ASSEMBLY**

OK

REPAIR OR REPLACE AUTOMATIC TRANSAXLE ASSEMBLY

AX

DTC	P0787	Shift / Timing Solenoid Low (Shift Solenoid Valve ST)

DTC	P0788	Shift / Timing Solenoid High (Shift Solenoid Valve ST)

DESCRIPTION

Shift solenoid valve ST is switched OFF-ON-OFF in accordance with signals from the ECM when up-shifting and down-shifting between the 3rd and the 4th gears. This reduces the shock of gear shifting between these positions.

DTC No.	DTC Detection Condition	Trouble Area
P0787	ECM detects short in solenoid valve ST circuit 4 times when solenoid valve ST is operated. (1-trip detection logic)	• Short in shift solenoid valve ST circuit • Shift solenoid valve ST • ECM
P0788	ECM detects open in solenoid valve ST circuit 4 times when solenoid valve ST is not operated. (1-trip detection logic)	• Open in shift solenoid valve ST circuit • Shift solenoid valve ST • ECM

MONITOR DESCRIPTION

When there is an open or short circuit in the shift solenoid valve circuit, the ECM detects the problem and the MIL comes on.

MONITOR STRATEGY

Related DTCs	P0787: Shift timing solenoid/Range check (Low resistance) P0788: Shift timing solenoid/Range check (High resistance)
Required sensors/Components	Shift solenoid valve ST
Frequency of operation	Continuous
Duration	0.128 seconds
MIL operation	Immediate
Sequence of operation	None

AX

TYPICAL ENABLING CONDITIONS

P0787: Range check (Low resistance)

The monitor runs whenever the following DTCs are not present	None
Solenoid	ON
Time after solenoid OFF to ON	More than 0.008 seconds
Battery voltage	8 V or more
Ignition switch	ON
Starter	OFF

P0788: Range check (High resistance)

The monitor runs whenever the following DTCs are not present	None
Solenoid	OFF
Time after solenoid ON to OFF	More than 0.008 seconds
Battery voltage	8 V or more
Ignition switch	ON
Starter	OFF

TYPICAL MALFUNCTION THRESHOLDS

P0787: Range check (Low resistance)

Shift solenoid valve ST resistance	8 Ω or less

P0788: Range check (High resistance)

Shift solenoid valve ST resistance	100 kΩ or more

COMPONENT OPERATING RANGE

Shift solenoid valve ST resistance	11 to 15 Ω at 20°C (68°F)

WIRING DIAGRAM

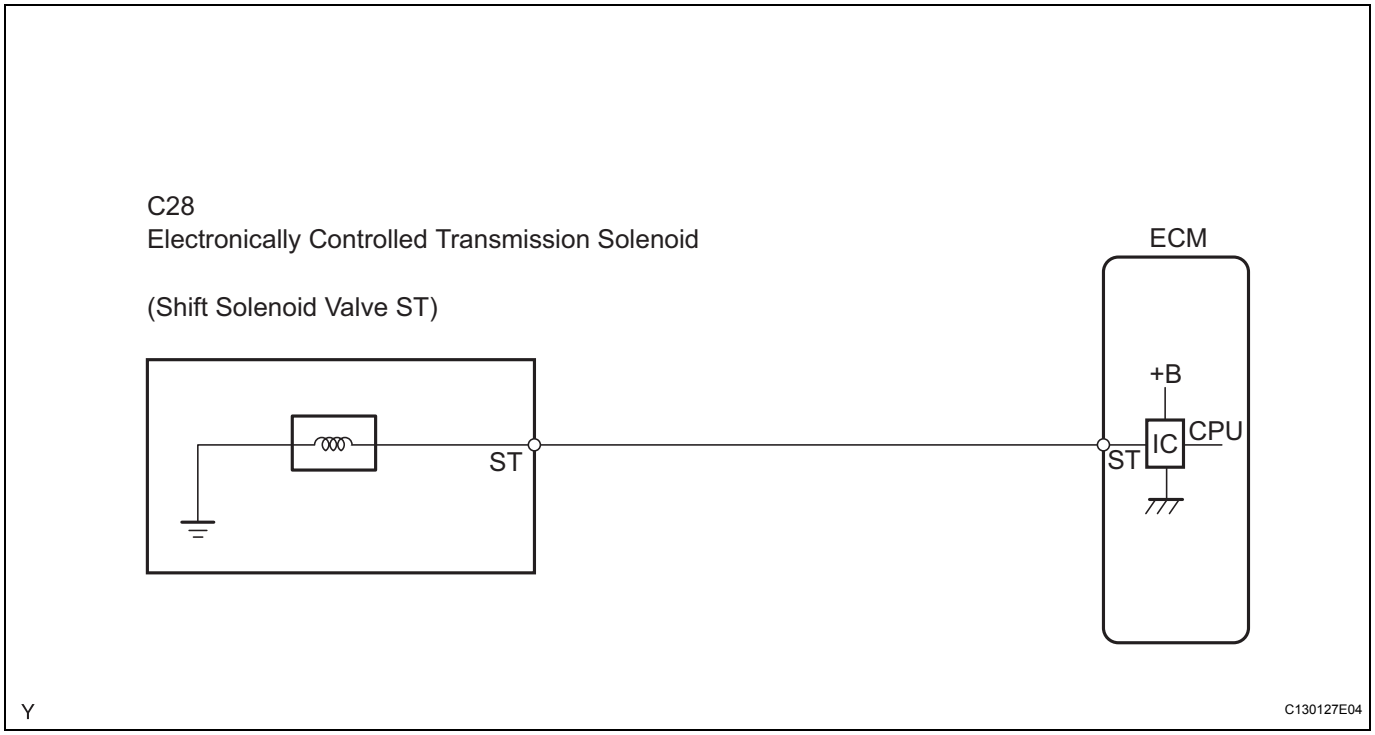

AX

INSPECTION PROCEDURE

1	INSPECT TRANSMISSION WIRE (SHIFT SOLENOID VALVE ST)

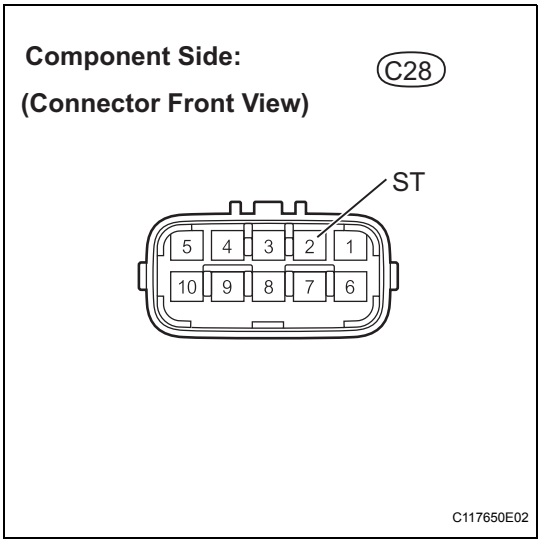

(a) Disconnect the transmission wire connector from the transaxle.
(b) Measure the resistance.
Standard resistance

Tester Connection	Specified Condition
2 (ST) - Body ground	11 Ω to 15 Ω at 20°C (68°F)

NG → **Go to step 3**

OK

2	CHECK HARNESS AND CONNECTOR (TRANSMISSION WIRE - ECM)

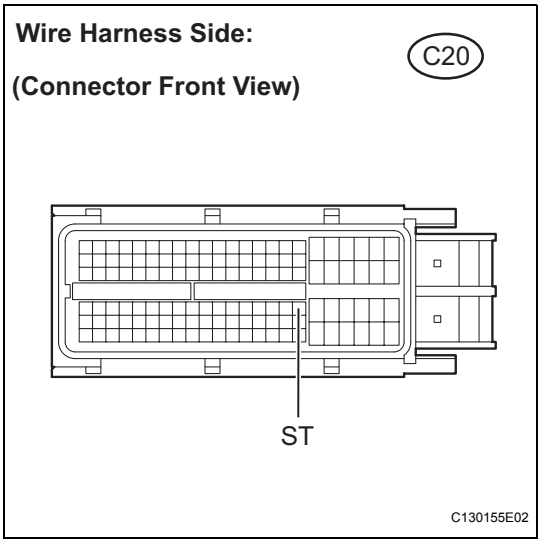

(a) Connect the transmission connector to the transaxle.
(b) Disconnect the ECM connector.
(c) Measure the resistance.
Standard resistance

Tester Connection	Specified Condition
80 (ST) - Body ground	11 Ω to 15 Ω at 20 °C (68 °F)

NG → **REPAIR OR REPLACE HARNESS OR CONNECTOR**

OK

REPLACE ECM

AX

3	INSPECT SHIFT SOLENOID VALVE ST

Shift Solenoid Valve ST:

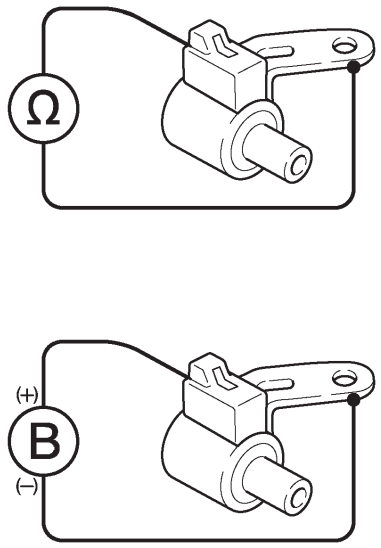

(a) Remove shift solenoid valve ST.
(b) Measure the resistance.
Standard resistance

Tester Connection	Specified Condition
Solenoid Connector (ST) - Solenoid Body (ST)	11 to 15 Ω at 20 °C (68 °F)

(c) Connect the positive (+) lead to the terminal of the solenoid connector and the negative (-) lead to the solenoid body to check the solenoid valve operation.
OK:
The solenoid makes operating sounds.

NG → **REPLACE SHIFT SOLENOID VALVE ST**

OK

REPAIR OR REPLACE TRANSMISSION WIRE

AX

DTC	P0973	Shift Solenoid "A" Control Circuit Low (Shift Solenoid Valve S1)

DTC	P0974	Shift Solenoid "A" Control Circuit High (Shift Solenoid Valve S1)

DESCRIPTION

Shifting from 1st to 4th is performed in combination with the ON and OFF operations of shift solenoid valves S1 and S2 which are controlled by the ECM. If an open or short circuit occurs in either of the shift solenoid valves, the ECM controls the remaining normal shift solenoid valve to allow the vehicle to be driven smoothly.
(If an open or short circuit occurs, the ECM stops sending currents to the affected circuit.)
Fail-safe function (See page AX-27).

DTC No.	DTC Detection Condition	Trouble Area
P0973	ECM detects short in solenoid valve S1 circuit 4 times when solenoid valve S1 is operated. (1-trip detection logic)	• Short in shift solenoid valve S1 circuit • Shift solenoid valve S1 • ECM
P0974	ECM detects open in solenoid valve S1 circuit 4 times when solenoid valve S1 is not operated. (1-trip detection logic)	• Open in shift solenoid valve S1 circuit • Shift solenoid valve S1 • ECM

MONITOR DESCRIPTION

The ECM commands gearshift by turning the shift solenoid valves ON/OFF. When there is an open or short circuit in the shift solenoid valve S1 circuit, the ECM detects the problem and the MIL comes on. Illuminating the MIL, the ECM performs the fail-safe and turns the other functioning shift solenoid valve ON/OFF.
(If an open or short circuit occurs, the ECM stops sending currents to the affected circuit.)

AX

MONITOR STRATEGY

Related DTCs	P0973: Shift solenoid valve S1/Range check (Low resistance) P0974: Shift solenoid valve S1/Range check (High resistance)
Required sensors/Components	Shift solenoid valve S1
Frequency of operation	Continuous
Duration	0.128 seconds or more
MIL operation	Immediate
Sequence of operation	None

TYPICAL ENABLING CONDITIONS

P0973: Range check (Low resistance)

The monitor runs whenever the following DTCs are not present.	None
Solenoid	ON
Time after solenoid OFF to ON	More than 0.008 seconds

P0974: Range check (High resistance)

The monitor runs whenever the following DTCs are not present.	None
Solenoid	OFF
Time after solenoid ON to OFF	More than 0.008 seconds

TYPICAL MALFUNCTION THRESHOLDS

P0973: Range check (Low resistance)

Shift solenoid valve S1 resistance	8 Ω or less

P0974: Range check (High resistance)

Shift solenoid valve S1 resistance	100 kΩ or more

COMPONENT OPERATING RANGE

Shift solenoid valve S1 resistance	11 to 15 Ω at 20°C (68°F)

WIRING DIAGRAM

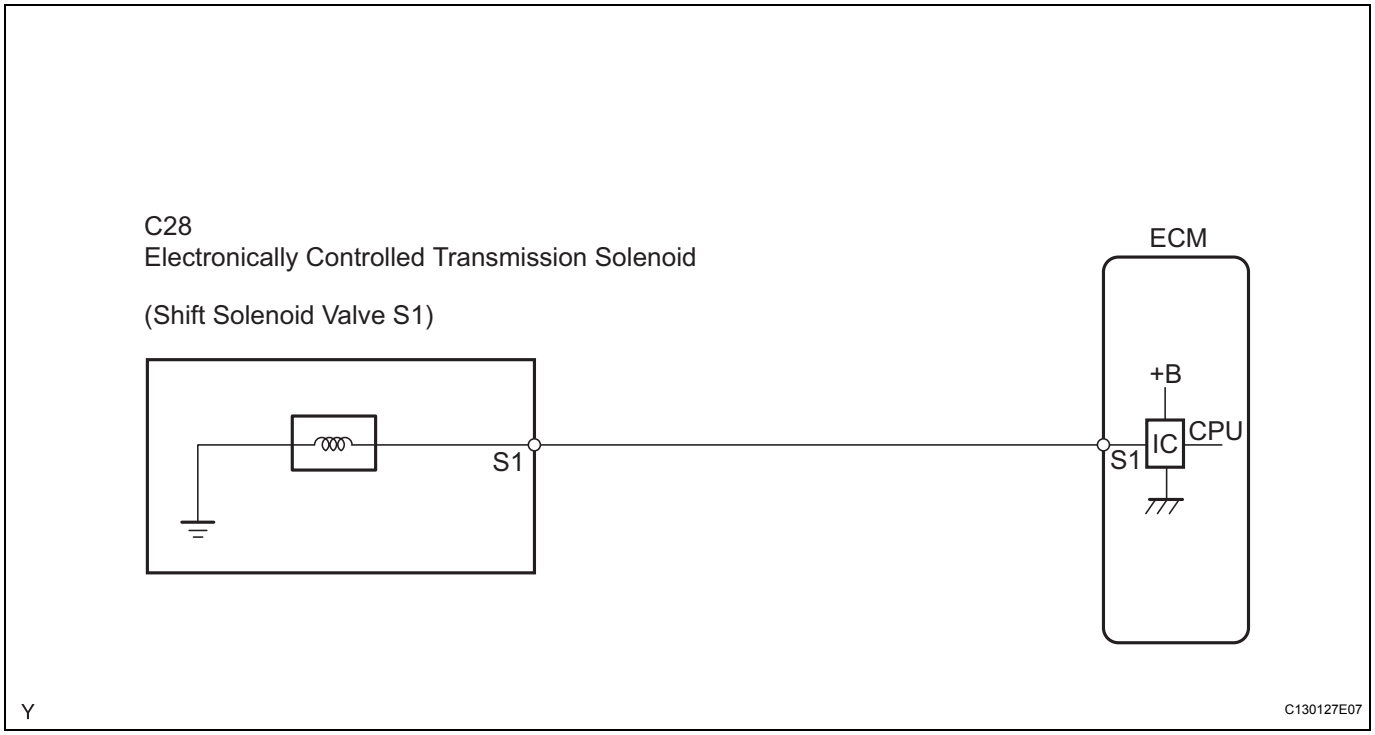

AX

INSPECTION PROCEDURE

HINT:

Shift solenoid valve S1 is turned on/off normally when the shift lever is in the D position:

Gearshift controlled by ECM	1st	2nd	3rd	4th
Shift solenoid valve S1	ON	ON	OFF	OFF

1	INSPECT TRANSMISSION WIRE (SHIFT SOLENOID VALVE S1)

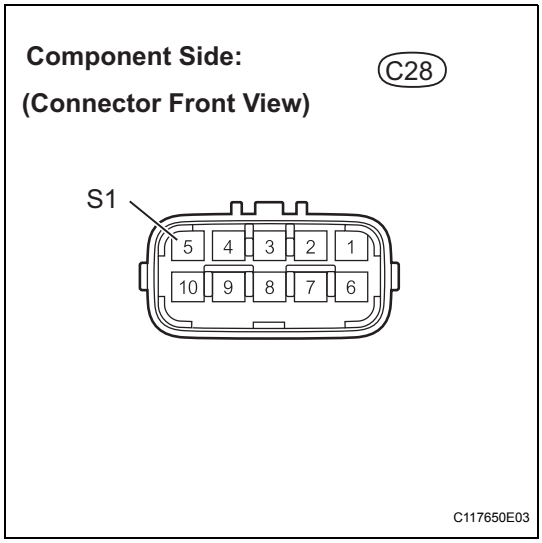

(a) Disconnect the transmission wire connector from the transaxle.
(b) Measure the resistance.
Standard resistance

Tester Connection	Specified Condition
5 (S1) - Body ground	11 Ω to 15 Ω at 20°C (68°F)

NG → **Go to step 3**

OK

2	CHECK HARNESS AND CONNECTOR (TRANSMISSION WIRE - ECM)

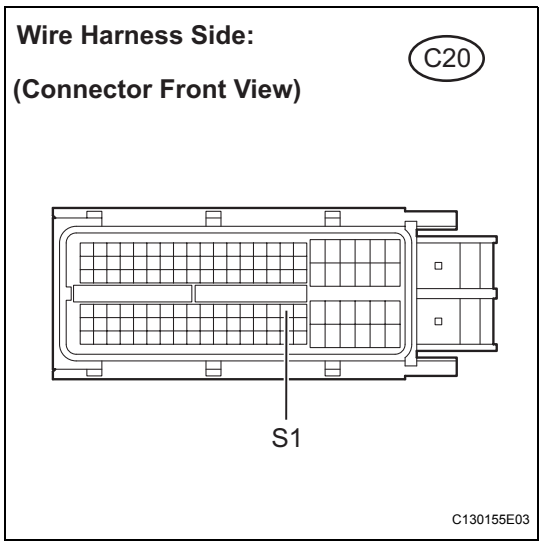

(a) Connect the transmission connector to the transaxle.
(b) Disconnect the ECM connector.
(c) Measure the resistance.
Standard resistance

Tester Connection	Specified Condition
79 (S1) - Body ground	11 Ω to 15 Ω at 20°C (68°F)

NG → **REPAIR OR REPLACE HARNESS OR CONNECTOR**

OK

REPLACE ECM

AX

3	INSPECT SHIFT SOLENOID VALVE S1

Shift Solenoid Valve S1:

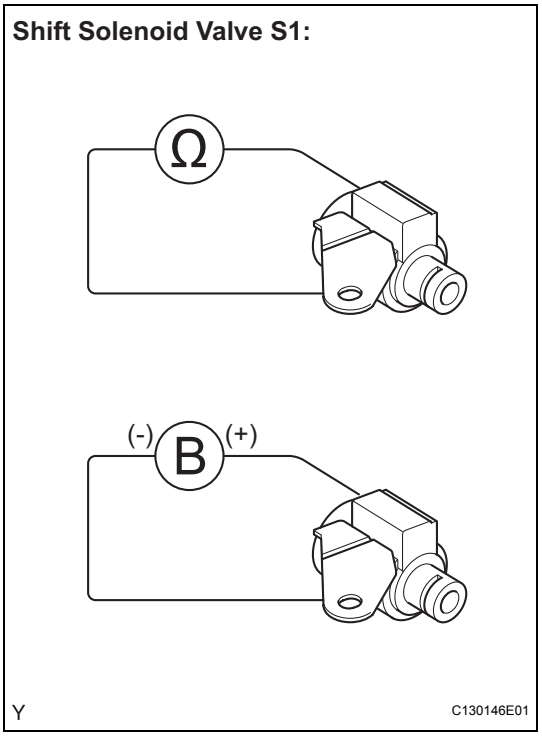

(a) Remove shift solenoid valve S1.
(b) Measure the resistance.
Standard resistance

Tester Connection	Specified Condition
Solenoid Connector (S1) - Solenoid Body (S1)	11 to 15 Ω at 20°C (68°F)

(c) Connect the positive (+) lead to the terminal of the solenoid connector and the negative (-) lead to the solenoid body to check the solenoid valve operation.
OK:
The solenoid makes operating sounds.

NG → **REPLACE SHIFT SOLENOID VALVE S1**

OK

REPAIR OR REPLACE TRANSMISSION WIRE

AX

DTC	P0976	Shift Solenoid "B" Control Circuit Low (Shift Solenoid Valve S2)

DTC	P0977	Shift Solenoid "B" Control Circuit High (Shift Solenoid Valve S2)

DESCRIPTION

Shifting from 1st to 4th is performed in combination with the ON and OFF operations of shift solenoid valves S1 and S2 which are controlled by the ECM. If an open or short circuit occurs in either of the shift solenoid valves, the ECM controls the remaining normal shift solenoid valve to allow the vehicle to be driven smoothly.
(If an open or short circuit occurs, the ECM stops sending currents to the affected circuit.)
Fail-safe function (See page AX-27).

DTC No.	DTC Detection Condition	Trouble Area
P0976	ECM detects short in solenoid valve S2 circuit 4 times when solenoid valve S2 is operated. (1-trip detection logic)	• Short in shift solenoid valve S2 circuit • Shift solenoid valve S2 • ECM
P0977	ECM detects open in solenoid valve S2 circuit 4 times when solenoid valve S2 is not operated. (1-trip detection logic)	• Open in shift solenoid valve S2 circuit • Shift solenoid valve S2 • ECM

MONITOR DESCRIPTION

The ECM commands gearshift by turning the shift solenoid valves ON/OFF. When there is an open or short circuit in the shift solenoid valve S2 circuit, the ECM detects the problem and the MIL comes on. Illuminating the MIL, the ECM performs the fail-safe and turns the other functioning shift solenoid valve ON/OFF.
(If an open or short circuit occurs, the ECM stops sending currents to the affected circuit.)

AX

MONITOR STRATEGY

Related DTCs	P0976: Shift solenoid valve S2/Range check (Low resistance) P0977: Shift solenoid valve S2/Range check (High resistance)
Required sensors/Components	Shift solenoid valve S2
Frequency of operation	Continuous
Duration	0.128 seconds or more
MIL operation	Immediate
Sequence of operation	None

TYPICAL ENABLING CONDITIONS

P0976: Range check (Low resistance)

The monitor runs whenever the following DTCs are not present.	None
Solenoid	ON
Time after solenoid OFF to ON	More than 0.008 seconds

P0977: Range check (High resistance)

The monitor runs whenever the following DTCs are not present.	None
Solenoid	OFF
Time after solenoid ON to OFF	More than 0.008 seconds

TYPICAL MALFUNCTION THRESHOLDS

P0976: Range check (Low resistance)

Shift solenoid valve S2 resistance	8 Ω or less

P0977: Range check (High resistance)

Shift solenoid valve S2 resistance	100 kΩ or more

COMPONENT OPERATING RANGE

Shift solenoid valve S2 resistance	11 to 15 Ω at 20°C (68°F)

WIRING DIAGRAM

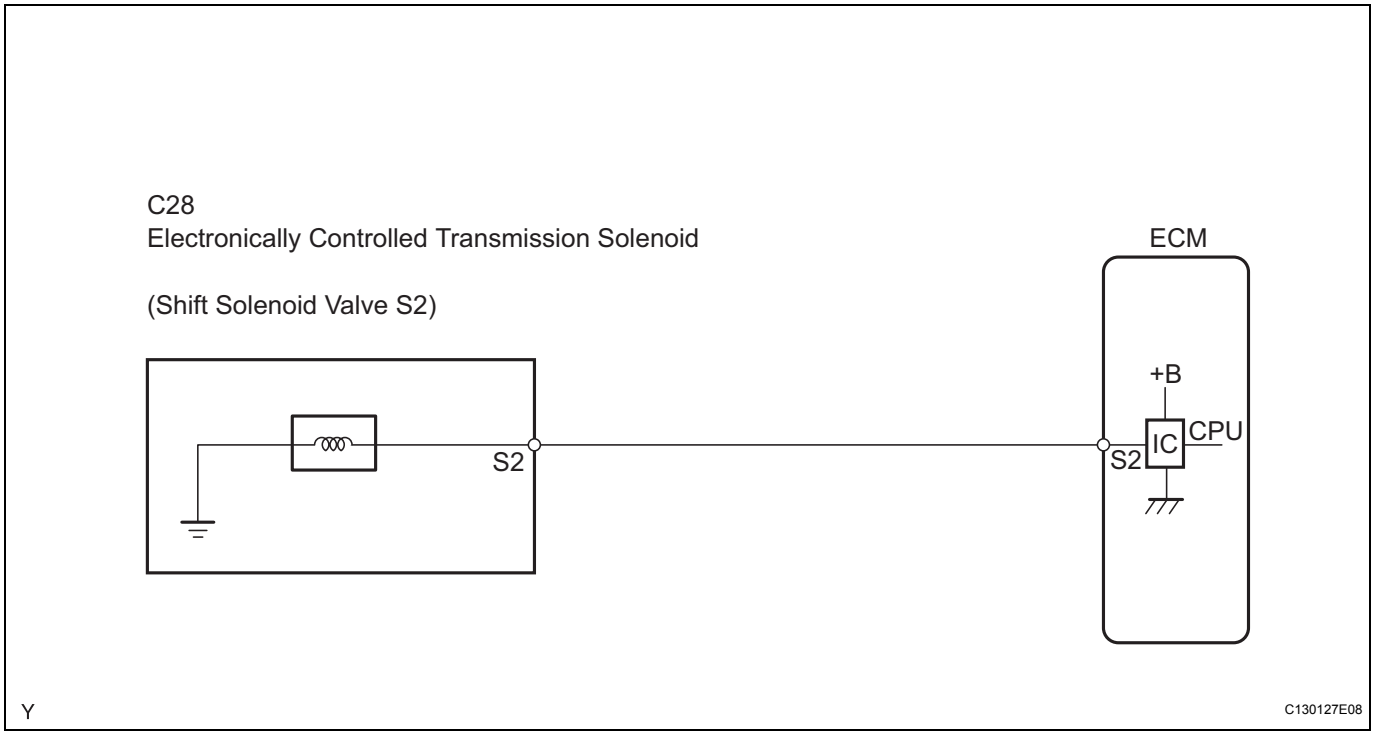

AX

INSPECTION PROCEDURE

HINT:

Shift solenoid valve S2 is turned on/off normally when the shift lever is in the D position:

Gearshift controlled by ECM	1st	2nd	3rd	4th
Shift solenoid valve S2	ON	OFF	OFF	ON

1	INSPECT TRANSMISSION WIRE (SHIFT SOLENOID VALVE S2)

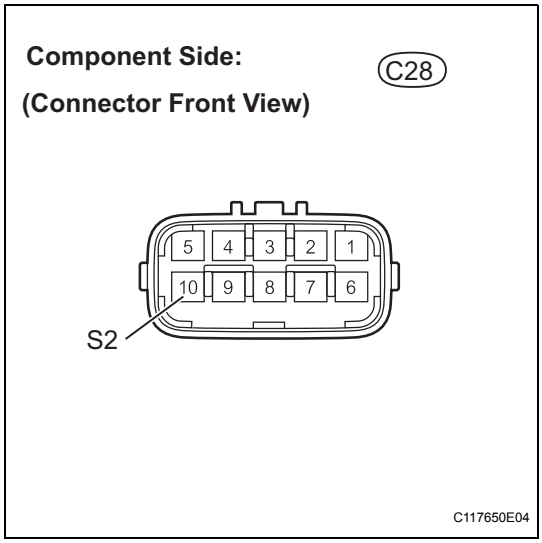

(a) Disconnect the transmission wire connector from the transaxle.
(b) Measure the resistance.
Standard resistance

Tester Connection	Specified Condition
10 (S2) - Body ground	11 Ω to 15 Ω at 20°C (68°F)

NG → **Go to step 3**

OK

2	CHECK HARNESS AND CONNECTOR (TRANSMISSION WIRE - ECM)

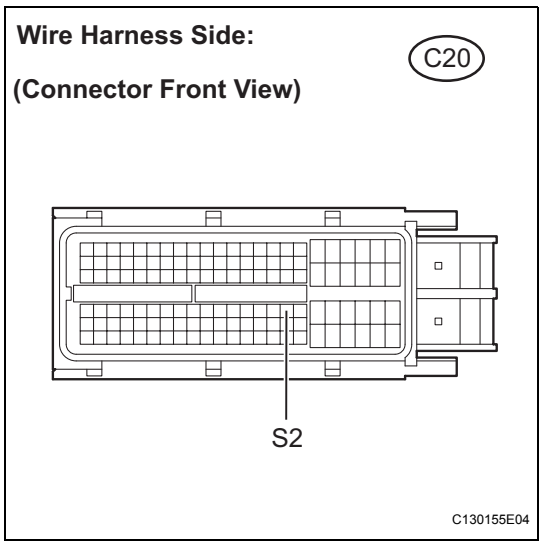

(a) Connect the transmission connector to the transaxle.
(b) Disconnect the ECM connector.
(c) Measure the resistance.
Standard resistance

Tester Connection	Specified Condition
78 (S2) - Body ground	11 Ω to 15 Ω at 20°C (68°F)

NG → **REPAIR OR REPLACE HARNESS OR CONNECTOR**

OK

REPLACE ECM

AX

3	INSPECT SHIFT SOLENOID VALVE S2

Shift Solenoid Valve S2:

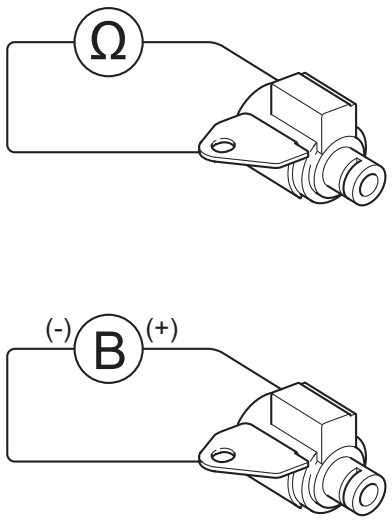

(a) Remove shift solenoid valve S2.
(b) Measure the resistance.
Standard resistance

Tester Connection	Specified Condition
Solenoid Connector (S2) - Solenoid Body (S2)	11 to 15 Ω at 20°C (68°F)

(c) Connect the positive (+) lead to the terminal of the solenoid connector and the negative (-) lead to the solenoid body to check the solenoid valve operation.
OK:
The solenoid makes operating sounds.

NG → **REPLACE SHIFT SOLENOID VALVE S2**

OK

REPAIR OR REPLACE TRANSMISSION WIRE

AX

DTC	P2714	Pressure Control Solenoid "D" Performance (Shift Solenoid Valve SLT)

DESCRIPTION

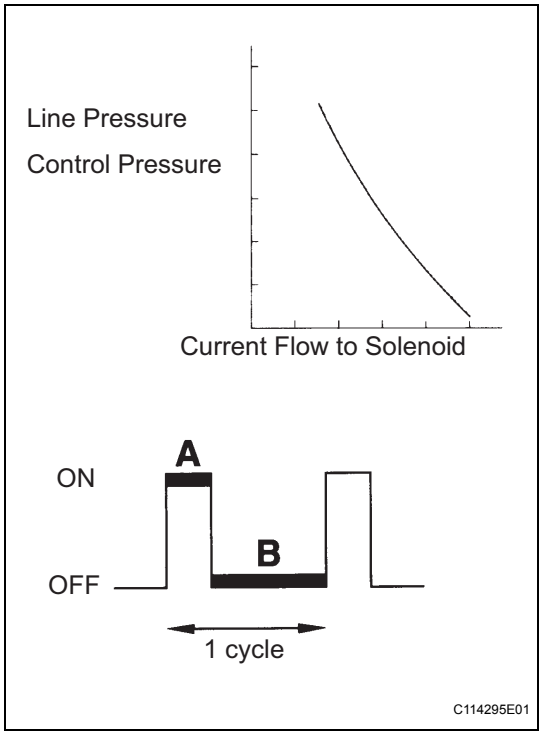

The throttle pressure that is applied to the primary regulator valve (which modulates the line pressure) causes shift solenoid valve SLT, under electronic control, to precisely modulate and generate the line pressure according to the extent that the accelerator pedal is depressed or the engine power output. This controls the line pressure and provides smooth shifting characteristics.

AX

Upon receiving a throttle valve opening angle signal, the ECM controls the line pressure by sending a predetermined duty ratio* to the solenoid valve, modulating the line pressure and generating throttle pressure.

*: The duty ratio is the ratio of the current ON time (A) to the total of the current ON and OFF time (A + B).
Duty Ratio (%) = A / (A + B) x 100

DTC No.	DTC Detection Condition	Trouble Area
P2714	ECM detects malfunction on SLT (ON side) according to difference in revolutions of turbine (input) and output shaft. (2-trip detection logic)	• Shift solenoid valve SLT remains open or closed • Valve body is blocked • Torque converter clutch • Automatic transaxle (clutch, brake or gear etc.) • ECM

MONITOR DESCRIPTION

In any forward position, when the difference between the revolutions of the turbine and output shaft exceeds the specified value (varies with output speed) determined by the ECM, the ECM illuminates the MIL and outputs the DTC. When shift solenoid valve SLT remains on, the oil pressure goes down and the clutch engagement force decreases.

MONITOR STRATEGY

Related DTCs	P2714: Shift solenoid valve SLT/ON malfunction
Required sensors/Components	Shift solenoid valve SLT, Speed sensor (NT), Speed sensor (SPD)
Frequency of operation	Continuous

Duration	1.0 second
MIL operation	2 driving cycles
Sequence of operation	None

TYPICAL ENABLING CONDITIONS

The following conditions are common to ON malfunctions (a), (b), (c) and (d).

The monitor runs whenever the following DTCs are not present.	None
Transmission shift position	D
Time after shifting N to D	4.5 seconds or more
ATF (Automatic Transmission Fluid) temperature	-10°C (14°F) or more
ATF temperature sensor (TFT sensor) circuit	No circuit malfunction
Electronic Throttle Control System (if applicable)	No circuit malfunction
Shift solenoid valve S1 circuit	No circuit malfunction
Shift solenoid valve S2 circuit	No circuit malfunction
Shift solenoid valve SLU circuit	No circuit malfunction
Shift solenoid valve SLT circuit	No circuit malfunction
Speed sensor (NT) circuit	No circuit malfunction
Speed sensor (SPD) circuit	No circuit malfunction

ON malfunction (a):

ECM gearshift command	1st
Input (turbine) speed	200 rpm or more
Output speed	300 rpm or more

ON malfunction (b):

ECM gearshift command	2nd
Input (turbine) speed	200 rpm or more
Output speed	300 rpm or more

ON malfunction (c):

ECM gearshift command	3rd
Input (turbine) speed	200 rpm or more
Output speed	300 rpm or more

ON malfunction (d):

ECM gearshift command	4th
Input (turbine) speed	200 rpm or more
Output speed	300 rpm or more

TYPICAL MALFUNCTION THRESHOLDS

[ON malfunction]

Detection condition: Total accumulated time of ON malfunctions (a), (b), (c) and (d) is 1 second or more

ON malfunction (a):

NT - NO x 1st gear ratio NT: Input (turbine) speed NO: Internal counter shaft speed	More than 300 rpm at output speed of 1,000 rpm (Conditions vary with output speed)
Duration	0.85 seconds or more

ON malfunction (b):

NT - NO x 2nd gear ratio	More than 300 rpm at output speed of 1,000 rpm (Conditions vary with output speed)
Duration	0.85 seconds or more

ON malfunction (c):

NT - NO x 3rd gear ratio	More than 300 rpm at output speed of 1,000 rpm (Conditions vary with output speed)
Duration	0.85 seconds or more

ON malfunction (d):

NT - NO x 4th gear ratio	More than 300 rpm at output speed of 1,000 rpm (Conditions vary with output speed)
Duration	0.85 seconds or more

INSPECTION PROCEDURE

1. ACTIVE TEST

HINT:

Performing the ACTIVE TEST using the intelligent tester allows components, such as the relay, VSV, and actuator, to be operated without removing any parts. Performing the ACTIVE TEST as the first step of troubleshooting is one method of shortening labor time.

It is possible to display the DATA LIST during the ACTIVE TEST.

(a) Warm up the engine.
(b) Turn the ignition switch off.
(c) Connect the intelligent tester together with the CAN VIM (Controller Area Network Vehicle Interface Module) to the DLC3.
(d) Turn the ignition switch to the ON position.
(e) Turn on the tester.
(f) Select the following items: DIAGNOSIS / ENHANCED OBD II / ACTIVE TEST / SOLENOID (SLT).
(g) In accordance with the display on the tester, perform the ACTIVE TEST.

Item	Test Details	Diagnostic Note
SOLENOID (SLT)*	[Test Details] Operate shift solenoid SLT and raise line pressure. [Vehicle Condition] • Vehicle Stopped • IDL: ON HINT: OFF: Line pressure up (when active test of SOLENOID (SLT) is performed, ECM turns off SLT solenoid) ON: No action (normal operation)	-

*: SOLENOID (SLT) in the ACTIVE TEST is performed to check the line pressure changes by connecting SST to the automatic transaxle, which is used in the HYDRAULIC TEST (see page AX-13) as well.

HINT:

The pressure values in ACTIVE TEST and HYDRAULIC TEST are different from each other.

1	**CHECK OTHER DTCS OUTPUT (IN ADDITION TO DTC P2714)**

(a) Connect the intelligent tester to the DLC3.
(b) Turn the ignition switch to the ON position.
(c) Turn on the tester.
(d) Select the following items: DIAGNOSIS / ENHANCED OBD II / DTC INFO / CURRENT CODES.
(e) Read the DTCs using the tester.

Result

Display (DTC output)	Proceed to
P2714	A
P2714 and other DTCs	B

HINT:
If any other DTCs besides P2714 are output, perform troubleshooting for those DTCs first.

B → **GO TO DTC CHART**

A

2 INSPECT SHIFT SOLENOID VALVE SLT

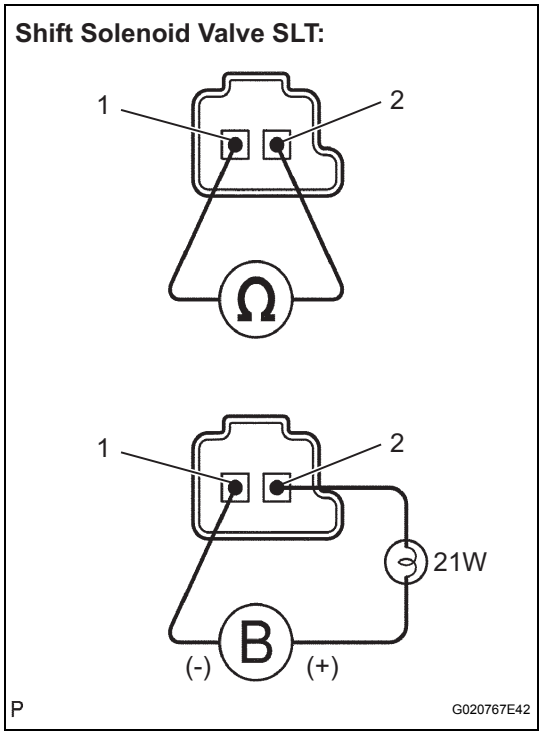

(a) Remove shift solenoid valve SLT.
(b) Measure the resistance.
Standard resistance

Tester Connection	Specified Condition
1 - 2	5.0 to 5.6 Ω at 20°C (68°F)

(c) Connect the positive (+) lead with a 21 W bulb to terminal 2 and the negative (-) lead to terminal 1 of the solenoid valve connector, then check the movement of the valve.
OK:
The solenoid makes operating sounds.

NG → **REPLACE SHIFT SOLENOID VALVE SLT**

OK

3 INSPECT TRANSMISSION VALVE BODY ASSEMBLY

OK:
There are no foreign objects on any valves and they operate smoothly.

NG → **REPAIR OR REPLACE TRANSMISSION VALVE BODY ASSEMBLY**

OK

AX

4	INSPECT TORQUE CONVERTER CLUTCH ASSEMBLY

OK:
The torque converter clutch operates normally.

NG → **REPLACE TORQUE CONVERTER CLUTCH ASSEMBLY**

OK

REPAIR OR REPLACE AUTOMATIC TRANSAXLE ASSEMBLY

DTC	P2716	Pressure Control Solenoid "D" Electrical (Shift Solenoid Valve SLT)

DESCRIPTION

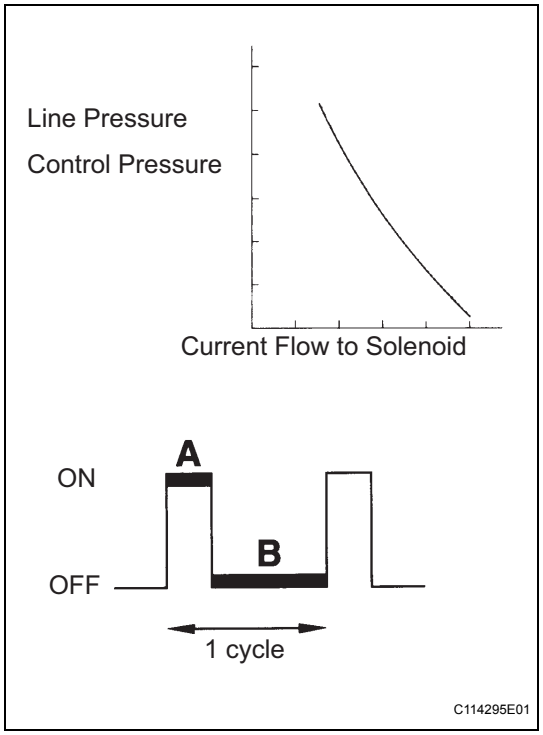

The throttle pressure that is applied to the primary regulator valve (which modulates the line pressure) causes shift solenoid valve SLT, under electronic control, to precisely modulate and generate the line pressure according to the extent that the accelerator pedal is depressed or the engine power output. This controls the line pressure and provides smooth shifting characteristics.
Upon receiving a throttle valve opening angle signal, the ECM controls the line pressure by sending a predetermined duty ratio* to the solenoid valve, modulating the line pressure and generating throttle pressure.
*: The duty ratio is the ratio of the current ON time (A) to the total of the current ON and OFF time (A + B).
Duty Ratio (%) = A / (A + B) x 100

AX

DTC No.	DTC Detection Condition	Trouble Area
P2716	Open or short is detected in shift solenoid valve SLT circuit for 1 second or more while driving. (1-trip detecting logic)	• Open or short in shift solenoid valve SLT circuit • Shift solenoid valve SLT • ECM

MONITOR DESCRIPTION

When an open or short in the linear solenoid valve (SLT) circuit is detected, the ECM interprets this as a fault. The ECM turns on the MIL and stores the DTC.

MONITOR STRATEGY

Related DTCs	P2716: Shift solenoid valve SLT/Range check
Required sensors/Components	Shift solenoid valve SLT
Frequency of operation	Continuous
Duration	1.0 second
MIL operation	Immediate
Sequence of operation	None

TYPICAL ENABLING CONDITIONS

The monitor runs whenever the following DTCs are not present	None
Solenoid current cut status	Not cut
Battery voltage	11 V or more
CPU commanded duty ratio	19 % or more
Ignition switch	ON
Starter	OFF

TYPICAL MALFUNCTION THRESHOLDS

Solenoid status (SLT) from MIC	Fail

COMPONENT OPERATING RANGE

Shift solenoid valve SLT	Resistance: 5.0 Ω to 5.6 Ω at 20°C (68°F)

WIRING DIAGRAM

C28
Electronically Controlled Transmission Solenoid

(Shift Solenoid Valve SLT)

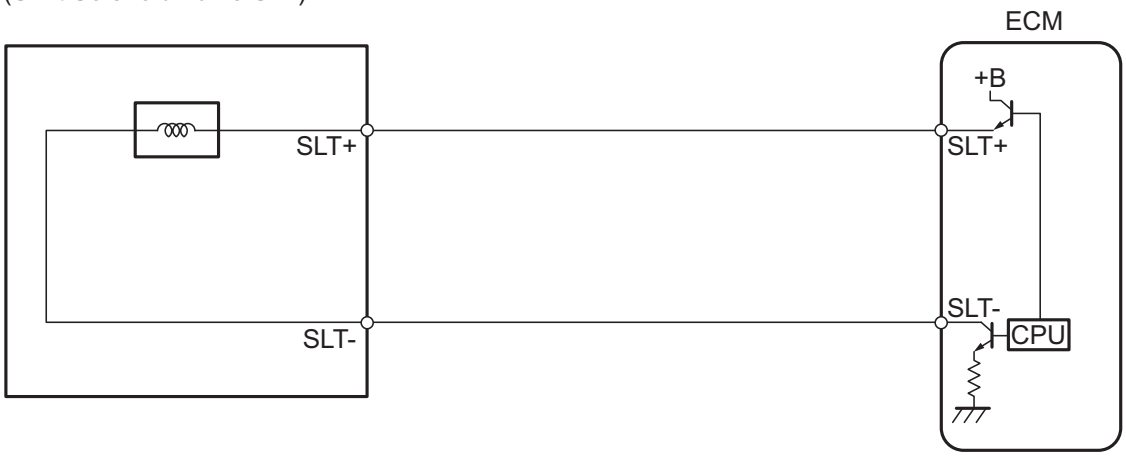

Y

C130128E02

AX

INSPECTION PROCEDURE

1 INSPECT TRANSMISSION WIRE (SHIFT SOLENOID VALVE SLT)

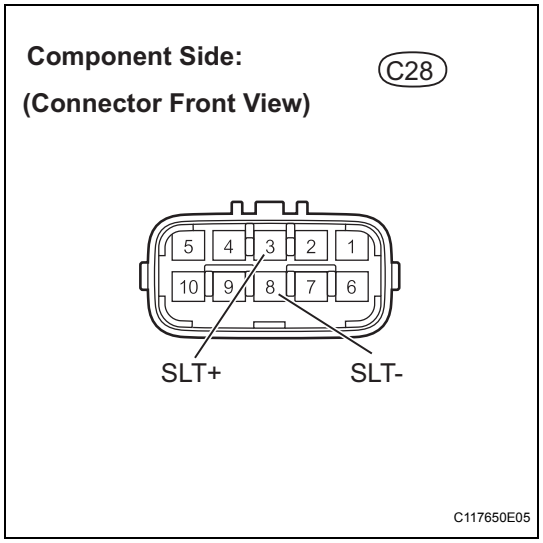

(a) Disconnect the transmission wire connector from the transaxle.
(b) Measure the resistance.
Standard resistance

Tester Connection	Specified Condition
3 (SLT+) - 8 (SLT-)	5.0 Ω to 5.6 Ω at 20°C (68°F)
3 (SLT+) - Body ground	10 kΩ or higher
8 (SLT-) - Body ground	10 kΩ or higher

NG → **Go to step 3**

OK

2 CHECK HARNESS AND CONNECTOR (TRANSMISSION WIRE - ECM)

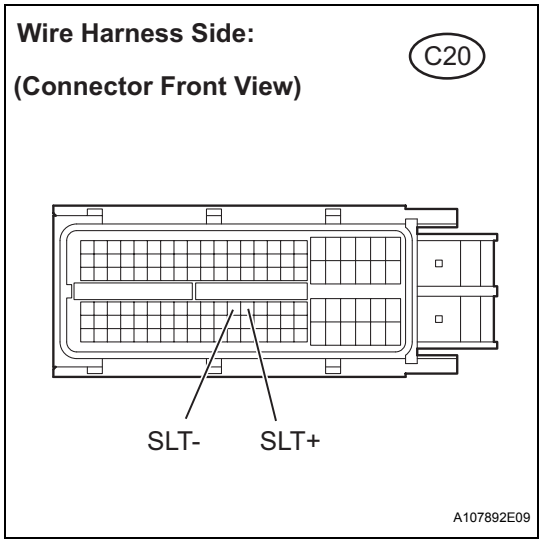

(a) Connect the transmission connector to the transaxle.
(b) Disconnect the ECM connector.
(c) Measure the resistance.
Standard resistance

Tester Connection	Specified Condition
76 (SLT+) - 75 (SLT-)	5.0 Ω to 5.6 Ω at 20°C (68°F)
76 (SLT+) - Body ground	10 kΩ or higher
75 (SLT-) - Body ground	10 kΩ or higher

NG → **REPAIR OR REPLACE HARNESS OR CONNECTOR**

OK

REPLACE ECM

AX

3	INSPECT SHIFT SOLENOID VALVE SLT

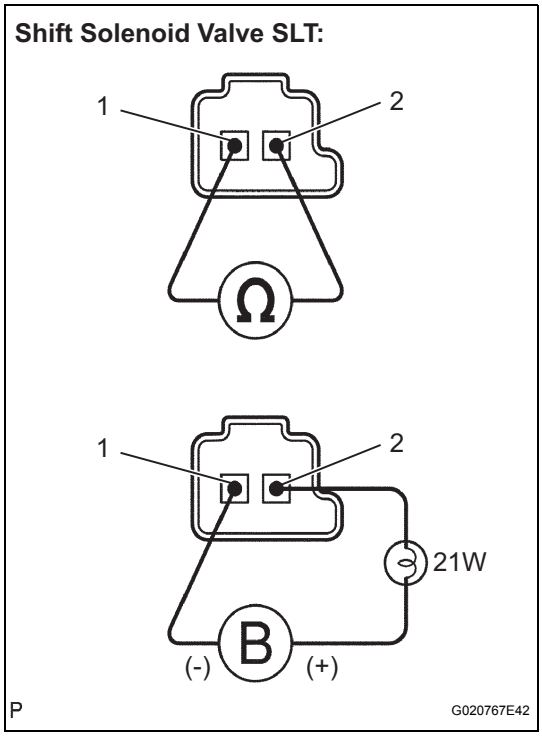

(a) Remove shift solenoid valve SLT.
(b) Measure the resistance.
Standard resistance

Tester Connection	Specified Condition
1 - 2	5.0 Ω to 5.6 Ω at 20°C (68°F)

(c) Connect the positive (+) lead with a 21 W bulb to terminal 2 and the negative (-) lead to terminal 1 of the solenoid valve connector, then check the movement of the valve.
OK:
The solenoid makes operating sounds.

NG → **REPLACE SHIFT SOLENOID VALVE SLT**

OK

REPAIR OR REPLACE TRANSMISSION WIRE

AX

DTC	P2757	Torque Converter Clutch Pressure Control Solenoid Performance (Shift Solenoid Valve SLU)

DESCRIPTION

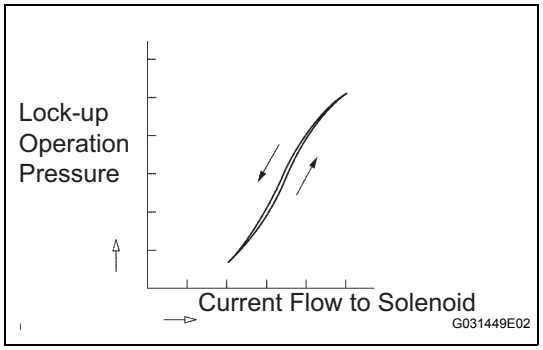

The ECM uses the signals from the throttle position sensor, turbine (input) speed sensor, vehicle speed sensor and crankshaft position sensor to monitor the engagement condition of the lock-up clutch.
Then the ECM compares the engagement condition of the lock-up clutch with the lock-up schedule in the ECM memory to detect mechanical problems of shift solenoid valve SLU, valve body and torque converter clutch.

DTC No.	DTC Detection Condition	Trouble Area
P2757	Lock-up does not occur when driving in lock-up range or lock-up remains ON in lock-up OFF range. (2-trip detection logic)	• Shift solenoid valve SLU remains open or closed • Valve body is blocked • Shift solenoid valve SLU • Torque converter clutch • Automatic transaxle (clutch, brake or gear etc.) • Line pressure is too low • ECM

AX

MONITOR DESCRIPTION

Torque converter lock-up is controlled by the ECM based on the speed sensor (NT), engine rpm (NE), engine load, engine coolant temperature, vehicle speed, transmission fluid temperature, and gear selection. The ECM determines the lock-up status of the torque converter by comparing the engine rpm (NE) to the input turbine rpm (NT). The ECM calculates the actual transmission gear by comparing input turbine rpm (NT) to output shaft speed. When conditions are appropriate, the ECM requests lock-up by applying the control voltage to shift solenoid valve SLU. When SLU is turned on, it applies pressure to the lock-up relay valve and locks the torque converter clutch.
If the ECM detects no lock-up after lock-up has been requested or if it detects lock-up when it is not requested, the ECM interprets this as a fault in shift solenoid valve SLU or lock-up system performance. The ECM turns on the MIL and stores the DTC.
Example:
When either of the following is met, the system judges it as a malfunction.

- There is a difference in the rotations of the input side (engine speed) and output side (input turbine speed) of the torque converter when the ECM commands lock-up.
  (Engine speed is at least 100 rpm greater than input turbine speed.)
- There is no difference in the rotations of the input side (engine speed) and output side (input turbine speed) of the torque converter when the ECM commands lock-up off.
  (The difference between engine speed and input turbine speed is less than 35 rpm.)

MONITOR STRATEGY

Related DTCs	P2757: Shift solenoid valve SLU/OFF malfunction Shift solenoid valve SLU/ON malfunction
Required sensors/Components	Shift solenoid valve SLU, Speed sensor (NT), Crankshaft position sensor (NE)
Frequency of operation	Continuous
Duration	OFF malfunction: 3.5 seconds ON malfunction: 1.8 seconds
MIL operation	2 driving cycles
Sequence of operation	None

TYPICAL ENABLING CONDITIONS

The following conditions are common to OFF malfunction and ON malfunction.

The monitor runs whenever the following DTCs are not present.	None
Time after shifting N to D	4.5 seconds or more
ECT (Engine Coolant Temperature)	60°C (140°F) or more
Transmission shift position	D
ECM selected gear	3rd or 4th
Vehicle speed	15.5 mph (25 km/h) or more
Shift solenoid valve S1 circuit	No circuit malfunction
Shift solenoid valve S2 circuit	No circuit malfunction
Shift solenoid valve SLU circuit	No circuit malfunction
ECT sensor circuit	No circuit malfunction
Electronic Throttle Control System (if applicable)	No circuit malfunction
Speed sensor (NT) circuit	No circuit malfunction
Speed sensor (SPD) circuit	No circuit malfunction

AX

OFF malfunction:

ECM lock-up command	ON
Duration time from lock-up on command	3 seconds or more
Actual gear	3rd or 4th

ON malfunction:

ECM lock-up command	OFF
Throttle valve opening angle	8 % or more
Vehicle speed	Less than 37.3 mph (60 km/h)
Actual gear	3rd
Calculated load value	22 % or more

TYPICAL MALFUNCTION THRESHOLDS

OFF malfunction:

Engine speed - Input (turbine) speed (NE - NT)	100 rpm or more

[ON malfunction]

2 detections are necessary per driving cycle.
1st detection: Temporary flag ON
2nd detection: Pending fault code ON
Vehicle speed must be under 6.2 mph (10 km/h) once before 2nd detection.

ON malfunction:

Difference between engine speed and Input (turbine) speed	Less than 35 rpm

INSPECTION PROCEDURE

1. ACTIVE TEST

HINT:

Performing the ACTIVE TEST using the intelligent tester allows components, such as the relay, VSV, and actuator, to be operated without removing any parts. Performing the ACTIVE TEST as the first step of troubleshooting is one method of shortening labor time.

It is possible to display the DATA LIST during the ACTIVE TEST.

(a) Warm up the engine.

(b) Turn the ignition switch off.

(c) Connect the intelligent tester together with the CAN VIM (Controller Area Network Vehicle Interface Module) to the DLC3.

(d) Turn the ignition switch to the ON position.

(e) Turn on the tester.

(f) Select the following items: DIAGNOSIS / ENHANCED OBD II / ACTIVE TEST / LOCK UP.

(g) According to the display on the tester, perform the ACTIVE TEST.

Item	Test Details	Diagnostic Note
LOCK UP	[Test Details] Control shift solenoid SLU to set automatic transaxle to lock-up condition. [Vehicle Condition] Vehicle Speed: 36 mph (60 km/h) or more, and 4th gear	Possible to check SLU operation.

HINT:

- This test can be conducted when the vehicle speed is 36 mph (60 km/h) or less.
- This test can be conducted in 4th gear.

(h) Lightly depress the accelerator pedal and check that the engine speed does not change abruptly.

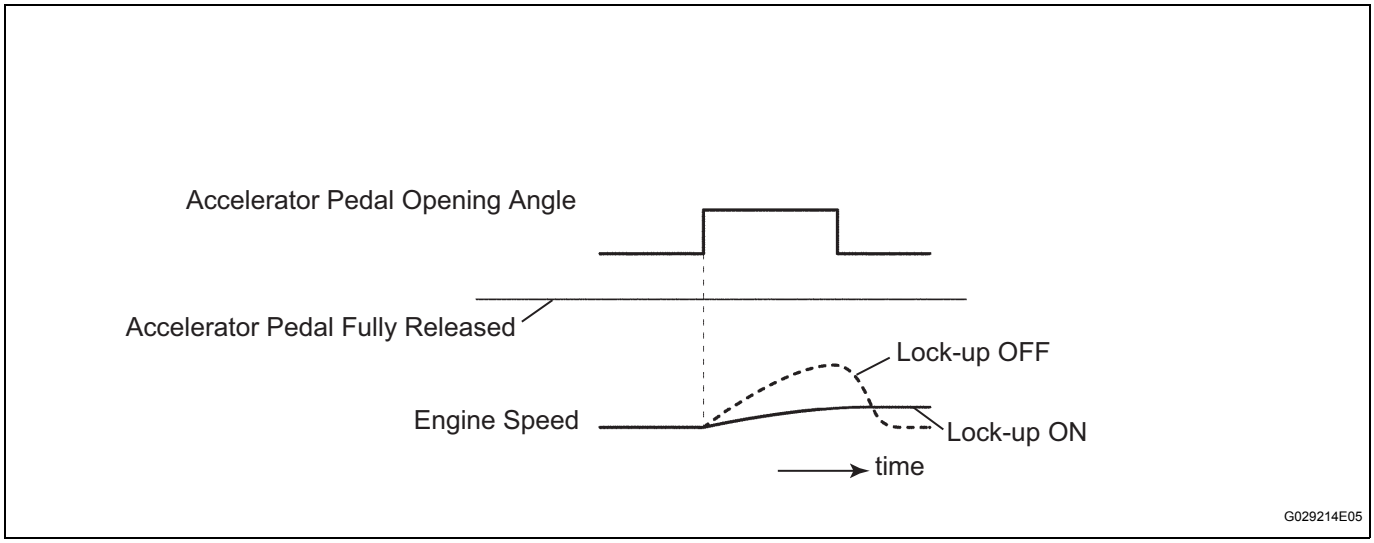

HINT:

- When changing the accelerator pedal opening angle while driving, if the engine speed does not change, lock-up is on.
- Slowly, but not fully, release the accelerator pedal in order to decelerate. (Fully releasing the pedal will close the throttle valve and lock-up may be turned off.)

1	CHECK OTHER DTCS OUTPUT (IN ADDITION TO DTC P2757)

(a) Connect the intelligent tester to the DLC3.

(b) Turn the ignition switch to the ON position.
(c) Turn on the tester.
(d) Select the following items: DIAGNOSIS / ENHANCED OBD II / DTC INFO / CURRENT CODES.
(e) Read the DTCs using the tester.

Result

Display (DTC output)	Proceed to
P2757	A
P2757 and other DTCs	B

HINT:
If any other DTCs besides P2757 are output, perform troubleshooting for those DTCs first.

B → **GO TO DTC CHART**

A

2 INSPECT SHIFT SOLENOID VALVE SLU

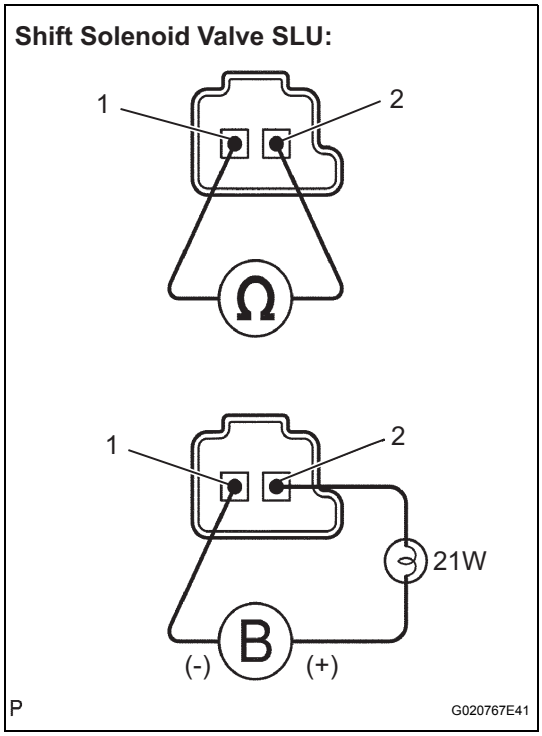

(a) Remove shift solenoid valve SLU.
(b) Measure the resistance.
Standard resistance

Tester Connection	Specified Condition
1 - 2	5.0 Ω to 5.6 Ω at 20°C (68°F)

(c) Connect the positive (+) lead with a 21 W bulb to terminal 2 and the negative (-) lead to terminal 1 of the solenoid valve connector, then check the movement of the valve.
OK:
The solenoid makes operating sounds.

NG → **REPLACE SHIFT SOLENOID VALVE SLU**

OK

3 INSPECT TRANSMISSION VALVE BODY ASSEMBLY

OK:
There are no foreign objects on any valves and they operate smoothly.

NG → **REPAIR OR REPLACE TRANSMISSION VALVE BODY ASSEMBLY**

AX

OK

4	INSPECT TORQUE CONVERTER CLUTCH ASSEMBLY

OK:

The torque converter clutch operates normally.

NG → **REPLACE TORQUE CONVERTER CLUTCH ASSEMBLY**

OK

REPAIR OR REPLACE AUTOMATIC TRANSAXLE ASSEMBLY

DTC	P2759	Torque Converter Clutch Pressure Control Solenoid Control Circuit Electrical (Shift Solenoid Valve SLU)

DESCRIPTION

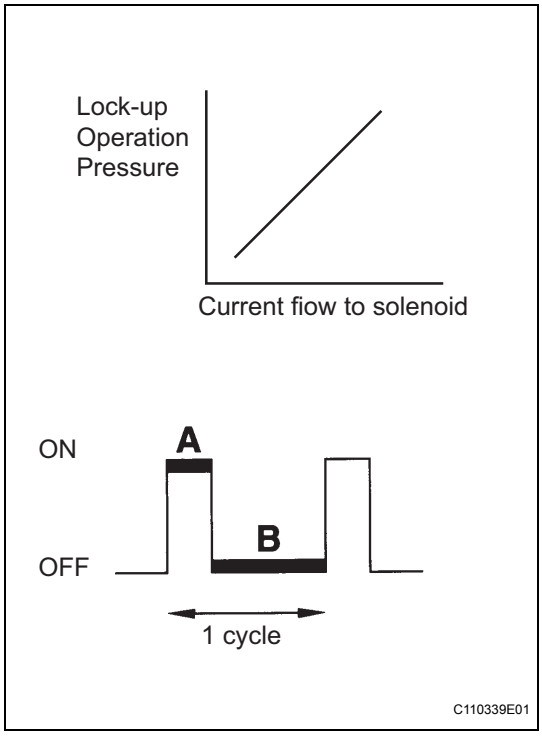

The amount of current flowing to the solenoid is controlled by the duty ratio* of the ECM output signal. The higher the duty ratio* becomes, the higher the lock-up hydraulic pressure becomes during the lock-up operation.

*: The duty ratio is the ratio of the current ON time (A) to the total of the current ON and OFF times (A + B).
Duty Ratio (%) = A / (A + B) x 100

DTC No.	DTC Detection Condition	Trouble Area
P2759	Open or short is detected in shift solenoid valve SLU circuit for 1 second or more while driving. (1-trip detection logic)	• Open or short in shift solenoid valve SLU circuit • Shift solenoid valve SLU • ECM

MONITOR DESCRIPTION

When an open or short in the linear solenoid valve (SLU) circuit is detected, the ECM interprets this as a fault. The ECM turns on the MIL and stores the DTC.

MONITOR STRATEGY

Related DTCs	P2759: Shift solenoid valve SLU/Range check
Required sensors/Components	Shift solenoid valve SLU
Frequency of operation	Continuous
Duration	1.0 second
MIL operation	Immediate
Sequence of operation	None

TYPICAL ENABLING CONDITIONS

The monitor runs whenever the following DTCs are not present.	None
Solenoid current cut status	Not cut
Battery voltage	11 V or more
CPU commanded duty ratio	19 % or more
Ignition switch	ON
Starter	OFF

TYPICAL MALFUNCTION THRESHOLDS

Solenoid status (SLU) from MIC	Fail

COMPONENT OPERATING RANGE

Solenoid status (SLU)	Resistance: 5.0 to 5.6 Ω at 20°C (68°F)

WIRING DIAGRAM

C28
Electronically Controlled Transmission Solenoid

(Shift Solenoid Valve SLU)

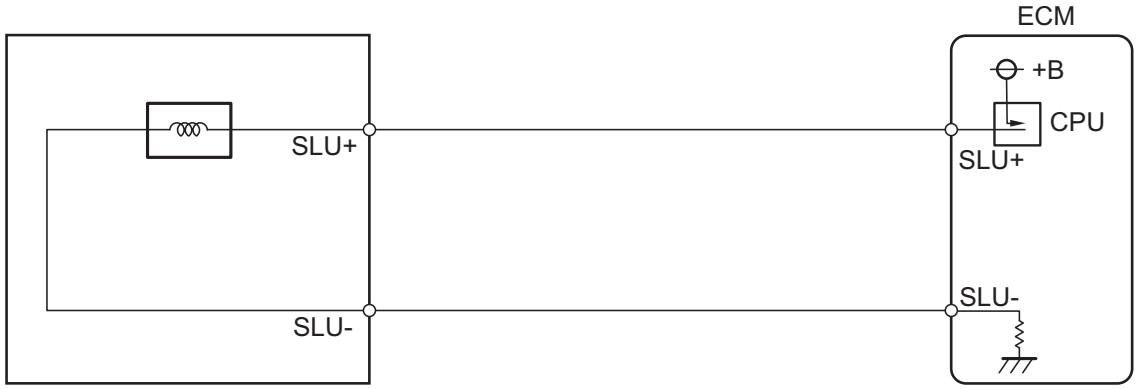

Y

C130126E05

AX

INSPECTION PROCEDURE

1	INSPECT TRANSMISSION WIRE (SHIFT SOLENOID VALVE SLU)

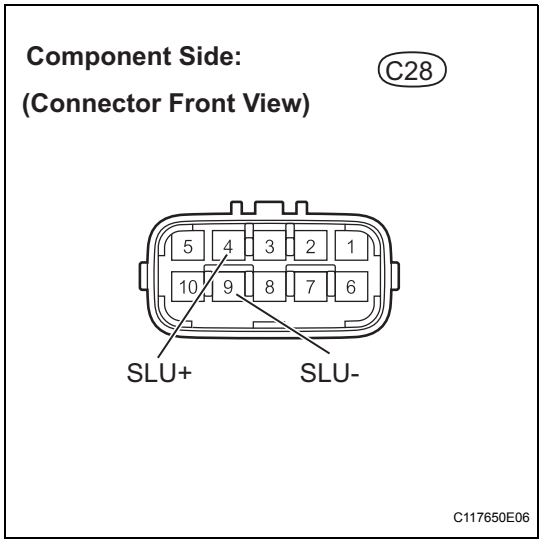

(a) Disconnect the transmission wire connector from the transaxle.
(b) Measure the resistance.
Standard resistance

Tester Connection	Specified Condition
4 (SLU+) - 9 (SLU-)	11 Ω to 15 Ω at 20°C (68°F)
4 (SLU+) - Body ground	10 kΩ or higher
9 (SLU-)- Body ground	10 kΩ or higher

NG → **Go to step 3**

OK

2	CHECK HARNESS AND CONNECTOR (TRANSMISSION WIRE - ECM)

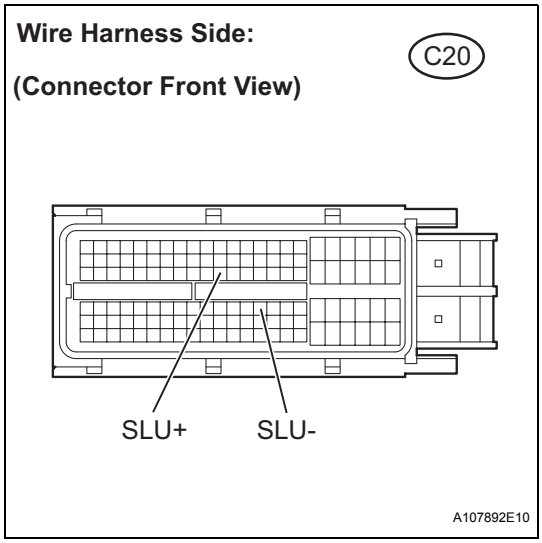

(a) Connect the transmission connector to the transaxle.
(b) Disconnect the ECM connector.
(c) Measure the resistance.
Standard resistance

Tester Connection	Specified Condition
77 (SLU+) - 57 (SLU-)	11 Ω to 15 Ω at 20°C (68°F)
57 (SLU+) - Body ground	10 kΩ or higher
77 (SLU-) - Body ground	10 kΩ or higher

NG → **REPAIR OR REPLACE HARNESS OR CONNECTOR**

OK

REPLACE ECM

AX

3	INSPECT SHIFT SOLENOID VALVE SLU

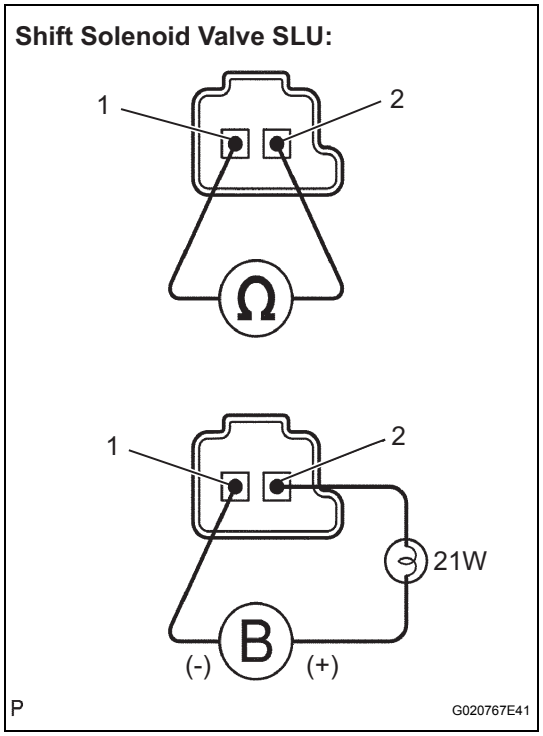

(a) Remove shift solenoid valve SLU.
(b) Measure the resistance.
Standard resistance

Tester Connection	Specified Condition
1 - 2	5.0 Ω to 5.6 Ω at 20°C (68°F)

(c) Connect the positive (+) lead with a 21 W bulb to terminal 2 and the negative (-) lead to terminal 1 of the solenoid valve connector, then check the movement of the valve.
OK:
The solenoid makes operating sounds.

NG → **REPLACE SHIFT SOLENOID VALVE SLU**

OK

REPAIR OR REPLACE TRANSMISSION WIRE

AX

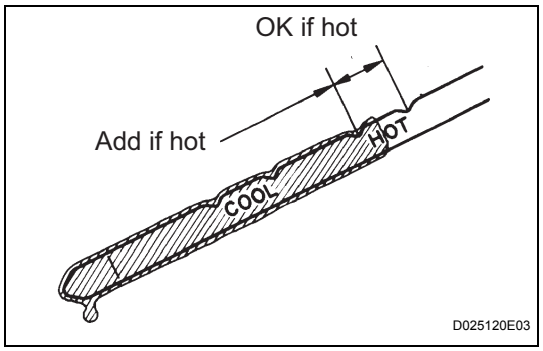

AUTOMATIC TRANSAXLE FLUID

ON-VEHICLE INSPECTION

1. INSPECT AUTOMATIC TRANSAXLE FLUID

HINT:

Drive the vehicle until the engine and transaxle are at normal operating temperature.

Fluid temperature:

70 to 80 °C (158 to 176 °F)

(a) Park the vehicle on a level surface and engage the parking brake.

(b) With the engine idling and the brake pedal depressed, shift the shift lever into all positions from P to L, and then return it to the P position.

(c) Pull out the oil level gauge and wipe it clean.

(d) Push it fully back into the pipe.

(e) Pull it out and check that the fluid level is within the HOT range.

If there is any leakage, repair or replace O-rings, FIPGs, oil seals, plugs or other parts.

SPEED SENSOR

COMPONENTS

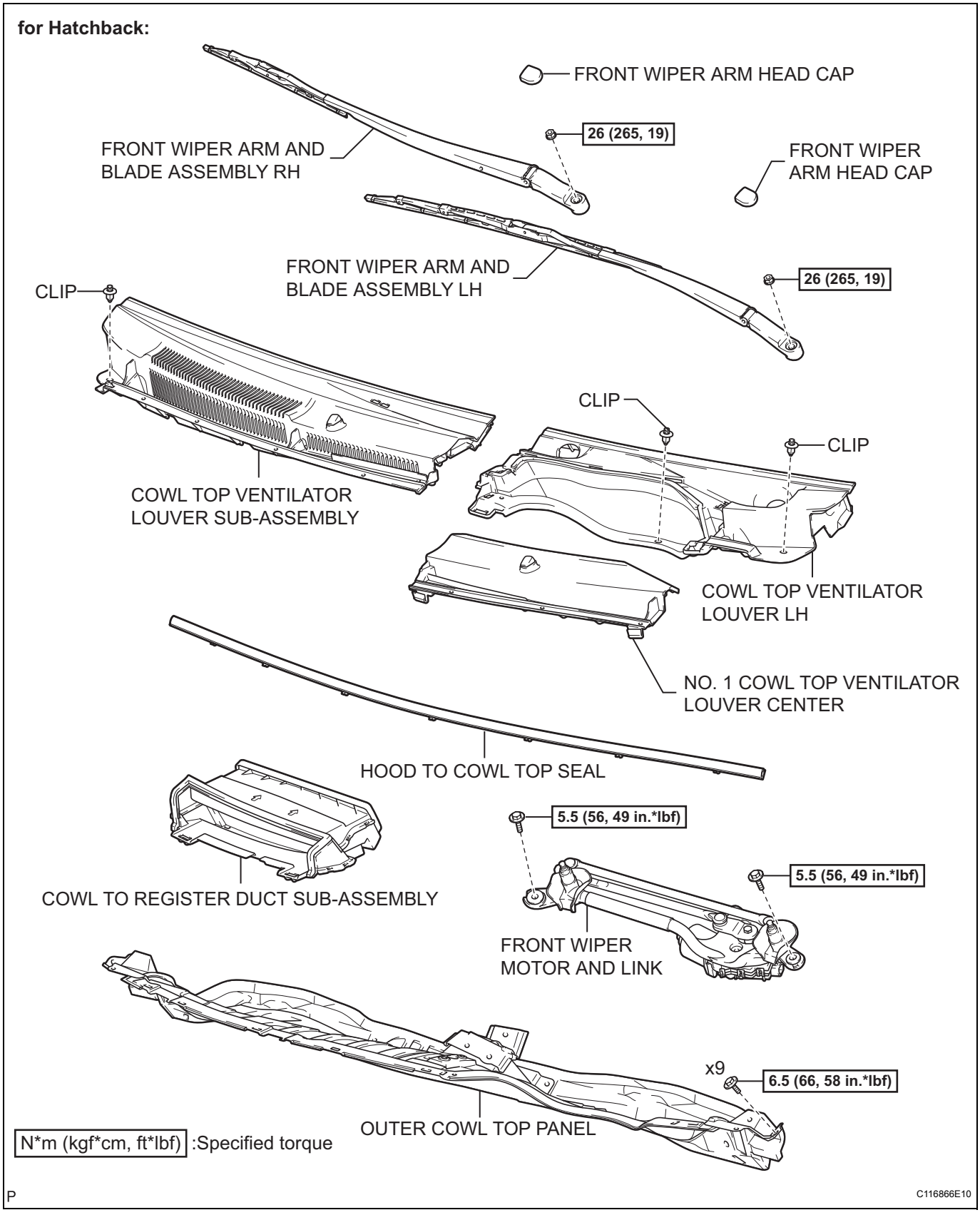

for Sedan:

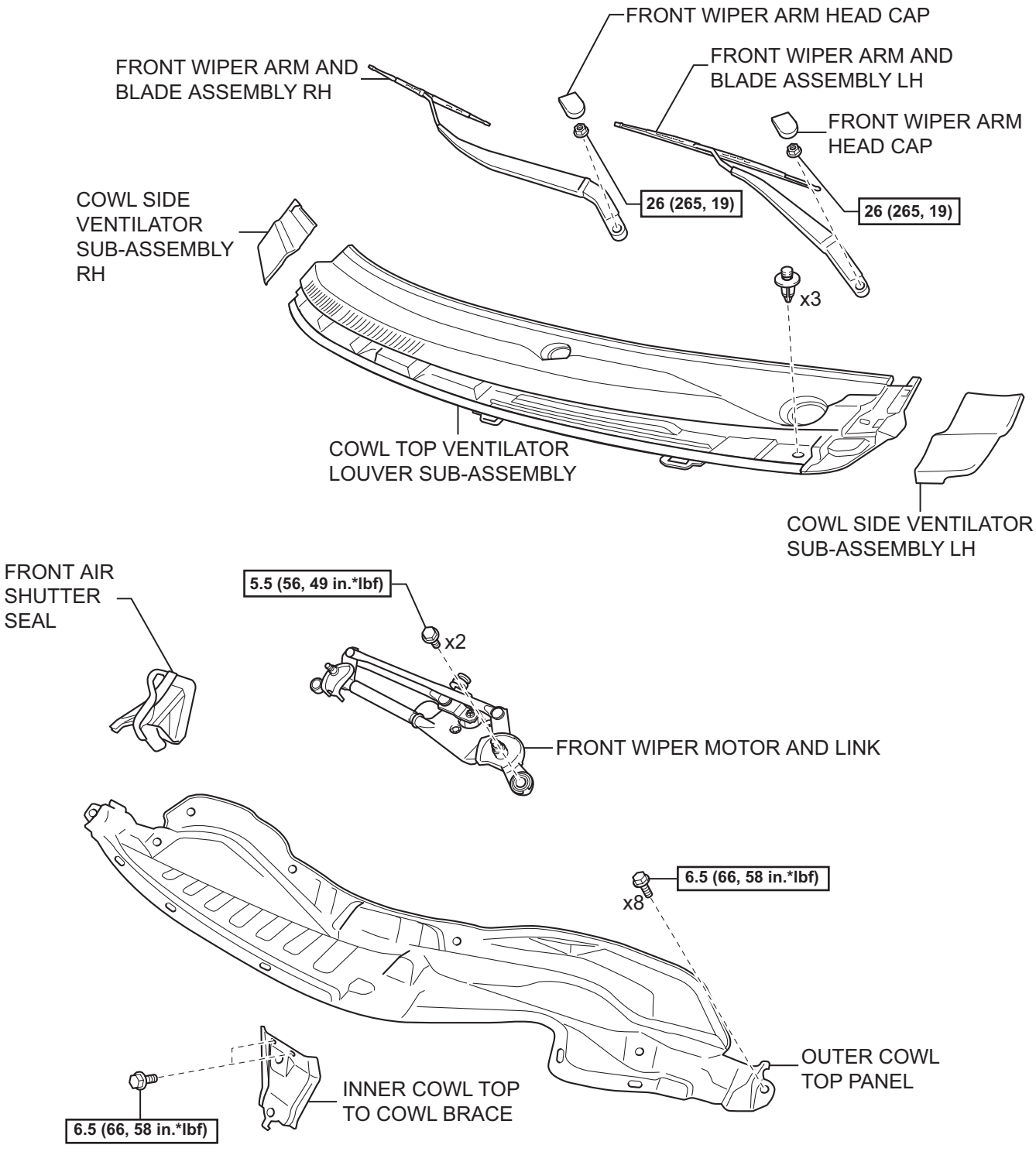

N*m (kgf*cm, ft*lbf) : Specified torque

Y

A133320E07

AX

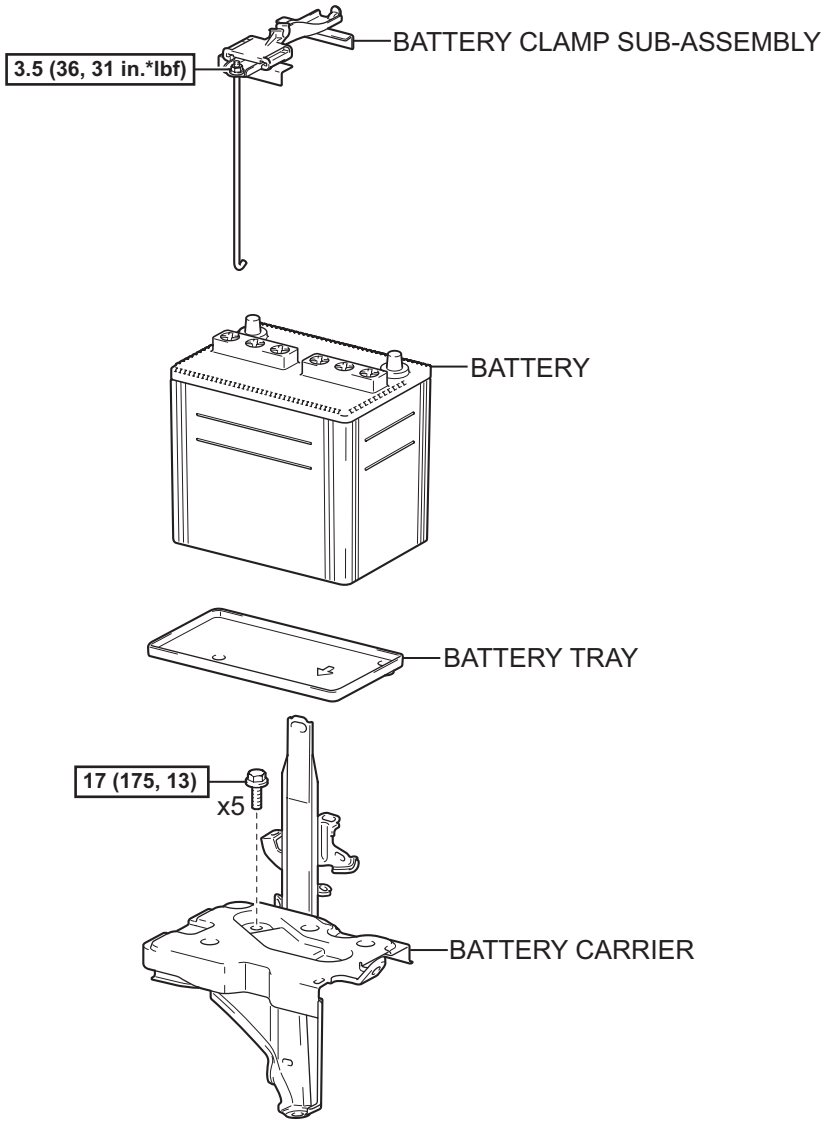

AX

N*m (kgf*cm, ft*lbf) :Specified torque

P

C117082E01

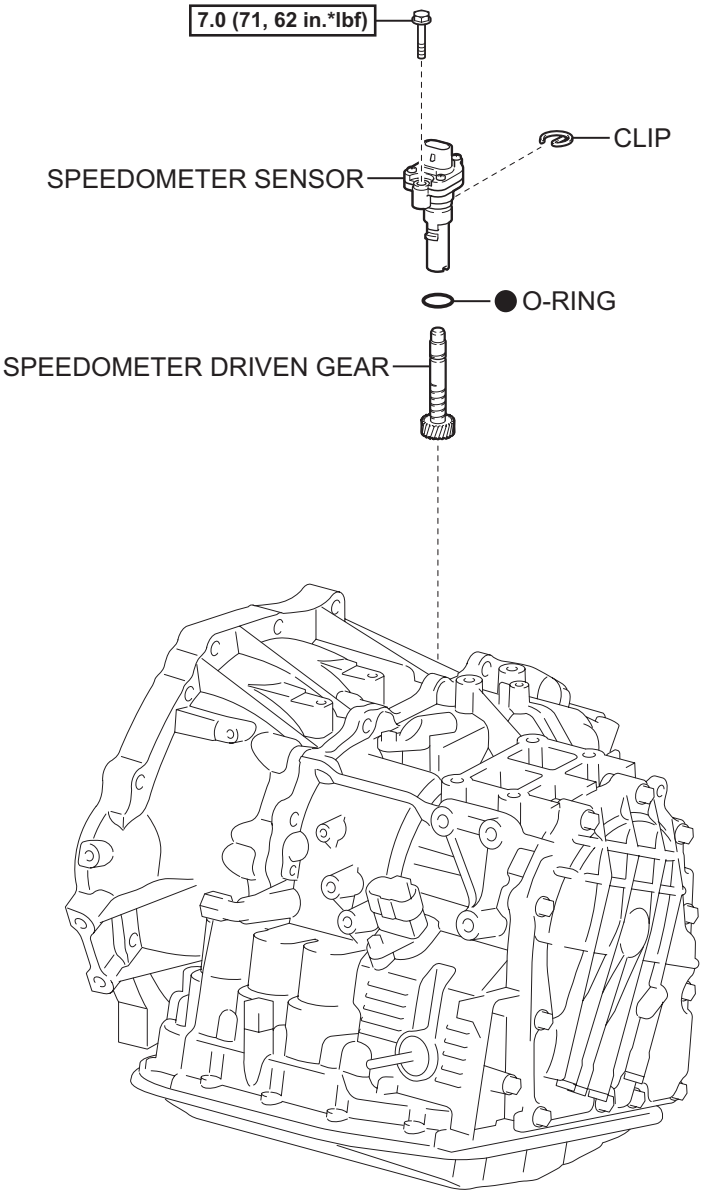

N*m (kgf*cm, ft*lbf) : Specified torque

● Non-reusable part

P

C117086E01

REMOVAL

1. **REMOVE FRONT WIPER ARM HEAD CAP**
   Hatchback: (See page WW-17)
   Sedan: (See page WW-9)
2. **REMOVE FRONT WIPER ARM AND BLADE ASSEMBLY LH**
   Hatchback: (See page WW-17)
   Sedan: (See page WW-9)
3. **REMOVE FRONT WIPER ARM AND BLADE ASSEMBLY RH**
   Hatchback: (See page WW-17)
   Sedan: (See page WW-9)
4. **REMOVE HOOD TO COWL TOP SEAL (for Hatchback) (See page WW-18)**
5. **REMOVE COWL SIDE VENTILATOR SUB-ASSEMBLY LH (for Sedan) (See page WW-10)**
6. **REMOVE COWL SIDE VENTILATOR SUB-ASSEMBLY RH (for Sedan) (See page WW-10)**
7. **REMOVE COWL TOP VENTILATOR LOUVER SUB-ASSEMBLY**
   Hatchback: (See page WW-18)
   Sedan: (See page WW-10)
8. **REMOVE COWL TOP VENTILATOR LOUVER LH (for Hatchback) (See page WW-18)**
9. **REMOVE FRONT WIPER MOTOR AND LINK**
   Hatchback: (See page WW-19)
   Sedan: (See page WW-10)
10. **REMOVE COWL TO REGISTER DUCT SUB-ASSEMBLY (for Hatchback) (See page EM-122)**
11. **REMOVE FRONT AIR SHUTTER SEAL (for Sedan) (See page EM-123)**
12. **REMOVE OUTER COWL TOP PANEL**
    Hatchback: (See page EM-123)
    Sedan: (See page EM-123)
13. **REMOVE BATTERY (See page EM-122)**
14. **REMOVE BATTERY TRAY**
15. **REMOVE BATTERY CARRIER (See page EM-125)**

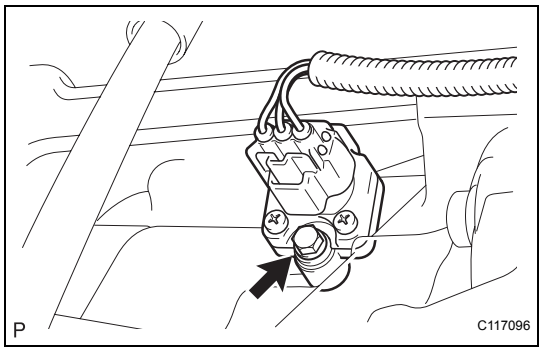

16. REMOVE SPEEDOMETER SENSOR

(a) Disconnect speedometer sensor connector.
(b) Remove the bolt and speedometer sensor.

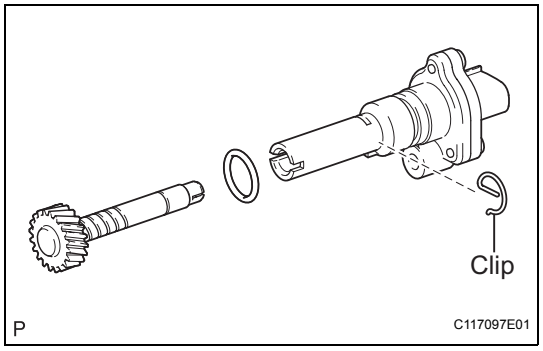

17. REMOVE SPEEDOMETER DRIVEN GEAR

(a) Remove the clip and driven gear from the speedometer sensor.
(b) Remove the O-ring from the speedometer sensor.

INSPECTION

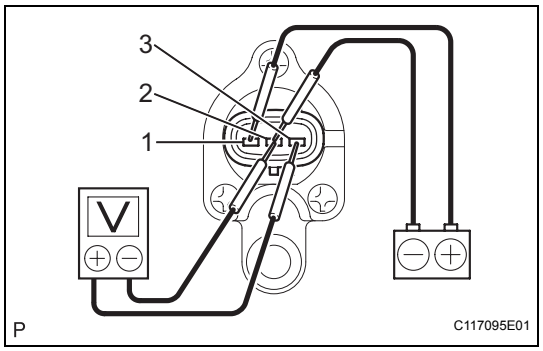

1. INSPECT SPEEDOMETER SENSOR

(a) Connect the positive (+) lead from the battery to terminal 1 and the negative (-) lead to terminal 2.
(b) Connect the positive (+) lead from the tester to terminal 3 and the negative (-) lead to terminal 2.
(c) Rotate the shaft.
(d) Check that the voltage output varies between 0 V and 11 V between terminals 2 and 3.
HINT:
The voltage output oscillates more than 4 times every revolution of the speed sensor shaft.
If the operation is not as specified, replace the sensor.

INSTALLATION

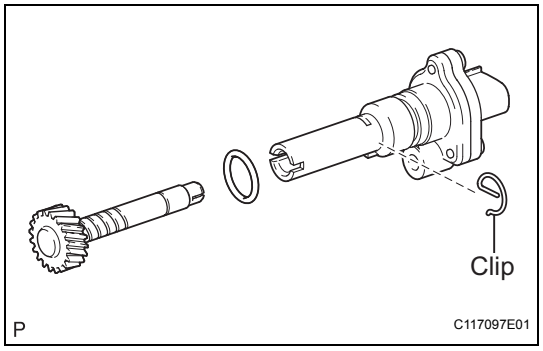

1. INSTALL SPEEDOMETER DRIVEN GEAR

(a) Coat a new O-ring with ATF and install it onto the speedometer sensor.
(b) Install the driven gear into the speedometer sensor with the clip.

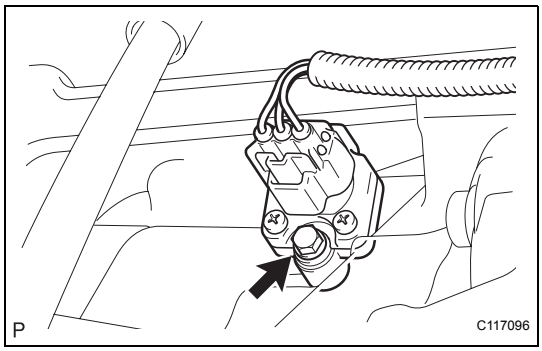

2. **INSTALL SPEEDOMETER SENSOR**
   (a) Install the speedometer sensor with the bolt.
   Torque: 7.0 N*m (71 kgf*cm, 62 in.*lbf)
   (b) Connect the speedometer sensor connector.
3. **INSTALL BATTERY CARRIER (See page EM-145)**
4. **INSTALL BATTERY TRAY**
5. **INSTALL BATTERY (See page EM-148)**
6. **INSTALL OUTER COWL TOP PANEL**
   Hatchback: (See page EM-146)
   Sedan: (See page EM-147)
7. **INSTALL COWL TO REGISTER DUCT SUB-ASSEMBLY (for Hatchback) (See page EM-147)**
8. **INSTALL FRONT AIR SHUTTER SEAL (for Sedan) (See page EM-148)**
9. **INSTALL FRONT WIPER MOTOR AND LINK**
   Hatchback: (See page WW-21)
   Sedan: (See page WW-12)
10. **INSTALL COWL TOP VENTILATOR LOUVER LH (for Hatchback) (See page WW-21)**
11. **INSTALL COWL TOP VENTILATOR LOUVER SUB-ASSEMBLY**
    Hatchback: (See page WW-21)
    Sedan: (See page WW-12)
12. **INSTALL HOOD TO COWL TOP SEAL (for Hatchback) (See page WW-22)**
13. **INSTALL COWL SIDE VENTILATOR SUB-ASSEMBLY LH (for Sedan) (See page WW-13)**
14. **INSTALL COWL SIDE VENTILATOR SUB-ASSEMBLY RH (for Sedan) (See page WW-13)**
15. **INSTALL FRONT WIPER ARM AND BLADE ASSEMBLY LH**
    Hatchback: (See page WW-22)
    Sedan: (See page WW-13)
16. **INSTALL FRONT WIPER ARM AND BLADE ASSEMBLY RH**
    Hatchback: (See page WW-23)
    Sedan: (See page WW-14)
17. **INSTALL FRONT WIPER ARM HEAD CAP**
    Hatchback: (See page WW-23)
    Sedan: (See page WW-15)

TRANSMISSION REVOLUTION SENSOR

COMPONENTS

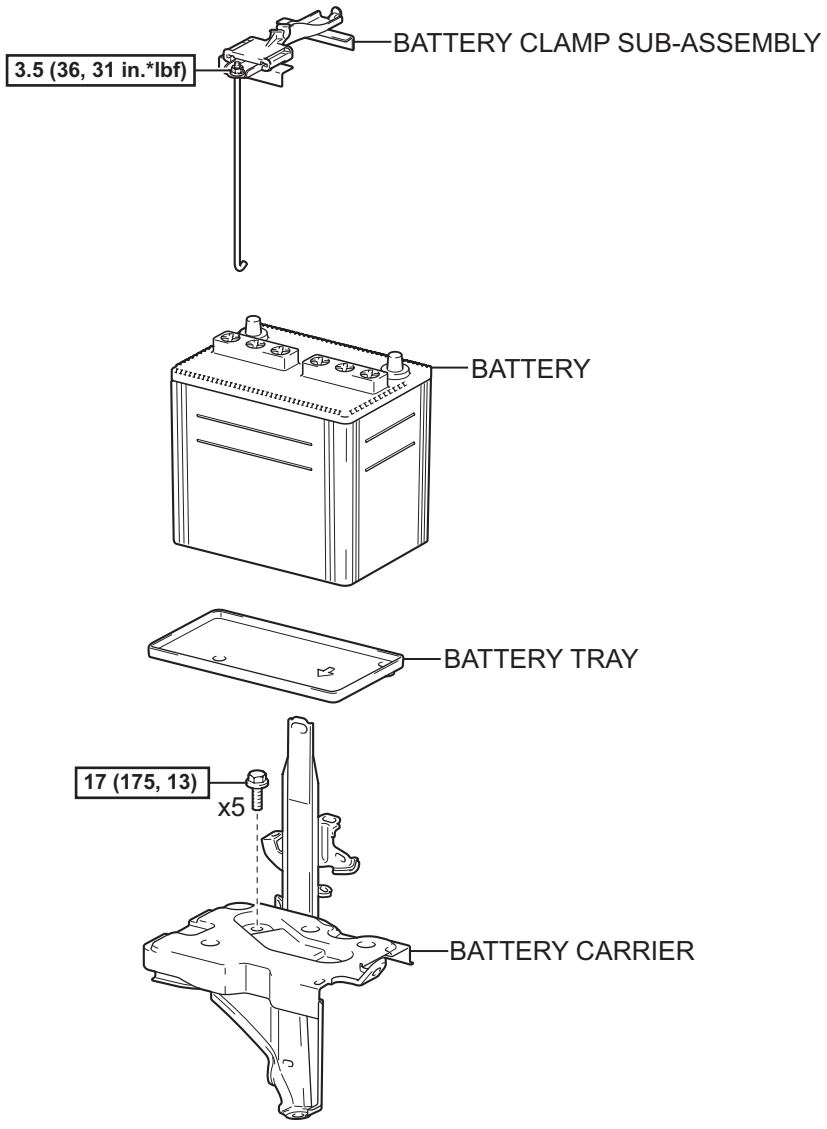

N*m (kgf*cm, ft*lbf) :Specified torque

P

C117082E01

AX

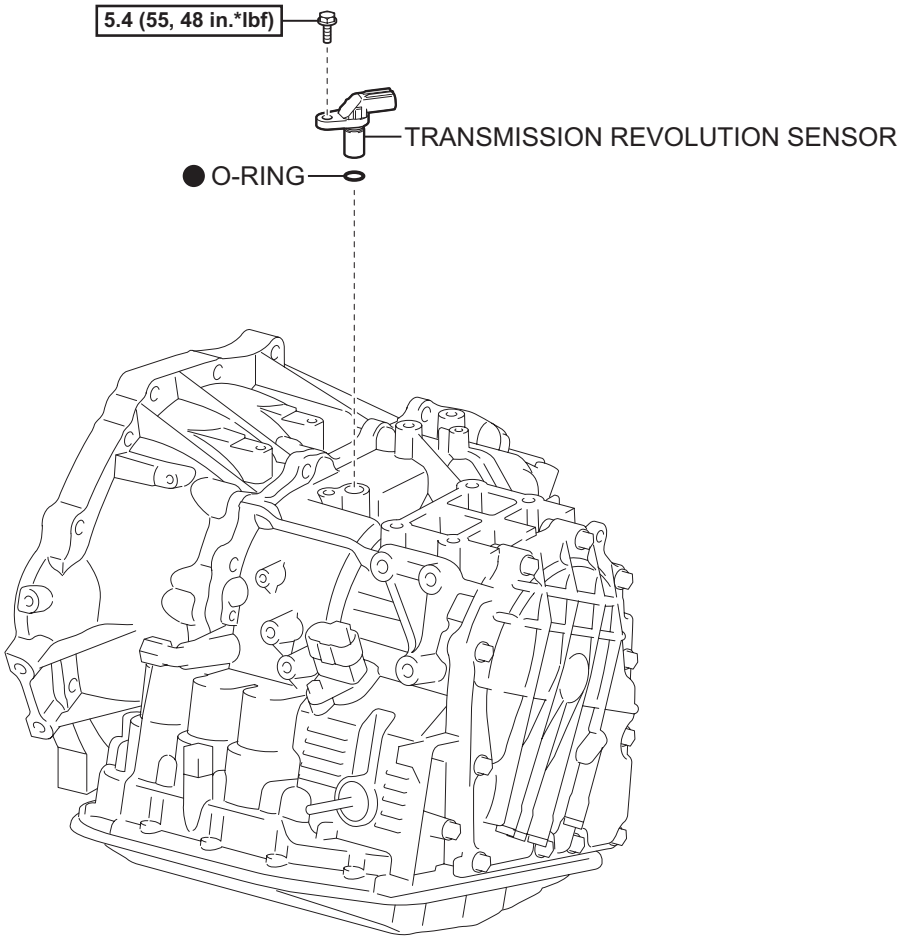

AX

N*m (kgf*cm, ft*lbf) : Specified torque

● Non-reusable part

P

C117087E01

REMOVAL

1. **REMOVE BATTERY (See page EM-122)**
2. **REMOVE BATTERY TRAY**
3. **REMOVE BATTERY CARRIER (See page EM-125)**
4. **REMOVE TRANSMISSION REVOLUTION SENSOR**
   (a) Disconnect the transmission revolution sensor connector.
   (b) Remove the bolt and transmission revolution sensor.

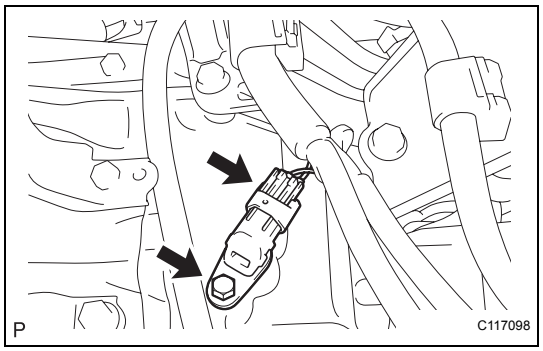

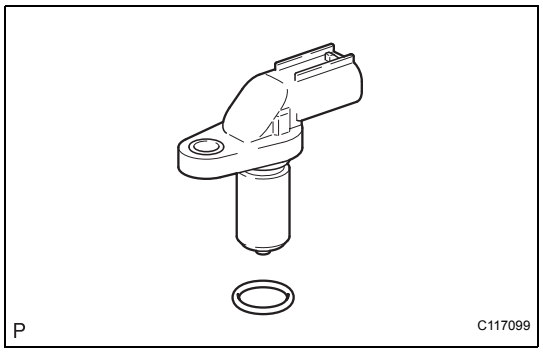

   (c) Remove the O-ring from the transmission revolution sensor.

INSPECTION

1. **INSPECT TRANSMISSION REVOLUTION SENSOR**
   (a) Measure the resistance.
   Standard resistance

Tester Connection	Specified Condition
1 - 2	560 to 680 Ω at 20°C (68°F)

Sensor Side:

(Connector Front View):

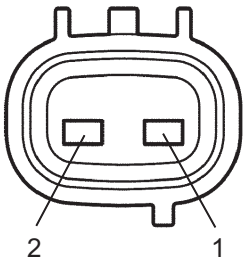

C113863E04

INSTALLATION

1. **INSTALL TRANSMISSION REVOLUTION SENSOR**
   (a) Coat a new O-ring with ATF, and install it onto the transmission revolution sensor.

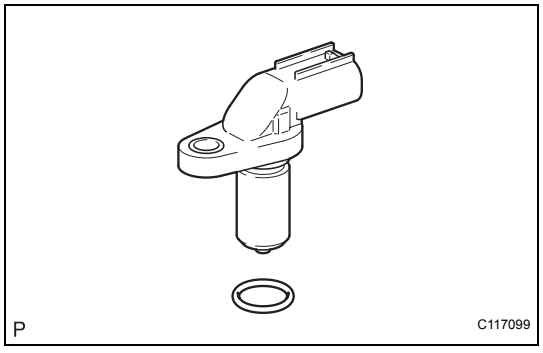

AX

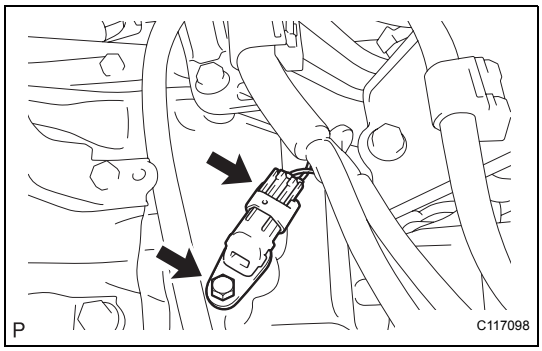

(b) Install the transmission revolution sensor with the bolt.
Torque: 5.4 N*m (55 kgf*cm, 48 in.*lbf)
(c) Connect the transmission revolution sensor connector.

2. **INSTALL BATTERY CARRIER (See page EM-145)**
3. **INSTALL BATTERY TRAY**
4. **INSTALL BATTERY (See page EM-148)**

PARK / NEUTRAL POSITION SWITCH

COMPONENTS

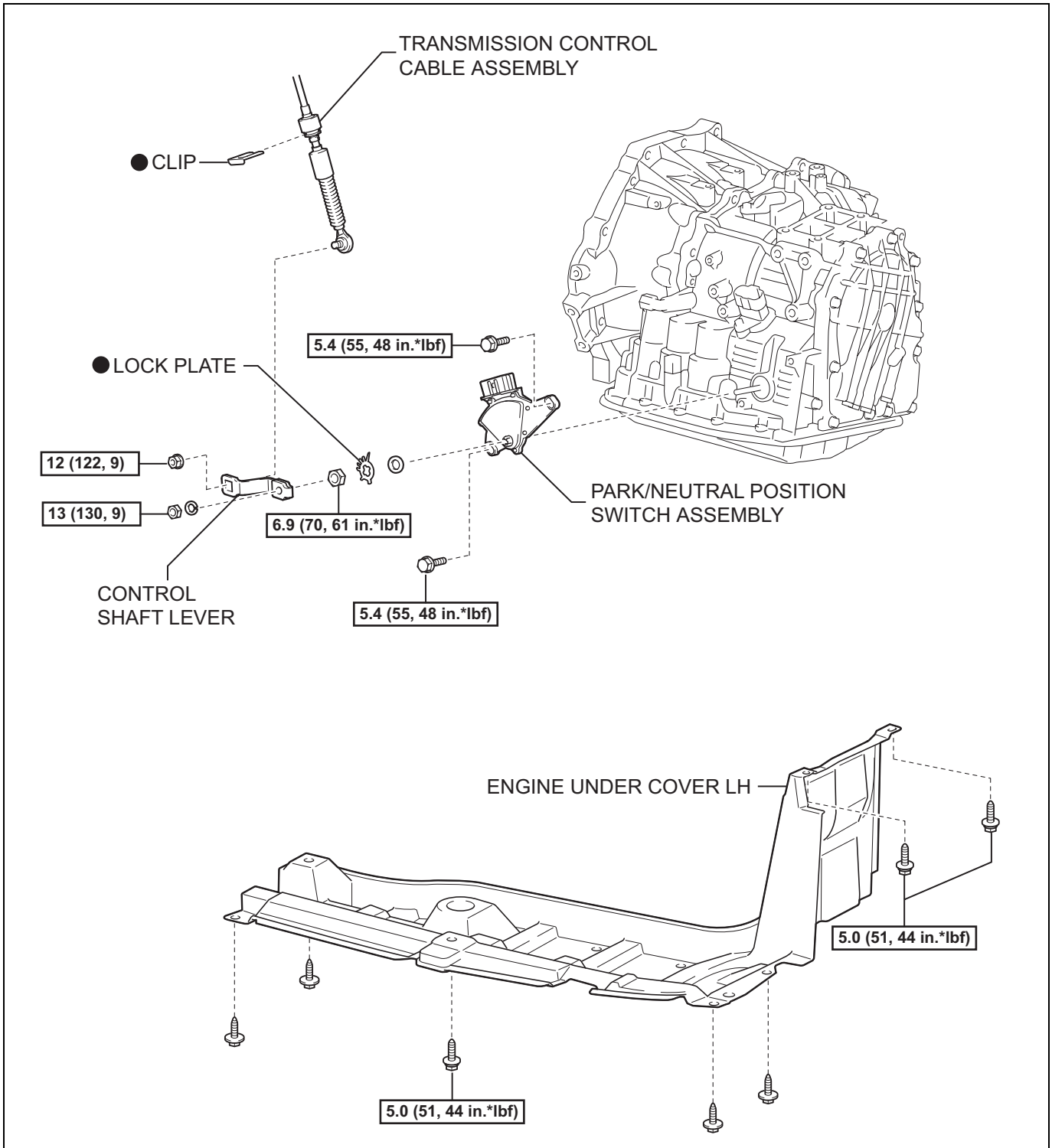

N*m (kgf*cm, ft*lbf) : Specified torque

● Non-reusable part

P

C133143E01

AX

ON-VEHICLE INSPECTION

1. INSPECT PARK/NEUTRAL POSITION SWITCH ASSEMBLY

(a) Apply the parking brake and turn the ignition switch ON.

(b) Depress the brake pedal and check that the engine starts when the shift lever is set in the N or P position, but does not start in the other positions.

(c) Check that the back-up light illuminates and the reverse warning buzzer sounds when the shift lever is set in the R position, but does not function in the other positions.

If a malfunction failure is found, check the park/neutral position switch for continuity.

REMOVAL

1. DISCONNECT CABLE FROM NEGATIVE BATTERY TERMINAL

2. REMOVE ENGINE UNDER COVER LH

3. SEPARATE TRANSMISSION CONTROL CABLE ASSEMBLY

(a) Remove the nut and disconnect the control cable from the control shaft lever.

(b) Remove the clip and disconnect the control cable from the control cable bracket.

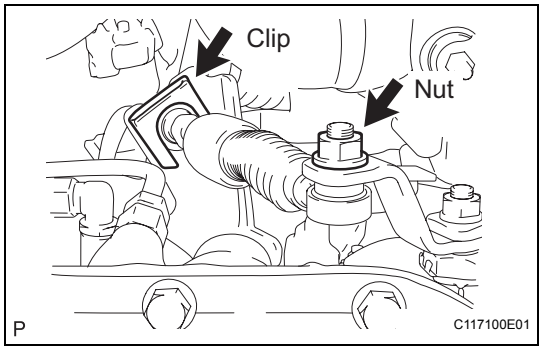

4. REMOVE PARK/NEUTRAL POSITION SWITCH ASSEMBLY

(a) Disconnect the connector from the park/neutral position switch assembly.

(b) Remove the nut, washer and control shaft lever.

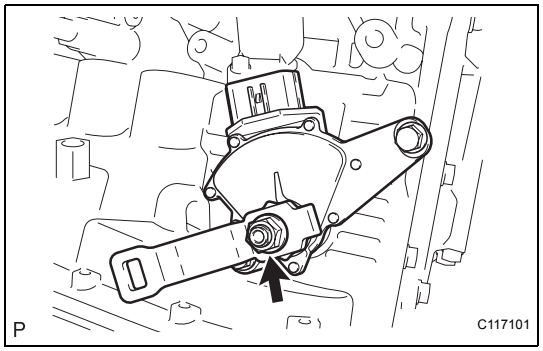

(c) Pry out the lock plate and remove the manual valve shaft nut.

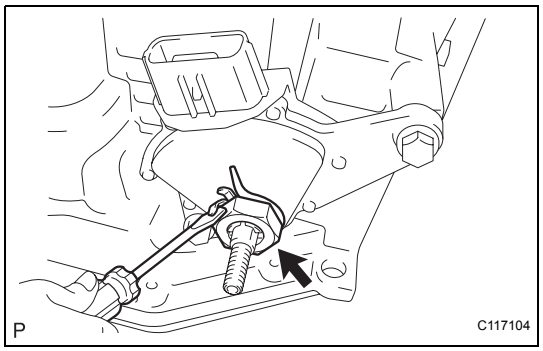

(d) Remove the 2 bolts and pull out the park/neutral position switch assembly.

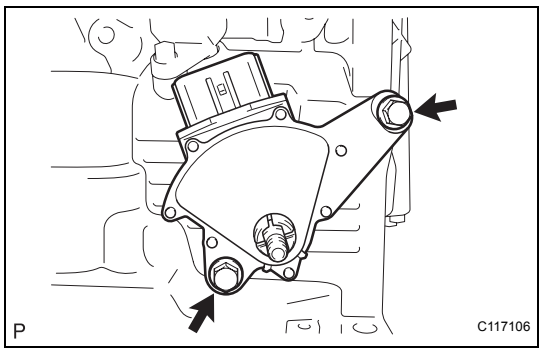

AX

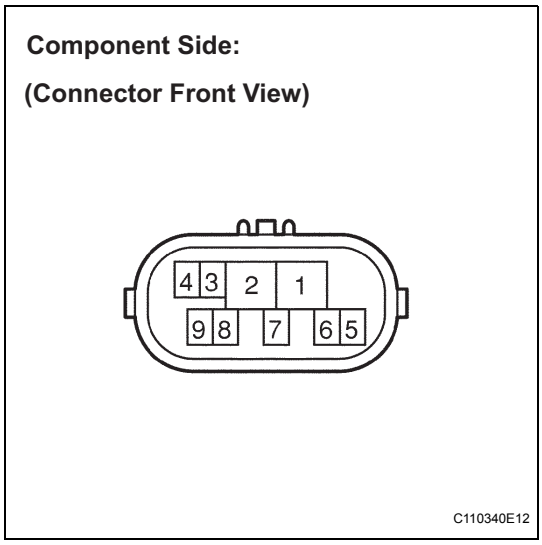

INSPECTION

1. INSPECT PARK/NEUTRAL POSITION SWITCH ASSEMBLY

(a) Disconnect the park/neutral position switch connector.

(b) Measure the resistance with the shift lever in each position.

Standard resistance

Shift Position	Tester Connection	Specified Connection
P	2 - 6 and 4 - 5	Below 1 Ω
Except P	↑	10 kΩ or higher
R	2 - 1	Below 1 Ω
Except R	↑	10 kΩ or higher
N	2 - 9 and 4 - 5	Below 1 Ω
Except N	↑	10 kΩ or higher
D and 3	2 - 7	Below 1 Ω
Except D and 3	↑	10 kΩ or higher
2	2 - 3	Below 1 Ω
Except 2	↑	10 kΩ or higher
L	2 - 8	Below 1 Ω
Except L	↑	10 kΩ or higher

AX

ADJUSTMENT

1. ADJUST PARK/NEUTRAL POSITION SWITCH ASSEMBLY

(a) Loosen the bolt of the park/neutral position switch and move the shift lever to the N position.

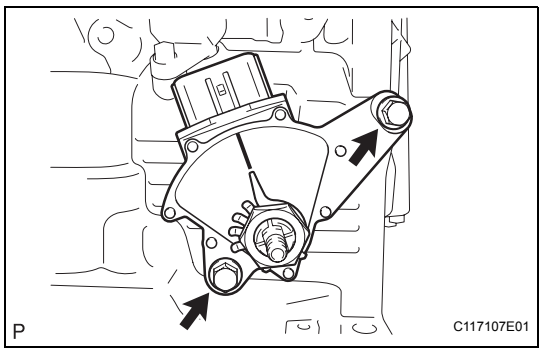

(b) Align the groove with the neutral basic line.

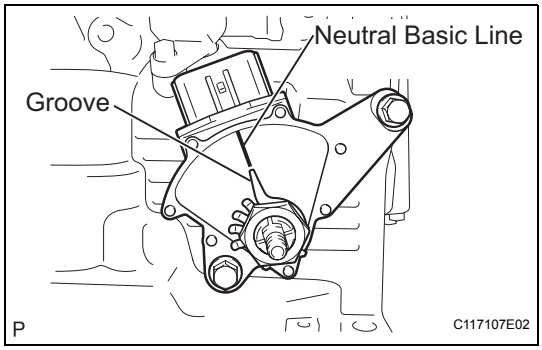

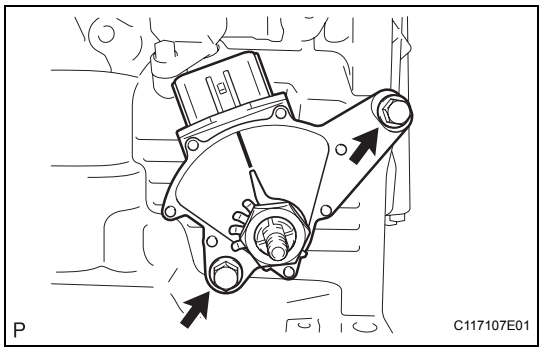

(c) Hold the switch in position and tighten the 2 bolts.
Torque: 5.4 N*m (55 kgf*cm, 48 in.*lbf)
(d) After the adjustment, perform the switch operation check.

INSTALLATION

1. INSTALL PARK/NEUTRAL POSITION SWITCH ASSEMBLY

(a) Install the park/neutral position switch assembly onto the manual transaxle.
(b) Provisionally install the 2 bolts.

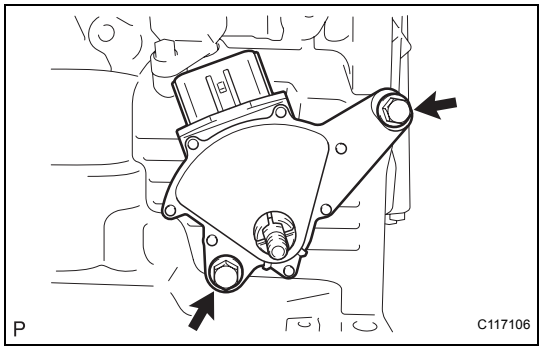

(c) Replace the lock plate with a new one and tighten the manual valve shaft nut.
Torque: 6.9 N*m (70 kgf*cm, 61 in.*lbf)
(d) Provisionally install the control shaft lever.

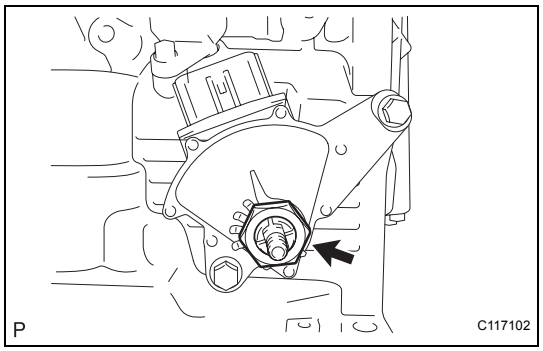

AX

(e) Turn the lever counterclockwise until it stops, then turn it clockwise 2 notches.
(f) Remove the control shaft lever.

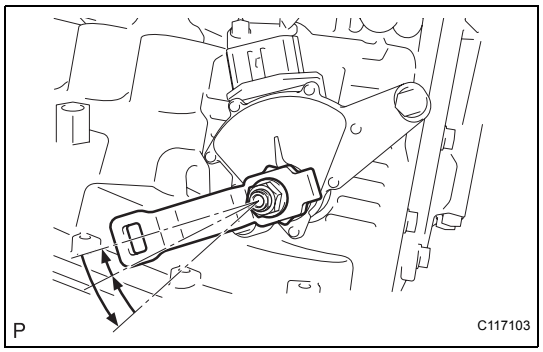

(g) Align the groove with the neutral basic line.
(h) Hold the switch in this position and tighten the 2 bolts.
Torque: 5.4 N*m (55 kgf*cm, 48 in.*lbf)

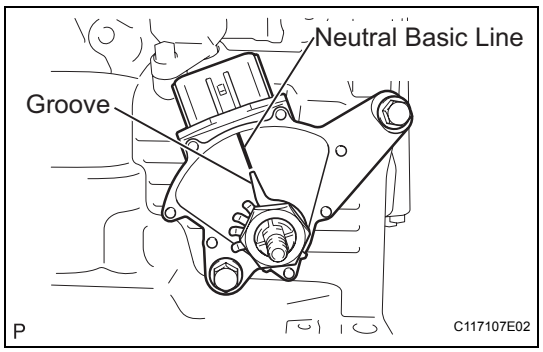

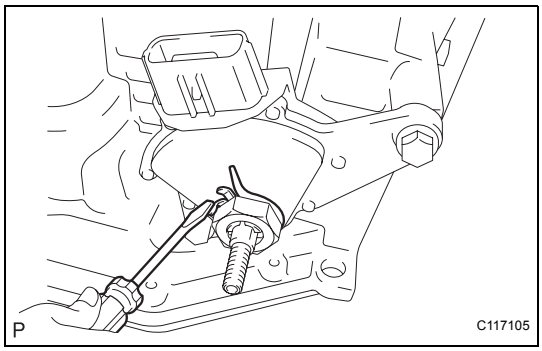

(i) Using a screwdriver, stake the nut with the lock plate.

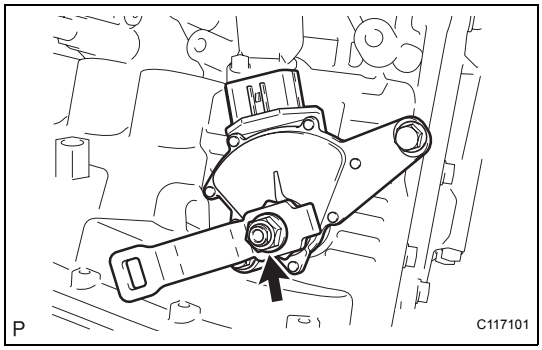

(j) Install the control shaft lever with the nut and washer.
Torque: 13 N*m (130 kgf*cm, 9 ft.*lbf)

(k) Connect the connector to the park/neutral position switch assembly.

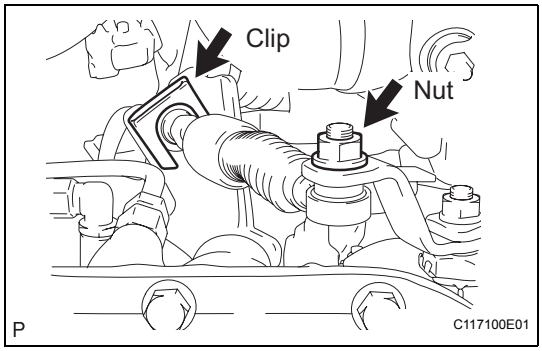

2. INSTALL TRANSMISSION CONTROL CABLE ASSEMBLY

(a) Install the transmission control cable onto the control shaft lever with the nut.
Torque: 12 N*m (122 kgf*cm, 9 ft.*lbf)

(b) Install the transmission control cable into the bracket with the new clip.

3. CONNECT CABLE TO NEGATIVE BATTERY TERMINAL
Torque: 5.4 N*m (55 kgf*cm, 48 in.*lbf)

4. ADJUST SHIFT LEVER POSITION (See page AX-137)

5. INSPECT SHIFT LEVER POSITION (See page AX-134)

6. INSPECT PARK/NEUTRAL POSITION SWITCH ASSEMBLY (See page AX-106)

7. INSTALL ENGINE UNDER COVER LH

TRANSMISSION WIRE

COMPONENTS

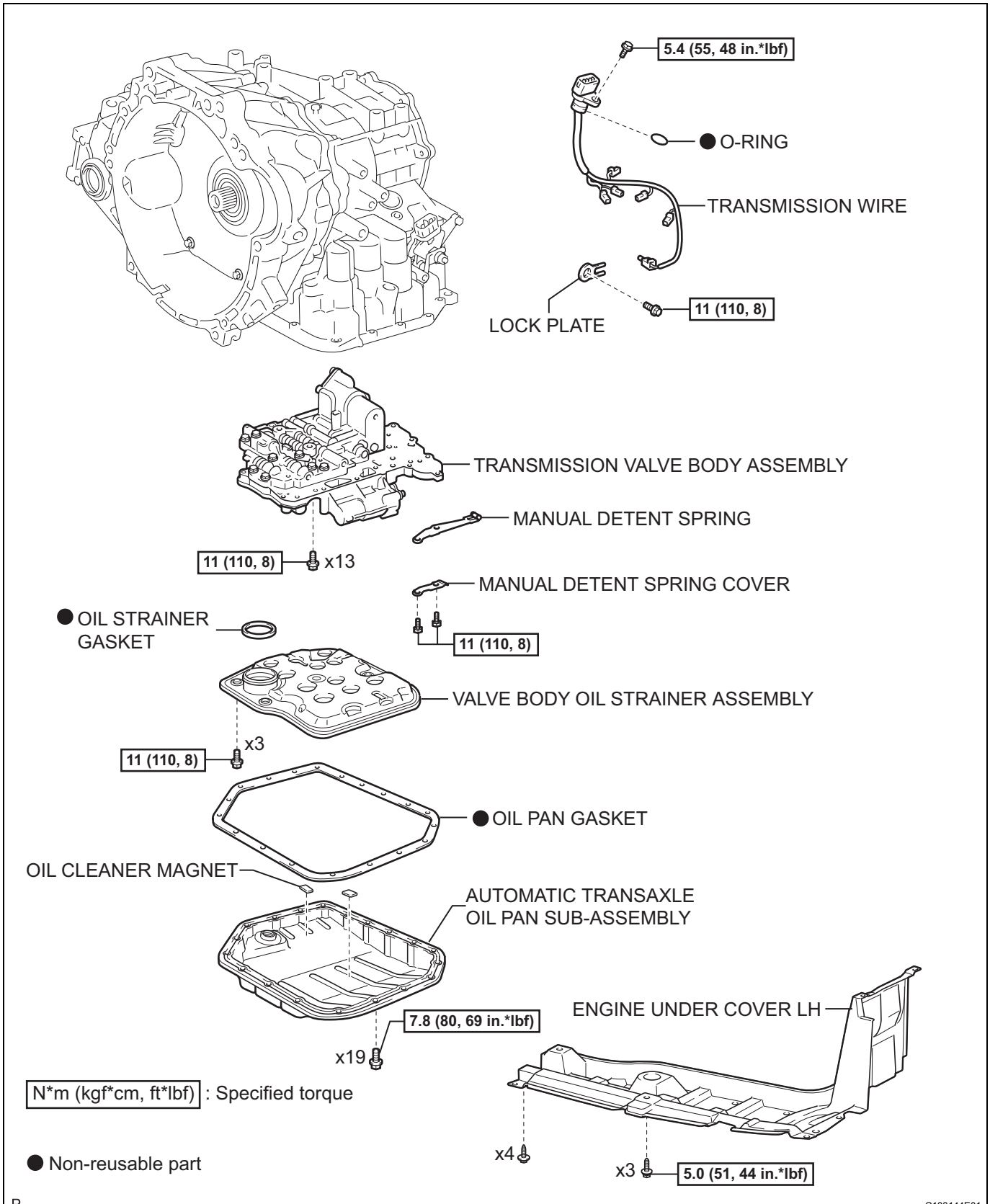

REMOVAL

1. **DISCONNECT CABLE FROM NEGATIVE BATTERY TERMINAL**
2. **REMOVE ENGINE UNDER COVER LH**
3. **DRAIN AUTOMATIC TRANSAXLE FLUID**
   (a) Remove the drain plug and gasket, and drain ATF.
   (b) Install a new gasket and the drain plug.
   Torque: 49 N*m (500 kgf*cm, 36 ft.*lbf)
4. **REMOVE AUTOMATIC TRANSAXLE OIL PAN SUB-ASSEMBLY (See page AX-114)**
5. **REMOVE VALVE BODY OIL STRAINER ASSEMBLY (See page AX-114)**
6. **REMOVE TRANSMISSION VALVE BODY ASSEMBLY (See page AX-115)**
7. **REMOVE TRANSMISSION WIRE**
   (a) Remove the bolt and the transmission wire from the transaxle case.

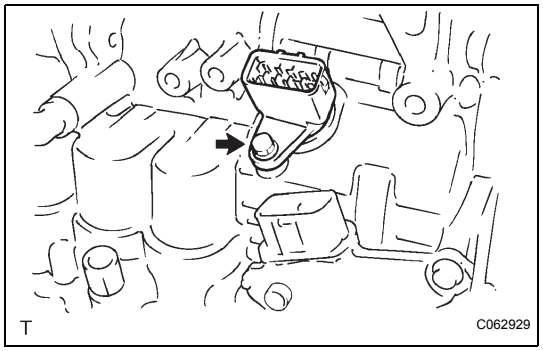

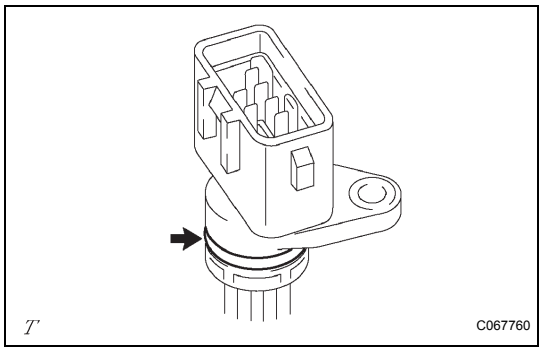

(b) Remove the O-ring from the transmission wire.

AX

INSPECTION

1. **INSPECT TRANSMISSION WIRE**
   (a) Measure the resistance.
   Standard resistance

Tester Connection	Oil Temperature	Specified Condition
1(OT+) - 6(OT-)	10°C (50°F)	6.4 kΩ
1(OT+) - 6(OT-)	110°C (230°F)	0.2 kΩ

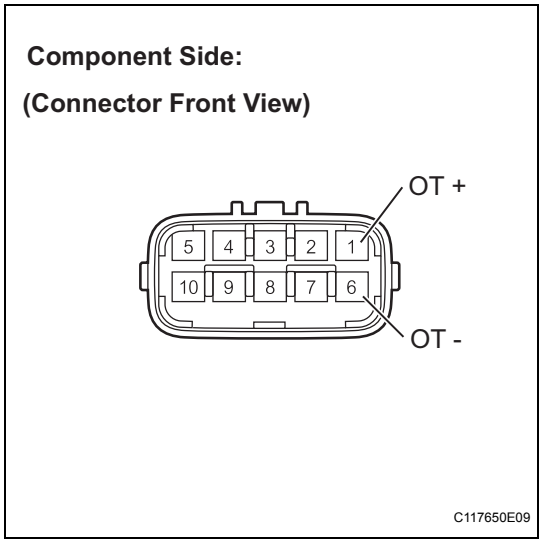

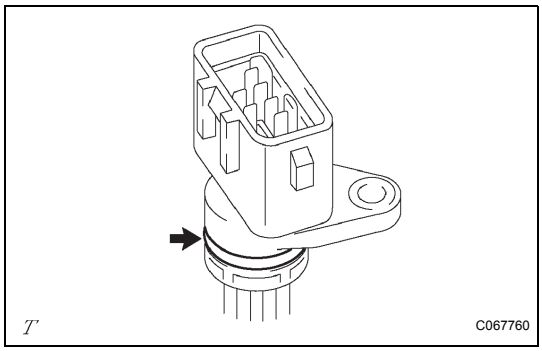

INSTALLATION

1. **INSTALL TRANSMISSION WIRE**
   (a) Coat a new O-ring with ATF and install it into the transmission wire.

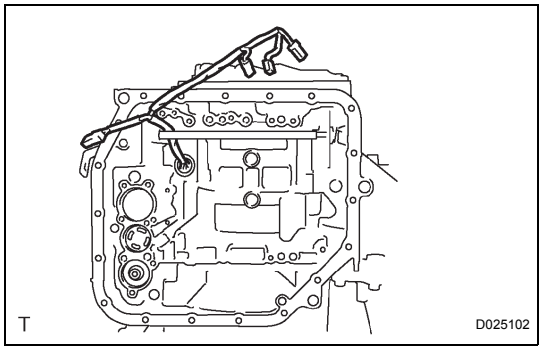

   (b) Pass the transmission wire through the transaxle.

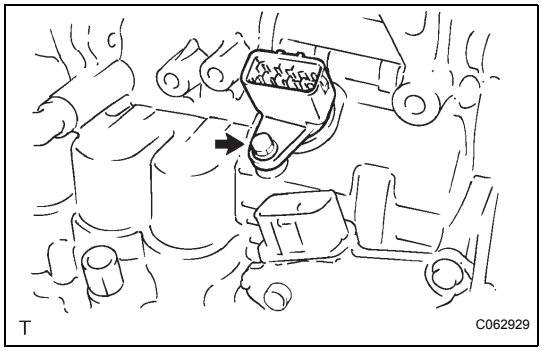

   (c) Install the transmission wire with the bolt.
   Torque: 5.4 N*m (55 kgf*cm, 48 in.*lbf)

2. **INSTALL TRANSMISSION VALVE BODY ASSEMBLY (See page AX-116)**
3. **INSTALL VALVE BODY OIL STRAINER ASSEMBLY (See page AX-117)**
4. **INSTALL AUTOMATIC TRANSAXLE OIL PAN SUB-ASSEMBLY (See page AX-118)**
5. **CONNECT CABLE TO NEGATIVE BATTERY TERMINAL**
   Torque: 5.4 N*m (55 kgf*cm, 48 in.*lbf)
6. **ADD AUTOMATIC TRANSAXLE FLUID (See page AX-170)**
7. **INSPECT AUTOMATIC TRANSAXLE FLUID (See page AX-93)**
8. **CHECK FOR AUTOMATIC TRANSAXLE FLUID LEAKAGE**
9. **INSTALL ENGINE UNDER COVER LH**

VALVE BODY ASSEMBLY

COMPONENTS

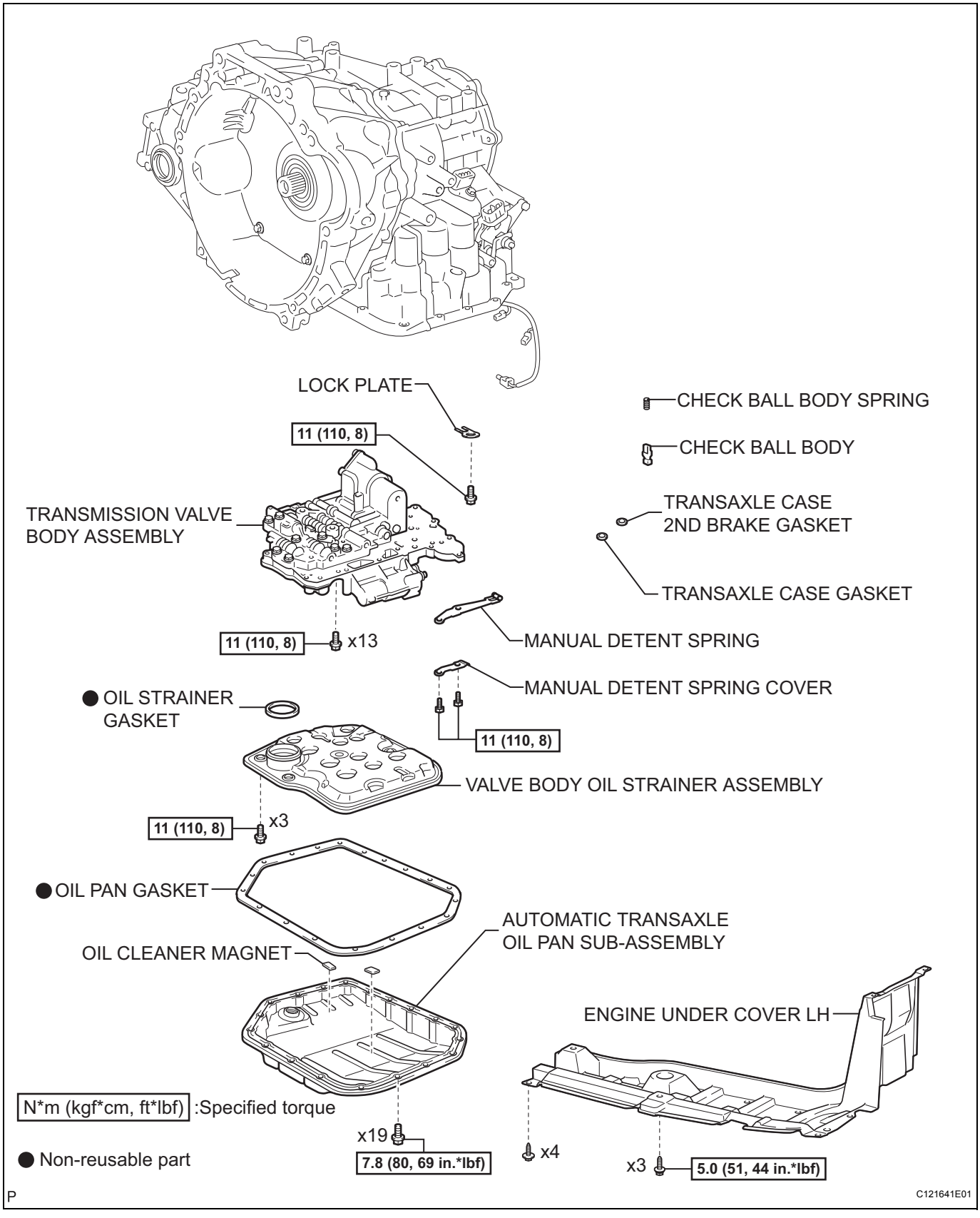

AX

REMOVAL

1. **DISCONNECT CABLE FROM NEGATIVE BATTERY TERMINAL**

2. **REMOVE ENGINE UNDER COVER LH**

3. **DRAIN AUTOMATIC TRANSAXLE FLUID**
   (a) Remove the drain plug and gasket, and drain ATF.
   (b) Install a new gasket and the drain plug.
   Torque: 49 N*m (500 kgf*cm, 36 ft.*lbf)

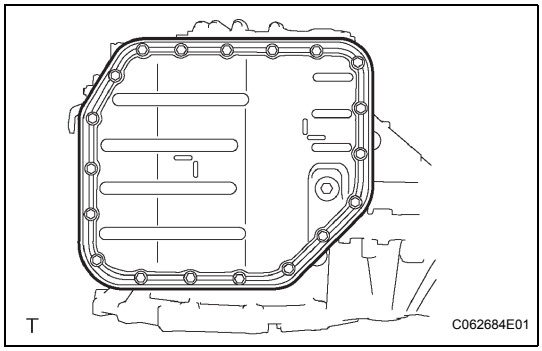

4. **REMOVE AUTOMATIC TRANSAXLE OIL PAN SUB-ASSEMBLY**
   (a) Remove the 19 bolts and remove the oil pan and oil pan gasket.
   NOTICE:
   Some fluid will remain in the oil pan.
   Remove all the oil pan bolts, and carefully remove the oil pan sub-assembly.

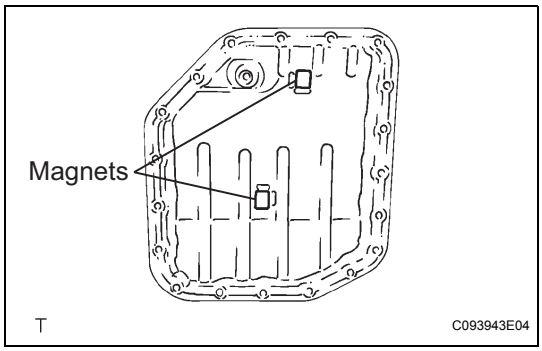

   (b) Remove the 2 magnets from the oil pan.

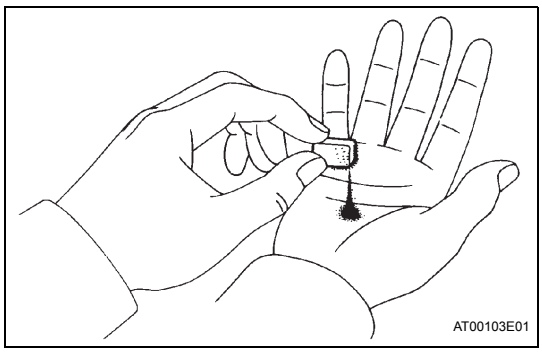

   (c) Examine the particles in the pan.
      (1) Collect any steel chips using the removed magnets.
      Carefully inspect the foreign matter and particles in the pan and on the magnets to guess at the type of wear which might be found in the transaxle.
      Steel (magnetic): bearing, gear and clutch plate wear
      Brass (non-magnetic): bearing wear

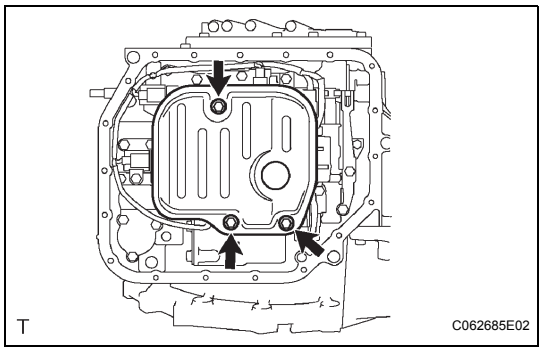

5. **REMOVE VALVE BODY OIL STRAINER ASSEMBLY**
   (a) Remove the 3 bolts and remove the oil strainer.
   NOTICE:
   Perform the operation carefully as some fluid will come out from the oil strainer.

AX

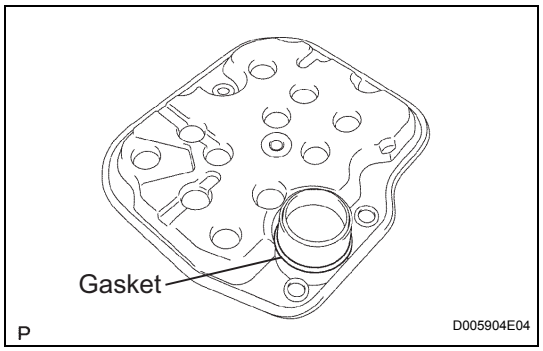

(b) Remove the oil strainer gasket from the oil strainer.

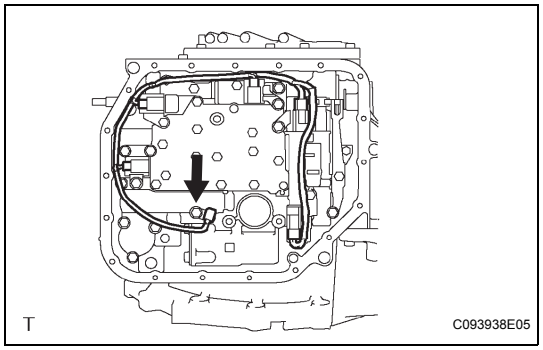

6. REMOVE TRANSMISSION VALVE BODY ASSEMBLY

(a) Disconnect the 5 connectors.

(b) Remove the bolt and lock plate and remove the ATF temperature sensor.

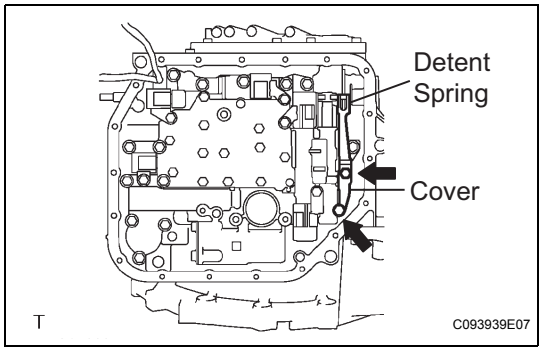

(c) Remove the 2 bolts and remove the detent spring cover and detent spring.

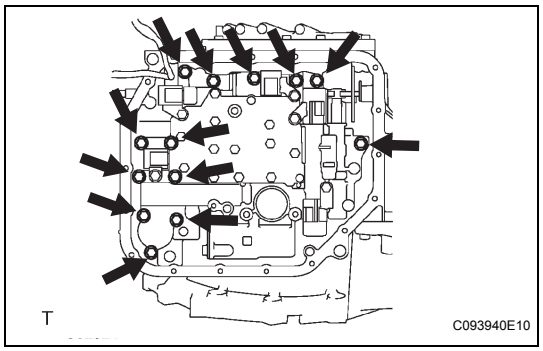

(d) Remove the 13 bolts and remove the valve body assembly.

NOTICE:

Do not drop the check ball body, check ball body spring or accumulator piston.

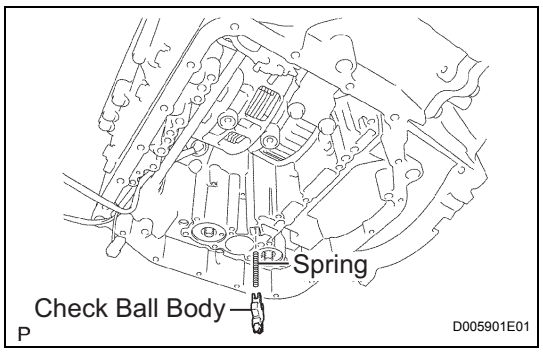

(e) Remove the check ball body and check ball body spring.

AX

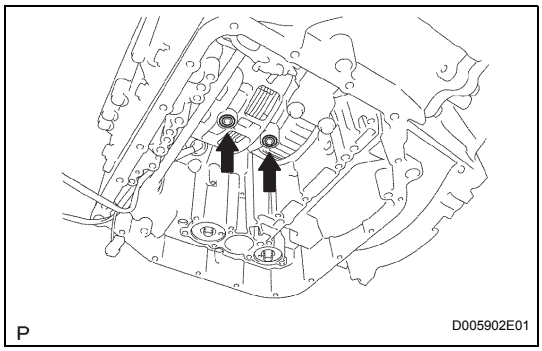

(f) Remove the 2 apply gaskets.

INSTALLATION

1. INSTALL TRANSMISSION VALVE BODY ASSEMBLY

(a) Coat 2 new apply gaskets with ATF and install them into the transaxle case.

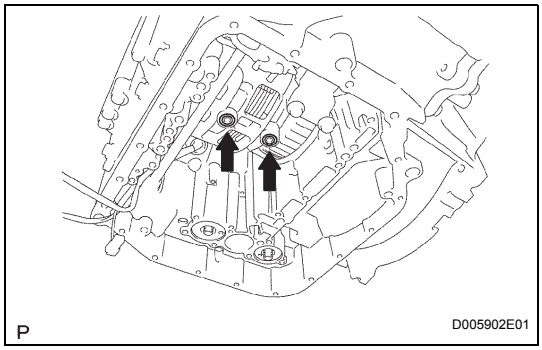

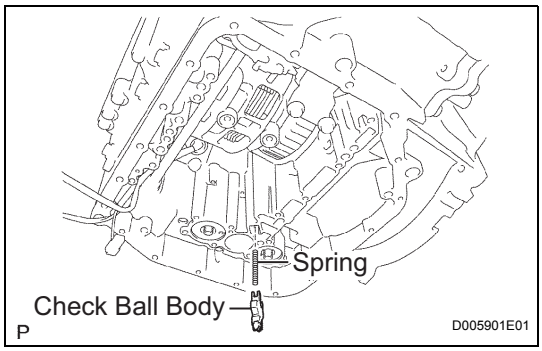

(b) Install the check ball body spring and check ball body.

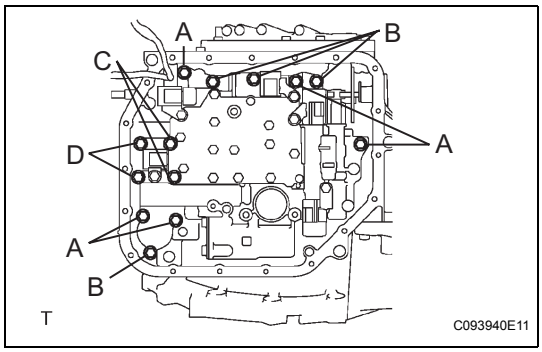

(c) Align the groove of the manual valve with the pin of the manual valve lever.

(d) Provisionally install the valve body with the 13 bolts.

Bolt length:

Bolt A:
32 mm (1.26 in.)

Bolt B:
22 mm (0.87 in.)

Bolt C:
55 mm (2.17 in.)

Bolt D:
45 mm (1.77 in.)

AX

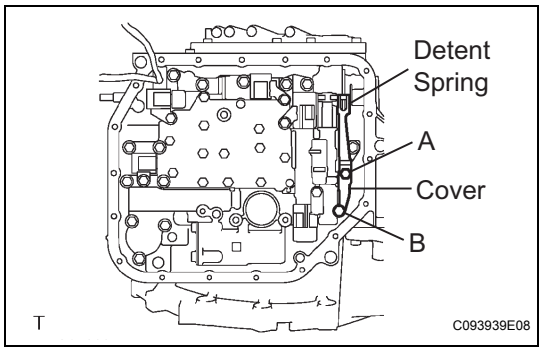

(e) Provisionally install the detent spring and detent spring cover with the 2 bolts.
Bolt length:
Bolt A:
14 mm (0.55 in.)
Bolt B:
45 mm (1.77 in.)

(f) Check that the manual valve lever comes into contact with the center of the roller at the tip of the detente spring.

(g) Tighten the 15 bolts.
Torque: 11 N*m (110 kgf*cm, 8 ft.*lbf)

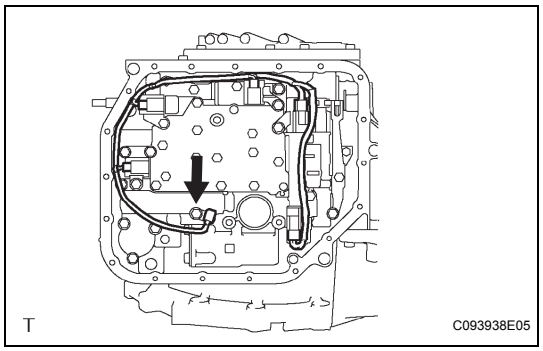

(h) Install the ATF temperature sensor with the lock plate and bolt.
Torque: 11 N*m (110 kgf*cm, 8 ft.*lbf)

(i) Connect the 5 shift solenoid valve connectors.

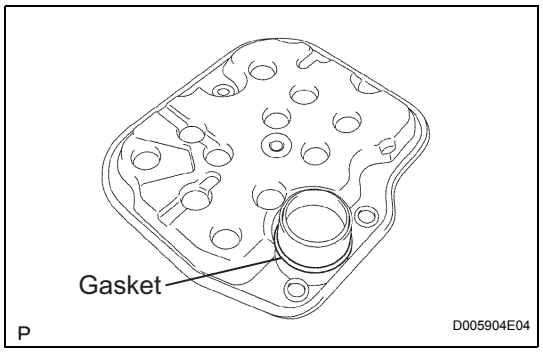

2. INSTALL VALVE BODY OIL STRAINER ASSEMBLY

(a) Coat a new oil strainer gasket with ATF, and install it into the oil strainer.

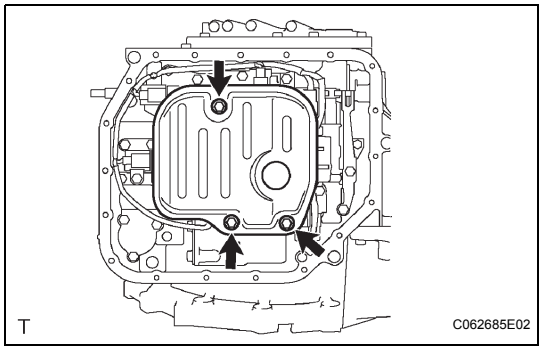

(b) Install the oil strainer with the 3 bolts.
Torque: 11 N*m (110 kgf*cm, 8 ft.*lbf)

AX

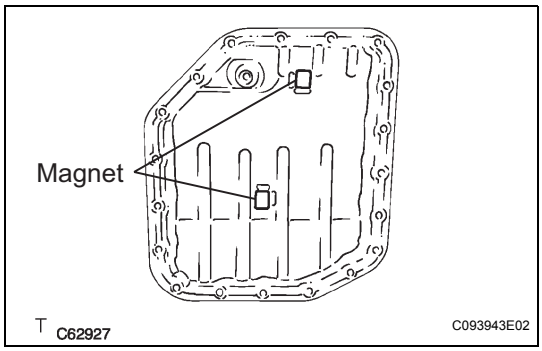

3. **INSTALL AUTOMATIC TRANSAXLE OIL PAN SUB-ASSEMBLY**
   (a) Install the 2 magnets onto the oil pan, as shown in the illustration.

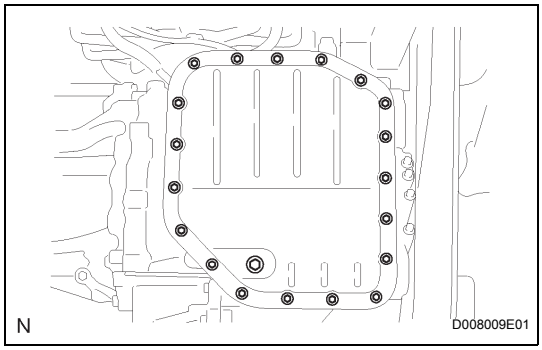

   (b) Install the oil pan and a new gasket with the 19 bolts.
   Torque: 7.8 N*m (80 kgf*cm, 69 in.*lbf)

4. **CONNECT CABLE TO NEGATIVE BATTERY TERMINAL**
   Torque: 5.4 N*m (55 kgf*cm, 48 in.*lbf)

5. **ADD AUTOMATIC TRANSAXLE FLUID (See page AX-170)**

6. **INSPECT AUTOMATIC TRANSAXLE FLUID (See page AX-93)**

7. **CHECK AUTOMATIC TRANSAXLE FLUID LEAKAGE**

8. **INSTALL ENGINE UNDER COVER LH**

SHIFT LOCK SYSTEM

ON-VEHICLE INSPECTION

1. INSPECT SHIFT LOCK CONTROL ECU SUB-ASSEMBLY

(a) Check the shift lock operation.
  (1) Move the shift lever to P.
  (2) Turn the ignition switch OFF.
  (3) Check that the shift lever cannot be moved to any position other than P.
  (4) Turn the ignition switch ON, depress the brake pedal and check that the shift lever can be moved to other positions.

(b) Check the shift lock release button operation.
  (1) When operating the shift lever with the shift lock release button pressed, check that the lever can be moved to any position.
  If the operation cannot be performed as specified, check the shift lever assembly.

(c) Check the key interlock operation.
  (1) Turn the ignition switch ON.
  (2) Depress the brake pedal and move the shift lever to any position other than P.
  (3) Check that the ignition switch cannot be turned OFF.
  (4) Move the shift lever to P, turn the ignition switch OFF and check that the key can be removed.
  If the results are not as specified, inspect the shift lock control unit.

(d) Inspect the shift lock control unit assembly.
  (1) Measure the voltage of the connector.
  HINT:
  Do not disconnect the shift lock control ECU connector.

Component Side:

(Connector Front View)

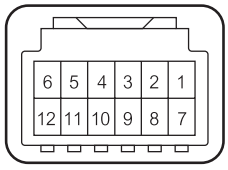

C117648E03

Standard voltage

Condition	Tester Connection	Specified Condition
Ignition switch ACC and shift lever P	12 (KLS+) - 8 (E)	Below 1 V
Ignition switch ACC and shift lever except P	12 (KLS+) - 8 (E)	7.5 to 11 V
Ignition switch ACC and shift lever except P (after approx. 1 second)	12 (KLS+) - 8 (E)	6 to 9 V
Ignition switch ON	6 (ACC) - 8 (E)	10 to 14 V

Condition	Tester Connection	Specified Condition
Ignition switch ACC	6 (ACC) - 8 (E)	10 to 14 V
Ignition switch OFF	6 (ACC) - 8 (E)	Below 1 V
Depress brake pedal	7 (STP) - 8 (E)	10 to 14 V
Release brake pedal	7 (STP) - 8 (E)	Below 1 V
Ignition switch ON	1 (IG) - 8 (E)	10 to 14 V
Ignition switch OFF	1 (IG) - 8 (E)	Below 1 V

Component Side:

(Connector Front View)

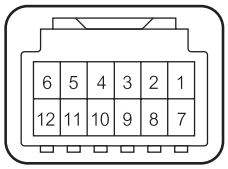

C117648E03

(2) Measure the resistance of the connector.
HINT:
Do not disconnect the shift lock control ECU connector.

Standard resistance

Tester Connection	Specified Condition
8 (E) - Body ground	Below 1 Ω

If the result is not as specified, replace the shift lock control ECU sub-assembly.

TRANSMISSION CONTROL CABLE ASSEMBLY

COMPONENTS

for Hatchback:

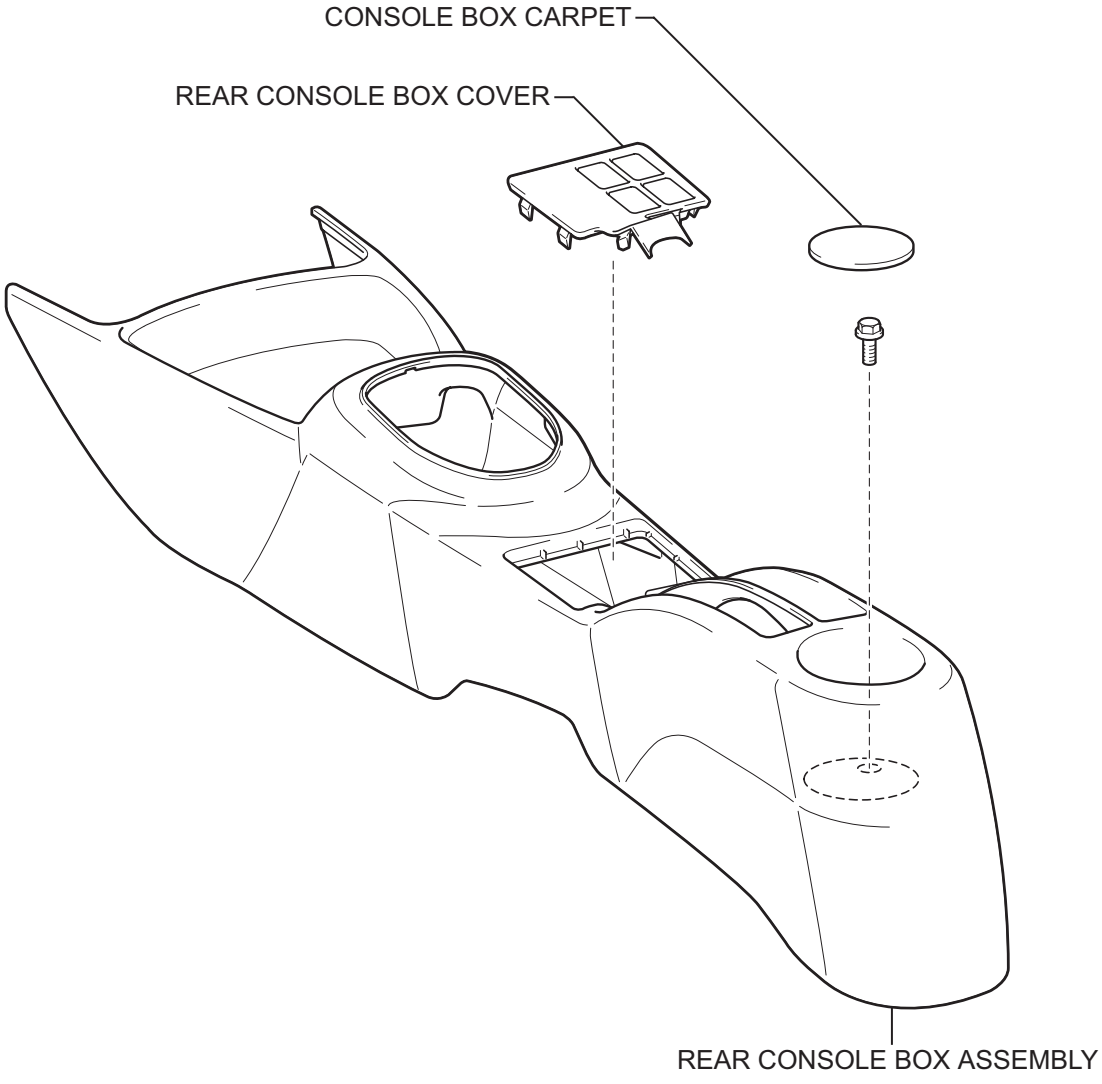

P

C117078E02

for Sedan:

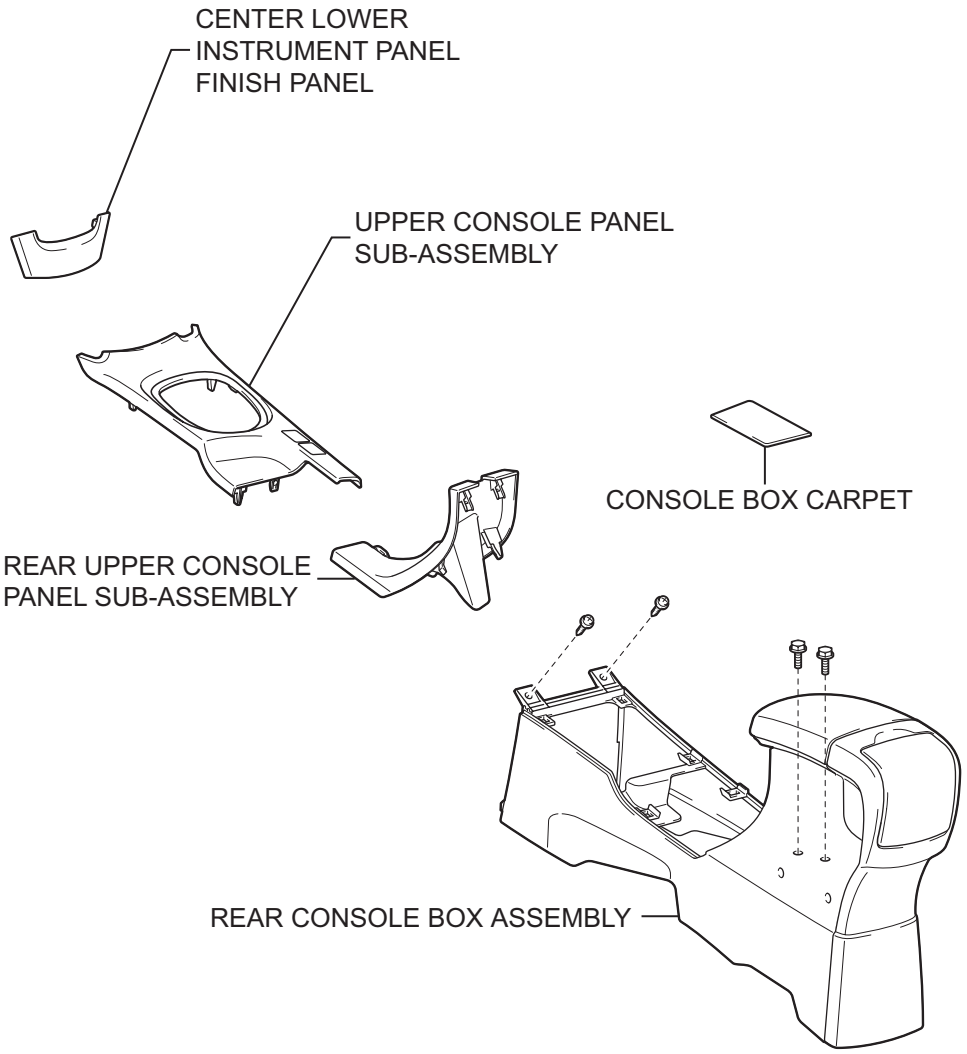

P

C133134E02

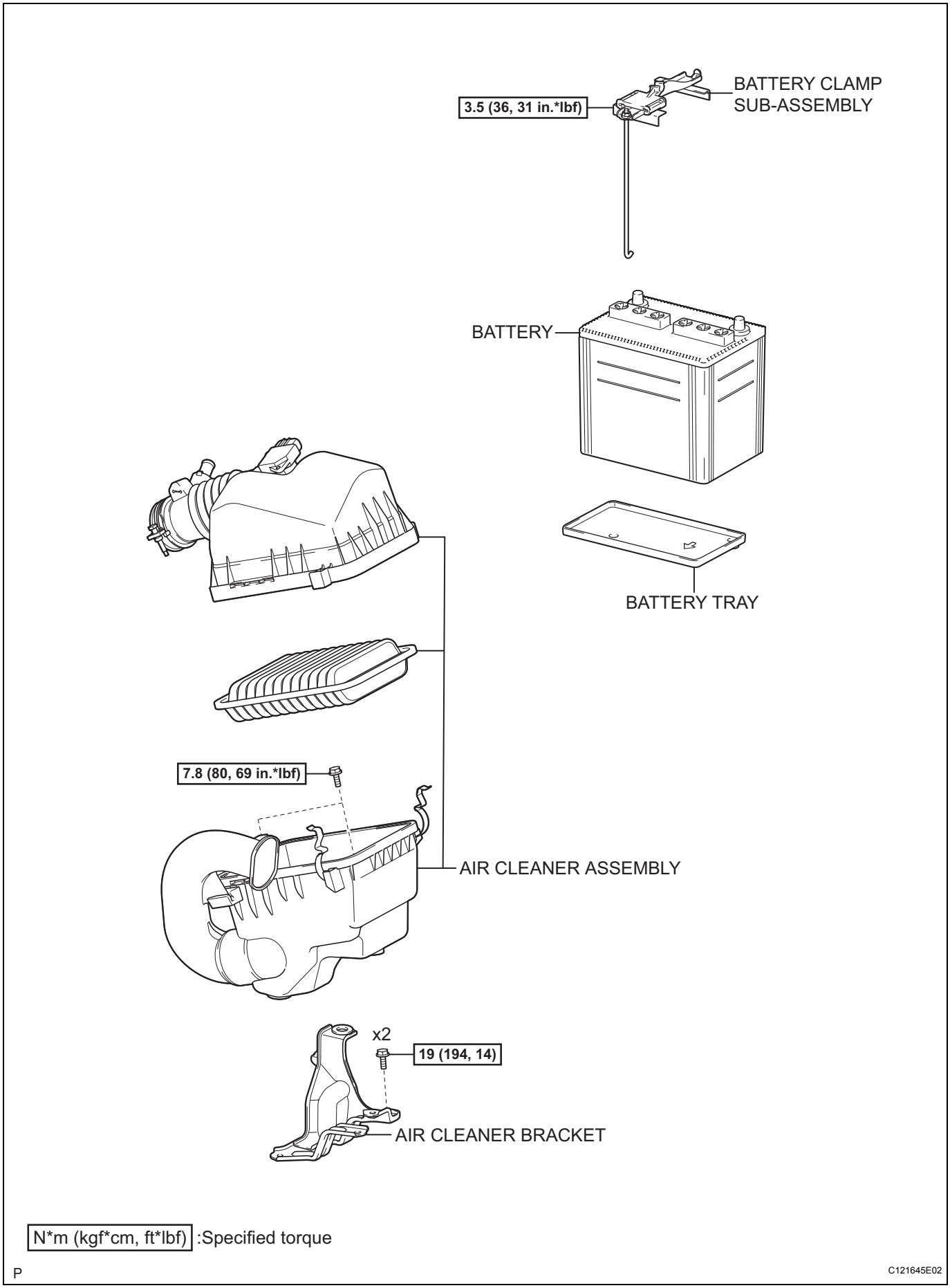

N*m (kgf*cm, ft*lbf) :Specified torque

C121645E02

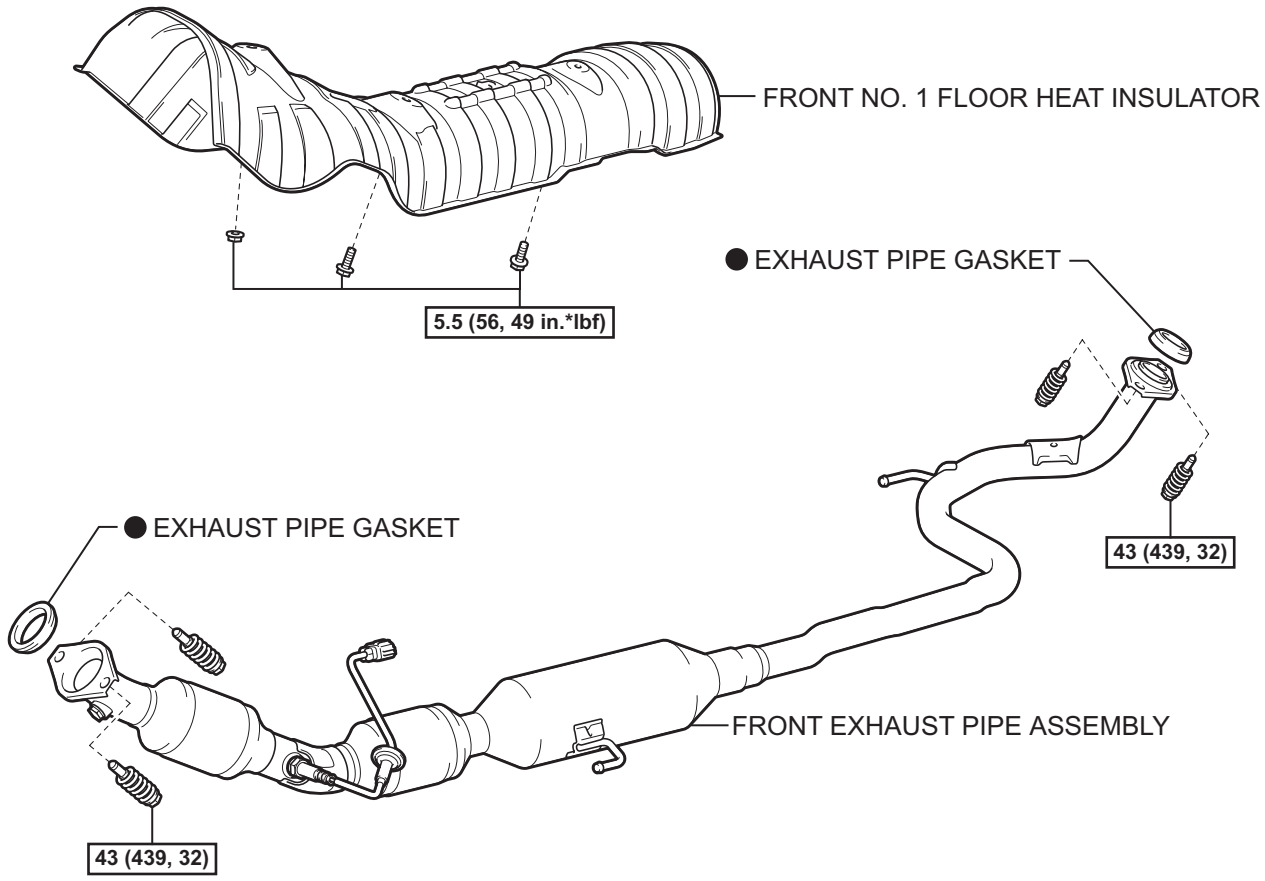

N*m (kgf*cm, ft*lbf) : Specified torque

● Non-reusable part

P

C117081E02

AX

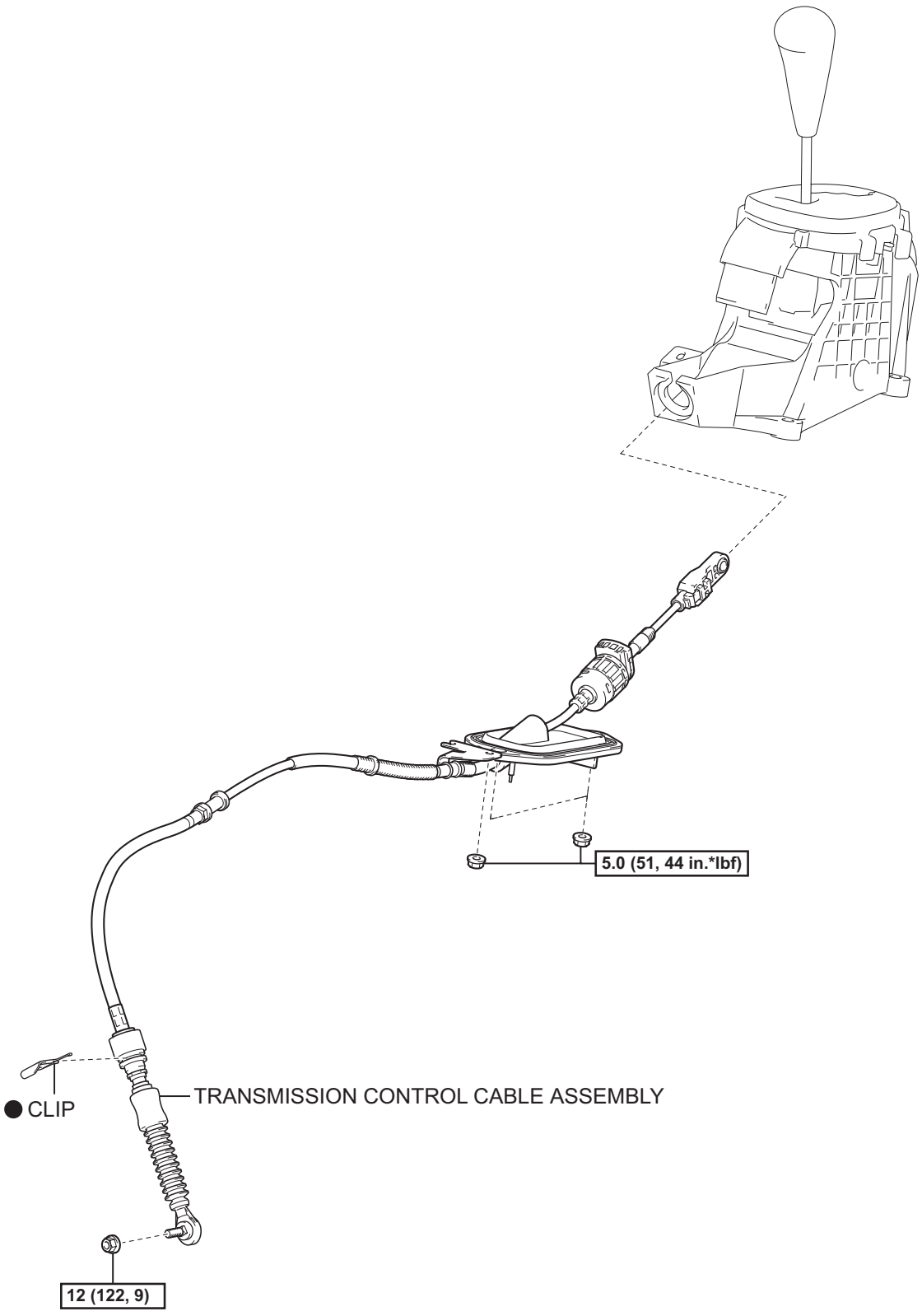

N*m (kgf*cm, ft*lbf) :Specified torque ● Non-reusable part

P

C117083E01

REMOVAL

1. **REMOVE CENTER LOWER INSTRUMENT PANEL FINISH PANEL (for Sedan) (See page PB-6)**
2. **REMOVE UPPER CONSOLE PANEL SUB-ASSEMBLY (for Sedan) (See page PB-6)**
3. **REMOVE REAR CONSOLE BOX COVER (for Hatchback) (See page PB-6)**
4. **REMOVE REAR UPPER CONSOLE PANEL SUB-ASSEMBLY (for Sedan) (See page PB-7)**
5. **REMOVE CONSOLE BOX CARPET (See page PB-7)**
6. **REMOVE REAR CONSOLE BOX ASSEMBLY (See page PB-8)**
7. **REMOVE BATTERY (See page EM-122)**
8. **REMOVE BATTERY TRAY**
9. **REMOVE AIR CLEANER ASSEMBLY (See page EM-124)**
10. **REMOVE AIR CLEANER BRACKET (See page EM-125)**
11. **SEPARATE OXYGEN SENSOR CONNECTOR**
    (a) Pull back the floor carpet and disconnect the oxygen sensor connector.
    (b) Remove the grommet and put the oxygen sensor connector outside of the vehicle.

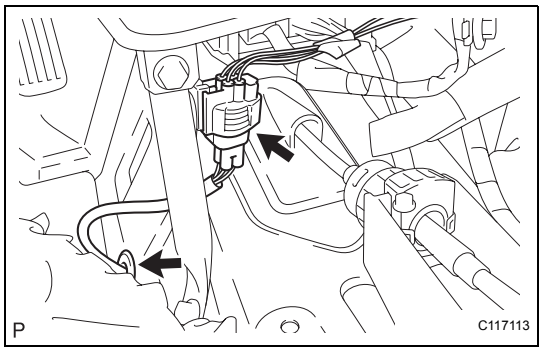

12. **REMOVE FRONT EXHAUST PIPE ASSEMBLY (See page EX-5)**

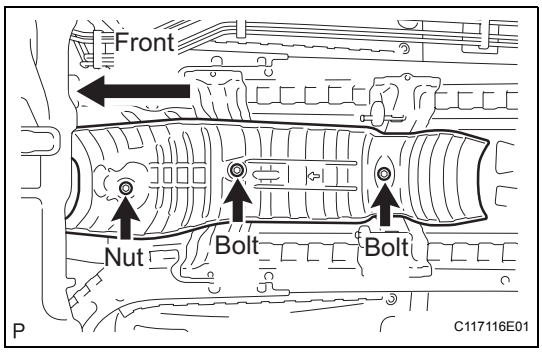

13. **REMOVE FRONT NO. 1 FLOOR HEAT INSULATOR**
    (a) Remove the 2 bolts and the nut and remove floor heat insulator.

AX

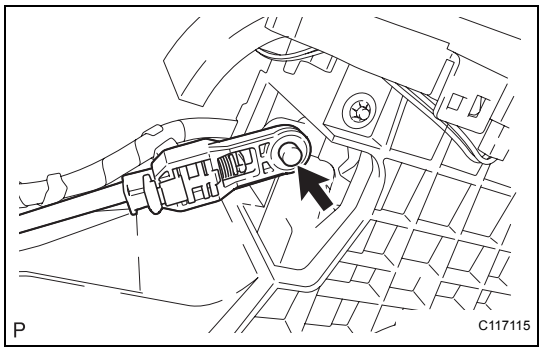

14. REMOVE TRANSMISSION CONTROL CABLE ASSEMBLY

(a) Disconnect the control cable from the shift lever.

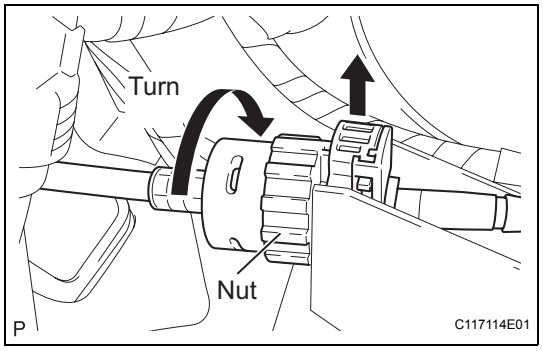

(b) Turn the nut and separate the control cable from the shift lever retainer.

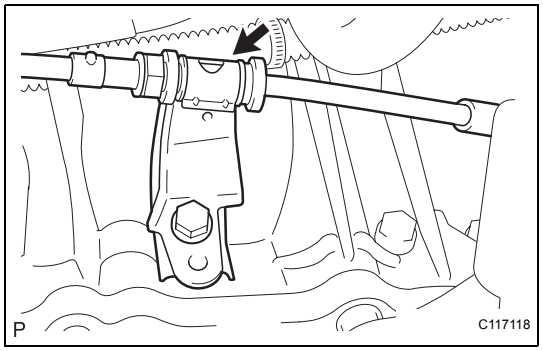

(c) Disconnect the control cable from the control cable support.

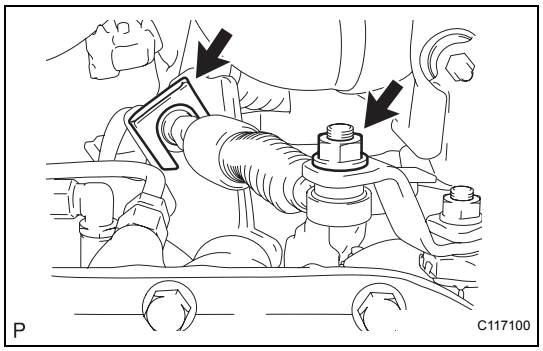

(d) Remove the nut and disconnect the control cable from the control shaft lever.

(e) Remove the clip and separate the control cable from the control cable bracket.

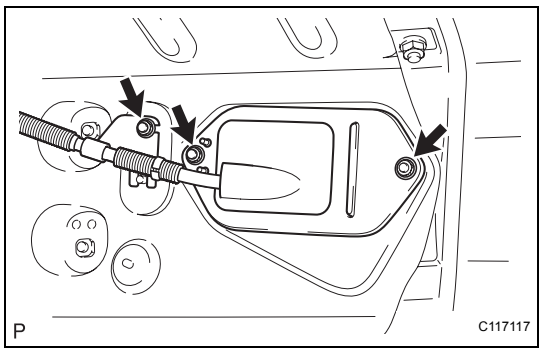

(f) Remove the 3 nuts and remove the control cable.

AX

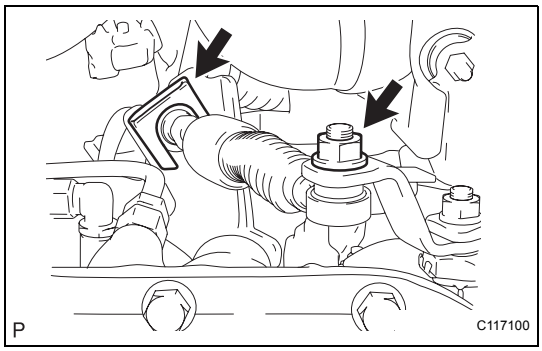

INSTALLATION

1. INSTALL TRANSMISSION CONTROL CABLE ASSEMBLY

(a) Install the control cable onto the control shaft lever with the nut.
Torque: 12 N*m (122 kgf*cm, 9 ft.*lbf)

(b) Fix the control cable onto the control cable bracket with a new clip.

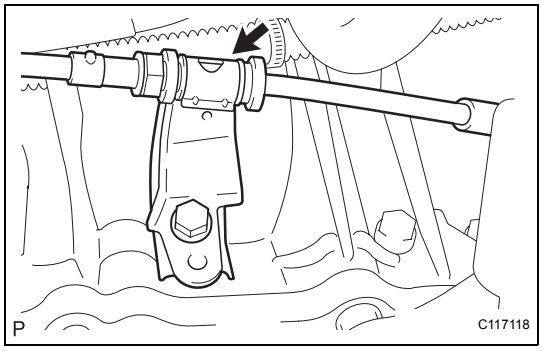

(c) Connect the control cable to the clamp.

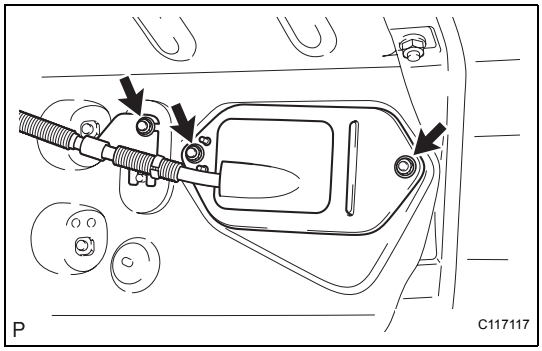

(d) Install the control cable with the 3 nuts.
Torque: 5.0 N*m (51 kgf*cm, 44 in.*lbf)

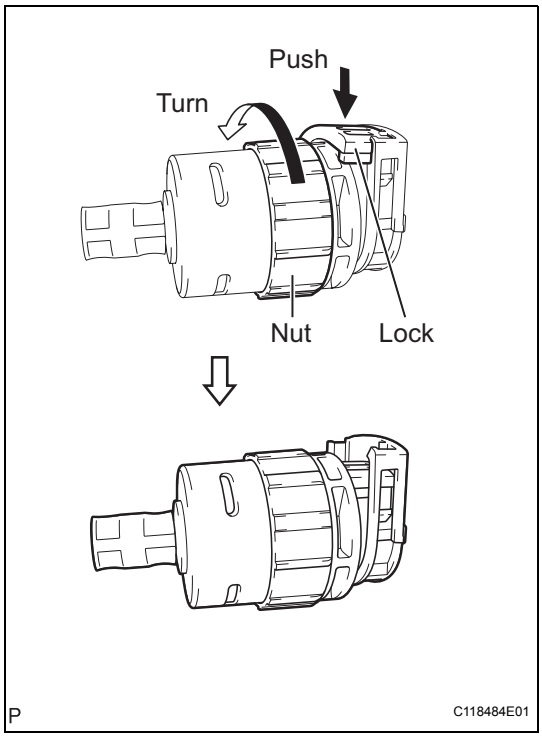

(e) Turn the nut of the control cable and push in the lock.

AX

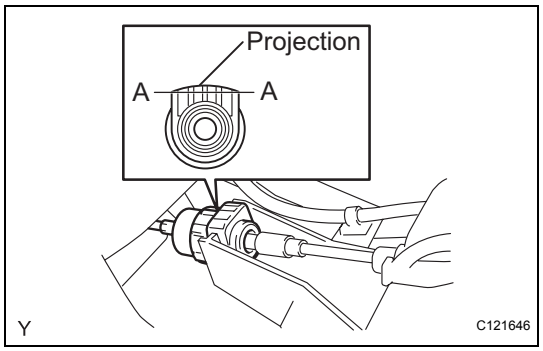

(f) Install the control cable onto the shift lever retainer.
NOTICE:
- **Install the cable with the protruding portion of the cable outer facing upward.**
- **After installing, check that the lock of the cable outer is protruding beyond portion A-A, as shown in the illustration.**

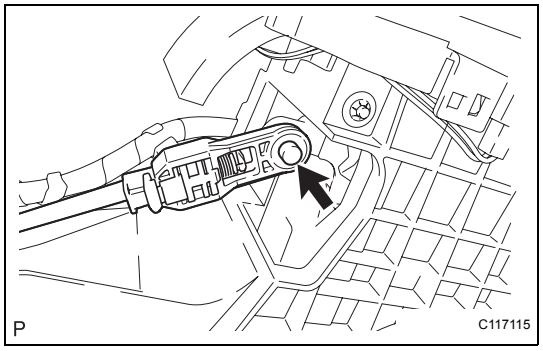

(g) Connect the control cable to the shift lever.
NOTICE:
Connect the control cable so that the adjusting mechanism lock of the control cable is installed on the left side of the vehicle.

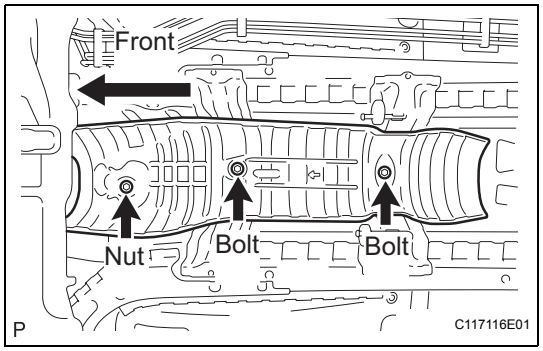

2. INSTALL FRONT NO. 1 FLOOR HEAT INSULATOR
(a) Install floor heat insulator with the 2 bolts and the nut.
Torque: 5.5 N*m (56 kgf*cm, 49 in.*lbf)

3. INSTALL FRONT EXHAUST PIPE ASSEMBLY (See page EX-8)

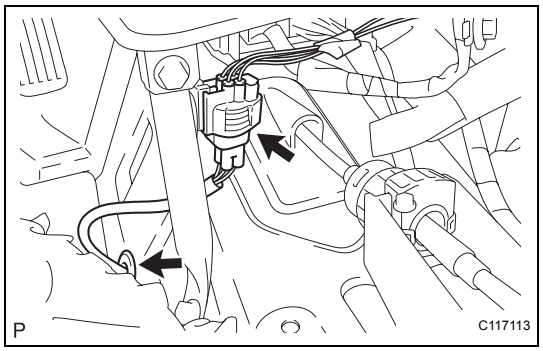

4. CONNECT OXYGEN SENSOR CONNECTOR
(a) Insert the oxygen sensor connector toward the room side, through the hole in the floor panel, and then install the grommet.
(b) Connect the oxygen sensor connector.

5. INSTALL AIR CLEANER BRACKET (See page EM-145)

6. INSTALL AIR CLEANER ASSEMBLY (See page EM-146)

7. INSTALL BATTERY TRAY

8. INSTALL BATTERY (See page EM-148)

9. INSPECT SHIFT LEVER POSITION (See page AX-134)

10. ADJUST SHIFT LEVER POSITION (See page AX-137)

11. INSTALL REAR CONSOLE BOX ASSEMBLY (See page PB-10)

12. INSTALL CONSOLE BOX CARPET (See page PB-11)

13. INSTALL REAR CONSOLE BOX COVER (for Hatchback) (See page PB-11)

14. **INSTALL REAR UPPER CONSOLE PANEL SUB-ASSEMBLY (for Sedan) (See page PB-11)**
15. **INSTALL UPPER CONSOLE PANEL SUB-ASSEMBLY (for Sedan) (See page PB-12)**
16. **INSTALL CENTER LOWER INSTRUMENT PANEL FINISH PANEL (for Sedan) (See page PB-12)**
17. **CHECK FOR EXHAUST GAS LEAKAGE**

FLOOR SHIFT ASSEMBLY

COMPONENTS

for Hatchback:

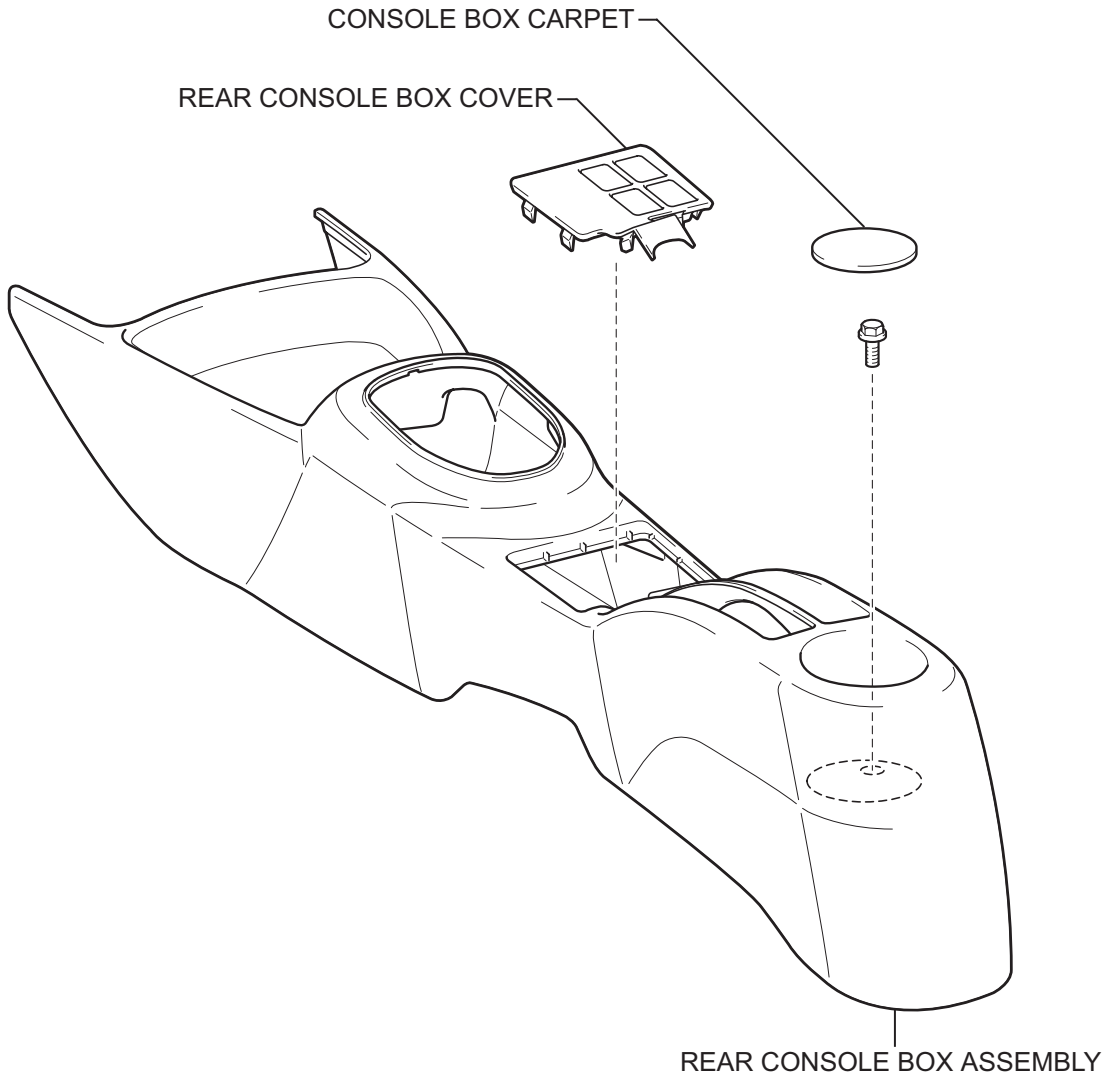

P

C117078E02

for Sedan:

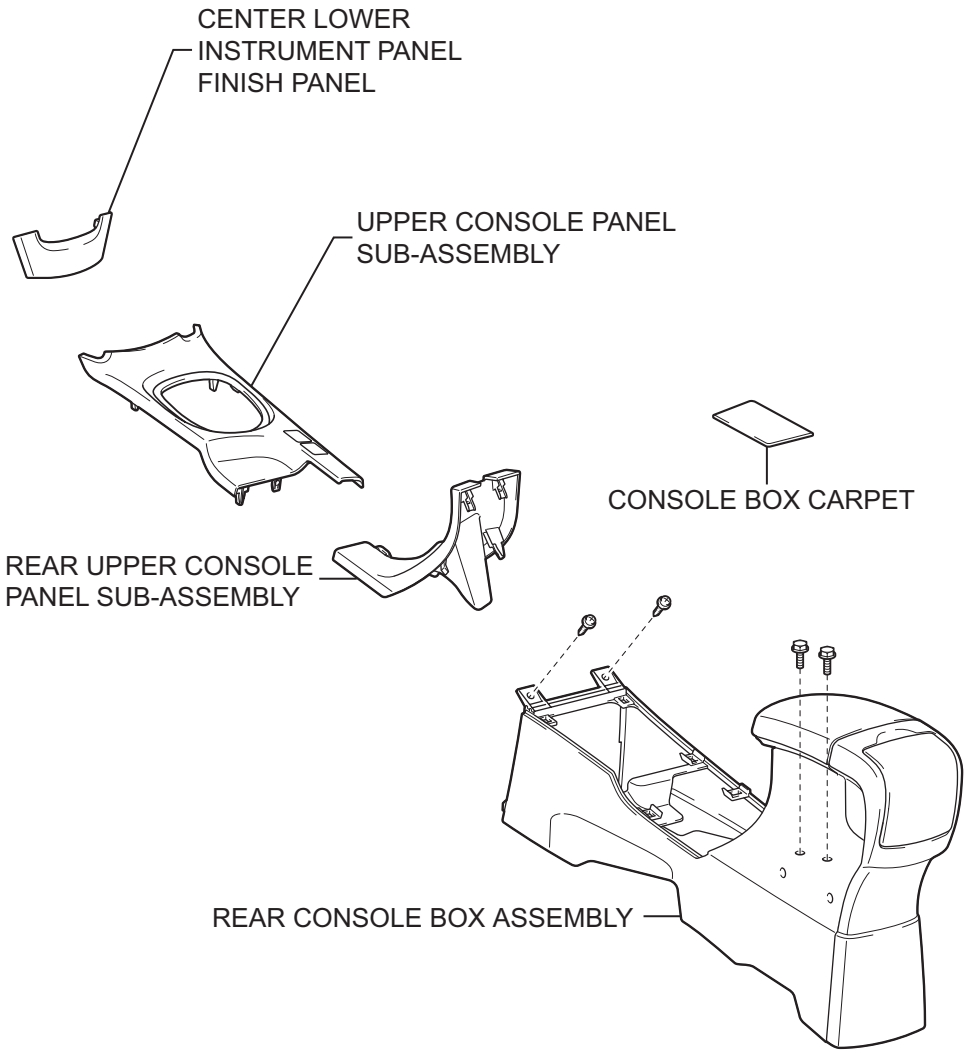

P

C133134E02

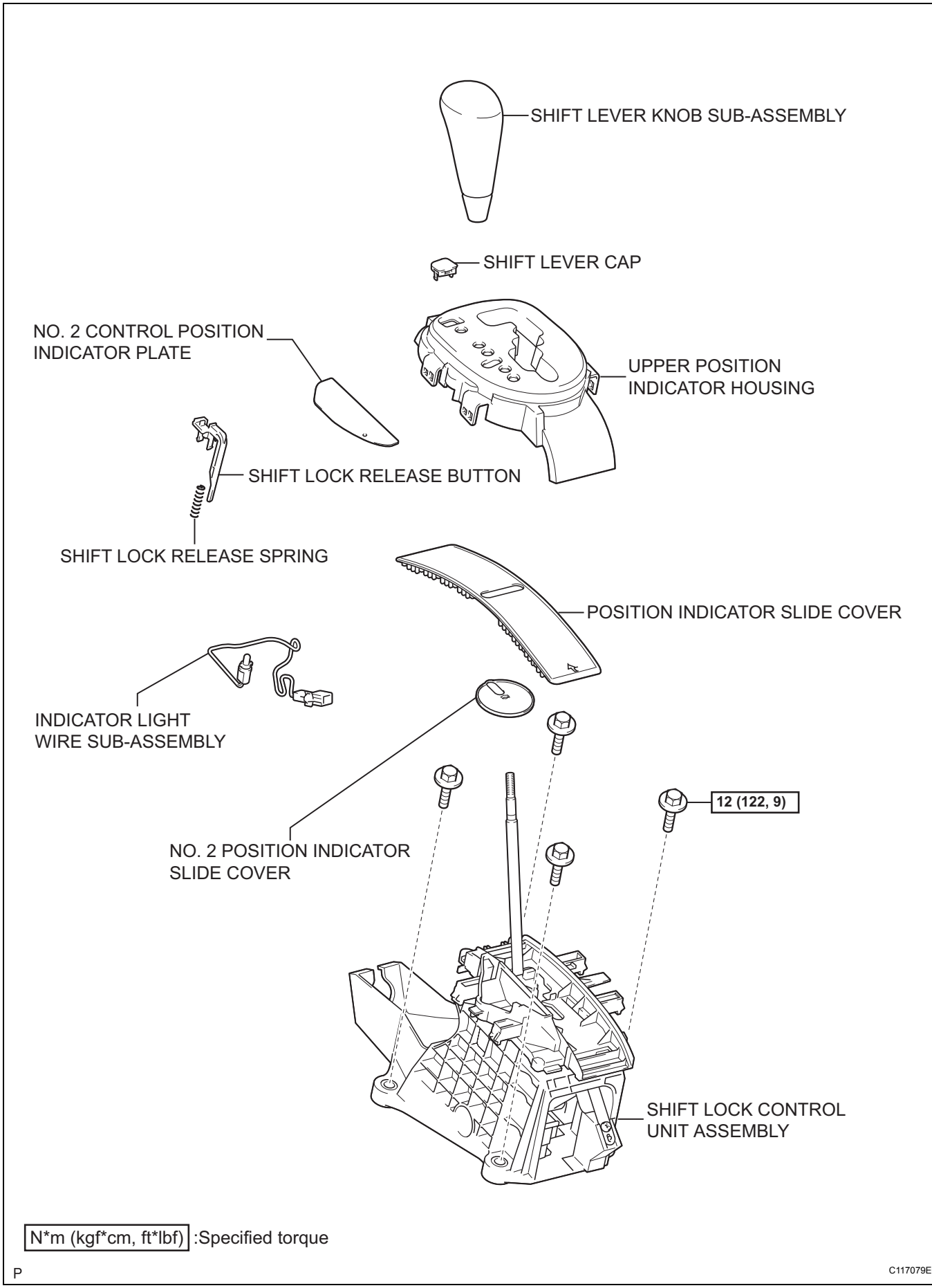
SHIFT LEVER KNOB SUB-ASSEMBLY
SHIFT LEVER CAP
NO. 2 CONTROL POSITION INDICATOR PLATE
UPPER POSITION INDICATOR HOUSING
SHIFT LOCK RELEASE BUTTON
SHIFT LOCK RELEASE SPRING
POSITION INDICATOR SLIDE COVER
INDICATOR LIGHT WIRE SUB-ASSEMBLY
12 (122, 9)
NO. 2 POSITION INDICATOR SLIDE COVER
SHIFT LOCK CONTROL UNIT ASSEMBLY
N*m (kgf*cm, ft*lbf) :Specified torque
P
C117079E02

AX

ON-VEHICLE INSPECTION

1. INSPECT SHIFT LEVER POSITION

(a) When shifting the lever from P to the R position with the ignition switch ON and the brake pedal depressed, make sure that the shift lever moves smoothly and moves correctly into position.

(b) Start the engine and make sure that the vehicle moves forward when shifting the lever from N to the D position and moves rearward when shifting the lever to the R position.
If the operation cannot be performed as specified, inspect the park/neutral position switch assembly and check the shift lever assembly installation condition.

REMOVAL

1. **DISCONNECT CABLE FROM NEGATIVE BATTERY TERMINAL**
2. **REMOVE SHIFT LEVER KNOB SUB-ASSEMBLY**
   (a) Remove the shift lever knob sub-assembly from the shift lever.
3. **REMOVE CENTER LOWER INSTRUMENT PANEL FINISH PANEL (for Sedan) (See page PB-6)**
4. **REMOVE UPPER CONSOLE PANEL SUB-ASSEMBLY (for Sedan) (See page PB-6)**
5. **REMOVE REAR CONSOLE BOX COVER (for Hatchback) (See page PB-6)**
6. **REMOVE REAR UPPER CONSOLE PANEL SUB-ASSEMBLY (for Sedan) (See page PB-7)**
7. **REMOVE CONSOLE BOX CARPET (See page PB-7)**
8. **REMOVE REAR CONSOLE BOX ASSEMBLY (See page PB-8)**
9. **SEPARATE TRANSMISSION CONTROL CABLE ASSEMBLY**
   (a) Disconnect the control cable from the shift lever.

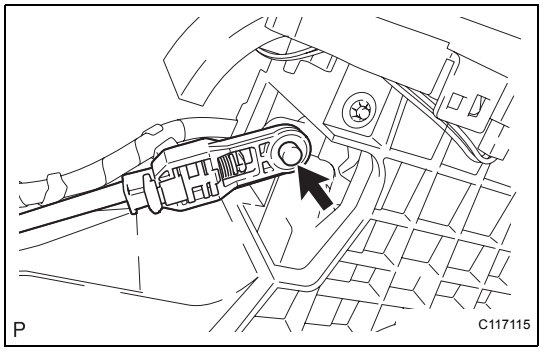

   (b) Turn the nut and separate the control cable from the shift lever retainer.

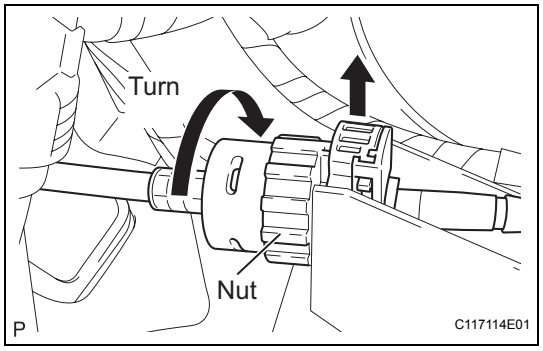

10. **REMOVE FLOOR SHIFT ASSEMBLY**
    (a) Separate the shift lock control computer connector and indicator wire connector.
    (b) Separate the 2 wire harness clamps from the shift lever.

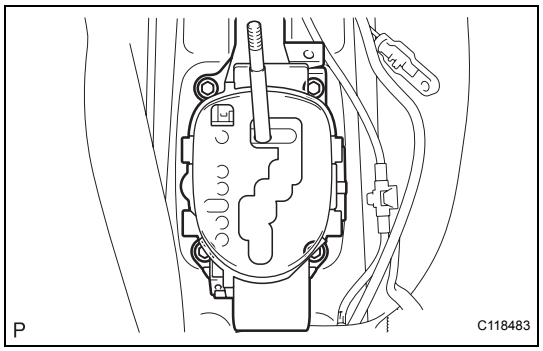

   (c) Remove the 4 bolts and remove the shift lever.

DISASSEMBLY

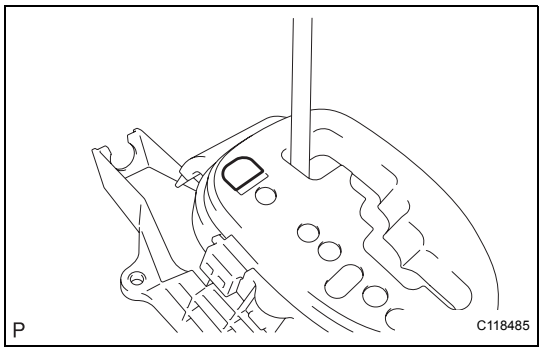

1. REMOVE SHIFT LEVER CAP

(a) Remove the shift lever cap from the position indicator housing upper.

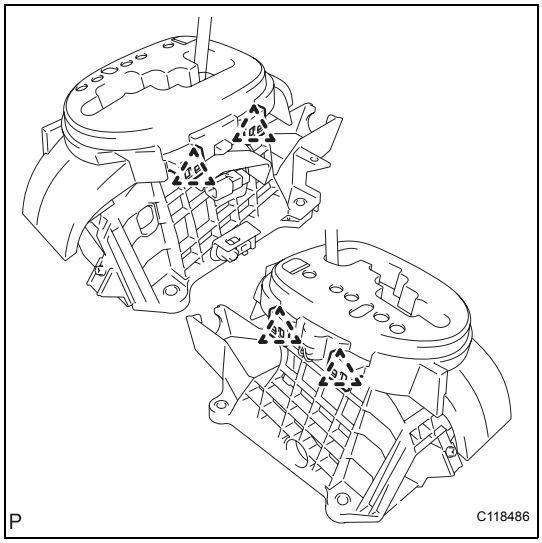

2. REMOVE UPPER POSITION INDICATOR HOUSING

(a) Release the 4 claws using a screwdriver and remove the upper position indicator housing from the shift lock control unit.

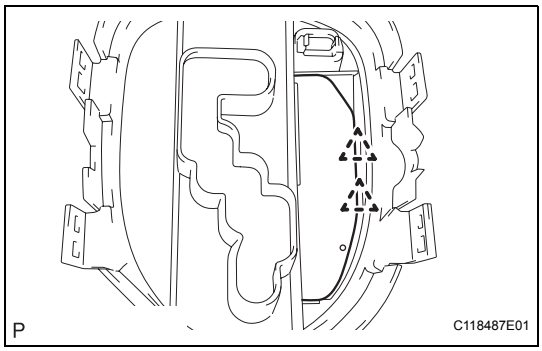

3. REMOVE NO. 2 CONTROL POSITION INDICATOR PLATE

(a) Release the 2 claws using a screwdriver and remove position indicator plate from the upper position indicator housing.

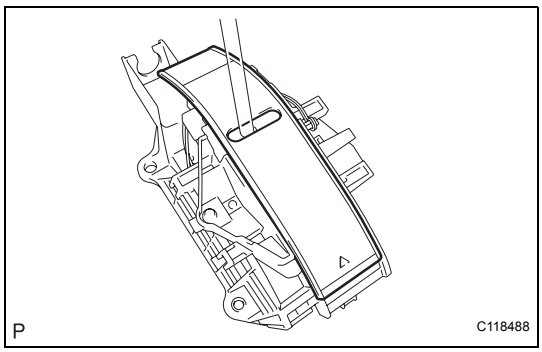

4. REMOVE POSITION INDICATOR SLIDE COVER

(a) Remove the position indicator slide cover from the shift lock control unit.

AX

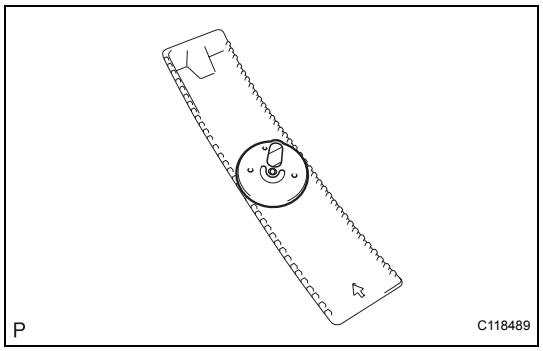

5. REMOVE NO. 2 POSITION INDICATOR SLIDE COVER

(a) Remove No. 2 position indicator slide cover from the position indicator slide cover.

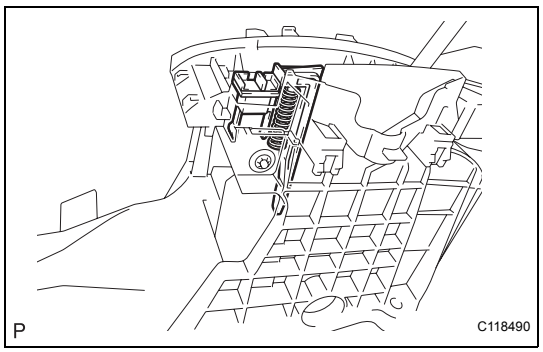

6. REMOVE SHIFT LOCK RELEASE BUTTON

(a) Remove the shift lock release button and shift lock release spring from the shift lock control unit.

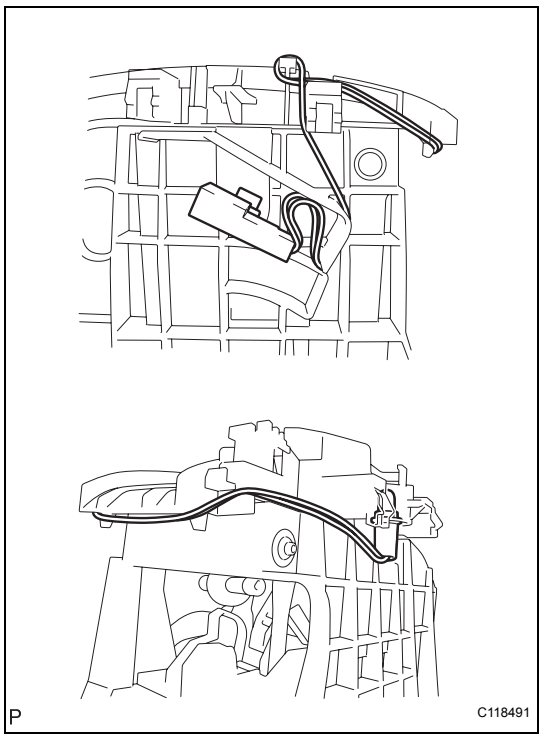

7. REMOVE INDICATOR LIGHT WIRE SUB-ASSEMBLY

(a) Remove the indicator light wire sub-assembly from the shift lock control unit.

AX

ADJUSTMENT

1. ADJUST SHIFT LEVER POSITION

(a) Shift the shift lever to the N position.

(b) Slide the adjuster case cover in the direction shown in the illustration and pull out the lock piece.

(c) Gently pull the cable rod toward the rear of the vehicle by hand to pull the cable taut.

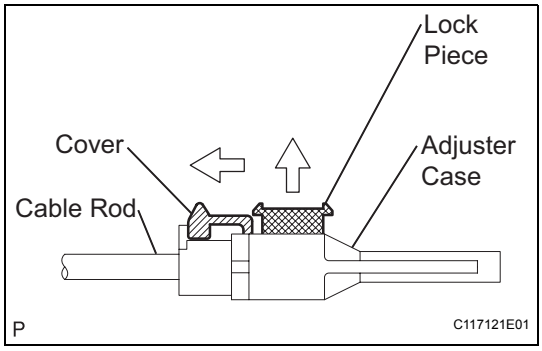

(d) Press the lock piece into the adjuster case and lock it.

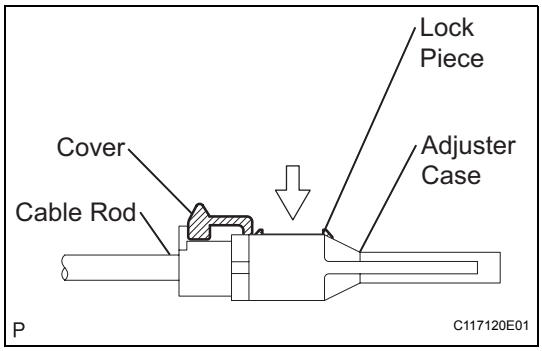

(e) Slide the cover in the direction shown in the illustration.
NOTICE:
Slide the cover past the protrusion of the lock piece.

(f) Inspect the operation after the adjustment.

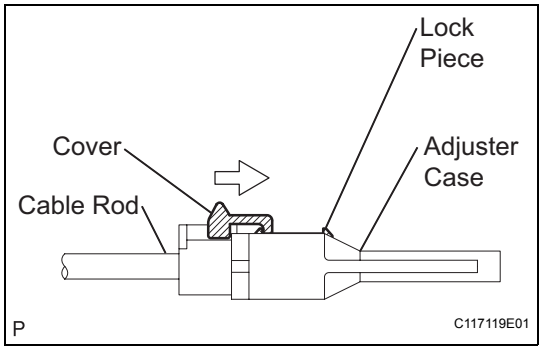

AX

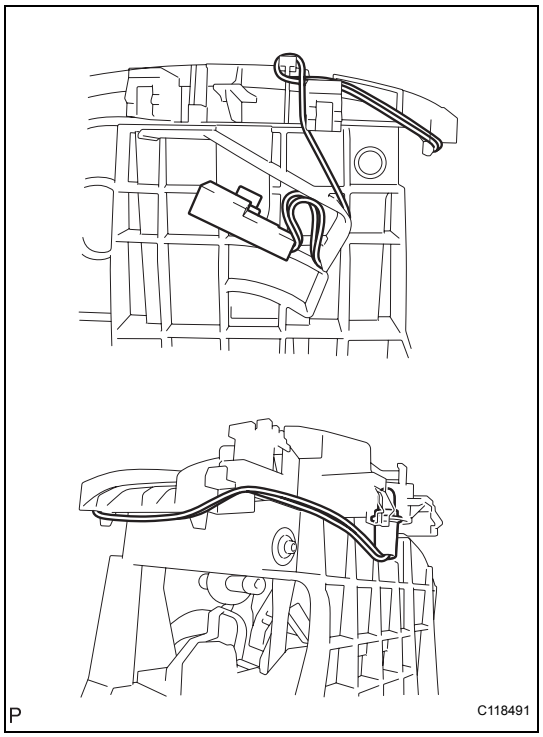

REASSEMBLY

1. INSTALL INDICATOR LIGHT WIRE SUB-ASSEMBLY

(a) Install the indicator light wire onto the shift lock control unit.

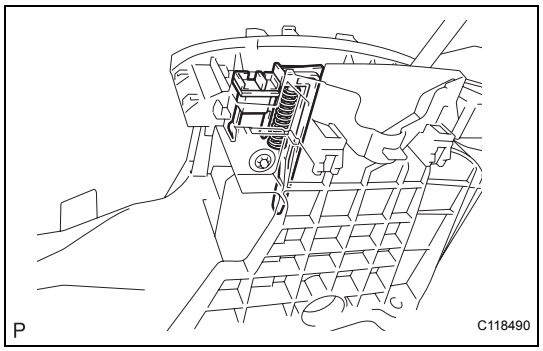

2. INSTALL SHIFT LOCK RELEASE BUTTON

(a) Install the shift lock release button and spring onto the shift lock control unit.

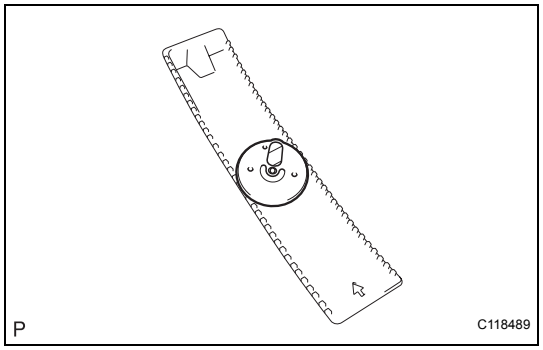

3. INSTALL NO. 2 POSITION INDICATOR SLIDE COVER

(a) Install No. 2 position indicator slide cover onto the position indicator slide cover.

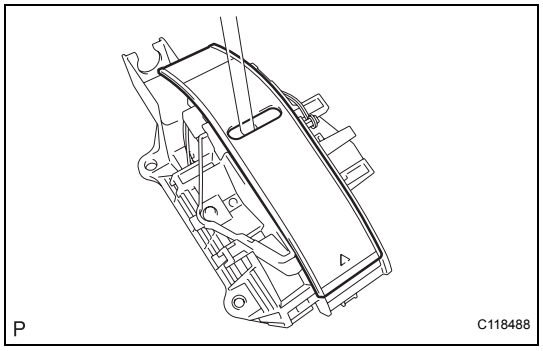

4. INSTALL POSITION INDICATOR SLIDE COVER

(a) Install the position indicator slide cover onto the shift lock control unit.

AX

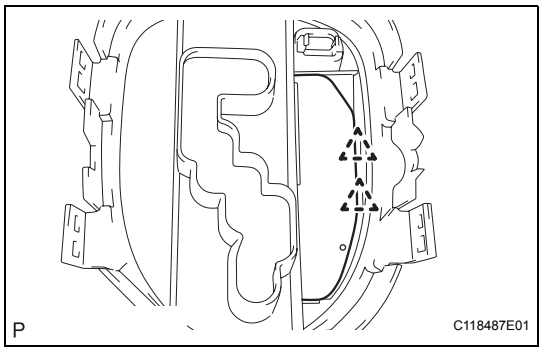

5. INSTALL NO. 2 CONTROL POSITION INDICATOR PLATE

(a) Install position indicator plate onto the upper position indicator housing.

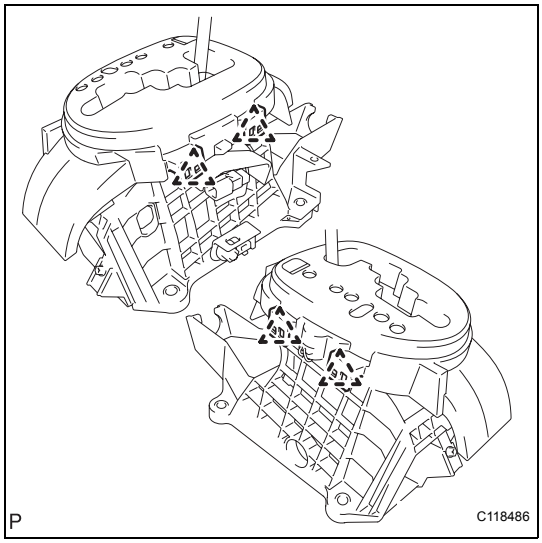

6. INSTALL UPPER POSITION INDICATOR HOUSING

(a) Install the upper position indicator housing onto the shift lock control unit.
NOTICE:
Securely engage the 4 claws.

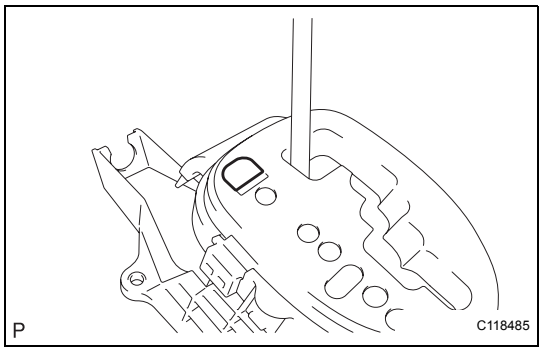

7. INSTALL SHIFT LEVER CAP

(a) Install the shift lever cap onto the position indicator housing upper.

INSTALLATION

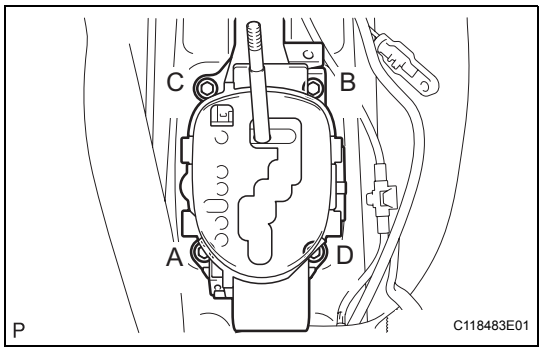

1. INSTALL FLOOR SHIFT ASSEMBLY

(a) Provisionally install the shift lever with the 4 bolts.
NOTICE:
Do not jam the wiring of the indicator light or shift lock.

(b) Tighten the 4 bolts in order, from A to D.
Torque: 12 N*m (122 kgf*cm, 9 ft.*lbf)

(c) Install the shift lock control computer connector and indicator light connector.

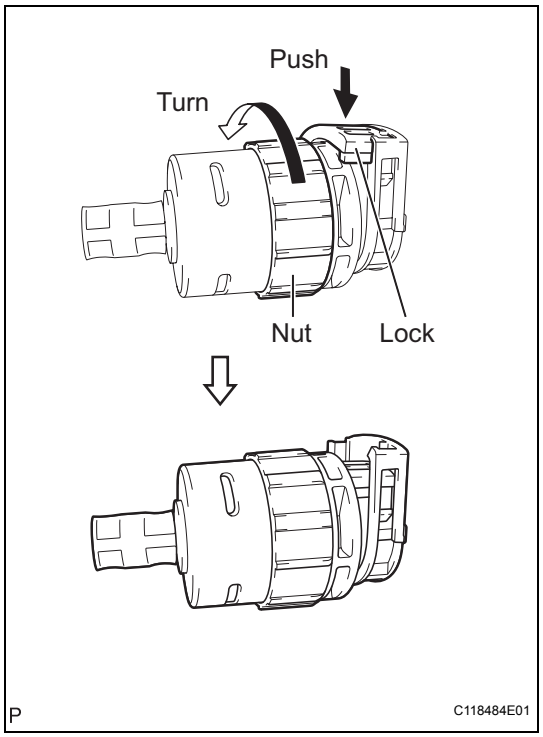

2. **CONNECT TRANSMISSION CONTROL CABLE ASSEMBLY**
   (a) Turn the nut of the control cable and push in the lock.

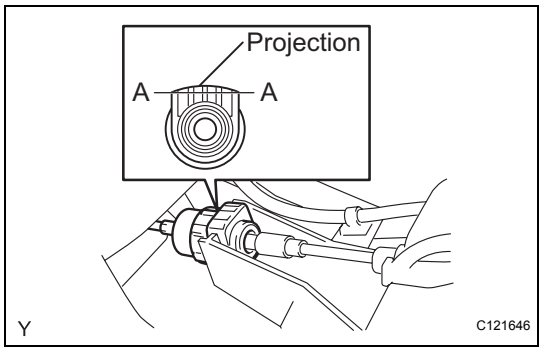

   (b) Install the control cable onto the shift lever retainer.
   CAUTION:
   - **Install the cable with the projection of the cable outer facing upward.**
   - **After installing, check that the lock of the cable outer is protruding beyond portion A-A, as shown in the illustration.**

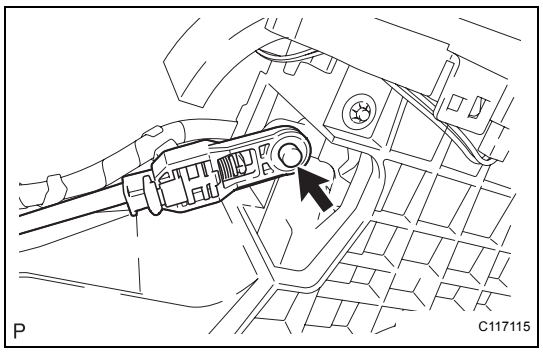

   (c) Connect the control cable to the shift lever.

3. **INSPECT SHIFT LEVER POSITION (See page AX-134)**
4. **ADJUST SHIFT LEVER POSITION (See page AX-137)**
5. **INSTALL REAR CONSOLE BOX ASSEMBLY (See page PB-10)**
6. **INSTALL CONSOLE BOX CARPET (See page PB-11)**
7. **INSTALL REAR CONSOLE BOX COVER (for Hatchback) (See page PB-11)**
8. **INSTALL REAR UPPER CONSOLE PANEL SUB-ASSEMBLY (for Sedan) (See page PB-11)**
9. **INSTALL UPPER CONSOLE PANEL SUB-ASSEMBLY (for Sedan) (See page PB-12)**
10. **INSTALL CENTER LOWER INSTRUMENT PANEL FINISH PANEL (for Sedan) (See page PB-12)**
11. **INSTALL SHIFT LEVER KNOB SUB-ASSEMBLY**
    (a) Install the shift lever knob sub-assembly onto the shift lever.

12. CONNECT CABLE TO NEGATIVE BATTERY TERMINAL
Torque: 5.4 N*m (55 kgf*cm, 48 in.*lbf)

DIFFERENTIAL OIL SEAL

COMPONENTS

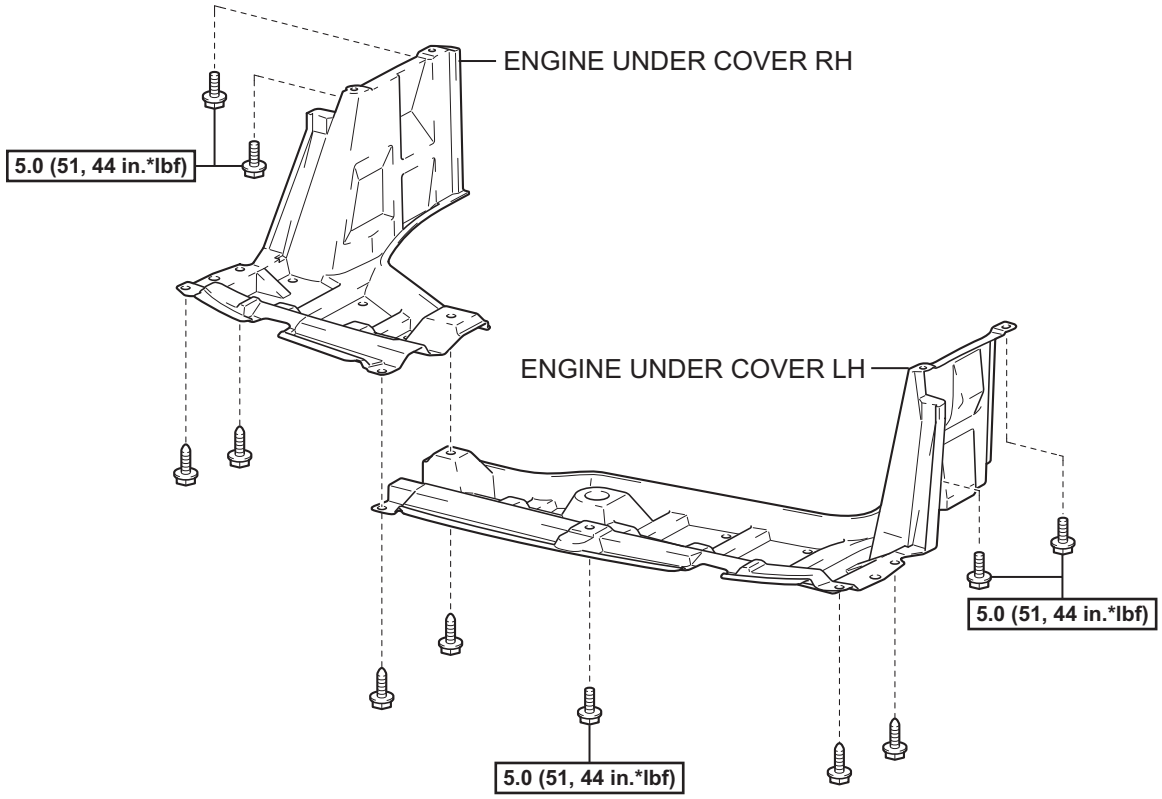

N*m (kgf*cm, ft*lbf) :Specified torque

P

C117094E01

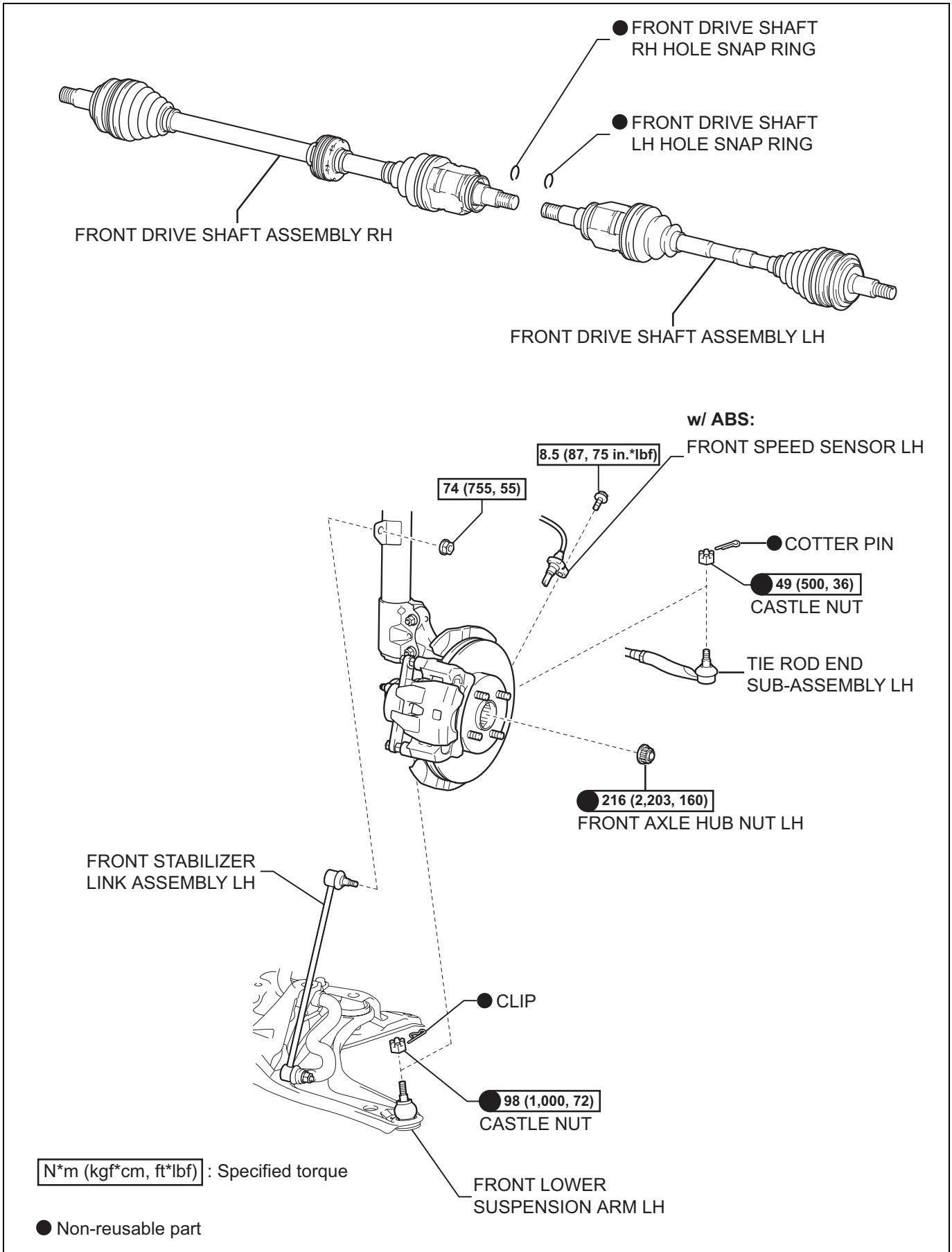
● FRONT DRIVE SHAFT RH HOLE SNAP RING
● FRONT DRIVE SHAFT LH HOLE SNAP RING
FRONT DRIVE SHAFT ASSEMBLY RH
FRONT DRIVE SHAFT ASSEMBLY LH
w/ ABS:
8.5 (87, 75 in.*lbf)
FRONT SPEED SENSOR LH
74 (755, 55)
● COTTER PIN
● 49 (500, 36)
CASTLE NUT
TIE ROD END SUB-ASSEMBLY LH
● 216 (2,203, 160)
FRONT AXLE HUB NUT LH
FRONT STABILIZER LINK ASSEMBLY LH
● CLIP
● 98 (1,000, 72)
CASTLE NUT
FRONT LOWER SUSPENSION ARM LH
N*m (kgf*cm, ft*lbf) : Specified torque
● Non-reusable part
P
C117093E05

AX

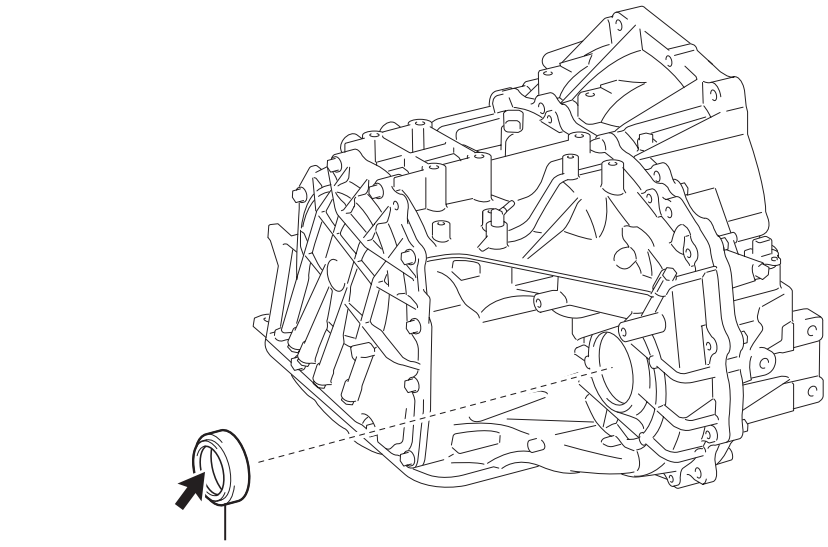

● TRANSAXLE CASE OIL SEAL

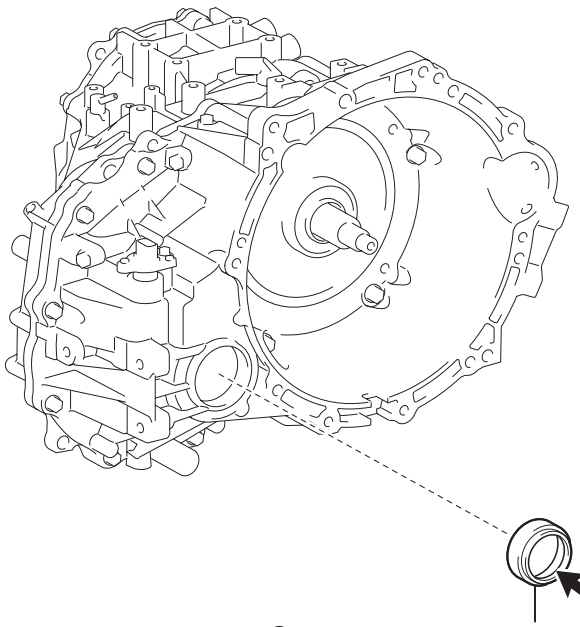

● Non-reusable part

◀ Apply MP grease

● FRONT TRANSAXLE CASE OIL SEAL

P

C117084E01

REMOVAL

1. **DISCONNECT CABLE FROM NEGATIVE BATTERY TERMINAL**
2. **REMOVE FRONT WHEELS**
3. **REMOVE ENGINE UNDER COVER LH**
4. **REMOVE ENGINE UNDER COVER RH**
5. **DRAIN AUTOMATIC TRANSAXLE FLUID**
   (a) Remove the drain plug and gasket, and drain the automatic transaxle fluid.
   (b) Install a new gasket and the drain plug.
   Torque: 49 N*m (500 kgf*cm, 36 ft.*lbf)
6. **REMOVE FRONT AXLE HUB NUT LH (See page DS-3)**
7. **REMOVE FRONT AXLE HUB NUT RH**
   HINT:
   The removal procedure for the RH side is the same as that for the LH side.
8. **SEPARATE FRONT SPEED SENSOR LH (w/ ABS) (See page DS-3)**
9. **SEPARATE FRONT SPEED SENSOR RH (w/ ABS)**
   HINT:
   The separation procedure for the RH side is the same as that for the LH side.
10. **SEPARATE FRONT STABILIZER LINK ASSEMBLY LH (See page DS-4)**
11. **SEPARATE FRONT STABILIZER LINK ASSEMBLY RH**
    HINT:
    The separation procedure for the RH side is the same as that for the LH side.
12. **SEPARATE TIE ROD END SUB-ASSEMBLY LH (See page DS-3)**
13. **SEPARATE TIE ROD END SUB-ASSEMBLY RH**
    HINT:
    The separation procedure for the RH side is the same as that for the LH side.
14. **SEPARATE FRONT LOWER SUSPENSION ARM LH (See page DS-4)**
15. **SEPARATE FRONT LOWER SUSPENSION ARM RH**
    HINT:
    The separation procedure for the RH side is the same as that for the LH side.

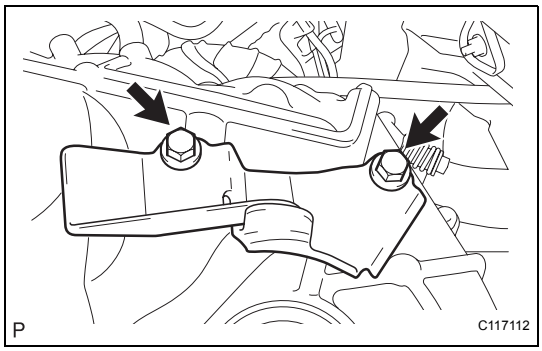

16. **REMOVE TRANSMISSION CASE PROTECTOR (w/o ABS)**
    (a) Remove the 2 bolts and remove the transmission case protector from the automatic transansaxle.
17. **REMOVE FRONT DRIVE SHAFT ASSEMBLY LH (See page DS-5)**
18. **REMOVE FRONT DRIVE SHAFT ASSEMBLY RH (See page DS-5)**

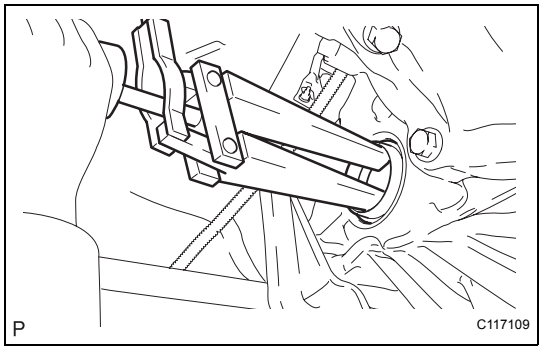

19. **REMOVE FRONT TRANSAXLE CASE OIL SEAL**
    (a) Using SST, remove the front transaxle case oil seal.
    SST 09308-00010

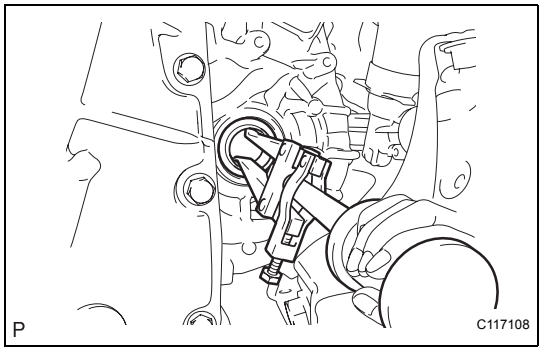

20. **REMOVE TRANSAXLE CASE OIL SEAL**
    (a) Using SST, remove the transaxle case oil seal.
    SST 09308-00010

INSTALLATION

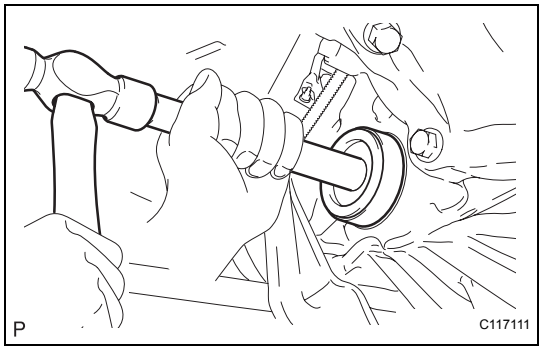

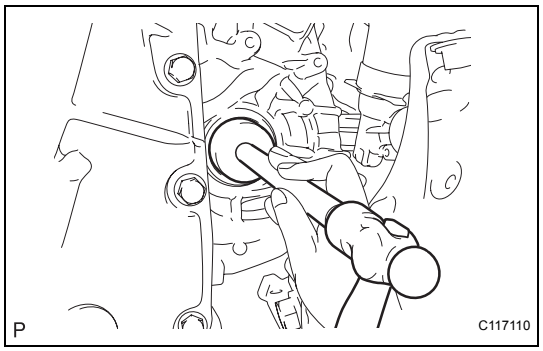

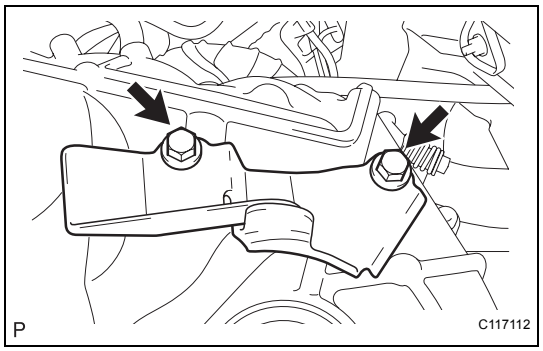

1. **INSTALL FRONT TRANSAXLE CASE OIL SEAL**
   (a) Coat the lip of a new oil seal with MP grease.
   (b) Using SST and a hammer, install the front transaxle case oil seal.
   SST 09554-14010, 09950-70010 (09951-07200)
   Drive in depth:
   1.5 to 2.5 mm (0.059 to 0.098 in.)
   NOTICE:
   Do not damage the oil seal lip.
2. **INSTALL TRANSAXLE CASE OIL SEAL**
   (a) Coat the lip of a new oil seal with MP grease.
   (b) Using SST and a hammer, install the transaxle case oil seal.
   SST 09710-20011 (09710-06071), 09950-70010 (09951-07200)
   Drive in depth:
   5.4 to 6.4 mm (0.213 to 0.252 in.)
   NOTICE:
   Do not damage the oil seal lip.
3. **INSTALL FRONT DRIVE SHAFT ASSEMBLY LH (See page DS-13)**
4. **INSTALL FRONT DRIVE SHAFT ASSEMBLY RH (See page DS-14)**
5. **INSTALL TRANSMISSION CASE PROTECTOR (w/o ABS)**
   (a) Install the transmission case protector onto the automatic transaxle with the 2 bolts.
6. **INSTALL FRONT LOWER SUSPENSION ARM LH (See page DS-14)**
7. **INSTALL FRONT LOWER SUSPENSION ARM RH**
   HINT:
   The installation procedure for the RH side is the same as that for the LH side.
8. **INSTALL TIE ROD END SUB-ASSEMBLY LH (See page DS-15)**
9. **INSTALL TIE ROD END SUB-ASSEMBLY RH**
   HINT:
   The installation procedure for the RH side is the same as that for the LH side.
10. **INSTALL FRONT STABILIZER LINK ASSEMBLY LH (See page DS-14)**
11. **INSTALL FRONT STABILIZER LINK ASSEMBLY RH**
    HINT:
    The installation procedure for the RH side is the same as that for the LH side.

AX

12. **INSTALL FRONT SPEED SENSOR LH (w/ ABS) (See page DS-15)**
13. **INSTALL FRONT SPEED SENSOR RH (w/ ABS)**
    HINT:
    The installation procedure for the RH side is the same as that for the LH side.
14. **INSTALL FRONT AXLE HUB NUT LH (See page DS-15)**
15. **INSTALL FRONT AXLE HUB NUT RH**
    HINT:
    The installation procedure for the RH side is the same as that for the LH side.
16. **INSTALL FRONT WHEELS**
    Torque: 103 N*m (1,050 kgf*cm, 76 ft.*lbf)
17. **CONNECT CABLE TO NEGATIVE BATTERY TERMINAL**
    Torque: 5.4 N*m (55 kgf*cm, 48 in.*lbf)
18. **ADD AUTOMATIC TRANSAXLE FLUID (See page AX-170)**
19. **INSPECT AUTOMATIC TRANSAXLE FLUID (See page AX-93)**
20. **CHECK AUTOMATIC TRANSAXLE FLUID LEAKAGE**
21. **INSPECT AND ADJUST FRONT WHEEL ALIGNMENT** (See page SP-2)
22. **INSTALL ENGINE UNDER COVER RH**
23. **INSTALL ENGINE UNDER COVER LH**

AUTOMATIC TRANSAXLE ASSEMBLY

COMPONENTS

for Hatchback:

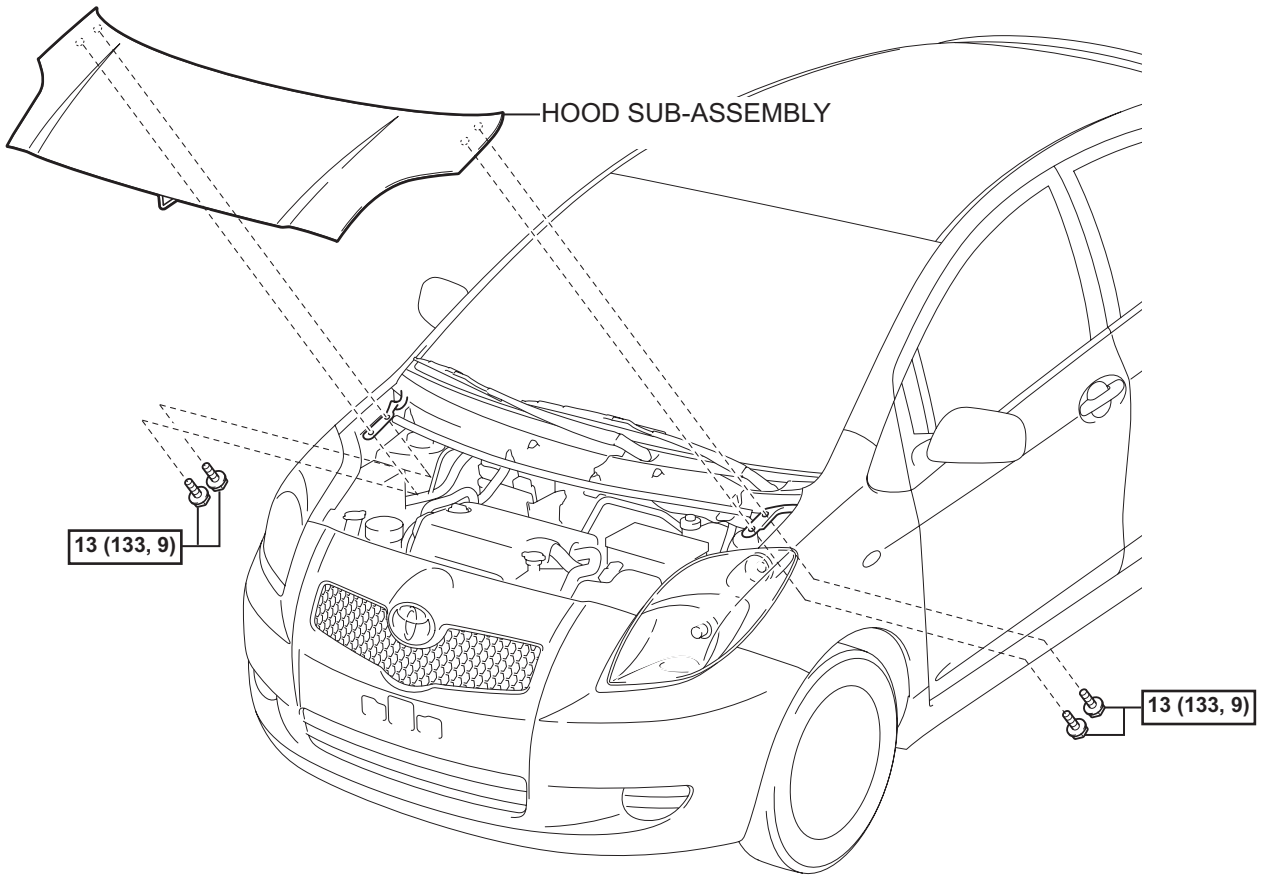

N*m (kgf*cm, ft.*lbf) : Specified torque

P

C117202E02

AX

for Sedan:

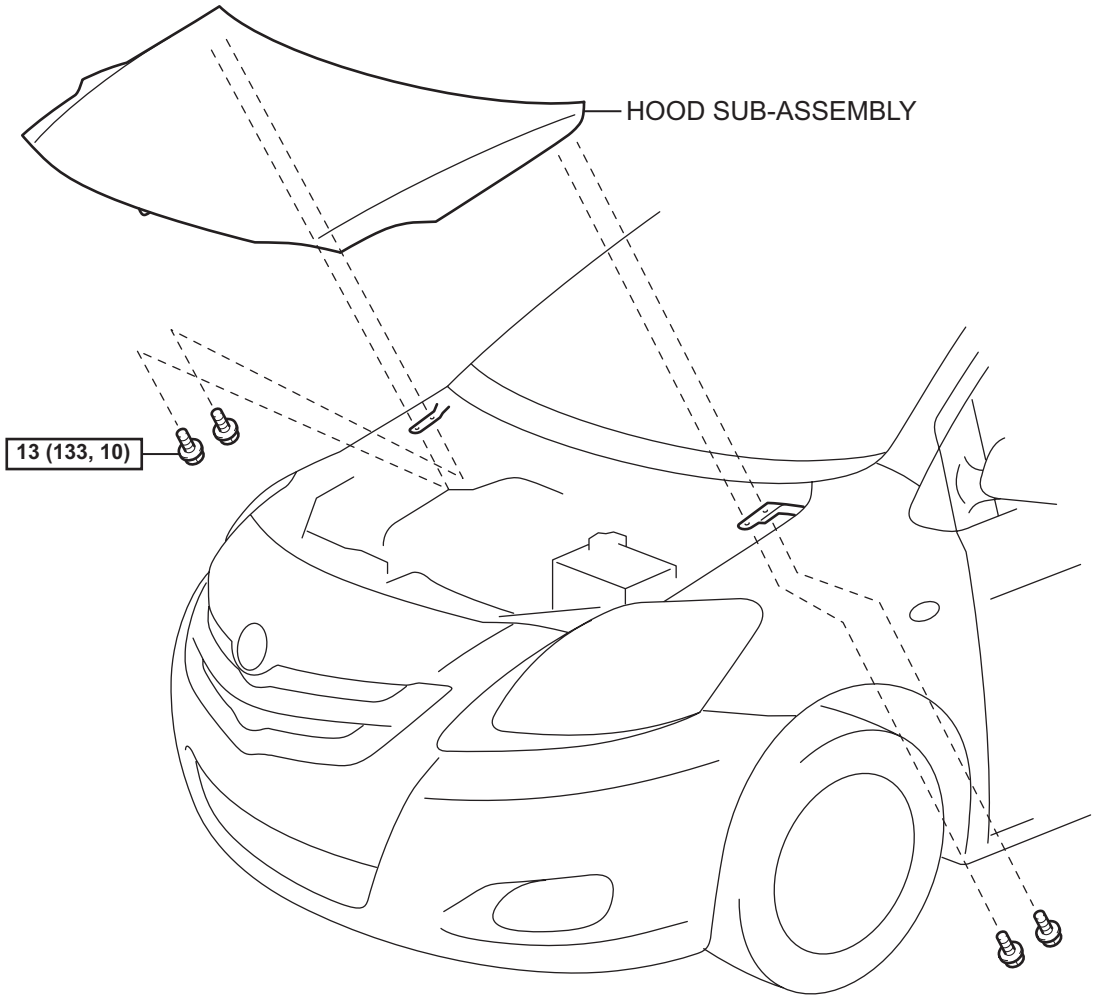

N*m (kgf*cm, ft*lbf) : Specified torque

B135922E02

for Hatchback:

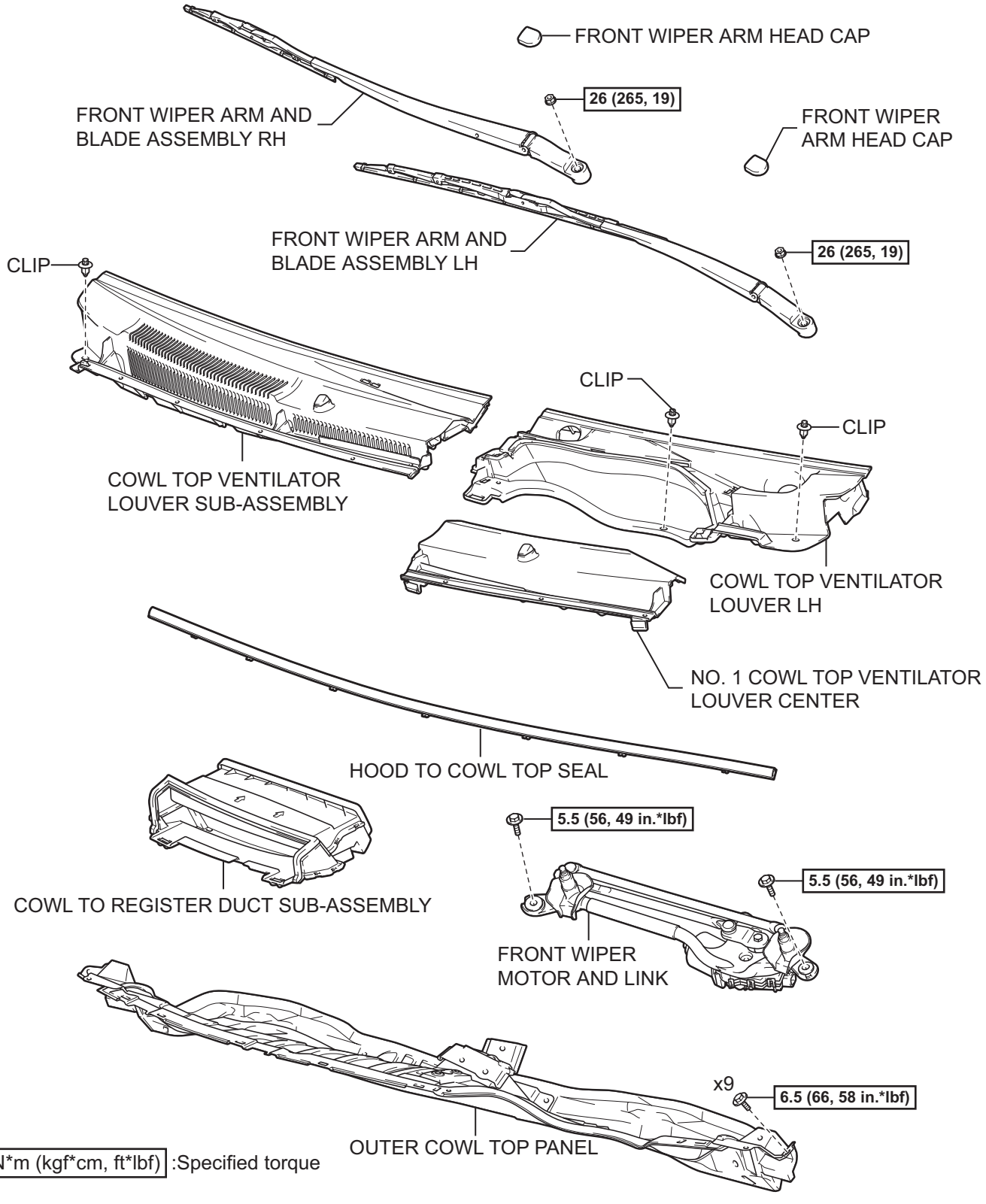

N*m (kgf*cm, ft*lbf) :Specified torque

P

C116866E10

AX

for Sedan:

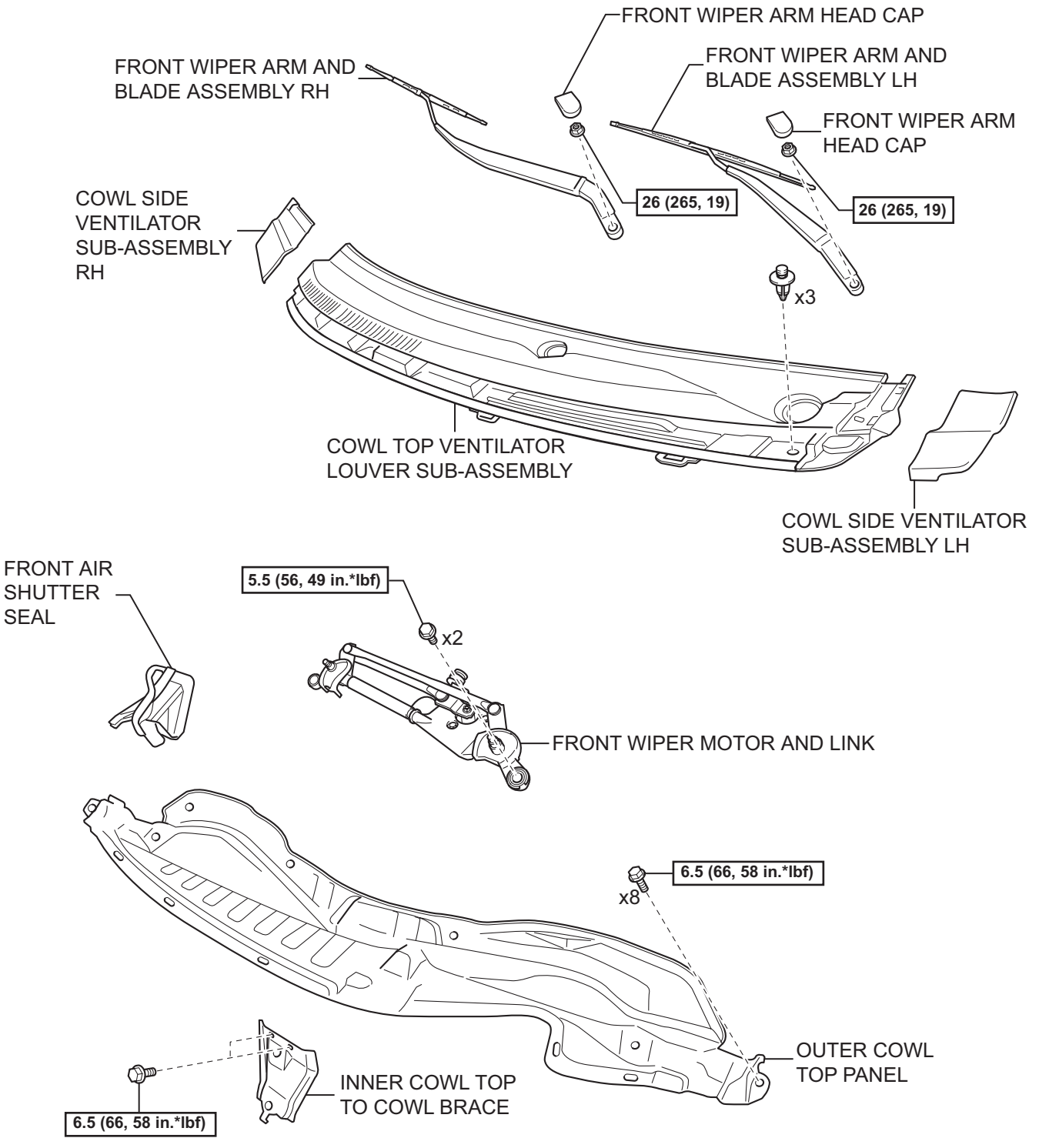

AX

N*m (kgf*cm, ft*lbf) : Specified torque

Y

A133320E07

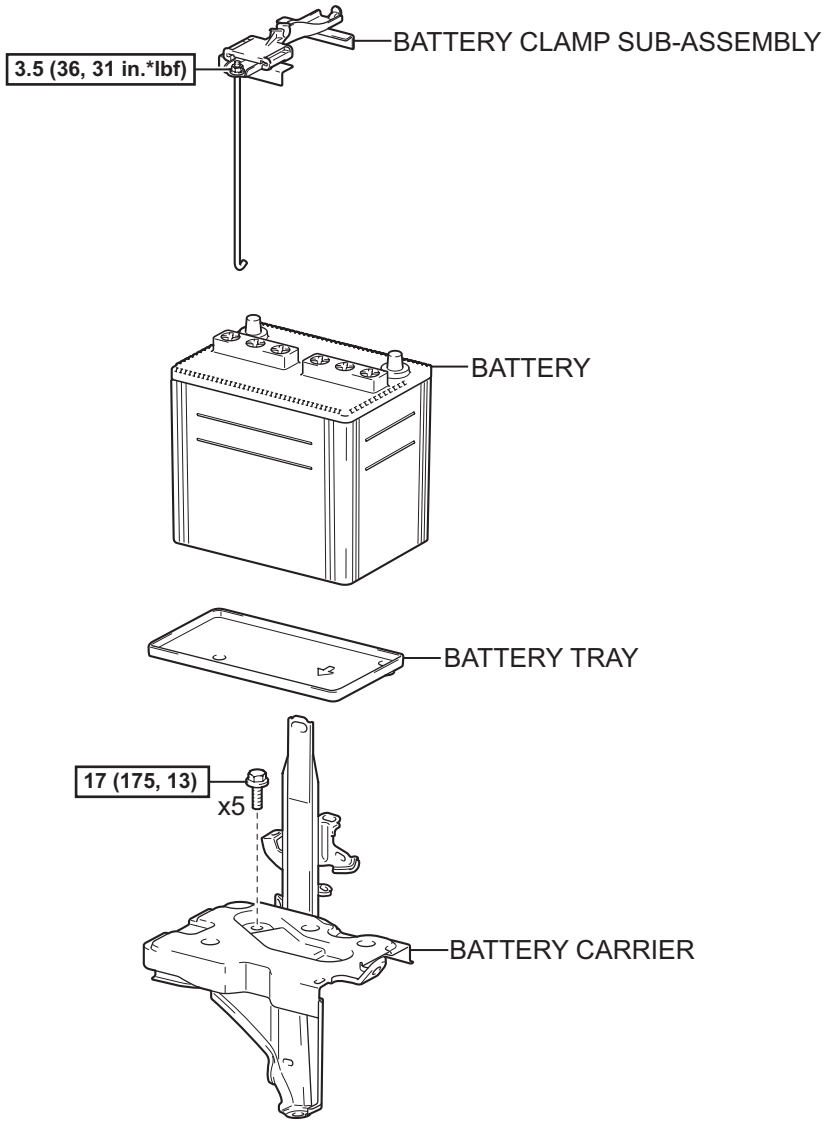

N*m (kgf*cm, ft*lbf) :Specified torque

P

C117082E01

AX

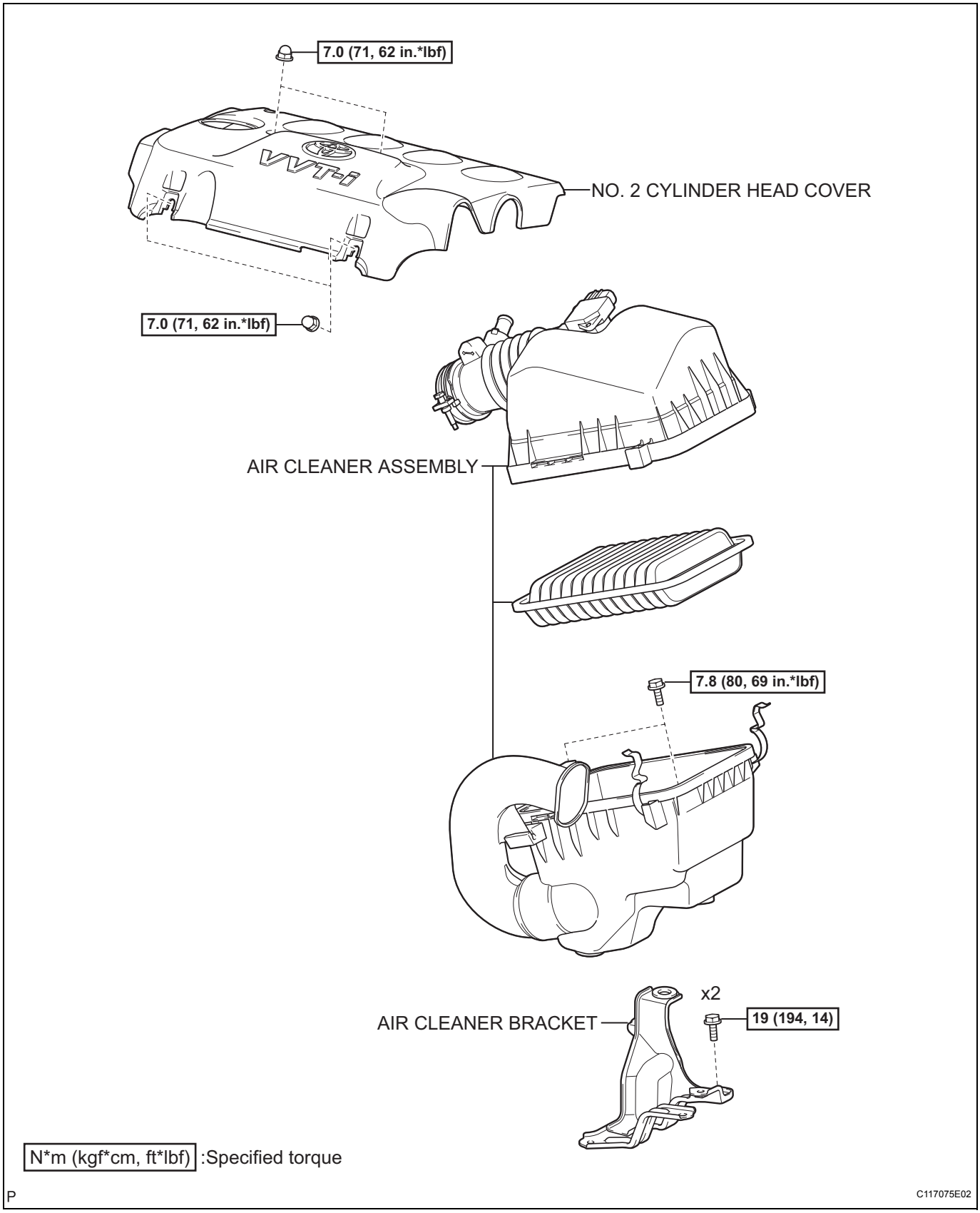
7.0 (71, 62 in.*lbf)
NO. 2 CYLINDER HEAD COVER
7.0 (71, 62 in.*lbf)
AIR CLEANER ASSEMBLY
7.8 (80, 69 in.*lbf)
x2
AIR CLEANER BRACKET
19 (194, 14)
N*m (kgf*cm, ft*lbf) :Specified torque
P
C117075E02

AX

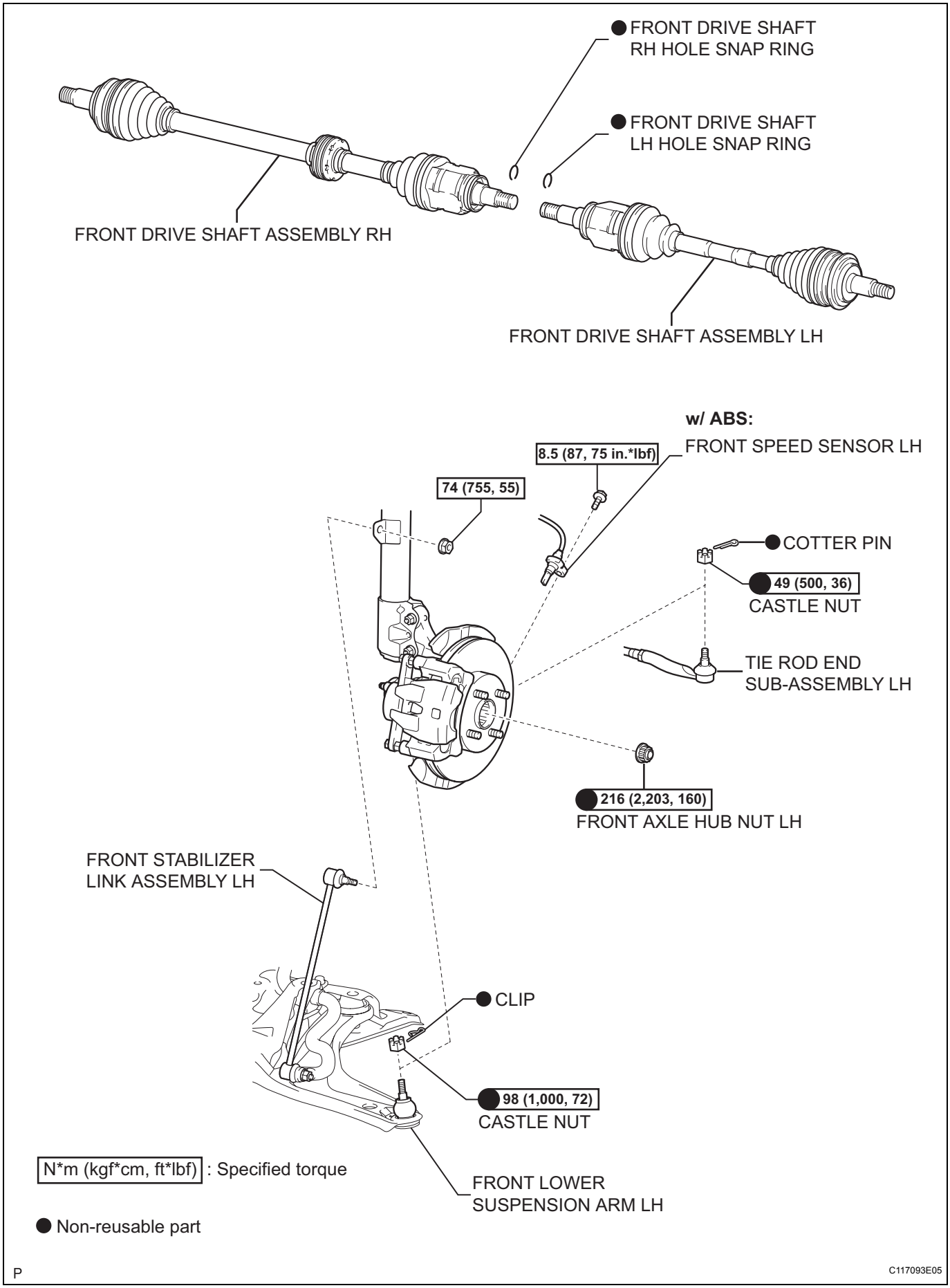
● FRONT DRIVE SHAFT RH HOLE SNAP RING
● FRONT DRIVE SHAFT LH HOLE SNAP RING
FRONT DRIVE SHAFT ASSEMBLY RH
FRONT DRIVE SHAFT ASSEMBLY LH
w/ ABS:
8.5 (87, 75 in.*lbf)
FRONT SPEED SENSOR LH
74 (755, 55)
● COTTER PIN
● 49 (500, 36)
CASTLE NUT
TIE ROD END SUB-ASSEMBLY LH
● 216 (2,203, 160)
FRONT AXLE HUB NUT LH
FRONT STABILIZER LINK ASSEMBLY LH
● CLIP
● 98 (1,000, 72)
CASTLE NUT
FRONT LOWER SUSPENSION ARM LH
N*m (kgf*cm, ft*lbf) : Specified torque
● Non-reusable part
P
C117093E05

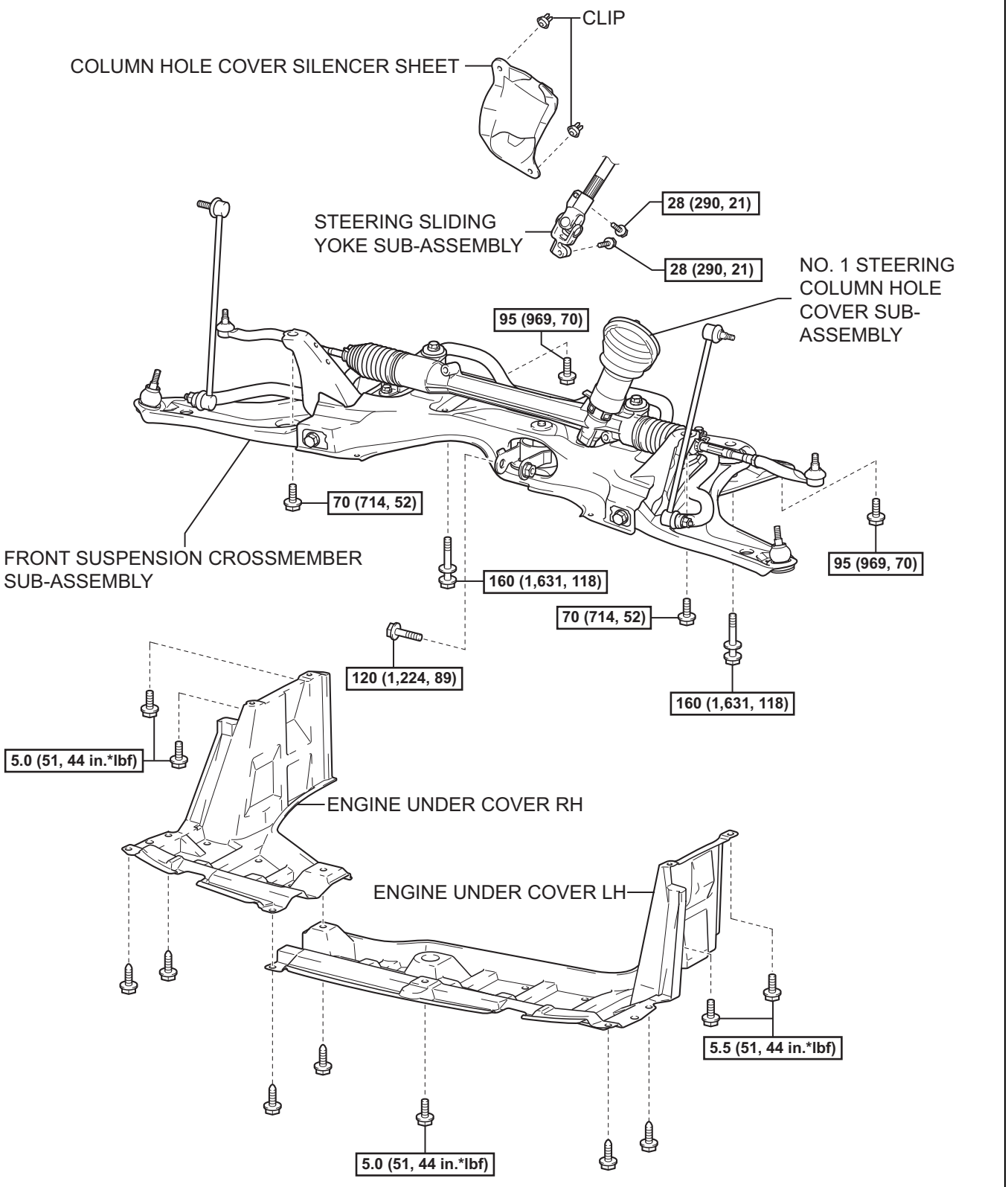

AX

N*m (kgf*cm, ft*lbf) :Specified torque

P

C117092E02

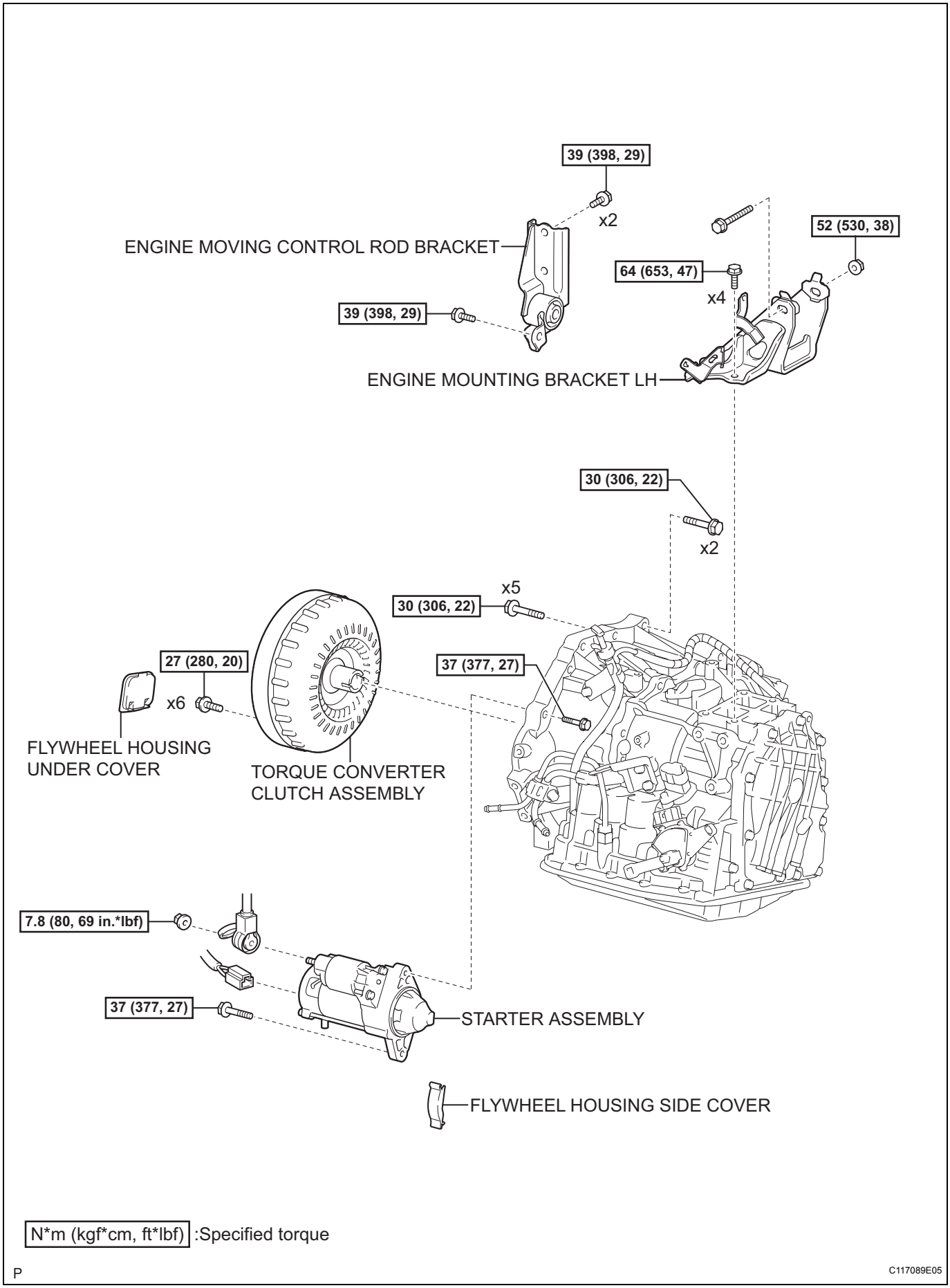

AX

N*m (kgf*cm, ft*lbf) :Specified torque

P

C117089E05

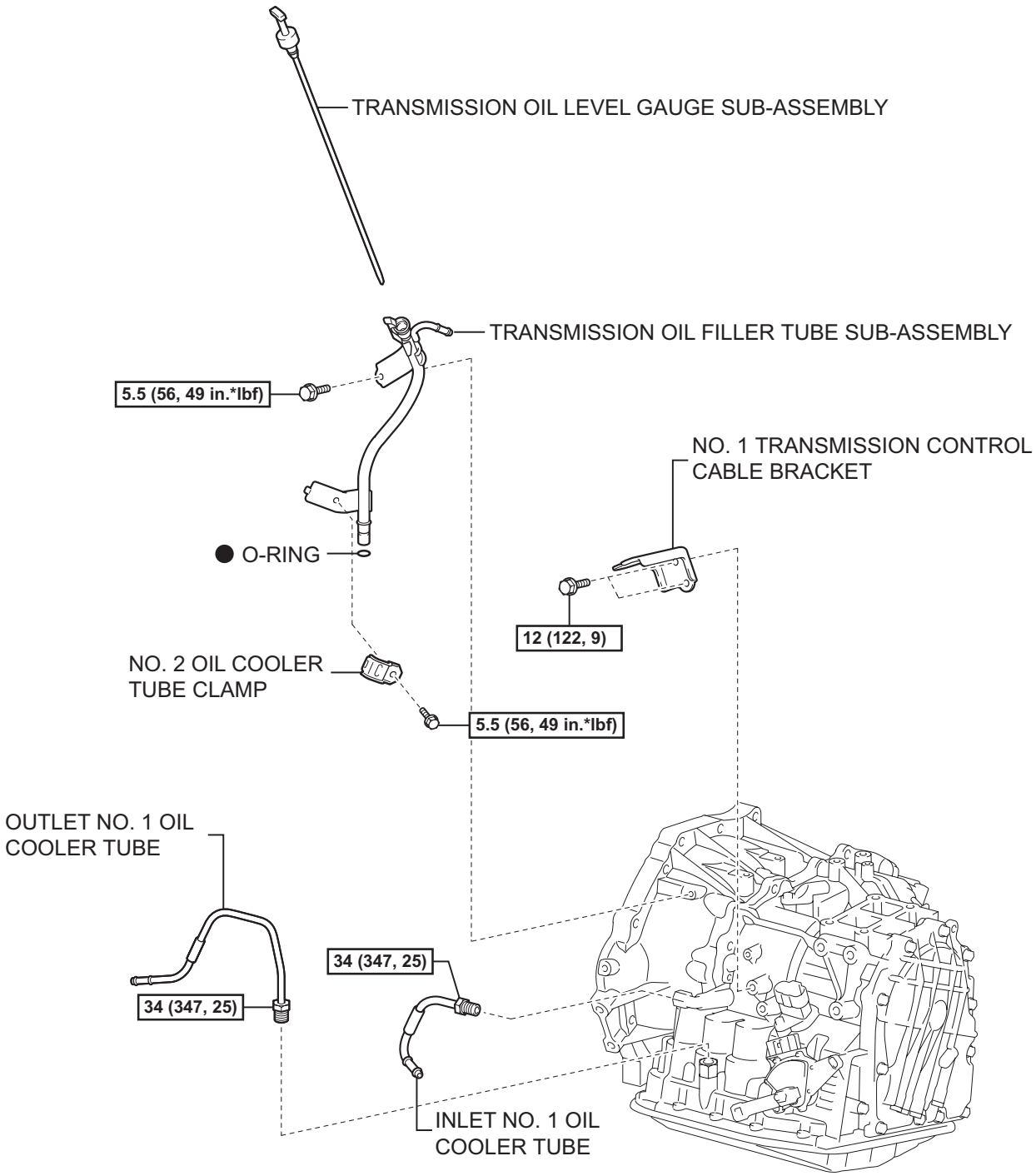

AX

N*m (kgf*cm, ft*lbf) : Specified torque

● Non-reusable part

P

C117090E02

REMOVAL

1. **REMOVE HOOD SUB-ASSEMBLY**
   Hatchback: (See page PS-74)
   Sedan: (See page PS-63)
2. **REMOVE FRONT WHEELS**
3. **REMOVE ENGINE UNDER COVER LH**
4. **REMOVE ENGINE UNDER COVER RH**
5. **DRAIN AUTOMATIC TRANSAXLE FLUID**
   (a) Remove the drain plug and gasket, and drain the ATF.
   (b) Install a new gasket and the drain plug.
   Torque: 49 N*m (500 kgf*cm, 36 ft.*lbf)
6. **REMOVE FRONT WIPER ARM HEAD CAP**
   Hatchback: (See page WW-17)
   Sedan: (See page WW-9)
7. **REMOVE FRONT WIPER ARM AND BLADE ASSEMBLY LH**
   Hatchback: (See page WW-17)
   Sedan: (See page WW-9)
8. **REMOVE FRONT WIPER ARM AND BLADE ASSEMBLY RH**
   Hatchback: (See page WW-17)
   Sedan: (See page WW-9)
9. **REMOVE HOOD TO COWL TOP SEAL (for Hatchback) (See page WW-18)**
10. **REMOVE COWL SIDE VENTILATOR SUB-ASSEMBLY LH (for Sedan) (See page WW-10)**
11. **REMOVE COWL SIDE VENTILATOR SUB-ASSEMBLY RH (for Sedan) (See page WW-10)**
12. **REMOVE COWL TOP VENTILATOR LOUVER SUB-ASSEMBLY**
    Hatchback: (See page WW-18)
    Sedan: (See page WW-10)
13. **REMOVE COWL TOP VENTILATOR LOUVER LH (for Hatchback) (See page WW-18)**
14. **REMOVE FRONT WIPER MOTOR AND LINK**
    Hatchback: (See page WW-19)
    Sedan: (See page WW-10)
15. **REMOVE COWL TO REGISTER DUCT SUB-ASSEMBLY (for Hatchback) (See page EM-122)**
16. **REMOVE FRONT AIR SHUTTER SEAL (for Sedan) (See page EM-123)**
17. **REMOVE OUTER COWL TOP PANEL**
    Hatchback: (See page EM-123)
    Sedan: (See page EM-123)
18. **REMOVE BATTERY (See page EM-122)**

19. **REMOVE BATTERY TRAY**

20. **REMOVE BATTERY CARRIER (See page EM-125)**

21. **REMOVE NO. 2 CYLINDER HEAD COVER (See page IG-9)**

22. **REMOVE AIR CLEANER ASSEMBLY (See page EM-124)**

23. **REMOVE AIR CLEANER BRACKET (See page EM-125)**

24. **POSITION WHEELS FACING STRAIGHT AHEAD**

25. **REMOVE COLUMN HOLE COVER SILENCER SHEET (See page SR-32)**

26. **SEPARATE STEERING SLIDING YOKE SUB-ASSEMBLY (See page PS-74)**

27. **SEPARATE NO. 1 STEERING COLUMN HOLE COVER SUB-ASSEMBLY (See page PS-75)**

28. **SEPARATE TRANSMISSION CONTROL CABLE ASSEMBLY (See page AX-106)**

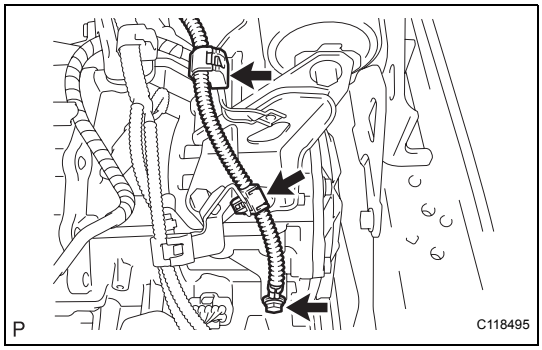

29. **SEPARATE NO. 3 ENGINE WIRE**
    (a) Remove the bolt and separate No. 3 engine wire from the automatic transaxle.
    (b) Separate the 2 clamps from the engine mount insulator.

30. **DISCONNECT CONNECTORS**
    (a) Separate the park neutral position switch connector and separate the clamp from the engine mount insulator LH.
    (b) Separate the transmission wire connector and separate the clamp from the engine mount insulator.
    (c) Separate the transmission revolution sensor connector.
    (d) Separate the vehicle speed sensor connector.

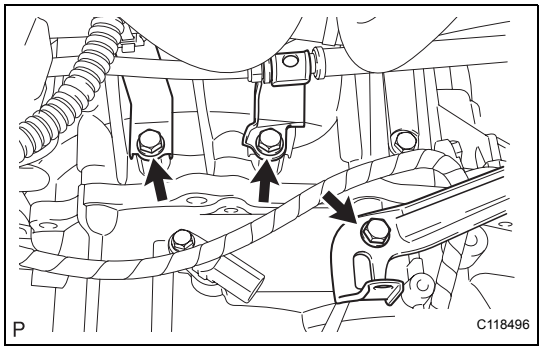

31. **DISCONNECT WIRE HARNESS**
    (a) Remove the 3 bolts and separate the 3 wire harness clamp brackets from the automatic transaxle.

32. **REMOVE STARTER ASSEMBLY (See page ST-9)**

33. **REMOVE FRONT AXLE HUB NUT LH (See page DS-3)**

34. **REMOVE FRONT AXLE HUB NUT RH**
    HINT:
    The removal procedure for the RH side is the same as that for the LH side.

35. **SEPARATE FRONT SPEED SENSOR LH (w/ ABS) (See page DS-3)**

36. **SEPARATE FRONT SPEED SENSOR RH (w/ ABS)**
    HINT:
    The separation procedure for the RH side is the same as that for the LH side.

AX

37. **SEPARATE FRONT STABILIZER LINK ASSEMBLY LH (See page DS-4)**

38. **SEPARATE FRONT STABILIZER LINK ASSEMBLY RH**
HINT:
The separation procedure for the RH side is the same as that for the LH side.

39. **SEPARATE TIE ROD END SUB-ASSEMBLY LH (See page DS-3)**

40. **SEPARATE TIE ROD END SUB-ASSEMBLY RH**
HINT:
The separation procedure for the RH side is the same as that for the LH side.

41. **SEPARATE FRONT LOWER SUSPENSION ARM LH (See page DS-4)**

42. **SEPARATE FRONT LOWER SUSPENSION ARM RH**
HINT:
The separation procedure for the RH side is the same as that for the LH side.

43. **REMOVE TRANSMISSION CASE PROTECTOR (w/o ABS) (See page AX-146)**

44. **REMOVE FRONT DRIVE SHAFT ASSEMBLY LH (See page DS-5)**

45. **REMOVE FRONT DRIVE SHAFT ASSEMBLY RH (See page DS-5)**

46. **SUSPEND ENGINE ASSEMBLY (See page PS-75)**

47. **SEPARATE INLET OIL COOLER HOSE**
(a) Separate the inlet oil cooler hose from inlet No. 1 oil cooler tube.

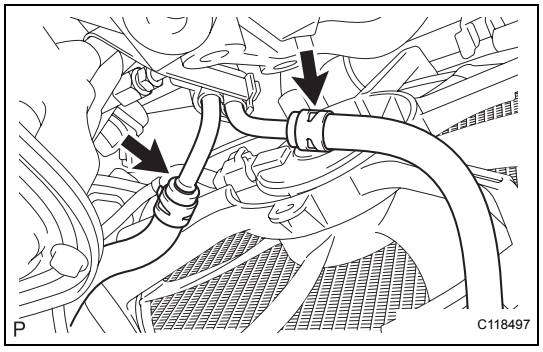

48. **SEPARATE OUTLET OIL COOLER HOSE**
(a) Separate the outlet oil cooler hose from outlet No. 1 oil cooler tube.

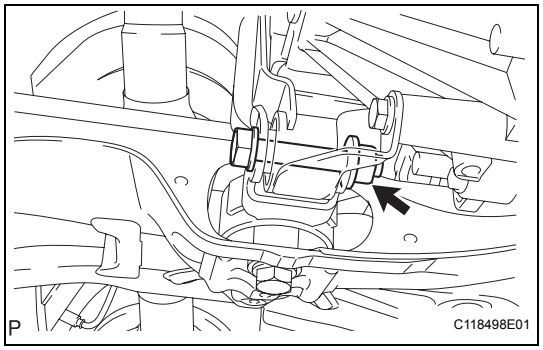

49. **SEPARATE ENGINE MOVING CONTROL ROD**
(a) Remove the bolt and nut and separate the engine moving control rod from the bracket.

50. **REMOVE FRONT SUSPENSION CROSSMEMBER SUB-ASSEMBLY (See page PS-76)**

AX

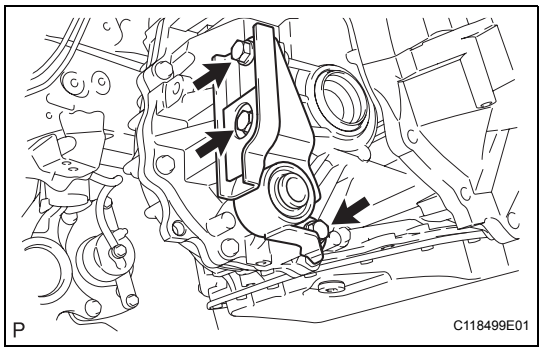

51. REMOVE ENGINE MOVING CONTROL ROD BRACKET

(a) Remove the 3 bolts and remove the engine moving control rod bracket.

52. SUPPORT AUTOMATIC TRANSAXLE ASSEMBLY

(a) Support the automatic transmission with the transmission jack.

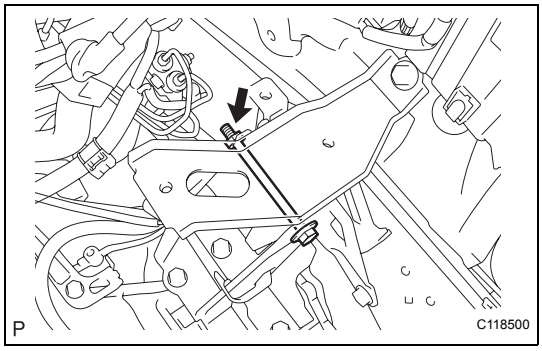

53. SEPARATE ENGINE MOUNTING INSULATOR LH

(a) Remove the bolt and nut and separate the engine mounting insulator LH from the bracket.

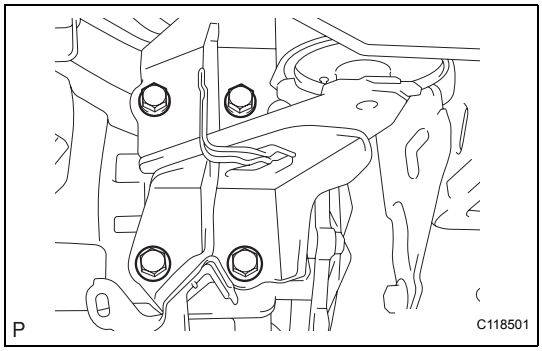

54. REMOVE ENGINE MOUNTING BRACKET LH

(a) Remove the 4 bolts and remove the engine mounting bracket LH from the automatic transaxle.

AX

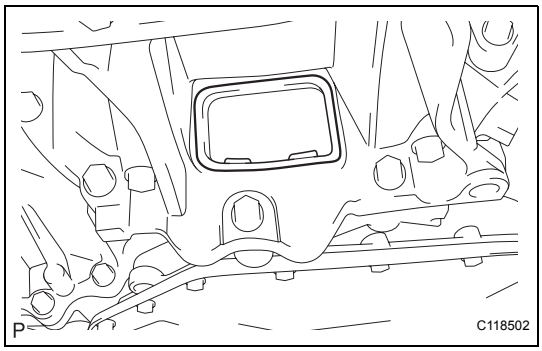

55. REMOVE AUTOMATIC TRANSAXLE ASSEMBLY

(a) Remove the flywheel housing under cover.

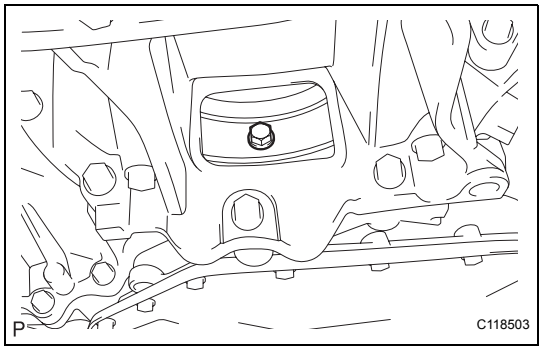

(b) Remove the 6 torque converter set bolts while holding the crankshaft pulley bolt with a wrench.

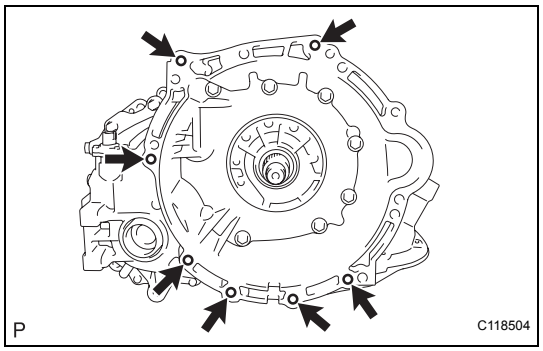

(c) Remove the 7 bolts and remove the automatic transmission from the engine.

56. REMOVE TORQUE CONVERTER CLUTCH ASSEMBLY

(a) Remove the torque converter clutch from the automatic transaxle.

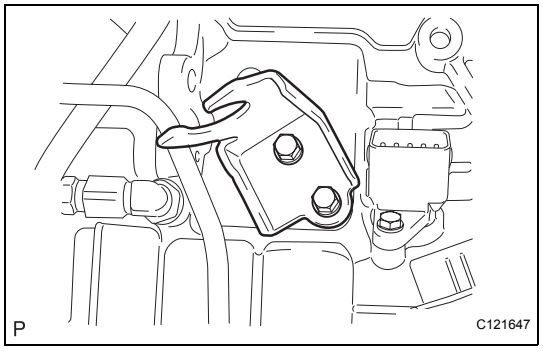

57. REMOVE NO. 1 TRANSMISSION CONTROL CABLE BRACKET

(a) Remove the 2 bolts and remove No. 1 transmission control cable bracket from the automatic transaxle.

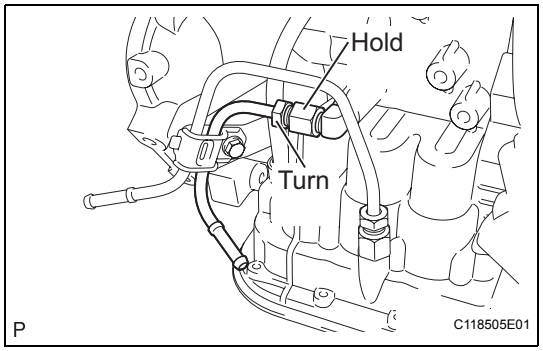

58. SEPARATE INLET NO. 1 OIL COOLER TUBE

(a) Using SST, remove the inlet oil cooler tube while holding the oil cooler tube union with a spanner.
SST 09023-12701

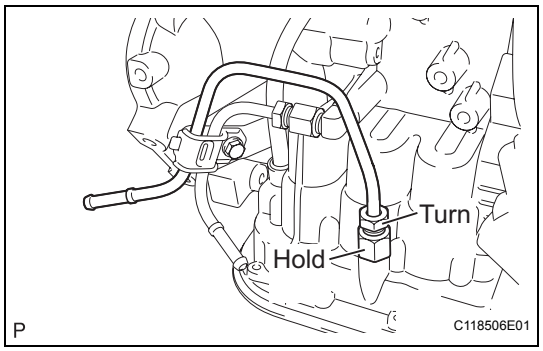

59. SEPARATE OUTLET NO. 1 OIL COOLER TUBE

(a) Using SST, remove the outlet oil cooler tube while holding the oil cooler tube union with a spanner.
SST 09023-12701

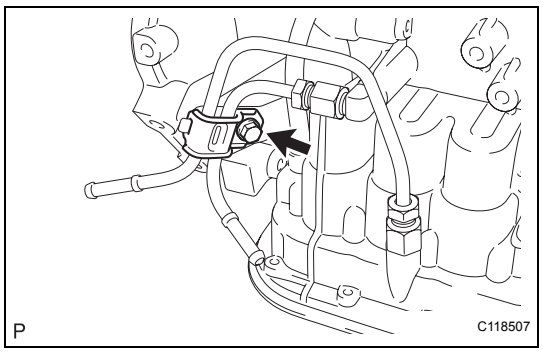

60. REMOVE NO. 2 OIL COOLER TUBE CLAMP

(a) Remove the bolt and remove No. 2 oil cooler tube clamp from the oil filler tube.

(b) Remove the inlet oil cooler tube and the outlet oil cooler tube from the automatic transaxle.

61. REMOVE TRANSMISSION OIL LEVEL GAUGE SUB-ASSEMBLY

(a) Remove the oil level gauge from the oil filler tube.

AX

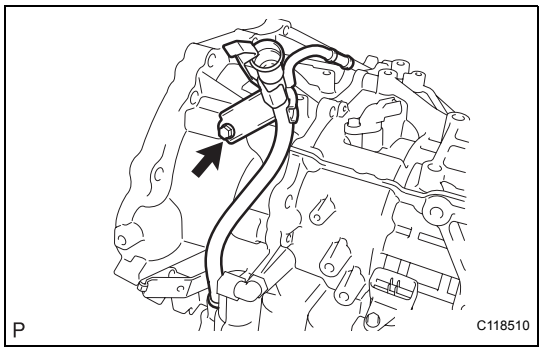

62. REMOVE TRANSMISSION OIL FILLER TUBE SUB-ASSEMBLY

(a) Remove the bolt and remove the oil filler tube.
(b) Remove the O-ring from the oil filler tube.

INSTALLATION

1. INSTALL TRANSMISSION OIL FILLER TUBE SUB-ASSEMBLY

(a) Apply ATF to a new O-ring, and install it onto the oil filler tube.

(b) Install the oil filler tube onto the automatic transaxle with the bolt.
Torque: 5.5 N*m (56 kgf*cm, 49 in.*lbf)

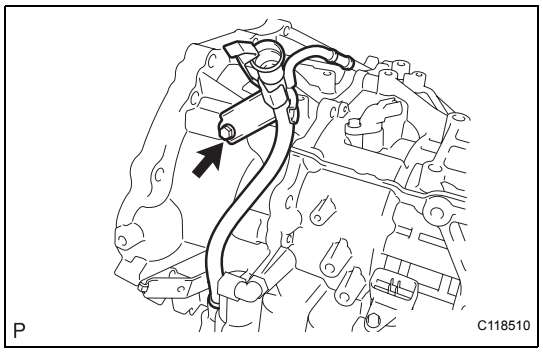

2. INSTALL TRANSMISSION OIL LEVEL GAUGE SUB-ASSEMBLY

(a) Install the oil level gauge into the oil filler tube.

3. INSTALL NO. 2 OIL COOLER TUBE CLAMP

(a) Provisionally install outlet No. 1 oil cooler tube into the oil cooler tube union.

(b) Provisionally install inlet No. 1 oil cooler tube into the oil cooler tube union.

(c) Provisionally install No. 2 oil cooler tube clamp onto the oil level gauge with the bolt.
Torque: 5.5 N*m (56 kgf*cm, 49 in.*lbf)

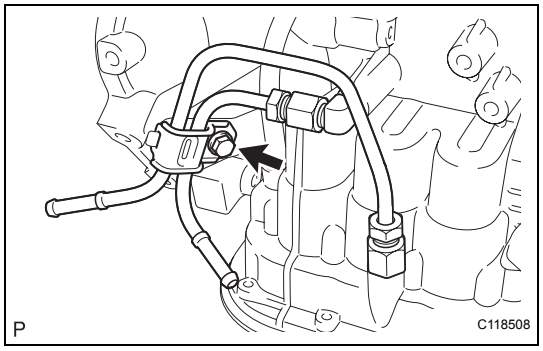

4. INSTALL OUTLET NO. 1 OIL COOLER TUBE

(a) Using SST, install outlet No. 1 oil cooler tube while holding the oil cooler tube union with a spanner.
SST 09023-12701
Torque: 34 N*m (347 kgf*cm, 25 ft.*lbf)

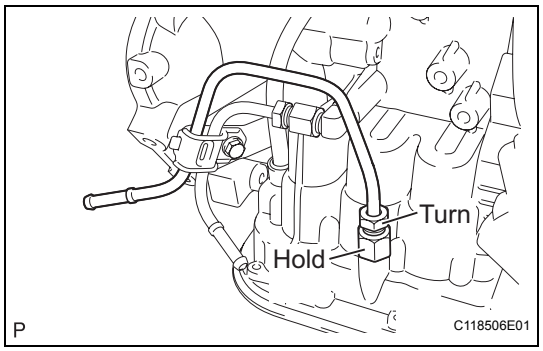

5. INSTALL INLET NO. 1 OIL COOLER TUBE

(a) Using SST, install inlet No. 1 oil cooler tube while holding the oil cooler tube union with a spanner.
SST 09023-12701
Torque: 34 N*m (347 kgf*cm, 25 ft.*lbf)

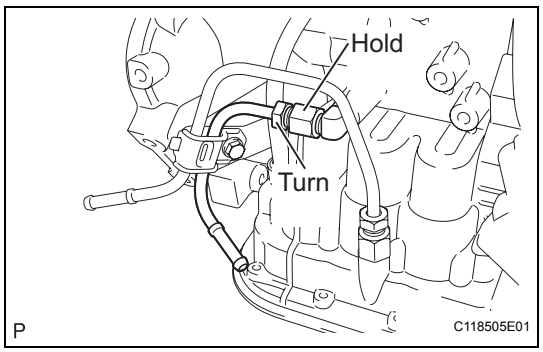

AX

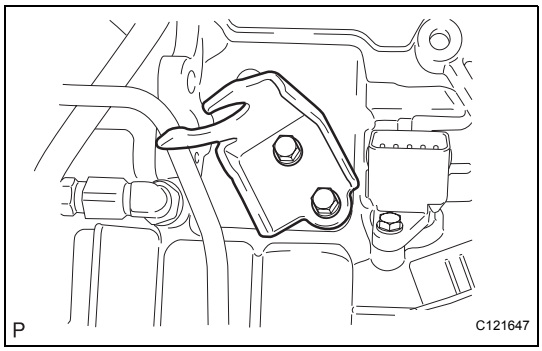

6. INSTALL NO. 1 TRANSMISSION CONTROL CABLE BRACKET

(a) Install No. 1 transmission control cable bracket onto the automatic transaxle with the 2 bolts.
Torque: 12 N*m (122 kgf*cm, 9 ft.*lbf)

7. INSPECT TORQUE CONVERTER CLUTCH ASSEMBLY (See page AX-171)

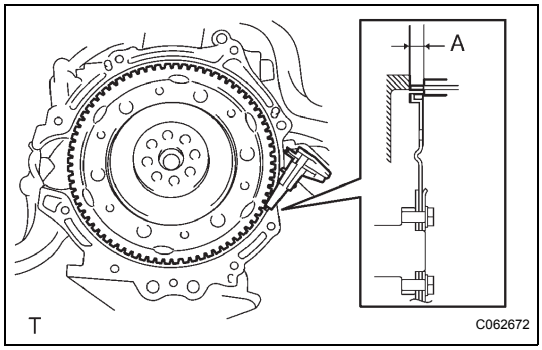

8. INSTALL TORQUE CONVERTER CLUTCH ASSEMBLY

(a) Using vernier calipers, measure dimension A between the transaxle fitting part of the engine and the converter fitting part of the drive plate.

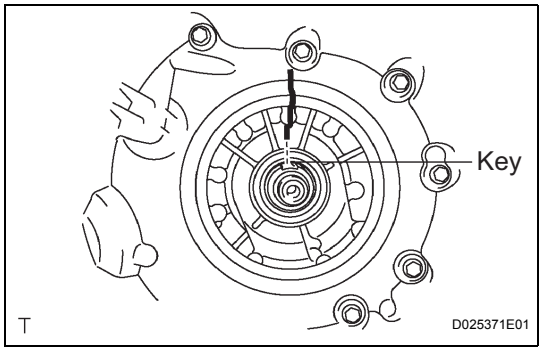

(b) Set the key at the top of the front oil pump drive gear and put a mark on the housing.

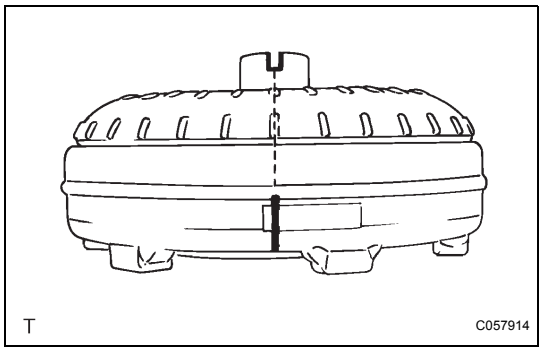

(c) Put a mark on the torque converter so that its groove is clearly indicated.

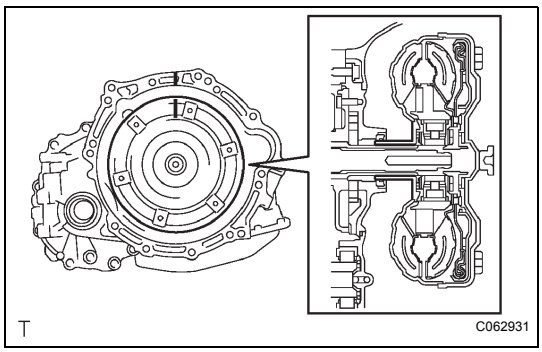

(d) Align the mark on the case with the one on the converter and fit the spline of the input shaft to the spline of the turbine runner.

AX

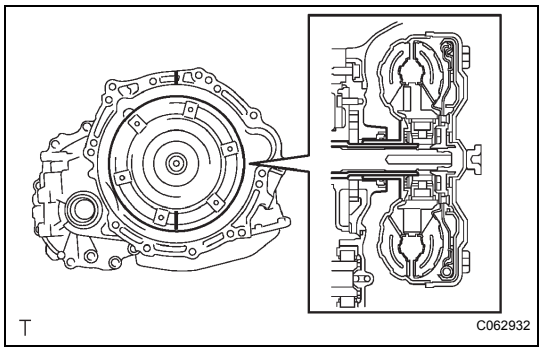

(e) Rotating the converter, fit the spline of the stator shaft with that of the stator.
HINT:
Rotate it approximately 180 degrees.

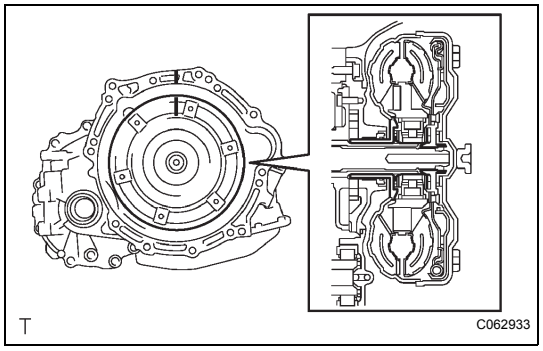

(f) Rotating the converter, align the mark on the case with the one on the converter again and fit the key of the oil pump drive gear into the keyway of the converter.
NOTICE:
Do not push the converter excessively when rotating it.

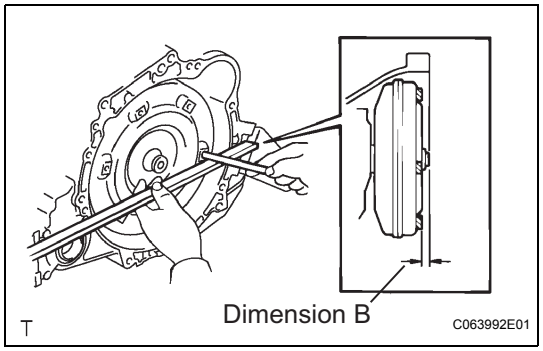

(g) Using vernier calipers and a straight edge, measure dimension B shown in the illustration and check that dimension B is greater than dimension A, which was measured in step (a).
Standard:
A + 1 mm (0.04 in.) or more
NOTICE:
Subtract the thickness of the straight edge from the measured value to gain dimension B.

AX

9. INSTALL AUTOMATIC TRANSAXLE ASSEMBLY

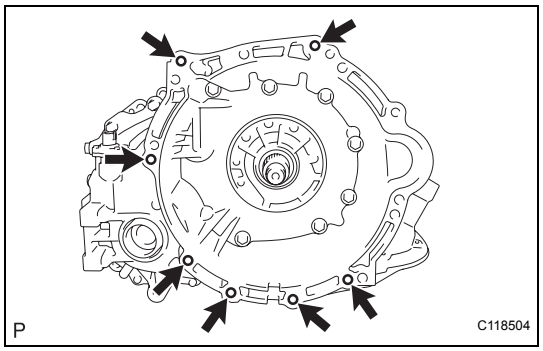

(a) Install the automatic transaxle onto the engine with the 7 bolts.
Torque: 30 N*m (306 kgf*cm, 22 ft.*lbf)

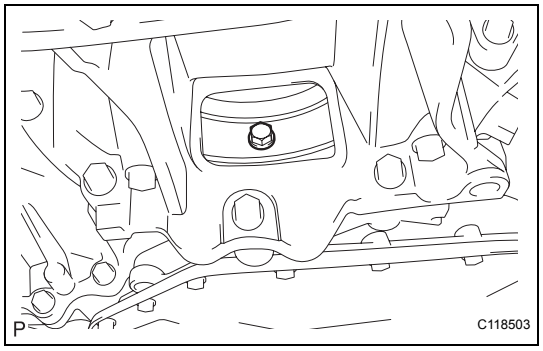

(b) Install the 6 torque converter set bolts while holding the crankshaft pulley bolt with a wrench.
Torque: 27 N*m (280 kgf*cm, 20 ft.*lbf)

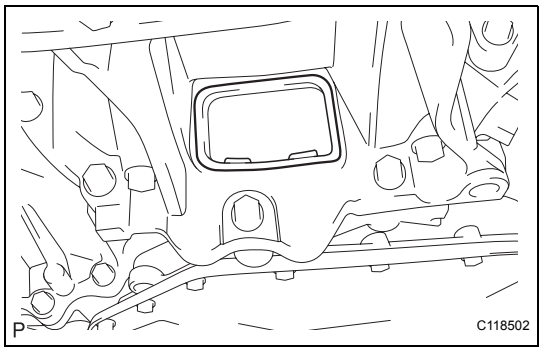

(c) Install the flywheel housing under cover.

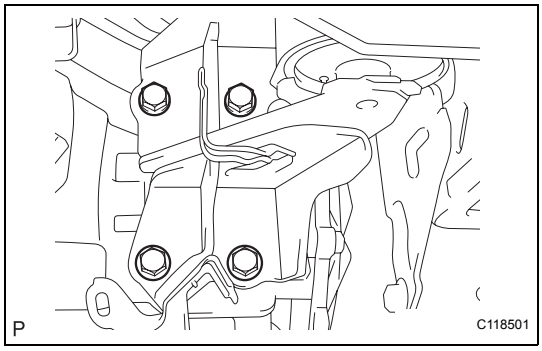

10. INSTALL ENGINE MOUNTING BRACKET LH

(a) Install the engine mounting bracket LH onto the automatic transaxle with the 4 bolts.
Torque: 64 N*m (653 kgf*cm, 47 ft.*lbf)

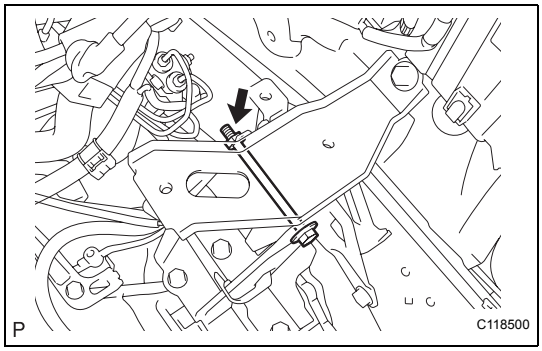

11. INSTALL ENGINE MOUNTING INSULATOR LH

(a) Install the engine mounting insulator LH and the engine mounting bracket LH with the bolt and nut.
Torque: 52 N*m (530 kgf*cm, 38 ft.*lbf)

AX

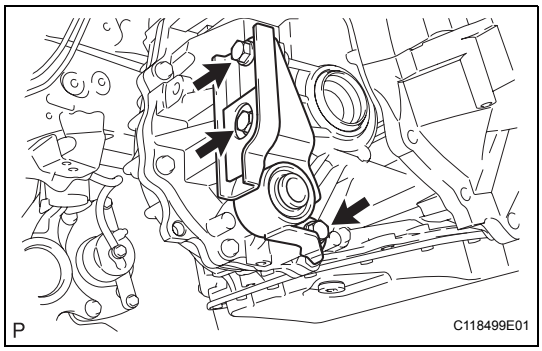

12. INSTALL ENGINE MOVING CONTROL ROD BRACKET

(a) Install the engine moving control bracket onto the automatic transaxle with the 3 bolts.
Torque: 39 N*m (398 kgf*cm, 29 ft.*lbf)

13. INSTALL FRONT SUSPENSION CROSSMEMBER SUB-ASSEMBLY (See page PS-77)

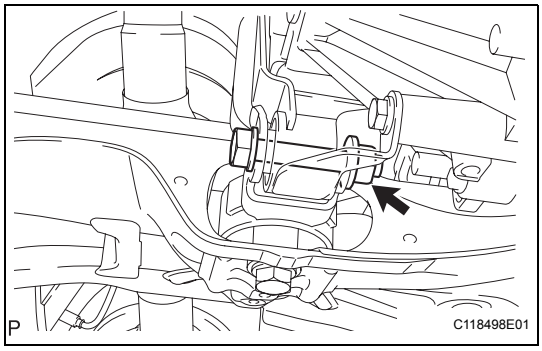

14. INSTALL ENGINE MOVING CONTROL ROD

(a) Install the engine moving control rod and the engine moving control bracket with the bolt and nut.
Torque: 120 N*m (1,224 kgf*cm, 89 ft.*lbf)

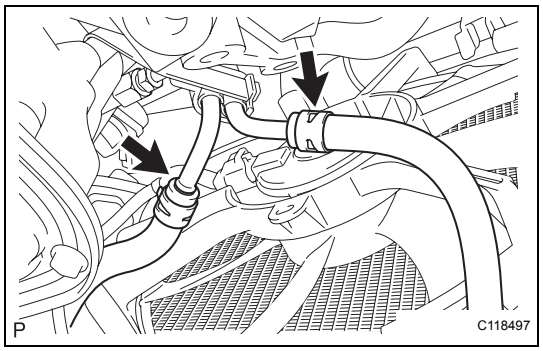

15. **INSTALL OUTLET OIL COOLER HOSE**
    (a) Install the outlet oil cooler hose onto the outlet oil cooler tube.
16. **INSTALL INLET OIL COOLER HOSE**
    (a) Install the inlet oil cooler hose onto the inlet oil cooler tube.
17. **INSTALL FRONT DRIVE SHAFT ASSEMBLY LH (See page DS-13)**
18. **INSTALL FRONT DRIVE SHAFT ASSEMBLY RH (See page DS-14)**
19. **REMOVE TRANSMISSION CASE PROTECTOR (w/o ABS) (See page AX-147)**
20. **INSTALL FRONT LOWER SUSPENSION ARM LH (See page DS-14)**
21. **INSTALL FRONT LOWER SUSPENSION ARM RH**
    HINT:
    The installation procedure for the RH side is the same as that for the LH side.
22. **INSTALL TIE ROD END SUB-ASSEMBLY LH (See page DS-15)**
23. **INSTALL TIE ROD END SUB-ASSEMBLY RH**
    HINT:
    The installation procedure for the RH side is the same as that for the LH side.
24. **INSTALL FRONT STABILIZER LINK ASSEMBLY LH (See page DS-14)**
25. **INSTALL FRONT STABILIZER LINK ASSEMBLY RH**
    HINT:
    The installation procedure for the RH side is the same as that for the LH side.
26. **INSTALL FRONT SPEED SENSOR LH (w/ ABS) (See page DS-15)**
27. **INSTALL FRONT SPEED SENSOR RH (w/ ABS)**
    HINT:
    The installation procedure for the RH side is the same as that for the LH side.
28. **INSTALL FRONT AXLE HUB NUT LH (See page DS-15)**
29. **INSTALL FRONT AXLE HUB NUT RH**
    HINT:
    The installation procedure for the RH side is the same as that for the LH side.
30. **INSTALL STARTER ASSEMBLY (See page ST-17)**

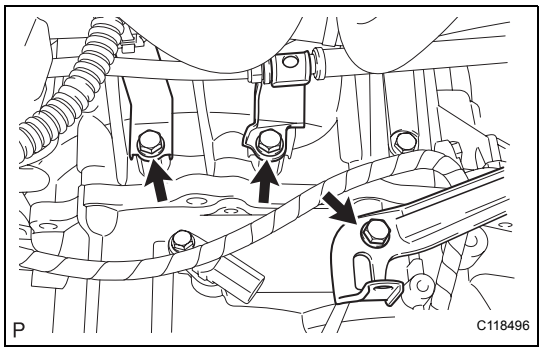

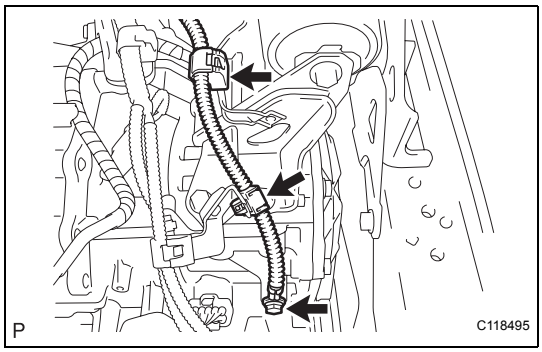

31. **CONNECT WIRE HARNESS**
    (a) Install the 3 wire harness clamp brackets onto the automatic transaxle with the 3 bolts.
    Torque: 5.0 N*m (51 kgf*cm, 44 in.*lbf)

32. **CONNECT CONNECTOR**
    (a) Connect the vehicle speed sensor connector.
    (b) Connect the transmission revolution sensor connector.
    (c) Connect the transmission wire connector and install the clamp onto the engine mount insulator.
    (d) Connect the park neutral position switch connector and install the clamp onto the engine mount insulator.

33. **INSTALL NO. 3 ENGINE WIRE**
    (a) Install No. 3 engine wire onto the automatic transaxle with the bolt.
    Torque: 7.4 N*m (75 kgf*cm, 65 in.*lbf)
    (b) Install the 2 clamps onto the engine mount insulator.

34. **INSTALL TRANSMISSION CONTROL CABLE ASSEMBLY (See page AX-109)**

35. **INSTALL NO. 1 STEERING COLUMN HOLE COVER SUB-ASSEMBLY (See page PS-79)**

36. **INSTALL STEERING SLIDING YOKE SUB-ASSEMBLY (See page PS-79)**

37. **INSTALL COLUMN HOLE COVER SILENCER SHEET (See page PS-79)**

38. **INSTALL AIR CLEANER BRACKET (See page EM-145)**

39. **INSTALL AIR CLEANER ASSEMBLY (See page EM-146)**

40. **INSTALL NO. 2 CYLINDER HEAD COVER (See page IG-10)**

41. **INSTALL BATTERY CARRIER (See page EM-145)**

42. **INSTALL BATTERY TRAY**

43. **INSTALL BATTERY (See page EM-148)**

44. **INSTALL OUTER COWL TOP PANEL**
    Hatchback: (See page EM-146)
    Sedan: (See page EM-147)

45. **INSTALL COWL TO REGISTER DUCT SUB-ASSEMBLY (for Hatchback) (See page EM-147)**

46. **INSTALL FRONT AIR SHUTTER SEAL (for Sedan) (See page EM-148)**

47. **INSTALL FRONT WIPER MOTOR AND LINK**
    Hatchback: (See page WW-21)
    Sedan: (See page WW-12)

48. **INSTALL COWL TOP VENTILATOR LOUVER LH (for Hatchback) (See page WW-21)**

49. **INSTALL COWL TOP VENTILATOR LOUVER SUB-ASSEMBLY**
Hatchback: (See page WW-21)
Sedan: (See page WW-12)

50. **INSTALL HOOD TO COWL TOP SEAL (for Hatchback) (See page WW-22)**

51. **INSTALL COWL SIDE VENTILATOR SUB-ASSEMBLY LH (for Sedan) (See page WW-13)**

52. **INSTALL COWL SIDE VENTILATOR SUB-ASSEMBLY RH (for Sedan) (See page WW-13)**

53. **INSTALL FRONT WIPER ARM AND BLADE ASSEMBLY LH**
Hatchback: (See page WW-22)
Sedan: (See page WW-13)

54. **INSTALL FRONT WIPER ARM AND BLADE ASSEMBLY RH**
Hatchback: (See page WW-23)
Sedan: (See page WW-14)

55. **INSTALL FRONT WIPER ARM HEAD CAP**
Hatchback: (See page WW-23)
Sedan: (See page WW-15)

56. **INSPECT HOOD**
Hatchback: (See page ED-3)
Sedan: (See page ED-1)

57. **ADJUST HOOD**
Hatchback: (See page ED-4)
Sedan: (See page ED-2)

58. **ADD AUTOMATIC TRANSAXLE FLUID**
Fluid type:
T-WS
Capacity:
2.9 liters (3.1 US qts, 2.6 Imp. qts)

59. **INSPECT AUTOMATIC TRANSAXLE FLUID (See page AX-93)**

60. **CHECK AUTOMATIC TRANSAXLE FLUID LEAKAGE**

61. **ADJUST SHIFT LEVER POSITION (See page AX-137)**

62. **INSPECT SHIFT LEVER POSITION (See page AX-134)**

63. **INSTALL ENGINE UNDER COVER RH**

64. **INSTALL ENGINE UNDER COVER LH**

65. **INSTALL FRONT WHEELS**
Torque: 103 N*m (1050 kgf*cm, 76 ft.*lbf)

66. **INSPECT AND ADJUST FRONT WHEEL ALIGNMENT**
(See page SP-2)

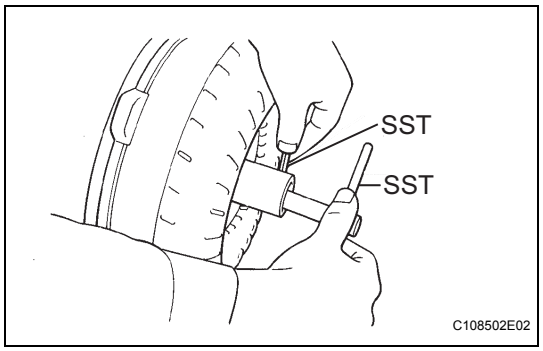

TORQUE CONVERTER CLUTCH AND DRIVE PLATE

INSPECTION

1. INSPECT TORQUE CONVERTER CLUTCH ASSEMBLY

(a) Inspect the one-way clutch.

(1) Install SST so that it fits into notch of the converter hub and the notch of the outer race of the one-way clutch.

SST 09350-32014 (09351-32010, 09351-32020)

(2) Press on the serrations of the stator with a finger and rotate it.

Check that it rotates smoothly when turned clockwise and locks up when turned counterclockwise.

SST 09350-32014 (09351-32010, 09351-32020)

If necessary, clean the converter and check the one-way clutch.

Replace the converter if the one-way clutch still does not operate as specified.

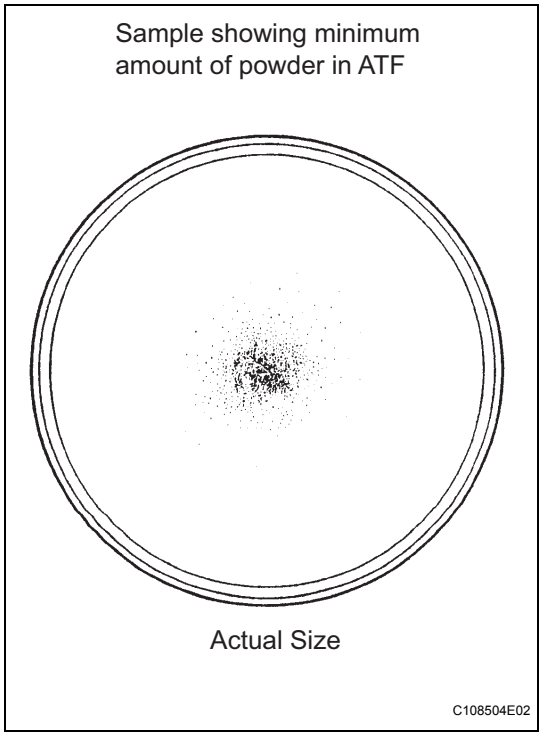

(b) Check the condition of the torque converter clutch assembly.

(1) If the inspection result of the torque converter clutch assembly meets any of the cases mentioned below, replace the torque converter clutch.

Malfunction Item:

Any metallic sound is heard from the torque converter clutch during stall test or when the shift lever is in the N position.
The one-way clutch is released or locked in both directions.
Fine powder exceeding the sample limit is identified in ATF.
(See the sample.)

HINT:

The sample shows approximately. 0.25 liters (0.26 US qts, 0.22 lmp. qts) of ATF that is taken out from the removed torque converter clutch.

(c) Replace the ATF in the torque converter clutch.

(1) If the ATF is discolored and/or has a foul odor, completely stir the ATF in the torque converter clutch and drain it with the installation surface facing up.

AX

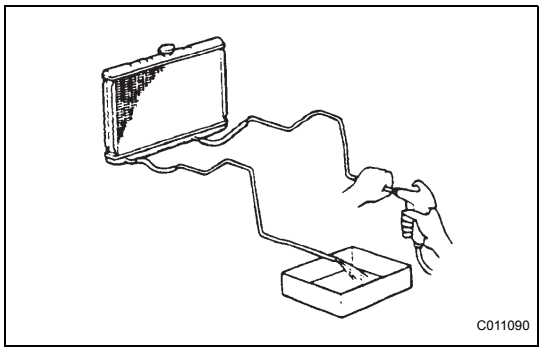

(d) Clean and check the oil cooler and oil pipe line.
(1) If the torque converter clutch is inspected or the ATF is changed, clean the oil cooler and oil pipe line.
HINT:
- Spray compressed air of 196 kpa (2 kgf/cm^2, 28 psi) from the inlet hose.
- If excessive fine powder is found in the ATF, add new ATF using a bucket pump and clean it again.

(2) If the ATF is cloudy, inspect the oil cooler (radiator).

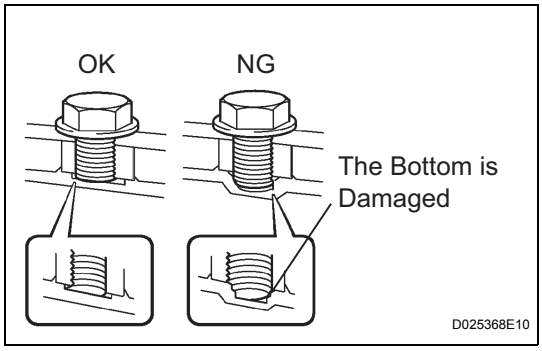

2. INSPECT DRIVE PLATE AND RING GEAR

(a) Set up a dial indicator and measure the drive plate runout.
Maximum runout:
0.20 mm (0.0079 in.)
If the runout is not within the specification or the ring gear is damaged, replace the drive plate.

(b) Check the ring gear for damage.

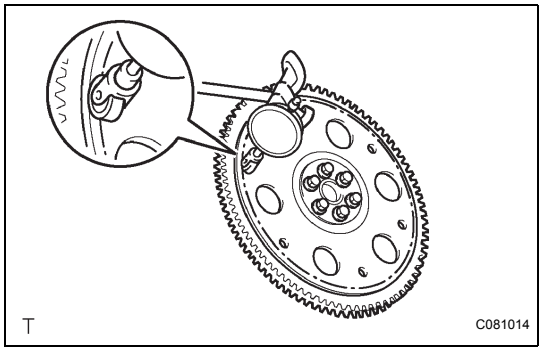

AX

AUTOMATIC TRANSAXLE UNIT

COMPONENTS

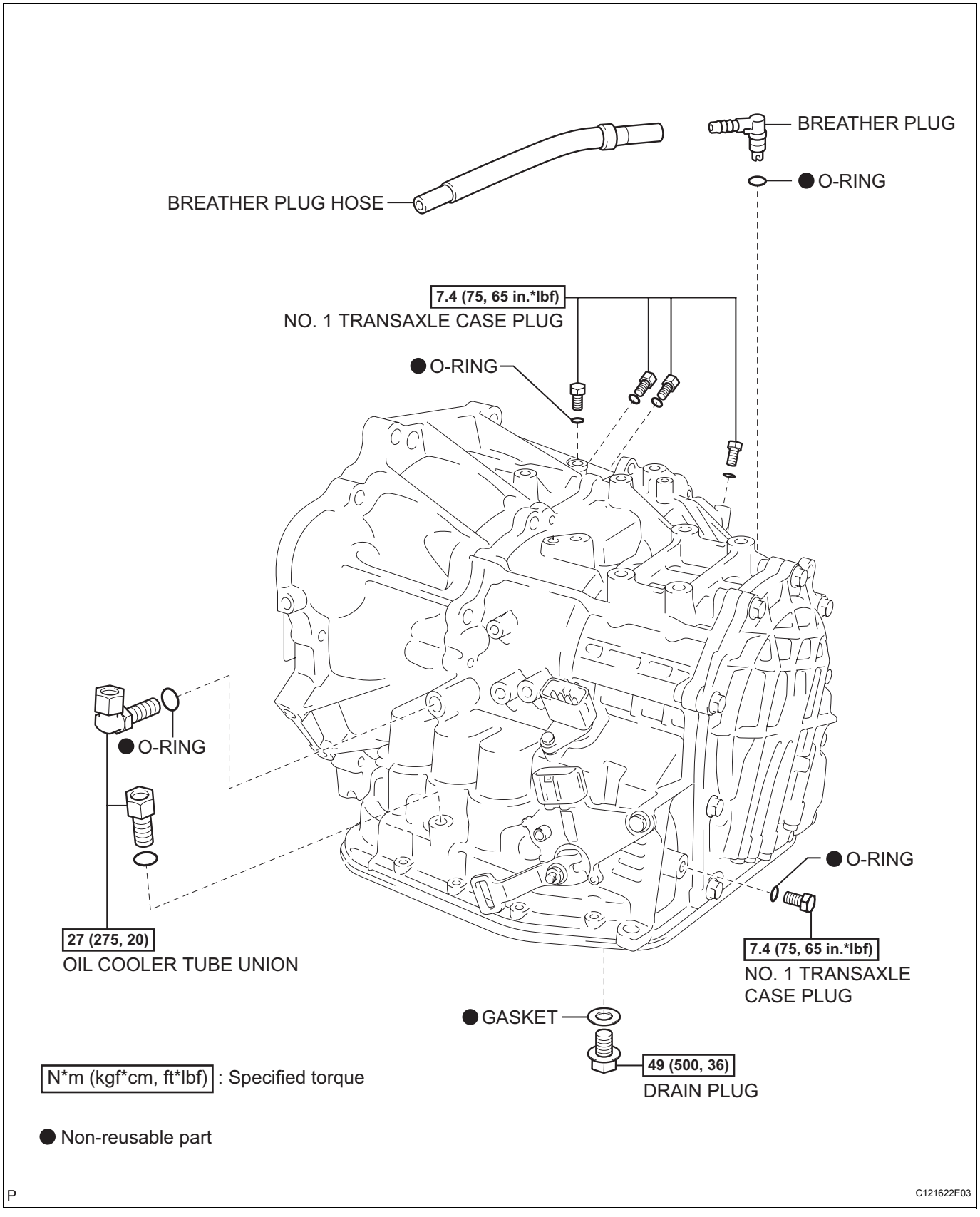

AX

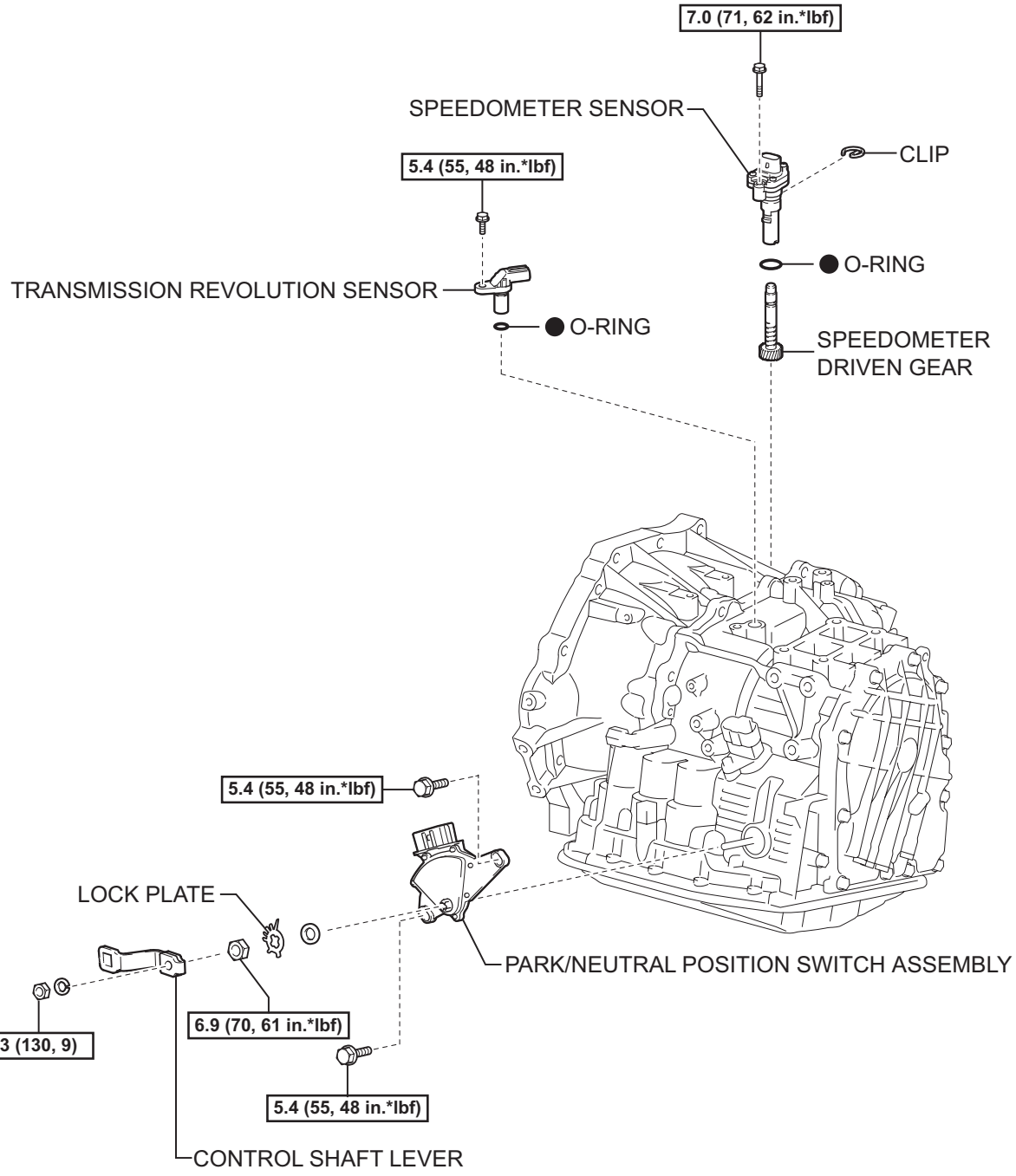

AX

N*m (kgf*cm, ft*lbf) : Specified torque

● Non-reusable part

P

C121623E04

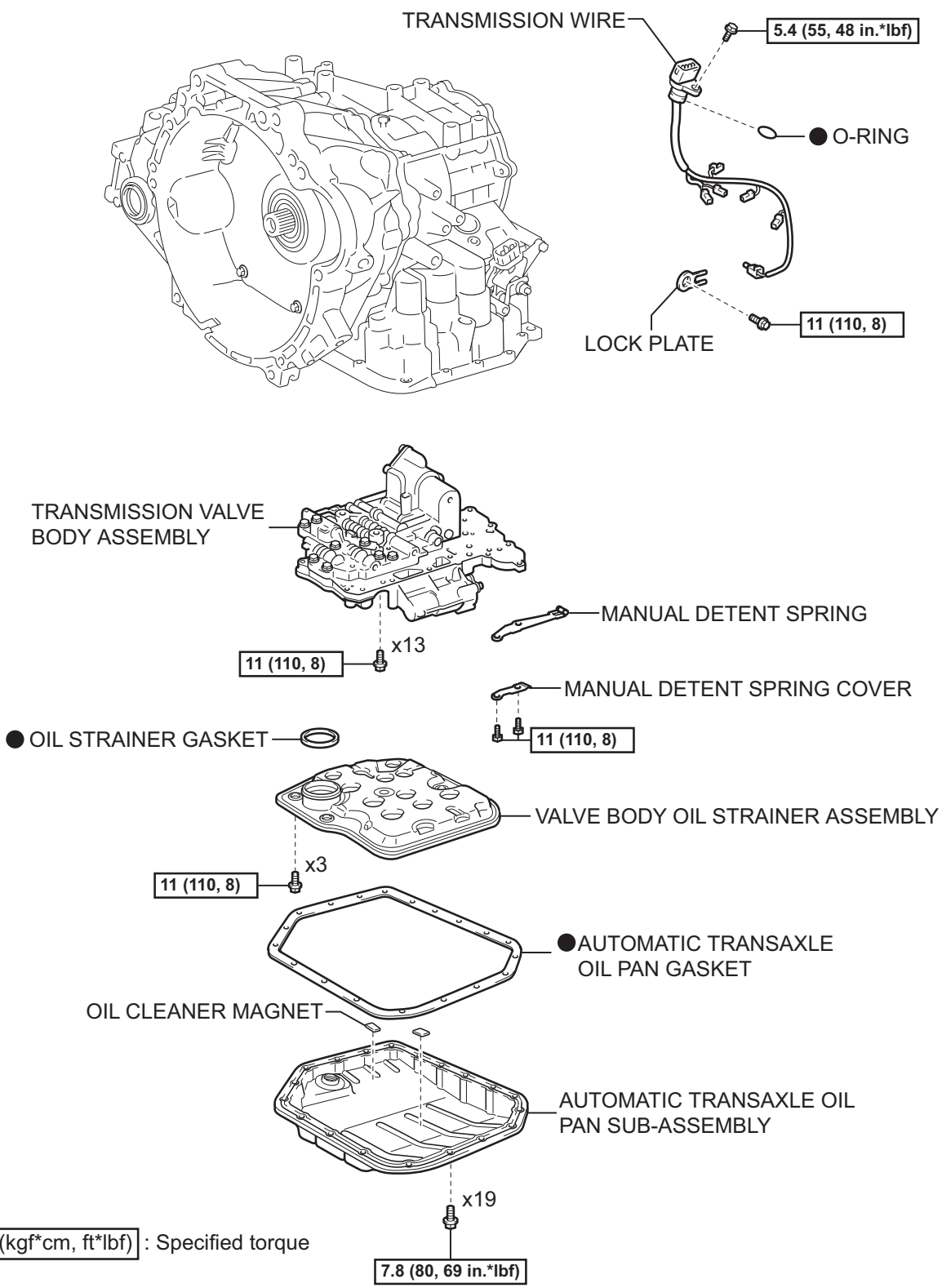

AX

P

C121626E01

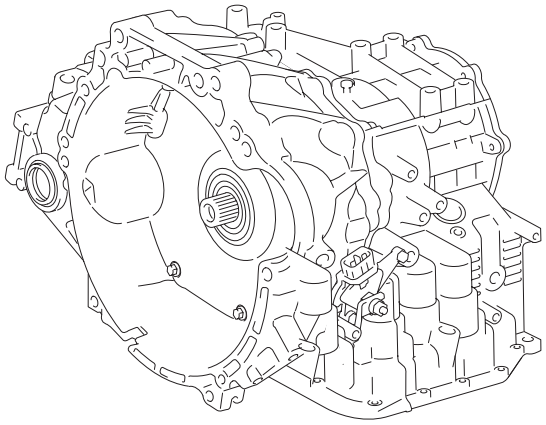

● BRAKE DRUM GASKET

● TRANSAXLE CASE GASKET

● TRANSAXLE CASE 2ND BRAKE GASKET

CHECK BALL BODY COMPRESSION SPRING

CHECK BALL BODY

C-2 ACCUMULATOR PISTON COMPRESSION SPRING

C-3 ACCUMULATOR PISTON COMPRESSION SPRING

B-2 ACCUMULATOR PISTON COMPRESSION SPRING

C-2 ACCUMULATOR PISTON

C-3 ACCUMULATOR PISTON

B-2 ACCUMULATOR PISTON

● C-2 ACCUMULATOR PISTON O-RING

● C-3 ACCUMULATOR PISTON O-RING

● B-2 ACCUMULATOR PISTON O-RING

● Non-reusable part

P

C121627E03

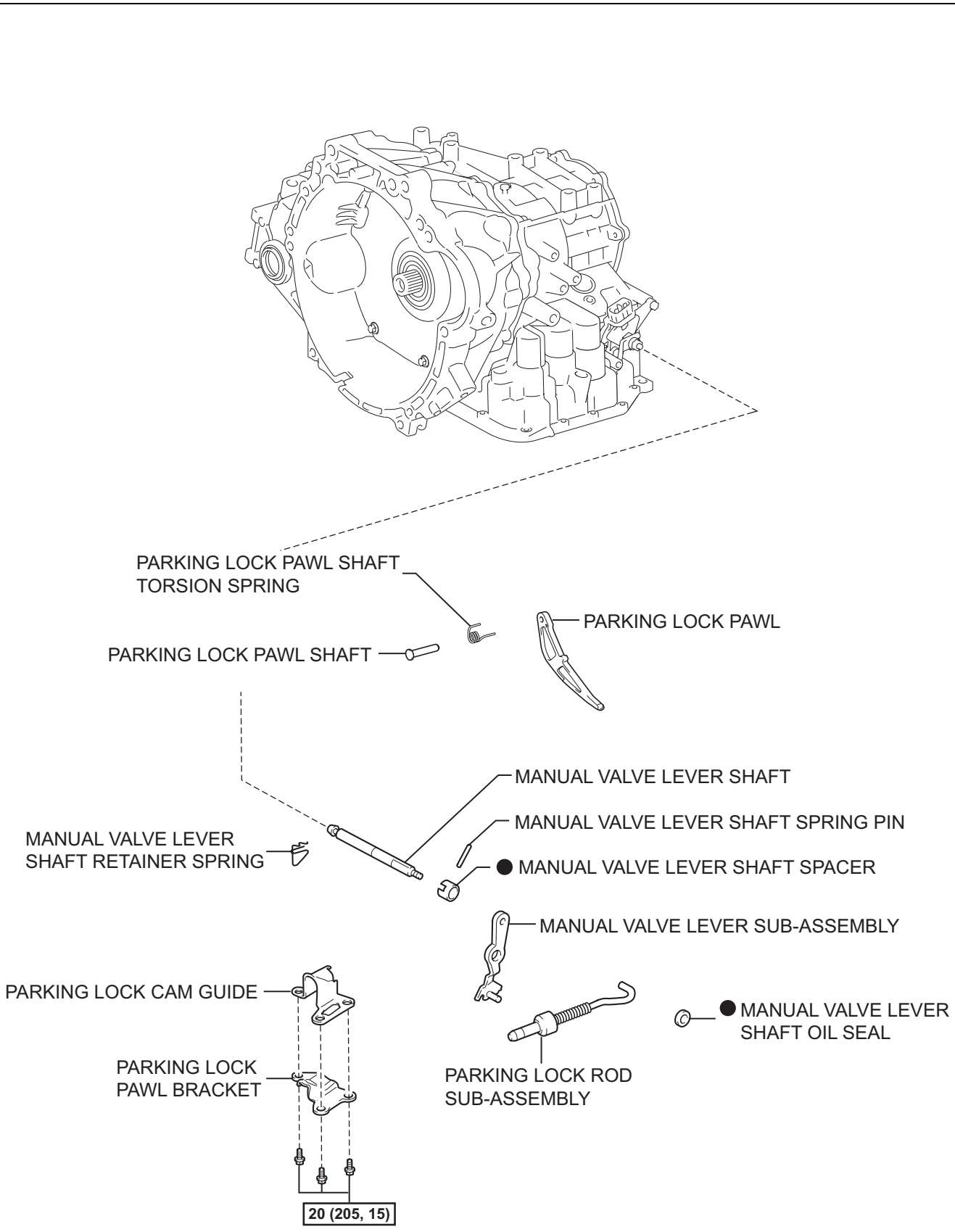

N*m (kgf*cm, ft*lbf) :Specified torque ● Non-reusable part

P

C121628E03

AX

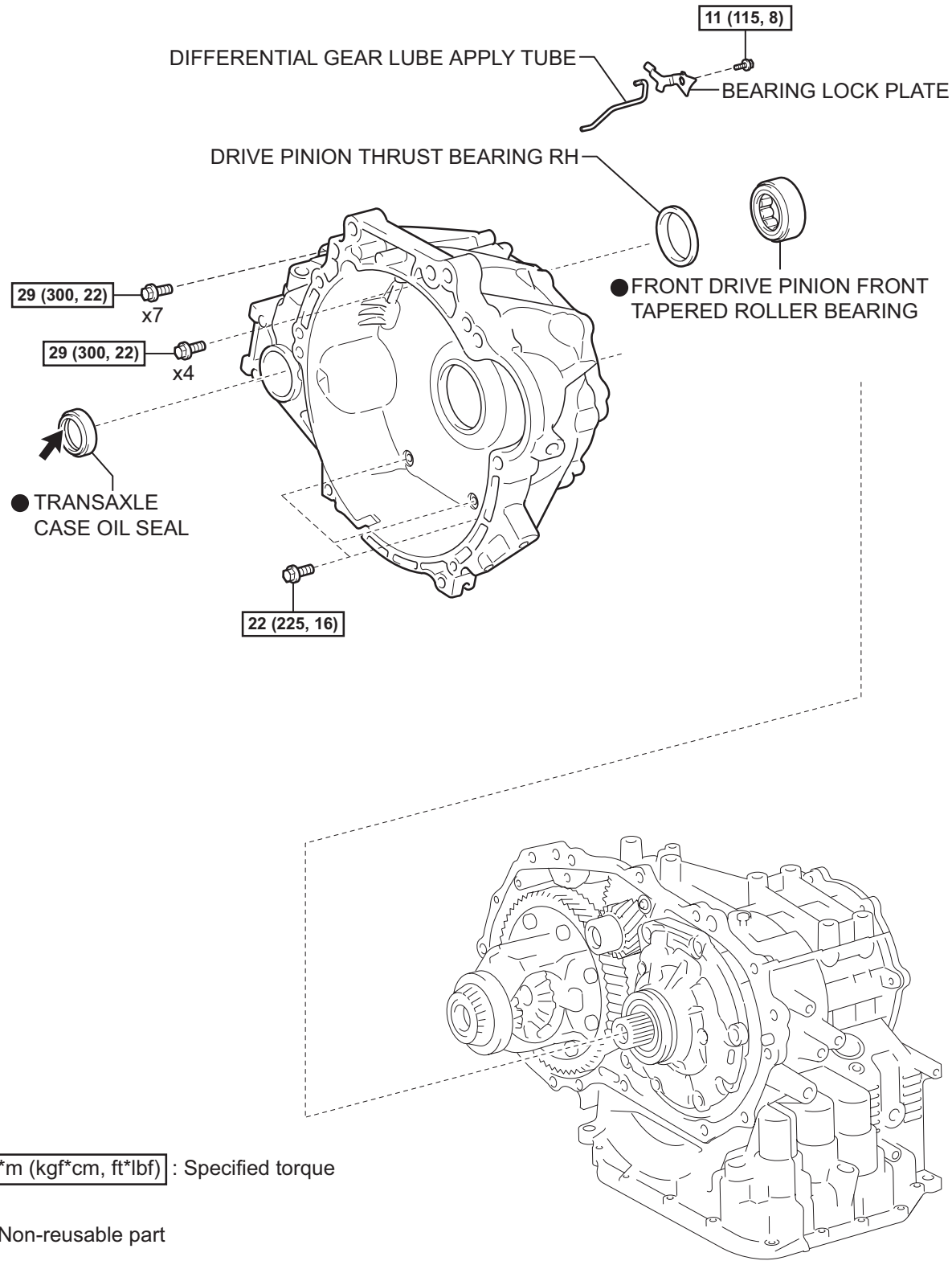

AX

P

C121624E01

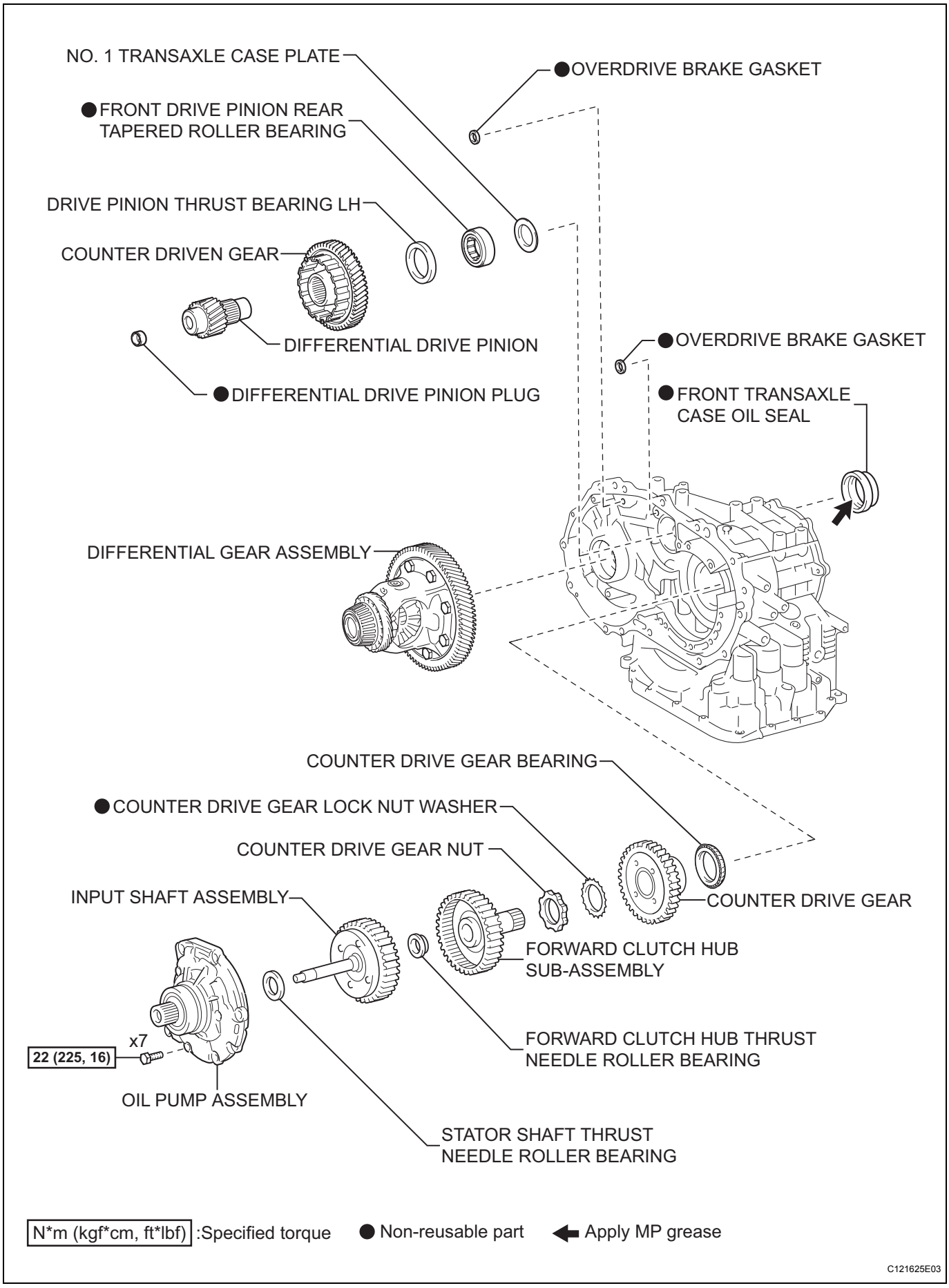
NO. 1 TRANSAXLE CASE PLATE
● OVERDRIVE BRAKE GASKET
● FRONT DRIVE PINION REAR TAPERED ROLLER BEARING
DRIVE PINION THRUST BEARING LH
COUNTER DRIVEN GEAR
DIFFERENTIAL DRIVE PINION
● DIFFERENTIAL DRIVE PINION PLUG
● OVERDRIVE BRAKE GASKET
● FRONT TRANSAXLE CASE OIL SEAL
DIFFERENTIAL GEAR ASSEMBLY
COUNTER DRIVE GEAR BEARING
● COUNTER DRIVE GEAR LOCK NUT WASHER
COUNTER DRIVE GEAR NUT
COUNTER DRIVE GEAR
INPUT SHAFT ASSEMBLY
FORWARD CLUTCH HUB SUB-ASSEMBLY
x7
22 (225, 16)
FORWARD CLUTCH HUB THRUST NEEDLE ROLLER BEARING
OIL PUMP ASSEMBLY
STATOR SHAFT THRUST NEEDLE ROLLER BEARING
N*m (kgf*cm, ft*lbf) :Specified torque
● Non-reusable part
Apply MP grease
C121625E03

AX

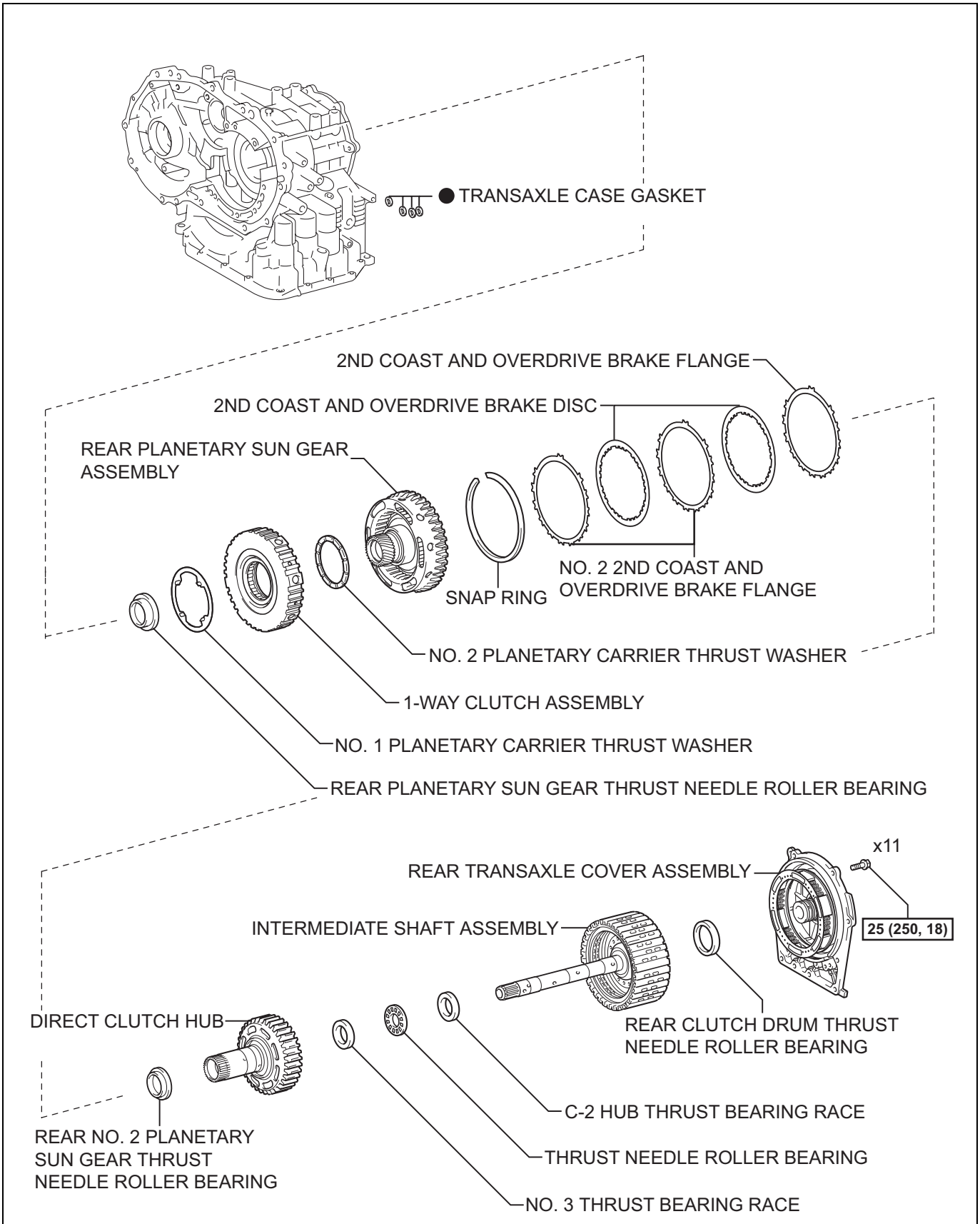

AX

N*m (kgf*cm, ft*lbf) :Specified torque ● Non-reusable part

P

C121664E02

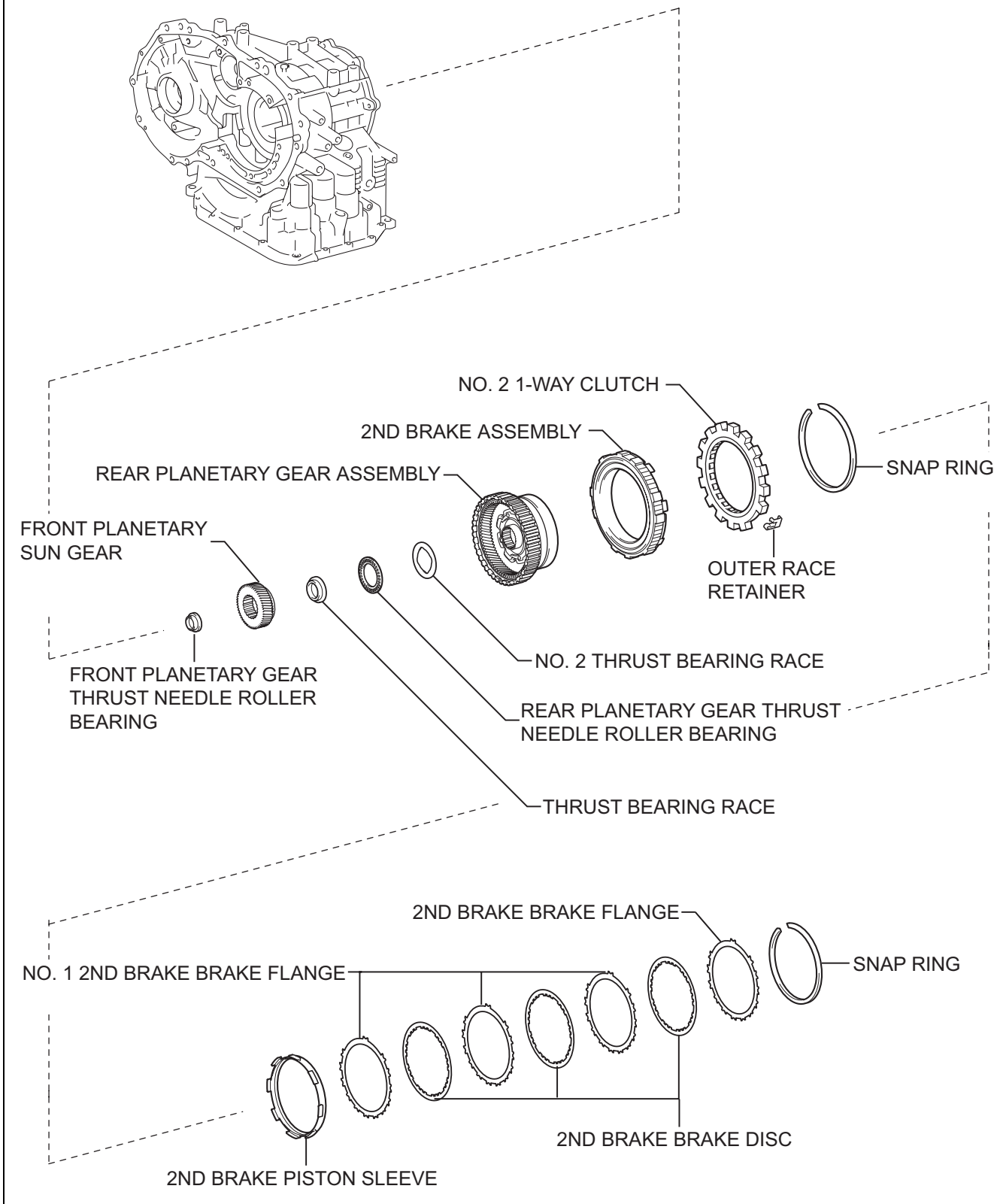

P C121665E02

AX

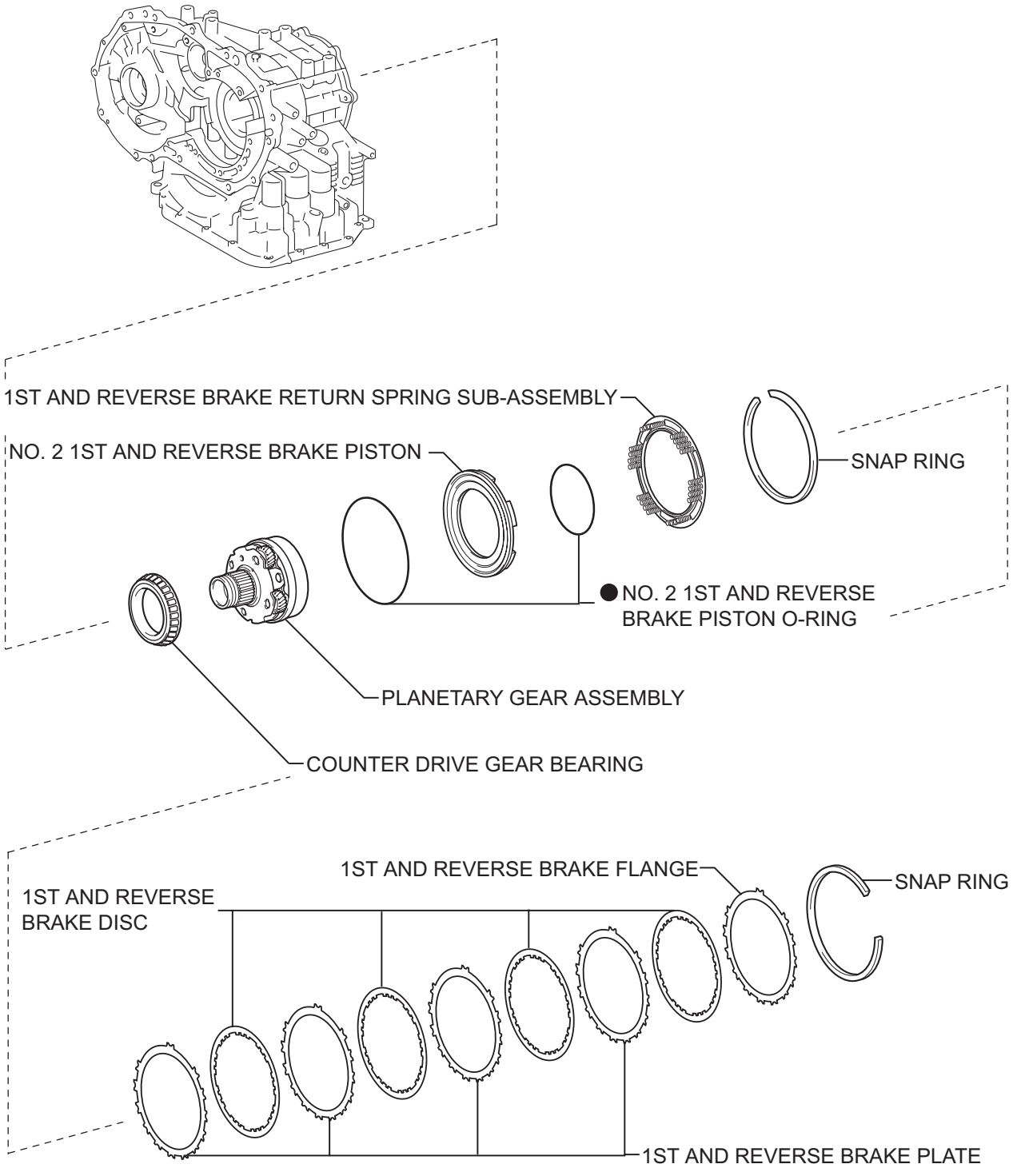

AX

● Non-reusable part

P

C121666E02

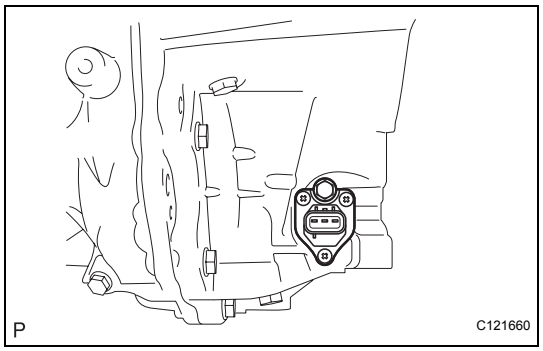

DISASSEMBLY

1. REMOVE SPEEDOMETER SENSOR

(a) Remove the bolt and remove the speedometer sensor.

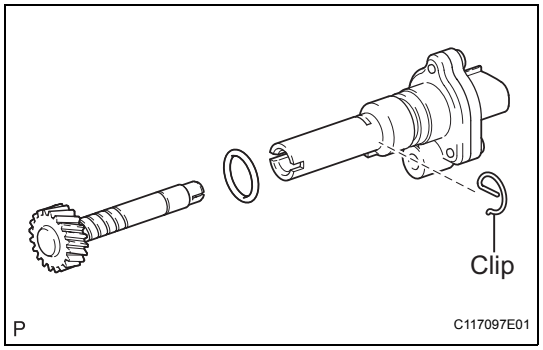

2. REMOVE SPEEDOMETER DRIVEN GEAR

(a) Remove the clip and speedometer driven gear from the speedometer sensor.

(b) Remove the O-ring from the speedometer sensor.

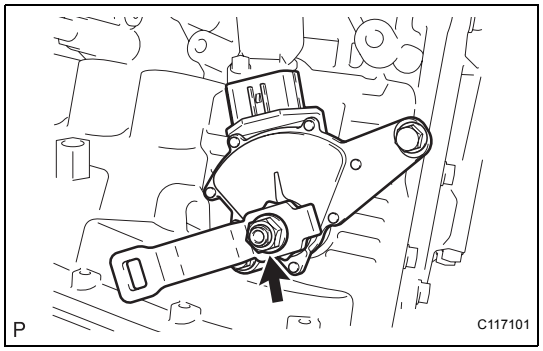

3. REMOVE PARK/NEUTRAL POSITION SWITCH ASSEMBLY

(a) Remove the nut and washer and remove the control lever shaft.

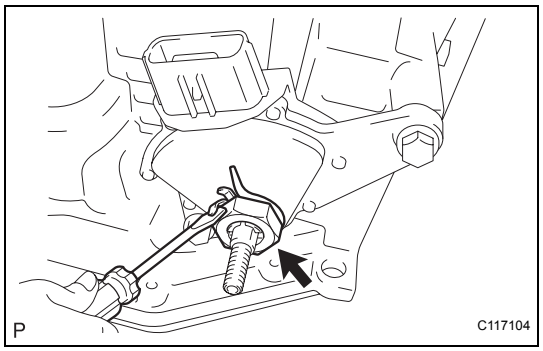

(b) Using a screwdriver, pry out the lock plate and remove the manual valve shaft nut.

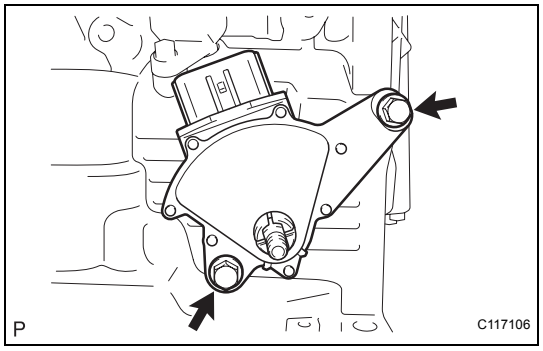

(c) Remove the 2 bolts and pull out the park/neutral position switch assembly.

AX

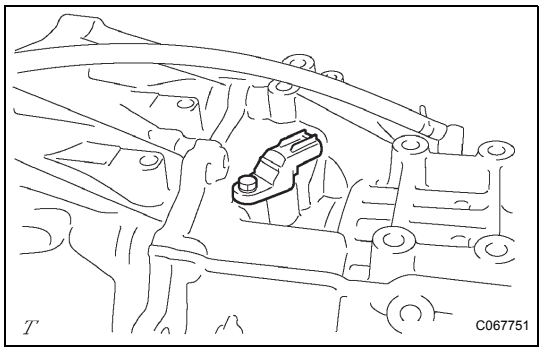

4. REMOVE TRANSMISSION REVOLUTION SENSOR

(a) Remove the bolt and remove the transmission revolution sensor.

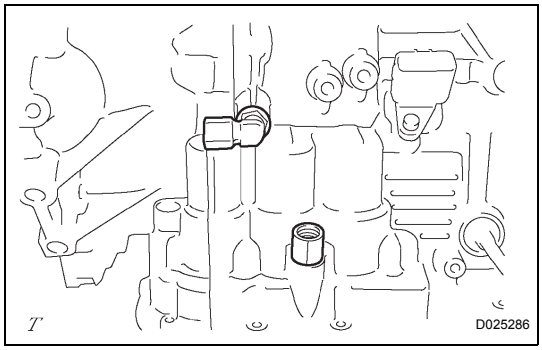

5. REMOVE OIL COOLER TUBE UNION

(a) Remove the 2 oil cooler tube unions from the transaxle case.

(b) Remove the 2 O-rings from the 2 oil cooler tube unions.

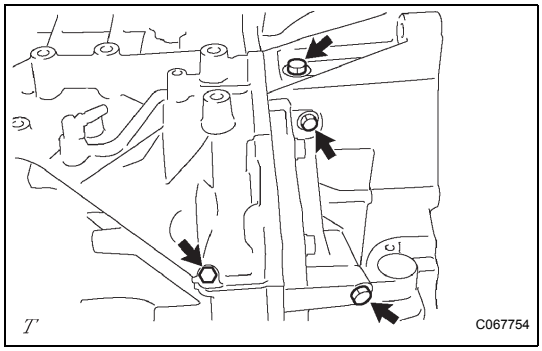

6. REMOVE NO. 1 TRANSAXLE CASE PLUG

(a) Remove the 4 No. 1 transaxle case plugs from the transaxle housing and transaxle case.

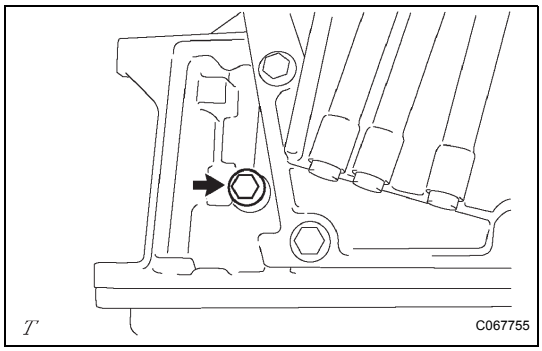

(b) Remove the No. 1 transaxle case plug from the transaxle case.

(c) Remove the O-rings from the No. 1 transaxle case plugs.

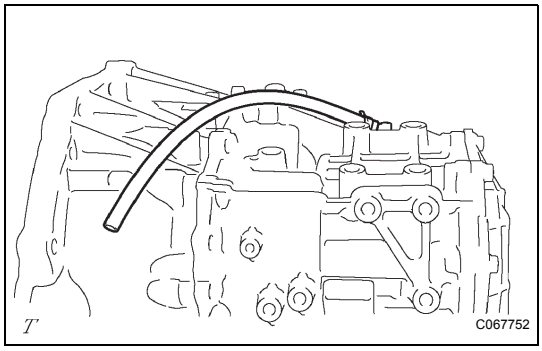

7. REMOVE BREATHER PLUG HOSE

(a) Remove the breather plug hose from the transaxle case.

8. FIX AUTOMATIC TRANSAXLE ASSEMBLY

AX

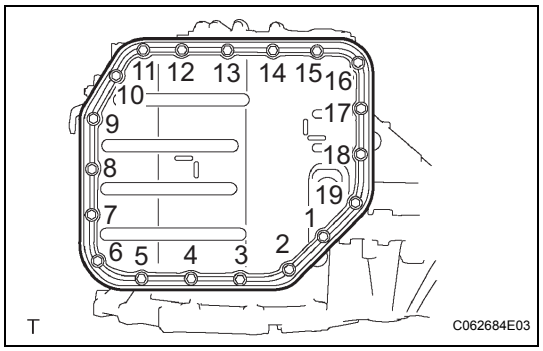

9. REMOVE AUTOMATIC TRANSAXLE OIL PAN SUB-ASSEMBLY

(a) Remove the 19 bolts and remove the oil pan and oil pan gasket.

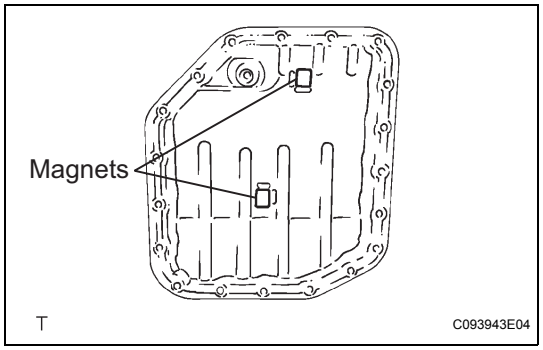

(b) Remove the 2 oil cleaner magnets from the oil pan.

(c) Examine the particles in the pan.

(1) Collect any steel chips with the removed magnets.

Carefully look at the foreign matter and particles in the pan and on the magnets to predict the type of wear which might be found in the transaxle.

Steel (magnetic): bearing, gear and clutch plate wear

Brass (non-magnetic): bearing wear

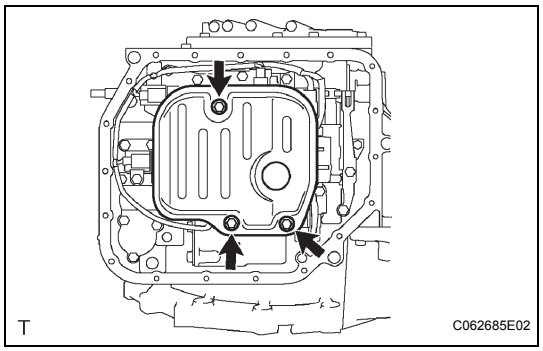

10. REMOVE VALVE BODY OIL STRAINER ASSEMBLY

(a) Remove the 3 bolts and remove the oil strainer assembly.

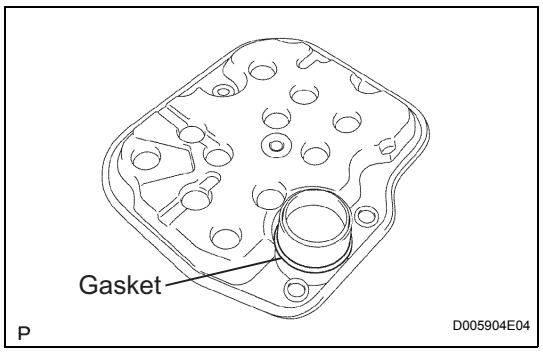

(b) Remove the oil strainer gasket from the oil strainer.

11. REMOVE TRANSMISSION VALVE BODY ASSEMBLY

(a) Disconnect the 5 solenoid connectors.

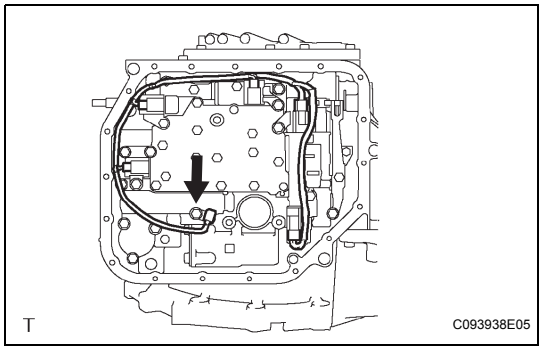

(b) Remove the bolt and lock plate and remove the ATF temperature sensor.

AX

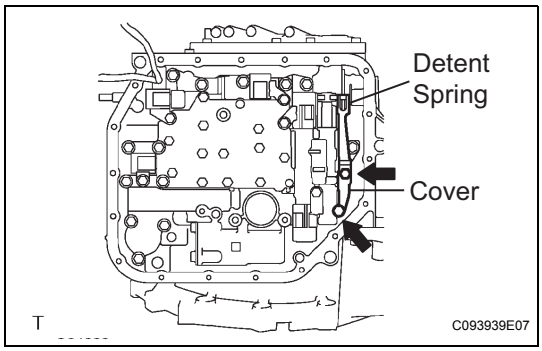

(c) Remove the 2 bolts and remove the detent spring cover and detent spring.

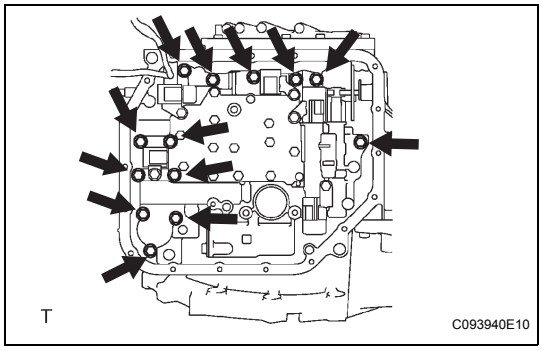

(d) Remove the 13 bolts and the valve body assembly from the transaxle case.

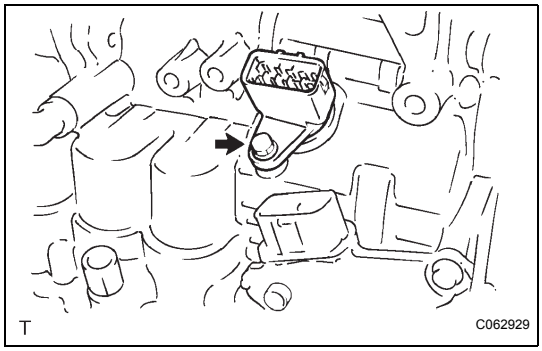

12. REMOVE TRANSMISSION WIRE

(a) Remove the bolt and the transmission wire from the transaxle case.

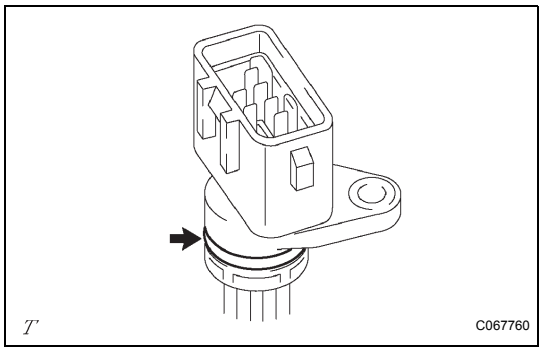

(b) Remove the O-ring from the transmission wire.

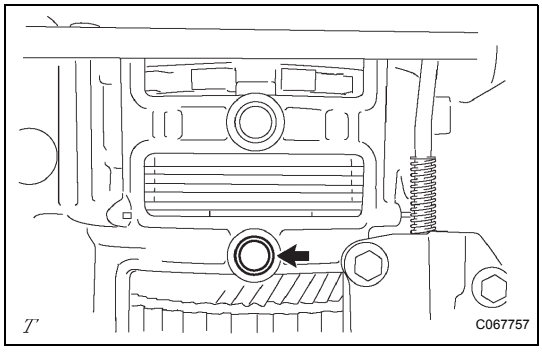

13. REMOVE TRANSAXLE CASE 2ND BRAKE GASKET

(a) Remove the transaxle case 2nd brake gasket from the transaxle case.

AX

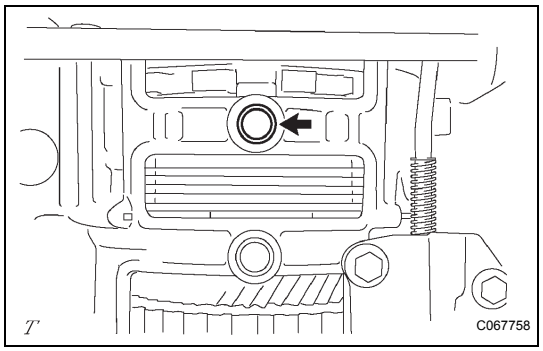

14. REMOVE TRANSAXLE CASE GASKET

(a) Remove the transaxle case gasket from the transaxle case.

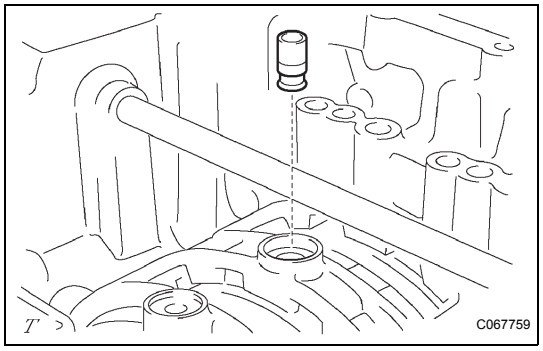

15. REMOVE BRAKE DRUM GASKET

(a) Remove the brake drum gasket from the transaxle case.

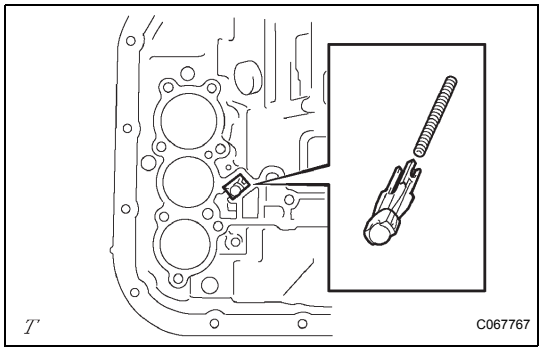

16. REMOVE CHECK BALL BODY

(a) Remove the check ball body and spring from the transaxle case.

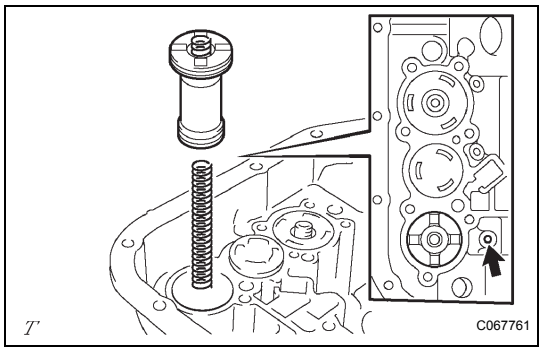

17. REMOVE B-2 ACCUMULATOR PISTON

(a) Apply compressed air (392 kPa, 4.0 kgf/cm^2, 57 psi) to the oil hole and remove the B-2 accumulator piston and spring.

NOTICE:

- **Blowing the air may cause the piston to jump out. When removing the piston, hold it by hand using a shop rag or piece of cloth.**
- **Do not splash ATF with the compressed air.**

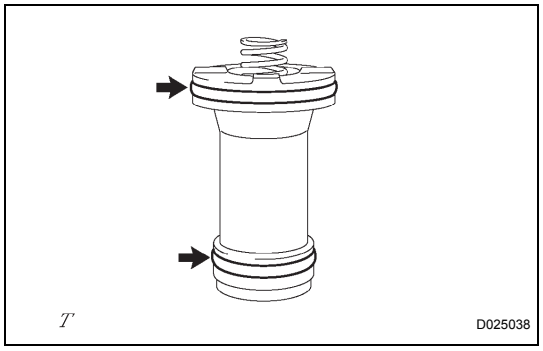

(b) Remove the 2 O-rings from the B-2 accumulator piston.

AX

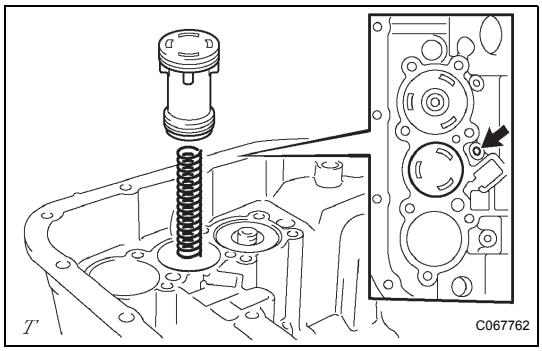

18. REMOVE C-3 ACCUMULATOR PISTON

(a) Apply compressed air (392 kPa, 4.0 kgf/cm^2, 57 psi) to the oil hole and remove the C-3 accumulator piston and spring.

NOTICE:

- **Blowing the air may cause the piston to jump out. When removing the piston, hold it with your hand using a shop rag or piece of cloth.**
- **Do not splash ATF with the compressed air.**

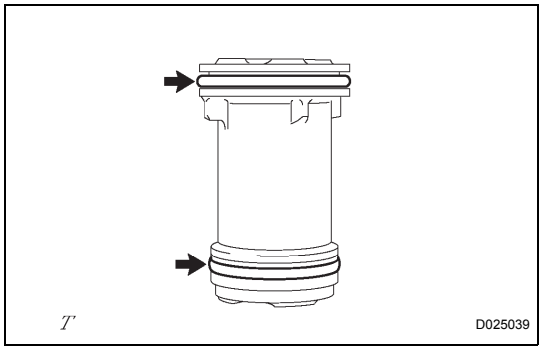

(b) Remove the 2 O-rings from the C-3 accumulator piston.

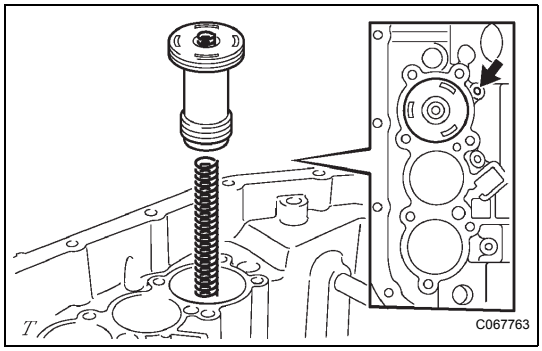

19. REMOVE C-2 ACCUMULATOR PISTON

(a) Apply compressed air (392 kPa, 4.0 kgf/cm^2, 57 psi) to the oil hole and remove the C-2 accumulator piston and the spring.

NOTICE:

- **Blowing the air may cause the piston to jump out. When removing the piston, hold it by hand using a shop rag or piece of cloth.**
- **Do not splash ATF with the compressed air.**

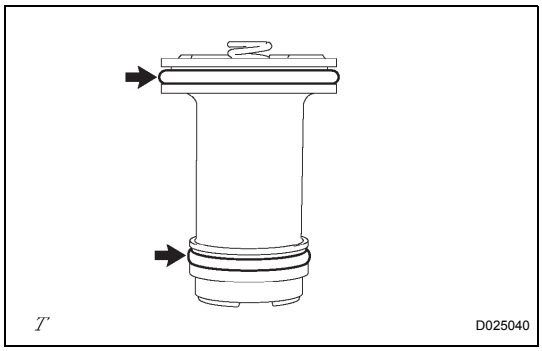

(b) Remove the 2 O-rings from the C-2 accumulator piston.

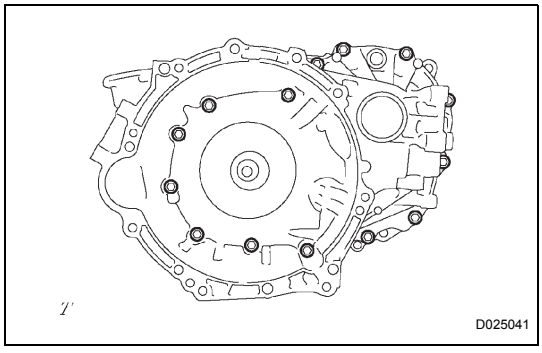

20. REMOVE TRANSAXLE HOUSING

(a) Remove the 14 bolts.

(b) Tap around the circumference of the transaxle housing with a plastic hammer to remove the transaxle housing from the transaxle case.

NOTICE:

The differential gear assembly may be accidentally removed when the transaxle housing is removed.

AX

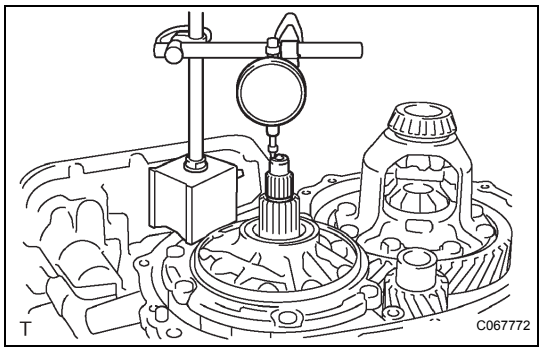

21. INSPECT INPUT SHAFT END PLAY

(a) Measure the end play in the axial direction.

End play:

0.37 to 1.29 mm (0.0146 to 0.0508 in.)

If the end play is not as specified, select and replace the thrust needle roller bearing.

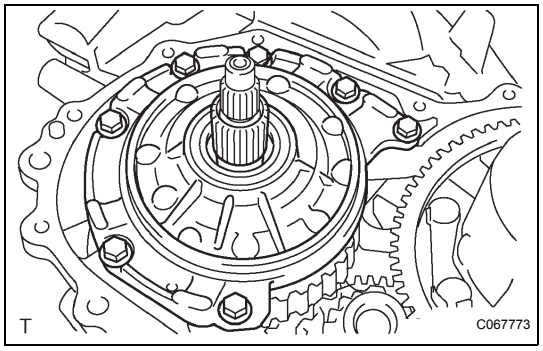

22. REMOVE OIL PUMP ASSEMBLY

(a) Remove the 7 bolts and the oil pump assembly from the transaxle case.

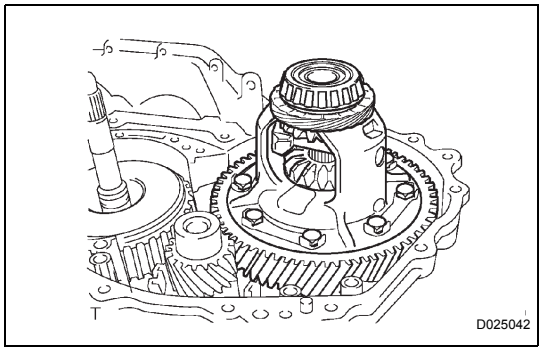

23. REMOVE DIFFERENTIAL GEAR ASSEMBLY

(a) Remove the differential gear assembly from the transaxle case.

AX

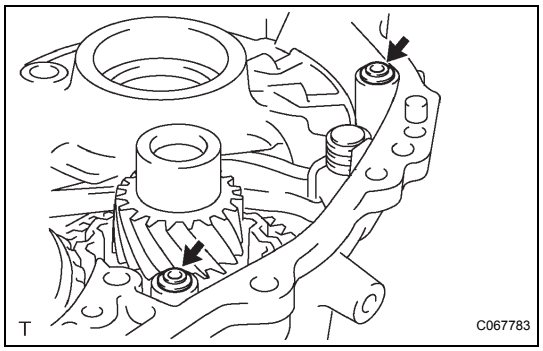

24. REMOVE OVERDRIVE BRAKE GASKET

(a) Using a screwdriver, remove the 2 overdrive brake gaskets from the transaxle case.

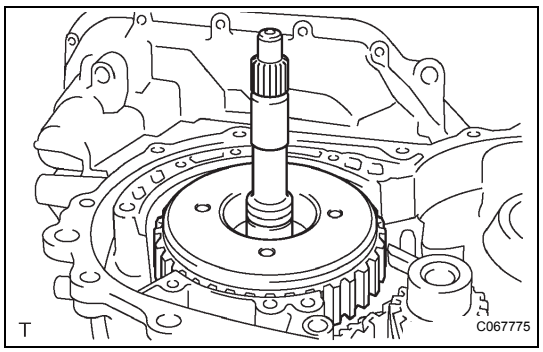

25. REMOVE INPUT SHAFT ASSEMBLY

(a) Remove the input shaft assembly from the transaxle case.

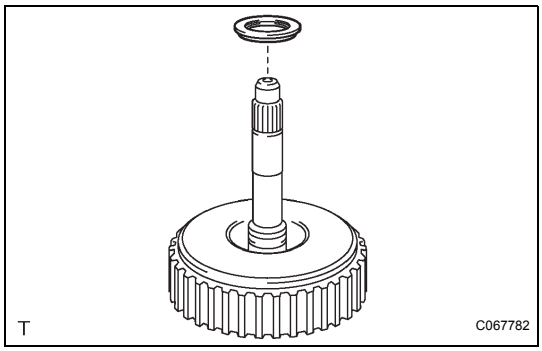

26. REMOVE STATOR SHAFT THRUST NEEDLE ROLLER BEARING

(a) Remove the thrust needle roller bearing from the input shaft.

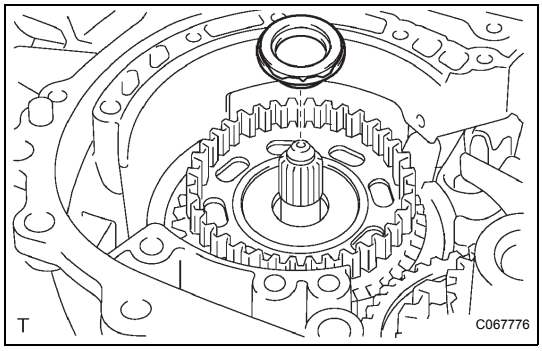

27. REMOVE FORWARD CLUTCH HUB THRUST NEEDLE ROLLER BEARING

(a) Remove the thrust needle roller bearing from the forward clutch hub.

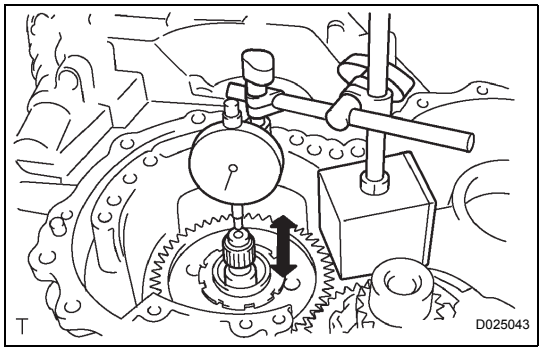

28. INSPECT INTERMEDIATE SHAFT ASSEMBLY

(a) Using a dial indicator, measure the clearance of the intermediate shaft.

Standard clearance:

0.204 to 0.966 mm (0.008 to 0.038 in.)

AX

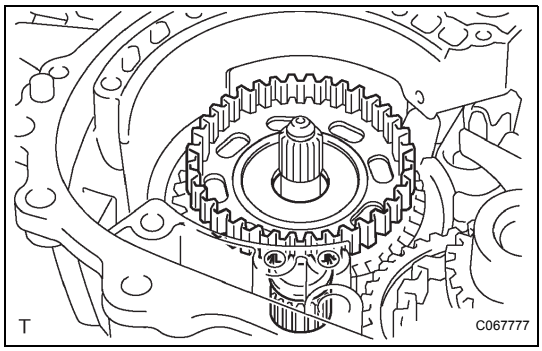

29. REMOVE FORWARD CLUTCH HUB SUB-ASSEMBLY

(a) Remove the forward clutch hub from the transaxle case.

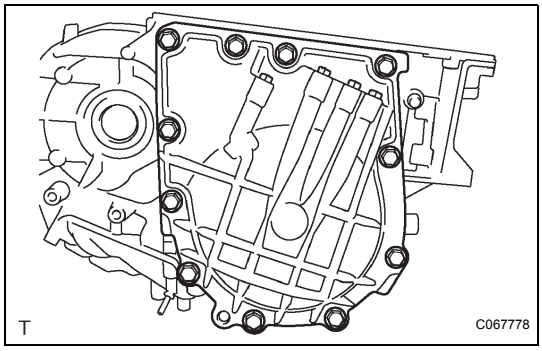

30. REMOVE REAR TRANSAXLE COVER ASSEMBLY

(a) Remove the 11 bolts.

(b) Tap around the circumference of the rear transaxle cover with a plastic hammer to remove the rear transaxle cover from the transaxle case.

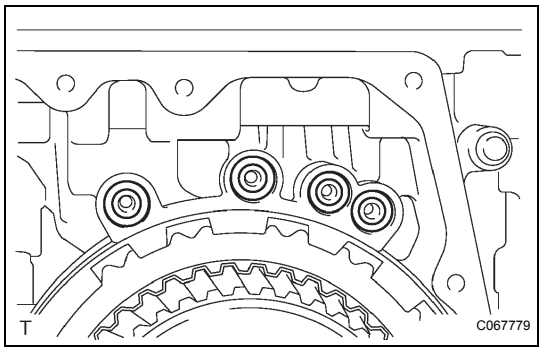

31. REMOVE TRANSAXLE CASE GASKET

(a) Remove the 4 transaxle case gaskets.

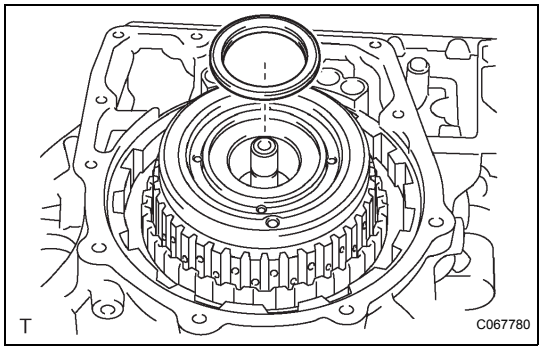

32. REMOVE REAR CLUTCH DRUM THRUST NEEDLE ROLLER BEARING

(a) Using a magnetic finger, remove the thrust needle roller bearing.

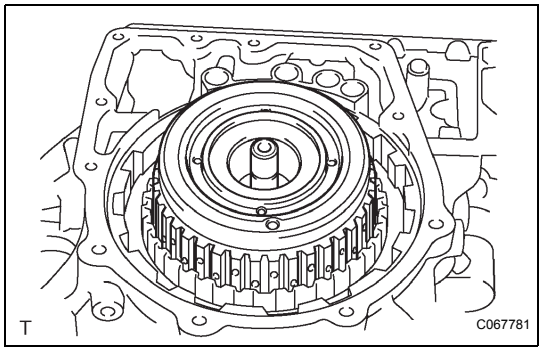

33. REMOVE INTERMEDIATE SHAFT ASSEMBLY

(a) Remove the intermediate shaft assembly from the transaxle case.

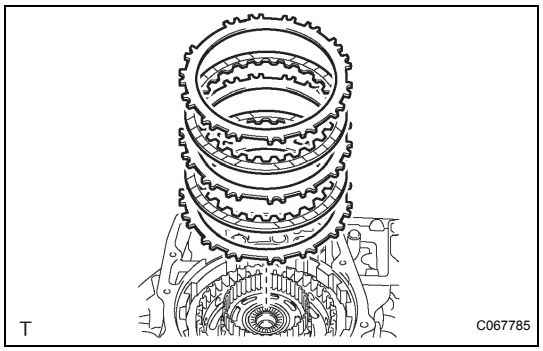

34. REMOVE 2ND COAST AND OVERDRIVE BRAKE DISC

(a) Remove the flange, 2 discs and 2 No. 2 flanges from the transaxle.

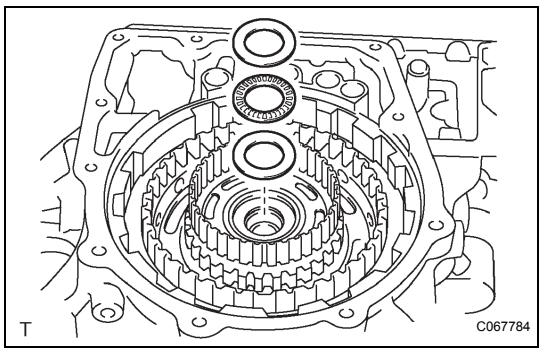

35. REMOVE THRUST NEEDLE ROLLER BEARING

(a) Using a magnetic finger, remove the C-2 hub thrust bearing race, the thrust needle roller bearing and the thrust bearing race from the direct clutch hub.

AX

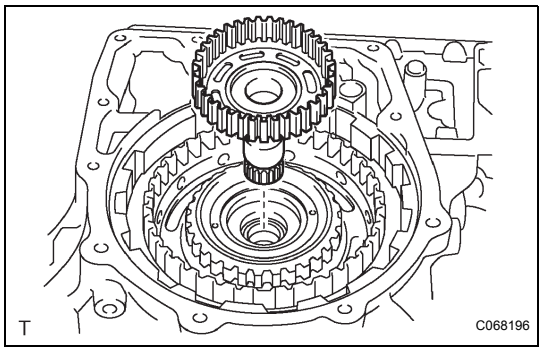

36. REMOVE DIRECT CLUTCH HUB

(a) Remove the direct clutch hub from the transaxle case.

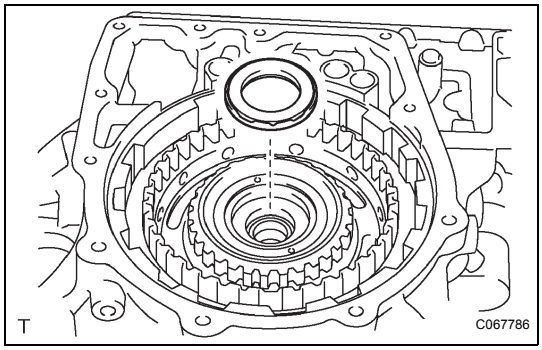

37. REMOVE REAR NO. 2 PLANETARY SUN GEAR THRUST NEEDLE ROLLER BEARING

(a) Using a magnetic finger, remove the thrust bearing from the rear thrust needle bearing.

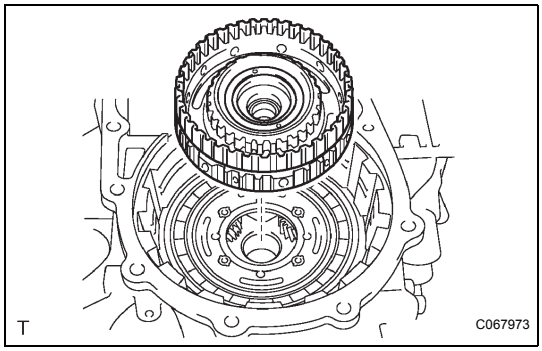

38. REMOVE REAR PLANETARY SUN GEAR ASSEMBLY

(a) Remove the rear planetary sun gear from the transaxle case.

AX

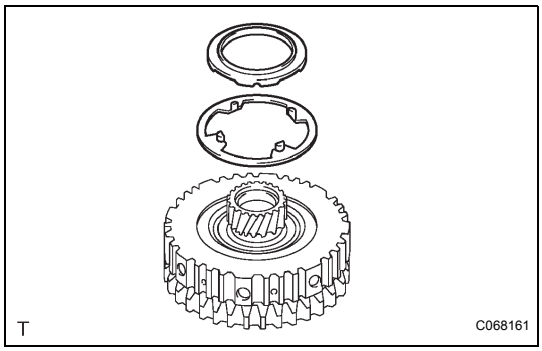

39. REMOVE REAR PLANETARY SUN GEAR THRUST NEEDLE ROLLER BEARING

(a) Remove the rear planetary sun gear thrust needle roller bearing and thrust washer No. 1 from the rear planetary sun gear.

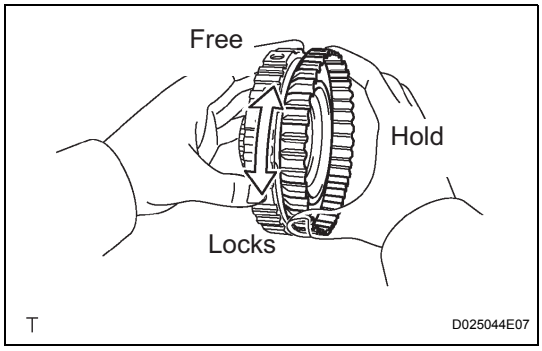

40. INSPECT 1-WAY CLUTCH ASSEMBLY

(a) Hold the rear planetary sun gear and turn the 1-way clutch.

(b) Make sure that 1-way clutch turns freely counterclockwise and locks when turned clockwise.

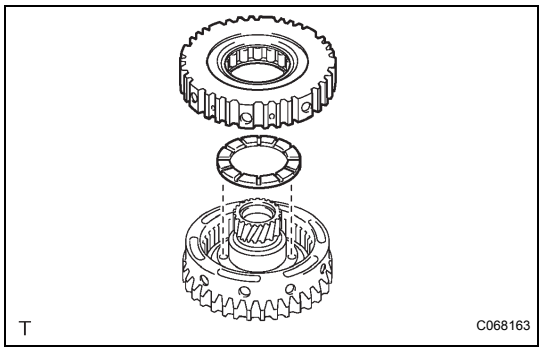

41. REMOVE 1-WAY CLUTCH ASSEMBLY

(a) Remove the 1-way clutch assembly and planetary carrier thrust washer No. 2 from the rear planetary sun gear.

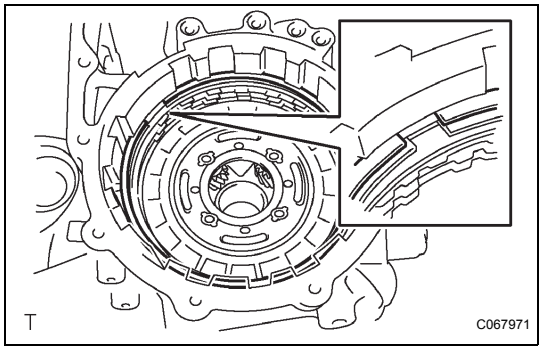

42. REMOVE 2ND COAST AND OVERDRIVE BRAKE FLANGE HOLE SNAP RING

(a) Using a screwdriver, remove the snap ring from the transaxle case.

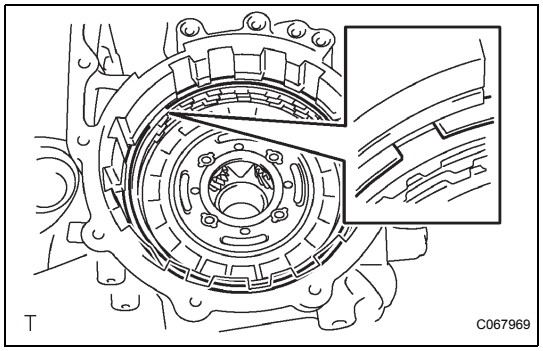

43. REMOVE 2ND BRAKE BRAKE DISC

(a) Using a screwdriver, remove the snap ring.
(b) Remove the flange, 3 discs and 3 plates from the transaxle.

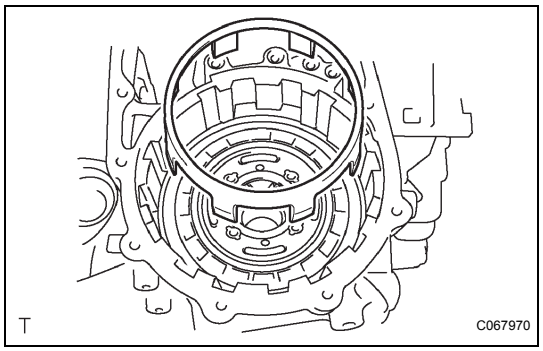

44. REMOVE 2ND BRAKE PISTON SLEEVE

(a) Remove the 2nd brake piston sleeve from the transaxle case.

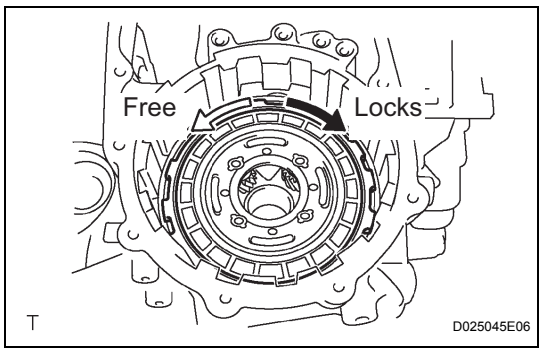

45. INSPECT NO. 2 1-WAY CLUTCH

(a) Install the 1-way clutch and the thrust washer onto the rear planetary sun gear.
(b) Hold the rear planetary sun gear and turn the 1-way clutch.
(c) Make sure that the 1-way clutch turns freely counterclockwise and locks when turned clockwise.

AX

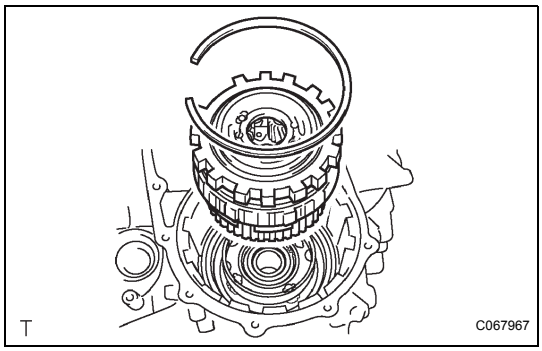

46. REMOVE REAR PLANETARY GEAR ASSEMBLY

(a) Using a screwdriver, remove the snap ring.

(b) Remove the rear planetary gear assembly from the transaxle case.

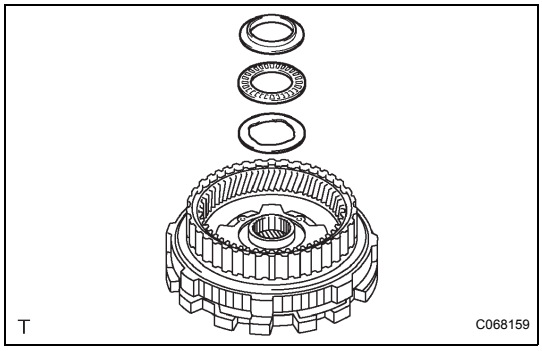

47. REMOVE REAR PLANETARY GEAR THRUST NEEDLE ROLLER BEARING

(a) Remove the thrust needle roller bearing and 2 bearing races from the rear planetary gear assembly.

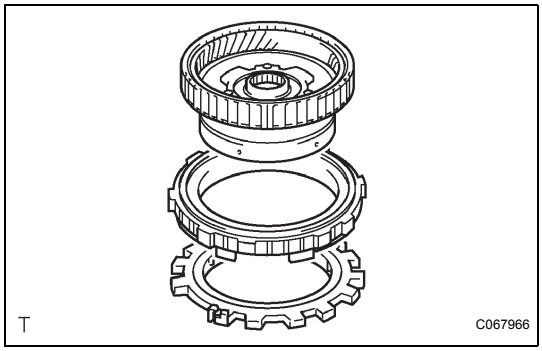

48. REMOVE NO. 2 1-WAY CLUTCH

(a) Separate the 2nd brake cylinder, 1-way clutch No. 2 and the rear planetary gear.

AX

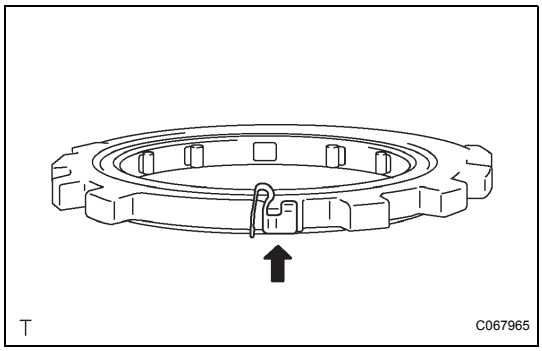

49. REMOVE OUTER RACE RETAINER

(a) Remove the retainer from 1-way clutch No. 2.

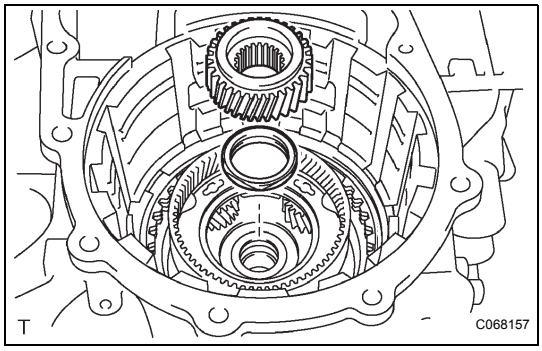

50. REMOVE FRONT PLANETARY SUN GEAR

(a) Remove the front planetary sun gear and thrust needle roller bearing from the transaxle case.

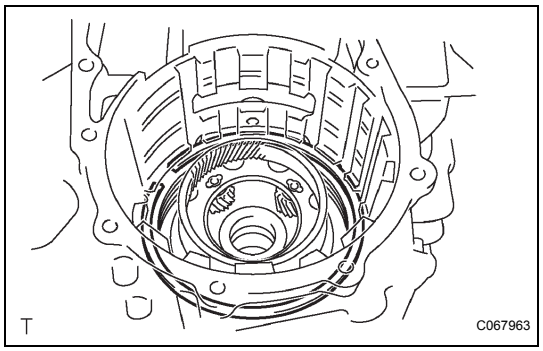

51. REMOVE 1ST AND REVERSE BRAKE DISC

(a) Using a screwdriver, remove the snap ring.

(b) Remove the flange, 4 discs and 4 plates from the transaxle case.

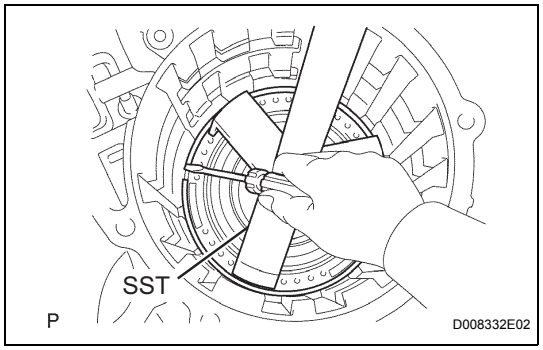

52. REMOVE 1ST AND REVERSE BRAKE RETURN SPRING SUB-ASSEMBLY

(a) Using SST, a press and a screwdriver, remove the snap ring.

SST 09387-00070

(b) Remove the 1st and reverse brake return spring sub-assembly.

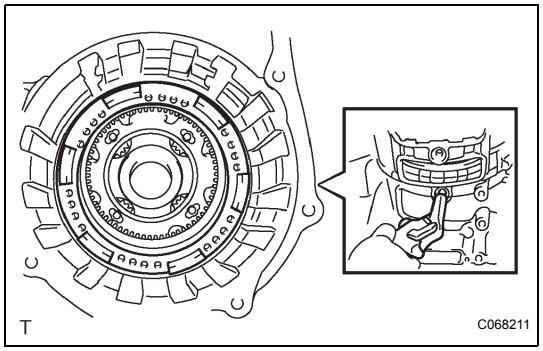

53. REMOVE NO. 2 1ST AND REVERSE BRAKE PISTON

(a) Apply compressed air (392 kPa, 4.0 kgf/cm^2, 57 psi) to the transaxle case to remove the 1st and reverse brake piston.

NOTICE:

- **Blowing the air may cause the piston to jump out. When removing the piston, hold it by hand using a shop rag or piece of cloth.**
- **Do not splash ATF with the compressed air.**

AX

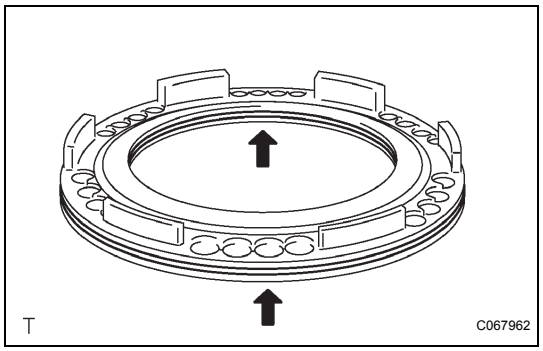

54. REMOVE NO. 2 1ST AND REVERSE BRAKE PISTON O-RING

(a) Remove the 2 O-rings from No. 2 1st and reverse brake piston.

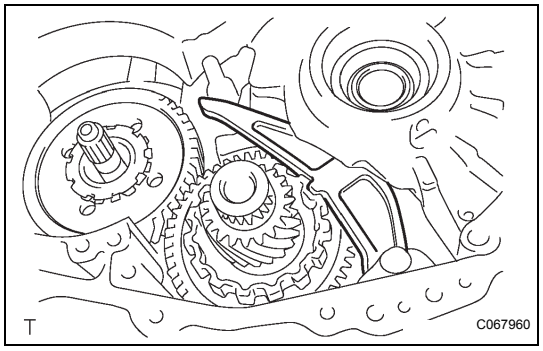

55. REMOVE COUNTER DRIVE GEAR NUT

(a) Fix the counter driven gear with the parking lock pawl.

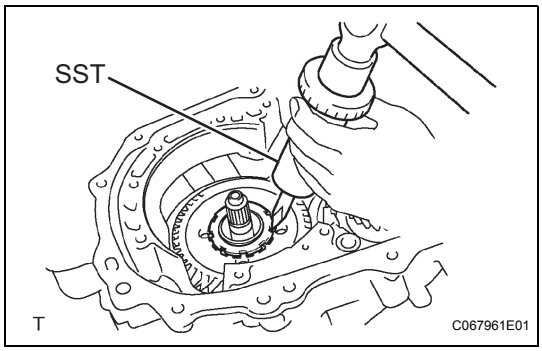

(b) Using SST and a hammer, release the lock washer.
SST 09930-00010

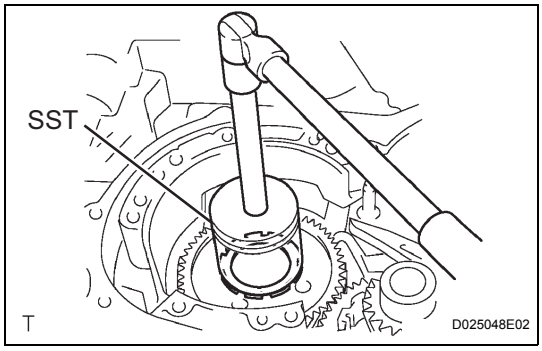

(c) Using SST, remove the nut and lock washer.
SST 09387-00120

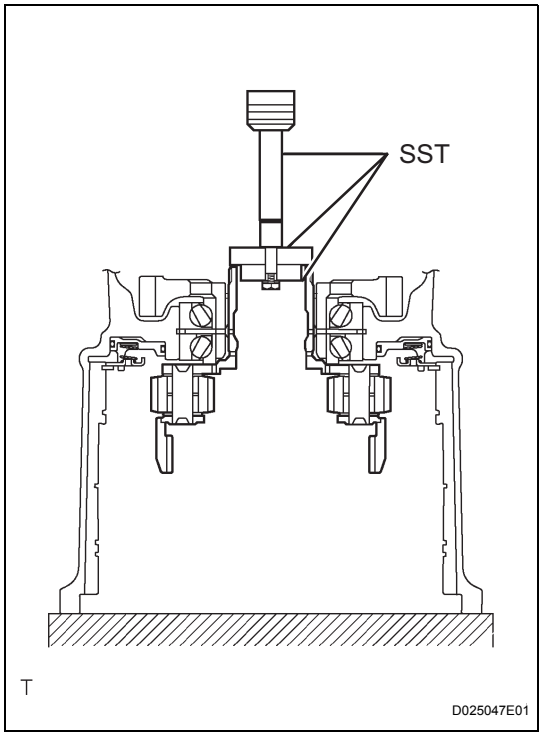

56. REMOVE PLANETARY GEAR ASSEMBLY

(a) Using SST and a press, remove the planetary gear assembly from the transaxle case.
SST 09950-60010 (09951-00400, 09951-00320, 09952-06010), 09950-70010 (09951-07100)

AX

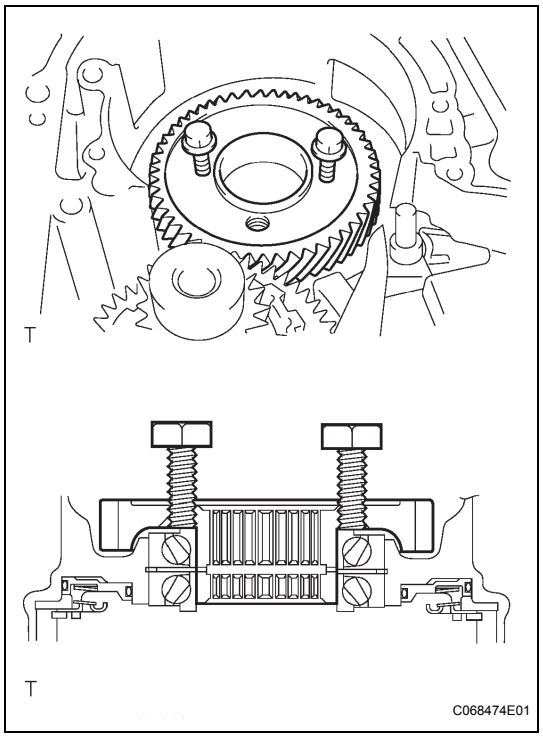

57. REMOVE COUNTER DRIVE GEAR

(a) Install the 2 bolts onto the counter drive gear.
Bolt (M6):
L = 40 to 80 mm
Pitch = 1.0 mm

(b) Rotate the 2 bolts and remove the counter drive gear and front planetary sun gear.

(c) Remove the 2 radial ball bearings from the counter drive gear and front planetary sun gear.

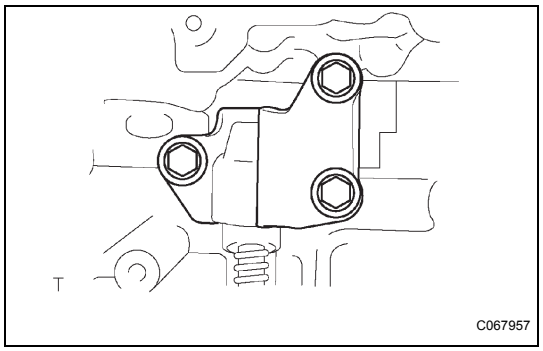

58. REMOVE PARKING LOCK PAWL BRACKET

(a) Remove the 3 bolts, cam guide and bracket from the transaxle case.

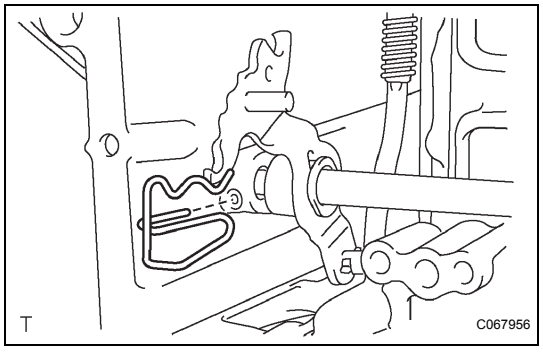

59. REMOVE MANUAL VALVE LEVER SHAFT RETAINER SPRING

(a) Remove the manual valve lever shaft retainer spring from the manual valve lever shaft.

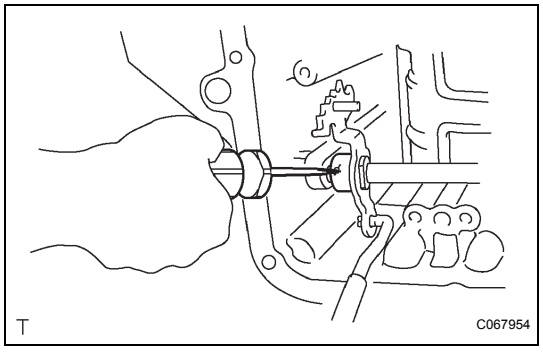

60. REMOVE MANUAL VALVE LEVER SUB-ASSEMBLY

(a) Using a screwdriver, release and remove the spacer.

AX

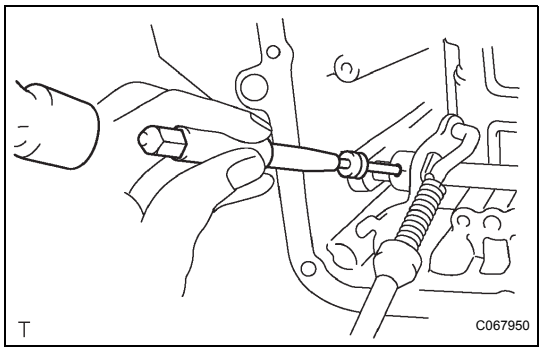

(b) Using a pin punch and hammer, drive out the manual valve lever shaft spring pin.
(c) Remove the manual valve lever shaft and manual valve lever.

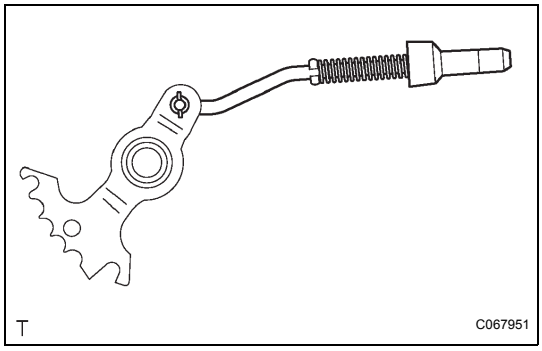

61. REMOVE PARKING LOCK ROD SUB-ASSEMBLY
(a) Remove the parking lock rod from the manual valve lever.

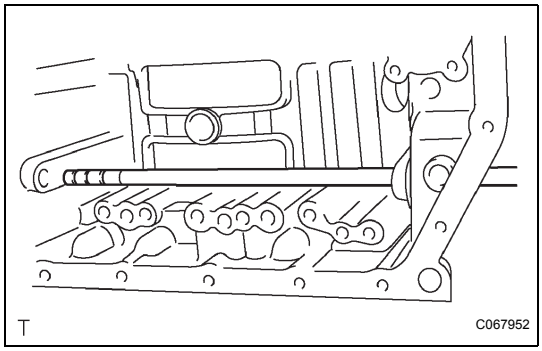

62. REMOVE MANUAL VALVE LEVER SHAFT
(a) Remove the manual valve lever shaft from the transaxle case.

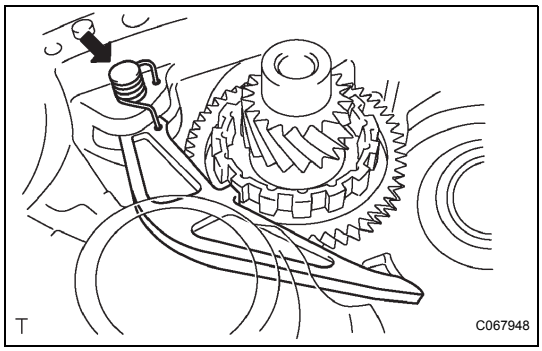

63. REMOVE PARKING LOCK PAWL
(a) Using a screwdriver, remove the parking lock pawl shaft from the transaxle case.
(b) Remove the parking lock pawl torsion spring and parking lock pawl from the transaxle case.

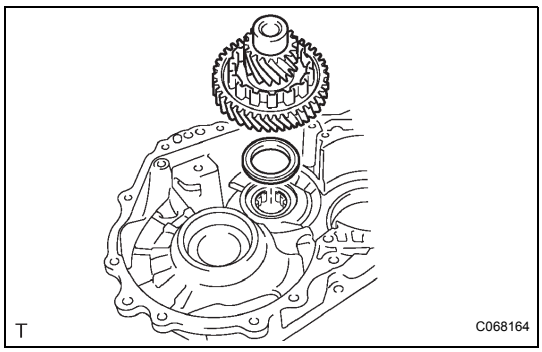

64. REMOVE COUNTER DRIVEN GEAR
(a) Remove the counter driven gear, drive pinion and thrust needle roller bearing from the transaxle case.

AX

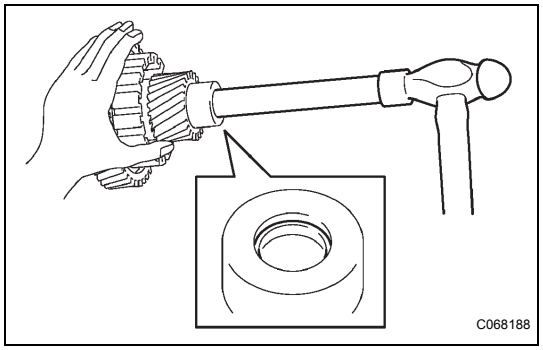

65. REMOVE DIFFERENTIAL DRIVE PINION PLUG

(a) Using a brass bar and a hammer, remove the differential drive pinion plug.

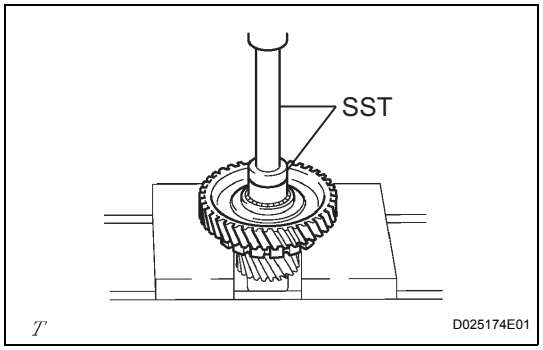

66. REMOVE DIFFERENTIAL DRIVE PINION

(a) Using SST and a press, remove the differential drive pinion from the counter driven gear.
SST 09950-60010 (09951-00350), 09950-70010 (09951-07150)

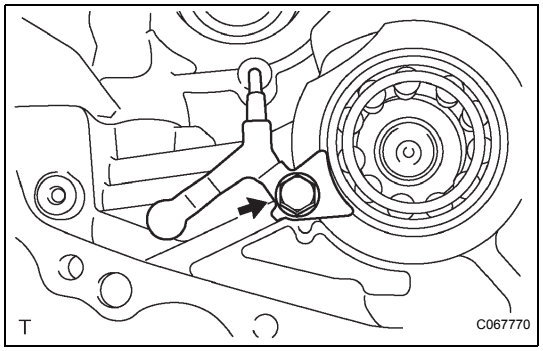

67. REMOVE BEARING LOCK PLATE

(a) Remove the bolt and remove the bearing lock plate.

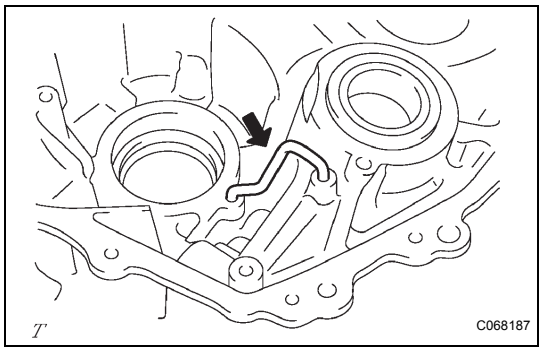

68. REMOVE DIFFERENTIAL GEAR LUBE APPLY TUBE

(a) Remove the differential gear lube apply tube from the transaxle housing.

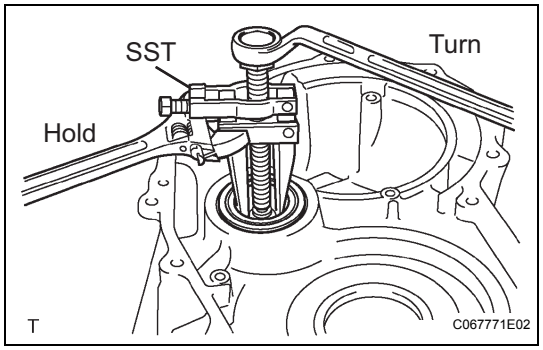

69. REMOVE FRONT DRIVE PINION FRONT TAPERED ROLLER BEARING

(a) Using SST, remove the front drive pinion front tapered roller bearing from the transaxle housing.
SST 09308-10010

AX

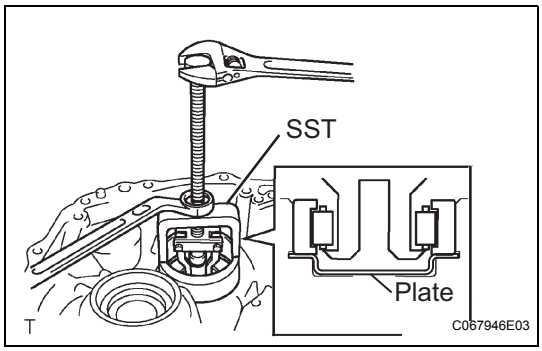

70. REMOVE FRONT DRIVE PINION REAR TAPERED ROLLER BEARING

(a) Using SST, remove the front drive pinion rear tapered roller bearing from the transaxle case.
SST 09612-65014 (09612-01040)

(b) Remove transaxle case plate No. 1 from the transaxle case.

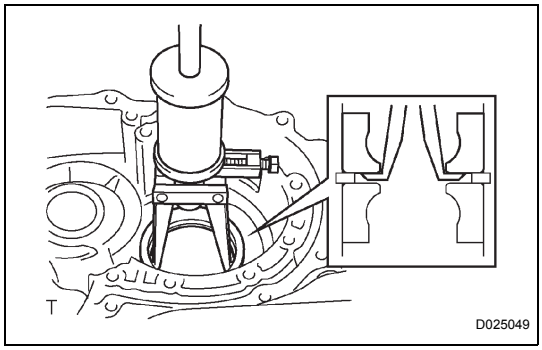

71. REMOVE COUNTER DRIVE GEAR BEARING

(a) Remove the 2 counter drive gear bearing inner races RH from the transaxle case.

(b) Using SST, remove the counter drive gear bearing LH outer race from the transaxle case.
SST 09308-00010

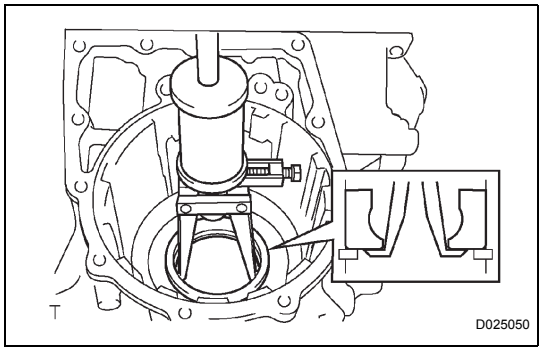

(c) Using SST, remove the counter drive gear bearing rear outer race from the transaxle case.
SST 09308-00010

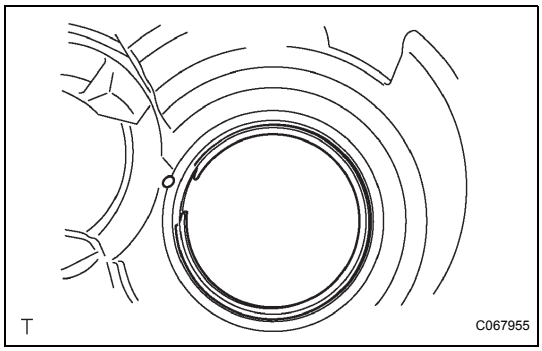

72. REMOVE COUNTER DRIVE GEAR HOLE SNAP RING

(a) Using a screwdriver, remove the counter drive gear hole snap ring from the transaxle case.

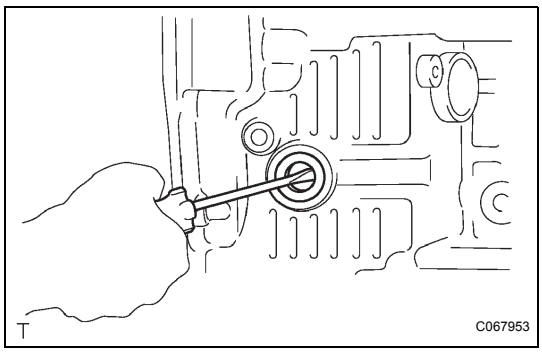

73. REMOVE MANUAL VALVE LEVER SHAFT OIL SEAL

(a) Using a screwdriver, remove the oil seal from the transaxle case.

AX

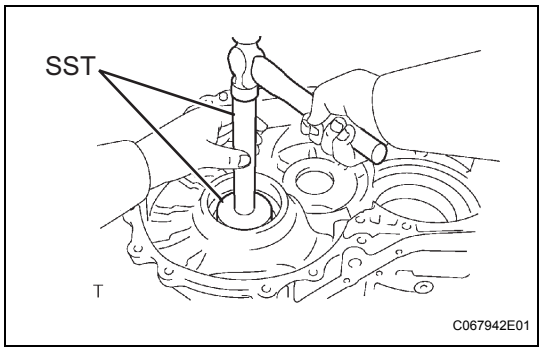

74. REMOVE FRONT TRANSAXLE CASE OIL SEAL

(a) Using SST and a hammer, remove the oil seal from the transaxle case.

SST 09950-60010 (09951-00550), 09950-70010 (09951-07100)

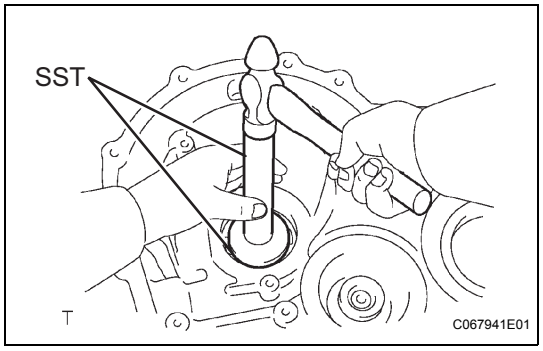

75. REMOVE TRANSAXLE CASE OIL SEAL

(a) Using SST and a hammer, remove the transaxle case oil seal from the transaxle housing.

SST 09950-60010 (09951-00530), 09950-70010 (09951-07100)

INSPECTION

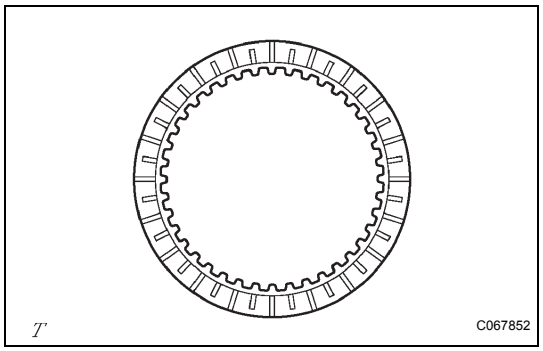

1. INSPECT 2ND COAST AND OVERDRIVE BRAKE DISC

(a) Check whether the sliding surfaces of the disc, plate and flange are worn or burnt.
If necessary, replace them.

NOTICE:

- **If the lining of the disc is peeling off or discolored, or even if a part of the printed number is defaced, replace all the discs.**
- **Before assembling new discs, soak them in ATF for at least 15 minutes.**

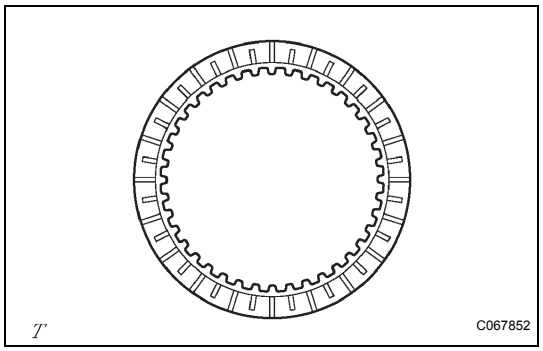

2. INSPECT 2ND BRAKE BRAKE DISC

(a) Check whether the sliding surfaces of the disc, plate and flange are worn or burnt.
If necessary, replace them.

NOTICE:

- **If the lining of the disc is peeling off or discolored or even if a part of the printed mark is defaced, replace all the discs.**
- **Before assembling new discs, soak them in ATF for at least 15 minutes.**

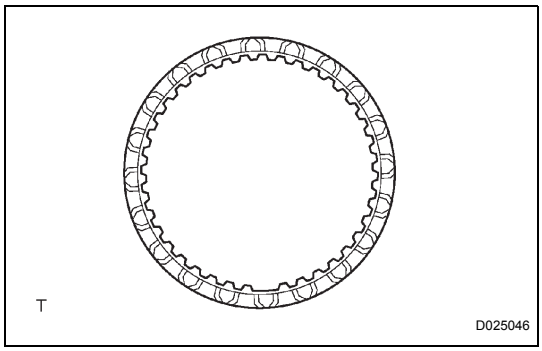

3. INSPECT 1ST AND REVERSE BRAKE DISC

(a) Check to see if the sliding surface of the disc, plate and flange are worn or burnt.
If necessary, replace them.
NOTICE:
- **If the lining of the disc is peeling off or discolored, or even if a part of the printed mark is defaced, replace all the discs.**
- **Before assembling new discs, soak in ATF for at least 15 minutes.**

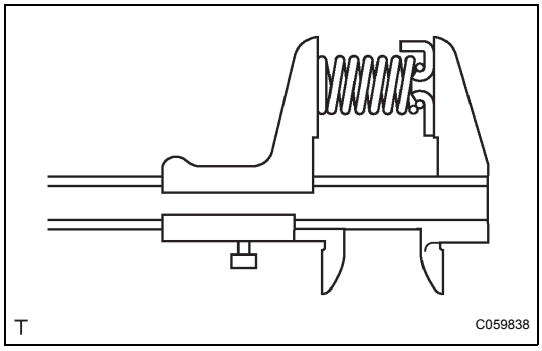

4. INSPECT 1ST AND REVERSE BRAKE RETURN SPRING SUB-ASSEMBLY

(a) Using vernier calipers, measure the free length of the spring together with the spring seat.
Standard free length:
13.96 mm (0.5496 in.)

REASSEMBLY

1. BEARING POSITION

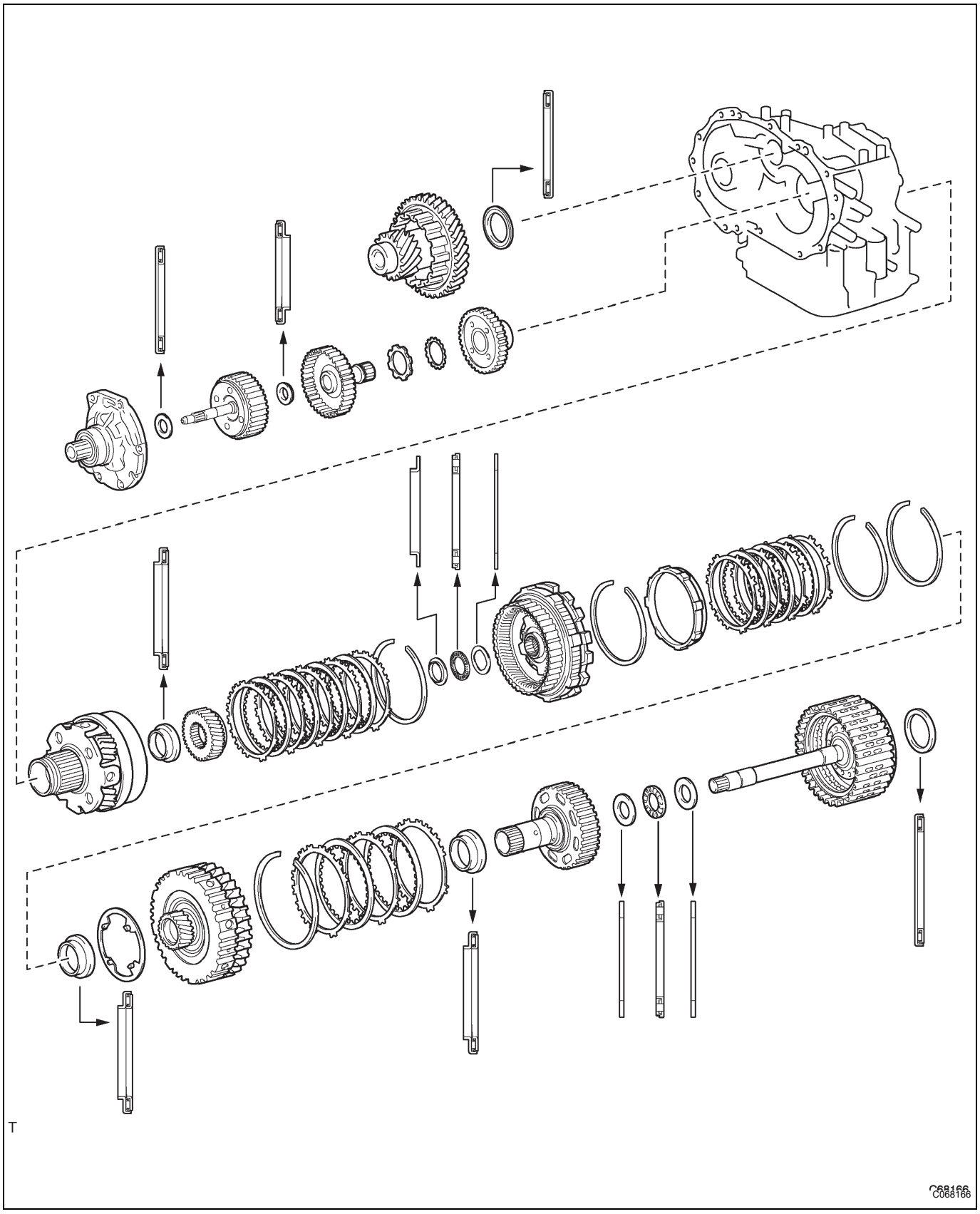

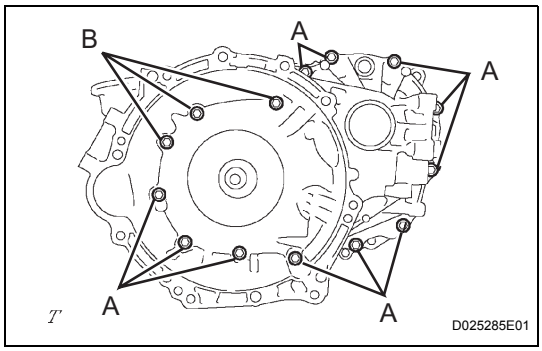

2. INSPECT DIFFERENTIAL CASE TAPERED ROLLER BEARING PRELOAD

(a) Coat the front differential case and bearing with ATF and install them onto the transaxle case.

(b) Install the transaxle housing with the 14 bolts.

Torque: Bolt A
29 N*m (300 kgf*cm, 22 ft.*lbf)
Bolt B
22 N*m (225 kgf*cm, 16 ft.*lbf)

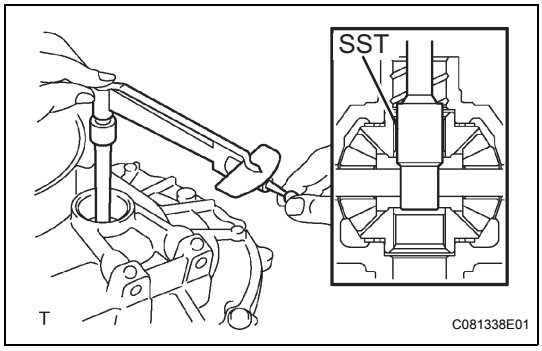

(c) Using SST and a small torque wrench, measure the preload of the differential gear.

Preload

Bearing	Standard
New	0.98 to 1.57 N*m (10.0 to 16.0 kgf*cm 8.7 to 13.9 in.*lbf)
Used	0.49 to 0.78 N*m (5.0 to 8.0 kgf*cm 4.3 to 6.9 in.*lbf)

If the preload is not within the specifications, remove the differential from the transaxle case.
Select a new transaxle case side adjusting shim in accordance with the following table.

Adjusting shim thickness

Mark	Thickness mm (in.)	Mark	Thickness mm (in.)
01	1.90 (0.0748)	11	2.40 (0.0945)
02	1.95 (0.0768)	12	2.45 (0.0965)
03	2.00 (0.0787)	13	2.50 (0.0984)
04	2.05 (0.0807)	14	2.55 (0.1004)
05	2.10 (0.0827)	15	2.60 (0.1024)
06	2.15 (0.0846)	16	2.65 (0.1043)
07	2.20 (0.0866)	17	2.70 (0.1063)
08	2.25 (0.0885)	18	2.75 (0.1082)
09	2.30 (0.0906)	19	2.80 (0.1102)
10	2.35 (0.0925)		

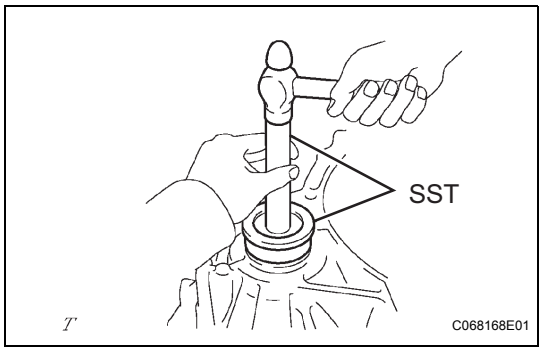

3. INSTALL TRANSAXLE CASE OIL SEAL

(a) Coat the lip of a new oil seal with MP grease.

(b) Using SST and a hammer, drive in a new oil seal.

SST 09554-14010, 09950-70010 (09951-07100)
Oil seal drive in depth:
1.5 to 2.5 mm (0.059 to 0.098 in.)

AX

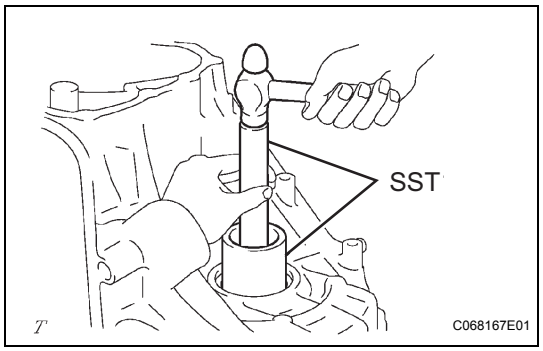

4. INSTALL FRONT TRANSAXLE CASE OIL SEAL

(a) Coat the lip of a new oil seal with MP grease.

(b) Using SST and a hammer, drive in a new oil seal.

SST 09726-27012 (09726-02041), 09950-70010 (09951-07150)

Oil seal drive in depth:
5.4 to 6.4 mm (0.213 to 0.252 in.)

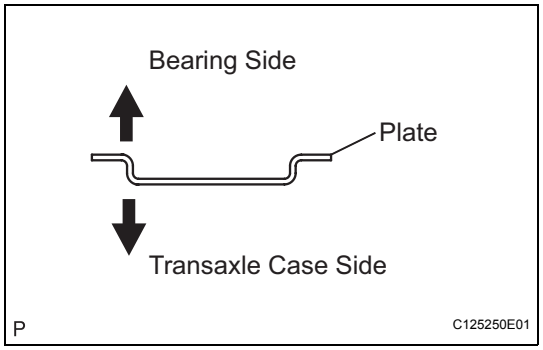

5. INSTALL FRONT DRIVE PINION REAR TAPERED ROLLER BEARING

(a) Install transaxle case plate No. 1 onto the transaxle case.

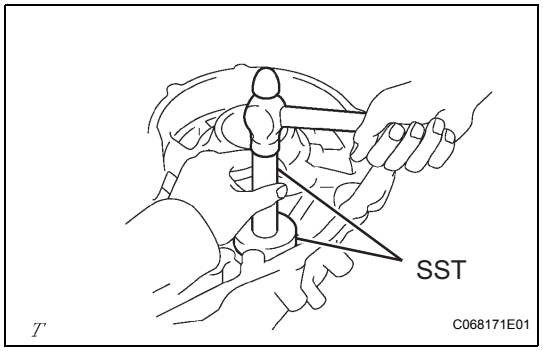

(b) Using SST and a hammer, install the front drive pinion rear tapered roller bearing onto the transaxle case.

SST 09950-60010 (09951-00610), 09950-70010 (09951-07150)

6. INSTALL FRONT DRIVE PINION FRONT TAPERED ROLLER BEARING

(a) Install the thrust bearing onto the transaxle housing.

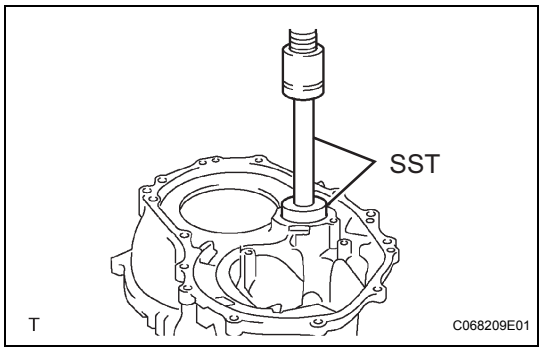

(b) Using SST and a press, install a new front drive pinion front tapered roller bearing onto the transaxle housing.

SST 09950-60010 (09951-00650), 09950-70010 (09951-07150)

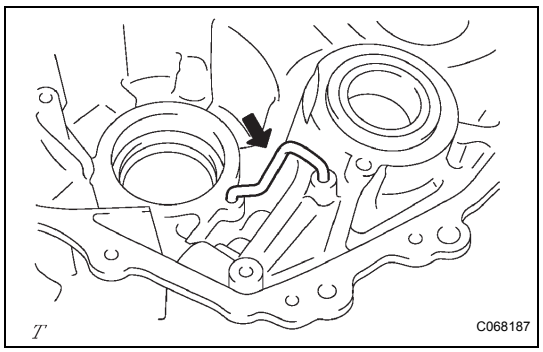

7. INSTALL DIFFERENTIAL GEAR LUBE APPLY TUBE

(a) Install the differential gear lube apply tube onto the transaxle housing.

AX

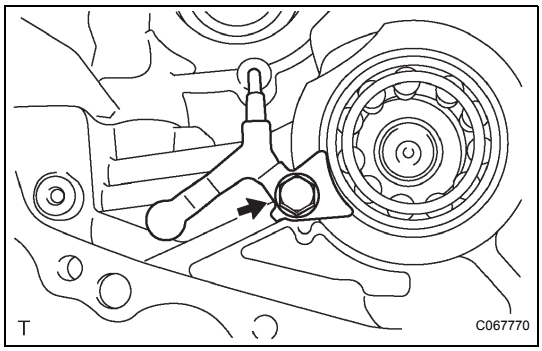

8. INSTALL BEARING LOCK PLATE

(a) Install the bearing lock plate onto the transaxle housing with the bolt.
Torque: 11 N*m (115 kgf*cm, 8 ft.*lbf)

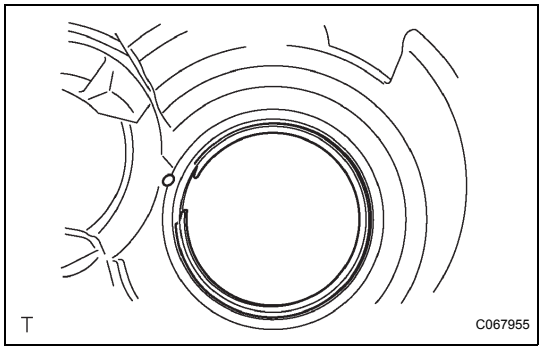

9. INSTALL COUNTER DRIVE GEAR HOLE SNAP RING

(a) Using a screwdriver, install the counter drive gear hole snap ring onto the transaxle case.

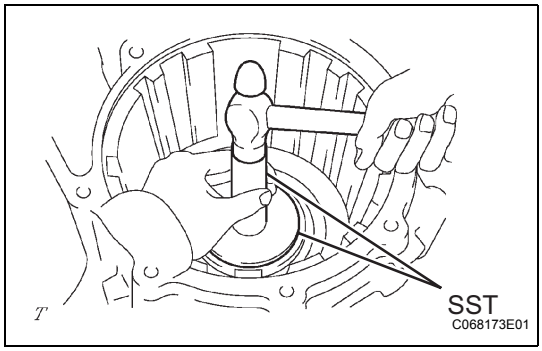

10. INSTALL COUNTER DRIVE GEAR BEARING

(a) Using SST and a hammer, install the counter drive gear bearing LH outer race onto the transaxle case.
SST 09950-60020 (09951-00890), 09950-70010 (09951-07150)

AX

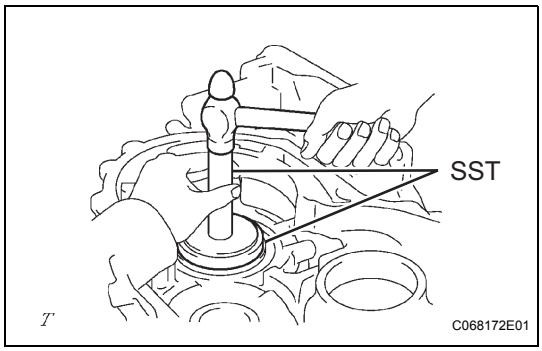

(b) Using SST and a hammer, install the counter drive gear bearing RH outer race onto the transaxle case.
SST 09950-60020 (09951-00890), 09950-70010 (09951-07150)

(c) Install the counter drive gear bearing onto the transaxle case.

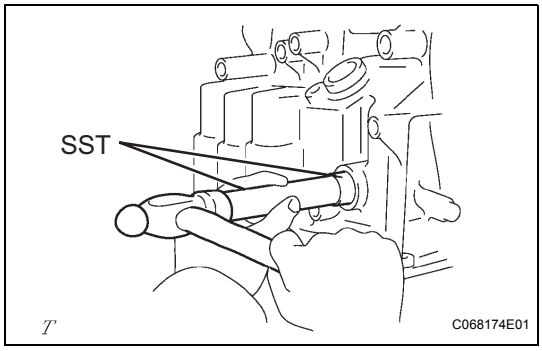

11. INSTALL MANUAL VALVE LEVER SHAFT OIL SEAL

(a) Coat the lip of a new oil seal with MP grease.

(b) Using SST and a hammer, install a new manual valve lever shaft oil seal.
SST 09950-60010 (09951-00220), 09950-70010 (09951-07100)
Oil seal drive in depth:
-0.5 to 0.5 mm (-0.020 to 0.020 in.)

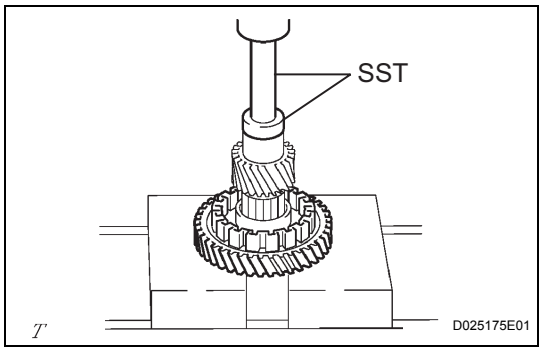

12. INSTALL DIFFERENTIAL DRIVE PINION

(a) Using SST and a press, install the differential drive pinion onto the counter driven gear.

SST 09950-60010 (09951-00350), 09950-70010 (09951-07150)

NOTICE:

When replacing the counter driven gear, replace the counter drive gear in the transaxle case as well.

Press the differential drive pinion in until it comes into contact with the counter driven gear.

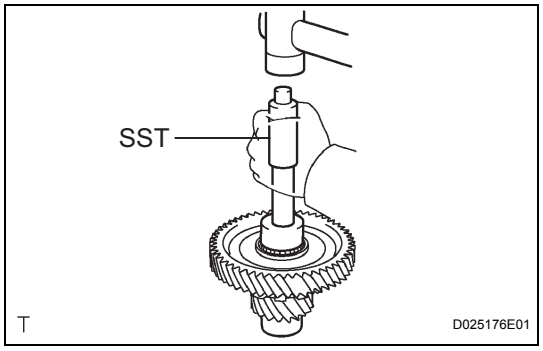

13. INSTALL DIFFERENTIAL DRIVE PINION PLUG

(a) Using SST and a plastic hammer, install a new differential drive pinion plug onto the differential drive pinion.

SST 09221-25026 (09221-00071)

Standard clearance:

2.5 to 2.6 mm (0.0984 to 0.1023 in.)

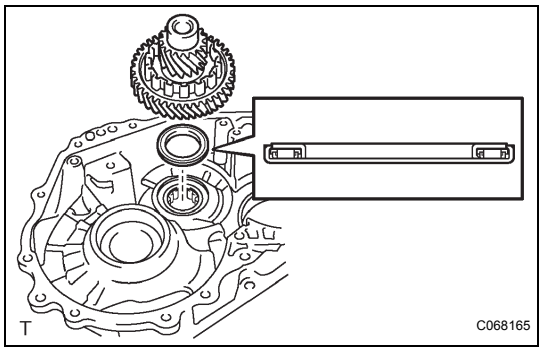

14. INSTALL COUNTER DRIVEN GEAR

(a) Install the counter driven gear and drive pinion thrust bearing onto the transaxle case.

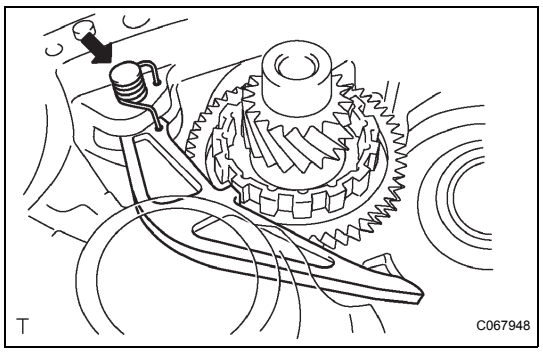

15. INSTALL PARKING LOCK PAWL

(a) Coat the parking lock pawl shaft with ATF.

(b) Install the parking lock pawl, parking lock pawl shaft torsion spring and parking lock pawl shaft onto the transaxle case.

NOTICE:

Check that the parking lock pawl moves smoothly.

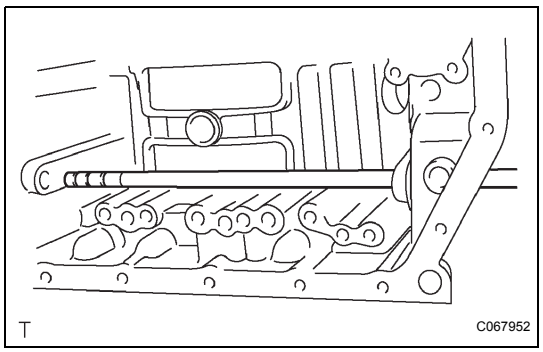

16. INSTALL MANUAL VALVE LEVER SHAFT

(a) Install the manual valve lever shaft onto the transaxle case.

NOTICE:

Do not damage the oil seal lip.

AX

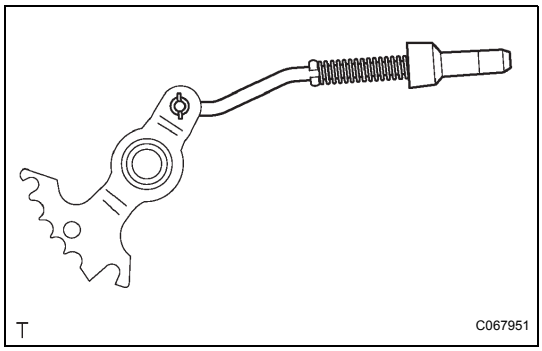

17. INSTALL PARKING LOCK ROD SUB-ASSEMBLY

(a) Install the parking lock rod onto the manual valve lever.

18. INSTALL MANUAL VALVE LEVER SUB-ASSEMBLY

(a) Coat the manual valve lever sub-assembly with ATF.

(b) Install the manual valve lever and a new manual valve lever spacer onto the manual valve lever shaft.

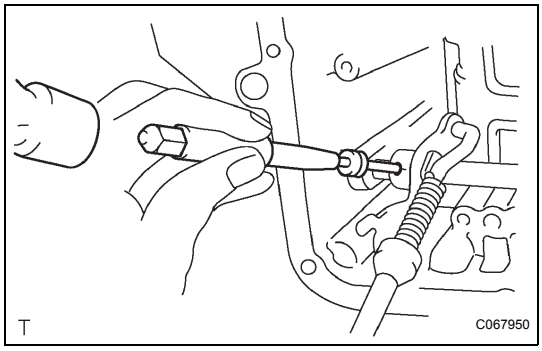

(c) Using a pin punch and hammer, drive in the pin.

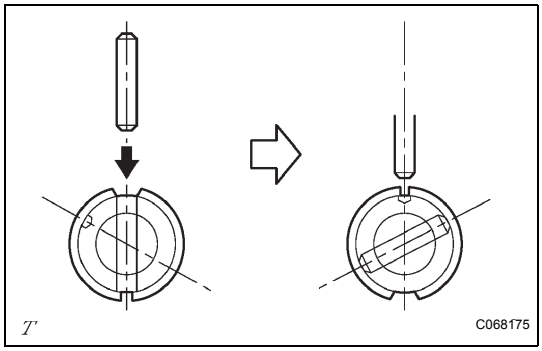

(d) Turn the spacer and lever shaft to align the small hole for locating the staking position in the spacer with the staking position mark on the lever shaft.

(e) Using a pin punch, stake the spacer through the small hole.

(f) Check that the spacer does not turn.

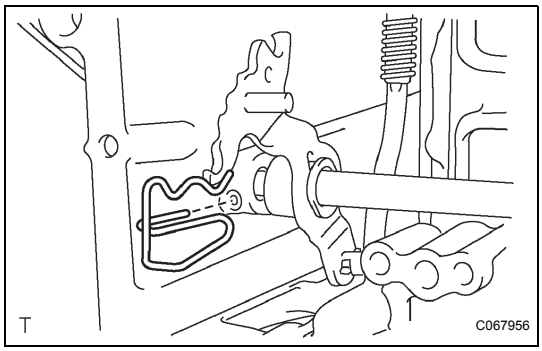

19. INSTALL MANUAL VALVE LEVER SHAFT RETAINER SPRING

(a) Install the manual valve lever shaft retainer spring onto the manual valve lever shaft.

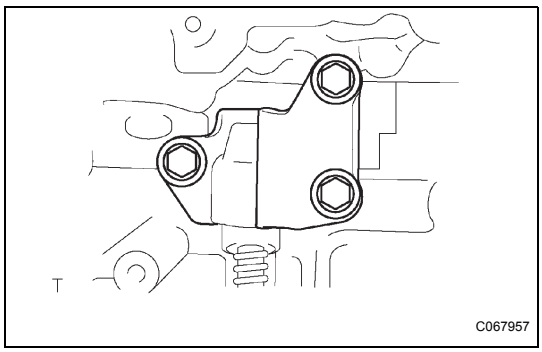

20. INSTALL PARKING LOCK PAWL BRACKET

(a) Install the parking lock pawl bracket, parking lock rod and cam guide sleeve onto the transaxle case with the 3 bolts.
Torque: 20 N*m (205 kgf*cm, 15 ft.*lbf)

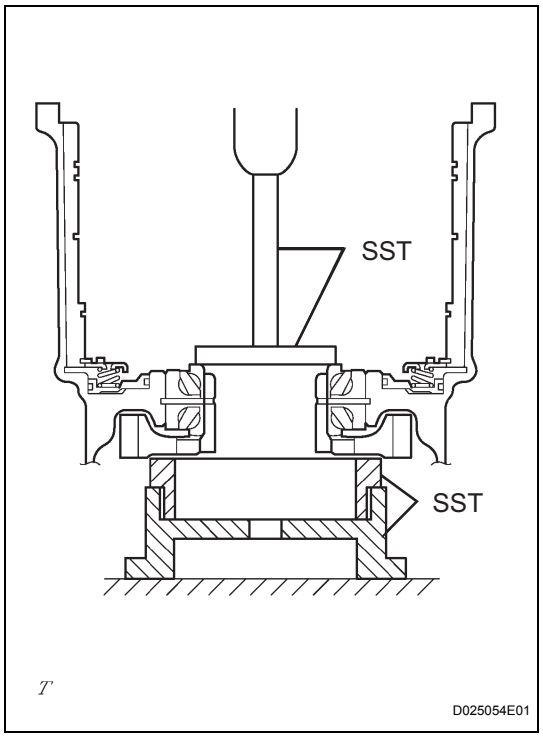

21. INSTALL COUNTER DRIVE GEAR

(a) Using SST and a press, install the counter drive gear onto the transaxle case.

SST 09223-15030, 09527-17011, 09950-60010 (09951-00650), 09950-70010 (09951-07150)

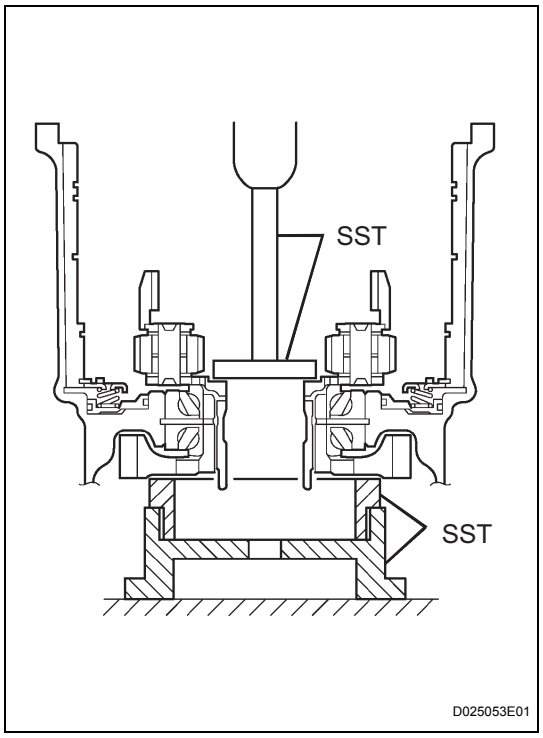

22. INSTALL PLANETARY GEAR ASSEMBLY

(a) Using SST and a press, install the planetary gear assembly onto the transaxle case.

SST 09950-60010 (09951-00480), 09223-15030, 09527-17011, 09950-70010 (09951-07150)

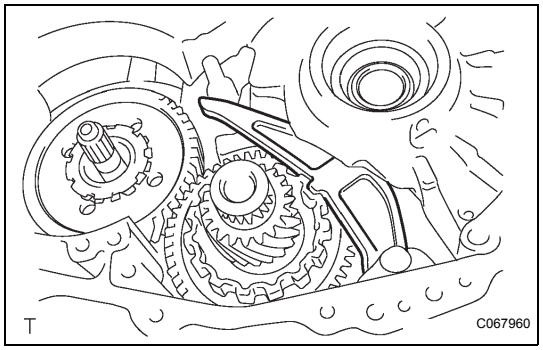

23. INSTALL COUNTER DRIVE GEAR NUT

(a) Fix the counter driven gear with the parking lock pawl.

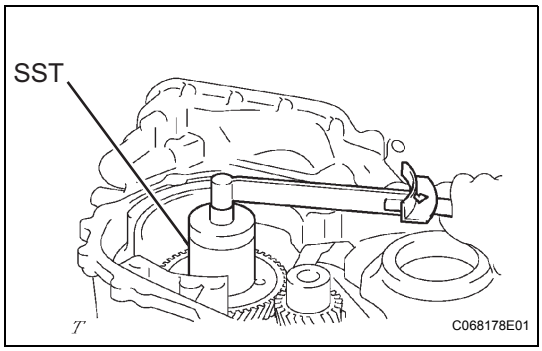

(b) Using SST, install a new lock washer and nut.
SST 09387-00120
Torque: 280 N*m (2,855 kgf*cm, 207 ft.*lbf)

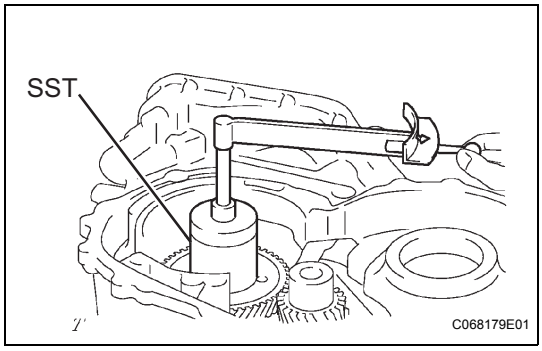

(c) Using SST and a small torque wrench, measure the rotating torque while turning the counter drive gear at 60 turns per minute.
SST 09387-00120
Rotating torque:
0.20 to 0.49 N*m (2 to 5 kgf*cm, 2 to 4 in.*lbf)

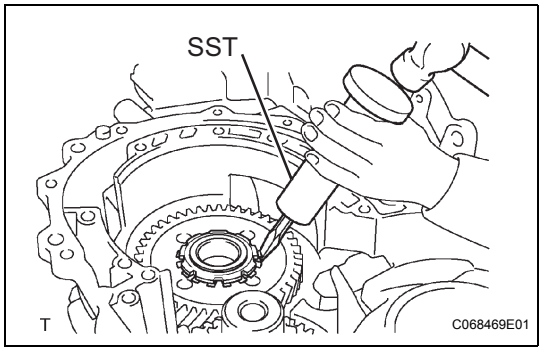

(d) Using SST and a hammer, stake the lock nut washer.
SST 09930-00010

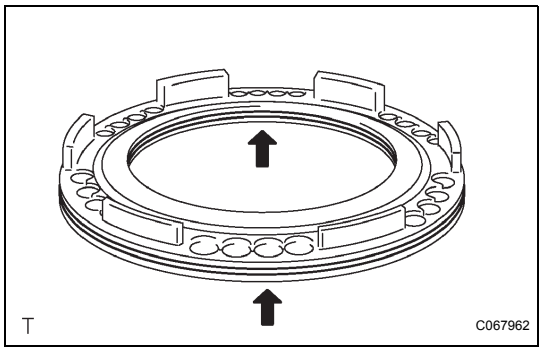

24. INSTALL NO. 2 1ST AND REVERSE BRAKE PISTON O-RING

(a) Coat 2 new O-rings with ATF, and install them onto No. 2 brake piston.

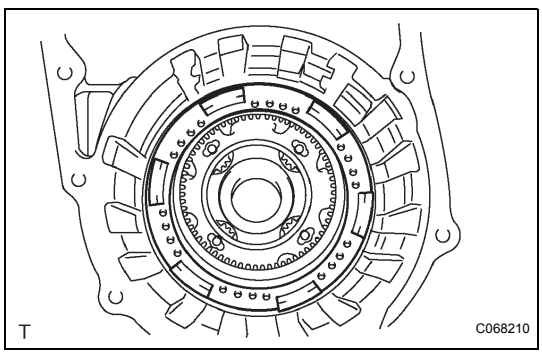

25. INSTALL NO. 2 1ST AND REVERSE BRAKE PISTON

(a) Coat No. 2 1st and reverse brake piston with ATF, and install it into the transaxle case.
NOTICE:
Do not damage the oil seal lip.

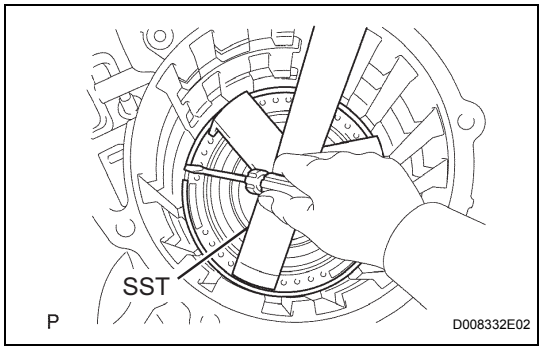

26. INSTALL 1ST AND REVERSE BRAKE RETURN SPRING SUB-ASSEMBLY

(a) Install the 1st and reverse brake return spring sub-assembly onto the transaxle case.

(b) Using SST, a press and a screwdriver, install the snap ring.

SST 09387-00070

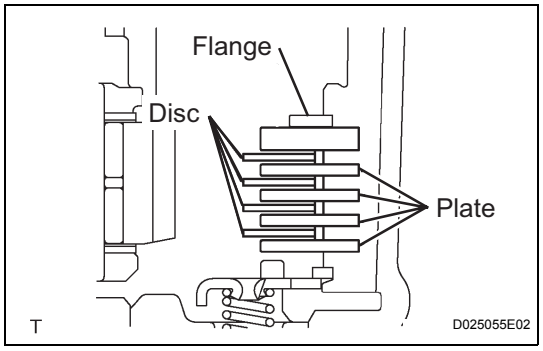

27. INSTALL 1ST AND REVERSE BRAKE DISC

(a) Install the 4 plates, 4 discs and flange onto the transaxle case.

(b) Using a screwdriver, install the snap ring.

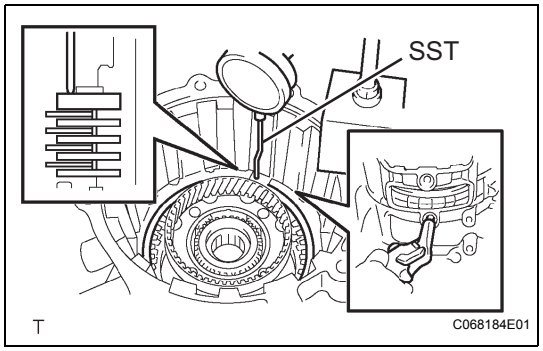

28. INSPECT PACK CLEARANCE OF FIRST AND REVERSE BRAKE

(a) Using SST and a dial indicator, measure the first and reverse brake clearance while pressing the disc and plate from the rear side.

SST 09350-36010 (09350-06110)

Pack clearance:

0.806 to 1.206 mm (0.0317 to 0.0475 in.)

NOTICE:

If the clearance is outside the specifications, select a new brake flange.

HINT:

There are 4 different flange thicknesses.

Flange thickness

Mark	Thickness mm (in.)	Mark	Thickness mm (in.)
-	3.4 (0.134)	2	3.8 (0.150)
1	3.6 (0.142)	3	4.0 (0.157)

(b) Check that the 1st and reverse brake piston moves when compressed air is applied (392 kPa, 4.0 kgf/cm^2, 57 psi) to the oil hole.

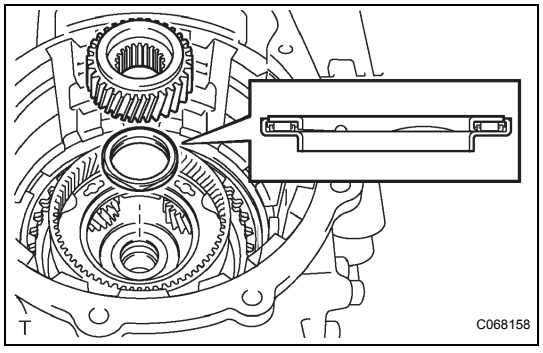

29. INSTALL FRONT PLANETARY SUN GEAR

(a) Install the planetary sun gear and needle roller bearing onto the planetary gear assembly.

AX

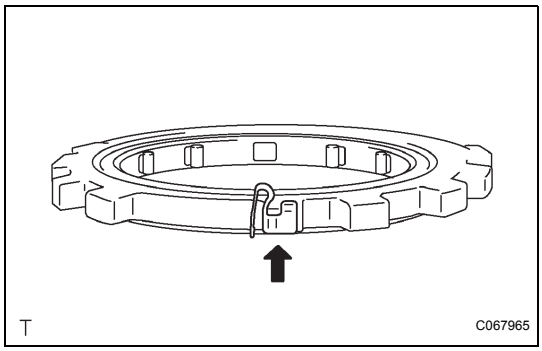

30. INSTALL OUTER RACE RETAINER

(a) Install the outer retainer onto No. 2 1-way clutch.

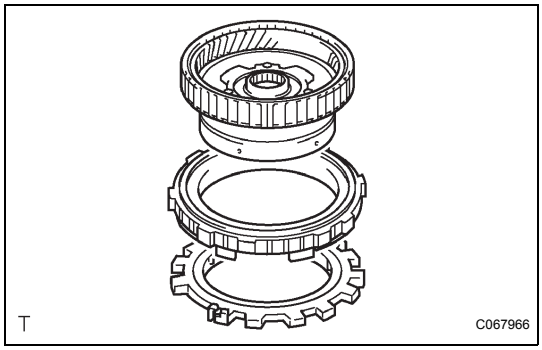

31. INSTALL NO. 2 1-WAY CLUTCH

(a) Install the 1-way clutch and 2nd brake piston assembly onto the rear planetary gear assembly.

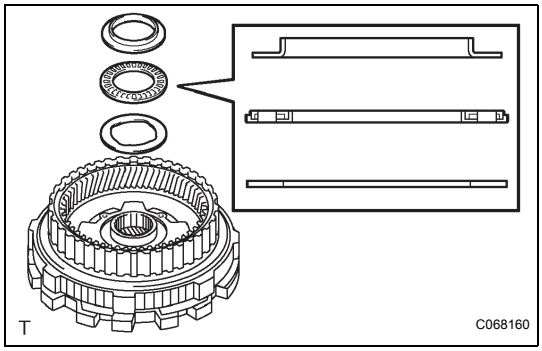

32. INSTALL REAR PLANETARY GEAR THRUST NEEDLE ROLLER BEARING

(a) Install No. 2 thrust bearing race, the planetary gear thrust needle roller bearing and thrust bearing race onto the rear planetary gear assembly.

AX

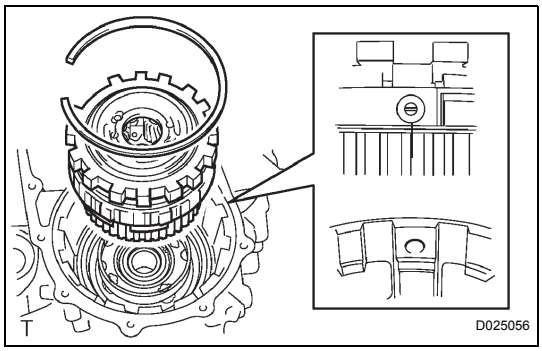

33. INSTALL REAR PLANETARY GEAR ASSEMBLY

(a) Install the rear planetary gear assembly onto the transaxle case.

(b) Using a screwdriver, install the snap ring.

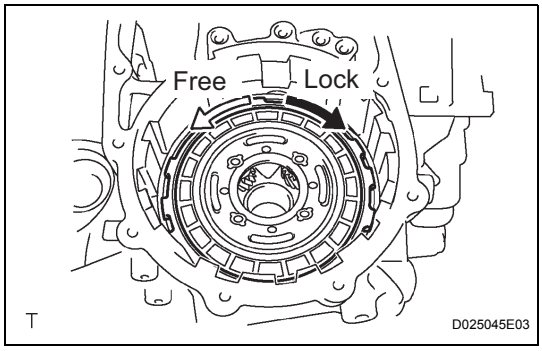

34. INSPECT NO. 2 1-WAY CLUTCH

(a) Check that the rear planetary gear turns freely counterclockwise and locks when turned clockwise.

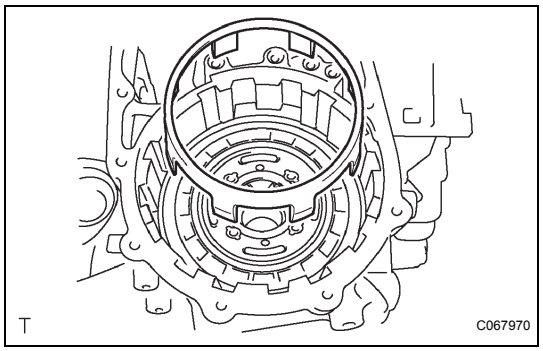

35. INSTALL 2ND BRAKE PISTON SLEEVE

(a) Install the 2nd brake piston sleeve onto the transaxle case.

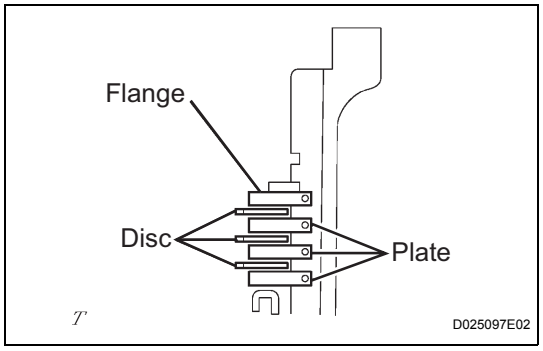

36. INSTALL 2ND BRAKE BRAKE DISC

(a) Install the 3 discs, 3 plates and flange onto the transaxle case.

(b) Using a screwdriver, install a snap ring onto the transaxle case.

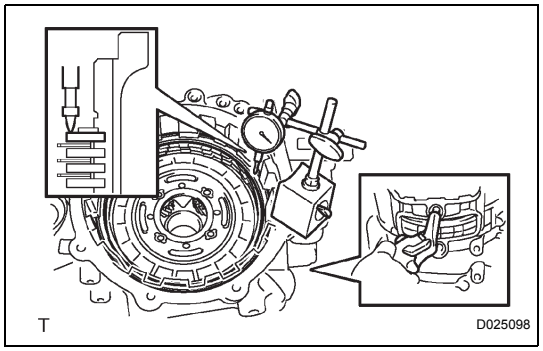

37. INSPECT PACK CLEARANCE OF 2ND BRAKE

(a) Using a dial indicator, measure the 2nd brake pack clearance while applying and releasing compressed air (392 to 785 kPa, 4 to 8 kgf/cm^2, 57 to 114 psi).

Pack clearance:

0.847 to 1.247 mm (0.0333 to 0.0491 in.)

NOTICE:

If the clearance is outside the specifications, select a new brake flange.

HINT:

There are 4 different flange thicknesses.

Flange thickness

Mark	Thickness mm (in.)	Mark	Thickness mm (in.)
-	3.0 (0.118)	2	3.4 (0.134)
1	3.2 (0.126)	3	3.6 (0.142)

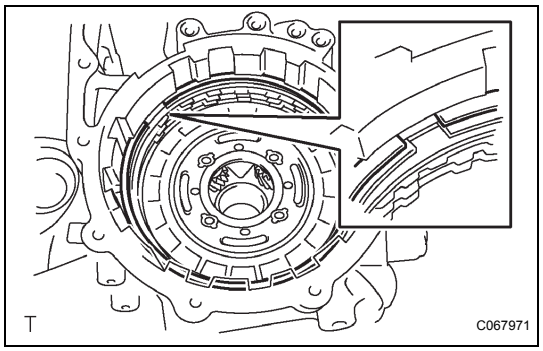

38. INSTALL 2ND COAST AND OVERDRIVE BRAKE FLANGE HOLE SNAP RING

(a) Using a screwdriver, install a snap ring onto the transaxle case.

AX

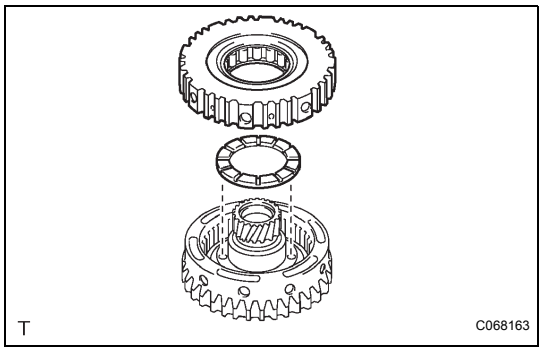

39. INSTALL 1-WAY CLUTCH ASSEMBLY

(a) Install No. 2 thrust washer onto the rear planetary gear assembly.

(b) Install 1-way clutch assembly onto the rear planetary sun gear assembly.

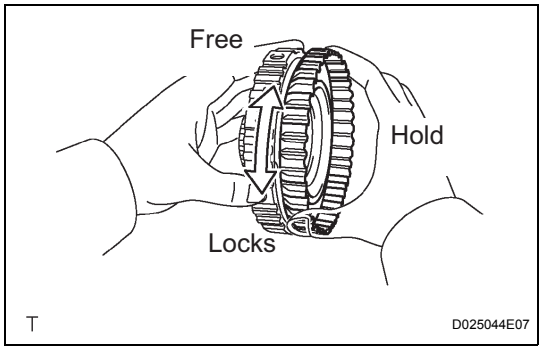

40. INSPECT 1-WAY CLUTCH ASSEMBLY

(a) Hold the rear planetary sun gear and turn the 1-way clutch and check that the 1-way clutch turns freely counterclockwise and locks when turned clockwise.

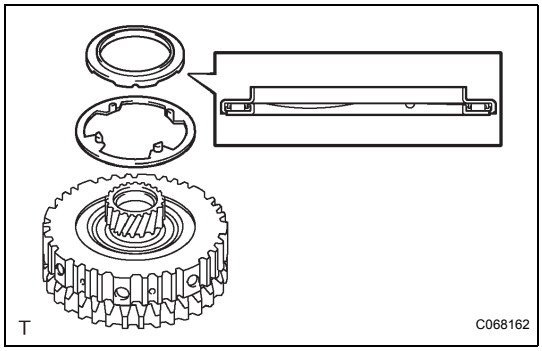

41. INSTALL REAR PLANETARY SUN GEAR THRUST NEEDLE ROLLER BEARING

(a) Install the thrust bearing and a washer onto the rear planetary sun gear.

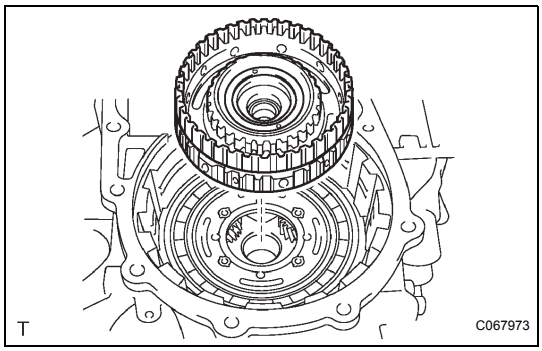

42. INSTALL REAR PLANETARY SUN GEAR ASSEMBLY

(a) Install the rear planetary sun gear assembly.

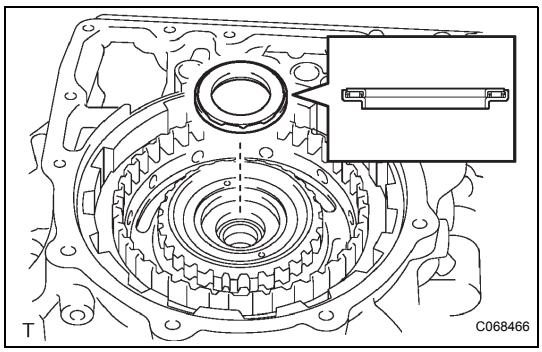

43. INSTALL REAR NO. 2 PLANETARY SUN GEAR THRUST NEEDLE ROLLER BEARING

(a) Install the thrust bearing onto the rear planetary sun gear.

AX

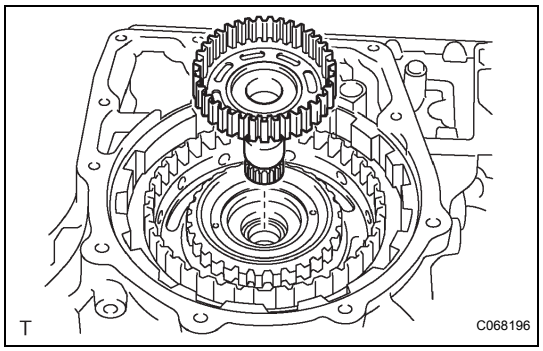

44. INSTALL DIRECT CLUTCH HUB

(a) Install the direct clutch hub.

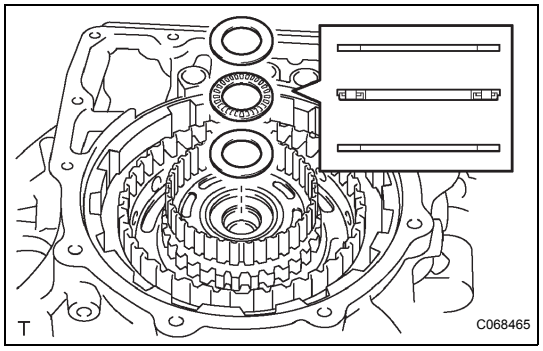

45. INSTALL THRUST NEEDLE ROLLER BEARING

(a) Install No. 3 thrust bearing race, the thrust needle roller bearing and the C-2 hub thrust bearing race onto the direct clutch hub.

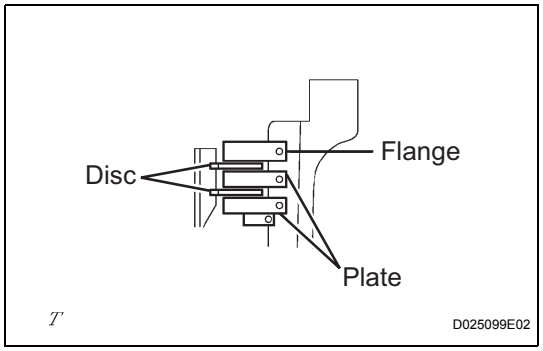

46. INSTALL 2ND COAST AND OVERDRIVE BRAKE DISC

(a) Install the 2 discs, 2 plates and flange onto the transaxle case.

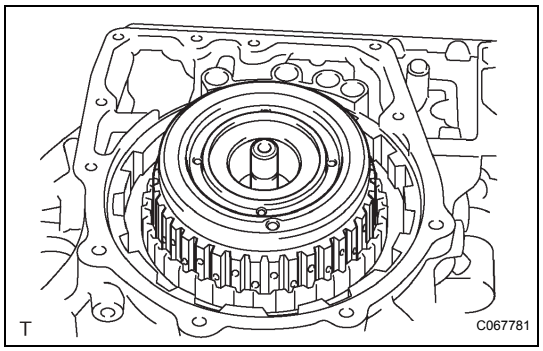

47. INSTALL INTERMEDIATE SHAFT ASSEMBLY

(a) Install the intermediate shaft assembly onto the transaxle case.

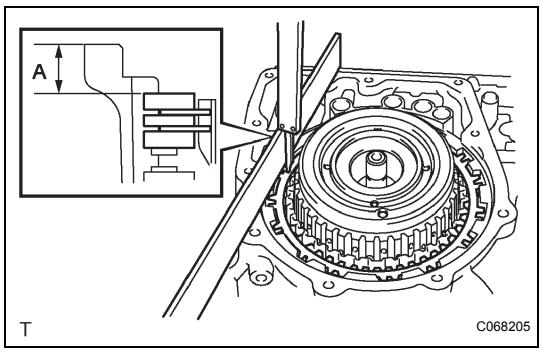

48. INSPECT 2ND COAST AND OVERDRIVE BRAKE CLEARANCE

(a) As shown in the illustration, place a straight edge on the transaxle case and measure the distance between the 2nd coast and O/D brake flange and straight edge using vernier calipers. (Dimension A)

AX

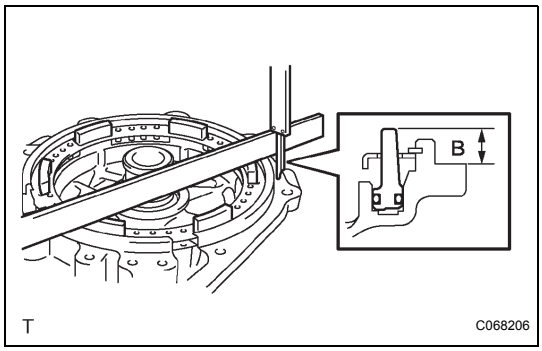

(b) As shown in the illustration, place a straight edge on the O/D brake piston and measure the distance between the transaxle rear cover and straight edge using vernier calipers. (Dimension B)
Calculate the piston stroke value using the following formula. Select a flange which meets the piston stroke value and install it.
Pack clearance:
2.091 to 2.491 mm (0.0823 to 0.0981 in.)
NOTICE:
If the clearance is outside the specifications, select a new brake flange.
HINT:
There are 4 different flange thicknesses.
Flange thickness

Mark	Thickness mm (in.)	Mark	Thickness mm (in,)
4	4.0 (0.1575)	6	4.4 (0.1732)
5	4.2 (0.1654)	7	4.6 (0.1811)

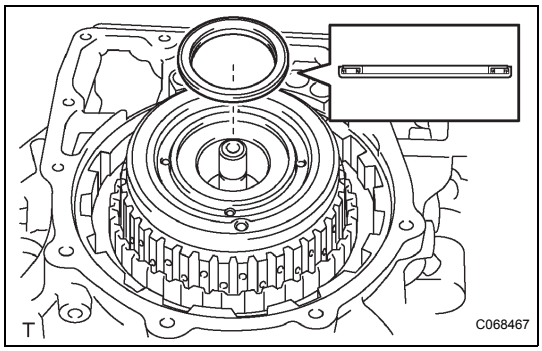

49. INSTALL REAR CLUTCH DRUM THRUST NEEDLE ROLLER BEARING

(a) Install the bearing onto the intermediate shaft.

AX

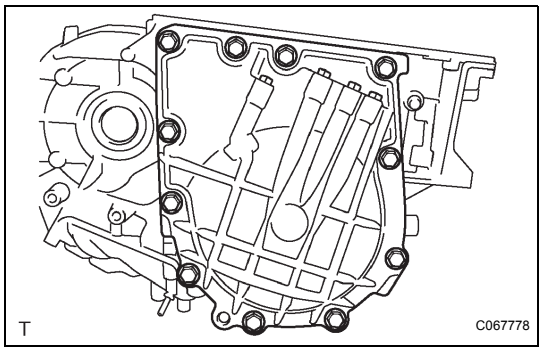

50. INSPECT INTERMEDIATE SHAFT ASSEMBLY

(a) Install the transaxle rear cover with the 11 bolts.
Torque: 25 N*m (250 kgf*cm, 18 ft.*lbf)

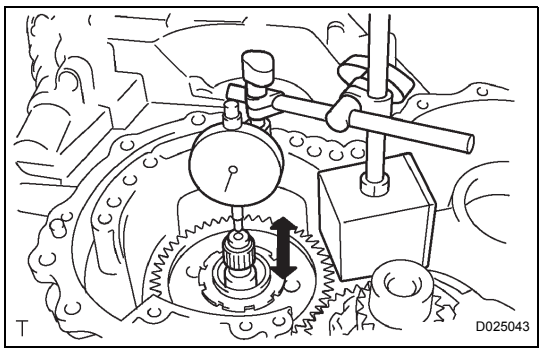

(b) Using a dial indicator, measure the clearance of the intermediate shaft.
Standard clearance:
0.204 to 0.966 mm (0.008 to 0.038 in.)

(c) Remove the 11 bolts and the transaxle rear cover.

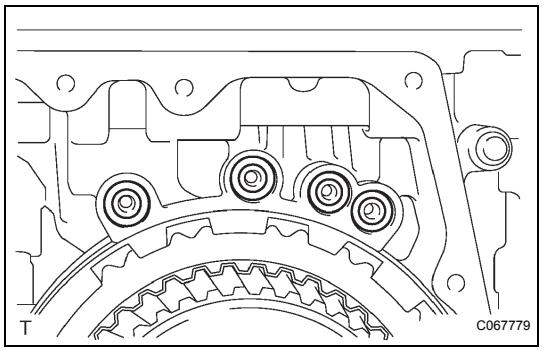

51. INSTALL TRANSAXLE CASE GASKET

(a) Install 4 new gaskets onto the transaxle case.

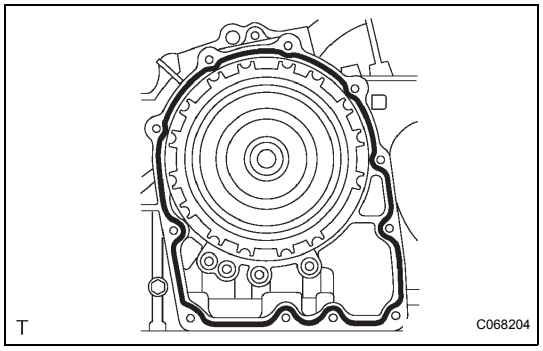

52. INSTALL REAR TRANSAXLE COVER ASSEMBLY

(a) Apply FIPG to the transaxle case.
FIPG:
Toyota Genuine Seal Packing 1281, Three Bond 1281 or Equivalent

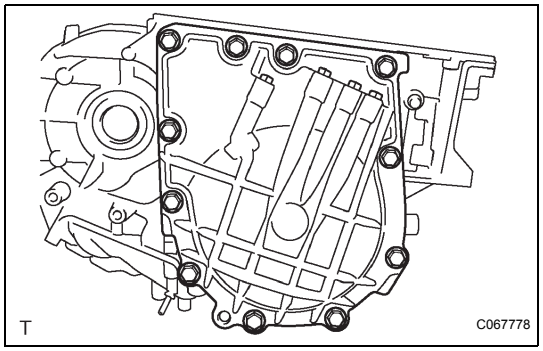

(b) Install the rear transaxle cover with the 11 bolts.
Torque: 25 N*m (250 kgf*cm, 18 ft.*lbf)

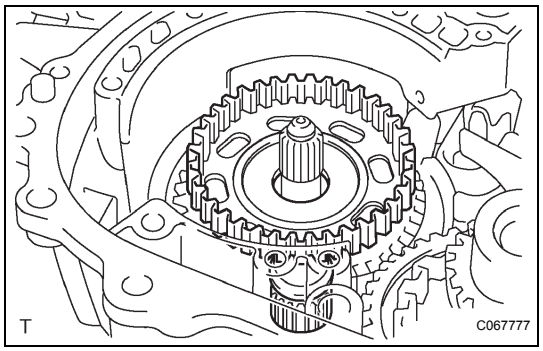

53. INSTALL FORWARD CLUTCH HUB SUB-ASSEMBLY

(a) Install the forward clutch hub sub-assembly onto the transaxle case.

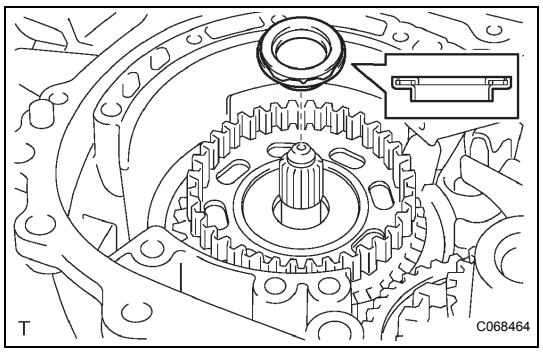

54. INSTALL FORWARD CLUTCH HUB THRUST NEEDLE ROLLER BEARING

(a) Install the bearing onto the forward clutch hub.

AX

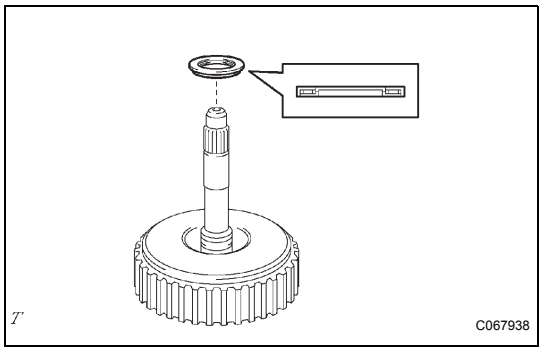

55. INSTALL STATOR SHAFT THRUST NEEDLE ROLLER BEARING

(a) Install the bearing onto the input shaft assembly.

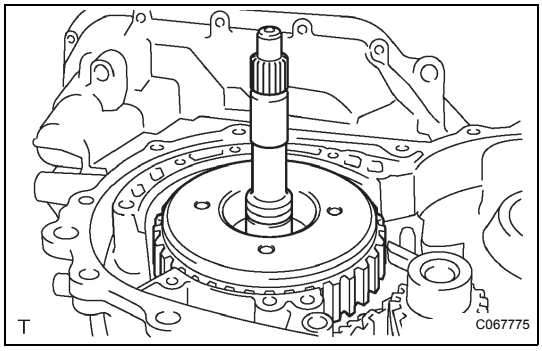

56. INSTALL INPUT SHAFT ASSEMBLY

(a) Install the input shaft assembly onto the transaxle case.

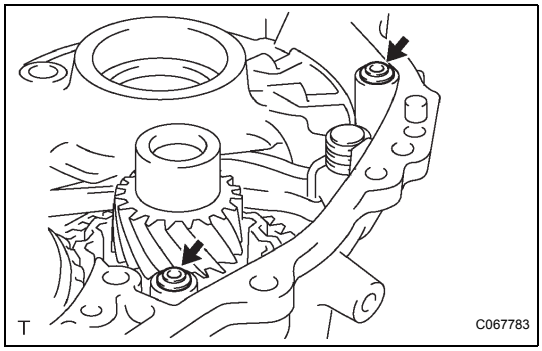

57. INSTALL OVERDRIVE BRAKE GASKET

(a) Install 2 new gaskets onto the transaxle case.

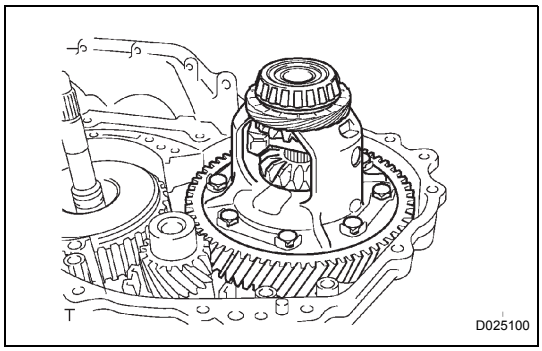

58. INSTALL DIFFERENTIAL GEAR ASSEMBLY

(a) Install the differential gear assembly onto the transaxle case.

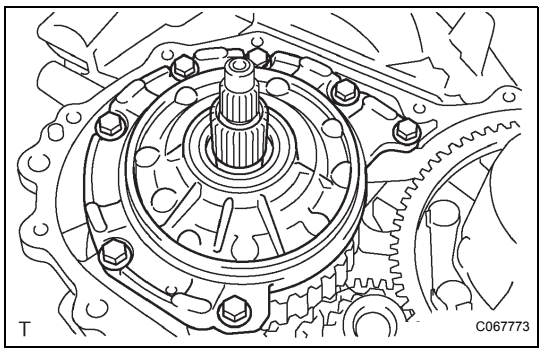

59. INSTALL OIL PUMP ASSEMBLY

(a) Install the oil pump with the 7 bolts.
Torque: 22 N*m (225 kgf*cm, 16 ft.*lbf)

AX

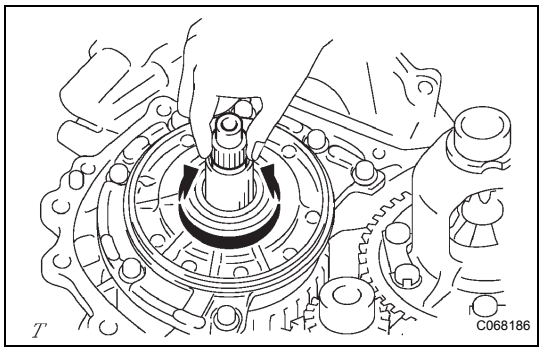

60. INSPECT INPUT SHAFT ASSEMBLY

(a) Make sure that the input shaft turns smoothly.

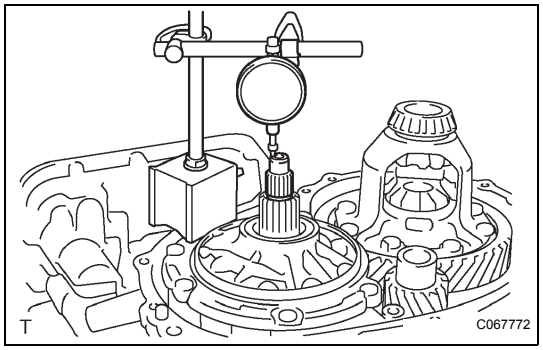

61. INSPECT INPUT SHAFT END PLAY

(a) Measure the end play in the axial direction.

End play:

0.37 to 1.29 mm (0.0146 to 0.0508 in.)

If the end play is not as specified, replace the thrust needle roller bearing.

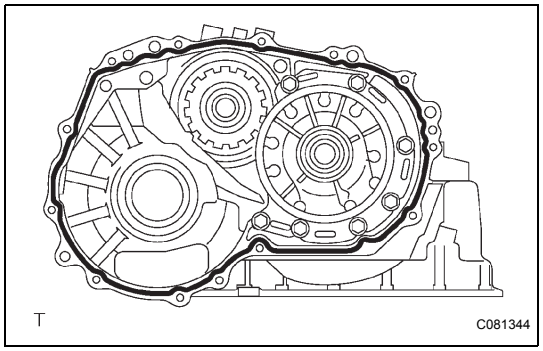

62. INSTALL TRANSAXLE HOUSING

(a) Apply FIPG to the transaxle case.

FIPG:

Toyota Genuine Seal Packing 1281, Three Bond 1281 or Equivalent

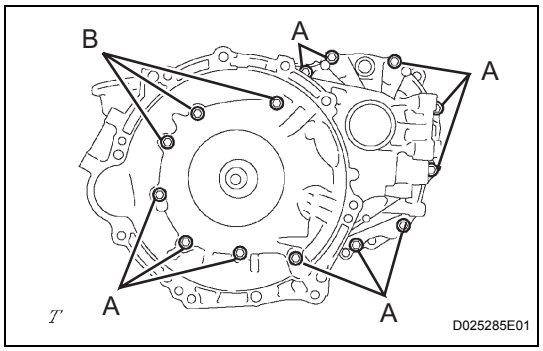

(b) Install the transaxle housing with the 14 bolts.

Torque: Bolt A

29 N*m (300 kgf*cm, 22 ft.*lbf)

Bolt B

22 N*m (225 kgf*cm, 16 ft.*lbf)

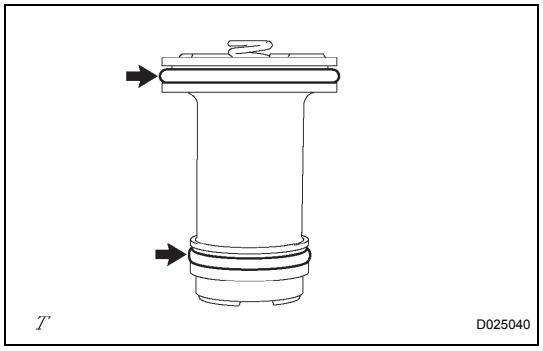

63. INSTALL C-2 ACCUMULATOR PISTON

(a) Coat 2 new O-rings with ATF and install them onto the C-2 accumulator piston.

NOTICE:

Do not damage the O-rings.

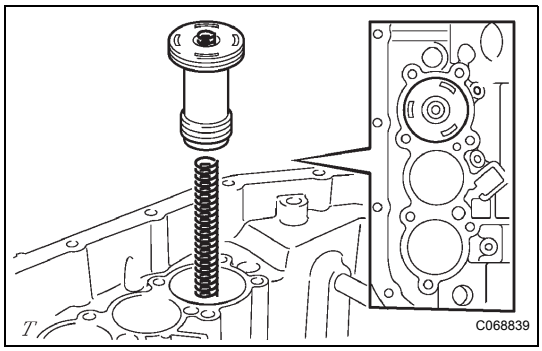

(b) Install the spring and C-2 accumulator piston.
Accumulator spring

Spring	Free length/ Outer diameter mm (in.)	Color
C-2	66.90 (2.6339) 17.20 (0.6772)	-

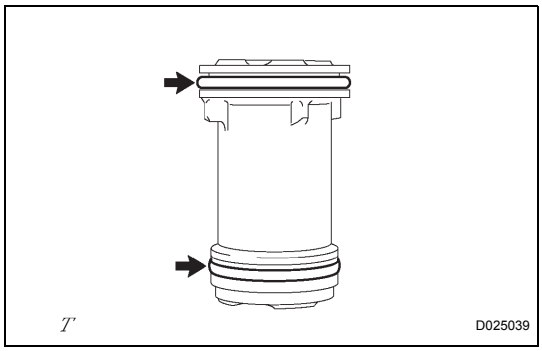

64. INSTALL C-3 ACCUMULATOR PISTON

(a) Coat 2 new O-rings with ATF and install them onto the C-3 accumulator piston.
NOTICE:
Do not damage the O-rings.

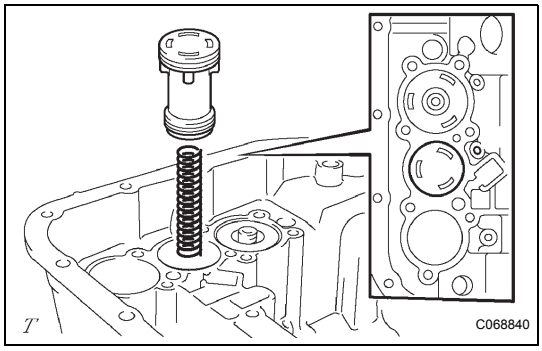

(b) Install the spring and C-3 accumulator piston.
Accumulator spring

Spring	Free length/ Outer diameter mm (in.)	Color
C-3	80.20 (3.1575) 18.70 (0.7362)	Blue

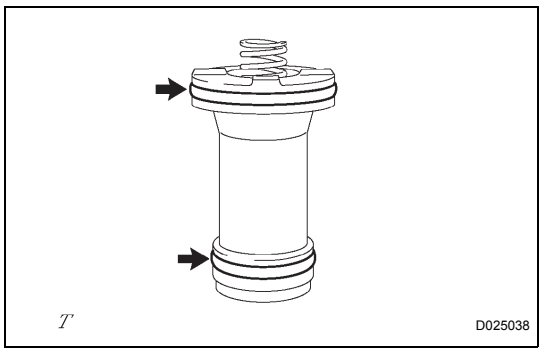

65. INSTALL B-2 ACCUMULATOR PISTON

(a) Coat 2 new O-rings with ATF and install them onto the B-2 accumulator piston.
NOTICE:
Do not damage the O-rings.

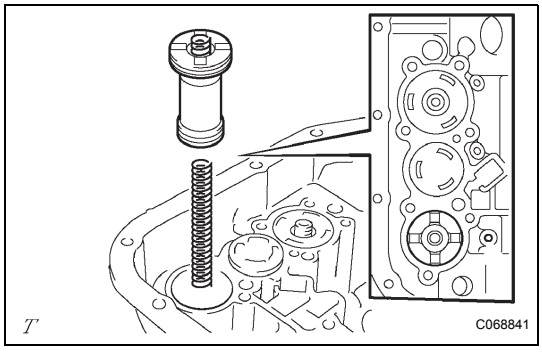

(b) Install the spring and B-2 accumulator piston.
Accumulator spring

Spring	Free length/ Outer diameter mm (in.)	Color
B-2	66.90 (2.6339) 15.50 (0.6102)	Green

AX

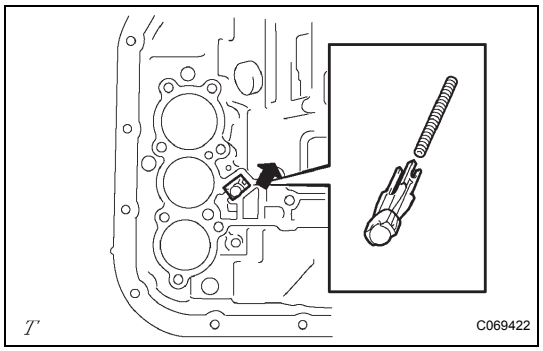

66. INSTALL CHECK BALL BODY

(a) Install the spring and check ball body.

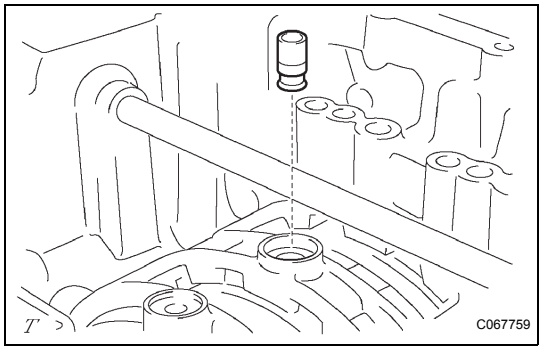

67. INSTALL BRAKE DRUM GASKET

(a) Install a new brake drum gasket.

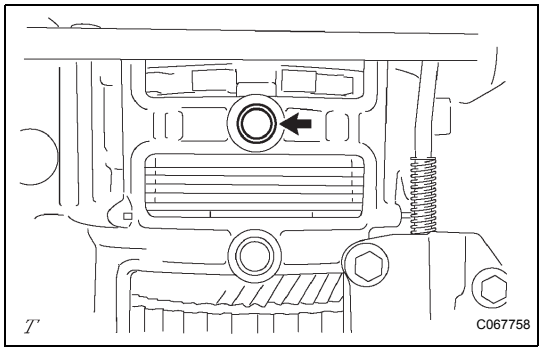

68. INSTALL TRANSAXLE CASE GASKET

(a) Coat a new transaxle case gasket with ATF, and install it onto the transaxle case.

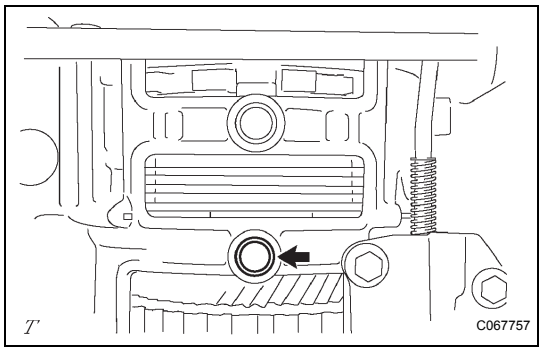

69. INSTALL TRANSAXLE CASE 2ND BRAKE GASKET

(a) Coat a new transaxle case 2nd brake gasket with ATF, and install it onto the transaxle case.

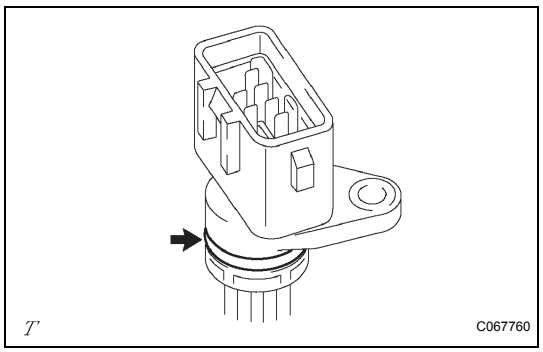

70. INSTALL TRANSMISSION WIRE

(a) Coat a new O-ring with ATF, and install it onto the transmission wire.

AX

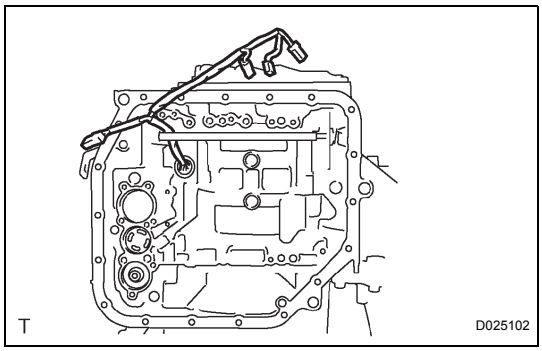

(b) Insert the transmission wire into the transaxle.

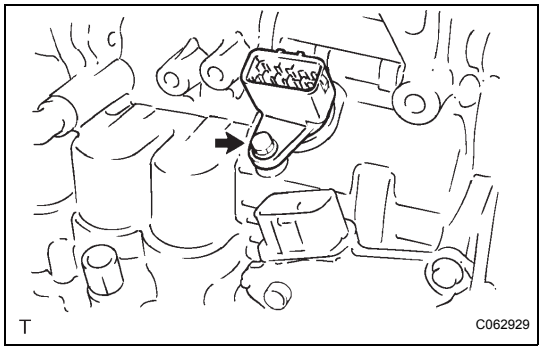

(c) Install the transmission wire with the bolt.
Torque: 5.4 N*m (55 kgf*cm, 48 in.*lbf)

71. INSTALL TRANSMISSION VALVE BODY ASSEMBLY

(a) Align the groove of the manual valve with the pin of the manual valve lever.

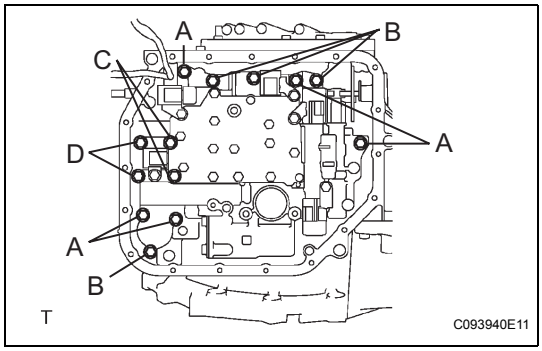

(b) Provisionally install the valve body with the 13 bolts.
Bolt length:
Bolt A: 32 mm (1.26 in.)
Bolt B: 22 mm (0.87 in.)
Bolt C: 55 mm (2.17 in.)
Bolt D: 45 mm (1.77 in.)

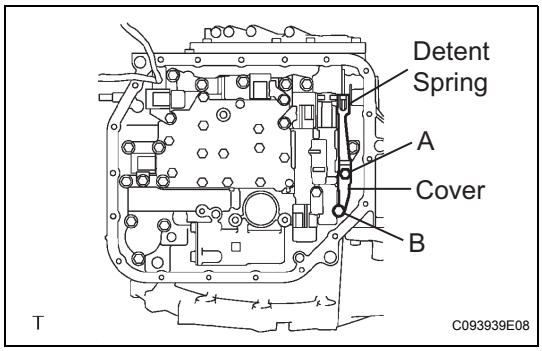

(c) Provisionally install the detent spring and detent spring cover with the 2 bolts.
Bolt length:
Bolt A: 14 mm (0.55 in.)
Bolt B: 45 mm (1.77 in.)

(d) Check that the manual valve lever is in contact with the center of the roller at the tip of the detent spring.

(e) Tighten the 15 bolts.
Torque: 11 N*m (110 kgf*cm, 8 ft.*lbf)

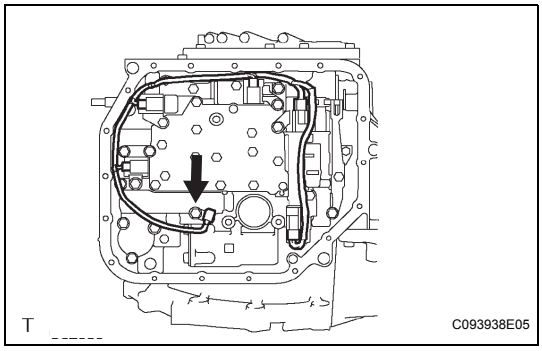

(f) Connect the 5 solenoid connectors.

(g) Install the ATF temperature sensor with the lock plate and bolt.
Torque: 11 N*m (110 kgf*cm, 8 ft.*lbf)
Bolt length:
55 mm (2.17 in.)

AX

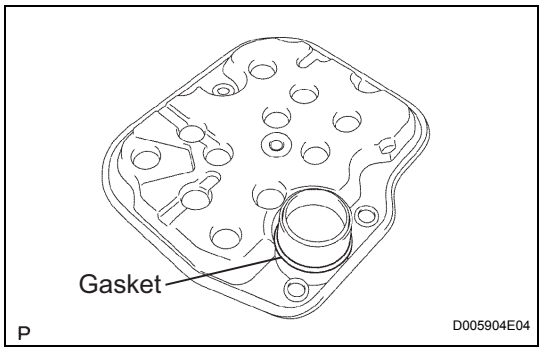

72. INSTALL VALVE BODY OIL STRAINER ASSEMBLY

(a) Coat a new O-ring with ATF, and install it into the oil strainer.

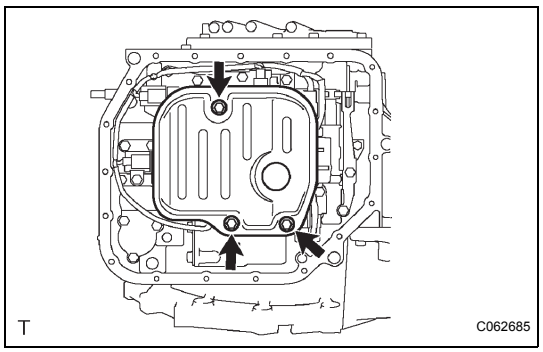

(b) Install the valve body oil strainer assembly onto the automatic transaxle with the 3 bolts.
Torque: 11 N*m (110 kgf*cm, 8 ft.*lbf)

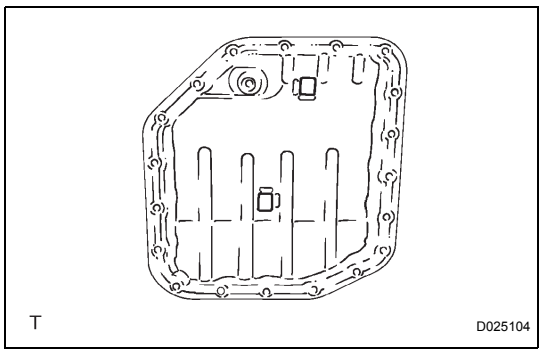

73. INSTALL AUTOMATIC TRANSAXLE OIL PAN SUB-ASSEMBLY

(a) Install the 2 magnets onto the oil pan.

(b) Install a new oil pan gasket onto the oil pan.

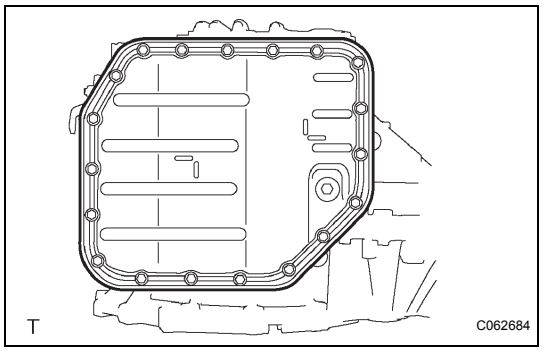

(c) Install the oil pan with the 19 bolts.
Torque: 7.8 N*m (80 kgf*cm, 69 in.*lbf)

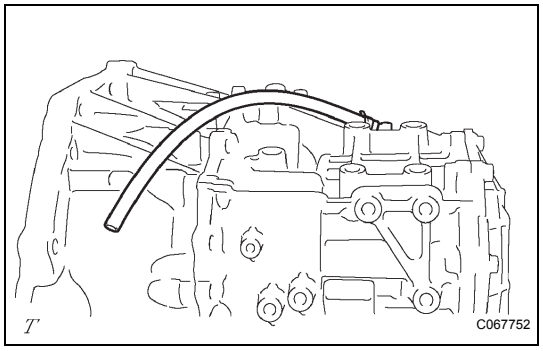

74. INSTALL BREATHER PLUG HOSE

(a) Install the breather plug hose onto the transaxle case.

AX

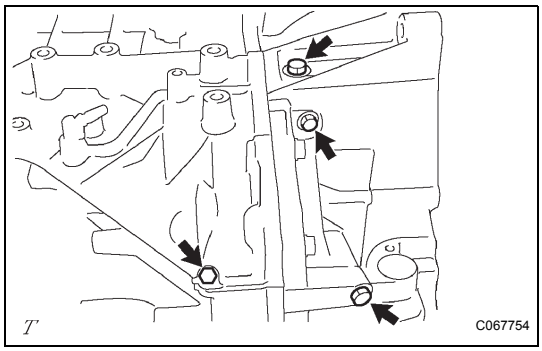

75. INSTALL NO. 1 TRANSAXLE CASE PLUG

(a) Coat 5 new O-rings with ATF, and install them onto the screw plugs.

(b) Install the 4 screw plugs onto the transaxle housing and transaxle case.
Torque: 7.4 N*m (75 kgf*cm, 65 in.*lbf)

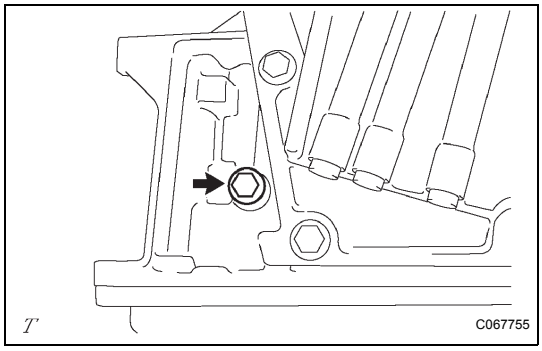

(c) Install the screw plug onto the transaxle case.
Torque: 7.4 N*m (75 kgf*cm, 65 in.*lbf)

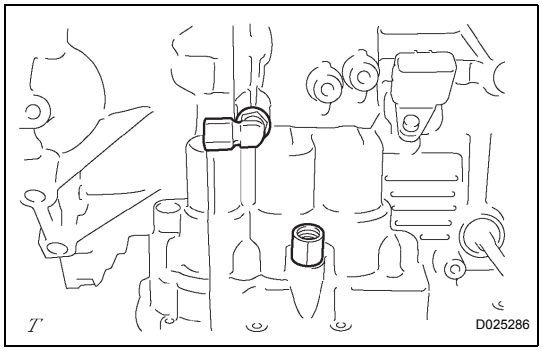

76. INSTALL OIL COOLER TUBE UNION

(a) Coat 2 new O-rings with ATF, and install them into the 2 oil cooler tube unions.

(b) Install the 2 oil cooler tube unions onto the transaxle case.
Torque: 27 N*m (275 kgf*cm, 20 ft.*lbf)

AX

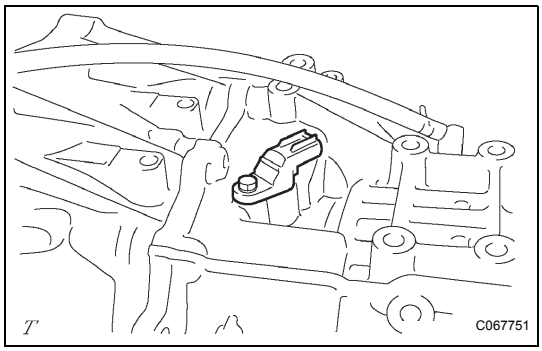

77. INSTALL TRANSMISSION REVOLUTION SENSOR

(a) Coat a new O-ring with ATF, and install it into the transmission revolution sensor.

(b) Install the transmission revolution sensor onto the transaxle case with the bolt.
Torque: 5.4 N*m (55 kgf*cm, 48 in.*lbf)

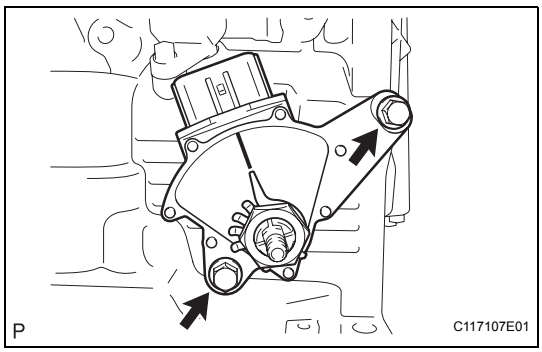

78. INSTALL PARK/NEUTRAL POSITION SWITCH ASSEMBLY

(a) Install the park/neutral position switch assembly onto the manual transaxle.

(b) Provisionally install the 2 bolts.

(c) Replace the lock plate with a new one and tighten the manual valve shaft nut.
Torque: 6.9 N*m (70 kgf*cm, 61 in.*lbf)

(d) Provisionally install the control shaft lever.

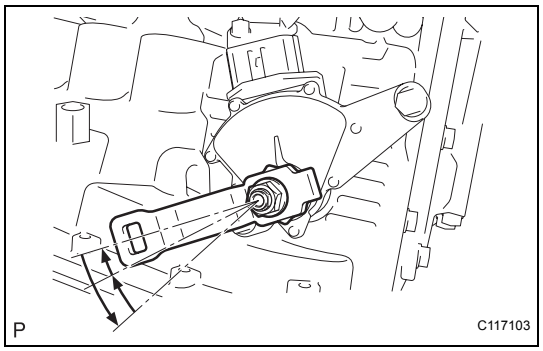

(e) Turn the lever counterclockwise until it stops, then turn it clockwise 2 notches.
(f) Remove the control shaft lever.

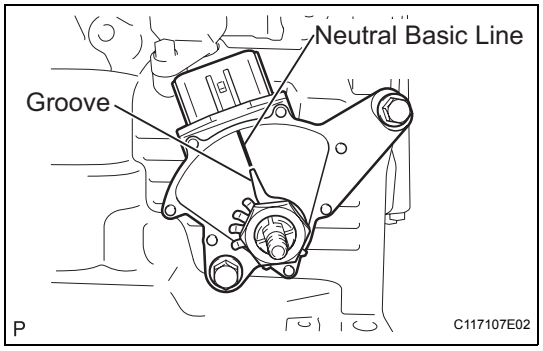

(g) Align the groove with the neutral basic line.
(h) Hold the switch in this position and tighten the 2 bolts.
Torque: 5.4 N*m (55 kgf*cm, 48 in.*lbf)

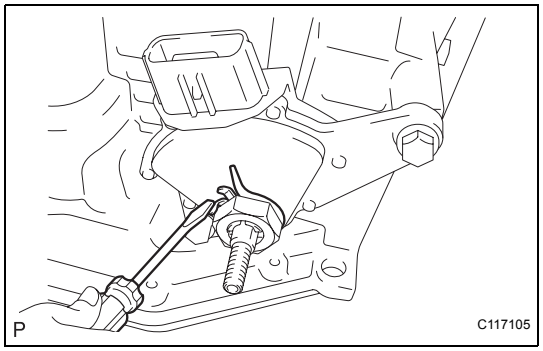

(i) Using a screwdriver, stake the nut with the lock plate.

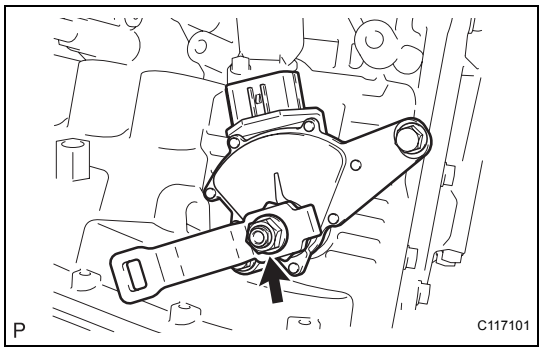

(j) Install the control shaft lever with the nut and washer.
Torque: 13 N*m (130 kgf*cm, 9 ft.*lbf)

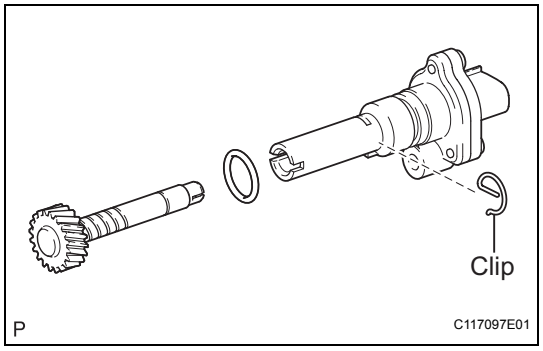

79. INSTALL SPEEDOMETER DRIVEN GEAR
(a) Coat a new O-ring with ATF and install it into the speedometer sensor.
(b) Install the driven gear into the speedometer sensor with the clip.

AX

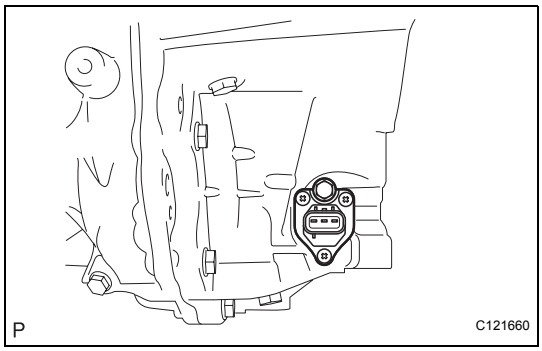

80. INSTALL SPEEDOMETER SENSOR

(a) Install the speedometer sensor onto the transaxle housing.

OIL PUMP

COMPONENTS

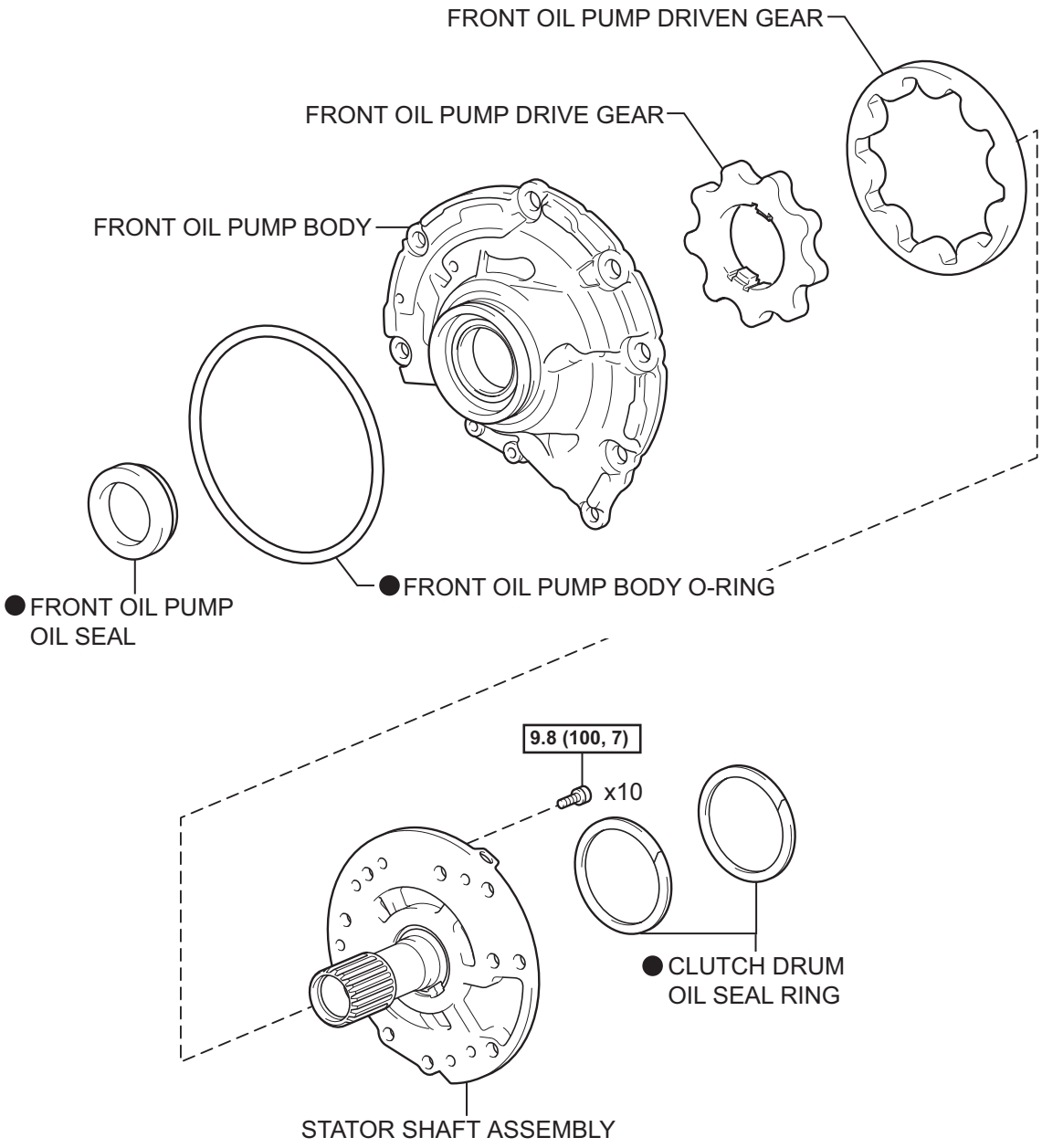

N*m (kgf*cm, ft*lbf) : Specified torque

● Non-reusable part

P

C121631E03

AX

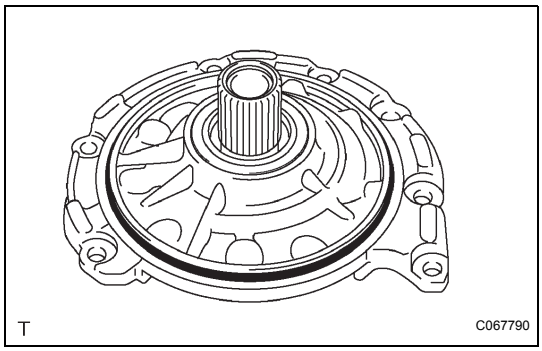

DISASSEMBLY

1. REMOVE FRONT OIL PUMP BODY O-RING

(a) Remove the front oil pump O-ring from the oil pump.

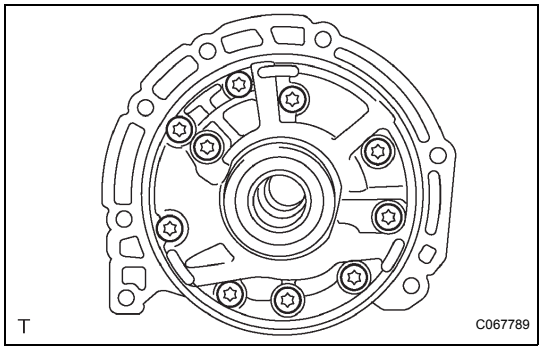

2. REMOVE STATOR SHAFT ASSEMBLY

(a) Using "Torx" socket wrench T30, remove the 10 "Torx" screws.

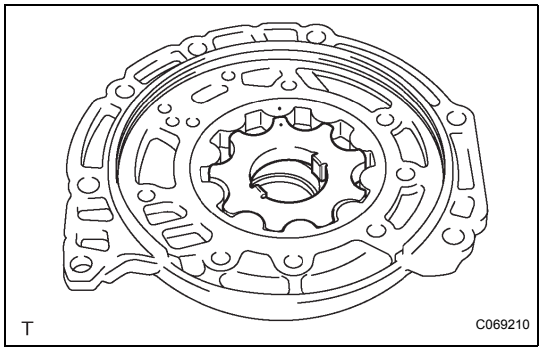

3. REMOVE FRONT OIL PUMP DRIVE GEAR

(a) Remove the front oil pump drive gear from the oil pump body.

AX

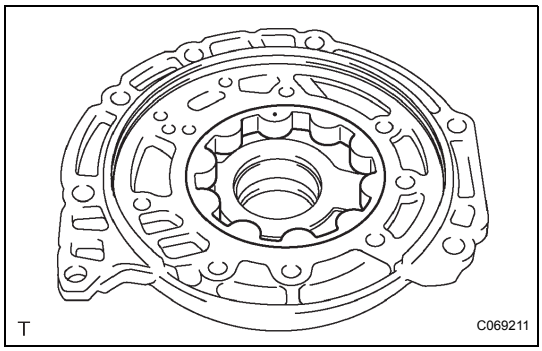

4. REMOVE FRONT OIL PUMP DRIVEN GEAR

(a) Remove the front oil pump driven gear from the oil pump body.

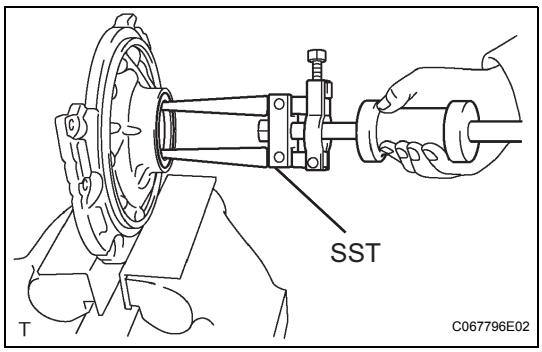

5. REMOVE FRONT OIL PUMP OIL SEAL

(a) Using SST, remove the front oil pump oil seal from the oil pump body.

SST 09308-00010

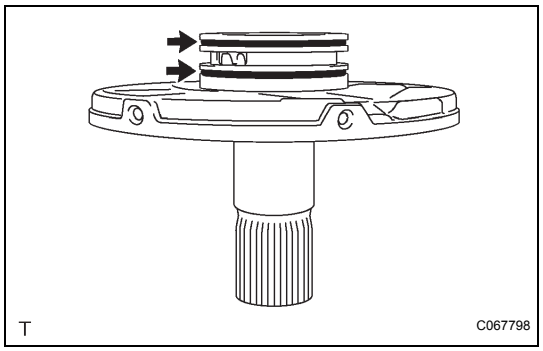

6. REMOVE CLUTCH DRUM OIL SEAL RING

(a) Using a screwdriver, remove the 2 clutch drum oil seal rings from the stator shaft assembly.

INSPECTION

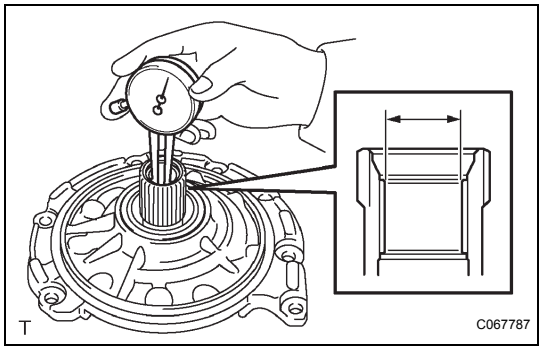

1. INSPECT STATOR SHAFT ASSEMBLY

(a) Using a dial indicator, measure the inside diameter of the stator shaft bushings.

Standard inside diameter:
21.500 to 21.526 mm (0.84646 to 0.84748 in.)
Maximum inside diameter:
21.526 mm (0.84748 in.)

If the inside diameter is greater than the maximum, replace the stator shaft.

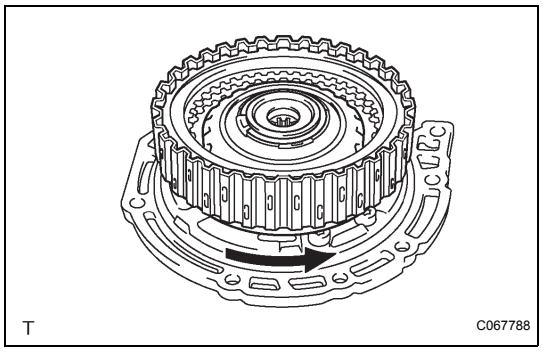

(b) Install the input shaft assembly onto the stator shaft assembly and check that the input shaft assembly turns smoothly.

NOTICE:
Replace the stator assembly with a new one if it moves roughly or makes unusual noise.
Inspect the input shaft's contact surface with the bearing when replacing, and replace the input shaft with a new one if any damage or discoloration is found.

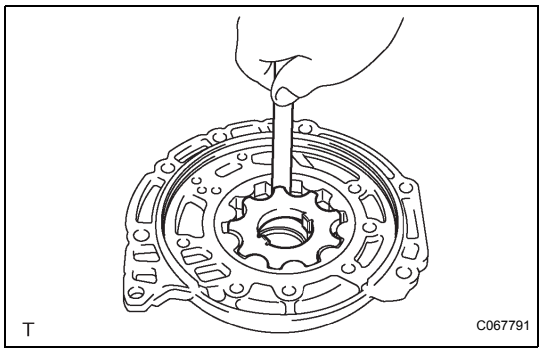

2. INSPECT OIL PUMP GEAR CLEARANCE

(a) Measure the clearance between the tips of the driven gear teeth and the drive gear teeth.

Standard tip clearance:
0.07 to 0.15 mm (0.0028 to 0.0059 in.)
Maximum tip clearance:
0.15 mm (0.0059 in.)

If the tip clearance is greater than the maximum, replace the oil pump body sub-assembly.

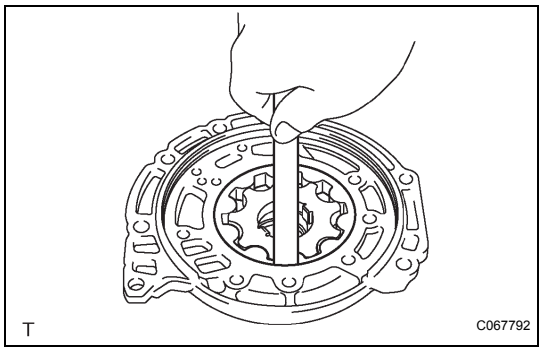

(b) Push the driven gear to one side of the body. Using a feeler gauge, measure the clearance.

Standard body clearance:
0.10 to 0.15 mm (0.0039 to 0.0059 in.)
Maximum body clearance:
0.15 mm (0.0059 in.)

If the body clearance is greater than the maximum, replace the oil pump body sub-assembly.

AX

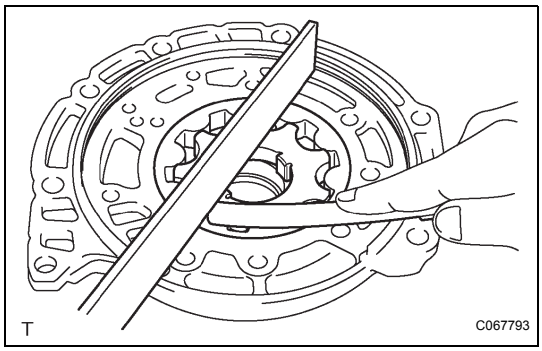

(c) Using a steel straight edge and feeler gauge, measure the side clearance of both gears.
Standard side clearance:
0.02 to 0.05 mm (0.0008 to 0.0020 in.)
Maximum side clearance:
0.05 mm (0.0020 in.)
If the side clearance is greater than the maximum, replace the drive gear, driven gear or pump body.
Drive gear thickness

No.	Thickness mm (in.)
1	9.44 to 9.45 (0.3709 to 0.3713)
2	9.45 to 9.46 (0.3713 to 0.3717)
3	9.46 to 9.47 (0.3717 to 0.3721)
4	9.47 to 9.48 (0.3721 to 0.3725)
5	9.48 to 9.49 (0.3725 to 0.3729)

Driven gear thickness

No.	Thickness mm (in.)
1	9.44 to 9.45 (0.3709 to 0.3713)
2	9.45 to 9.46 (0.3713 to 0.3717)
3	9.46 to 9.47 (0.3717 to 0.3721)
4	9.47 to 9.48 (0.3721 to 0.3725)
5	9.48 to 9.49 (0.3725 to 0.3729)

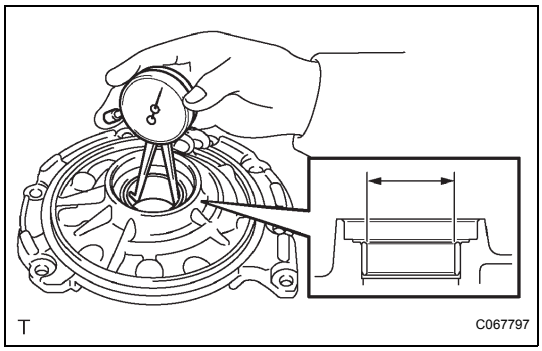

3. INSPECT FRONT OIL PUMP BODY SUB-ASSEMBLY
(a) Using a dial indicator, measure the inside diameter of the oil pump body bushing.
Standard inside diameter:
38.113 to 38.138 mm (1.50050 to 1.50149 in.)
Maximum inside diameter:
38.138 mm (1.50149 in.)
If the inside diameter is greater than the maximum, replace the oil pump body sub-assembly.

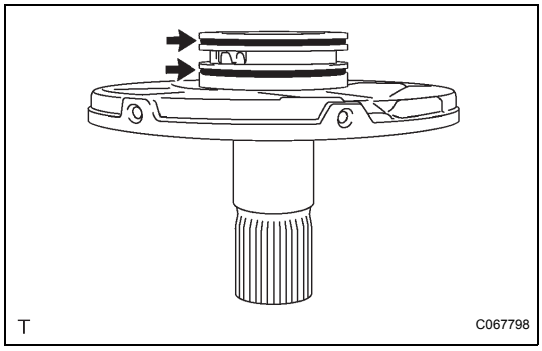

REASSEMBLY

1. INSTALL CLUTCH DRUM OIL SEAL RING
(a) Coat 2 new clutch drum oil seal rings with ATF, and install them onto the stator shaft.

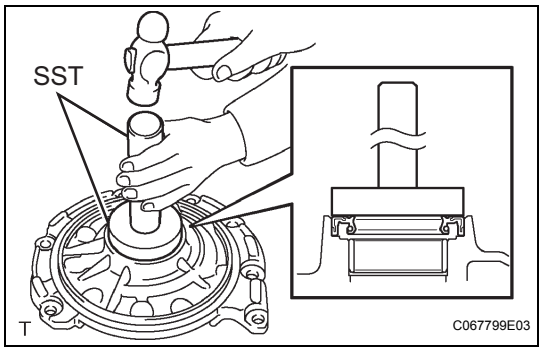

2. INSTALL FRONT OIL PUMP OIL SEAL

(a) Using SST, install the front oil pump oil seal into the oil pump body.

SST 09950-60010 (09951-00550), 09950-70010 (09951-07100)

Oil seal drive in depth:
-0.15 to 0.15 mm (-0.006 to 0.006 in.)

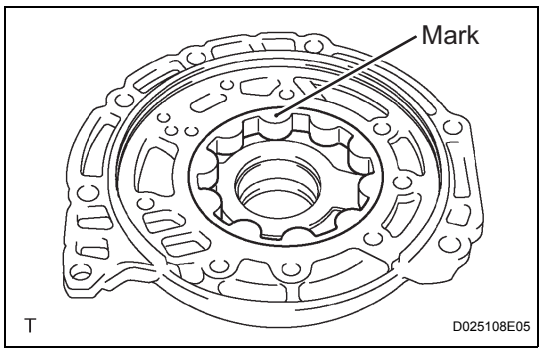

3. INSTALL FRONT OIL PUMP DRIVEN GEAR

(a) Coat the front oil pump driven gear with ATF, and install it into the oil pump body with the marked side facing upward.

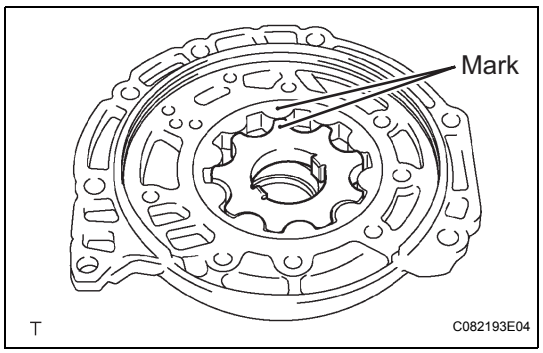

4. INSTALL FRONT OIL PUMP DRIVE GEAR

(a) Coat the front oil pump drive gear with ATF, and install it into the oil pump body with the marked side facing upward.

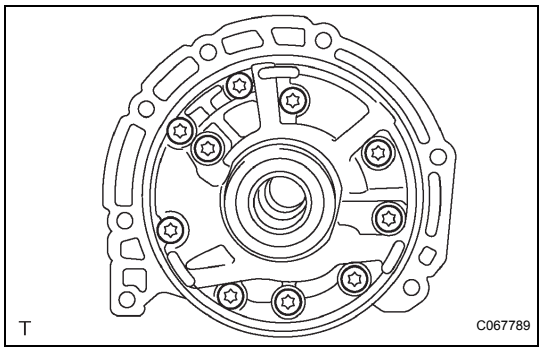

5. INSTALL STATOR SHAFT ASSEMBLY

(a) Using "Torx" socket wrench T30, install the stator shaft assembly with 10 "Torx" screws.

Torque: 9.8 N*m (100 kgf*cm, 7 ft.*lbf)

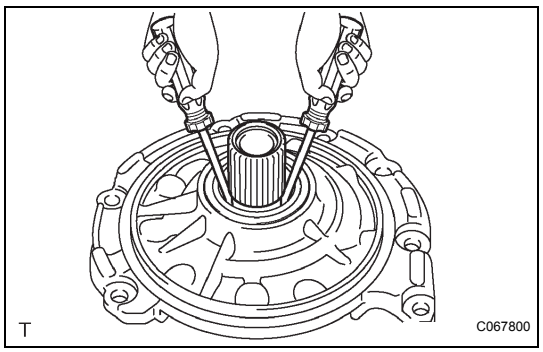

6. INSPECT OIL PUMP ASSEMBLY

(a) Turn the drive gear with 2 screwdrivers and make sure it rotates smoothly.

NOTICE:
Do not damage the oil seal lip.

AX

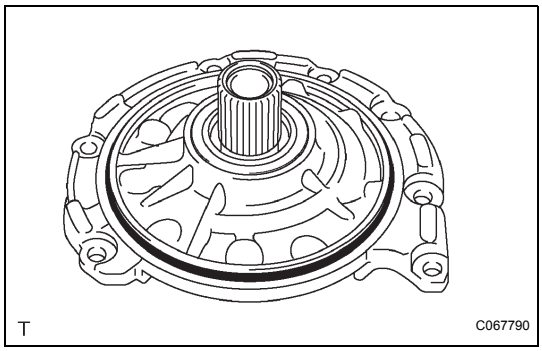

7. INSTALL FRONT OIL PUMP BODY O-RING

(a) Coat a new front oil pump body O-ring with ATF, and install it onto the oil pump.

INPUT SHAFT

COMPONENTS

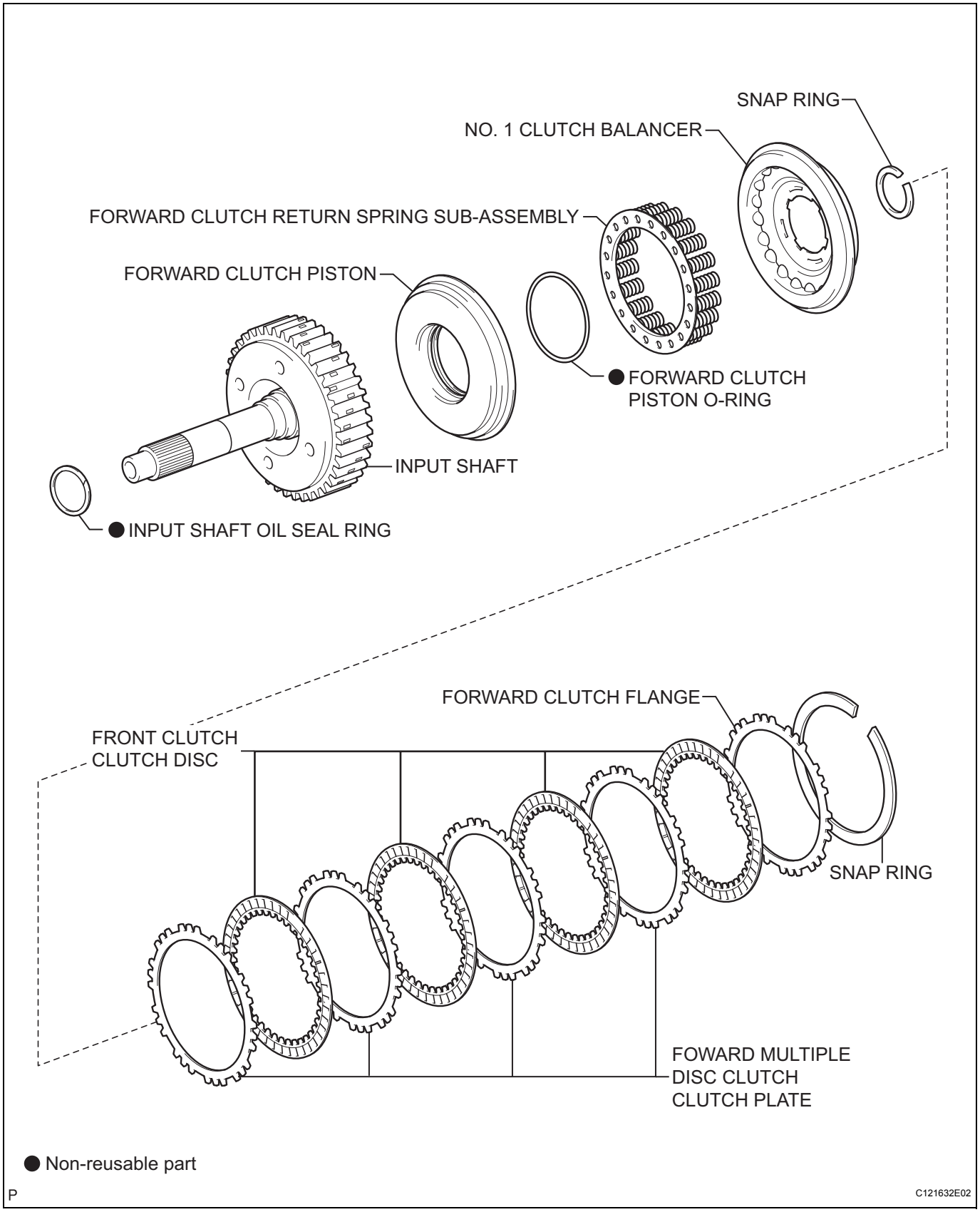

AX

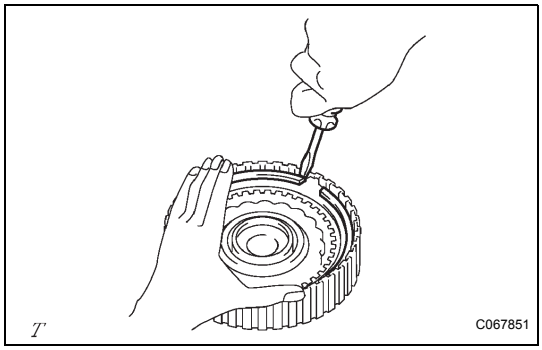

DISASSEMBLY

1. REMOVE FRONT CLUTCH CLUTCH DISC

(a) Using a screwdriver, remove the snap ring.

(b) Remove the flange, 4 discs and 4 plates from the input shaft.

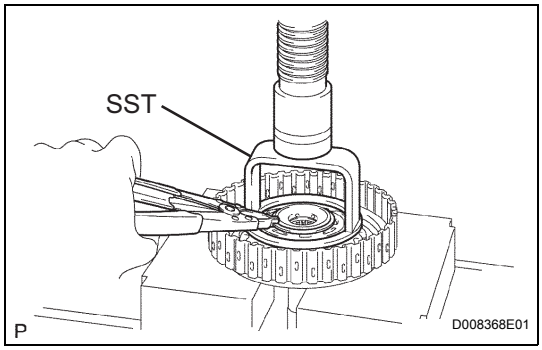

2. REMOVE FORWARD CLUTCH RETURN SPRING SUB-ASSEMBLY

(a) Using SST on the clutch balancer, compress the return spring with a press.

SST 09320-89010

NOTICE:

Do not compress the return spring excessively.

(b) Using a snap ring expander, remove the snap ring.

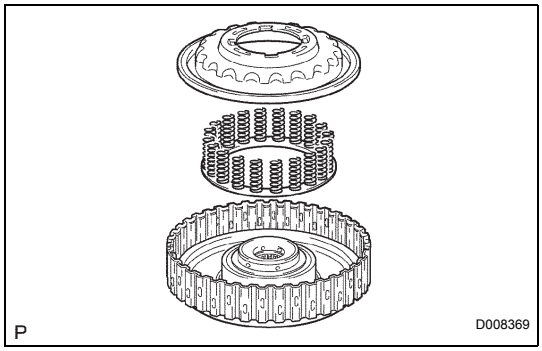

(c) Remove the clutch balancer and piston return spring.

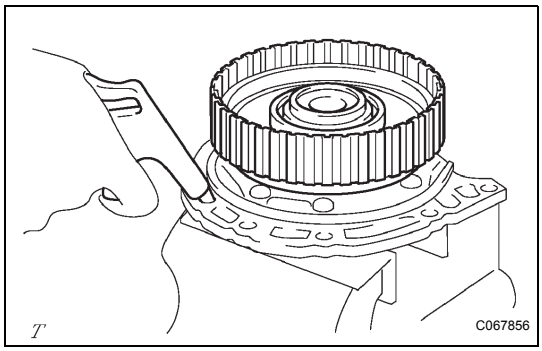

3. REMOVE FORWARD CLUTCH PISTON

(a) Place the input shaft onto the oil pump.

(b) Holding the forward clutch piston by hand, apply compressed air (392 kPa, 4.0 kgf/cm^2, 57 psi) to the oil pump to remove the forward clutch piston.

HINT:

When the piston can not be removed due to being slanted, either blow the air again with the protruding side pushed or remove the piston using needle-nose pliers with their tips wrapped in protective tape.

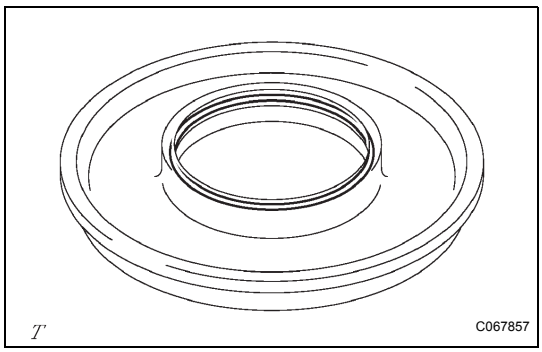

4. REMOVE FORWARD CLUTCH PISTON O-RING

(a) Using a screwdriver, remove the clutch piston O-ring from the forward clutch piston.

AX

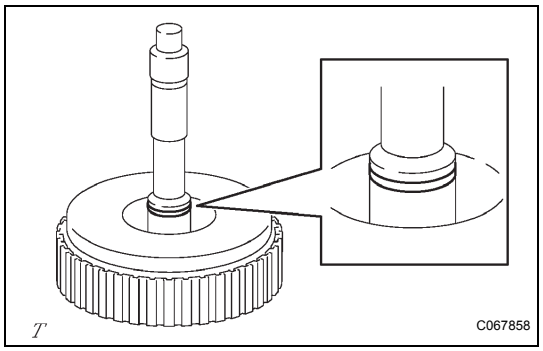

5. REMOVE INPUT SHAFT OIL SEAL RING

(a) Using a screwdriver, remove the input shaft oil seal ring from the input shaft.

INSPECTION

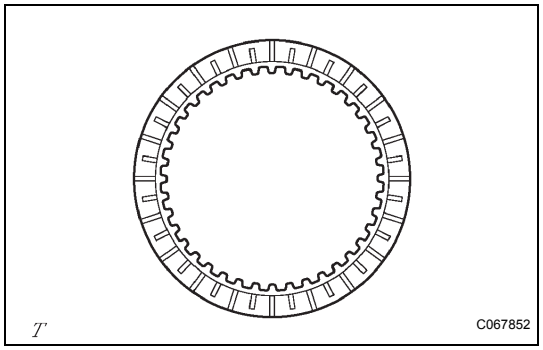

1. INSPECT FRONT CLUTCH CLUTCH DISC

(a) Check whether the sliding surface of the disc, plate and flange are worn or burnt.
If necessary, replace them.
NOTICE:
- **If the lining of the disc is peeling off or discolored, or even if a part of the printed number is defaced, replace all the discs.**
- **Before assembling new discs, soak them in ATF for at least 15 minutes.**

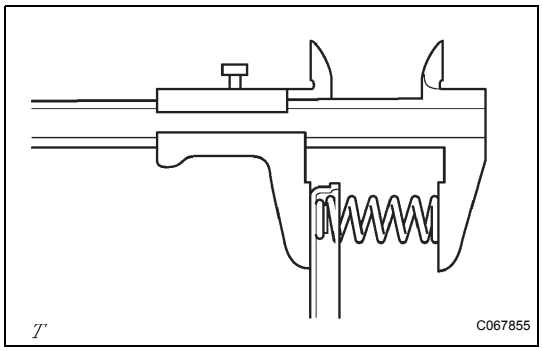

2. INSPECT FORWARD CLUTCH RETURN SPRING SUB-ASSEMBLY

(a) Using vernier calipers, measure the free length of the spring together with the spring seat.
Standard free length:
21.69 mm (0.8540 in.)

AX

REASSEMBLY

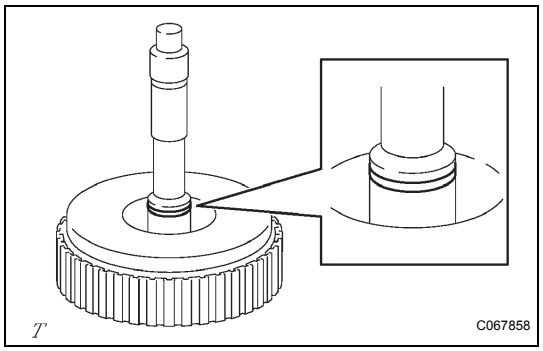

1. INSTALL INPUT SHAFT OIL SEAL RING

(a) Coat a new input shaft oil seal ring with ATF, and install it into the input shaft.

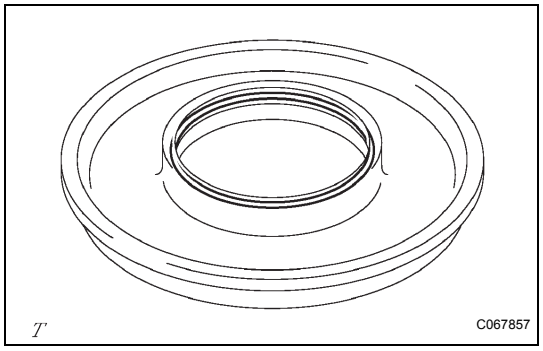

2. INSTALL FORWARD CLUTCH PISTON O-RING

(a) Coat a new clutch piston O-ring with ATF, and install it into the forward clutch piston.

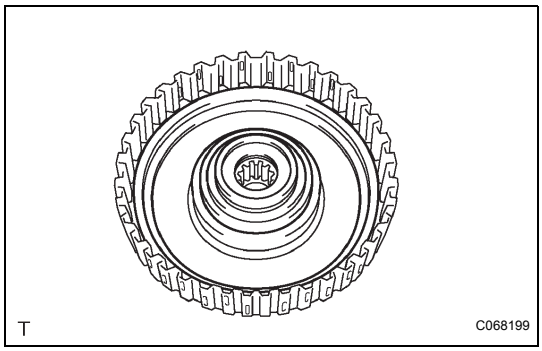

3. INSTALL FORWARD CLUTCH PISTON

(a) Install the forward clutch piston into the input shaft.
NOTICE:
Do not damage the O-ring.

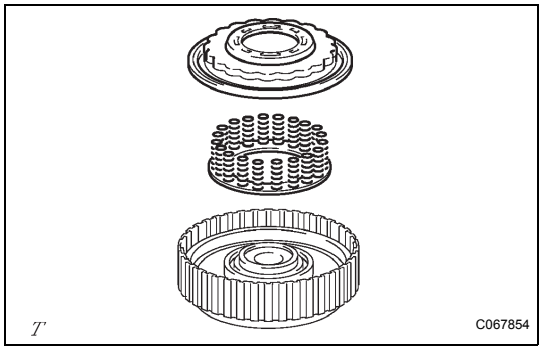

4. INSTALL FORWARD CLUTCH RETURN SPRING SUB-ASSEMBLY

(a) Install the return spring and clutch balancer into the input shaft.

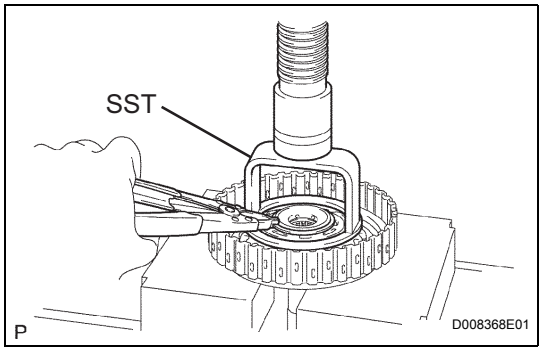

(b) Using SST, a press and snap ring pliers, install the snap ring onto the input shaft.
SST 09320-89010

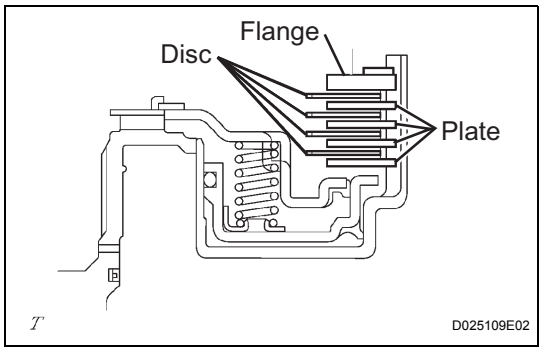

5. INSTALL FRONT CLUTCH CLUTCH DISC

(a) Install the 4 plates, 4 discs and flange.
(b) Using a screwdriver, install the snap ring into the input shaft.

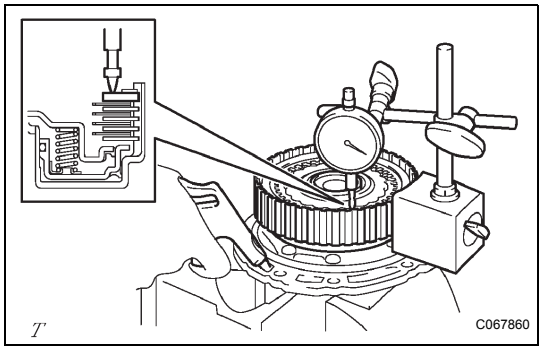

6. INSPECT PACK CLEARANCE OF FORWARD CLUTCH

(a) Using a dial indicator, measure the pack clearance while applying and releasing compressed air (392 kPa, 4.0 kgf/cm^2, 57 psi).
Pack clearance:
1.406 to 1.806 mm (0.05535 to 0.07110 in.)
NOTICE:
If the clearance is outside the specifications, select a new brake flange.

AX

HINT:
There are 4 different flange thicknesses.

Flange thickness

No.	Thickness mm (in.)	No.	Thickness mm (in.)
-	3.0 (0.118)	2	3.4 (0.134)
1	3.2 (0.126)	3	3.6 (0.142)

SECOND BRAKE PISTON

COMPONENTS

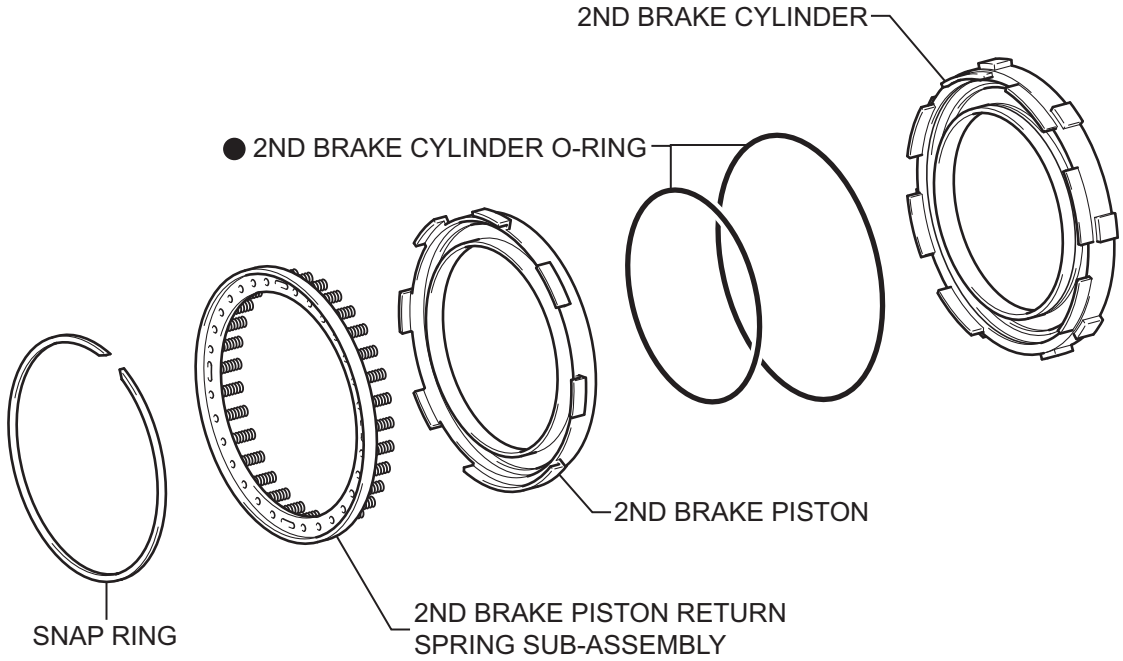

● Non-reusable part

P

C121633E02

AX

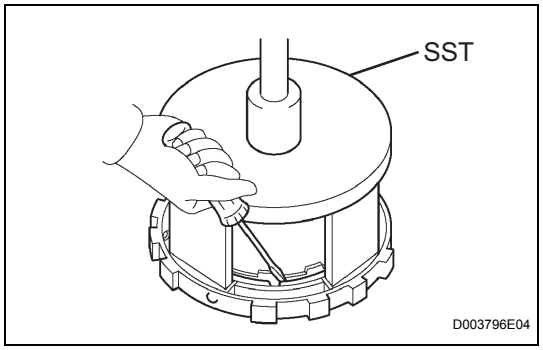

DISASSEMBLY

1. REMOVE 2ND BRAKE PISTON RETURN SPRING SUB-ASSEMBLY

(a) Using SST and a press, remove the snap ring from the 2nd brake piston.
SST 09387-00060

(b) Remove the 2nd brake return spring from the 2nd brake cylinder.

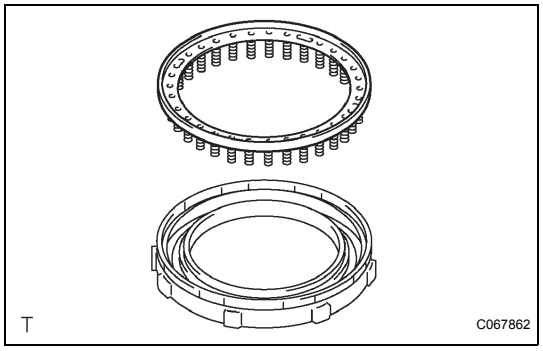

(c) Remove the 2nd brake piston return spring sub-assembly from the 2nd brake cylinder.

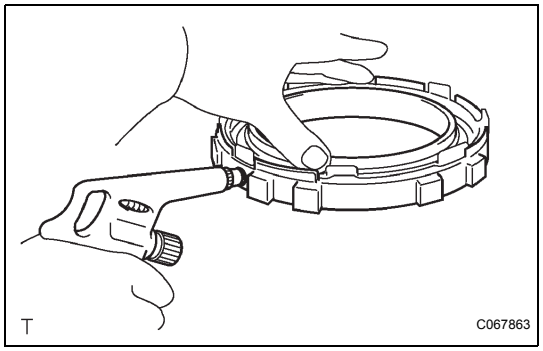

2. REMOVE 2ND BRAKE PISTON

(a) Hold the 2nd brake piston and apply compressed air (392 kPa, 4.0 kgf/cm^2 , 57 psi) to the 2nd brake cylinder to remove the 2nd brake piston.

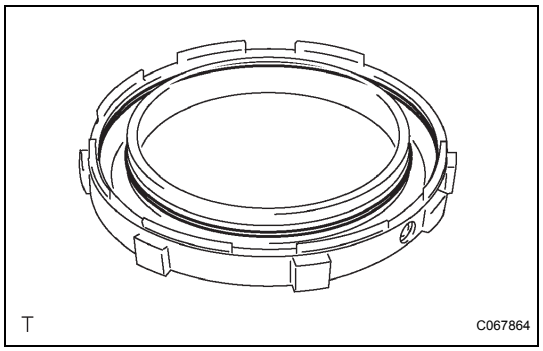

3. REMOVE 2ND BRAKE CYLINDER O-RING

(a) Using a screwdriver, remove the 2 O-rings from the 2nd brake cylinder.

INSPECTION

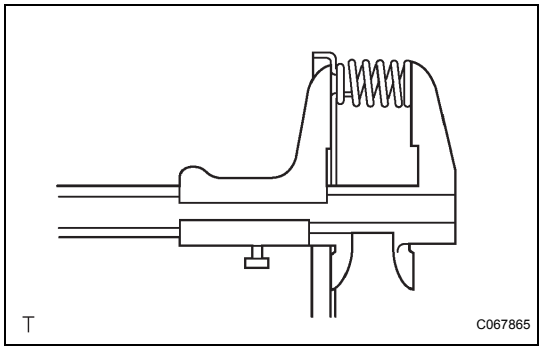

1. INSPECT 2ND BRAKE PISTON RETURN SPRING SUB-ASSEMBLY

(a) Using vernier calipers, measure the free length of the spring together with the spring seat.
Standard free length:
14.65 mm (0.5768 in.)

AX

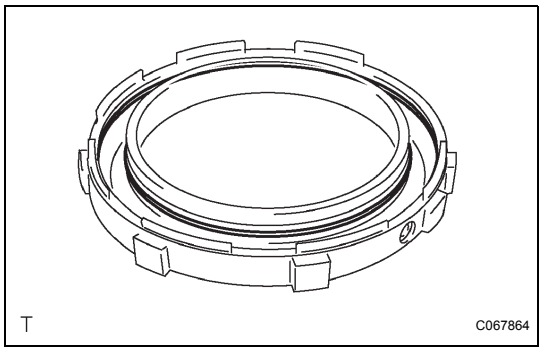

REASSEMBLY

1. INSTALL 2ND BRAKE CYLINDER O-RING

(a) Coat 2 new 2nd brake cylinder O-rings with ATF, and install them into the 2nd brake cylinder.
NOTICE:
Do not damage the O-rings.

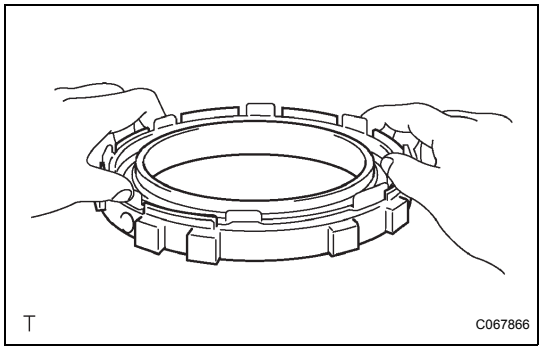

2. INSTALL 2ND BRAKE PISTON

(a) Coat the 2nd brake piston with ATF, and install it into the 2nd brake cylinder.
CAUTION:
Do not damage the O-rings when pressing the 2nd brake piston into the 2nd brake cylinder by hand.

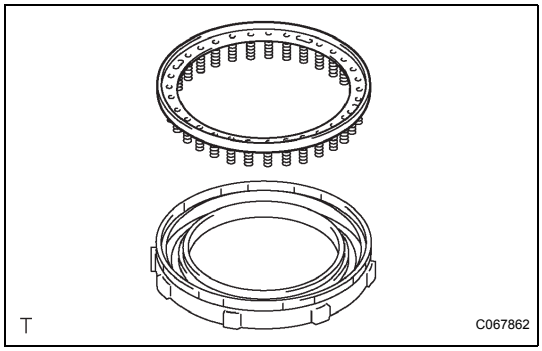

3. INSTALL 2ND BRAKE PISTON RETURN SPRING SUB-ASSEMBLY

(a) Install the piston return spring.

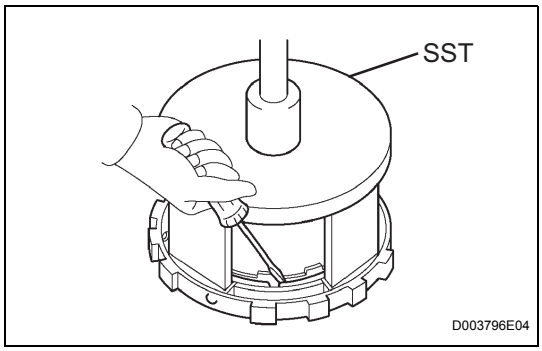

(b) Place SST on the piston return spring, and compress the piston return spring with a press.
(c) Using a screwdriver, install the snap ring.
NOTICE:
Make sure that the end gap of the snap ring is not aligned with the piston return spring claw.

AX

INTERMEDIATE SHAFT

COMPONENTS

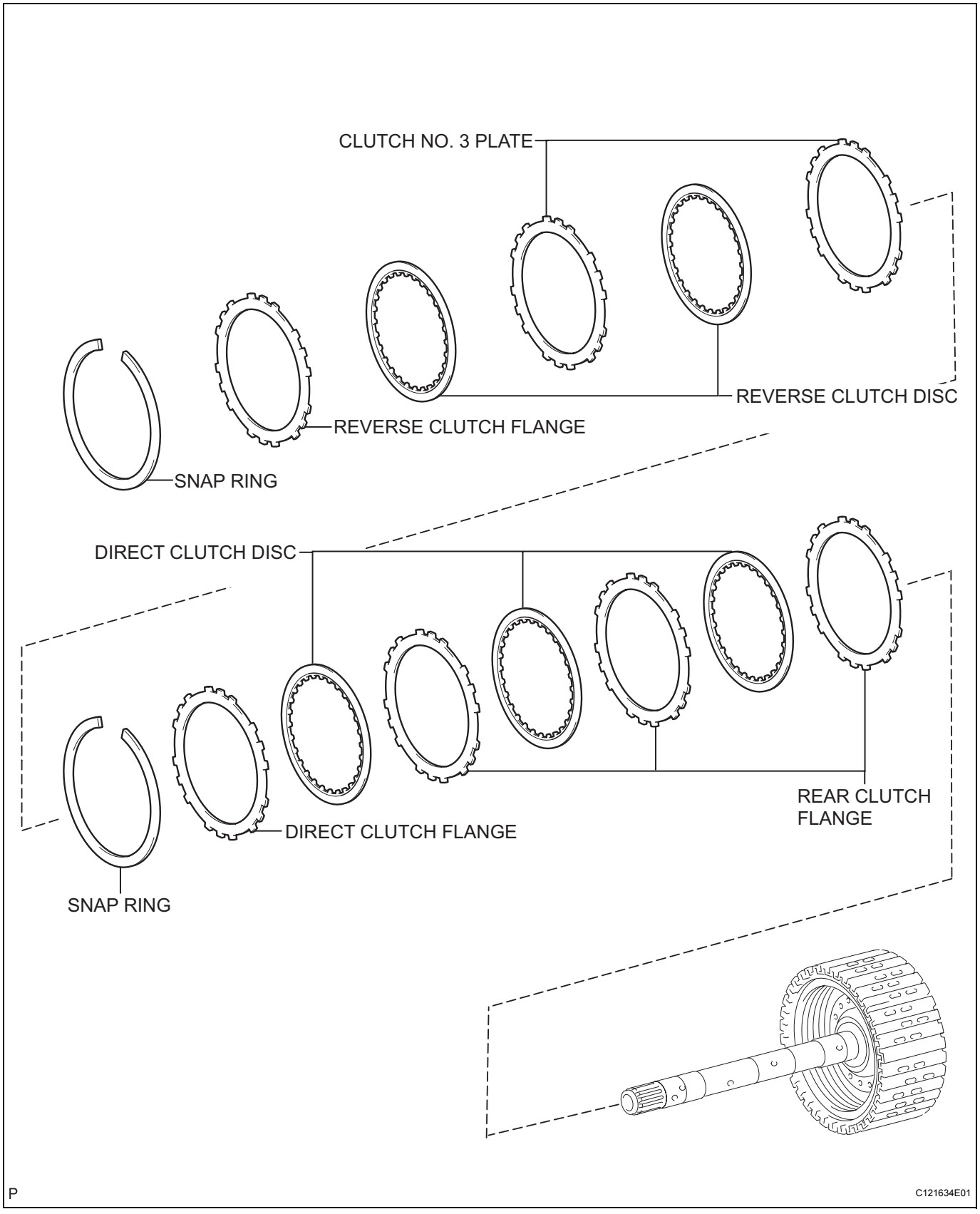

AX

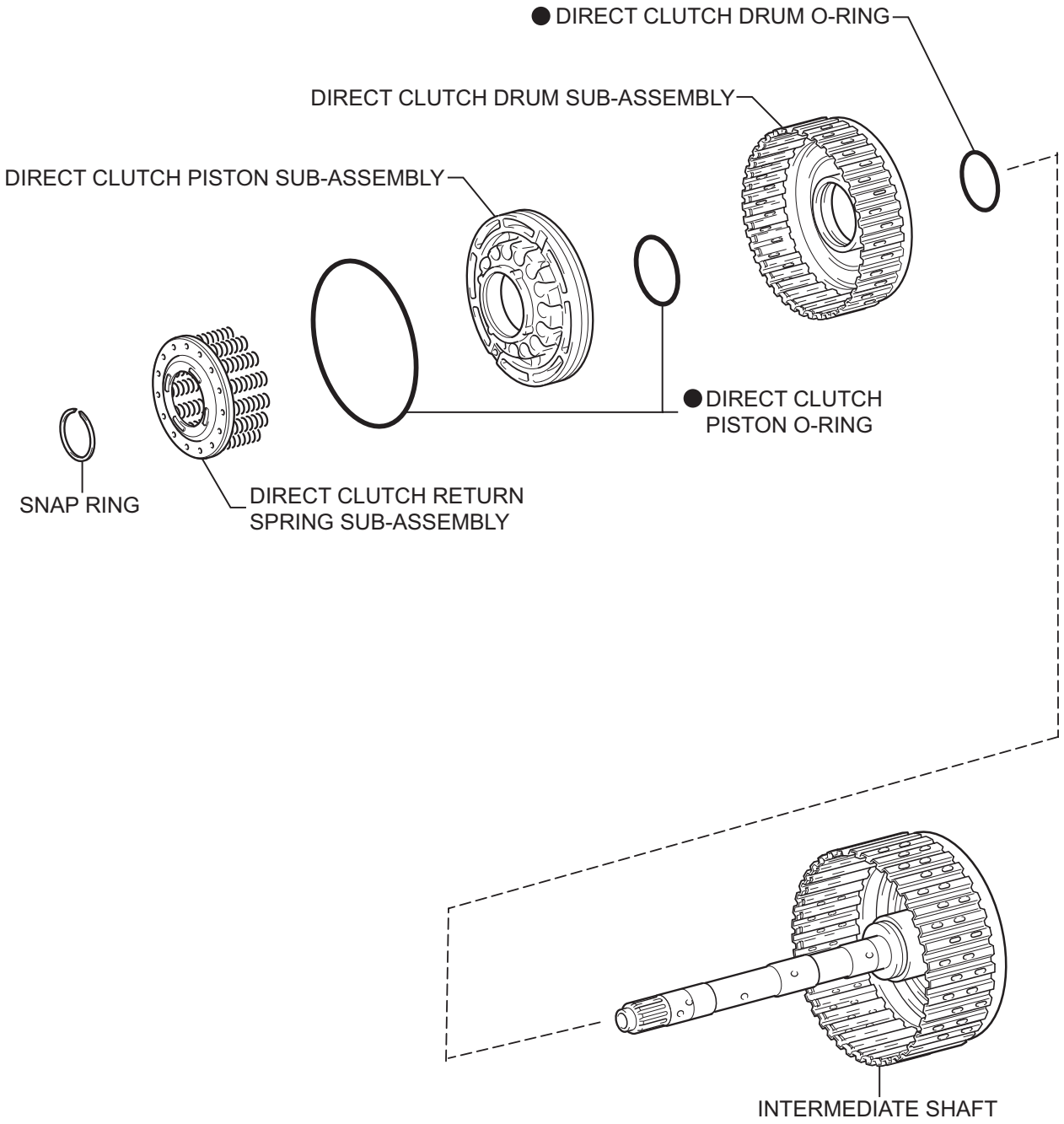

● Non-reusable part

P

C121635E02

DISASSEMBLY

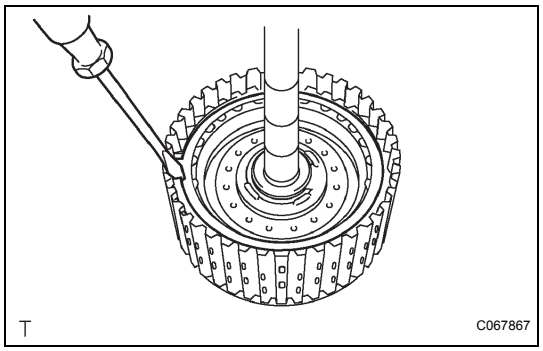

1. REMOVE REVERSE CLUTCH DISC

(a) Using a screwdriver, remove the snap ring.

(b) Remove the flange, 2 discs and 2 plates.

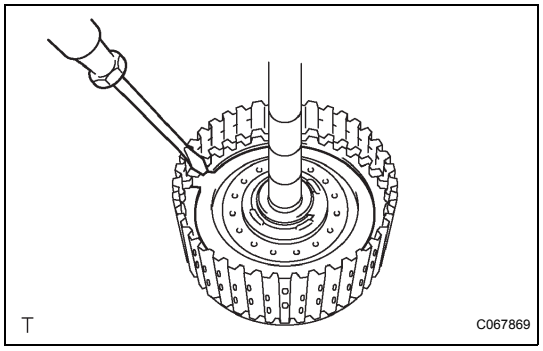

2. REMOVE DIRECT CLUTCH DISC

(a) Using a screwdriver, remove the snap ring.

(b) Remove the direct clutch flange, 3 plates and 3 rear clutch flanges.

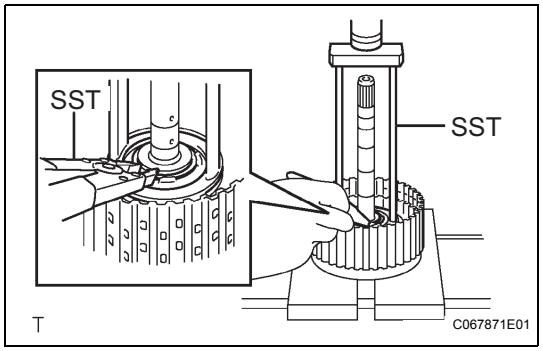

3. REMOVE DIRECT CLUTCH RETURN SPRING SUB-ASSEMBLY

(a) Using SST and a press, remove the snap ring.
SST 09387-00020

(b) Remove the direct clutch return spring sub-assembly from the intermediate shaft.

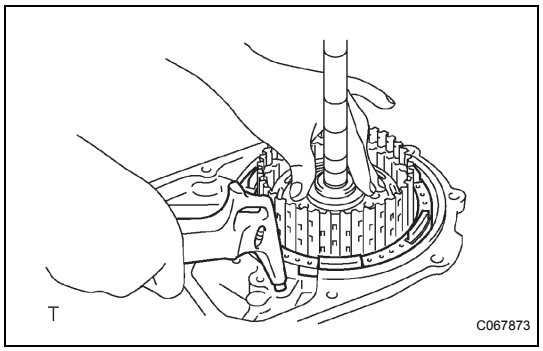

4. REMOVE DIRECT CLUTCH PISTON SUB-ASSEMBLY

(a) Install the intermediate shaft onto the transaxle rear cover.

(b) Apply compressed air (392 kPa, 4.0 kgf/cm^2, 57 psi) to the oil hole shown in the illustration and remove the direct clutch piston from the intermediate shaft.
NOTICE:
- **Blowing the air may cause the piston to jump out. When removing the piston, hold it by hand using a shop rag or piece of cloth.**
- **Do not splash ATF with the compressed air.**

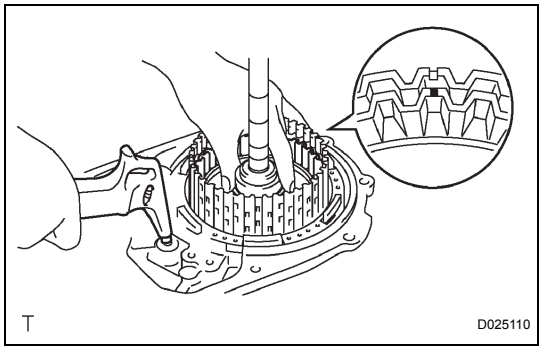

5. REMOVE DIRECT CLUTCH DRUM SUB-ASSEMBLY

(a) Install the intermediate shaft onto the transaxle rear cover.

(b) Put a matchmark on the direct clutch drum in the same position as the cutout of the intermediate shaft assembly.

AX

(c) Apply compressed air (392 kPa, 4.0 kgf/cm^2, 57 psi) to the oil hole shown in the illustration and remove the direct clutch drum from the intermediate shaft.
NOTICE:
- **Blowing the air may cause the drum to jump out. When removing the drum, hold it by hand using a shop rag or piece of cloth.**
- **Do not splash ATF with the compressed air.**

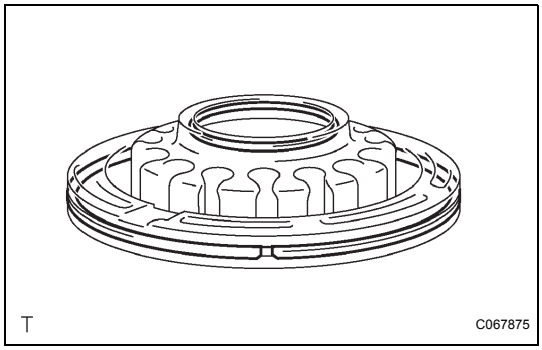

6. REMOVE DIRECT CLUTCH PISTON O-RING
(a) Using a screwdriver, remove the 2 piston O-rings from the direct clutch piston.

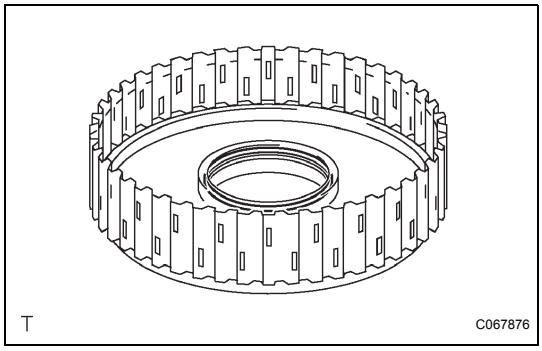

7. REMOVE DIRECT CLUTCH DRUM O-RING
(a) Using a screwdriver, remove the direct clutch drum O-ring from the direct clutch drum.

AX

INSPECTION

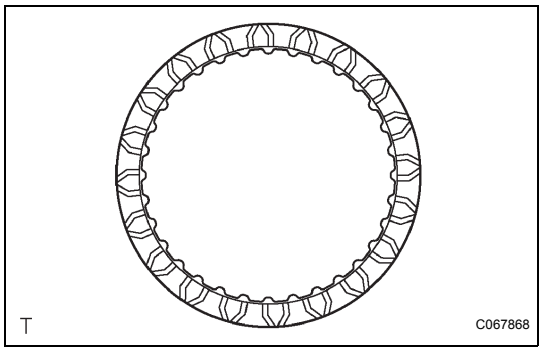

1. INSPECT REVERSE CLUTCH DISC
(a) Check whether the sliding surfaces of the disc, plate and flange are worn or burnt.
If necessary, replace them.
NOTICE:
- **If the lining of the disc is peeling off or discolored, or even if a part of the printed mark is defaced, replace all the discs.**
- **Before assembling new discs, soak them in ATF for at least 15 minutes.**

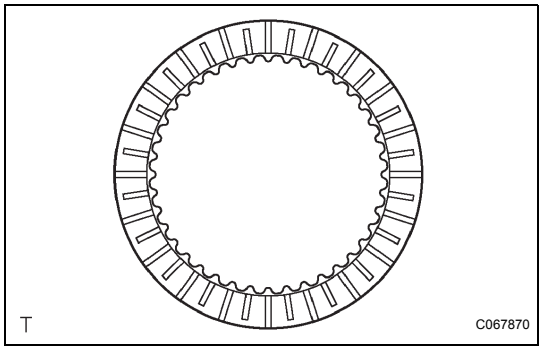

2. INSPECT DIRECT CLUTCH DISC
(a) Check whether the sliding surface of the disc, plate and flange are worn or burnt.
If necessary, replace them.
NOTICE:
- **If the lining of the disc is peeling off or discolored, or even if a part of the printed mark is defaced, replace all the discs.**
- **Before assembling new discs, soak them in ATF for at least 15 minutes.**

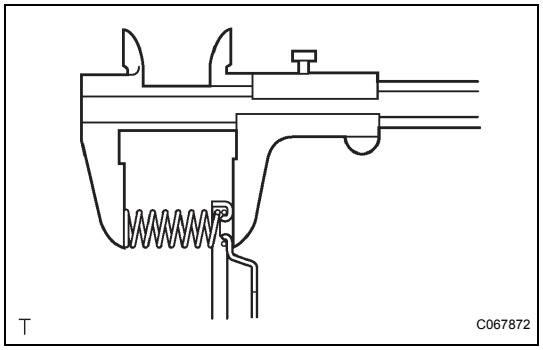

3. **INSPECT DIRECT CLUTCH RETURN SPRING SUB-ASSEMBLY**
   (a) Using vernier calipers, measure the free length of the spring together with the spring seat.
   Standard free length:
   32.9 mm (1.2953 in.)

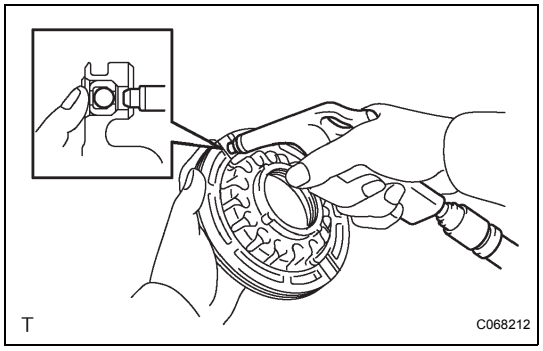

4. **INSPECT DIRECT CLUTCH PISTON SUB-ASSEMBLY**
   (a) Shake the direct clutch pin and confirm that the check ball is not stuck.
   (b) Apply low pressure compressed air to the check ball and check that no air leakage is identified.

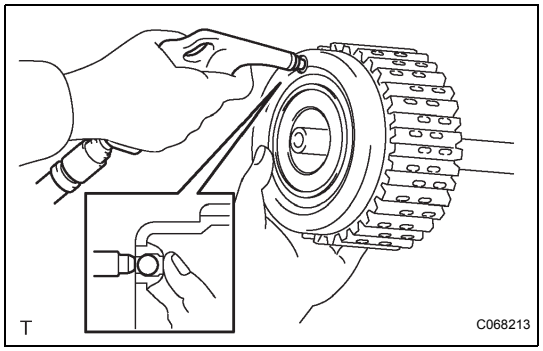

5. **INSPECT INTERMEDIATE SHAFT SUB-ASSEMBLY**
   (a) Shake the direct clutch pin and confirm that the check ball is not stuck.
   (b) Apply low pressure compressed air to the check ball and check that no air leakage is identified.

AX

REASSEMBLY

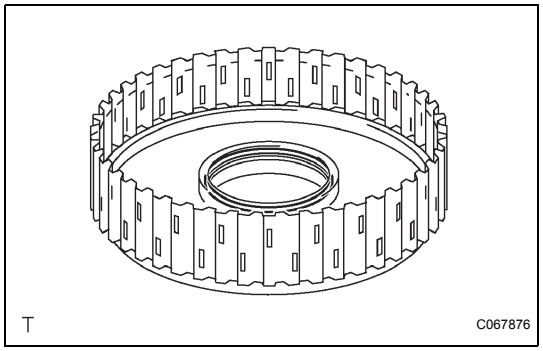

1. **INSTALL DIRECT CLUTCH DRUM O-RING**
   (a) Coat a new O-ring with ATF and install it into the direct clutch drum.
   NOTICE:
   Do not damage the O-rings.

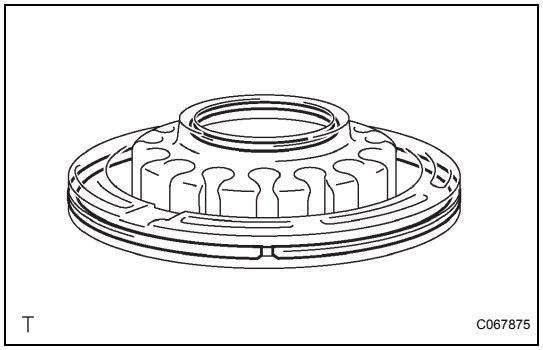

2. **INSTALL DIRECT CLUTCH PISTON O-RING**
   (a) Coat 2 new O-rings with ATF and install them into the direct clutch piston.
   NOTICE:
   Do not damage the O-rings.

3. **INSTALL DIRECT CLUTCH DRUM SUB-ASSEMBLY**
   (a) Coat the direct clutch drum with ATF.

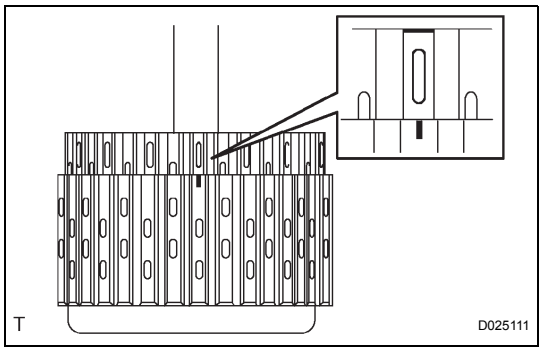

(b) Align the cutout in the intermediate shaft assembly with the matchmark on the direct clutch drum and install the direct clutch drum onto the intermediate shaft assembly.
NOTICE:
Do do not damage the O-ring or the lip of the clutch drum.

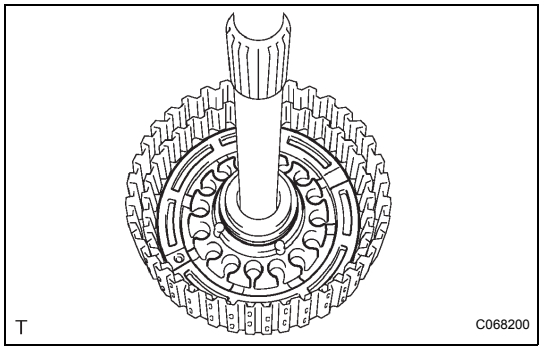

4. INSTALL DIRECT CLUTCH PISTON SUB-ASSEMBLY

(a) Coat the direct clutch piston with ATF and install it into the intermediate shaft.
NOTICE:
Do not damage the O-ring or the direct clutch piston.

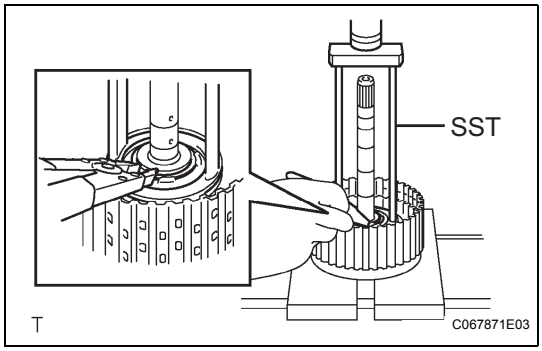

5. INSTALL DIRECT CLUTCH RETURN SPRING SUB-ASSEMBLY

(a) Install the direct clutch return spring onto the direct clutch piston.
(b) Place SST on the piston return spring and compress the springs with a press.
SST 09387-00020
(c) Using snap ring pliers, install the snap ring into the direct clutch drum.
NOTICE:
- **Stop pressing the press when the spring seat is lowered to 1 to 2 mm (0.039 to 0.078 in.) from the snap ring groove to prevent the spring seat from deforming.**
- **Do not expand the snap ring excessively.**

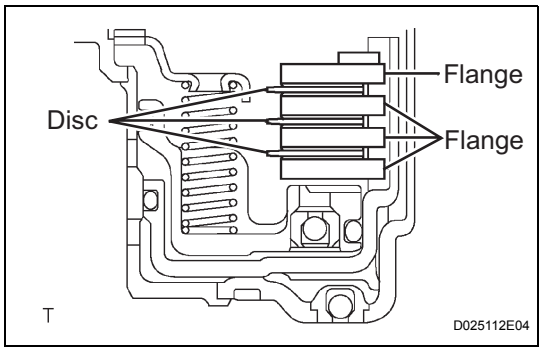

6. INSTALL DIRECT CLUTCH DISC

(a) Coat the 3 rear clutch flanges, 3 discs and direct clutch flange with ATF and install them onto the intermediate shaft.
(b) Install the snap ring into the intermediate shaft.

AX

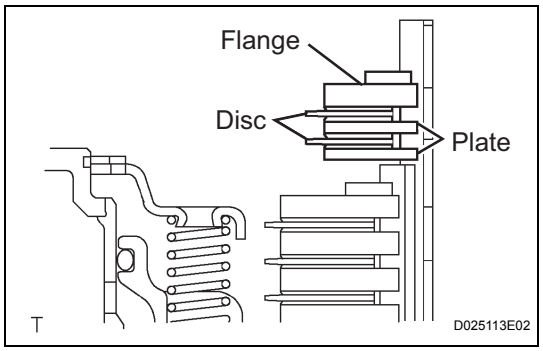

7. INSTALL REVERSE CLUTCH DISC

(a) Coat the 2 plates, 2 discs and flange with ATF, and install them onto the intermediate shaft.

(b) Install the snap ring into the intermediate shaft.

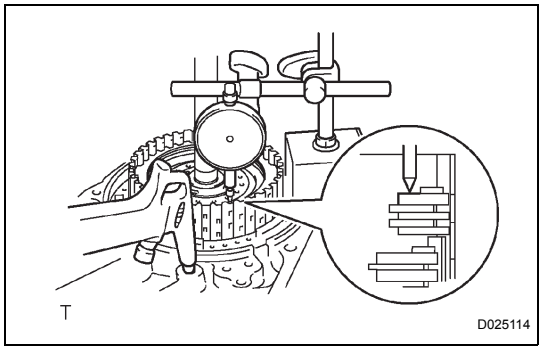

8. INSPECT PACK CLEARANCE OF REVERSE CLUTCH

(a) Install the intermediate shaft and thrust needle roller bearing onto the transaxle rear cover.

(b) Using a dial indicator, measure the reverse clutch pack clearance while applying and releasing compressed air (392 kPa, 4.0 kgf/cm^2, 57 psi).

Pack clearance:

0.86 to 1.26 mm (0.0339 to 0.0496 in.)

NOTICE:

If the clearance is outside the specifications, select a new brake flange.

HINT:

There are 4 different flange thicknesses.

Flange thickness

No.	Thickness mm (in.)	No.	Thickness mm (in.)
-	3.0 (0.118)	2	3.4 (0.134)
1	3.2 (0.126)	3	3.6 (0.142)

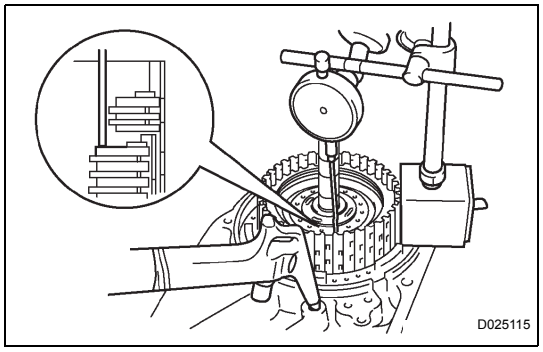

9. INSPECT PACK CLEARANCE OF DIRECT CLUTCH

(a) Install the intermediate shaft and thrust needle roller bearing onto the transaxle rear cover.

(b) Using a dial indicator and measuring terminal (SST), measure the forward clutch pack clearance while applying and releasing compressed air (392 kPa, 4.0 kgf/cm^2, 57 psi).

SST 09350-36010 (09350-06110)

HINT:

The direct and reverse clutch will come out as the compressed air is applied.

Therefore, while performing the check, press on the input shaft of the direct and reverse clutch using a stamping machine or the equivalent so that the pressure is not applied to the direct and reverse clutch.

Pack clearance:

0.62 to 1.02 mm (0.0244 to 0.0402 in.)

NOTICE:

If the clearance is outside the specifications, select a new brake flange.

HINT:

There are 4 different flange thicknesses.

AX

Flange thickness

No.	Thickness mm (in.)	No.	Thickness mm (in.)
-	3.0 (0.118)	2	3.4 (0.134)
1	3.2 (0.126)	3	3.6 (0.142)

TRANSAXLE REAR COVER

COMPONENTS

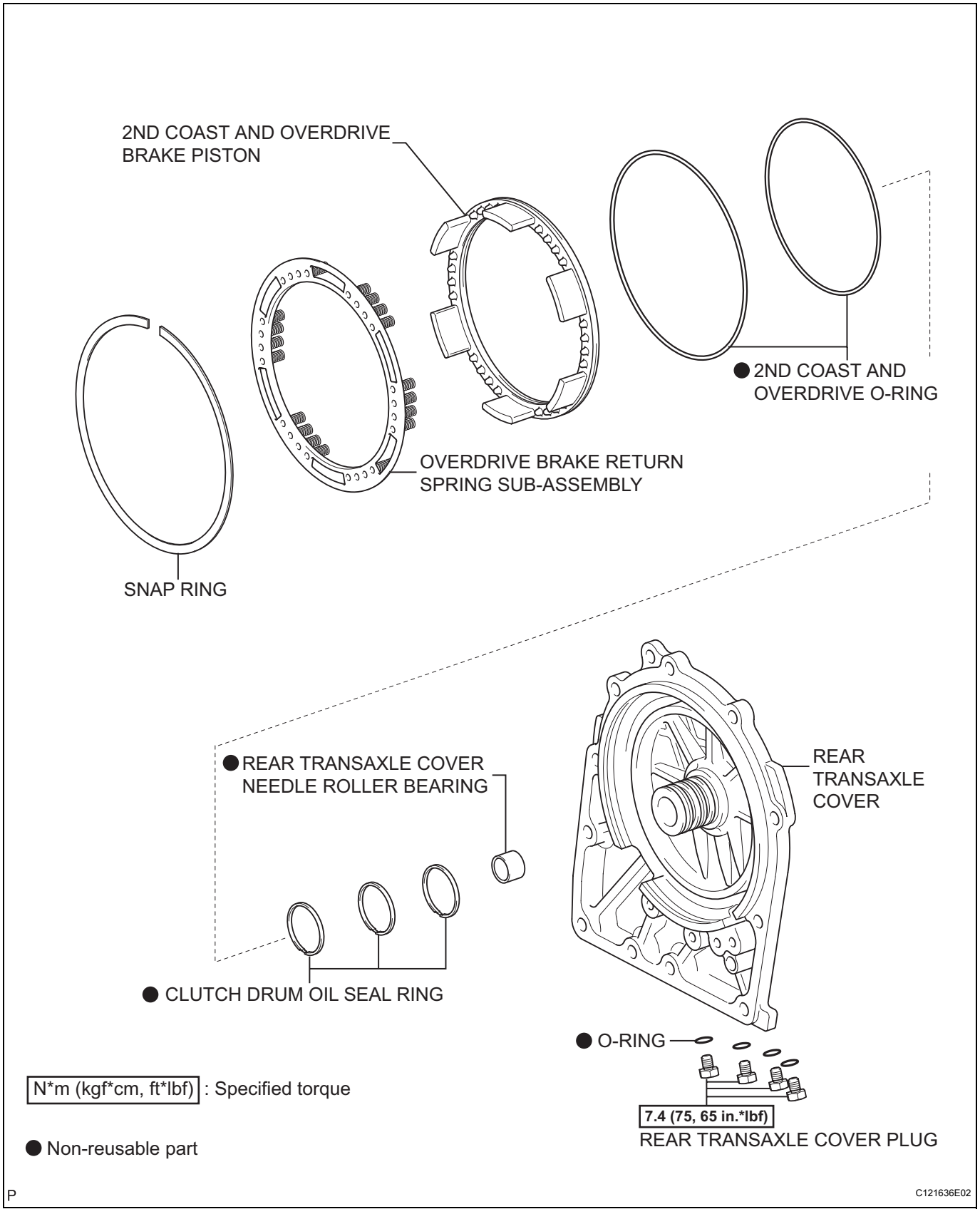

AX

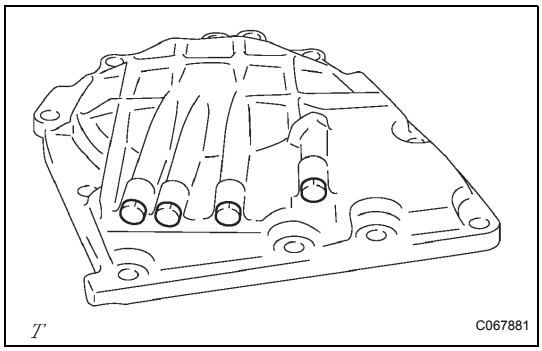

DISASSEMBLY

1. REMOVE REAR TRANSAXLE COVER PLUG

(a) Remove the 4 rear transaxle cover plugs from the rear transaxle cover.

(b) Using a screwdriver, remove the 4 O-rings from the 4 rear transaxle cover plugs.

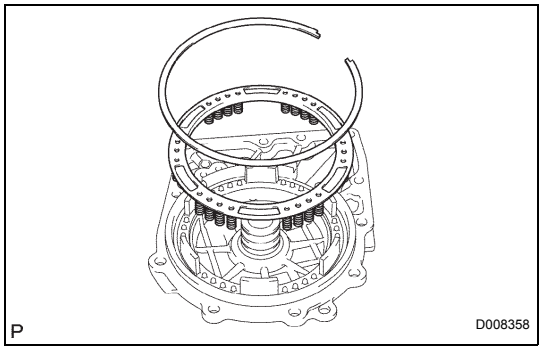

2. REMOVE OVERDRIVE BRAKE RETURN SPRING SUB-ASSEMBLY

(a) Using SST, a press and a screwdriver, remove the snap ring.

SST 09387-00070

NOTICE:

Stop the press when the overdrive brake piston is lowered to 1 to 2 mm (0.039 to 0.078 in.) from the snap ring groove, to prevent the overdrive brake piston from being deformed.

(b) Remove the overdrive brake return spring from the transaxle rear cover.

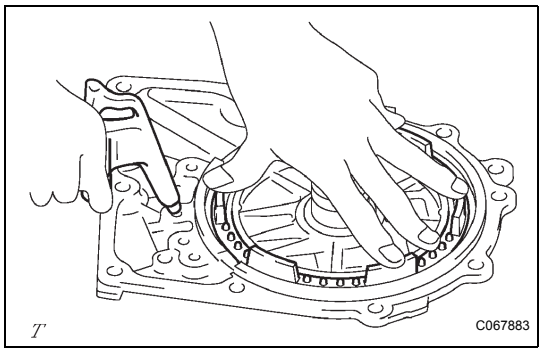

3. REMOVE 2ND COAST AND OVERDRIVE BRAKE PISTON

(a) Apply compressed air (392 kPa, 4.0 kgf/cm^2, 57 psi) to the transaxle rear cover to remove the overdrive brake piston.

NOTICE:

- **Blowing the air may cause the piston to jump out. When removing the piston, hold it by hand using a shop rag or piece of cloth.**
- **Do not splash ATF with the compressed air.**

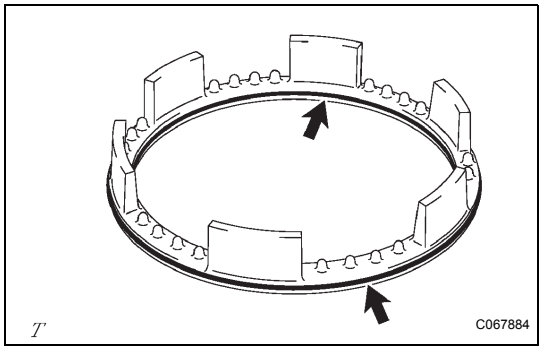

4. REMOVE 2ND COAST AND OVERDRIVE O-RING

(a) Using a screwdriver, remove the 2 O-rings from the 2nd coast and overdrive brake piston.

AX

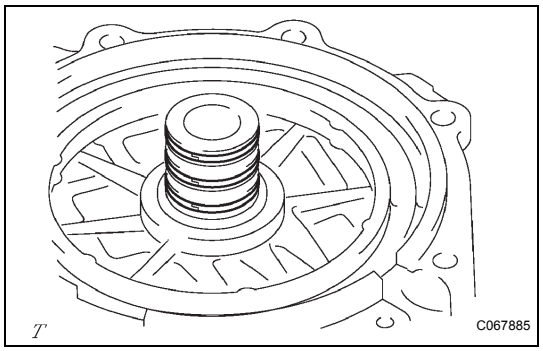

5. REMOVE CLUTCH DRUM OIL SEAL RING

(a) Remove the 3 oil seals from the transaxle rear cover.

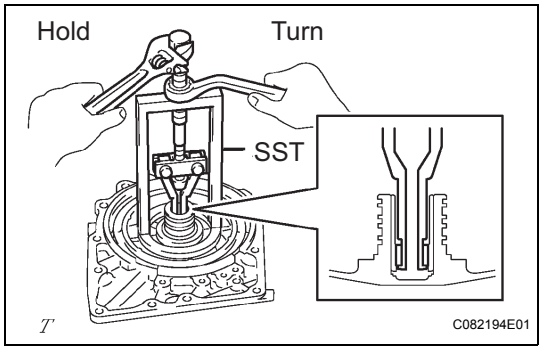

6. REMOVE REAR TRANSAXLE COVER NEEDLE ROLLER BEARING

(a) Using SST, remove the bearing from the rear transaxle cover.

SST 09387-00041 (09387-01021)

INSPECTION

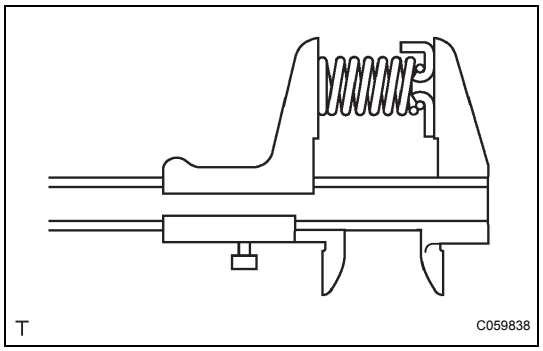

1. INSPECT OVERDRIVE BRAKE RETURN SPRING SUB-ASSEMBLY

(a) Using vernier calipers, measure the free length of the spring together with the spring seat.

Standard free length:
17.88 mm (0.7039 in.)

AX

REASSEMBLY

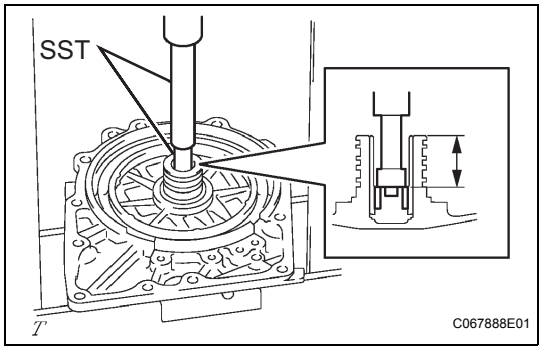

1. INSTALL REAR TRANSAXLE COVER NEEDLE ROLLER BEARING

(a) Coat a new needle roller bearing with ATF.

(b) Using SST and a press, install the needle roller bearing into the rear transaxle cover.

SST 09950-60010 (09951-00190, 09952-06010), 09950-70010 (09951-07100)

Standard clearance:
25.2 mm (0.992 in.)

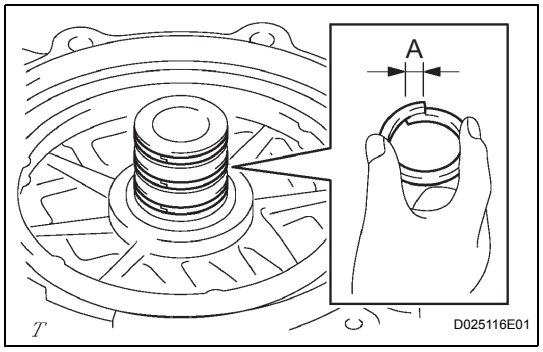

2. INSTALL CLUTCH DRUM OIL SEAL RING

(a) Compress the oil seal ring from both sides to reduce dimension A.

Dimension A:
5.0 mm (0.197 in.)

(b) Coat the oil seal ring with ATF and install it onto the rear transaxle cover.

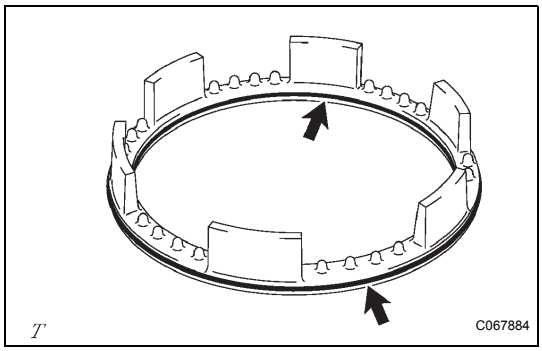

3. INSTALL 2ND COAST AND OVERDRIVE O-RING

(a) Coat 2 new O-rings with ATF and install them into the 2nd coast and overdrive brake piston.

NOTICE:
Do not damage the O-rings.

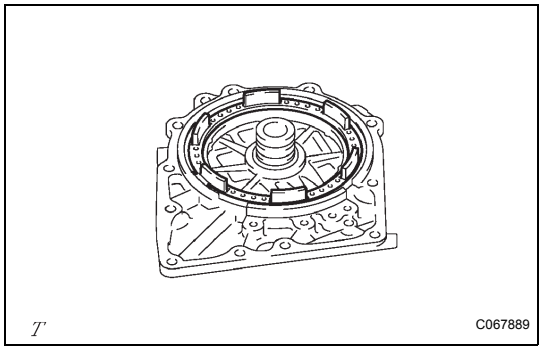

4. INSTALL 2ND COAST AND OVERDRIVE BRAKE PISTON

(a) Coat the piston with ATF and install it into the transaxle rear cover.

NOTICE:
Do not damage the O-rings.

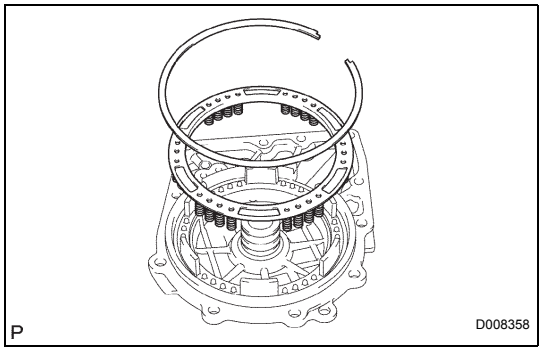

5. INSTALL OVERDRIVE BRAKE RETURN SPRING SUB-ASSEMBLY

(a) Using SST and a press, install the overdrive brake return spring and snap ring onto the transaxle rear cover.

SST 09387-00070
NOTICE:
- **Stop pressing the press when the spring sheet is lowered to 1 to 2 mm (0.039 to 0.078 in.) from the snap ring groove, to prevent the spring sheet from deforming.**
- **Do not expand the snap ring excessively.**

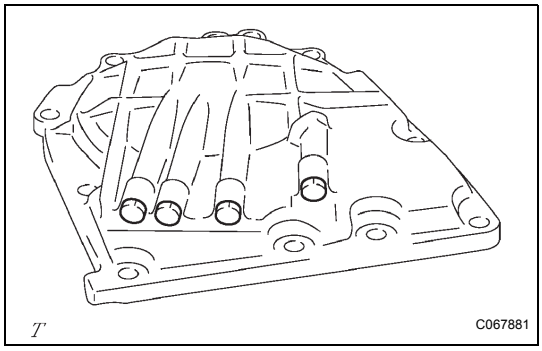

6. INSTALL REAR TRANSAXLE COVER PLUG

(a) Coat 4 new O-rings with ATF, and install them into the 4 rear transaxle cover plugs.

(b) Install the 4 rear transaxle cover plugs into the rear transaxle cover.

Torque: 7.4 N*m (75 kgf*cm, 65 in.*lbf)
NOTICE:
Do not damage the O-rings.

AX

VALVE BODY

COMPONENTS

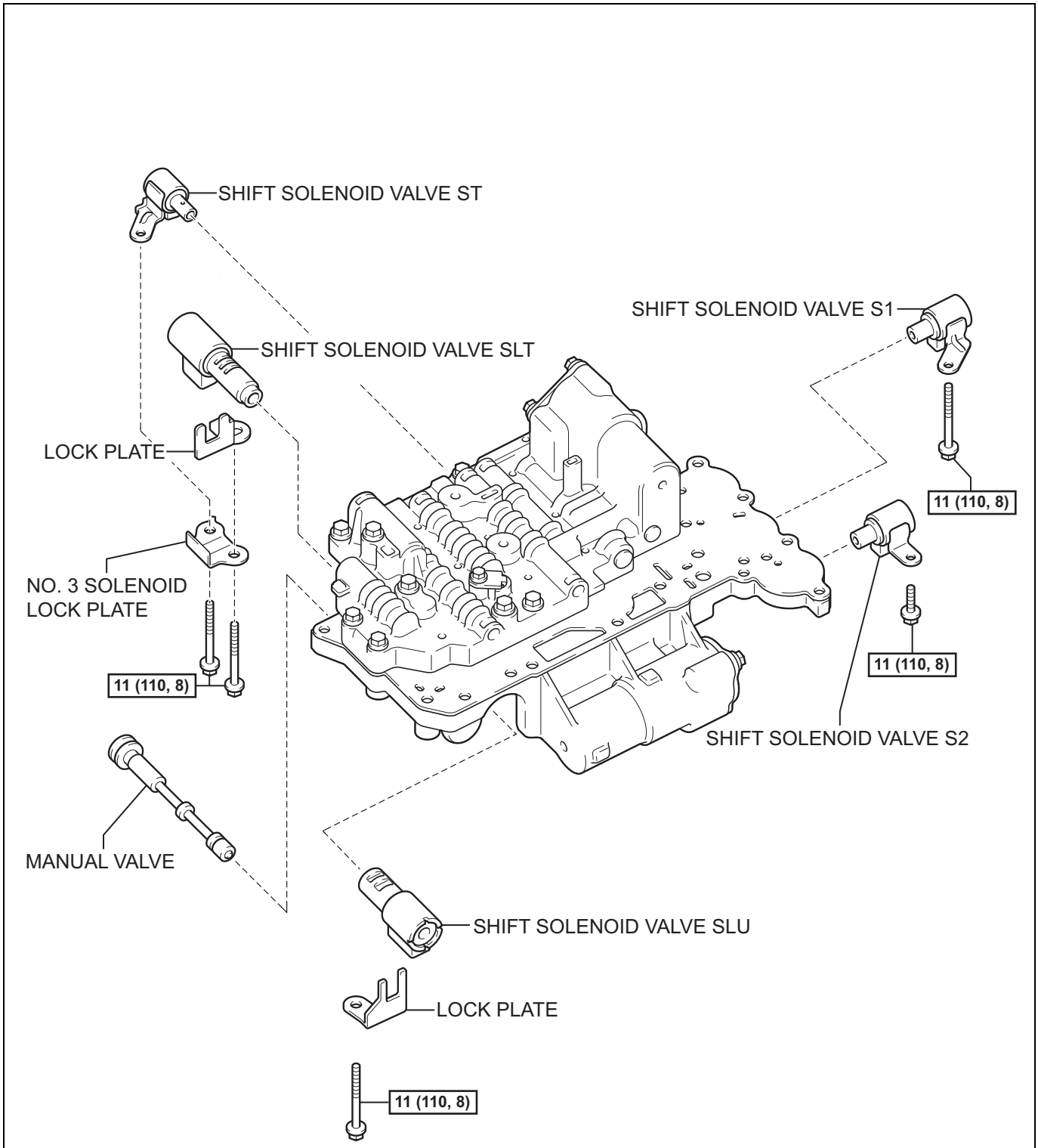

N*m (kgf*cm, ft*lbf) :Specified torque

P

C121644E02

AX

DISASSEMBLY

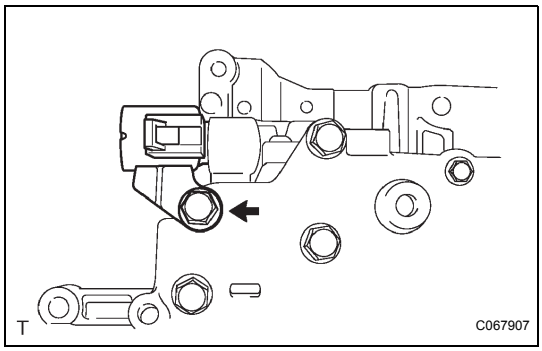

1. REMOVE SHIFT SOLENOID VALVE S1

(a) Remove the bolt and pull out shift solenoid valve S1.

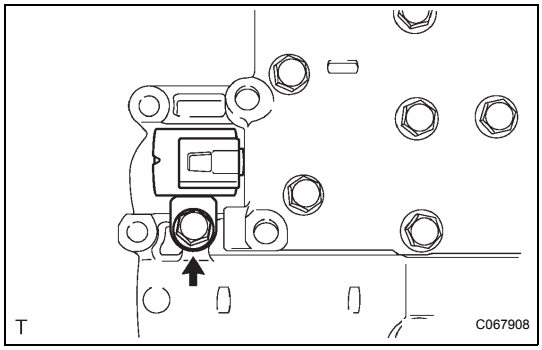

2. REMOVE SHIFT SOLENOID VALVE S2

(a) Remove the bolt and pull out shift solenoid valve S2.

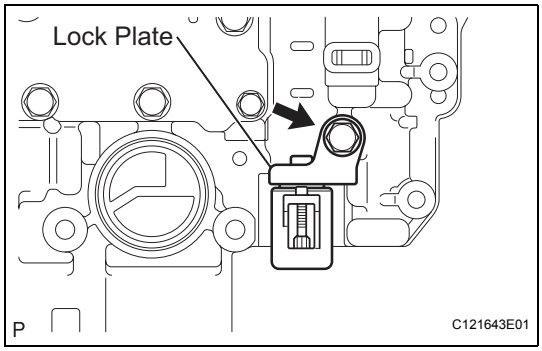

3. REMOVE SHIFT SOLENOID VALVE SLU

(a) Remove the bolt and the solenoid lock plate.
(b) Pull out the shift solenoid valve SLU.

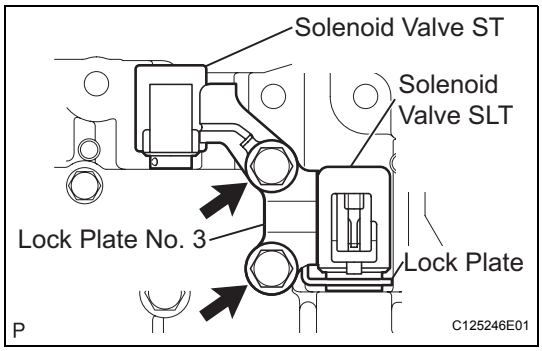

4. REMOVE NO. 3 SOLENOID LOCK PLATE

(a) Remove the 2 bolts and No. 3 solenoid lock plate from the valve body.
(b) Pull out the shift solenoid valve ST from the valve body.
(c) Remove the solenoid lock plate from the shift solenoid valve SLT.
(d) Pull out the shift solenoid valve SLT from the valve body.

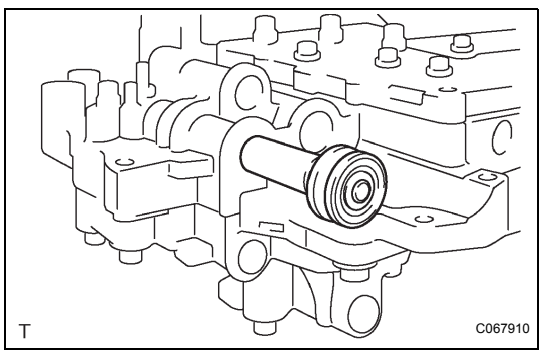

5. REMOVE MANUAL VALVE

(a) Remove the manual valve from the valve body assembly.

AX

Shift Solenoid Valve S1:

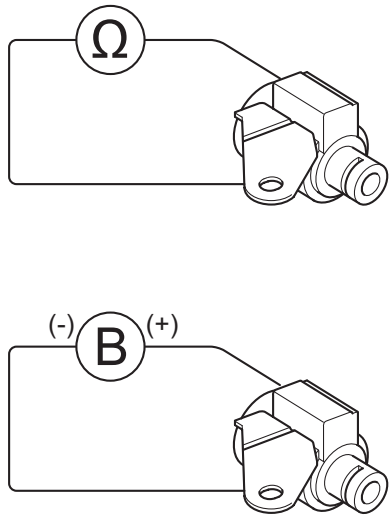

Y C130146E01

Shift Solenoid Valve S2:

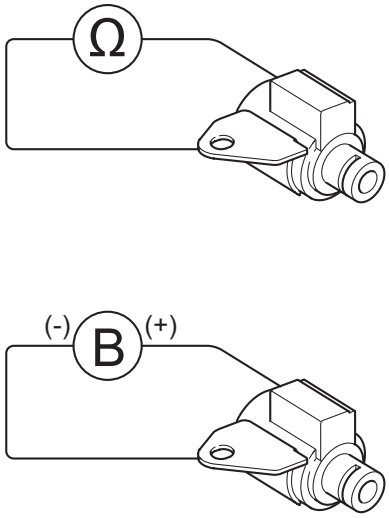

Y C130147E01

INSPECTION

1. INSPECT SHIFT SOLENOID VALVE S1

(a) Measure the resistance.

Standard resistance

Tester Connection	Specified Condition
Solenoid Connector (S1) - Solenoid Body (S1)	11 to 15 Ω at 20°C (68°F)

(b) Connect the positive (+) battery lead to the terminal of the solenoid connector, and the negative (-) battery lead to the solenoid body, and check the operation of the valve.

NOTICE:

While using the battery during the inspection, do not bring the positive and negative tester probes too close to each other as a short circuit may occur.

OK:

The solenoid makes an operating sound.

2. INSPECT SHIFT SOLENOID VALVE S2

(a) Measure the resistance.

Standard resistance

Tester Connection	Specified Condition
Solenoid Connector (S2) - Solenoid Body (S2)	11 to 15 Ω at 20°C (68°F)

(b) Connect the positive (+) battery lead to the terminal of the solenoid connector, and the negative (-) battery lead to the solenoid body, and check the operation of the valve.

NOTICE:

While using the battery during the inspection, do not bring the positive and negative tester probes too close to each other as a short circuit may occur.

OK:

The solenoid makes an operating sound.

Shift Solenoid Valve ST:

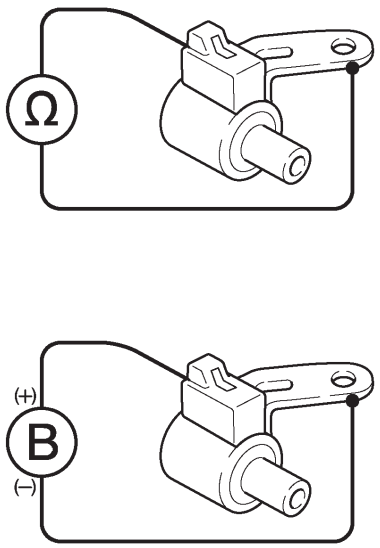

N D009034E02

3. INSPECT SHIFT SOLENOID VALVE ST

(a) Measure the resistance.

Standard resistance

Tester Connection	Specified Condition
Solenoid Connector (ST) - Solenoid Body (ST)	11 to 15 Ω at 20°C (68°F)

(b) Connect the positive (+) battery lead to the terminal of the solenoid connector, and the negative (-) battery lead to the solenoid body, and check the operation of the valve.

NOTICE:

While using the battery during the inspection, do not bring the positive and negative tester probes too close to each other as a short circuit may occur.

OK:

The solenoid makes an operating sound.

Shift Solenoid Valve SLT:

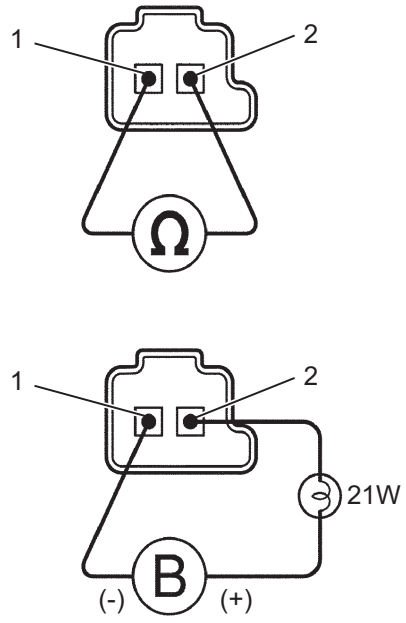

P G020767E42

4. INSPECT SHIFT SOLENOID VALVE SLT

(a) Measure the resistance.

Standard resistance

Tester Connection	Specified Condition
1 - 2	5.0 to 5.6 Ω at 20°C (68°F)

(b) Connect the positive (+) battery lead with a 21 W bulb to terminal 2 and the negative (-) battery lead to terminal 1 of the solenoid valve connector, and check the operation of the valve.

NOTICE:

While using the battery during the inspection, do not bring the positive and negative tester probes too close to each other as a short circuit may occur.

OK:

The solenoid makes an operating sound.

AX

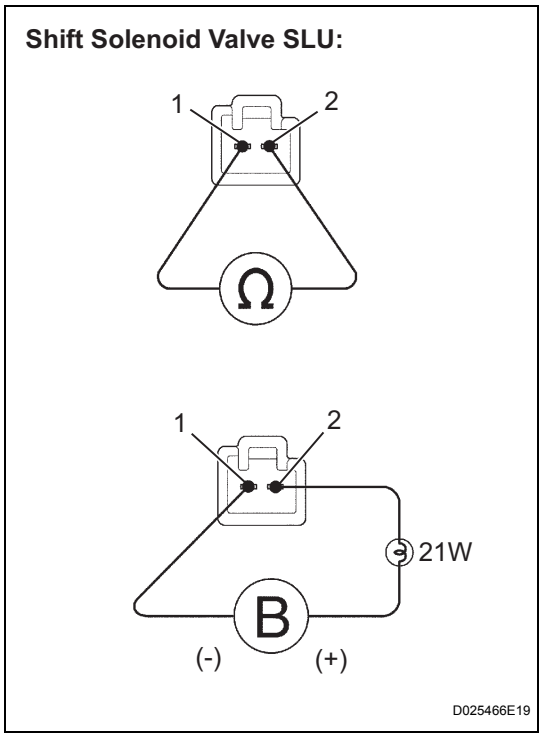

5. INSPECT SHIFT SOLENOID VALVE SLU

(a) Measure the resistance.

Standard resistance

Tester Connection	Specified Condition
1 - 2	5.0 to 5.6 Ω at 20°C (68°F)

(b) Connect the positive (+) battery lead with a 21 W bulb to terminal 2 and the negative (-) battery lead to terminal 1 of the solenoid valve connector, and check the operation of the valve.

NOTICE:

While using the battery during the inspection, do not bring the positive and negative tester probes too close to each other as a short circuit may occur.

OK:

The solenoid makes an operating sound.

REASSEMBLY

1. INSTALL MANUAL VALVE

(a) Coat the manual valve with ATF, and install it onto the valve body.

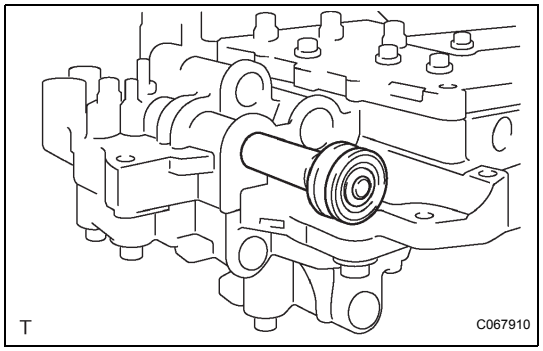

AX

2. INSTALL NO. 3 SOLENOID LOCK PLATE

(a) Install the shift solenoid valve SLT onto the valve body.

(b) Install the solenoid lock plate onto the shift solenoid valve SLT.

(c) Install the shift solenoid valve ST onto the valve body.

(d) Install the No. 3 solenoid lock plate onto the valve body with the 2 bolts.

Torque: 11 N*m (110 kgf*cm, 8 ft.*lbf)

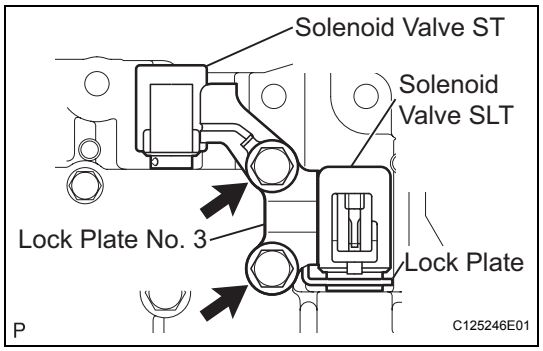

3. INSTALL SHIFT SOLENOID VALVE SLU

(a) Install the shift solenoid valve SLU onto the valve body.

(b) Install the solenoid lock plate with the bolt.

Torque: 11 N*m (110 kgf*cm, 8 ft.*lbf)

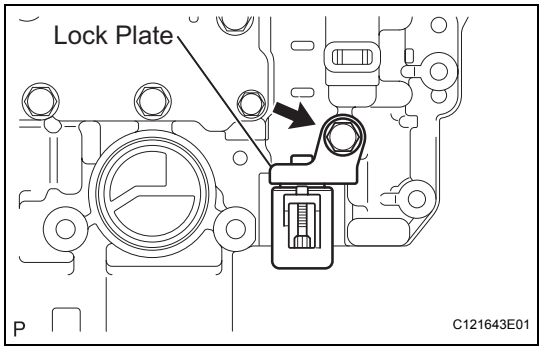

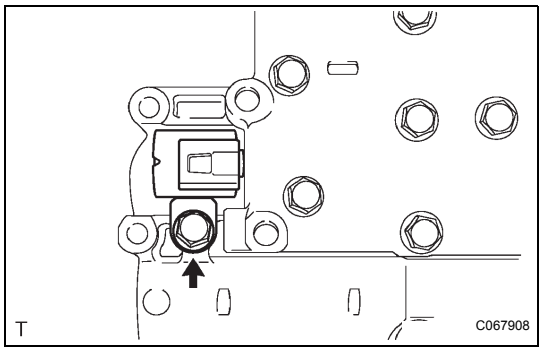

4. INSTALL SHIFT SOLENOID VALVE S2

(a) Install shift solenoid valve S2 with the bolt.
Torque: 11 N*m (110 kgf*cm, 8 ft.*lbf)

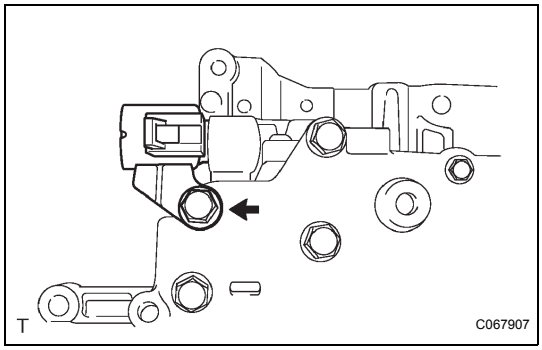

5. INSTALL SHIFT SOLENOID VALVE S1

(a) Install shift solenoid valve S1 with the bolt.
Torque: 11 N*m (110 kgf*cm, 8 ft.*lbf)

DIFFERENTIAL CASE

COMPONENTS

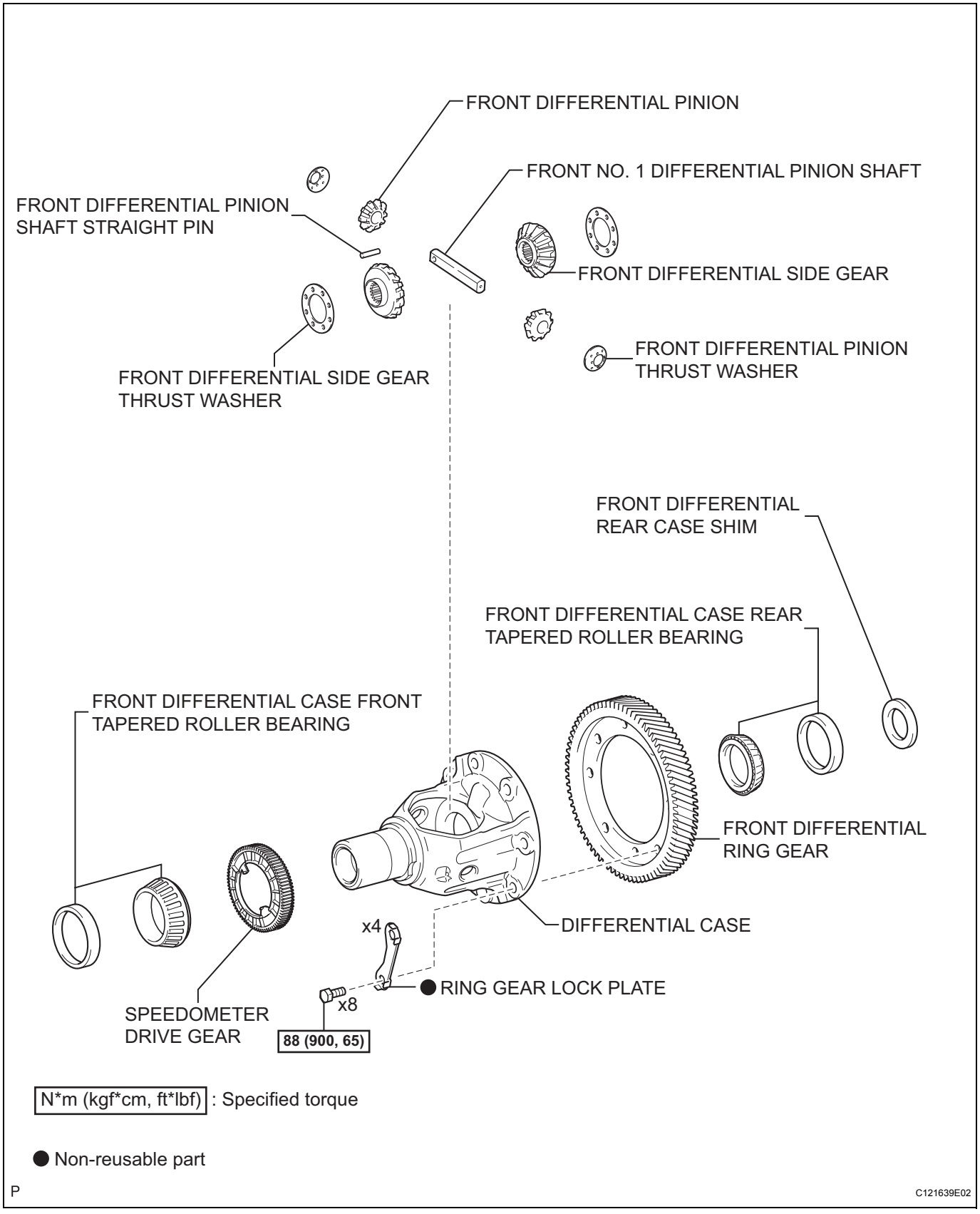

AX

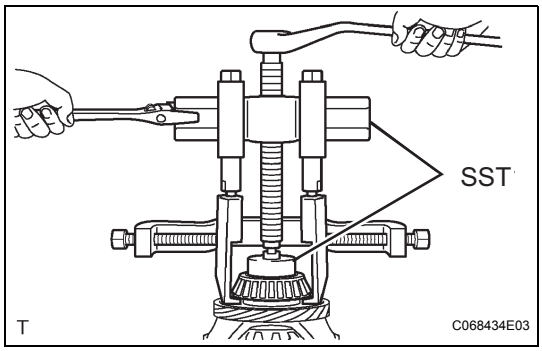

DISASSEMBLY

1. REMOVE FRONT DIFFERENTIAL CASE FRONT TAPERED ROLLER BEARING

(a) Using SST, remove the front differential case front tapered roller bearing from the differential case.

SST 09950-40011 (09951-04010, 09952-04010, 09953-04030, 09954-04010, 09955-04061, 09957-04010, 09958-04011), 09950-60010 (09951-00390)

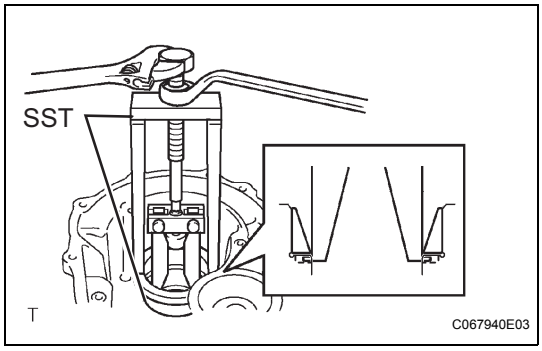

(b) Using SST, remove the front differential case RH tapered roller bearing outer race from the transaxle housing.

SST 09387-00041 (09387-02020, 09387-02010)

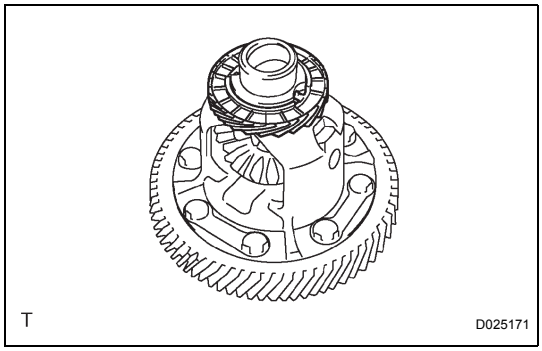

2. REMOVE SPEEDOMETER DRIVE GEAR

(a) Remove the speedometer drive gear from the differential case.

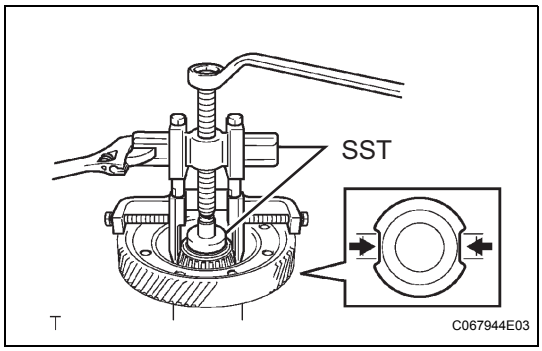

3. REMOVE FRONT DIFFERENTIAL CASE REAR TAPERED ROLLER BEARING

(a) Using SST, remove the front differential case tapered roller bearing from the differential case.

SST 09950-40011 (09951-04010, 09952-04010, 09953-04020, 09954-04010, 09955-04061, 09957-04010, 09958-04011), 09950-60010 (09951-00430)

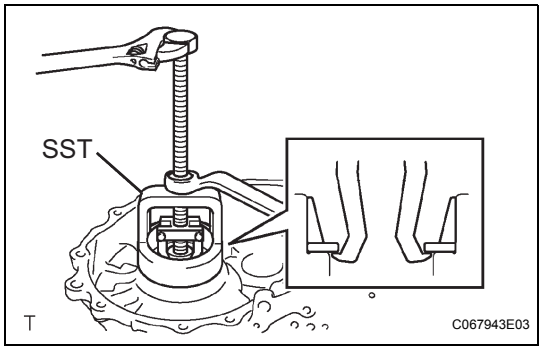

(b) Using SST, remove the front differential case tapered roller bearing outer race from the transaxle case.

SST 09612-65014 (09612-01010)

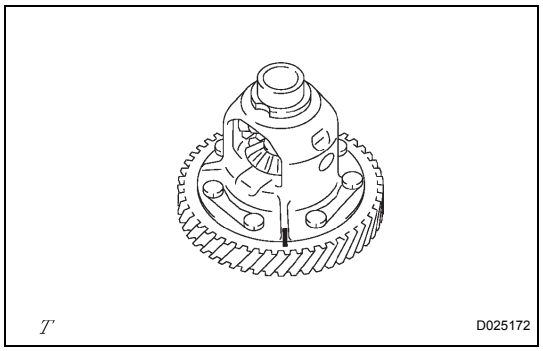

4. REMOVE FRONT DIFFERENTIAL RING GEAR

(a) Place matchmarks on the front differential ring gear and differential case.

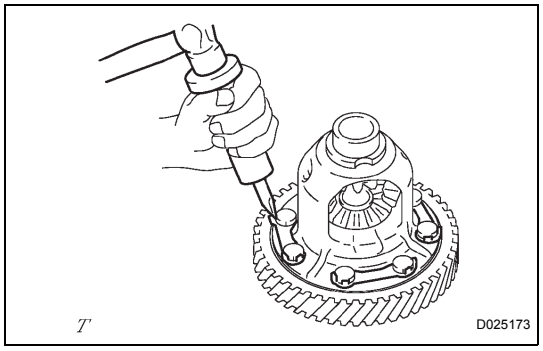

(b) Using SST and a hammer, release the lock plate.
SST 09930-00010

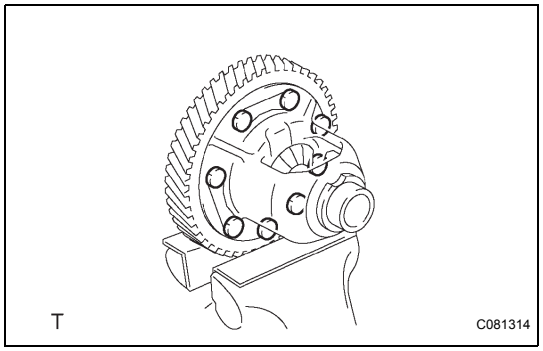

(c) Remove the 8 bolts and the lock plate.

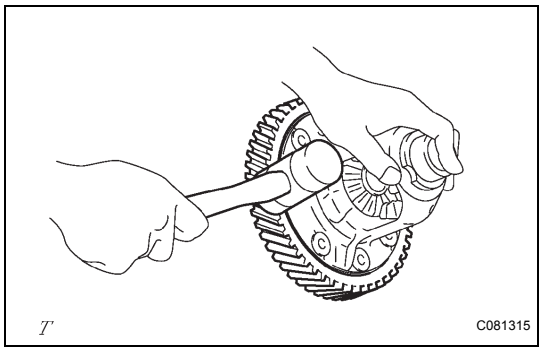

(d) Using a plastic hammer, remove the front differential ring gear from the differential case.

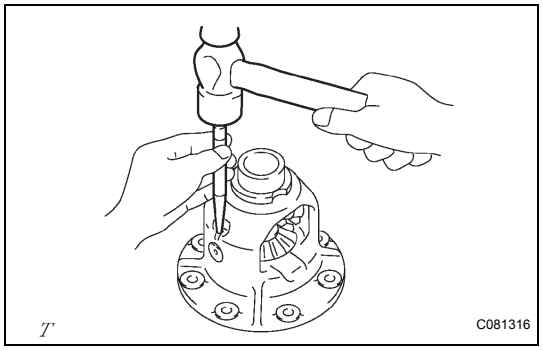

5. REMOVE FRONT DIFFERENTIAL PINION SHAFT STRAIGHT PIN

(a) Using a punch and a hammer, release the differential case.

AX

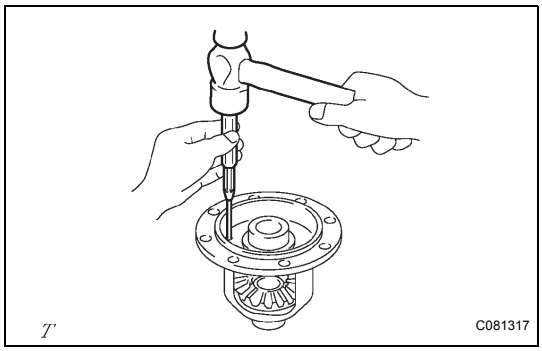

(b) Using a pin punch and a hammer, remove the straight pin.

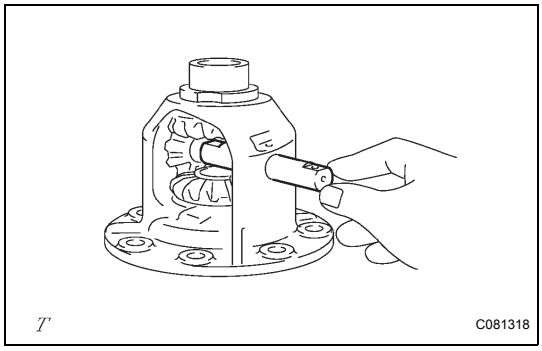

6. REMOVE FRONT NO. 1 DIFFERENTIAL PINION SHAFT

(a) Remove the pinion shaft from the front differential case.

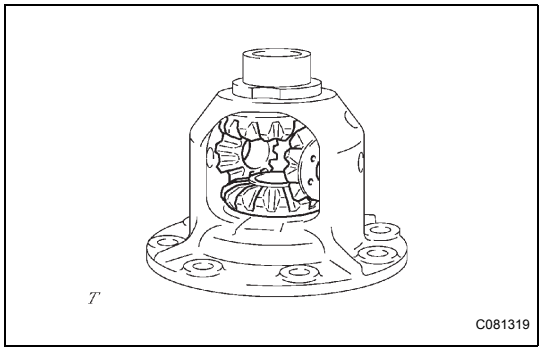

7. REMOVE FRONT DIFFERENTIAL SIDE GEAR

(a) Remove the 2 pinions, 2 thrust washers, 2 side gears and 2 thrust washers No. 1 from the front differential case.

AX

REASSEMBLY

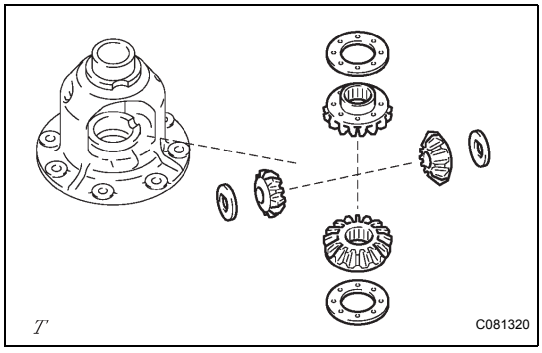

1. INSTALL FRONT DIFFERENTIAL SIDE GEAR

(a) After applying ATF to the 2 front differential side gears, 2 side gear thrust washers No. 1, 2 front differential pinions and 2 pinion thrust washers, install them onto the front differential case.
HINT:
When installing them, set the alignment of the front differential pinions perpendicular to that of the side gear and rotate them so that their holes are aligned with the holes in the differential case.

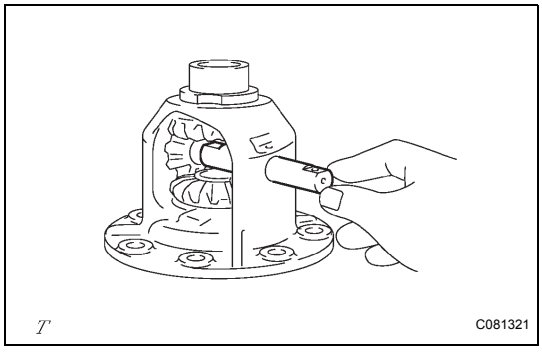

2. INSTALL FRONT NO. 1 DIFFERENTIAL PINION SHAFT

(a) Install the pinion shaft so as to align the lock pin holes in the pinion shaft and differential case.

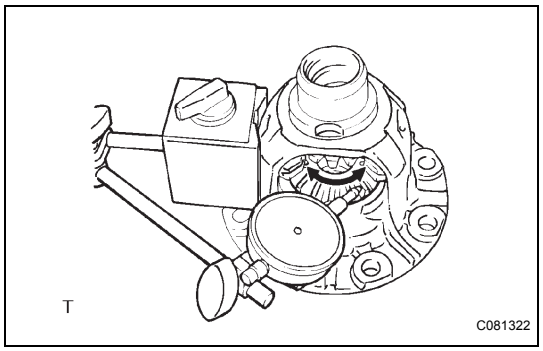

3. INSPECT BACKLASH

(a) Measure the side gear backlash while holding 1 pinion gear toward the case.

Standard backlash:

0.05 to 0.20 mm (0.0020 to 0.0079 in.)

If the backlash is outside the specifications, install the correct thrust washer to the side gear.

(b) Referring to the table below, select thrust washers which will ensure that the backlash is within the specifications for both sides.

Thrust washer thickness

Thickness mm (in.)	Thickness mm (in.)
0.95 (0.0374)	1.10 (0.0433)
1.00 (0.0394)	1.15 (0.0453)
1.05 (0.0413)	1.20 (0.0472)

If the backlash is not within the specifications, install a thrust washer of a different thickness.

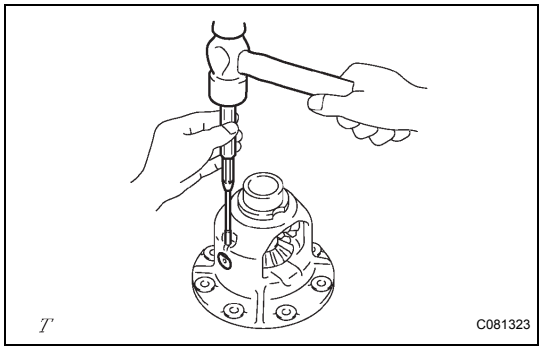

4. INSTALL FRONT DIFFERENTIAL PINION SHAFT STRAIGHT PIN

(a) Using a pin punch and a hammer, install the pinion shaft straight pin.

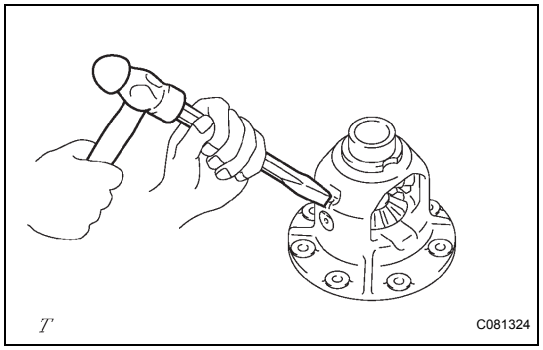

(b) Using a chisel and a hammer, stake the differential case.

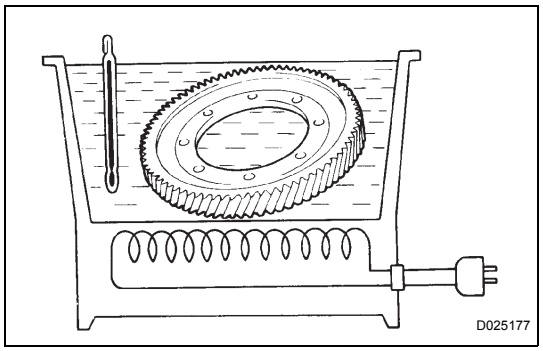

5. INSTALL FRONT DIFFERENTIAL RING GEAR

(a) Using ATF and a heater, heat the front differential ring gear to 90 to 110°C (194 to 230°F).

(b) Clean the contact surface of the front differential case.

AX

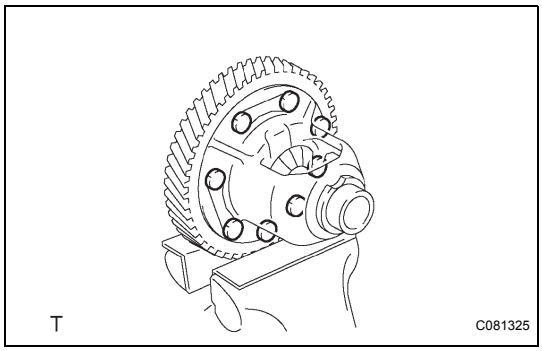

(c) Install 4 new ring gear lock plates with the 8 bolts.
Torque: 88 N*m (900 kgf*cm, 65 ft.*lbf)

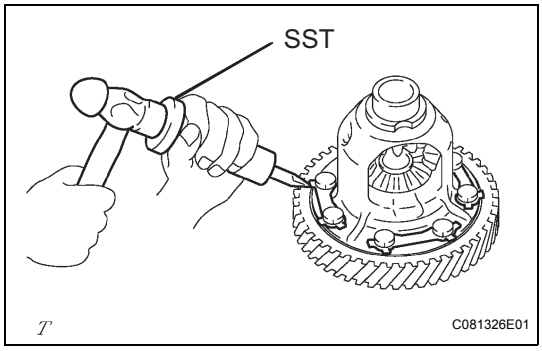

(d) Using SST, stake the ring gear lock plate.
SST 09930-00010

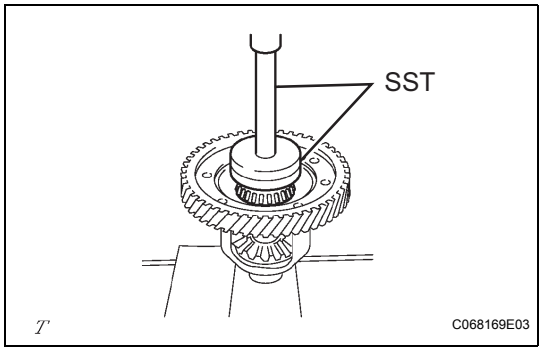

6. INSTALL FRONT DIFFERENTIAL CASE REAR TAPERED ROLLER BEARING

(a) Using SST and a press, install the front differential case LH tapered roller bearing inner race onto the differential case.
SST 09726-40010, 09950-60020 (09951-00790)

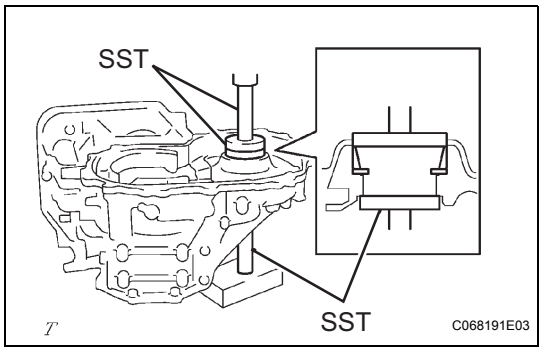

(b) Using SST and a press, install the shim and bearing outer race onto the transaxle case.
SST 09950-60020 (09951-00720), 09950-60010 (09951-00650), 09950-70010 (09951-07100, 09951-07200)

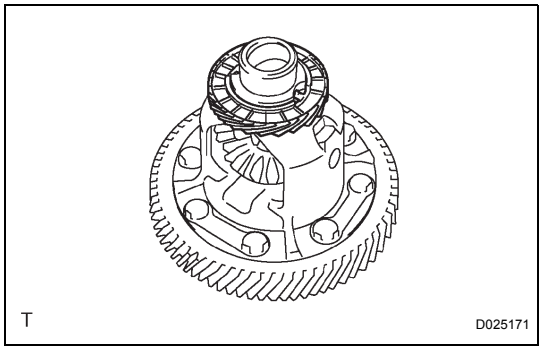

7. INSTALL SPEEDOMETER DRIVE GEAR

(a) Install the speedometer drive gear onto the differential case.

AX

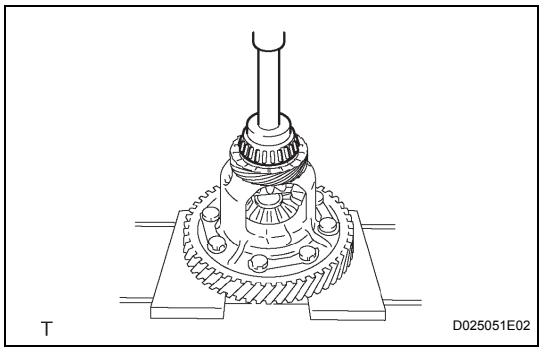

8. INSTALL FRONT DIFFERENTIAL CASE FRONT TAPERED ROLLER BEARING

(a) Using SST and a press, install the bearing inner race onto the differential case.

SST 09950-60010 (09951-00460), 09950-70010 (09951-07100)

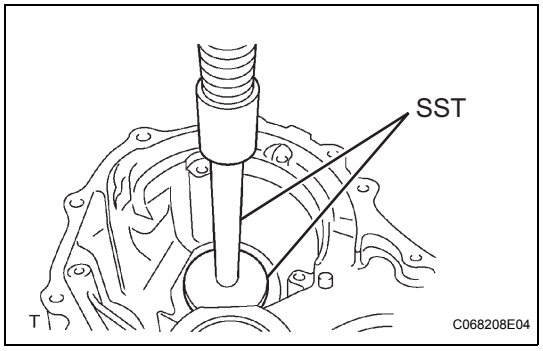

(b) Using SST and a press, install the tapered roller bearing onto the transaxle housing.

SST 09950-70010 (09951-07150), 09950-60020 (09951-00680)

CLUTCH SYSTEM

PROBLEM SYMPTOMS TABLE

Use the table below to help find the cause of the problem. The numbers indicate the likelihood of the possible causes of the problem in descending order. Check each part in order. Replace parts as necessary.

Symptom	Suspected area	See page
Clutch grabs/chatters	1. Engine mounting (Loose)	-
	2. Clutch disc assembly (Excessive runout)	CL-15
	3. Clutch disc assembly (Oily)	CL-15
	4. Clutch disc assembly (Worn out)	CL-15
	5. Clutch disc torsion spring (Damaged)	CL-15
	6. Clutch disc assembly (Glazed)	CL-15
	7. Diaphragm spring (Tip out of alignment)	CL-15
Clutch pedal spongy	1. Clutch line (Air in line)	-
	2. Master cylinder cup (Damaged)	CL-9
	3. Release cylinder rubber (Damaged)	CL-12
Clutch noisy	1. Clutch release bearing assembly (Worn, dirty or damaged)	CL-15
	2. Clutch disc torsion spring (Damaged)	CL-15
Clutch slips	1. Clutch pedal (Free play out of adjustment)	CL-3
	2. Clutch disc assembly (Oily)	CL-15
	3. Clutch disc assembly (Worn out)	CL-15
	4. Diaphragm spring (Damaged)	CL-15
	5. Pressure plate (Distorted)	CL-15
	6. Flywheel sub-assembly (Distorted)	CL-15
Clutch does not disengage	1. Clutch pedal (Free play out of adjustment)	CL-3
	2. Clutch line (Air in line)	-
	3. Master cylinder cup (Damaged)	CL-9
	4. Release cylinder cup (Damaged)	CL-12
	5. Clutch disc assembly (Out of line)	CL-15
	6. Clutch disc assembly (Excessive runout)	CL-15
	7. Clutch disc assembly (Lining broken)	CL-15
	8. Clutch disc assembly (Dirty or burned)	CL-15
	9. Clutch disc assembly (Oily)	CL-15
	10. Clutch disc assembly (Lack of spline grease)	CL-15

CLUTCH PEDAL

COMPONENTS

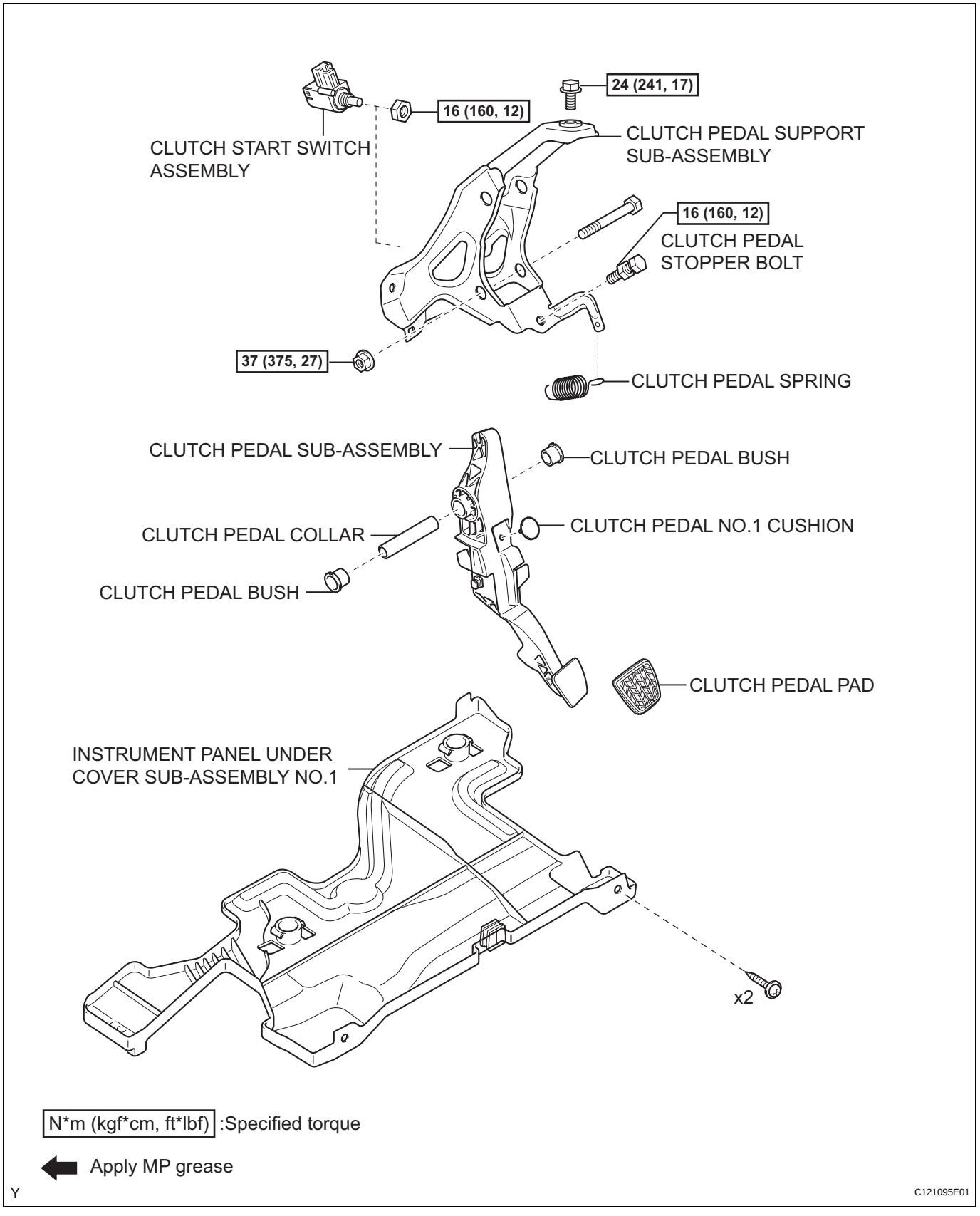

CL

ON-VEHICLE INSPECTION

1. INSPECT AND ADJUST CLUTCH PEDAL SUB-ASSEMBLY

(a) Pull back the floor carpet.

(b) Check that the pedal height is correct.
Pedal height from dash panel:
133.0 to 143.0 mm (5.236 to 5.630 in.)

(c) If the pedal height is not as specified, adjust it as follows.
(1) Loosen the lock nut and turn the stopper bolt until the correct height is obtained.
(2) Tighten the lock nut.
Torque: 16 N*m (160 kgf*cm, 12 ft.*lbf)

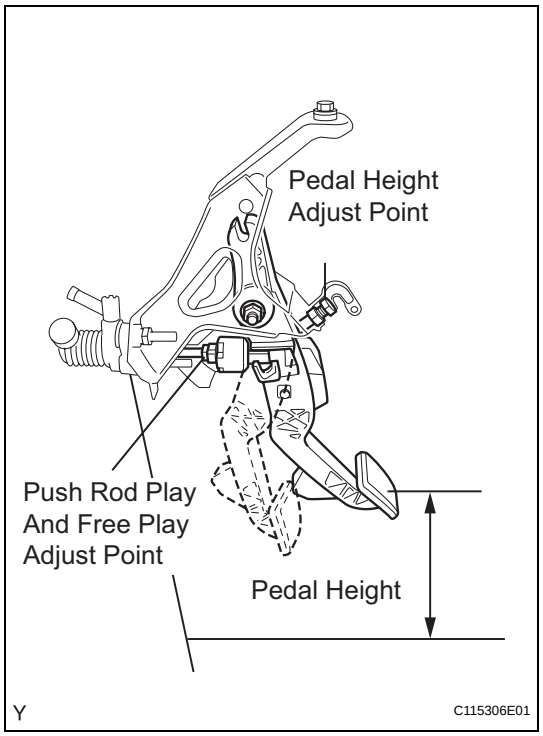

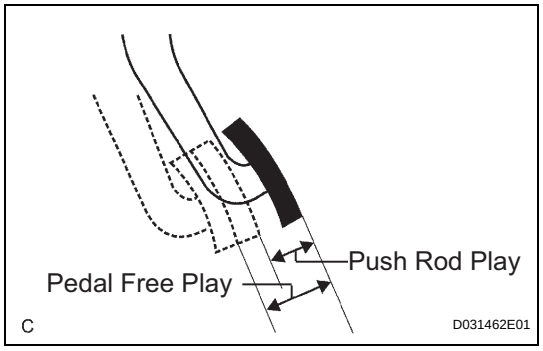

2. INSPECT AND ADJUST PEDAL FREE PLAY AND PUSH ROD PLAY

(a) Check that the pedal free play and push rod play are correct.
(1) Depress the pedal until clutch resistance begins to be felt.
Pedal free play:
5.0 to 15.0 mm (0.197 to 0.591 in.)
(2) Gently depress the pedal until the resistance begins to increase a little.
Push rod play at pedal top:
1.0 to 5.0 mm (0.039 to 0.197 in.)

(b) Adjust the pedal free play and push rod play.
(1) Loosen the lock nut and turn the push rod until the correct free play and push rod play are obtained.
(2) Tighten the lock nut.
Torque: 12 N*m (120 kgf*cm, 8.7 ft.*lbf)
(3) After adjusting the pedal free play, check the pedal height.

CL

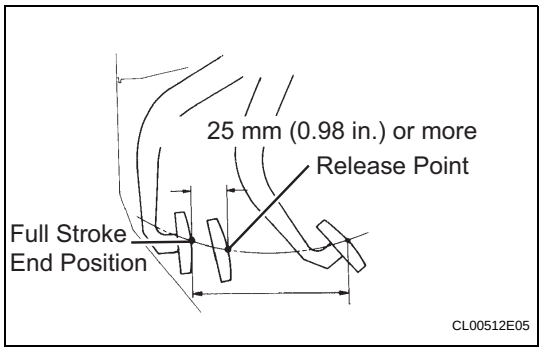

3. INSPECT AND ADJUST CLUTCH RELEASE POINT

(a) Check the clutch release point.

(1) Pull the parking brake lever and install a wheel stoppers.

(2) Start the engine and run it at idle.

(3) Without depressing the clutch pedal, slowly move the shift lever into reverse until the gears come into contact.

(4) Gradually depress the clutch pedal and measure the stroke distance from the point that the gear noise stops (release point) up to the full stroke end position.

Standard distance:

25 mm (0.98 in.) or more (From pedal stroke end position to release point)

If the distance is not as specified, perform the following operations.

- Check pedal height.
- Check push rod play and pedal free play.
- Bleed the clutch line.
- Check the clutch cover assembly and disc assembly.

REMOVAL

1. **REMOVE BRAKE BOOSTER ASSEMBLY**
   (See page BR-41)
2. **REMOVE INSTRUMENT PANEL SUB-ASSEMBLY UPPER (for Hatchback)**
   (See page IP-19)
3. **REMOVE INSTRUMENT PANEL SUB-ASSEMBLY UPPER (for Sedan)**
   (See page IP-5)
4. **REMOVE CLUTCH RESERVOIR TUBE (See page CL-9)**
5. **DISCONNECT CLUTCH MASTER CYLINDER TO FLEXIBLE HOSE TUBE (See page CL-9)**
6. **REMOVE INSTRUMENT PANEL UNDER COVER SUB-ASSEMBLY NO.1 (See page IR-50)**
7. **REMOVE CLUTCH MASTER CYLINDER ASSEMBLY (See page CL-9)**
8. **REMOVE CLUTCH PEDAL SUPPORT SUB-ASSEMBLY**
   (a) Disconnect the wire harness clamp.
   (b) Disconnect the clutch start switch connector.
   (c) Remove the bolt and clutch pedal support.

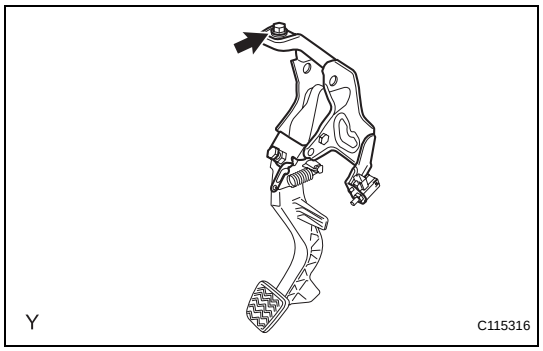

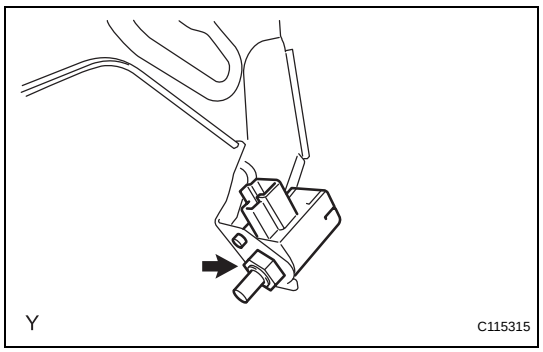

9. **REMOVE CLUTCH START SWITCH ASSEMBLY**
   (a) Remove the nut and clutch start switch.

CL

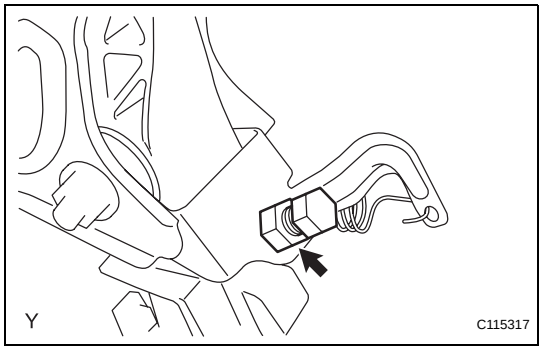

10. REMOVE CLUTCH PEDAL STOPPER BOLT
(a) Loosen the lock nut and remove the clutch pedal stopper bolt.

11. REMOVE CLUTCH PEDAL SPRING

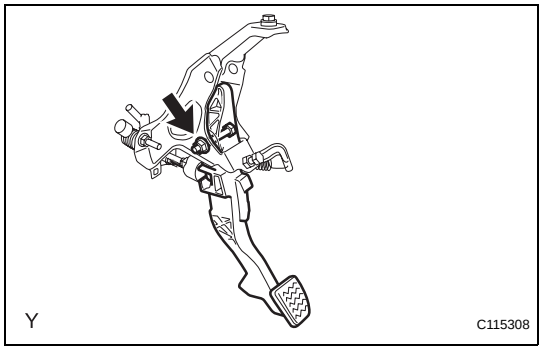

12. REMOVE CLUTCH PEDAL SUB-ASSEMBLY
(a) Remove the bolt and the nut.
(b) Remove the clutch pedal from the clutch pedal support.

13. REMOVE CLUTCH PEDAL PAD

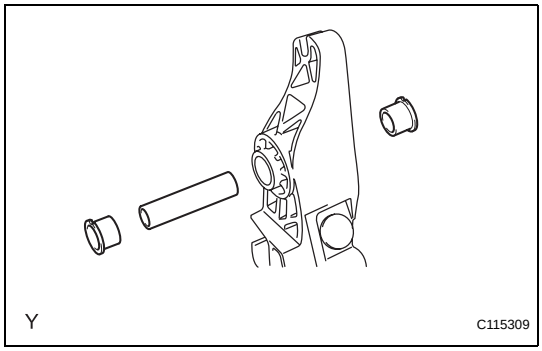

14. REMOVE CLUTCH PEDAL BUSH
(a) Remove the 2 bushes from the clutch pedal.
(b) Remove the collar from the clutch pedal.

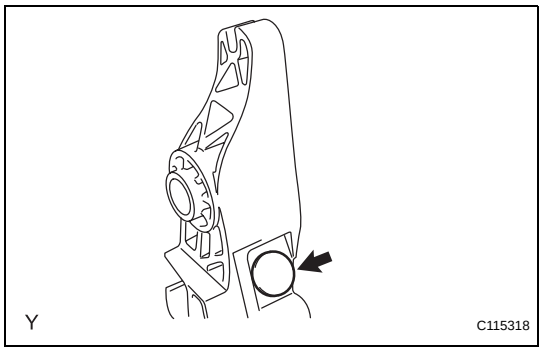

15. REMOVE CLUTCH PEDAL NO.1 CUSHION
(a) Remove the clutch pedal No. 1 cushion from the clutch pedal.

INSTALLATION

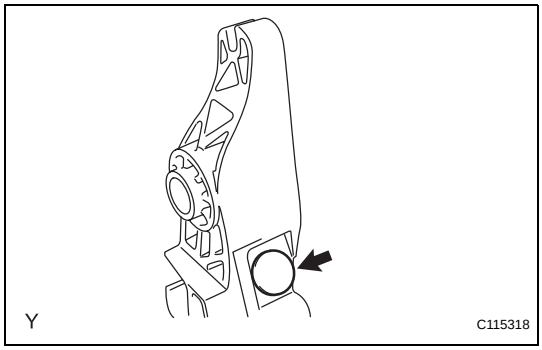

1. INSTALL CLUTCH PEDAL NO.1 CUSHION
(a) Install the clutch pedal No. 1 cushion onto the clutch pedal.

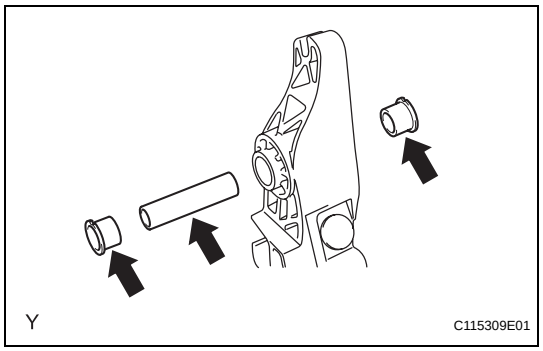

2. INSTALL CLUTCH PEDAL BUSH

(a) Apply MP grease to the 2 bushes and collar.

(b) Install the 2 bushes and collar onto the clutch pedal.

3. INSTALL CLUTCH PEDAL PAD

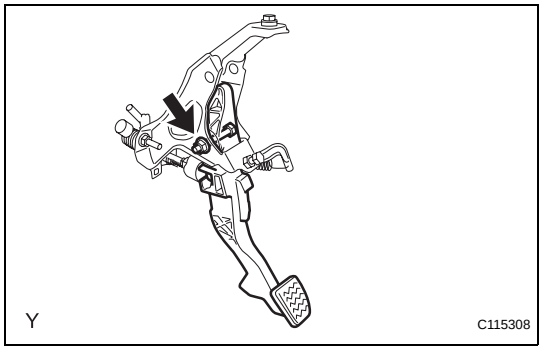

4. INSTALL CLUTCH PEDAL SUB-ASSEMBLY

(a) Install the clutch pedal onto the clutch pedal support with the bolt and the nut.

Torque: 37 N*m (375 kgf*cm, 27 ft.*lbf)

HINT:

Install the bolt from the left side of the vehicle.

5. INSTALL CLUTCH PEDAL SPRING

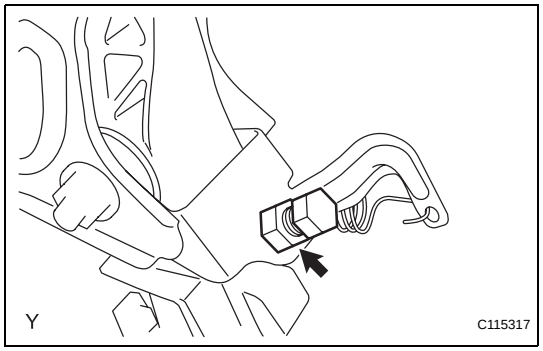

6. INSTALL CLUTCH PEDAL STOPPER BOLT

(a) Install the clutch pedal stopper bolt so that its end touches the clutch pedal cushion.

HINT:

Tighten the lock nut to the specified torque when adjusting the clutch pedal.

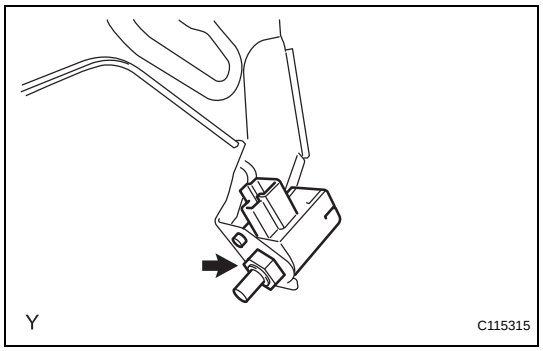

7. INSTALL CLUTCH START SWITCH ASSEMBLY

(a) Install the clutch start switch with the nut.

Torque: 16 N*m (160 kgf*cm, 12 ft.*lbf)

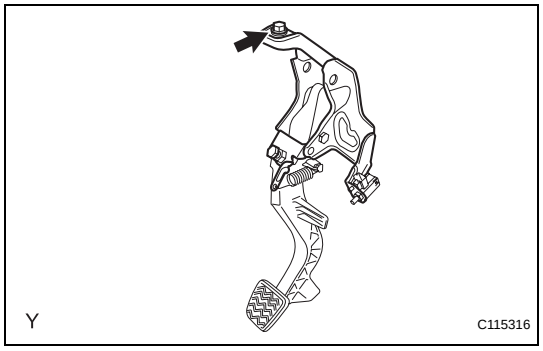

8. INSTALL CLUTCH PEDAL SUPPORT SUB-ASSEMBLY

(a) Install the clutch pedal support onto the vehicle with the bolt.

Torque: 24 N*m (241 kgf*cm, 17 ft.*lbf)

(b) Connect the clutch start switch connector.

(c) Connect the wire harness clamp.

9. INSTALL CLUTCH MASTER CYLINDER ASSEMBLY
(See page CL-10)

CL

10. **CONNECT CLUTCH MASTER CYLINDER TO FLEXIBLE HOSE TUBE (See page CL-10)**
11. **INSTALL CLUTCH RESERVOIR TUBE (See page CL-10)**
12. **INSTALL INSTRUMENT PANEL SUB-ASSEMBLY UPPER (for Hatchback)**
(See page IP-26)
13. **INSTALL INSTRUMENT PANEL SUB-ASSEMBLY UPPER (for Sedan)**
(See page IP-10)
14. **INSTALL BRAKE BOOSTER ASSEMBLY**
(See page BR-43)
15. **INSPECT AND ADJUST CLUTCH PEDAL SUB-ASSEMBLY (See page CL-3)**
16. **INSTALL INSTRUMENT PANEL UNDER COVER SUB-ASSEMBLY NO.1 (See page IR-82)**

CLUTCH MASTER CYLINDER

COMPONENTS

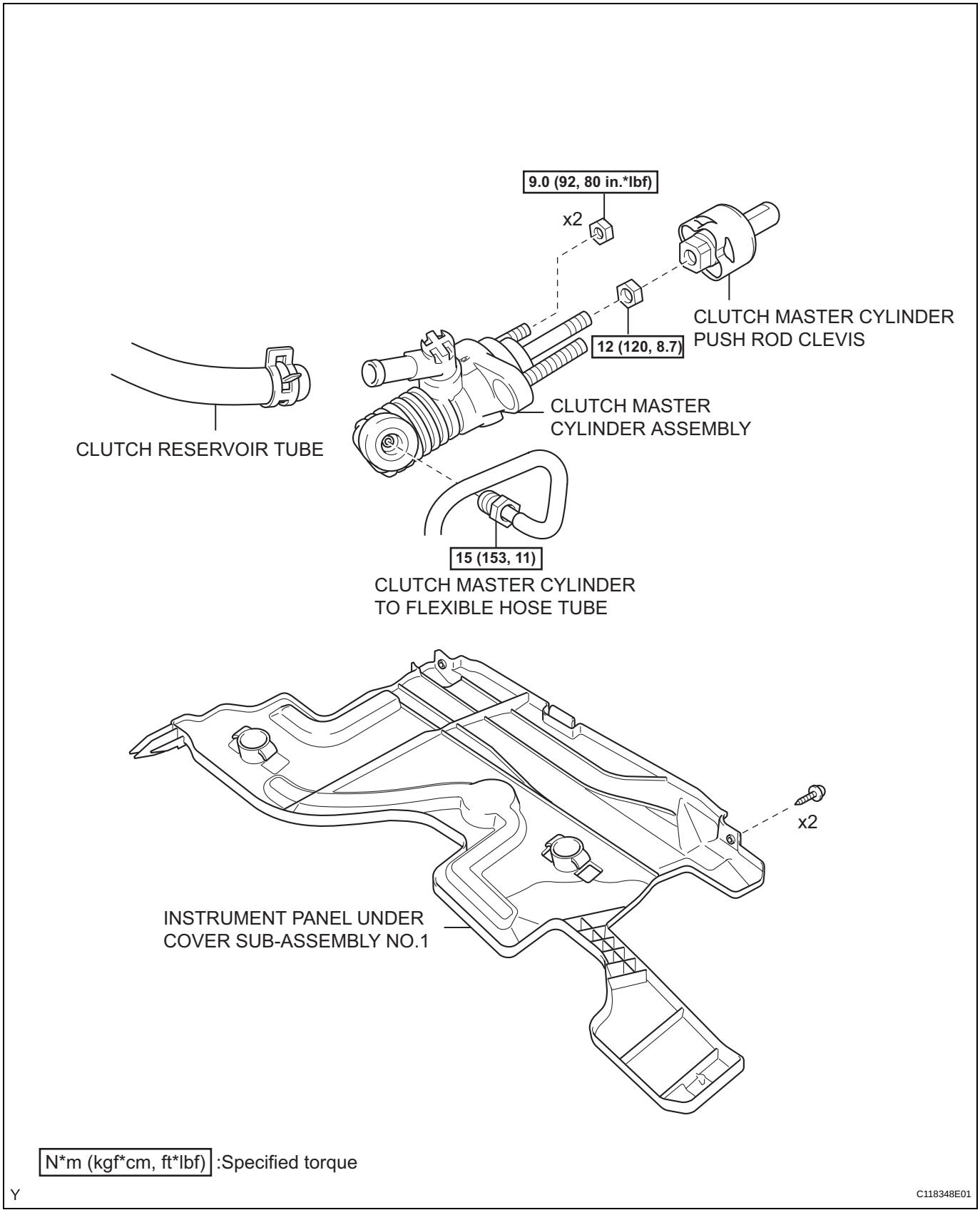

CL

REMOVAL

1. **REMOVE BRAKE BOOSTER ASSEMBLY**
   (See page BR-41)

2. **REMOVE CLUTCH RESERVOIR TUBE**
   (a) Loosen the clip and remove the clutch reservoir tube from the clutch master cylinder assembly.
   HINT:
   Use a container to collect the fluid.

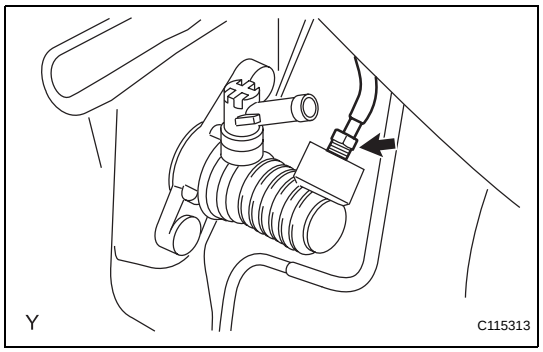

3. **DISCONNECT CLUTCH MASTER CYLINDER TO FLEXIBLE HOSE TUBE**
   (a) Using SST, disconnect the flexible hose tube.
   SST 09023-00101
   HINT:
   Use a container to collect the fluid.

4. **REMOVE INSTRUMENT PANEL UNDER COVER SUB-ASSEMBLY NO.1 (See page IR-50)**

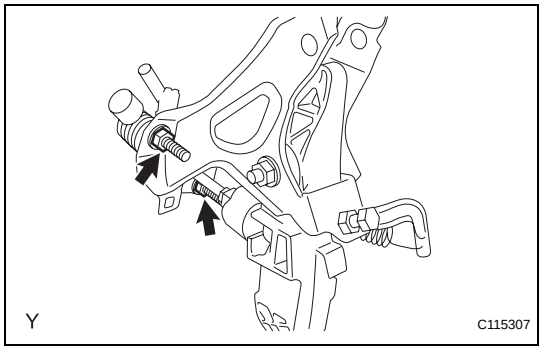

5. **REMOVE CLUTCH MASTER CYLINDER ASSEMBLY**
   (a) Remove the 2 nuts and the clutch master cylinder.

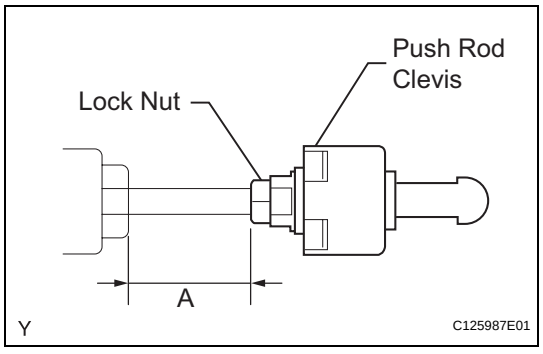

6. **REMOVE CLUTCH MASTER CYLINDER PUSH ROD CLEVIS**
   (a) Measure dimension A as shown in the illustration before loosening the lock nut.
   (b) Loosen the lock nut and remove the push rod clevis.
   (c) Remove the lock nut.

INSTALLATION

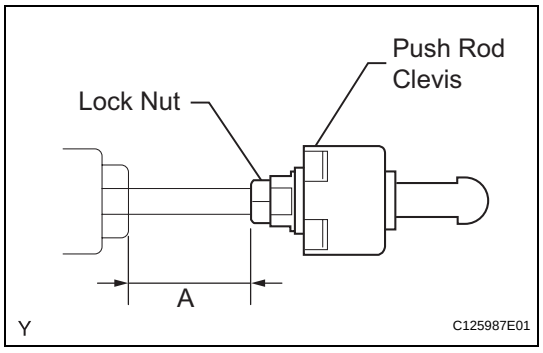

1. **INSTALL CLUTCH MASTER CYLINDER PUSH ROD CLEVIS**
   (a) Install the lock nut onto the push rod.
   (b) Install the push rod clevis.
   (c) Tighten the lock nut and check the dimension A is same as the dimension A that has been measured.

CL

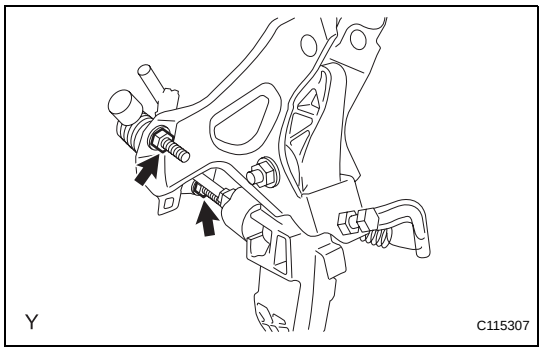

2. INSTALL CLUTCH MASTER CYLINDER ASSEMBLY

(a) Install the clutch master cylinder with the 2 nuts.
Torque: 9.0 N*m (92 kgf*cm, 80 in.*lbf)

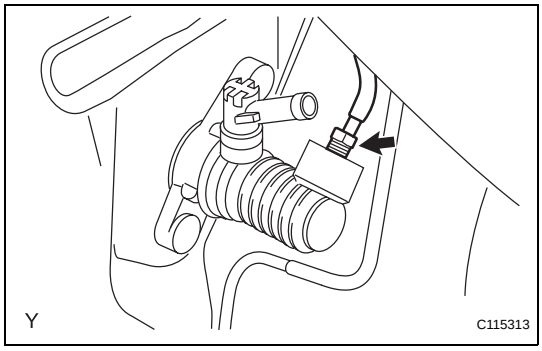

3. CONNECT CLUTCH MASTER CYLINDER TO FLEXIBLE HOSE TUBE

(a) Using SST, connect the flexible hose tube.
SST 09023-00101
Torque: 15 N*m (153 kgf*cm, 11 ft.*lbf)

4. INSTALL CLUTCH RESERVOIR TUBE

(a) Connect the clutch reservoir tube with the clip to the clutch master cylinder assembly.

5. INSTALL BRAKE BOOSTER ASSEMBLY
(See page BR-43)

6. INSPECT AND ADJUST CLUTCH PEDAL SUB-ASSEMBLY (See page CL-3)

7. INSTALL INSTRUMENT PANEL UNDER COVER SUB-ASSEMBLY NO.1 (See page IR-82)

CLUTCH RELEASE CYLINDER

COMPONENTS

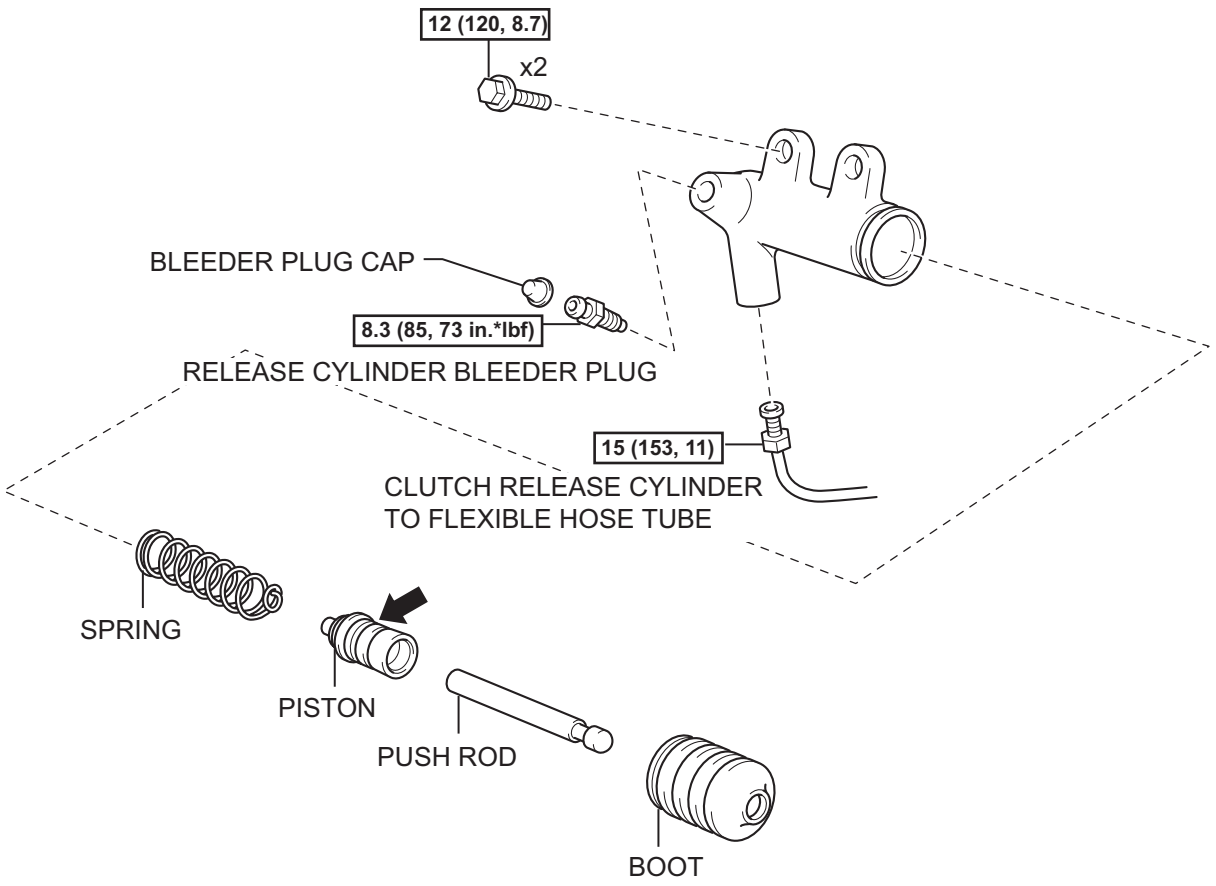

N*m (kgf*cm, ft*lbf) :Specified torque

Lithium soap base glycol grease

Y

C106366E01

CL

REMOVAL

1. DRAIN BRAKE FLUID

2. DISCONNECT CLUTCH RELEASE CYLINDER TO FLEXIBLE HOSE TUBE

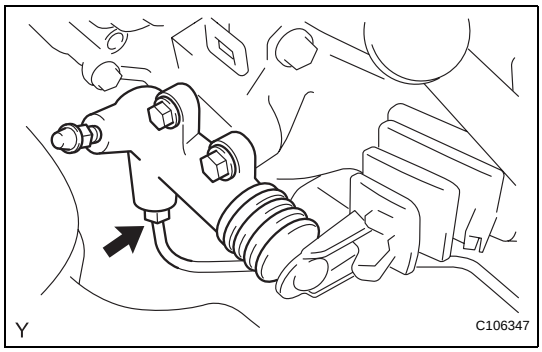

(a) Using SST, disconnect the flexible hose tube.
SST 09023-00101
HINT:
Use a container to collect the fluid.

3. REMOVE CLUTCH RELEASE CYLINDER ASSEMBLY

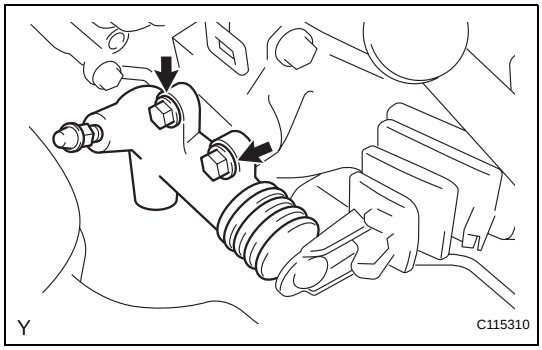

(a) Remove the 2 bolts and the clutch release cylinder.

DISASSEMBLY

1. REMOVE CLUTCH RELEASE CYLINDER KIT

(a) Remove the boot from the cylinder body.
(b) Remove the push rod from the cylinder body.
(c) Remove the piston from the cylinder body.
NOTICE:
Do not damage the inside of the cylinder body.
(d) Remove the spring from the cylinder body.
(e) Remove the bleeder plug cap from the bleeder plug.

2. REMOVE RELEASE CYLINDER BLEEDER PLUG

REASSEMBLY

1. INSTALL RELEASE CYLINDER BLEEDER PLUG
Torque: 8.3 N*m (85 kgf*cm, 73 in.*lbf)

2. INSTALL CLUTCH RELEASE CYLINDER KIT
(a) Install the bleeder plug cap onto the bleeder plug.
(b) Install a new spring onto the cylinder body.

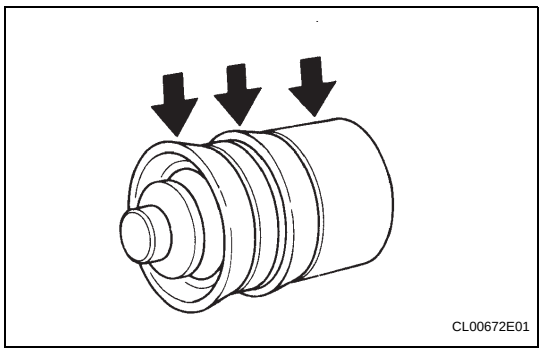

(c) Coat the parts with lithium soap base glycol grease, as shown in the illustration.
(d) Install the piston onto the cylinder body.
NOTICE:
Do not damage the inside of the cylinder body.
(e) Install the push rod onto the cylinder body.
(f) Install the boot onto the cylinder body.

INSTALLATION

1. INSTALL CLUTCH RELEASE CYLINDER ASSEMBLY
(a) Install the clutch release cylinder with the 2 bolts.
Torque: 12 N*m (120 kgf*cm, 8.7 ft.*lbf)

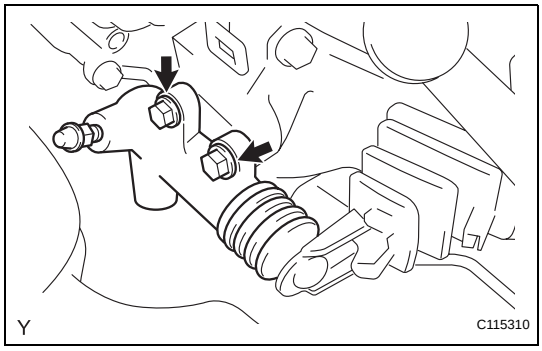

2. CONNECT CLUTCH RELEASE CYLINDER TO FLEXIBLE HOSE TUBE
(a) Using SST, connect the flexible hose tube.
SST 09023-00101
Torque: 15 N*m (153 kgf*cm, 11 ft.*lbf)

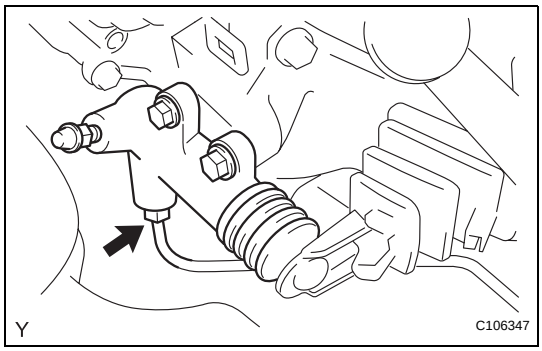

3. BLEED CLUTCH PIPE LINE
(a) Fill the brake reservoir tank with brake fluid and bleed the clutch system.
Torque: 8.3 N*m (85 kgf*cm, 73 in.*lbf)

4. CHECK FOR CLUTCH FLUID LEAKAGE

CL

CLUTCH UNIT

COMPONENTS

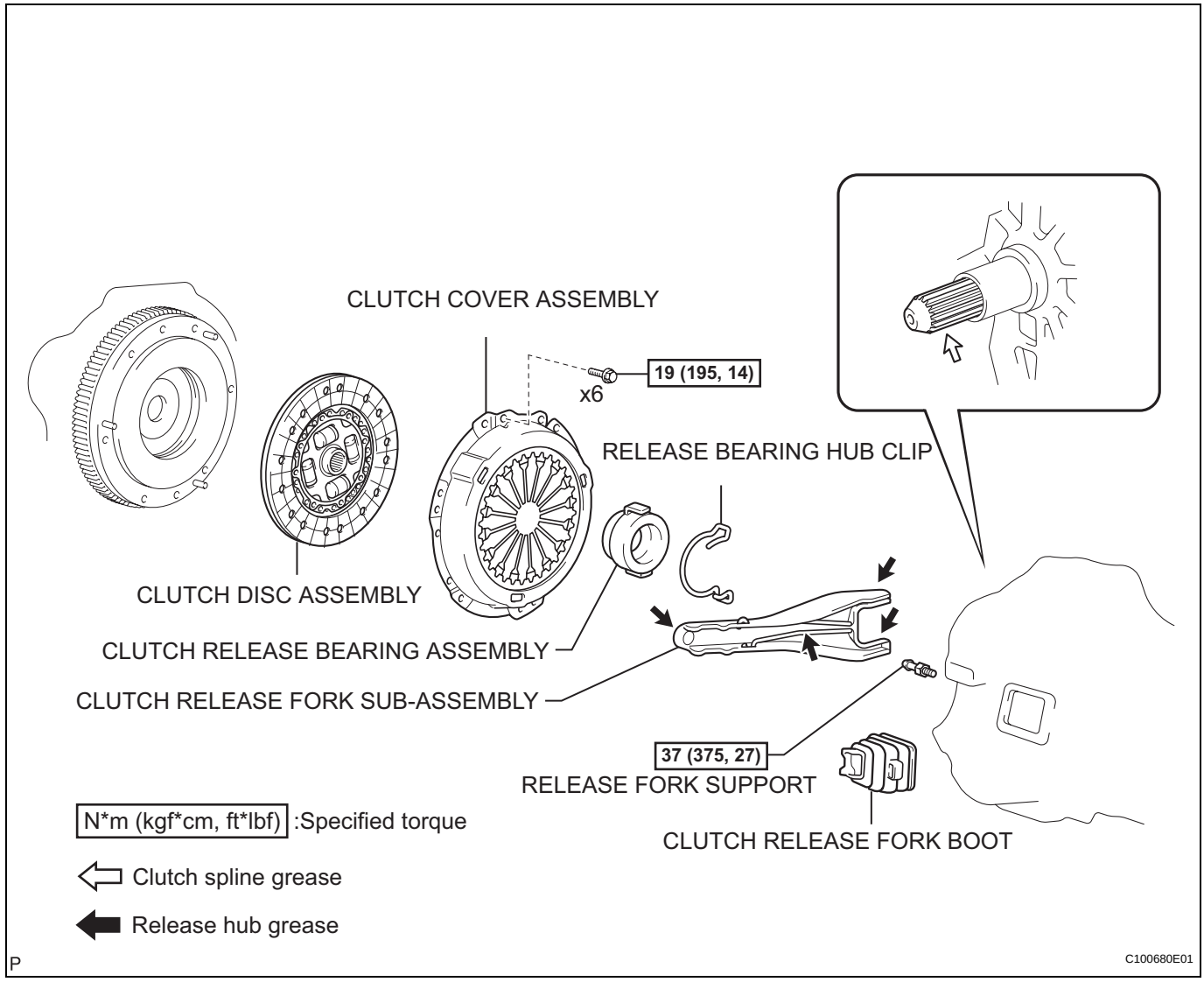

CL

REMOVAL

1. **REMOVE MANUAL TRANSAXLE ASSEMBLY**
   (See page MX-26)
2. **REMOVE CLUTCH RELEASE FORK SUB-ASSEMBLY**
   (a) Remove the clutch release fork with the clutch release bearing from the manual transaxle.
3. **REMOVE CLUTCH RELEASE FORK BOOT**
4. **REMOVE CLUTCH RELEASE BEARING ASSEMBLY**
   (a) Remove the clutch release bearing from the clutch release fork.
5. **REMOVE RELEASE BEARING HUB CLIP**
6. **REMOVE RELEASE FORK SUPPORT**
   (a) Remove the release fork support from the manual transaxle.
7. **REMOVE CLUTCH COVER ASSEMBLY**
   (a) Align the matchmark on the clutch cover assembly with the one on the flywheel.
   (b) Loosen each set bolt one turn at a time until the spring tension is released.
   (c) Remove the set bolts and pull off the clutch cover.
   NOTICE:
   Do not drop the clutch disc.
8. **REMOVE CLUTCH DISC ASSEMBLY**

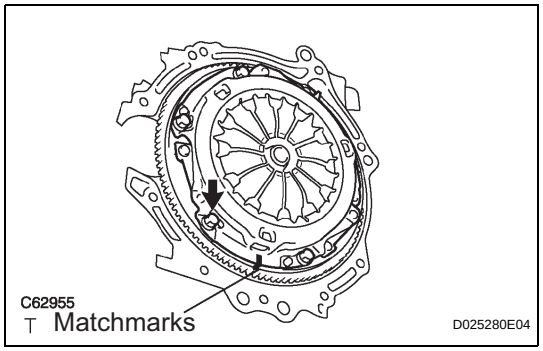

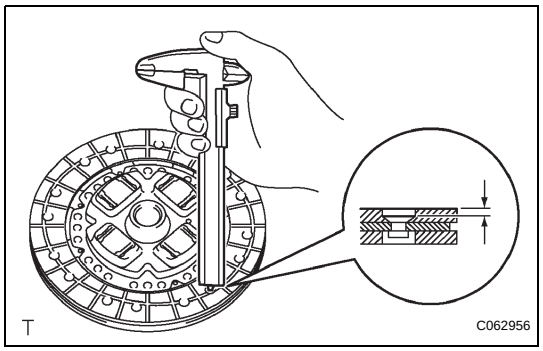

INSPECTION

1. **INSPECT CLUTCH DISC ASSEMBLY**
   (a) Using vernier calipers, measure the rivet head depth.
   Minimum rivet depth:
   0.3 mm (0.012 in.)
   If necessary, replace the clutch disc assembly.
   (b) Install the clutch disc assembly onto the transaxle assembly.
   NOTICE:
   Insert the clutch disc assembly in the correct direction.

CL

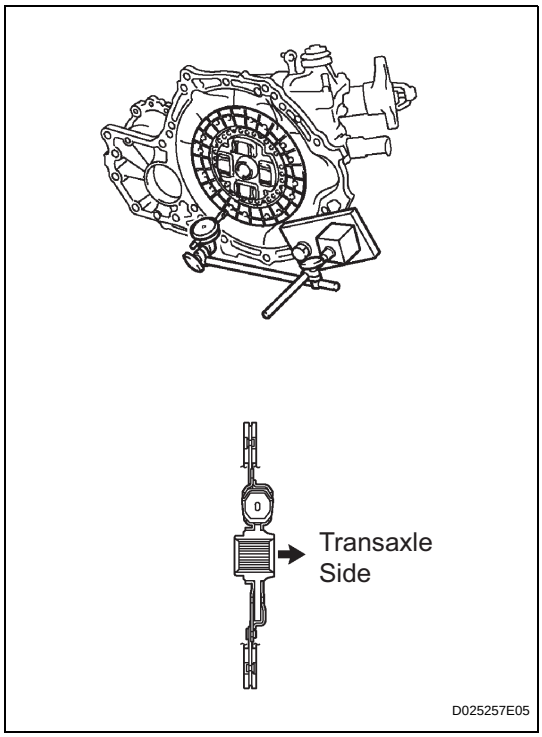

(c) Using a dial gauge, measure the clutch disc assembly runout.
Maximum runout:
0.8 mm (0.031 in.)
If necessary, replace the clutch disc assembly.

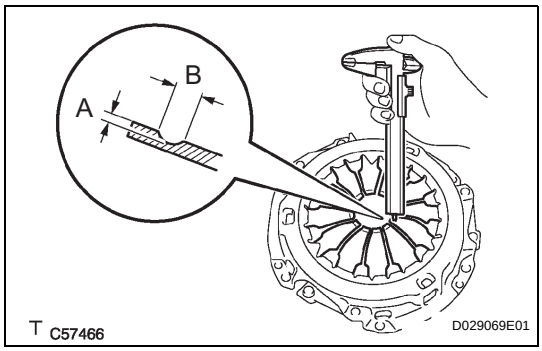

2. INSPECT CLUTCH COVER ASSEMBLY

(a) Using vernier calipers, measure the depth and width of the diaphragm spring wear.
Maximum:
A (Depth): 0.5 mm (0.020 in.)
B (Width): 6.0 mm (0.236 in.)
If necessary, replace the clutch cover assembly.

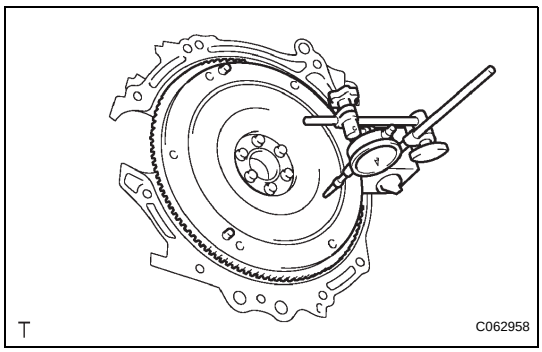

3. INSPECT FLYWHEEL SUB-ASSEMBLY

(a) Using a dial gauge, check the flywheel sub-assembly runout.
Maximum runout:
0.1 mm (0.004 in.)
If necessary, replace the flywheel sub-assembly.

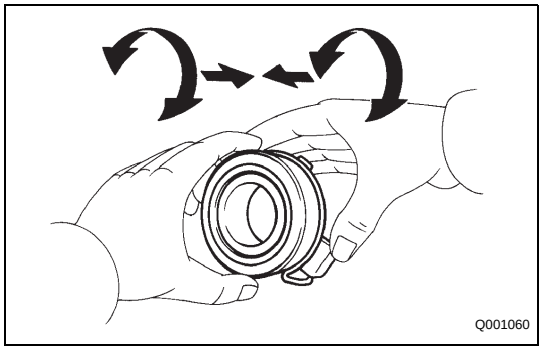

4. INSPECT CLUTCH RELEASE BEARING ASSEMBLY

(a) Check that the clutch release bearing assembly moves smoothly without abnormal resistance by turning the sliding parts of the clutch release bearing assembly (contact surfaces with the clutch cover) while applying force in the axial direction.
(b) Inspect the clutch release bearing assembly for damage and wear.
HINT:
If necessary, replace the release bearing assembly.

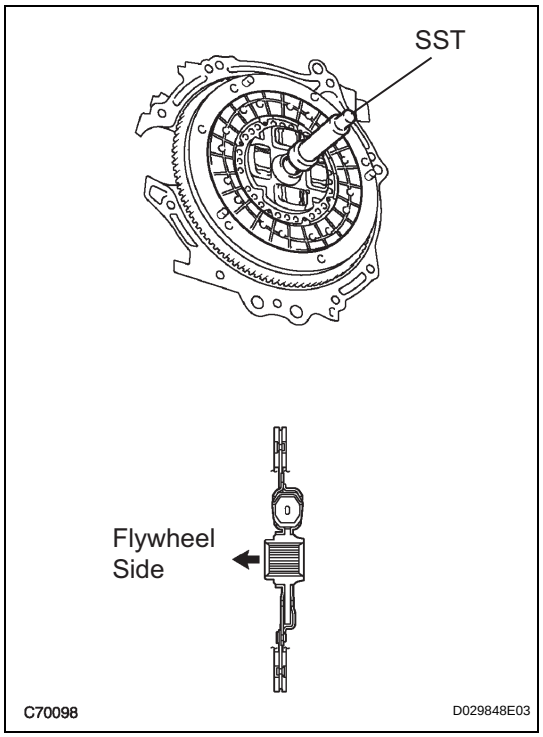

INSTALLATION

1. INSTALL CLUTCH DISC ASSEMBLY

(a) Insert SST into the clutch disc assembly, then insert them both into the flywheel sub-assembly.
SST 09301-00110
NOTICE:
Insert the clutch disc assembly in the correct direction.

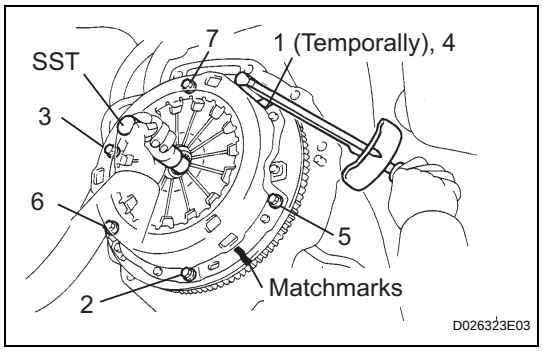

2. INSTALL CLUTCH COVER ASSEMBLY

(a) Align the matchmark on the clutch cover assembly with that on the flywheel sub-assembly.

(b) Following the procedures shown in the illustration, tighten the 6 bolts in order, starting with the bolt located near the knock pin at the top.
Torque: 19 N*m (195 kgf*cm, 14 ft.*lbf)
HINT:
- Following the order in the illustration, tighten the blots evenly one at a time.
- Move SST up and down, right and left lightly after checking that the disc is in the center, and tighten the bolts.

SST 09301-00110

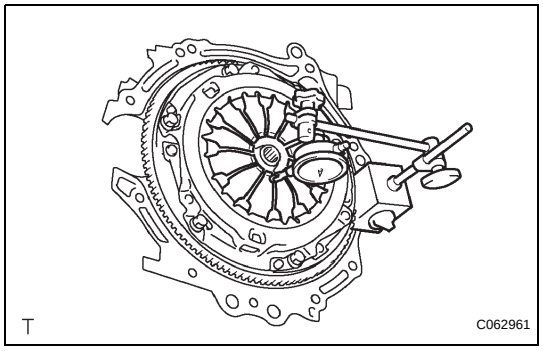

3. INSPECT AND ADJUST CLUTCH COVER ASSEMBLY

(a) Using a dial indicator with a roller instrument, check the diaphragm spring tip alignment.
Maximum non-alignment:
0.5 mm (0.020 in.)

CL

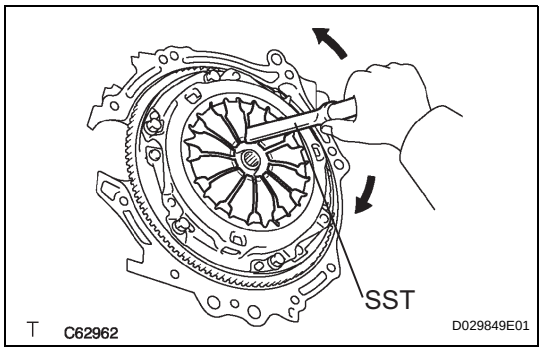

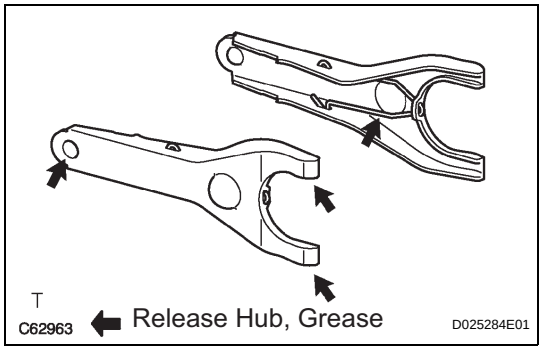

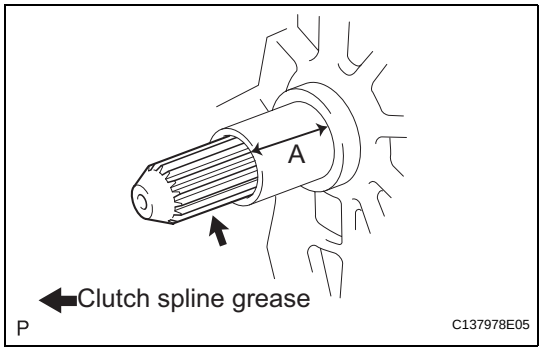

(b) If the alignment is not as specified, using SST, adjust the diaphragm spring tip alignment.
SST 09333-00013

4. INSTALL RELEASE FORK SUPPORT

(a) Install the release fork support onto the transaxle assembly.
Torque: 37 N*m (375 kgf*cm, 27 ft.*lbf)

5. INSTALL CLUTCH RELEASE FORK BOOT

6. INSTALL RELEASE BEARING HUB CLIP

7. INSTALL CLUTCH RELEASE FORK SUB-ASSEMBLY

(a) Apply release hub grease to the contact surfaces of the release fork and release bearing assembly, release fork and push rod, and release fork and fork support.
Sealant:
Toyota Genuine Release Hub Grease or Equivalent

(b) Install the release fork onto the release bearing assembly.

8. INSTALL CLUTCH RELEASE BEARING ASSEMBLY

(a) Apply clutch spline grease to the input shaft spline.
Sealant:
Toyota Genuine Clutch Spline Grease or Equivalent
NOTICE:
Do not apply grease to portion A shown in the illustration.

(b) Install the clutch release bearing with release fork onto the transaxle assembly.
NOTICE:
After the installation, move the fork forward and backward to check that the release bearing slides smoothly.

9. INSTALL MANUAL TRANSAXLE ASSEMBLY
(See page MX-30)

CLUTCH START SWITCH

COMPONENTS

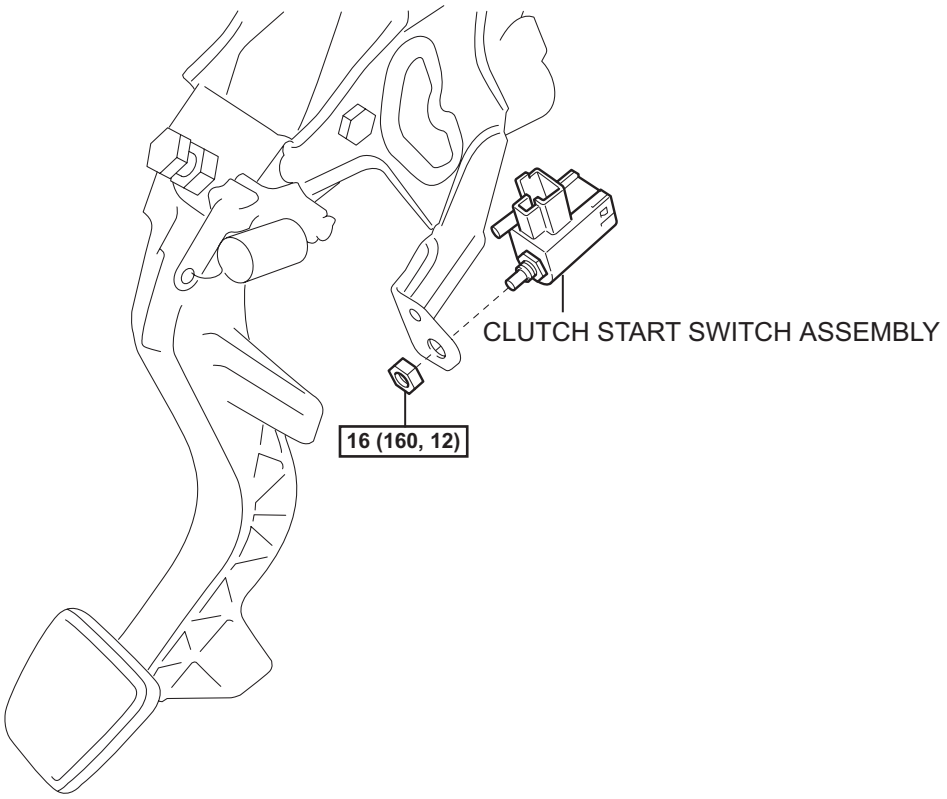

N*m (kgf*cm, ft*lbf) :Specified torque

Y

C116833E01

CL

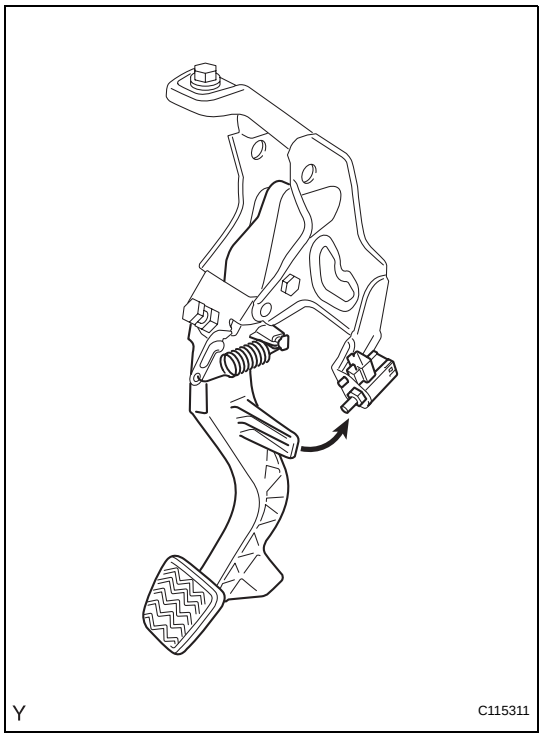

ON-VEHICLE INSPECTION

1. CHECK CLUTCH START SYSTEM

(a) Check that the engine does not start when the clutch pedal is released.

(b) Check that the engine starts when the clutch pedal is fully depressed.
If necessary, replace the clutch start switch assembly.

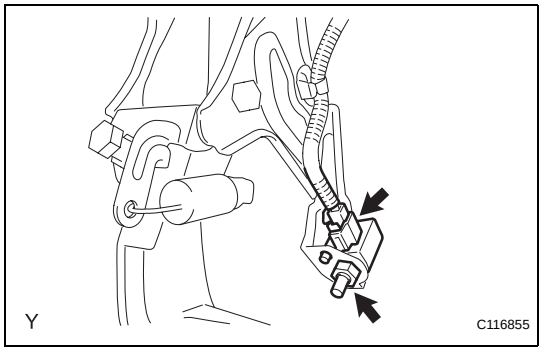

REMOVAL

1. REMOVE CLUTCH START SWITCH ASSEMBLY

(a) Disconnect the clutch start switch connector.

(b) Remove the nut and clutch start switch from the bracket.

CL

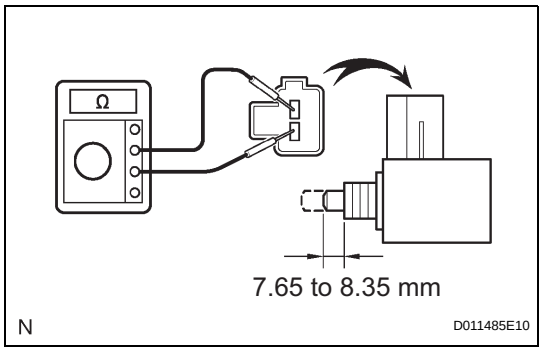

INSPECTION

1. INSPECT CLUTCH START SWITCH ASSEMBLY

(a) Check the resistance between the terminals when the switch is ON and OFF.
Standard resistance

Switch position	Condition
ON (pushed in)	Below 1Ω
OFF (released)	10 kΩ or higher

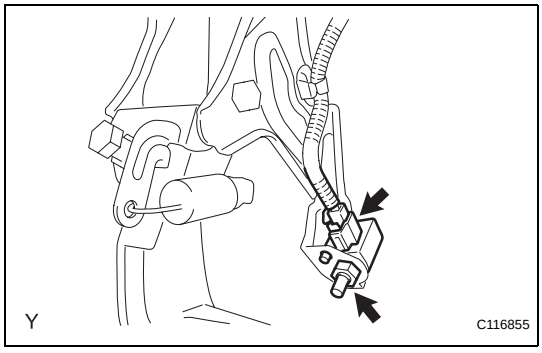

INSTALLATION

1. INSTALL CLUTCH START SWITCH ASSEMBLY

(a) Install the clutch start switch with the nut.
Torque: 16 N*m (160 kgf*cm, 12 ft.*lbf)
NOTICE:
Insert the protrusion of the clutch start switch into the hole in the clutch pedal support.

(b) Connect the clutch start switch connector.

2. INSPECT CLUTCH START SWITCH ASSEMBLY (See page CL-20)

MANUAL TRANSAXLE SYSTEM

PROBLEM SYMPTOMS TABLE

Use the table below to help find the cause of the problem. The numbers indicate the likelihood of the possible causes in descending order. Check each part in order. Replace parts as necessary.

Symptom	Suspected area	See page
Noise	1. Oil (Level low)	MX-2
	2. Oil (Wrong)	MX-2
	3. Gear (Input shaft) (Worn or damaged)	MX-78
	4. Gear (Output shaft) (Worn or damaged)	MX-89
	5. Bearing (Input shaft) (Worn or damaged)	MX-76
	6. Bearing (Output shaft) (Worn or damaged)	MX-86
	7. Bearing (Differential case) (Worn or damaged)	MX-101
Oil leakage	1. Oil (Level too high)	MX-2
	2. Gasket (Damaged)	MX-41
	3. Oil seal (Worn or damaged)	MX-4
Hard or impossible to shift	1. Control cable (Faulty)	MX-16
	2. Shift fork (Worn)	MX-56
	3. Synchronizer ring ((Input shaft) Worn or damaged)	MX-78
	4. Synchronizer ring (Output shaft) (Worn or damaged)	MX-89
	5. Shift key spring (Input shaft) (damaged)	MX-76
	6. Shift key spring (Output shaft) (damaged)	MX-86
	7. Gear (Input shaft) (damaged)	MX-78
	8. Gear (Output shaft) (damaged)	MX-89
	9. Hub sleeve (Input shaft) (damaged)	MX-78
	10. Hub sleeve (Output shaft) (damaged)	MX-89
Jumps out of gear	1. Shift fork (Worn)	MX-56
	2. Gear (Input shaft) (Worn or damaged)	MX-78
	3. Gear (Output shaft) (Worn or damaged)	MX-89
	4. Bearing (Input shaft) (Worn or damaged)	MX-76
	5. Bearing (Output shaft) (Worn or damaged)	MX-86

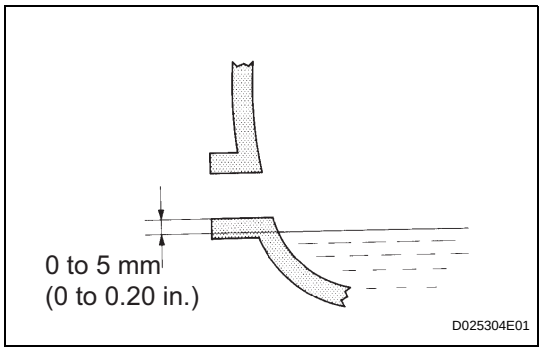

MANUAL TRANSAXLE OIL

ON-VEHICLE INSPECTION

1. INSPECT TRANSAXLE OIL

(a) Stop the vehicle in a level place.

(b) Remove the transmission filler plug and the gasket.

(c) Check that the oil surface is within 5 mm (0.20 in.) of the bottom of the transmission filler plug opening.

NOTICE:

- **Excessively large or small amounts of oil may cause problems.**
- **After replacing the oil, drive the vehicle and check the oil level again.**

(d) Check for oil leakage when the oil level is low.

(e) Install the transmission filler plug and a new gasket.

Torque: 39 N*m (400 kgf*cm, 29 ft.*lbf)

DIFFERENTIAL OIL SEAL

COMPONENTS

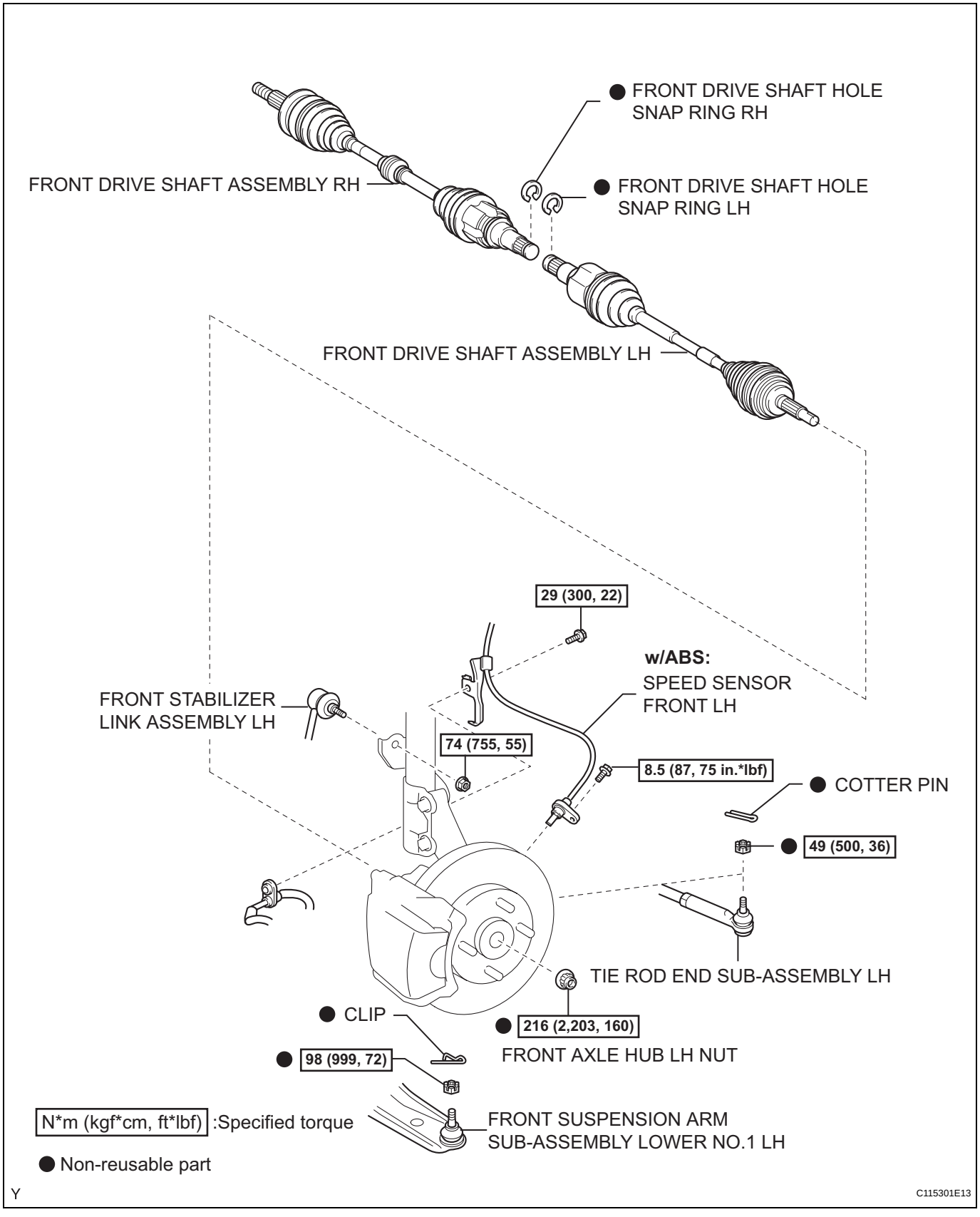

MX

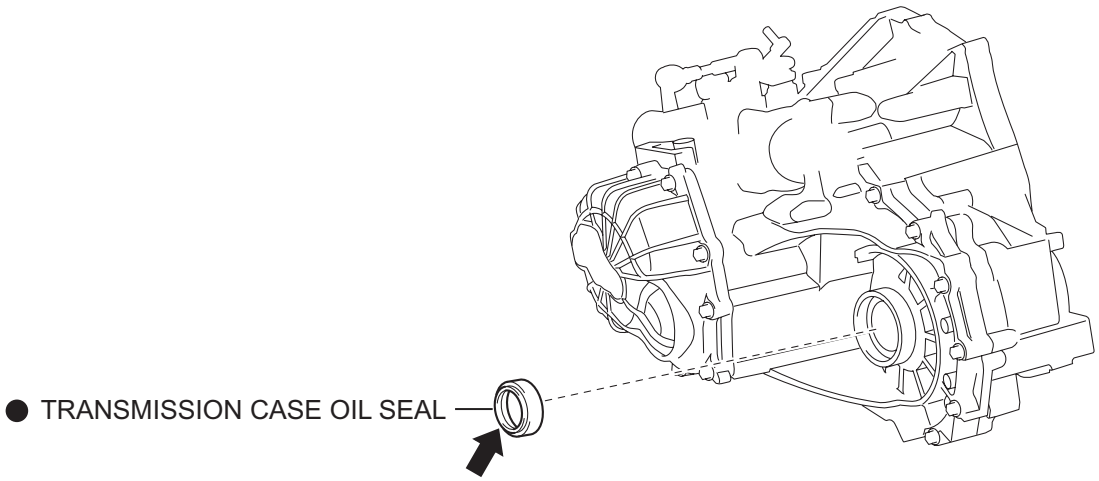

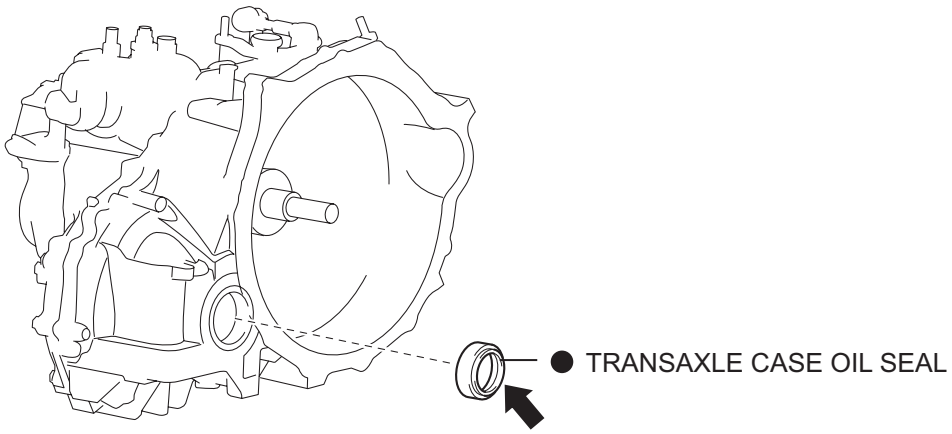

● Non-reusable part

⬅ Apply MP grease

Y

C108463E01

REMOVAL

1. **DISCONNECT CABLE FROM NEGATIVE BATTERY TERMINAL**

2. **DRAIN TRANSAXLE OIL**
   (a) Remove the filler plug and the gasket.
   (b) Remove the drain plug and gasket, and then drain the manual transaxle oil.
   (c) Install a new gasket and the drain plug.
   Torque: 39 N*m (400 kgf*cm, 29 ft.*lbf)

3. **REMOVE FRONT WHEELS**

4. **REMOVE FRONT AXLE HUB LH NUT (See page DS-3)**

5. **REMOVE FRONT AXLE HUB RH NUT**
   HINT:
   The removal procedure for the RH side is the same as that for the LH side.

6. **SEPARATE SPEED SENSOR FRONT LH (w/ ABS) (See page DS-3)**

7. **SEPARATE SPEED SENSOR FRONT RH (w/ ABS)**
   HINT:
   The separation procedure for the RH side is the same as that for the LH side.

8. **SEPARATE FRONT SUSPENSION ARM SUB-ASSEMBLY LOWER NO.1 LH (See page DS-4)**

9. **SEPARATE FRONT SUSPENSION ARM SUB-ASSEMBLY LOWER NO.1 RH**
   HINT:
   The separation procedure for the RH side is the same as that for the LH side.

10. **SEPARATE TIE ROD END SUB-ASSEMBLY LH (See page DS-3)**

11. **SEPARATE TIE ROD END SUB-ASSEMBLY RH**
    HINT:
    The separation procedure for the RH side is the same as that for the LH side.

12. **SEPARATE FRONT STABILIZER LINK ASSEMBLY LH (See page DS-4)**

13. **SEPARATE FRONT STABILIZER LINK ASSEMBLY RH**
    HINT:
    The separation procedure for the RH side is the same as that for the LH side.

14. **SEPARATE FRONT AXLE ASSEMBLY LH (See page DS-4)**

15. **SEPARATE FRONT AXLE ASSEMBLY RH**
HINT:
The separation procedure for the RH side is the same as that for the LH side.

16. **REMOVE FRONT DRIVE SHAFT ASSEMBLY LH (See page DS-5)**

17. **REMOVE FRONT DRIVE SHAFT ASSEMBLY RH (See page DS-5)**

18. **REMOVE TRANSAXLE CASE OIL SEAL**
(a) Using SST, remove the oil seal.
SST 09308-00010

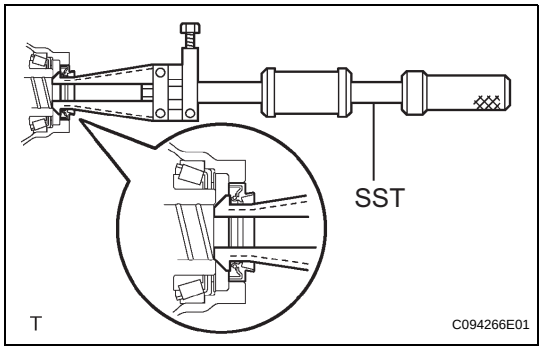

19. **REMOVE TRANSMISSION CASE OIL SEAL**
(a) Using SST, remove the oil seal.
SST 09308-00010

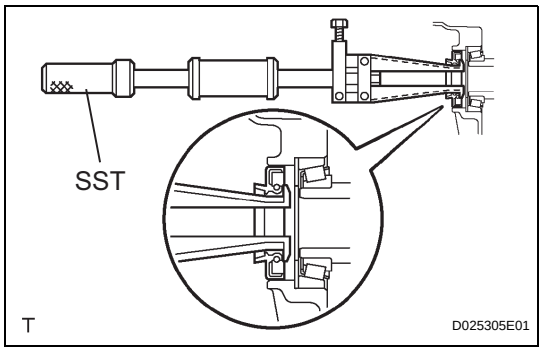

INSTALLATION

1. **INSTALL TRANSMISSION CASE OIL SEAL**
(a) Coat the lip of a new oil seal with MP grease.
(b) Using SST and a hammer, install the new oil seal.
SST 09309-37010
Drive in depth:
9.6 to 10.2 mm (0.378 to 0.402 in.)
NOTICE:
Do not damage the oil seal lip.

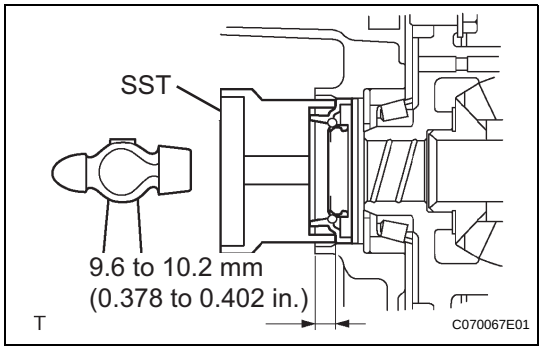

2. **INSTALL TRANSAXLE CASE OIL SEAL**
(a) Coat the lip of a new oil seal with MP grease.
(b) Using SST and a hammer, install the new oil seal.
SST 09710-26011 (09710-05061)
Drive in depth:
1.6 to 2.2 mm (0.063 to 0.087 in.)
NOTICE:
Do not damage the oil seal lip.

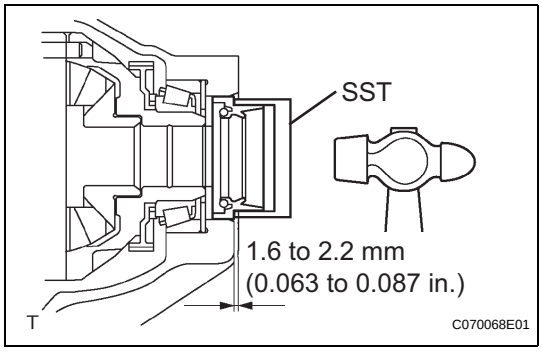

3. **INSTALL FRONT DRIVE SHAFT ASSEMBLY LH (See page DS-13)**

4. **INSTALL FRONT DRIVE SHAFT ASSEMBLY RH (See page DS-14)**

MX

5. **INSTALL FRONT AXLE ASSEMBLY LH (See page DS-14)**
6. **INSTALL FRONT AXLE ASSEMBLY RH**
   HINT:
   The installation procedure for the RH side is the same as that for the LH side.
7. **INSTALL FRONT STABILIZER LINK ASSEMBLY LH (See page DS-14)**
8. **INSTALL FRONT STABILIZER LINK ASSEMBLY RH**
   HINT:
   The installation procedure for the RH side is the same as that for the LH side.
9. **INSTALL TIE ROD END SUB-ASSEMBLY LH (See page DS-15)**
10. **INSTALL TIE ROD END SUB-ASSEMBLY RH**
    HINT:
    The installation procedure for the RH side is the same as that for the LH side.
11. **INSTALL FRONT SUSPENSION ARM SUB-ASSEMBLY LOWER NO.1 LH (See page DS-14)**
12. **INSTALL FRONT SUSPENSION ARM SUB-ASSEMBLY LOWER NO.1 RH**
    HINT:
    The installation procedure for the RH side is the same as that for the LH side.
13. **INSTALL SPEED SENSOR FRONT LH (w/ ABS) (See page DS-15)**
14. **INSTALL SPEED SENSOR FRONT RH (w/ ABS)**
    HINT:
    The installation procedure for the RH side is the same as that for the LH side.
15. **INSTALL FRONT AXLE HUB LH NUT (See page DS-15)**
16. **INSTALL FRONT AXLE HUB RH NUT**
    HINT:
    The installation procedure for the RH side is the same as that for the LH side.
17. **INSTALL FRONT WHEELS**
18. **CONNECT CABLE TO NEGATIVE BATTERY TERMINAL**
    Torque: 5.4 N*m (55 kgf*cm, 48 in.*lbf)
19. **ADD TRANSAXLE OIL**
20. **INSPECT AND ADJUST TRANSAXLE OIL (See page MX-2)**
21. **INSPECT ABS SPEED SENSOR SIGNAL**
    (See page BC-14)

22. **INSPECT AND ADJUST FRONT WHEEL ALIGNMENT**
(See page SP-2)

23. **CHECK FOR TRANSAXLE OIL LEAKAGE**

FLOOR SHIFT LEVER ASSEMBLY

COMPONENTS

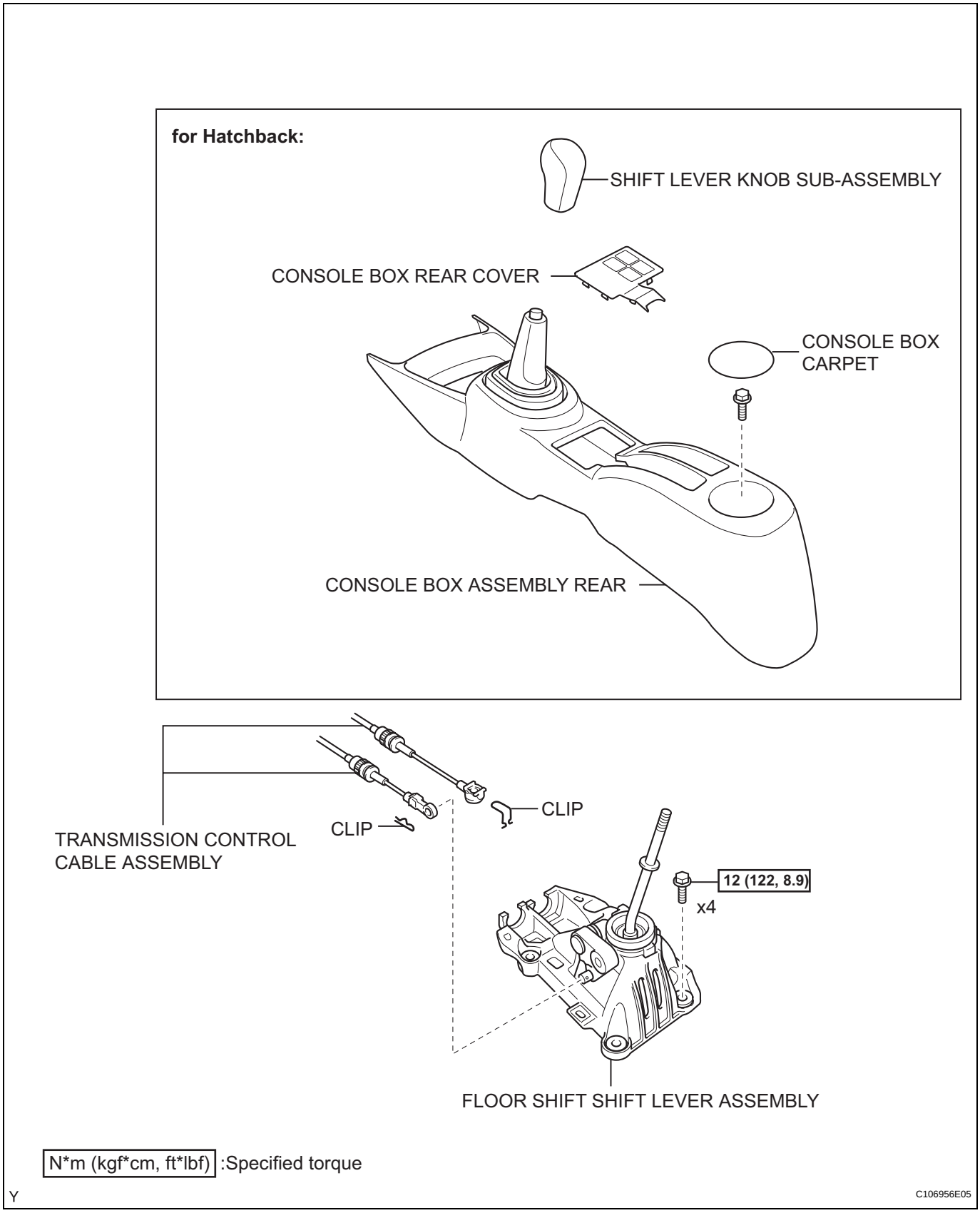

MX

for Sedan:

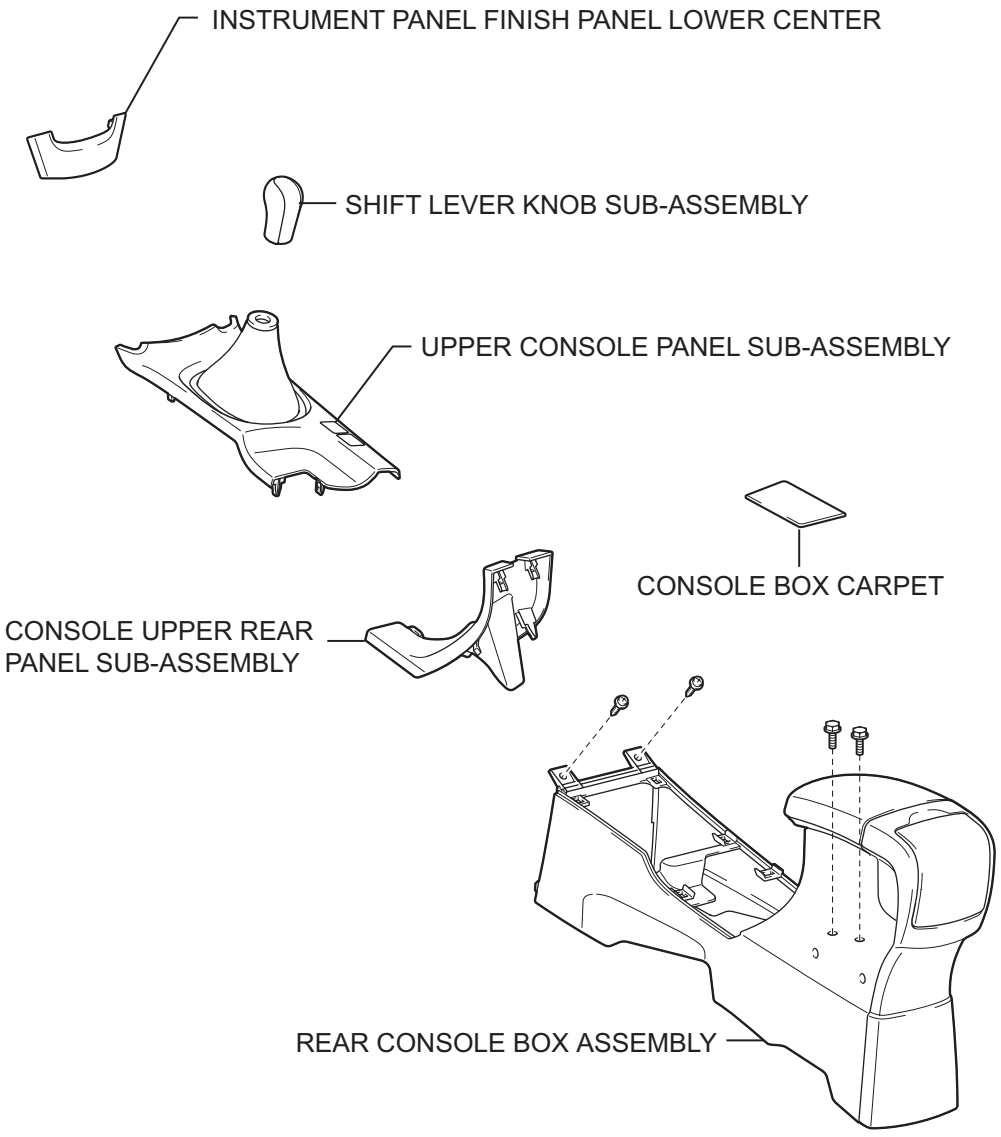

P

C136395E01

MX

REMOVAL

1. **REMOVE SHIFT LEVER KNOB SUB-ASSEMBLY (for Hatchback) (See page IP-68)**
2. **REMOVE CONSOLE BOX ASSEMBLY REAR (for Hatchback) (See page IP-69)**
3. **REMOVE INSTRUMENT PANEL FINISH PANEL LOWER CENTER (for Sedan) (See page ME-138)**
4. **REMOVE SHIFT LEVER KNOB SUB-ASSEMBLY (for Sedan) (See page IP-84)**
5. **REMOVE UPPER CONSOLE PANEL SUB-ASSEMBLY (for Sedan) (See page IP-84)**
6. **REMOVE CONSOLE UPPER REAR PANEL SUB-ASSEMBLY (for Sedan) (See page IP-84)**
7. **REMOVE CONSOLE BOX CARPET (for Sedan) (See page IP-85)**
8. **REMOVE REAR CONSOLE BOX ASSEMBLY (for Sedan) (See page IP-85)**
9. **DISCONNECT TRANSMISSION CONTROL CABLE ASSEMBLY**
   (a) Remove the clip and disconnect the control select cable from the shift lever.
   (b) Turn the lock to release it and separate the control select cable from the shift lever retainer.
   (c) Disconnect the control shift cable from the shift lever.
   (d) Turn the lock to release it and separate the control shift cable from the shift lever retainer.
10. **REMOVE FLOOR SHIFT SHIFT LEVER ASSEMBLY**
    (a) Remove the 4 bolts and remove the shift lever.

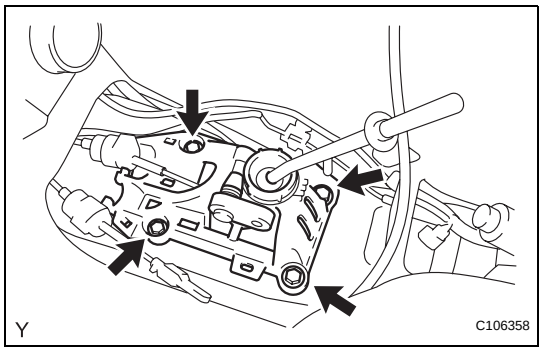

INSTALLATION

1. **INSTALL FLOOR SHIFT SHIFT LEVER ASSEMBLY**
   (a) Install the shift lever with the 4 bolts.
   Torque: 12 N*m (122 kgf*cm, 8.9 ft.*lbf)

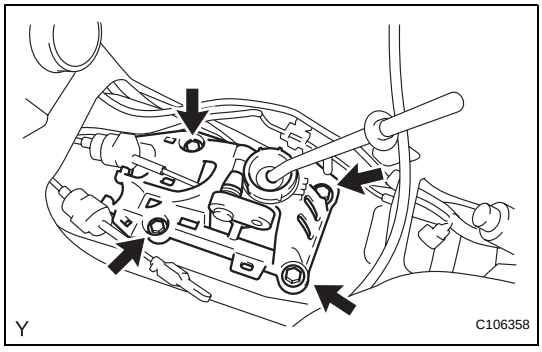

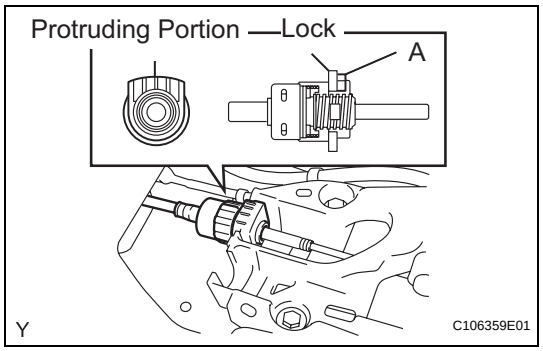

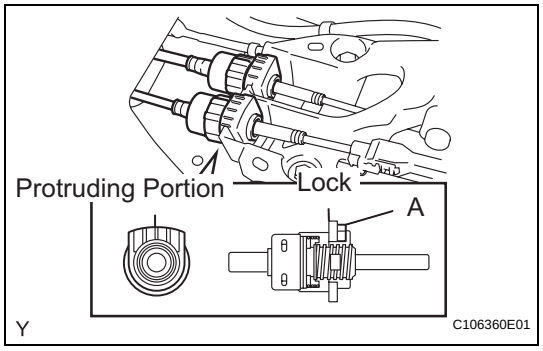

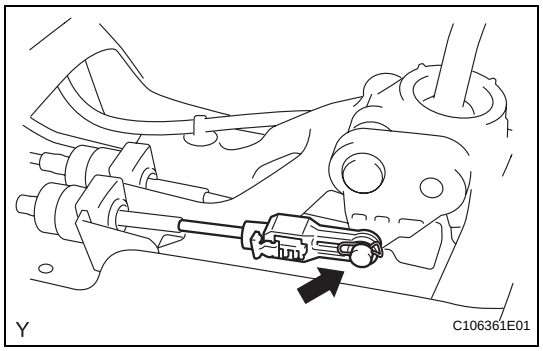

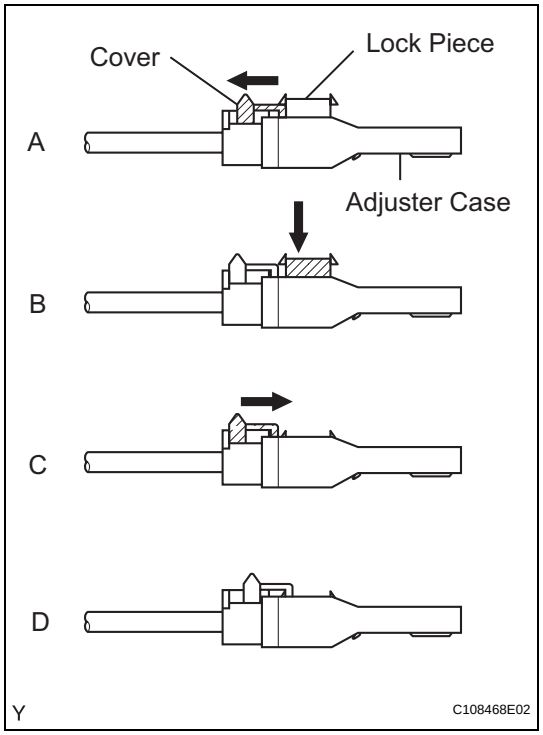

2. CONNECT TRANSMISSION CONTROL CABLE ASSEMBLY

(a) Install the control shift cable onto the shift lever retainer.

NOTICE:

- **Install the cable with the protruding portion of the cable outer facing upward.**
- **After installing, check that the lock of the cable outer is protruding beyond portion A, as shown in the illustration.**

(b) Connect the control shift cable to the shift lever.

(c) Install the control select cable onto the shift lever retainer.

NOTICE:

- **Install the cable with the protruding portion of the cable outer facing upward.**
- **After installing, check that the lock of the cable outer is protruding beyond portion A, as shown in the illustration.**

(d) Connect the control select cable to the shift lever.

NOTICE:

- **Connect the control select cable so that the adjusting mechanism lock of the control select cable is installed on the left side of the vehicle.**
- **Insert the clip in the direction shown in the illustration.**

(e) Adjust the length of the control select cable.

(1) Slide the adjuster case cover in the direction shown in the illustration (Illustration A).

(2) Gently pull the cable rod toward the rear of the vehicle by hand to pull the cable taut.

(3) Press the lock piece into the adjuster case and lock it (Illustration B).

(4) Slide the cover in the direction shown in the illustration (Illustration C).

NOTICE:

Slide the cover past the protrusion of the lock piece (Illustration D).

3. INSTALL CONSOLE BOX ASSEMBLY REAR (for Hatchback) (See page IP-79)

4. INSTALL SHIFT LEVER KNOB SUB-ASSEMBLY (for Hatchback) (See page IP-80)

5. INSTALL REAR CONSOLE BOX ASSEMBLY (for Sedan) (See page IP-88)

MX

6. **INSTALL CONSOLE BOX CARPET (for Sedan) (See page IP-88)**
7. **INSTALL CONSOLE UPPER REAR PANEL SUB-ASSEMBLY (for Sedan) (See page IP-89)**
8. **INSTALL UPPER CONSOLE PANEL SUB-ASSEMBLY (for Sedan) (See page IP-89)**
9. **INSTALL SHIFT LEVER KNOB SUB-ASSEMBLY (for Sedan) (See page IP-89)**
10. **INSTALL INSTRUMENT PANEL FINISH PANEL LOWER CENTER (for Sedan) (See page ME-142)**

TRANSMISSION CONTROL CABLE

COMPONENTS

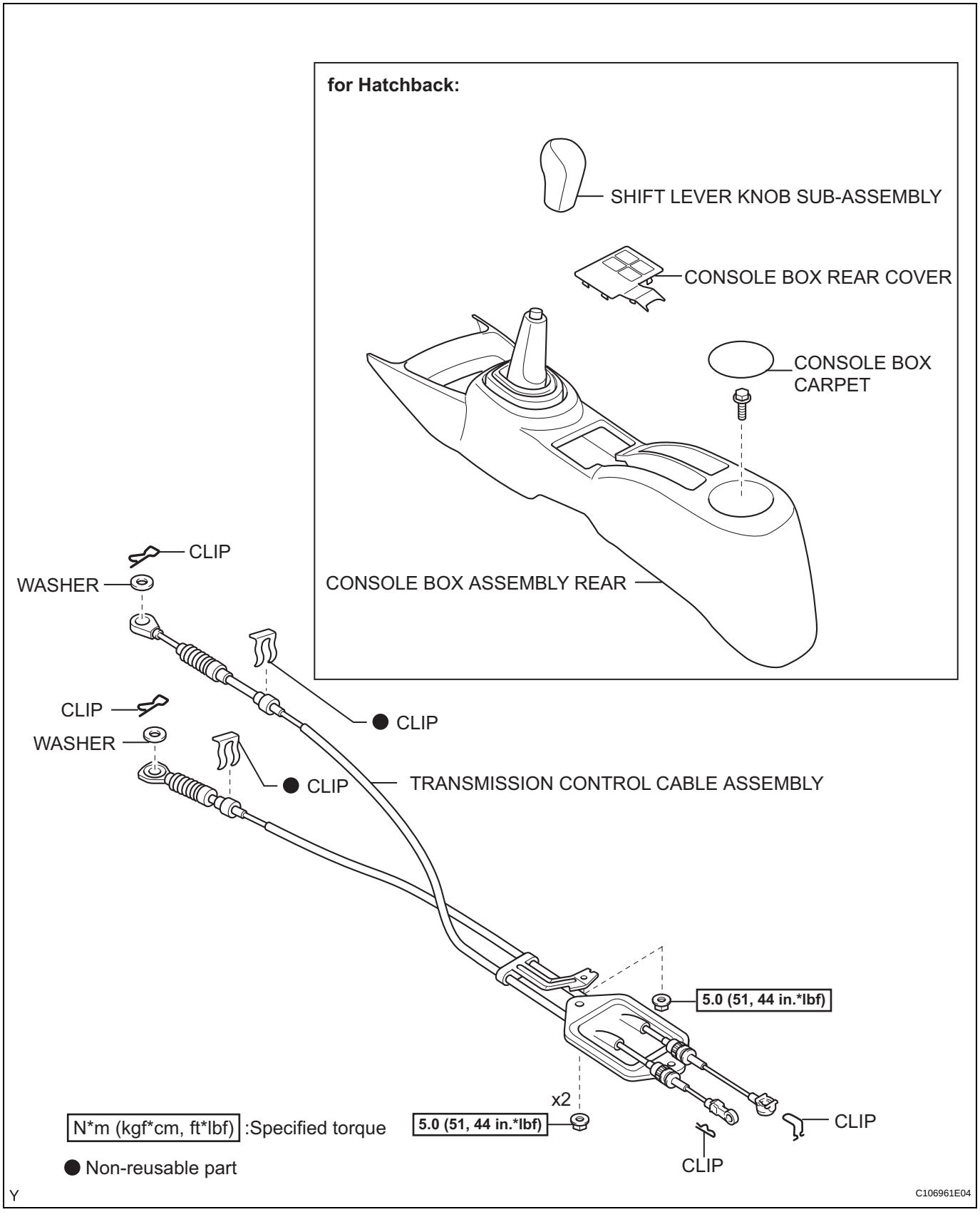

MX

for Sedan:

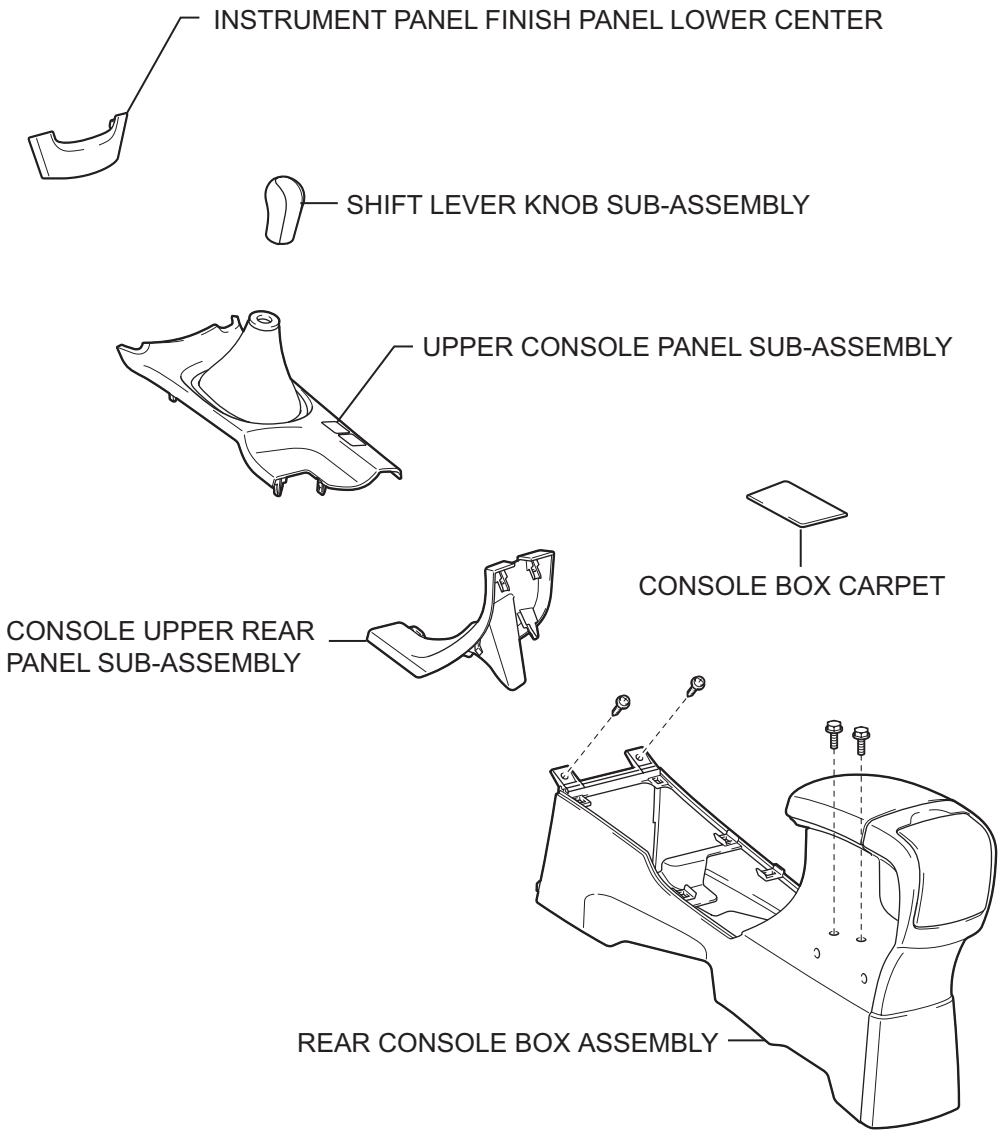

P

C136395E01

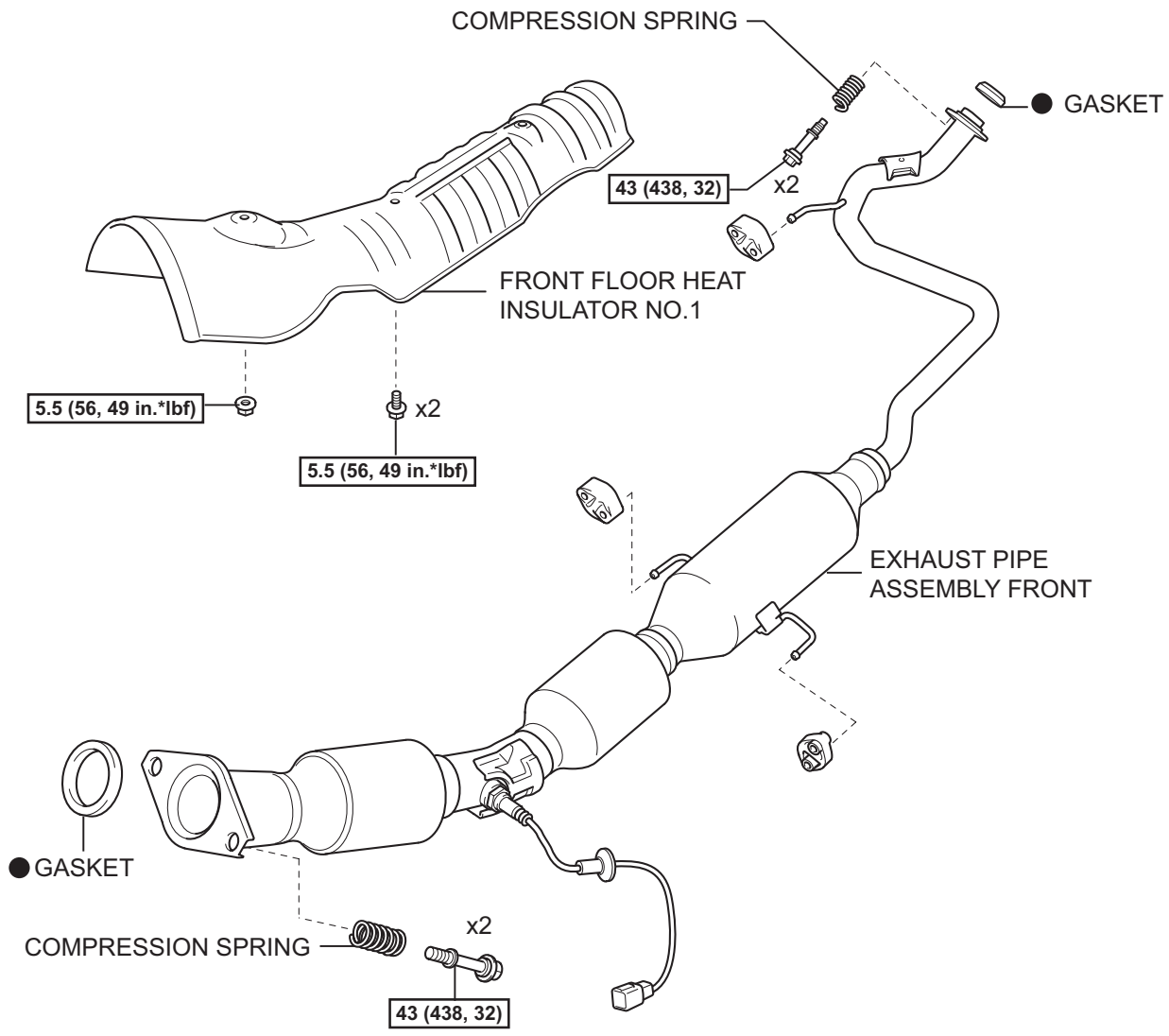

N*m (kgf*cm, ft*lbf) :Specified torque

● Non-reusable part

Y

C121106E01

MX

REMOVAL

1. **DISCONNECT CABLE FROM NEGATIVE BATTERY TERMINAL**
2. **REMOVE SHIFT LEVER KNOB SUB-ASSEMBLY (for Hatchback) (See page IP-68)**
3. **REMOVE CONSOLE BOX ASSEMBLY REAR (for Hatchback) (See page IP-69)**
4. **REMOVE INSTRUMENT PANEL FINISH PANEL LOWER CENTER (for Sedan) (See page ME-138)**
5. **REMOVE SHIFT LEVER KNOB SUB-ASSEMBLY (for Sedan) (See page IP-84)**
6. **REMOVE UPPER CONSOLE PANEL SUB-ASSEMBLY (for Sedan) (See page IP-84)**
7. **REMOVE CONSOLE UPPER REAR PANEL SUB-ASSEMBLY (for Sedan) (See page IP-84)**
8. **REMOVE CONSOLE BOX CARPET (for Sedan) (See page IP-85)**
9. **REMOVE REAR CONSOLE BOX ASSEMBLY (for Sedan) (See page IP-85)**
10. **DISCONNECT OXYGEN SENSOR CONNECTOR**
11. **REMOVE EXHAUST PIPE ASSEMBLY FRONT (See page EX-5)**
12. **REMOVE FRONT FLOOR HEAT INSULATOR NO.1**
    (a) Remove the 2 bolts and nut and remove floor heat insulator No.1.
13. **REMOVE TRANSMISSION CONTROL CABLE ASSEMBLY**
    (a) Disconnect the control shift cable from the shift lever.
    (b) Turn the lock to release it and separate the control shift cable from the shift lever retainer.
    (c) Remove the clip and disconnect the control select cable from the shift lever.
    (d) Turn the lock to release it and separate the control select cable from the shift lever retainer.
    (e) Remove the 2 clips and the 2 washers, and disconnect the 2 cables from the transaxle.
    (f) Remove the 2 clips and disconnect the 2 cables from the control cable bracket.

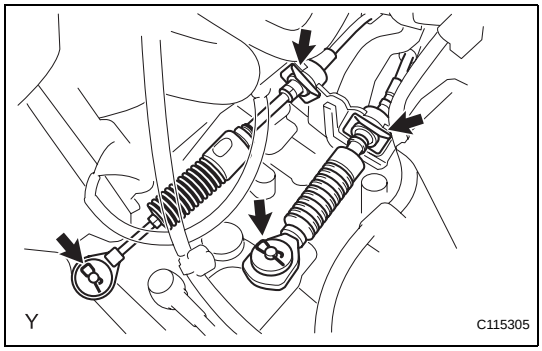

MX

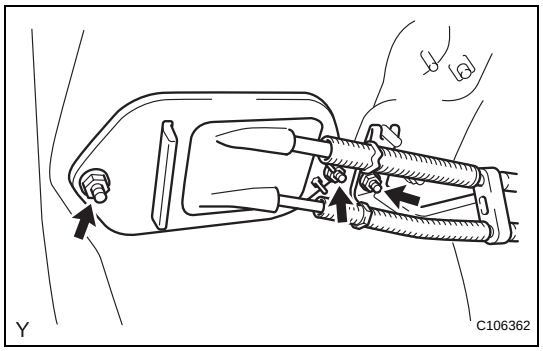

(g) Remove the 3 nuts and remove the transmission control cable.

INSTALLATION

1. INSTALL TRANSMISSION CONTROL CABLE ASSEMBLY

(a) Install the control cable with the 3 nuts.
Torque: 5.0 N*m (51 kgf*cm, 44 in.*lbf)

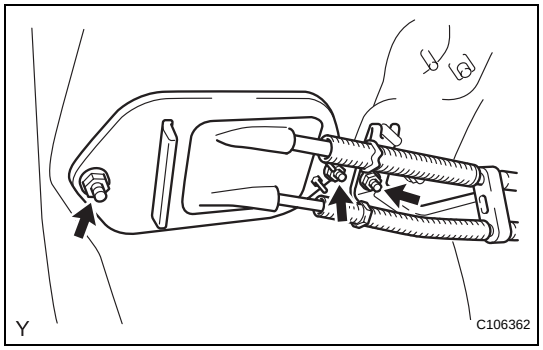

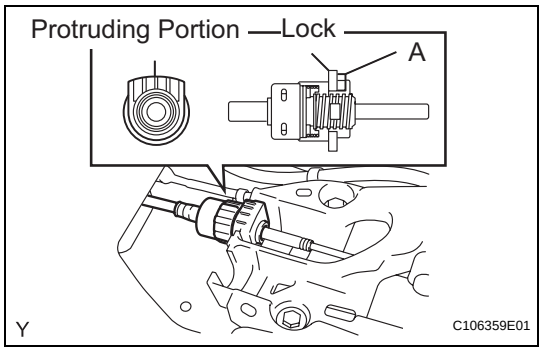

(b) Install the control shift cable onto the shift lever retainer.
NOTICE:
- **Install the cable with the protruding portion of the cable outer facing upward.**
- **After installing, check that the lock of the cable outer is protruding beyond portion A, as shown in the illustration.**

(c) Connect the control shift cable to the shift lever.

(d) Install the control shift cable onto the control cable bracket with a new clip.

(e) Connect the control shift cable to the transaxle through the washer.

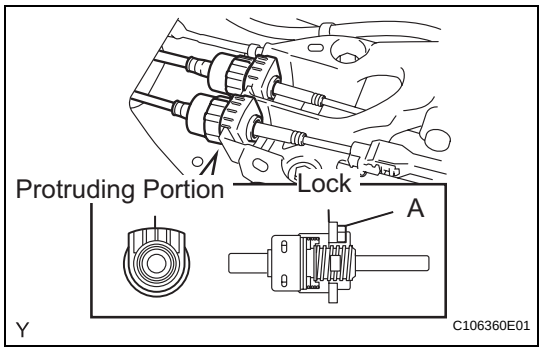

(f) Install the control select cable onto the shift lever retainer.
NOTICE:
- **Install the cable with the protruding portion of the cable outer facing upward.**
- **After installing, check that the lock of the cable outer is protruding beyond portion A, as shown in the illustration.**

MX

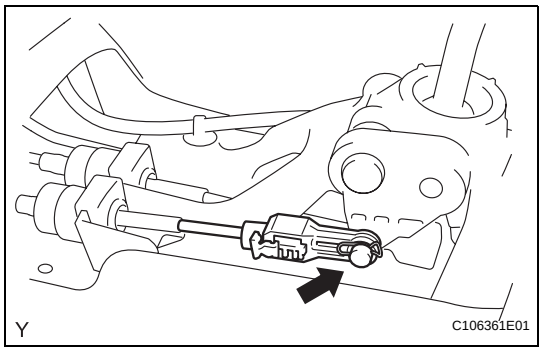

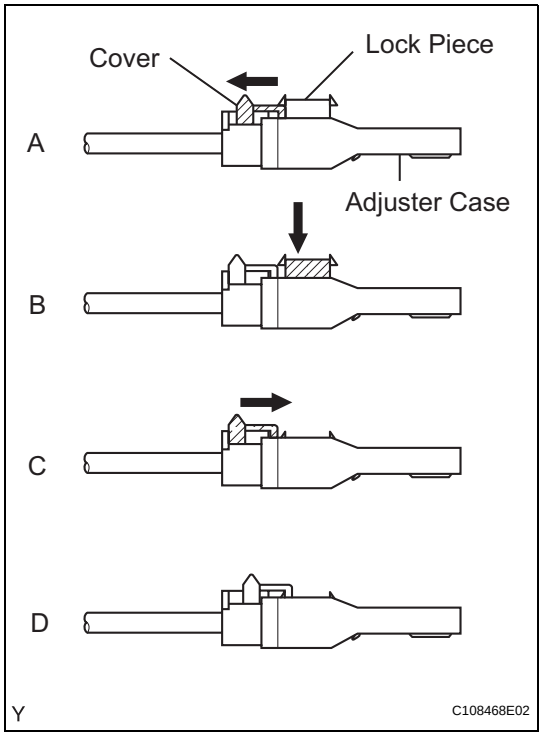

(g) Connect the control select cable to the shift lever with the clip.
NOTICE:
- **Connect the control select cable so that the adjusting mechanism lock of the control select cable is installed on the left side of the vehicle.**
- **Insert the clip in the direction shown in the illustration.**

(h) Install the control select cable onto the control cable bracket with a new clip.

(i) Connect the control select cable to the transaxle through the washer.

(j) Adjust the length of the control select cable.
(1) Slide the adjuster case cover in the direction shown in the illustration (Illustration A).
(2) Gently pull the cable rod toward the rear of the vehicle by hand to pull the cable taut.
(3) Press the lock piece into the adjuster case and lock it (Illustration B).
(4) Slide the cover in the direction shown in the illustration (Illustration C).
NOTICE:
Slide the cover past the protrusion portion of the lock piece (Illustration D).

2. INSTALL FRONT FLOOR HEAT INSULATOR NO.1

(a) Install floor heat insulator No. 1 with the 2 bolts and nut.
Torque: 5.5 N*m (56 kgf*cm, 49 in.*lbf)

3. INSTALL EXHAUST PIPE ASSEMBLY FRONT (See page EX-8)

4. CONNECT OXYGEN SENSOR CONNECTOR

5. INSTALL CONSOLE BOX ASSEMBLY REAR (for Hatchback) (See page IP-79)

6. INSTALL SHIFT LEVER KNOB SUB-ASSEMBLY (for Hatchback) (See page IP-80)

7. INSTALL REAR CONSOLE BOX ASSEMBLY (for Sedan) (See page IP-88)

8. INSTALL CONSOLE BOX CARPET (for Sedan) (See page IP-88)

9. INSTALL CONSOLE UPPER REAR PANEL SUB-ASSEMBLY (for Sedan) (See page IP-89)

10. INSTALL UPPER CONSOLE PANEL SUB-ASSEMBLY (for Sedan) (See page IP-89)

11. INSTALL SHIFT LEVER KNOB SUB-ASSEMBLY (for Sedan) (See page IP-89)

12. INSTALL INSTRUMENT PANEL FINISH PANEL LOWER CENTER (for Sedan) (See page ME-142)

13. CONNECT CABLE TO NEGATIVE BATTERY TERMINAL
Torque: 5.4 N*m (55 kgf*cm, 48 in.*lbf)

MANUAL TRANSAXLE ASSEMBLY

COMPONENTS

for Hatchback:

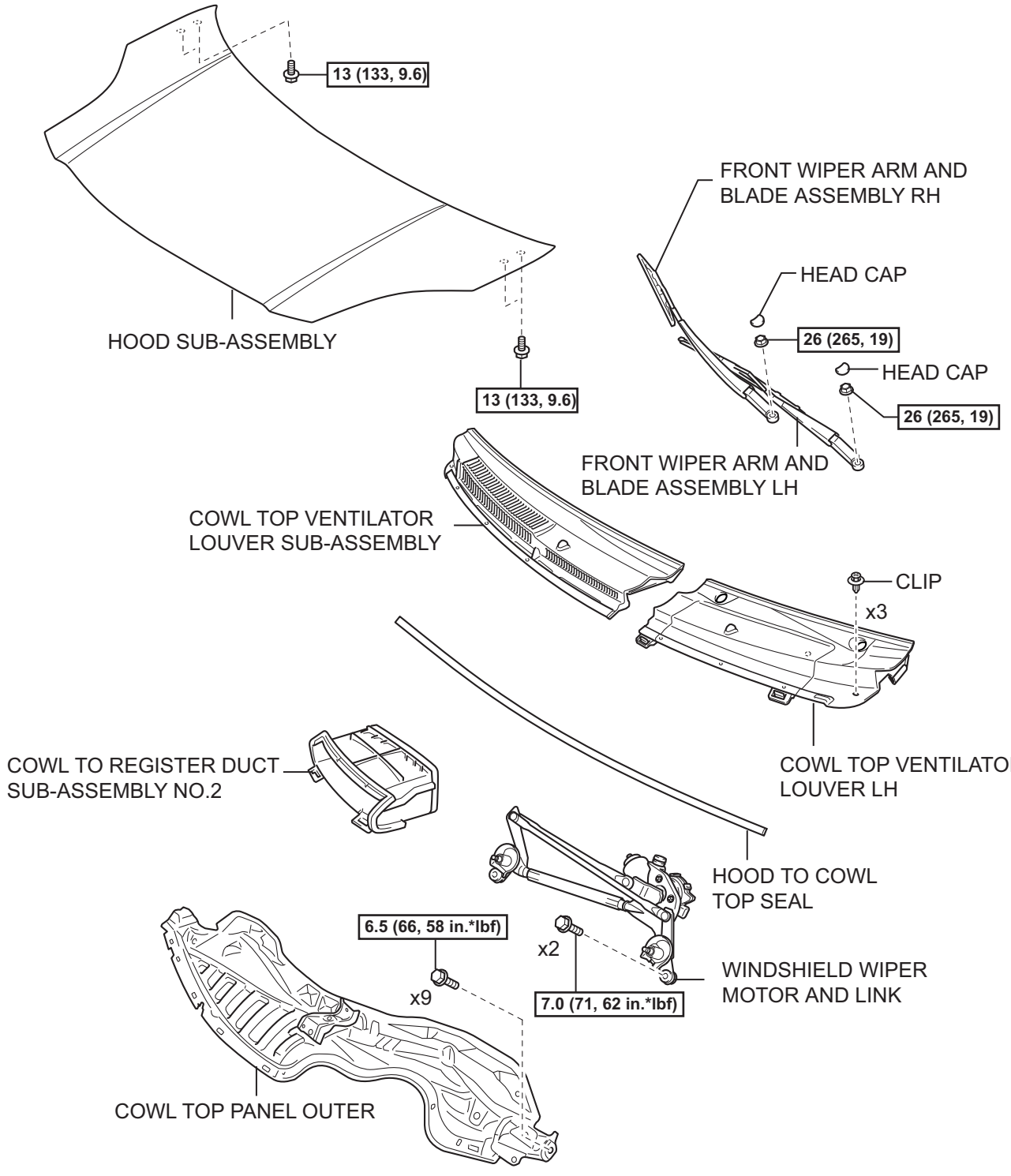

N*m (kgf*cm, ft*lbf) :Specified torque

Y

C116836E06

MX

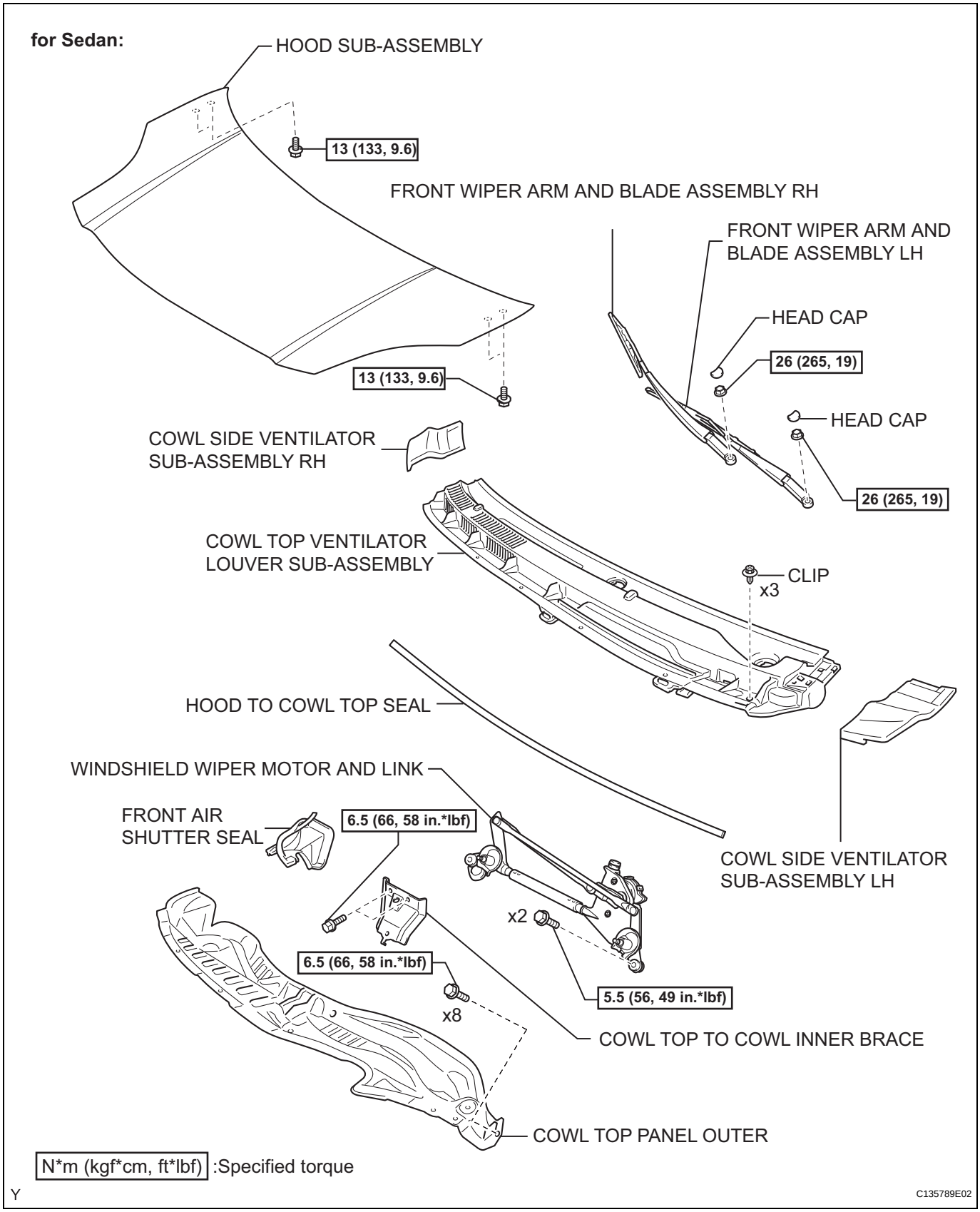
for Sedan:
HOOD SUB-ASSEMBLY
13 (133, 9.6)
FRONT WIPER ARM AND BLADE ASSEMBLY RH
FRONT WIPER ARM AND BLADE ASSEMBLY LH
HEAD CAP
26 (265, 19)
13 (133, 9.6)
HEAD CAP
COWL SIDE VENTILATOR SUB-ASSEMBLY RH
26 (265, 19)
COWL TOP VENTILATOR LOUVER SUB-ASSEMBLY
CLIP
x3
HOOD TO COWL TOP SEAL
WINDSHIELD WIPER MOTOR AND LINK
FRONT AIR SHUTTER SEAL
6.5 (66, 58 in.*lbf)
COWL SIDE VENTILATOR SUB-ASSEMBLY LH
x2
6.5 (66, 58 in.*lbf)
5.5 (56, 49 in.*lbf)
x8
COWL TOP TO COWL INNER BRACE
COWL TOP PANEL OUTER
N*m (kgf*cm, ft*lbf) :Specified torque
Y
C135789E02

MX

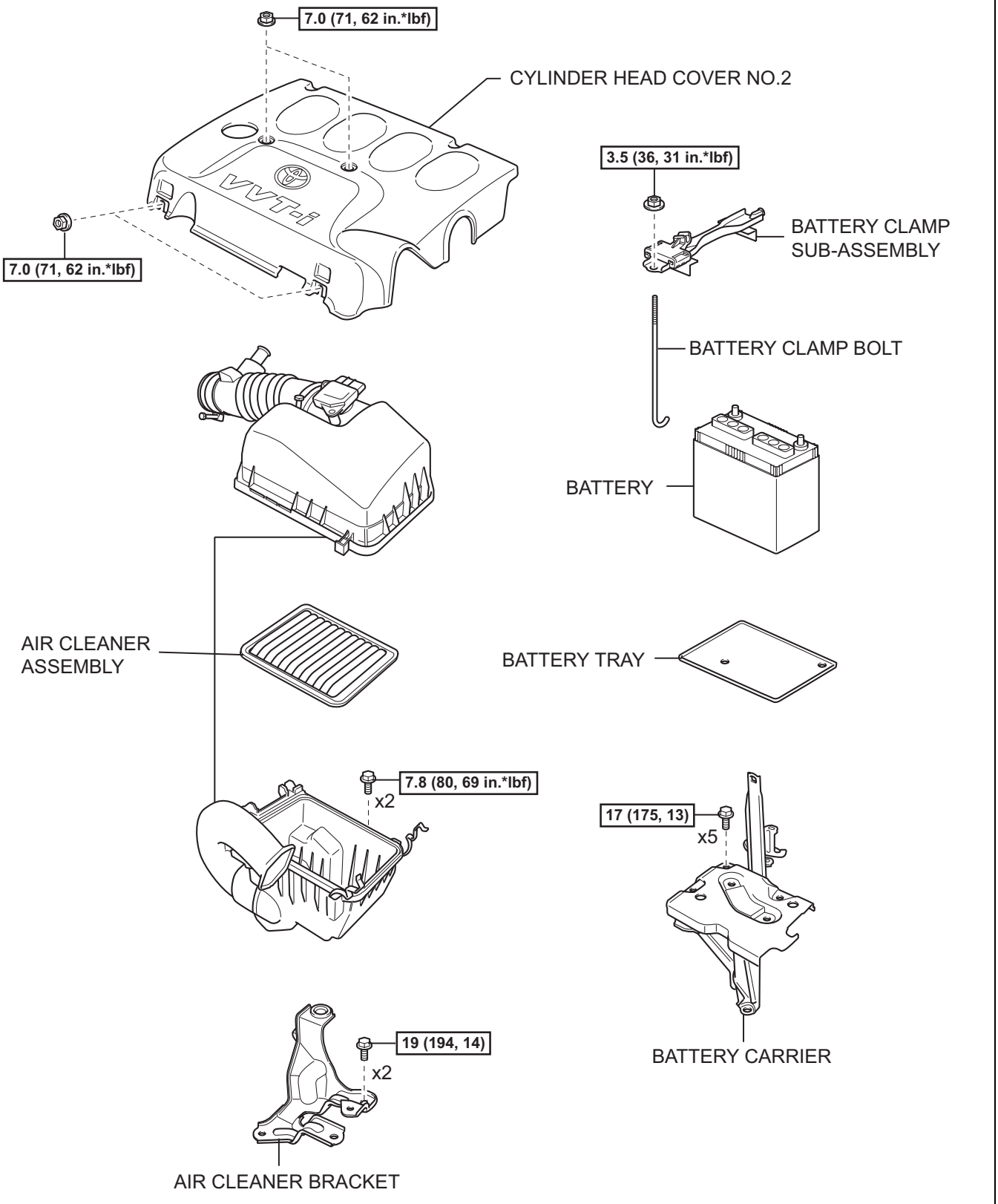

N*m (kgf*cm, ft*lbf) :Specified torque

Y

C121105E02

MX

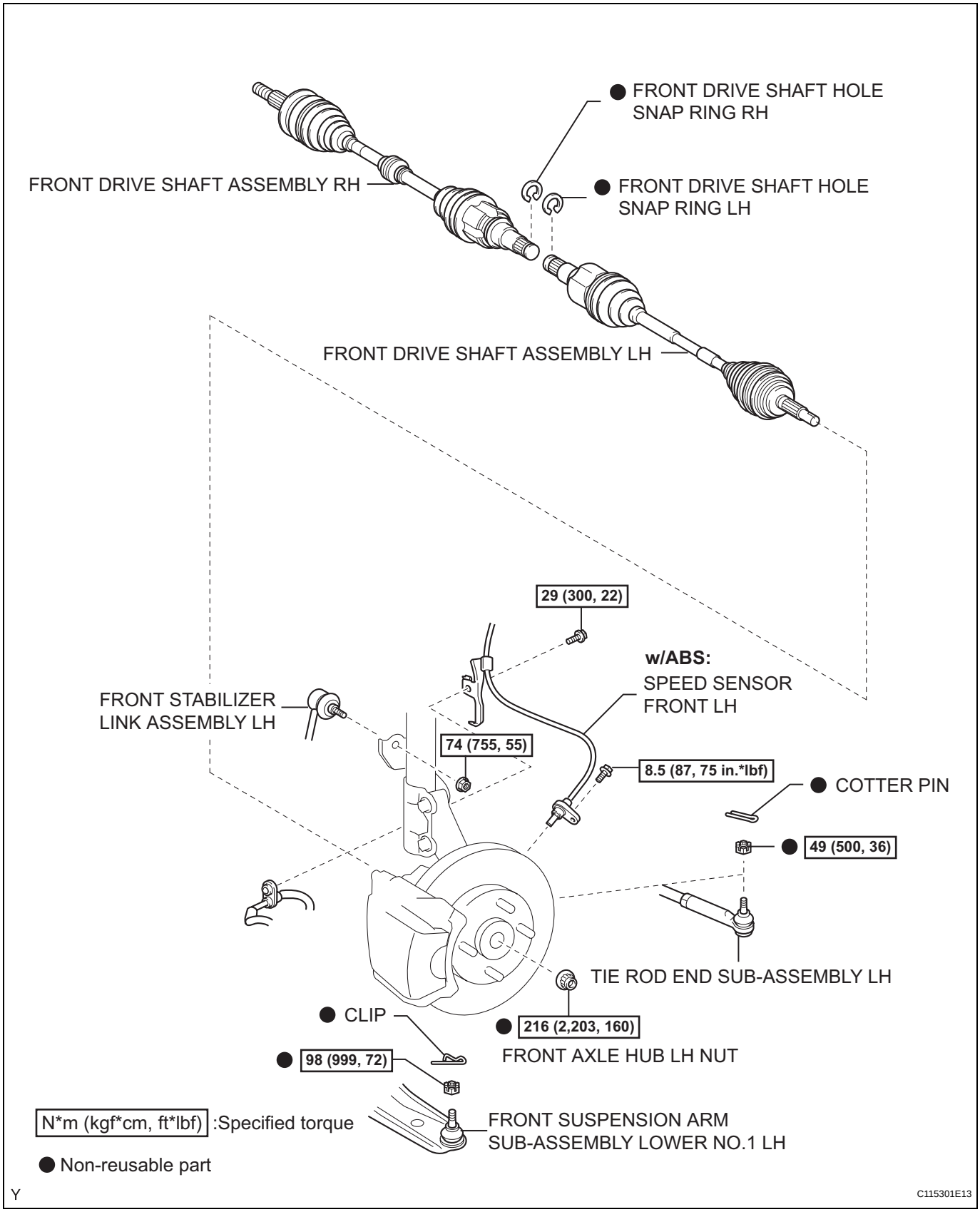
● FRONT DRIVE SHAFT HOLE SNAP RING RH
FRONT DRIVE SHAFT ASSEMBLY RH
● FRONT DRIVE SHAFT HOLE SNAP RING LH
FRONT DRIVE SHAFT ASSEMBLY LH
29 (300, 22)
w/ABS:
SPEED SENSOR FRONT LH
FRONT STABILIZER LINK ASSEMBLY LH
74 (755, 55)
8.5 (87, 75 in.*lbf)
● COTTER PIN
● 49 (500, 36)
TIE ROD END SUB-ASSEMBLY LH
● CLIP
● 216 (2,203, 160)
FRONT AXLE HUB LH NUT
● 98 (999, 72)
N*m (kgf*cm, ft*lbf) :Specified torque
FRONT SUSPENSION ARM SUB-ASSEMBLY LOWER NO.1 LH
● Non-reusable part
Y
C115301E13

MX

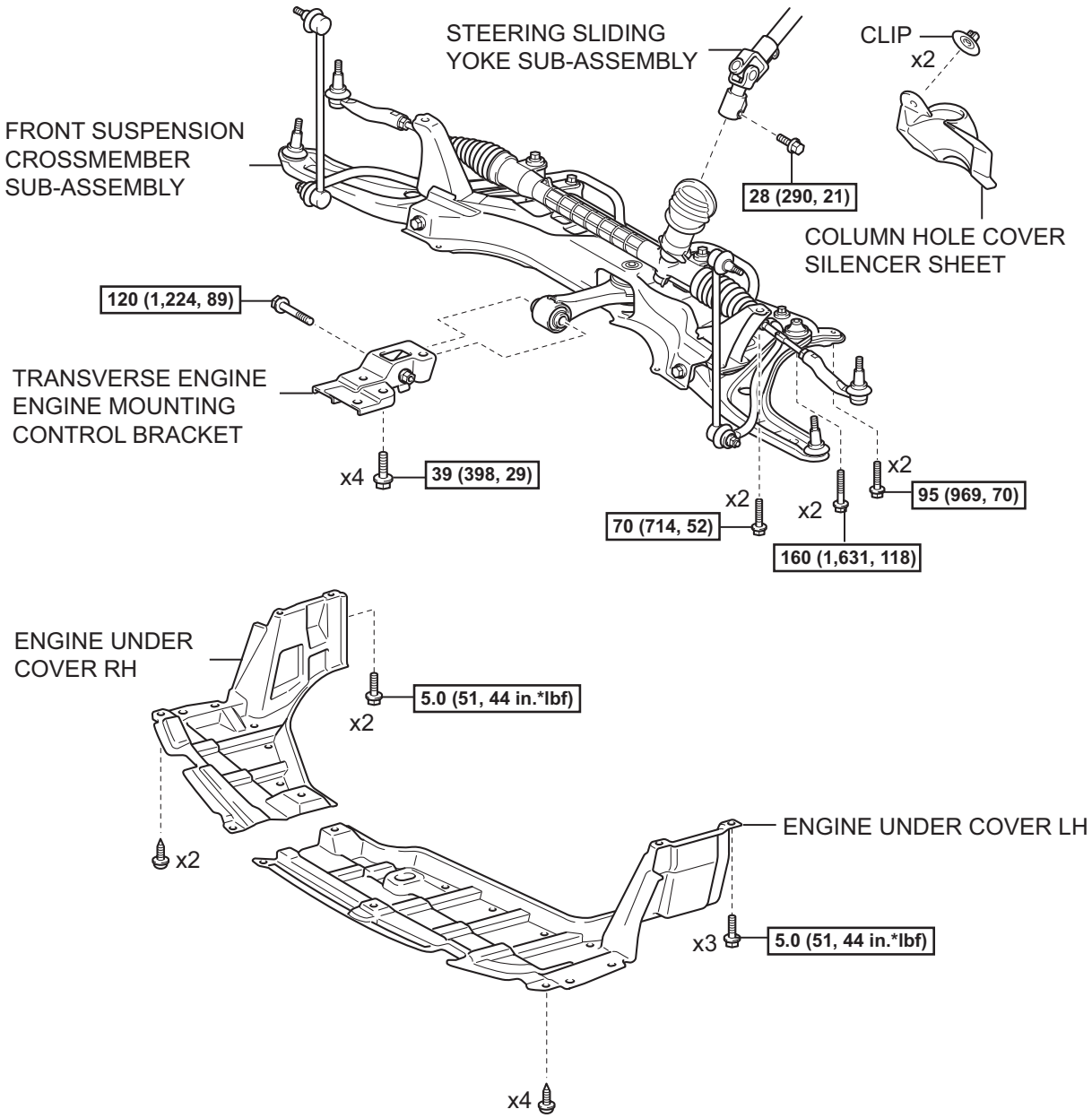

MX

N*m (kgf*cm, ft*lbf) :Specified torque

Y

C116860E01

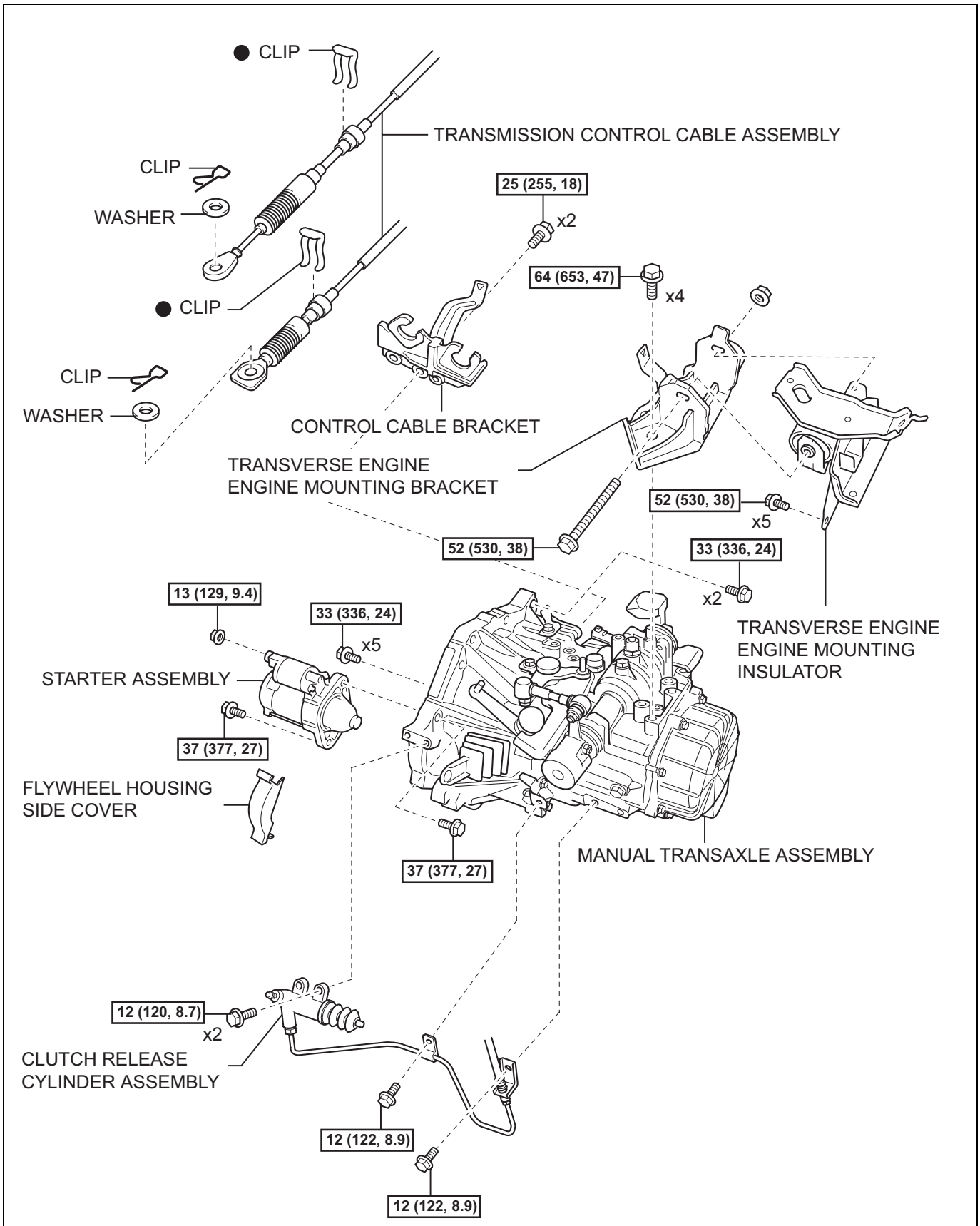

N*m (kgf*cm, ft*lbf) :Specified torque

● Non-reusable part

Y

C116837E02

MX

REMOVAL

1. **DISCONNECT CABLE FROM NEGATIVE BATTERY TERMINAL**
2. **REMOVE COLUMN HOLE COVER SILENCER SHEET (See page PS-74)**
3. **REMOVE STEERING SLIDING YOKE SUB-ASSEMBLY (See page PS-74)**
4. **REMOVE FRONT WHEELS**
5. **REMOVE ENGINE UNDER COVER LH**
6. **REMOVE ENGINE UNDER COVER RH**
7. **DRAIN TRANSAXLE OIL**
   (a) Remove the filler plug and the gasket.
   (b) Remove the drain plug and the gasket, and then drain the manual transaxle oil.
   (c) Install a new gasket and the drain plug.
   Torque: 39 N*m (400 kgf*cm, 29 ft.*lbf)
8. **REMOVE HOOD SUB-ASSEMBLY**
9. **REMOVE FRONT WIPER ARM AND BLADE ASSEMBLY LH (See page WW-17)**
10. **REMOVE FRONT WIPER ARM AND BLADE ASSEMBLY RH (See page WW-17)**
11. **REMOVE HOOD TO COWL TOP SEAL (See page WW-18)**
12. **REMOVE COWL TOP VENTILATOR LOUVER SUB-ASSEMBLY (for Hatchback) (See page WW-18)**
13. **REMOVE COWL TOP VENTILATOR LOUVER LH (for Hatchback) (See page WW-18)**
14. **REMOVE WINDSHIELD WIPER MOTOR AND LINK (for Hatchback) (See page WW-19)**
15. **REMOVE COWL TO REGISTER DUCT SUB-ASSEMBLY NO.2 (for Hatchback) (See page EM-122)**
16. **REMOVE COWL TOP PANEL OUTER (for Hatchback) (See page EM-123)**
17. **REMOVE COWL SIDE VENTILATOR SUB-ASSEMBLY LH (for Sedan) (See page WW-10)**
18. **REMOVE COWL SIDE VENTILATOR SUB-ASSEMBLY RH (for Sedan) (See page WW-10)**
19. **REMOVE COWL TOP VENTILATOR LOUVER SUB-ASSEMBLY (for Sedan) (See page WW-10)**
20. **REMOVE WINDSHIELD WIPER MOTOR AND LINK (for Sedan) (See page WW-10)**
21. **REMOVE FRONT AIR SHUTTER SEAL (for Sedan) (See page EM-123)**

22. REMOVE COWL TOP PANEL OUTER (for Sedan) (See page EM-123)

23. REMOVE CYLINDER HEAD COVER NO.2 (See page IG-9)

24. REMOVE AIR CLEANER ASSEMBLY (See page EM-124)

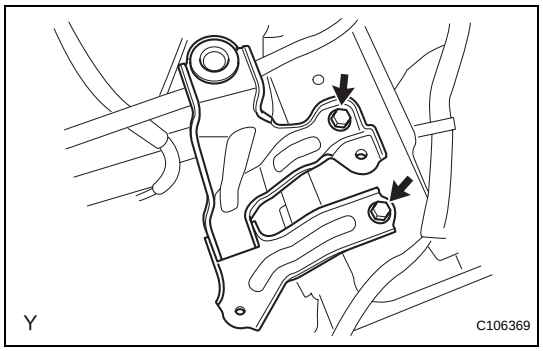

25. REMOVE AIR CLEANER BRACKET

(a) Remove the 2 bolts and the air cleaner bracket.

26. REMOVE BATTERY CLAMP SUB-ASSEMBLY

27. REMOVE BATTERY

28. REMOVE BATTERY TRAY

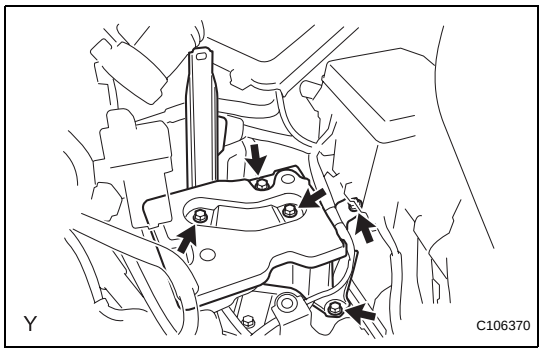

29. REMOVE BATTERY CARRIER

(a) Remove the 5 bolts and the battery carrier.

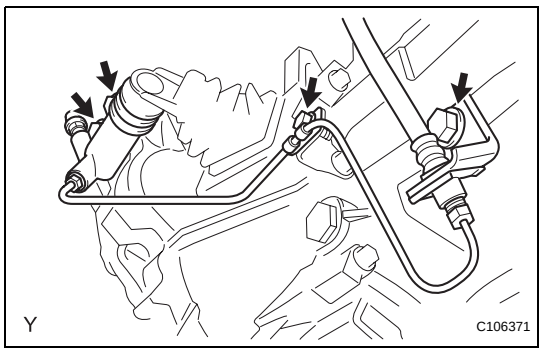

30. SEPARATE CLUTCH RELEASE CYLINDER ASSEMBLY

(a) Remove the 4 bolts, then separate the clutch release cylinder.
HINT:
Suspend the clutch release cylinder with a piece of rope so as not to overload the clutch pipe.

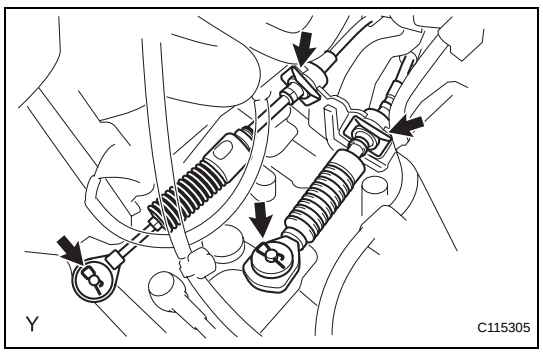

31. SEPARATE TRANSMISSION CONTROL CABLE ASSEMBLY

(a) Remove the 2 clips and the 2 washers, and disconnect the 2 cables from the transaxle.

(b) Remove the 2 clips and disconnect the 2 cables from the control cable bracket.

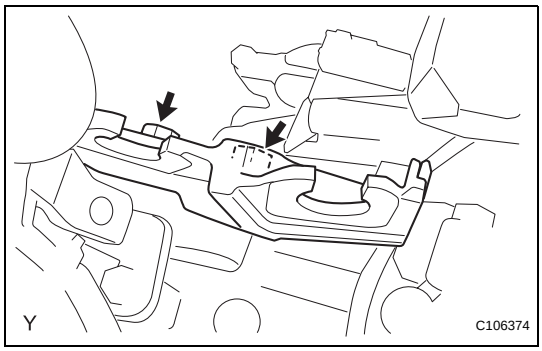

32. REMOVE CONTROL CABLE BRACKET
(a) Remove the 2 bolts and the control cable bracket.

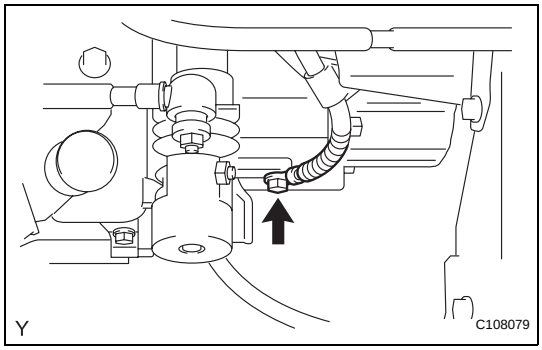

33. DISCONNECT WIRE HARNESS
(a) Remove the bolt, then disconnect the wire harness.

34. DISCONNECT CONNECTOR
(a) Disconnect the back-up light switch connector.

35. REMOVE STARTER ASSEMBLY (See page ST-9)

36. REMOVE FRONT AXLE HUB LH NUT (See page DS-3)

37. REMOVE FRONT AXLE HUB RH NUT
HINT:
The removal procedure for the RH side is the same as that for the LH side.

38. SEPARATE SPEED SENSOR FRONT LH (w/ ABS) (See page DS-3)

39. SEPARATE SPEED SENSOR FRONT RH (w/ ABS)
HINT:
The separation procedure for the RH side is the same as that for the LH side.

40. SEPARATE FRONT SUSPENSION ARM SUB-ASSEMBLY LOWER NO.1 LH (See page DS-4)

41. SEPARATE FRONT SUSPENSION ARM SUB-ASSEMBLY LOWER NO.1 RH
HINT:
The separation procedure for the RH side is the same as that for the LH side.

42. SEPARATE TIE ROD END SUB-ASSEMBLY LH (See page DS-3)

43. SEPARATE TIE ROD END SUB-ASSEMBLY RH
HINT:
The separation procedure for the RH side is the same as that for the LH side.

44. SEPARATE FRONT STABILIZER LINK ASSEMBLY LH (See page DS-4)

45. SEPARATE FRONT STABILIZER LINK ASSEMBLY RH
HINT:
The separation procedure for the RH side is the same as that for the LH side.

46. SEPARATE FRONT AXLE ASSEMBLY LH (See page DS-4)

47. SEPARATE FRONT AXLE ASSEMBLY RH

HINT:

The separation procedure for the RH side is the same as that for the LH side.

48. REMOVE FRONT DRIVE SHAFT ASSEMBLY LH (See page DS-5)

49. REMOVE FRONT DRIVE SHAFT ASSEMBLY RH (See page DS-5)

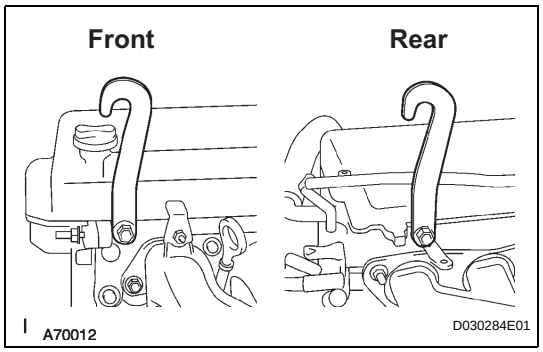

50. SUSPEND ENGINE ASSEMBLY

(a) Install the 2 hangers in the correct direction.

(b) Attach the engine chain hoist to the hangers.

CAUTION:
Do not attempt to hang the engine by hooking the chain to any other part.
Parts No.:
Engine Hanger: 12281-21010
Bolt:
91642-81025
Torque: 40 N*m (408 kgf*cm, 29 ft.*lbf)

51. REMOVE FRONT SUSPENSION CROSSMEMBER SUB-ASSEMBLY (See page PS-76)

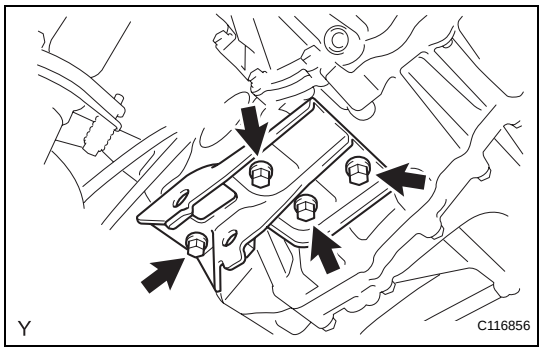

52. REMOVE TRANSVERSE ENGINE ENGINE MOUNTING CONTROL BRACKET

(a) Remove the 4 bolts and the engine mounting control bracket.

53. SUPPORT MANUAL TRANSAXLE ASSEMBLY

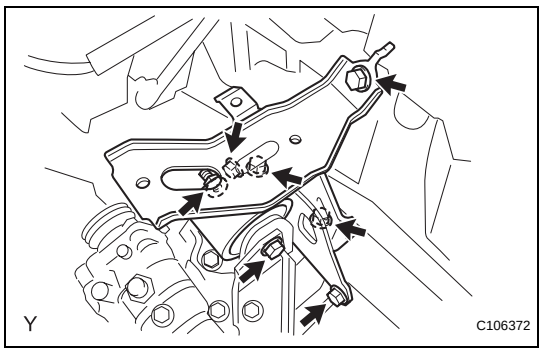

54. REMOVE TRANSVERSE ENGINE ENGINE MOUNTING INSULATOR

(a) Remove the bolt and nut, then separate the engine mounting insulator LH.

(b) Remove the 5 bolts and the engine mounting insulator LH.

MX

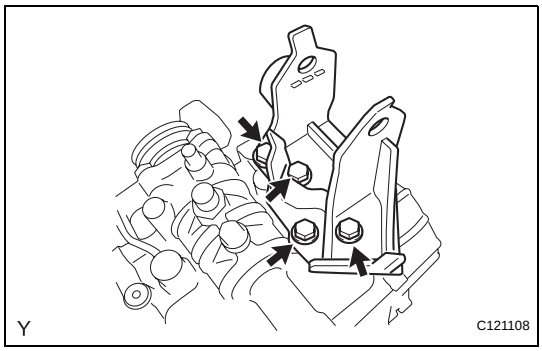

55. REMOVE TRANSVERSE ENGINE ENGINE MOUNTING BRACKET

(a) Remove the 4 bolts and the engine mounting bracket LH.

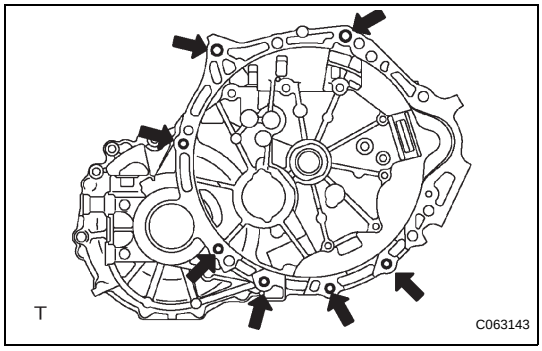

56. REMOVE MANUAL TRANSAXLE ASSEMBLY

(a) Remove the 7 bolts and the manual transaxle.

INSTALLATION

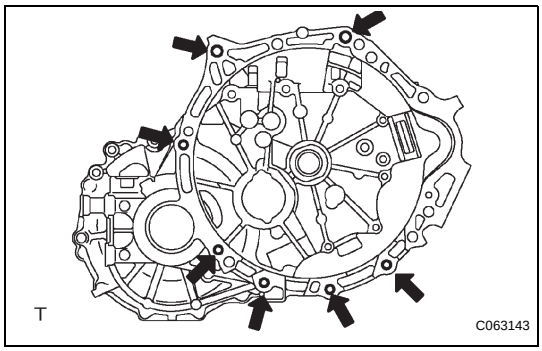

1. INSTALL MANUAL TRANSAXLE ASSEMBLY

(a) Align the input shaft with the clutch disc and install the manual transaxle onto the engine.

(b) Install the 7 bolts.
Torque: 33 N*m (336 kgf*cm, 24 ft.*lbf)

MX

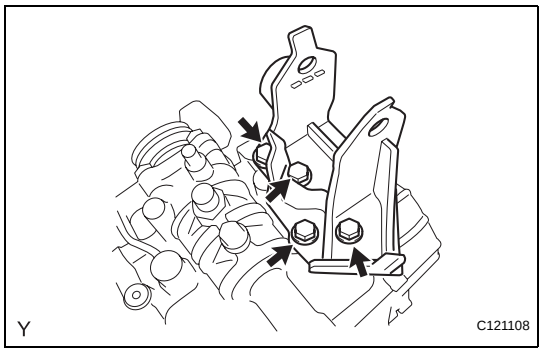

2. INSTALL TRANSVERSE ENGINE ENGINE MOUNTING BRACKET

(a) Install the engine mounting bracket LH with the 4 bolts.
Torque: 64 N*m (653 kgf*cm, 47 ft.*lbf)

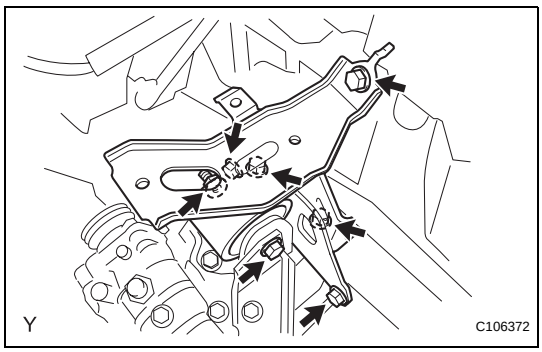

3. INSTALL TRANSVERSE ENGINE ENGINE MOUNTING INSULATOR

(a) Install the engine mounting insulator LH with the 5 bolts.
Torque: 52 N*m (530 kgf*cm, 38 ft.*lbf)

(b) Install the engine mounting bracket LH and engine insulator LH with the bolt and nut.
Torque: 52 N*m (530 kgf*cm, 38 ft.*lbf)

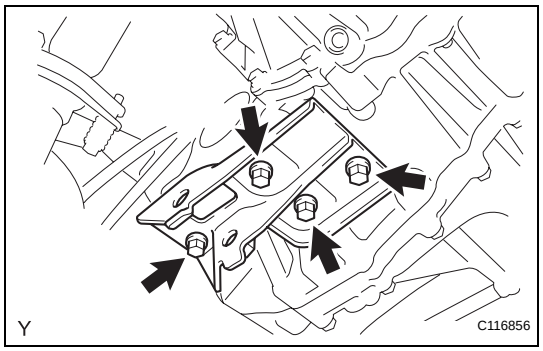

4. **INSTALL TRANSVERSE ENGINE ENGINE MOUNTING CONTROL BRACKET**
   (a) Install the engine mounting control bracket with the 4 bolts.
   Torque: 39 N*m (398 kgf*cm, 29 ft.*lbf)
5. **INSTALL FRONT SUSPENSION CROSSMEMBER SUB-ASSEMBLY (See page PS-77)**
6. **INSTALL FRONT DRIVE SHAFT ASSEMBLY LH (See page DS-13)**
7. **INSTALL FRONT DRIVE SHAFT ASSEMBLY RH (See page DS-14)**
8. **INSTALL FRONT AXLE ASSEMBLY LH**
9. **INSTALL FRONT AXLE ASSEMBLY RH (See page DS-14)**
10. **INSTALL FRONT STABILIZER LINK ASSEMBLY LH (See page DS-14)**
11. **INSTALL FRONT STABILIZER LINK ASSEMBLY RH**
    HINT:
    The installation procedure for the RH side is the same as that for the LH side.
12. **INSTALL TIE ROD END SUB-ASSEMBLY LH (See page DS-15)**
13. **INSTALL TIE ROD END SUB-ASSEMBLY RH**
    HINT:
    The installation procedure for the RH side is the same as that for the LH side.
14. **INSTALL FRONT SUSPENSION ARM SUB-ASSEMBLY LOWER NO.1 LH (See page DS-14)**
15. **INSTALL FRONT SUSPENSION ARM SUB-ASSEMBLY LOWER NO.1 RH**
    HINT:
    The installation procedure for the RH side is the same as that for the LH side.
16. **INSTALL SPEED SENSOR FRONT LH (w/ ABS) (See page DS-15)**
17. **INSTALL SPEED SENSOR FRONT RH (w/ ABS)**
    HINT:
    The installation procedure for the RH side is the same as that for the LH side.
18. **INSTALL FRONT AXLE HUB LH NUT (See page DS-15)**
19. **INSTALL FRONT AXLE HUB RH NUT**
    HINT:
    The installation procedure for the RH side is the same as that for the LH side.
20. **INSTALL STARTER ASSEMBLY (See page ST-17)**

21. CONNECT CONNECTOR

(a) Connect the back-up light switch connector.

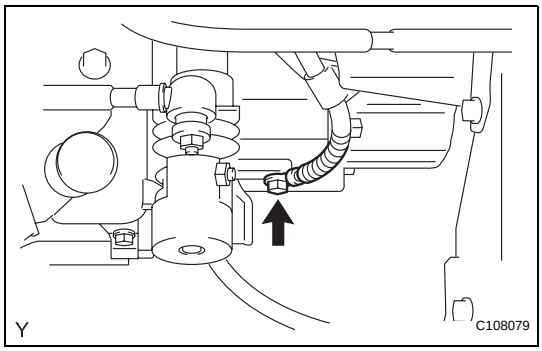

22. CONNECT WIRE HARNESS

(a) Connect the wire harness with the bolt.
Torque: 26 N*m (260 kgf*cm, 19 ft.*lbf)

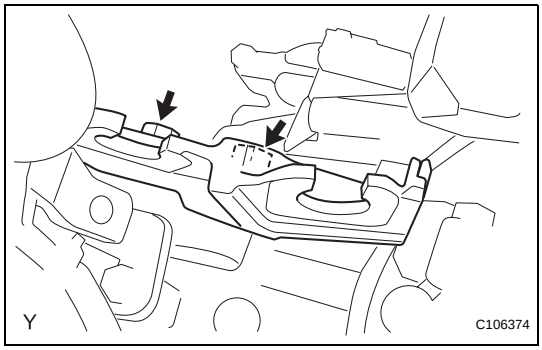

23. INSTALL CONTROL CABLE BRACKET

(a) Install the control cable bracket with the 2 bolts.
Torque: 25 N*m (255 kgf*cm, 18 ft.*lbf)

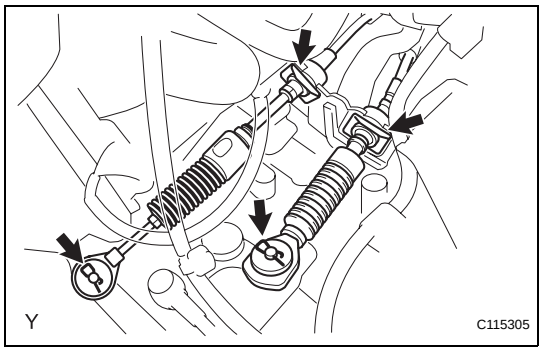

24. CONNECT TRANSMISSION CONTROL CABLE ASSEMBLY

(a) Connect the 2 cable ends and install the 2 washers and the 2 clips.
(b) Install 2 new clips onto the control cable bracket.

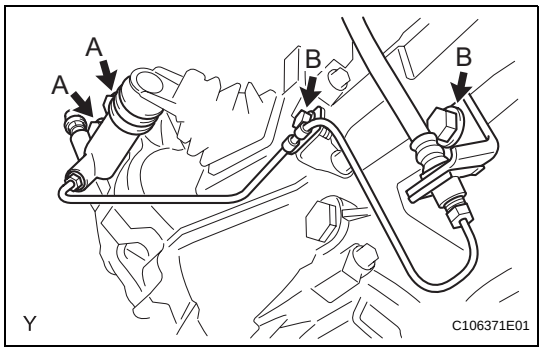

25. INSTALL CLUTCH RELEASE CYLINDER ASSEMBLY

(a) Install the clutch release cylinder and clutch pipe with the 4 bolts.
Torque: 12 N*m (120 kgf*cm, 8.7 ft.*lbf) for bolt A
12 N*m (122 kgf*cm, 8.9 ft.*lbf) for bolt B

MX

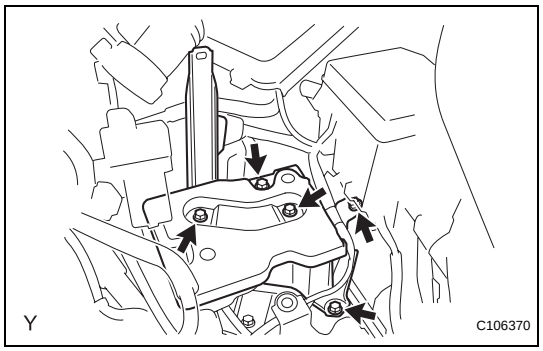

26. **INSTALL BATTERY CARRIER**
    (a) Install the battery carrier with the 5 bolts.
    Torque: 17 N*m (175 kgf*cm, 13 ft.*lbf)
27. **INSTALL BATTERY TRAY**
28. **INSTALL BATTERY**
29. **INSTALL BATTERY CLAMP SUB-ASSEMBLY**

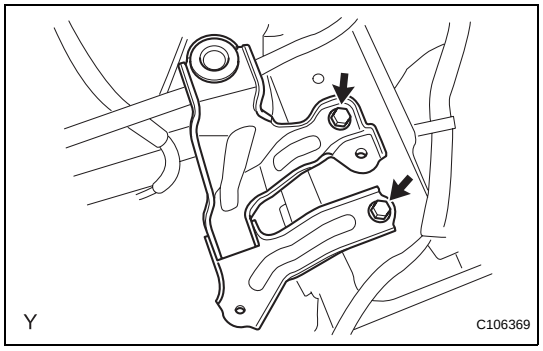

30. **INSTALL AIR CLEANER BRACKET**
    (a) Install the air cleaner bracket with the 2 bolts.
    Torque: 19 N*m (194 kgf*cm, 14 ft.*lbf)
31. **INSTALL AIR CLEANER ASSEMBLY (See page EM-146)**
32. **INSTALL CYLINDER HEAD COVER NO.2 (See page IG-10)**
33. **INSTALL COWL TOP PANEL OUTER (for Hatchback) (See page EM-146)**
34. **INSTALL COWL TO REGISTER DUCT SUB-ASSEMBLY NO.2 (for Hatchback) (See page EM-147)**
35. **INSTALL WINDSHIELD WIPER MOTOR AND LINK (for Hatchback) (See page WW-21)**
36. **INSTALL COWL TOP VENTILATOR LOUVER LH (for Hatchback) (See page WW-21)**
37. **INSTALL COWL TOP VENTILATOR LOUVER SUB-ASSEMBLY (for Hatchback) (See page WW-21)**
38. **INSTALL COWL TOP PANEL OUTER (for Sedan) (See page EM-147)**
39. **INSTALL FRONT AIR SHUTTER SEAL (for Sedan) (See page EM-148)**
40. **INSTALL WINDSHIELD WIPER MOTOR AND LINK (for Sedan) (See page WW-12)**
41. **INSTALL COWL TOP VENTILATOR LOUVER SUB-ASSEMBLY (for Sedan) (See page WW-12)**
42. **INSTALL COWL SIDE VENTILATOR SUB-ASSEMBLY RH (for Sedan) (See page WW-13)**
43. **INSTALL COWL SIDE VENTILATOR SUB-ASSEMBLY LH (for Sedan) (See page WW-13)**
44. **INSTALL HOOD TO COWL TOP SEAL (See page WW-22)**
45. **INSTALL FRONT WIPER ARM AND BLADE ASSEMBLY LH (See page WW-22)**
46. **INSTALL FRONT WIPER ARM AND BLADE ASSEMBLY RH (See page WW-23)**
47. **INSTALL HOOD SUB-ASSEMBLY**

48. **INSPECT HOOD SUB-ASSEMBLY (See page ED-3)**
49. **ADJUST HOOD SUB-ASSEMBLY (See page ED-4)**
50. **ADD TRANSAXLE OIL**
51. **INSPECT AND ADJUST TRANSAXLE OIL (See page MX-2)**
52. **INSTALL ENGINE UNDER COVER RH**
53. **INSTALL ENGINE UNDER COVER LH**
54. **INSTALL FRONT WHEELS**
55. **INSTALL STEERING SLIDE YOKE SUB-ASSEMBLY (See page PS-79)**
56. **INSTALL COLUMN HOLE COVER SILENCER SHEET (See page PS-79)**
57. **CONNECT CABLE TO NEGATIVE BATTERY TERMINAL**
    Torque: 5.4 N*m (55 kgf*cm, 48 in.*lbf)
58. **INSPECT ABS SPEED SENSOR SIGNAL (w/ ABS)** (See page BC-14)
59. **INSPECT AND ADJUST FRONT WHEEL ALIGNMENT** (See page SP-2)
60. **CHECK FOR EXHAUST GAS LEAKAGE**
61. **CHECK FOR TRANSAXLE OIL LEAKAGE**

MANUAL TRANSAXLE UNIT

COMPONENTS

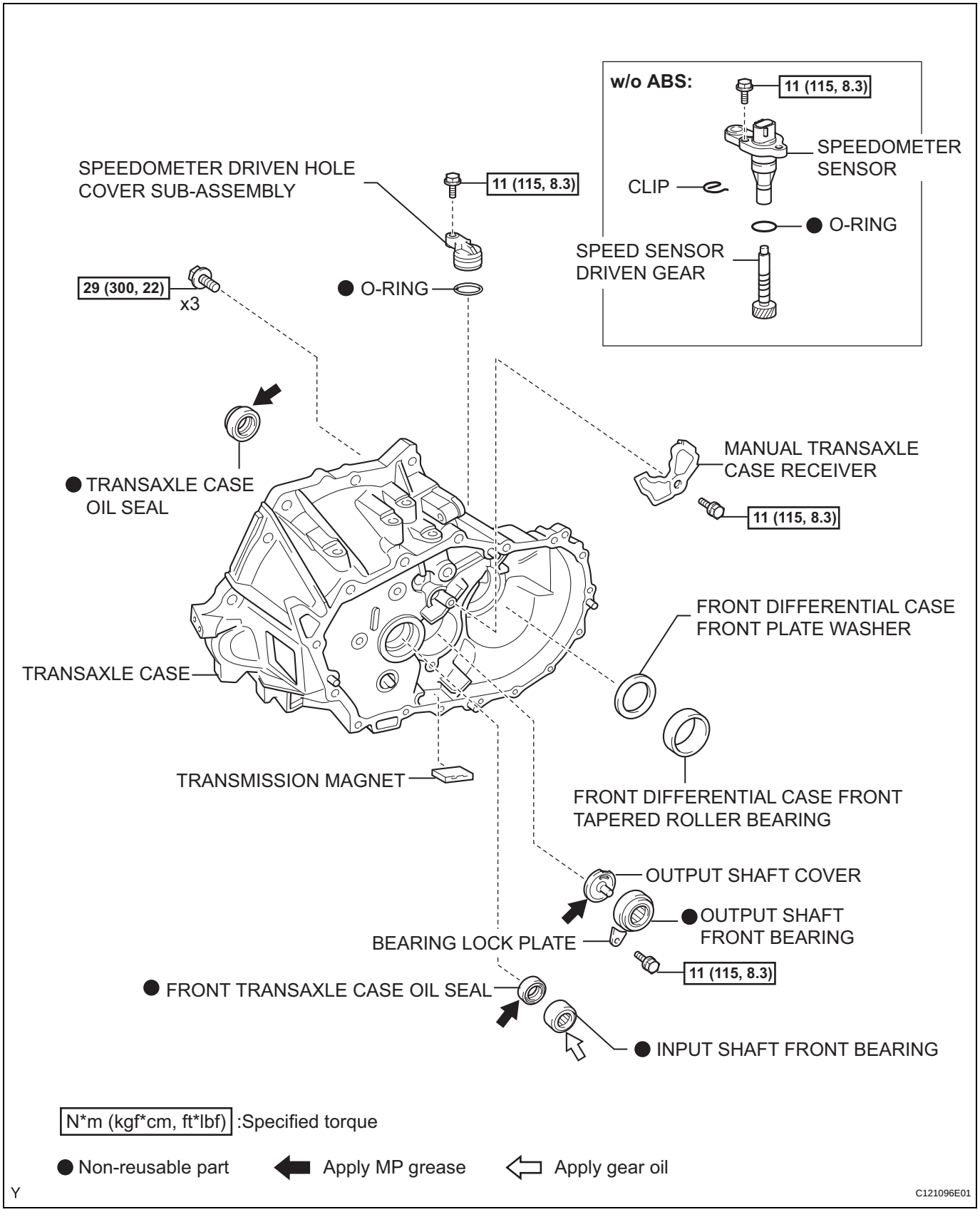

MX

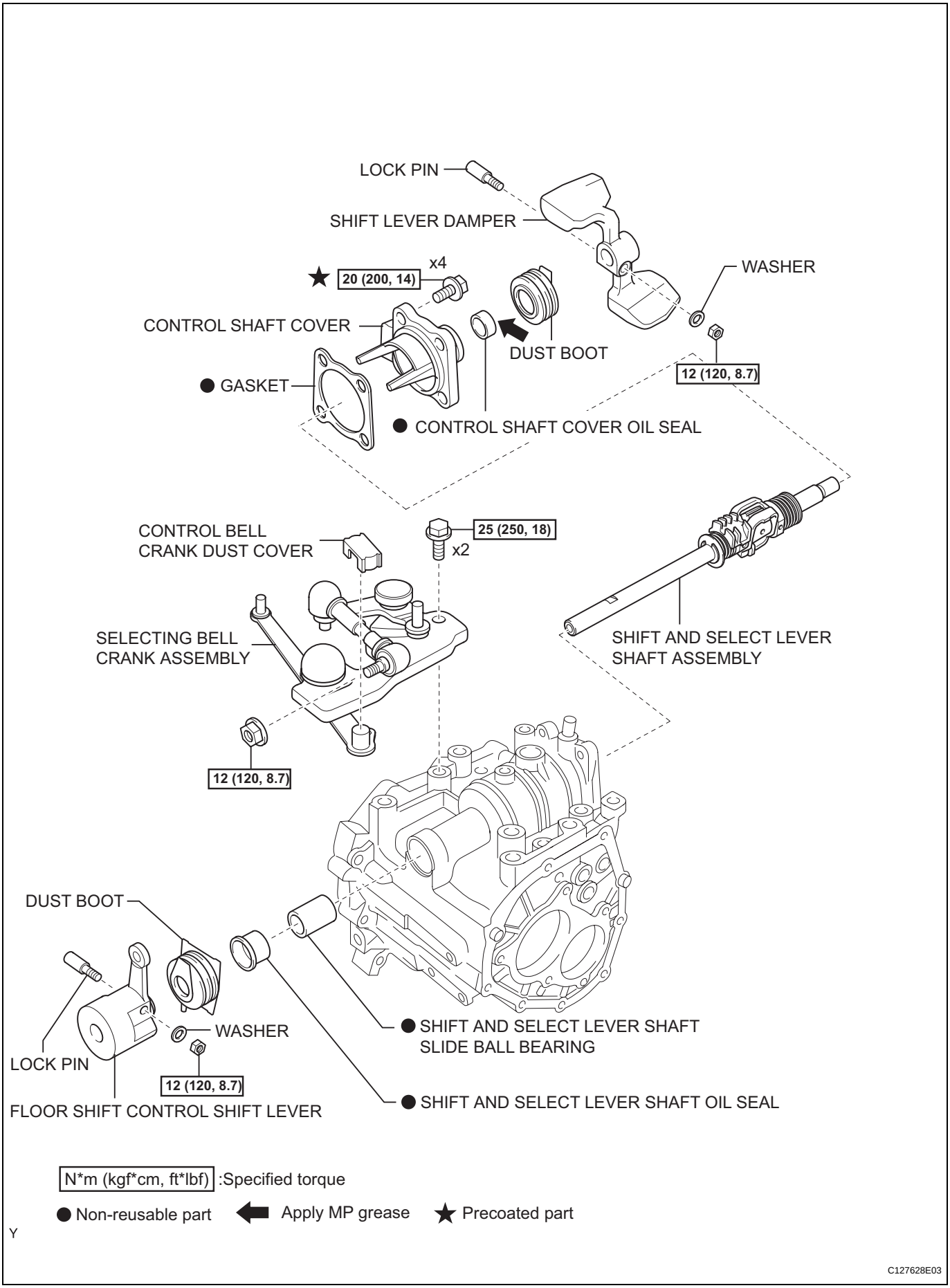
LOCK PIN
SHIFT LEVER DAMPER
WASHER
x4
★ 20 (200, 14)
CONTROL SHAFT COVER
DUST BOOT
12 (120, 8.7)
● GASKET
● CONTROL SHAFT COVER OIL SEAL
CONTROL BELL CRANK DUST COVER
25 (250, 18)
x2
SELECTING BELL CRANK ASSEMBLY
SHIFT AND SELECT LEVER SHAFT ASSEMBLY
12 (120, 8.7)
DUST BOOT
WASHER
LOCK PIN
12 (120, 8.7)
FLOOR SHIFT CONTROL SHIFT LEVER
● SHIFT AND SELECT LEVER SHAFT SLIDE BALL BEARING
● SHIFT AND SELECT LEVER SHAFT OIL SEAL
N*m (kgf*cm, ft*lbf) :Specified torque
● Non-reusable part
Apply MP grease
★ Precoated part
C127628E03

MX

Y

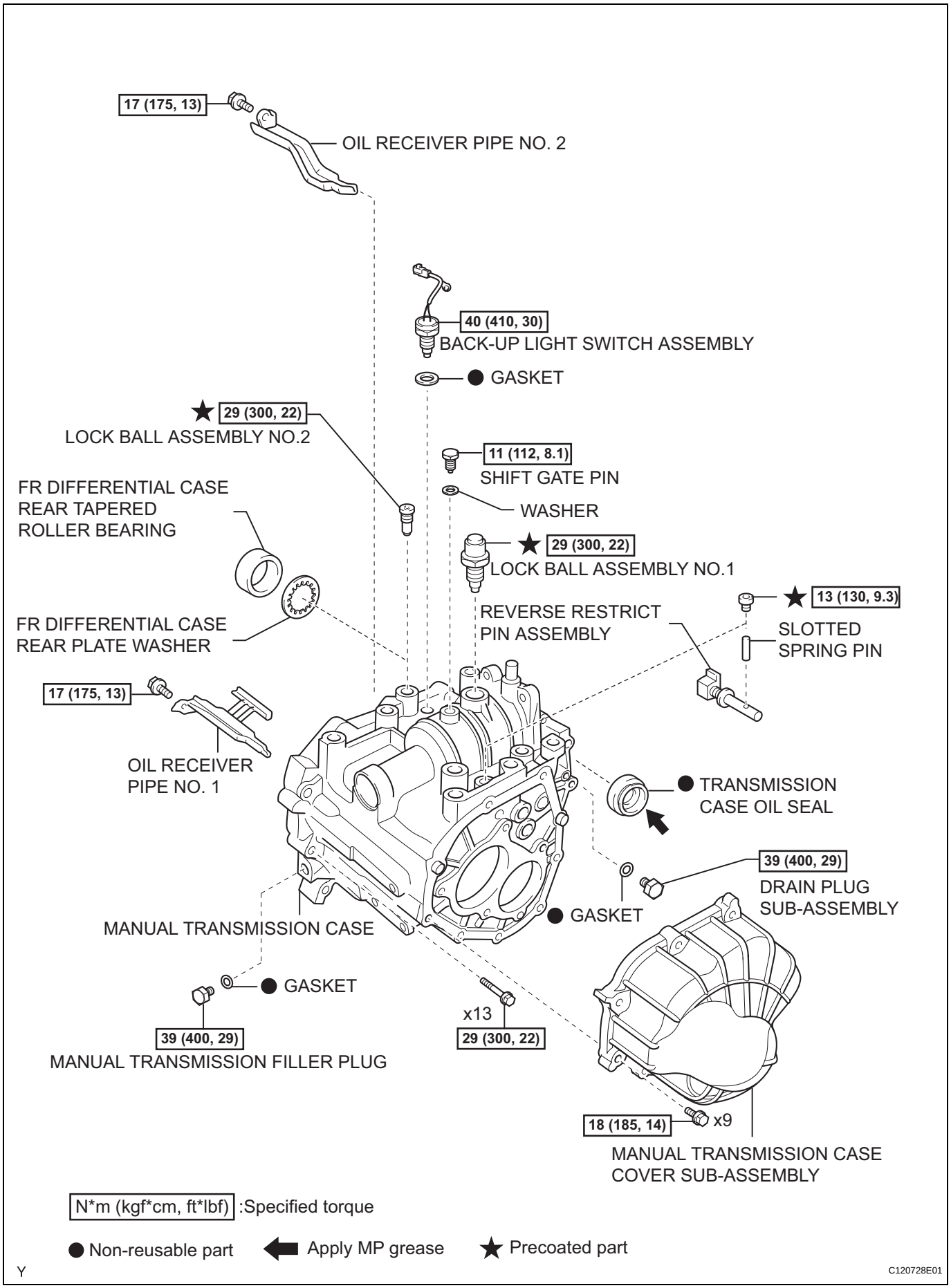
17 (175, 13)
OIL RECEIVER PIPE NO. 2
40 (410, 30)
BACK-UP LIGHT SWITCH ASSEMBLY
GASKET
29 (300, 22)
LOCK BALL ASSEMBLY NO.2
11 (112, 8.1)
SHIFT GATE PIN
WASHER
FR DIFFERENTIAL CASE REAR TAPERED ROLLER BEARING
29 (300, 22)
LOCK BALL ASSEMBLY NO.1
13 (130, 9.3)
SLOTTED SPRING PIN
REVERSE RESTRICT PIN ASSEMBLY
FR DIFFERENTIAL CASE REAR PLATE WASHER
17 (175, 13)
OIL RECEIVER PIPE NO. 1
TRANSMISSION CASE OIL SEAL
39 (400, 29)
DRAIN PLUG SUB-ASSEMBLY
GASKET
MANUAL TRANSMISSION CASE
GASKET
39 (400, 29)
MANUAL TRANSMISSION FILLER PLUG
x13
29 (300, 22)
18 (185, 14)
x9
MANUAL TRANSMISSION CASE COVER SUB-ASSEMBLY
N*m (kgf*cm, ft*lbf) :Specified torque
Non-reusable part
Apply MP grease
Precoated part
Y
C120728E01

MX

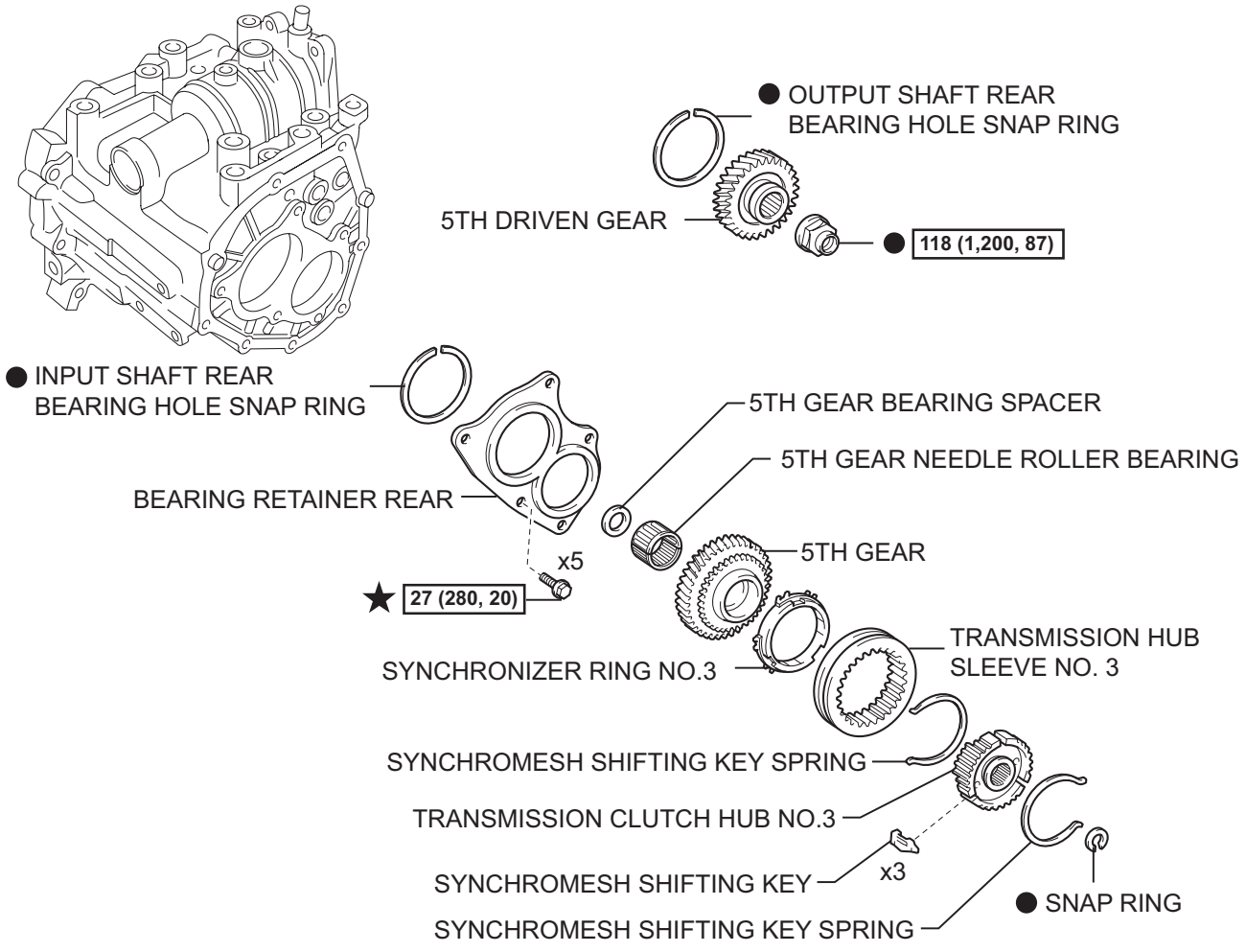

MX

N*m (kgf*cm, ft*lbf) :Specified torque

● Non-reusable part ★ Precoated part

Y

C120727E01

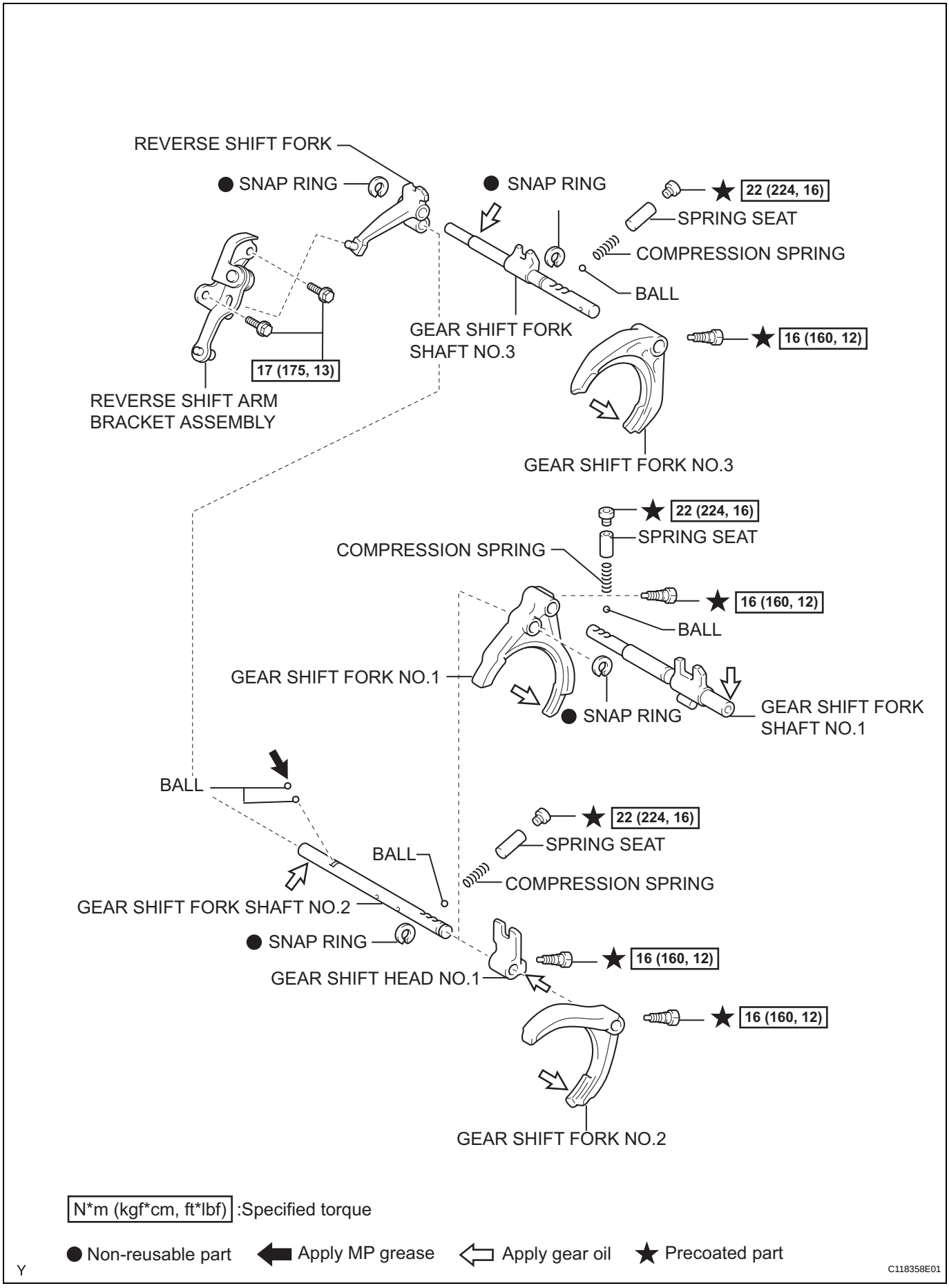
REVERSE SHIFT FORK
SNAP RING
SNAP RING
★ 22 (224, 16)
SPRING SEAT
COMPRESSION SPRING
BALL
GEAR SHIFT FORK SHAFT NO.3
★ 16 (160, 12)
17 (175, 13)
REVERSE SHIFT ARM BRACKET ASSEMBLY
GEAR SHIFT FORK NO.3
★ 22 (224, 16)
SPRING SEAT
COMPRESSION SPRING
★ 16 (160, 12)
BALL
GEAR SHIFT FORK NO.1
SNAP RING
GEAR SHIFT FORK SHAFT NO.1
BALL
★ 22 (224, 16)
SPRING SEAT
BALL
COMPRESSION SPRING
GEAR SHIFT FORK SHAFT NO.2
SNAP RING
★ 16 (160, 12)
GEAR SHIFT HEAD NO.1
★ 16 (160, 12)
GEAR SHIFT FORK NO.2
N*m (kgf*cm, ft*lbf) :Specified torque
● Non-reusable part
Apply MP grease
Apply gear oil
★ Precoated part
Y
C118358E01

MX

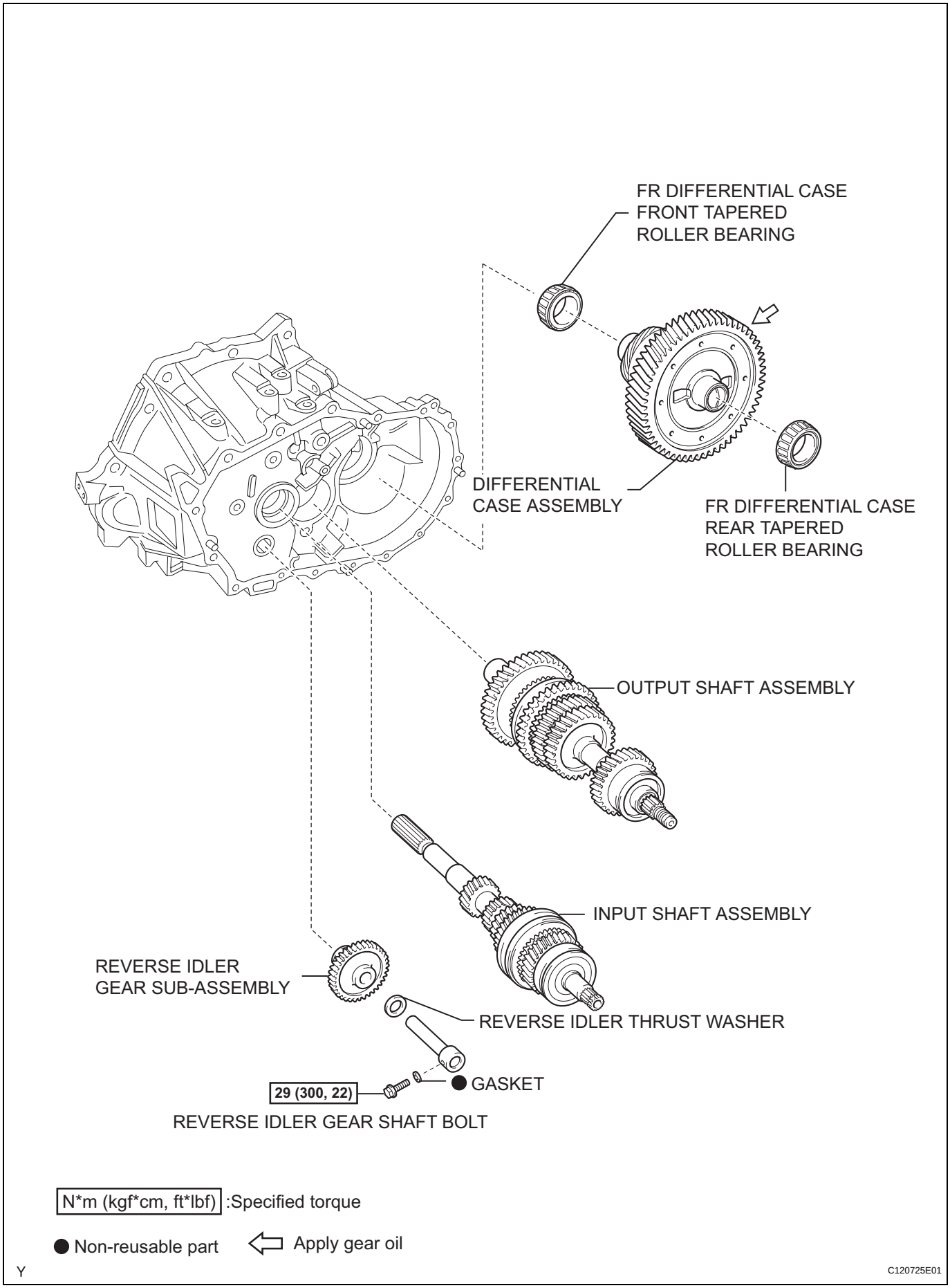
FR DIFFERENTIAL CASE
FRONT TAPERED
ROLLER BEARING
DIFFERENTIAL
CASE ASSEMBLY
FR DIFFERENTIAL CASE
REAR TAPERED
ROLLER BEARING
OUTPUT SHAFT ASSEMBLY
INPUT SHAFT ASSEMBLY
REVERSE IDLER
GEAR SUB-ASSEMBLY
REVERSE IDLER THRUST WASHER
GASKET
29 (300, 22)
REVERSE IDLER GEAR SHAFT BOLT
N*m (kgf*cm, ft*lbf) :Specified torque
● Non-reusable part
⇦ Apply gear oil
Y
C120725E01

MX

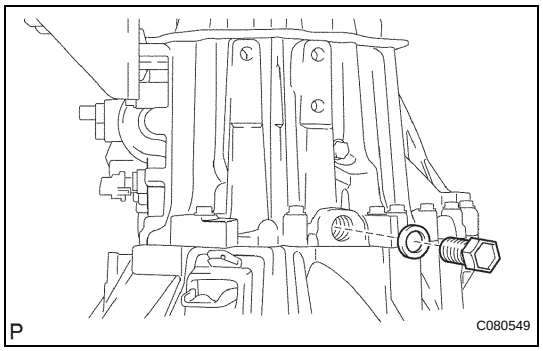

DISASSEMBLY

1. REMOVE MANUAL TRANSMISSION FILLER PLUG

(a) Remove the manual transmission filler plug and gasket from the manual transmission case.

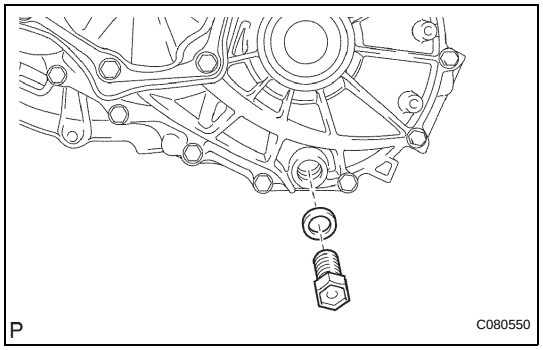

2. REMOVE DRAIN PLUG SUB-ASSEMBLY

(a) Remove the drain plug sub-assembly and gasket from the manual transmission case.

3. REMOVE SPEEDOMETER DRIVEN HOLE COVER SUB-ASSEMBLY

(a) Remove the bolt and speedometer driven hole cover sub-assembly from the transaxle case.

(b) Remove the O-ring from the speedometer driven hole cover sub-assembly.

4. REMOVE SPEEDOMETER SENSOR (w/o ABS)

(a) Remove the bolt and speedometer sensor from the transaxle case.

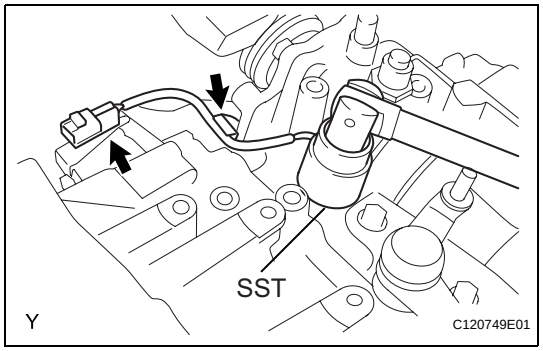

5. REMOVE BACK-UP LIGHT SWITCH ASSEMBLY

(a) Separate the back-up light switch wire harness from the 2 clamps.

(b) Using SST, remove the back-up light switch assembly and gasket from the manual transmission case.

SST 09817-16011

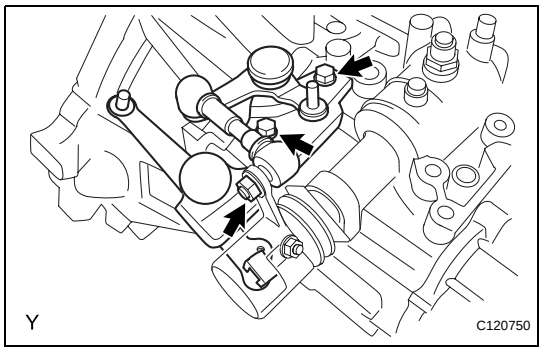

6. REMOVE SELECTING BELL CRANK ASSEMBLY

(a) Remove the 2 bolts and nut and remove the selecting bell crank assembly from the manual transmission case.

(b) Remove the control shift lever bush.

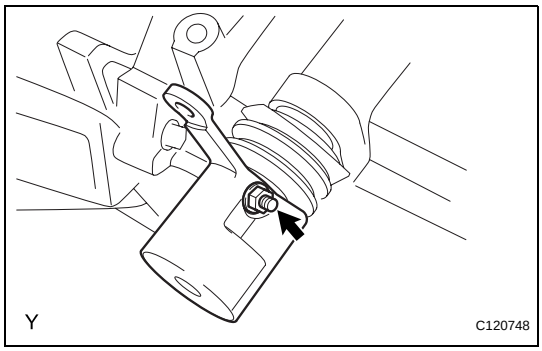

7. REMOVE FLOOR SHIFT CONTROL SHIFT LEVER

(a) Remove the nut and spring washer.

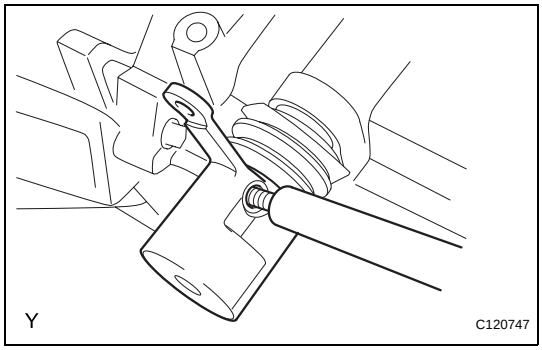

(b) Using a brass bar and a hammer, remove the lock pin.

(c) Remove the floor shift control shift lever.

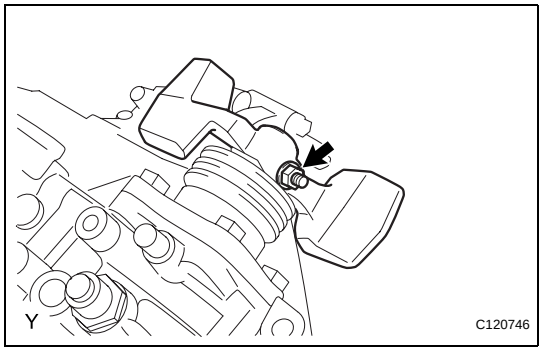

8. REMOVE SHIFT LEVER DAMPER

(a) Remove the nut and spring washer.

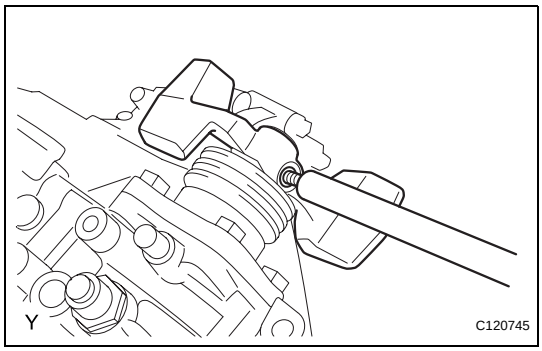

(b) Using a brass bar and a hammer, remove the lock pin.

(c) Remove the shift lever damper.

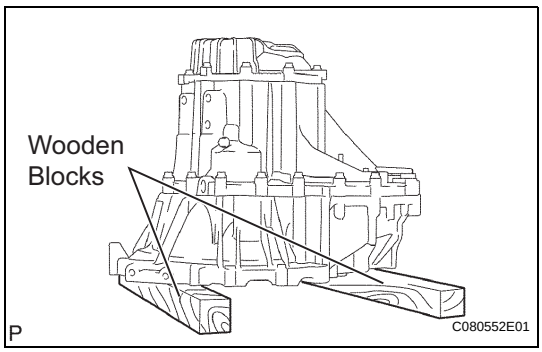

9. FIX MANUAL TRANSAXLE ASSEMBLY

(a) Place the manual transaxle assembly on wooden blocks.

MX

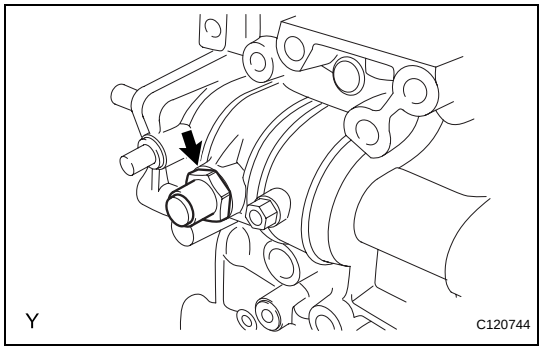

10. REMOVE LOCK BALL ASSEMBLY NO.1

(a) Remove lock ball assembly No. 1 from the manual transmission case.

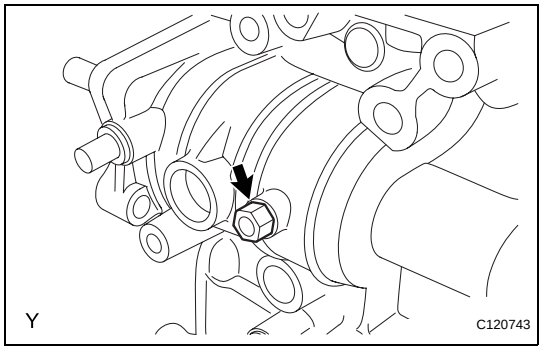

11. REMOVE SHIFT GATE PIN

(a) Remove the shift gate pin and washer from the transmission case.

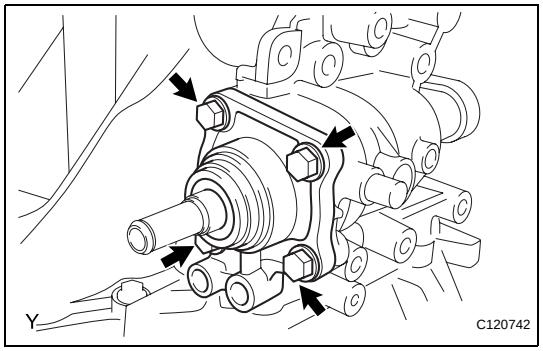

12. REMOVE CONTROL SHAFT COVER

(a) Remove the 4 bolts, control shaft cover and gasket from the manual transmission case.

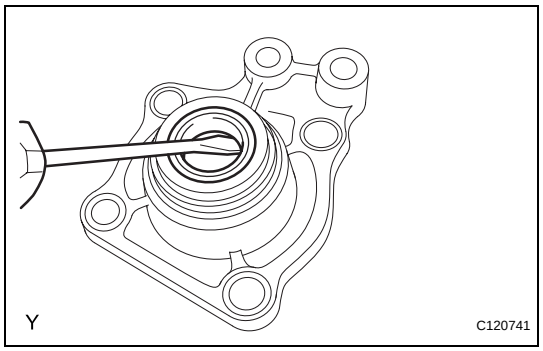

13. REMOVE CONTROL SHAFT COVER OIL SEAL

(a) Using a screwdriver, remove the control shaft cover oil seal from the control shaft cover.

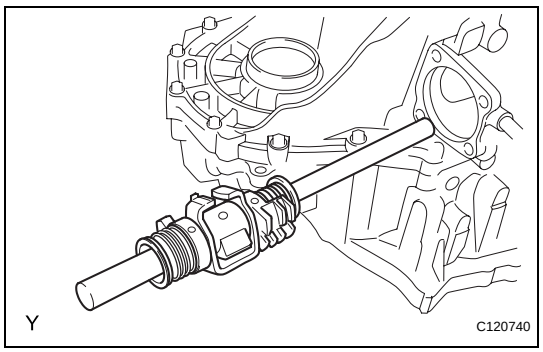

14. REMOVE SHIFT AND SELECT LEVER SHAFT ASSEMBLY

(a) Remove the shift and select lever shaft assembly from the transmission case.

MX

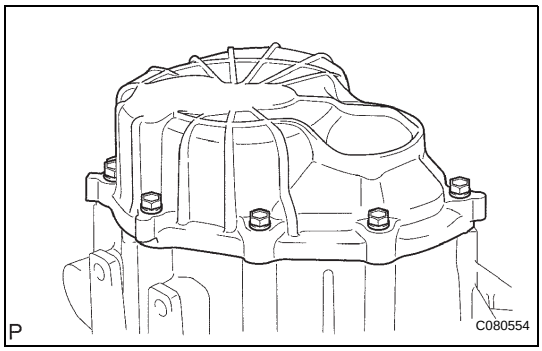

15. REMOVE MANUAL TRANSMISSION CASE COVER SUB-ASSEMBLY

(a) Remove the 9 bolts.

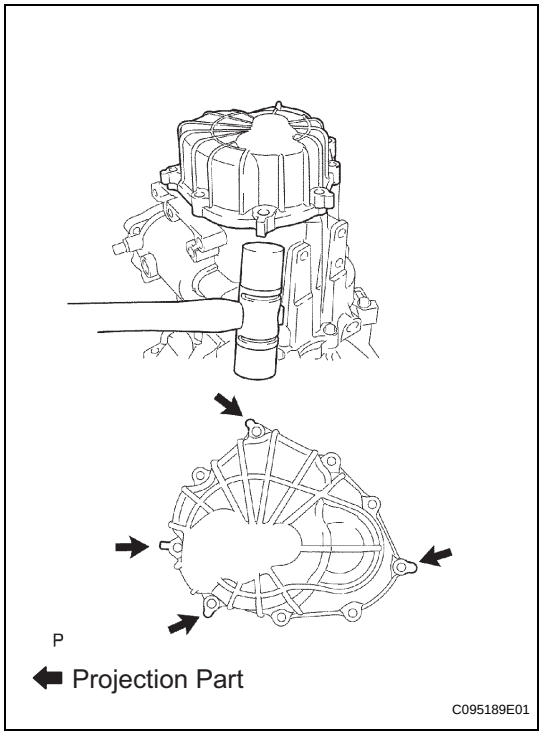

(b) Using a plastic hammer, carefully tap the projection of the manual transmission case cover sub-assembly to remove the manual transmission case cover from the manual transmission case.
NOTICE:
Do not damage the manual transmission case.

MX

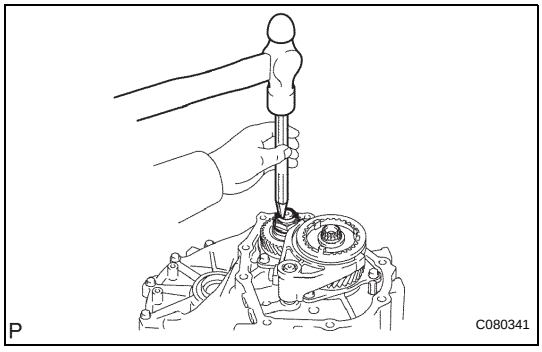

16. REMOVE MANUAL TRANSMISSION OUTPUT SHAFT REAR SET NUT

(a) Using a chisel and a hammer, loosen the staked part of the manual transmission output shaft rear set nut.

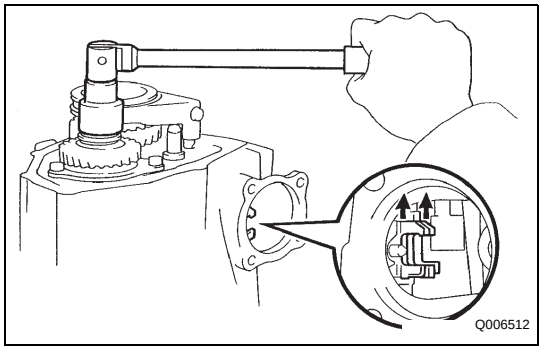

(b) Engage the 2 gears simultaneously to lock the transmission.
(c) Remove the manual transmission output shaft rear set nut.
(d) Disengage the 2 gears.

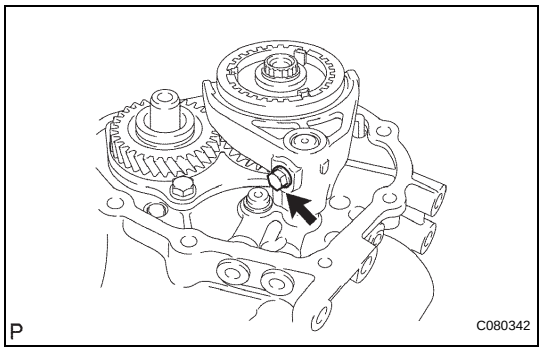

17. REMOVE GEAR SHIFT FORK NO.3

(a) Remove the gear shift fork lock bolt from gear shift fork No. 3.

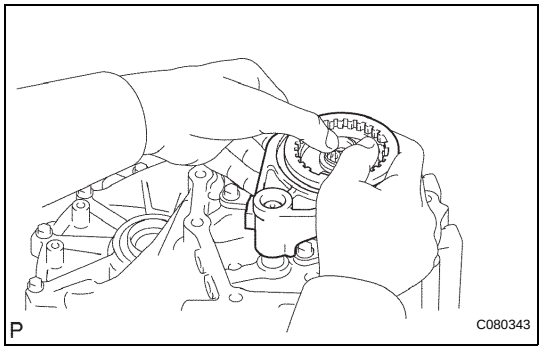

(b) Remove transmission hub sleeve No. 3 with gear shift fork No. 3 from transmission clutch hub No. 3.

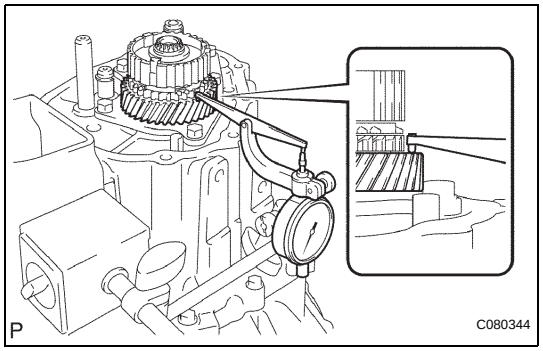

18. INSPECT 5TH GEAR THRUST CLEARANCE

(a) Using a dial indicator, measure the 5th gear thrust clearance.

Standard clearance:
0.10 to 0.55 mm (0.0039 to 0.0217 in.)
Maximum clearance:
0.55 mm (0.0217 in.)

If the clearance exceeds the maximum, replace transmission clutch hub No. 3, the 5th gear or input shaft rear radial ball bearing.

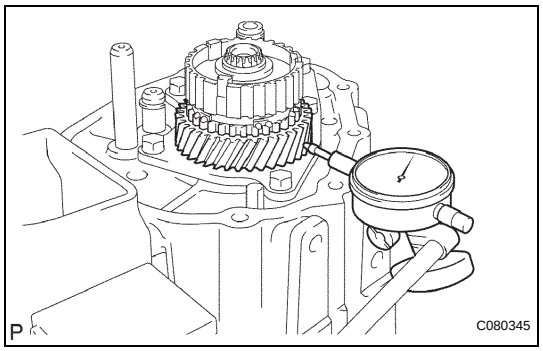

19. INSPECT 5TH GEAR RADIAL CLEARANCE

(a) Using a dial indicator, measure the 5th gear radial clearance.

Standard clearance:
KOYO made:
0.015 to 0.058 mm (0.0006 to 0.0023 in.)
NSK made:
0.015 to 0.056 mm (0.0006 to 0.0022 in.)
Maximum clearance:
KOYO made:
0.058 mm (0.0023 in.)
NSK made:
0.056 mm (0.0022 in.)

If the clearance exceeds the maximum, replace the 5th gear, 5th gear needle roller bearing or input shaft.

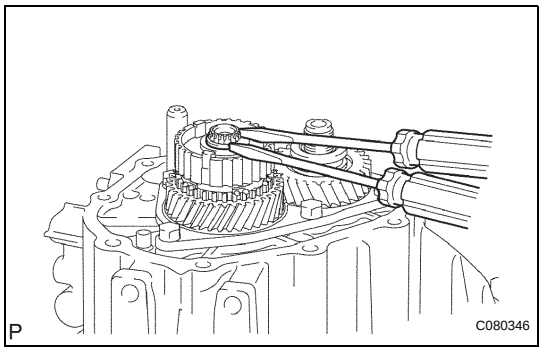

20. REMOVE TRANSMISSION CLUTCH HUB NO.3

(a) Using 2 screwdrivers and a hammer, tap out the snap ring.
HINT:
Use a shop rag or piece of cloth to keep the snap ring from flying off.

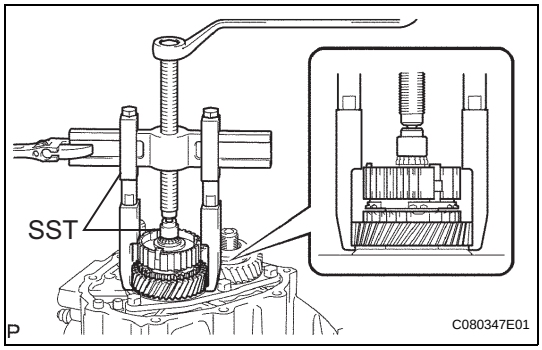

(b) Using SST, remove transmission clutch hub No. 3, the 5th gear and synchronizer ring No. 3 from the input shaft.
SST 09950-40011 (09951-04020, 09952-04010, 09953-04030, 09954-04010, 09955-04011), 09950-60010 (09951-00180)

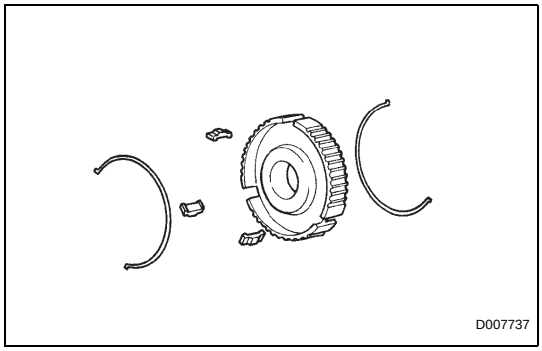

(c) Remove the 3 synchromesh shifting keys and 2 synchromesh shifting key springs from transmission clutch hub No. 3.

MX

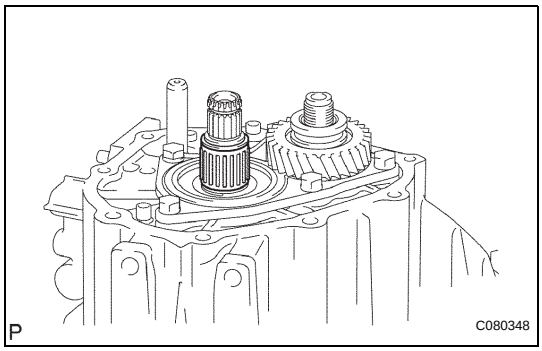

21. REMOVE 5TH GEAR NEEDLE ROLLER BEARING

(a) Remove the 5th gear needle roller bearing and 5th gear bearing spacer from the input shaft.

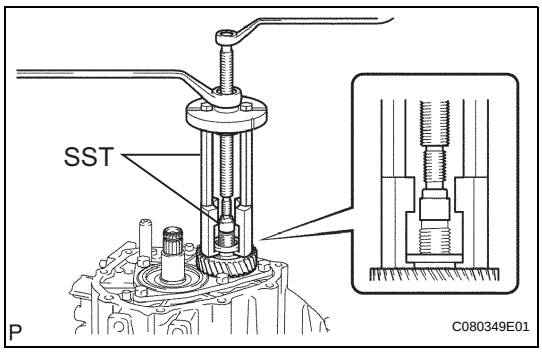

22. REMOVE 5TH DRIVEN GEAR

(a) Using SST, remove the 5th driven gear from the output shaft.
SST 09950-30012 (09951-03010, 09953-03010, 09954-03010, 09955-03021), 09950-60010 (09951-00180)

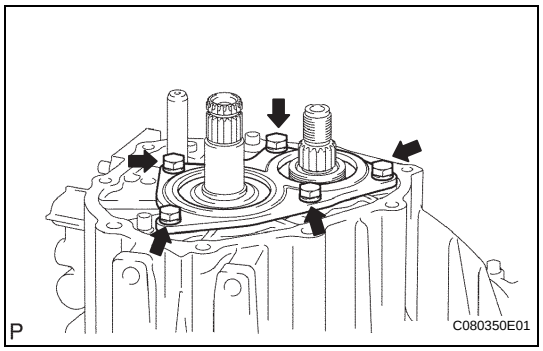

23. REMOVE BEARING RETAINER REAR

(a) Remove the 5 bolts and bearing retainer rear from the manual transmission case.

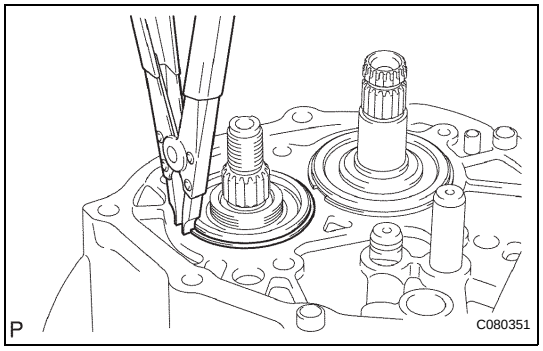

24. REMOVE OUTPUT SHAFT REAR BEARING HOLE SNAP RING

(a) Using a snap ring expander, remove the output shaft rear bearing hole snap ring from the output shaft.

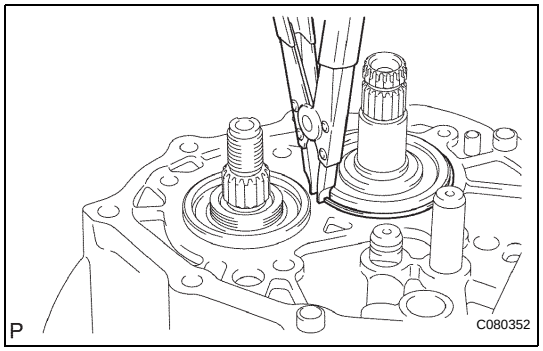

25. REMOVE INPUT SHAFT REAR BEARING HOLE SNAP RING

(a) Using a snap ring expander, remove the input shaft rear bearing hole snap ring from the input shaft.

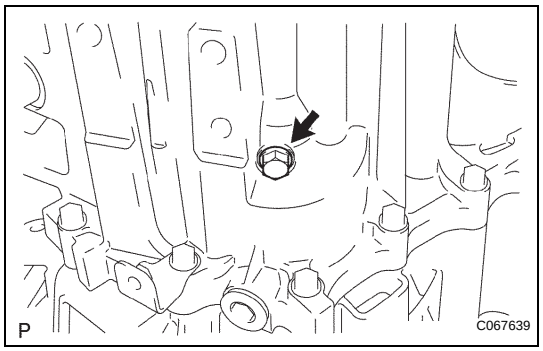

26. REMOVE REVERSE IDLER GEAR SHAFT BOLT

(a) Remove the reverse idler gear shaft bolt and reverse idler gear shaft gasket from the manual transmission case.

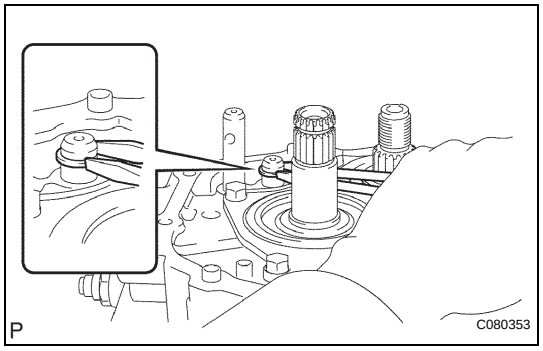

27. REMOVE SHIFT FORK SHAFT SHAFT SNAP RING

(a) Using 2 screwdrivers and a hammer, tap out the snap ring from gear shift fork shaft No. 2.
HINT:
Use a shop rag or piece of cloth to keep the snap ring from flying off.

MX

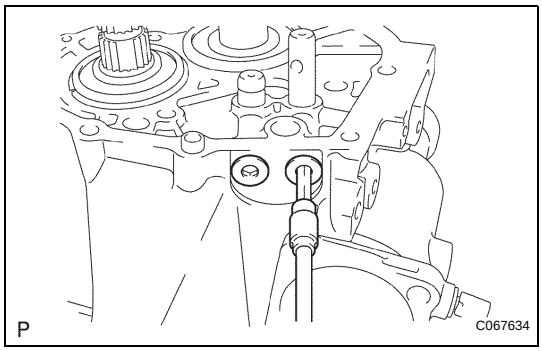

28. REMOVE SHIFT DETENT BALL

(a) Using a hexagon wrench, remove the 2 shift detent ball plugs from the manual transmission case.

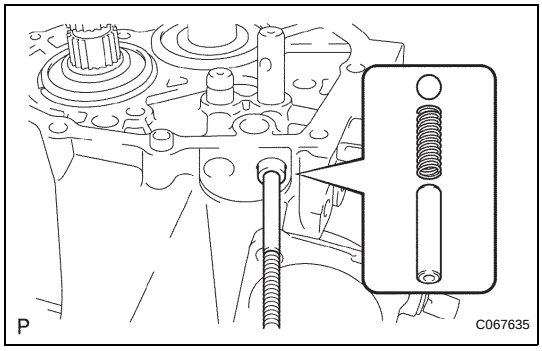

(b) Using a magnetic finger, remove the 2 shift detent ball spring seats No. 1, 2 shift detent ball springs and 2 shift detent balls from the manual transmission case.

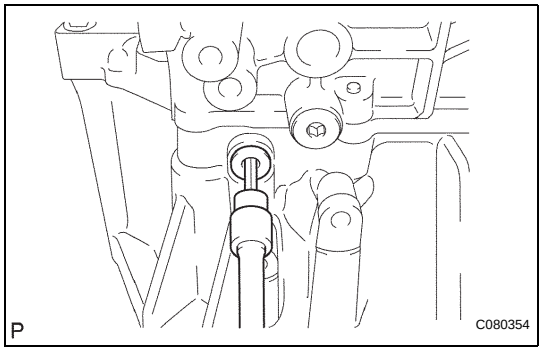

(c) Using a hexagon wrench, remove the shift detent ball plug from the front transaxle case.

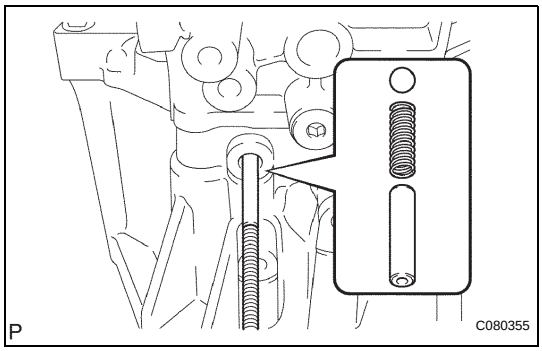

(d) Using a magnetic finger, remove the seat, spring and ball from the front transaxle case.

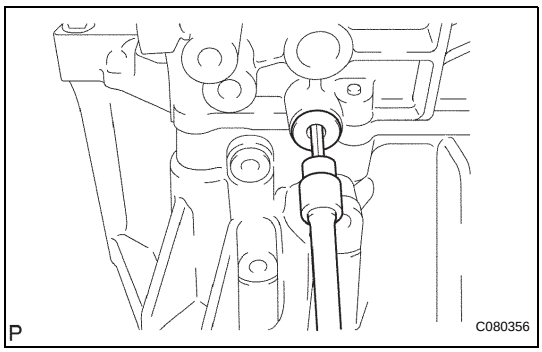

29. REMOVE LOCK BALL ASSEMBLY NO.2

(a) Using a hexagon wrench, remove lock ball assembly No. 2 from the manual transmission case.

MX

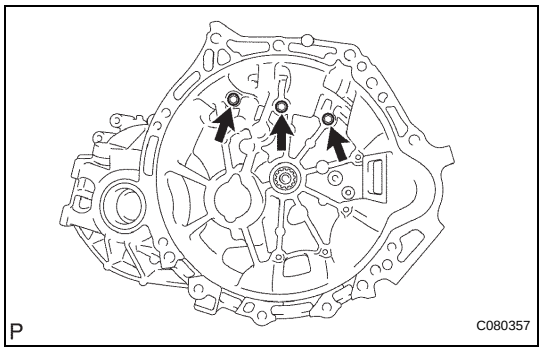

30. REMOVE MANUAL TRANSMISSION CASE

(a) Remove the 3 bolts from the front transaxle case.

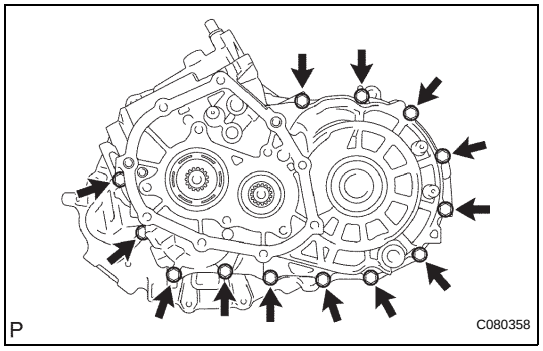

(b) Remove the 13 bolts from the manual transmission case.

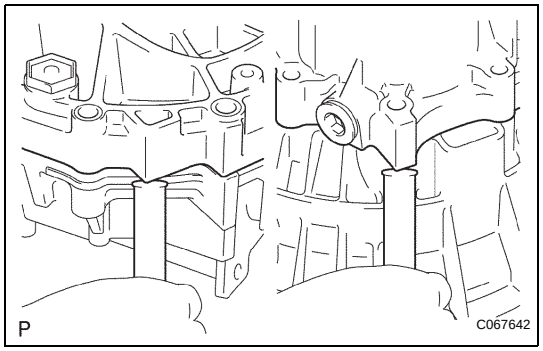

(c) Using a brass bar and a hammer, carefully tap the projections of the manual transmission case to remove the transmission case from the transaxle case.

NOTICE:
Do not damage the manual transmission case and transaxle case.

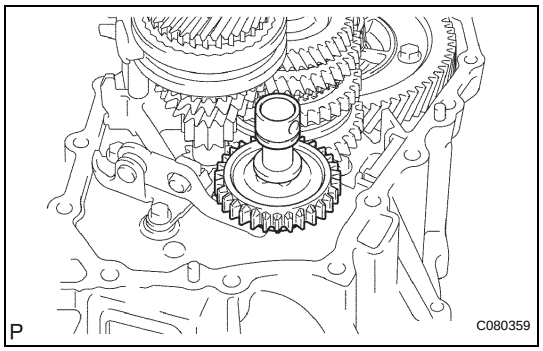

31. REMOVE REVERSE IDLER GEAR SUB-ASSEMBLY

(a) Remove the reverse idler gear sub-assembly, thrust washer and reverse idler gear shaft from the front transaxle case.

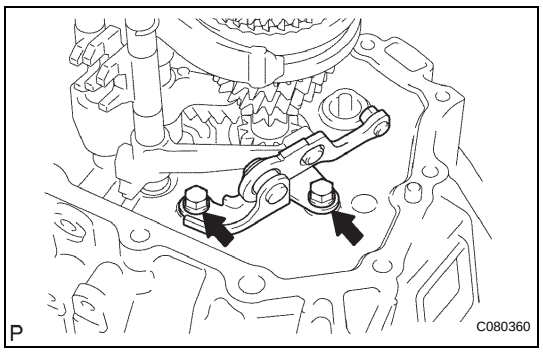

32. REMOVE REVERSE SHIFT ARM BRACKET ASSEMBLY

(a) Remove the 2 bolts and reverse shift arm bracket assembly from the front transaxle case.

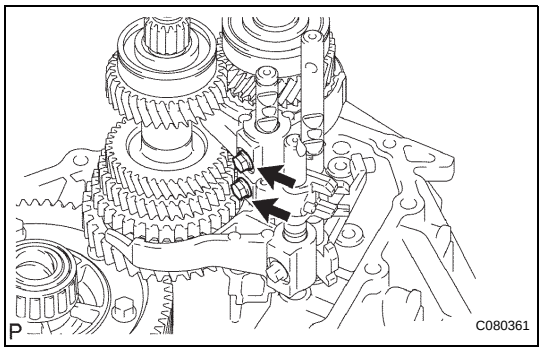

33. REMOVE GEAR SHIFT FORK SHAFT NO.2

(a) Remove the 2 bolts from gear shift fork No. 2 and gear shift head No. 1.

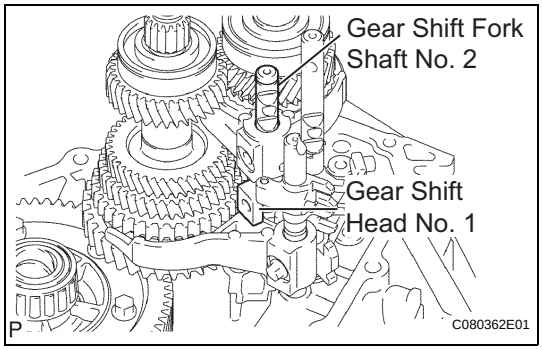

(b) Remove gear shift fork shaft No. 2 and gear shift head No. 1 from the front transaxle case.

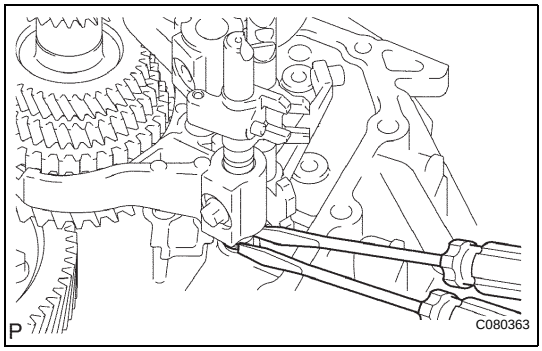

34. REMOVE GEAR SHIFT FORK SHAFT NO.1

(a) Using 2 screwdrivers and a hammer, tap out the snap ring.
HINT:
Use a shop rag or piece of cloth to keep the snap ring from flying off.

MX

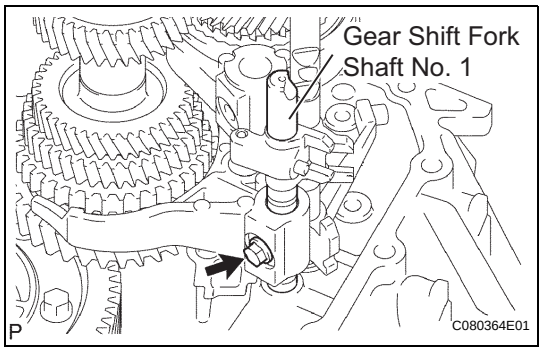

(b) Remove the shift fork set bolt and gear shift fork shaft No. 1 from gear shift fork No. 1.

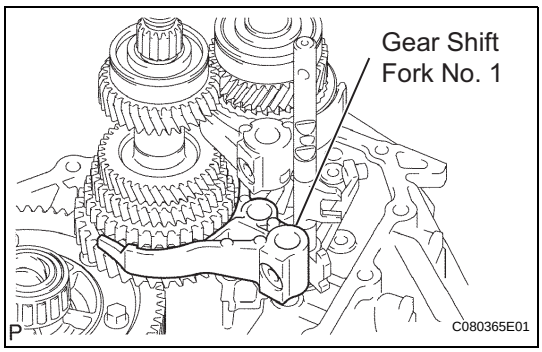

(c) Remove gear shift fork No. 1.

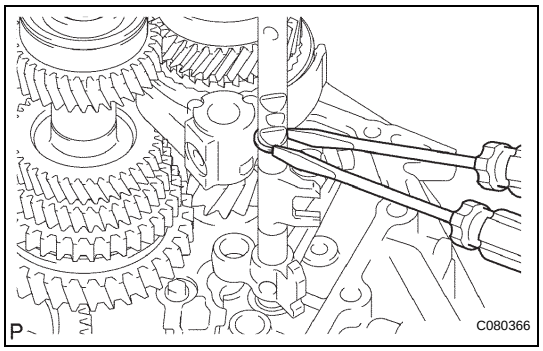

35. REMOVE GEAR SHIFT FORK SHAFT NO.3

(a) Using 2 screwdrivers and a hammer, tap out the snap ring from gear shift fork shaft No. 3.
HINT:
Use a shop rag or piece of cloth to keep the snap ring from flying off.

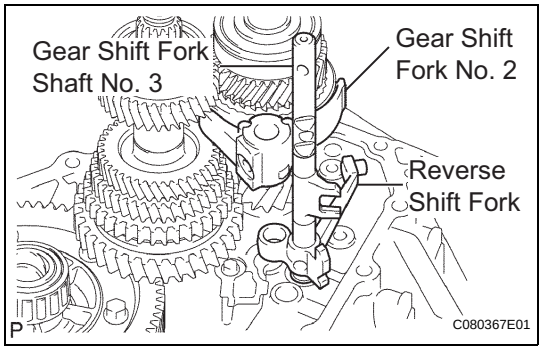

(b) Remove shift fork shaft No. 3 together with the reverse shift fork and gear shift fork No. 2 from the manual transaxle case.

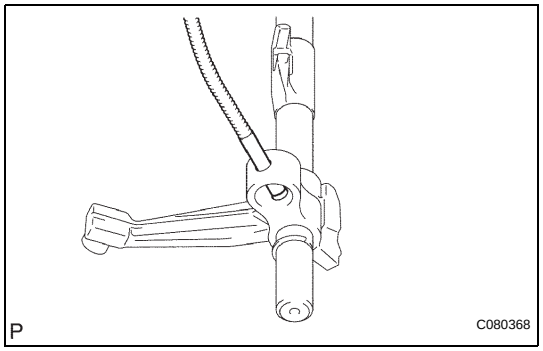

(c) Using a magnetic finger, remove the 2 reverse shift fork balls from the reverse shift fork.

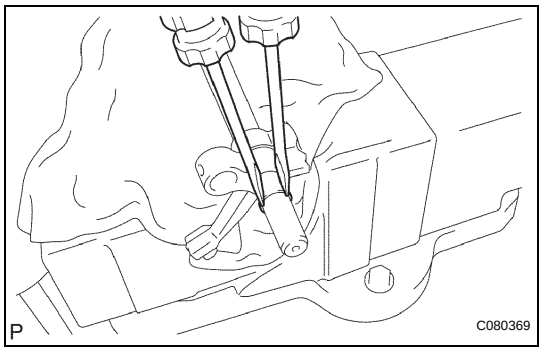

(d) Using 2 screwdrivers and a hammer, tap the snap ring out of shift fork shaft No. 3.
HINT:
Use a shop rag or piece of cloth to keep the snap ring from flying off.

(e) Remove the reverse shift fork from gear shift fork shaft No. 3.

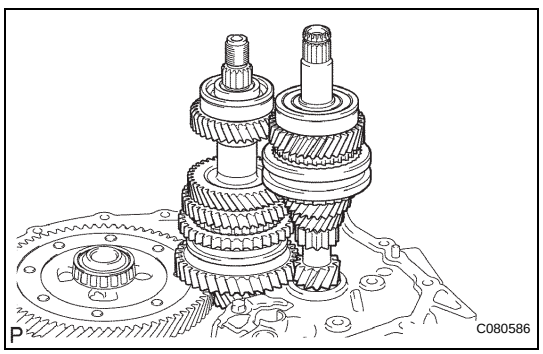

36. REMOVE INPUT SHAFT ASSEMBLY

(a) Remove the input shaft assembly and output shaft assembly from the front transaxle case.

MX

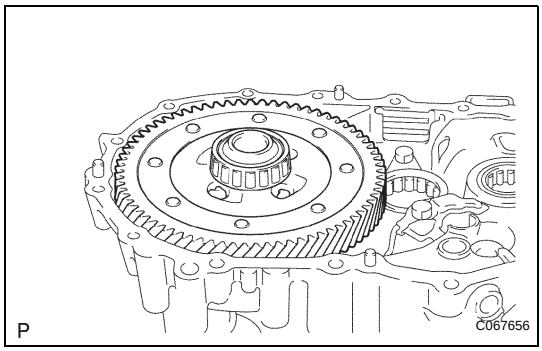

37. REMOVE DIFFERENTIAL CASE ASSEMBLY

(a) Remove the differential case assembly from the front transaxle case.

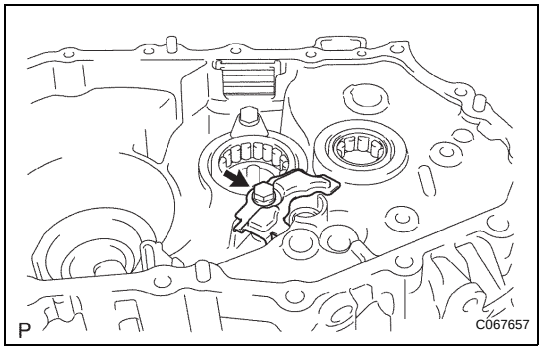

38. REMOVE MANUAL TRANSAXLE CASE RECEIVER

(a) Remove the bolt and manual transaxle case receiver from the front transaxle case.

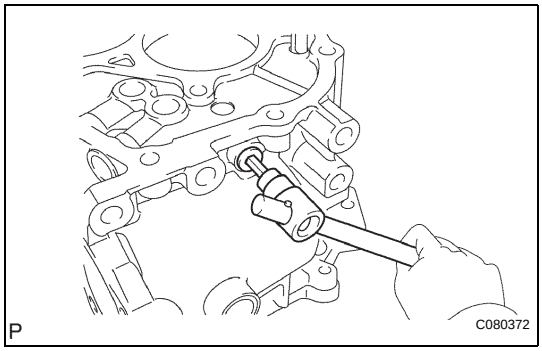

39. REMOVE REVERSE RESTRICT PIN ASSEMBLY

(a) Using a hexagon wrench, remove the reverse restrict pin plug from the manual transmission case.

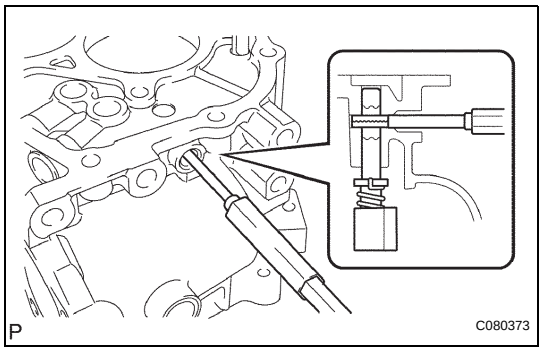

(b) Using a pin punch (ϕ5 mm) and a hammer, drive out the slotted spring pin and remove the reverse restrict pin assembly from the manual transmission case.

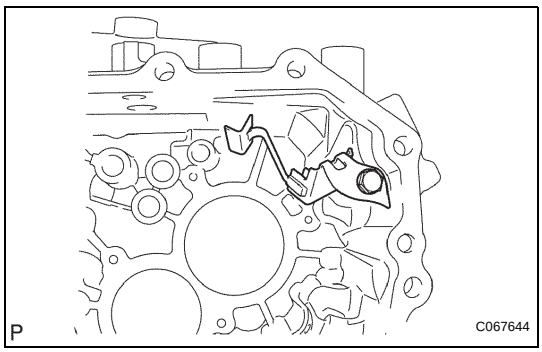

40. REMOVE OIL RECEIVER PIPE NO. 1

(a) Remove the bolt and oil receiver pipe No. 1 from the manual transmission case.

NOTICE:
Do not damage oil receiver pipe No. 1.

MX

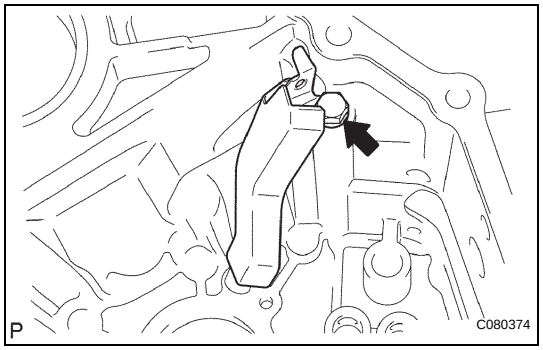

41. REMOVE OIL RECEIVER PIPE NO. 2

(a) Remove the bolt and oil receiver pipe No. 2 from the manual transmission case.

NOTICE:

Do not damage oil receiver pipe No. 2.

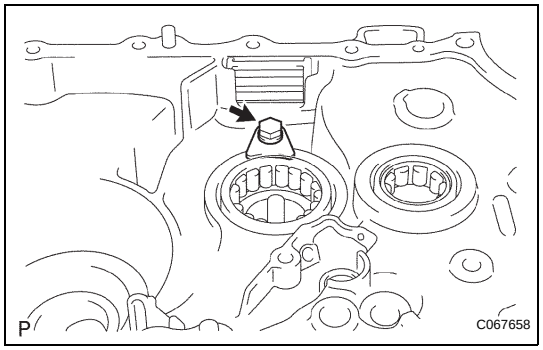

42. REMOVE BEARING LOCK PLATE

(a) Remove the bolt and bearing lock plate from the front transaxle case.

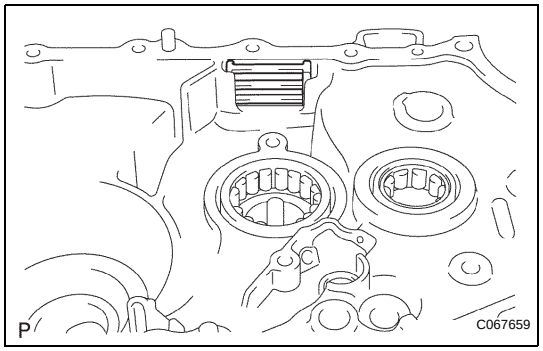

43. REMOVE TRANSMISSION MAGNET

(a) Remove the transmission magnet from the front transaxle case.

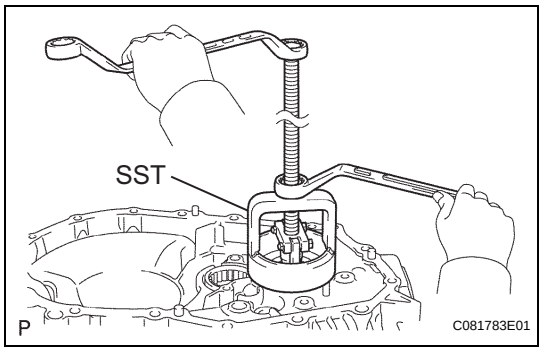

44. REMOVE INPUT SHAFT FRONT BEARING

(a) Using SST, remove the input shaft front bearing from the front transaxle case.

SST 09612-65014 (09612-01050, 09612-01060)

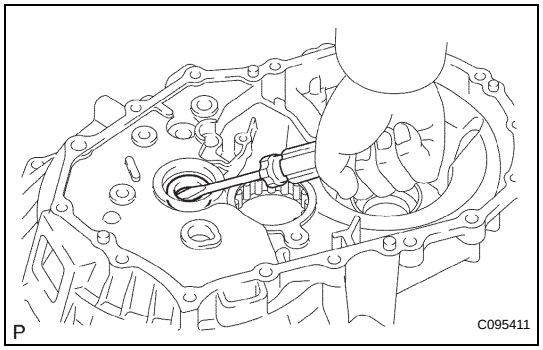

45. REMOVE FRONT TRANSAXLE CASE OIL SEAL

(a) Using a screwdriver, remove the front transaxle case oil seal from the transaxle case.

MX

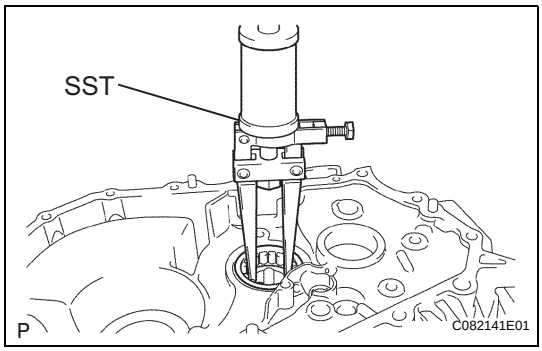

46. REMOVE OUTPUT SHAFT FRONT BEARING

(a) Using SST, remove the output shaft front bearing from the front transaxle case.

SST 09308-00010

NOTICE:

Do not apply excessive force to the front transaxle case when installing it.

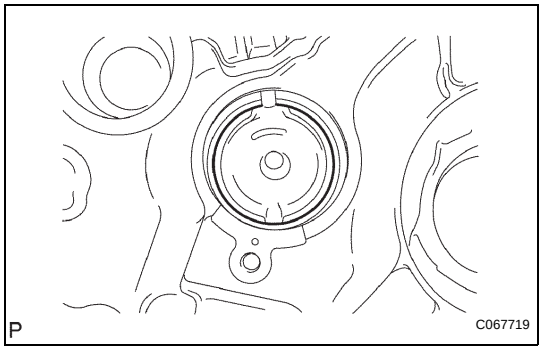

47. REMOVE OUTPUT SHAFT COVER

(a) Remove the output shaft cover from the front transaxle case.

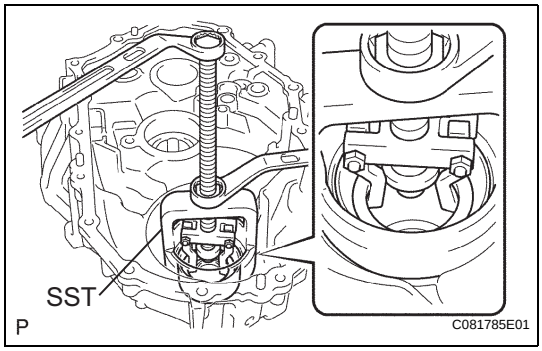

48. REMOVE FR DIFFERENTIAL CASE FRONT TAPERED ROLLER BEARING

(a) Using SST, remove the front differential case front tapered roller bearing (outer race) and plate washer from the front transaxle case.

SST 09612-65014 (09612-01040, 09612-01050)

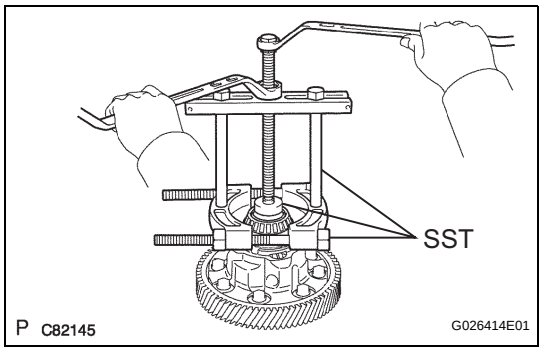

(b) Using SST, remove the front differential case front tapered roller bearing (inner race) from the differential case assembly.

SST 09950-00020, 09950-00030, 09950-40011 (09957-04010), 09950-60010 (09951-00360)

NOTICE:

Do not damage the bearing.

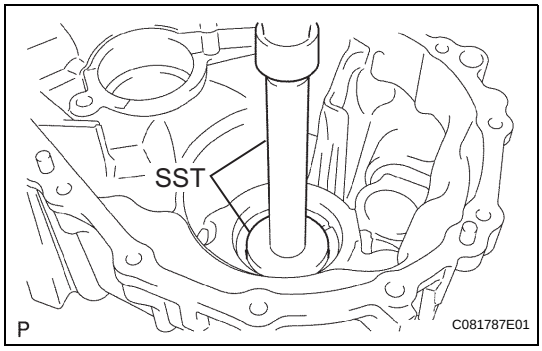

49. REMOVE TRANSAXLE CASE OIL SEAL

(a) Using SST and a hammer, remove the transaxle case oil seal from the front transaxle case.

SST 09950-60010 (09951-00530), 09950-70010 (09951-07150)

MX

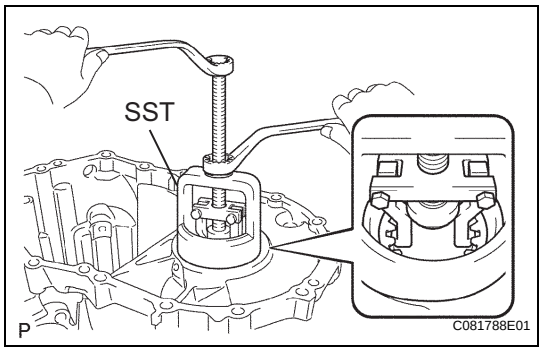

50. REMOVE FR DIFFERENTIAL CASE REAR TAPERED ROLLER BEARING

(a) Using SST, remove the front differential case rear tapered roller bearing (outer race) and plate washer from the transmission case.

SST 09612-65014 (09612-01040, 09612-01050)

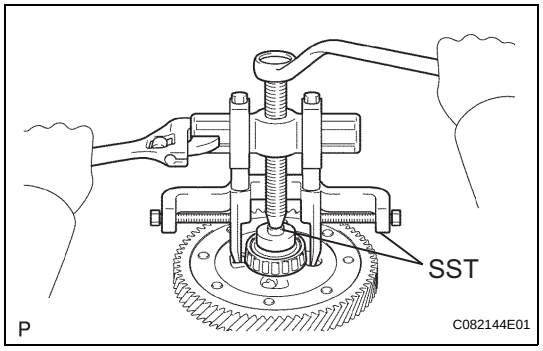

(b) Using SST, remove the front differential case rear tapered roller bearing (inner race) from the front differential case.

SST 09950-40011 (09951-04010, 09952-04010, 09953-04020, 09954-04010, 09955-04061, 09957-04010, 09958-04011), 09950-60010 (09951-00360)

NOTICE:

Do not damage the bearing.

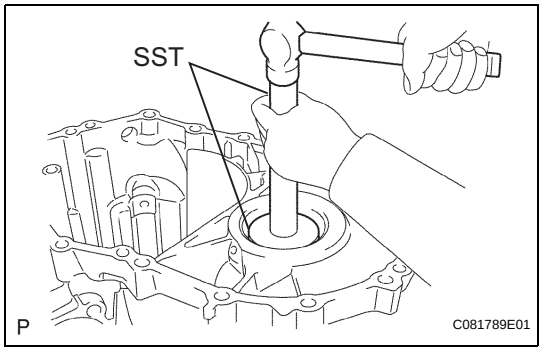

51. REMOVE TRANSMISSION CASE OIL SEAL

(a) Using SST and a hammer, drive out the transmission case oil seal from the manual transmission case.

SST 09950-60010 (09951-00530), 09950-70010 (09951-07150)

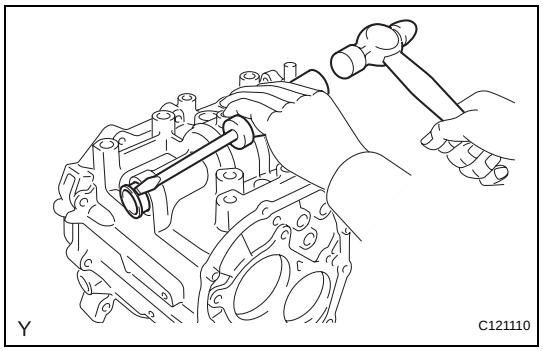

52. REMOVE SHIFT AND SELECT LEVER SHAFT OIL SEAL

(a) Using a screwdriver and hammer, remove the shift and select lever shaft oil seal.

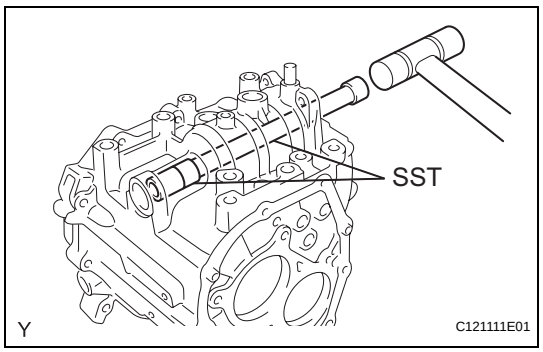

53. REMOVE SHIFT AND SELECT LEVER SHAFT SLIDE BALL BEARING

(a) Using SST and a hammer, remove the shift and select lever shaft slide ball bearing.

SST 09950-60010 (09951-00220), 09950-70010 (09951-07200)

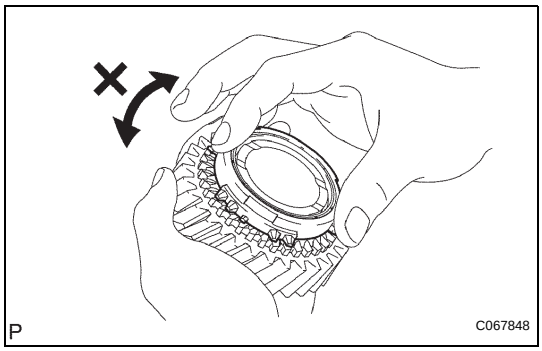

INSPECTION

1. INSPECT SYNCHRONIZER RING NO.3

(a) Check for wear and damage.
(b) Coat the 5th gear cone with gear oil.
(c) Turn the synchronizer ring in one direction while pushing it against the 5th gear cone.
(d) Check that the ring locks.
If the synchronizer ring does not lock, replace the synchronizer ring.

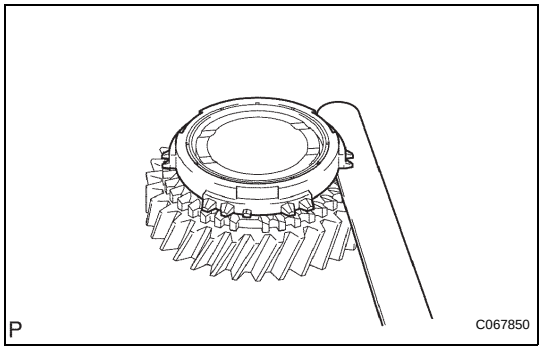

(e) Using a feeler gauge, measure the clearance between the synchronizer ring back and the gear spline end.
Minimum clearance:
0.75 mm (0.0295 in.)
If the clearance is less than the minimum, replace the synchronizer ring.

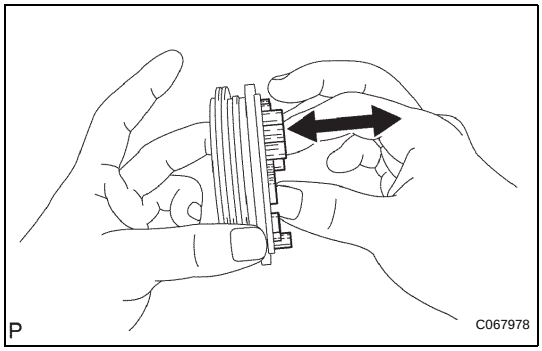

2. INSPECT TRANSMISSION HUB SLEEVE NO.3

(a) Check the sliding condition between transmission hub sleeve No. 3 and transmission clutch hub No. 3.
(b) Check that the edges of the transmission hub sleeve No. 3 spline gear are not worn down.

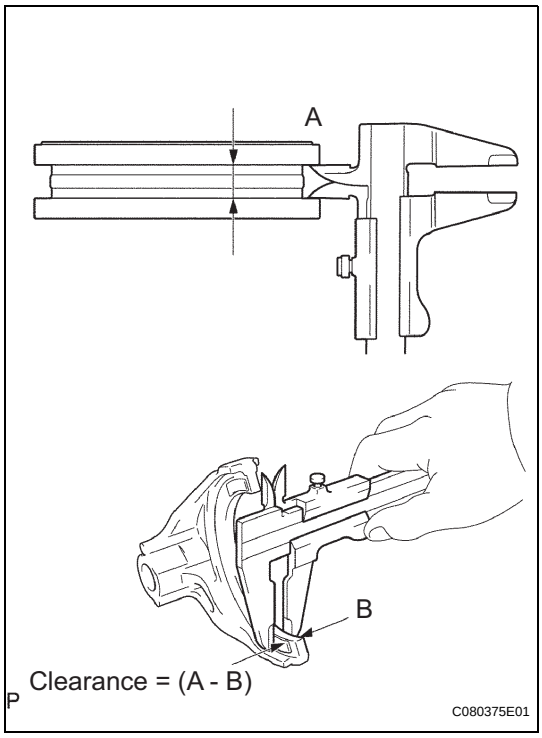

(c) Using vernier calipers, measure the width of the transmission hub sleeve No. 3 groove (A) and the thickness of the claw part on the gear shift fork No. 3 (B), and calculate the clearance.
Standard clearance (A - B):
0.3 to 0.5 mm (0.012 to 0.0020 in.)
If the clearance exceeds the standard, replace transmission hub sleeve No. 3 and gear shift fork No. 3.

MX

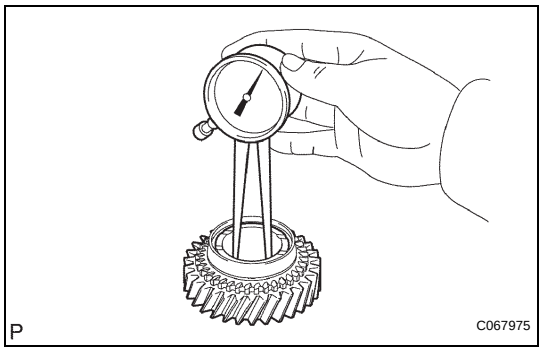

3. INSPECT 5TH GEAR

(a) Using a caliper gauge, measure the inside diameter of the 5th gear.

Standard inside diameter:
29.915 to 29.931 mm (1.1778 to 1.1783 in.)
Maximum inside diameter:
29.931 mm (1.1783 in.)

If the inside diameter exceeds the maximum, replace the 5th gear.

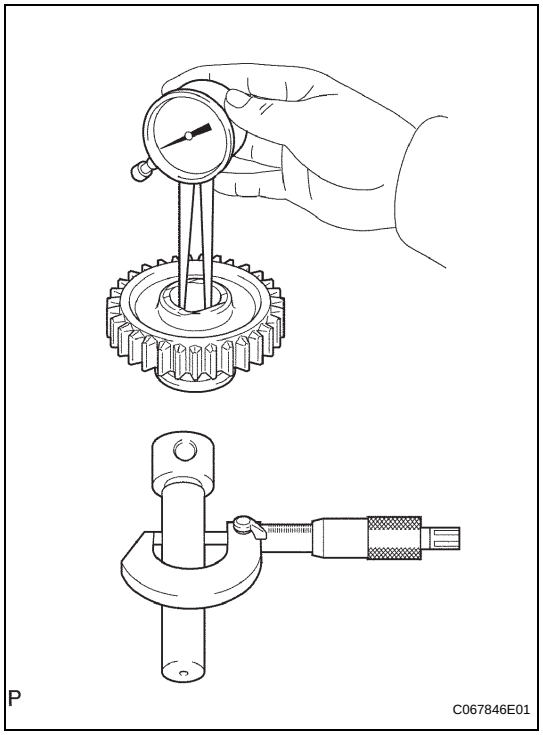

4. INSPECT REVERSE IDLER GEAR SUB-ASSEMBLY

(a) Using a caliper gauge, inspect the reverse idle gear.

Standard inside diameter:
18.040 to 18.058 mm (0.7102 to 0.7109 in.)
Maximum inside diameter:
18.058 mm (0.7109 in.)

If the inside diameter exceeds the maximum, replace the reverse idler gear sub-assembly.

(b) Using a micrometer, inspect the reverse idler gear shaft as shown in the illustration.

Standard outer diameter:
17.966 to 17.984 mm (0.7073 to 0.7080 in.)
Minimum outer diameter:
17.966 mm (0.7073 in.)

If the outer diameter is less than the minimum, replace the reverse idler gear shaft.

REASSEMBLY

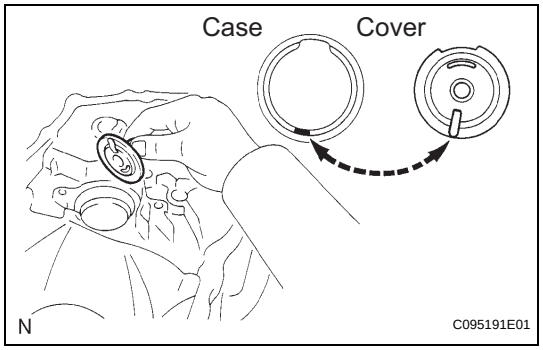

1. INSTALL OUTPUT SHAFT COVER

(a) Coat the output shaft cover with MP grease and install it onto the front transaxle case.

NOTICE:
Insert the output shaft cover projection into the case side hollow.

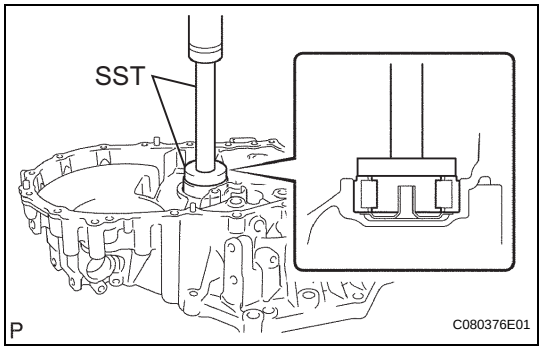

2. INSTALL OUTPUT SHAFT FRONT BEARING

(a) Coat a new output shaft front bearing with gear oil. Using SST and a press, install it onto the front transaxle case.

SST 09950-60010 (09951-00550), 09950-70010 (09951-07150)

NOTICE:

- **Install the new bearing in the correct direction, as shown in the illustration.**

MX

- **When replacing the output shaft front bearing, replace the output shaft front bearing inner race at the same time.**

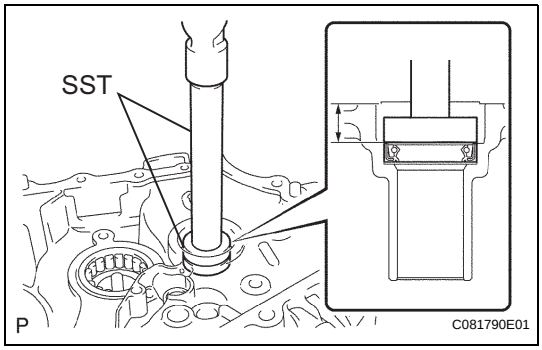

3. INSTALL FRONT TRANSAXLE CASE OIL SEAL

(a) Using SST and a hammer, install a new front transaxle case oil seal onto the front transalxe case.

SST 09950-60010 (09951-00370), 09950-70010 (09951-07150)

Drive in depth:

15.6 to 16.0 mm (0.6141 to 0.6299 in.)

(b) Coat the lip of the front transaxle case oil seal with MP grease.

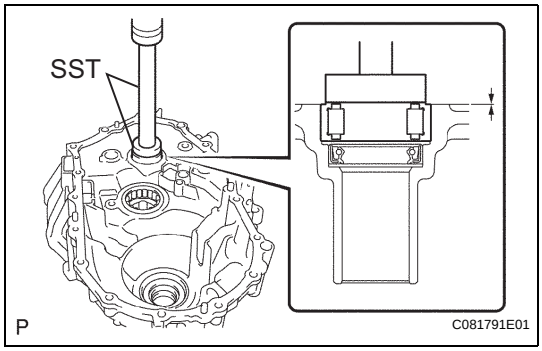

4. INSTALL INPUT SHAFT FRONT BEARING

(a) Coat a new input shaft front bearing with gear oil, and using SST and a press, install it onto the front transaxle case.

SST 09950-60010 (09951-00420), 09950-70010 (09951-07150)

Drive in depth:

0 to 0.3 mm (0 to 0.0118 in.)

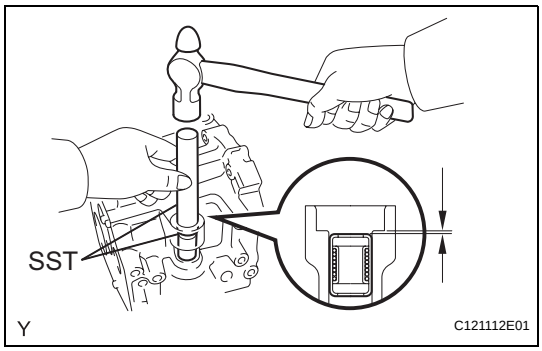

5. INSTALL SHIFT AND SELECT LEVER SHAFT SLIDE BALL BEARING

(a) Using SST and a hammer, install the shift and select lever shaft slide ball bearing onto the transmission case.

SST 09950-60010 (09951-00220), 09950-70010 (09951-07100)

Drive in depth:

0 to 0.5 mm (0 to 0.0020 in.)

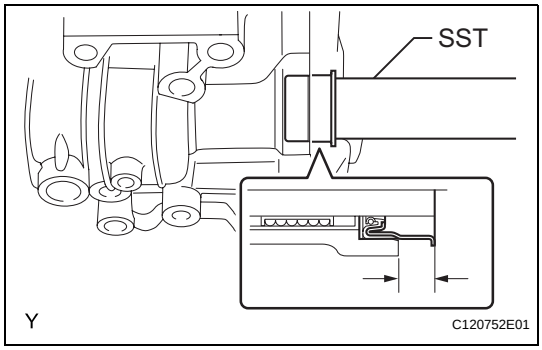

6. INSTALL SHIFT AND SELECT LEVER SHAFT OIL SEAL

(a) Using SST, install the shift and select lever shaft oil seal onto the transmission case.

SST 09950-70010 (09951-07150), 09950-60010 (09951-00240)

Drive in depth:

9.7 to 10.3 mm (0.382 to 0.406 in.)

MX

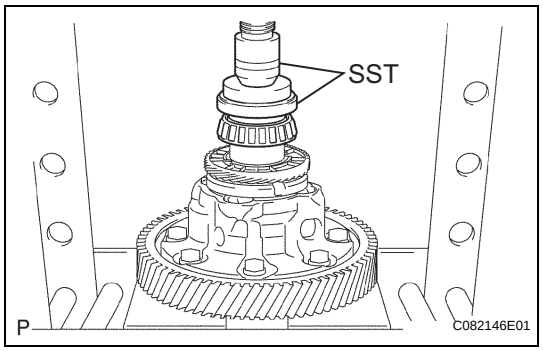

7. INSTALL FR DIFFERENTIAL CASE FRONT TAPERED ROLLER BEARING

(a) Using SST and a press, install the front differential case front tapered roller bearing (inner race) onto the front differential case.

SST 09350-32014 (09351-32120), 09950-60010 (09951-00530)

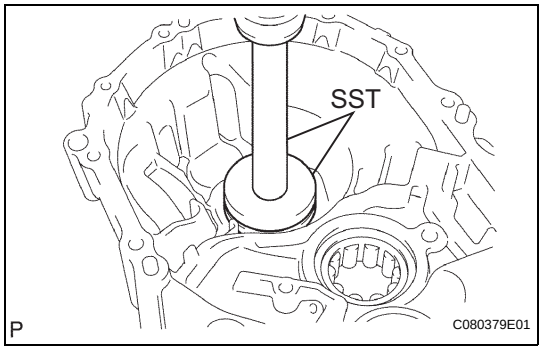

(b) Using SST and a press, install the front differential case front tapered roller bearing (outer race) together with the plate washer onto the front transaxle case.

SST 09950-60020 (09951-00680), 09950-70010 (09951-07150)

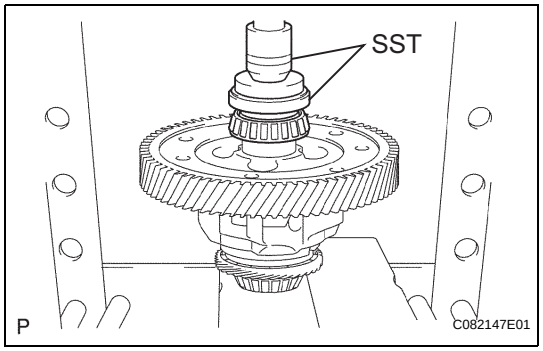

8. INSTALL FR DIFFERENTIAL CASE REAR TAPERED ROLLER BEARING

(a) Using SST and a press, install the front differential case rear tapered roller bearing (inner race) onto the differential case.

SST 09350-32014 (09351-32120), 09950-60010 (09951-00530)

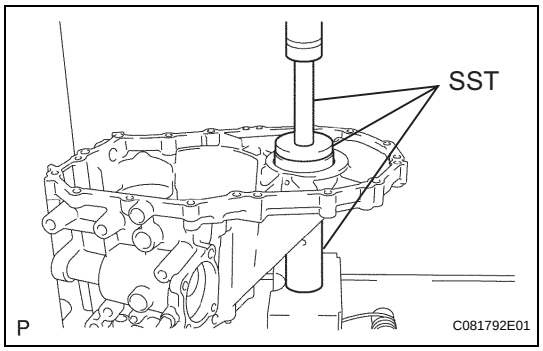

(b) Using SST and a press, install the front differential case rear tapered roller bearing (outer race) with plate washer onto the transmission case.

SST 09309-36010, 09950-60020 (09951-00710), 09950-70010 (09951-07150)

HINT:

Use a plate washer of the same thickness as the removed one.

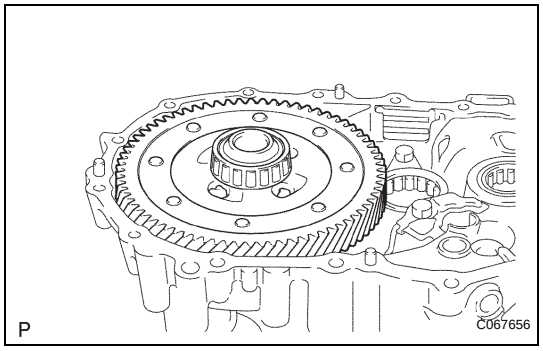

9. ADJUST DIFFERENTIAL SIDE BEARING PRELOAD

(a) Coat the differential case assembly with gear oil, and install it onto the front transaxle case.

(b) Install the manual transmission case with the 16 bolts.

Torque: 29 N*m (300 kgf*cm, 22 ft.*lbf)

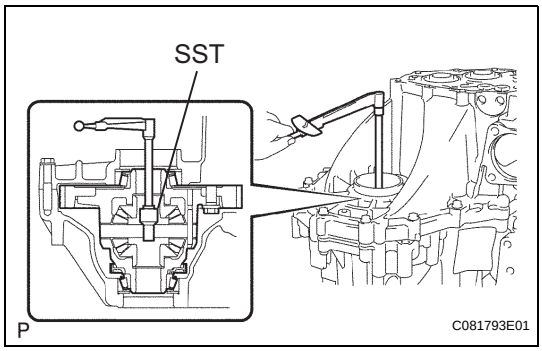

(c) Using SST and a torque wrench, turn the differential case assembly to the right and left 2 or 3 times to allow the bearings to settle.
SST 09564-32011

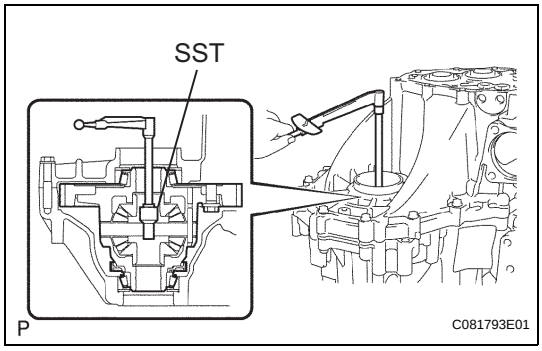

(d) Using SST and a torque wrench, measure the preload.
SST 09564-32011
Preload (at starting):
New bearing:
0.78 to 1.57 N*m (7.95 to 16.0 kgf*cm, 6.9 to 13.89 in.*lbf)
Used bearing:
0.49 to 0.98 N*m (5.0 to 10.0 kgf*cm, 4.34 to 8.67 in.*lbf)
If the preload is outside the specifications, select another plate washer.
Plate washer thickness

Mark	Thickness mm (in.)	Mark	Thickness mm (in.)
AA	2.10 (0.0827)	LL	2.60 (0.1024)
BB	2.15 (0.0846)	MM	2.65 (0.1043)
CC	2.20 (0.0866)	NN	2.70 (0.1063)
DD	2.25 (0.0886)	PP	2.75 (0.1083)
EE	2.30 (0.0906)	QQ	2.80 (0.1102)
FF	2.35 (0.0925)	RR	2.85 (0.1122)
GG	2.40 (0.0945)	SS	2.90 (0.1142)
HH	2.45 (0.0965)	TT	2.95 (0.1161)
JJ	2.50 (0.0984)	UU	3.00 (0.1181)
KK	2.55 (0.1004)	-	-

HINT:
The preload changes by approximately 0.3 to 0.4 N*m (3 to 4 kgf*cm, 2.6 to 3.5 in.*lbf) per each 0.05 mm (0.0020 in.) change in plate washer thickness.

(e) Remove the 16 bolts and the manual transmission case.

(f) Remove the differential case assembly from the front transaxle case.

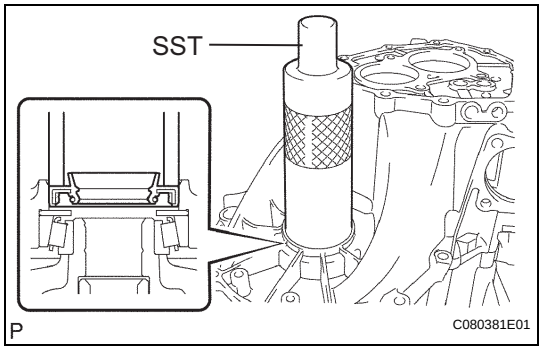

10. INSTALL TRANSMISSION CASE OIL SEAL

(a) Using SST and a hammer, install a new transmission case oil seal onto the manual transmission case.
SST 09316-60011 (09316-00011)
Drive in depth:
9.6 to 10.2 mm (0.378 to 0.402 in.)

(b) Coat the lip of the front transmission case oil seal with MP grease.

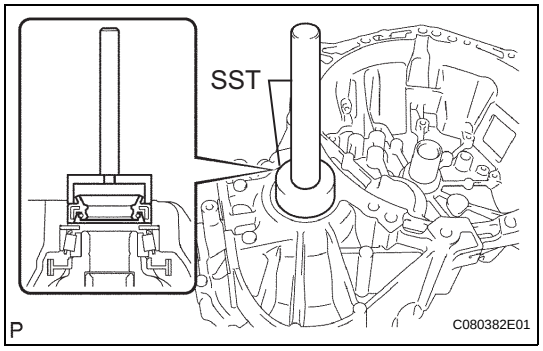

11. INSTALL TRANSAXLE CASE OIL SEAL

(a) Using SST and a hammer, install a new transaxle case oil seal onto the front transaxle case.
Drive in depth:
1.6 to2.2 mm (0.063 to 0.087 in.)
SST 09710-20011 (09710-06071), 09950-70010 (09951-07150)

(b) Coat the lip of the transaxle case oil seal with MP grease.

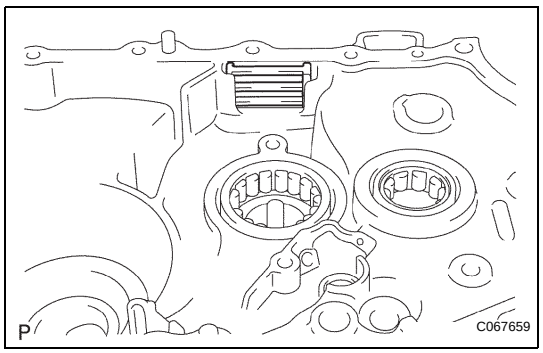

12. INSTALL TRANSMISSION MAGNET

(a) Clean the transmission magnet and install it onto the front transaxle case.

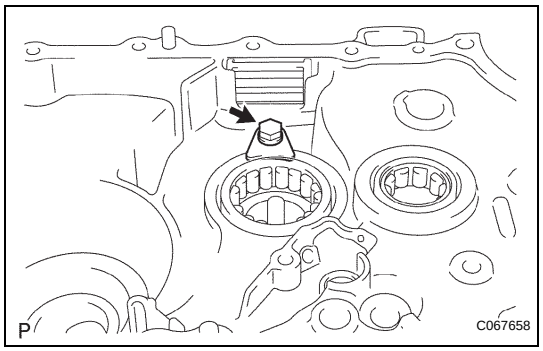

13. INSTALL BEARING LOCK PLATE

(a) Install the bearing lock plate onto the front transaxle case with the bolt.
Torque: 11 N*m (115 kgf*cm, 8.3 ft.*lbf)

MX

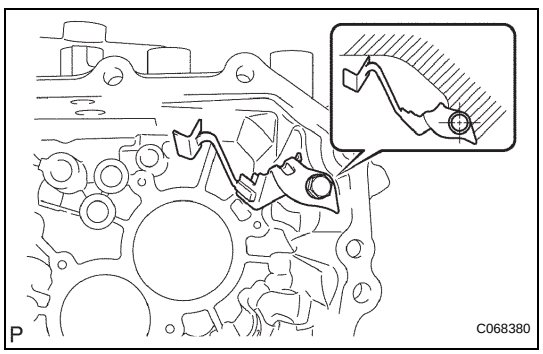

14. INSTALL OIL RECEIVER PIPE NO. 1

(a) Install oil receiver pipe No. 1 onto the manual transmission case with the bolt.
Torque: 17 N*m (175 kgf*cm, 13 ft.*lbf)
NOTICE:
- **Do not deform oil receiver pipe No. 1.**
- **Install the oil receiver pipe No. 1 while holding it against the manual transmission case, as shown in the illustration.**

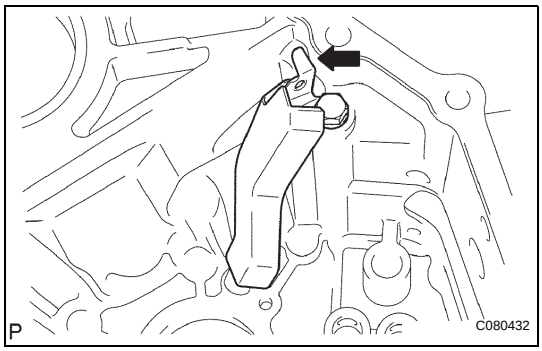

15. INSTALL OIL RECEIVER PIPE NO. 2

(a) Install the oil receiver pipe No. 2 onto the manual transmission case with the bolt.
Torque: 17 N*m (175 kgf*cm, 13 ft.*lbf)
NOTICE:
- **Do not deform oil receiver pipe No. 2.**
- **Install the oil receiver pipe No. 2 while holding it against the manual transmission case, as shown in the illustration.**

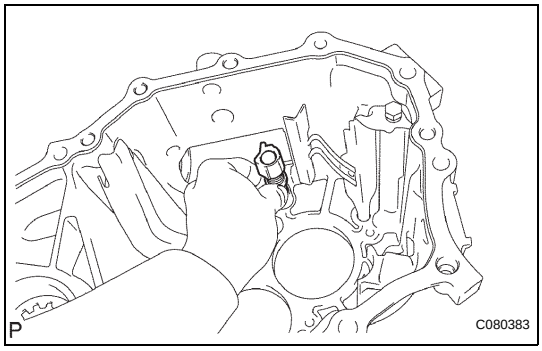

16. INSTALL REVERSE RESTRICT PIN ASSEMBLY

(a) Install the reverse restrict pin assembly onto the manual transmission case.
NOTICE:
Set the reverse restrict pin assembly in the correct orientation.

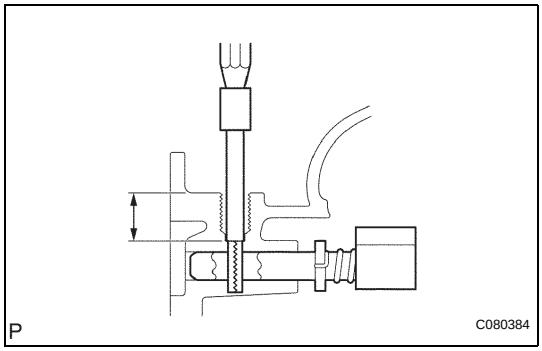

(b) Using a pin punch (ϕ5 mm) and a hammer, install the slotted pin onto the reverse restrict pin assembly.
Drive in depth:
15.5 to 16.5 mm (0.6102 to 0.6496 in.)

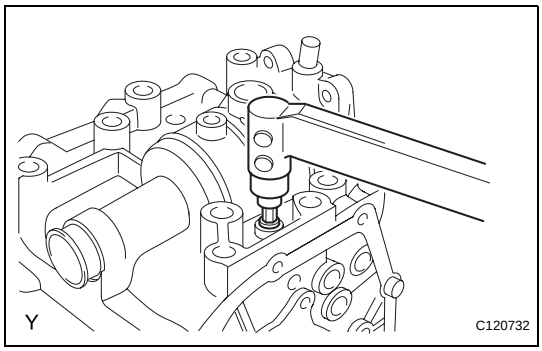

(c) Apply sealant to the reverse restrict pin plug.
Sealant:
Toyota Genuine Adhesive 1344, Three Bond 1344 or Equivalent

(d) Using a hexagon wrench and a torque wrench, install the reverse restrict pin plug onto the manual transmission case.
Torque: 13 N*m (130 kgf*cm, 9.3 ft.*lbf)

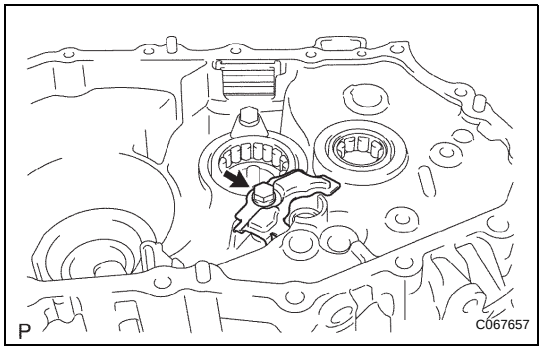

17. INSTALL MANUAL TRANSAXLE CASE RECEIVER

(a) Install the manual transaxle case receiver onto the front transaxle case with the bolt.
Torque: 11 N*m (115 kgf*cm, 8.3 ft.*lbf)

MX

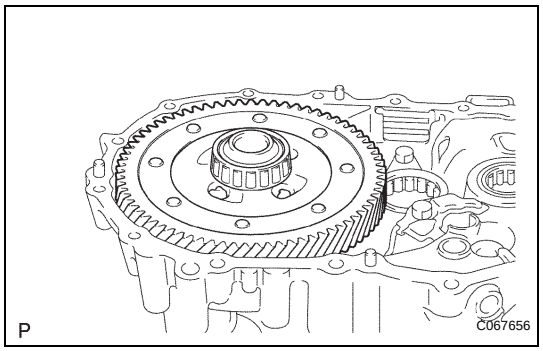

18. INSTALL DIFFERENTIAL CASE ASSEMBLY

(a) Coat the differential case tapered roller bearing with gear oil and install the differential case assembly onto the front transaxle case.

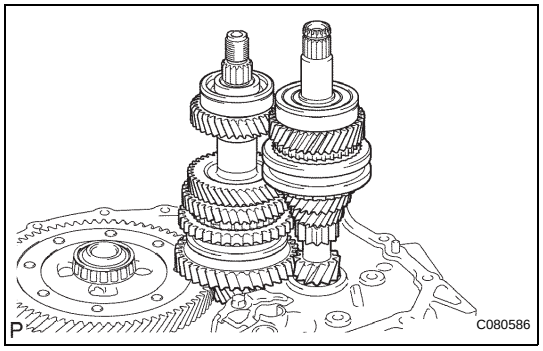

19. INSTALL INPUT SHAFT ASSEMBLY

(a) Coat the sliding and rotating surfaces of the input and output shafts with gear oil and install them onto the transaxle case.

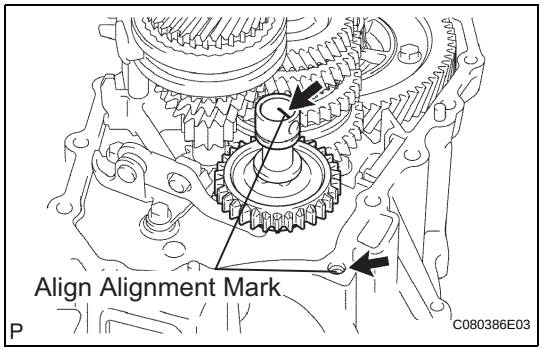

20. INSTALL REVERSE IDLER GEAR SUB-ASSEMBLY

(a) Coat the reverse idler gear sub-assembly, thrust washer and reverse idler gear shaft with gear oil and install them as shown in the illustration.
HINT:
Align the mark on the reverse idler gear shaft with the bolt hole shown in the illustration.

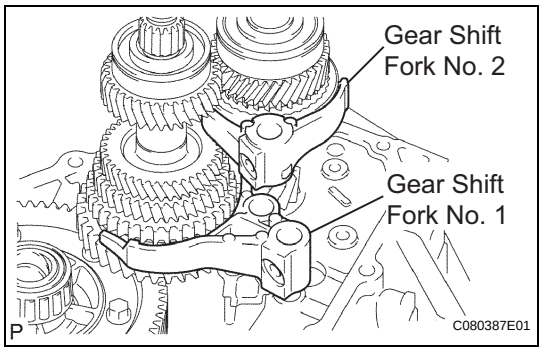

21. INSTALL GEAR SHIFT FORK SHAFT NO.1

(a) Coat gear shift fork No. 1 and gear shift fork No. 2 with gear oil and install them.

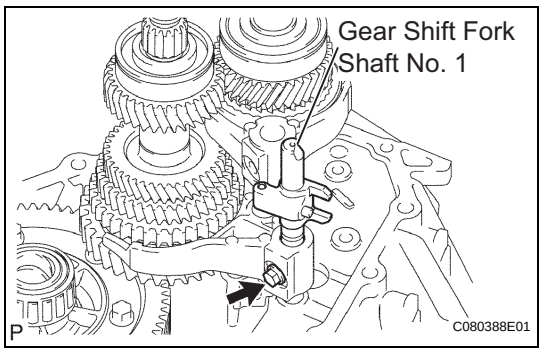

(b) Coat gear shift fork shaft No. 1 with gear oil and install it.

(c) Apply sealant to the shift fork set bolt.
Sealant:
Toyota Genuine Adhesive 1344, Three Bond 1344 or Equivalent

(d) Install the shift fork set bolt.
Torque: 16 N*m (160 kgf*cm, 12 ft.*lbf)

MX

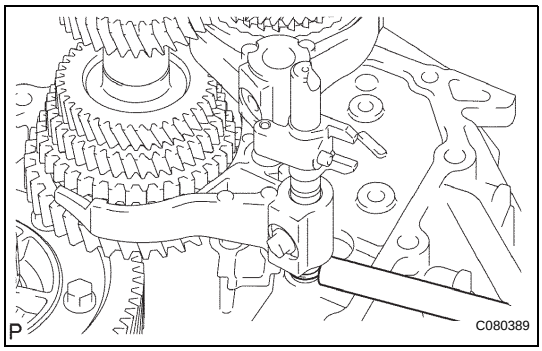

(e) Using a brass bar and a hammer, install a new shaft snap ring onto gear shift fork shaft No. 1.

22. INSTALL GEAR SHIFT FORK SHAFT NO.3

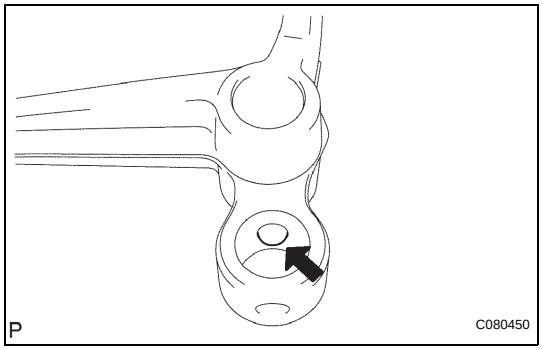

(a) Coat the 2 shift fork balls with MP grease and install them onto the reverse shift fork.

(b) Install the reverse shift fork onto gear shift fork shaft No. 3.

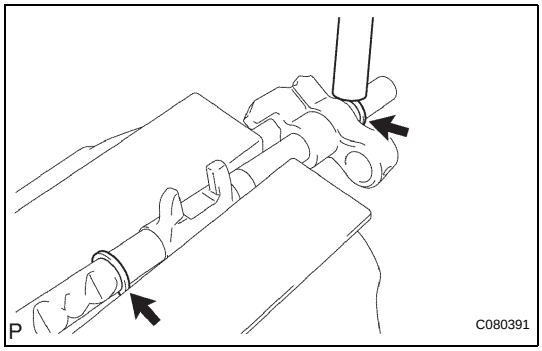

(c) Using a brass bar and a hammer, install 2 new shift fork shaft snap rings onto shift fork shaft No. 3.

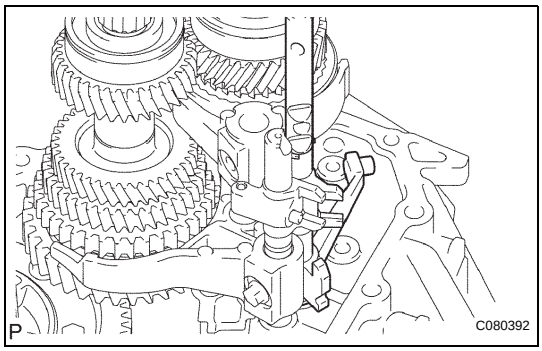

(d) Coat gear shift fork shaft No. 3 with gear oil and install it.

MX

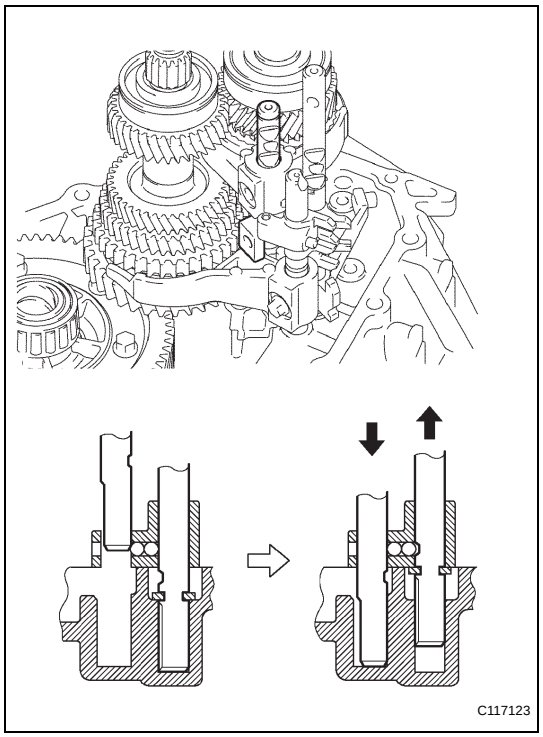

23. INSTALL GEAR SHIFT FORK SHAFT NO.2

(a) Coat gear shift head No. 1 and gear shift fork shaft No. 2 with gear oil and install them.

NOTICE:

To avoid interference by the 2 shift fork balls, lift up gear shift fork shaft No. 3 to the position shown in the illustration.

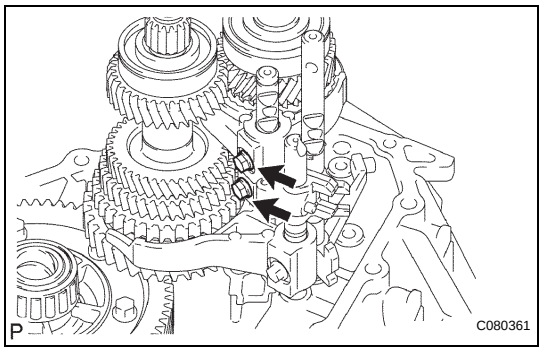

(b) Coat the 2 shift lock bolts with sealant and install them onto gear shift fork No. 2 and shift head No. 1.

Sealant:

Toyota Genuine Adhesive 1344, Three Bond 1344 or Equivalent

Torque: 16 N*m (160 kgf*cm, 12 ft.*lbf)

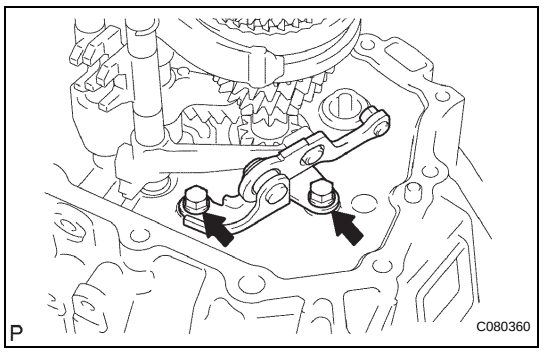

24. INSTALL REVERSE SHIFT ARM BRACKET ASSEMBLY

(a) Install the reverse shift arm bracket assembly onto the front transaxle case with 2 bolts.

Torque: 17 N*m (175 kgf*cm, 13 ft.*lbf)

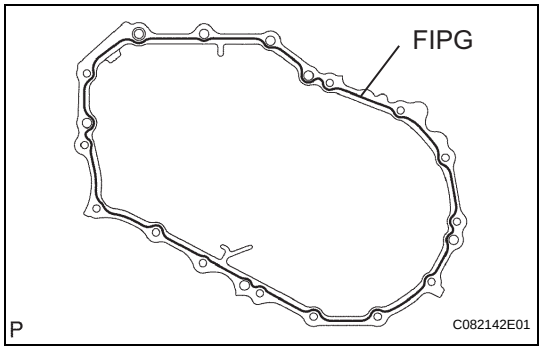

25. INSTALL MANUAL TRANSMISSION CASE

(a) Apply FIPG to the manual transmission case, as shown in the illustration.

FIPG:

Toyota Genuine Seal Packing 1281, Three Bond 1281 or Equivalent

NOTICE:

Assemble the parts within 10 minutes of application. Otherwise, the packing (FIPG) material must be removed and reapplied.

MX

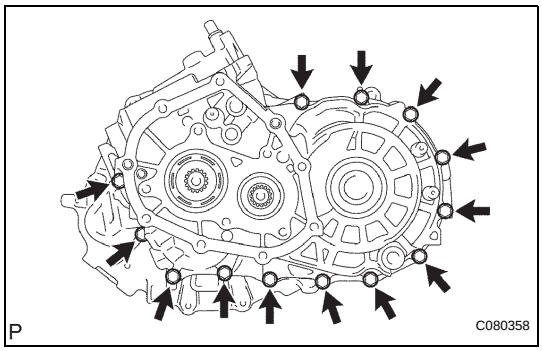

(b) Install the 13 bolts onto the manual transmission side.
Torque: 29 N*m (300 kgf*cm, 22 ft.*lbf)

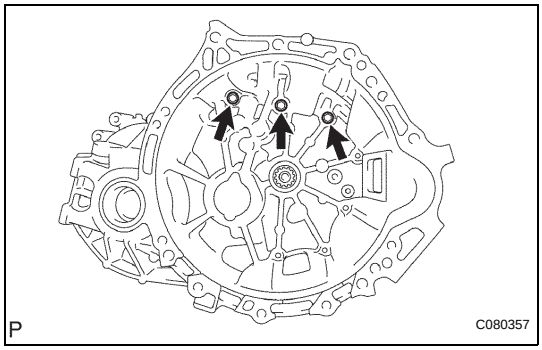

(c) Install the 3 bolts onto the manual transaxle side.
Torque: 29 N*m (300 kgf*cm, 22 ft.*lbf)

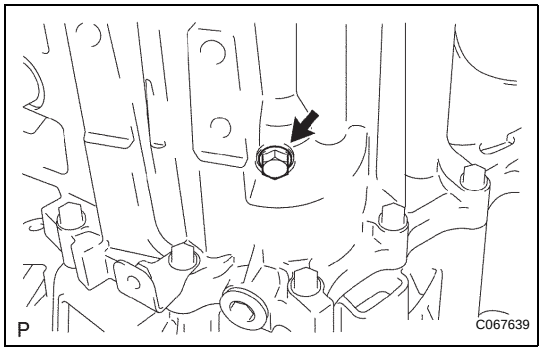

26. INSTALL REVERSE IDLER GEAR SHAFT BOLT

(a) Coat the reverse idler gear shaft bolt with sealant and install it with a new gasket.
Sealant:
Toyota Genuine Adhesive 1344, Three Bond 1344 or Equivalent
Torque: 29 N*m (300 kgf*cm, 22 ft.*lbf)

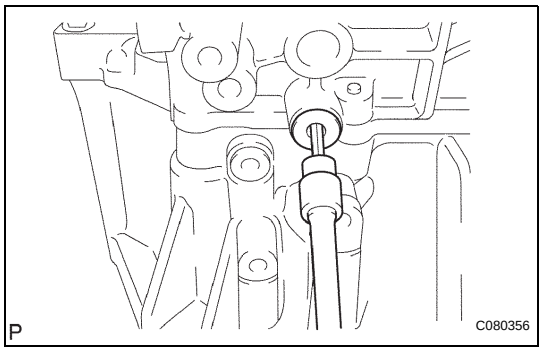

27. INSTALL LOCK BALL ASSEMBLY NO.2

(a) Coat lock ball assembly No. 2 with sealant and install it with a hexagon wrench.
Sealant:
Toyota Genuine Adhesive 1344, Three Bond 1344 or Equivalent
Torque: 29 N*m (300 kgf*cm, 22 ft.*lbf)

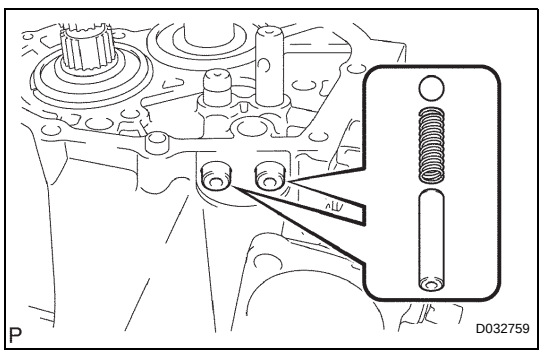

28. INSTALL SHIFT DETENT BALL

(a) Install the 2 shift detent balls, 2 shift detent ball springs and 2 shift detent ball spring seats No. 1 onto the manual transmission case.

MX

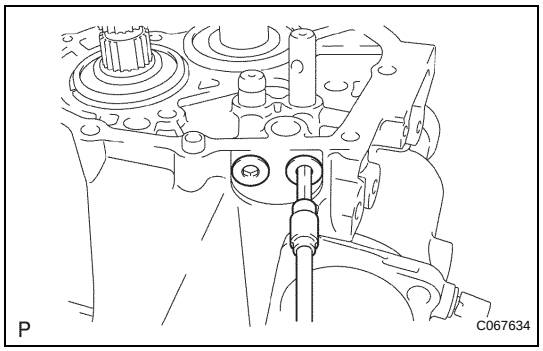

(b) Coat the 2 shift detent ball plugs with sealant and install them using a hexagon wrench.
Sealant:
Toyota Genuine Adhesive 1344, Three Bond 1344 or Equivalent
Torque: 22 N*m (224 kgf*cm, 16 ft.*lbf)

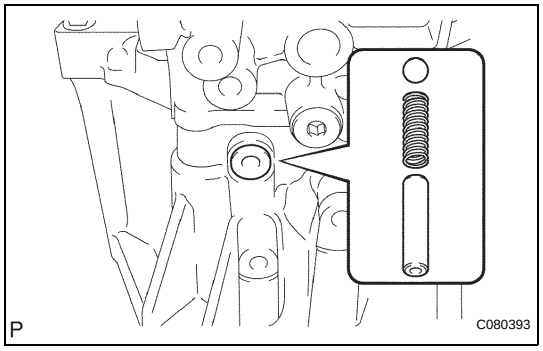

(c) Install the shift detent ball, shift detent ball compression spring and shift detent ball spring seat No. 1 onto the front transaxle case.

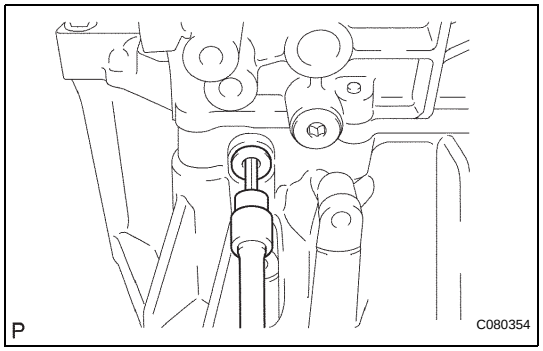

(d) Coat the shift detent ball plug with sealant and install it using a hexagon wrench.
Sealant:
Toyota Genuine Adhesive 1344, Three Bond 1344 or Equivalent
Torque: 22 N*m (224 kgf*cm, 16 ft.*lbf)

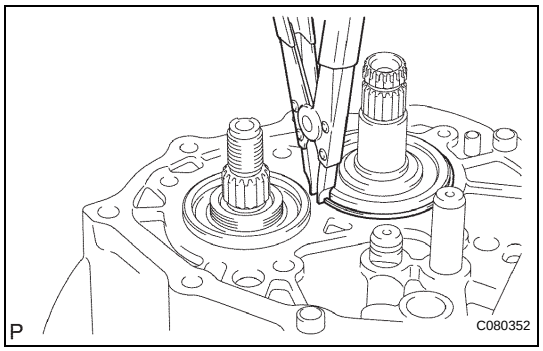

29. INSTALL INPUT SHAFT REAR BEARING HOLE SNAP RING

(a) Using a snap ring expander, install the input shaft rear bearing hole snap ring onto the input shaft.

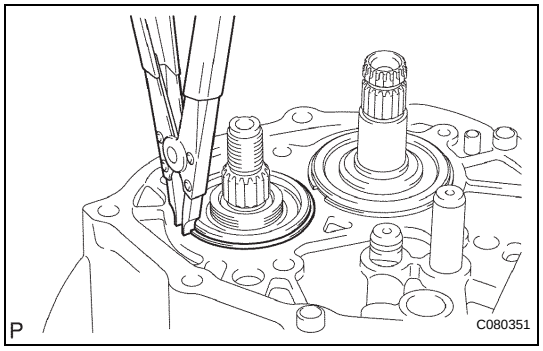

30. INSTALL OUTPUT SHAFT REAR BEARING HOLE SNAP RING

(a) Using a snap ring expander, install the output shaft rear bearing hole snap ring onto the output shaft.

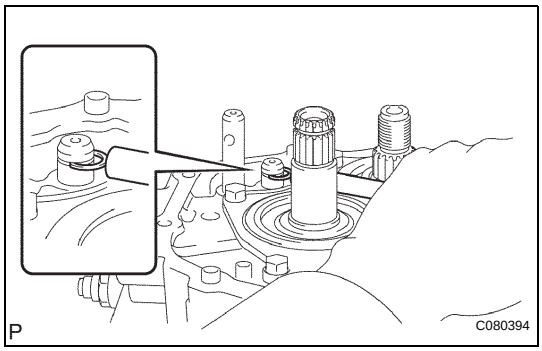

31. INSTALL SHIFT FORK SHAFT SHAFT SNAP RING

(a) Using a brass bar and a hammer, install a new shift fork shaft shaft snap ring onto the shift fork shaft No. 2.

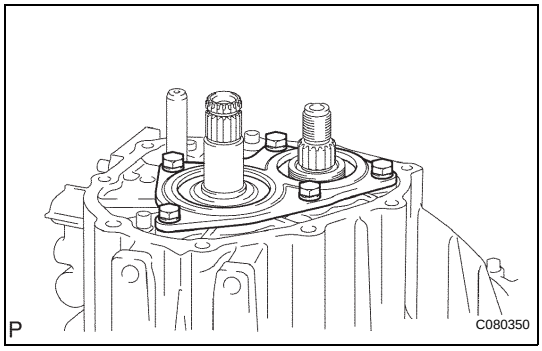

32. INSTALL BEARING RETAINER REAR

(a) Coat the 5 bolts with sealant, and install the bearing retainer rear onto the manual transmission case with the 5 bolts.
Torque: 27 N*m (280 kgf*cm, 20 ft.*lbf)

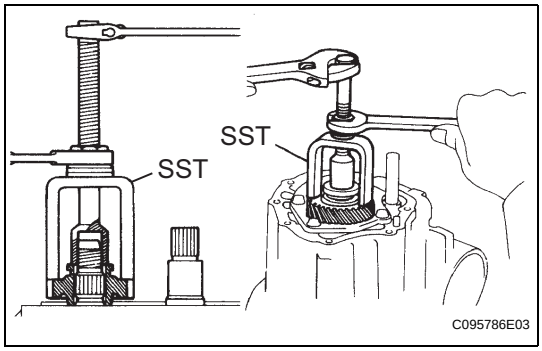

33. INSTALL 5TH DRIVEN GEAR

(a) Using SST, install the 5th driven gear onto the output shaft.
SST 09309-12020

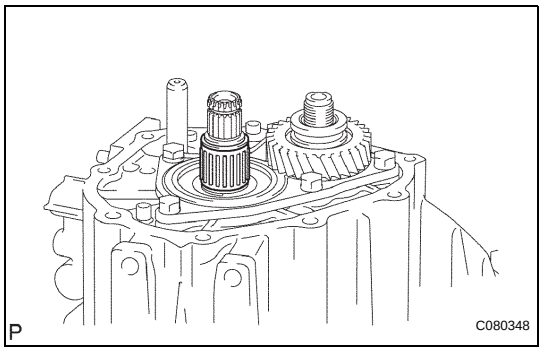

34. INSTALL 5TH GEAR NEEDLE ROLLER BEARING

(a) Coat the 5th gear needle roller bearing and 5th gear bearing spacer with gear oil, and install them onto the input shaft.

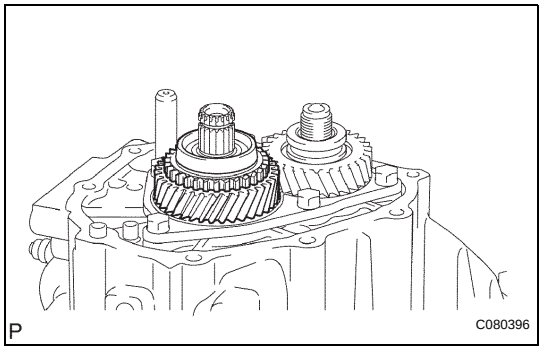

35. INSTALL 5TH GEAR

(a) Coat the 5th gear with gear oil and install it onto the input shaft.

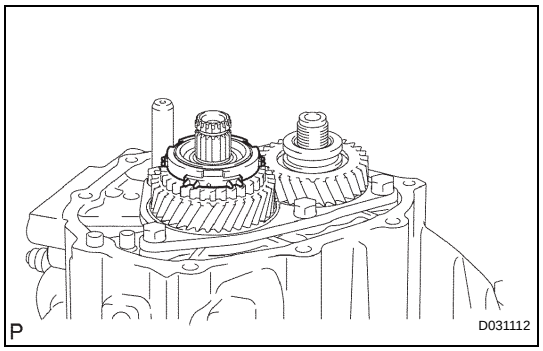

36. INSTALL SYNCHRONIZER RING NO.3

(a) Coat synchronizer ring No. 3 with gear oil and install it onto the 5th gear.

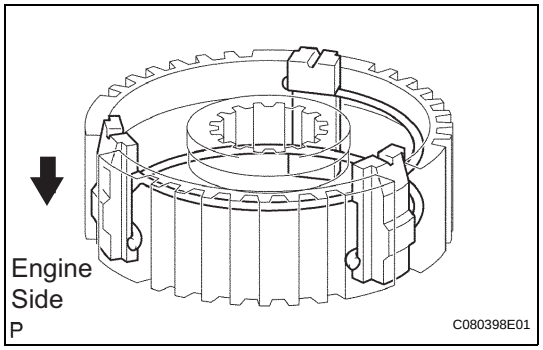

37. INSTALL TRANSMISSION CLUTCH HUB NO.3

(a) Install the 3 synchromesh shifting keys and 2 synchromesh shifting key springs onto the transmission clutch hub No. 3, as shown in the illustration.

NOTICE:

Do not set the 2 shifting key spring openings in the same position.

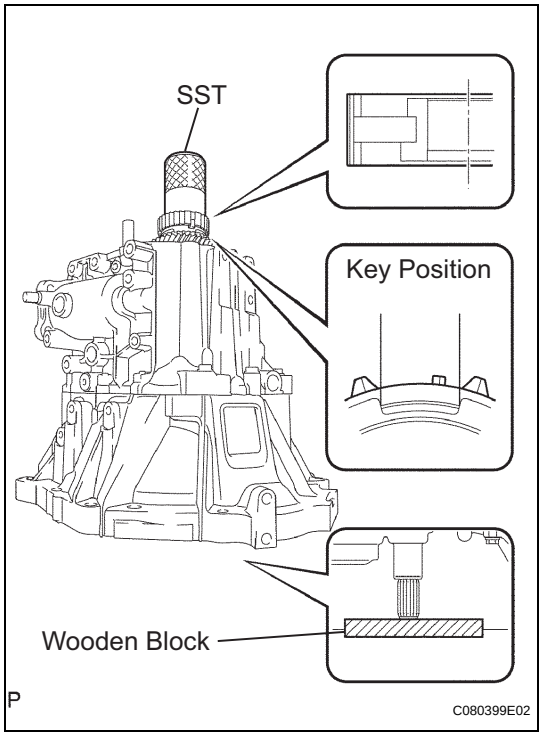

(b) Using SST and a hammer, install transmission clutch hub No. 3 onto the input shaft.

SST 09636-20010

NOTICE:

- **Do not install transmission clutch hub No. 3 in the wrong direction.**
- **Install the transmission clutch hub No. 3 with the synchronizer ring No. 3 key groove and synchromesh shifting key No. 3 aligned.**
- **Check that the 5th gear is rotating.**
- **Place a suitable sized wooden block to support the input shaft.**

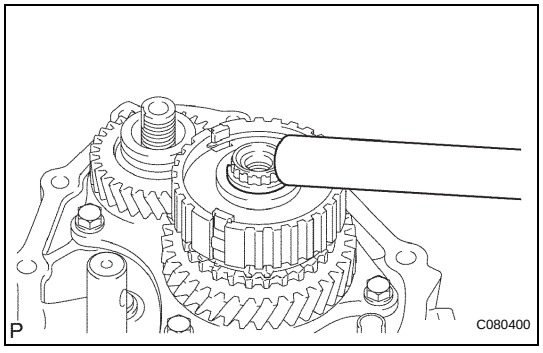

(c) Select a clutch hub No. 3 shaft snap ring that will allow minimum axial play.

Clearance:

0.1 mm or less

Snap ring thickness

Mark	Thickness mm (in.)	Mark	Thickness mm (in.)
A	2.25 (0.0886)	E	2.49 (0.0980)
B	2.31 (0.0909)	F	2.55 (0.1004)
C	2.37 (0.0933)	G	2.61 (0.1028)

Mark	Thickness mm (in.)	Mark	Thickness mm (in.)
D	2.43 (0.0957)	-	-

(d) Using a brass bar and a hammer, install the snap ring onto the input shaft.

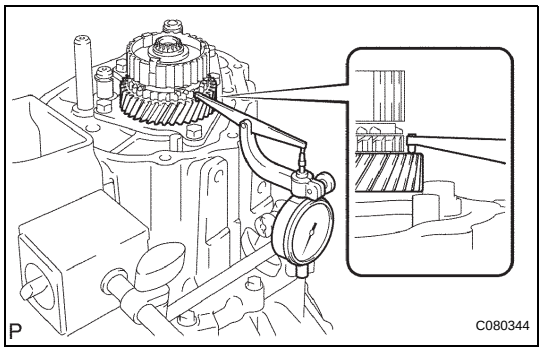

38. INSPECT 5TH GEAR THRUST CLEARANCE

(a) Using a dial indicator, measure the 5th gear thrust clearance.

Standard clearance:
0.1 to 0.55 mm (0.0039 to 0.0217 in.)
Maximum clearance:
0.55 mm (0.0217 in.)

If the clearance exceeds the maximum, replace transmission clutch hub No. 3, the 5th gear or input shaft rear radial ball bearing.

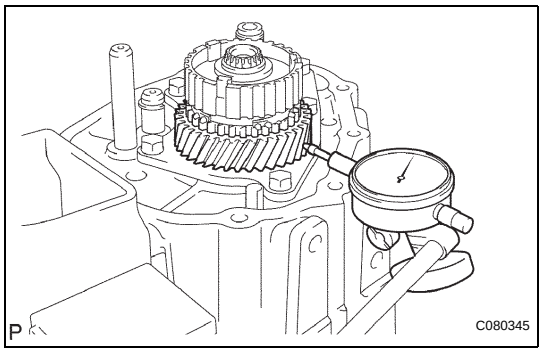

39. INSPECT 5TH GEAR RADIAL CLEARANCE

(a) Using a dial indicator, measure 5th gear radial clearance.

Standard clearance:
KOYO made:
0.015 to 0.058 mm (0.0006 to 0.0023 in.)
NSK made:
0.015 to 0.056 mm (0.0006 to 0.0022 in.)
Maximum clearance:
KOYO made:
0.058 mm (0.0023 in.)
NSK made:
0.056 mm (0.0022 in.)

If the clearance exceeds the maximum, replace the 5th gear, 5th gear needle roller bearing or input shaft.

MX

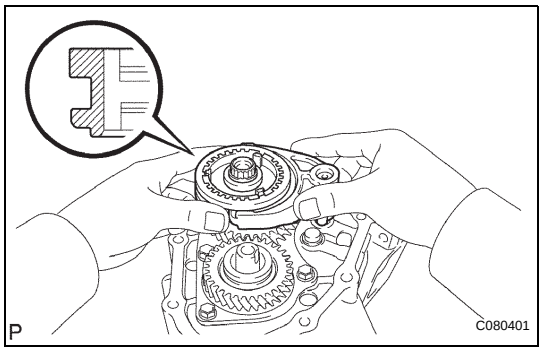

40. INSTALL GEAR SHIFT FORK NO.3

(a) Coat transmission clutch hub sleeve No. 3 with gear oil and install it together with gear shift fork No. 3 onto transmission clutch hub No. 3.

HINT:
Set the transmission clutch hub No. 3 in the correct orientation.

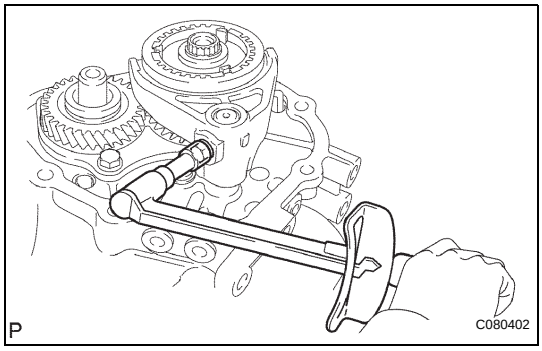

(b) Coat the gear shift fork lock bolt with sealant, and install it onto gear shift fork No. 3.

Sealant:
Toyota Genuine Adhesive 1344, Three Bond 1344 or Equivalent
Torque: 16 N*m (160 kgf*cm, 12 ft.*lbf)

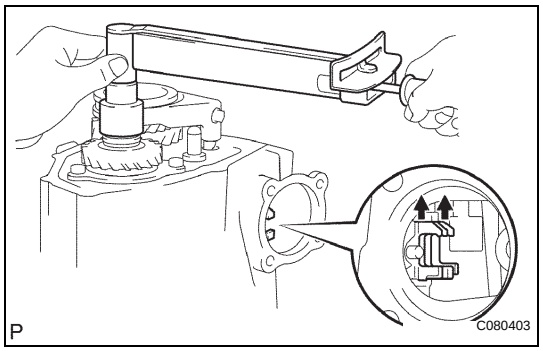

41. INSTALL MANUAL TRANSMISSION OUTPUT SHAFT REAR SET NUT

(a) Engage the 2 gears simultaneously to lock the transmission.

(b) Coat a new manual transmission output shaft rear set nut with sealant.
Sealant:
Toyota Genuine Adhesive 1344, Three Bond 1344 or Equivalent

(c) Install the new manual transmission output shaft rear set nut.
Torque: 118 N*m (1,200 kgf*cm, 87 ft.*lbf)

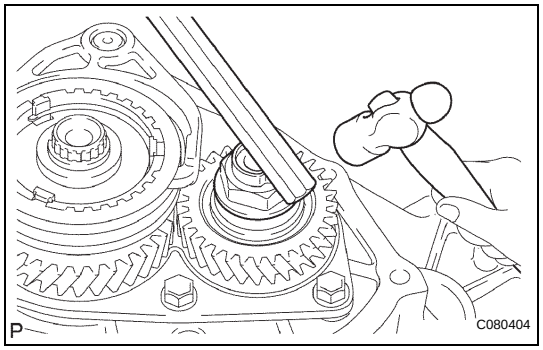

(d) Using a chisel and a hammer, stake the manual transmission output shaft rear set nut.

(e) Disengage the 2 gears.

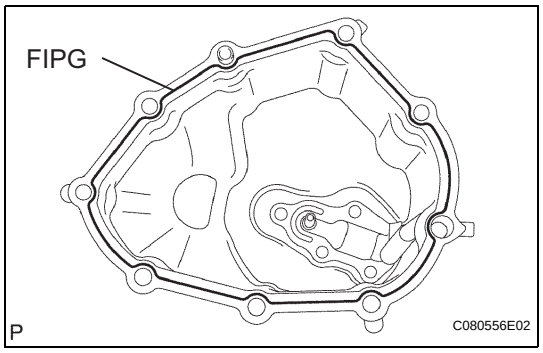

42. INSTALL MANUAL TRANSMISSION CASE COVER SUB-ASSEMBLY

(a) Apply FIPG to the manual transaxle case cover sub-assembly as shown in the illustration.
FIPG:
Toyota Genuine Seal Packing 1281, Three Bond 1281 or Equivalent
NOTICE:
Assemble the parts within 10 minutes of application. Otherwise, the packing (FIPG) material must be removed and reapplied.

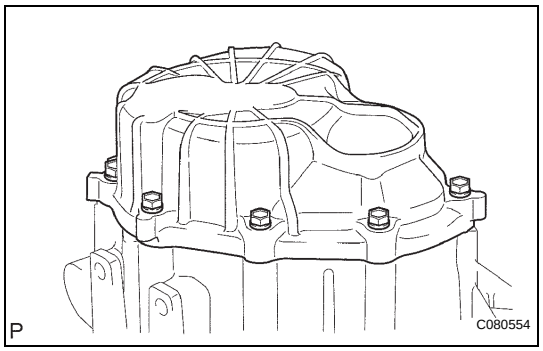

(b) Install the manual transmission case cover sub-assembly onto the manual transmission case with the 9 bolts.
Torque: 18 N*m (185 kgf*cm, 14 ft.*lbf)

MX

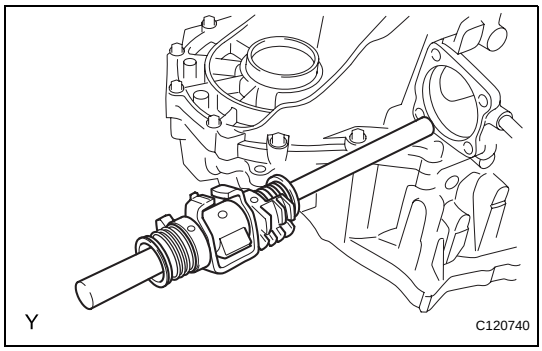

43. INSTALL SHIFT AND SELECT LEVER SHAFT ASSEMBLY

(a) Coat the shift and select lever shaft assembly with gear oil, and install it onto the transmission case.

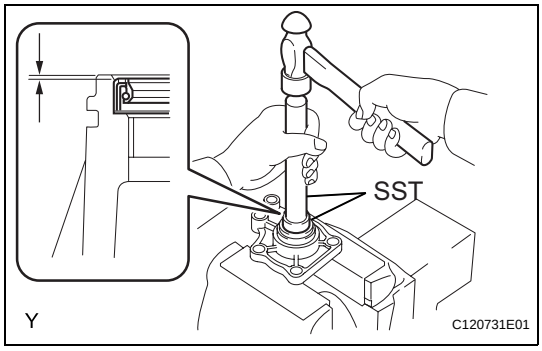

44. INSTALL CONTROL SHAFT COVER OIL SEAL

(a) Using SST and a hammer, install a new control shaft cover oil seal onto the control shaft cover.
Drive in depth:
0.2 to 1.2 mm (0.0079 to 0.0472 in.)
SST 09950-60010 (09951-00280), 09950-70010 (09951-07150)

(b) Coat the control shaft cover oil seal with MP grease.

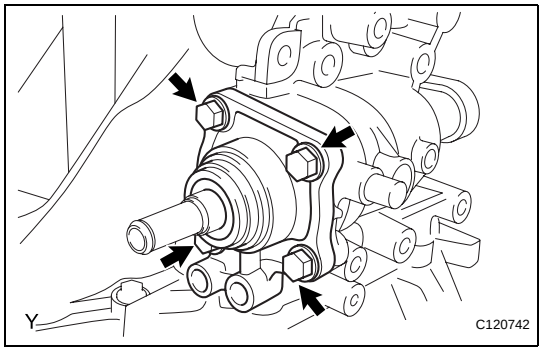

45. INSTALL CONTROL SHAFT COVER

(a) Coat the 4 bolts with sealant. Install a new gasket and control shaft cover onto the manual transmission case with the 4 bolts.
Torque: 20 N*m (200 kgf*cm, 14 ft.*lbf)
Sealant:
Toyota Genuine Adhesive 1344, Three Bond 1344 or Equivalent
NOTICE:
Set the claws of the shift interlock plate into the shift head part of the gear shift fork shaft securely.

MX

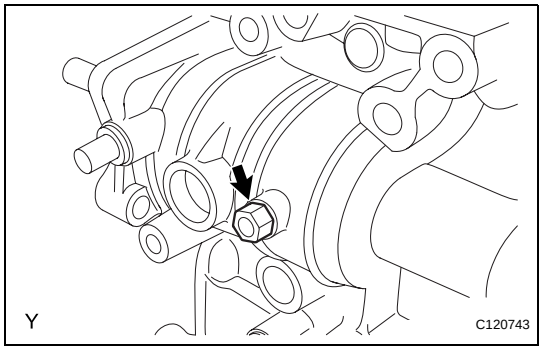

46. INSTALL SHIFT GATE PIN

(a) Coat the shift gate pin with sealant.

(b) Install the washer and shift gate pin.
Torque: 11 N*m (112 kgf*cm, 8.1 ft.*lbf)
Sealant:
Toyota Genuine Adhesive 1344, Three Bond 1344 or Equivalent

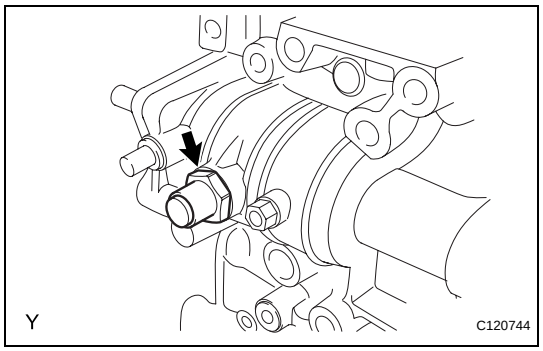

47. INSTALL LOCK BALL ASSEMBLY NO.1

(a) Coat lock ball assembly No. 1 with sealant, install it onto the manual transmission case.
Torque: 29 N*m (300 kgf*cm, 22 ft.*lbf)
Sealant:
Toyota Genuine Adhesive 1344, Three Bond 1344 or Equivalent

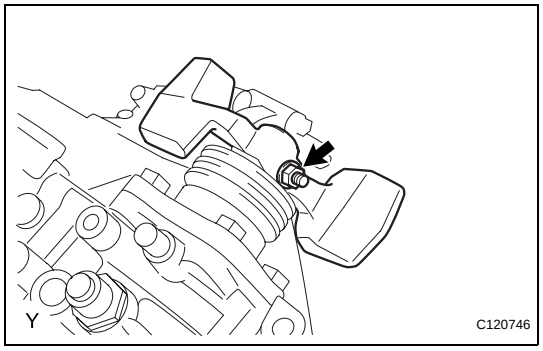

48. INSTALL SHIFT LEVER DAMPER

(a) Install the dust boot onto the control shaft cover.
(b) Install the shift lever damper with the lock pin onto the shift and select lever shaft assembly.
(c) Install the spring washer with the nut.
Torque: 12 N*m (120 kgf*cm, 8.7 ft.*lbf)

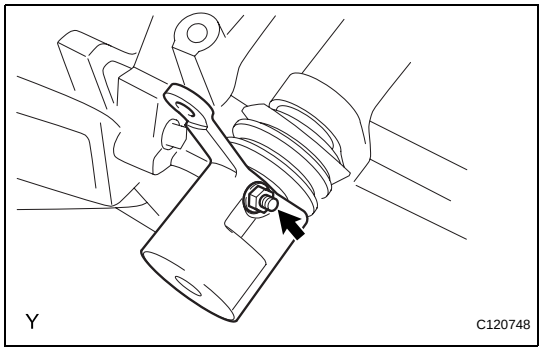

49. INSTALL FLOOR SHIFT CONTROL SHIFT LEVER

(a) Install the dust boot onto the shift and select lever shaft oil seal.
(b) Install the floor shift control shift lever with the lock pin onto the shift and select lever shaft assembly.
(c) Install the spring washer with the nut.
Torque: 12 N*m (120 kgf*cm, 8.7 ft.*lbf)

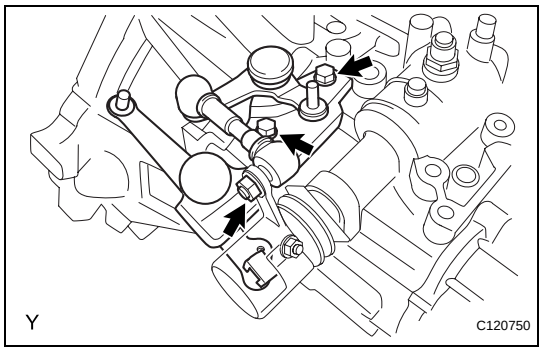

50. INSTALL SELECTING BELL CRANK ASSEMBLY

(a) Install the selecting bell crank assembly together with the control shift lever bush onto the manual transmission case with the 2 bolts and nut.
Torque: 25 N*m (250 kgf*cm, 18 ft.*lbf) for bolt
12 N*m (120 kgf*cm, 8.7 ft.*lbf) for nut
NOTICE:
Apply MP grease to the inside circumferential surface of the control shift lever bush.

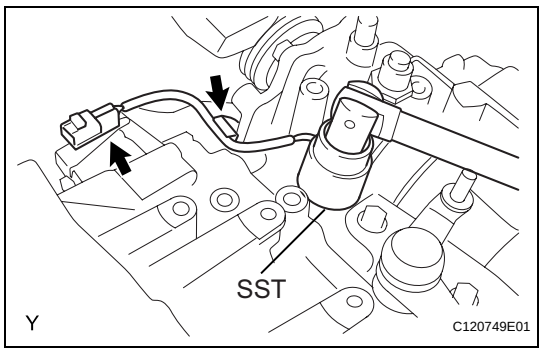

51. INSTALL BACK-UP LIGHT SWITCH ASSEMBLY

(a) Using SST, install the back-up light switch assembly onto the manual transmission case with a new gasket.
SST 09817-16011
Torque: 40 N*m (410 kgf*cm, 30 ft.*lbf)
(b) Install the back-up light switch wire harness into the 2 clamps.

52. INSTALL SPEEDOMETER SENSOR (w/o ABS)

(a) Install a new O-ring onto the speedometer sensor.

MX

(b) Install the speedometer sensor onto the transaxle case with the bolt.
Torque: 11 N*m (115 kgf*cm, 8.3 ft.*lbf)

53. INSTALL SPEEDOMETER DRIVEN HOLE COVER SUB-ASSEMBLY

(a) Install a new O-ring onto the speedometer driven hole cover sub-assembly.
(b) Install the speedometer driven hole cover sub-assembly onto the manual transaxle case with the bolt.
Torque: 11 N*m (115 kgf*cm, 8.3 ft.*lbf)

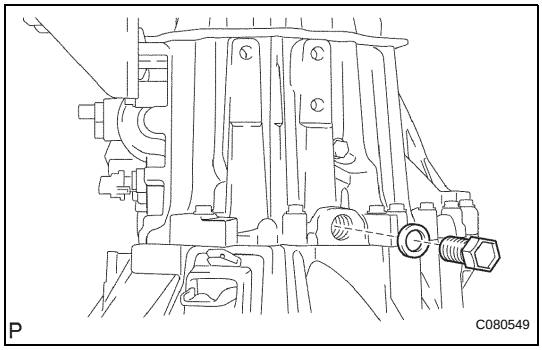

54. INSTALL MANUAL TRANSMISSION FILLER PLUG

(a) Install the manual transmission filler plug onto the manual transmission case with a new gasket.
Torque: 39 N*m (400 kgf*cm, 29 ft.*lbf)

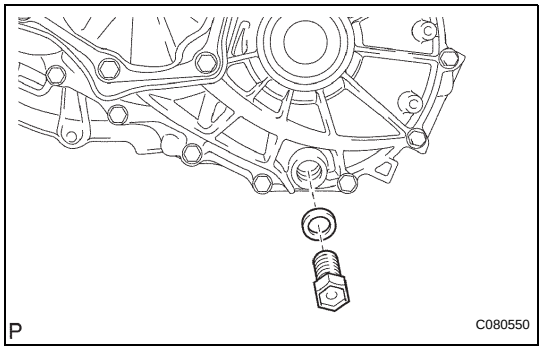

55. INSTALL DRAIN PLUG SUB-ASSEMBLY

(a) Install the drain plug onto the manual transmission case with a new gasket.
Torque: 39 N*m (400 kgf*cm, 29 ft.*lbf)

INPUT SHAFT

COMPONENTS

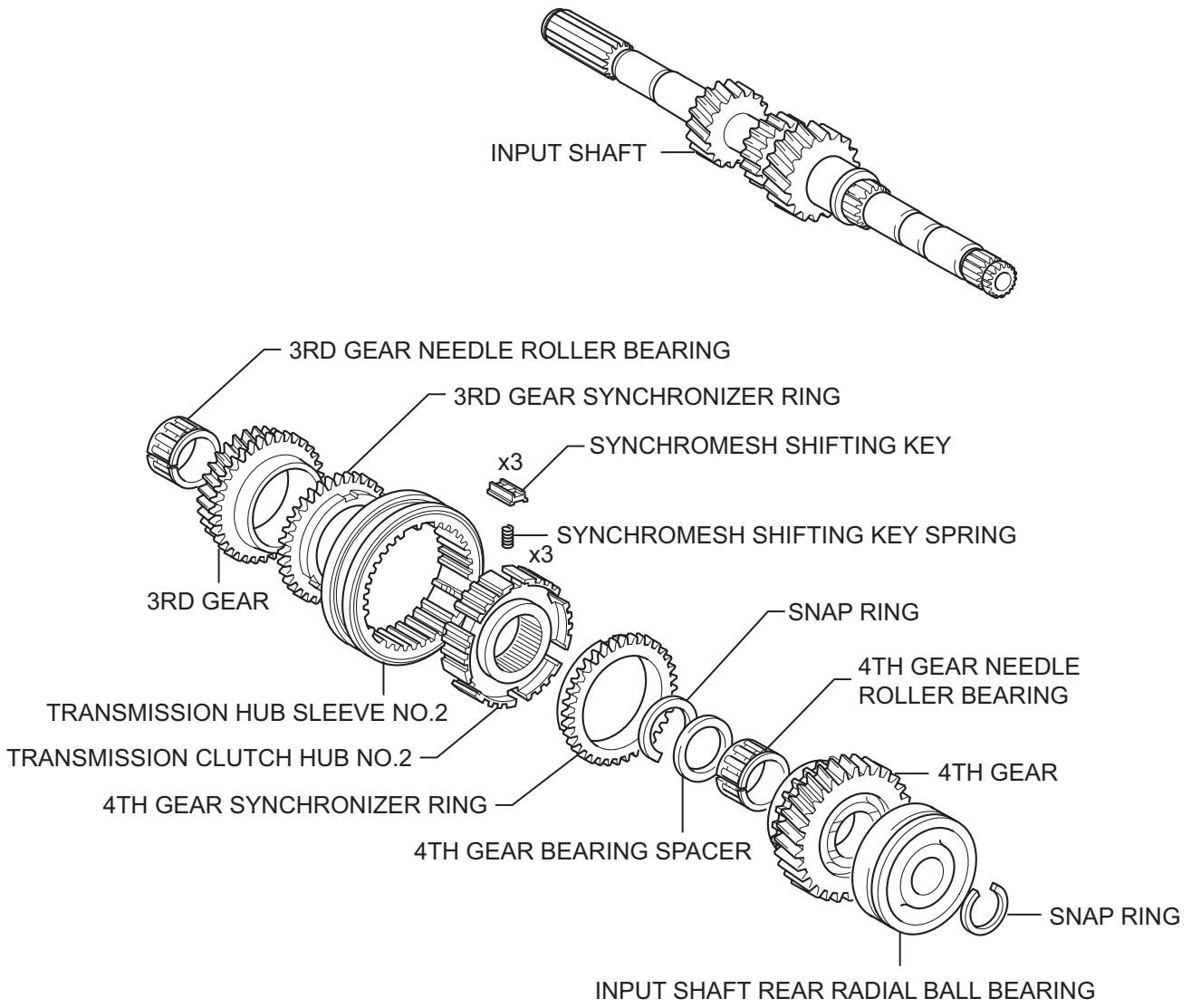

MX

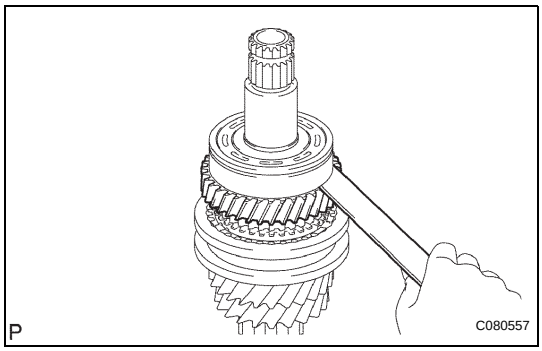

DISASSEMBLY

1. INSPECT 4TH GEAR THRUST CLEARANCE

(a) Using a feeler gauge, measure the 4th gear thrust clearance.

Standard clearance:
0.1 to 0.55 mm (0.0039 to 0.0217 in.)
Maximum clearance:
0.55 mm (0.0217 in.)

If the clearance exceeds the maximum, replace transmission clutch hub No. 2, the 4th gear or input shaft rear radial ball bearing.

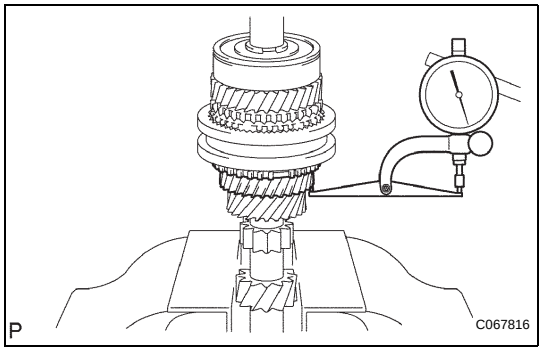

2. INSPECT 3RD GEAR THRUST CLEARANCE

(a) Using a dial gauge, measure the 3rd gear thrust clearance.

Standard clearance:
0.1 to 0.35 mm (0.0039 to 0.0138 in.)
Maximum clearance:
0.35 mm (0.0138 in.)

If the clearance exceeds the maximum, replace transmission clutch hub No. 2, the 3rd gear or input shaft.

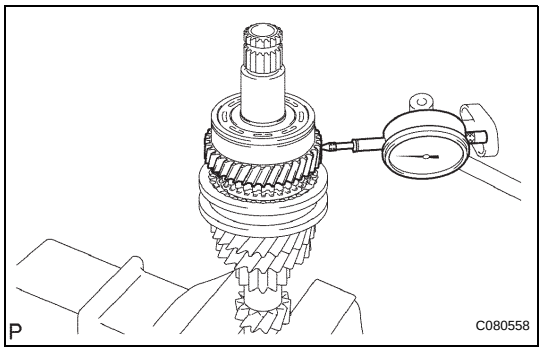

3. INSPECT 4TH GEAR RADIAL CLEARANCE

(a) Using a dial indicator, measure the 4th gear radial clearance between the gear and shaft.

Standard clearance:
0.009 to 0.050 mm (0.0004 to 0.0020 in.)
Maximum clearance:
0.050 mm (0.0020 in.)

If the clearance exceeds the maximum, replace the 4th gear, 4th gear needle roller bearing or input shaft.

MX

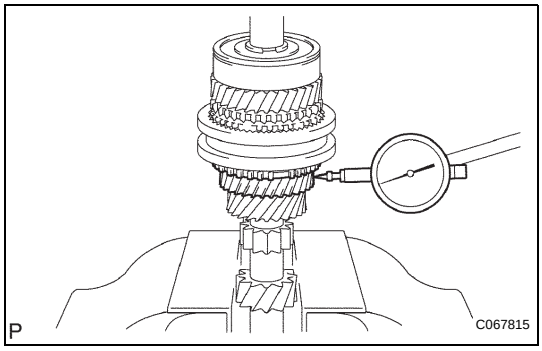

4. INSPECT 3RD GEAR RADIAL CLEARANCE

(a) Using a dial gauge, measure the 3rd gear radial clearance between the gear and shaft.

Standard clearance:
KOYO made bearing:
0.015 to 0.058 mm (0.0006 to 0.0023 in.)
NSK made bearing:
0.015 to 0.056 mm (0.0006 to 0.0022 in.)
Maximum clearance:
KOYO made:
0.058 mm (0.0023 in.)
NSK made:
0.056 mm (0.0022 in.)

If the clearance exceeds the maximum, replace the 3rd gear, 3rd gear needle roller bearing or input shaft.

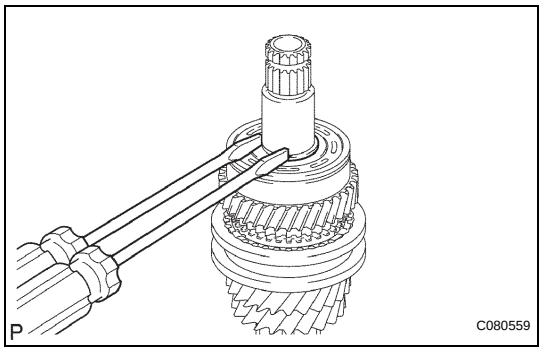

5. REMOVE 4TH GEAR

(a) Using 2 screwdrivers and a hammer, remove the input shaft rear bearing shaft snap ring from the input shaft.
HINT:
Use a shop rag or piece of cloth to keep the snap ring from flying off.

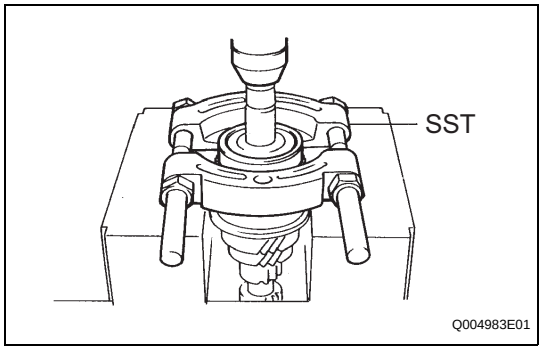

(b) Using SST and a press, remove the input shaft rear radial ball bearing and 4th gear from the input shaft.
SST 09950-00020
HINT:
- Do not tighten SST excessively.
- Support the input shaft assembly by hand to prevent it from dropping off.

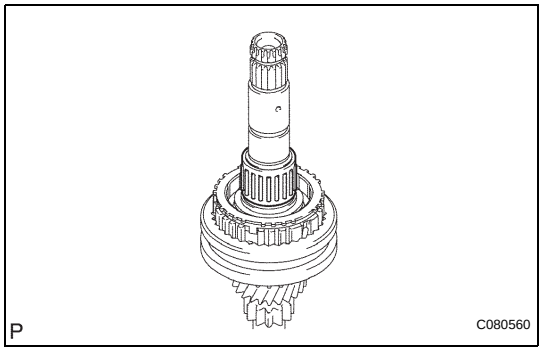

6. REMOVE 4TH GEAR NEEDLE ROLLER BEARING

(a) Remove the 4th gear needle roller bearing and 4th gear bearing spacer from the input shaft.

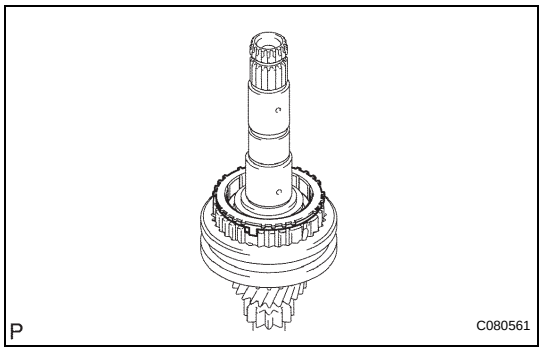

7. REMOVE 4TH GEAR SYNCHRONIZER RING

(a) Remove synchronizer ring No. 2 from transmission clutch hub No. 2.

MX

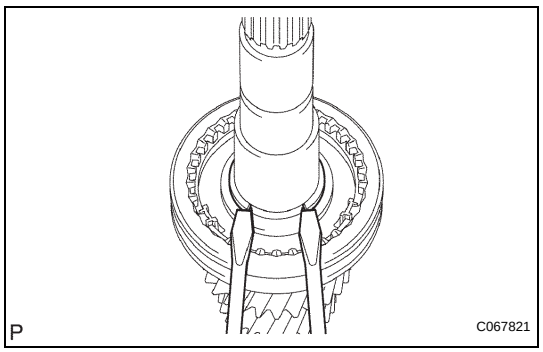

8. REMOVE 3RD GEAR

(a) Using 2 screwdrivers and a hammer, remove the clutch hub No. 2 setting shaft snap ring from the input shaft.
HINT:
Use a shop rag or piece of cloth to keep the snap ring from flying off.

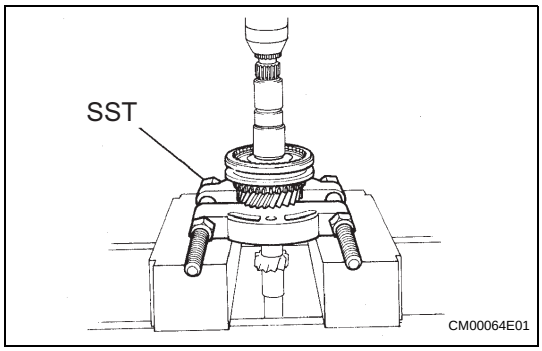

(b) Using SST and a press, remove transmission clutch hub No. 2 and the 3rd gear from the input shaft.
SST 09950-00020
NOTICE:
- **Do not tighten SST excessively.**
- **Support the input shaft by hand to prevent it from dropping off.**

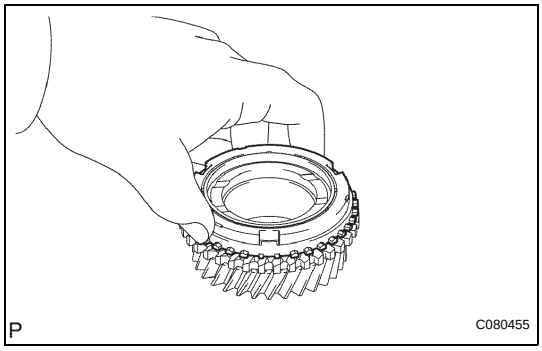

9. REMOVE 3RD GEAR SYNCHRONIZER RING
(a) Remove synchronizer ring No. 2 from the 3rd gear.

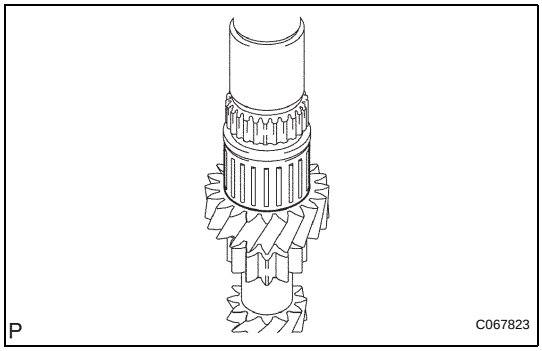

10. REMOVE 3RD GEAR NEEDLE ROLLER BEARING
(a) Remove the 3rd gear needle roller bearing from the input shaft.

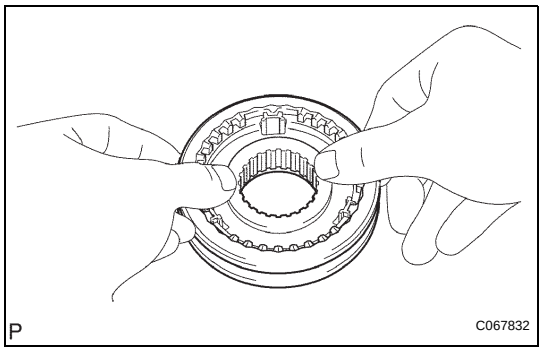

11. REMOVE TRANSMISSION HUB SLEEVE NO.2
(a) Remove transmission hub sleeve No. 2, the 3 shifting keys and 3 shifting key springs from transmission clutch hub No. 2.
NOTICE:
Use a shop rag or piece of cloth to keep the shifting key and shifting key spring from flying off.

INSPECTION

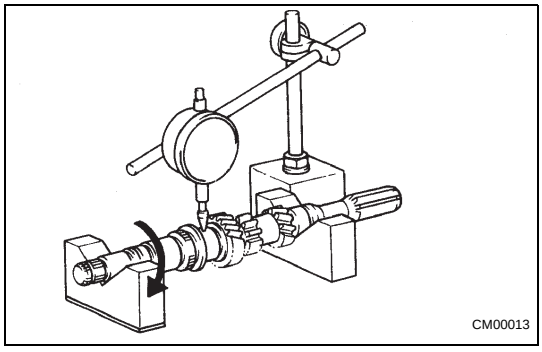

1. INSPECT INPUT SHAFT
(a) Using a dial gauge, check the input shaft runout.
Maximum runout:
0.015 mm (0.0006 in.)
If the runout exceeds the maximum, replace the input shaft.

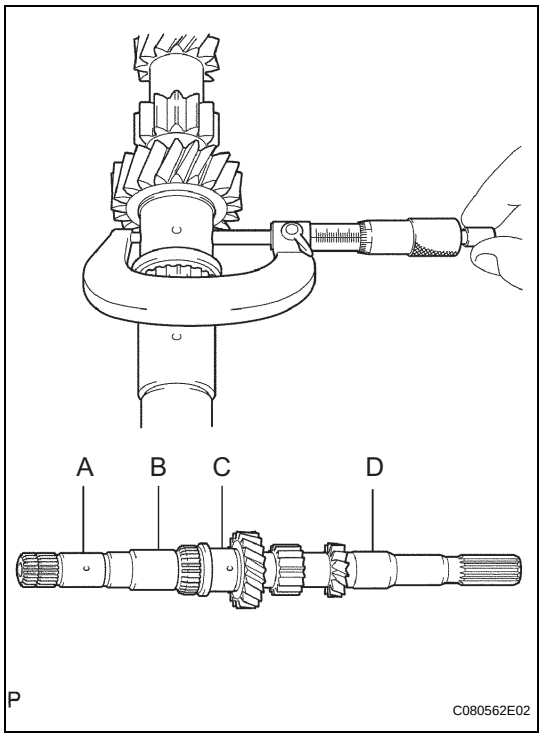

(b) Using a micrometer, measure the outer diameter of the input shaft journal surface, at the locations indicated.

Standard outer diameter:
Part A:
24.885 to 24.900 mm (0.9797 to 0.9803 in.)
Part B:
28.991 to 29.006 mm (1.1414 to 1.1420 in.)
Part C:
30.985 to 31.000 mm (1.2198 to 1.2204 in.)
Part D:
24.985 to 25.000 mm (0.9836 to 0.9842 in.)
Minimum outer diameter:
Part A:
24.885 mm (0.9797 in.)
Part B:
28.991 mm (1.1414 in.)
Part C:
30.985 mm (1.2198 in.)
Part D:
24.985 mm (0.9836 in.)

If the outer diameters are less than the minimums, replace the input shaft.

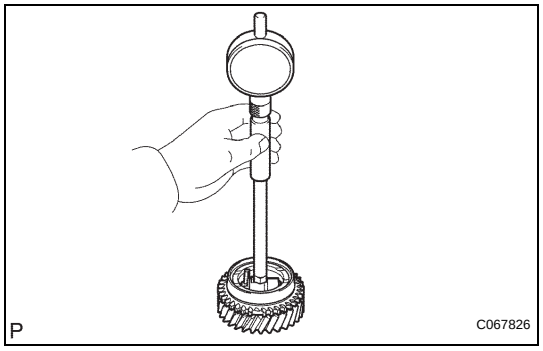

2. INSPECT 4TH GEAR

(a) Using a cylinder gauge, measure the inside diameter of the 4th gear.

Standard inside diameter:
34.015 to 34.031 mm (1.3391 to 1.3398 in.)
Maximum inside diameter:
34.031 mm (1.3398 in.)

If the inside diameter exceeds the maximum, replace the 4th gear.

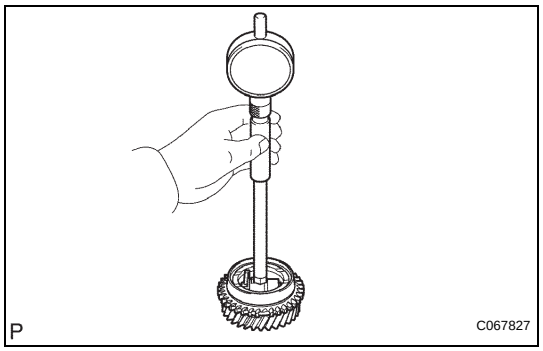

3. INSPECT 3RD GEAR

(a) Using a cylinder gauge, measure the inside diameter of the 3rd gear.

Standard inside diameter:
36.015 to 36.031 mm (1.4179 to 1.4185 in.)
Maximum inside diameter:
36.031 mm (1.4185 in.)

If the inside diameter exceeds the maximum, replace the 3rd gear.

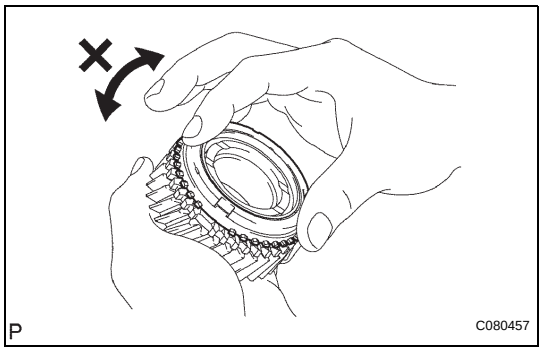

4. INSPECT 4TH GEAR SYNCHRONIZER RING

(a) Check for wear and damage.
(b) Coat the 4th gear cone with gear oil.
(c) Turn the synchronizer ring in one direction while pushing it against the 4th gear cone.
(d) Check that the ring locks.
If the synchronizer outer ring does not lock, replace the synchronizer ring.

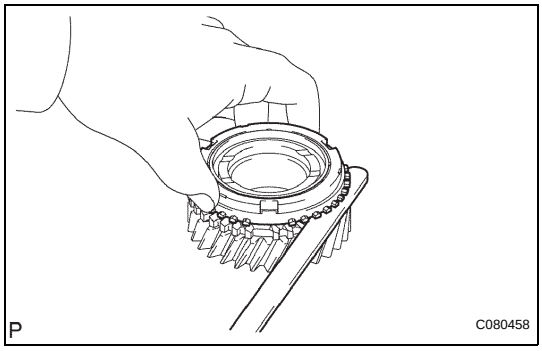

(e) Using a feeler gauge, measure the clearance between the synchronizer ring back and the gear spline end.
Standard clearance:
0.75 to 1.65 mm (0.0295 to 0.0649 in.)
Minimum clearance:
0.75 mm (0.0295 in.)
If the clearance is less than the minimum, replace the synchronizer ring.

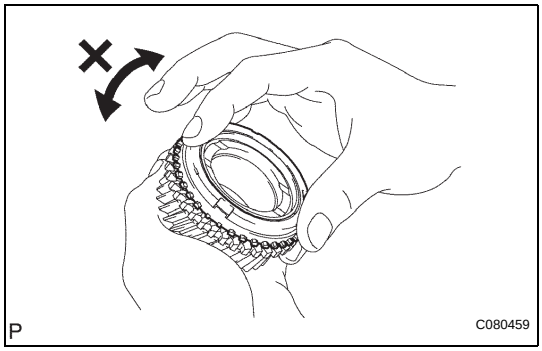

5. INSPECT 3RD GEAR SYNCHRONIZER RING

(a) Check for wear and damage.
(b) Coat the 3rd gear cone with gear oil.
(c) Turn the synchronizer ring in one direction while pushing it against the 3rd gear cone.
(d) Check that the ring locks.
If the synchronizer outer ring does not lock, replace the synchronizer ring.

MX

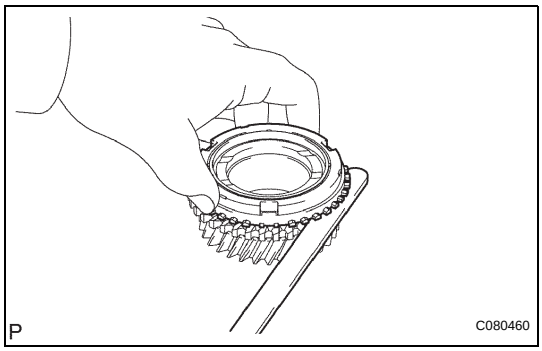

(e) Using a feeler gauge, measure the clearance between the synchronizer ring back and the gear spline end.
Standard clearance:
0.75 to 1.65 mm (0.0295 to 0.0650 in.)
Minimum clearance:
0.75 mm (0.0295 in.)
If the clearance is less than the minimum, replace the synchronizer ring.

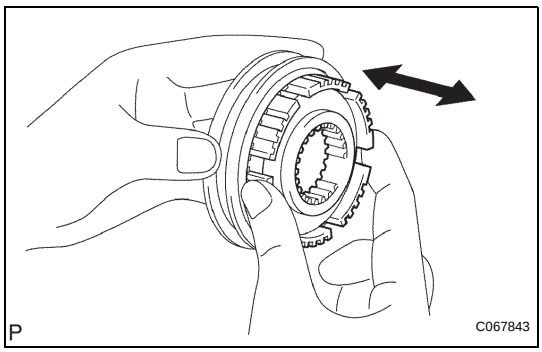

6. INSPECT TRANSMISSION HUB SLEEVE NO.2

(a) Check the sliding condition between transmission hub sleeve No. 2 and transmission clutch hub No. 2.
(b) Check that the edges of the transmission hub sleeve No. 2 spline gear are not worn down.

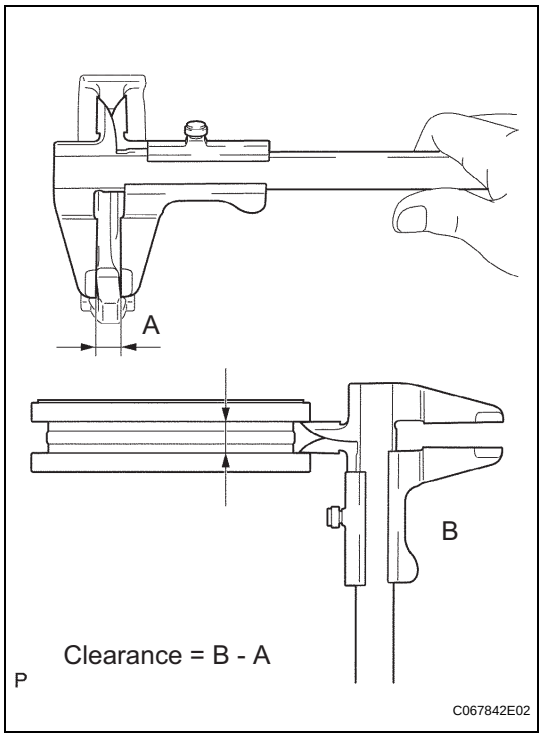

(c) Using vernier calipers, measure the width of the transmission hub sleeve No. 2 groove (B) and the thickness of the claw part on gear shift fork No. 2 (A), and calculate the clearance.
Standard clearance (B - A):
0.15 to 0.35 mm (0.0059 to 0.0137 in.)
If the clearance is outside the specifications, replace transmission hub sleeve No. 2 and gear shift fork No. 2.

REASSEMBLY

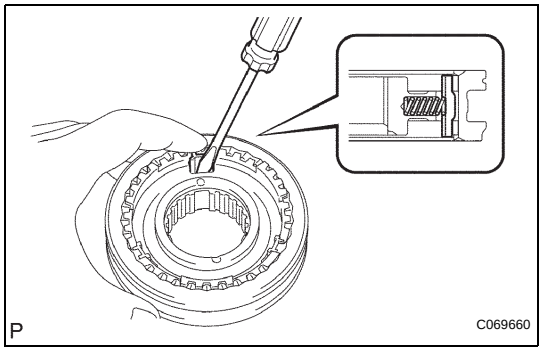

1. INSTALL TRANSMISSION HUB SLEEVE NO.2

(a) Coat transmission hub sleeve No. 2 with gear oil, and install it to transmission clutch hub No. 2.
NOTICE:
Orient the transmission hub sleeve No.2 and transmission clutch hub No.2 correctly.

(b) Using a screwdriver, install the 3 synchromesh key springs with 3 synchromesh shifting keys onto transmission clutch hub No. 2.

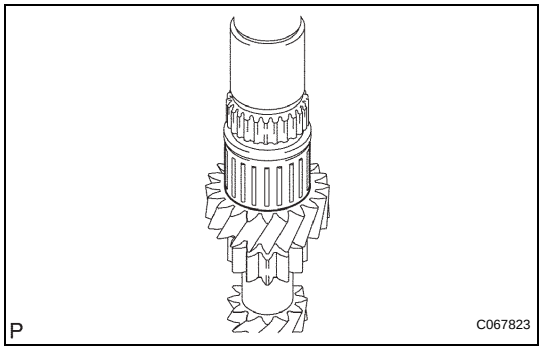

2. INSTALL 3RD GEAR NEEDLE ROLLER BEARING

(a) Coat the 3rd gear needle roller bearing with gear oil and install it onto the input shaft.

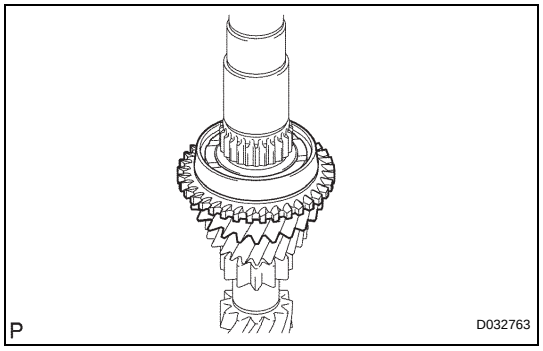

3. INSTALL 3RD GEAR

(a) Coat the 3rd gear with gear oil and install it onto the input shaft.

MX

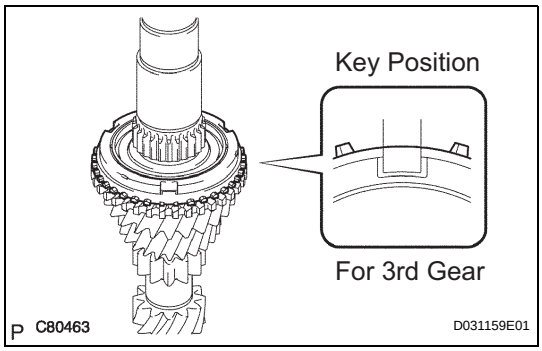

4. INSTALL 3RD GEAR SYNCHRONIZER RING

(a) Coat the 3rd gear synchronizer ring with gear oil and install it onto the 3rd gear.

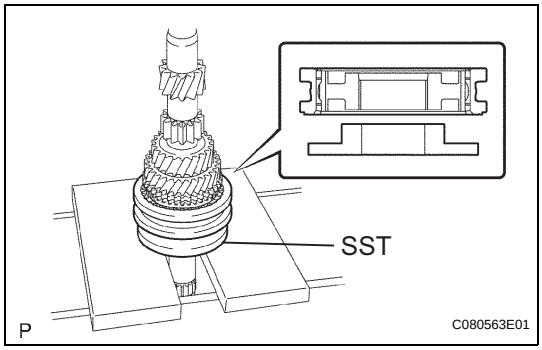

5. INSTALL TRANSMISSION CLUTCH HUB NO.2

(a) Using SST and a press, install transmission clutch hub No. 2 onto the input shaft.

SST 09316-60011 (09316-00021)

NOTICE:

Fit the synchromesh shifting key into the groove of the synchronizer ring correctly.

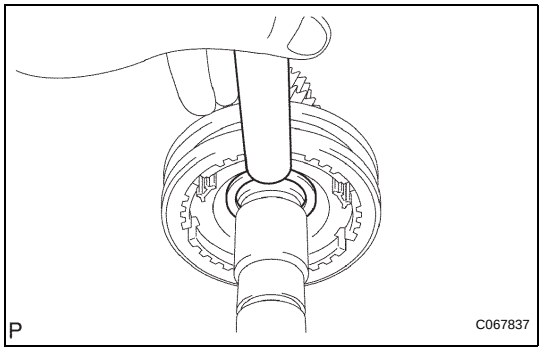

(b) Select a snap ring that will allow minimum axial play.

Standard clearance:

0.1 mm (0.0039 in.) or less.

Snap ring thickness

Mark	Thickness mm (in.)	Mark	Thickness mm (in.)
0	2.30 (0.0906)	3	2.48 (0.0976)
1	2.36 (0.0929)	4	2.54 (0.1000)
2	2.42 (0.0953)	5	2.60 (0.1024)

(c) Using a brass bar and a hammer, install the snap ring onto the input shaft.

MX

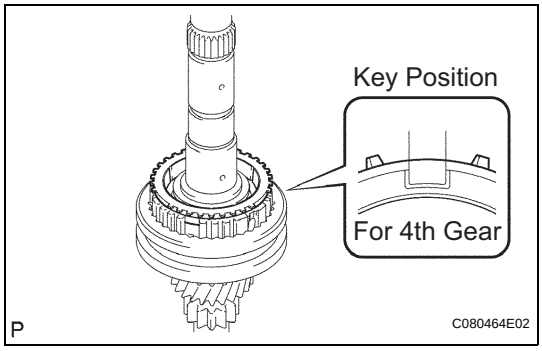

6. INSTALL 4TH GEAR SYNCHRONIZER RING

(a) Coat the 4th gear synchronizer ring with gear oil and install it onto transmission clutch hub No. 2.

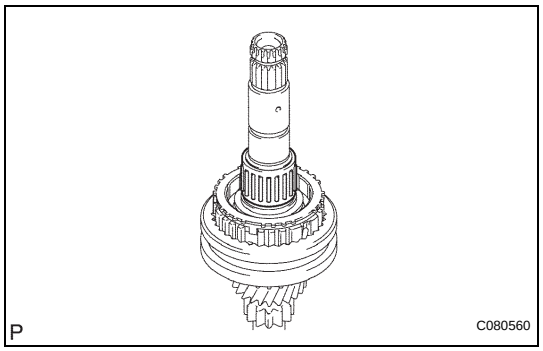

7. INSTALL 4TH GEAR NEEDLE ROLLER BEARING

(a) Coat the 4th gear needle roller bearing and 4th gear bearing spacer with gear oil and install them onto transmission clutch hub No. 2.

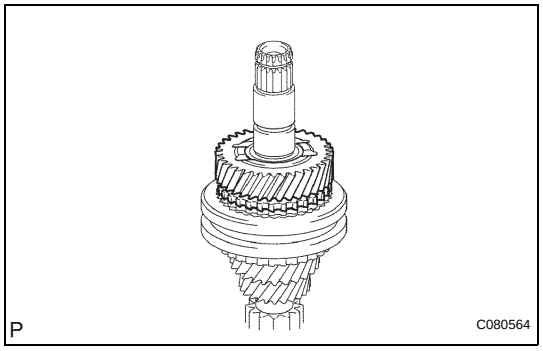

8. INSTALL 4TH GEAR

(a) Coat the 4th gear with gear oil and install it onto the input shaft.

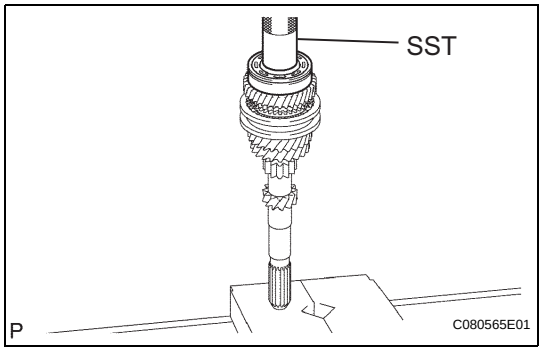

9. INSTALL INPUT SHAFT REAR RADIAL BALL BEARING

(a) Using SST and a press, install the input shaft rear radial ball bearing onto the input shaft.
SST 09608-04031

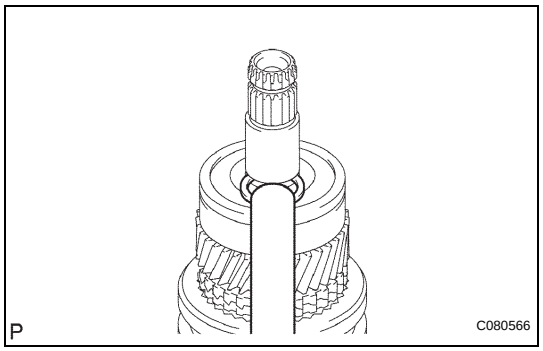

(b) Select a snap ring that will allow minimum axial play.
Standard clearance:
0.1 mm (0.0039 in.) or less
Snap ring thickness

Mark	Thickness mm (in.)	Mark	Thickness mm (in.)
A	2.29 (0.0901)	D	2.47 (0.0972)
B	2.35 (0.0925)	E	2.53 (0.0996)
C	2.41 (0.0948)	F	2.59 (0.1019)

(c) Using a brass bar and a hammer, install the snap ring onto the input shaft.
NOTICE:
Do not damage the journal surface of the snap ring.

MX

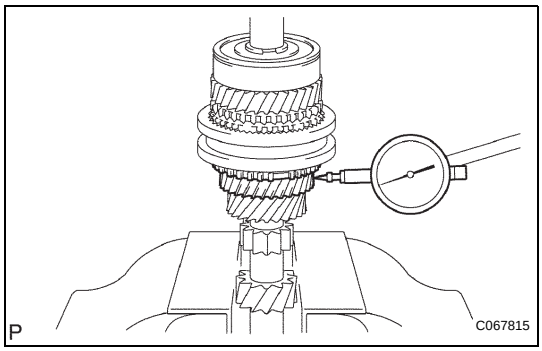

10. INSPECT 3RD GEAR RADIAL CLEARANCE

(a) Using a dial gauge, measure the 3rd gear radial clearance.

Standard clearance:
KOYO made:
0.015 to 0.058 mm (0.0006 to 0.0023 in.)
NSK made:
0.015 to 0.056 mm (0.0006 to 0.0022 in.)
Maximum clearance:
KOYO made:
0.058 mm (0.0023 in.)
NSK made:
0.056 mm (0.0022 in.)

If the clearance exceeds the maximum, replace the 3rd gear, 3rd gear needle roller bearing or input shaft.

11. INSPECT 4TH GEAR RADIAL CLEARANCE

(a) Using a dial gauge, measure the 4th gear radial clearance.

Standard clearance:
0.009 to 0.050 mm (0.0004 to 0.0020 in.)
Maximum clearance:
0.050 mm (0.0020 in.)

If the clearance exceeds the maximum, replace the 4th gear, 4th gear needle roller bearing or input shaft.

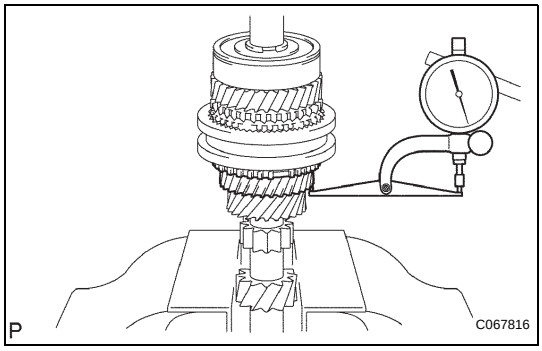

12. INSPECT 3RD GEAR THRUST CLEARANCE

(a) Using a dial gauge, measure the 3rd thrust clearance.

Standard clearance:
0.1 to 0.35 mm (0.0039 to 0.0138 in.)
Maximum clearance:
0.35 mm (0.0138 in.)

If the clearance exceeds the maximum, replace transmission clutch hub No. 2, the 3rd gear or input shaft.

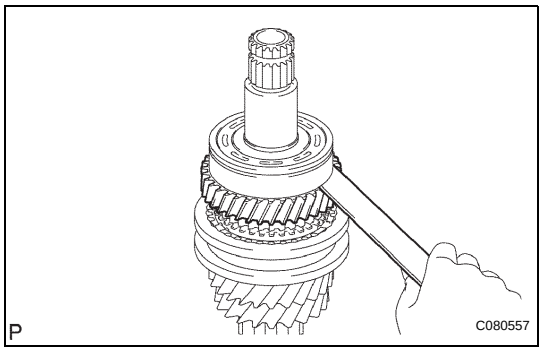

13. INSPECT 4TH GEAR THRUST CLEARANCE

(a) Using a feeler gauge, measure the 4th thrust clearance.

Standard clearance:
0.1 to 0.55 mm (0.0039 to 0.0217 in.)
Maximum clearance:
0.55 mm (0.0217 in.)

If the clearance exceeds the maximum, replace transmission clutch hub No. 2, the 4th gear or input shaft rear radial ball bearing.

OUTPUT SHAFT

COMPONENTS

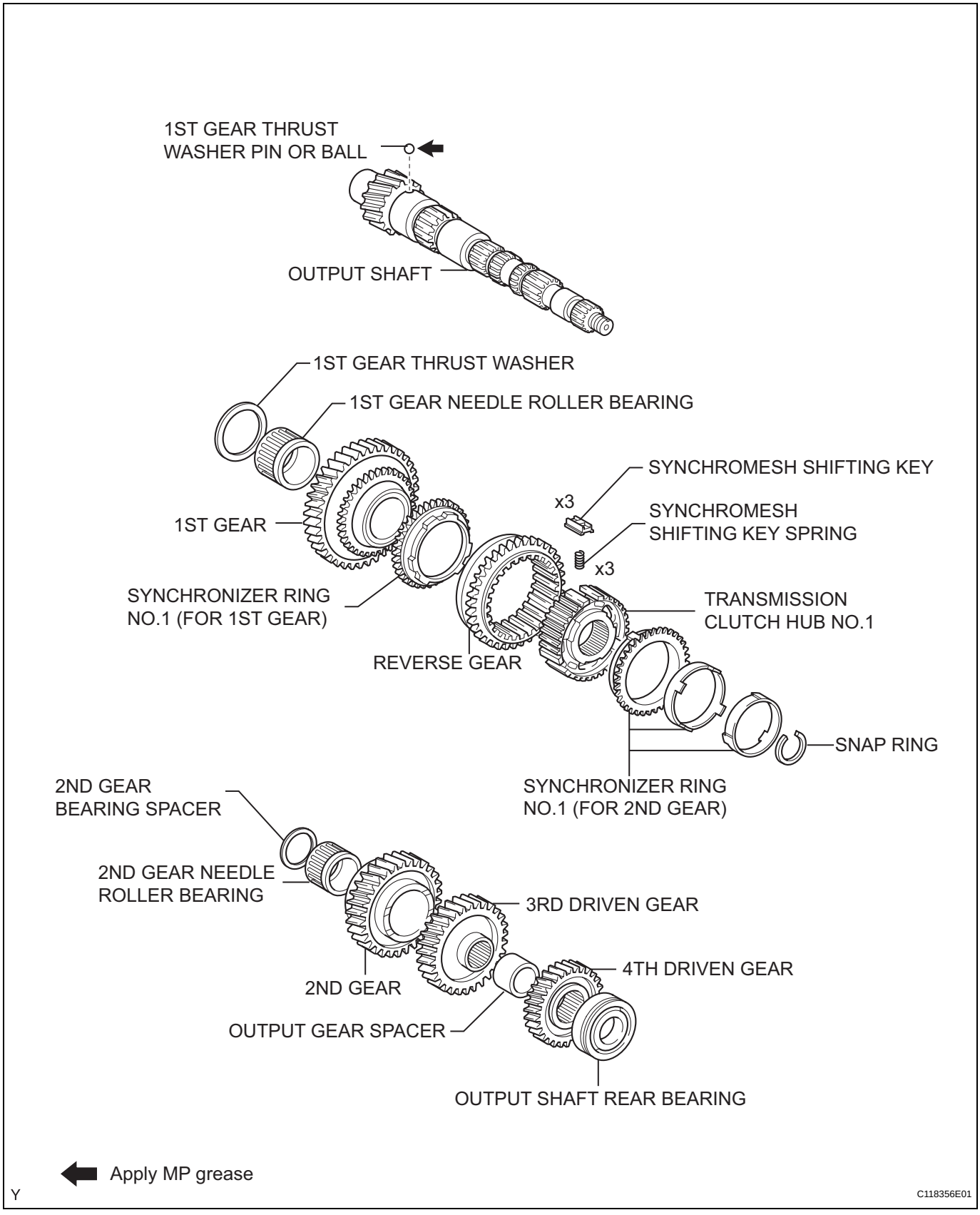

MX

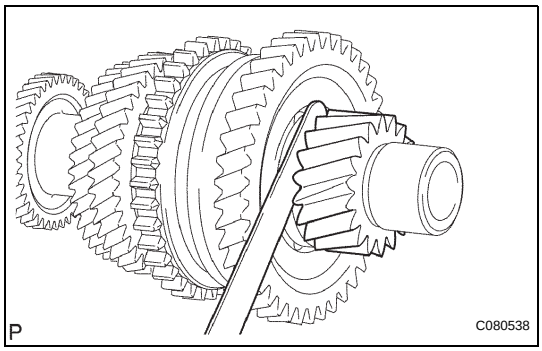

DISASSEMBLY

1. INSPECT 1ST GEAR THRUST CLEARANCE

(a) Using a feeler gauge, measure the 1st gear thrust clearance.

Standard clearance:
0.10 to 0.40 mm (0.0039 to 0.0157 in.)
Maximum clearance:
0.40 mm (0.0157 in.)

If the clearance exceeds the maximum, replace the 1st gear thrust washer, 1st gear or transmission clutch hub No. 1.

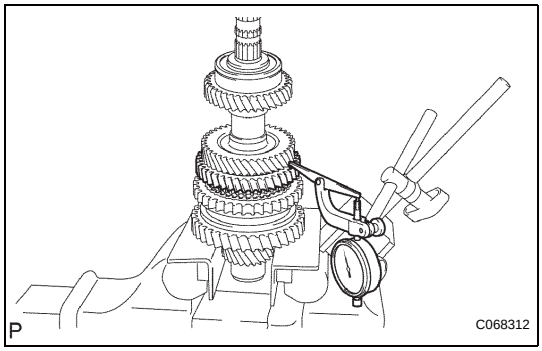

2. INSPECT 2ND GEAR THRUST CLEARANCE

(a) Using a dial gauge, measure the 2nd gear thrust clearance.

Standard clearance:
0.10 to 0.55 mm (0.0039 to 0.0217 in.)
Maximum clearance:
0.55 mm (0.0217 in.)

If the clearance exceeds the maximum, replace transmission clutch hub No. 1, 2nd gear or 3rd driven gear.

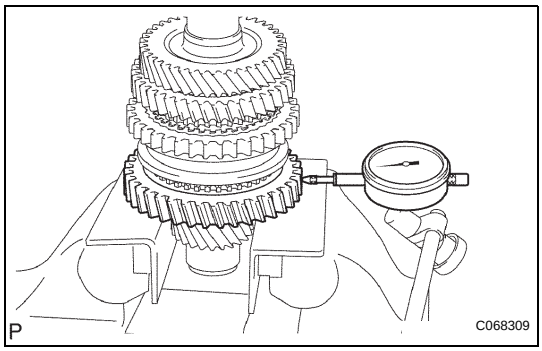

3. INSPECT 1ST GEAR RADIAL CLEARANCE

(a) Using a dial gauge, measure the 1st gear radial clearance between the gear and shaft.

Standard clearance:
KOYO made bearing:
0.015 to 0.058 mm (0.0006 to 0.0023 in.)
NSK made bearing:
0.015 to 0.056 mm (0.0006 to 0.0022 in.)
Maximum clearance:
KOYO made:
0.058 mm (0.0023 in.)
NSK made:
0.056 mm (0.0022 in.)

If the clearance exceeds the maximum, replace the 1st gear or 1st gear needle roller bearing.

MX

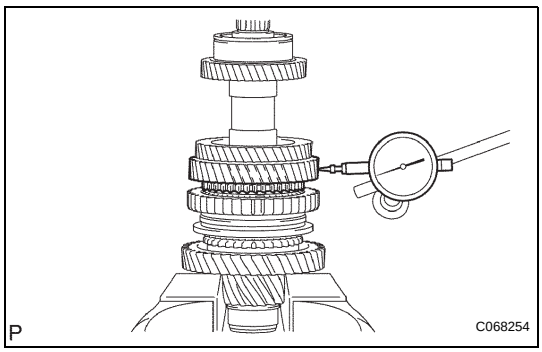

4. INSPECT 2ND GEAR RADIAL CLEARANCE

(a) Using a dial gauge, measure the 2nd gear radial clearance between the gear and shaft.

Standard clearance:
KOYO made:
0.015 to 0.058 mm (0.0006 to 0.0023 in.)
NSK made:
0.015 to 0.056 mm (0.0006 to 0.0022 in.)
Maximum clearance:
KOYO made:
0.058 mm (0.0023 in.)
NSK made:
0.056 mm (0.0022 in.)

If the clearance exceeds the maximum, replace the 2nd gear or 2nd gear needle roller bearing.

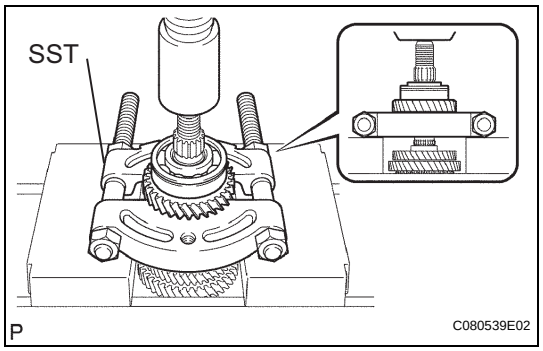

5. REMOVE 4TH DRIVEN GEAR

(a) Using SST and a press, remove the output shaft rear bearing and 4th driven gear from the output shaft.
SST 09950-00020

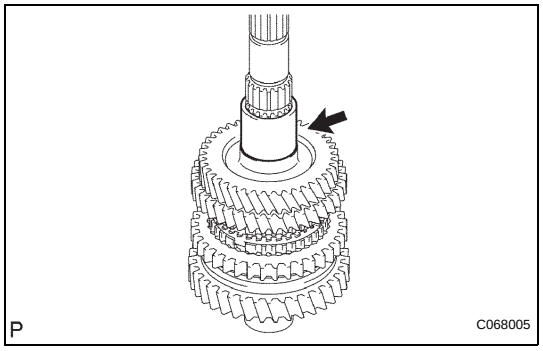

6. REMOVE OUTPUT GEAR SPACER

(a) Remove the output gear spacer from the output shaft.

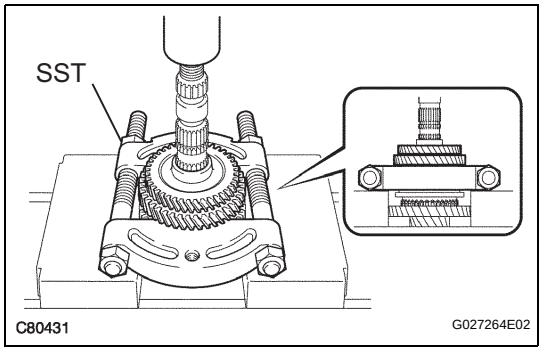

7. REMOVE 2ND GEAR

(a) Using SST and a press, remove the 3rd driven gear with 2nd gear from the output shaft.
SST 09950-00020

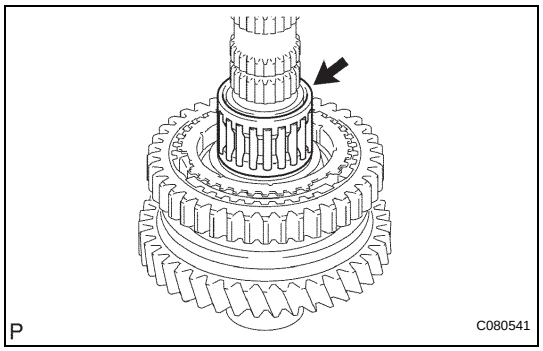

8. REMOVE 2ND GEAR NEEDLE ROLLER BEARING

(a) Remove the 2nd gear needle roller bearing and 2nd gear bearing spacer from the output shaft.

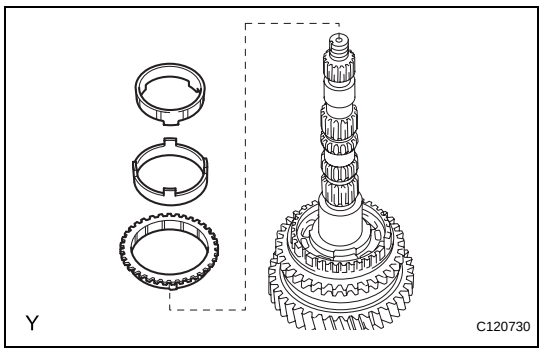

9. REMOVE SYNCHRONIZER RING NO.1 (FOR 2ND GEAR)

(a) Remove synchronizer ring No. 1 from the output shaft.

MX

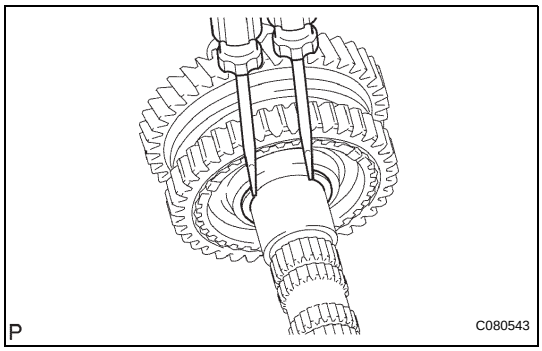

10. REMOVE 1ST GEAR

(a) Using 2 screwdrivers and a hammer, remove the clutch hub No. 1 shaft snap ring from the output shaft.
HINT:
Use a shop rag or piece of cloth to keep the shaft snap ring from flying off.

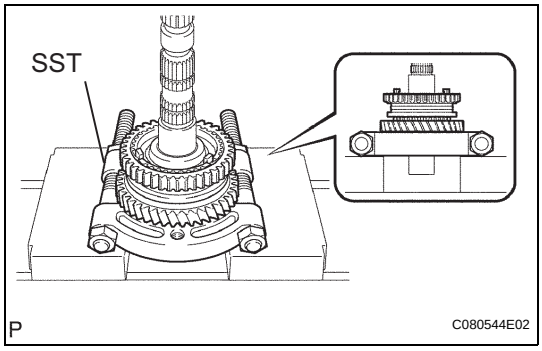

(b) Using SST and a press, remove the clutch hub No. 1 assembly and 1st gear from the output shaft.
SST 09950-00020
NOTICE:
- **Do not tighten SST excessively.**
- **Support the input shaft by hand to prevent it from dropping off.**

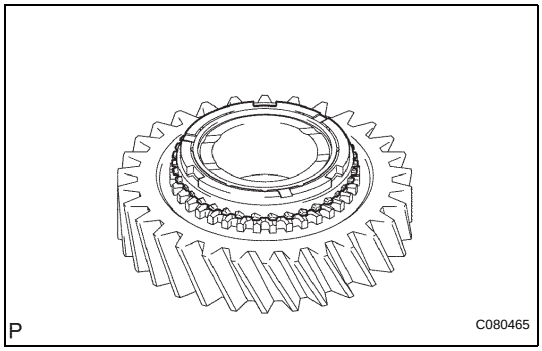

11. REMOVE SYNCHRONIZER RING GEAR NO.1 (FOR 1ST GEAR)

(a) Remove synchronizer ring No. 1 from the 1st gear.

MX

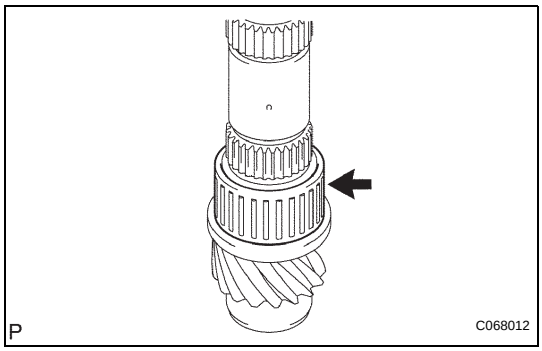

12. REMOVE 1ST GEAR NEEDLE ROLLER BEARING

(a) Remove the 1st gear needle roller bearing from the output shaft.

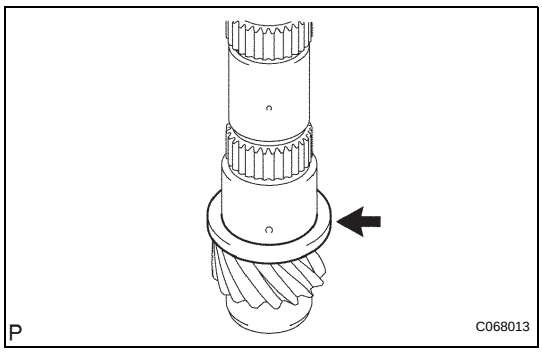

13. REMOVE 1ST GEAR THRUST WASHER

(a) Remove the 1st gear thrust washer from the output shaft.

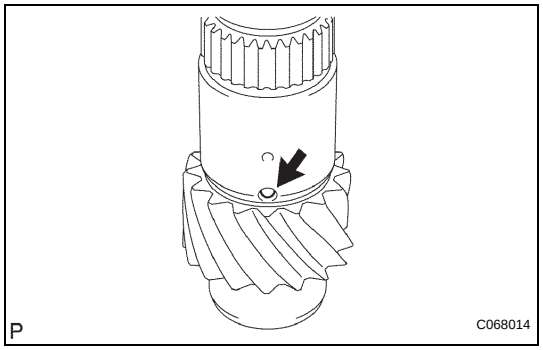

14. REMOVE 1ST GEAR THRUST WASHER PIN OR BALL

(a) Remove the 1st gear thrust washer pin or ball from the output shaft.

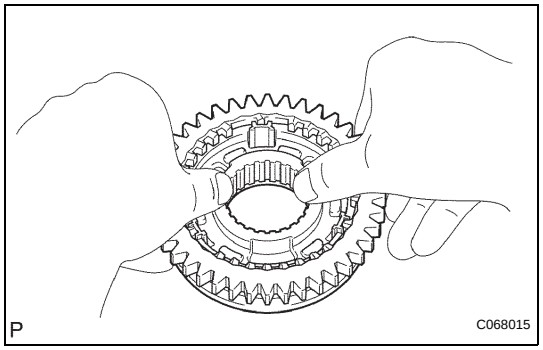

15. REMOVE REVERSE GEAR

(a) Remove the reverse gear, 3 synchromesh shifting keys and 3 synchromesh shifting key springs from transmission clutch hub No. 1.

NOTICE:

Use a shop rag or piece of cloth to keep the shifting key and shifting key spring from flying off.

INSPECTION

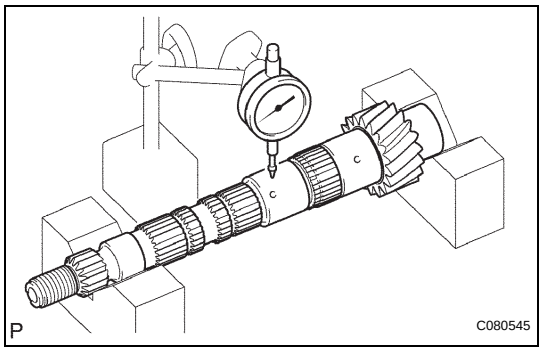

1. INSPECT OUTPUT SHAFT

(a) Using a dial gauge and 2 V-blocks, check the output shaft runout.

Maximum runout:

0.015 mm (0.0006 in.)

If the runout exceeds the maximum, replace the output shaft.

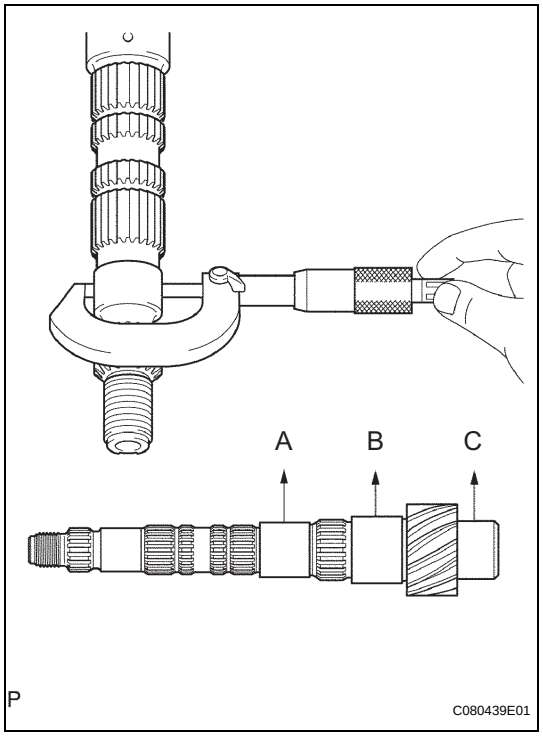

(b) Using a micrometer, measure the outer diameter of the output shaft journal surface, at the locations indicated.

Standard outer diameter:

Part A:

31.985 to 32.000 mm (1.2592 to 1.2598 in.)

Part B:

37.985 to 38.000 mm (1.4955 to 1.4961 in.)

Part C:

32.985 to 33.000 mm (1.2986 to 1.2992 in.)

If the outer diameters are less than the minimums, replace the output shaft.

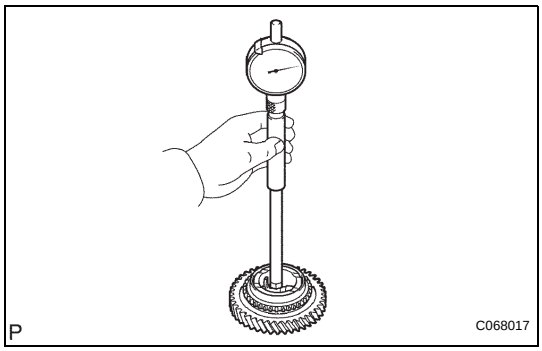

2. INSPECT 2ND GEAR

(a) Using a cylinder gauge, measure the inside diameter of the 2nd gear.

Standard inside diameter:
38.015 to 38.031 mm (1.4967 to 1.4972 in.)
Maximum inside diameter:
38.031 mm (1.4972 in.)

If the inside diameter exceeds the maximum, replace the 1st gear.

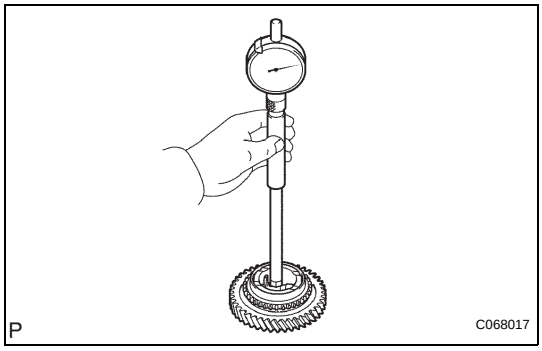

3. INSPECT 1ST GEAR

(a) Using a cylinder gauge, measure the inside diameter of the 1st gear.

Standard inside diameter:
44.015 to 44.031 mm (1.7328 to 1.7335 in.)
Maximum inside diameter:
44.031 mm (1.7335 in.)

If the inside diameter exceeds the maximum, replace the 1st gear.

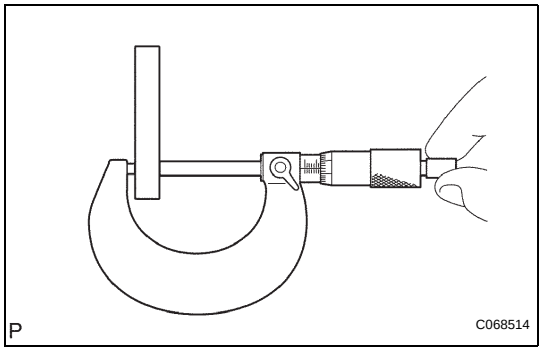

4. INSPECT 1ST GEAR THRUST WASHER

(a) Using a micrometer, measure the 1st gear thrust washer.

Standard thickness:
5.975 to 6.025 mm (0.2352 to 0.2372 in.)
Minimum thickness:
5.975 mm (0.2352 in.)

If the thickness is less than the minimum, replace the 1st gear thrust washer.

MX

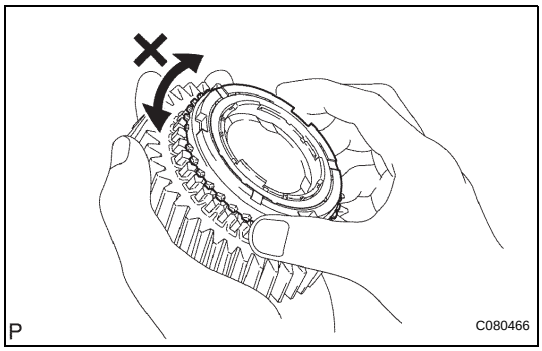

5. INSPECT SYNCHRONIZER RING NO.1 (FOR 2ND GEAR)

(a) Check for wear and damage.
(b) Coat the 2nd gear cone with gear oil.
(c) Turn the synchronizer ring in one direction while pushing it against the 2nd gear cone.
(d) Check that the ring locks.

If the synchronizer ring does not lock, replace the synchronizer ring.

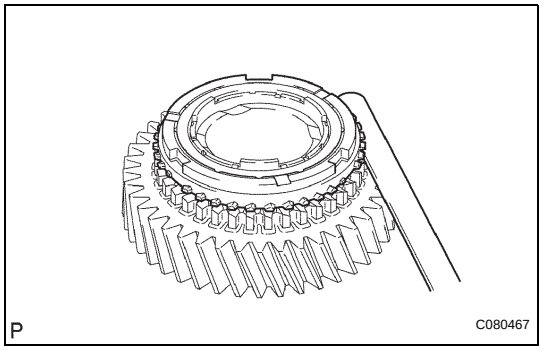

(e) Using a feeler gauge, measure the clearance between the synchronizer ring back and the gear spline end.

Standard clearance:
0.70 to 1.3 mm (0.0276 to 0.0512 in.)
Minimum clearance:
0.70 mm (0.0276 in.)

If the clearance is less than the minimum, replace the synchronizer ring.

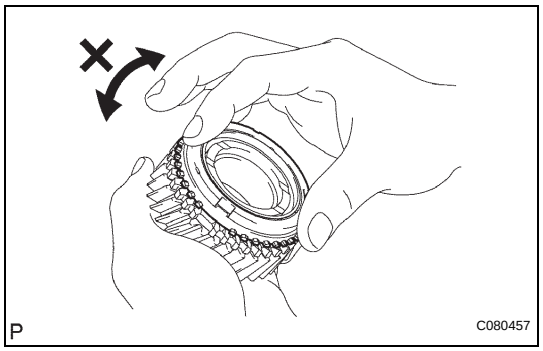

6. INSPECT SYNCHRONIZER RING NO.1 (FOR 1ST GEAR)

(a) Check for wear and damage.
(b) Coat the 1st gear cone with gear oil.
(c) Turn the synchronizer ring in one direction while pushing it against the 1st gear cone.
(d) Check that the ring locks.
If the synchronizer ring does not lock, replace the synchronizer ring.

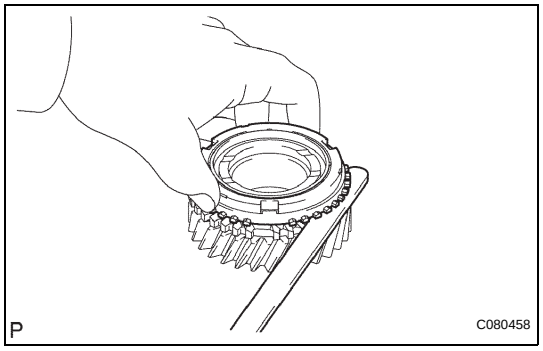

(e) Using a feeler gauge, measure the clearance between the synchronizer ring back and the gear spline end.
Standard clearance:
0.75 to 1.65 mm (0.0295 to 0.0650 in.)
Minimum clearance:
0.75 mm (0.0295 in.)
If the clearance is less than the minimum, replace the synchronizer ring.

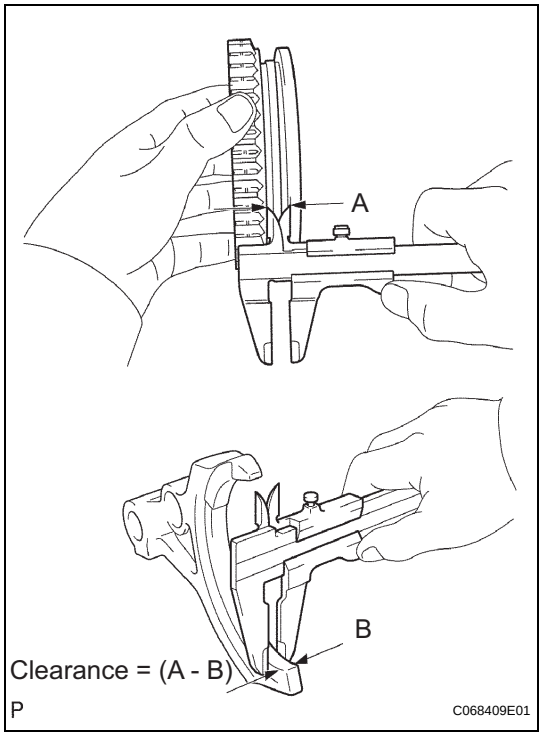

7. INSPECT REVERSE GEAR

(a) Using a vernier calipers, measure the width of the reverse gear groove (A) and the thickness of the claw part on the reverse shift fork (B), and calculate the clearance.
Standard clearance (A - B):
0.15 to 0.35 mm (0.0059 to 0.0138 in.)
If the clearance is outside the specifications, replace the reverse gear and reverse shift fork.

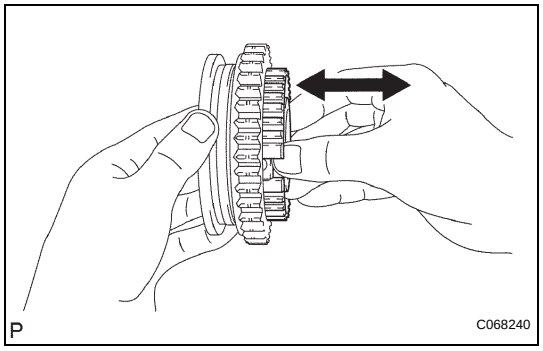

8. INSPECT TRANSMISSION CLUTCH HUB NO.1

(a) Check that transmission clutch hub No. 1 and the reverse gear slide smoothly.
(b) Check that the edges of the reverse gear spline gear are not worn down.

MX

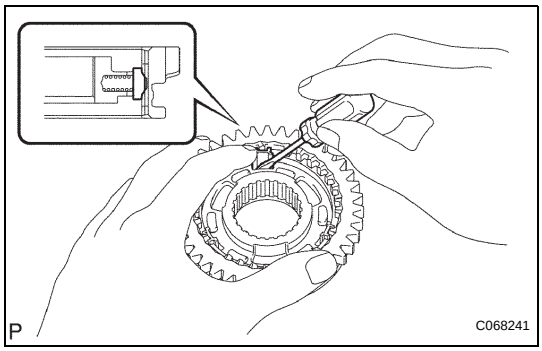

REASSEMBLY

1. INSTALL REVERSE GEAR

(a) Coat the reverse gear with gear oil and install it onto transmission clutch hob No. 1.

NOTICE:

Orient the reverse gear and transmission clutch hub No. 1 correctly.

(b) Install the 3 synchromesh shifting key springs and 3 synchromesh keys onto transmission clutch hub No. 1.

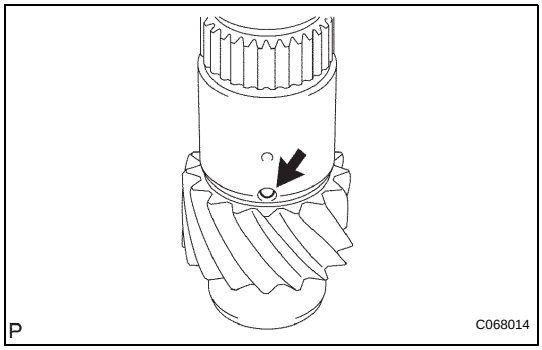

2. INSTALL 1ST GEAR THRUST WASHER PIN OR BALL

(a) Coat the 1st gear thrust washer pin or ball with MP grease, and install it onto the output shaft.

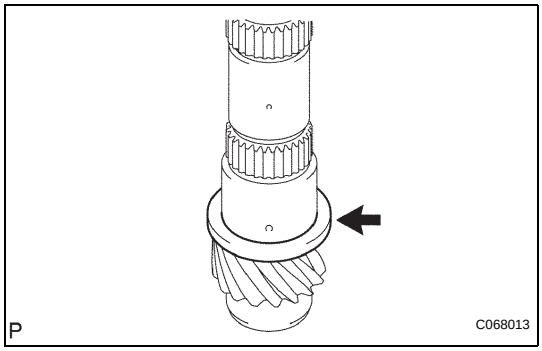

3. INSTALL 1ST GEAR THRUST WASHER

(a) Coat the 1st gear thrust washer with gear oil and install it onto the output shaft.

MX

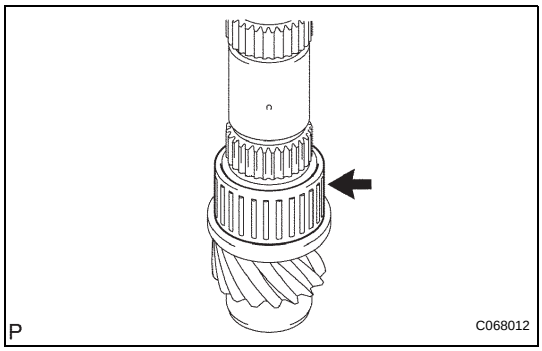

4. INSTALL 1ST GEAR NEEDLE ROLLER BEARING

(a) Coat the 1st gear needle roller bearing with gear oil and install it onto the output shaft.

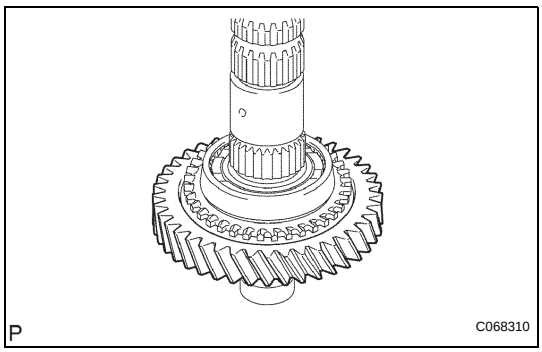

5. INSTALL 1ST GEAR

(a) Coat the 1st gear with gear oil and install it onto the output shaft.

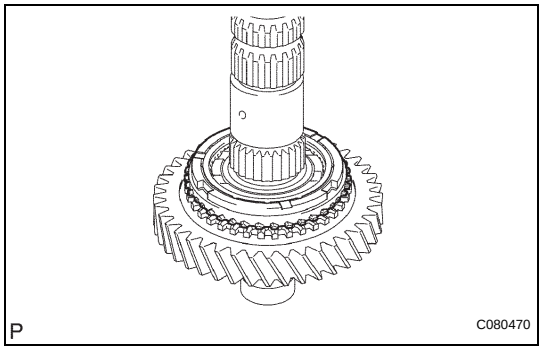

6. INSTALL SYNCHRONIZER RING NO.1 (FOR 1ST GEAR)

(a) Coat synchronizer ring No. 1 with gear oil and install it onto the 1st gear.

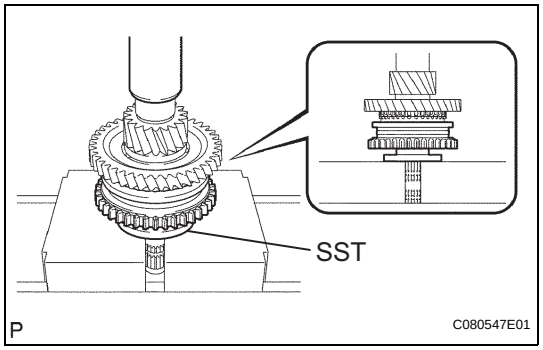

7. INSTALL TRANSMISSION CLUTCH HUB NO.1

(a) Using SST and a press, install transmission clutch hub No. 1 onto the output shaft.

SST 09316-60011 (09316-00031)

HINT:

- The 1st gear can be turned.
- While checking that the 1st gear thrust washer pin or ball is inserted into the groove of the 1st gear thrust washer, press and fit the clutch hub No. 1.

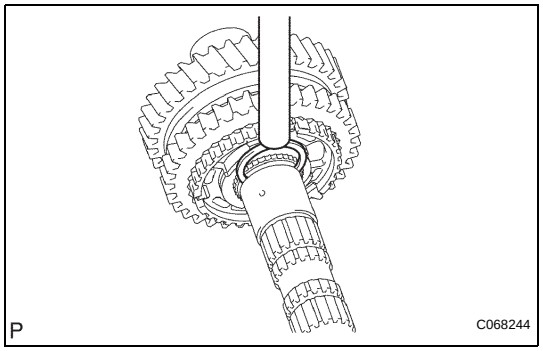

(b) Select a snap ring that will allow minimum axial play.

Standard clearance:
0.1 mm (0.039 in.) or less

Snap ring thickness

Mark	Thickness mm (in.)	Mark	Thickness mm (in.)
A	2.50 (0.0984)	D	2.68 (0.1055)
B	2.56 (0.1008)	E	2.74 (0.1079)
C	2.62 (0.1031)	F	2.80 (0.1102)

(c) Using a brass bar and a hammer, install the snap ring onto the output shaft.

NOTICE:
Do not damage the journal surface of the output shaft.

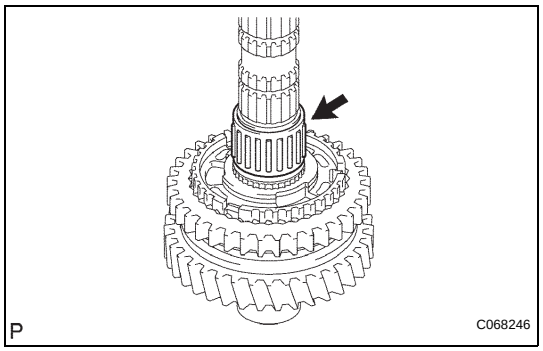

8. INSTALL 2ND GEAR NEEDLE ROLLER BEARING

(a) Coat the 2nd gear needle roller bearing and 2nd gear bearing spacer with gear oil, and install them onto the output shaft.

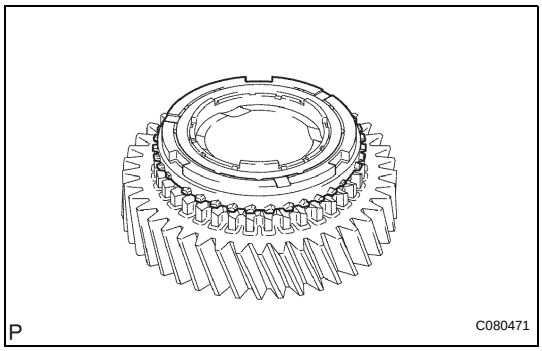

9. INSTALL SYNCHRONIZER RING NO.1 (FOR 2ND GEAR)

(a) Coat synchronizer ring No. 1 with gear oil and install it onto the 2nd gear.

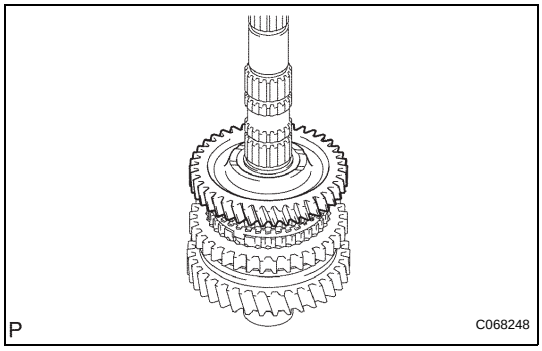

10. INSTALL 2ND GEAR

(a) Coat the 2nd gear with gear oil and install it onto the output shaft.

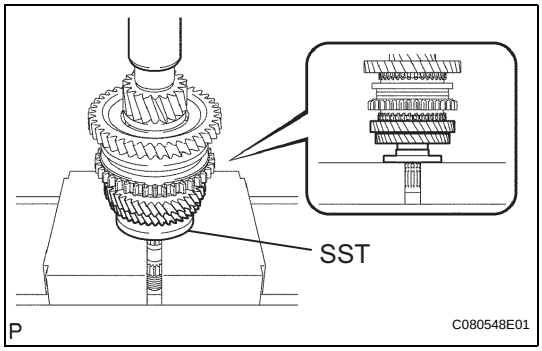

11. INSTALL 3RD DRIVEN GEAR

(a) Using SST and a press, install the 3rd driven gear onto the output shaft.
SST 09316-60011 (09316-00031)

MX

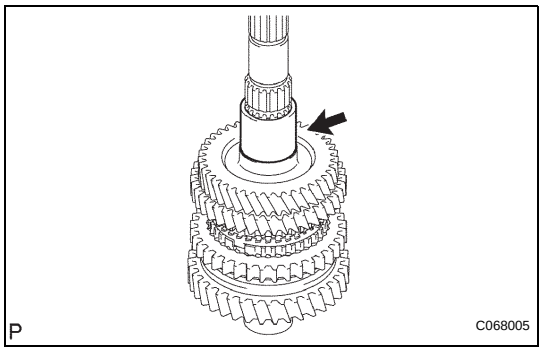

12. INSTALL OUTPUT GEAR SPACER

(a) Install the output gear spacer onto the output shaft.

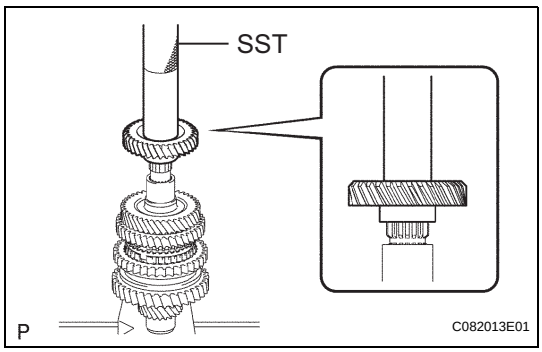

13. INSTALL 4TH DRIVEN GEAR

(a) Using SST and a press, install the 4th driven gear onto the output shaft.
SST 09612-22011

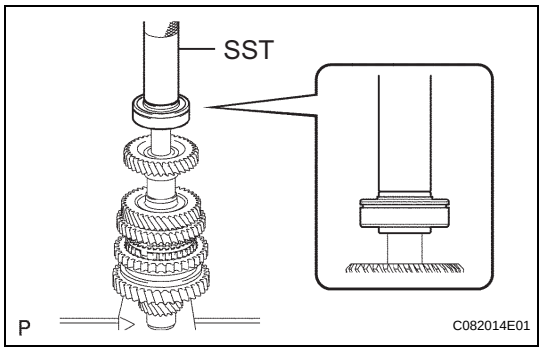

14. INSTALL OUTPUT SHAFT REAR BEARING

(a) Using SST and a press, install the output shaft rear bearing onto the output shaft.
SST 09612-22011

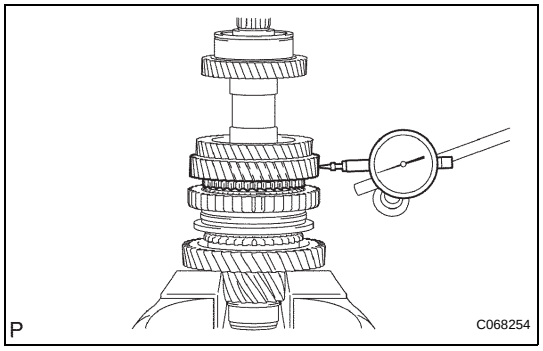

15. INSPECT 2ND GEAR RADIAL CLEARANCE

(a) Using a dial gauge, measure the 2nd gear radial clearance between the gear and shaft.
Standard clearance:
KOYO made:
0.015 to 0.058 mm (0.0006 to 0.00023 in.)
NSK made:
0.015 to 0.056 mm (0.0006 to 0.0022 in.)
Maximum clearance:
KOYO made:
0.058 mm (0.0023 in.)
NSK made:
0.056 mm (0.0022 in.)
If the clearance exceeds the maximum, replace the 2nd gear or 2nd gear needle roller bearing.

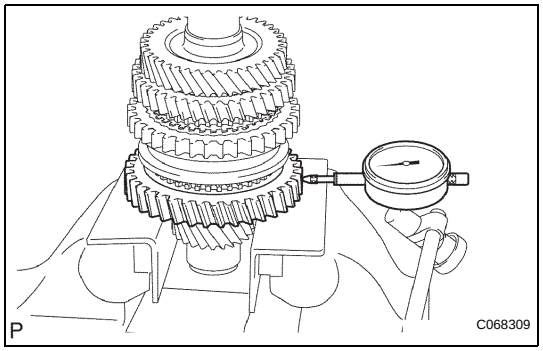

16. INSPECT 1ST GEAR RADIAL CLEARANCE

(a) Using a dial gauge, measure the 1st gear radial clearance between the gear and shaft.
Standard clearance:
KOYO made:
0.015 to 0.058 mm (0.0006 to 0.00023 in.)
NSK made:
0.015 to 0.056 mm (0.0006 to 0.0022 in.)
Maximum clearance:
KOYO made:
0.058 mm (0.0023 in.)
NSK made:
0.056 mm (0.0022 in.)
If the clearance exceeds the maximum, replace the 1st gear or 1st gear needle roller bearing.

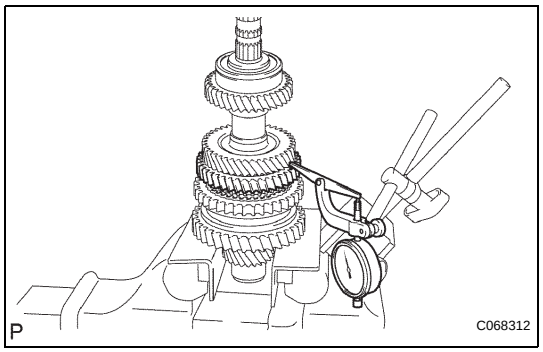

17. INSPECT 2ND GEAR THRUST CLEARANCE

(a) Using a dial gauge, measure the 2nd gear thrust clearance.
Standard clearance:
0.10 to 0.55 mm (0.0039 to 0.0217 in.)
Maximum clearance:
0.55 mm (0.0217 in.)
If the clearance exceeds the maximum, replace transmission clutch hub No. 1, the 2nd gear or 3rd driven gear.

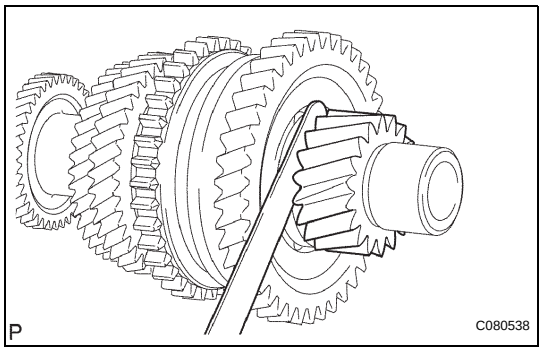

18. INSPECT 1ST GEAR THRUST CLEARANCE

(a) Using a feeler gauge, measure the 1st gear thrust clearance.

Standard clearance:
0.10 to 0.40 mm (0.0039 to 0.0157 in.)

Maximum clearance:
0.40 mm (0.0157 in.)

If the clearance exceeds the maximum, replace the 1st gear thrust washer, 1st gear or transmission clutch hub No. 1.

SHIFT AND SELECT LEVER SHAFT

COMPONENTS

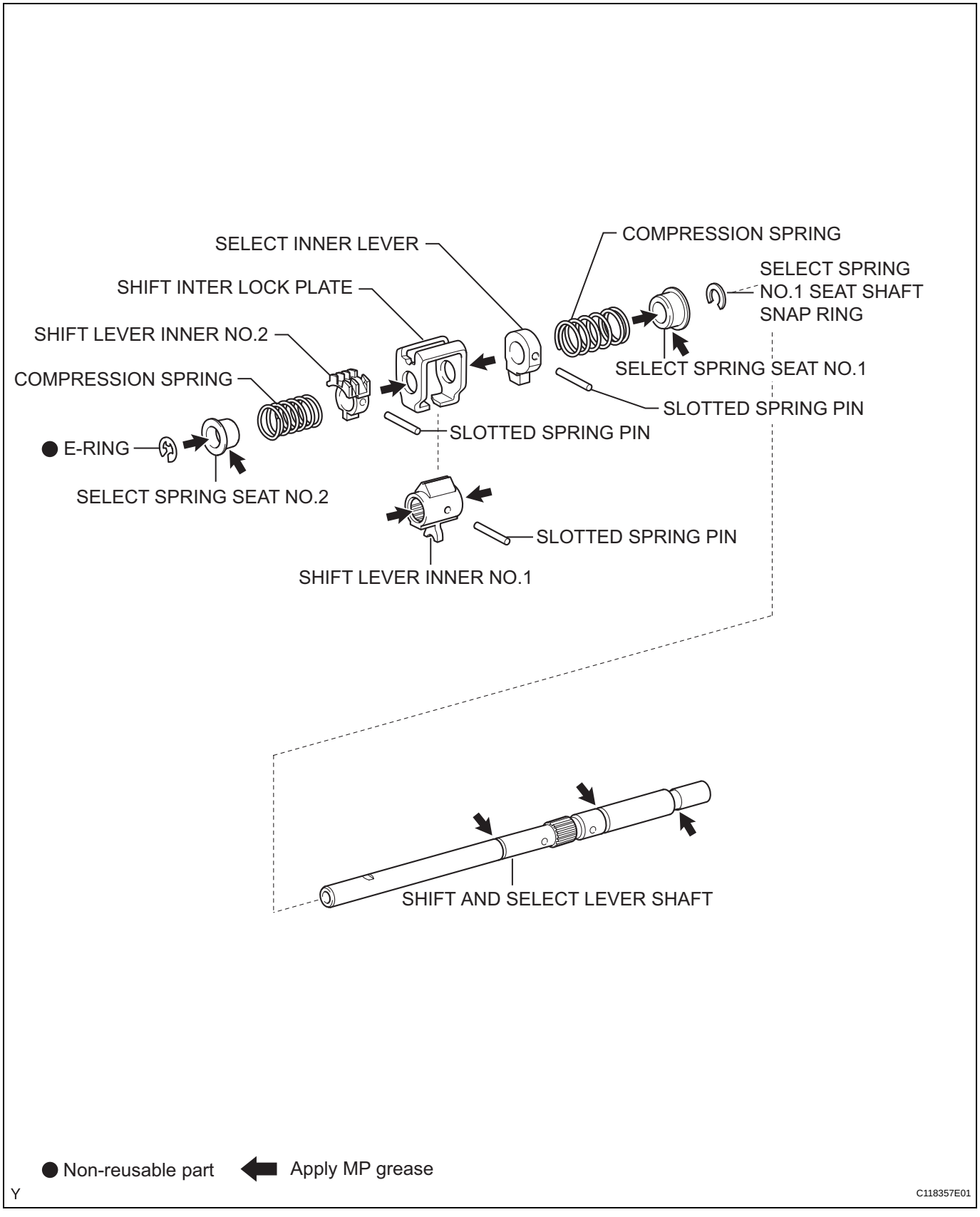

MX

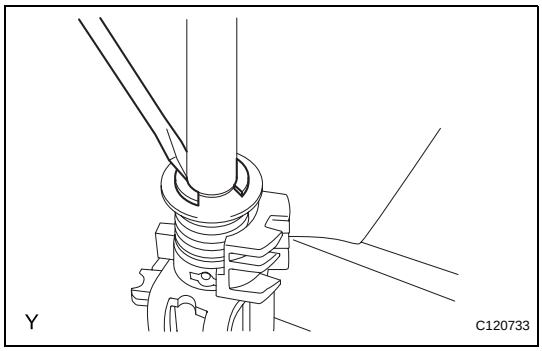

DISASSEMBLY

1. REMOVE SELECT SPRING SEAT NO.2

(a) Using a screwdriver, remove the select spring No. 2 seat E-ring, select spring seat No. 2 and select return compression spring No. 2 from the shift and select lever shaft.

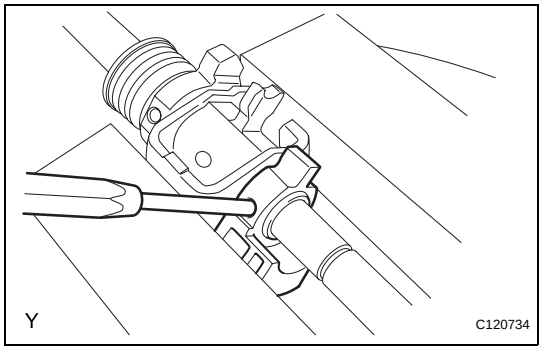

2. REMOVE SHIFT LEVER INNER NO.2

(a) Using a pin punch (ϕ5 mm) and a hammer, remove the shift inner lever slotted spring pin and shift lever inner No. 2 from the shift and select lever shaft.
HINT:
Check the orientation of shift lever inner No. 2.

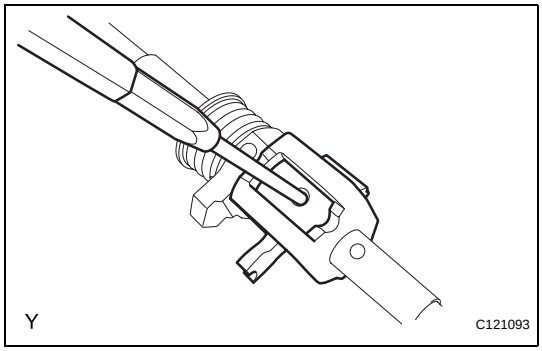

3. REMOVE SHIFT LEVER INNER NO.1

(a) Using a pin punch (ϕ5 mm) and a hammer, remove the shift inner lever slotted spring pin, shift lever inner No. 1 and shift inter lock plate from the shift and select lever shaft.
HINT:
Check the orientation of shift lever inner No. 1.

MX

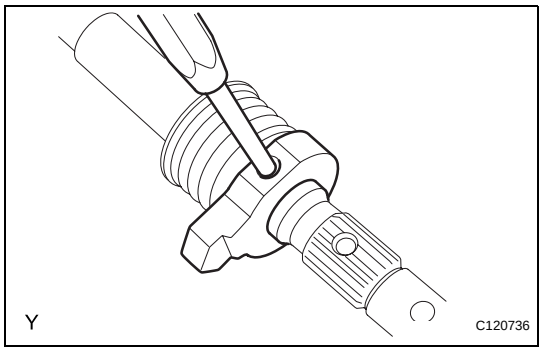

4. REMOVE SELECT INNER LEVER

(a) Using a pin punch (ϕ5 mm) and a hammer, remove the select inner lever slotted spring pin, select inner lever, select return compression spring No. 1 and select spring seat No. 1 from shift and select lever shaft.
HINT:
Check the orientation of the select inner lever.

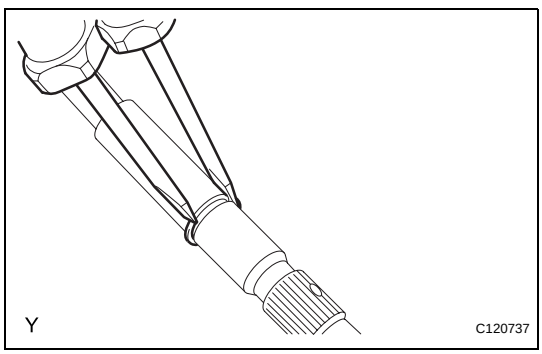

5. REMOVE SELECT SPRING NO.1 SEAT SHAFT SNAP RING

(a) Using 2 screwdrivers and a hammer, remove the select spring No. 1 seat shaft snap ring.

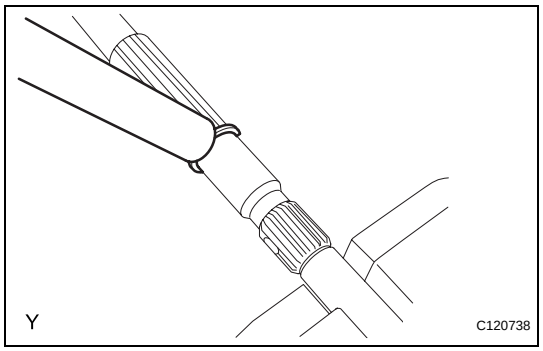

REASSEMBLY

1. INSTALL SELECT SPRING NO.1 SEAT SHAFT SNAP RING

(a) Coat the shift and select lever shaft with MP grease, and install a snap ring onto the shift and select lever shaft using a brass bar and a hammer.

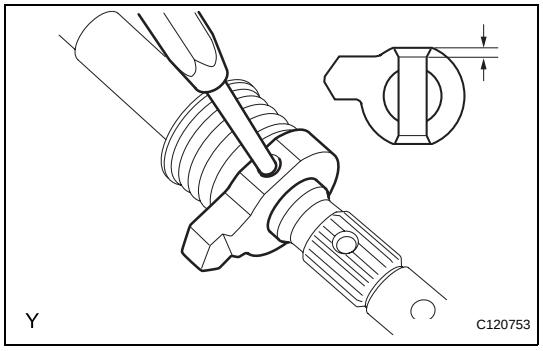

2. INSTALL SELECT INNER LEVER

(a) Coat select spring seat No. 1 with MP grease.

(b) Using a pin punch (ϕ5 mm) and a hammer, install select spring seat No. 1, select return compression spring No. 1, the select inner lever and select inner lever slotted spring pin onto the shift and select lever.

Drive in depth:

3.0 to 4.0 mm (0.1181 to 0.1575 in)

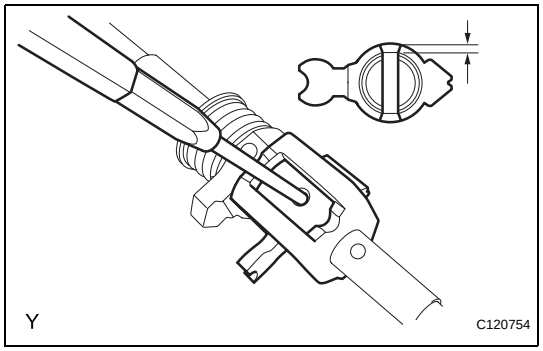

3. INSTALL SHIFT LEVER INNER NO.1

(a) Coat the shift inter lock plate and shift lever inner No. 1 with MP grease.

(b) Using a pin punch (ϕ5 mm) and a hammer, install the shift inter lock plate, shift lever inner No. 1 and shift inner lever slotted spring pin onto the shift and select lever shaft.

Drive in depth:

-0.5 to 0.5 mm (-0.0197 to 0.0197 in.)

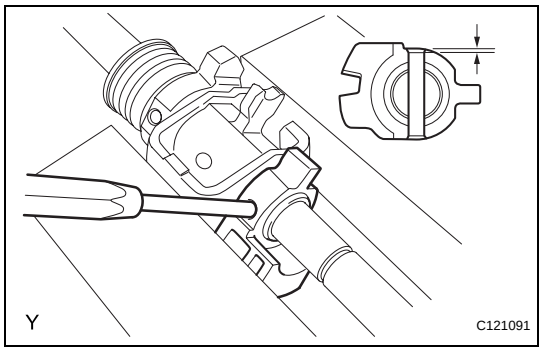

4. INSTALL SHIFT LEVER INNER NO.2

(a) Coat shift lever inner No. 2 with MP grease.

(b) Using a pin punch (ϕ5 mm) and a hammer, install shift lever inner No. 2 and shift inner lever slotted spring pin onto the shift and select lever shaft.

Drive in depth:

1.0 to 2.0 mm (0.0394 to 0.0787 in.)

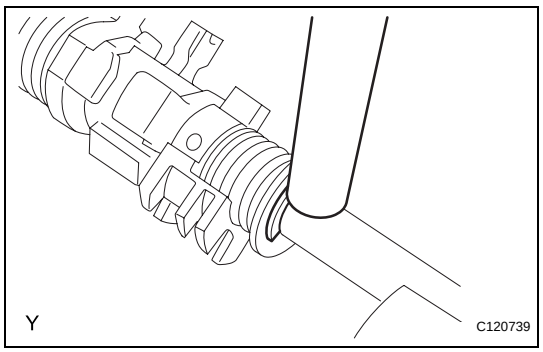

5. INSTALL SELECT SPRING SEAT NO.2

(a) Coat select spring seat No. 2 with MP grease.

(b) Install select spring seat No. 2 and select return compression spring No. 2. Using pliers, install a new select spring seat No. 2 E-ring onto the shift and select lever shaft.

DIFFERENTIAL CASE

COMPONENTS

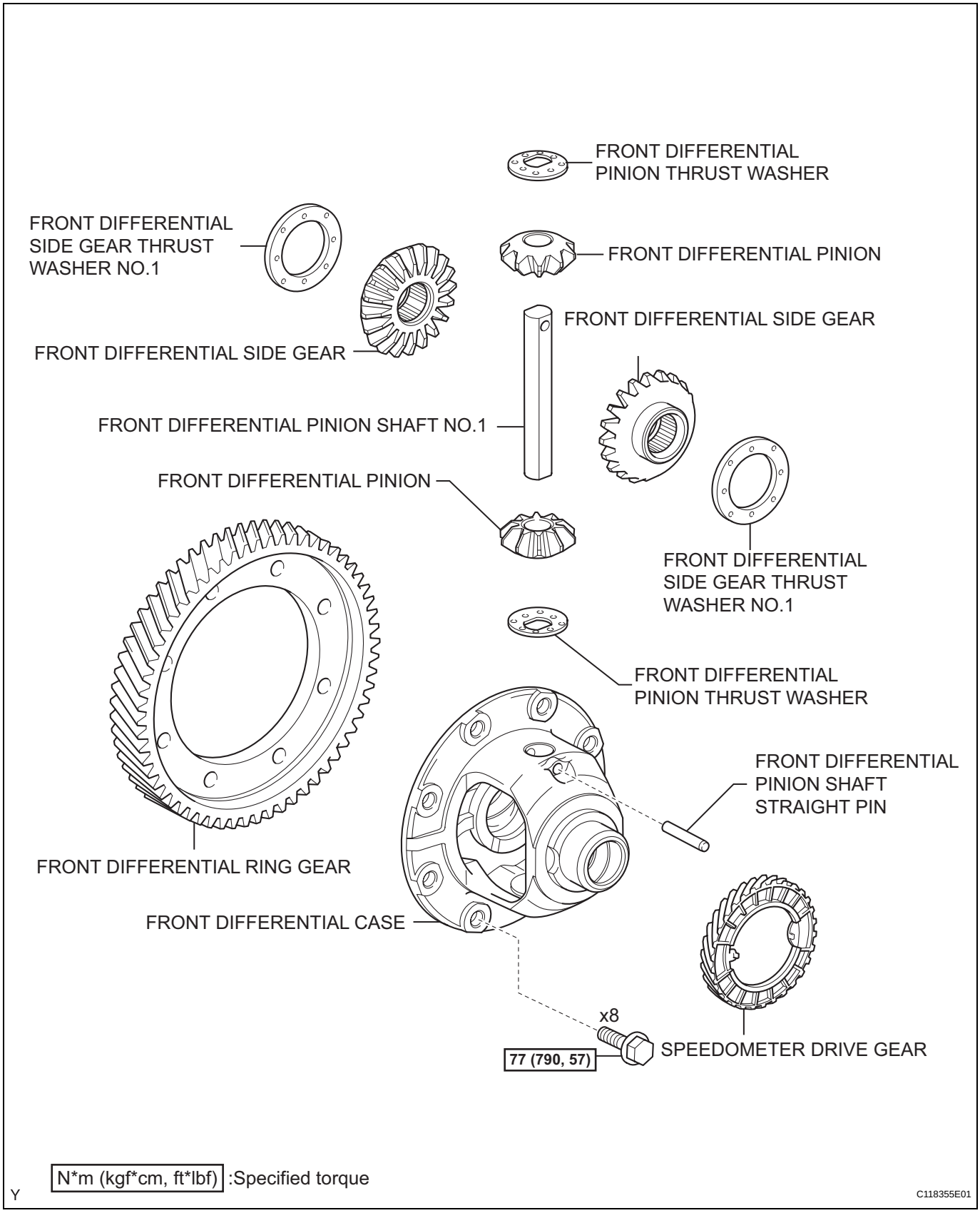

MX

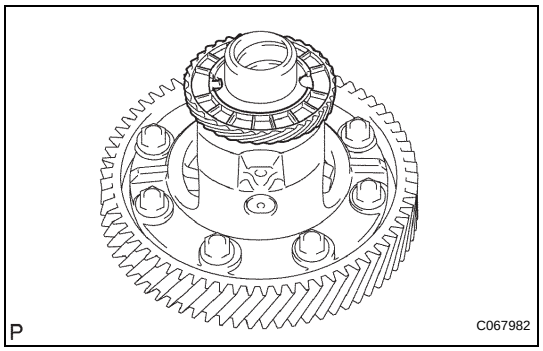

DISASSEMBLY

1. REMOVE SPEEDOMETER DRIVE GEAR

(a) Remove the speedometer drive gear from the front differential case.

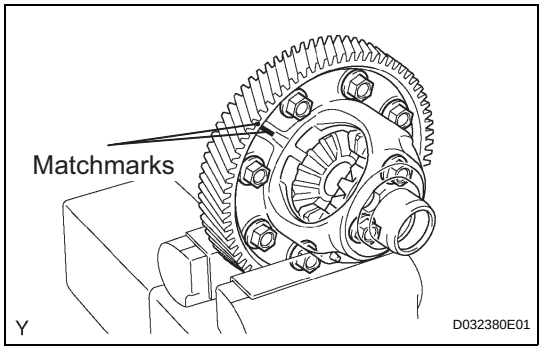

2. REMOVE FRONT DIFFERENTIAL RING GEAR

(a) Place matchmarks on the front differential ring gear and the front differential case.

(b) Remove the 8 bolts.

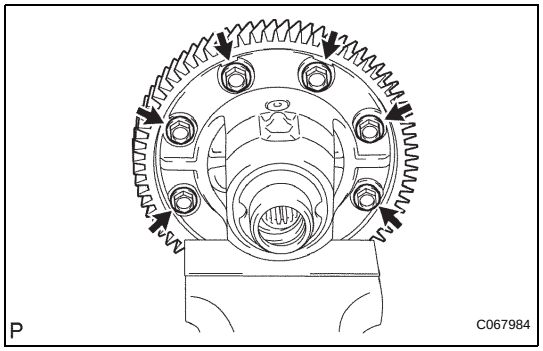

(c) Using a plastic hammer, remove the front differential ring gear from the front differential case.

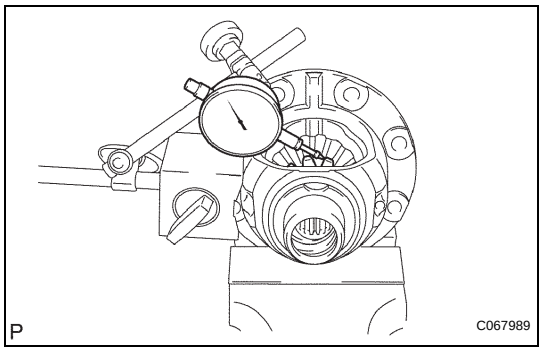

3. INSPECT FRONT DIFFERENTIAL SIDE GEAR BACKLASH

(a) Fix the front differential pinion to the front differential case side. Using a dial indicator, measure the front differential side gear backlash.

Standard backlash:

0.05 to 0.20 mm (0.0020 to 0.0079 in.)

If the backlash is outside the specifications, replace the side gear thrust washers.

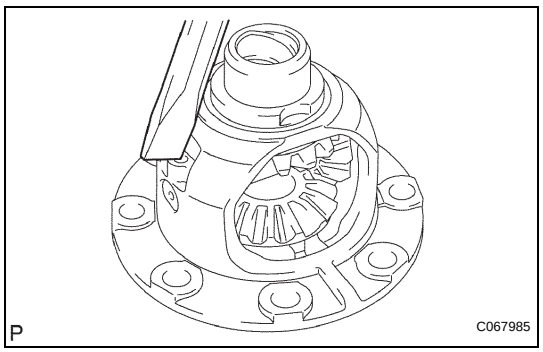

4. REMOVE FRONT DIFFERENTIAL PINION SHAFT STRAIGHT PIN

(a) Using a chisel and a hammer, loosen the staked part of the front differential case.

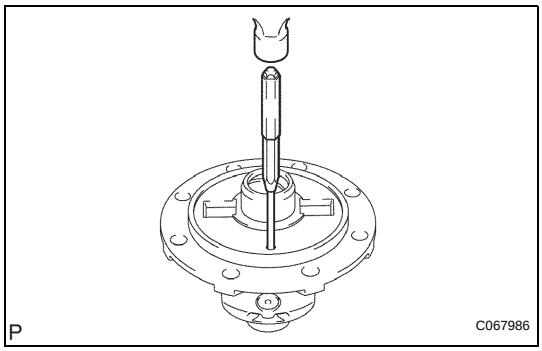

(b) Using a pin punch (ϕ3 mm) and a hammer, remove the front differential pinion shaft straight pin from the front differential case.

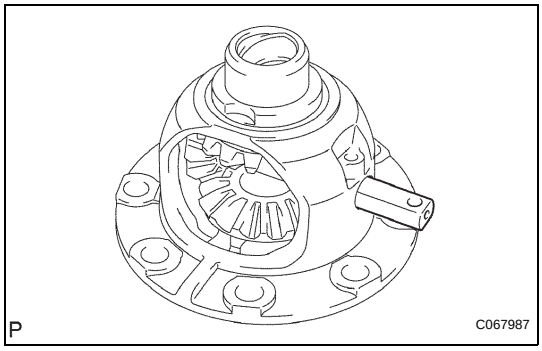

5. REMOVE FRONT DIFFERENTIAL PINION SHAFT NO.1

(a) Remove front differential pinion shaft No. 1 from the front differential case.

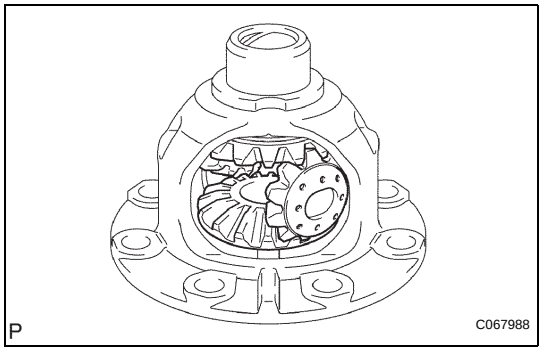

6. REMOVE FRONT DIFFERENTIAL SIDE GEAR

(a) Remove the 2 front differential pinions, 2 front differential pinion thrust washers, 2 front differential side gear thrust washers No. 1 and 2 front differential side gears from the front differential case.
HINT:
Revolving the front differential pinion, remove the 2 pinions and 2 side gears.

INSPECTION

MX

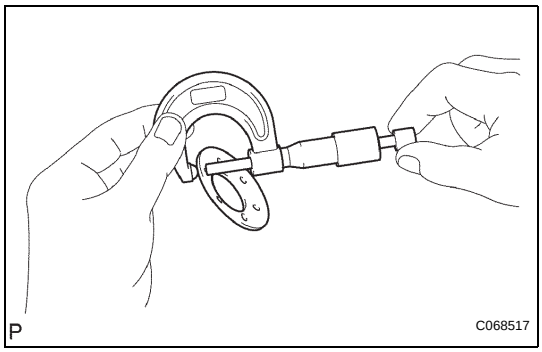

1. INSPECT FRONT DIFFERENTIAL PINION THRUST WASHER

(a) Using a micrometer, measure the thickness of the front differential pinion thrust washer.
Minimum thickness:
0.94 mm (0.03701 in.)
If the thickness is less than the minimum, replace the front differential pinion thrust washer.

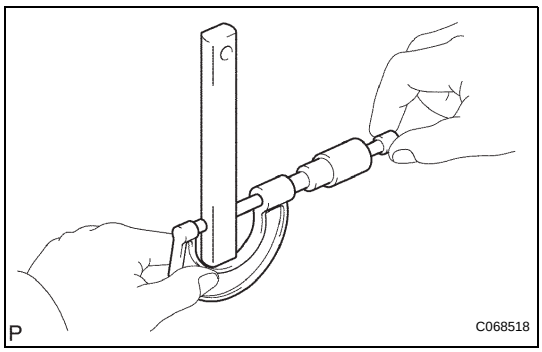

2. INSPECT FRONT DIFFERENTIAL PINION SHAFT NO.1

(a) Using a micrometer, measure the outer diameter of front differential pinion shaft No. 1.
Minimum outer diameter:
16.982 mm (0.6685 in.)
If the outer diameter is less than the minimum, replace front differential pinion shaft No. 1.

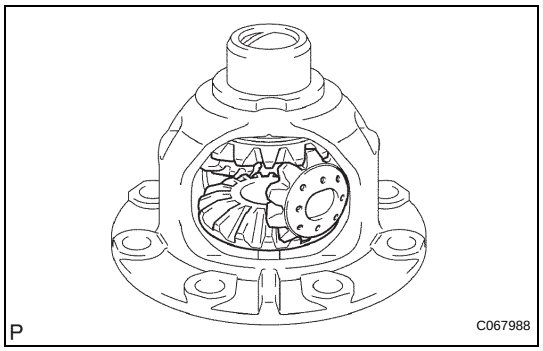

REASSEMBLY

1. INSTALL FRONT DIFFERENTIAL SIDE GEAR

(a) Coat the sliding and rotating surfaces of the front differential side gear with gear oil.

(b) Install the 2 front differential side gear thrust washers No. 1 onto the 2 front differential side gears.

(c) Install the 2 front differential side gears, 2 front differential pinions and 2 front differential pinion thrust washers onto the front differential case.
HINT:
Revolving the front differential side gear, install the 2 front differential pinions and 2 front differential pinion thrust washers.

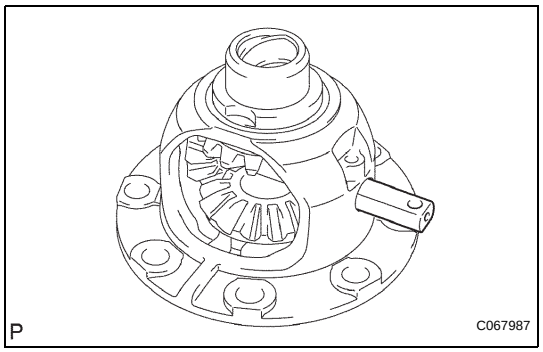

2. INSTALL FRONT DIFFERENTIAL PINION SHAFT NO.1

(a) Coat front differential pinion shaft No. 1 with MP grease.

(b) Install front differential pinion shaft No. 1 onto the front differential case so that the hole for the front differential pinion shaft straight pin is aligned with the hole in the front differential case.

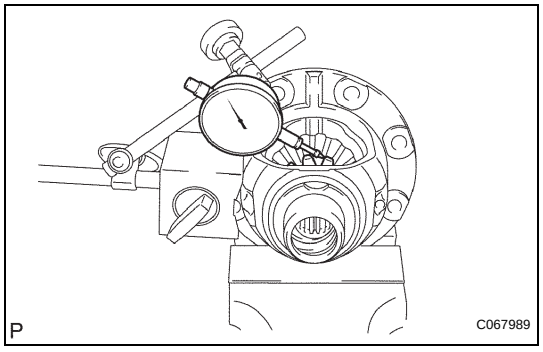

3. ADJUST FRONT DIFFERENTIAL SIDE GEAR BACKLASH

(a) Fix the front differential pinion to the front differential case side. Using a dial indicator, measure the front differential side gear backlash.
Standard backlash:
0.05 to 0.20 mm (0.0020 to 0.0079 in.)
If the backlash is outside the specifications, replace the side gear thrust washer.
Thrust washer thickness

Parts No.	Thickness mm (in.)
41361 - 22140	0.95 (0.0374 in.)
41361 - 22020	1.00 (0.0394 in.)
41361 - 22150	1.05 (0.0413 in.)
41361 - 22030	1.10 (0.0433 in.)
41361 - 22160	1.15 (0.0452 in.)
41361 - 22040	1.20 (0.0472 in.)

HINT:
- Because the thrust washer does not have any marks for distinction, measure the thickness with a micrometer to select a proper thrust washer.
- Select washers of the same thickness for both the right and left.

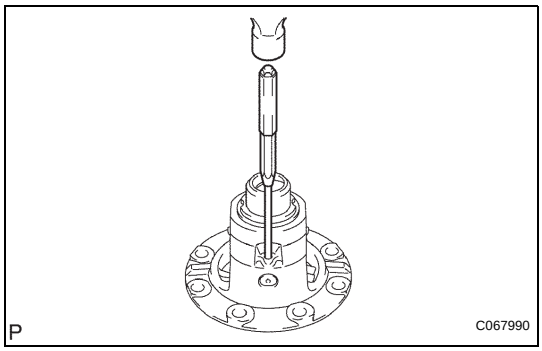

4. INSTALL FRONT DIFFERENTIAL PINION SHAFT STRAIGHT PIN

(a) Using a pin punch (ϕ3 mm) and a hammer, install the front differential pinion shaft straight pin onto the front differential case.

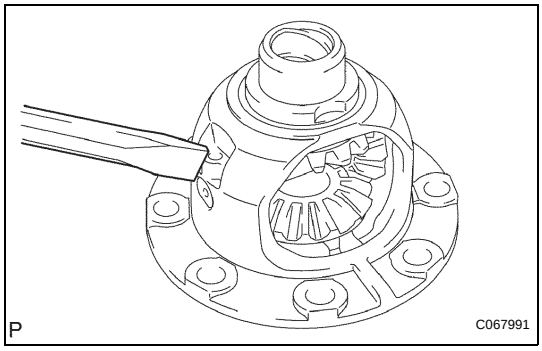

(b) Using a chisel and a hammer, stake the front differential case hole.

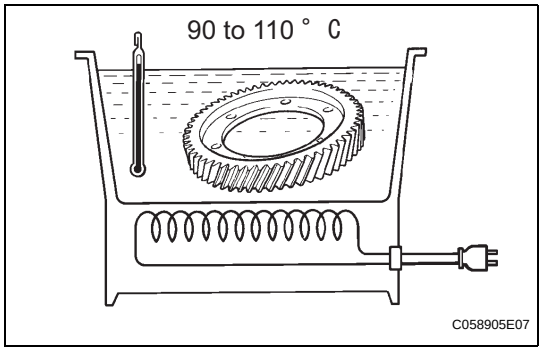

5. INSTALL FRONT DIFFERENTIAL RING GEAR

(a) Clean the contact surfaces of the front differential case and ring gear.

(b) Using a heater, heat the front differential ring gear to 90 to 110°C (194.0 to 230.0°F).

(c) After the moisture on the ring gear has completely evaporated, quickly install the ring gear onto the differential case.

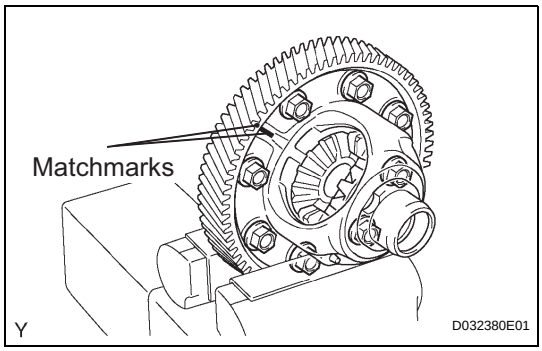

(d) Aligning the 2 matchmarks, quickly install the front differential ring gear onto the front differential case.

(e) Install the 8 bolts.
Torque: 77 N*m (790 kgf*cm, 57 ft.*lbf)

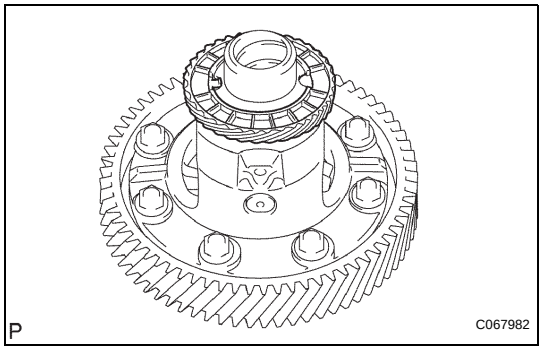

6. INSTALL SPEEDOMETER DRIVE GEAR

(a) Install the speedometer drive gear onto the front differential case.

MX

FRONT DRIVE SHAFT

COMPONENTS

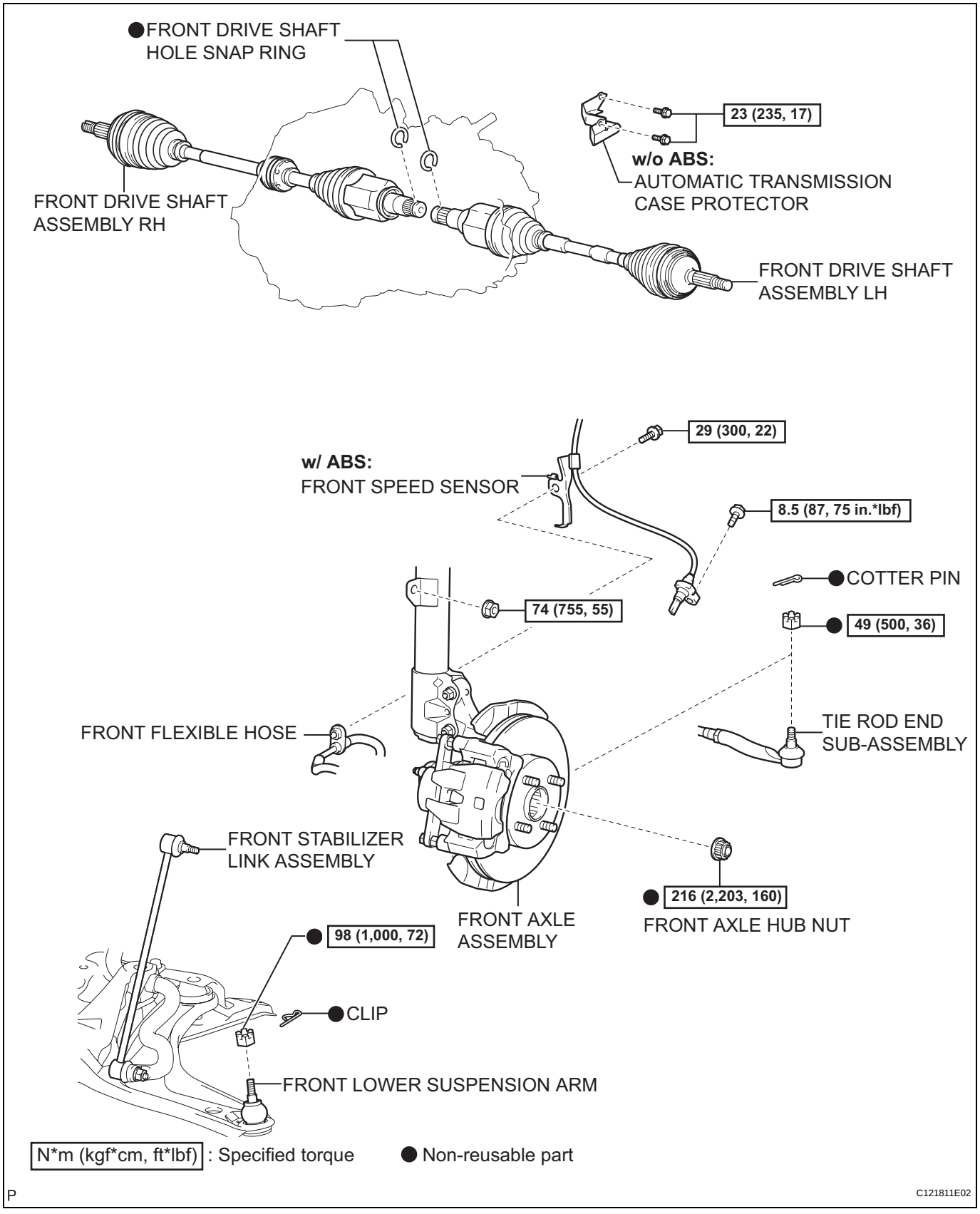

DS

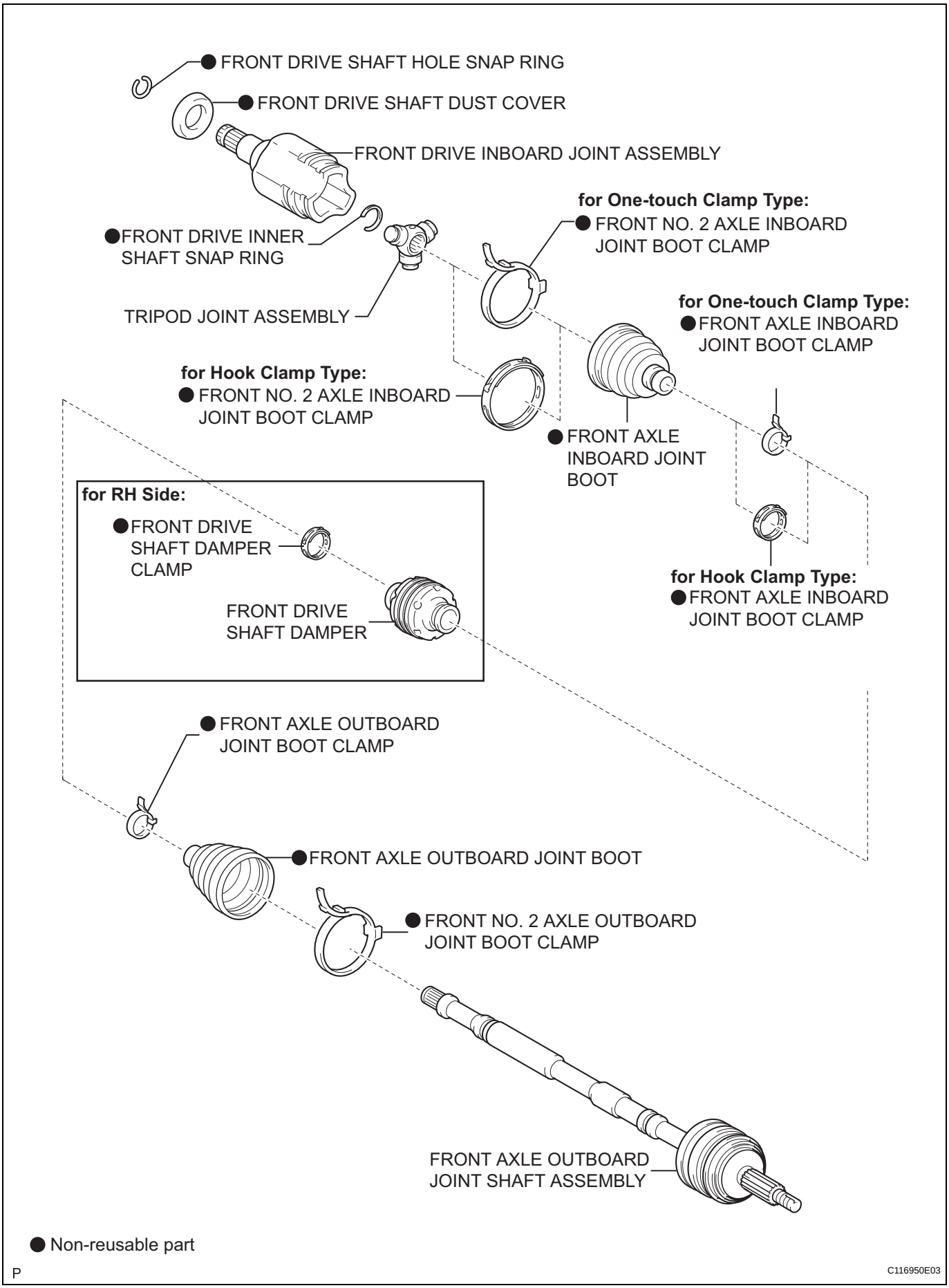

DS

P

C116950E03

REMOVAL

1. **DISCONNECT CABLE FROM NEGATIVE BATTERY TERMINAL**
2. **DRAIN AUTOMATIC TRANSAXLE FLUID (for Automatic Transaxle) (See page AX-159)**
3. **DRAIN TRANSAXLE OIL (for Manual Transaxle) (See page MX-26)**
4. **REMOVE FRONT WHEEL**
5. **REMOVE FRONT AXLE HUB NUT**

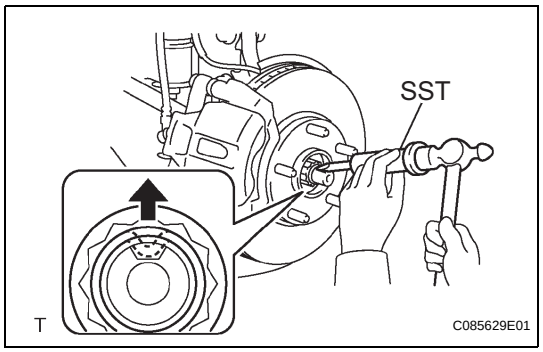

(a) Using SST and a hammer, release the staked part of the axle hub nut.
SST 09930-00010
NOTICE:
- **Insert SST into the groove with the flat surface facing up.**
- **Do not damage the tip of SST using grinders.**
- **Completely unstake the staked part before removing the axle hub nut.**
- **Do not damage the threads of the drive shaft.**

(b) Using a 30 mm socket wrench, remove the axle hub nut.

6. **SEPARATE FRONT SPEED SENSOR (w/ ABS)**

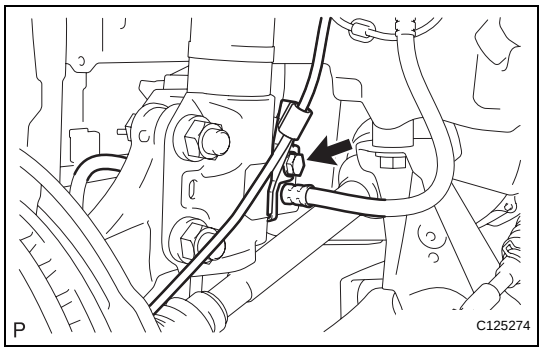

(a) Remove the bolt and separate the speed sensor and flexible hose.

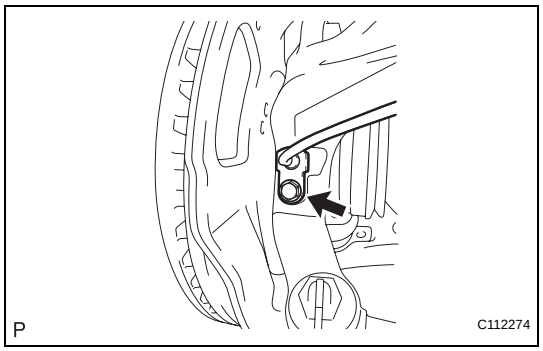

(b) Remove the bolt and separate the speed sensor from the steering knuckle.
NOTICE:
- **Keep the speed sensor tip and installation portion free of foreign matter.**
- **Remove the speed sensor without turning it from its original installation angle.**

7. **SEPARATE TIE ROD END SUB-ASSEMBLY**

(a) Remove the cotter pin and castle nut.

DS

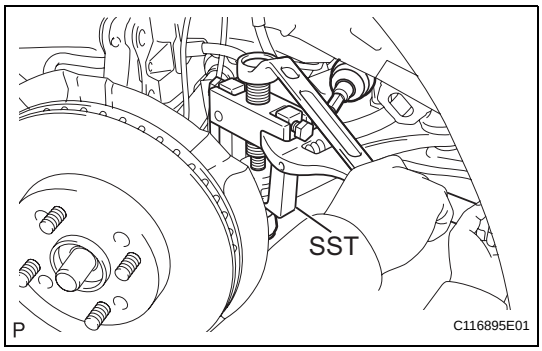

(b) Using SST, separate the tie rod end from the steering knuckle.
SST 09628-62011
NOTICE:
Do not damage the tie rod end dust cover.

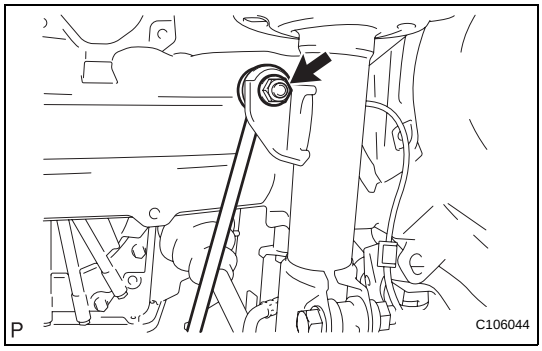

8. SEPARATE FRONT STABILIZER LINK ASSEMBLY

(a) Remove the nut and separate the stabilizer link from the shock absorber.
HINT:
If the ball joint turns together with the nut, use a socket hexagon wrench 6 to hold the stud.

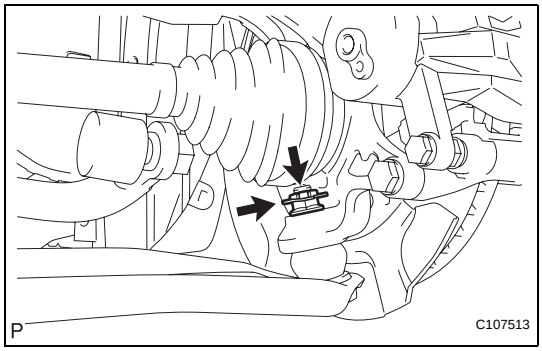

9. SEPARATE FRONT LOWER SUSPENSION ARM

(a) Remove the clip and castle nut.

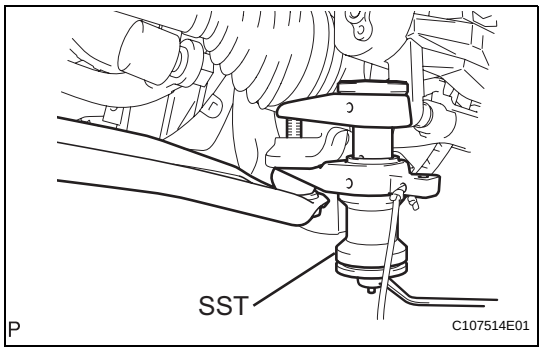

(b) Using SST, separate the lower arm.
SST 09628-00011
NOTICE:
- **Do not damage the lower ball joint dust cover.**
- **Suspend SST with a piece of string or the equivalent.**

10. SEPARATE FRONT AXLE ASSEMBLY

(a) Using a plastic hammer, tap the end of the drive shaft and disengage the fitting between the drive shaft and front axle.
HINT:
If it is difficult to disengage the fitting, tap the end of the drive shaft with a brass bar and hammer.

(b) Push the front axle out of the vehicle to remove the drive shaft from the front axle.
NOTICE:
- **Do not push the front axle further out of the vehicle than is necessary.**
- **Do not damage the outboard joint boot.**
- **Do not damage the speed sensor rotor.**

DS

- **Suspend the drive shaft with a piece of string or the equivalent.**

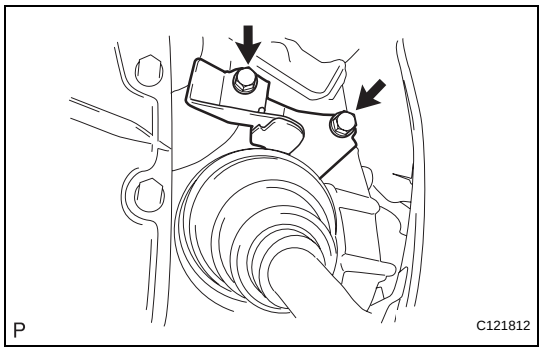

11. REMOVE AUTOMATIC TRANSMISSION CASE PROTECTOR (w/o ABS)

(a) Remove the 2 bolts and transmission case protector.

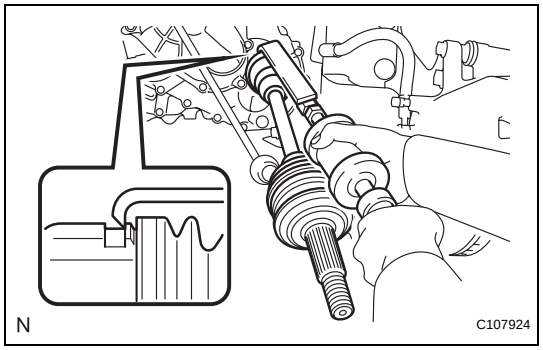

12. REMOVE FRONT DRIVE SHAFT ASSEMBLY LH

(a) Using SST, remove the drive shaft.
SST 09520-01010, 09520-24010 (09520-32040)
NOTICE:
- **Do not damage the oil seal.**
- **Do not damage the inboard joint boot.**
- **Do not drop the drive shaft.**

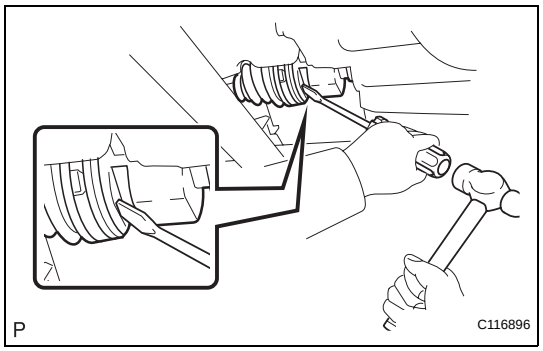

13. REMOVE FRONT DRIVE SHAFT ASSEMBLY RH

(a) Using a screwdriver and hammer, remove the drive shaft.
NOTICE:
- **Do not damage the oil seal.**
- **Do not damage the inboard joint boot.**
- **Do not drop the drive shaft.**

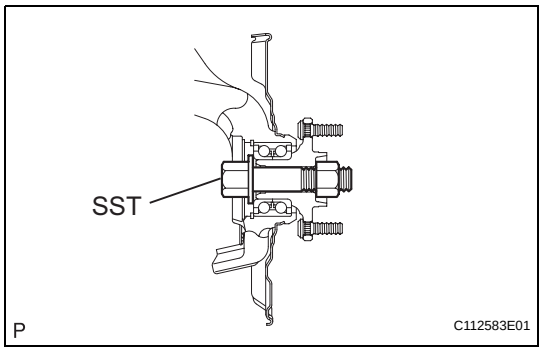

14. FIX FRONT AXLE ASSEMBLY
SST 09608-16042 (09608-02021, 09608-02041)
HINT:
The hub bearing could be damaged if it is subjected to the vehicle's full weight, such as when moving the vehicle with the drive shaft removed. If it is absolutely necessary to place the vehicle's full weight on the hub bearing, first support it with SST.

DS

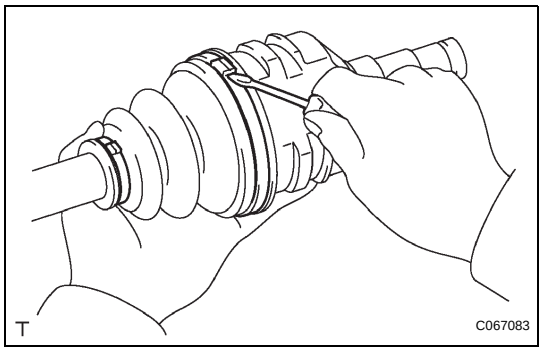

DISASSEMBLY

1. REMOVE FRONT NO. 2 AXLE INBOARD JOINT BOOT CLAMP

(a) for One-touch Clamp Type:

(1) Using a screwdriver, release the staked part of the boot clamp and separate the boot clamp.

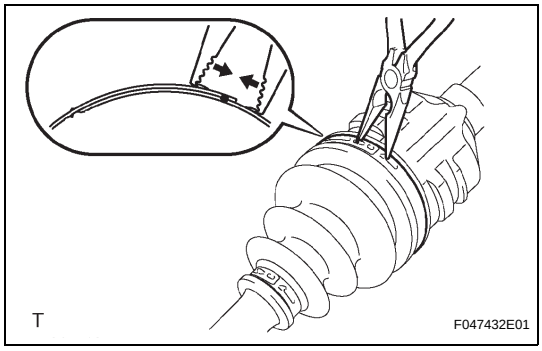

(b) for Hook Clamp Type:

(1) Using needle-nose pliers, disengage the hook and remove the boot clamp.

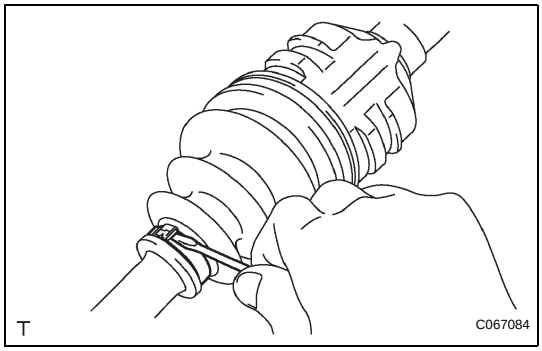

2. REMOVE FRONT AXLE INBOARD JOINT BOOT CLAMP

(a) for One-touch Clamp Type:

(1) Using a screwdriver, release the staked part of the boot clamp and separate the boot clamp.

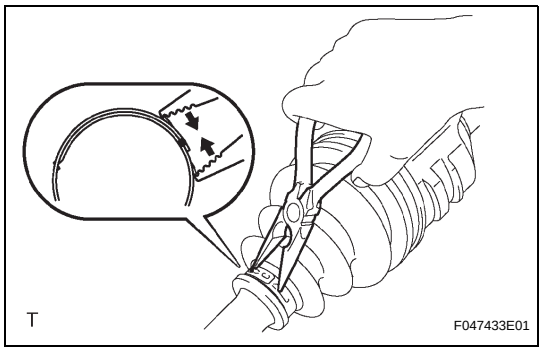

(b) for Hook Clamp Type:

(1) Using needle-nose pliers, disengage the hook and remove the boot clamp.

3. SEPARATE FRONT AXLE INBOARD JOINT BOOT

(a) Separate the inboard joint boot from the inboard joint.

4. REMOVE FRONT DRIVE INBOARD JOINT ASSEMBLY

(a) Remove the old grease from the inboard joint.

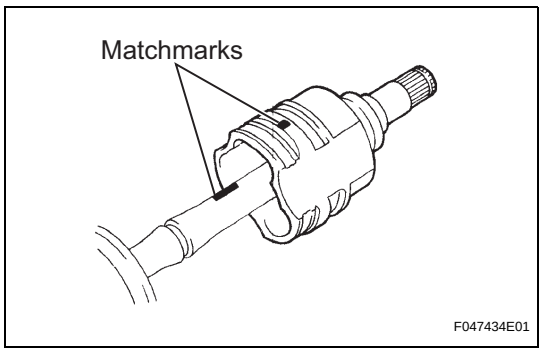

(b) Place matchmarks on the inboard joint and outboard joint shaft.
NOTICE:
Do not cause any damage when placing the marks.

(c) Remove the inboard joint from the outboard joint shaft.

(d) Fix the outboard joint shaft in a vise between aluminum plates.
NOTICE:
Do not overtighten the vise.

DS

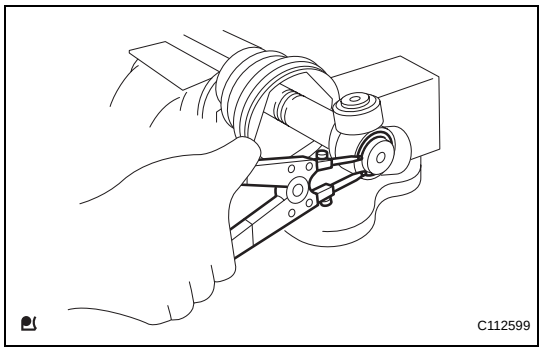

(e) Using a snap ring expander, remove the snap ring.

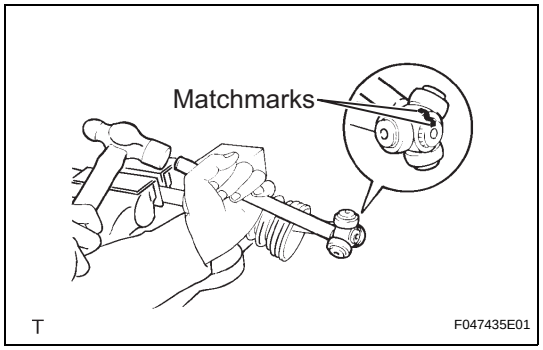

(f) Place matchmarks on the tripod joint and outboard joint shaft.
NOTICE:
Do not cause any damage when placing the marks.
(g) Using a brass bar and hammer, remove the tripod joint.
NOTICE:
Do not tap the roller.
(h) Remove the inboard joint boot No. 2 clamp, the inboard joint boot and the inboard joint boot clamp.

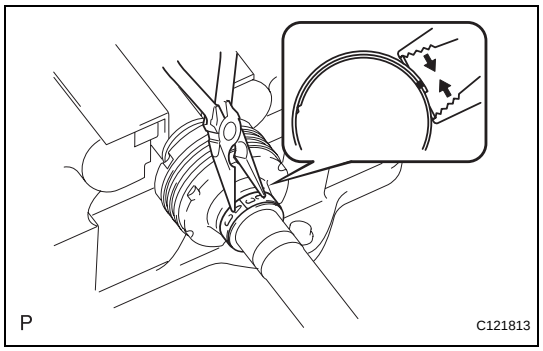

5. REMOVE FRONT DRIVE SHAFT DAMPER CLAMP (for RH Side)
(a) Using needle-nose pliers, disengage the hook and remove the damper clamp.

6. REMOVE FRONT DRIVE SHAFT DAMPER (for RH Side)

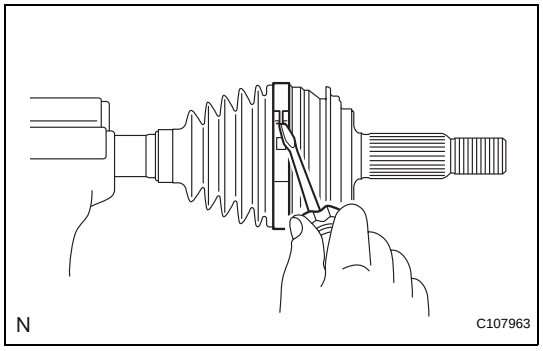

7. REMOVE FRONT NO. 2 AXLE OUTBOARD JOINT BOOT CLAMP
(a) Using a screwdriver, release the staked part of the boot clamp and remove the boot clamp.

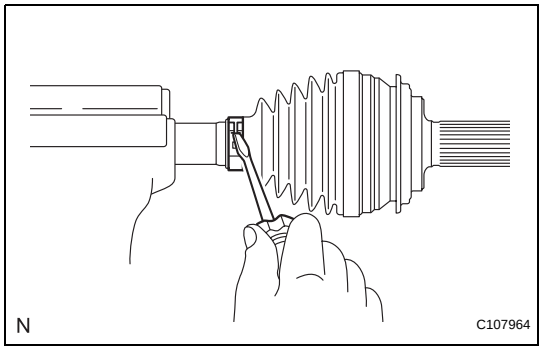

8. REMOVE FRONT AXLE OUTBOARD JOINT BOOT CLAMP
(a) Using a screwdriver, release the staked part of the boot clamp and remove the boot clamp.

9. REMOVE FRONT AXLE OUTBOARD JOINT BOOT
(a) Remove the outboard joint boot from the outboard joint shaft.
(b) Remove the old grease from the outboard joint.

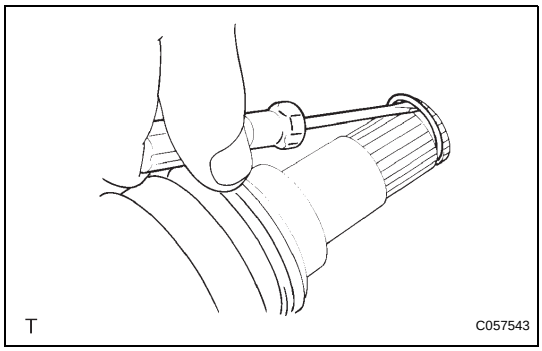

10. REMOVE FRONT DRIVE SHAFT HOLE SNAP RING

(a) Using a screwdriver, remove the snap ring.

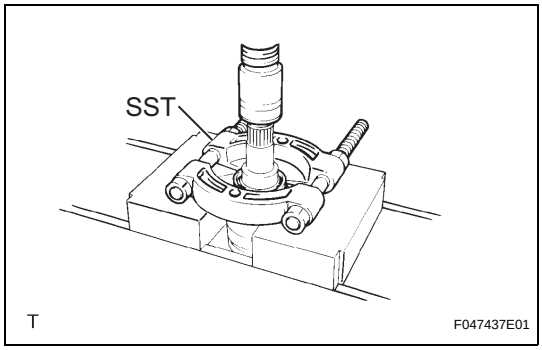

11. REMOVE FRONT DRIVE SHAFT DUST COVER

(a) Using SST and a press, remove the dust cover.
SST 09950-00020
NOTICE:
Do not drop the inboard joint.

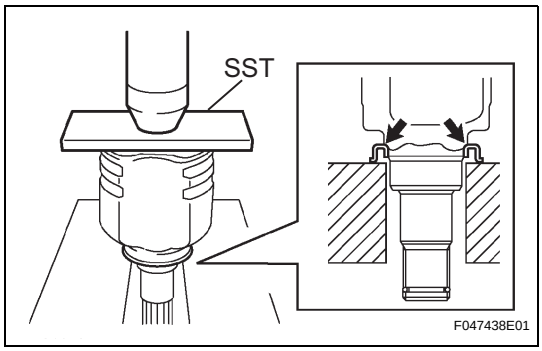

REASSEMBLY

1. INSTALL FRONT DRIVE SHAFT DUST COVER

(a) Using SST and a press, install a new dust cover into the inboard joint until it is flush with the end.
SST 09527-10011
NOTICE:
- **Install the dust cover in the correct orientation.**
- **Do not deform the dust cover.**

2. INSTALL FRONT DRIVE SHAFT HOLE SNAP RING

(a) Install a new snap ring.

3. INSTALL FRONT AXLE OUTBOARD JOINT BOOT

(a) Wrap the spline of the outboard joint shaft with protective tape.

(b) Install new parts onto the outboard joint shaft in the following order.

1.	Front axle outboard joint boot No. 2 clamp
2.	Front axle outboard joint boot
3.	Front axle outboard joint boot clamp

(c) Pack the outboard joint shaft joint portion and outboard joint boot with grease.
Standard Quantity:
125 to 135 g (4.4 to 4.8 oz.)

(d) Install the outboard joint boot onto the outboard joint shaft groove.
NOTICE:
Keep the groove free of grease.

DS

4. INSTALL FRONT NO. 2 AXLE OUTBOARD JOINT BOOT CLAMP

CAUTION:
Wear protective gloves to avoid injuries to your hands.

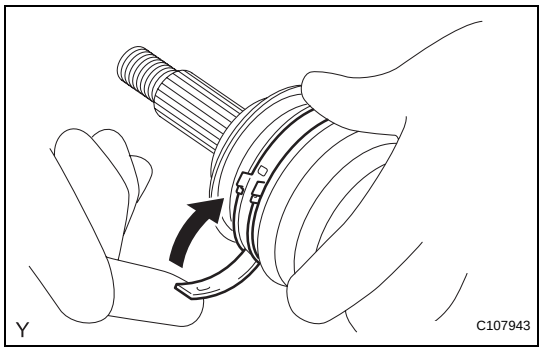

(a) Install the boot clamp onto the outboard joint boot and provisionally bend the lever.

NOTICE:
- **Set the lever into the guide groove correctly.**
- **Check the band and the lever for any deformation before bending the lever.**
- **Set the lever into the guide groove correctly and install the clamp as far into the inner side of the vehicle as possible.**

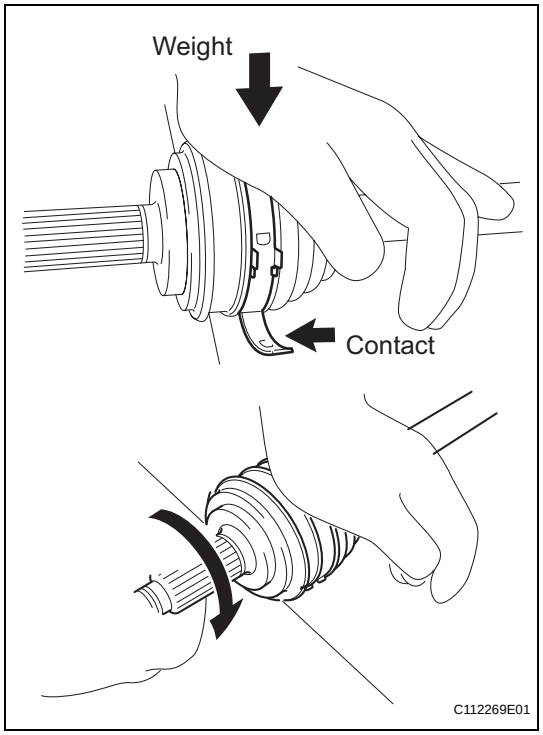

(b) Lean your weight on your hand and roll the outboard joint forward while pressing the outboard joint against the work plane. Roll the outboard joint and fold the lever until a click sound can be heard.

NOTICE:
- **Do not damage the deflector.**
- **Make sure that the outboard joint is in direct contact with the work plane.**

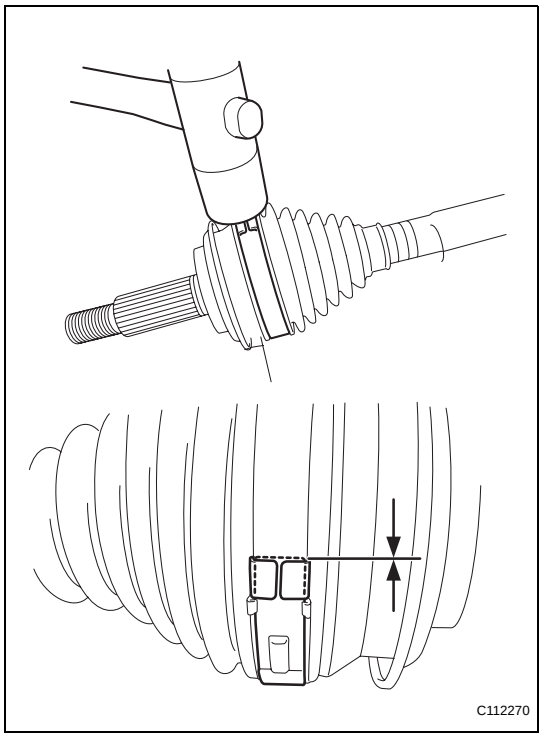

(c) Using a plastic hammer, tap the buckle to fix it while adjusting the clearance between the lever and the groove to make the clearances between the buckle edge and the lever end even.
NOTICE:
Do not damage the outboard joint boot.

5. INSTALL FRONT AXLE OUTBOARD JOINT BOOT CLAMP
CAUTION:
Wear protective gloves to avoid injuries to your hands.

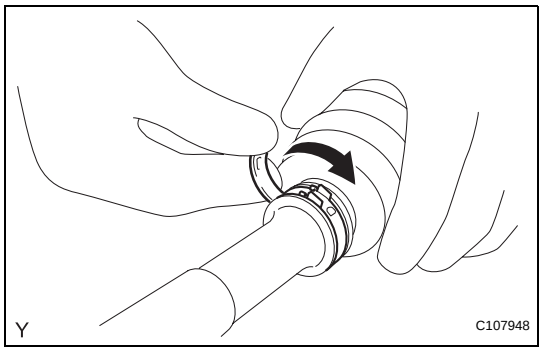

(a) Install the boot clamp onto the outboard joint boot and provisionally bend the lever.
NOTICE:
- **Set the lever into the guide groove correctly.**
- **Check the band and the lever for any deformation before bending the lever.**

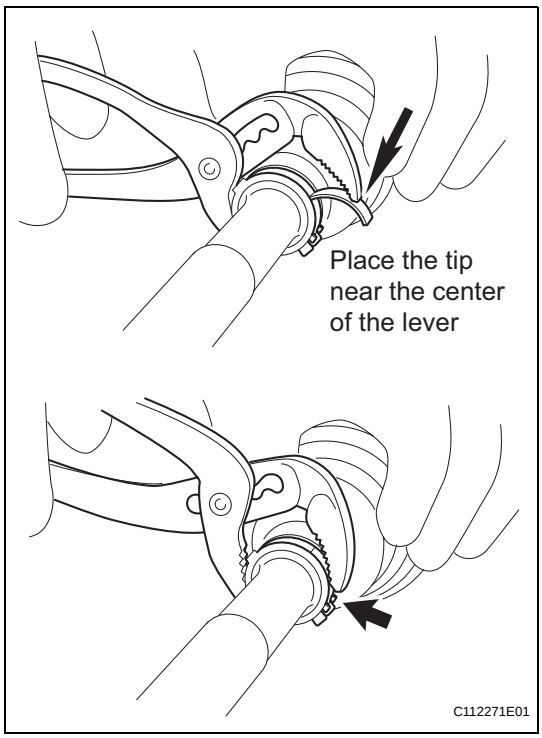

(b) Using water pump pliers, pinch the boot clamp to provisionally fix it.

DS

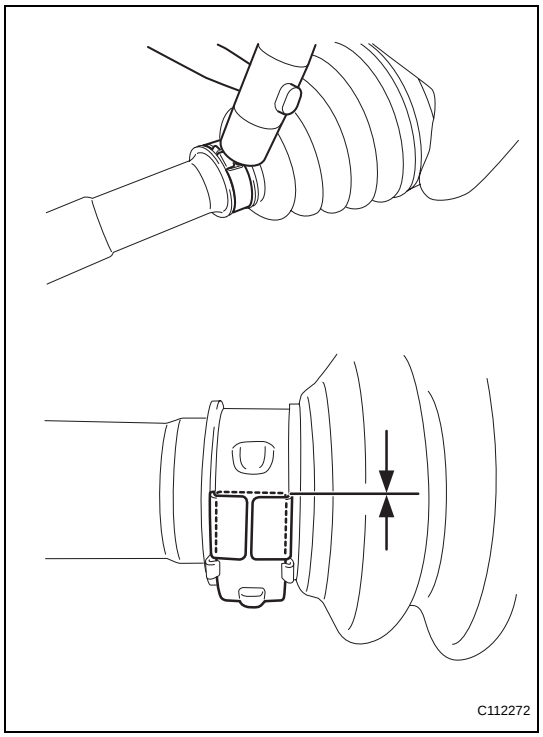

(c) Using a plastic hammer, tap the buckle to fix it while adjusting the clearance between the lever and the groove to make the clearances between the buckle edge and the lever end even.
NOTICE:
Do not damage the outboard joint boot.

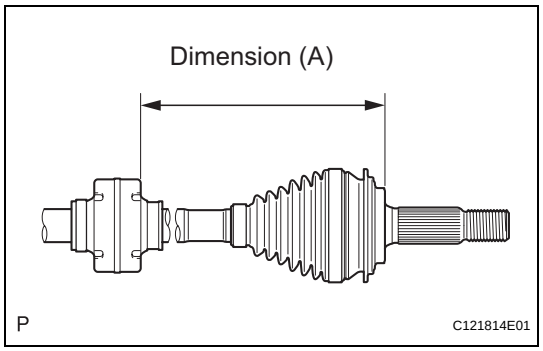

6. INSTALL FRONT DRIVE SHAFT DAMPER (for RH Side)

(a) Install the drive shaft damper onto dimension (A) shown in the illustration.
Dimension (A):
425.6 to 429.6 mm (16.76 to 16.91 in.)

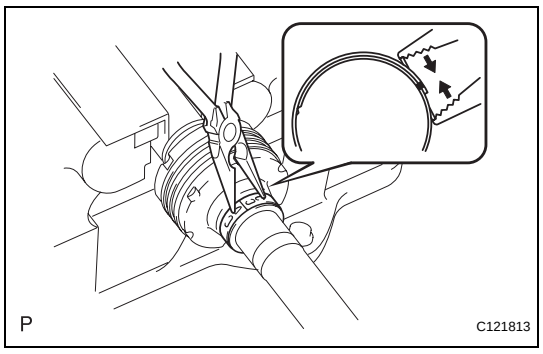

7. INSTALL FRONT DRIVE SHAFT DAMPER CLAMP (for RH Side)

(a) Using needle-nose pliers, align the concave part with the protrusion of a new damper clamp in order to fix it.

8. INSTALL FRONT DRIVE INBOARD JOINT ASSEMBLY

(a) Install new parts onto the outboard joint shaft in the following order.

1.	Front axle inboard joint boot clamp
2.	Front axle inboard joint boot
3.	Front axle inboard joint boot No. 2 clamp

(b) Fix the outboard joint shaft in a vise between aluminum plates.
NOTICE:
Do not overtighten the vise.

(c) Remove the protective tape.

DS

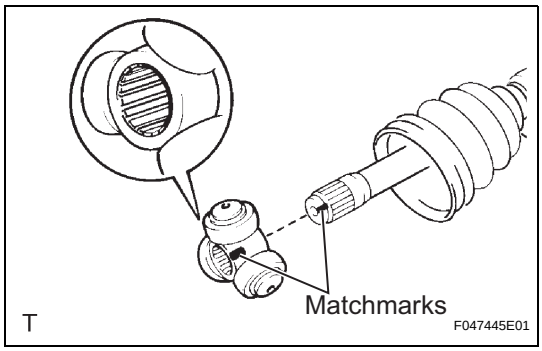

(d) Align the matchmarks and install the tripod joint onto the outboard joint shaft.
NOTICE:
Face the serration side of the tripod joint outward and install it onto the outboard joint end.

(e) Using a brass bar and hammer, install the tripod joint.
NOTICE:
- **Do not hit the roller portion.**
- **Keep the tripod joint free of foreign matter.**

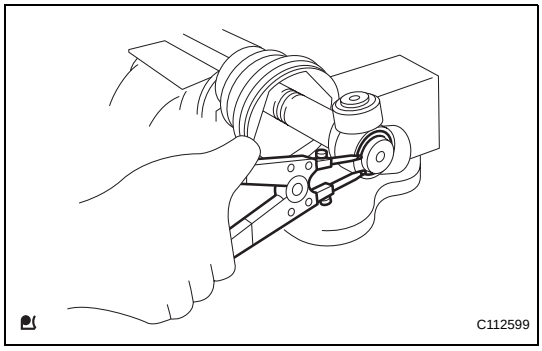

(f) Using a snap ring expander, install a new snap ring.

(g) Pack the inboard joint with grease.
Standard Quantity:
125 to 135 g (4.4 to 4.8 oz.)

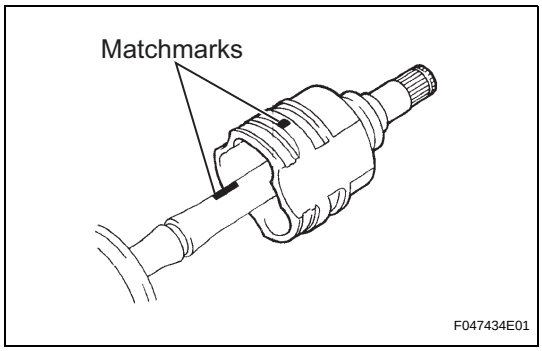

(h) Align the matchmarks and install the inboard joint onto the outboard joint shaft.

9. INSTALL FRONT AXLE INBOARD JOINT BOOT

(a) Install the inboard joint boot into the grooves of the inboard joint and outboard joint shaft.
NOTICE:
Keep the grooves free of grease.

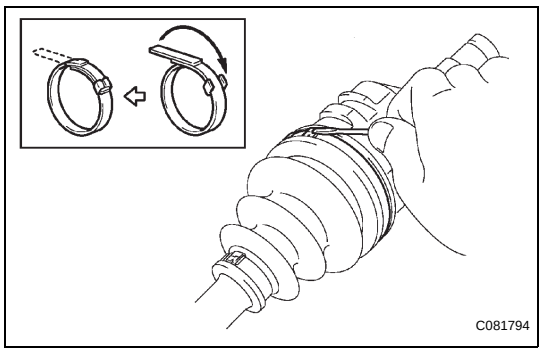

10. INSTALL FRONT NO. 2 AXLE INBOARD JOINT BOOT CLAMP

(a) for One-touch Clamp Type:

(1) Install the boot clamp onto the inboard joint boot and caulk the boot clamp with a screwdriver.
NOTICE:
Do not damage the boot.

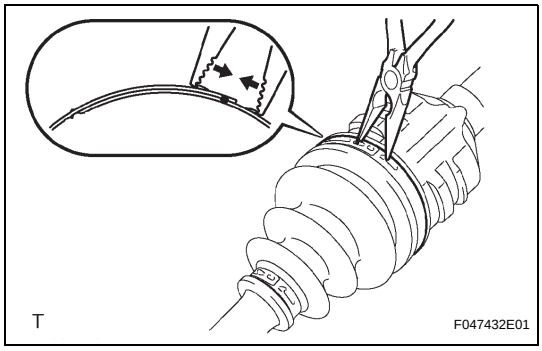

(b) for Hook Clamp Type:

(1) Using needle-nose pliers, align the concave part with the protrusion of the boot clamp in order to fix it.
NOTICE:
- **Do not damage the boot.**
- **Do not deform the claw of the hook.**

DS

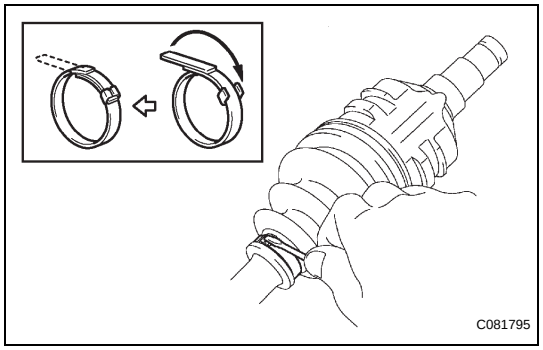

11. INSTALL FRONT AXLE INBOARD JOINT BOOT CLAMP

(a) for One-touch Clamp Type:

(1) Install the boot clamp onto the inboard joint boot and caulk the boot clamp with a screwdriver.

NOTICE:

Do not damage the boot.

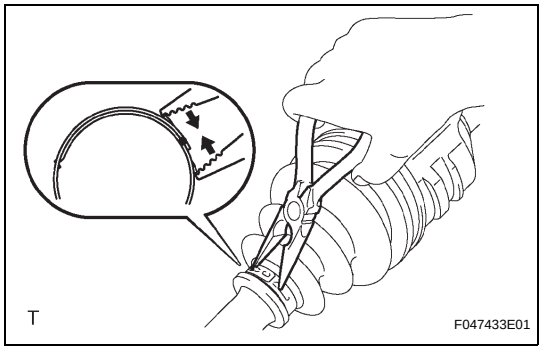

(b) for Hook Clamp Type:

(1) Using needle-nose pliers, align the concave part with the protrusion of the boot clamp in order to fix it.

NOTICE:

- **Do not damage the boot.**
- **Do not deform the claw of the hook.**

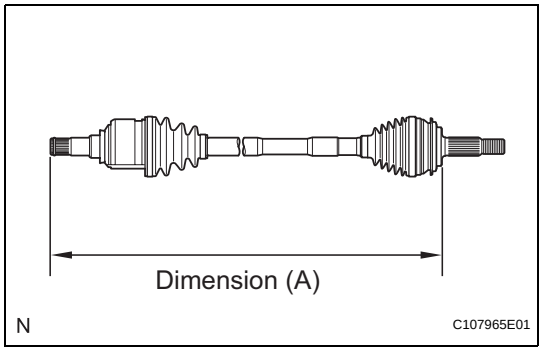

12. INSPECT FRONT DRIVE SHAFT

(a) Check whether the drive shaft dimensions are within the following specifications.

HINT:

The following table shows dimension (A) of the drive shaft.

Dimension (A)

LH	RH
584.3 mm (23.00 in.)	**826.3 mm (32.53 in.)**

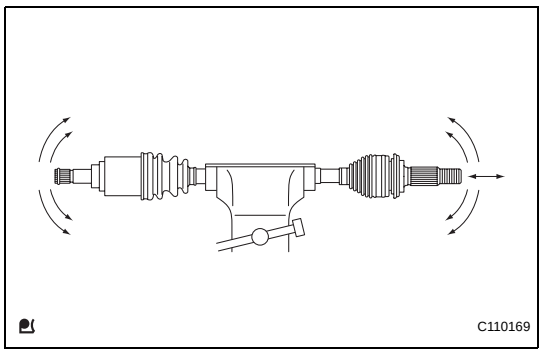

(b) Check for noticeable looseness when turning the joint up and down, left and right, and in the thrust direction.

(c) Check for cracks, damage and grease leakage on the boot joint.

NOTICE:

Keep the drive shaft level while moving it.

DS

INSTALLATION

1. INSTALL FRONT DRIVE SHAFT ASSEMBLY LH

(a) for Automatic Transaxle:

(1) Coat the spline of the inboard joint with ATF.

(b) for Manual Transaxle:

(1) Coat the spline of the inboard joint with gear oil.

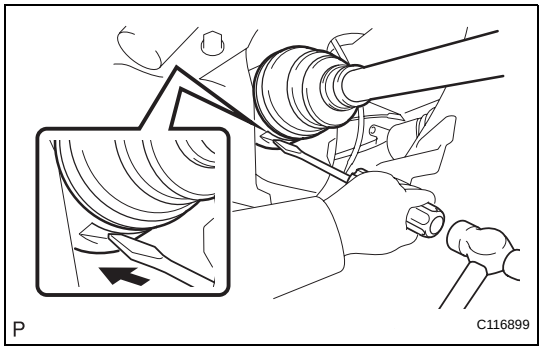

(c) Align the inboard joint splines and install the drive shaft with a screwdriver and hammer.

NOTICE:

- **Face the cut area of the front drive inboard joint hole snap ring downward.**
- **Do not damage the oil seal.**
- **Do not damage the inboard joint boot.**

HINT:

Confirm whether the drive shaft is securely driven in by checking the reaction force and sound.

2. INSTALL FRONT DRIVE SHAFT ASSEMBLY RH

HINT:

The installation procedure for the RH side is the same as that for the LH side.

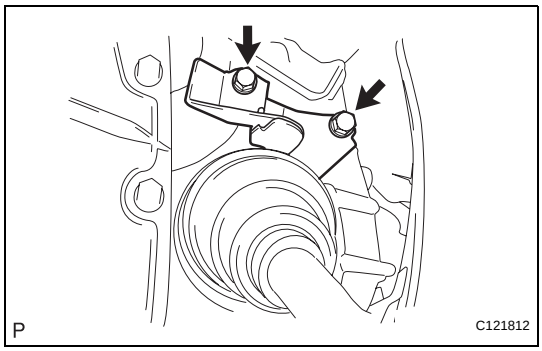

3. INSTALL AUTOMATIC TRANSMISSION CASE PROTECTOR (w/o ABS)

(a) Install the transmission case protector with the 2 bolt.

Torque: 23 N*m (235 kgf*cm, 17 ft.*lbf)

4. INSTALL FRONT AXLE ASSEMBLY

(a) Push the front axle out of the vehicle to align the spline of the drive shaft with the front axle and insert the front axle.

NOTICE:

- **Do not push the front axle further out of the vehicle than is necessary.**
- **Do not damage the outboard joint boot.**
- **Check for any foreign matter on the speed sensor rotor and insertion part.**
- **Do not damage the speed sensor rotor.**

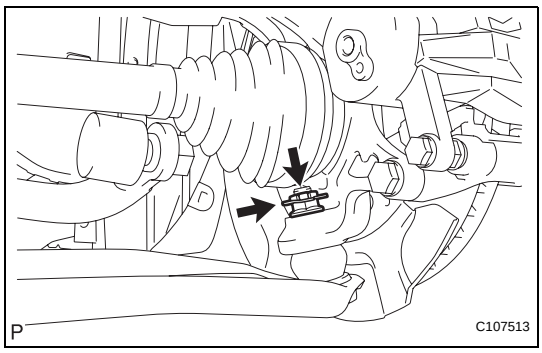

5. INSTALL FRONT LOWER SUSPENSION ARM

(a) Install the lower arm onto the steering knuckle with a new castle nut.

Torque: 98 N*m (1,000 kgf*cm, 72 ft.*lbf)

NOTICE:

If the holes for the clip are not aligned, tighten the nut by a further turn of up to 60°.

(b) Install a new clip.

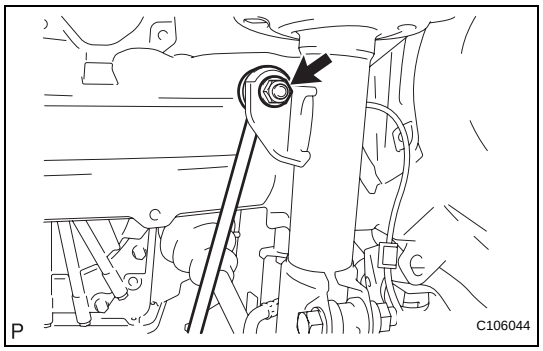

6. INSTALL FRONT STABILIZER LINK ASSEMBLY

(a) Install the stabilizer link with the nut.
Torque: 74 N*m (755 kgf*cm, 55 ft.*lbf)
HINT:
If the ball joint turns together with the nut, use a socket hexagon wrench 6 to hold the stud.

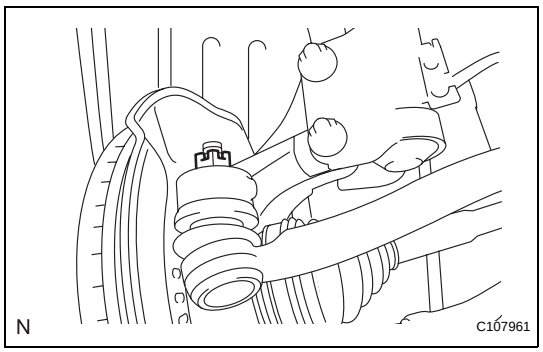

7. INSTALL TIE ROD END SUB-ASSEMBLY

(a) Install the tie rod end onto the steering knuckle with a new castle nut.
Torque: 49 N*m (500 kgf*cm, 36 ft.*lbf)
NOTICE:
If the holes for the clip are not aligned, tighten the nut by a further turn of up to 60°.

(b) Install a new cotter pin.

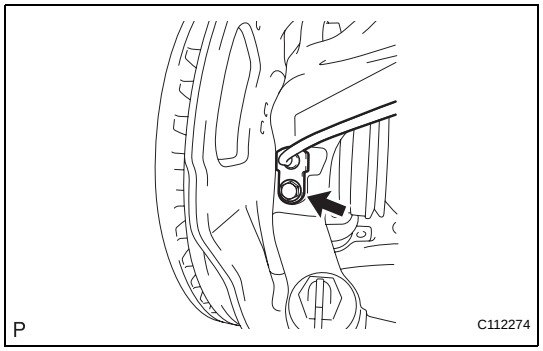

8. INSTALL FRONT SPEED SENSOR (w/ ABS)

(a) Install the speed sensor onto the steering knuckle with the bolt.
Torque: 8.5 N*m (87 kgf*cm, 75 in.*lbf)
NOTICE:
- **Check that the speed sensor tip and installation portion are free of foreign matter.**
- **Install the speed sensor without turning it from its original installation angle.**

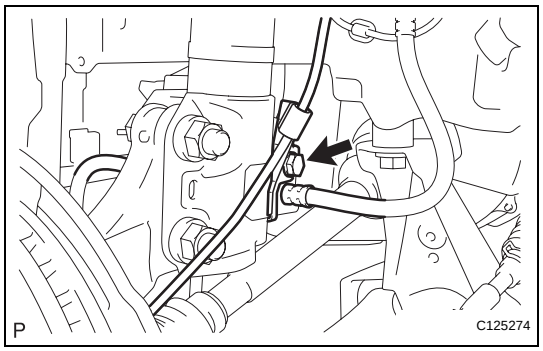

(b) Install the flexible hose and speed sensor with the bolt.
Torque: 29 N*m (300 kgf*cm, 22 ft.*lbf)
NOTICE:
Install the flexible hose and speed sensor without twisting them.

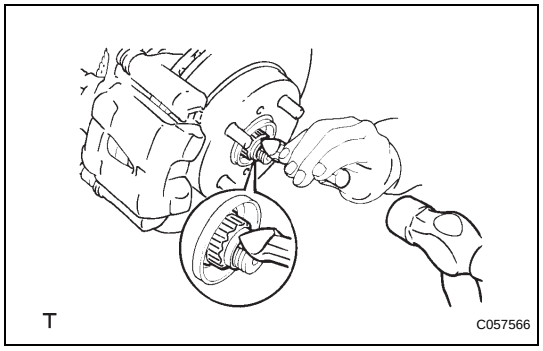

9. INSTALL FRONT AXLE HUB NUT

(a) Using a 30 mm socket wrench, install a new axle hub nut.
Torque: 216 N*m (2,203 kgf*cm, 160 ft.*lbf)

(b) Using a chisel and hammer, caulk the axle hub nut.

10. INSTALL FRONT WHEEL
Torque: 103 N*m (1,050 kgf*cm, 76 ft.*lbf)

11. CONNECT CABLE TO NEGATIVE BATTERY TERMINAL
Torque: 5.4 N*m (55 kgf*cm, 48 in.*lbf)

DS

12. **ADD AUTOMATIC TRANSAXLE FLUID (for Automatic Transaxle) (See page AX-170)**
13. **ADD TRANSAXLE OIL (for Manual Transaxle)**
14. **INSPECT AUTOMATIC TRANSAXLE FLUID (for Automatic Transaxle) (See page AX-93)**
15. **INSPECT TRANSAXLE OIL (for Manual Transaxle) (See page MX-2)**
16. **CHECK AUTOMATIC TRANSAXLE FLUID LEAKAGE (for Automatic Transaxle)**
17. **CHECK TRANSAXLE OIL LEAKAGE (for Manual Transaxle)**
18. **INSPECT AND ADJUST FRONT WHEEL ALIGNMENT** (See page SP-2)
19. **CHECK ABS SENSOR SIGNAL (w/ ABS)** (See page BC-14)

AXLE SYSTEM

PROBLEM SYMPTOMS TABLE

HINT:
Use the table below to help you find the cause of the problem. The numbers indicate the ranked order of probability of each of the possible causes. Check each part in the order suggested. If necessary, replace the applicable parts.

Symptom	Suspected area	See page
Vehicle unstable	1. Front wheel alignment	SP-2
	2. Rear wheel alignment	SP-10
	3. Steering linkage	-
	4. Hub bearing	AH-1
	5. Front stabilizer bar	SP-42
Front wheel shimmy	1. Wheels (Out of balance)	TW-2
	2. Front shock absorber	SP-18
	3. Hub bearing	AH-1
Rear wheel shimmy	1. Wheels (Out of balance)	TW-2
	2. Rear shock absorber	SP-55
	3. Hub bearing	AH-1

ON-VEHICLE INSPECTION

1. **REMOVE FRONT WHEEL**
2. **SEPARATE FRONT DISC BRAKE CALIPER ASSEMBLY (See page AH-6)**
3. **REMOVE FRONT DISC (See page BR-50)**
4. **INSPECT FRONT AXLE HUB BEARING**
   (a) Inspect the axle hub backlash.
      (1) Using a dial indicator, check the backlash near the center of the axle hub.
      Maximum:
      0.05 mm (0.0020 in.)
      If the backlash exceeds the maximum, replace the bearing.

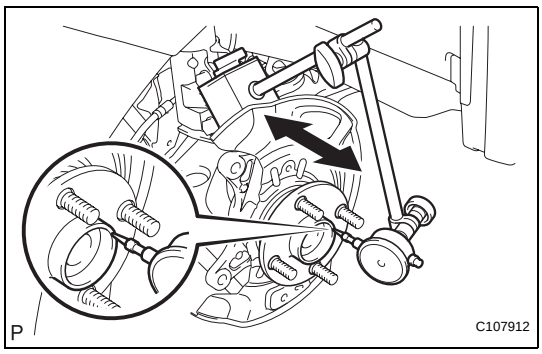

   (b) Inspect the axle hub runout.
      (1) Using a dial indicator, check the runout of the surface of the axle hub.
      Maximum:
      0.05 mm (0.0020 in.)
      If the runout exceeds the maximum, replace the bearing and axle hub.

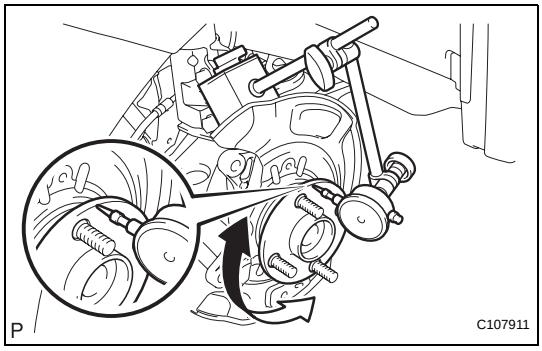

5. **INSTALL FRONT DISC (See page BR-52)**
6. **INSTALL FRONT DISC BRAKE CALIPER ASSEMBLY (See page AH-10)**
7. **INSTALL FRONT WHEEL**
   Torque: 103 N*m (1,050 kgf*cm, 76 ft.*lbf)
8. **REMOVE REAR WHEEL**
9. **REMOVE REAR BRAKE DRUM SUB-ASSEMBLY (See page BR-60)**
10. **INSPECT REAR AXLE HUB BEARING**
    (a) Inspect the axle hub and bearing backlash.
       (1) Using a dial indicator, check the backlash near the center of the axle hub.
       Maximum:
       0.05 mm (0.0020 in.)
       If the backlash exceeds the maximum, replace the axle hub and bearing.

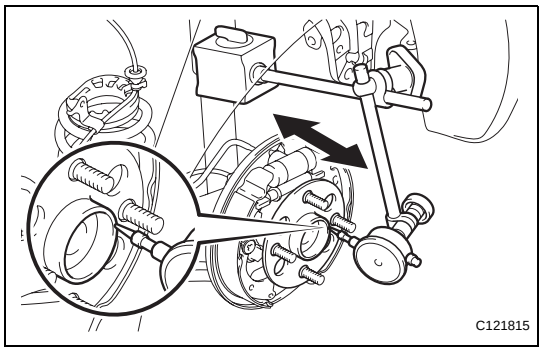

AH

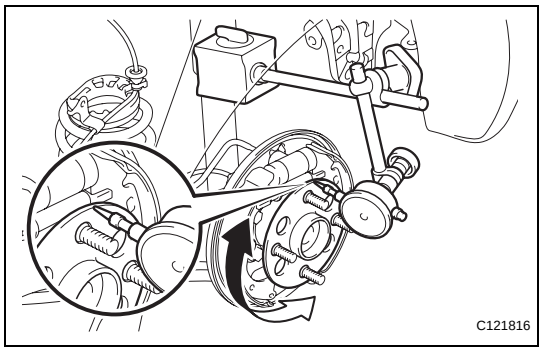

(b) Inspect the axle hub and bearing runout.
  (1) Using a dial indicator, check the runout of the surface of the axle hub.
  Maximum:
  0.07 mm (0.0028 in.)
  If the runout exceeds the maximum, replace the axle hub and bearing.

11. INSTALL REAR BRAKE DRUM SUB-ASSEMBLY

12. ADJUST REAR DRUM BRAKE SHOE CLEARANCE (See page BR-67)

13. INSTALL REAR WHEEL
Torque: 103 N*m (1,050 kgf*cm, 76 ft.*lbf)

FRONT AXLE HUB BOLT

COMPONENTS

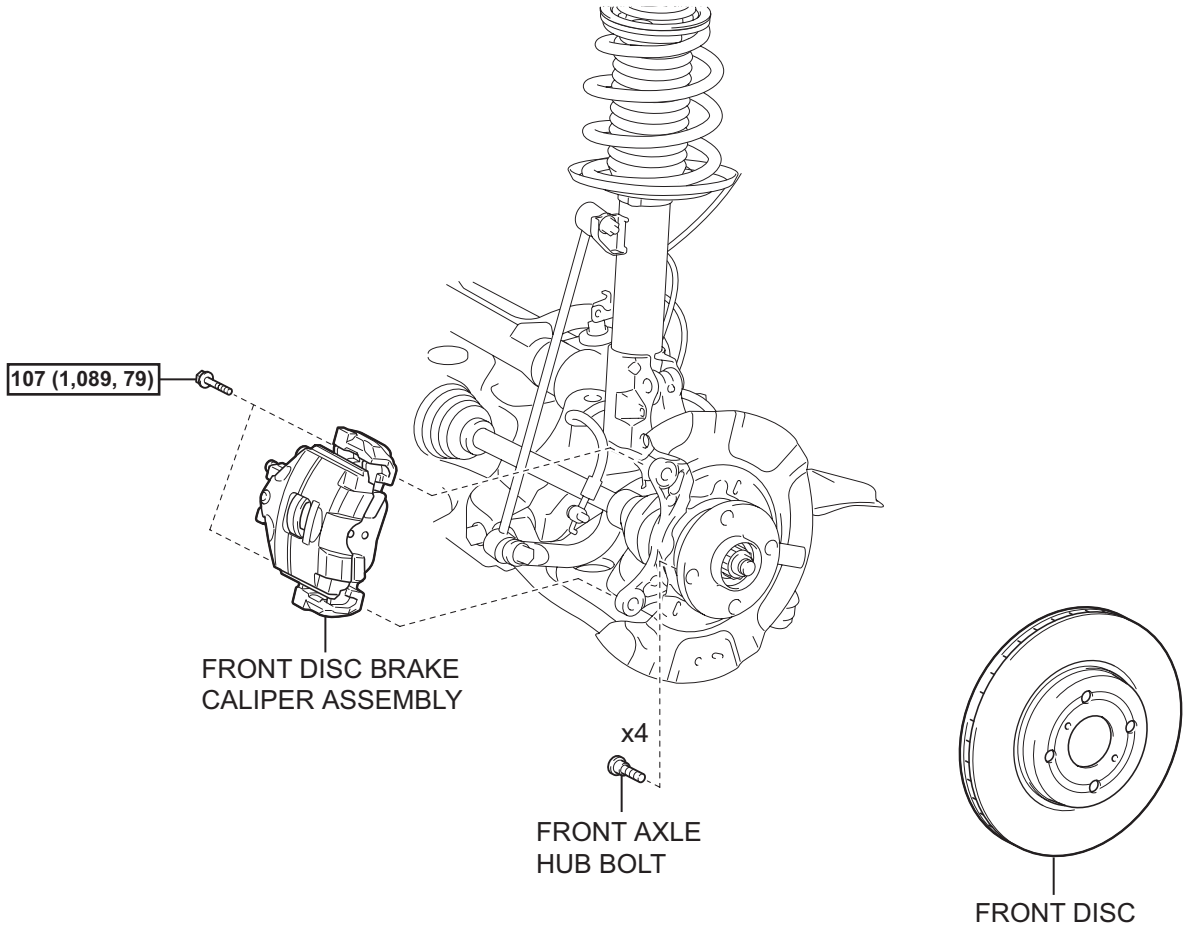

N*m (kgf*cm, ft*lbf) :Specified torque

P

C118252E01

AH

REMOVAL

1. **REMOVE FRONT WHEEL**
2. **SEPARATE FRONT DISC BRAKE CALIPER ASSEMBLY (See page AH-6)**
3. **REMOVE FRONT DISC (See page BR-50)**
4. **REMOVE FRONT AXLE HUB BOLT**
   (a) Using SST and a screwdriver or the equivalent to hold the axle hub, remove the hub bolt.
   SST 09628-10011

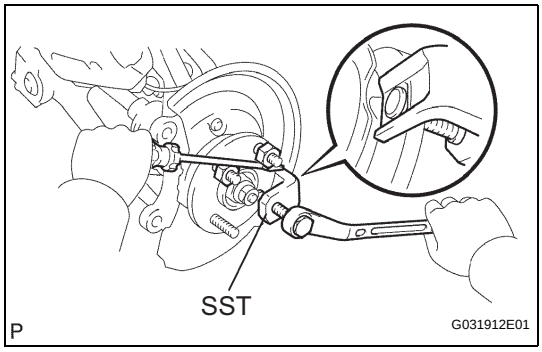

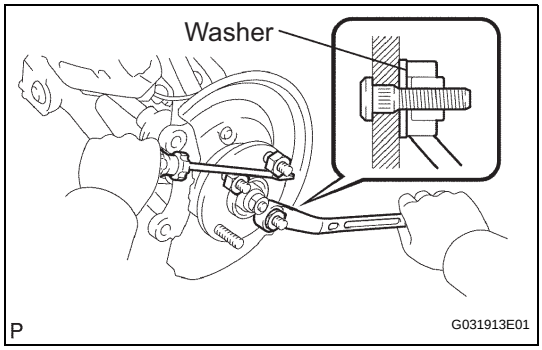

INSTALLATION

1. **INSTALL FRONT AXLE HUB BOLT**
   (a) Install the washer and the nut onto a new hub bolt, as shown in the illustration.
   (b) Using a screwdriver or the equivalent to hold the axle hub, install the hub bolt by tightening the nut.
2. **INSTALL FRONT DISC (See page BR-52)**
3. **INSTALL FRONT DISC BRAKE CALIPER ASSEMBLY (See page AH-10)**
4. **INSTALL FRONT WHEEL**
   Torque: 103 N*m (1,050 kgf*cm, 76 ft.*lbf)

FRONT AXLE HUB

COMPONENTS

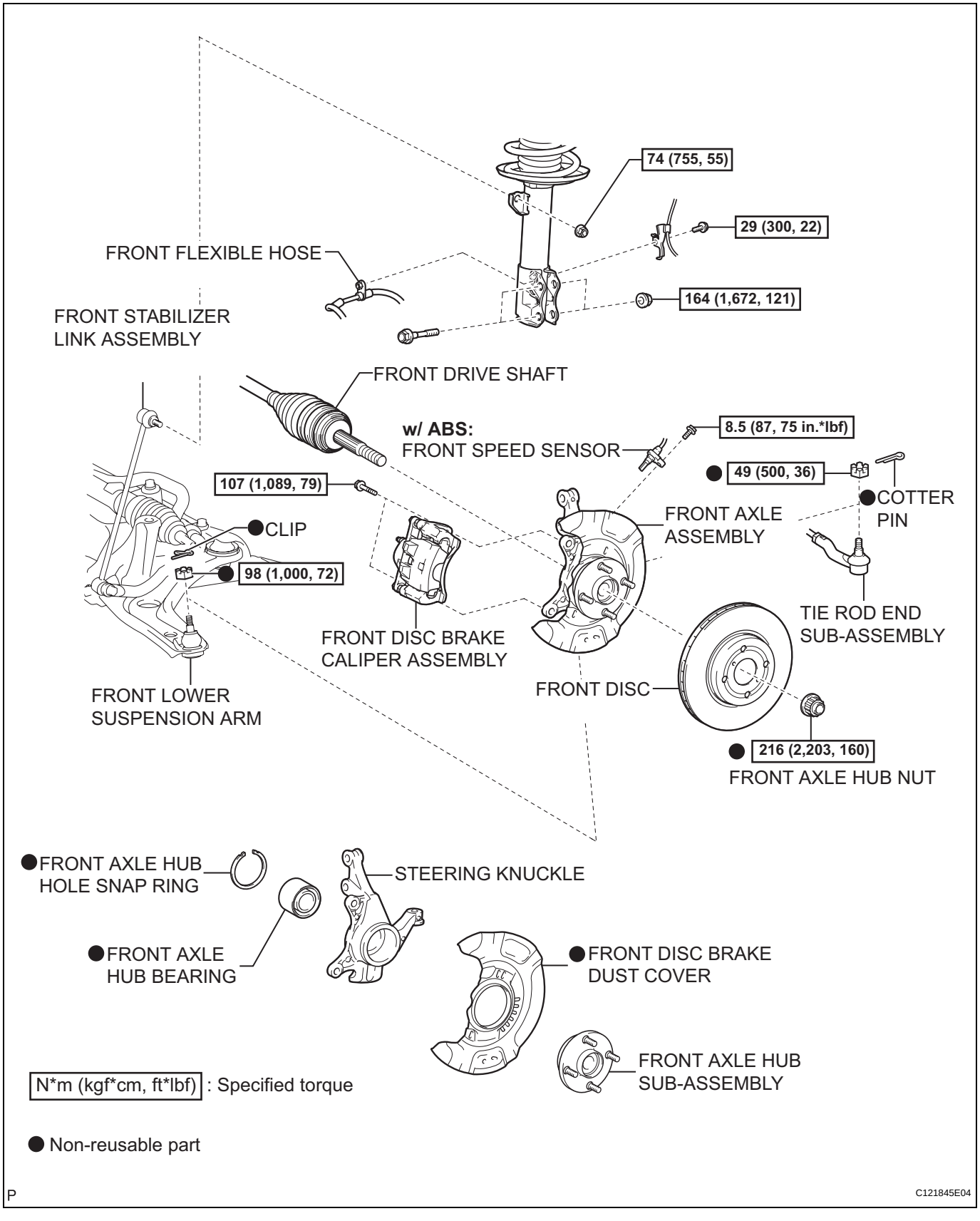

AH

REMOVAL

1. **DISCONNECT CABLE FROM NEGATIVE BATTERY TERMINAL**
2. **REMOVE FRONT WHEEL**
3. **REMOVE FRONT AXLE HUB NUT (See page DS-3)**
4. **SEPARATE FRONT SPEED SENSOR (w/ ABS) (See page DS-3)**
5. **SEPARATE FRONT DISC BRAKE CALIPER ASSEMBLY**
   (a) Remove the 2 bolts and separate the disc brake caliper from the steering knuckle.
   NOTICE:
   Hang the caliper using a piece of string or the equivalent.

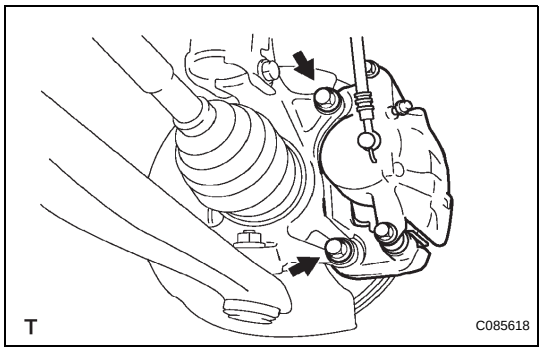

6. **REMOVE FRONT DISC (See page BR-50)**
7. **SEPARATE TIE ROD END SUB-ASSEMBLY (See page DS-3)**
8. **SEPARATE FRONT STABILIZER LINK ASSEMBLY (See page DS-4)**
9. **SEPARATE FRONT LOWER SUSPENSION ARM (See page DS-4)**
10. **SEPARATE FRONT AXLE ASSEMBLY**
    (a) Using a plastic hammer, tap the end of the drive shaft and disengage the fitting between the drive shaft and front axle.
    HINT:
    If it is difficult to disengage the fitting, tap the end of the drive shaft with a brass bar and hammer.
    (b) Push the front axle out of the vehicle to remove the drive shaft from the front axle.
    NOTICE:
    - **Do not push the front axle further out of the vehicle than is necessary.**
    - **Do not damage the outboard joint boot.**
    - **Do not damage the speed sensor rotor.**
    - **Suspend the drive shaft with a piece of string or the equivalent.**

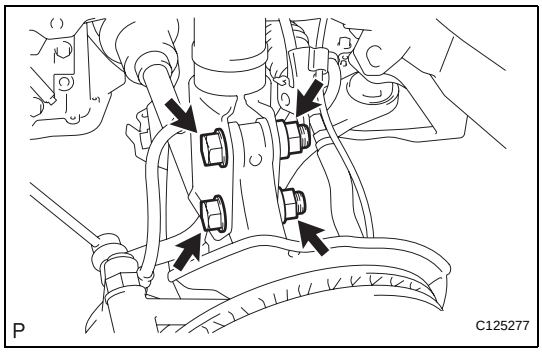

    (c) Remove the 2 nuts and 2 bolts and remove the front axle assembly.
    HINT:
    Keep the nut from rotating while turning the bolt.

AH

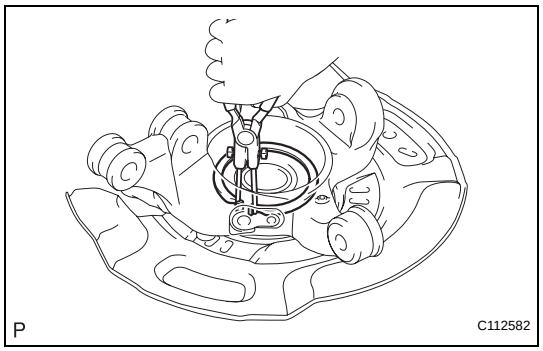

DISASSEMBLY

1. REMOVE FRONT AXLE HUB HOLE SNAP RING

(a) Using snap ring pliers, remove the hole snap ring.

NOTICE:

When removing the hole snap ring, do not damage the magnetic rotor surface.

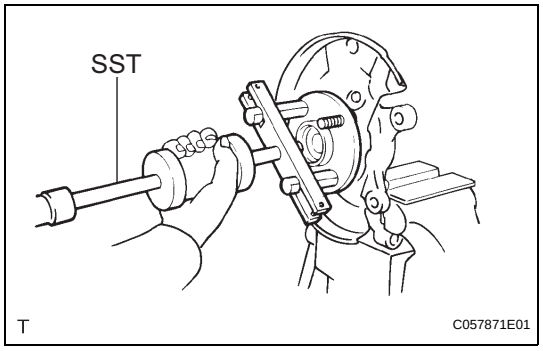

2. REMOVE FRONT AXLE HUB SUB-ASSEMBLY

(a) Fix the steering knuckle in a vise between aluminum plates.

NOTICE:

Do not overtighten the vise.

(b) Using SST, remove the axle hub.

SST 09520-00031

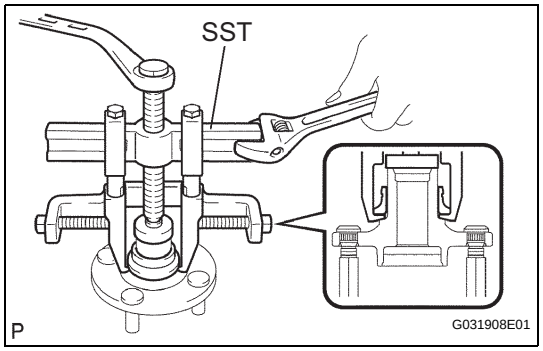

(c) Using SST, remove the hub bearing inner race from the axle hub.

SST 09950-40011 (09951-04020, 09952-04010, 09953-04020, 09954-04010, 09955-04011, 09957-04010, 09958-04011), 09950-60010 (09951-00370)

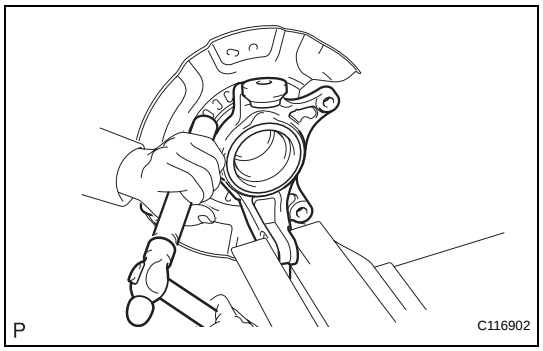

3. REMOVE FRONT DISC BRAKE DUST COVER

(a) Remove the dust cover by tapping the back side with a brass bar and hammer.

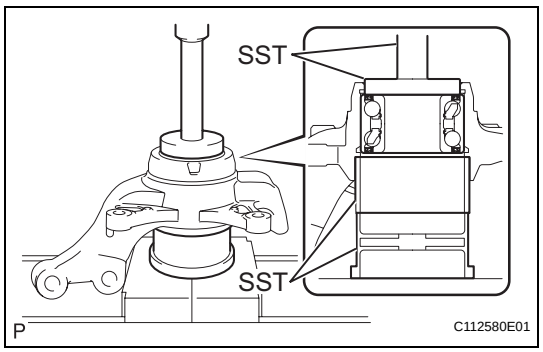

4. REMOVE FRONT AXLE HUB BEARING

(a) Install the removed hub bearing inner race onto the outer side of the hub bearing.

(b) Using SST and a press, remove the hub bearing from the steering knuckle.

SST 09223-15020, 09387-00041 (09387-02010), 09950-60010 (09951-00630), 09950-70010 (09951-07100)

AH

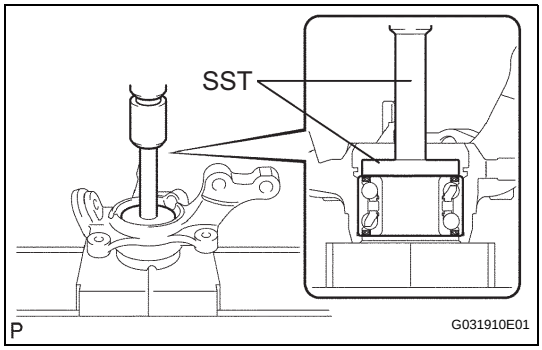

REASSEMBLY

1. INSTALL FRONT AXLE HUB BEARING

(a) Using SST and a press, insert a new hub bearing, with its magnetic rotor side facing the inside of the vehicle, until it reaches the end of the steering knuckle.

SST 09950-60020 (09951-00710), 09950-70010 (09951-07100)

NOTICE:

- **Do not remove the inner race because the hub bearing is built into the oil seal.**
- **Do not use bearings that have been removed.**
- **Do not wipe off any grease that has been applied to new bearings.**
- **Do not bring magnets close to the magnetic rotor surface of the bearing.**
- **Keep the magnetic rotor surface of the bearing free of foreign matter.**

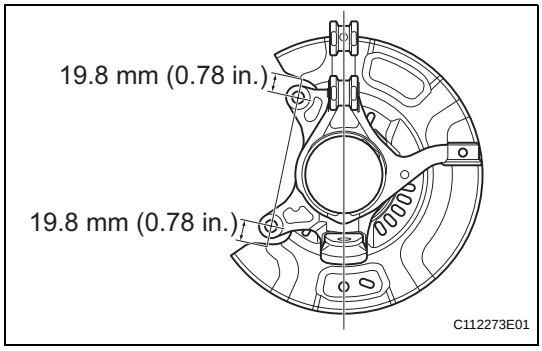

2. INSTALL FRONT DISC BRAKE DUST COVER

(a) Provisionally install a new disc brake dust cover, as shown in the illustration.

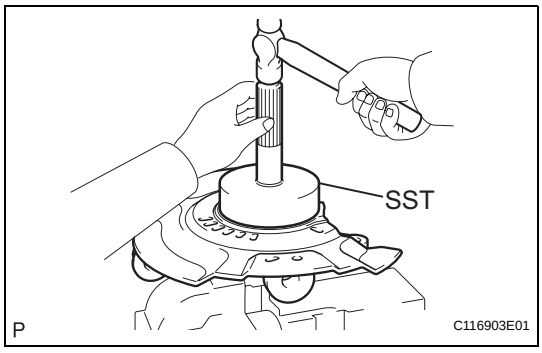

(b) Using SST and a hammer, install the disc brake dust cover.

SST 09223-56010

NOTICE:

- **Uniformly press in the disc brake dust cover while sliding SST slightly.**
- **Surely press in the disc brake dust cover until the pressing-in base.**

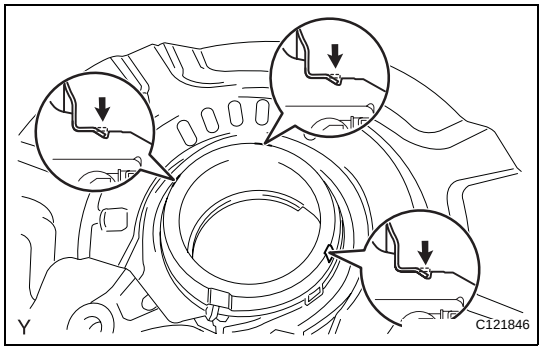

(c) Using a chisel, fix the 3 points on the circumference.

NOTICE:

Securely fold each end into the engagement grooves.

AH

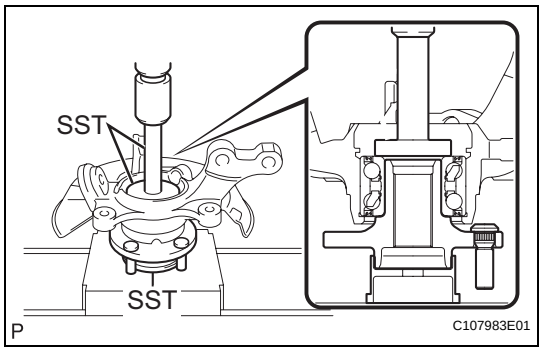

3. INSTALL FRONT AXLE HUB SUB-ASSEMBLY

(a) Using SST and a press, press the axle hub into the steering knuckle.

SST 09608-32010, 09950-60010 (09951-00500), 09950-70010 (09951-07100)

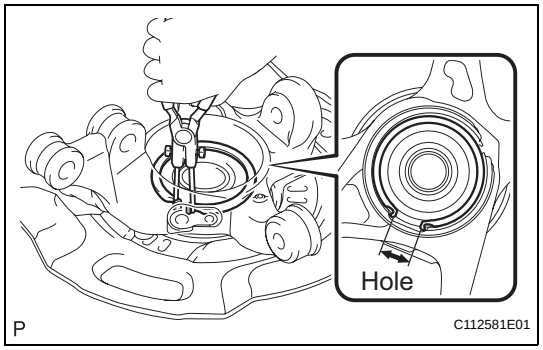

4. INSTALL FRONT AXLE HUB HOLE SNAP RING

(a) Using snap ring pliers, install a new hole snap ring, as shown in the illustration.

NOTICE:

- **Do not overlap the end of the snap ring and the installation hole in the speed sensor on the knuckle side.**
- **Do not damage the magnetic rotor surface of the bearing when installing the snap ring.**

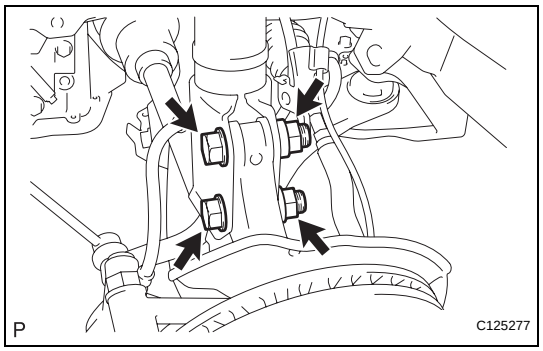

INSTALLATION

1. INSTALL FRONT AXLE ASSEMBLY

(a) Install the front axle assembly onto the shock absorber.

(b) Install the 2 bolts and 2 nuts.

Torque: 164 N*m (1,672 kgf*cm, 121 ft.*lbf)

HINT:

Keep the nut from rotating while turning the bolt.

(c) Push the front axle out of the vehicle to align the spline of the drive shaft with the front axle and insert the front axle.

NOTICE:

- **Do not push the front axle further out of the vehicle than is necessary.**
- **Do not damage the outboard joint boot.**
- **Check for any foreign matter on the speed sensor rotor and insertion part.**
- **Do not damage the speed sensor rotor.**

2. INSTALL FRONT LOWER SUSPENSION ARM (See page DS-14)

3. INSTALL FRONT STABILIZER LINK ASSEMBLY (See page DS-14)

4. INSTALL TIE ROD END SUB-ASSEMBLY (See page DS-15)

5. INSTALL FRONT DISC (See page BR-52)

AH

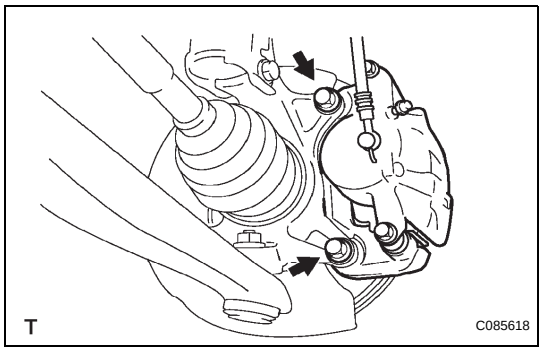

6. **INSTALL FRONT DISC BRAKE CALIPER ASSEMBLY**
   (a) Install the disc brake caliper onto the steering knuckle.
   Torque: 107 N*m (1,089 kgf*cm, 79 ft.*lbf)
7. **INSTALL FRONT SPEED SENSOR (w/ ABS) (See page DS-15)**
8. **INSTALL FRONT AXLE HUB NUT (See page DS-15)**
9. **INSPECT FRONT AXLE HUB BEARING (See page AH-1)**
10. **INSTALL FRONT WHEEL**
    Torque: 103 N*m (1,050 kgf*cm, 76 ft.*lbf)
11. **INSPECT AND ADJUST FRONT WHEEL ALIGNMENT** (See page SP-2)
12. **CONNECT CABLE TO NEGATIVE BATTERY TERMINAL**
    Torque: 5.4 N*m (55 kgf*cm, 48 in.*lbf)
13. **CHECK ABS SENSOR SIGNAL (w/ ABS)** (See page BC-14)

REAR AXLE HUB BOLT

COMPONENTS

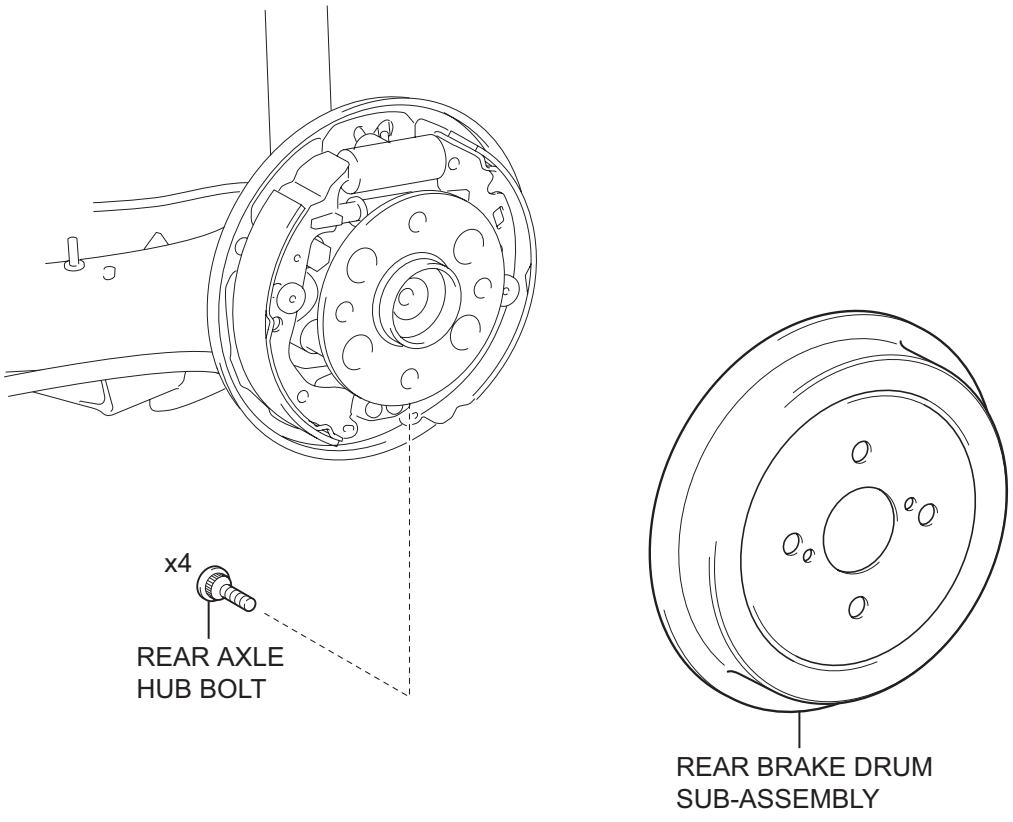

P

C121817E01

REMOVAL

1. **REMOVE REAR WHEEL**
2. **REMOVE REAR BRAKE DRUM SUB-ASSEMBLY (See page BR-60)**
3. **REMOVE REAR AXLE HUB BOLT**
   (a) Using SST and a screwdriver or the equivalent, remove the hub bolt.
   SST 09628-10011

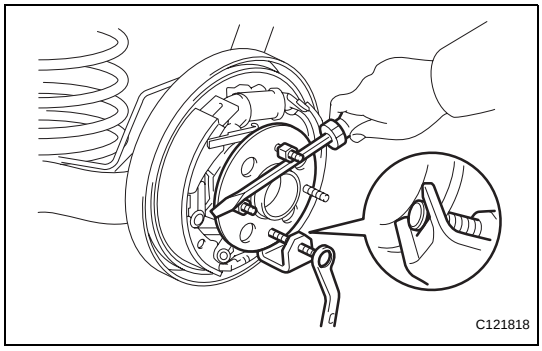

INSTALLATION

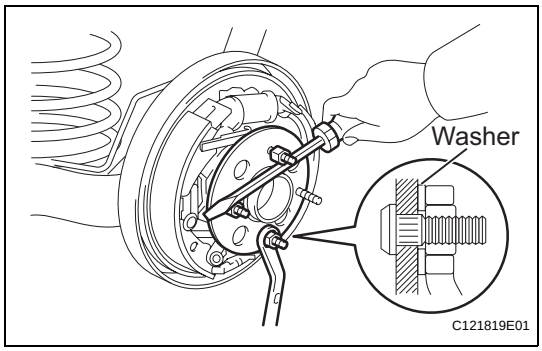

1. **INSTALL REAR AXLE HUB BOLT**
   (a) Install the washer and the nut onto a new hub bolt as shown in the illustration.
   (b) Using a screwdriver or the equivalent to hold the hub and bearing, install the hub bolt by tightening the nut.
2. **INSTALL REAR BRAKE DRUM SUB-ASSEMBLY**
3. **ADJUST REAR DRUM BRAKE SHOE CLEARANCE (See page BR-67)**
4. **INSTALL REAR WHEEL**
   Torque: 103 N*m (1,050 kgf*cm, 76 ft.*lbf)

REAR AXLE HUB AND BEARING

COMPONENTS

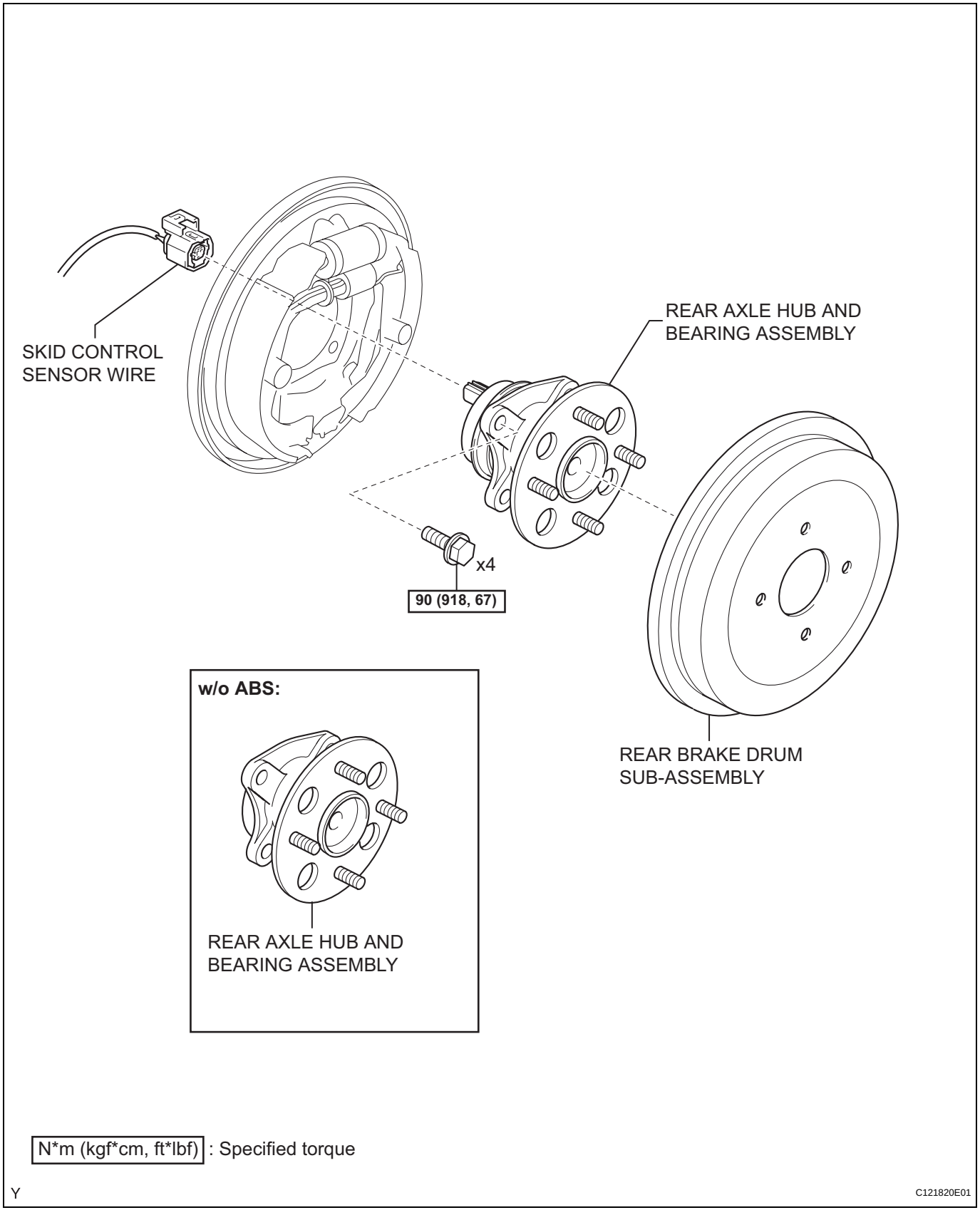

AH

REMOVAL

1. **DISCONNECT CABLE FROM NEGATIVE BATTERY TERMINAL**
2. **REMOVE REAR WHEEL**
3. **REMOVE REAR BRAKE DRUM SUB-ASSEMBLY (See page BR-60)**
4. **DISCONNECT SKID CONTROL SENSOR WIRE (w/ ABS)**
   (a) Using a screwdriver, remove the claw of the connector lock portion and disconnect the skid control sensor wire connector.
   NOTICE:
   Do not remove the connector cover from the connector because the skid control sensor wire may be damaged.

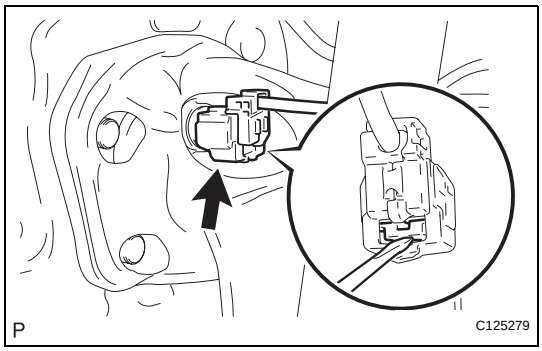

5. **REMOVE REAR AXLE HUB AND BEARING ASSEMBLY**
   (a) Remove the 4 bolts and remove the axle hub and bearing from the axle beam.
   NOTICE:
   Suspend the backing plate with a piece of rope.

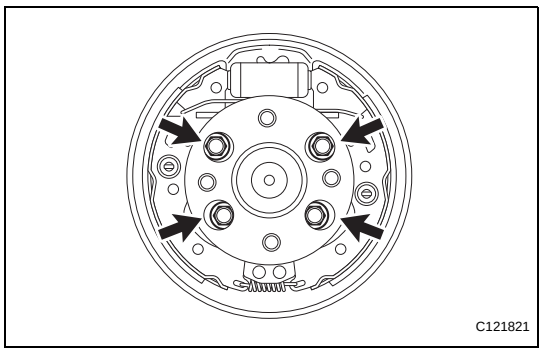

INSTALLATION

1. **INSTALL REAR AXLE HUB AND BEARING ASSEMBLY**
   (a) Install the axle hub and bearing onto the axle beam with the 4 bolts.
   Torque: 90 N*m (918 kgf*cm, 67 ft.*lbf)
2. **INSPECT REAR AXLE HUB BEARING (See page AH-2)**

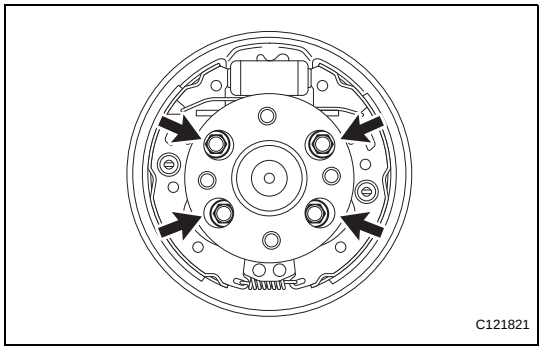

3. **CONNECT SKID CONTROL SENSOR WIRE (w/ ABS)**
   (a) Connect the skid control sensor wire connector.
4. **INSTALL REAR BRAKE DRUM SUB-ASSEMBLY**
5. **ADJUST REAR DRUM BRAKE SHOE CLEARANCE (See page BR-67)**
6. **INSTALL REAR WHEEL**
   Torque: 103 N*m (1,050 kgf*cm, 76 ft.*lbf)
7. **CONNECT CABLE TO NEGATIVE BATTERY TERMINAL**
   Torque: 5.4 N*m (55 kgf*cm, 48 in.*lbf)
8. **CHECK ABS SENSOR SIGNAL (w/ ABS)**
   (See page BC-14)

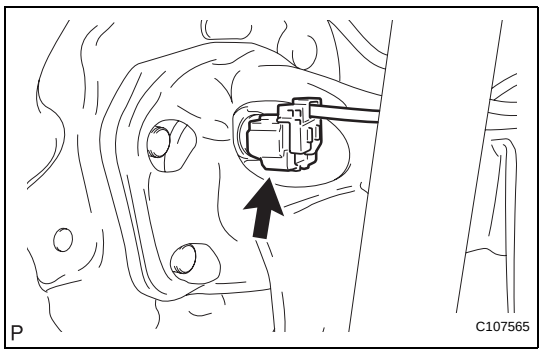

AH

SUSPENSION SYSTEM

PROBLEM SYMPTOMS TABLE

HINT:
Use the table below to help you find the cause of the problem. The numbers indicate the ranked order of probability of each of the possible causes. Check each part in the order suggested. If necessary, replace the applicable parts.

Symptom	Suspected area	See page
Vehicle unstable	1. Tires (Worn or improperly inflated)	TW-1
	2. Front wheel alignment	SP-2
	3. Rear wheel alignment	SP-10
	4. Hub bearing	AH-1
	5. Front shock absorber with coil spring	SP-18
	6. Rear shock absorber	SP-55
	7. Rear coil spring	SP-49
Bottoming	1. Vehicle (Overloaded)	-
	2. Front shock absorber with coil spring	SP-18
	3. Rear shock absorber	SP-55
	4. Rear coil spring	SP-49
Swaying/pitching	1. Tires (Worn or improperly inflated)	TW-1
	2. Front stabilizer bar	SP-42
	3. Front shock absorber with coil spring	SP-18
	4. Rear shock absorber	SP-55
	5. Rear coil spring	SP-49
Front wheel shimmy	1. Tires (Worn or improperly inflated)	TW-1
	2. Wheels (Out of balance)	TW-2
	3. Front wheel alignment	SP-2
	4. Front suspension lower arm	SP-23
	5. Front shock absorber with coil spring	SP-18
	6. Hub bearing	AH-1
Rear wheel shimmy	1. Tires (Worn or improperly inflated)	TW-1
	2. Wheels (Out of balance)	TW-2
	3. Rear wheel alignment	SP-10
	4. Rear axle beam	SP-63
	5. Rear shock absorber	SP-55
	6. Rear coil spring	SP-49
	7. Hub bearing	AH-1
Abnormal tire wear	1. Tires (Worn or improperly inflated)	TW-1
	2. Wheels (Out of balance)	TW-2
	3. Front wheel alignment	SP-2
	4. Rear wheel alignment	SP-10
Vehicle pull	1. Tires (Worn or improperly inflated)	TW-1
	2. Front wheel alignment	SP-2
	3. Rear wheel alignment	SP-10
	4. Brake (Dragging)	BR-4
	5. Steering wheel (Off center)	-

FRONT WHEEL ALIGNMENT

ADJUSTMENT

1. **INSPECT TIRES (See page TW-1)**

2. **MEASURE VEHICLE HEIGHT**

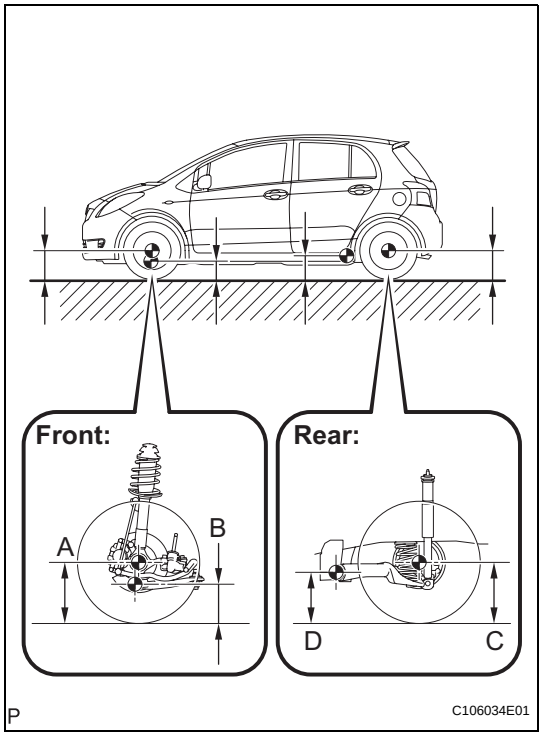

(a) Hatch back:

Vehicle height

Destination	A-B	C-D
Except for Rough Road Package	88 mm (3.46 in.)	20 mm (0.79 in.)
Rough Road Package	68 mm (2.68 in.)	0 mm (0 in.)

Measuring points:

A:
Ground clearance of front wheel center

B:
Ground clearance of lower arm set front bolt center

C:
Ground clearance of rear wheel center

D:
Ground clearance of axle beam set bolt center

NOTICE:

Before inspecting the wheel alignment, check the vehicle height.

HINT:

Bounce the vehicle up and down at the corners to stabilize the suspension before inspecting the vehicle height.

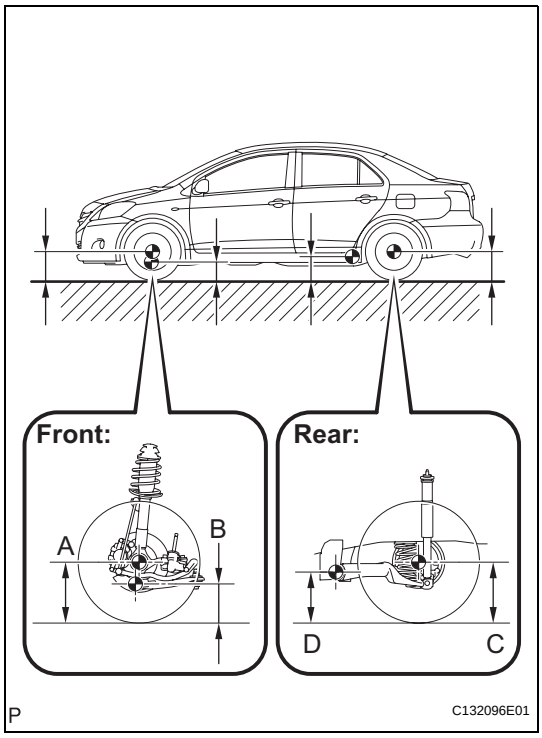

(b) Sedan:

Vehicle height

Destination	A-B	C-D
Except for Rough Road Package	87 mm (3.43 in.)	16 mm (0.63 in.)
Rough Road Package	67 mm (2.64 in.)	-2 mm (-0.08 in.)

Measuring points:

A:
Ground clearance of front wheel center

B:
Ground clearance of lower arm set front bolt center

C:
Ground clearance of rear wheel center

D:
Ground clearance of axle beam set bolt center

NOTICE:

Before inspecting the wheel alignment, check the vehicle height.

SP

HINT:
Bounce the vehicle up and down at the corners to stabilize the suspension before inspecting the vehicle height.

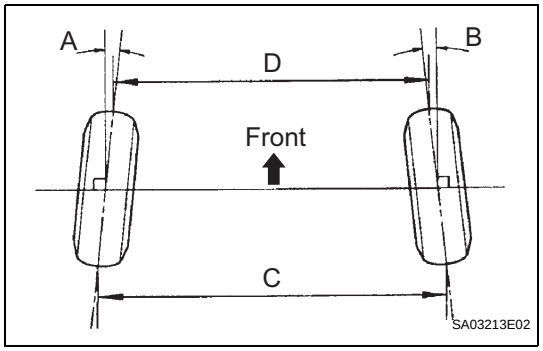

3. INSPECT TOE-IN

Toe-in:

Hatchback

A+B	C-D
0°09' +- 0°13' (0.15° +- 0.22°)	1.5 +- 2.0 mm (0.06 +- 0.08 in.)

Sedan

A+B	C-D
0°12' +- 0°06' (0.20° +- 0.10°)	2.0 +- 2.0 mm (0.08 +- 0.08 in.)

HINT:
Only measure C-D when A+B can not be measured.
If the toe-in is not within the specified value, adjust it at the rack ends.

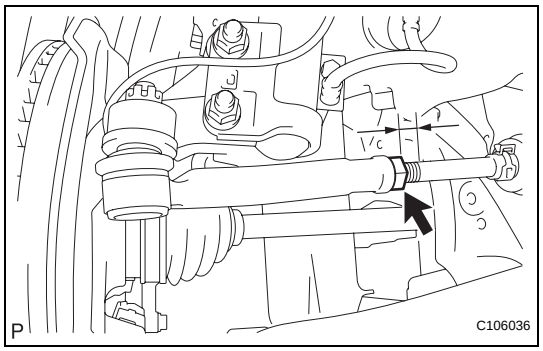

4. ADJUST TOE-IN

(a) Measure the thread lengths of the right and left rack ends.
Standard:
Difference in thread length of 1.5 mm (0.059 in.) or less

(b) Remove the rack boot set clips.

(c) Loosen the tie rod end lock nuts.

(d) Adjust the rack ends if the difference in thread length between the right and left rack ends is not within the specified range.
(1) Extend the shorter rack end if the measured toe-in deviates toward the outer-side.
(2) Shorten the longer rack end if the measured toe-in deviates toward the inner-side.

(e) Turn the right and left rack ends by an equal amount to adjust the toe-in.
HINT:
Try to adjust the toe-in to the center of the specified range.

(f) Make sure that the lengths of the right and left rack ends are the same.
Toe-in

Body Type	Toe-in
Hatchback	1.5 +- 1.0 mm (0.06 +- 0.04 in.)
Sedan	2.0 +- 1.0 mm (0.08 +- 0.04 in.)

(g) Tighten the tie rod end lock nuts to the specified torque.
Torque: 75 N*m (760 kgf*cm, 55 ft.*lbf)

SP

NOTICE:
Provisionally tighten the lock nut while holding the hexagonal part of the steering rack end so that the lock nut and the steering rack end do not turn together. Hold the width across flat of the tie rod end and tighten the lock nut.

(h) Place the boots on the seats.

(i) Using pliers, install the clip as shown in the illustration.

NOTICE:
Make sure that the boots are not twisted.

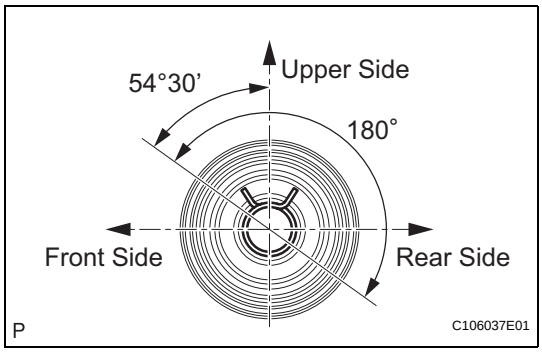

5. INSPECT WHEEL TURNING ANGLE

(a) Fully turn the steering wheel left and right, and measure the wheel turning angle.

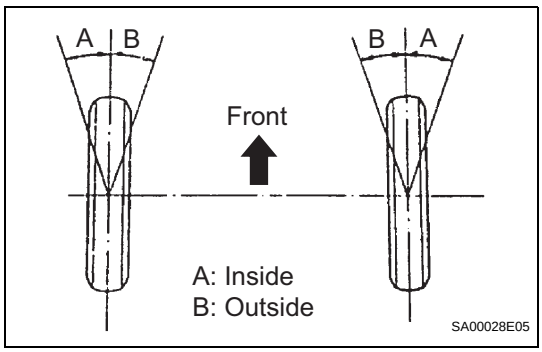

Wheel turning angle

Destination	Inside Wheel	Outside Wheel (Reference)
Except for Rough Road Package	40°57' +- 2° (40.95° +- 2°)	35°17' (35.29°)
Rough Road Package	41°22' +- 2° (41.37° +- 2°)	35°45' (35.75°)

If the right and left inside wheel angles are not within the specified range, check the right and left rack end lengths.

SP

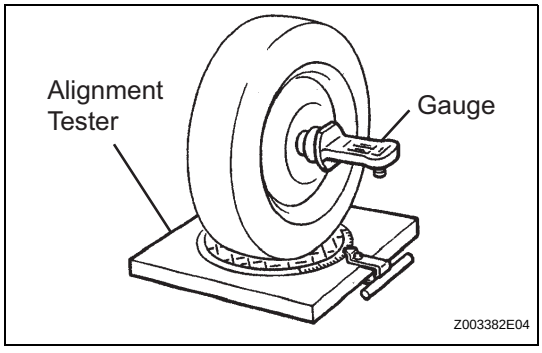

6. INSPECT CAMBER, CASTER AND STEERING AXIS INCLINATION

(a) Put the front wheel on the center of the alignment tester.

(b) Remove the wheel cap.

(c) Set the camber-caster-steering axis inclination gauge at the center of the axle hub or drive shaft.

(d) Inspect the camber, caster and steering axis inclination.

Camber, caster and steering axis inclination: Hatchback

Destination	Camber	Caster	Steering Axis Inclination (Reference)
Except for Rough Road Package	-0°10' +- 45' (-0.17°+- 0.75°)	4°46' +- 45' (4.77°+- 0.75°)	11°18' (11.30°)

Destination	Camber	Caster	Steering Axis Inclination (Reference)
Rough Road Package	0°06' +- 45' (0.10°+- 0.75°)	4°27' +- 45' (4.45°+- 0.75°)	10°47' (10.78°)

Sedan

Destination	Camber	Caster	Steering Axis Inclination (Reference)
Except for Rough Road Package	-0°10' +- 45' (-0.17°+- 0.75°)	4°39' +- 45' (4.65°+- 0.75°)	11°16' (11.27°)
Rough Road Package	0°06' +- 45' (0.10°+- 0.75°)	4°23' +- 45' (4.38°+- 0.75°)	10°47' (10.78°)

NOTICE:
- **Perform the inspection while the vehicle is empty (without a spare tire or tools on board).**
- **The tolerance for the difference between the left and right wheels is 30' (0.5°) or less for both the camber and caster.**

(e) Remove the camber-caster-steering axis inclination gauge and attachment.

(f) Install the wheel cap.

If the caster and steering axis inclination are not within the specified values after the camber has been correctly adjusted, recheck the suspension parts for damage and wear.

7. ADJUST CAMBER

NOTICE:

Inspect the toe-in after the camber has been adjusted.

(a) Remove the front wheel.

(b) w/ ABS:

(1) Remove the bolt and separate the speed sensor and flexible hose.

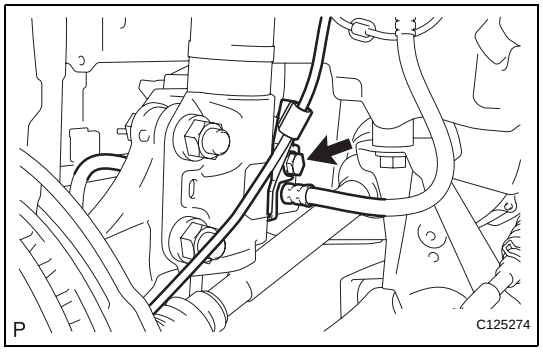

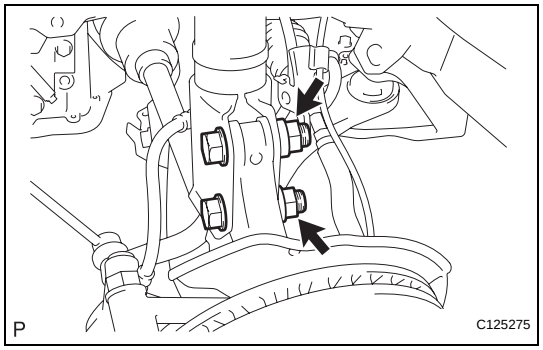

(c) Remove the 2 nuts on the lower side of the shock absorber.

HINT:

Keep the bolt from rotating while loosening and removing the nuts.

(d) Clean the installation surfaces of the shock absorber and steering knuckle.

(e) Provisionally install the 2 nuts (Step A).

SP

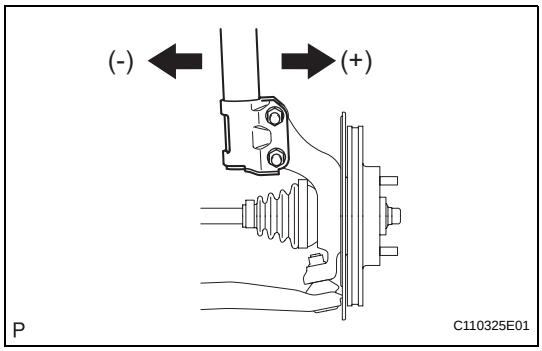

(f) Fully push or pull the axle hub in the direction of the required adjustment (Step B).

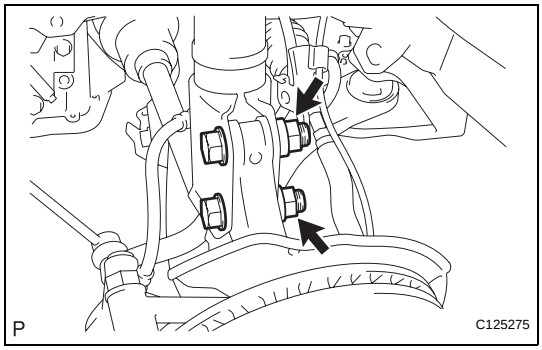

(g) Tighten the 2 nuts.
Torque: 164 N*m (1,672 kgf*cm, 121 ft.*lbf)
HINT:
Keep the bolt from rotating while loosening and removing the nuts.

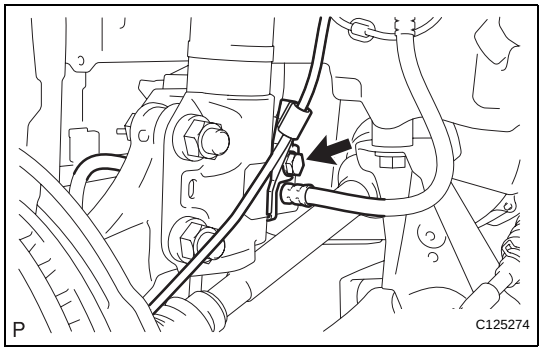

(h) w/ ABS:
(1) Install the flexible hose and speed sensor with the bolt.
Torque: 29 N*m (300 kgf*cm, 22 ft.*lbf)
NOTICE:
Install the flexible hose and speed sensor without twisting them.

(i) Install the front wheel.
Torque: 103 N*m (1,050 kgf*cm, 76 ft.*lbf)

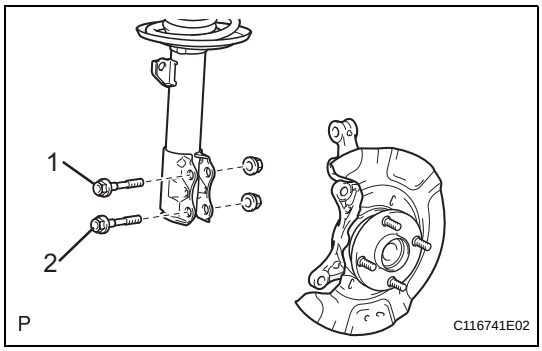

(j) Check the camber.
If the measured value is not within the specification, calculate the required adjustment amount using the formula below.
(Camber adjustment amount) = Center of specified range - Measured value
Check the combination of installed bolts. Select appropriate bolts from the table below to adjust the camber to within the specified range.
HINT:
Try to adjust the camber to the center of the specified range.

Move axle toward (+) in step (B)	Refer to table (1) (Move axle toward positive side)
Move axle toward (-) in step (B)	Refer to table (2) (Move axle toward negative side)

SP

(k) Table (1) (Move the axle toward the positive side).

Table (1) (Move the axle toward the positive side)

Installed Bolt / Adjusting Value		1	2	3	4	5	6	7
	1	 90109-15001	 90109-15001	 90109-15001	 90109-15001	 90109-15002	 90109-15003	 90109-15004
	2	 90109-15001	 90109-15002	 90109-15003	 90109-15004	 90109-15004	 90109-15004	 90109-15004
-1° 30' to -1° 15'								G
-1° 15' to -1° 00'							G	A
-1° 00' to -0° 45'						G	A	B
-0° 45' to -0° 30'					G	A	B	C
-0° 30' to -0° 15'				G	A	B	C	D
-0° 15' to 0°			G	A	B	C	D	E
0° to 0° 15'		A	B	C	D	E	F	
0° 15' to 0° 30'		B	C	D	E	F		
0° 30' to 0° 45'		C	D	E	F			
0° 45' to 1° 00'		D	E	F				
1° 00' to 1° 15'		E	F					
1° 15' to 1° 30'		F						

Selected Bolt Combination

	A	B	C	D	E	F	G
1	 90109-15001	 90109-15001	 90109-15001	 90109-15002	 90109-15003	 90109-15004	 90109-15001
2	 90109-15002	 90109-15003	 90109-15004	 90109-15004	 90109-15004	 90109-15004	 90109-15001

SP

P

C111317E07

(l) Table (2) (Move the axle toward the negative side).

Table (2) (Move the axle toward the negative side)

Installed Bolt / Adjusting Value		 90109-15001	 90109-15001	 90109-15001	 90109-15001	 90109-15002	 90109-15003	 90109-15004
	2	 90109-15001	 90109-15002	 90109-15003	 90109-15004	 90109-15004	 90109-15004	 90109-15004
-1° 30' to -1° 15'		F						
-1° 15' to -1° 00'		E	F					
-1° 00' to -0° 45'		D	E	F				
-0° 45' to -0° 30'		C	D	E	F			
-0° 30' to -0° 15'		B	C	D	E	F		
-0° 15' to 0°		A	B	C	D	E	F	
0° to 0°15'			G	A	B	C	D	E
0° 15' to 0° 30'				G	A	B	C	D
0° 30' to 0° 45'					G	A	B	C
0° 45' to 1° 00'						G	A	B
1° 00' to 1° 15'							G	A
1° 15' to 1° 30'								G

Selected Bolt Combination

	A	B	C	D	E	F	G
1	 90109-15001	 90109-15001	 90109-15001	 90109-15002	 90109-15003	 90109-15004	 90109-15001
2	 90109-15002	 90109-15003	 90109-15004	 90109-15004	 90109-15004	 90109-15004	 90109-15001

P

C111317E08

The body and suspension may be damaged if the camber is not correctly adjusted in accordance with the above table.

NOTICE:

Replace the nut with a new one when replacing the bolt.

SP

(m) Repeat the steps mentioned above. At step (A), replace 1or 2 selected bolts.
HINT:
Replace one bolt at a time when replacing 2 bolts.

REAR WHEEL ALIGNMENT

INSPECTION

1. **INSPECT TIRES (See page TW-1)**
2. **MEASURE VEHICLE HEIGHT (See page SP-2)**
3. **INSPECT TOE-IN**
   Toe-in:
   Hatchback

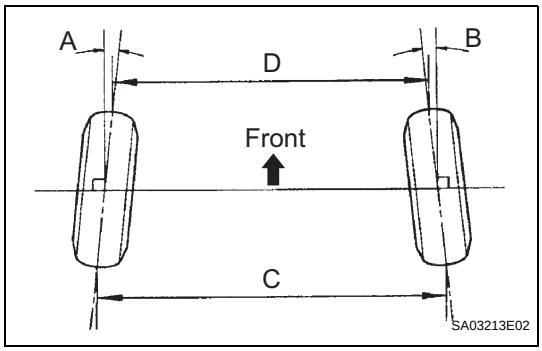

Destination	Tire Size	A+B	C-D
Except for Rough Road Package	175/65R14	0°17' +- 0°20' (0.28°+- 0.33°)	2.8 +- 3.0 mm (0.11 +- 0.12 in.)
	185/60R15	0°17' +- 0°20' (0.28°+- 0.33°)	2.9 +- 3.0 mm (0.11 +- 0.12 in.)
Rough Road Package	175/65R14	0°13' +- 0°20' (0.22°+- 0.33°)	2.2 +- 3.0 mm (0.09 +- 0.12 in.)
	185/60R15	0°13' +- 0°20' (0.22°+- 0.33°)	2.2 +- 3.0 mm (0.09 +- 0.12 in.)

Sedan

Destination	Tire Size	A+B	C-D
Except for Rough Road Package	175/65R14	0°17' +- 0°20' (0.28°+- 0.33°)	2.8 +- 3.0 mm (0.11 +- 0.12 in.)
	185/60R15	0°17' +- 0°20' (0.28°+- 0.33°)	2.9 +- 3.0 mm (0.11 +- 0.12 in.)
Rough Road Package	175/65R14	0°13' +- 0°20' (0.22°+- 0.33°)	2.1 +- 3.0 mm (0.08 +- 0.12 in.)
	185/60R15	0°13' +- 0°20' (0.22°+- 0.33°)	2.2 +- 3.0 mm (0.09 +- 0.12 in.)

HINT:
Only measure C-D when A+B can not be measured.

SP

4. **INSPECT CAMBER**
   (a) Install the camber-caster-kingpin gauge and position the rear wheel on the alignment tester.
   (b) Inspect the camber.
   Camber:
   Hatchback

Destination	Camber
Except for Rough Road Package	-0°57' +- 45' (-0.95°+- 0.75°)
Rough Road Package	-0°54' +- 45' (-0.90°+- 0.75°)

Sedan

Destination	Camber
Except for Rough Road Package	**-0°56' +- 45' (-0.93°+- 0.75°)**
Rough Road Package	**-0°54' +- 45' (-0.90°+- 0.75°)**

NOTICE:
The tolerance for the difference between the left and right wheels is 30' (0.5°) or less for both cambers.
If the camber is not within the specified range, inspect the suspension parts and replace them if necessary.

FRONT SHOCK ABSORBER WITH COIL SPRING

COMPONENTS

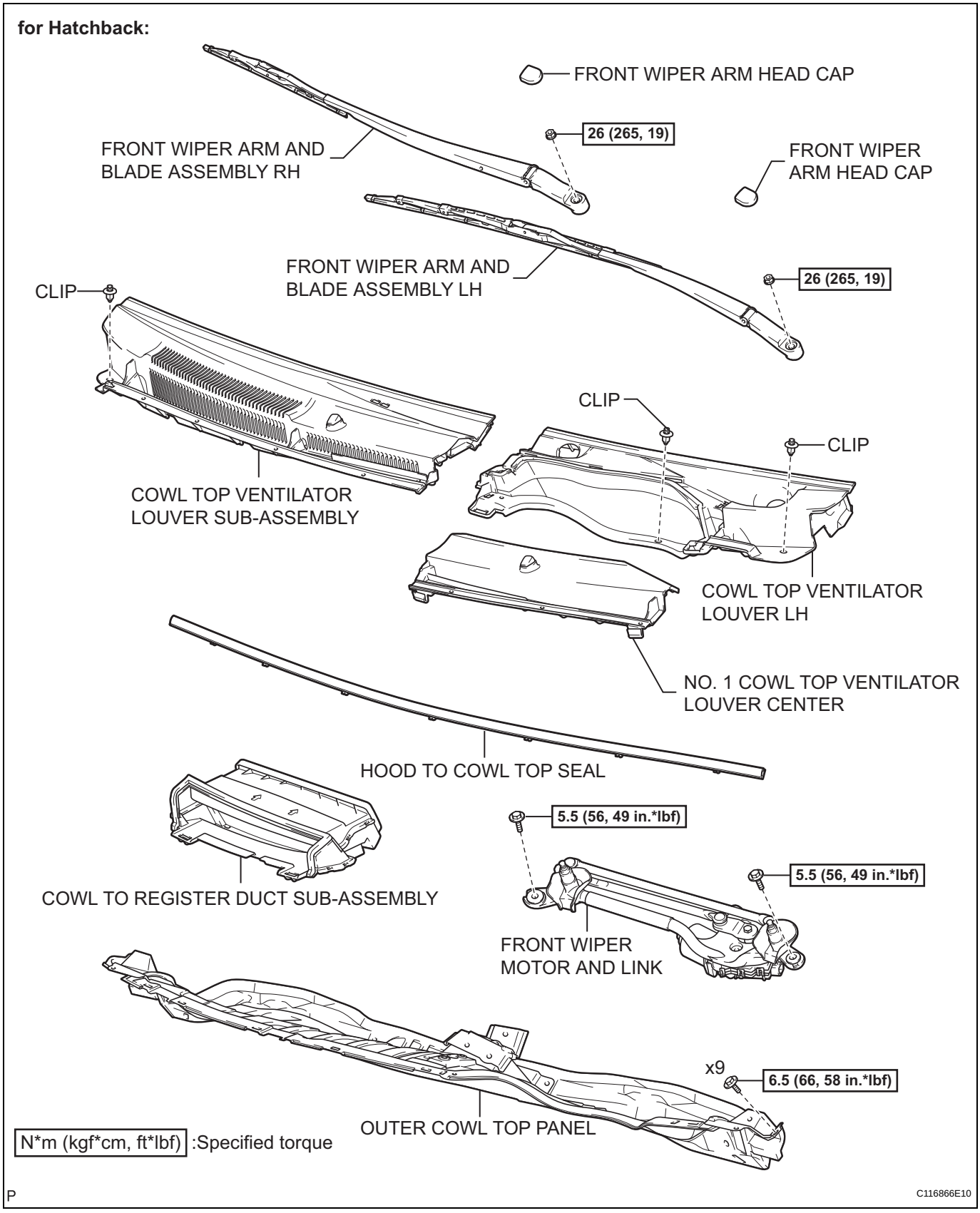

SP

for Sedan:

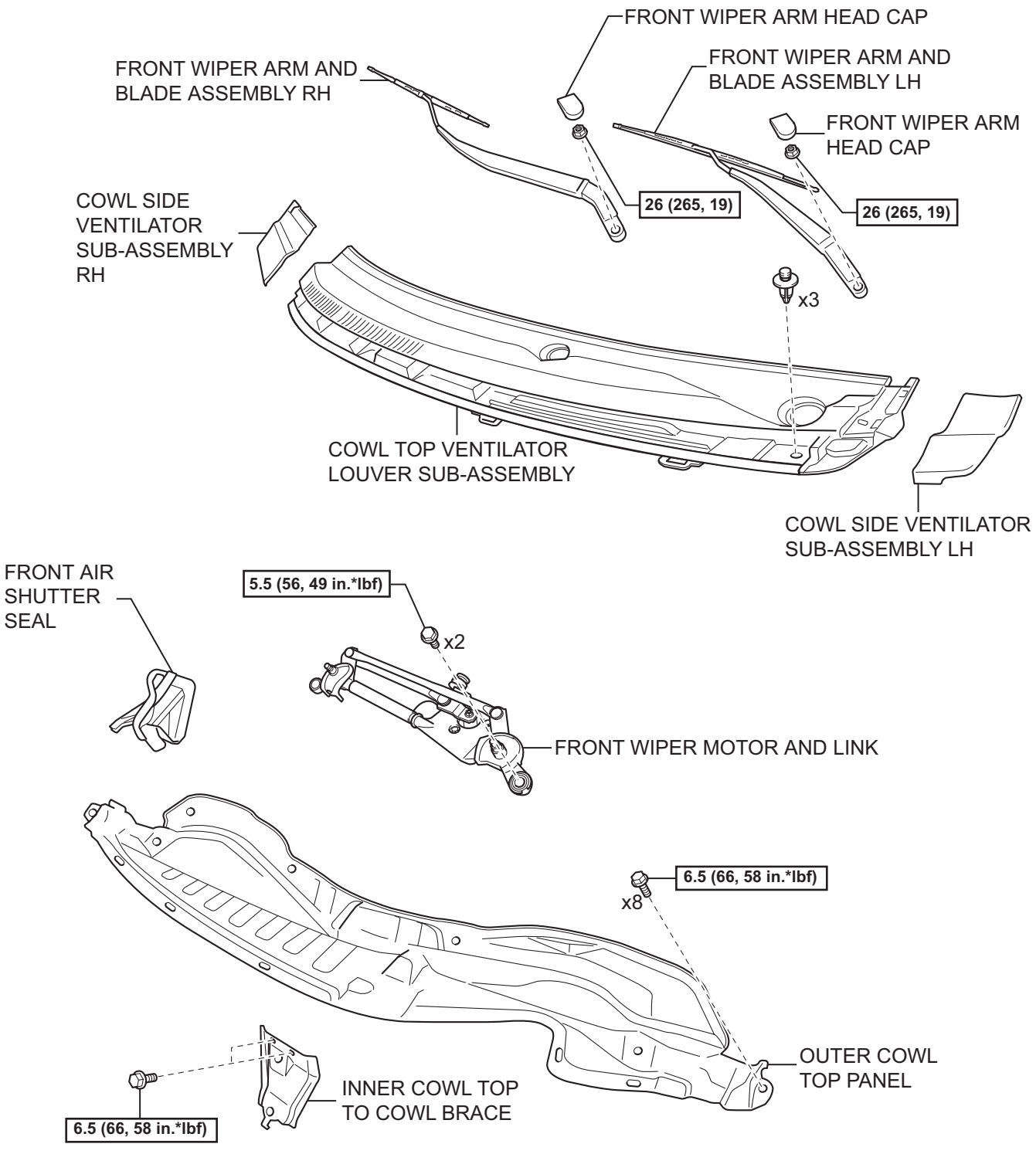

N*m (kgf*cm, ft*lbf) : Specified torque

Y

A133320E07

SP

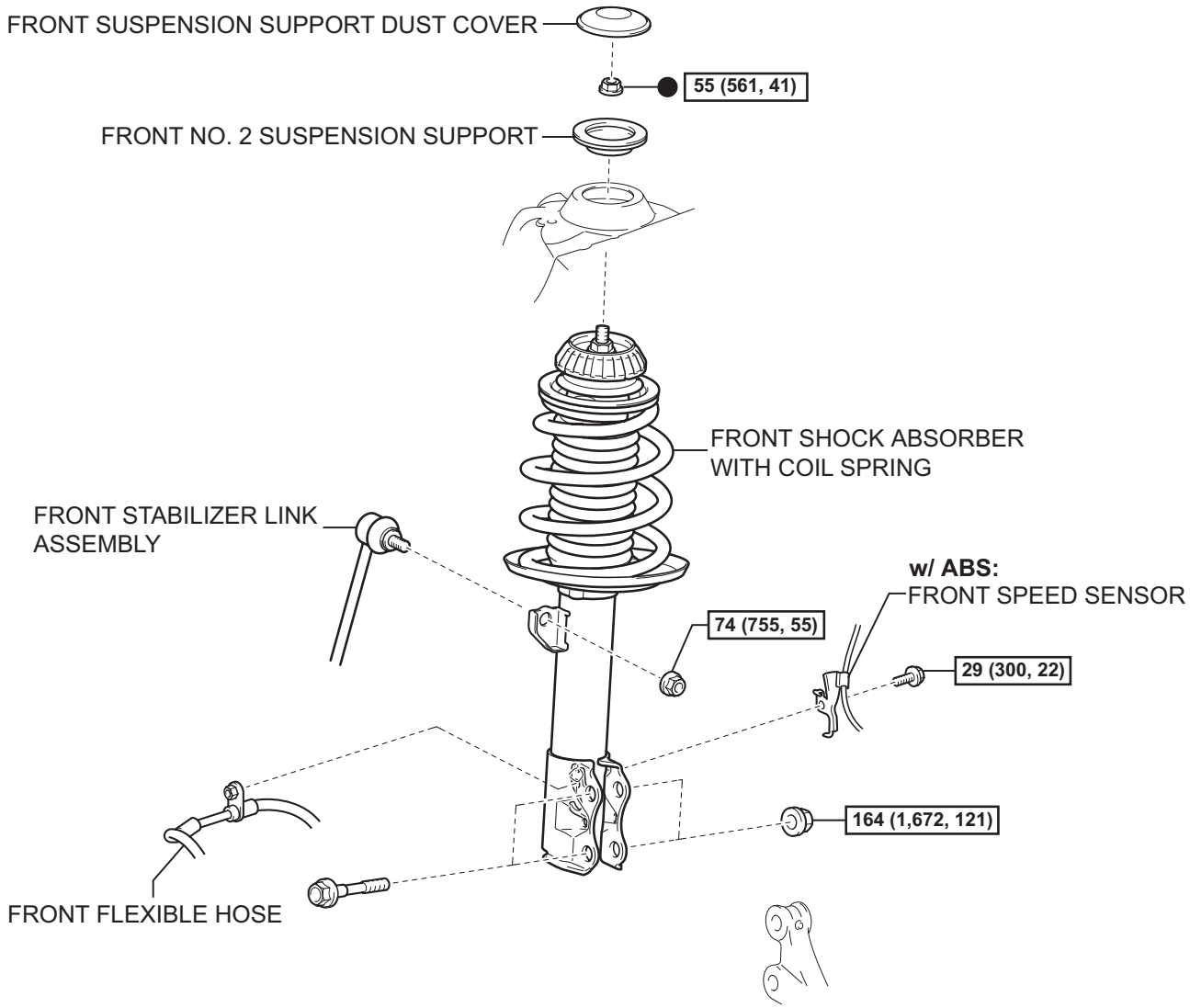

SP

N*m (kgf*cm, ft*lbf) : Specified torque

● Non-reusable part

P

C121847E02

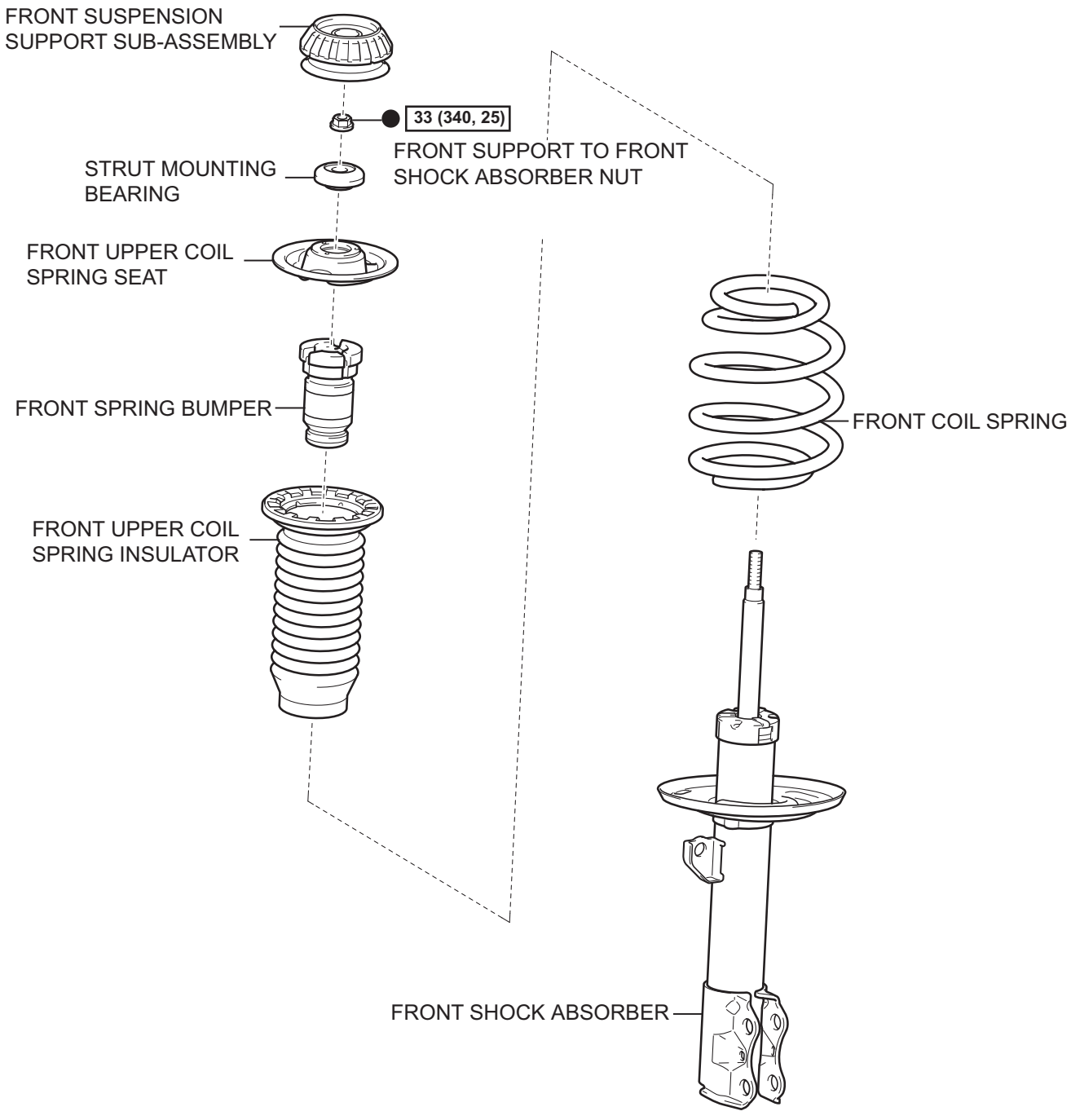

N*m (kgf*cm, ft*lbf) : Specified torque

● Non-reusable part

P

C106043E03

SP

REMOVAL

1. **DISCONNECT CABLE FROM NEGATIVE BATTERY TERMINAL**
2. **REMOVE FRONT WIPER ARM HEAD CAP**
   Hatchback: (See page WW-17)
   Sedan: (See page WW-9)
3. **REMOVE FRONT WIPER ARM AND BLADE ASSEMBLY LH**
   Hatchback: (See page WW-17)
   Sedan: (See page WW-9)
4. **REMOVE FRONT WIPER ARM AND BLADE ASSEMBLY RH**
   Hatchback: (See page WW-17)
   Sedan: (See page WW-9)
5. **REMOVE HOOD TO COWL TOP SEAL (for Hatchback) (See page WW-18)**
6. **REMOVE COWL SIDE VENTILATOR SUB-ASSEMBLY LH (for Sedan) (See page WW-10)**
7. **REMOVE COWL SIDE VENTILATOR SUB-ASSEMBLY RH (for Sedan) (See page WW-10)**
8. **REMOVE COWL TOP VENTILATOR LOUVER SUB-ASSEMBLY**
   Hatchback: (See page WW-18)
   Sedan: (See page WW-10)
9. **REMOVE COWL TOP VENTILATOR LOUVER LH (for Hatchback) (See page WW-18)**
10. **REMOVE FRONT WIPER MOTOR AND LINK**
    Hatchback: (See page WW-19)
    Sedan: (See page WW-10)
11. **REMOVE COWL TO REGISTER DUCT SUB-ASSEMBLY (for Hatchback) (See page EM-122)**
12. **REMOVE FRONT AIR SHUTTER SEAL (for Sedan) (See page EM-123)**
13. **REMOVE OUTER COWL TOP PANEL**
    Hatchback: (See page EM-123)
    Sedan: (See page EM-123)
14. **REMOVE FRONT WHEEL**
15. **SEPARATE FRONT STABILIZER LINK ASSEMBLY**
    (a) Remove the nut and separate the stabilizer link from the shock absorber.
    HINT:
    If the ball joint turns together with the nut, use a socket hexagon wrench 6 to hold the stud.

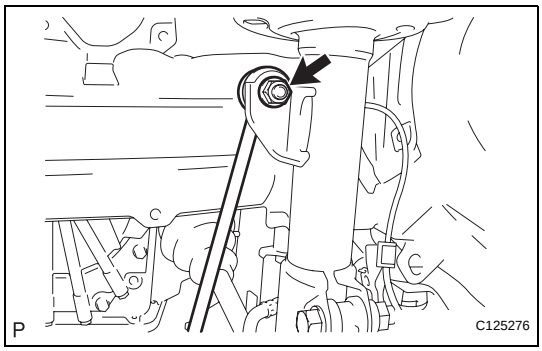

SP

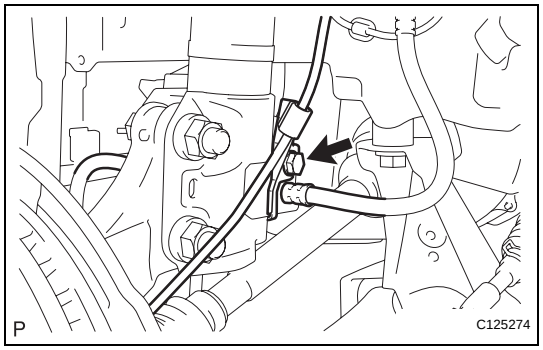

16. SEPARATE FRONT FLEXIBLE HOSE

(a) w/ ABS:
  (1) Remove the bolt and separate the speed sensor and flexible hose.

(b) w/o ABS:
  (1) Remove the bolt and separate the flexible hose.

17. REMOVE FRONT SUSPENSION SUPPORT DUST COVER

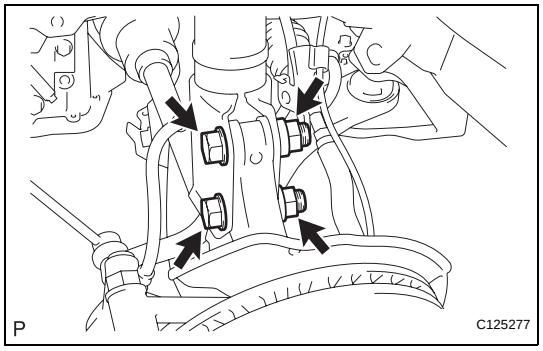

18. REMOVE FRONT SHOCK ABSORBER WITH COIL SPRING

(a) Remove the 2 nuts and 2 bolts and separate the shock absorber with coil spring from the steering knuckle.
HINT:
Keep the bolt from rotating while loosening and removing the nuts.

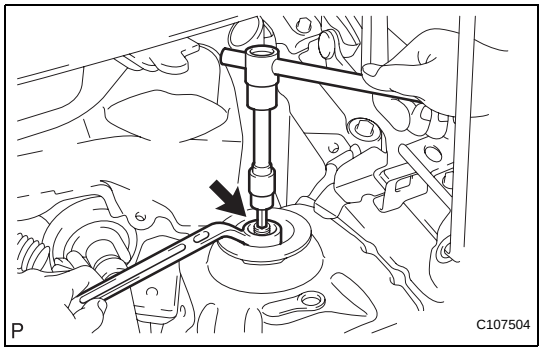

(b) Using a socket hexagon wrench 6, fix the shock absorber rod and remove the nut.

(c) Remove No. 2 suspension support .

(d) Remove the front shock absorber with coil spring from the vehicle.

DISASSEMBLY

1. REMOVE FRONT SUSPENSION SUPPORT SUB-ASSEMBLY

2. REMOVE FRONT SUPPORT TO FRONT SHOCK ABSORBER NUT

(a) Using a socket hexagon wrench 6, fix the shock absorber rod and loosen the nut.

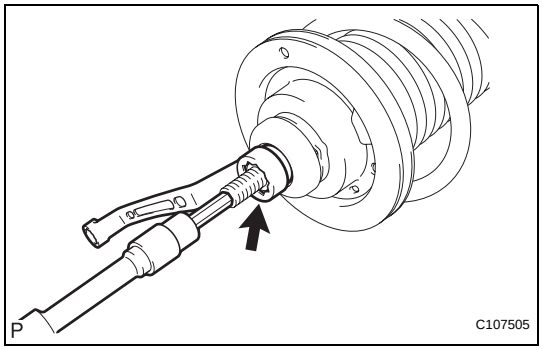

(b) Using SST, compress the coil spring.

SST 09727-30021 (09727-00010, 09727-00021, 09727-00031)

NOTICE:

Do not use an impact wrench. It will damage SST.

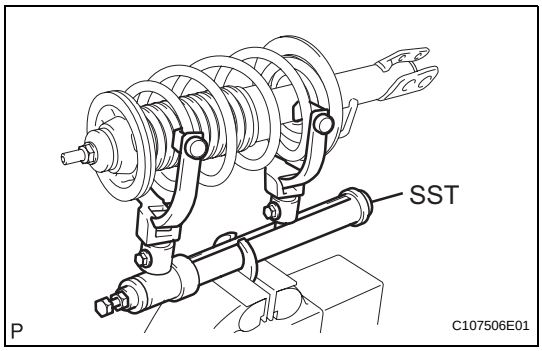

(c) Remove the nut.

3. REMOVE FRONT UPPER COIL SPRING SEAT

(a) Remove the upper coil spring seat with the strut mounting bearing and spring bumper from the shock absorber.

4. REMOVE FRONT SPRING BUMPER

(a) Remove the spring bumper from the upper coil spring seat.

5. REMOVE FRONT UPPER COIL SPRING INSULATOR

6. REMOVE FRONT COIL SPRING

7. REMOVE STRUT MOUNTING BEARING

(a) Using a brass bar and press, remove the strut mounting bearing from the upper coil spring seat.

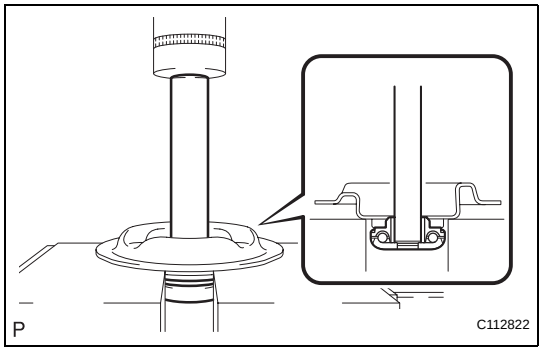

INSPECTION

1. INSPECT FRONT SHOCK ABSORBER

(a) Compress and extend the shock absorber rod and check that there is no abnormal resistance or abnormal sound during the operation.

If there is any abnormality, replace the shock absorber with a new one.

NOTICE:

When disposing of the shock absorber, see DISPOSAL on page SP-21.

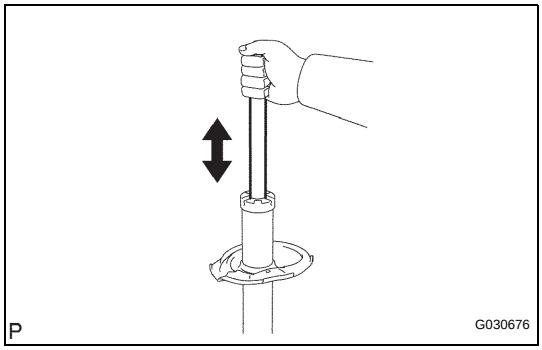

SP

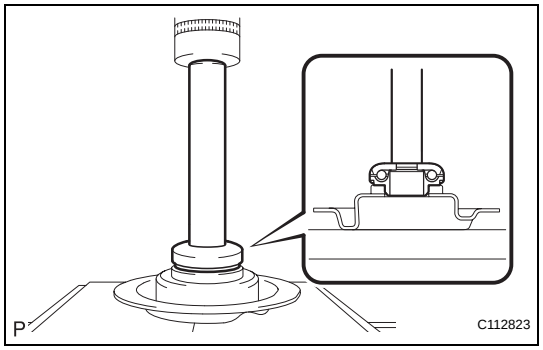

REASSEMBLY

1. INSTALL STRUT MOUNTING BEARING

(a) Using a brass bar and press, install the strut mounting bearing onto the coil spring seat upper.

NOTICE:

The strut mounting bearing must be securely installed.

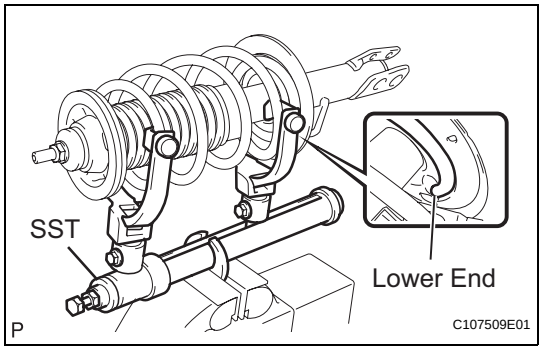

2. INSTALL FRONT COIL SPRING

(a) Using SST, compress the coil spring.

SST 09727-30021 (09727-00010, 09727-00021, 09727-00031)

NOTICE:

Do not use an impact wrench. It will damage SST.

(b) Install the coil spring onto the shock absorber.

NOTICE:

A spring of a smaller diameter should be installed in the upward direction.

HINT:

Fit the lower end of the coil spring into the gap of the absorber lower seat.

3. INSTALL FRONT UPPER COIL SPRING INSULATOR

4. INSTALL FRONT SPRING BUMPER

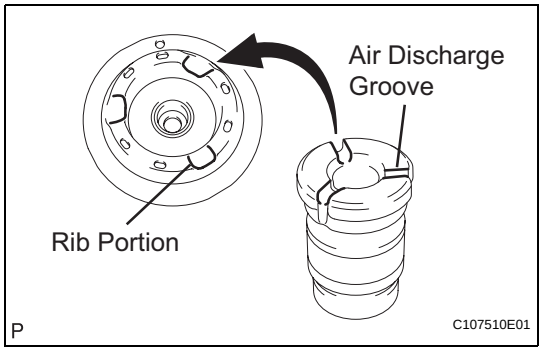

(a) Install the spring bumper onto the upper coil spring seat with the air discharge groove of the spring bumper and the rib portion of the upper coil spring seat aligned.

NOTICE:

Securely insert the spring bumper into the upper coil spring seat.

5. INSTALL FRONT UPPER COIL SPRING SEAT

(a) Install the upper coil spring seat with the strut mounting bearing and spring bumper onto the shock absorber.

6. INSTALL FRONT SUPPORT TO FRONT SHOCK ABSORBER NUT

(a) Provisionally tighten a new nut.

(b) Remove SST from the front coil spring.

NOTICE:

Do not use an impact wrench. It will damage SST.

SP

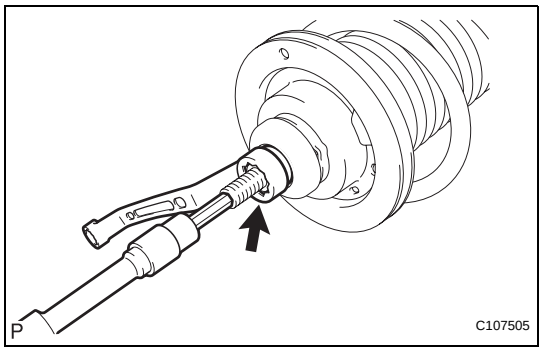

(c) Using a socket hexagon wrench 6, fix the shock absorber rod and tighten the nut.
Torque: 33 N*m (340 kgf*cm, 25 ft.*lbf)

7. INSTALL FRONT SUSPENSION SUPPORT SUB-ASSEMBLY

INSTALLATION

1. TEMPORARILY TIGHTEN FRONT SHOCK ABSORBER WITH COIL SPRING

(a) Provisionally tighten a new nut through No. 2 suspension support.

(b) Install the front shock absorber with coil spring onto the steering knuckle.

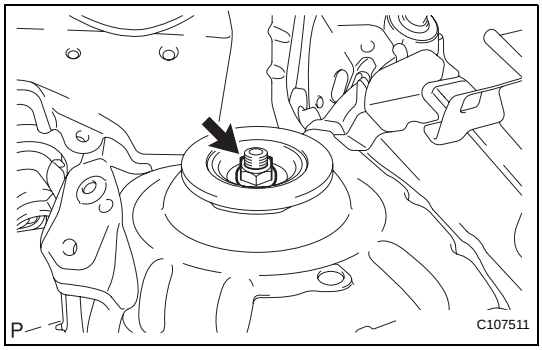

(c) Install the 2 bolts and 2 nuts.
Torque: 164 N*m (1,672 kgf*cm, 121 ft.*lbf)
HINT:
Keep the bolt from rotating while loosening and removing the nuts.

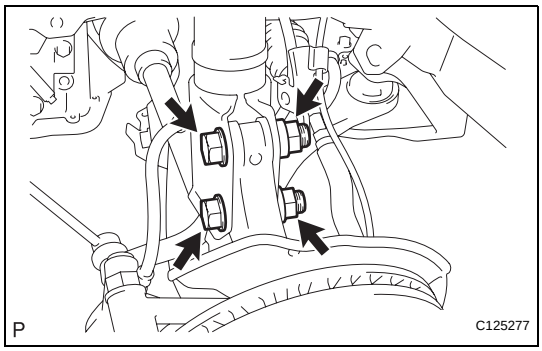

2. INSTALL FRONT FLEXIBLE HOSE

(a) w/ ABS:

(1) Install the flexible hose and speed sensor with the bolt.
Torque: 29 N*m (300 kgf*cm, 22 ft.*lbf)
NOTICE:
Install the flexible hose and speed sensor without twisting them.

(b) w/o ABS:

(1) Install the flexible hose with the bolt.
Torque: 29 N*m (300 kgf*cm, 22 ft.*lbf)
NOTICE:
Install the flexible hose without twisting them.

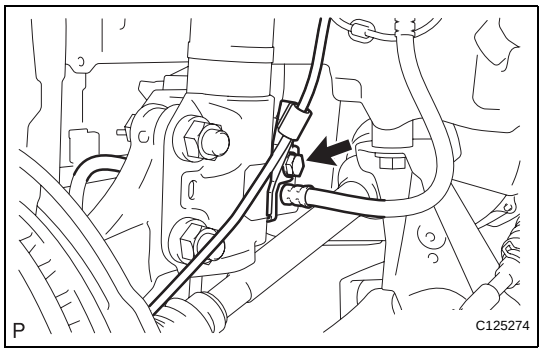

SP

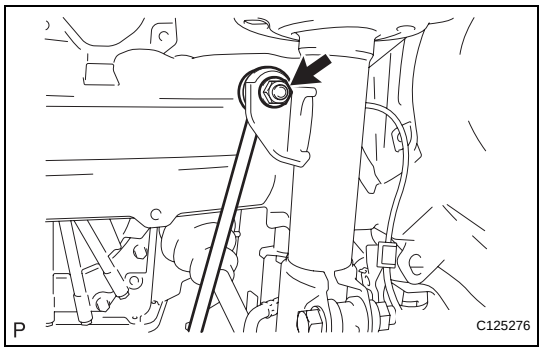

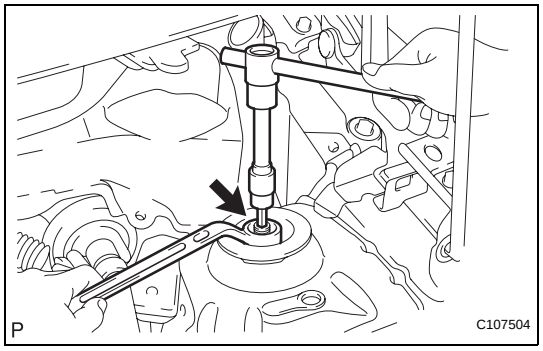

3. **INSTALL FRONT STABILIZER LINK ASSEMBLY**
   (a) Install the stabilizer link with the nut.
   Torque: 74 N*m (755 kgf*cm, 55 ft.*lbf)
   HINT:
   If the ball joint turns together with the nut, use a socket hexagon wrench 6 to hold the stud.

4. **INSTALL FRONT WHEEL**
   Torque: 103 N*m (1,050 kgf*cm, 76 ft.*lbf)

5. **FULLY TIGHTEN FRONT SHOCK ABSORBER WITH COIL SPRING**
   (a) Using a socket hexagon wrench 6, fix the shock absorber rod and tighten the nut.
   Torque: 55 N*m (561 kgf*cm, 41 ft.*lbf)

6. **INSTALL FRONT SUSPENSION SUPPORT DUST COVER**

7. **INSTALL OUTER COWL TOP PANEL**
   Hatchback: (See page EM-146)
   Sedan: (See page EM-147)

8. **INSTALL COWL TO REGISTER DUCT SUB-ASSEMBLY (for Hatchback) (See page EM-147)**

9. **INSTALL FRONT AIR SHUTTER SEAL (for Sedan) (See page EM-148)**

10. **INSTALL FRONT WIPER MOTOR AND LINK**
    Hatchback: (See page WW-21)
    Sedan: (See page WW-12)

11. **INSTALL COWL TOP VENTILATOR LOUVER LH (for Hatchback) (See page WW-21)**

12. **INSTALL COWL TOP VENTILATOR LOUVER SUB-ASSEMBLY**
    Hatchback: (See page WW-21)
    Sedan: (See page WW-12)

13. **INSTALL HOOD TO COWL TOP SEAL (for Hatchback) (See page WW-22)**

14. **INSTALL COWL SIDE VENTILATOR SUB-ASSEMBLY LH (for Sedan) (See page WW-13)**

15. **INSTALL COWL SIDE VENTILATOR SUB-ASSEMBLY RH (for Sedan) (See page WW-13)**

16. **INSTALL FRONT WIPER ARM AND BLADE ASSEMBLY LH**
    Hatchback: (See page WW-22)
    Sedan: (See page WW-13)

17. **INSTALL FRONT WIPER ARM AND BLADE ASSEMBLY RH**
    Hatchback: (See page WW-23)
    Sedan: (See page WW-14)

18. **INSTALL FRONT WIPER ARM HEAD CAP**
Hatchback: (See page WW-23)
Sedan: (See page WW-15)

19. **CONNECT CABLE TO NEGATIVE BATTERY TERMINAL**
Torque: 5.4 N*m (55 kgf*cm, 48 in.*lbf)

20. **INSPECT AND ADJUST FRONT WHEEL ALIGNMENT**
(See page SP-2)

DISPOSAL

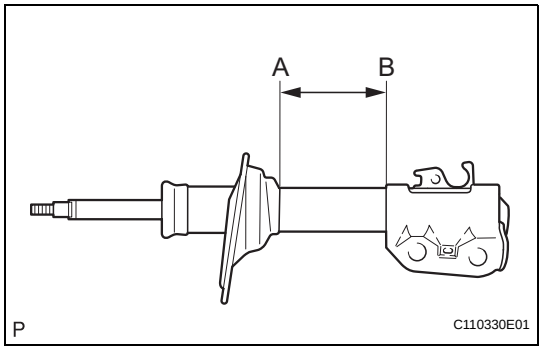

1. **DISPOSE OF FRONT SHOCK ABSORBER**
   (a) Fully extend the shock absorber piston rod, and fix it at an angle in a vise or similar tool.
   (b) Using a drill or similar tool, slowly make a hole in the area (A-B) shown in the illustration to discharge the gas inside.
   NOTICE:
   - **The gas is colorless, odorless and harmless.**
   - **Since the discharging gas may cause chips to scatter, cover the drill with a shop rag or piece of cloth when making the hole.**

FRONT LOWER SUSPENSION ARM (for LH Side)

COMPONENTS

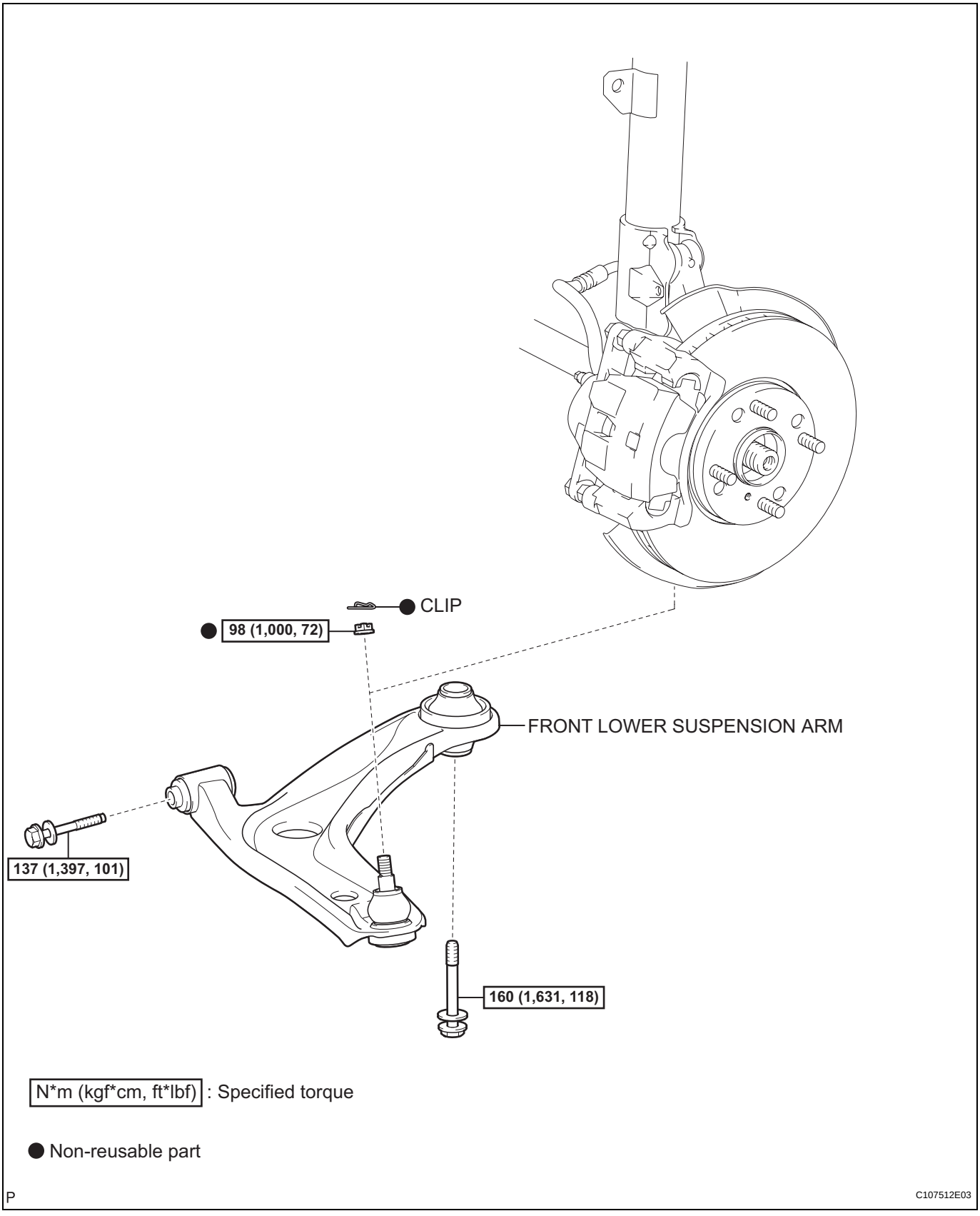

SP

REMOVAL

1. REMOVE FRONT WHEEL

2. REMOVE FRONT LOWER SUSPENSION ARM

(a) Remove the clip and castle nut.

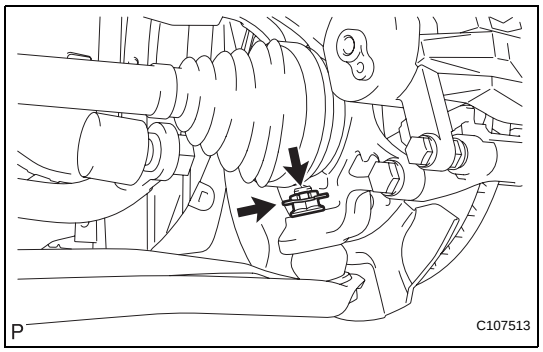

(b) Using SST, separate the lower arm.
SST 09628-00011
NOTICE:
- **Do not damage the lower arm dust cover.**
- **Suspend SST with a piece of string or the equivalent.**

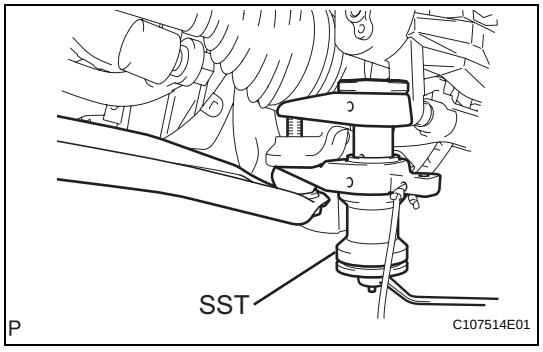

(c) Remove the 2 bolts and lower arm.

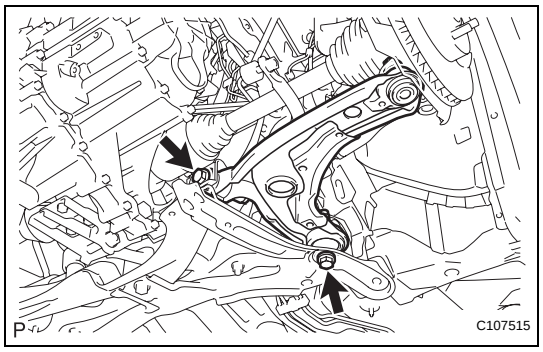

INSPECTION

1. INSPECT FRONT LOWER SUSPENSION ARM

(a) As shown in the illustration, flip the ball joint stud back and forth 5 times before installing the nut.

(b) Using a torque wrench, turn the nut continuously at a rate of 2 to 4 seconds per turn and take the torque reading on the 5th turn.
Torque: 0.78 to 3.43 N*m (8 to 35 kgf*cm, 6.9 to 30 in.*lbf)

(c) Check for any cracks and grease leakage on the ball joint dust cover.

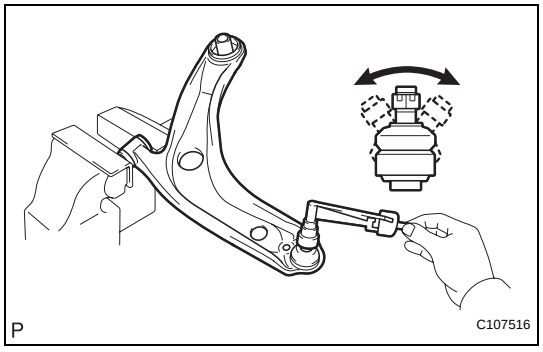

SP

INSTALLATION

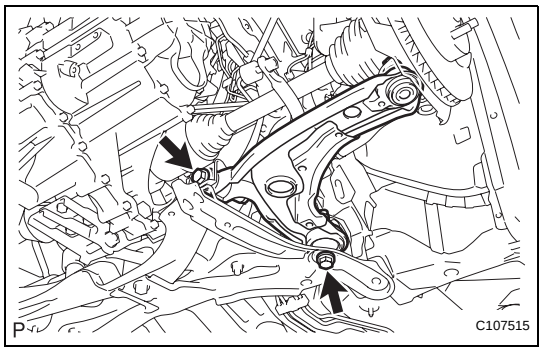

1. TEMPORARILY TIGHTEN FRONT LOWER SUSPENSION ARM

(a) Provisionally tighten the lower arm with the 2 bolts.

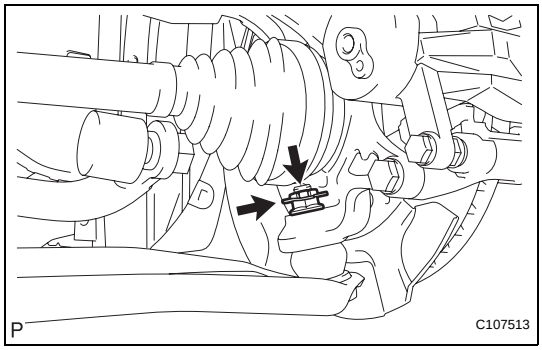

(b) Install the lower arm onto the steering knuckle with a new castle nut.
Torque: 98 N*m (1,000 kgf*cm, 72 ft.*lbf)
NOTICE:
If the holes for the clip are not aligned, tighten the nut by a further turn of up to 60°.

(c) Install a new clip.

2. INSTALL FRONT WHEEL
Torque: 103 N*m (1,050 kgf*cm, 76 ft.*lbf)

3. STABILIZE SUSPENSION

(a) Lower the vehicle from the jack.

(b) Bounce the vehicle up and down several times to stabilize the suspension.

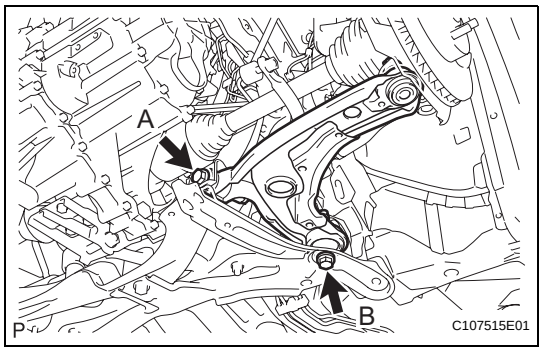

4. FULLY TIGHTEN FRONT LOWER SUSPENSION ARM

(a) Fully tighten the 2 bolts.
Torque: Bolt A
137 N*m (1,397 kgf*cm, 101 ft.*lbf)
Bolt B
160 N*m (1,631 kgf*cm, 118 ft.*lbf)

5. INSPECT AND ADJUST FRONT WHEEL ALIGNMENT
(See page SP-2)

FRONT LOWER SUSPENSION ARM (for RH Side)

COMPONENTS

for Hatchback:

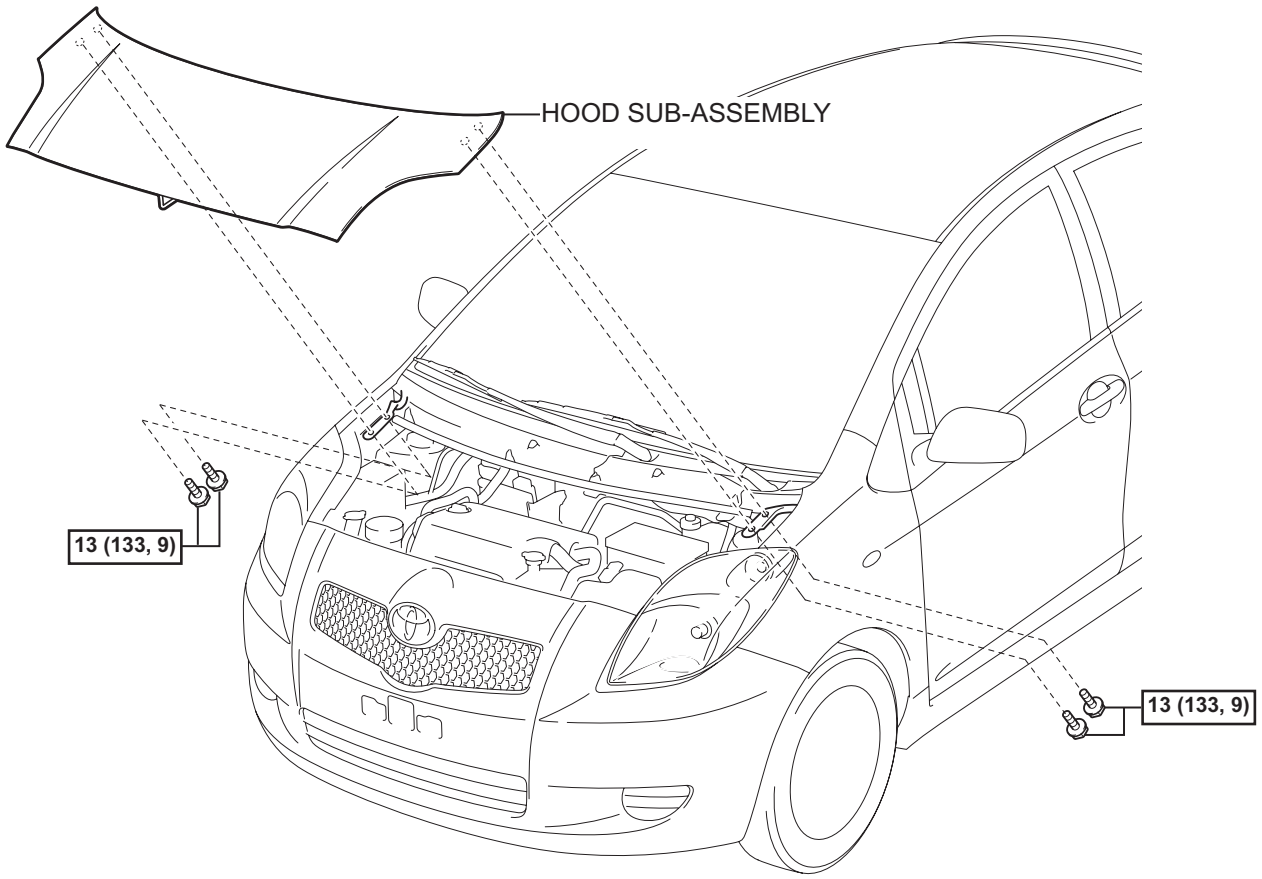

N*m (kgf*cm, ft.*lbf) : Specified torque

P

C117202E02

SP

for Sedan:

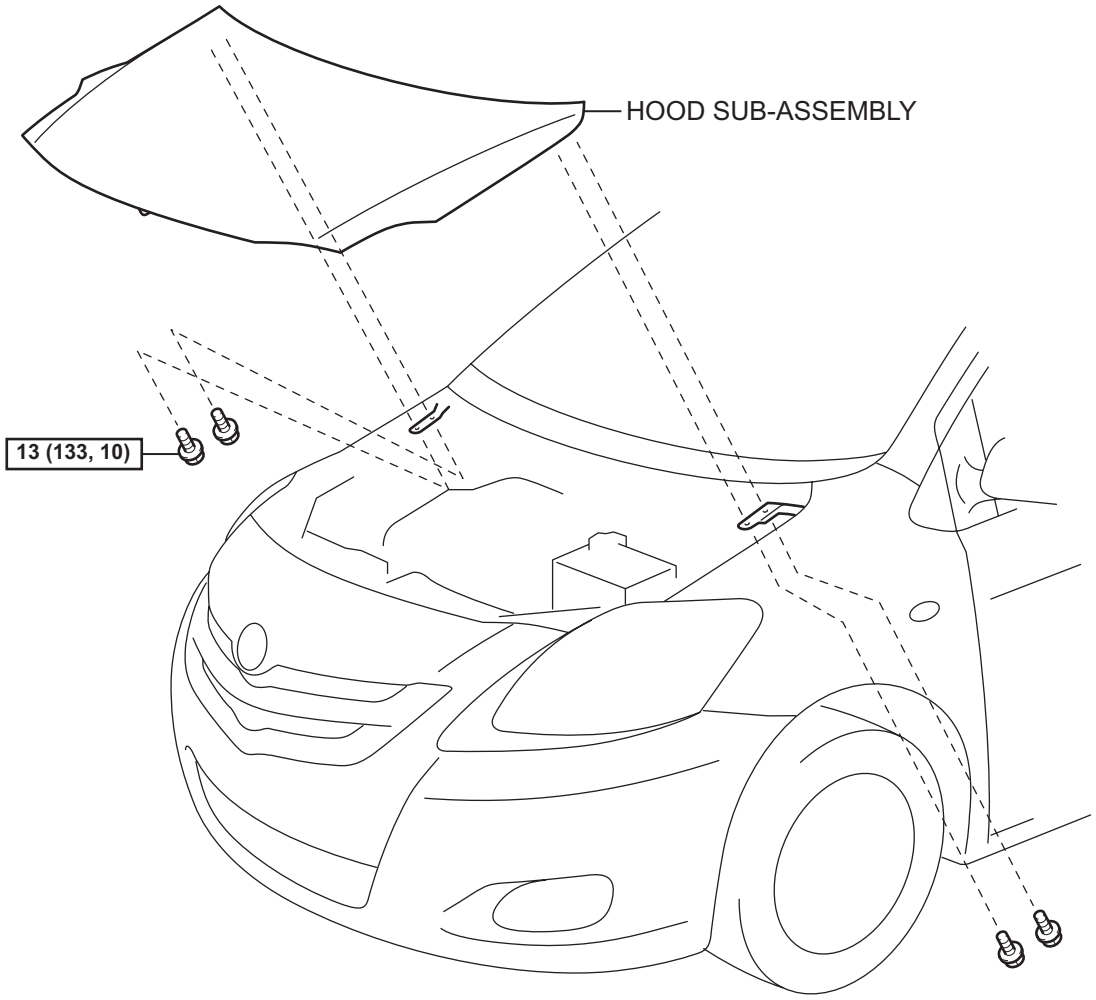

SP

N*m (kgf*cm, ft*lbf) : Specified torque

B135922E02

for Hatchback:

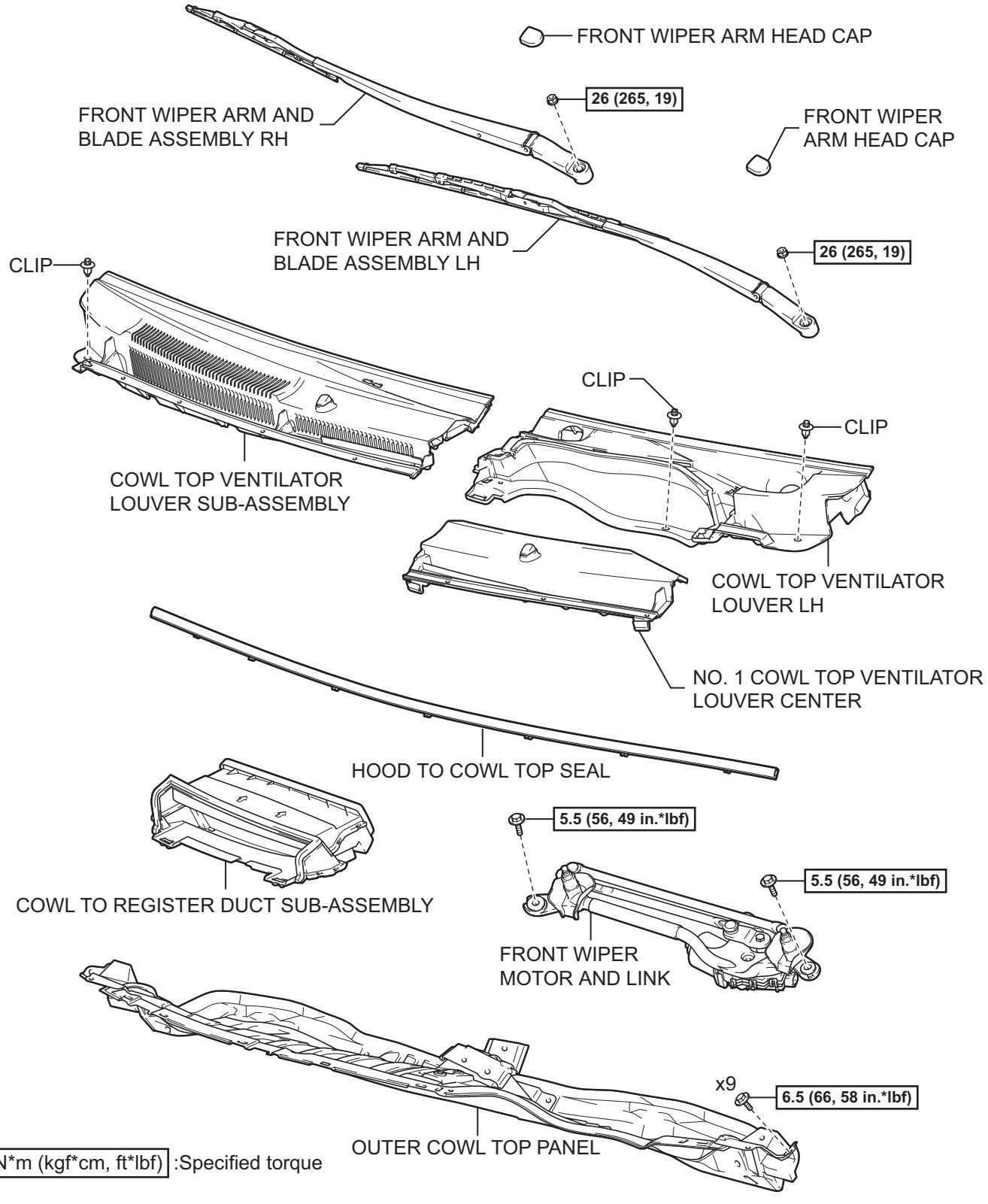

SP

for Sedan:

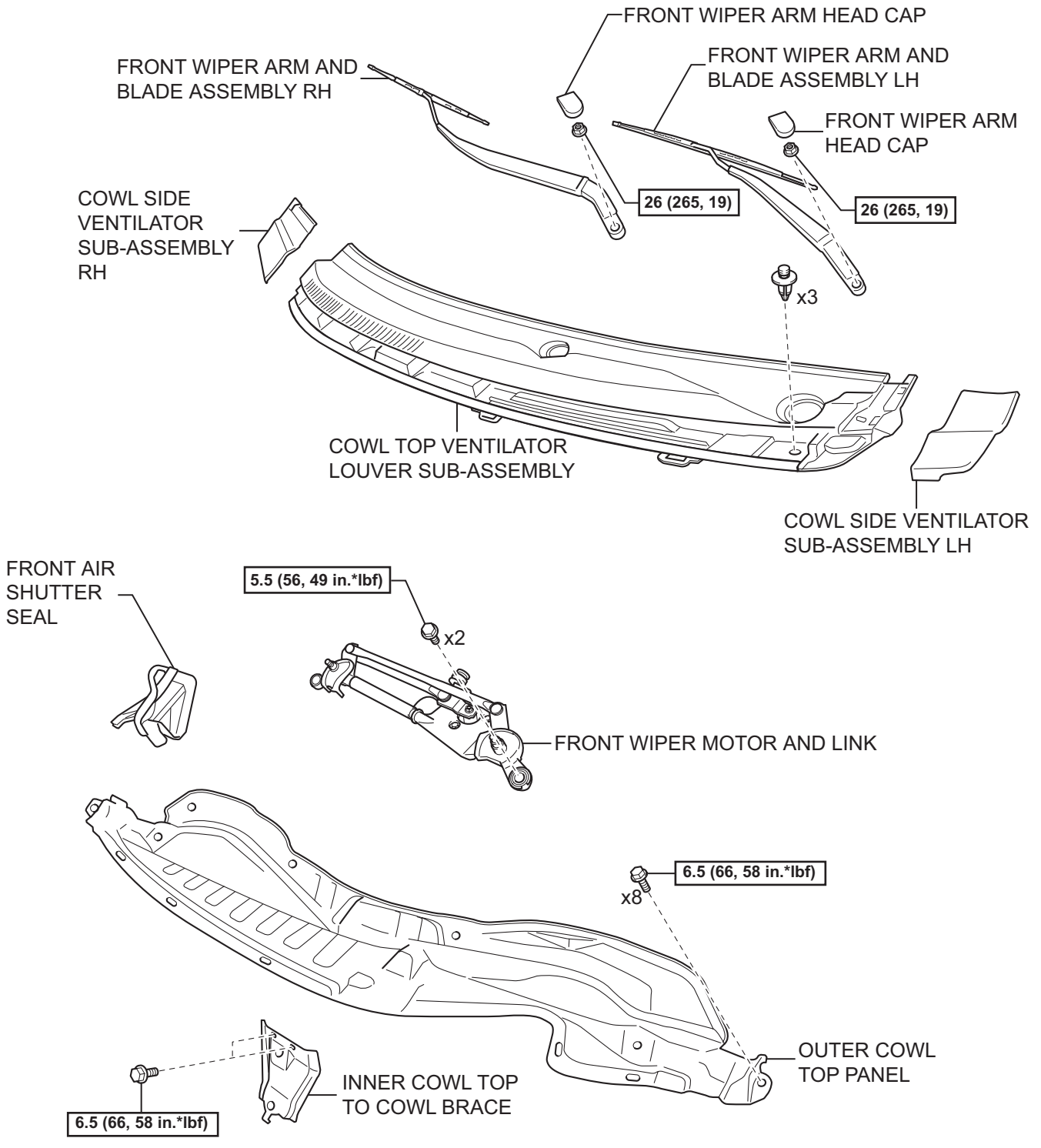

N*m (kgf*cm, ft*lbf) : Specified torque

Y

A133320E07

SP

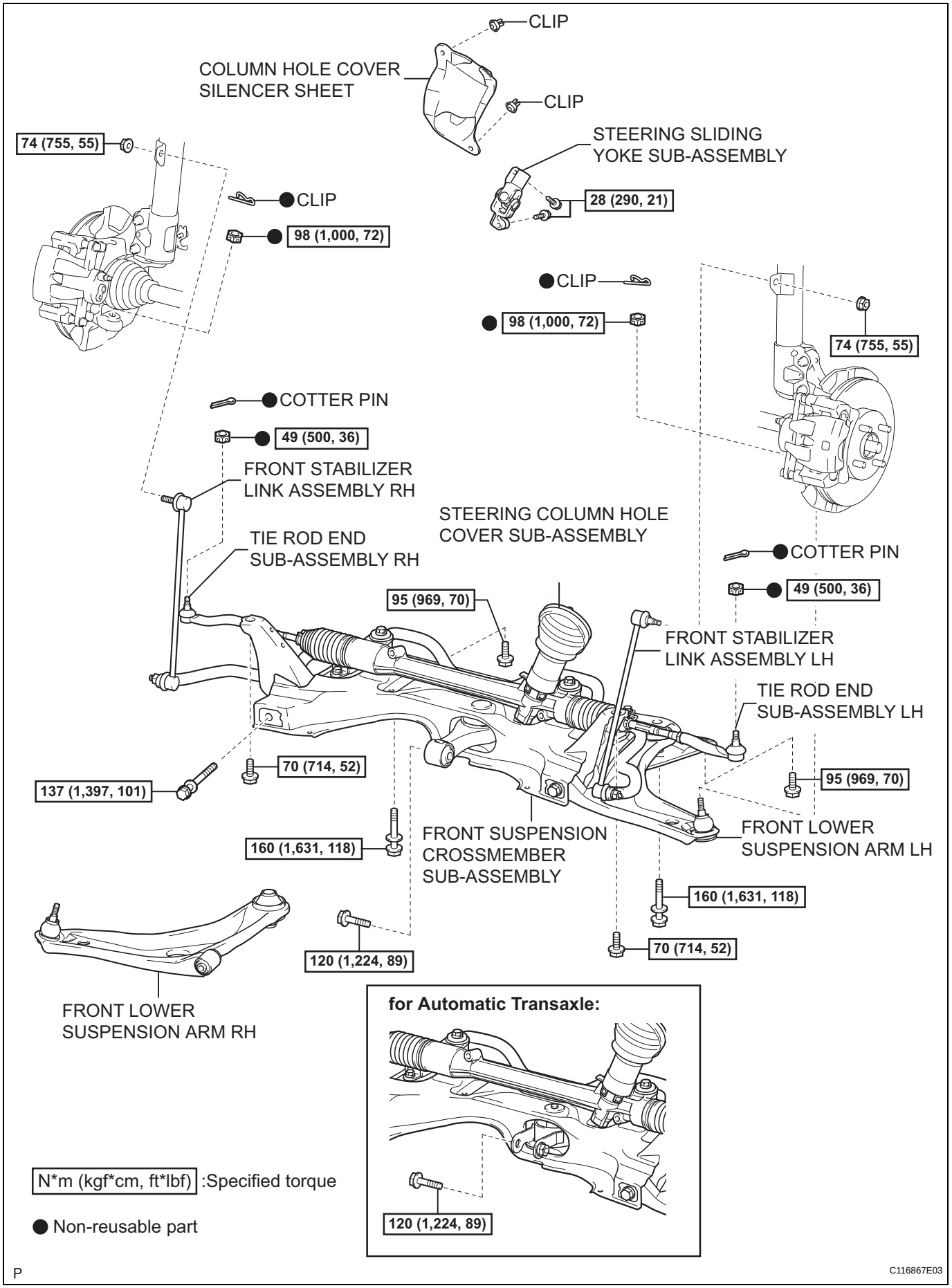
CLIP
COLUMN HOLE COVER SILENCER SHEET
CLIP
STEERING SLIDING YOKE SUB-ASSEMBLY
74 (755, 55)
CLIP
98 (1,000, 72)
28 (290, 21)
CLIP
98 (1,000, 72)
74 (755, 55)
COTTER PIN
49 (500, 36)
FRONT STABILIZER LINK ASSEMBLY RH
TIE ROD END SUB-ASSEMBLY RH
STEERING COLUMN HOLE COVER SUB-ASSEMBLY
COTTER PIN
49 (500, 36)
95 (969, 70)
FRONT STABILIZER LINK ASSEMBLY LH
TIE ROD END SUB-ASSEMBLY LH
137 (1,397, 101)
70 (714, 52)
95 (969, 70)
160 (1,631, 118)
FRONT SUSPENSION CROSSMEMBER SUB-ASSEMBLY
FRONT LOWER SUSPENSION ARM LH
160 (1,631, 118)
120 (1,224, 89)
70 (714, 52)
FRONT LOWER SUSPENSION ARM RH
for Automatic Transaxle:
120 (1,224, 89)
N*m (kgf*cm, ft*lbf) :Specified torque
● Non-reusable part
P
C116867E03

SP

REMOVAL

1. **DISCONNECT CABLE FROM NEGATIVE BATTERY TERMINAL**
2. **REMOVE HOOD SUB-ASSEMBLY**
   Hatchback: (See page PS-74)
   Sedan: (See page PS-63)
3. **REMOVE FRONT WIPER ARM HEAD CAP**
   Hatchback: (See page WW-17)
   Sedan: (See page WW-9)
4. **REMOVE FRONT WIPER ARM AND BLADE ASSEMBLY LH**
   Hatchback: (See page WW-17)
   Sedan: (See page WW-9)
5. **REMOVE FRONT WIPER ARM AND BLADE ASSEMBLY RH**
   Hatchback: (See page WW-17)
   Sedan: (See page WW-9)
6. **REMOVE HOOD TO COWL TOP SEAL (for Hatchback) (See page WW-18)**
7. **REMOVE COWL SIDE VENTILATOR SUB-ASSEMBLY LH (for Sedan) (See page WW-10)**
8. **REMOVE COWL SIDE VENTILATOR SUB-ASSEMBLY RH (for Sedan) (See page WW-10)**
9. **REMOVE COWL TOP VENTILATOR LOUVER SUB-ASSEMBLY**
   Hatchback: (See page WW-18)
   Sedan: (See page WW-10)
10. **REMOVE COWL TOP VENTILATOR LOUVER LH (for Hatchback) (See page WW-18)**
11. **REMOVE FRONT WIPER MOTOR AND LINK**
    Hatchback: (See page WW-19)
    Sedan: (See page WW-10)
12. **REMOVE COWL TO REGISTER DUCT SUB-ASSEMBLY (for Hatchback) (See page EM-122)**
13. **REMOVE FRONT AIR SHUTTER SEAL (for Sedan) (See page EM-123)**
14. **REMOVE OUTER COWL TOP PANEL**
    Hatchback: (See page EM-123)
    Sedan: (See page EM-123)
15. **POSITION WHEELS FACING STRAIGHT AHEAD**
16. **REMOVE FRONT WHEEL**
17. **REMOVE COLUMN HOLE COVER SILENCER SHEET (See page SR-32)**
18. **REMOVE STEERING SLIDING YOKE SUB-ASSEMBLY (See page PS-74)**

SP

19. **REMOVE STEERING COLUMN HOLE COVER SUB-ASSEMBLY (See page PS-75)**
20. **SEPARATE TIE ROD END SUB-ASSEMBLY LH (See page DS-3)**
21. **SEPARATE TIE ROD END SUB-ASSEMBLY RH**
    HINT:
    The removal procedure for the RH side is the same as that for the LH side.
22. **SEPARATE FRONT LOWER SUSPENSION ARM LH (See page DS-4)**
23. **SEPARATE FRONT LOWER SUSPENSION ARM RH**
    HINT:
    The removal procedure for the RH side is the same as that for the LH side.
24. **SEPARATE FRONT STABILIZER LINK ASSEMBLY LH (See page DS-4)**
25. **SEPARATE FRONT STABILIZER LINK ASSEMBLY RH**
    HINT:
    The removal procedure for the RH side is the same as that for the LH side.
26. **SUSPEND ENGINE ASSEMBLY (See page PS-75)**
27. **REMOVE FRONT SUSPENSION CROSSMEMBER SUB-ASSEMBLY (See page PS-76)**
28. **REMOVE FRONT LOWER SUSPENSION ARM RH**
    (a) Remove the bolt and lower arm.

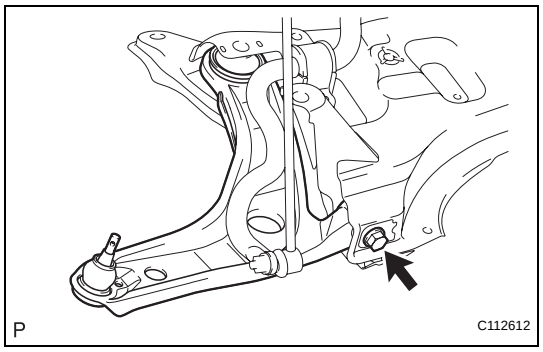

INSPECTION

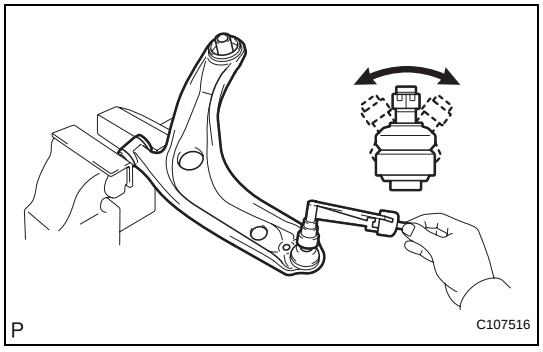

1. **INSPECT FRONT LOWER SUSPENSION ARM**
   (a) As shown in the illustration, flip the ball joint stud back and forth 5 times before installing the nut.
   (b) Using a torque wrench, turn the nut continuously at a rate of 2 to 4 seconds per turn and take the torque reading on the 5th turn.
   Torque: 0.78 to 3.43 N*m (8 to 35 kgf*cm, 6.9 to 30 in.*lbf)
   (c) Check for any cracks and grease leakage on the ball joint dust cover.

SP

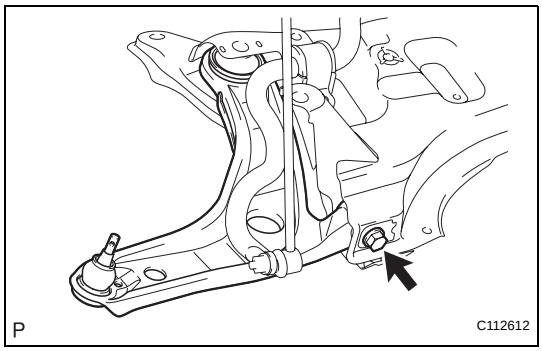

INSTALLATION

1. **TEMPORARILY TIGHTEN FRONT LOWER SUSPENSION ARM RH**
   (a) Install the lower arm onto the crossmember and provisionally tighten the bolt.
2. **INSTALL FRONT SUSPENSION CROSSMEMBER SUB-ASSEMBLY (See page PS-77)**
3. **INSTALL FRONT STABILIZER LINK ASSEMBLY LH (See page DS-14)**
4. **INSTALL FRONT STABILIZER LINK ASSEMBLY RH**
   HINT:
   The installation procedure for the RH side is the same as that for the LH side.
5. **INSTALL FRONT LOWER SUSPENSION ARM LH (See page DS-14)**
6. **INSTALL FRONT LOWER SUSPENSION ARM RH**
   HINT:
   The installation procedure for the RH side is the same as that for the LH side.
7. **INSTALL TIE ROD END SUB-ASSEMBLY LH (See page DS-15)**
8. **INSTALL TIE ROD END SUB-ASSEMBLY RH**
   HINT:
   The installation procedure for the RH side is the same as that for the LH side.
9. **INSTALL STEERING COLUMN HOLE COVER SUB-ASSEMBLY (See page PS-79)**
10. **INSTALL STEERING SLIDING YOKE SUB-ASSEMBLY (See page PS-79)**
11. **INSTALL COLUMN HOLE COVER SILENCER SHEET (See page PS-79)**
12. **INSTALL FRONT WHEEL**
    Torque: 103 N*m (1,050 kgf*cm, 76 ft.*lbf)
13. **POSITION WHEELS FACING STRAIGHT AHEAD**
14. **STABILIZE SUSPENSION**
    (a) Lower the vehicle from the jack.
    (b) Bounce the vehicle up and down several times to stabilize the suspension.

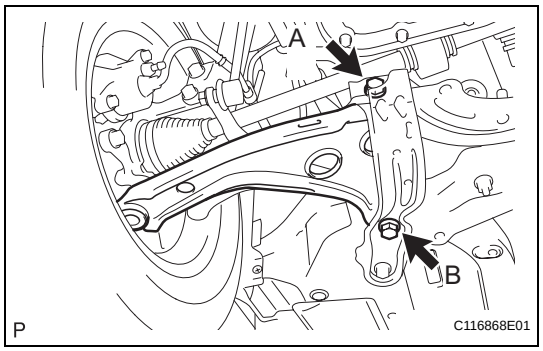

15. **FULLY TIGHTEN FRONT LOWER SUSPENSION ARM RH**
    (a) Fully tighten the 2 bolts.
    Torque: Bolt A
    137 N*m (1,397 kgf*cm, 101 ft.*lbf)
    Bolt B
    160 N*m (1,631 kgf*cm, 118 ft.*lbf)
16. **INSTALL OUTER COWL TOP PANEL**
    Hatchback: (See page EM-146)
    Sedan: (See page EM-147)
17. **INSTALL COWL TO REGISTER DUCT SUB-ASSEMBLY (for Hatchback) (See page EM-147)**
18. **INSTALL FRONT AIR SHUTTER SEAL (for Sedan) (See page EM-148)**
19. **INSTALL FRONT WIPER MOTOR AND LINK**
    Hatchback: (See page WW-21)
    Sedan: (See page WW-12)
20. **INSTALL COWL TOP VENTILATOR LOUVER LH (for Hatchback) (See page WW-21)**
21. **INSTALL COWL TOP VENTILATOR LOUVER SUB-ASSEMBLY**
    Hatchback: (See page WW-21)
    Sedan: (See page WW-12)
22. **INSTALL HOOD TO COWL TOP SEAL (for Hatchback) (See page WW-22)**
23. **INSTALL COWL SIDE VENTILATOR SUB-ASSEMBLY LH (for Sedan) (See page WW-13)**
24. **INSTALL COWL SIDE VENTILATOR SUB-ASSEMBLY RH (for Sedan) (See page WW-13)**
25. **INSTALL FRONT WIPER ARM AND BLADE ASSEMBLY LH**
    Hatchback: (See page WW-22)
    Sedan: (See page WW-13)
26. **INSTALL FRONT WIPER ARM AND BLADE ASSEMBLY RH**
    Hatchback: (See page WW-23)
    Sedan: (See page WW-14)
27. **INSTALL FRONT WIPER ARM HEAD CAP**
    Hatchback: (See page WW-23)
    Sedan: (See page WW-15)
28. **INSPECT HOOD**
    Hatchback: (See page ED-3)
    Sedan: (See page ED-1)
29. **ADJUST HOOD (for Hatchback)**
    Hatchback: (See page ED-4)
    Hatchback: (See page ED-2)

SP

30. **CONNECT CABLE TO NEGATIVE BATTERY TERMINAL**
    Torque: 5.4 N*m (55 kgf*cm, 48 in.*lbf)

31. **INSPECT AND ADJUST FRONT WHEEL ALIGNMENT**
    (See page SP-2)

FRONT STABILIZER BAR

COMPONENTS

for Hatchback:

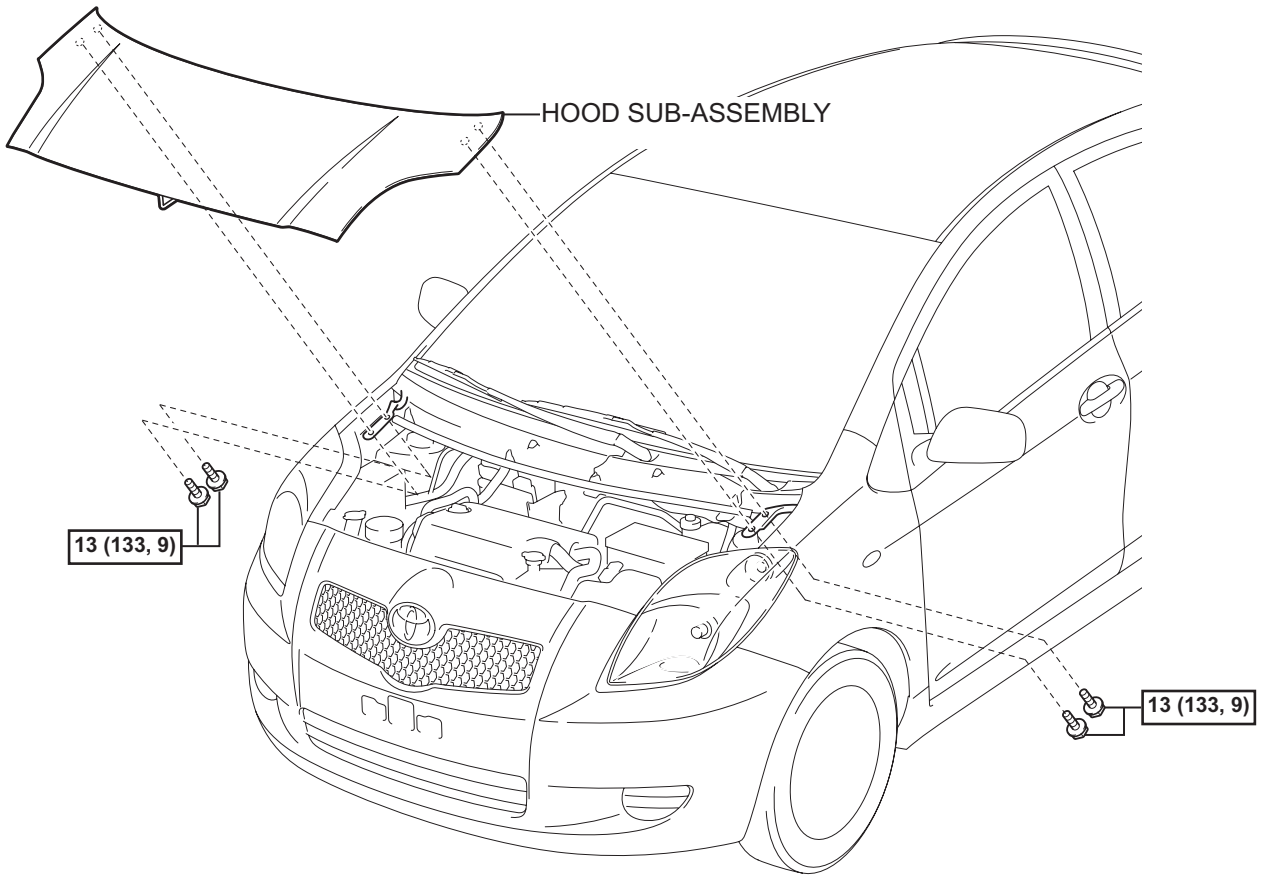

N*m (kgf*cm, ft.*lbf) : Specified torque

P

C117202E02

SP

for Sedan:

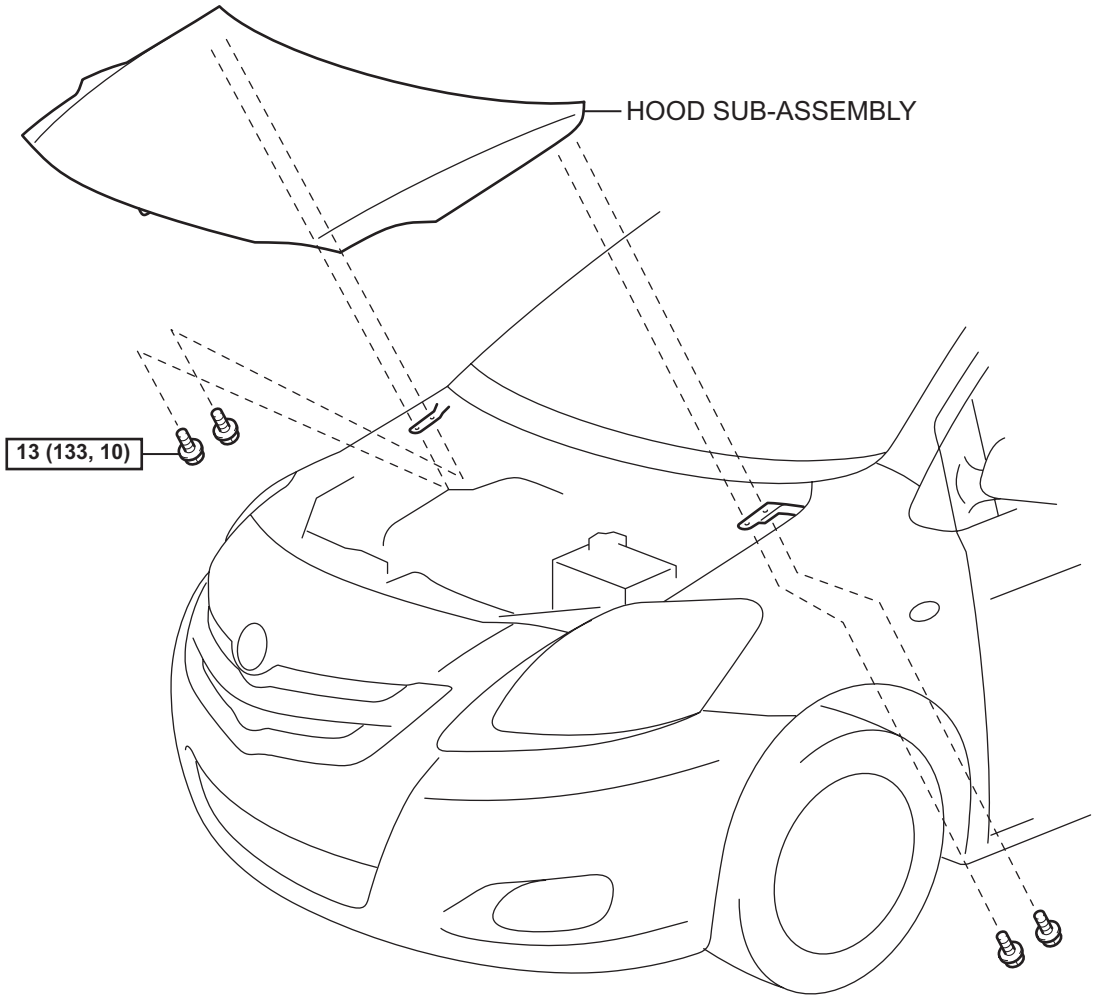

SP

N*m (kgf*cm, ft*lbf) : Specified torque

B135922E02

for Hatchback:

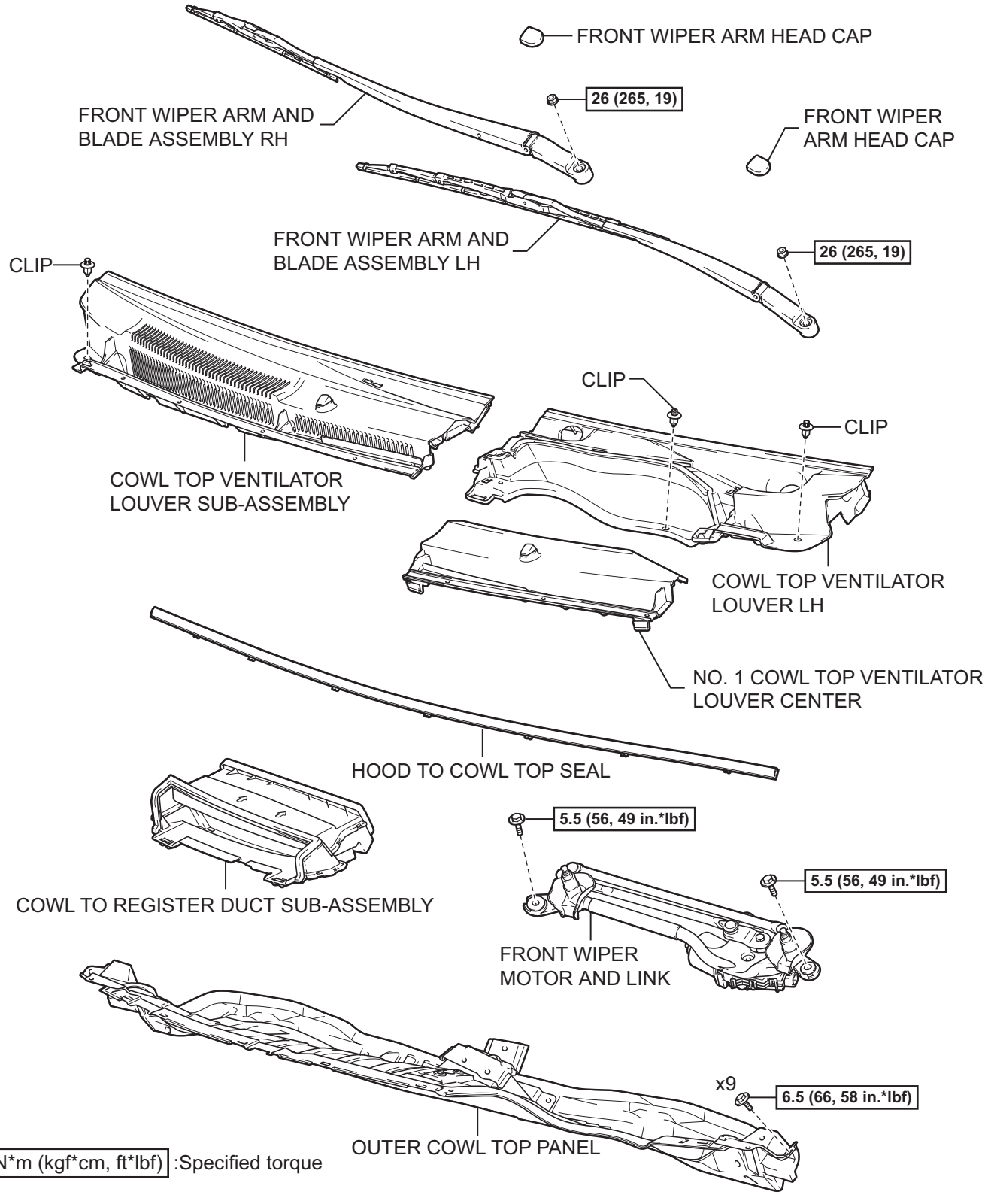

SP

for Sedan:

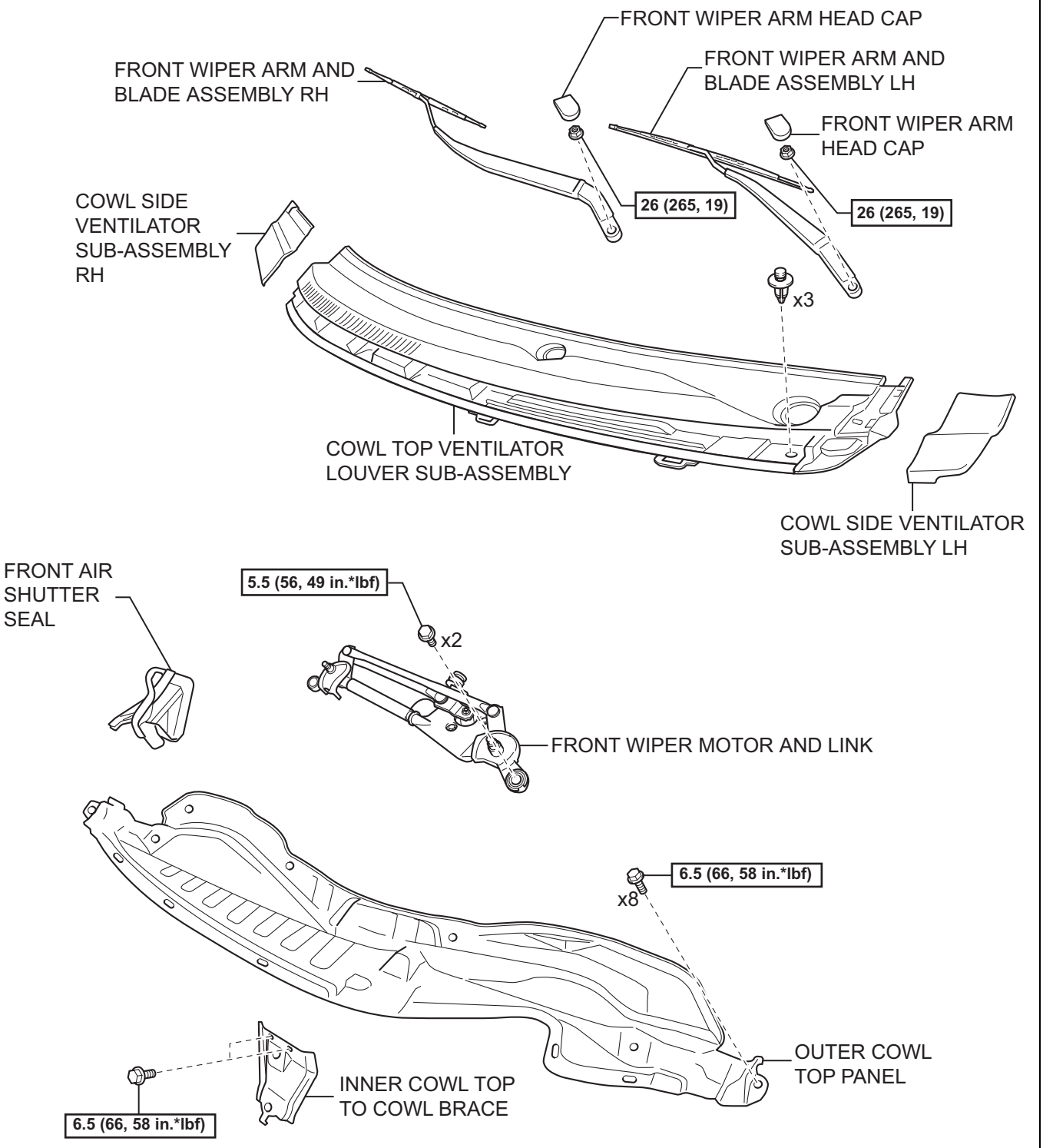

N*m (kgf*cm, ft*lbf) : Specified torque

Y

A133320E07

SP

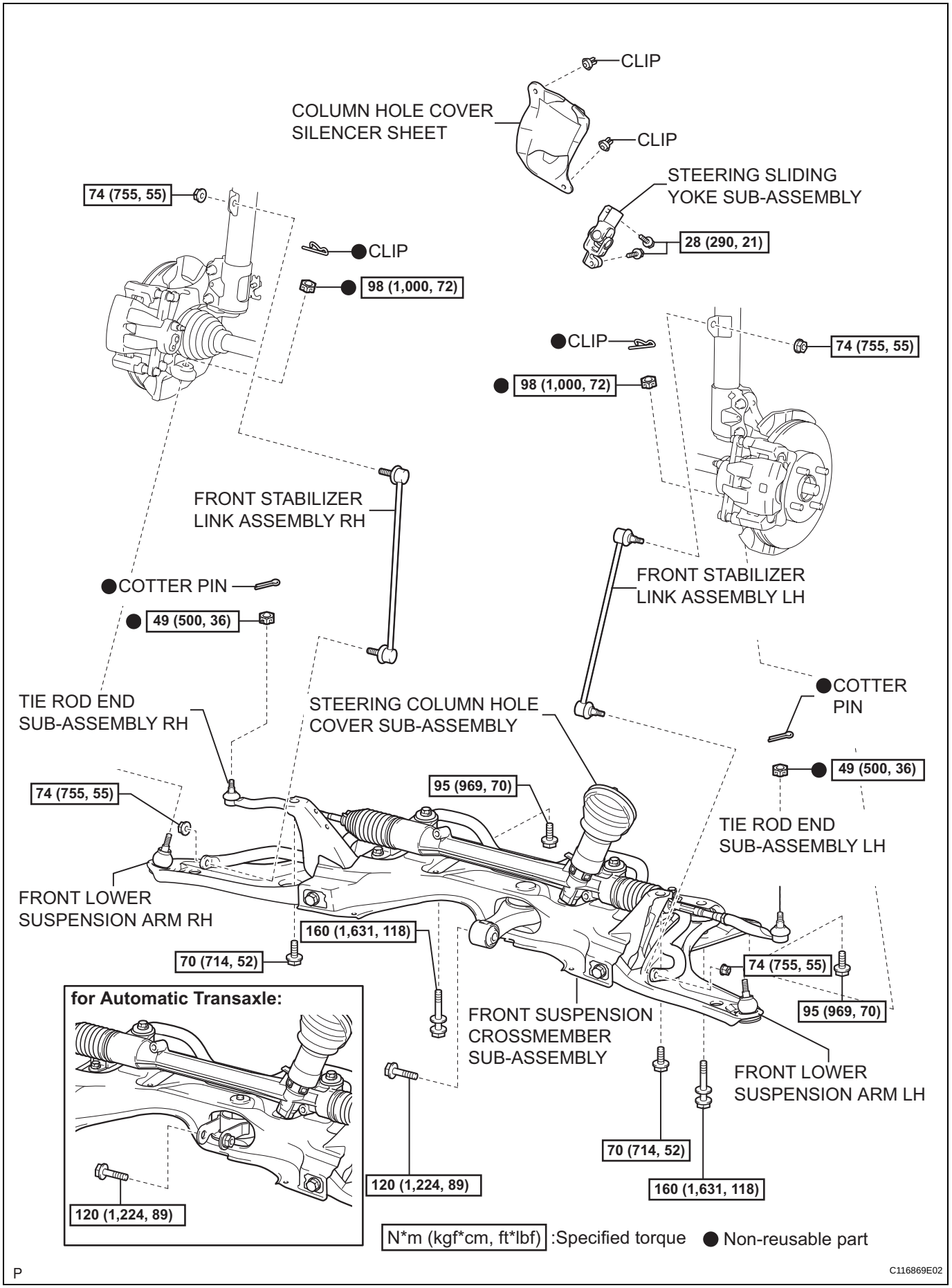
CLIP
COLUMN HOLE COVER SILENCER SHEET
CLIP
STEERING SLIDING YOKE SUB-ASSEMBLY
28 (290, 21)
74 (755, 55)
CLIP
98 (1,000, 72)
CLIP
74 (755, 55)
98 (1,000, 72)
FRONT STABILIZER LINK ASSEMBLY RH
FRONT STABILIZER LINK ASSEMBLY LH
COTTER PIN
49 (500, 36)
TIE ROD END SUB-ASSEMBLY RH
STEERING COLUMN HOLE COVER SUB-ASSEMBLY
COTTER PIN
49 (500, 36)
74 (755, 55)
95 (969, 70)
TIE ROD END SUB-ASSEMBLY LH
FRONT LOWER SUSPENSION ARM RH
160 (1,631, 118)
70 (714, 52)
74 (755, 55)
95 (969, 70)
FRONT SUSPENSION CROSSMEMBER SUB-ASSEMBLY
FRONT LOWER SUSPENSION ARM LH
70 (714, 52)
160 (1,631, 118)
120 (1,224, 89)
for Automatic Transaxle:
120 (1,224, 89)
N*m (kgf*cm, ft*lbf) :Specified torque
Non-reusable part
P
C116869E02

SP

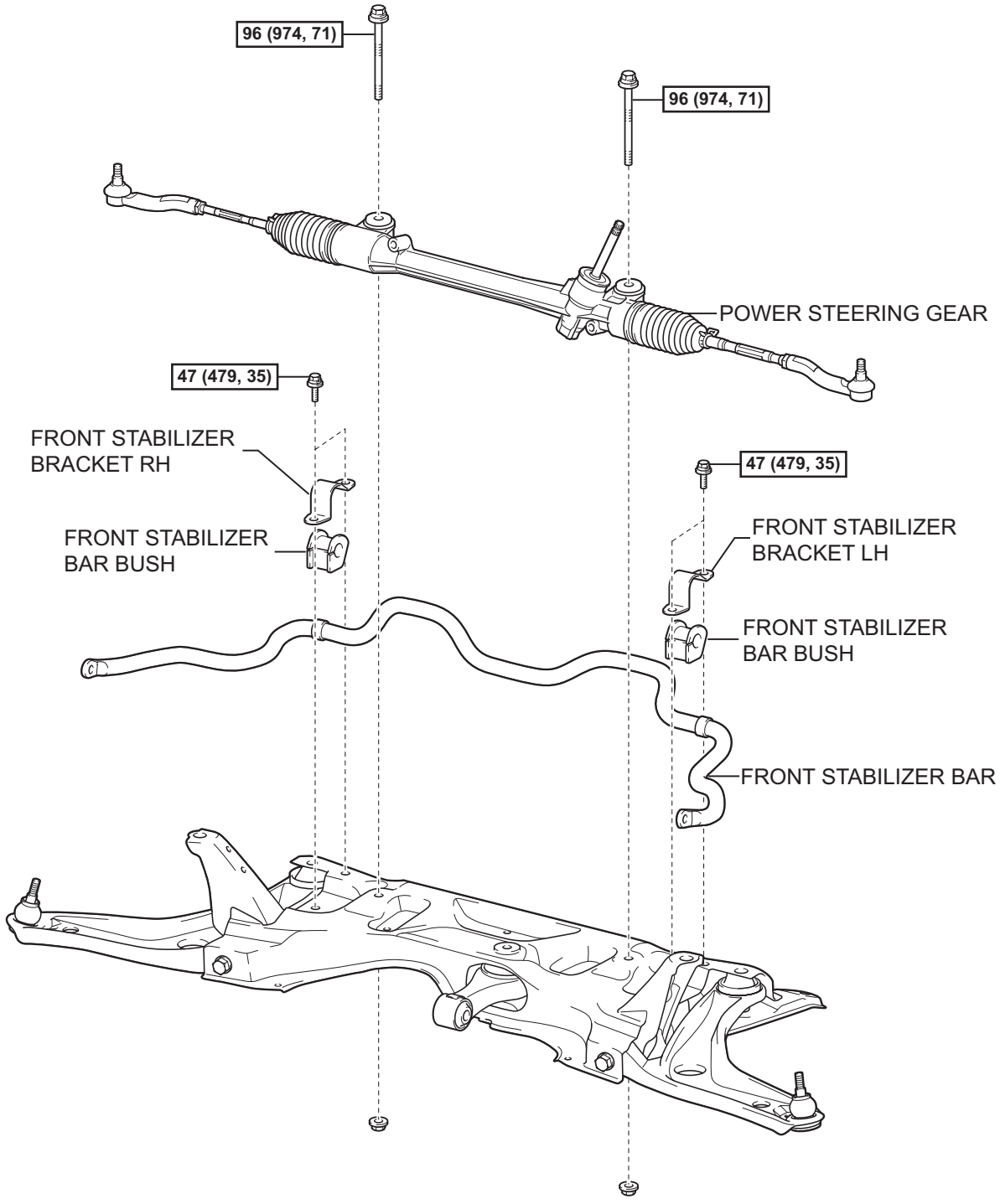

N*m (kgf*cm, ft*lbf) : Specified torque

● Non-reusable part

P

C116870E01

SP

REMOVAL

1. **DISCONNECT CABLE FROM NEGATIVE BATTERY TERMINAL**
2. **REMOVE HOOD SUB-ASSEMBLY**
   Hatchback: (See page PS-74)
   Sedan: (See page PS-63)
3. **REMOVE FRONT WIPER ARM HEAD CAP**
   Hatchback: (See page WW-17)
   Sedan: (See page WW-9)
4. **REMOVE FRONT WIPER ARM AND BLADE ASSEMBLY LH**
   Hatchback: (See page WW-17)
   Sedan: (See page WW-9)
5. **REMOVE FRONT WIPER ARM AND BLADE ASSEMBLY RH**
   Hatchback: (See page WW-17)
   Sedan: (See page WW-9)
6. **REMOVE HOOD TO COWL TOP SEAL (for Hatchback) (See page WW-18)**
7. **REMOVE COWL SIDE VENTILATOR SUB-ASSEMBLY LH (for Sedan) (See page WW-10)**
8. **REMOVE COWL SIDE VENTILATOR SUB-ASSEMBLY RH (for Sedan) (See page WW-10)**
9. **REMOVE COWL TOP VENTILATOR LOUVER SUB-ASSEMBLY**
   Hatchback: (See page WW-18)
   Sedan: (See page WW-10)
10. **REMOVE COWL TOP VENTILATOR LOUVER LH (for Hatchback) (See page WW-18)**
11. **REMOVE FRONT WIPER MOTOR AND LINK**
    Hatchback: (See page WW-19)
    Sedan: (See page WW-10)
12. **REMOVE COWL TO REGISTER DUCT SUB-ASSEMBLY (for Hatchback) (See page EM-122)**
13. **REMOVE FRONT AIR SHUTTER SEAL (for Sedan) (See page EM-123)**
14. **REMOVE OUTER COWL TOP PANEL**
    Hatchback: (See page EM-123)
    Sedan: (See page EM-123)
15. **POSITION WHEELS FACING STRAIGHT AHEAD**
16. **REMOVE FRONT WHEEL**
17. **REMOVE COLUMN HOLE COVER SILENCER SHEET (See page PS-74)**
18. **REMOVE STEERING SLIDING YOKE SUB-ASSEMBLY (See page PS-74)**

19. **REMOVE STEERING COLUMN HOLE COVER SUB-ASSEMBLY (See page PS-75)**

20. **SEPARATE TIE ROD END SUB-ASSEMBLY LH (See page DS-3)**

21. **SEPARATE TIE ROD END SUB-ASSEMBLY RH**
HINT:
The removal procedure for the RH side is the same as that for the LH side.

22. **SEPARATE FRONT LOWER SUSPENSION ARM LH (See page DS-4)**

23. **SEPARATE FRONT LOWER SUSPENSION ARM RH**
HINT:
The removal procedure for the RH side is the same as that for the LH side.

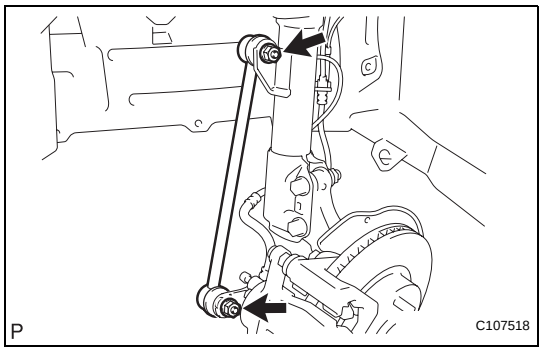

24. **REMOVE FRONT STABILIZER LINK ASSEMBLY LH**
(a) Remove the 2 nuts and stabilizer link
HINT:
If the ball joint turns together with the nut, use a socket hexagon wrench 6 to hold the stud.

25. **REMOVE FRONT STABILIZER LINK ASSEMBLY RH**
HINT:
The removal procedure for the RH side is the same as that for the LH side.

26. **SUSPEND ENGINE ASSEMBLY (See page PS-75)**

27. **REMOVE FRONT SUSPENSION CROSSMEMBER SUB-ASSEMBLY (See page PS-76)**

28. **REMOVE POWER STEERING GEAR (See page PS-76)**

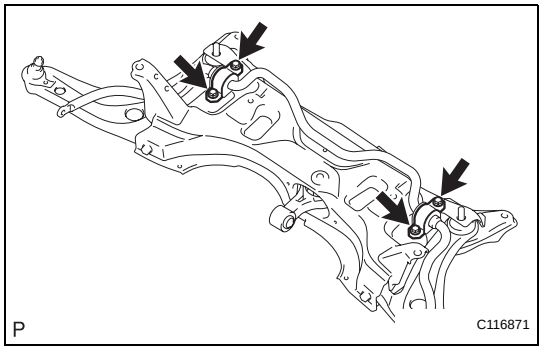

29. **REMOVE FRONT STABILIZER BRACKET LH**
(a) Remove the 2 bolts and the stabilizer bracket.

30. **REMOVE FRONT STABILIZER BRACKET RH**
(a) Remove the 2 bolts and the stabilizer bracket.

31. **REMOVE FRONT STABILIZER BAR**

32. **REMOVE FRONT STABILIZER BAR BUSH**

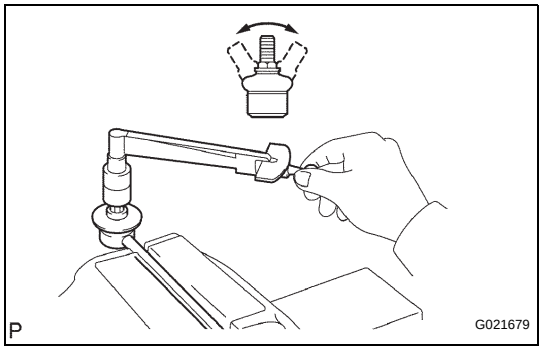

INSPECTION

1. **INSPECT FRONT STABILIZER LINK ASSEMBLY**
(a) As shown in the illustration, flip the ball joint stud back and forth 5 times before installing the nut.
(b) Using a torque wrench, turn the nut continuously at a rate of 3 to 5 seconds per turn and take the torque reading on the 5th turn.
Torque: 1.0 N*m (10 kgf*cm, 8.9 in.*lbf) or less
(c) Check for any cracks and grease leakage on the ball joint dust cover.

SP

INSTALLATION

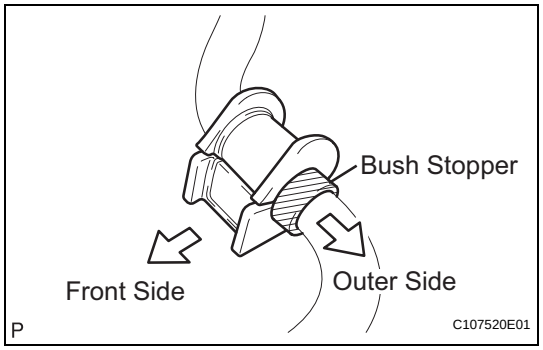

1. INSTALL FRONT STABILIZER BAR BUSH

(a) Install the stabilizer bar bush to the stabilizer bar.
HINT:
- Install the bush onto the stabilizer so that the bush stopper of the stabilizer bar faces the outside of the vehicle.
- Install the bush with its cutout facing the front of the vehicle.

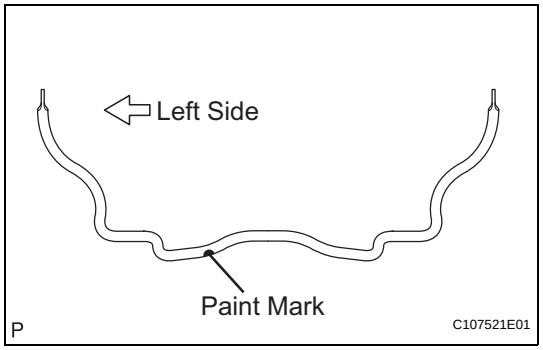

2. INSTALL FRONT STABILIZER BAR

(a) Install the stabilizer onto the crossmember with the paint mark on the left side of the vehicle.

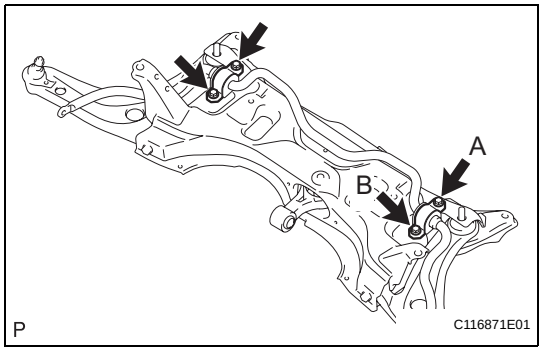

3. INSTALL FRONT STABILIZER BRACKET LH

(a) Provisionally tighten bolt A.
(b) Tighten the bolts to the specified torque, in the order of B then A.
Torque: 47 N*m (479 kgf*cm, 35 ft.*lbf)

4. INSTALL FRONT STABILIZER BRACKET RH

HINT:
The installation procedure for the RH side is the same as that for the LH side.

5. INSTALL POWER STEERING GEAR (See page PS-77)

6. INSTALL FRONT SUSPENSION CROSSMEMBER SUB-ASSEMBLY (See page PS-77)

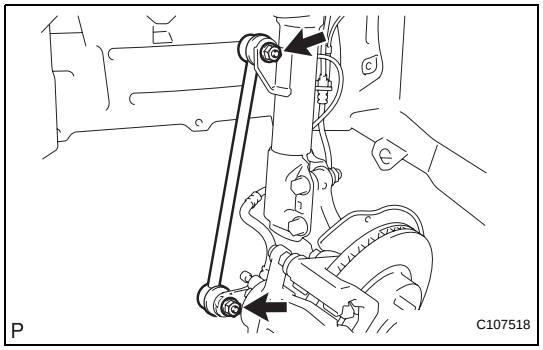

7. INSTALL FRONT STABILIZER LINK ASSEMBLY LH

(a) Install the stabilizer link with the 2 nuts.
HINT:
If the ball joint turns together with the nut, use a socket hexagon wrench 6 to hold the stud.

8. INSTALL FRONT STABILIZER LINK ASSEMBLY RH

HINT:
The installation procedure for the RH side is the same as that for the LH side.

9. INSTALL FRONT LOWER SUSPENSION ARM LH (See page DS-14)

10. INSTALL FRONT LOWER SUSPENSION ARM RH

HINT:
The installation procedure for the RH side is the same as that for the LH side.

11. INSTALL TIE ROD END SUB-ASSEMBLY LH (See page DS-15)

SP

12. **INSTALL TIE ROD END SUB-ASSEMBLY RH**
HINT:
The installation procedure for the RH side is the same as that for the LH side.

13. **INSTALL STEERING COLUMN HOLE COVER SUB-ASSEMBLY (See page PS-79)**

14. **INSTALL STEERING SLIDING YOKE SUB-ASSEMBLY (See page PS-79)**

15. **INSTALL COLUMN HOLE COVER SILENCER SHEET (See page PS-79)**

16. **INSTALL FRONT WHEEL**
Torque: 103 N*m (1,050 kgf*cm, 76 ft.*lbf)

17. **POSITION WHEELS FACING STRAIGHT AHEAD**

18. **INSTALL OUTER COWL TOP PANEL**
Hatchback: (See page EM-146)
Sedan: (See page EM-147)

19. **INSTALL COWL TO REGISTER DUCT SUB-ASSEMBLY (for Hatchback) (See page EM-147)**

20. **INSTALL FRONT AIR SHUTTER SEAL (for Sedan) (See page EM-148)**

21. **INSTALL FRONT WIPER MOTOR AND LINK**
Hatchback: (See page WW-21)
Sedan: (See page WW-12)

22. **INSTALL COWL TOP VENTILATOR LOUVER LH (for Hatchback) (See page WW-21)**

23. **INSTALL COWL TOP VENTILATOR LOUVER SUB-ASSEMBLY**
Hatchback: (See page WW-21)
Sedan: (See page WW-12)

24. **INSTALL HOOD TO COWL TOP SEAL (for Hatchback) (See page WW-22)**

25. **INSTALL COWL SIDE VENTILATOR SUB-ASSEMBLY LH (for Sedan) (See page WW-13)**

26. **INSTALL COWL SIDE VENTILATOR SUB-ASSEMBLY RH (for Sedan) (See page WW-13)**

27. **INSTALL FRONT WIPER ARM AND BLADE ASSEMBLY LH**
Hatchback: (See page WW-22)
Sedan: (See page WW-13)

28. **INSTALL FRONT WIPER ARM AND BLADE ASSEMBLY RH**
Hatchback: (See page WW-23)
Sedan: (See page WW-14)

29. **INSTALL FRONT WIPER ARM HEAD CAP**
Hatchback: (See page WW-23)
Sedan: (See page WW-15)

30. **INSPECT HOOD**
    Hatchback: (See page ED-3)
    Sedan: (See page ED-1)

31. **ADJUST HOOD**
    Hatchback: (See page ED-4)
    Sedan: (See page ED-2)

32. **CONNECT CABLE TO NEGATIVE BATTERY TERMINAL**
    Torque: 5.4 N*m (55 kgf*cm, 48 in.*lbf)

33. **INSPECT AND ADJUST FRONT WHEEL ALIGNMENT**
    (See page SP-2)

REAR COIL SPRING

COMPONENTS

for Sedan Fixed Seat Type:

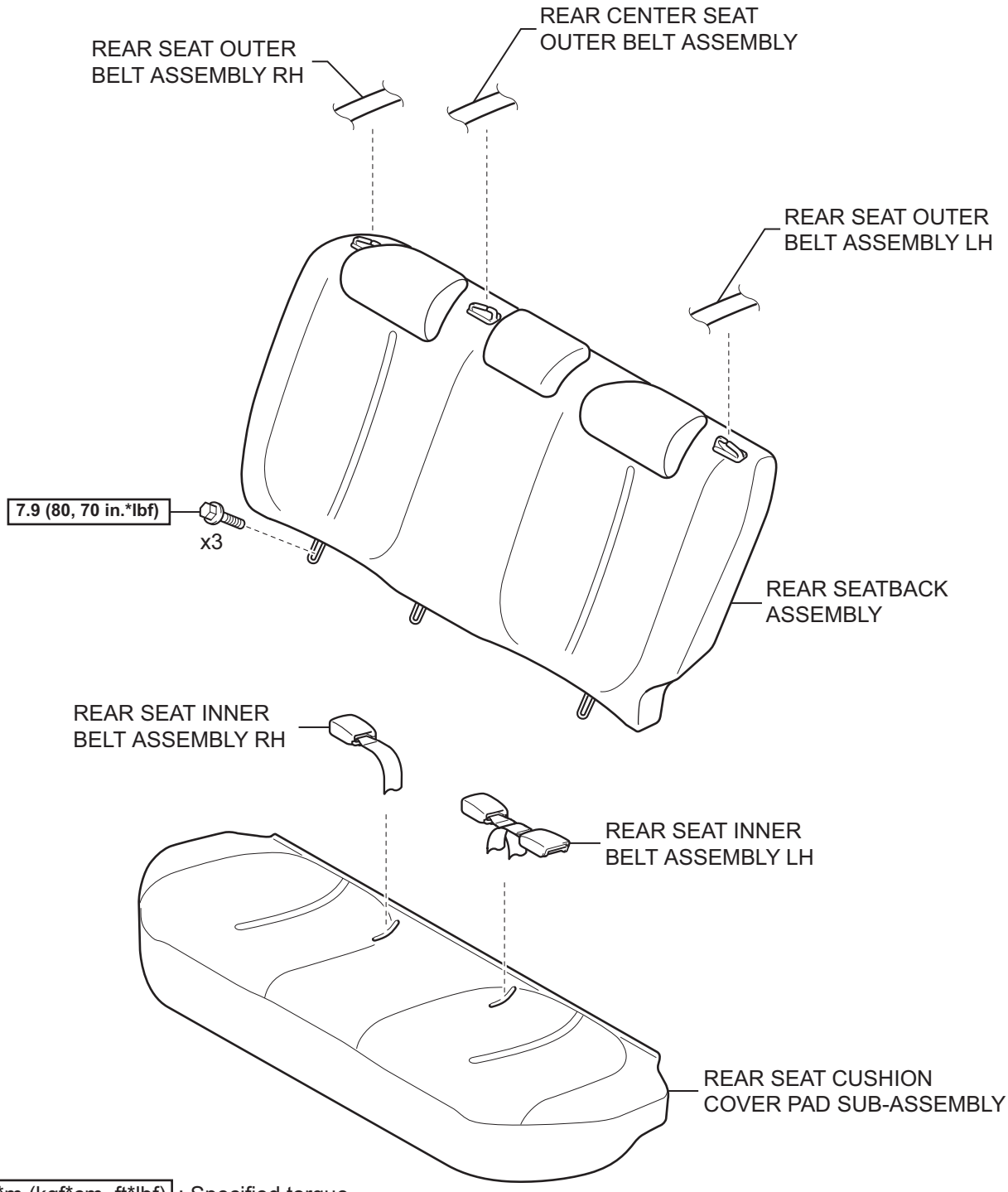

N*m (kgf*cm, ft*lbf) : Specified torque

T

B134979E09

SP

RH Side:

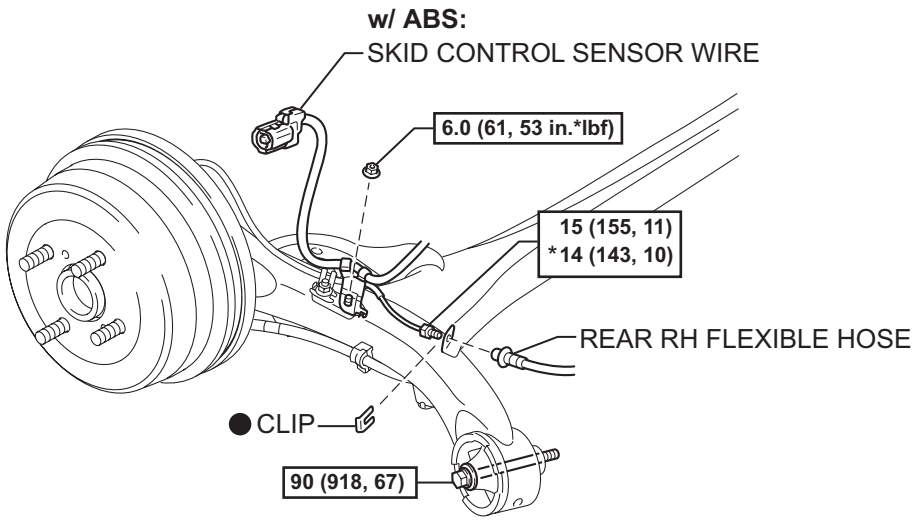

LH Side:

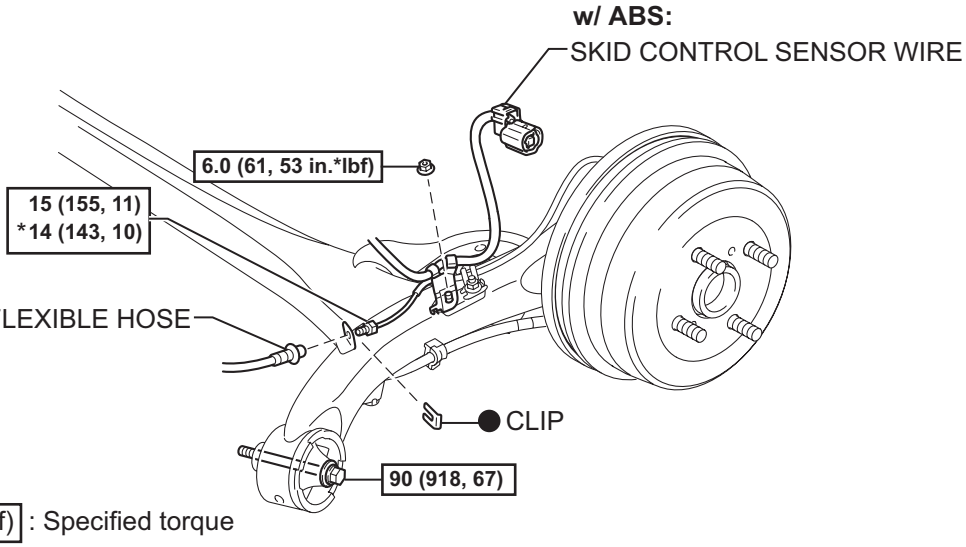

SP

N*m (kgf*cm, ft*lbf) : Specified torque

● Non-reusable part

* For use with SST

N

C125282E06

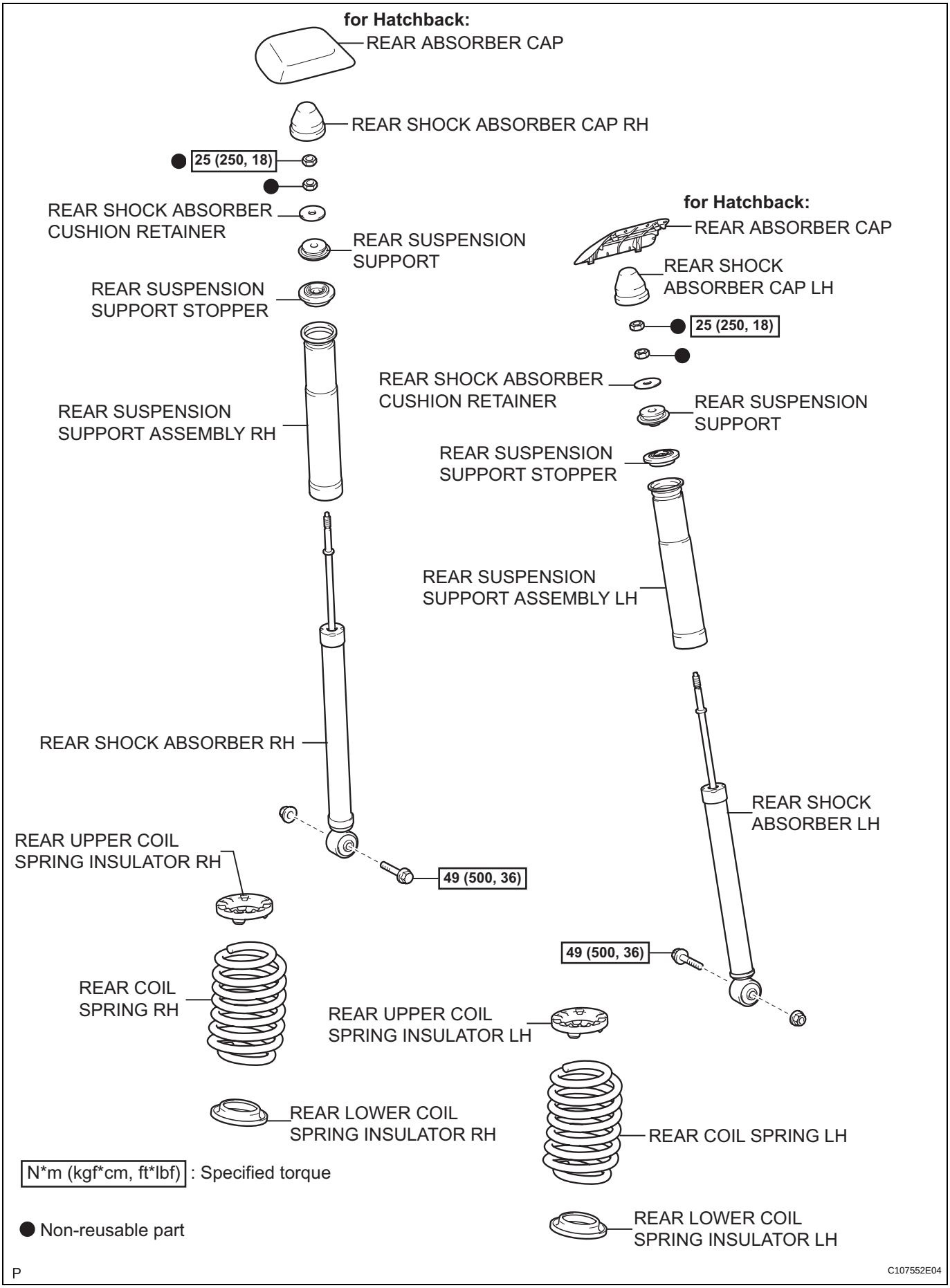
for Hatchback:
REAR ABSORBER CAP
REAR SHOCK ABSORBER CAP RH
25 (250, 18)
REAR SHOCK ABSORBER CUSHION RETAINER
REAR SUSPENSION SUPPORT
REAR SUSPENSION SUPPORT STOPPER
REAR SUSPENSION SUPPORT ASSEMBLY RH
REAR SHOCK ABSORBER RH
REAR UPPER COIL SPRING INSULATOR RH
49 (500, 36)
REAR COIL SPRING RH
REAR LOWER COIL SPRING INSULATOR RH
for Hatchback:
REAR ABSORBER CAP
REAR SHOCK ABSORBER CAP LH
25 (250, 18)
REAR SHOCK ABSORBER CUSHION RETAINER
REAR SUSPENSION SUPPORT
REAR SUSPENSION SUPPORT STOPPER
REAR SUSPENSION SUPPORT ASSEMBLY LH
REAR SHOCK ABSORBER LH
49 (500, 36)
REAR UPPER COIL SPRING INSULATOR LH
REAR COIL SPRING LH
REAR LOWER COIL SPRING INSULATOR LH
N*m (kgf*cm, ft*lbf) : Specified torque
● Non-reusable part
P
C107552E04

SP

REMOVAL

1. **DISCONNECT CABLE FROM NEGATIVE BATTERY TERMINAL**
2. **REMOVE REAR SEAT CUSHION COVER PAD SUB-ASSEMBLY (for Sedan Fixed Seat Type) (See page SE-106)**
3. **REMOVE REAR SEATBACK ASSEMBLY (for Sedan Fixed Seat Type) (See page SE-106)**
4. **REMOVE REAR WHEEL**
5. **DRAIN BRAKE FLUID**
   NOTICE:
   Immediately wash off any brake fluid that comes into contact with any painted surfaces.
6. **SEPARATE SKID CONTROL SENSOR WIRE (w/ ABS)**
   (a) Using a screwdriver, remove the claw of the connector lock portion and disconnect the skid control sensor wire connector.
   NOTICE:
   Do not remove the connector cover from the connector because the skid control sensor wire may be damaged.

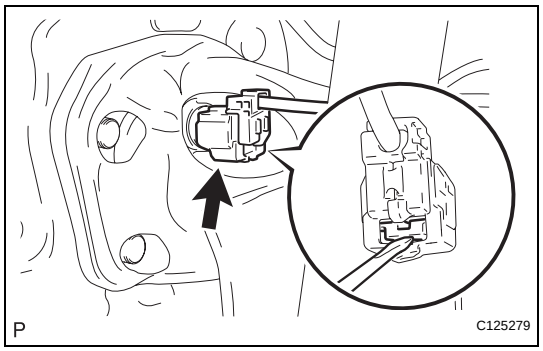

   (b) Remove the nut and separate the skid control sensor wire.

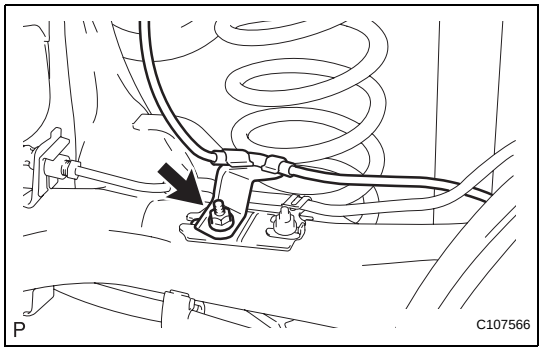

7. **SEPARATE REAR LH FLEXIBLE HOSE**
   (a) Using SST, separate the brake tube from the flexible hose.
   SST 09023-00101
   (b) Remove the clip and disconnect the flexible hose from the axle beam.

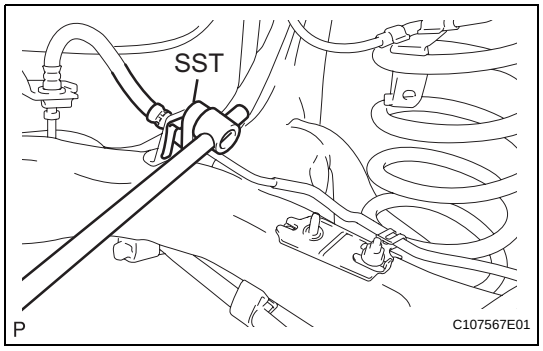

8. **SEPARATE REAR RH FLEXIBLE HOSE**
   HINT:
   The removal procedure for the RH side is the same as that for the LH side.

SP

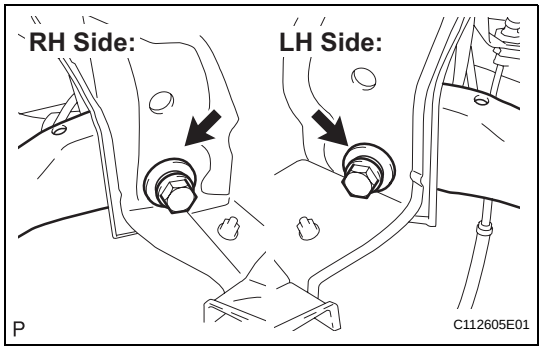

9. LOOSEN REAR AXLE BEAM

(a) Loosen the 2 bolts.

NOTICE:
Do not remove the bolts.

10. REMOVE REAR ABSORBER CAP (for Hatchback)

11. REMOVE REAR SHOCK ABSORBER CAP LH

12. REMOVE REAR SHOCK ABSORBER CAP RH

13. REMOVE REAR SHOCK ABSORBER LH (See page SP-55)

14. REMOVE REAR SHOCK ABSORBER RH

HINT:
The removal procedure for the RH side is the same as that for the LH side.

15. REMOVE REAR COIL SPRING LH

(a) Lower the jacks slowly.
(b) Remove the coil spring, coil spring insulator upper and coil spring insulator lower.

16. REMOVE REAR COIL SPRING RH

HINT:
The removal procedure for the RH side is the same as that for the LH side.

INSTALLATION

1. INSTALL REAR COIL SPRING LH

(a) Install the coil spring insulator lower onto the axle beam.

(b) Install the coil spring insulator upper so that its gap fits onto the end of coil spring.

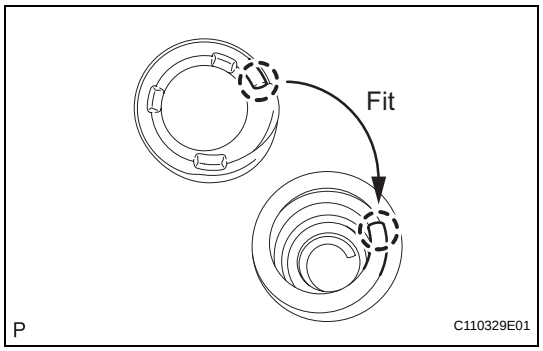

(c) Install the coil spring onto the axle beam.
NOTICE:
The paint mark of the coil spring should be towards the underside and rear side of the vehicle.

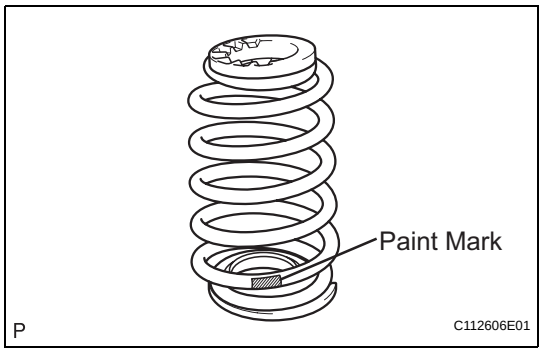

2. INSTALL REAR COIL SPRING RH

HINT:
The installation procedure for the RH side is the same as that for the LH side.

3. TEMPORARILY TIGHTEN REAR SHOCK ABSORBER LH (See page SP-56)

4. TEMPORARILY TIGHTEN REAR SHOCK ABSORBER RH

HINT:
The installation procedure for the RH side is the same as that for the LH side.

5. INSTALL REAR SHOCK ABSORBER CAP LH

6. INSTALL REAR SHOCK ABSORBER CAP RH

7. INSTALL REAR ABSORBER CAP (for Hatchback)

8. INSTALL REAR LH FLEXIBLE HOSE

(a) Connect the flexible hose onto the axle beam with a new clip.

(b) Using SST, install the brake tube.
SST 09023-00101
Torque: for use without SST
15 N*m (155 kgf*cm, 11 ft.*lbf)
for use with SST
14 N*m (143 kgf*cm, 10 ft.*lbf)

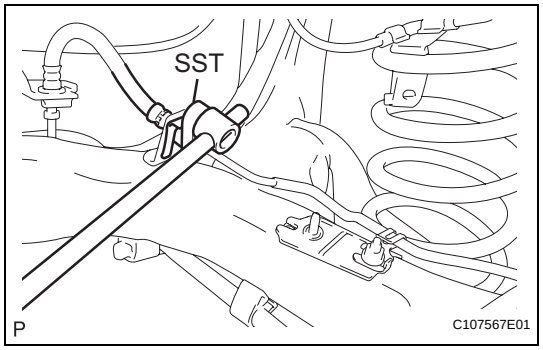

HINT:
- Use a torque wrench with a fulcrum length of 300 mm (11.81 in.).
- This torque value is effective when SST is parallel to a torque wrench.

SP

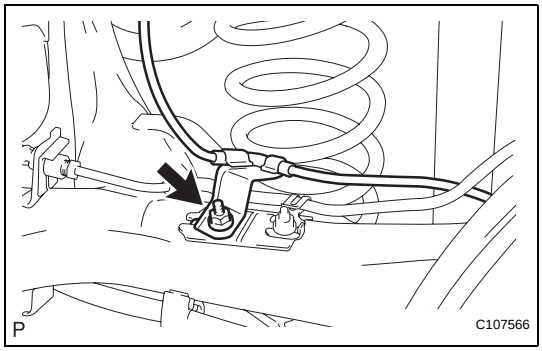

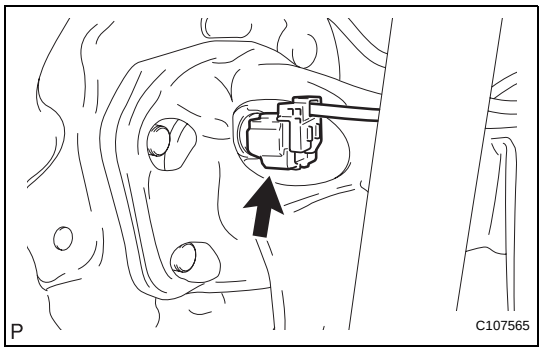

9. **INSTALL REAR RH FLEXIBLE HOSE**
HINT:
The installation procedure for the RH side is the same as that for the LH side.

10. **INSTALL SKID CONTROL SENSOR WIRE (w/ ABS)**
(a) Install the skid control sensor wire onto the axle beam with the nut.
Torque: 6.0 N*m (61 kgf*cm, 53 in.*lbf)

(b) Connect the skid control sensor wire connector.

11. **INSTALL REAR WHEEL**
Torque: 103 N*m (1,050 kgf*cm, 76 ft.*lbf)

12. **STABILIZE SUSPENSION**
(a) Lower the vehicle from the jack.
(b) Bounce the vehicle up and down several times to stabilize the suspension.

13. **FULLY TIGHTEN REAR AXLE BEAM (See page SP-68)**

14. **FULLY TIGHTEN REAR SHOCK ABSORBER LH (See page SP-56)**

15. **FULLY TIGHTEN REAR SHOCK ABSORBER RH**
HINT:
The installation procedure for the RH side is the same as that for the LH side.

16. **INSTALL REAR SEATBACK ASSEMBLY (for Sedan Fixed Seat Type) (See page SE-108)**

17. **INSTALL REAR SEAT CUSHION COVER PAD SUB-ASSEMBLY (for Sedan Fixed Seat Type) (See page SE-109)**

18. **CONNECT CABLE TO NEGATIVE BATTERY TERMINAL**
Torque: 5.4 N*m (55 kgf*cm, 48 in.*lbf)

19. **FILL RESERVOIR WITH BRAKE FLUID (See page BR-10)**

20. **BLEED MASTER CYLINDER (See page BR-10)**

21. **BLEED BRAKE LINE (See page BR-12)**

22. **CHECK FLUID LEVEL IN RESERVOIR (See page BR-12)**

23. **CHECK FOR BRAKE FLUID LEAKAGE**

24. **INSPECT REAR WHEEL ALIGNMENT**
(See page SP-10)

25. CHECK ABS SENSOR SIGNAL (w/ ABS)
(See page BC-14)

REAR SHOCK ABSORBER

COMPONENTS

for Sedan Fixed Seat Type:

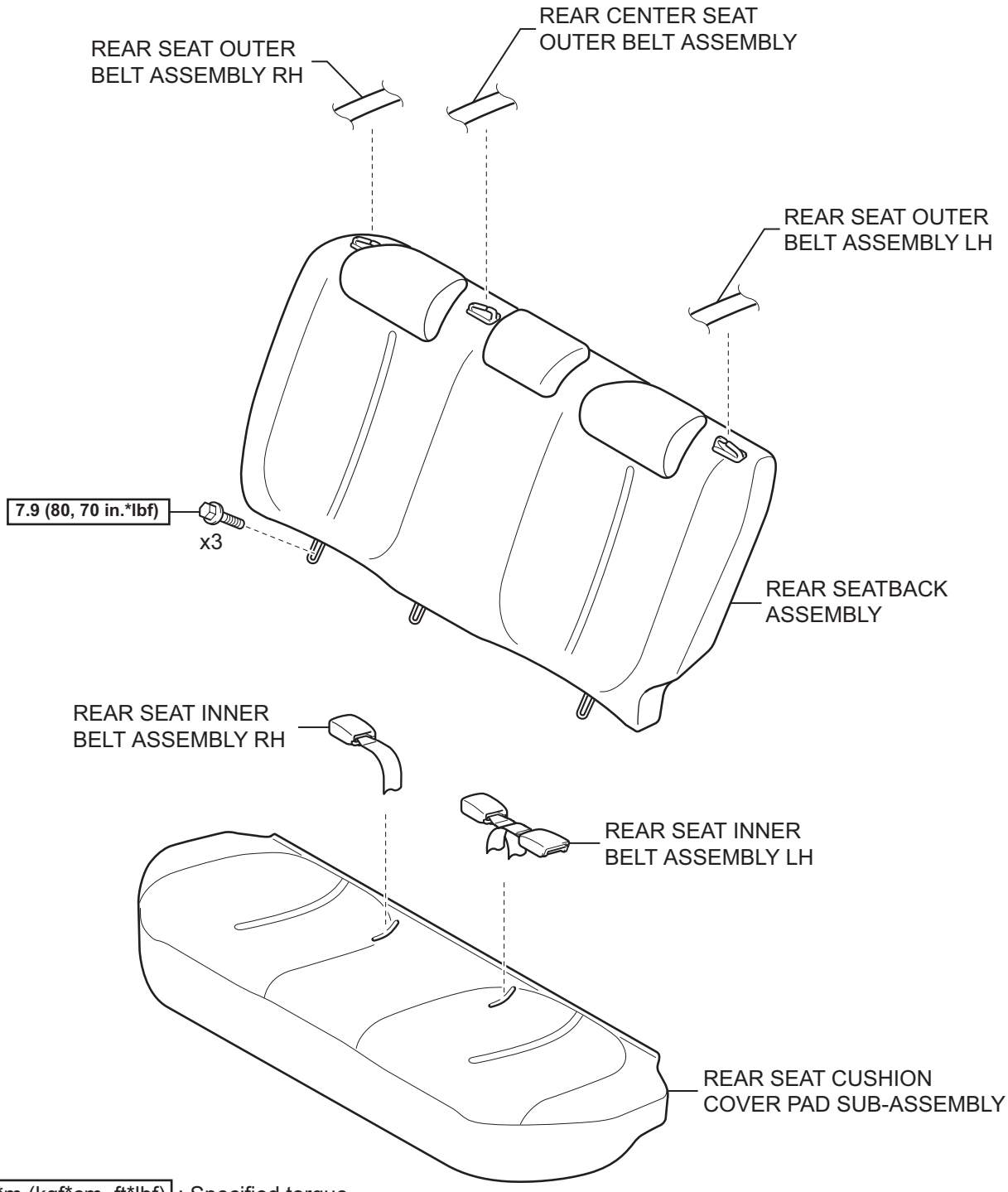

N*m (kgf*cm, ft*lbf) : Specified torque

T

B134979E09

SP

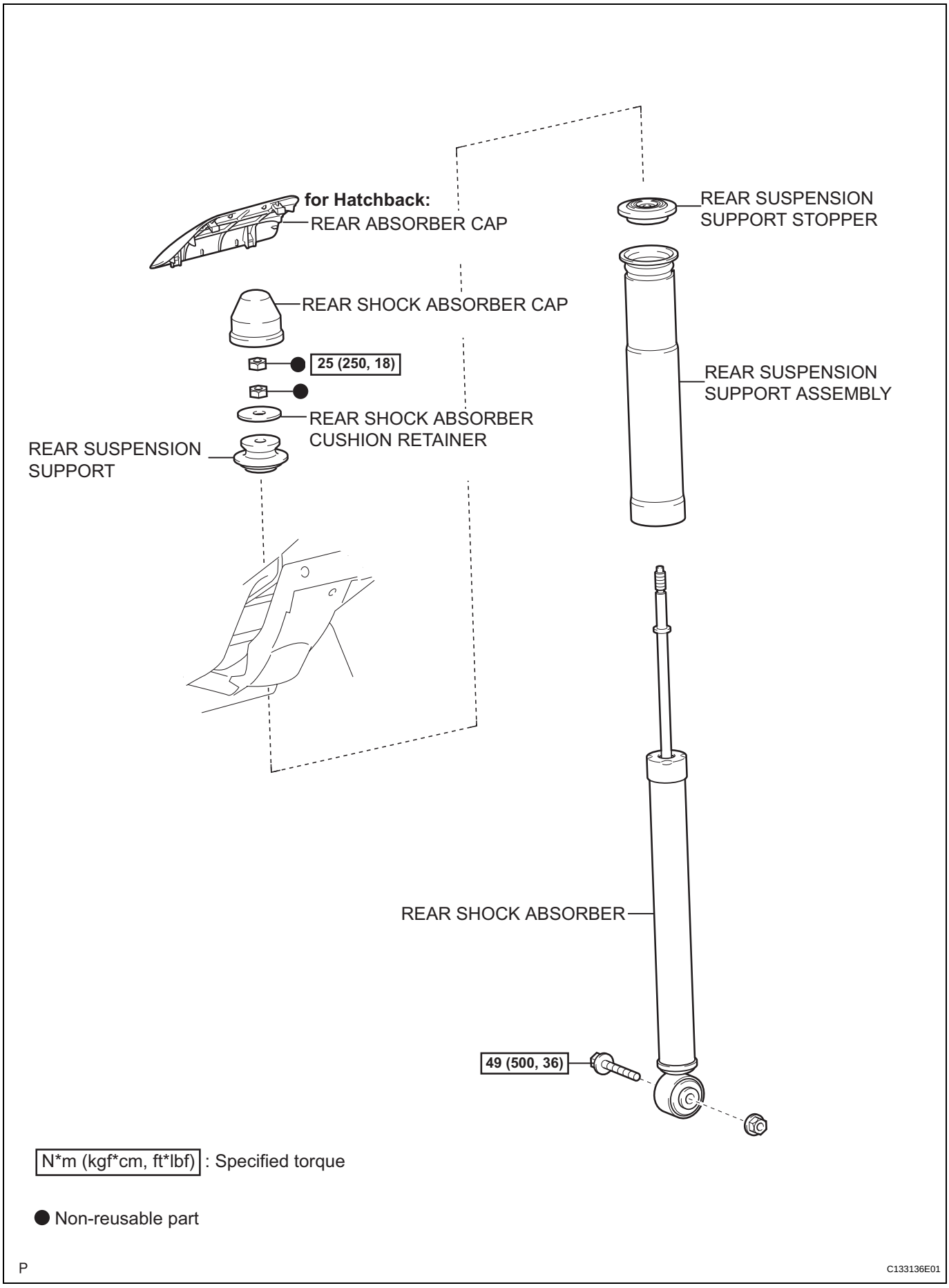
for Hatchback:
REAR ABSORBER CAP
REAR SUSPENSION SUPPORT STOPPER
REAR SHOCK ABSORBER CAP
25 (250, 18)
REAR SUSPENSION SUPPORT ASSEMBLY
REAR SHOCK ABSORBER CUSHION RETAINER
REAR SUSPENSION SUPPORT
REAR SHOCK ABSORBER
49 (500, 36)
N*m (kgf*cm, ft*lbf) : Specified torque
● Non-reusable part
P
C133136E01

SP

REMOVAL

1. **REMOVE REAR WHEEL**
2. **REMOVE REAR SEAT CUSHION COVER PAD SUB-ASSEMBLY (for Sedan Fixed Seat Type) (See page SE-106)**
3. **REMOVE REAR SEATBACK ASSEMBLY (for Sedan Fixed Seat Type) (See page SE-106)**
4. **REMOVE REAR ABSORBER CAP (for Hatchback)**
5. **REMOVE REAR SHOCK ABSORBER CAP**
6. **REMOVE REAR SHOCK ABSORBER**
   (a) Support the axle beam with a jack. Insert a wooden block between the jack and the rear axle spring seat to prevent damage.

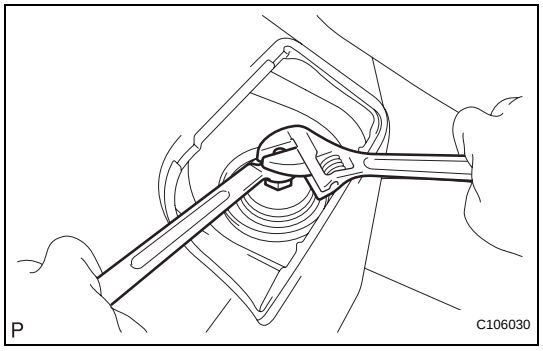

   (b) Remove the 2 nuts while keeping the piston rod from rotating.
   (c) Remove the cushion retainer and suspension support.

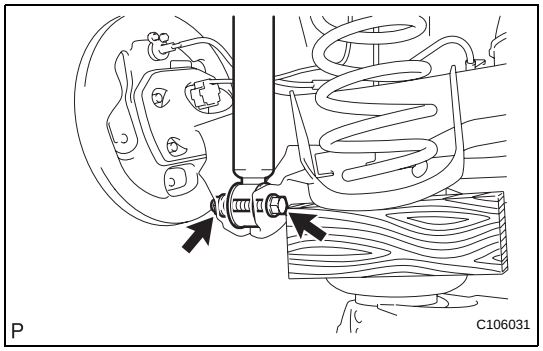

   (d) Remove the bolt while keeping the nut from rotating and remove the shock absorber.
   NOTICE:
   Remove the nut on the bolt side because the one on the lower side is a jam nut.
7. **REMOVE REAR SUSPENSION SUPPORT STOPPER**
8. **REMOVE REAR SUSPENSION SUPPORT ASSEMBLY**

INSPECTION

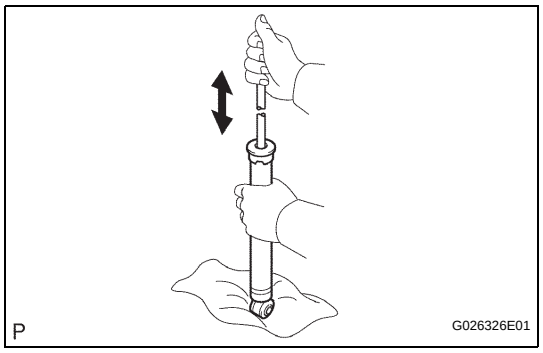

1. **INSPECT REAR SHOCK ABSORBER**
   (a) Compress and extend the shock absorber rod and check that there is no abnormal resistance or abnormal sound during the operation.
   If there is any abnormality, replace the shock absorber with a new one.
   NOTICE:
   When disposing of the shock absorber rear, see DISPOSAL on page SP-57.

SP

INSTALLATION

1. **INSTALL REAR SUSPENSION SUPPORT ASSEMBLY**
2. **INSTALL REAR SUSPENSION SUPPORT STOPPER**
3. **TEMPORARILY TIGHTEN REAR SHOCK ABSORBER**
   (a) Support the axle beam with a jack. Insert a wooden block between the jack and the rear axle spring seat to prevent damage.
   (b) Jack up the axle beam slowly, and provisionally tighten the shock absorber (lower side) with the bolt and nut to the axle beam.
   (c) Install the suspension support and cushion retainer.

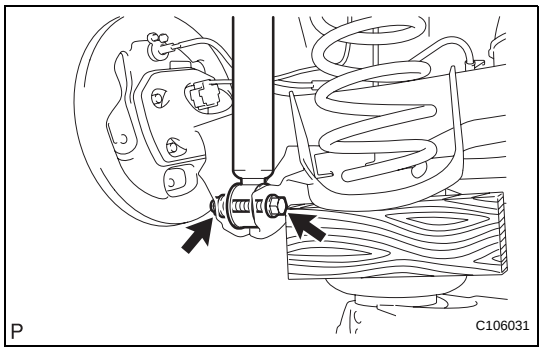

   (d) While holding the piston rod, install a new nut (lower nut) to the specified standard.
   Standard:
   15 to 18 mm (0.591 to 0.709 in.)

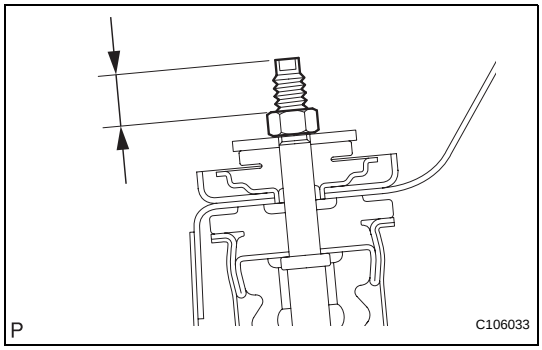

   (e) While holding the piston rod, tighten a new nut (upper nut).
   Torque: 25 N*m (250 kgf*cm, 18 ft.*lbf)
4. **INSTALL REAR SHOCK ABSORBER CAP**
5. **INSTALL REAR ABSORBER CAP (for Hatchback)**
6. **INSTALL REAR SEATBACK ASSEMBLY (for Sedan Fixed Seat Type) (See page SE-108)**
7. **INSTALL REAR SEAT CUSHION COVER PAD SUB-ASSEMBLY (for Sedan Fixed Seat Type) (See page SE-109)**
8. **INSTALL REAR WHEEL**
   Torque: 103 N*m (1,050 kgf*cm, 76 ft.*lbf)
9. **STABILIZE SUSPENSION**
   (a) Lower the vehicle from the jack.
   (b) Bounce the vehicle up and down several times to stabilize the suspension.
10. **FULLY TIGHTEN REAR SHOCK ABSORBER**
    (a) Fully tighten the shock absorber (lower side) with the bolt.
    Torque: 49 N*m (500 kgf*cm, 36 ft.*lbf)
11. **INSPECT REAR WHEEL ALIGNMENT**
    (See page SP-10)

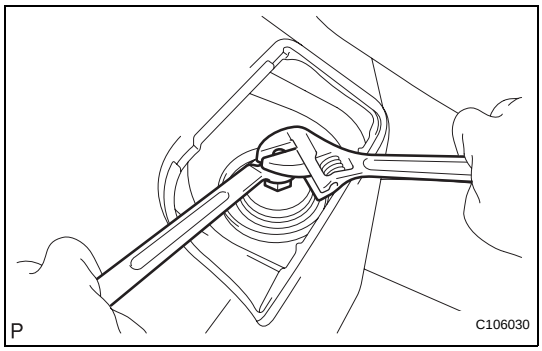

SP

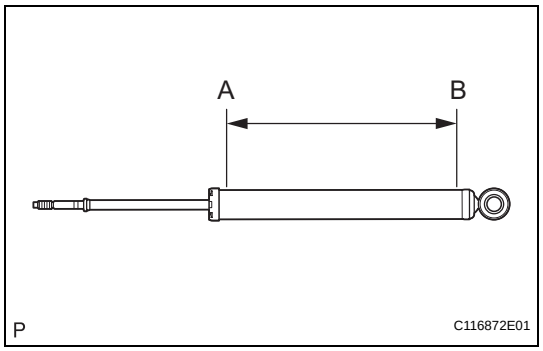

DISPOSAL

1. DISPOSE OF REAR SHOCK ABSORBER

(a) Fully extend the shock absorber piston rod.

(b) Using a drill or similar tool, slowly make a hole in the area (A-B) shown in the illustration to discharge the gas inside.

NOTICE:

- **The gas is colorless, odorless and harmless.**
- **Since the discharging gas may cause chips to scatter, cover the drill with a shop rag or piece of cloth when making the hole.**

REAR AXLE BEAM

COMPONENTS

for Sedan Fixed Seat Type:

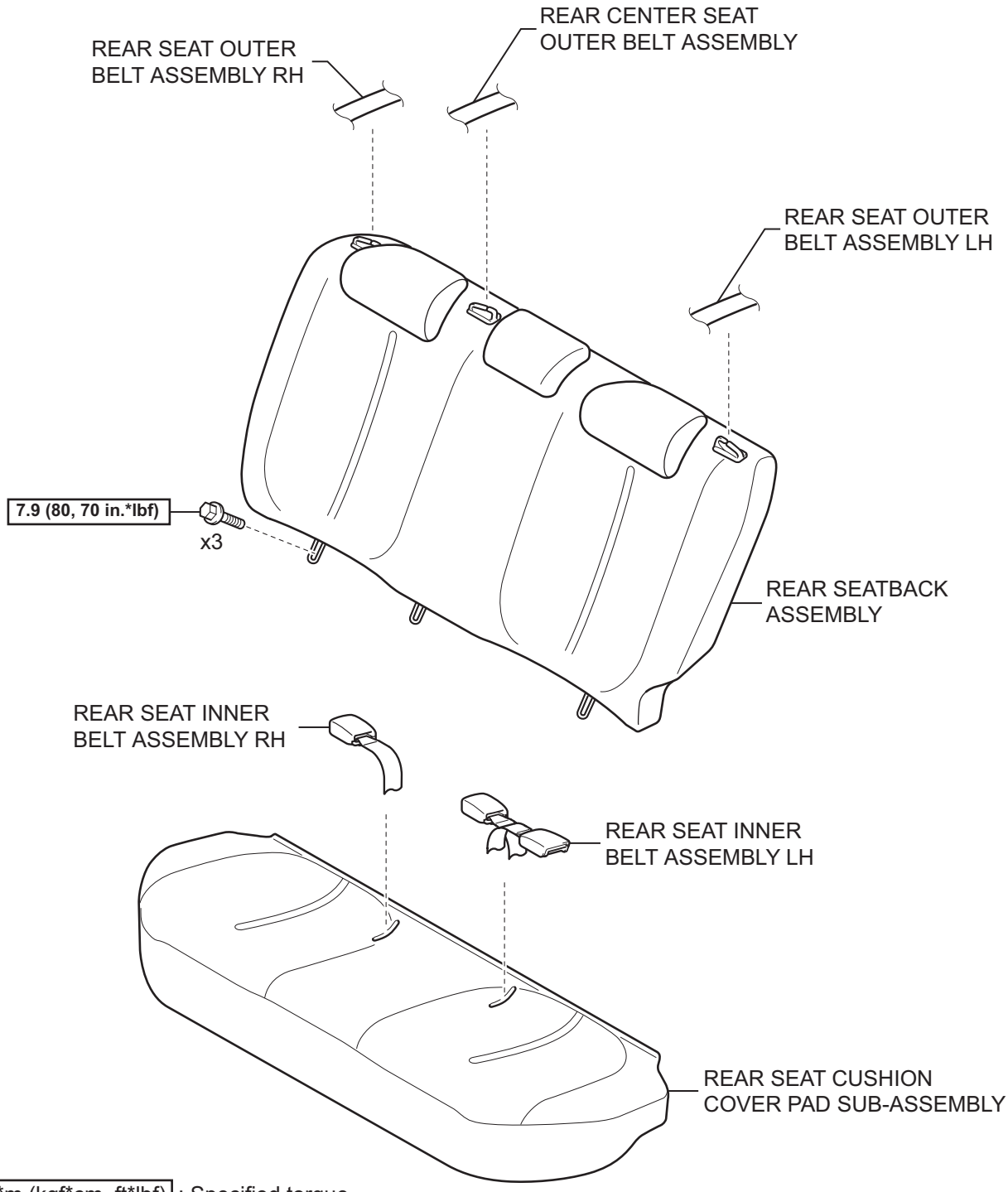

N*m (kgf*cm, ft*lbf) : Specified torque

T

B134979E09

SP

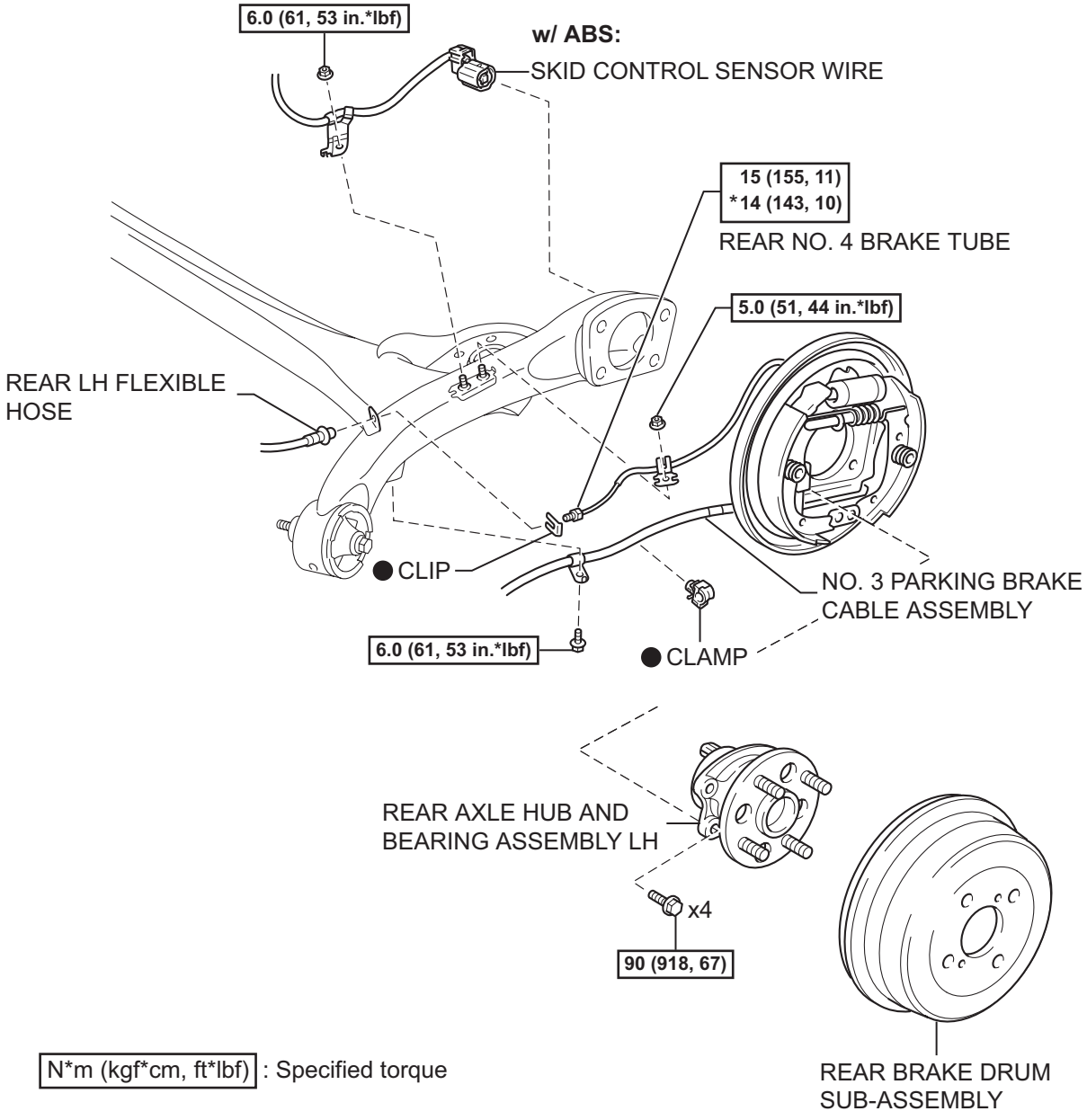

N*m (kgf*cm, ft*lbf) : Specified torque

● Non-reusable part

* For use with SST

N

C126192E06

SP

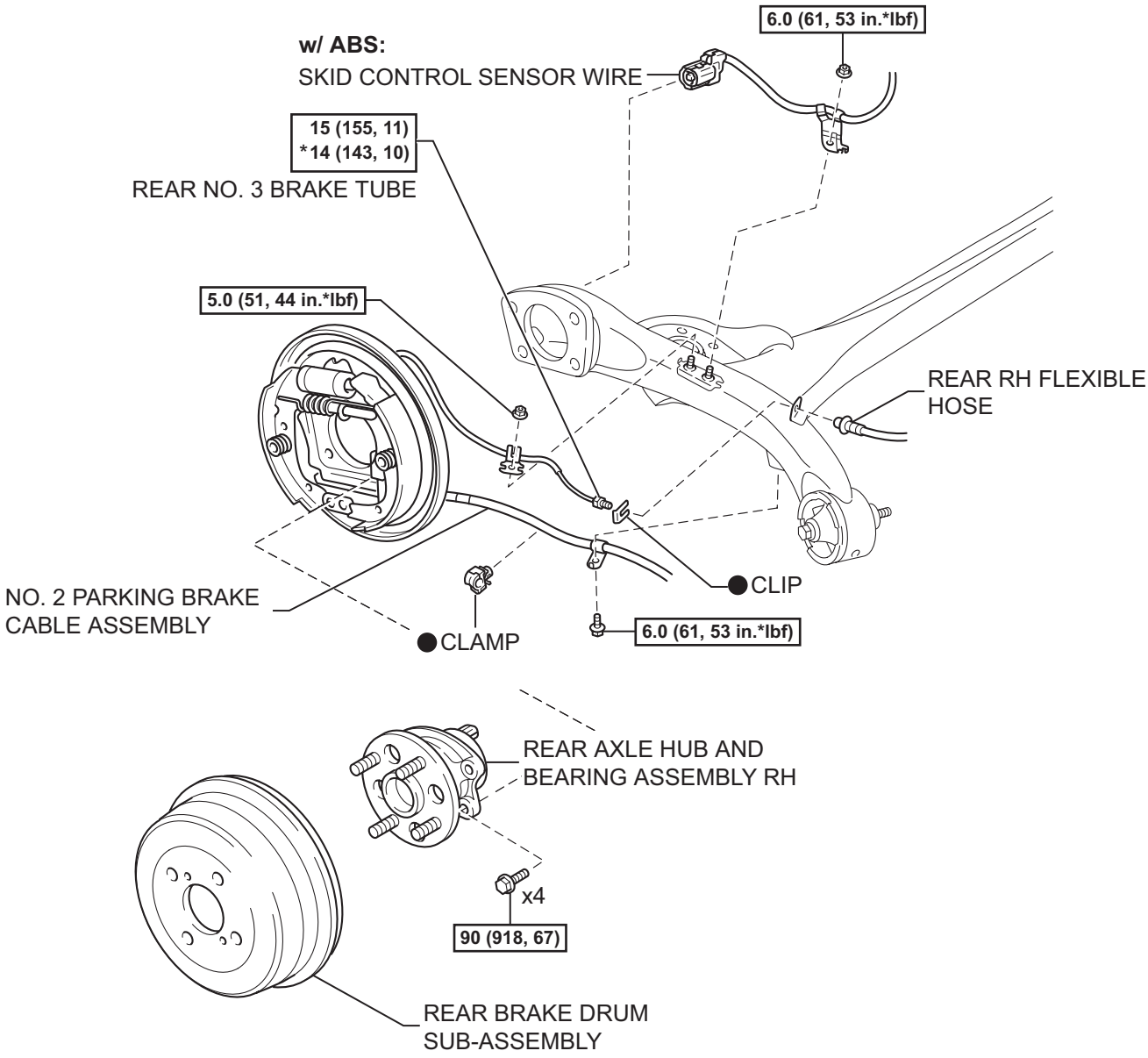

SP

N*m (kgf*cm, ft*lbf) : Specified torque

● Non-reusable part * For use with SST

N

C126193E06

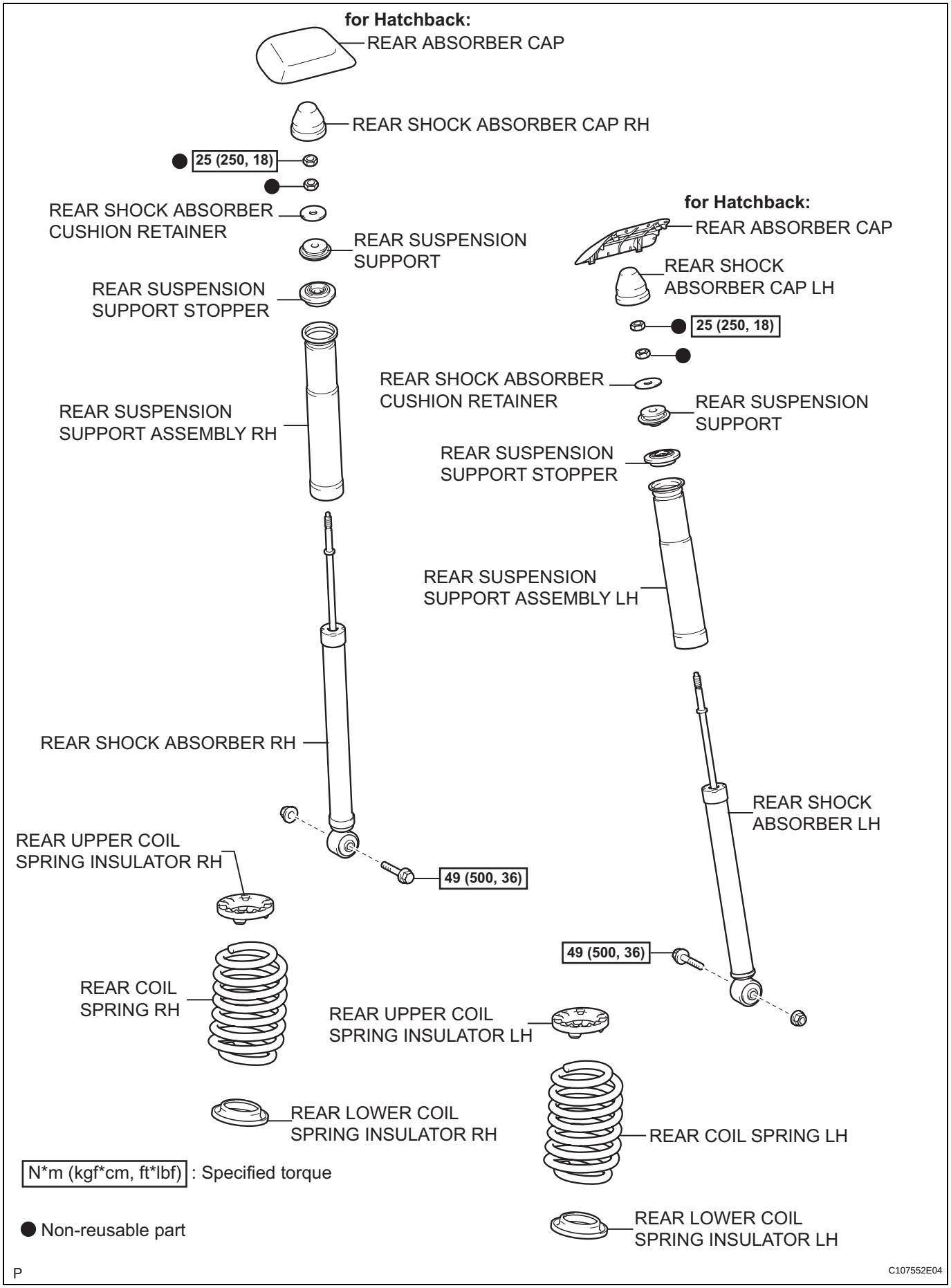
for Hatchback:
REAR ABSORBER CAP
REAR SHOCK ABSORBER CAP RH
25 (250, 18)
REAR SHOCK ABSORBER CUSHION RETAINER
REAR SUSPENSION SUPPORT
REAR SUSPENSION SUPPORT STOPPER
REAR SUSPENSION SUPPORT ASSEMBLY RH
REAR SHOCK ABSORBER RH
REAR UPPER COIL SPRING INSULATOR RH
49 (500, 36)
REAR COIL SPRING RH
REAR LOWER COIL SPRING INSULATOR RH
for Hatchback:
REAR ABSORBER CAP
REAR SHOCK ABSORBER CAP LH
25 (250, 18)
REAR SHOCK ABSORBER CUSHION RETAINER
REAR SUSPENSION SUPPORT
REAR SUSPENSION SUPPORT STOPPER
REAR SUSPENSION SUPPORT ASSEMBLY LH
REAR SHOCK ABSORBER LH
49 (500, 36)
REAR UPPER COIL SPRING INSULATOR LH
REAR COIL SPRING LH
REAR LOWER COIL SPRING INSULATOR LH
N*m (kgf*cm, ft*lbf) : Specified torque
● Non-reusable part
P
C107552E04

SP

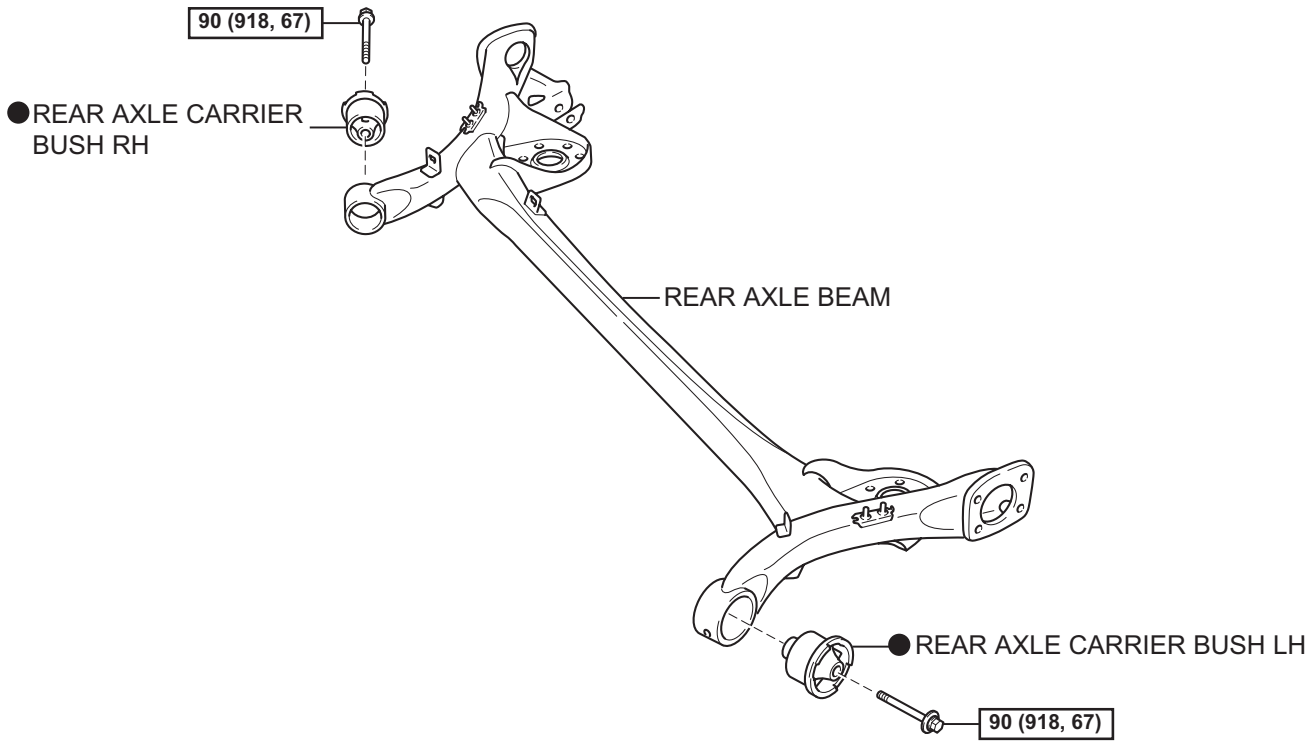

SP

N*m (kgf*cm, ft*lbf) : Specified torque

● Non-reusable part

N

C121822E01

REMOVAL

1. **DISCONNECT CABLE FROM NEGATIVE BATTERY TERMINAL**
2. **REMOVE REAR SEAT CUSHION COVER PAD SUB-ASSEMBLY (for Sedan Fixed Seat Type) (See page SE-106)**
3. **REMOVE REAR SEATBACK ASSEMBLY (for Sedan Fixed Seat Type) (See page SE-106)**
4. **REMOVE REAR WHEEL**
5. **DRAIN BRAKE FLUID**
   NOTICE:
   Immediately wash off any brake fluid that comes into contact with any painted surfaces.
6. **SEPARATE SKID CONTROL SENSOR WIRE (w/ ABS) (See page SP-49)**
7. **SEPARATE REAR NO. 4 BRAKE TUBE**
   (a) Using SST, separate the brake tube from the flexible hose.
   SST 09023-00100
   (b) Remove the clip and disconnect the flexible hose from the axle beam.
   (c) Remove the nut and separate the brake tube.

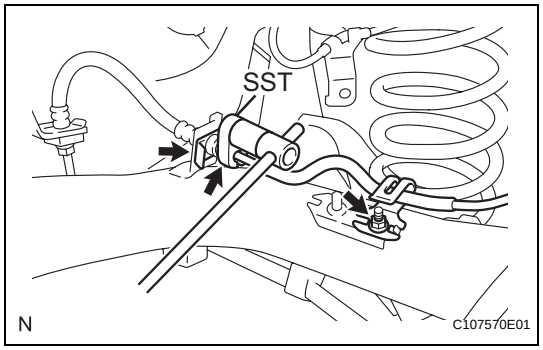

8. **SEPARATE REAR NO. 3 BRAKE TUBE**
   HINT:
   The removal procedure for the RH side is the same as that for the LH side.
9. **SEPARATE NO. 3 PARKING BRAKE CABLE ASSEMBLY**
   (a) Using pliers, pinch both ends of the claw of cable clamp and flex the clamp to remove it.
   (b) Remove the bolt and separate the parking brake cable.
   (c) Remove the cable clamp from the parking brake cable.
   HINT:
   Replace the clamp with a new one when installing the parking brake cable.

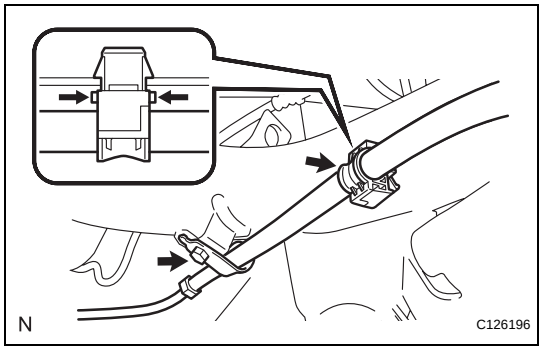

10. **SEPARATE NO. 2 PARKING BRAKE CABLE ASSEMBLY**
    HINT:
    The removal procedure for the RH side is the same as that for the LH side.
11. **REMOVE REAR BRAKE DRUM SUB-ASSEMBLY (See page BR-60)**
12. **REMOVE REAR AXLE HUB AND BEARING ASSEMBLY LH (See page AH-14)**

SP

13. **REMOVE REAR AXLE HUB AND BEARING ASSEMBLY RH**
HINT:
The removal procedure for the RH side is the same as that for the LH side.

14. **LOOSEN REAR AXLE BEAM (See page SP-50)**

15. **REMOVE REAR ABSORBER CAP (for Hatchback)**

16. **REMOVE REAR SHOCK ABSORBER CAP LH**

17. **REMOVE REAR SHOCK ABSORBER CAP RH**

18. **REMOVE REAR SHOCK ABSORBER LH (See page SP-55)**

19. **REMOVE REAR SHOCK ABSORBER RH**
HINT:
The removal procedure for the RH side is the same as that for the LH side.

20. **REMOVE REAR COIL SPRING LH (See page SP-50)**

21. **REMOVE REAR COIL SPRING RH**
HINT:
The removal procedure for the RH side is the same as that for the LH side.

22. **REMOVE REAR AXLE BEAM**
(a) Remove the 2 bolts and remove the axle beam.

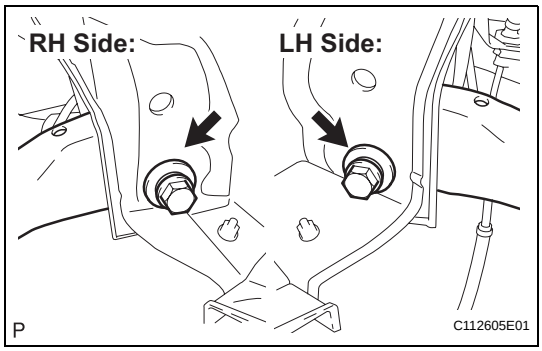

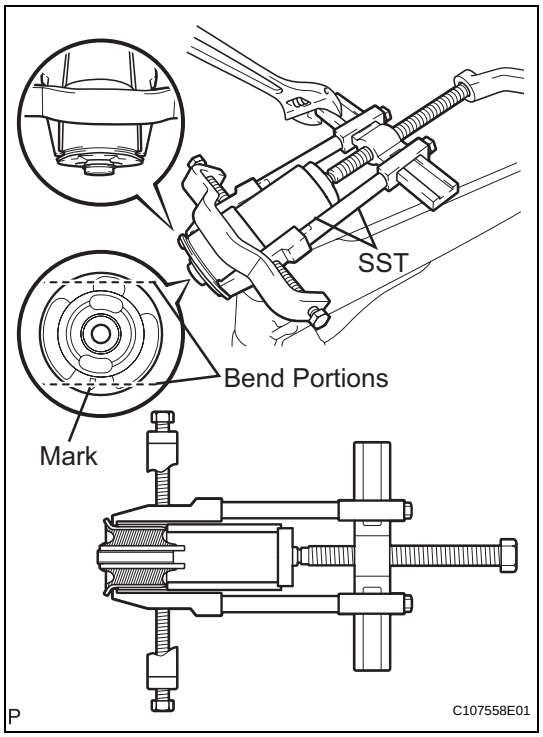

REPLACEMENT

1. REMOVE REAR AXLE CARRIER BUSH LH

(a) Place a match mark on the axle beam with it aligned with the bush mark.

(b) Using a chisel and hammer, bend the 2 portions of the bush rib.

NOTICE:

Bend the bush rib until the claw of SST can be suspended.

(c) Using SST, remove the bush from the axle beam.

SST 09950-40011 (09951-04020, 09952-04010, 09953-04030, 09954-04020, 09955-04011, 09957-04010, 09958-04011), 09612-30012, 09950-60010 (09951-00590)

NOTICE:

Apply paint to any scratches on the rear axle beam.

2. REMOVE REAR AXLE CARRIER BUSH RH

HINT:

The removal procedure for the RH side is the same as that for the LH side.

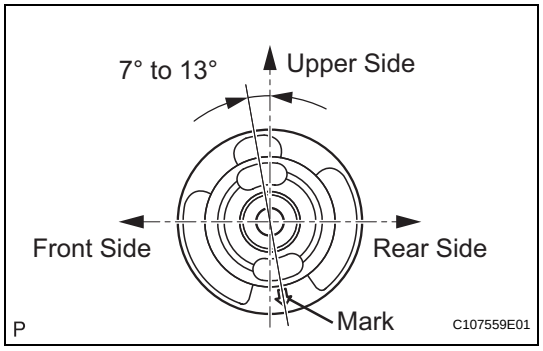

3. INSTALL REAR AXLE CARRIER BUSH LH

(a) Align the matchmarks on a new bush and the axle beam and provisionally install the bush onto the axle beam, as shown in the illustration.

NOTICE:

Install the bush in the same orientation as the old one was prior to removal because they are directional.

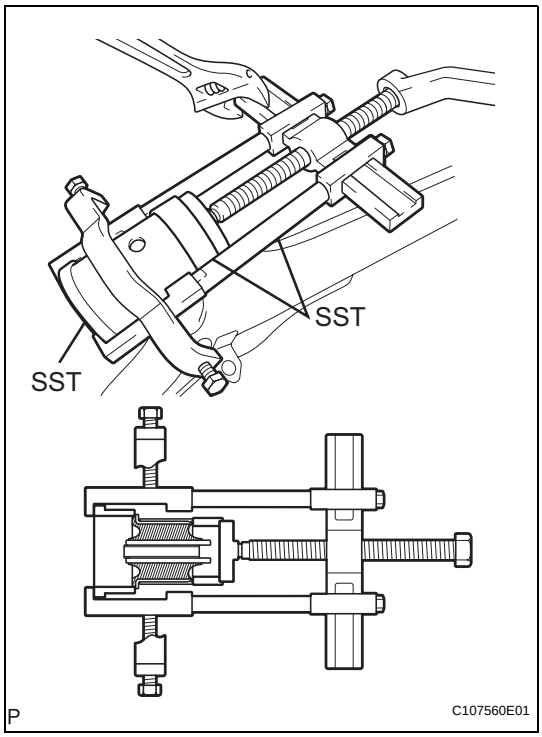

(b) Using SST, install the bush onto the axle beam.
SST 09950-40011 (09951-04020, 09952-04010, 09953-04030, 09954-04030, 09955-04051, 09957-04010, 09958-04011), 09950-60020 (09951-00810, 09387-02010), 09223-15020
NOTICE:
Do not damage the rubber portion when installing the bush.

4. **INSTALL REAR AXLE CARRIER BUSH RH**
HINT:
The installation procedure for the RH side is the same as that for the LH side.

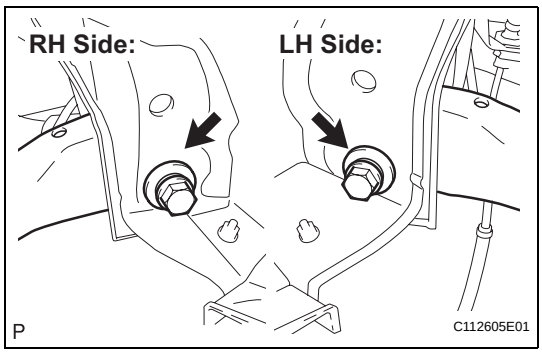

INSTALLATION

1. **TEMPORARILY TIGHTEN REAR AXLE BEAM**
(a) Support the rear axle beam with a jack.
(b) Install the axle beam onto the vehicle and provisionally tighten the 2 bolts.
2. **INSTALL REAR COIL SPRING LH (See page SP-50)**
3. **INSTALL REAR COIL SPRING RH**
HINT:
The installation procedure for the RH side is the same as that for the LH side.
4. **TEMPORARILY TIGHTEN REAR SHOCK ABSORBER LH (See page SP-56)**
5. **TEMPORARILY TIGHTEN REAR SHOCK ABSORBER RH**
HINT:
The installation procedure for the RH side is the same as that for the LH side.
6. **INSTALL REAR SHOCK ABSORBER CAP LH**
7. **INSTALL REAR SHOCK ABSORBER CAP RH**
8. **INSTALL REAR ABSORBER CAP (for Hatchback)**
9. **INSTALL REAR AXLE HUB AND BEARING ASSEMBLY LH (See page AH-14)**
10. **INSTALL REAR AXLE HUB AND BEARING ASSEMBLY RH**
HINT:
The installation procedure for the RH side is the same as that for the LH side.

11. INSPECT REAR AXLE HUB BEARING (See page AH-2)

12. INSTALL REAR BRAKE DRUM SUB-ASSEMBLY

13. ADJUST REAR DRUM BRAKE SHOE CLEARANCE (See page BR-67)

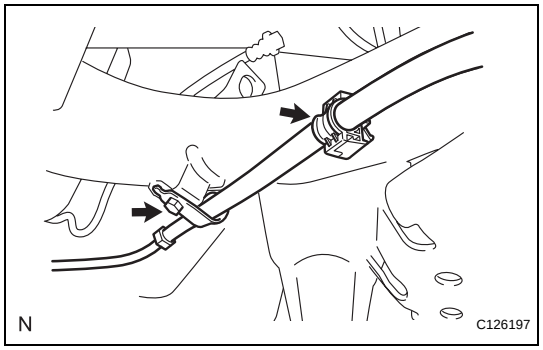

14. INSTALL NO. 3 PARKING BRAKE CABLE ASSEMBLY

(a) Install the parking brake cable with the bolt and a new clamp.
Torque: 6.0 N*m (61 kgf*cm, 53 in.*lbf)

15. INSTALL NO. 2 PARKING BRAKE CABLE ASSEMBLY

HINT:
The installation procedure for the RH side is the same as that for the LH side.

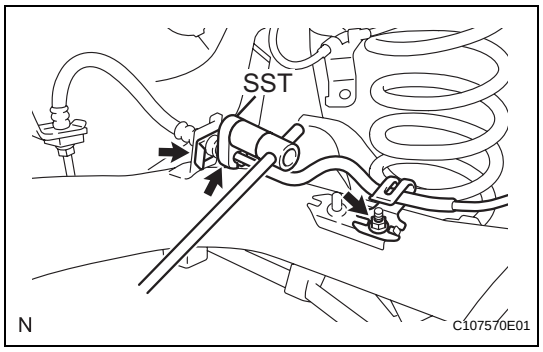

16. INSTALL REAR NO. 4 BRAKE TUBE

(a) Install the brake tube onto the axle beam with the nut.
Torque: 5.0 N*m (51 kgf*cm, 44 in.*lbf)

(b) Connect the flexible hose to the axle beam with a new clip.

(c) Using SST, install the brake tube onto the flexible hose.
SST 09023-00100
Torque: for use without SST
15 N*m (155 kgf*cm, 11 ft.*lbf)
for use with SST
14 N*m (143 kgf*cm, 10 ft.*lbf)

HINT:
- Use a torque wrench with a fulcrum length of 300 mm (11.81 in.).
- This torque value is effective when SST is parallel to a torque wrench.

17. INSTALL REAR NO. 3 BRAKE TUBE

HINT:
The installation procedure for the RH side is the same as that for the LH side.

18. INSTALL SKID CONTROL SENSOR WIRE (w/ ABS) (See page SP-51)

19. INSTALL REAR WHEEL
Torque: 103 N*m (1,050 kgf*cm, 76 ft.*lbf)

20. STABILIZE SUSPENSION

(a) Lower the vehicle from the jack.

(b) Bounce the vehicle up and down several times to stabilize the suspension.

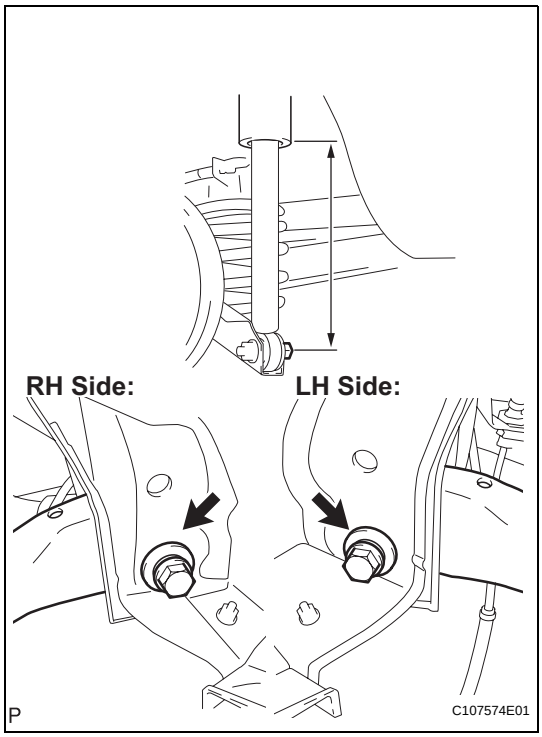

21. **FULLY TIGHTEN REAR AXLE BEAM**
    (a) Suspend the jack on the rear axle spring seat and adjust the length of the shock absorber to the reference value.
    Length of shock absorber:
    220 mm (8.7 in.)
    (b) Fully tighten the 2 bolts.
    Torque: 90 N*m (918 kgf*cm, 67 ft.*lbf)
22. **FULLY TIGHTEN REAR SHOCK ABSORBER LH (See page SP-56)**
23. **FULLY TIGHTEN REAR SHOCK ABSORBER RH**
    HINT:
    The installation procedure for the RH side is the same as that for the LH side.
24. **INSTALL REAR SEATBACK ASSEMBLY (for Sedan Fixed Seat Type) (See page SE-108)**
25. **INSTALL REAR SEAT CUSHION COVER PAD SUB-ASSEMBLY (for Sedan Fixed Seat Type) (See page SE-109)**
26. **CONNECT CABLE TO NEGATIVE BATTERY TERMINAL**
    Torque: 5.4 N*m (55 kgf*cm, 48 in.*lbf)
27. **FILL RESERVOIR WITH BRAKE FLUID (See page BR-10)**
28. **BLEED MASTER CYLINDER (See page BR-10)**
29. **BLEED BRAKE LINE (See page BR-12)**
30. **CHECK FLUID LEVEL IN RESERVOIR (See page BR-12)**
31. **CHECK FOR BRAKE FLUID LEAKAGE**
32. **INSPECT REAR WHEEL ALIGNMENT**
    (See page SP-10)
33. **CHECK ABS SENSOR SIGNAL (w/ ABS)**
    (See page BC-14)

TIRE AND WHEEL SYSTEM

INSPECTION

1. INSPECT TIRES

(a) Check the tires for wear and proper inflation pressure.

Cold tire inflation pressure:
for Hatchback

Destination	Tire Size	Vehicle Speed	Front kPa (kgf/cm^2, psi)	Rear kPa (kgf/cm^2, psi)
North America	P175/65R14 81S P185/60R15 84T	Driving below 160 km/h (100 mph)	220 (2.2, 32)	220 (2.2, 32)
		Driving over 160 km/h (100 mph)	240 (2.4, 35)	240 (2.4, 35)
Mexico	185/60R15 84H	Driving below 160 km/h (100 mph)	220 (2.2, 32)	220 (2.2, 32)
		Driving over 160 km/h (100 mph)	230 (2.3, 33)	230 (2.3, 33)

for Sedan

Destination	Tire Size	Vehicle Speed	Front kPa (kgf/cm^2, psi)	Rear kPa (kgf/cm^2, psi)
North America	P175/65R14 81S P185/60R15 84T	Driving below 160 km/h (100 mph)	220 (2.2, 32)	220 (2.2, 32)
		Driving over 160 km/h (100 mph)	240 (2.4, 35)	240 (2.4, 35)
Mexico	175/65R14 82T 185/60R15 84H	Driving below 160 km/h (100 mph)	220 (2.2, 32)	220 (2.2, 32)
		Driving over 160 km/h (100 mph)	230 (2.3, 33)	230 (2.3, 33)

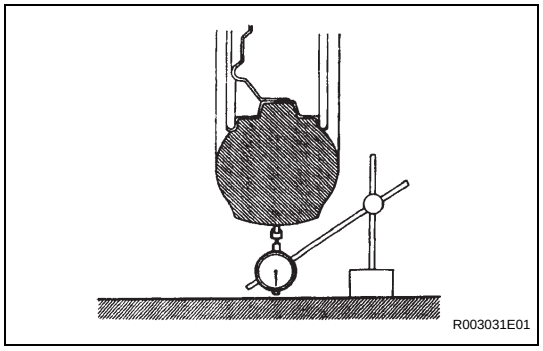

(b) Using a dial indicator, check the tire runout.

Tire runout:
1.4 mm (0.055 in.) or less

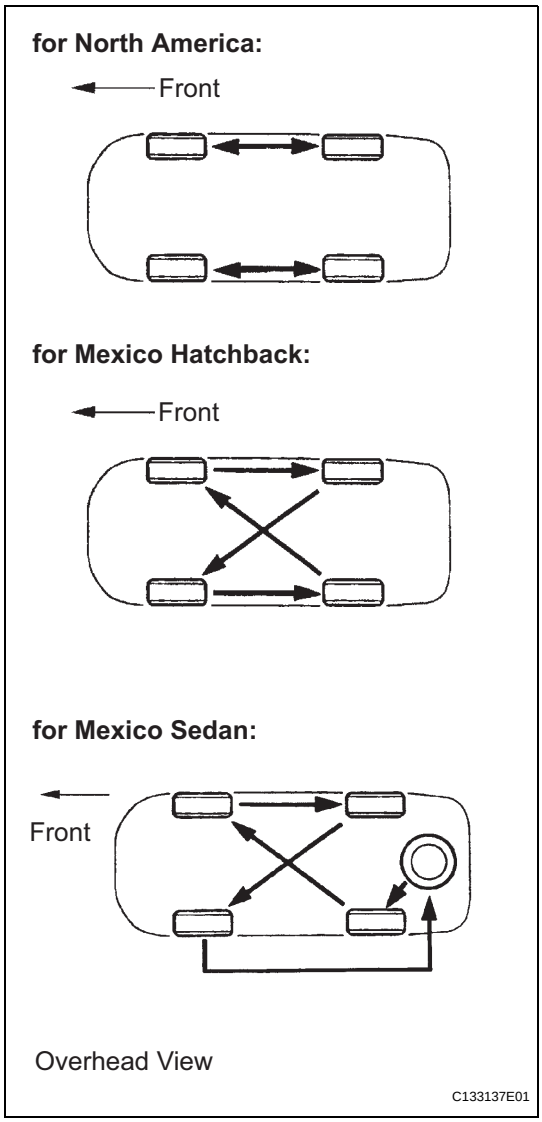

2. ROTATE TIRES

HINT:

Rotate tires, as shown in the illustration.

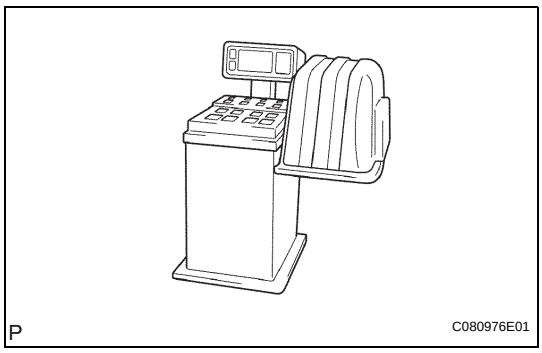

3. INSPECT WHEEL BALANCE

(a) Check and perform off-car balancing.

(b) If required, perform on-car balancing.

Imbalance after adjustment:

8 g (0.018 lb) or less

4. INSPECT FRONT AXLE HUB BEARING (See page AH-1)

5. INSPECT REAR AXLE HUB BEARING (See page AH-2)

TW

ANTI-LOCK BRAKE SYSTEM

PRECAUTION

1. TROUBLESHOOTING PRECAUTION

- When there are malfunctions in the contact points of the terminals or installation problems with any parts, removal and installation of the suspected problem parts may return the system to its normal condition, either entirely or temporarily.
- In order to determine the location of the malfunction, be sure to check the conditions from the time the malfunction occurred, through data such as DTC and freeze frame data outputs. Record this information before disconnecting any connectors and removing or installing any parts.
- Since the anti-lock brake system may be influenced by malfunctions in other systems, be sure to check for DTCs in other systems.
- Be sure to remove and install the brake actuator and each sensor with the ignition switch off, unless specified in the inspection procedures.
- When removing and installing the brake actuator and each sensor, be sure to check that the normal display is output during a test mode inspection and a DTC output inspection after reinstalling all the parts.
- If the DTC of the CAN communication line is output, repair the malfunction in the communication line and then troubleshoot the anti-lock brake system.
- Since the CAN communication line has its own length and route, it cannot be repaired temporarily with a bypass wire, etc.

PARTS LOCATION

HATCHBACK:

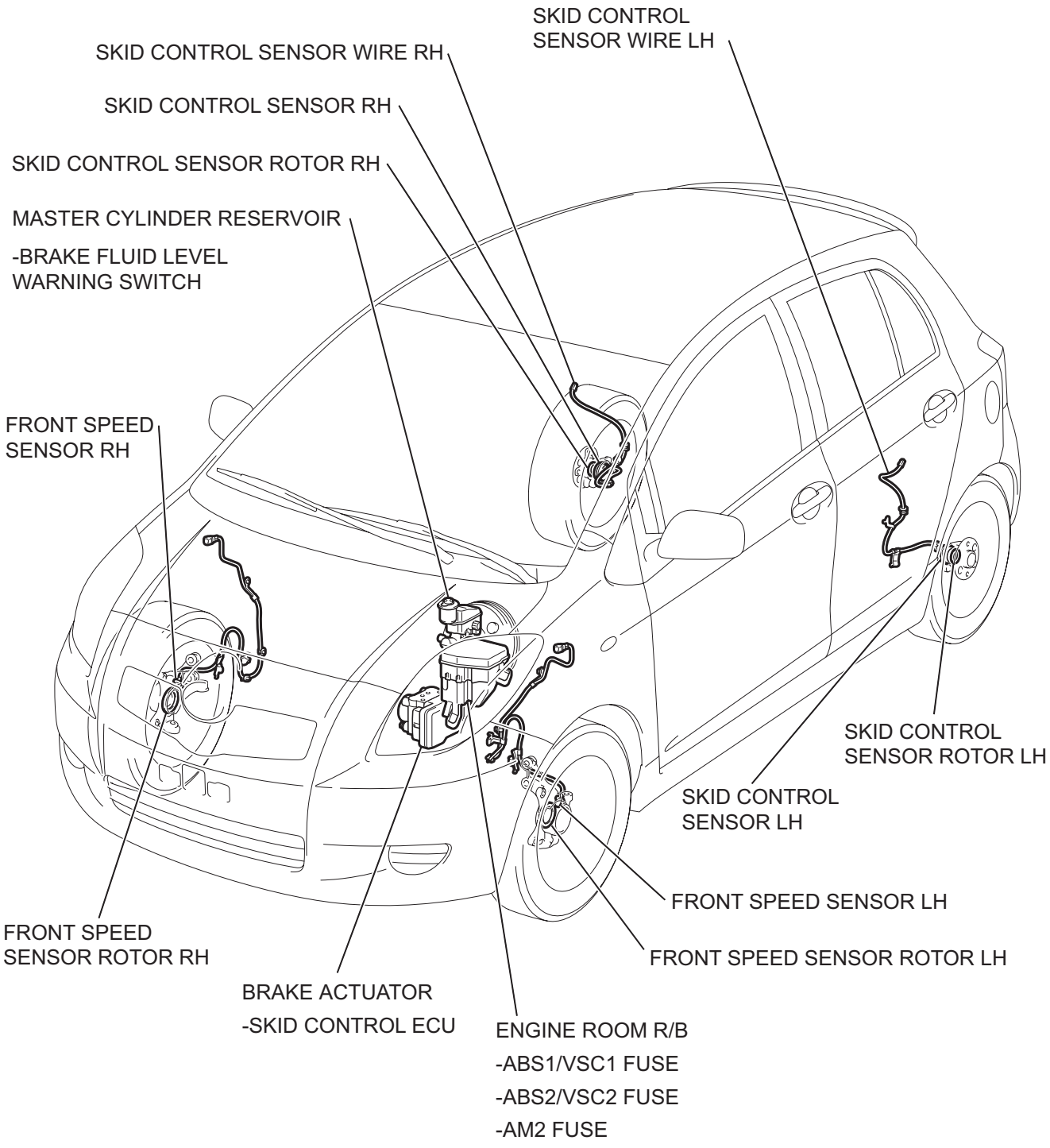

P

C117856E04

BC

HATCHBACK:

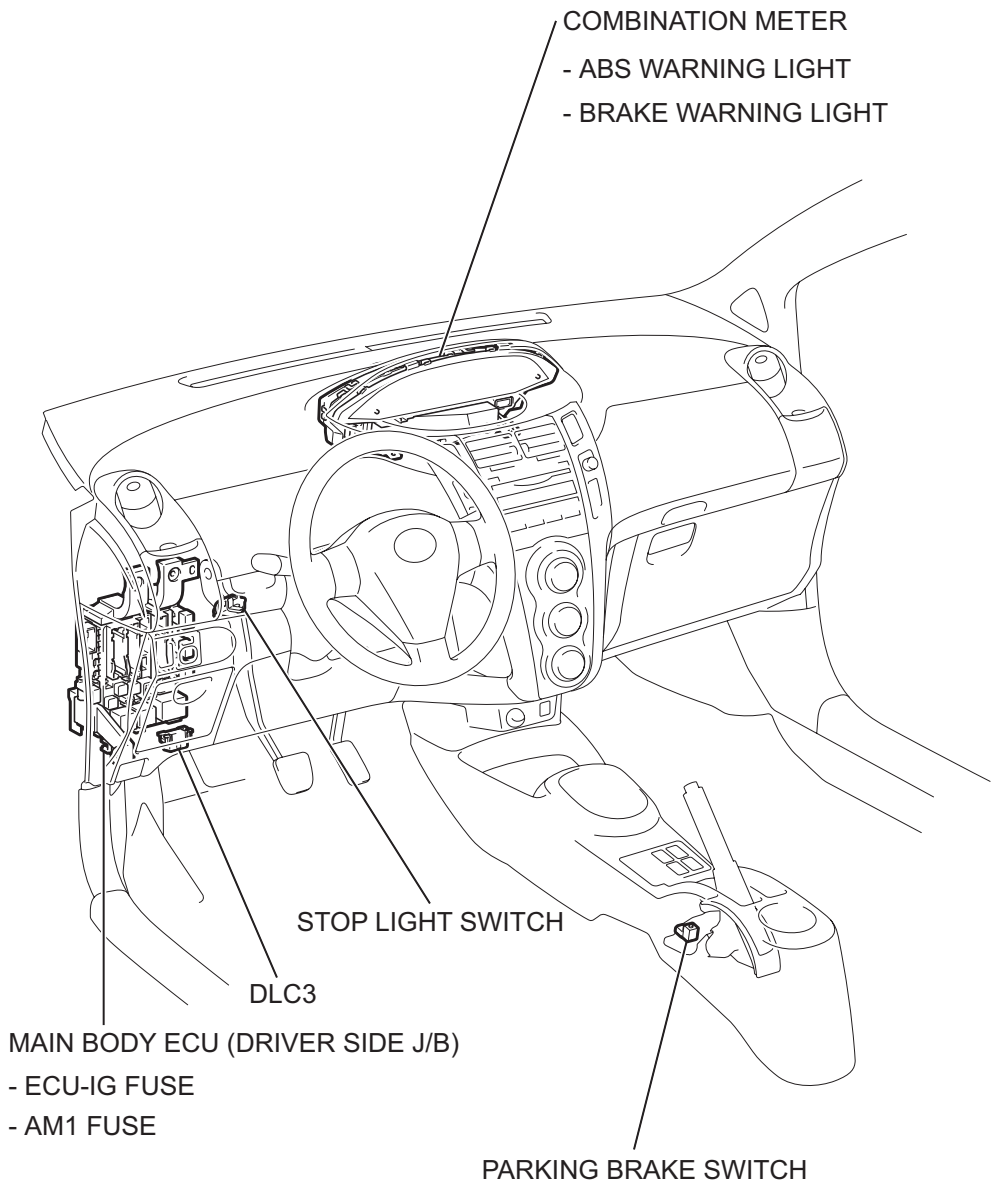

P

C118692E04

BC

SEDAN:

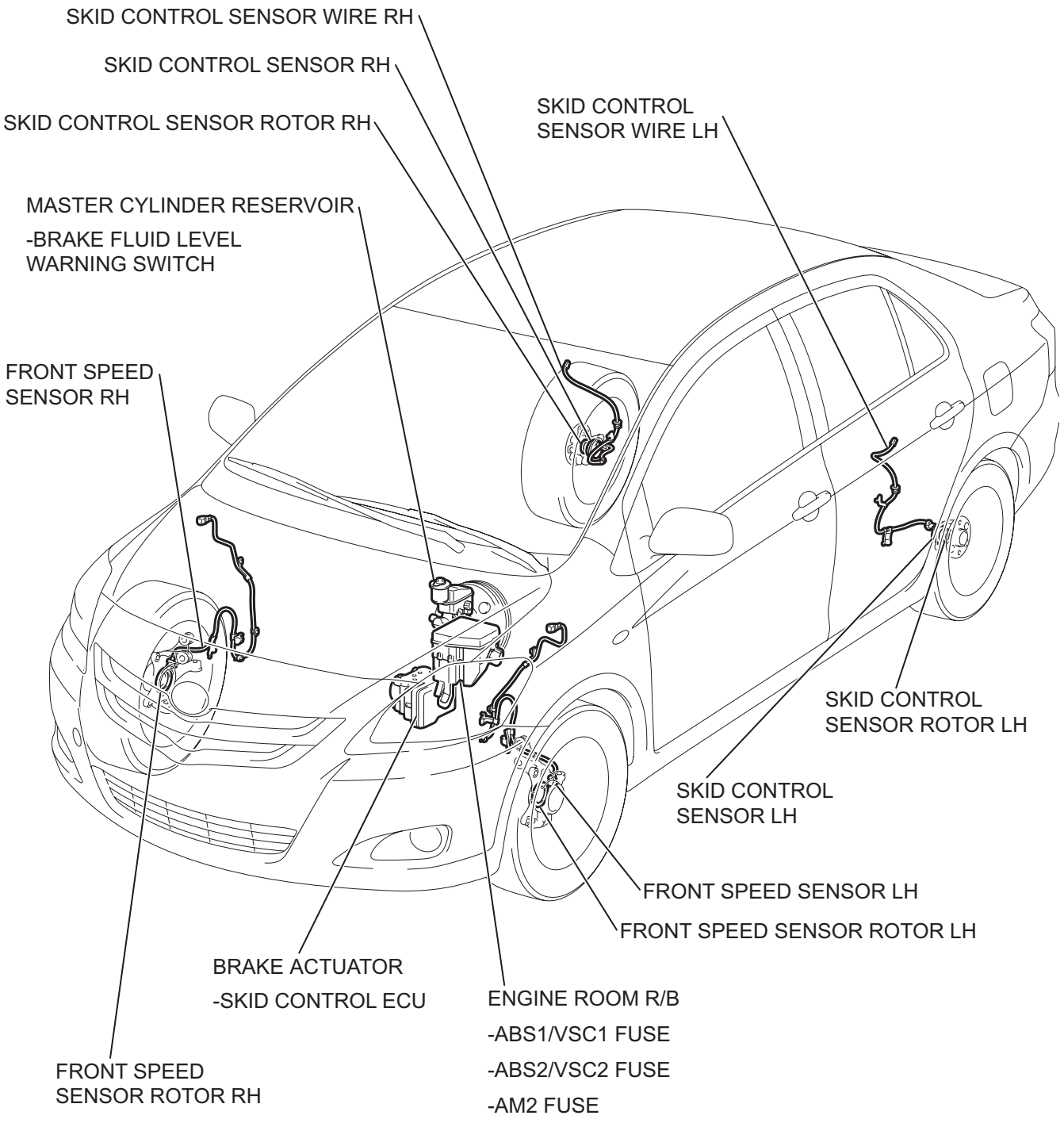

BC

P

C139617E01

SEDAN:

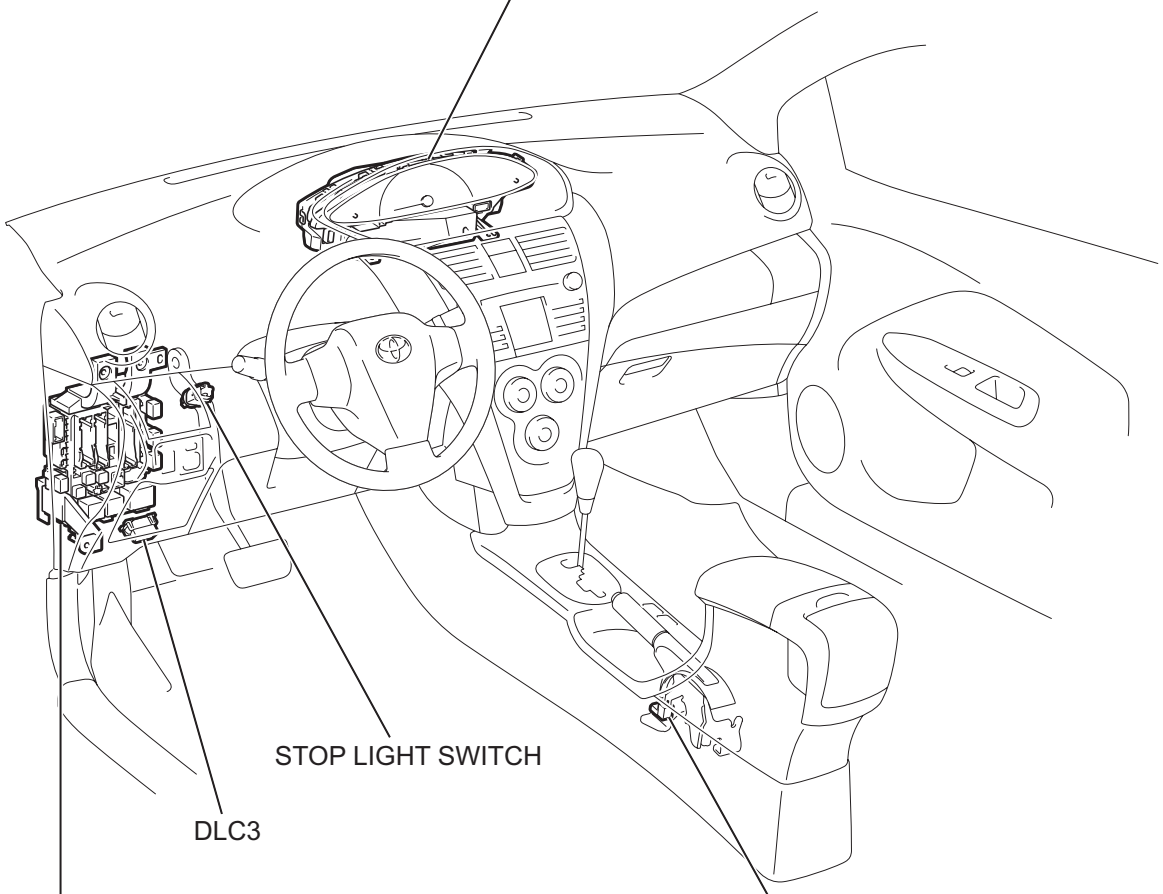

P

C139619E01

BC

SYSTEM DIAGRAM

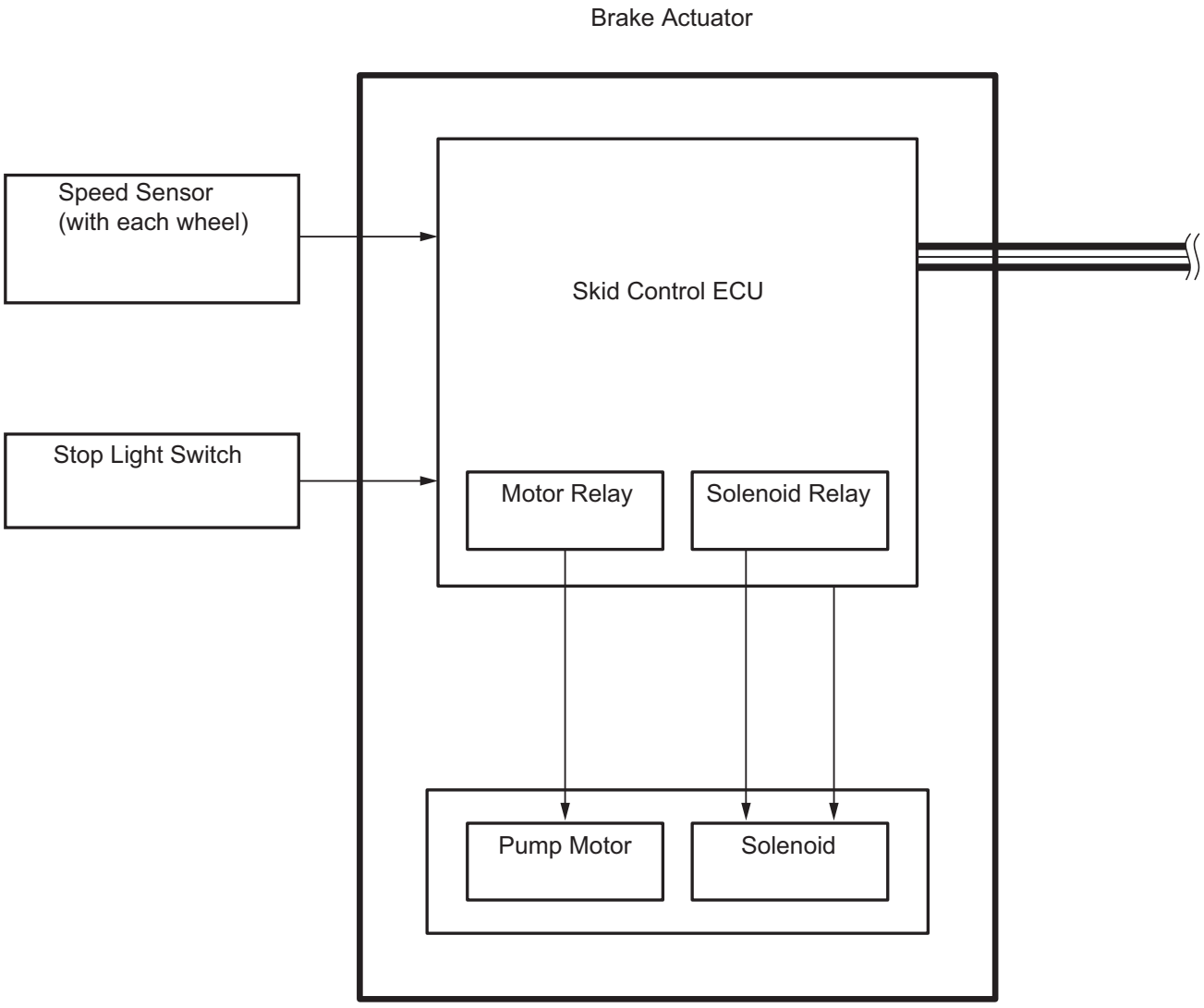

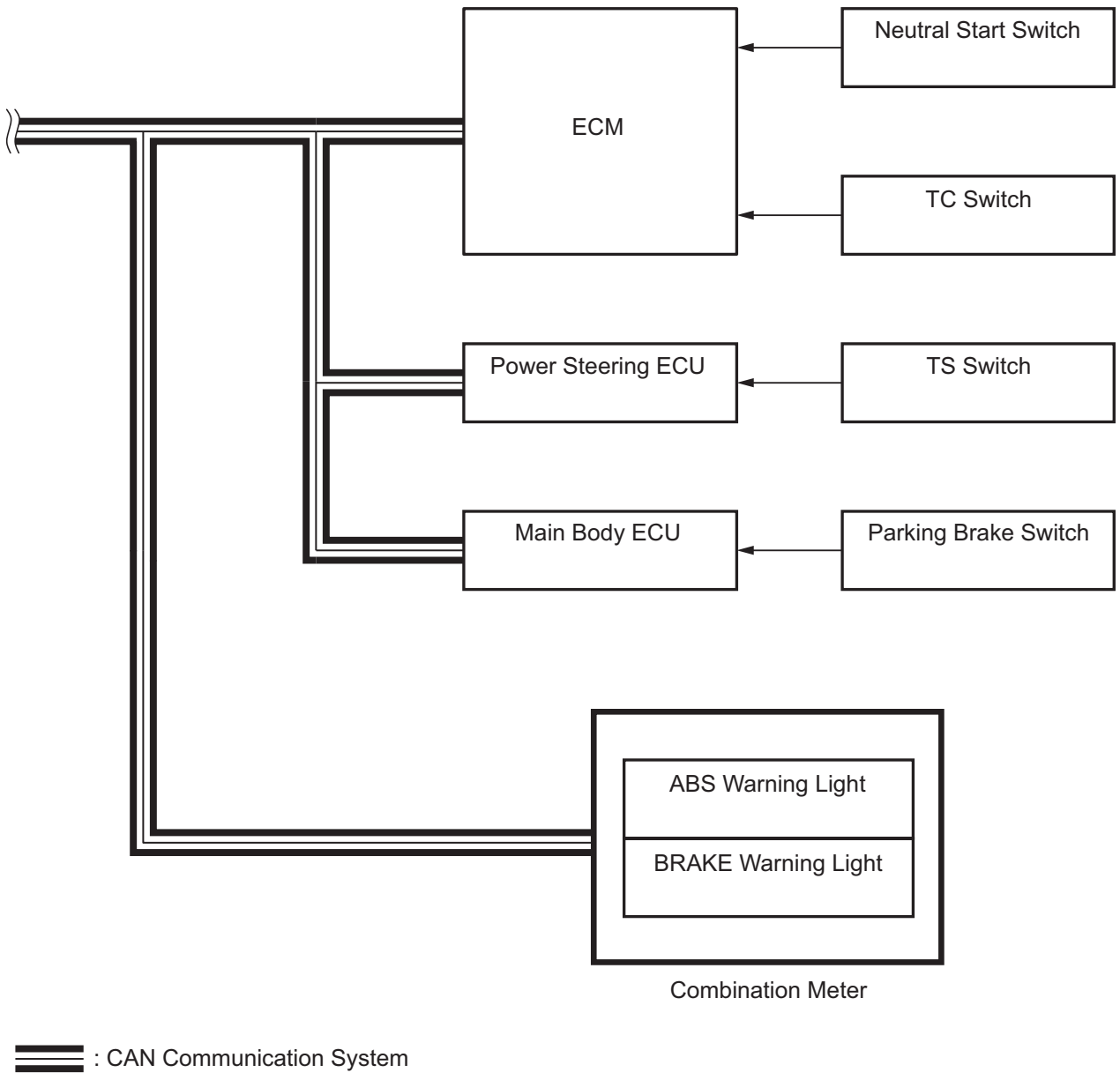
Neutral Start Switch
ECM
TC Switch
Power Steering ECU
TS Switch
Main Body ECU
Parking Brake Switch
ABS Warning Light
BRAKE Warning Light
Combination Meter
: CAN Communication System
C125123E02

SYSTEM DESCRIPTION

1. SYSTEM DESCRIPTION

HINT:
The skid control ECU forms a single unit with the brake actuator.

(a) ABS (Anti-lock Brake System)
The ABS helps prevent the wheels from locking when the brakes are applied firmly or on a slippery surface.

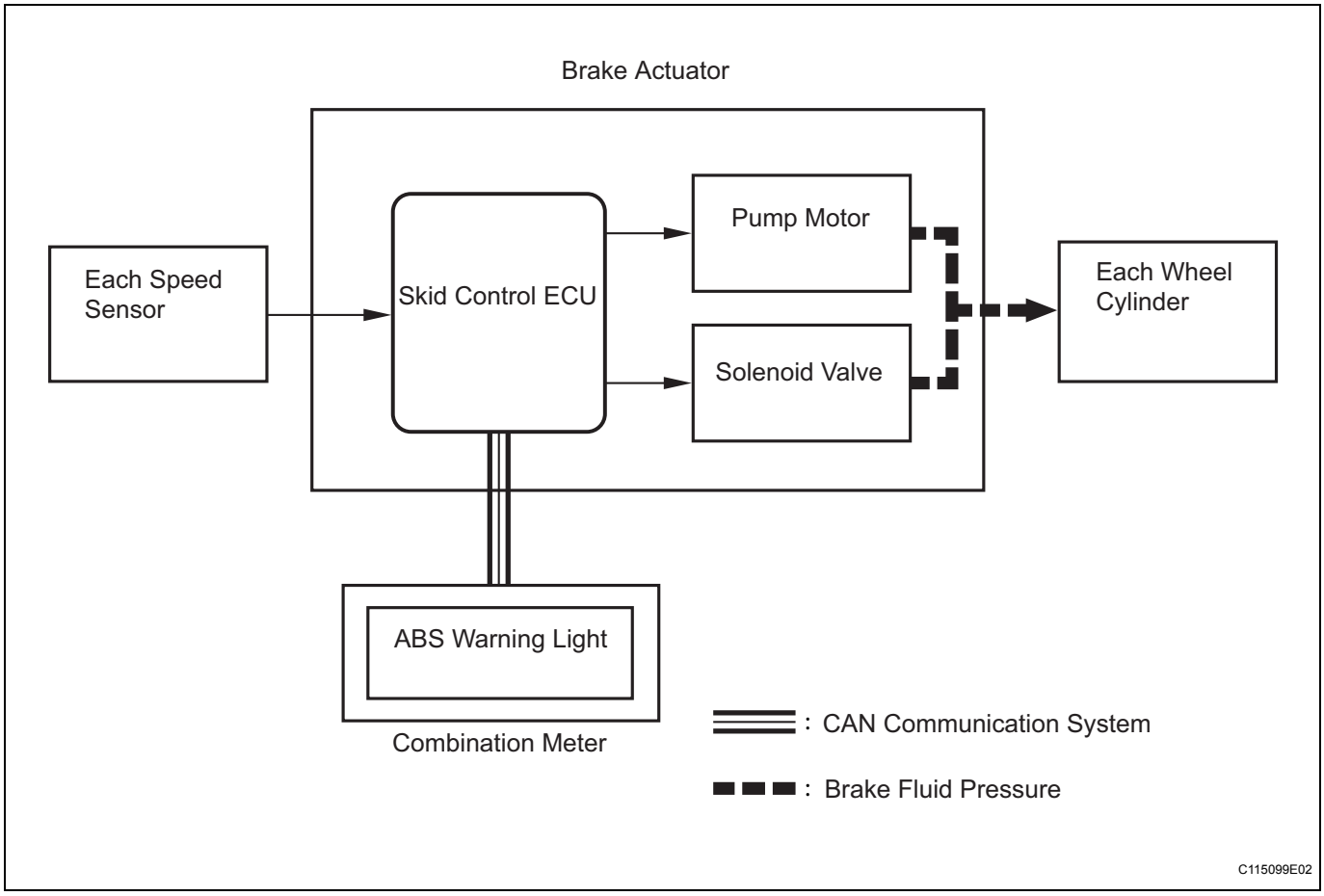

(1) Operation description
The skid control ECU detects wheel lock conditions by receiving vehicle speed signals from each speed sensor, and sends control signals to the pump motor and solenoid valve to prevent the wheels from locking by controlling the brake fluid pressure of each wheel cylinder. The ABS warning light comes on when the ABS system malfunctions.

(b) EBD (Electronic Brake force Distribution)
The EBD control utilizes the ABS, realizing the proper brake force distribution between the front and rear wheels in accordance with the driving conditions and vehicle load. In addition, when the brakes are applied while cornering, it also controls the braking forces of the right and left wheels, helping to maintain vehicle stability.

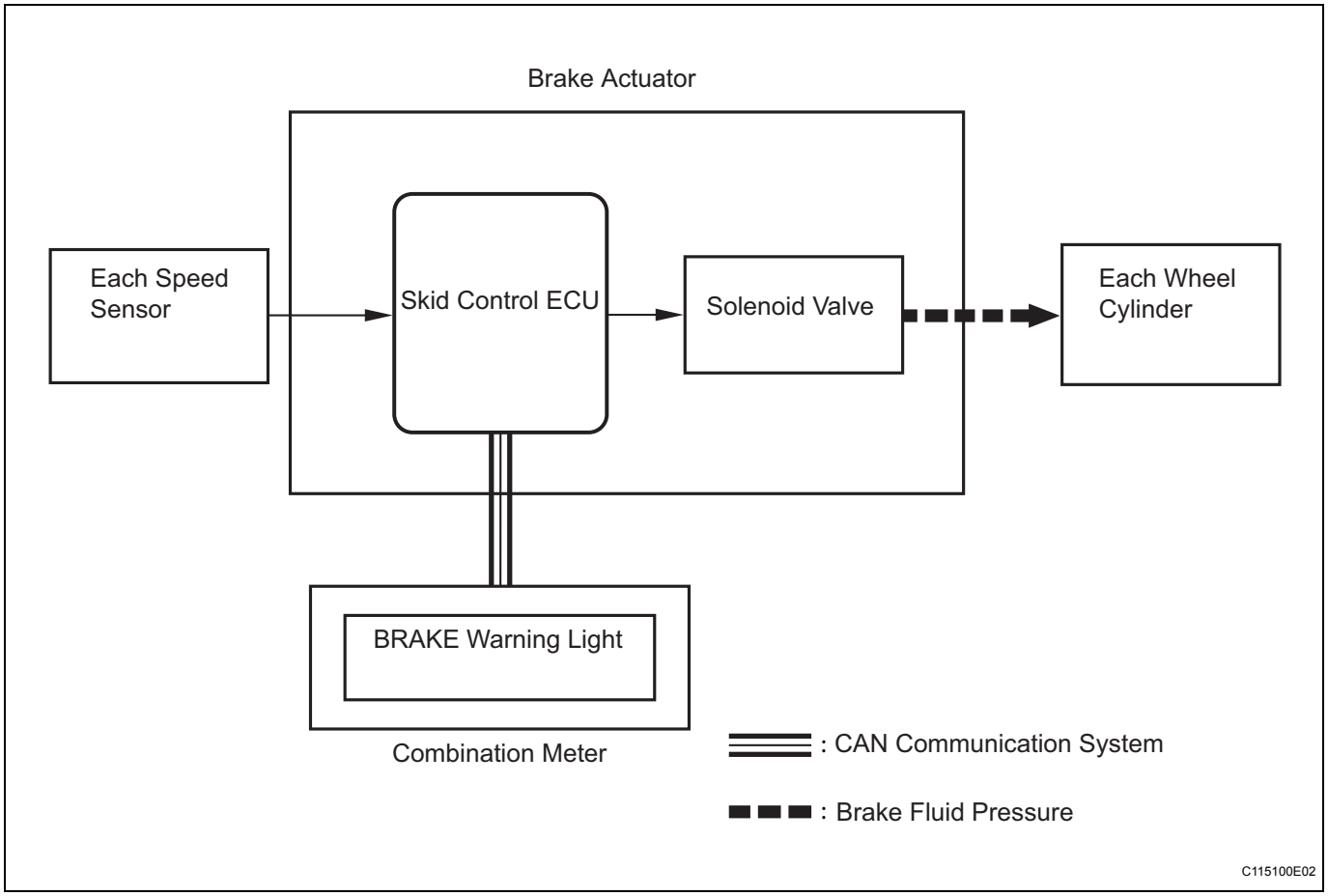

(1) Operation description
The skid control ECU receives speed signals from each speed sensor to detect the slip conditions of the wheels and sends control signals to the solenoid.
The solenoid valve controls the brake fluid pressure of each wheel cylinder and divides the control power properly between the front and rear wheels and the right and left wheels.
The BRAKE warning light comes on to indicate malfunctions in the EBD system.

2. ABS with EBD OPERATION

(a) Based on the signals received from each of the 4 wheel speed sensors, the skid control ECU calculates the speed and deceleration of each wheel, and checks the wheel slippage conditions. The ECU controls the pressure holding valve and pressure reduction valve in order to adjust the brake fluid pressure of each wheel cylinder in accordance with the slippage conditions.

3. FAIL SAFE FUNCTION

(a) When a failure occurs in the ABS system, the ABS warning light comes on and its operation is prohibited. In addition to this, when a failure which disables the EBD operation occurs, the brake warning light comes on and its operation is prohibited.
If control is prohibited due to a malfunction during operation, control is disabled gradually to avoid sudden vehicle instability.

4. INITIAL CHECK

(a) When the vehicle speed first reaches approximately 4 mph (6 km/h) or more after the ignition switch is turned on, each solenoid valve and the motor of the brake actuator are sequentially activated to perform electrical checks. During the initial check, the operating sound of the solenoid valve and motor can be heard from the engine compartment, but this does not indicate a malfunction.

5. FUNCTION OF COMPONENTS

Components	Functions
Front speed sensor (Semiconductor speed sensor, magnetic sensor rotor)	• Detects the wheel speed and sends a signal to the skid control ECU. • The front speed sensor (semiconductor speed sensor) with the integrated bearing and the sensor rotor (magnetic sensor rotor) are installed on the front axle hub. • The magnetic sensor rotor is equipped with north and south poles (48 of each), which are evenly spaced around its circumference. • The magnetic field changes as the magnetic sensor rotor rotates. The semiconductor speed sensor detects the change and outputs it as the vehicle speed pulse.
Skid control sensor (Semiconductor speed sensor, magnetic sensor rotor)	• The skid control sensor (semiconductor speed sensor) and the sensor rotor (magnetic sensor rotor) are installed on the rear axle carrier. • The skid control sensor has the same structure and functions as the front speed sensor.
Skid control ECU (Housed in brake actuator)	• Processes the signals from the sensors to control the ABS. • Sends and receives control signals to and from the ECM via CAN communication.
Brake actuator	• Consists of the master cylinder cut solenoid valve, holding solenoid valve, pump motor, and reservoir, and adjusts the brake fluid pressure applied to each wheel cylinder. • Houses the skid control ECU.
Solenoid relay	• Supplies power to each solenoid. • Housed in the skid control ECU.
ABS warning light	• Illuminates to inform the driver that a malfunction in the ABS has occurred. • Blinks to indicate DTCs that relate to the ABS.
BRAKE warning light	• Illuminates to inform the driver that the parking brake is ON when the system is normal, and when the brake fluid has decreased. • Illuminates to inform the driver that a malfunction in the EBD has occurred.

HOW TO PROCEED WITH TROUBLESHOOTING

HINT:
*: Use the intelligent tester.

1	VEHICLE BROUGHT TO WORKSHOP

NEXT

2	CUSTOMER PROBLEM ANALYSIS

NEXT

3	DTCS AND FREEZE FRAME DATA CHECK AND CLEARANCE*

NEXT

4	PROBLEM SYMPTOM CONFIRMATION

Result

Result	Proceed to
Symptom does not occur	A
Symptom occurs	B

B → SYMPTOM SIMULATION

A

5	CAN COMMUNICATION SYSTEM CHECK*

(a) Check for the output DTC relating to the CAN communication system.
HINT:
The ECU of this system is connected to the CAN communication system. Therefore, before starting troubleshooting, be sure to check that there is no trouble in the CAN communication system.

BC

Result

Result	Proceed to
CAN communication system DTC not output	A
CAN communication system DTC output	B

B → CAN COMMUNICATION SYSTEM

A

6	DTC CHECK*

HINT:
See page BC-25.

Result

Result	Proceed to
DTC output	A
DTC not output	B

B → PROBLEM SYMPTOM TABLE

A

7	DTC CHART

HINT:
See page BC-31.

NEXT

8	CIRCUIT INSPECTION

HINT:
When 2 or more DTCs are detected, perform circuit inspections one by one until the problem is identified.

NEXT

9	PROBLEM IDENTIFICATION

NEXT

10	REPAIR OR REPLACEMENT

NEXT

BC

11	CONFIRMATION TEST

NEXT

END

CHECK FOR INTERMITTENT PROBLEMS

1. CHECK FOR INTERMITTENT PROBLEMS

HINT:

A momentary interruption (open circuit) in the connectors and/or wire harness between the sensors and ECUs can be detected by using the ECU data list function of an intelligent tester.

(a) Turn the ignition switch off and connect the intelligent tester to the DLC3.

(b) Turn the ignition switch on.

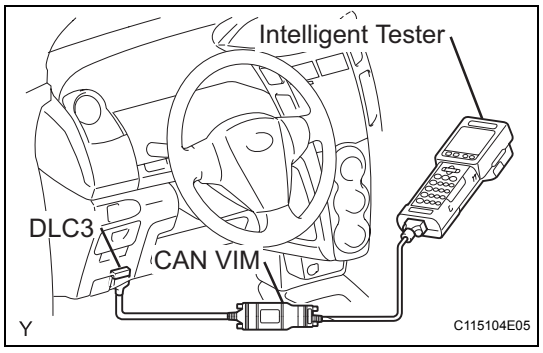

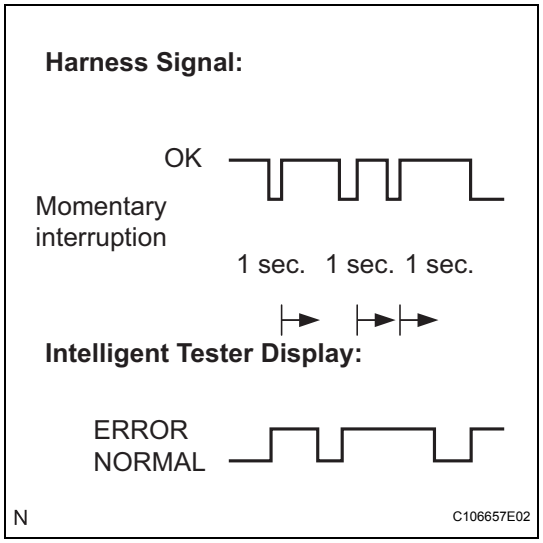

(c) Follow the prompts on the intelligent tester to display the DATA LIST and select areas where a momentary interruption should be monitored.

HINT:

- A momentary interruption (open circuit) cannot be detected for 3 seconds after the ignition switch is turned on (initial check).
- If the status remains on the ERROR display, check for continuity between the ECU and the sensors, or between ECUs.
- The ERROR display on the intelligent tester remains on for 1 second after the harness signal changes from a momentary interruption (open circuit) to normal condition.

Item (Display)	Measurement Item / Range (Display)	Normal Condition	Diagnostic Note
FR SPD OPN	FR speed sensor open detection / ERROR or NORMAL	ERROR: Momentary interruption NORMAL: Normal	-
FL SPD OPN	FL speed sensor open detection / ERROR or NORMAL	ERROR: Momentary interruption NORMAL: Normal	-
RR SPD OPN	RR speed sensor open detection / ERROR or NORMAL	ERROR: Momentary interruption NORMAL: Normal	-
RL SPD OPN	RL speed sensor open detection / ERROR or NORMAL	ERROR: Momentary interruption NORMAL: Normal	-

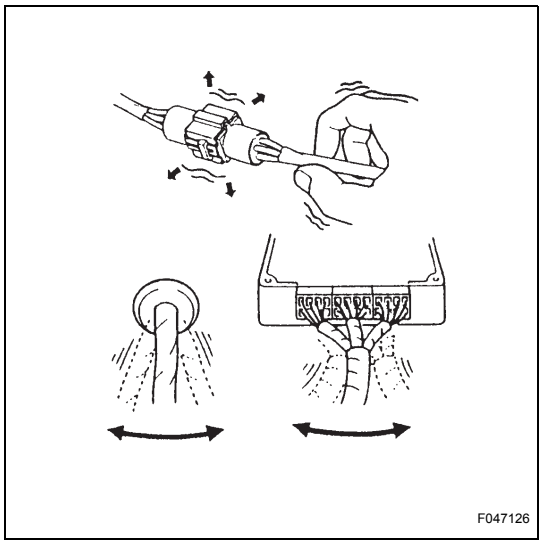

(d) While observing the screen, gently jiggle the connector or wire harness between the ECU and sensors, or between ECUs.
OK:
Display does not change.
HINT:
The connector and/or wire harness have a momentary interruption (open circuit) if the display changes. Repair or replace the connector and wire harness if either of them is faulty.

TEST MODE PROCEDURE

HINT:

- By switching the skid control ECU from normal mode to test mode, abnormality detection sensitivity is enhanced and troubleshooting can be conducted efficiently.
- Perform a sensor check in test mode after the speed sensor or sensor rotor has been repaired or replaced.
- If the ignition switch is turned from on to ACC or off during test mode, DTCs related to the signal check function will be erased.
- During test mode, the skid control ECU stores all DTCs related to the signal check function, and the DTCs are erased if normality is confirmed. Any remaining DTCs are those indicating abnormalities that were found.

1. TEST MODE (SIGNAL CHECK) PROCEDURE (USING INTELLIGENT TESTER)

(a) Turn the ignition switch off.

(b) Check that the steering wheel is in the straight-ahead position.

(c) A/T: Check that the shift lever is in the P position and apply the parking brake.

(d) M/T: Check that the shift lever is in neutral and apply the parking brake.

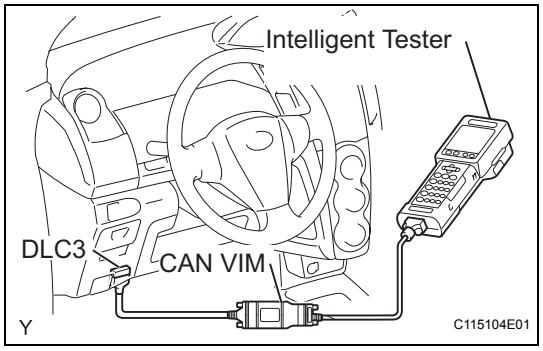

(e) Connect the intelligent tester to the DLC3.

(f) Turn the ignition switch on.

(g) Turn the tester on.

(h) Switch the skid control ECU to test mode using the intelligent tester.
Select the following menu items: DIAGNOSIS / OBD/MOBD /select vehicle / ABS / SIGNAL CHECK.

Blinking Pattern in TEST MODE:

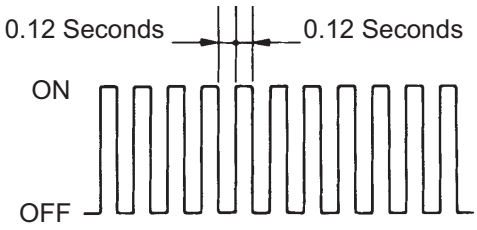

(i) Check that the ABS warning light blinks as shown in the illustration.
HINT:
If the ABS warning light does not blink, perform relevant troubleshooting procedures. The relevant troubleshooting procedures are described in the sections listed in the table below.

Section Title	See Page
ABS Warning Light does not Come ON	BC-73
TS and CG Terminal Circuit	BC-84

(j) Start the engine.

BC

Blinking Pattern in TEST MODE:

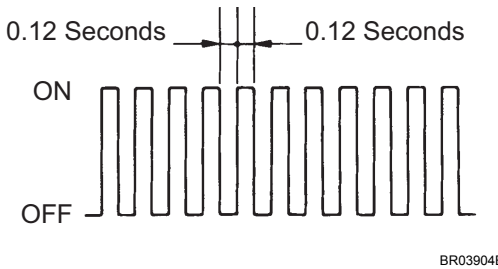

2. SPEED SENSOR CHECK (USING INTELLIGENT TESTER)

(a) Check that the ABS warning light is blinking as shown in the illustration.

(b) Check the speed sensor signal.

(1) Drive the vehicle straight forward at a speed of 28 mph (45 km/h) or more for several seconds.

(2) Check that the ABS warning light goes off.

HINT:

- The sensor check may not be completed if one or more wheels spin or the steering wheel is turned.
- If the speed sensor check is commenced while the steering wheel is turned, the ABS warning light may come on after the low speed check is finished.
- The ABS warning light comes on immediately when an abnormality is detected.
- When the speed sensor signal is normal, the ABS warning light goes off while the vehicle is driven at 28 mph (45 km/h) or more and blinks in the test mode pattern while stationary.
- Do not drive the vehicle at a speed of 50 mph (80 km/h) or more after the ABS warning light turns off, because test mode DTCs are set again when the vehicle speed exceeds 50 mph (80km/h).

Blinking pattern in speed sensor check:

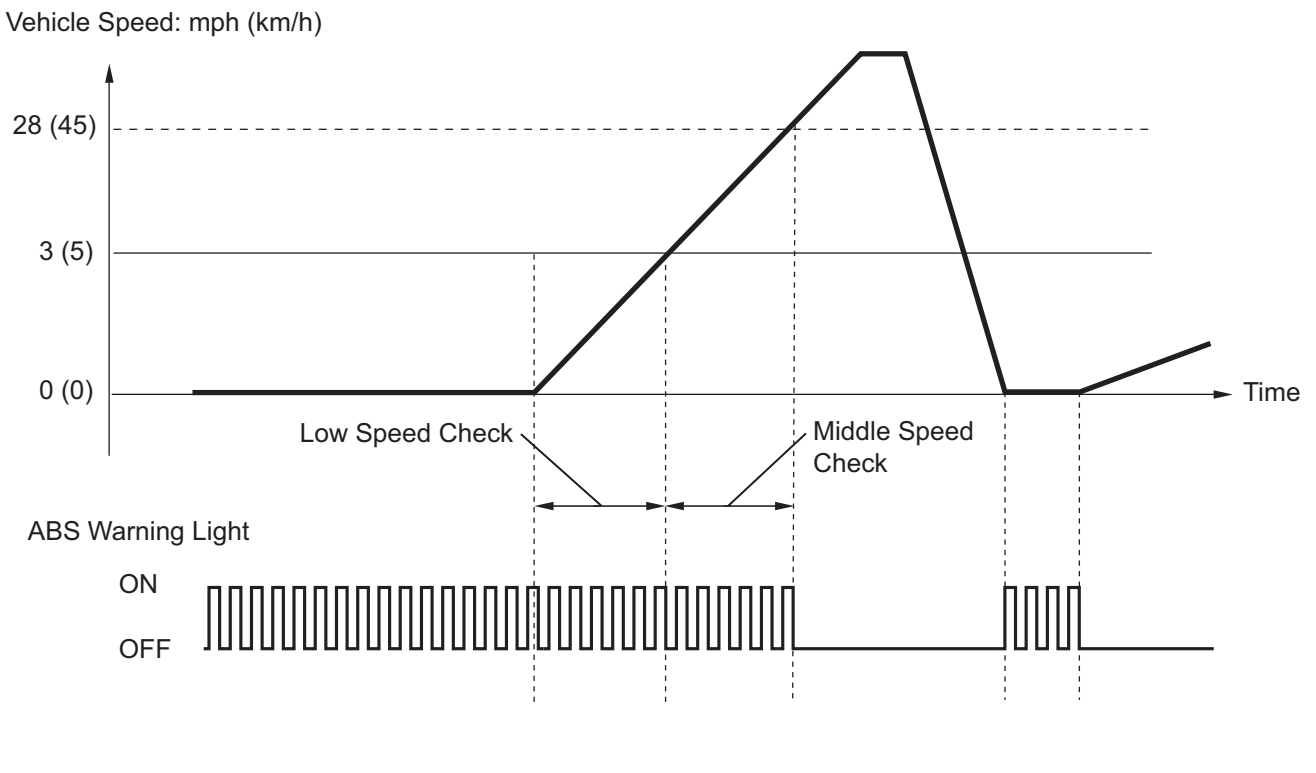

(3) Stop the vehicle.

3. **END SENSOR CHECK (USING INTELLIGENT TESTER)**
   (a) When the sensor check is successfully completed, the ABS warning light blinks in the test mode pattern when the vehicle is stopped, and goes off when the vehicle is driven.
   NOTICE:
   If the sensor check is not completed, the ABS warning light blinks even while the vehicle is driven and the ABS does not operate.
4. **READ SIGNAL CHECK FUNCTION DTCS (USING INTELLIGENT TESTER)**
   (a) Read the DTC(s) by following the instructions on the tester screen.
   HINT:
   See the list of DTCs (refer to step 9).
5. **TEST MODE (SIGNAL CHECK) PROCEDURE (USING SST CHECK WIRE)**
   (a) Turn the ignition switch off.
   (b) Check that the steering wheel is in the straight-ahead position.
   (c) A/T: Check that the shift lever is in the P position and apply the parking brake.
   (d) M/T: Check that the shift lever is in neutral and apply the parking brake.

BC

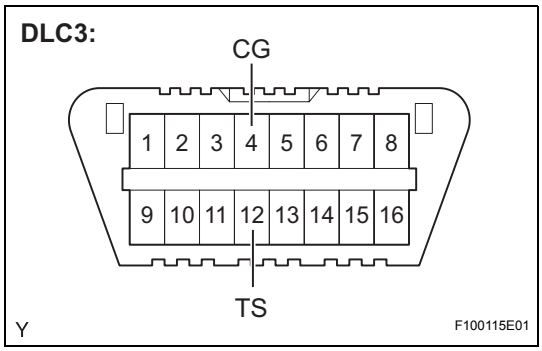

(e) Using SST, connect terminals TS and CG of the DLC3.
SST 09843-18040

(f) Turn the ignition switch on.

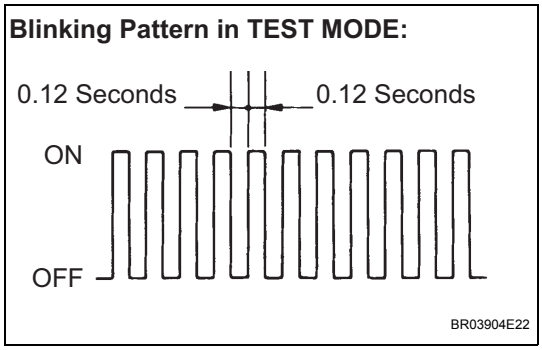

(g) Check that the ABS warning light blinks as shown in the illustration.
HINT:
If the ABS warning light does not blink, perform relevant troubleshooting procedures. The relevant troubleshooting procedures are described in the sections listed in the table below.

Section Title	See Page
ABS Warning Light does not Come ON	BC-73
TS and CG Terminal Circuit	BC-84

(h) Start the engine.

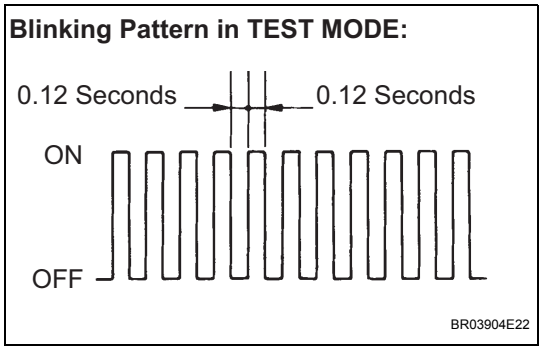

6. SPEED SENSOR CHECK (USING SST CHECK WIRE)

(a) Check that the ABS warning light blinks as shown in the illustration.

(b) Check the speed sensor signal.

(1) Drive the vehicle straight forward at a speed of 28 mph (45km/h) or more for several seconds, and then step on the brake pedal.

(2) Check that the ABS warning light goes off.
HINT:
- The sensor check may not be completed if one or more wheels spin or the steering wheel is turned.
- If the speed sensor check is commenced while the steering wheel is turned, the ABS warning light may come on after the low speed check is finished.
- The ABS warning light comes on immediately when an abnormality is detected.
- When the speed sensor signal is normal, the ABS warning light goes off while the vehicle is driven at 28 mph (45 km/h) or more and blinks in the test mode pattern while stationary.
- Do not drive the vehicle at a speed of 50 mph (80 km/h) or more after the ABS warning light turns off, because test mode DTCs are set again when the vehicle speed exceeds 50 mph (80km/h).

Blinking pattern in speed sensor check:

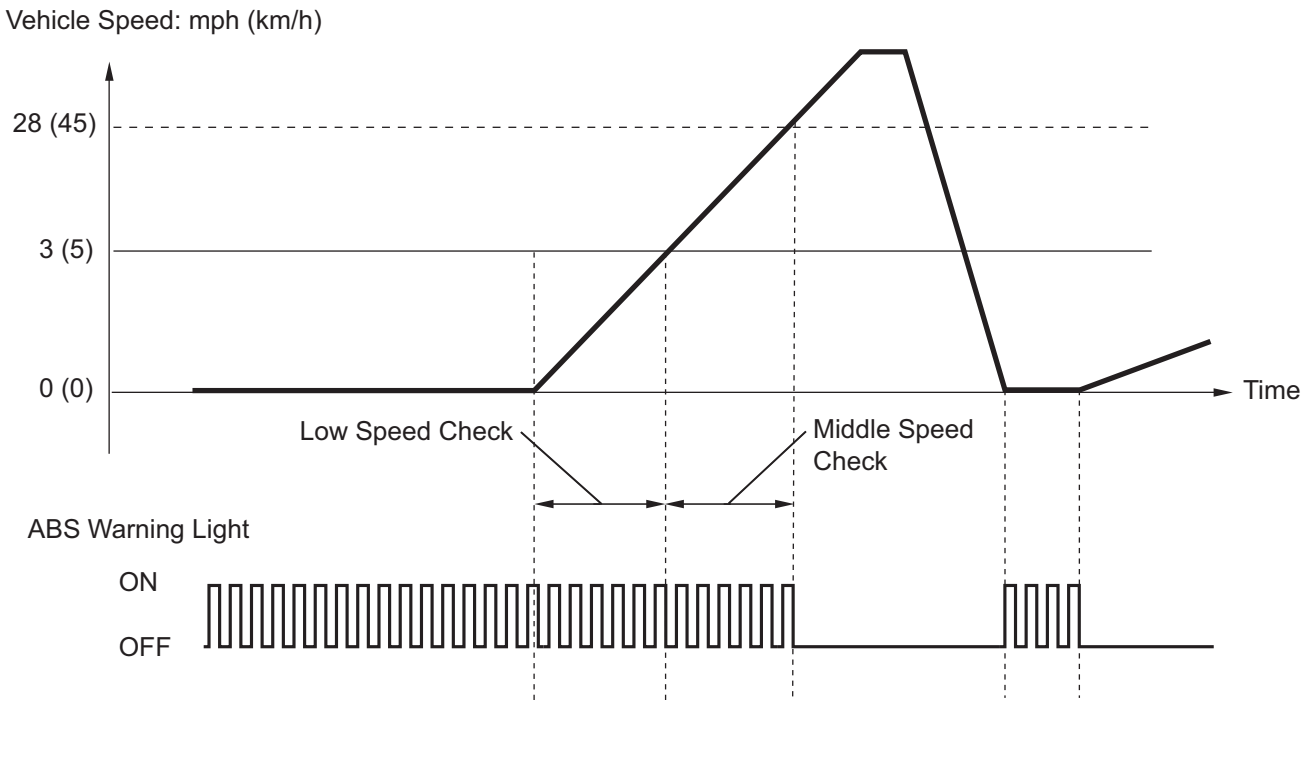

(3) Stop the vehicle.

7. END SENSOR CHECK (USING SST CHECK WIRE)

(a) When the sensor check is successfully completed, the ABS warning light blinks in the test mode pattern when the vehicle is stopped, and goes off when the vehicle is driven.

NOTICE:

If the sensor check is not completed, the ABS warning light blinks even while the vehicle is driven and the ABS does not operate.

DLC3:

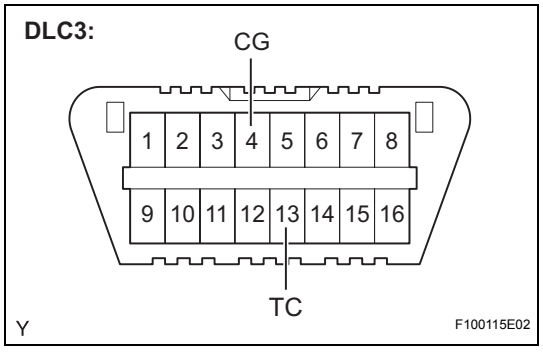

8. READ SIGNAL CHECK FUNCTION DTCS (USING SST CHECK WIRE)

(a) Using SST, connect terminals TC and CG of the DLC3.

SST 09843-18040

(b) Turn the ignition switch on.

(c) Read the number of blinks of the ABS warning light.

HINT:

- See the list of DTCs (refer to step 9).

BC

Blinking Pattern in TEST MODE:

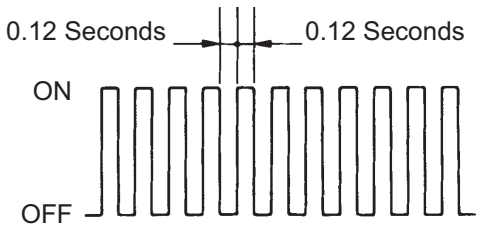

- If all the sensors are normal, a normal system code is output (the light comes on for 0.25 seconds at intervals of 0.25 seconds).

(d) After the check, disconnect the SST from terminals TC and CG of the DLC3.

(e) Turn the ignition switch off.

9. SPEED SENSOR CHECK FUNCTION DTCs

Code No.	Diagnosis	Trouble Areas
C1271/71	Low output signal of front speed sensor RH	• Front speed sensor RH • Front speed sensor RH circuit • Sensor installation • Foreign matter on sensor tip or sensor rotor
C1272/72	Low output signal of front speed sensor LH	• Front speed sensor LH • Front speed sensor LH circuit • Sensor installation • Foreign matter on sensor tip or sensor rotor
C1273/73	Low output signal of rear speed sensor RH	• Skid control sensor RH • Skid control sensor RH circuit • Sensor installation
C1274/74	Low output signal of rear speed sensor LH	• Skid control sensor LH • Skid control sensor LH circuit • Sensor installation
C1275/75	Abnormal change in output signal of front speed sensor RH	• Front speed sensor RH • Front speed sensor RH circuit • Foreign matter on sensor tip or sensor rotor
C1276/76	Abnormal change in output signal of front speed sensor LH	• Front speed sensor LH • Front speed sensor LH circuit • Foreign matter on sensor tip or sensor rotor
C1277/77	Abnormal change in output signal of rear speed sensor RH	• Skid control sensor RH • Skid control sensor RH circuit
C1278/78	Abnormal change in output signal of rear speed sensor LH	• Skid control sensor LH • Skid control sensor LH circuit

HINT:

- The DTCs in this table are only output in test mode.
- Detection of DTCs from C1271/71 to C1274/74 is completed before the vehicle speed reaches 3 mph (5 km/h).
- Detection of DTCs from C1275/75 to C1278/78 is completed several seconds after the vehicle speed exceeds 28 mph (45 km/h).
- C1271/71 - C1274/74: Speed output from only one wheel is extremely low despite other wheel speed outputs reaching 3 mph (5 km/h).
- C1275/75 - C1278/78: Abnormal speed sensor output frequency is as shown in the illustration.

BC

Example:

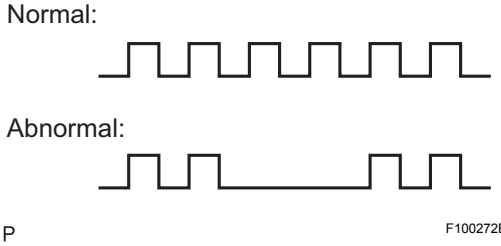

PROBLEM SYMPTOMS TABLE

If no DTCs are displayed during the DTC check but the problem still occurs, check the circuits for each problem symptom in the order given in the table below and proceed to the relevant troubleshooting page.

NOTICE:

When replacing the brake actuator or sensor, turn the ignition switch off.

ANTI-LOCK BRAKE SYSTEM

Symptom	Suspected area	See page
ABS and/or EBD does not operate	1. Check DTC again and make sure that normal system code displayed.	BC-25
	2. IG power source circuit	BC-59
	3. Front speed sensor circuit	BC-37
	4. Skid control sensor circuit	BC-44
	5. Check brake actuator using intelligent tester. (Check brake actuator operation using active test function.) If abnormal, check hydraulic circuit for leakage.	BC-34
	6. If symptoms still occur even after above circuits in suspected areas inspected and proved to be normal, replace brake actuator (skid control ECU).	BC-89
ABS and/or EBD does not operate efficiently	1. Check DTC again and make sure that normal system code displayed.	BC-25
	2. Front speed sensor circuit	BC-37
	3. Skid control circuit	BC-44
	4. Stop light switch circuit	BC-64
	5. Check brake actuator using intelligent tester. (Check brake actuator operation using active test function.) If abnormal, check hydraulic circuit for leakage.	BC-34
	6. If symptoms still occur even after above circuits in suspected areas inspected and proved to be normal, replace brake actuator (skid control ECU).	BC-89
Sensor signal check cannot be done	1. TS and CG terminal circuit	BC-84
	2. Brake actuator (skid control ECU)	BC-89
DTC check cannot be done	1. Check DTC again and make sure that normal system code displayed.	BC-25
	2. TC and CG terminal circuit	BC-81
	3. If symptoms still occur even after above circuits in suspected areas inspected and proved to be normal, replace brake actuator (skid control ECU).	BC-89
ABS warning light remains on	1. ABS warning light circuit	BC-70
	2. Brake actuator (skid control ECU)	BC-89
ABS warning light does not come on	1. ABS warning light circuit	BC-73
	2. Brake actuator (skid control ECU)	BC-89
BRAKE warning light remains on	1. BRAKE waning light circuit	BC-74
	2. Brake actuator (skid control ECU)	BC-89
BRAKE warning light does not come on	1. BRAKE warning light circuit	BC-79
	2. Brake actuator (skid control ECU)	BC-89

TERMINALS OF ECU

1. Terminals of ECU

Skid Control ECU:

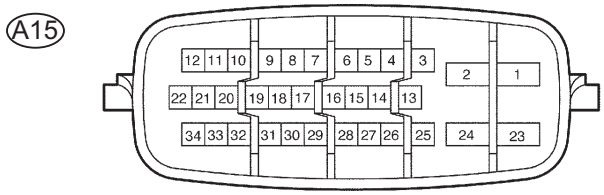

C110609E01

Symbols (Terminals No.)	Terminal Description
+BS (A15-1)	Solenoid valve power supply
GND1 (A15-2)	Skid control ECU ground
CANL (A15-5)	CAN communication line L
CANH (A15-6)	CAN communication line H
FL- (A15-8)	Front LH wheel speed signal input
FL+ (A15-9)	Front LH wheel speed sensor power supply
STP (A15-10)	Stop light switch input
RL+ (A15-11)	Rear LH wheel speed sensor power supply
RL- (A15-12)	Rear LH wheel speed signal input
+BM (A15-23)	Motor relay power supply
GND2 (A15-24)	Actuator pump motor ground
IG1 (A15-25)	ECU power supply
FR- (A15-30)	Front RH wheel speed signal input
FR+ (A15-31)	Front RH wheel speed sensor power supply
RR+ (A15-33)	Rear RH wheel speed sensor power supply
RR- (A15-34)	Rear RH wheel speed signal input

Main Body ECU (Rear View):

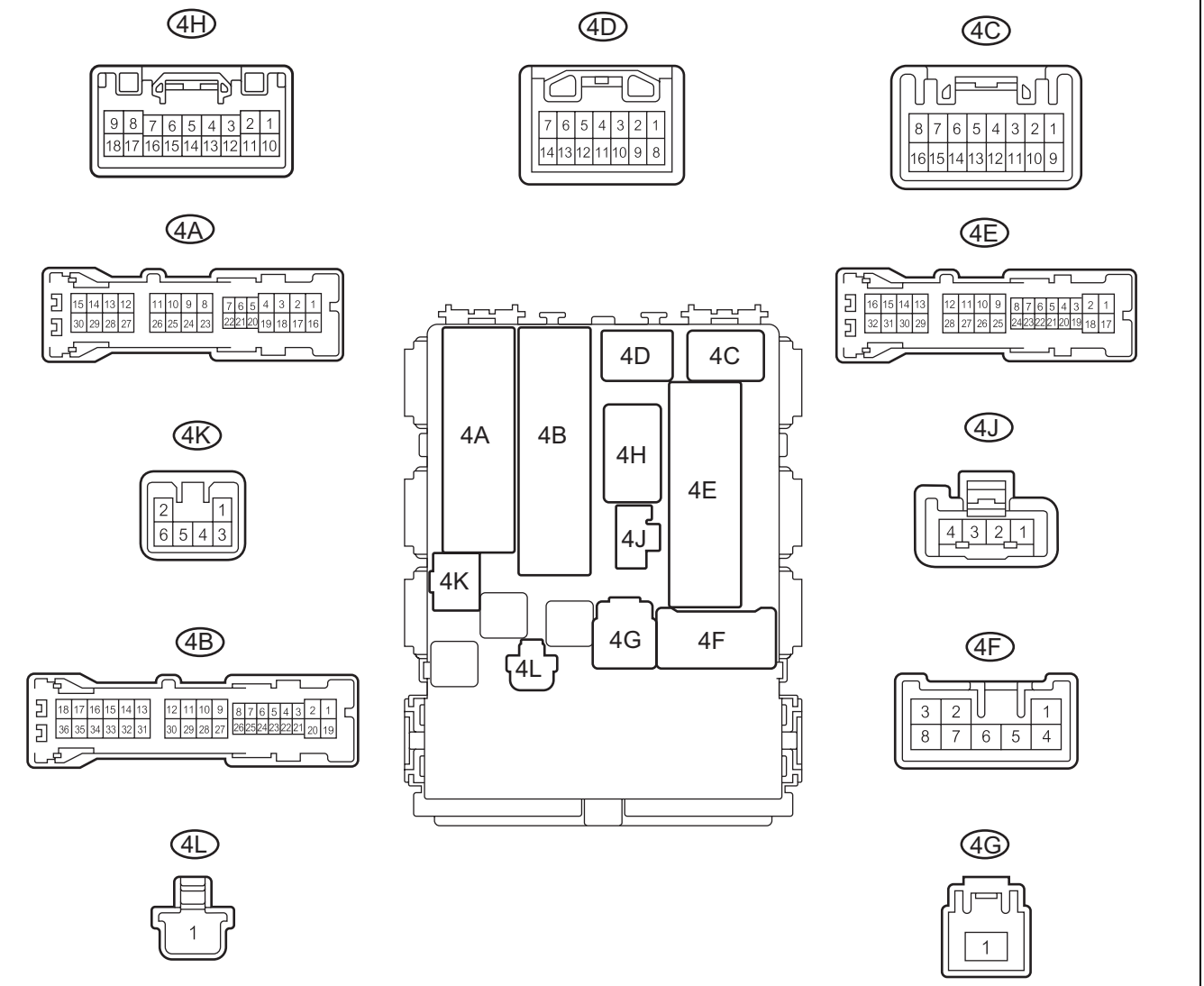

H

E114510E04

Symbols (Terminals No.)	Terminal Description
PKB (4C-2)	Parking brake switch input

2. Terminal inspection

(a) Disconnect the connector and measure the resistance and voltage on the wire harness side.
HINT:
The voltage cannot be measured with the connector connected to the skid control ECU as the connector is water resistant.

BC

Skid Control ECU (harness side connector):

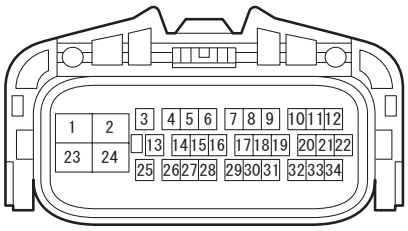

C107496E01

Standard:

Symbols	Wiring Color	Terminal Description	Conditions	Specified Conditions
+BS (A15-1) - Body ground	W - Body ground	Solenoid valve power supply	Always	11 to 14 V
GND1 (A15-2) - Body ground	W-B - Body ground	Skid control ECU ground	Always	Below 1 Ω
STP (A15-10) - Body ground	G - Body ground	Stop light switch input	Stop light switch ON Brake pedal depressed	8 to 14 V
STP (A15-10) - Body ground	G - Body ground	Stop light switch input	Stop light switch OFF Brake pedal released	Below 1.5 V
+BM (A15-23) - Body ground	B - Body ground	Motor relay power supply	Always	11 to 14 V
GND2 (A15-24) - Body ground	W-B - Body ground	Actuator pump motor ground	Always	Below 1 Ω
IG1 (A15-25) - Body ground	B - Body ground	ECU power supply	Ignition switch on	11 to 14 V

Main Body ECU (harness side connector):

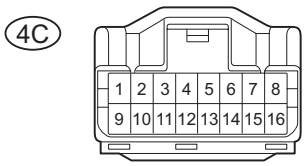

Y

C118700E01

Standard resistance:

Symbols	Wiring Color	Terminal Description	Conditions	Specified Conditions
PKB (4C-2) - Body ground	Y - Body ground	Parking brake switch input	Parking brake switch ON	Below 1 Ω
PKB (4C-2) - Body ground	Y - Body ground	Parking brake switch input	Parking brake switch OFF	10 kΩ or higher

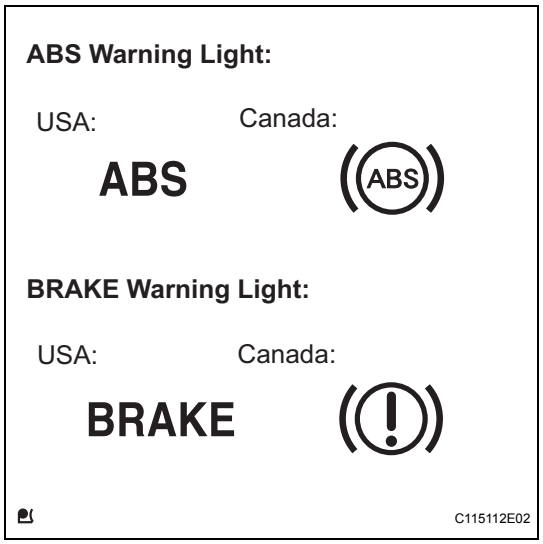

DIAGNOSIS SYSTEM

1. DIAGNOSIS

If the skid control ECU detects a malfunction, the ABS and/or BRAKE warning lights come on in accordance with the trouble area, to warn the driver.
The table below indicates which lights come on when there are malfunctions in particular functions.

Item / Trouble Area	ABS System	EBD System	Skid Control ECU
ABS warning light	○	○	○
Brake warning light	-	○	○

○: Light ON, -: Light OFF

HINT:

- The DTCs can be read by connecting SST (09843-18040) between the TC and CG terminals of the DLC3 and observing the blinking pattern of the ABS warning light, or by using an intelligent tester (See page BC-25).
- This system has a sensor signal check function (See page BC-14).

2. WARNING LIGHT CHECK

(a) Release the parking brake lever.

NOTICE:
Before releasing the parking brake lever, set chocks to hold the vehicle for safety.

HINT:
When the parking brake is applied or the brake fluid level is low, the brake warning light comes on.

(b) When the ignition switch is turned on, check that the ABS warning light and brake warning light come on and go off in approximately 3 seconds.

HINT:
If the warning lights do not illuminate, confirm whether the bulbs have burned out, and also check for CAN communication system DTCs, since the skid control ECU and combination meter are connected by the CAN communication line.
If the warning light remains on, perform the relevant troubleshooting procedures. The relevant troubleshooting procedures are described in the sections listed in the table below.

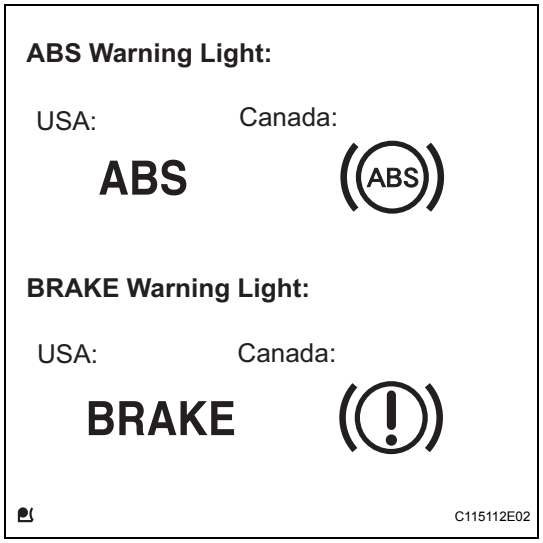

Section Title	See Page
ABS Warning Light Remains ON	BC-70
Brake Warning Light Remains ON	BC-74

BC

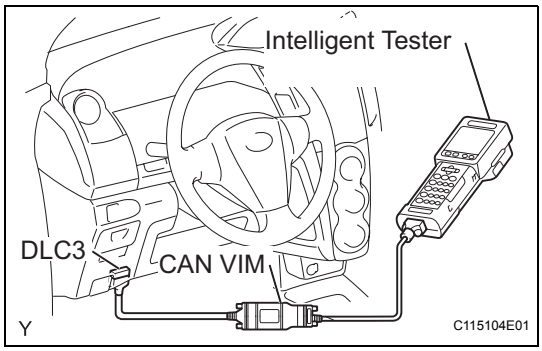

DTC CHECK / CLEAR

1. DTC CHECK (USING INTELLIGENT TESTER)

(a) Check DTCs.

(1) Connect the intelligent tester to the DLC3.

(2) Turn the ignition switch on.

(3) Turn the tester on.

(4) Read the DTCs using the intelligent tester. Select the following menu items: DIAGNOSIS / OBD/MOBD / select vehicle / ABS / DTC INFO / TROUBLE CODES.

2. DTC CLEAR (USING INTELLIGENT TESTER)

(a) Clear the DTCs.

(1) Connect the intelligent tester to the DLC3.

(2) Turn the ignition switch on.

(3) Turn the tester on.

(4) Clear the DTCs using the intelligent tester. Select the following menu items: DIAGNOSIS / OBD/MOBD / select vehicle / ABS / DTC INFO / CLEAR CODES.

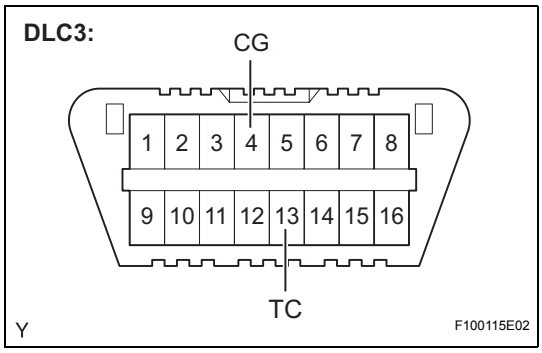

3. DTC CHECK (USING SST CHECK WIRE)

(a) Check DTCs.

(1) Using SST, connect terminals TC and CG of the DLC3.

SST 09843-18040

(2) Turn the ignition switch on.

(3) Read 2-digit DTCs indicated by the blinking of the ABS warning light on the combination meter.

HINT:

- If the ABS warning light does not blink, perform relevant troubleshooting procedures. The relevant troubleshooting procedures are described in the sections listed in the table below.

Section Title	See Page
ABS Warning Light does not Come ON	BC-73
TC and CG Terminal Circuit	BC-81

- As an example, the blinking patterns of the normal system code and DTCs 11 and 21 are shown below.

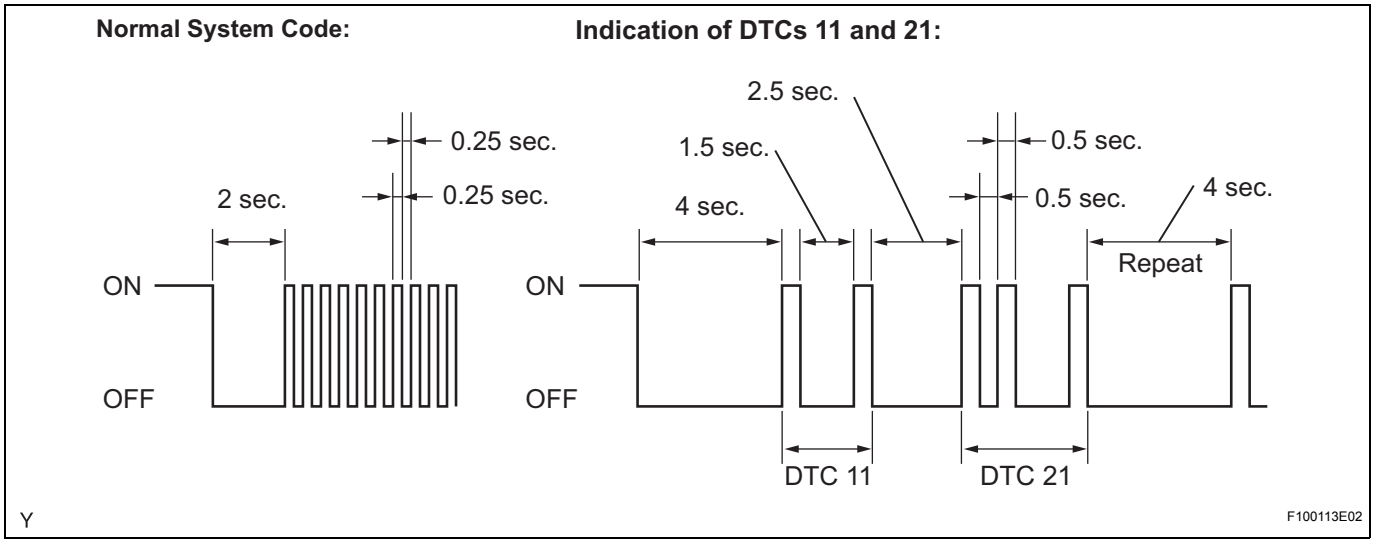

- DTCs are explained in "DIAGNOSTIC TROUBLE CODE CHART" (See page BC-31).

(4) After completing the check, disconnect SST from terminals TC and CG of the DLC3, and turn the ignition switch off.
HINT:
If 2 or more malfunctions are detected at the same time, the lowest numbered DTC is displayed first.

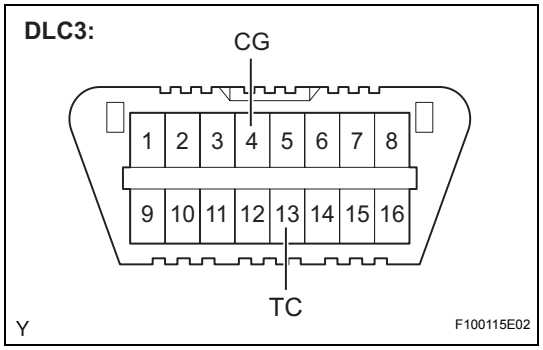

4. DTC CLEAR (USING SST CHECK WIRE)

(a) Clear the DTCs.

(1) Using SST, connect terminals TC and CG of the DLC3.
SST 09843-18040

(2) Turn the ignition switch on.

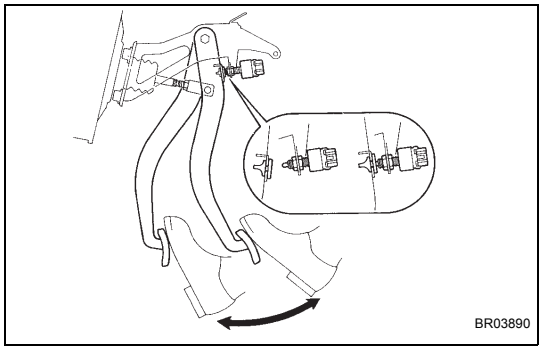

(3) Clear the DTCs stored in the skid control ECU by depressing the brake pedal 8 times or more within 5 seconds.

(4) Check that the warning light blinks in the normal system code pattern.

(5) Remove SST from the terminals of the DLC3.

(6) Turn the ignition switch off.
HINT:
The DTCs cannot be cleared by removing the battery cable or ECU-IG fuse.

5. END OF DTC CHECK/CLEAR

(a) Turn the ignition switch on.

(b) Check that the ABS warning light goes off within approximately 3 seconds.

BC

(c) Turn the ignition switch off.

FREEZE FRAME DATA

1. FREEZE FRAME DATA

HINT:

- Whenever a DTC is detected or the ABS operates, the skid control ECU stores the current vehicle (sensor) state as freeze frame data.
- The skid control ECU stores the number of times (maximum: 31) the ignition switch has been turned from off to on since the last time the ABS was activated. However, if the vehicle was stationary or running at a low speed (4.3 mph [7 km/h] or less), or if a DTC is detected, the skid control ECU stops counting.
- Freeze frame data at the time the ABS operates: The skid control ECU stores and updates the data whenever the ABS system operates.
  When the ECU stores data at the time a DTC is detected, the data stored when the ABS operated is erased.
- Freeze frame data at the time a DTC is detected: When the skid control ECU stores data at the time a DTC is detected, no updates are performed until the data is cleared.

(a) Connect the intelligent tester to the DLC3.
(b) Turn the ignition switch on.
(c) Turn the tester on.
(d) From the display on the tester, select "FREEZE FRAME DATA".

Item (Display)	Measurement Item	Reference Values
FREEZE TIME	Elapsed time since freeze frame data stored	Min.: 0 ms Max.: 500 ms
#IG ON	Number of ignition switch on operations since freeze frame data stored	0 to 31
STOP LAMP SW	Stop light switch signal	ON: Stop light switch ON OFF: Stop light switch OFF
PARKING BRAKE SW	Parking brake switch signal	ON: Parking brake switch ON OFF: Parking brake switch OFF
OPERATED SYSTEM	Operated system status	ABS: ABS activated FAIL: Fail safe mode activated SYS: System prohibited NON: No system activated
FORWARD&REA G	Forward and backward G	Min.: -25.11 m/s^2 Max.: 24.91 m/s^2
FR WHEEL SPD	FR wheel speed	Min.: 0 mph (0 km/h) Max.: 202 mph (326.4 km/h)
FL WHEEL SPD	FL wheel speed	Min.: 0 mph (0 km/h) Max.: 202 mph (326.4 km/h)
RR WHEEL SPD	RR wheel speed	Min.: 0 mph (0 km/h) Max.: 202 mph (326.4 km/h)
RL WHEEL SPD	RL wheel speed	Min.: 0 mph (0 km/h) Max.: 202 mph (326.4 km/h)
VEHICLE SPD	Vehicle speed	Min.: 0 mph (0 km/h) Max.: 202 mph (326.4 km/h)
SPD GRADE	Vehicle speed grade	Min.: -25.11 m/s^2 Max.: 24.91 m/s^2

FAIL-SAFE CHART

1. FAIL SAFE OPERATION

- If there is a problem with any sensor signals or actuator systems, the skid control ECU prohibits the power supply to the brake actuator.
  ABS control is prohibited, but EBD control continues as far as possible. If EBD control is impossible, the BRAKE warning light comes on to warn the driver (See page BC-24).
- If any system components have malfunctions before starting control, the operation stops immediately. If any system components have malfunctions during control, the control stops gradually so as not to trigger any sudden changes in the vehicle conditions.
  If it is impossible to control the systems, the warning light comes on to inform the driver of the malfunctions in the systems (See page BC-24).

HINT:

- If the ABS system malfunctions, the brake system operates normally without the ABS system control.
- If the brake actuator malfunctions, a gradual loss of brake performance is expected, and ABS system control is prohibited.

ABS and EBD system

Malfunction Area	Fail-Safe Operation
ABS system	ABS control prohibited
EBD system	ABS and EBD control prohibited

DATA LIST / ACTIVE TEST

1. DATA LIST

HINT:

By referring to the DATA LIST displayed on the intelligent tester, the values and status of parts such as switches, sensors and actuators can be read without removing any parts. Reading the DATA LIST as the first step of troubleshooting is one method of shortening diagnostic time.

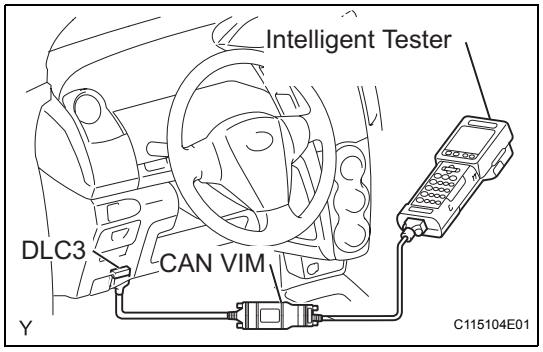

(a) Connect the intelligent tester to the DLC3.
(b) Turn the ignition switch on.
(c) Turn the intelligent tester on.
(d) Select the following menu items: DIAGNOSIS / OBD / MOBD / select vehicle / ABS / DATA LIST.

Item (Display)	Measurement Item / Range (Display)	Normal Condition	Diagnostic Notes
ABS WARN LAMP	ABS warning light / ON or OFF	ON: ABS warning light ON OFF: ABS warning light OFF	-
BRAKE WARN LAMP	BRAKE warning light / ON or OFF	ON: BRAKE warning light ON OFF: BRAKE warning light OFF	-
STOP LAMP SW	Stop light switch / ON or OFF	ON: Brake pedal depressed OFF: Brake pedal released	-
PARKING BRAKE SW	Parking brake switch / ON or OFF	ON: Parking brake applied OFF: Parking brake released	-
DECELERAT SEN	Deceleration sensor reading / min.: -25.11 m/s, max.: 24.91 m/s	Approximately 0+-0.13 while stationary	-
FORWARD&REA G	Forward and rearward G	min.: -25.11 m/s^2 max.: 24.91 m/s^2	-
FR WHEEL SPD	Wheel speed sensor (FR) reading / min.: 0 mph (0 km/h), max.: 202 mph (326 km/h)	Actual wheel speed	Similar to speed indicated on speedometer
FL WHEEL SPD	Wheel speed sensor (FL) reading / min.: 0 mph (0 km/h), max.: 202 mph (326 km/h)	Actual wheel speed	Similar to speed indicated on speedometer
RR WHEEL SPD	Wheel speed sensor (RR) reading / min.: 0 mph (0 km/h), max.: 202 mph (326 km/h)	Actual wheel speed	Similar to speed indicated on speedometer
RL WHEEL SPD	Wheel speed sensor (RL) reading / min.: 0 mph (0 km/h), max.: 202 mph (326 km/h)	Actual wheel speed	Similar to speed indicated on speedometer
VEHICLE SPD	Maximum speed sensor reading / min.: 0 mph (0 km/h), max.: 202 mph (326 km/h)	Actual wheel speed	Similar to speed indicated on speedometer
FR WHEEL ACCEL	FR wheel acceleration / min.: -25.11 m/s^2, max.: 24.91 m/s^2	min.: -200.84 m/s^2 max.: 199.27 m/s^2	-
FL WHEEL ACCEL	FL wheel acceleration / min.: -25.11 m/s^2, max.: 24.91 m/s^2	min.: -200.84 m/s^2 max.: 199.27 m/s^2	-
RR WHEEL ACCEL	RR wheel acceleration / min.: -25.11 m/s^2, max.: 24.91 m/s^2	min.: -200.84 m/s^2 max.: 199.27 m/s^2	-

Item (Display)	Measurement Item / Range (Display)	Normal Condition	Diagnostic Notes
RL WHEEL ACCEL	RL wheel acceleration / min.: -25.11 m/s^2, max.: 24.91 m/s^2	min.: -200.84 m/s^2 max.: 199.27 m/s^2	-
FR ABS STATUS	FR wheel ABS control status / ON or OFF	ON: During control	-
FL ABS STATUS	FL wheel ABS control status / ON or OFF	ON: During control	-
RR ABS STATUS	RR wheel ABS control status / ON or OFF	ON: During control	-
RL ABS STATUS	RL wheel ABS control status / ON or OFF	ON: During control	-
SOL RELAY	Solenoid relay / ON or OFF	ON: Solenoid relay ON OFF: Solenoid relay OFF	-
ECB MTR RELAY	ABS Motor relay / ON or OFF	ON: Motor relay ON OFF: Motor relay OFF	-
SFRH (*1)	ABS solenoid (SFRH) / ON or OFF	ON: Operates OFF: Does not operate	-
SFRR (*2)	ABS solenoid (SFRR) / ON or OFF	ON: Operates OFF: Does not operate	-
SFLH (*3)	ABS solenoid (SFLH) / ON or OFF	ON: Operates OFF: Does not operate	-
SFLR (*4)	ABS solenoid (SFLR) / ON or OFF	ON: Operates OFF: Does not operate	-
SRRH (*5)	ABS solenoid (SRRH) / ON or OFF	ON: Operates OFF: Does not operate	-
SRRR (*6)	ABS solenoid (SRRR) / ON or OFF	ON: Operates OFF: Does not operate	-
SRLH (*7)	ABS solenoid (SRLH) / ON or OFF	ON: Operates OFF: Does not operate	-
SRLR (*8)	ABS solenoid (SRLR) / ON or OFF	ON: Operates OFF: Does not operate	-
FR SPD OPN	FR speed sensor open detection / ERROR or NORMAL	ERROR: Momentary interruption NORMAL: Normal	-
FL SPD OPN	FL speed sensor open detection / ERROR or NORMAL	ERROR: Momentary interruption NORMAL: Normal	-
RR SPD OPN	RR speed sensor open detection / ERROR or NORMAL	ERROR: Momentary interruption NORMAL: Normal	-
RL SPD OPN	RL speed sensor open detection / ERROR or NORMAL	ERROR: Momentary interruption NORMAL: Normal	-
#DTC	Number of recorded DTCs / min.: 0, max.: 255	min.: 0 max.: 255	-

HINT:

- *1: SFRH (S: Solenoid, F: Front, R: Right, H: Holding)
- *2: SFRR (S: Solenoid, F: Front, R: Right, R: Reduction)
- *3: SFLH (S: Solenoid, F: Front, L: Left, H: Holding)
- *4: SFLR (S: Solenoid, F: Front, L: Left, R: Reduction)
- *5: SRRH (S: Solenoid, R: Rear, R: Right, H: Holding)
- *6: SRRR (S: Solenoid, R: Rear, R: Right, R: Reduction)

- *7: SRLH (S: Solenoid, R: Rear, L: Left, H: Holding)
- *8: SRLR (S: Solenoid, R: Rear, L: Left, R: Reduction)

2. ACTIVE TEST

HINT:

Performing the ACTIVE TEST using the intelligent tester allows parts such as relays and actuators to be operated without removing any parts. Performing the ACTIVE TEST as the first step of troubleshooting is one method of shortening diagnostic time.

It is possible to display the DATA LIST during the ACTIVE TEST.

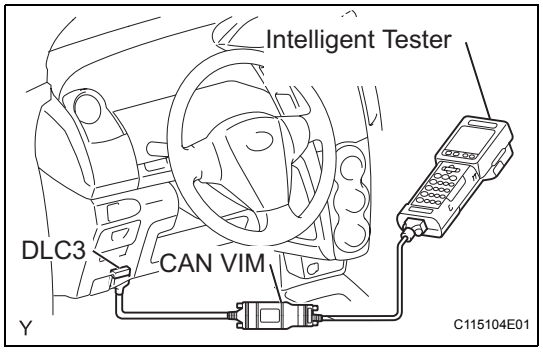

(a) Connect the intelligent tester to the DLC3.
(b) Turn the ignition switch on.
(c) Turn the intelligent tester on.
(d) By following the prompts on the tester, perform the ACTIVE TEST.

HINT:

- The ignition switch must be turned on to proceed to the ACTIVE TEST using the intelligent tester.
- The ACTIVE TESTs of the ABS solenoid, ABS motor relay, ABS warning light and BRAKE warning light are available when the vehicle is stopped.
- The motors stop automatically after 5 seconds of activation to prevent them from being damaged. When the motors are operated repeatedly, certain intervals are required between operations.
- Solenoids stop automatically after 2 seconds of activation to prevent them from being damaged, and can only be operated again after a certain interval.
- Do not depress the brake pedal while only the pressure reduction solenoid valves are on.
- Do not drive 2 or more solenoids simultaneously except to operate the pressure holding solenoid valves and pressure reduction solenoid valves of the wheels.

Item (Display)	Test Details	Diagnostic Notes
ABS WARN LAMP	Turns ABS warning light ON or OFF	Observe combination meter
BRAKE WARN LAMP	Turns BRAKE warning light ON or OFF	Observe combination meter
SOL RELAY	Turns ABS solenoid relay ON or OFF	-
MOTOR RELAY	Turns ABS motor relay ON or OFF	Operation sound of motor can be heard
SRLR	Turns ABS solenoid (SRLR) ON or OFF	Operation sound of solenoid (clicking sound) can be heard
SRLH	Turns ABS solenoid (SRLH) ON or OFF	Operation sound of solenoid (clicking sound) can be heard
SRRR	Turns ABS solenoid (SRRR) ON or OFF	Operation sound of solenoid (clicking sound) can be heard
SRRH	Turns ABS solenoid (SRRH) ON or OFF	Operation sound of solenoid (clicking sound) can be heard

Item (Display)	Test Details	Diagnostic Notes
SFLR	Turns ABS solenoid (SFLR) ON or OFF	Operation sound of solenoid (clicking sound) can be heard
SFLH	Turns ABS solenoid (SFLH) ON or OFF	Operation sound of solenoid (clicking sound) can be heard
SFRR	Turns ABS solenoid (SFRR) ON or OFF	Operation sound of solenoid (clicking sound) can be heard
SFRH	Turns ABS solenoid (SFRH) ON or OFF	Operation sound of solenoid (clicking sound) can be heard

DIAGNOSTIC TROUBLE CODE CHART

NOTICE:
When replacing any parts, turn the ignition switch off.
HINT:

- If no abnormality is found when inspecting parts, check the skid control ECU and check for poor contact at ground points.
- If a DTC is displayed during the DTC check, check the circuit for the DTC listed in the table below. For details of each DTC, refer to the page indicated.
- When 2 or more DTCs are detected, perform circuit inspections one by one until the problem is identified.
- All DTCs in the table below are detected in accordance with 1 trip detection logic.

DTC chart:

DTC No.	Detection Item	Trouble Areas	See page
C0200/31 (*1)	Right Front Wheel Speed Sensor Signal	1. Front speed sensor RH 2. Front speed sensor RH circuit 3. Sensor installation 4. Foreign matter on sensor tip or sensor rotor 5. Brake actuator (skid control ECU)	BC-37
C0205/32 (*1)	Left Front Wheel Speed Sensor Signal	1. Front speed sensor LH 2. Front speed sensor LH circuit 3. Sensor installation 4. Foreign matter on sensor tip or sensor rotor 5. Brake actuator (skid control ECU)	BC-37
C0210/33 (*1)	Right Rear Wheel Speed Sensor Signal	1. Skid control sensor RH 2. Skid control sensor RH circuit 3. Sensor installation 4. Brake actuator (skid control ECU)	BC-44
C0215/34 (*1)	Left Rear Wheel Speed Sensor Signal	1. Skid control sensor LH 2. Skid control sensor LH circuit 3. Sensor installation 4. Brake actuator (skid control ECU)	BC-44
C0226/21	SFR Solenoid Circuit	Brake actuator	BC-51
C0236/22	SFL Solenoid Circuit	Brake actuator	BC-51
C0246/23	SRR Solenoid Circuit	Brake actuator	BC-51
C0256/24	SRL Solenoid Circuit	Brake actuator	BC-51
C0273/13	Open in ABS Motor Relay Circuit	1. ABS1/VSC1 fuse 2. Wire harness (+ BM circuit) 3. Brake actuator (skid control ECU)	BC-54
C0274/14	Short to B+ in ABS Motor Relay Circuit	1. ABS1/VSC1 fuse 2. Wire harness (+ BM circuit) 3. Brake actuator (skid control ECU)	BC-54
C0278/11	Open in ABS Solenoid Relay Circuit	1. ABS2/VSC2 fuse 2. Wire harness (+BS) 3. Brake actuator (skid control ECU)	BC-57
C0279/12	Short to B+ in ABS Solenoid Relay Circuit	1. ABS2/VSC2 fuse 2. Wire harness (+BS) 3. Brake actuator (skid control ECU)	BC-57

DTC No.	Detection Item	Trouble Areas	See page
C1235/35	Foreign Object is Attached on Tip of Front Speed Sensor RH	1. Front speed sensor RH 2. Front speed sensor RH circuit 3. Foreign matter on sensor tip or sensor rotor 4. Brake actuator (skid control ECU)	BC-37
C1236/36	Foreign Object is Attached on Tip of Front Speed Sensor LH	1. Front speed sensor LH 2. Front speed sensor LH circuit 3. Foreign matter on sensor tip or sensor rotor 4. Brake actuator (skid control ECU)	BC-37
C1238/38	Foreign Object is Attached on Tip of Rear Speed Sensor RH	1. Skid control sensor RH 2. Skid control sensor RH circuit 3. Brake actuator (skid control ECU)	BC-44
C1239/39	Foreign Object is Attached on Tip of Rear Speed Sensor LH	1. Skid control sensor LH 2. Skid control sensor LH circuit 3. Brake actuator (skid control ECU)	BC-44
C1241/41	Low Battery Positive Voltage or Abnormally High Battery Positive Voltage	1. Battery 2. Charging system 3. ECU-IG fuse 4. AM1 fuse 5. IG1 relay 6. Brake actuator (skid control ECU)	BC-59
C1249/49	Open in Stop Light Switch Circuit	1. Stop light switch 2. Stop light switch circuit 3. Brake actuator (skid control ECU)	BC-64
C1251/51 (*1)	Open in Pump Motor Circuit	Brake actuator	BC-68
U0073/94	Control Module Communication Bus OFF	CAN communication system	BC-69

HINT:

*1:

Even after the trouble areas are repaired, the ABS warning light will not go off unless the following operations are performed.

1. Drive the vehicle at 12 mph (20 km/h) for 30 seconds or more and check that the ABS warning light goes off.
2. Clear the DTC(s).

Test Mode DTC:

DTC No.	Detection Item	Trouble Areas	See page
C1271/71	Low Output Signal of Front Speed Sensor RH (Test Mode DTC)	1. Front speed sensor RH 2. Front speed sensor RH circuit 3. Sensor installation 4. Foreign matter on sensor tip or sensor rotor	BC-37
C1272/72	Low Output Signal of Front Speed Sensor LH (Test Mode DTC)	1. Front speed sensor LH 2. Front speed sensor LH circuit 3. Sensor installation 4. Foreign matter on sensor tip or sensor rotor	BC-37
C1273/73	Low Output Signal of Rear Speed Sensor RH (Test Mode DTC)	1. Skid control sensor RH 2. Skid control sensor RH circuit 3. Sensor installation	BC-44
C1274/74	Low Output Signal of Rear Speed Sensor LH (Test Mode DTC)	1. Skid control sensor LH 2. Skid control sensor LH circuit 3. Sensor installation	BC-44

DTC No.	Detection Item	Trouble Areas	See page
C1275/75	Abnormal Change in Output Signal of Front Speed Sensor RH (Test Mode DTC)	1. Front speed sensor RH 2. Front speed sensor RH circuit 3. Foreign matter on sensor tip or sensor rotor	BC-37
C1276/76	Abnormal Change in Output Signal of Front Speed Sensor LH (Test Mode DTC)	1. Front speed sensor LH 2. Front speed sensor LH circuit 3. Foreign matter on sensor tip or sensor rotor	BC-37
C1277/77	Abnormal Change in Output Signal of Rear Speed Sensor RH (Test Mode DTC)	1. Skid control sensor RH 2. Skid control sensor RH circuit	BC-44
C1278/78	Abnormal Change in Output Signal of Rear Speed Sensor LH (Test Mode DTC)	1. Skid control sensor LH 2. Skid control sensor LH circuit	BC-44

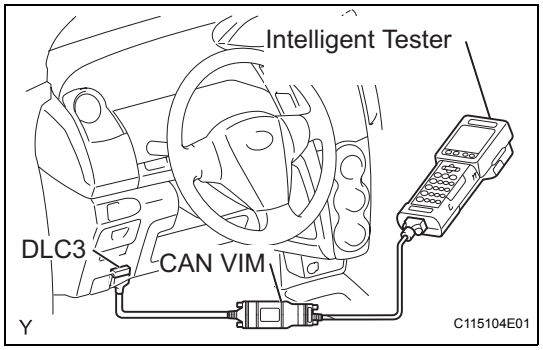

ON-VEHICLE INSPECTION

1. CONNECT INTELLIGENT TESTER

(a) Connect the intelligent tester to the DLC3.
(b) Start the engine and allow it to idle.
(c) Turn the tester on.
(d) Perform the active test using the intelligent tester. Select the following menu items: DIAGNOSIS / OBD/MOBD / select vehicle / ABS / ACTIVE TEST.

2. INSPECT BRAKE ACTUATOR MOTOR

(a) With the motor relay ON, check the actuator motor operation sound.
(b) Turn the motor relay OFF.
(c) Depress the brake pedal and hold it for approximately 15 seconds. Check that the brake pedal cannot be depressed further.
(d) With the motor relay ON, check that the pedal does not pulsate.
NOTICE:
Do not keep the motor relay ON for more than 5 seconds continuously. Allow intervals of at least 20 seconds between consecutive operations.
(e) Turn the motor relay OFF and release the brake pedal.

3. INSPECT BRAKE ACTUATOR SOLENOID (for Front Right Wheel)

NOTICE:
Never turn ON a solenoid in any manner other than described below.
(a) With the brake pedal depressed, perform the following operations.
(b) Turn the SFRH and SFRR solenoids ON simultaneously, and check that the pedal cannot be depressed further.
NOTICE:
Do not keep the motor relay ON for more than 5 seconds continuously. Allow intervals of at least 20 seconds between consecutive operations.

BC

(c) Turn the SFRH and SFRR solenoids OFF simultaneously, and check that the pedal can be depressed further.
(d) Turn the motor relay ON, and check that the pedal can be depressed.
NOTICE:
Do not keep the motor relay ON for more than 5 seconds continuously. Allow intervals of at least 20 seconds between consecutive operations.
(e) Turn the motor relay OFF and release the brake pedal.

4. INSPECT BRAKE ACTUATOR SOLENOID (for Front Left Wheel)
NOTICE:
Never turn ON a solenoid in any manner other than described below.
(a) With the brake pedal depressed, perform the following operations.
(b) Turn the SFLH and SFLR solenoids ON simultaneously, and check that the pedal cannot be depressed further.
NOTICE:
Do not keep the motor relay ON for more than 5 seconds continuously. Allow intervals of at least 20 seconds between consecutive operations.
(c) Turn the SFLH and SFLR solenoids OFF simultaneously, and check that the pedal can be depressed further.
(d) Turn the motor relay ON, and check that the pedal can be depressed.
NOTICE:
Do not keep the motor relay ON for more than 5 seconds continuously. Allow intervals of at least 20 seconds between consecutive operations.
(e) Turn the motor relay OFF and release the brake pedal.

5. INSPECT BRAKE ACTUATOR SOLENOID (for Rear Right Wheel)
NOTICE:
Never turn ON a solenoid in any manner other than described below.
(a) With the brake pedal depressed, perform the following operations.
(b) Turn the SRRH and SRRR solenoids ON simultaneously, and check that the pedal cannot be depressed further.
NOTICE:
Do not keep the motor relay ON for more than 5 seconds continuously. Allow intervals of at least 20 seconds between consecutive operations.
(c) Turn the SRRH and SRRR solenoids OFF simultaneously, and check that the pedal can be depressed further.

(d) Turn the motor relay ON, and check that the pedal can be depressed.
NOTICE:
Do not keep the motor relay ON for more than 5 seconds continuously. Allow intervals of at least 20 seconds between consecutive operations.
(e) Turn the motor relay OFF and release the brake pedal.

6. INSPECT BRAKE ACTUATOR SOLENOID (for Rear Left Wheel)
NOTICE:
Never turn ON a solenoid in any manner other than described below.
(a) With the brake pedal depressed, perform the following operations.
(b) Turn the SRLH and SRLR solenoids ON simultaneously, and check that the pedal cannot be depressed further.
NOTICE:
Do not keep the motor relay ON for more than 5 seconds continuously. Allow intervals of at least 20 seconds between consecutive operations.
(c) Turn the SRLH and SRLR solenoids OFF simultaneously, and check that the pedal can be depressed further.
(d) Turn the motor relay ON, and check that the pedal can be depressed.
NOTICE:
Do not keep the motor relay ON for more than 5 seconds continuously. Allow intervals of at least 20 seconds between consecutive operations.
(e) Turn the motor relay OFF and release the brake pedal.

DTC	**C0200/31**	**Right Front Wheel Speed Sensor Signal**
DTC	**C0205/32**	**Left Front Wheel Speed Sensor Signal**
DTC	**C1235/35**	**Foreign Object is Attached on Tip of Front Speed Sensor RH**
DTC	**C1236/36**	**Foreign Object is Attached on Tip of Front Speed Sensor LH**
DTC	**C1271/71**	**Low Output Signal of Front Speed Sensor RH (Test Mode DTC)**
DTC	**C1272/72**	**Low Output Signal of Front Speed Sensor LH (Test Mode DTC)**
DTC	**C1275/75**	**Abnormal Change in Output Signal of Front Speed Sensor RH (Test Mode DTC)**
DTC	**C1276/76**	**Abnormal Change in Output Signal of Front Speed Sensor LH (Test Mode DTC)**

DESCRIPTION

The speed sensors detect the wheel speeds and send appropriate signals to the skid control ECU. Speed sensor rotors have rows of alternating N and S magnetic poles, and their magnetic fields change as the rotors turn.

The speed sensors detect those magnetic changes and send pulse signals to the skid control ECU. The ECU monitors the wheel speeds through these pulse signals to control the ABS control system.

Front Speed Sensor:

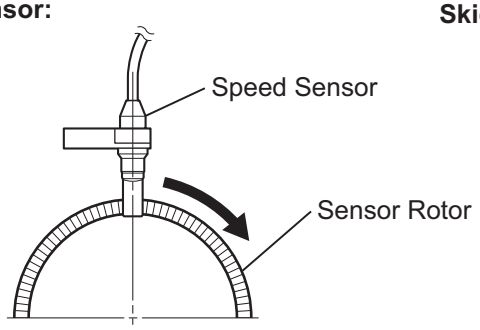

Skid Control Sensor:

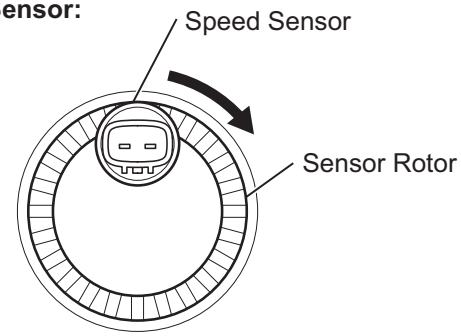

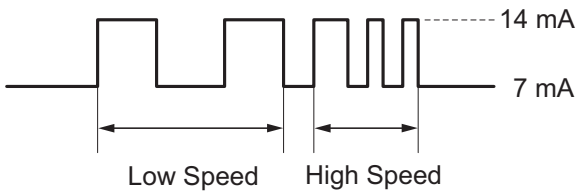

C115116E03

DTC No.	DTC Detecting Conditions	Trouble Areas
C0200/31 C0205/32	When any of following conditions detected: 1. At vehicle speed of 6 mph (10 km/h) or more, open or short in sensor signal circuit continues for 1 second or more. 2. Momentary interruption of sensor signal from abnormal wheel occurs 255 times or more. 3. Open in speed sensor signal circuit continues for 0.5 seconds or more. 4. With IG1 terminal voltage 9.5 V or more, sensor power supply voltage decreases for 0.5 seconds or more. 5. When vehicle driven at speed of more than 6 mph (10 km/h), speed of one wheel below one-seventh of other wheel speeds for 15 seconds or more.	• Front speed sensor • Front speed sensor circuit • Sensor installation • Foreign matter on sensor tip or sensor rotor • Brake actuator (skid control ECU)
C1235/35 C1236/36	When either of following conditions detected: 1. At vehicle speed of 12 mph (20 km/h) or more, noise occurs 75 times or more in sensor signal from abnormal wheel within 5 seconds. 2. At vehicle speed of 6 mph (10 km/h) or more, noise input once per rotor rotation for 15 seconds or more.	• Front speed sensor • Front speed sensor circuit • Foreign matter on sensor tip or sensor rotor • Brake actuator (skid control ECU)
C1271/71 C1272/72	Detected only during test mode.	• Front speed sensor • Front speed sensor circuit • Sensor installation • Foreign matter on sensor tip or sensor rotor
C1275/75 C1276/76	Detected only during test mode.	• Front speed sensor • Front speed sensor circuit • Foreign matter on sensor tip or sensor rotor

BC

HINT:

- DTCs C0200/31 and C1235/35 relate to the front speed sensor RH.
- DTCs C0205/32 and C1236/36 relate to the front speed sensor LH.

WIRING DIAGRAM

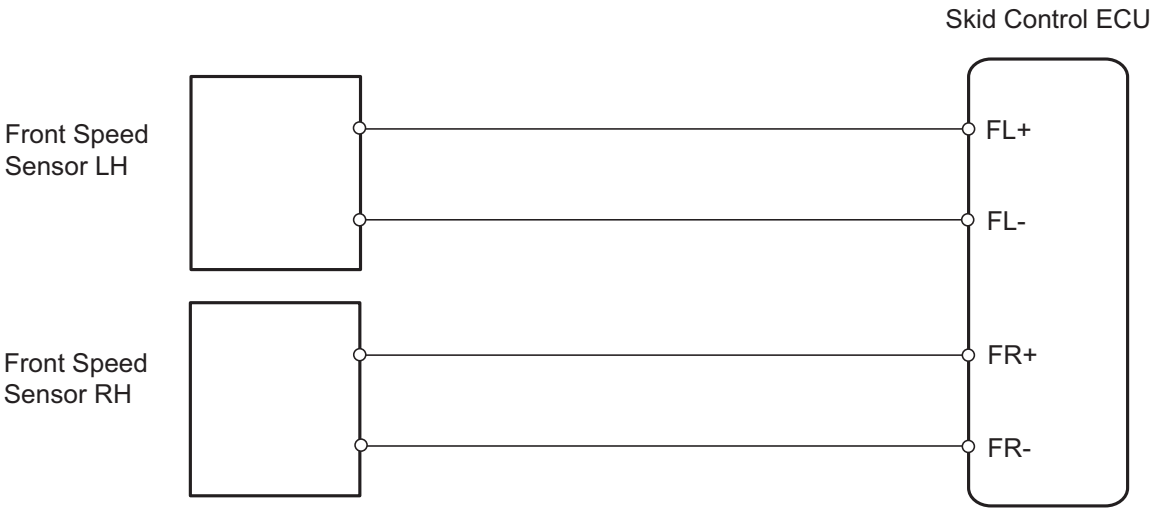

INSPECTION PROCEDURE

NOTICE:

Check the speed sensor signal in test mode after cleaning or replacement (See page BC-14).

1	CHECK HARNESS AND CONNECTOR (MOMENTARY INTERRUPTION)

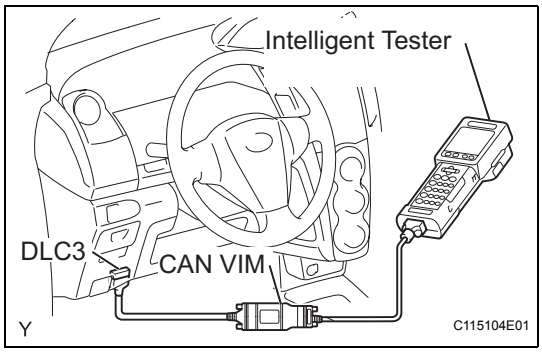

(a) Connect the intelligent tester to the DLC3.
(b) Turn the ignition switch on.
(c) Turn the tester on.
(d) Using the intelligent tester, check for any momentary interruption in the wire harness and connector of the speed sensor.
Select the following menu items: DIAGNOSIS / OBD/ MOBD / select vehicle / ABS / DATA LIST.

DATA LIST: ABS

Item (Display)	Measurement Item / Range (Display)	Normal Condition
FR SPD OPN	FR speed sensor open detection / ERROR or NORMAL	ERROR: Momentary interruption NORMAL: Normal
FL SPD OPN	FL speed sensor open detection / ERROR or NORMAL	ERROR: Momentary interruption NORMAL: Normal

OK:

There are no momentary interruptions.

HINT:

Perform the above inspection before removing the sensor and connector.

BC

NG → REPAIR OR REPLACE HARNESS OR CONNECTOR

OK

2 READ VALUE OF DATA LIST (FRONT SPEED SENSOR)

(a) Connect the intelligent tester to the DLC3.
(b) Start the engine and drive the vehicle.
(c) Turn the tester on.
(d) Select the following menu items: DIAGNOSIS / OBD/ MOBD / select vehicle / ABS / DATA LIST.
(e) Select the item "FR (FL) WHEEL SPD" in the DATA LIST and read the value displayed on the intelligent tester.

DATA LIST: ABS

Item (Display)	Measurement Item / Range (Display)	Normal Condition
FR WHEEL SPD	Wheel speed sensor (FR) reading : min.: 0 mph (0 km/h), max.: 202 mph (326 km/h)	Similar to speed indicated on speedometer
FL WHEEL SPD	Wheel speed sensor (FL) reading : min.: 0 mph (0 km/h), max.: 202 mph (326 km/h)	Similar to speed indicated on speedometer

(f) Check that there is no significant difference between the speed value displayed on the intelligent tester and the speed value displayed on the speedometer when driving the vehicle.
OK:
There is no significant difference in the displayed speed values.
HINT:
There is a tolerance of +- 10% in the speedometer indication.

NG → Go to step 5

OK

3 PERFORM TEST MODE INSPECTION (SIGNAL CHECK)

(a) Perform a TEST MODE inspection and check for DTCs (See page BC-14).
OK:
No DTC output.

NG → REPLACE FRONT SPEED SENSOR

OK

4 RECONFIRM DTC

(a) Clear the DTC(s) (See page BC-25).
(b) Start the engine.
(c) Drive the vehicle at a speed of 12 mph (20 km/h) or more for at least 60 seconds.
(d) Check if the same DTC(s) is output (See page BC-25).

Result

Result	Proceed to
DTC not output	A
DTC output	B

B → **Go to step 11**

A

END

5 CHECK FRONT SPEED SENSOR INSTALLATION

(a) Check that the speed sensor installation bolt is tightened properly.
OK:
The installation bolt is tightened properly.
Torque: 8.5 N*m (87 kgf*cm, 75 in.*lbf)

NG → **TIGHTEN BOLT PROPERLY**

OK

6 CHECK FRONT SPEED SENSOR

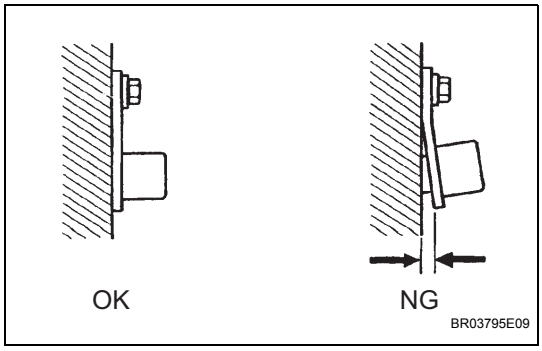

(a) Visually check the speed sensor for deformation and damage.
OK:
No deformation or damage.
No gap between the sensor and front steering knuckle.

NG → **REPLACE FRONT SPEED SENSOR**

OK

7 CHECK SPEED SENSOR TIP

(a) Remove the speed sensor (See page BC-95).
(b) Check the sensor tip.
OK:
No scratches or foreign matter on the sensor tip.

NG → **CLEAN OR REPLACE SPEED SENSOR**

OK

BC

8 CHECK HARNESS AND CONNECTOR (SKID CONTROL ECU - FRONT SPEED SENSOR)

Skid Control ECU (harness side connector):

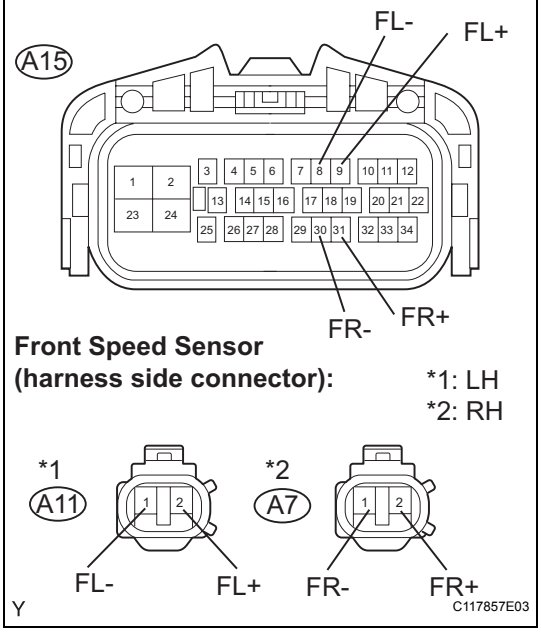

(a) Disconnect the skid control ECU connector.
(b) Disconnect the front speed sensor connector.
(c) Measure the resistance.

Standard resistance (LH)

Tester Connection	Specified Condition
A15-9 (FL+) - A11-2 (FL+)	Below 1 Ω
A15-8 (FL-) - A11-1 (FL-)	Below 1 Ω

Standard resistance (RH)

Tester Connection	Specified Condition
A15-31 (FR+) - A7-2 (FR+)	Below 1 Ω
A15-30 (FR-) - A7-1 (FR-)	Below 1 Ω

NG → **REPAIR OR REPLACE HARNESS OR CONNECTOR**

OK

9 INSPECT FRONT SPEED SENSOR (INPUT VOLTAGE)

Front Speed Sensor (harness side connecor):

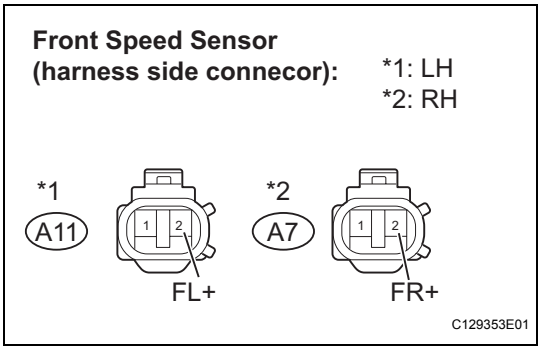

(a) Disconnect the speed sensor connector.
(b) Turn the ignition switch on.
(c) Measure the voltage.

Standard voltage

Tester Connection	Specified Condition
A11-2 (FL+) - Body ground	5.7 to 17.3 V
A7-2 (FR+) - Body ground	5.7 to 17.3 V

NG → **REPLACE BRAKE ACTUATOR**

OK

10 RECONFIRM DTC

(a) Clear the DTC(s) (See page BC-25).
(b) Start the engine.
(c) Drive the vehicle at a speed of 12 mph (20 km/h) or more for at least 60 seconds.
(d) Check if the same DTC(s) is output (See page BC-25).

Result

Result	Proceed to
DTC output	A

BC

Result	Proceed to
DTC not output	B

B → END

A

11 REPLACE FRONT SPEED SENSOR

(a) Replace the front speed sensor (See page BC-95).

NEXT

12 RECONFIRM DTC

(a) Clear the DTC(s) (See page BC-25).
(b) Start the engine.
(c) Drive the vehicle at a speed of 12 mph (20 km/h) or more for at least 60 seconds.
(d) Check if the same DTC(s) is output (See page BC-25).

Result

Result	Proceed to
DTC output	A
DTC not output	B

B → END

A

REPLACE BRAKE ACTUATOR

DTC	C0210/33	Right Rear Wheel Speed Sensor Signal

DTC	C0215/34	Left Rear Wheel Speed Sensor Signal

DTC	C1238/38	Foreign Object is Attached on Tip of Rear Speed Sensor RH

DTC	C1239/39	Foreign Object is Attached on Tip of Rear Speed Sensor LH

DTC	C1273/73	Low Output Signal of Rear Speed Sensor RH (Test Mode DTC)

DTC	C1274/74	Low Output Signal of Rear Speed Sensor LH (Test Mode DTC)

DTC	C1277/77	Abnormal Change in Output Signal of Rear Speed Sensor RH (Test Mode DTC)

DTC	C1278/78	Abnormal Change in Output Signal of Rear Speed Sensor LH (Test Mode DTC)

DESCRIPTION

Refer to DTC C0200/31 (See page BC-37).

DTC No.	DTC Detecting Conditions	Trouble Areas
C0210/33 C0215/34	When any of following conditions detected: 1. At vehicle speed of 6 mph (10 km/h) or more, open or short in sensor signal circuit continues for 1 second or more. 2. Momentary interruption of sensor signal from abnormal wheel occurs 255 times or more. 3. Open in speed sensor signal circuit continues for 0.5 seconds or more. 4. With IG1 terminal voltage 9.5 V or more, sensor power supply voltage decreases for 0.5 seconds or more. 5. When vehicle driven at speed of more than 6 mph (10 km/h), one of wheel speeds below one-seventh of other wheel speeds for 15 seconds or more.	• Skid control sensor • Skid control sensor circuit • Sensor installation • Brake actuator (skid control ECU)
C1238/38 C1239/39	When either of following conditions detected: 1. At vehicle speed of 12 mph (20 km/h) or more, noise occurs 75 times or more in sensor signal from abnormal wheel in 5 seconds. 2. At vehicle speed of 6 mph (10 km/h) or more, noise input once per rotor rotation for 15 seconds or more.	• Skid control sensor • Skid control sensor circuit • Brake actuator (skid control ECU)
C1273/73 C1274/74	Detected only during test mode.	• Skid control sensor • Skid control sensor circuit • Sensor installation
C1277/77 C1278/78	Detected only during test mode.	• Skid control sensor • Skid control sensor circuit

HINT:
- DTC C0210/33 and C1238/38 relate to the skid control sensor RH.
- DTC C0215/34 and C1239/39 relate to the skid control sensor LH.

WIRING DIAGRAM

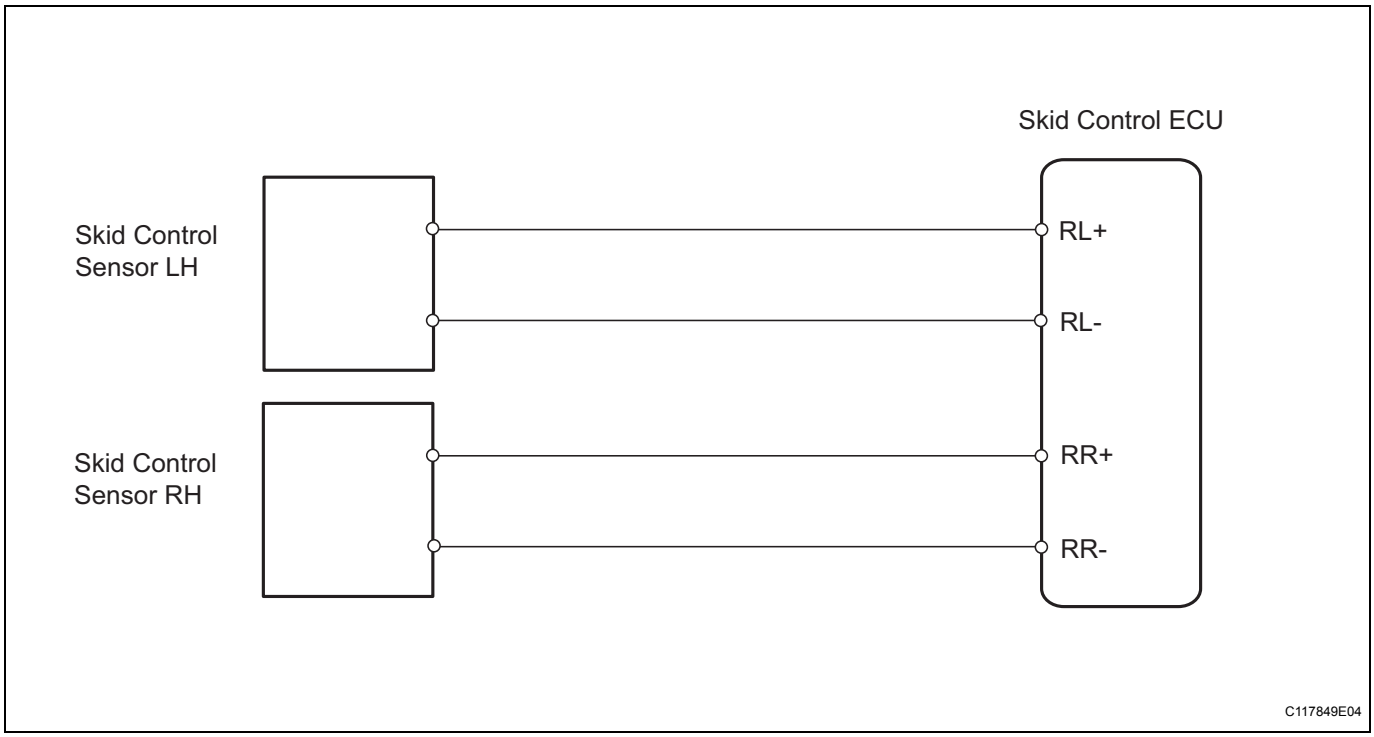

INSPECTION PROCEDURE

NOTICE:
Check the speed sensor signal in test mode after cleaning or replacement (See page BC-14).

1	CHECK HARNESS AND CONNECTOR (MOMENTARY INTERRUPTION)

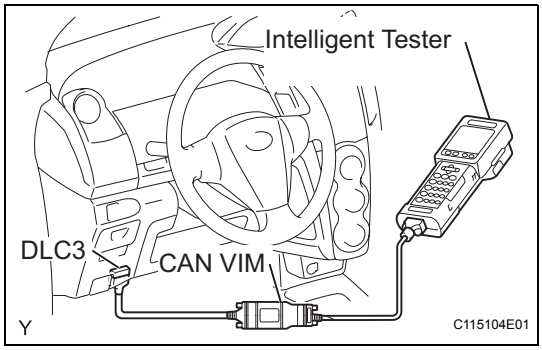

(a) Connect the intelligent tester to the DLC3.
(b) Turn the ignition switch on.
(c) Turn the tester on.
(d) Using the intelligent tester, check for any momentary interruptions in the wire harness of the speed sensor. Select the following menu items: DIAGNOSIS / OBD/ MOBD / select vehicle / ABS / DATA LIST.

DATA LIST: ABS

Item (Display)	Measurement Item / Range (Display)	Normal Condition
RR SPD OPN	RR speed sensor open detection / ERROR or NORMAL	ERROR: Momentary interruption NORMAL: Normal
RL SPD OPN	RL speed sensor open detection / ERROR or NORMAL	ERROR: Momentary interruption NORMAL: Normal

OK:
There are no momentary interruptions.

BC

HINT:
Perform this inspection before removing the sensor and connector.

NG → REPAIR OR REPLACE HARNESS OR CONNECTOR

OK

2	READ VALUE OF DATA LIST (SKID CONTROL SENSOR)

(a) Connect the intelligent tester to the DLC3.
(b) Start the engine and drive the vehicle.
(c) Turn the tester on.
(d) Select the following menu items: DIAGNOSIS / OBD/ MOBD / select vehicle / ABS / DATA LIST.
(e) Select the item "RR (RL) WHEEL SPD" in the DATA LIST and read the value displayed on the intelligent tester.

DATA LIST: ABS

Item (Display)	Measurement Item / Range (Display)	Normal Condition
RR WHEEL SPD	Wheel speed sensor (RR) reading : min.: 0 mph (0 km/h), max.: 202 mph (326 km/h)	Similar to speed indicated on speedometer
RL WHEEL SPD	Wheel speed sensor (RL) reading : min.: 0 mph (0 km/h), max.: 202 mph (326 km/h)	Similar to speed indicated on speedometer

(f) Check that there is no significant difference between the speed value displayed on the intelligent tester and the speed value displayed on the speedometer when driving the vehicle.
OK:
There is no significant difference in the displayed speed values.
HINT:
There is a tolerance of +- 10% in the speedometer indication.

NG → Go to step 5

OK

3	PERFORM TEST MODE INSPECTION (SIGNAL CHECK)

(a) Perform a TEST MODE inspection and check for DTCs (See page BC-14).
OK:
No DTCs output.

NG → REPAIR OR REPLACE HARNESS OR CONNECTOR

OK

BC

4	RECONFIRM DTC

(a) Clear the DTC(s) (See page BC-25).
(b) Start the engine.
(c) Drive the vehicle at a speed of 12 mph (20 km/h) or more for at least 60 seconds.
(d) Check if the same DTC(s) is output (See page BC-25).

Result

Result	Proceed to
DTC not output	A
DTC output	B

B → **Go to step 10**

A

END

5	CHECK SKID CONTROL SENSOR

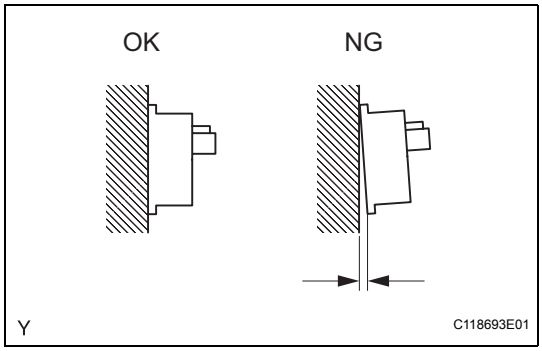

(a) Visually check the skid control sensor for deformation and damage.
OK:
No deformation or damage.
No gap between the sensor and rear axle carrier.

NG → **REPLACE SKID CONTROL SENSOR**

OK

6 INSPECT SKID CONTROL SENSOR WIRE

Skid Control Sensor Wire:

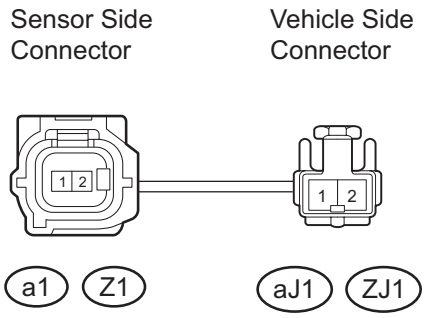

(a) Disconnect the skid control sensor wire.
(b) Measure the resistance.

Standard resistance (LH)

Tester Connection	Specified Condition
a1-1 - aJ1-1	Below 1 Ω
a1-1 - aJ1-2	10 kΩ or higher
a1-1 - Body ground	10 kΩ or higher
a1-2 - aJ1-1	10 kΩ or higher
a1-2 - aJ1-2	Below 1 Ω
a1-2 - Body ground	10 kΩ or higher

Standard resistance (RH)

Tester Connection	Specified Condition
Z1-1 - ZJ1-1	Below 1 Ω
Z1-1 - ZJ1-2	10 kΩ or higher
Z1-1 - Body ground	10 kΩ or higher
Z1-2 - ZJ1-1	10 kΩ or higher
Z1-2 - ZJ1-2	Below 1 Ω
Z1-2 - Body ground	10 kΩ or higher

NG → **REPLACE SKID CONTROL SENSOR WIRE**

OK

7 CHECK HARNESS AND CONNECTOR (SKID CONTROL ECU - REAR SPEED SENSOR)

Skid Control ECU (harness side connector):

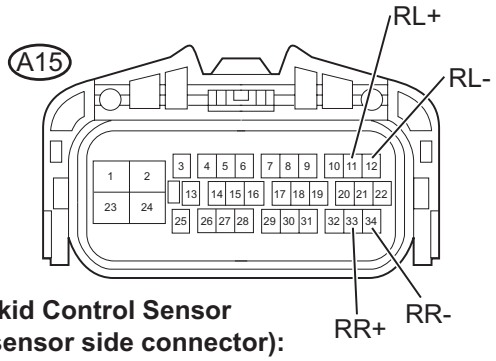

Skid Control Sensor (sensor side connector):

*1: LH
*2: RH

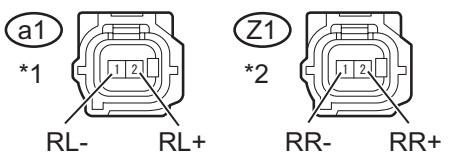

(a) Disconnect the skid control ECU connector.
(b) Disconnect the skid control sensor connector.
(c) Measure the resistance.

Standard resistance (LH)

Tester Connection	Specified Condition
A15-11 (RL+) - a1-2 (RL+)	Below 1 Ω
A15-12 (RL-) - a1-1 (RL-)	Below 1 Ω

Standard resistance (RH)

Tester Connection	Specified Condition
A15-33 (RR+) - Z1-2 (RR+)	Below 1 Ω
A15-34 (RR-) - Z1-1 (RR-)	Below 1 Ω

NG → **REPAIR OR REPLACE HARNESS OR CONNECTOR**

BC

OK

8	CHECK SKID CONTROL SENSOR (INPUT VOLTAGE)

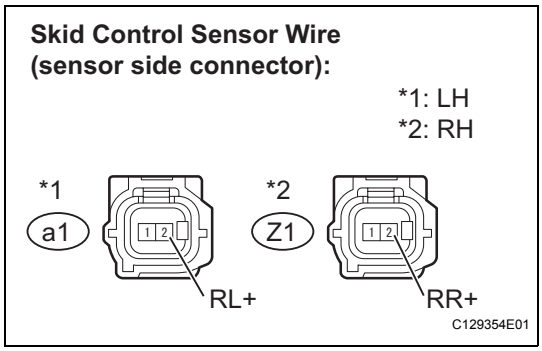

(a) Disconnect the skid control sensor connector.
(b) Turn the ignition switch on.
(c) Measure the voltage.

Standard voltage

Tester Connection	Specified Condition
a1-2 (RL+) - Body ground	5.7 to 17.3 V
Z1-2 (RR+) - Body ground	5.7 to 17.3 V

NG → REPLACE BRAKE ACTUATOR

OK

9	RECONFIRM DTC

(a) Clear the DTC(s) (See page BC-25).
(b) Start the engine.
(c) Drive the vehicle at a speed of 12 mph (20 km/h) or more for at least 60 seconds.
(d) Check if the same DTC(s) is output (See page BC-25).

Result

Result	Proceed to
DTC output	A
DTC not output	B

B → END

A

10	REPLACE SKID CONTROL SENSOR

(a) Replace the rear speed sensor.

NEXT

11	RECONFIRM DTC

(a) Clear the DTC(s) (See page BC-25).
(b) Start the engine.
(c) Drive the vehicle at a speed of 12 mph (20 km/h) or more for at least 60 seconds.
(d) Check if the same DTC(s) is output (See page BC-25).

Result

Result	Proceed to
DTC output	A
DTC not output	B

BC

B → **END**

A

REPLACE BRAKE ACTUATOR

DTC	C0226/21	SFR Solenoid Circuit

DTC	C0236/22	SFL Solenoid Circuit

DTC	C0246/23	SRR Solenoid Circuit

DTC	C0256/24	SRL Solenoid Circuit

DESCRIPTION

This solenoid is turned on in accordance with signals from the skid control ECU and controls the pressure on the wheel cylinders to control the braking force.

DTC No.	DTC Detecting Condition	Trouble Area
C0226/21 C0236/22 C0246/23 C0256/24	Open or short in solenoid circuit continues for 0.05 seconds or more.	Brake actuator

HINT:
C0226/21, C0236/22, C0246/23 and C0256/24:
The skid control ECU begins to detect these DTCs when the vehicle speed exceeds 4 mph (6 km/h).

WIRING DIAGRAM

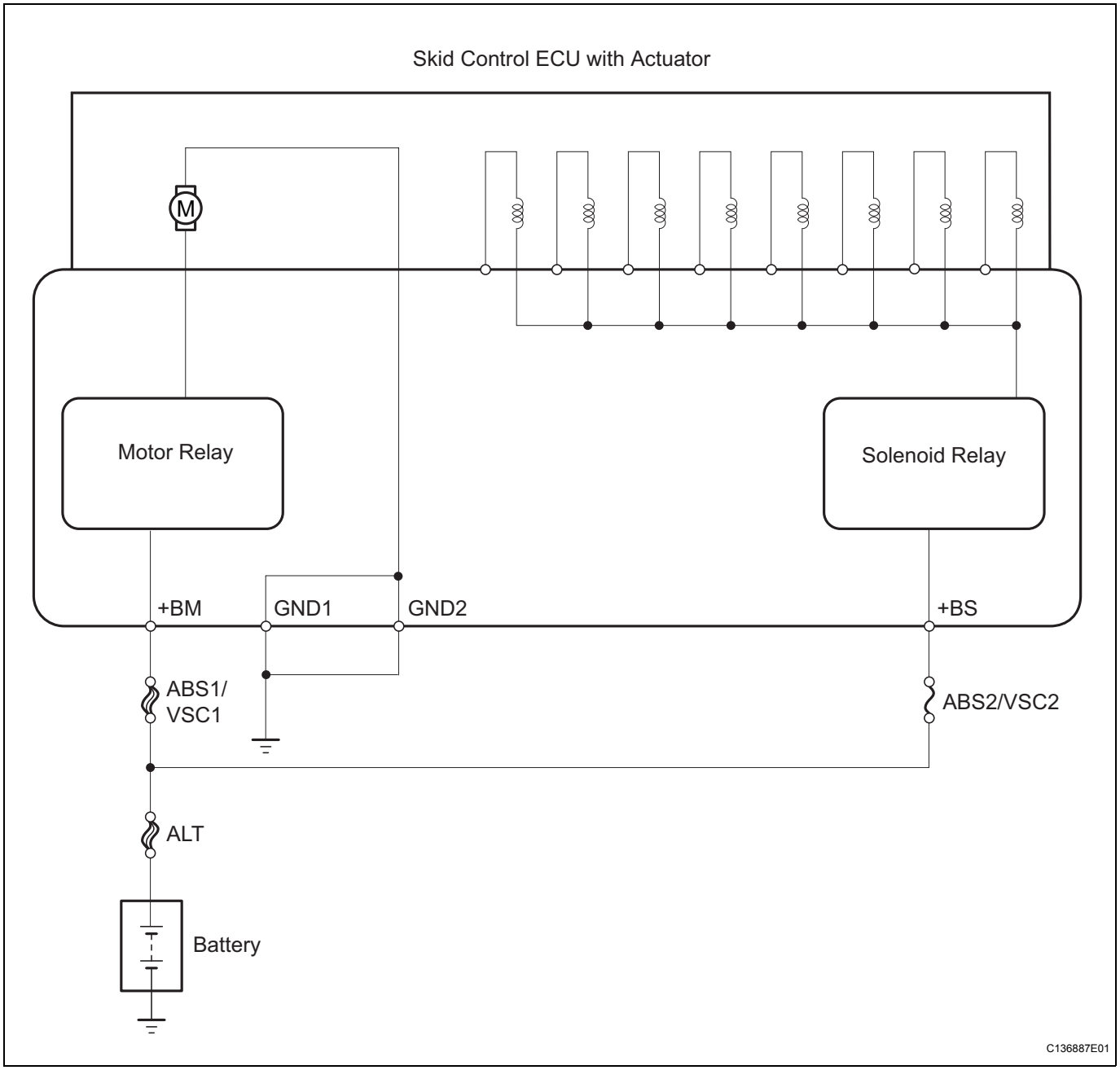

INSPECTION PROCEDURE

BC

1	RECONFIRM DTC

(a) Clear the DTC(s) (See page BC-25).
(b) Start the engine.
(c) Drive the vehicle at 4 mph (6 km/h) or more to activate the initial check.
(d) Check if the same DTC(s) is output (See page BC-25).

Result

Result	Proceed to
DTC output	A

Result	Proceed to
DTC not output	B

HINT:
The DTCs may be stored due to a malfunction in the connector terminal.

B → **END**

A

REPLACE BRAKE ACTUATOR

DTC	C0273/13	Open in ABS Motor Relay Circuit

DTC	C0274/14	Short to B+ in ABS Motor Relay Circuit

DESCRIPTION

The ABS motor relay supplies the power to the ABS pump motor. While the ABS is activated, the skid control ECU switches the motor relay ON and operates the ABS pump motor.

DTC No.	DTC Detecting Conditions	Trouble Areas
C0273/13	When either of following conditions (1 or 2) detected: 1. All of following conditions continue for 0.2 seconds or more. (a) IG1 terminal voltage between 9.5 V and 17.2 V. (b) During initial check or ABS operation. (c) Relay contact open when relay on. 2. Both of following conditions continue for 0.2 seconds or more. (a) IG1 terminal voltage 9.5 V or less. (b) Relay contact remains open when relay on.	• ABS1/VSC1 fuse • Wire harness (+BM circuit) • Brake actuator (skid control ECU)
C0274/14	When motor relay off, motor relay remains closed for 4 seconds or more.	• ABS1/VSC1 fuse • Wire harness (+BM circuit) • Brake actuator (skid control ECU)

HINT:
C0273/13 and C0274/14: The skid control ECU begins to detect these DTCs when the vehicle speed exceeds 4 mph (6 km/h).

WIRING DIAGRAM

See page BC-52.

INSPECTION PROCEDURE

1	INSPECT FUSE (ABS1/VSC1)

Engine Room R/B:

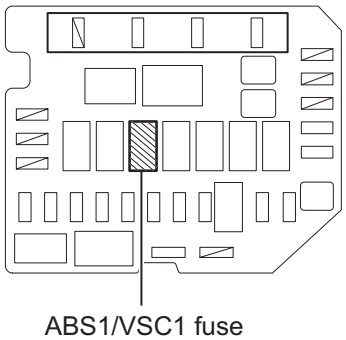

(a) Remove the ABS1/VSC1 fuse from the engine room R/B.
(b) Measure the resistance.
Standard resistance:
Below 1 Ω

NG → **CHECK FOR SHORTS IN ALL HARNESSES AND CONNECTORS CONNECTED TO FUSE AND REPLACE FUSE**

OK

BC

2	CHECK HARNESS AND CONNECTOR (BATTERY - SKID CONTROL ECU - BODY GROUND)

Skid Control ECU (harness side connector):

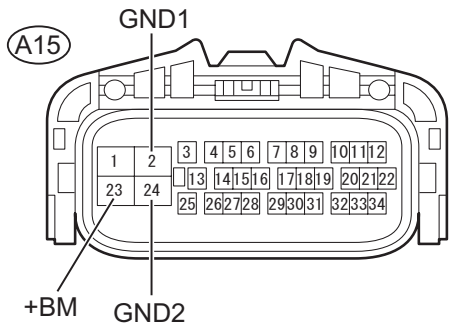

(a) Disconnect the skid control ECU connector.
(b) Measure the voltage.
Standard voltage

Tester Connection	Specified Condition
A15-23 (+BM) - Body ground	11 to 14 V

(c) Measure the resistance
Standard resistance

Tester Connection	Specified Condition
A15-2 (GND1) - Body ground	Below 1 Ω
A15-24 (GND2) - Body ground	Below 1 Ω

NG → **REPAIR OR REPLACE HARNESS OR CONNECTOR**

OK

3	PERFORM ACTIVE TEST USING INTELLIGENT TESTER (ABS MOTOR RELAY)

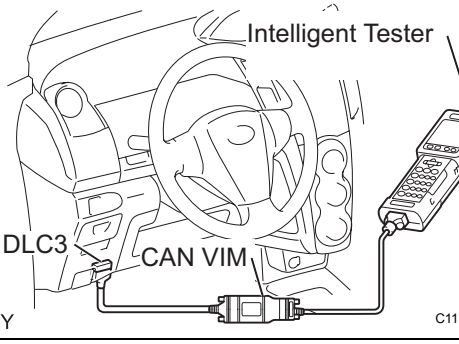

(a) Connect the intelligent tester to the DLC3.
(b) Turn the ignition switch on.
(c) Turn the tester on.
(d) Clear the DTCs (See page BC-25).
(e) Perform the active test using the intelligent tester. Select the following menu items: Chassis / ABS/VSC/TRC / Active Test.

ACTIVE TEST: ABS

Item (Display)	Vehicle Condition / Test Details	Diagnostic Note
MOTOR RELAY	Turns ABS motor relay ON / OFF	Operating sound of motor can be heard

(f) Check for the operation sound of the ABS motor when operating it with the intelligent tester.
OK:
The operation sound of the ABS motor can be heard.

NG → **REPLACE BRAKE ACTUATOR**

OK

4	RECONFIRM DTC

(a) Clear the DTC(s) (See page BC-25).
(b) Start the engine.

BC

(c) Drive the vehicle at 4 mph (6 km/h) or more to activate the initial check.
(d) Check if the same DTC(s) is output (See page BC-25).

Result

Result	Proceed to
DTC output	A
DTC not output	B

B → END

A

REPLACE BRAKE ACTUATOR

DTC	C0278/11	Open in ABS Solenoid Relay Circuit

DTC	C0279/12	Short to B+ in ABS Solenoid Relay Circuit

DESCRIPTION

The solenoid relay supplies power to the ABS solenoid.
After the ignition switch is turned on, the vehicle speed has reached 3 mph (5 km/h) and the solenoid is determined to be normal by the initial check self-diagnosis, the relay switches on. If any open or short circuits are detected, the relay switches off.
These DTCs may be set if the voltage supply to the solenoid relay (+BS) falls below the DTC detection threshold due to the battery or alternator outputs being insufficient.

DTC No.	DTC Detecting Condition	Trouble Areas
C0278/11	When either of following conditions (1 or 2) detected: 1. Both of following conditions continue for 0.2 seconds or more. (a) IG1 terminal voltage between 9.5 V and 17.2 V. (b) Solenoid relay contact open when relay on. 2. Both of following conditions continue for 0.2 seconds or more. (a) IG1 terminal voltage becomes lower than 9.5 V when relay turned on. (b) Relay contact remains open.	• ABS2/VSC2 fuse • Wire harness (+BS) • Brake actuator (skid control ECU)
C0279/12	Immediately after ignition switch turned on, solenoid relay contact closed for 0.2 seconds or more when relay off.	• ABS2/VSC2 fuse • Wire harness (+BS) • Brake actuator (skid control ECU)

HINT:
C0278/11 and C0279/12: The skid control ECU begins to detect these DTCs when the vehicle speed exceeds 4 mph (6 km/h).

WIRING DIAGRAM

See page BC-52.

INSPECTION PROCEDURE

1	INSPECT FUSE (ABS2/VSC2)

Engine Room R/B:

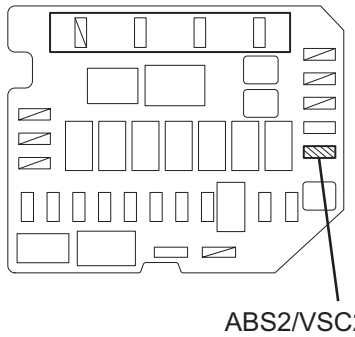

(a) Remove the ABS2/VSC2 fuse from the engine room R/B.
(b) Measure the resistance.
Standard resistance:
Below 1 Ω

NG → **CHECK FOR SHORTS IN ALL HARNESSES AND CONNECTORS CONNECTED TO FUSE AND REPLACE FUSE**

BC

OK

2	CHECK HARNESS AND CONNECTOR (BATTERY - SKID CONTROL ECU - BODY GROUND)

Skid Control ECU
(harness side connector):

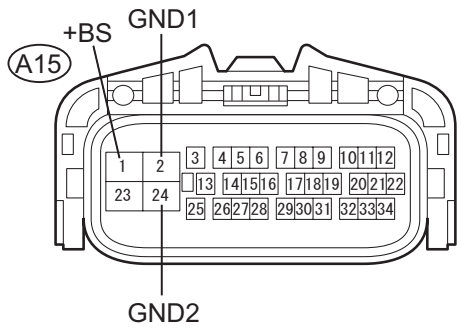

C117862E01

(a) Disconnect the skid control ECU connector.
(b) Measure the voltage.
Standard voltage

Tester Connection	Specified Condition
A15-1 (+BS) - Body ground	11 to 14 V

(c) Measure the resistance.
Standard resistance

Tester Connection	Specified Condition
A15-2 (GND1) - Body ground	Below 1 Ω
A15-24 (GND2) - Body ground	Below 1 Ω

NG → REPAIR OR REPLACE HARNESS OR CONNECTOR

OK

3	RECONFIRM DTC

(a) Clear the DTC(s) (See page BC-25).
(b) Start the engine.
(c) Drive the vehicle at 4 mph (6 km/h) or more to activate the initial check.
(d) Check if the same DTC(s) is output (See page BC-25).

Result

Result	Proceed to
DTC output	A
DTC not output	B

B → END

A

REPLACE BRAKE ACTUATOR

BC

DTC	C1241/41	Low Battery Positive Voltage or Abnormally High Battery Positive Voltage

DESCRIPTION

When there is an abnormality in the power supply circuit of the brake actuator (skid control ECU), the skid control ECU sets a DTC and the operation is prohibited by the fail-safe function. This DTC is set when the voltage supplied to terminal IG1 is outside the DTC detection threshold, due to abnormalities in the battery, power source circuits or charging circuits such as the alternator circuit.
The fail-safe function is canceled when the voltage to terminal IG1 returns to normal.

DTC No.	DTC Detecting Conditions	Trouble Areas
C1241/41	When any of following conditions detected: 1. At vehicle speed of 2 mph (3 km/h) or more, IG1 terminal voltage 9.5 V or less for 10 seconds or more. 2. When IG1 terminal voltage below 9.5 V, relay off condition continues for 0.2 seconds or more despite ECU turning motor relay on. 3. When IG1 terminal voltage below 9.5 V, wheel speed sensor power source voltage decreases for 60 seconds or more.	• Battery • Charging system • ECU-IG fuse • AM1 fuse • IG1 relay • Brake actuator (skid control ECU)

WIRING DIAGRAM

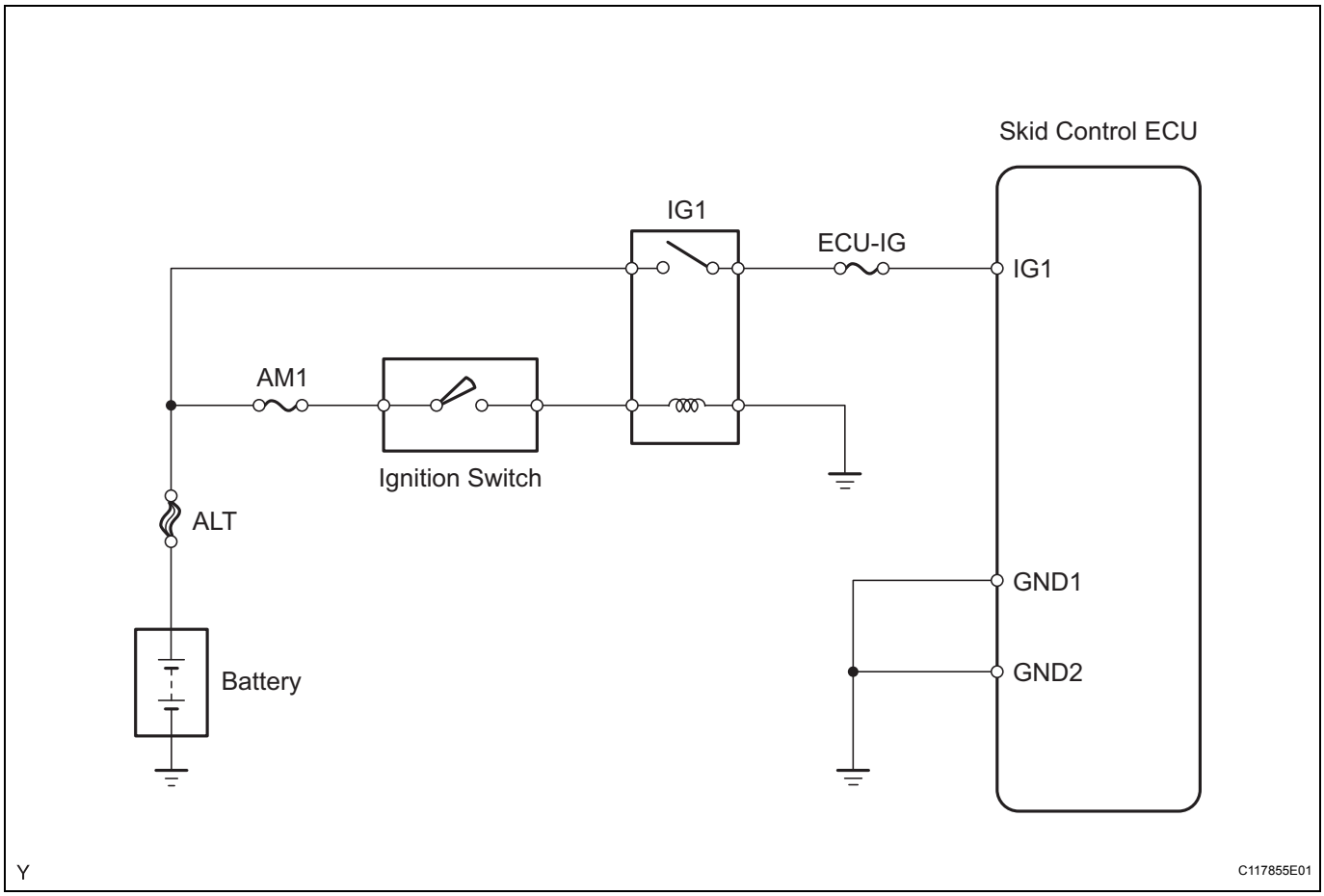

BC

INSPECTION PROCEDURE

1 CHECK SKID CONTROL ECU TERMINAL VOLTAGE

Skid Control ECU (harness side connector):

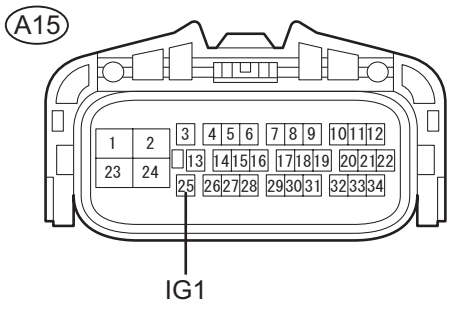

(a) Disconnect the skid control ECU connector.
(b) Turn the ignition switch on.
(c) Measure the voltage.

Standard voltage

Tester Connection	Specified Condition
A15-25 (IG1) - Body ground	11 to 14 V

NG → **Go to step 3**

OK

2 RECONFIRM DTC

(a) Clear the DTC (See page BC-25).
(b) Drive the vehicle at 2 mph (3 km/h) or more for several seconds.
(c) Check if the same DTC is output (See page BC-25).

Result

Result	Proceed to
DTC output	A
DTC not output	B

B → **END**

A

REPLACE BRAKE ACTUATOR

BC

3	INSPECT FUSES (ECU-IG, AM1)

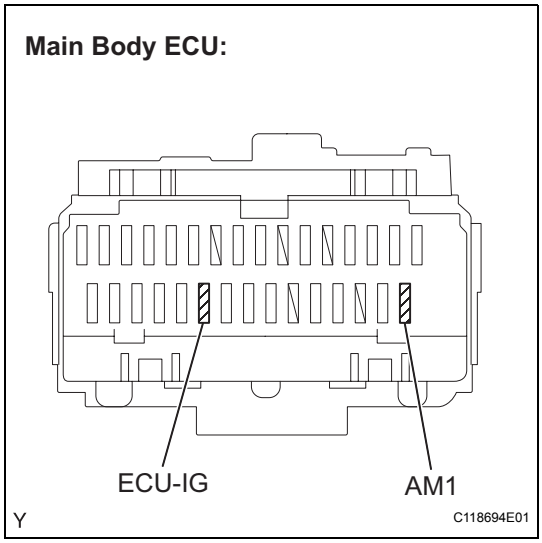

(a) Remove the ECU-IG fuse and AM1 fuse from the main body ECU.
(b) Measure the resistance.
Standard resistance:
Below 1 Ω

NG → **CHECK FOR SHORTS IN ALL HARNESSES AND CONNECTORS CONNECTED TO FUSE AND REPLACE FUSE**

OK

4	INSPECT BATTERY

(a) Check the battery voltage.
Standard voltage:
11 to 14 V

NG → **CHECK CHARGING SYSTEM**

OK

5	INSPECT IG1 RELAY

Main Body ECU:

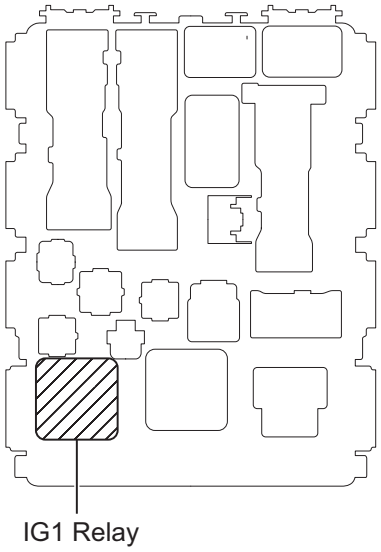

Y C118689E01

(a) Remove the IG1 relay from the main body ECU.

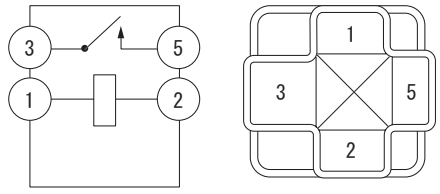

C113445

(b) Measure the resistance.
Standard resistance

Tester Connection	Condition	Specified Condition
3 - 5	Always	10 kΩ or higher
3 - 5	Apply B+ between terminals 1 and 2	Below 1 Ω

NG → **REPLACE IG1 RELAY**

OK

BC

6	CHECK HARNESS AND CONNECTOR (SKID CONTROL ECU - BODY GROUND)

Skid Control ECU (harness side connector):

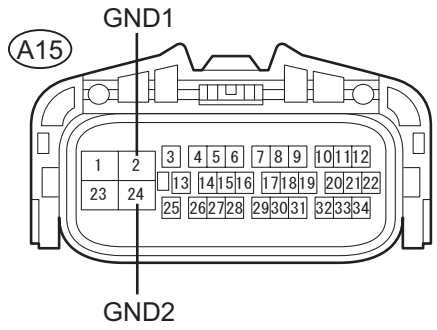

(a) Disconnect the skid control ECU connector.
(b) Measure the resistance.
Standard resistance

Tester Connection	Specified Condition
A15-2 (GND1) - Body ground	Below 1 Ω
A15-24 (GND2) - Body ground	Below 1 Ω

NG → **REPAIR OR REPLACE HARNESS OR CONNECTOR**

OK

REPLACE BRAKE ACTUATOR

DTC	C1249/49	Open in Stop Light Switch Circuit

DESCRIPTION

The skid control ECU detects the brake operating conditions through a signal transmitted by the stop light switch. The skid control ECU incorporates an open circuit detection circuit. This DTC is set under either of the following conditions:

- An open is detected in the stop light signal input line when the stop light switch is off.
- An open is detected in the stop light circuit lead to the ground when the stop light switch is off.

DTC No.	DTC Detecting Conditions	Trouble Areas
C1249/49	When IG1 terminal voltage 9.5 to 17.2 V, open circuit of stop light switch continues for 0.3 seconds or more.	• Stop light switch • Stop light switch circuit • Brake actuator (skid control ECU)

WIRING DIAGRAM

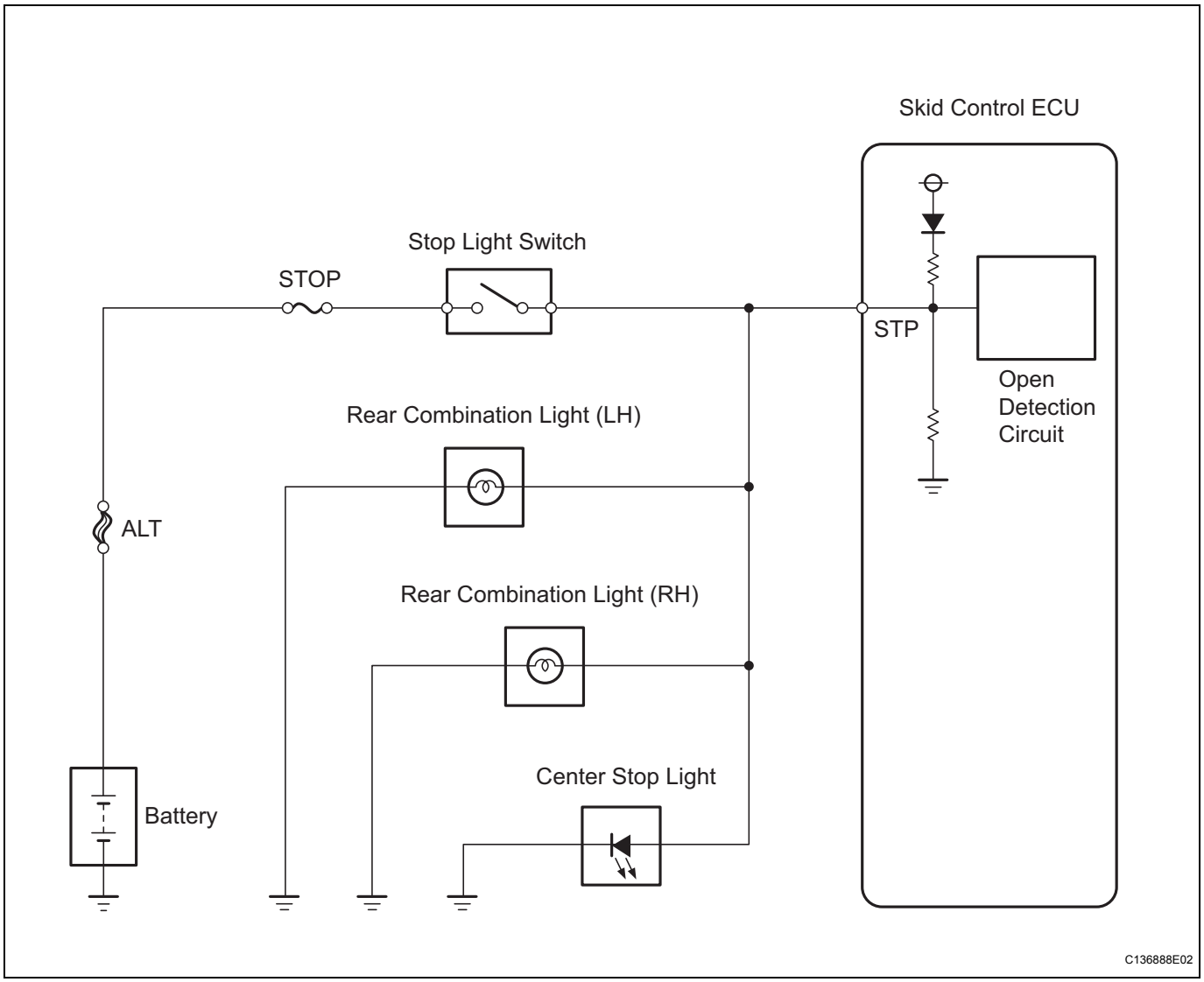

BC

INSPECTION PROCEDURE

1	CHECK STOP LIGHT SWITCH OPERATION

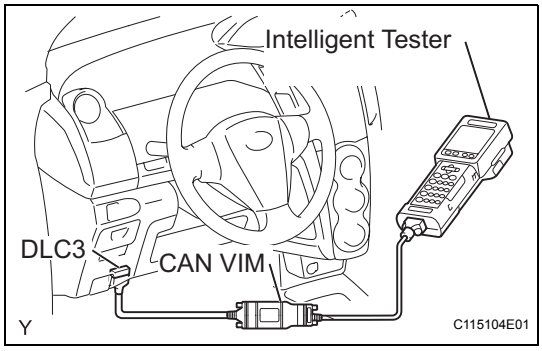

(a) Connect the intelligent tester to the DLC3.
(b) Turn the ignition switch on.
(c) Turn the tester on.
(d) Select the following menu items: DIAGNOSIS / OBD/ MOBD / select vehicle / ABS / DATA LIST.

DATA LIST: ABS

Item (Display)	Measurement Item / Range (Display)	Normal Conditions
STOP LAMP SW	Stop light switch / ON or OFF	ON: Brake pedal depressed OFF: Brake pedal released

(e) Check that "STOP LAMP SW" is turned ON and OFF when the brake pedal is depressed and released.
OK:
"STOP LAMP SW" is turned ON and OFF in accordance with the operation of the brake pedal.

NG → **Go to step 3**

OK

2	CHECK SKID CONTROL ECU TERMINAL VOLTAGE (STP)

Skid Control ECU (harness side connector):

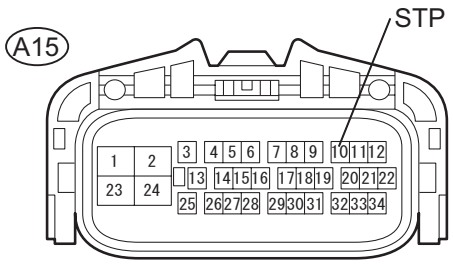

(a) Disconnect the skid control ECU connector.
(b) Measure the voltage.
Standard voltage

Tester Connection	Switch Condition	Specified Condition
A15-10 (STP) - Body ground	Brake pedal depressed	8 to 14 V
A15-10 (STP) - Body ground	Brake pedal released	Below 4.0 V

NG → **Go to step 5**

OK

REPLACE BRAKE ACTUATOR

BC

3	INSPECT FUSE (STOP)

Main Body ECU:

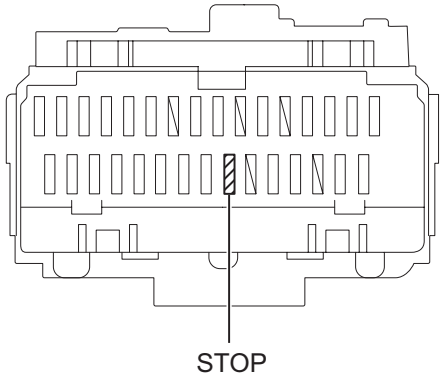

(a) Remove the STOP fuse from the main body ECU.
(b) Measure the resistance.
Standard resistance:
Below 1 Ω

NG → **CHECK FOR SHORTS IN ALL HARNESSES AND CONNECTORS CONNECTED TO FUSE AND REPLACE FUSE**

OK

4	INSPECT STOP LIGHT SWITCH ASSEMBLY

Stop Light Switch:

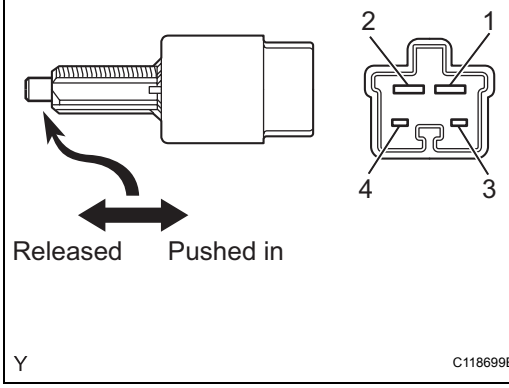

(a) Disconnect the stop light switch connector.
(b) Measure the resistance.
Standard resistance

Tester Connection	Switch Condition	Specified Condition
1 - 2	Switch pin released	Below 1 Ω
3 - 4	Switch pin released	10 kΩ or higher
1 - 2	Switch pin pushed in	10 kΩ or higher
3 - 4	Switch pin pushed in	Below 1 Ω

NG → **REPLACE STOP LIGHT SWITCH ASSEMBLY**

OK

5	CHECK HARNESS AND CONNECTOR (SKID CONTROL ECU - STOP LIGHT SWITCH)

Skid Control ECU (harness side connector):

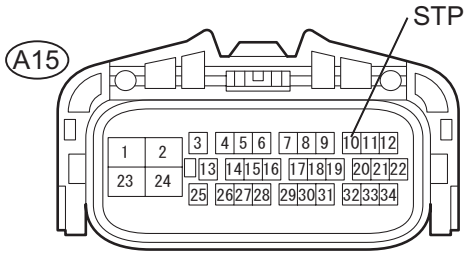

Stop Light Switch (harness side connector):

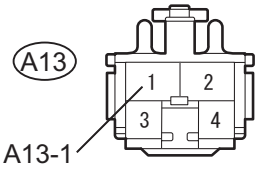

C118696E01

(a) Disconnect the skid control ECU connector.
(b) Disconnect the stop light switch connector.
(c) Measure the resistance.

Standard resistance

Tester Connection	Specified Condition
A15-10 (STP) - A13-1	Below 1 Ω

NG → **REPAIR OR REPLACE HARNESS OR CONNECTOR**

OK

6	RECONFIRM DTC

(a) Clear the DTC (See page BC-25).
(b) Check if the same DTC is output (See page BC-25).

Result

Result	Proceed to
DTC output	A
DTC not output	B

B → **END**

A

BC

REPLACE BRAKE ACTUATOR

DTC	C1251/51	Open in Pump Motor Circuit

DESCRIPTION

The motor relay (semiconductor relay) is housed in the skid control ECU and drives the pump motor based on a signal from the skid control ECU.

DTC No.	DTC Detecting Conditions	Trouble Areas
C1251/51	When either of following conditions detected: 1. Actuator pump motor does not operate properly. 2. Open in actuator pump motor circuit continues for at least 2 seconds.	Brake actuator

WIRING DIAGRAM

See page BC-52.

INSPECTION PROCEDURE

1 CHECK POWER SOURCE CIRCUIT

(a) Check that the battery voltage, power source voltage, and the ground condition of the skid control ECU are normal.

OK:

The battery voltage, power source voltage, and the ground condition of the skid control ECU are normal.

NG → **REPAIR POWER SOURCE CIRCUIT**

OK ↓

2 RECONFIRM DTC

(a) Clear the DTC (See page BC-25).
(b) Start the engine.
(c) Drive the vehicle at a speed of 4 mph (6 km/h) or more for several seconds.
(d) Check if the same DTC is output (See pageBC-25).

Result

Result	Proceed to
DTC output	A
DTC not output	B

B → **END**

A ↓

REPLACE BRAKE ACTUATOR

DTC	U0073/94	Control Module Communication Bus OFF

DESCRIPTION

DTC No.	DTC Detecting Conditions	Trouble Areas
U0073/94	When either of following conditions detected: 1. After data output from skid control ECU completed, output continues for 5 seconds or more. 2. Bus off condition occurs once or more per 0.1 second 10 times in succession.	CAN communication system

INSPECTION PROCEDURE

1	RECONFIRM DTC

(a) Clear the DTC (See page BC-25).
(b) Check if the same DTC is output (See page BC-25).

Result

Result	Proceed to
DTC output	A
DTC not output	B

B → END

A

REPAIR CAN COMMUNICATION SYSTEM

ABS Warning Light Remains ON

DESCRIPTION

If any of the following conditions are detected, the ABS warning light remains on:

1. The ECU connectors are disconnected from the skid control ECU.
2. There is a malfunction in the skid control ECU internal circuit.
3. There is an open or short in the wire harness between the combination meter and the skid control ECU.

HINT:

The intelligent tester may not be used when there is a malfunction in the skid control ECU.

WIRING DIAGRAM

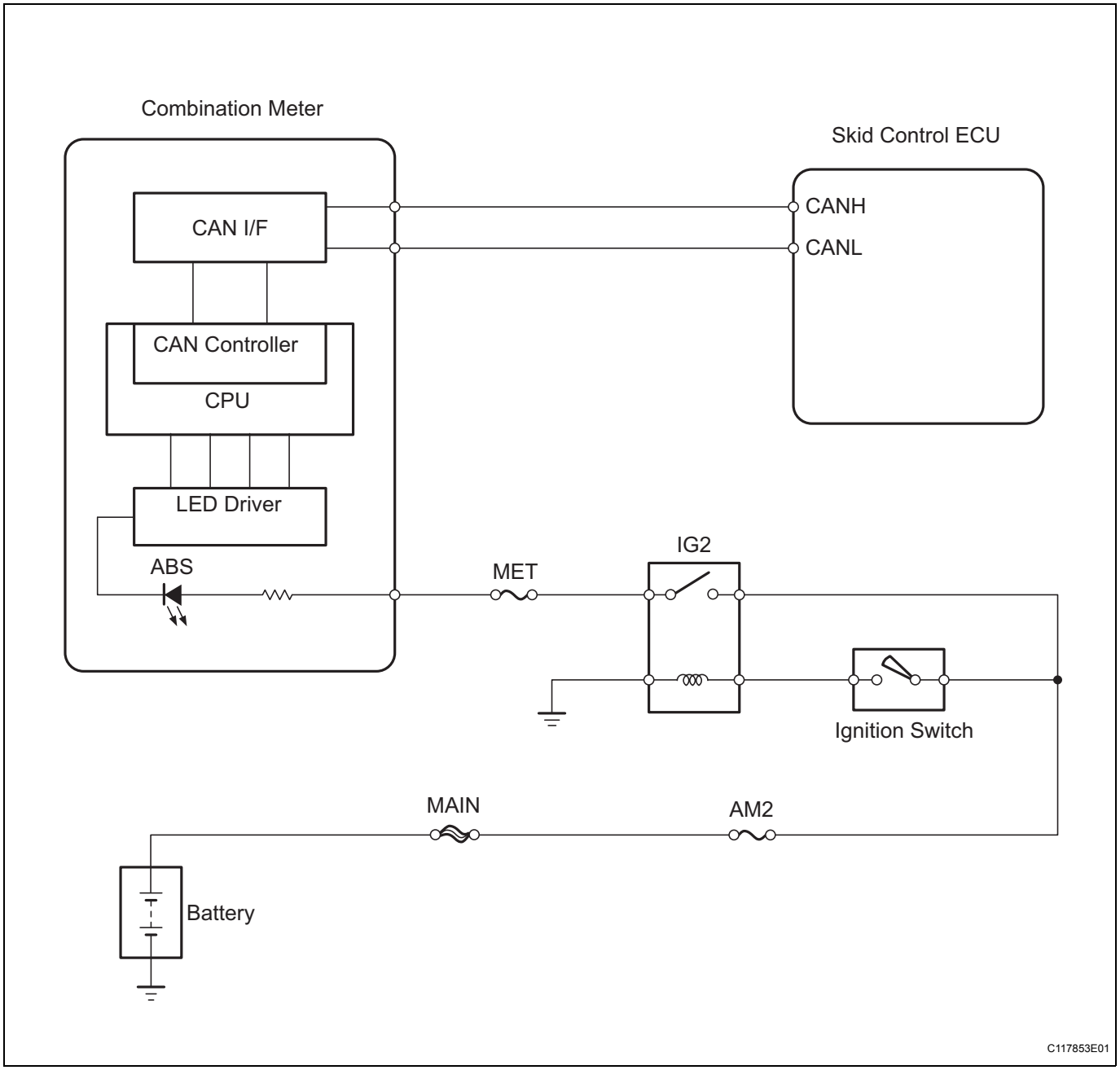

INSPECTION PROCEDURE

1	CHECK CAN COMMUNICATION SYSTEM

(a) Check if the CAN communication system DTC is output (See page CA-22).

Result

Result	Proceed to
DTC not output	A
DTC output	B

B → REPAIR CAN COMMUNICATION SYSTEM

A

2	CHECK CONNECTOR CONNECTION CONDITION

(a) Check the skid control ECU connector condition.
OK:
The connector is securely connected.

NG → CONNECT CONNECTOR CORRECTLY

OK

3	PERFORM ACTIVE TEST USING INTELLIGENT TESTER (ABS WARNING LIGHT)

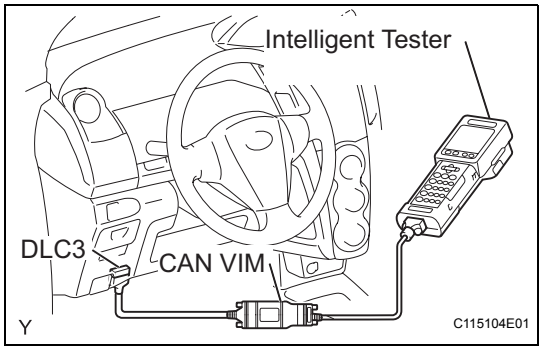

(a) Connect the intelligent tester to the DLC3.
(b) Turn the ignition switch on.
(c) Turn the tester on.
(d) Select the following menu items: DIAGNOSIS / OBD/MOBD / select vehicle / ABS / ACTIVE TEST / ABS WARN LAMP.

ACTIVE TEST: ABS

Item (Display)	Test Details	Diagnostic Notes
ABS WARN LAMP	Turns ABS warning light ON and OFF	Observe combination meter

BC

(e) Check that the ABS warning light turns on and off in the combination meter using the intelligent tester.
OK:
The ABS warning light turns ON and OFF in accordance with the intelligent tester operation.
HINT:
When the ABS warning light remains illuminated, an open in the wire harness of the combination meter or abnormalities in the meter circuit should be considered.

NG → CHECK COMBINATION METER CIRCUIT

OK

REPLACE BRAKE ACTUATOR

ABS Warning Light does not Come ON

WIRING DIAGRAM

See page BC-70.

INSPECTION PROCEDURE

1	CHECK CAN COMMUNICATION SYSTEM

(a) Check if the CAN communication system DTC is output (See page CA-22).

Result

Result	Proceed to
DTC not output	A
DTC output	B

B → REPAIR CAN COMMUNICATION SYSTEM

A

2	PERFORM ACTIVE TEST USING INTELLIGENT TESTER (ABS WARNING LIGHT)

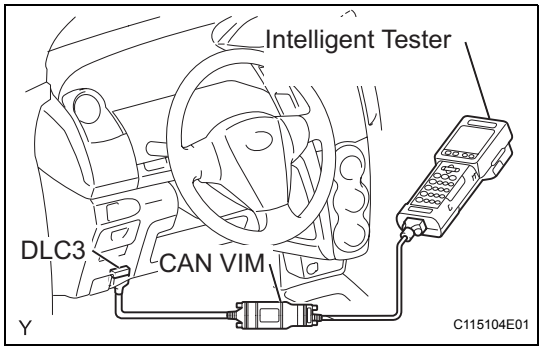

(a) Connect the intelligent tester to the DLC3.
(b) Turn the ignition switch on.
(c) Turn the tester on.
(d) Select the following menu items: DIAGNOSIS / OBD/ MOBD / select vehicle / ABS / ACTIVE TEST / ABS WARN LAMP.

ACTIVE TEST: ABS

Item (Display)	Test Details	Diagnostic Notes
ABS WARN LAMP	Turns ABS warning light ON and OFF	Observe combination meter

(e) Check that the ABS warning light turns on and off in the combination meter using the intelligent tester.

OK:

The ABS warning light turns ON and OFF in accordance with the intelligent tester operation.

NG → CHECK COMBINATION METER CIRCUIT

OK

REPLACE BRAKE ACTUATOR

BC

Brake Warning Light Remains ON

DESCRIPTION

If any of the following conditions are detected, the BRAKE warning light remains on:

1. The ECU connectors are disconnected from the skid control ECU.
2. The brake fluid level is insufficient.
3. The parking brake is applied.
4. The EBD is defective.

WIRING DIAGRAM

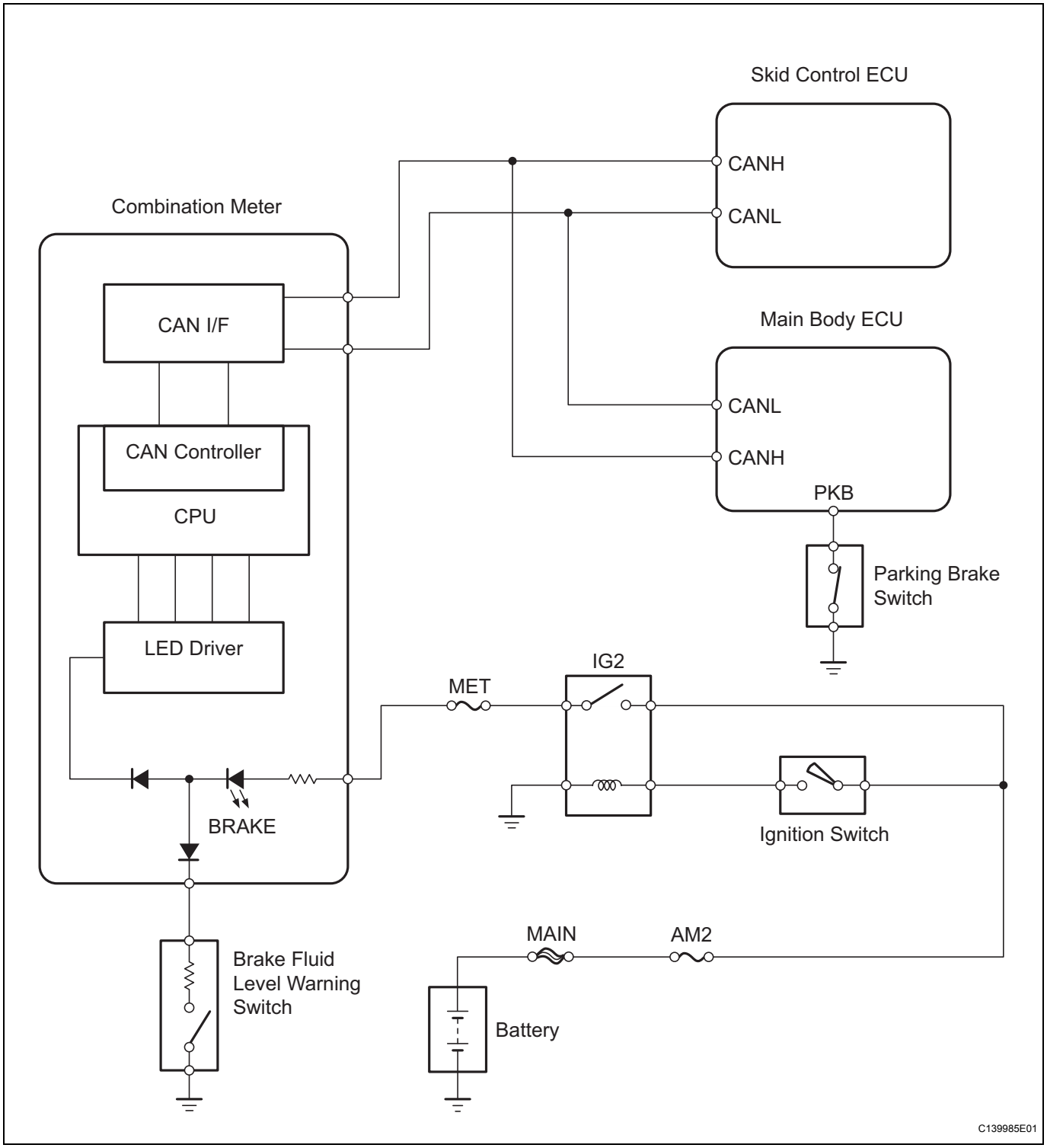

BC

INSPECTION PROCEDURE

1	PREPARE FOR INSPECTION

(a) Check that both of the following conditions are satisfied.
- The brake fluid level in the brake master cylinder reservoir is correct.
- The parking brake is released.

HINT:
When the ABS warning light remains illuminated, repair the malfunctions in the ABS system first.

NEXT

2	CHECK DTC

(a) Check if any ABS DTCs are output (See page BC-25).

Result

Result	Proceed to
DTC not output	A
DTC output	B

B → REPAIR CIRCUITS INDICATED BY OUTPUT DTCS

A

3	CHECK CAN COMMUNICATION SYSTEM

(a) Check if the CAN communication system DTC is output (See page CA-22).

Result

Result	Proceed to
DTC not output	A
DTC output	B

B → REPAIR CAN COMMUNICATION SYSTEM

A

4	CHECK CONNECTOR CONNECTION CONDITION

(a) Check if the skid control ECU connector is connected securely.

OK:

The connector is connected securely.

NG → CONNECTOR CORRECTLY

OK

5	CHECK PARKING BRAKE SWITCH ASSEMBLY

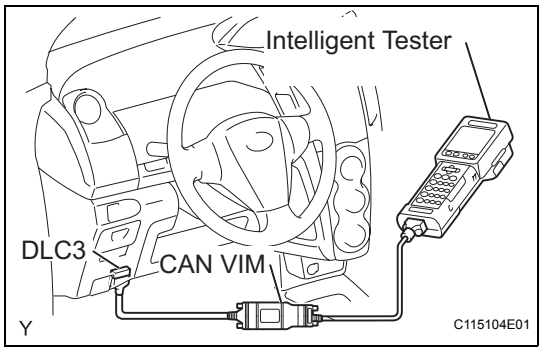

(a) Connect the intelligent tester to the DLC3.
(b) Turn the ignition switch on.
(c) Turn the tester on.
(d) Select the following menu items: DIAGNOSIS / OBD/ MOBD / select vehicle / ABS / DATA LIST / PARKING BRAKE SW.

DATA LIST: ABS

Item (Display)	Measurement Item / Range (Display)	Normal Condition
PARKING BRAKE SW	Parking brake switch / ON or OFF	ON: Parking brake applied OFF: Parking brake released

(e) Check that "ON" and "OFF" are properly indicated on the tester display in accordance with the parking brake lever operation.
OK:
Tester display changes in accordance with the parking brake lever operation.

NG → **Go to step 9**

OK

6	INSPECT BRAKE FLUID LEVEL WARNING SWITCH

Brake Fluid Level Warning Switch:

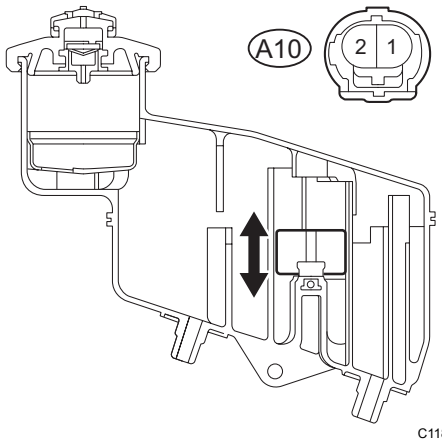

(a) Remove the reservoir tank cap and strainer.
(b) Disconnect the brake fluid level warning switch connector.
(c) Measure the resistance.
HINT:
There is a float inside the reservoir. Its position can be changed by increasing or decreasing the brake fluid level.
Standard resistance

Tester Connection	Condition	Specified Condition
A10-1 - A10-2	Float up (Switch OFF)	1.9 to 2.1 kΩ
A10-1 - A10-2	Float down (Switch ON)	Below 1 Ω

HINT:
If there is no problem after the above check is finished, adjust the brake fluid level to the MAX level.

NG → **REPLACE BRAKE MASTER CYLINDER RESERVOIR SUB-ASSEMBLY**

BC

OK

7	CHECK HARNESS AND CONNECTOR (COMBINATION METER - BRAKE FLUID LEVEL WARNING SWITCH)

(a) Disconnect the D2 combination meter connector.
(b) Disconnect the brake fluid level warning switch connector.
(c) Measure the resistance.

Standard resistance

Tester Connection	Specified Condition
D2-2 - A10-1	Below 1 Ω
D2-2 - Body ground	10 kΩ or higher
A10-2 - Body ground	10 kΩ or higher

Brake Fluid Level Warning Switch (harness side connector):

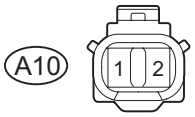

Combination Meter (harness side connector):

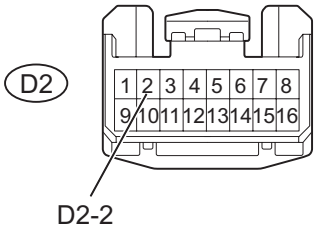

C118702E01

NG → **REPAIR OR REPLACE HARNESS OR CONNECTOR**

OK

8	INSPECT COMBINATION METER

(a) Inspect the combination meter assembly (See page ME-24 or ME-88).

NG → **REPLACE COMBINATION METER**

OK

BC

REPLACE BRAKE ACTUATOR

9	INSPECT PARKING BRAKE SWITCH ASSEMBLY

(a) Disconnect the parking brake switch connector.

Parking Brake Switch:

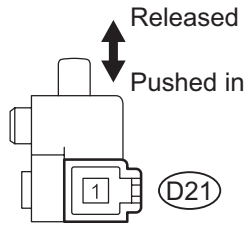

C118703E01

(b) Measure the resistance.
Standard resistance

Tester Connection	Condition	Specified Condition
D21-1 - Body ground	Parking brake switch ON (Switch pin released)	Below 1 Ω
D21-1 - Body ground	Parking brake switch OFF (Switch pin pushed in)	10 kΩ or higher

NG → **REPLACE PARKING BRAKE SWITCH ASSEMBLY**

OK

10 CHECK HARNESS AND CONNECTOR (MAIN BODY ECU - PARKING BRAKE SWITCH ASSEMBLY)

Main Body ECU:

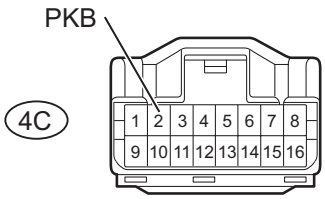

Parking Brake Switch:

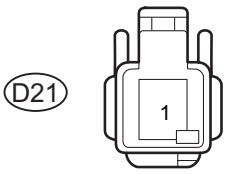

C120360E01

(a) Disconnect connector 4C of the main body ECU (See page BC-21).
(b) Disconnect the parking brake switch connector.
(c) Measure the resistance.
Standard resistance

Tester Connection	Specified Condition
4C-2 (PKB) - D21-1	Below 1 Ω
4C-2 (PKB) - Body ground	10 kΩ or higher

NG → **REPAIR OR REPLACE HARNESS OR CONNECTOR**

OK

REPLACE MAIN BODY ECU

BC

Brake Warning Light does not Come ON

WIRING DIAGRAM

See page BC-74.

INSPECTION PROCEDURE

1	CHECK CAN COMMUNICATION SYSTEM

(a) Check if the CAN communication system DTC is output (See page CA-22).

Result

Result	Proceed to
DTC not output	A
DTC output	B

B → REPAIR CAN COMMUNICATION SYSTEM

A

2	PERFORM ACTIVE TEST USING INTELLIGENT TESTER (BRAKE WARNING LIGHT)

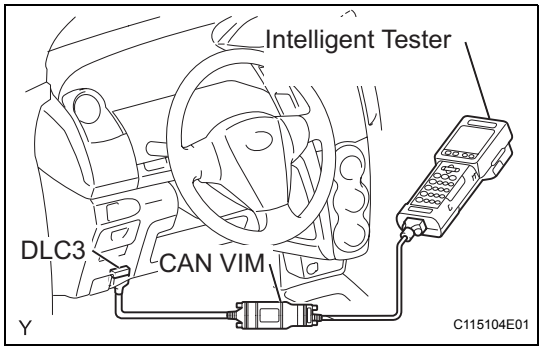

(a) Connect the intelligent tester to the DLC3.
(b) Turn the ignition switch on.
(c) Turn the tester on.
(d) Select the following menu items: DIAGNOSIS / OBD/ MOBD / select vehicle /ACTIVE TEST / BRAKE WARN LAMP.

ACTIVE TEST: ABS

Item (Display)	Test Details	Diagnostic Note
BRAKE WARN LAMP	Turns BRAKE warning light ON and OFF	Observe combination meter

(e) Check that the BRAKE warning light turns on and off in the combination meter using the intelligent tester.
OK:
The BRAKE warning light turns ON and OFF in accordance with the intelligent tester operation.

OK → REPLACE BRAKE ACTUATOR

NG

3	INSPECT COMBINATION METER

(a) Inspect the combination meter (See page ME-24 or ME-84).

BC

NG → **REPLACE COMBINATION METER**

OK

REPLACE BRAKE ACTUATOR

TC and CG Terminal Circuit

DESCRIPTION

Connecting terminals TC and CG of the DLC3 causes the skid control ECU to display 2-digit DTCs by flashing the ABS warning light.

WIRING DIAGRAM

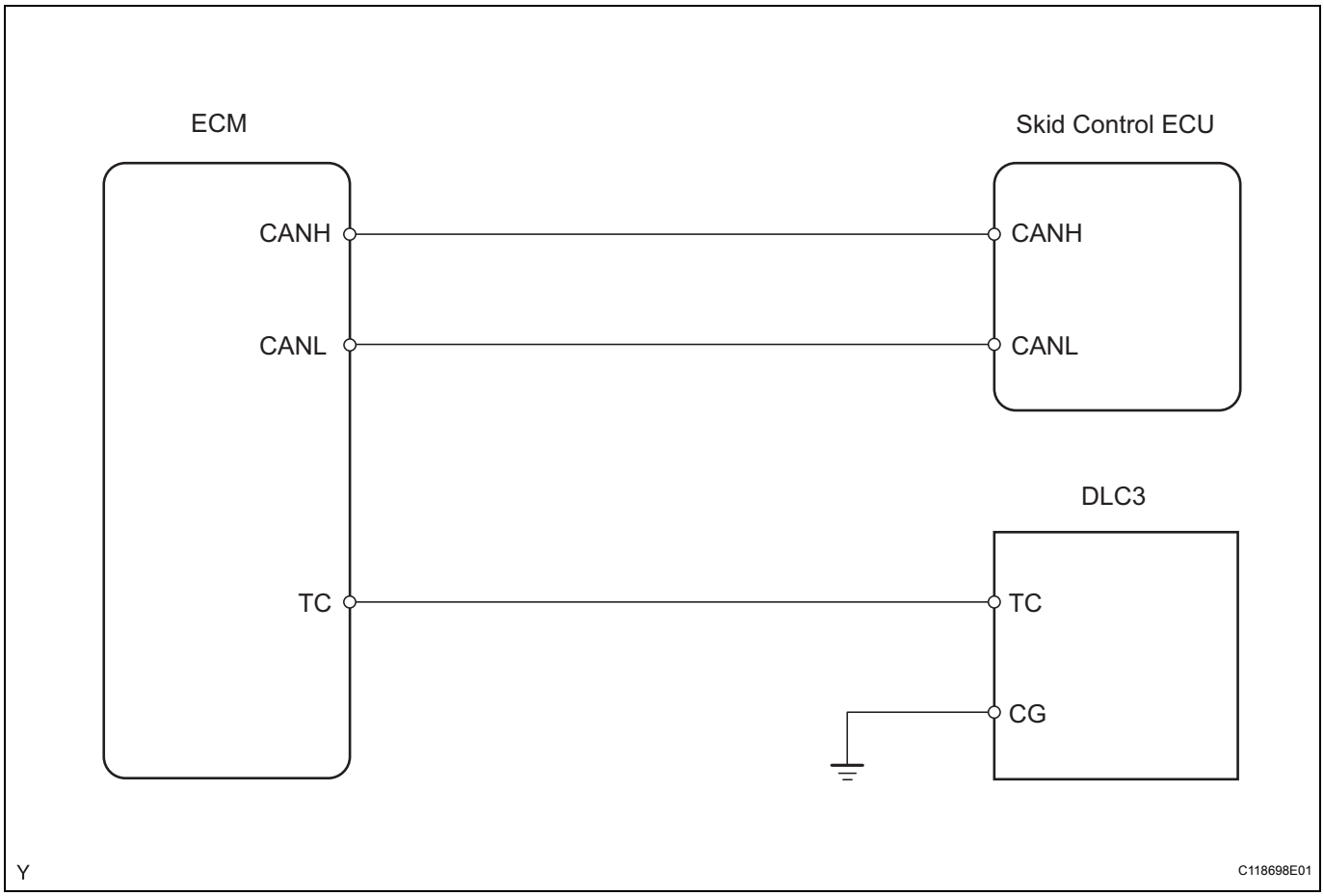

INSPECTION PROCEDURE

1	CHECK HARNESS AND CONNECTOR (DLC3 - ECM)

(a) Turn the ignition switch off.
(b) Disconnect the ECM connector.

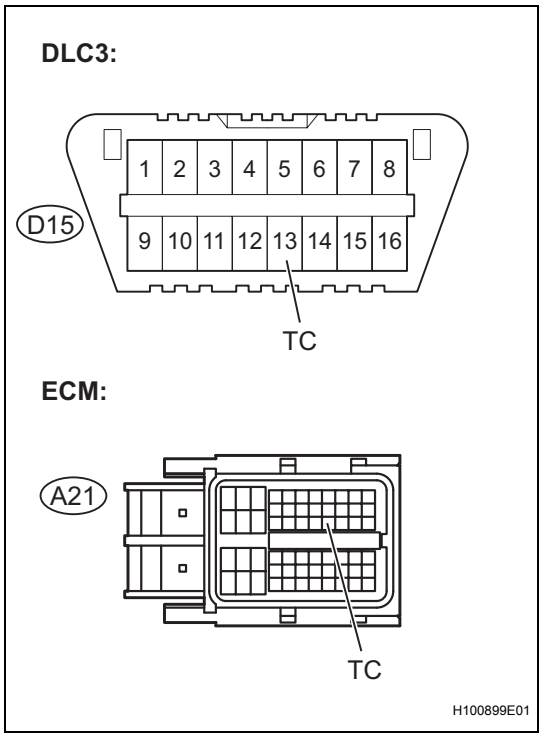

(c) Measure the resistance.
Standard resistance

Tester Connection	Specified Condition
D15-13 (TC) - A21-27 (TC)	Below 1 Ω

NG → **REPAIR OR REPLACE HARNESS OR CONNECTOR**

OK

2 CHECK HARNESS AND CONNECTOR (DLC3 - BODY GROUND)

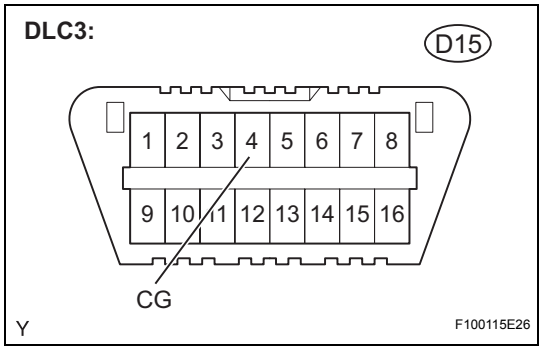

(a) Measure the resistance.
Standard resistance

Tester Connection	Specified Condition
D15-4 (CG) - Body ground	Below 1 Ω

NG → **REPAIR OR REPLACE HARNESS OR CONNECTOR**

OK

3 CHECK HARNESS AND CONNECTOR (ECM - BODY GROUND)

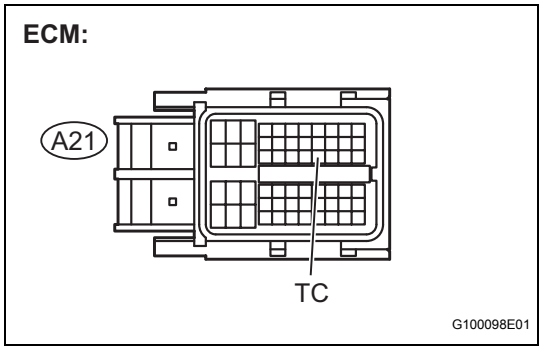

(a) Disconnect the ECM connector.
(b) Measure the resistance.
Standard resistance

Tester Connection	Specified Condition
A21-27 (TC) - Body ground	10 kΩ or higher

NG → **REPAIR OR REPLACE HARNESS OR CONNECTOR**

BC

OK

4	REPLACE ECM

(a) Replace the ECM.
(b) Check for DTCs of the ECM (See page ES-34).

Result

Result	Proceed to
DTC not output	A
DTC output	B

B → REPAIR CIRCUITS INDICATED BY OUTPUT DTCS

A

END

TS and CG Terminal Circuit

DESCRIPTION

In sensor check mode, malfunctions of the speed sensor that cannot be detected when the vehicle is stopped can be detected by driving the vehicle.
Transition to sensor check mode can be performed by connecting terminals TS and CG of the DLC3 and turning the ignition switch from off to on.

WIRING DIAGRAM

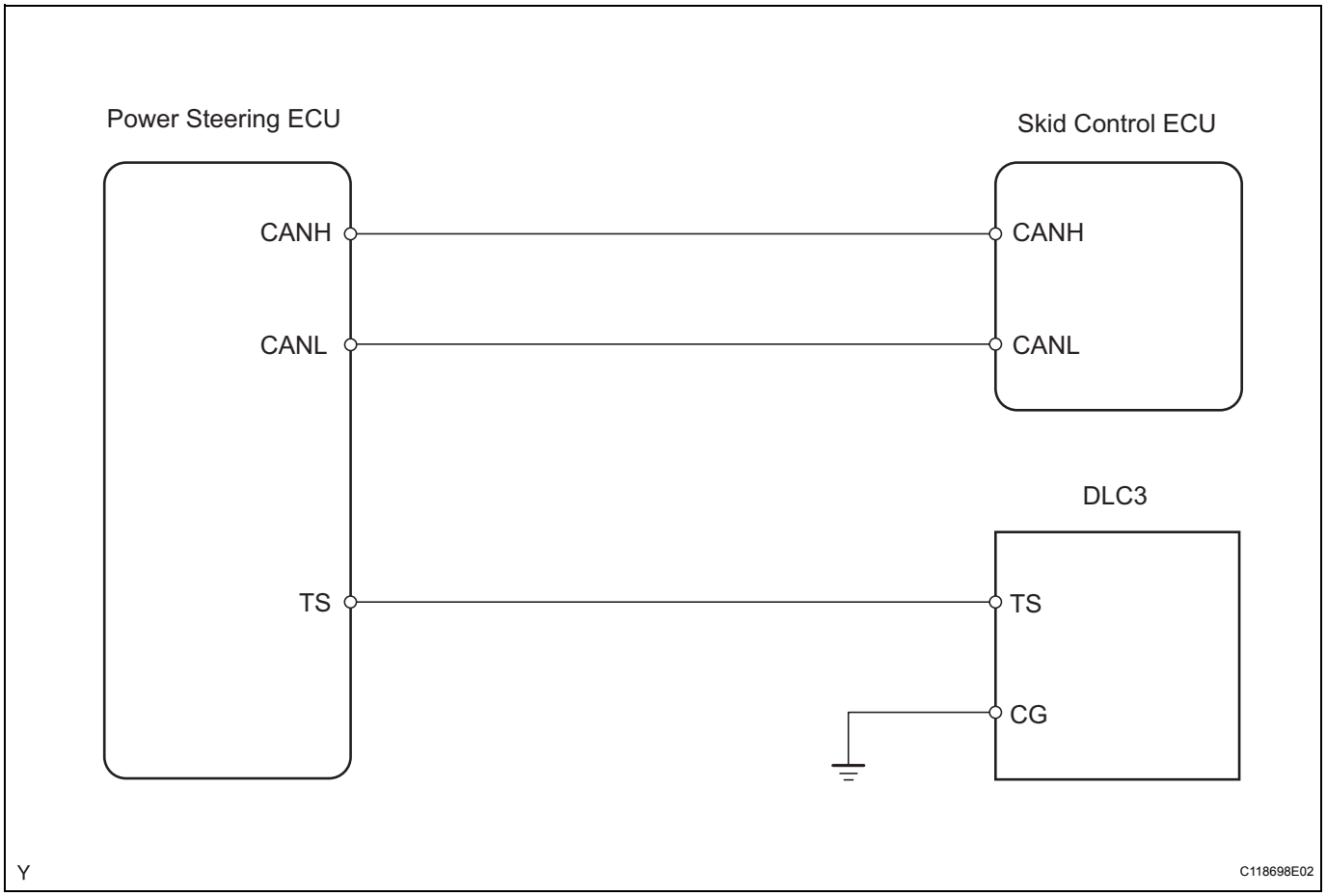

INSPECTION PROCEDURE

1	CHECK HARNESS AND CONNECTOR (DLC3 - POWER STEERING ECU)

(a) Turn the ignition switch off.
(b) Disconnect the power steering ECU connector.

BC

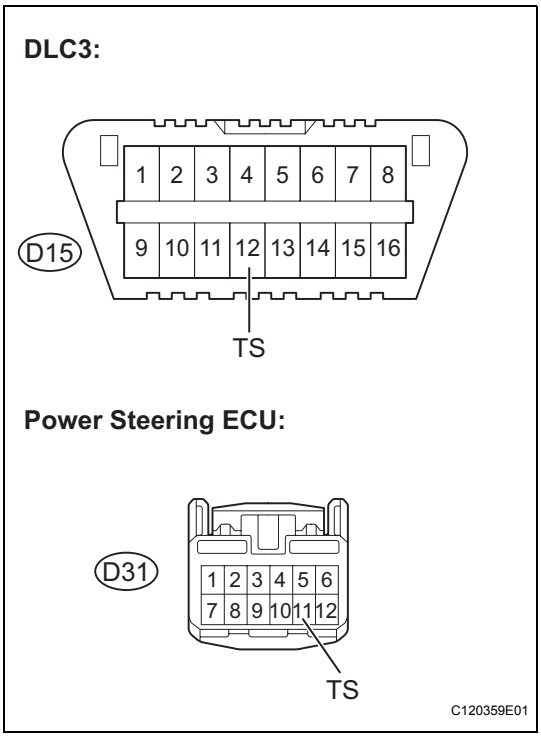

(c) Measure the resistance.
Standard resistance

Tester Connection	Specified Condition
D15-12 (TS) - D31-11 (TS)	Below 1 Ω

NG → **REPAIR OR REPLACE HARNESS OR CONNECTOR**

OK

2 CHECK HARNESS AND CONNECTOR (DLC3 - BODY GROUND)

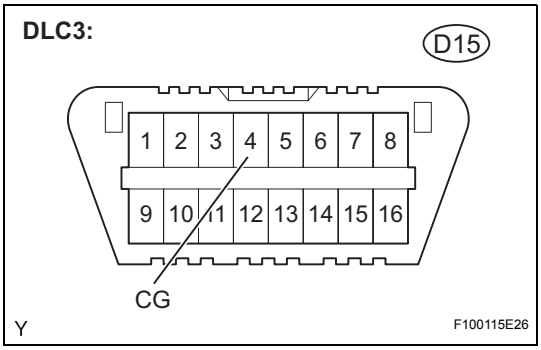

(a) Measure the resistance.
Standard resistance

Tester Connection	Specified Condition
D15-4 (CG) - Body ground	Below 1 Ω

NG → **REPAIR OR REPLACE HARNESS OR CONNECTOR**

OK

3 CHECK HARNESS AND CONNECTOR (POWER STEERING ECU - BODY GROUND)

BC

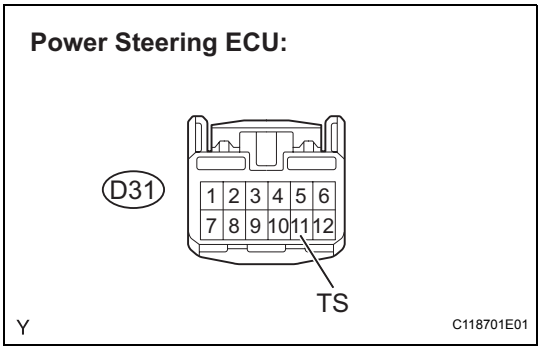

(a) Disconnect the power steering ECU connector.
(b) Measure the resistance.
Standard resistance

Tester Connection	Specified Condition
D31-11 (TS) - Body ground	10 kΩ or higher

NG → **REPAIR OR REPLACE HARNESS OR CONNECTOR**

OK

4	REPLACE POWER STEERING ECU

(a) Replace the power steering ECU.
(b) Check for DTCs of the power steering ECU (See page PS-25).

Result

Result	Proceed to
DTC not output	A
DTC output	B

B → REPAIR CIRCUITS INDICATED BY OUTPUT DTCS

A

END

BRAKE ACTUATOR

COMPONENTS

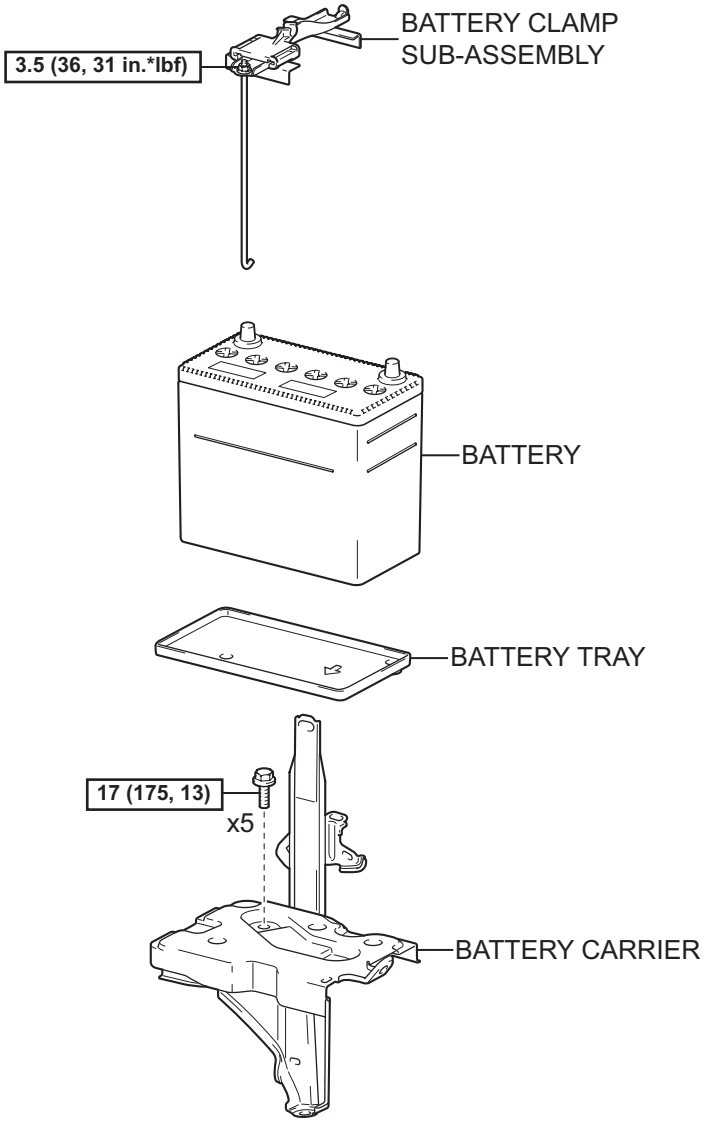

N*m (kgf*cm, ft*lbf) : Specified torque

P

C107526E05

BC

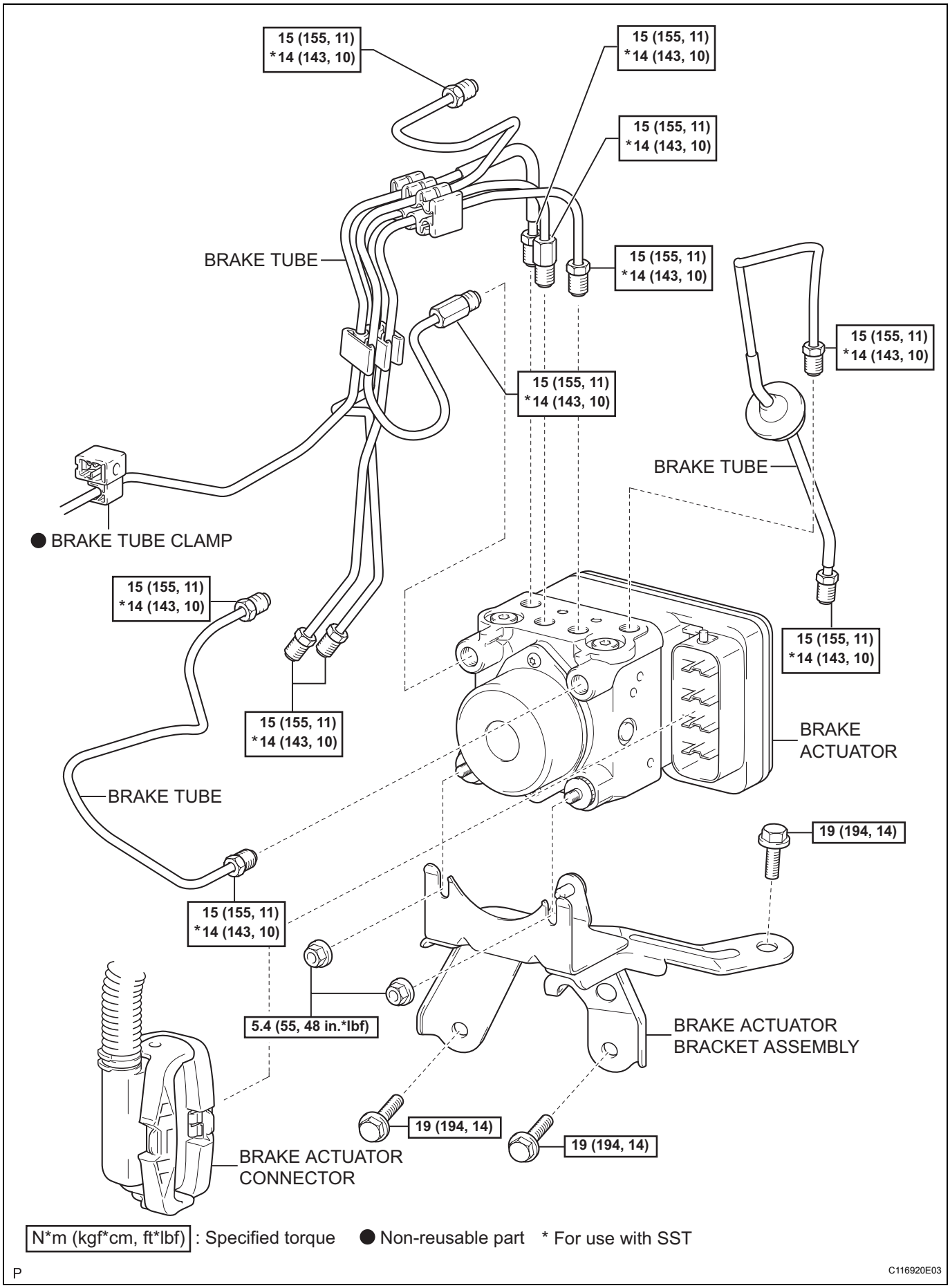
15 (155, 11)
*14 (143, 10)
BRAKE TUBE
BRAKE TUBE CLAMP
BRAKE TUBE
BRAKE TUBE
BRAKE ACTUATOR
19 (194, 14)
5.4 (55, 48 in.*lbf)
BRAKE ACTUATOR BRACKET ASSEMBLY
19 (194, 14)
19 (194, 14)
BRAKE ACTUATOR CONNECTOR
N*m (kgf*cm, ft*lbf) : Specified torque
● Non-reusable part
* For use with SST
P
C116920E03

REMOVAL

1. **DRAIN BRAKE FLUID**
   NOTICE:
   Immediately wash off any brake fluid that comes into contact with any painted surfaces.
2. **REMOVE BATTERY (See page EM-122)**
3. **REMOVE BATTERY TRAY**
4. **REMOVE BATTERY CARRIER (See page EM-125)**
5. **REMOVE BRAKE ACTUATOR**
   (a) Remove the clip and disconnect the wire harness.
   (b) Move the lock lever in the direction indicated by the arrow to release the lock and disconnect the brake actuator connector from the actuator.

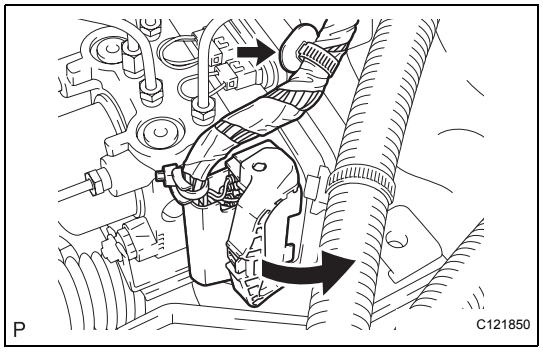

(c) Using SST, separate the brake tube from the front flexible hose.
SST 09023-00100

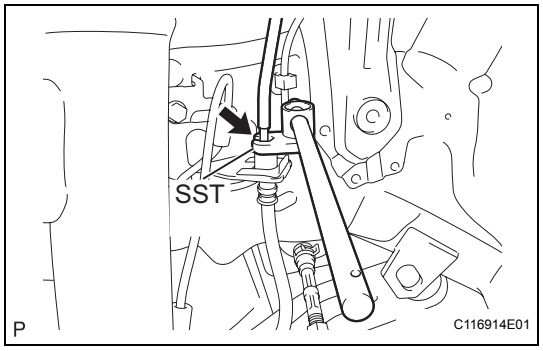

(d) Using SST, separate the 2 brake tubes from the brake tube No. 1 way.
SST 09023-00100

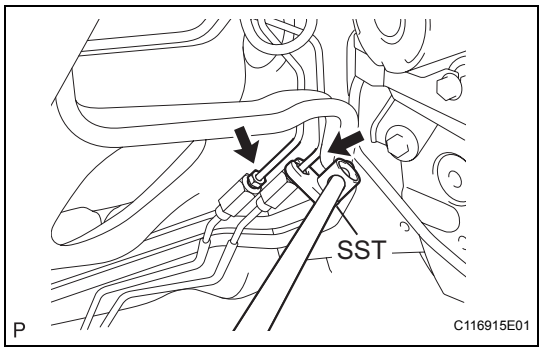

(e) Using SST, separate the 2 brake tubes from the brake master cylinder.
SST 09023-00100

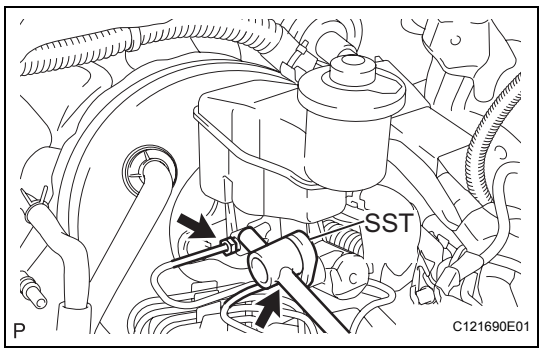

BC

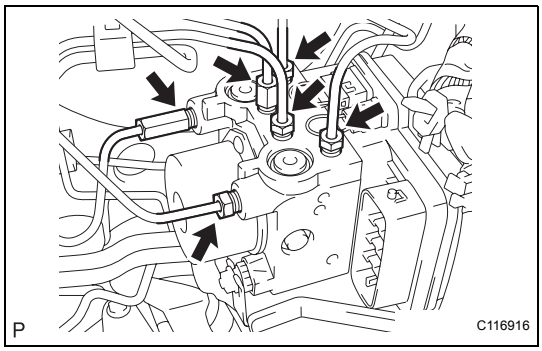

(f) Using SST, separate the 6 brake tubes from the brake actuator.
SST 09023-00100

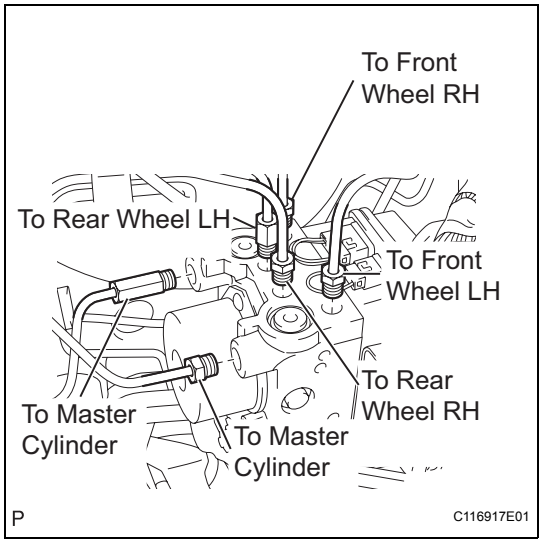

(g) Use tags or labels to identify the place to reconnect each brake tube.

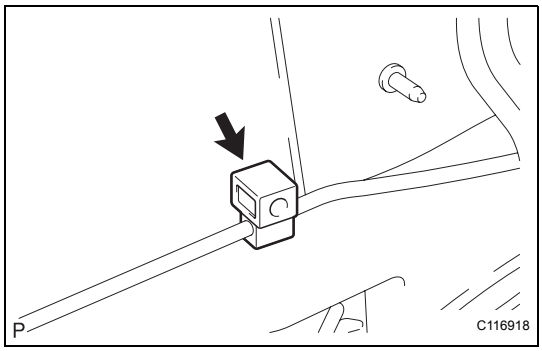

(h) Disconnect the brake tube clamp.

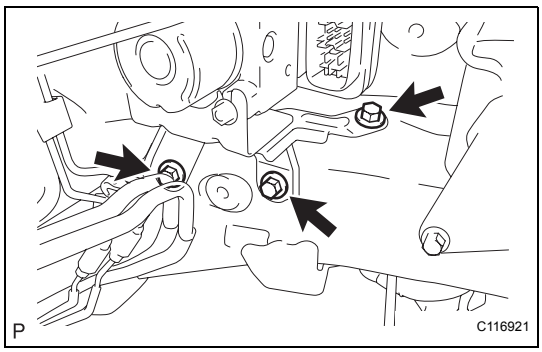

(i) Remove the 3 bolts and the actuator with bracket.

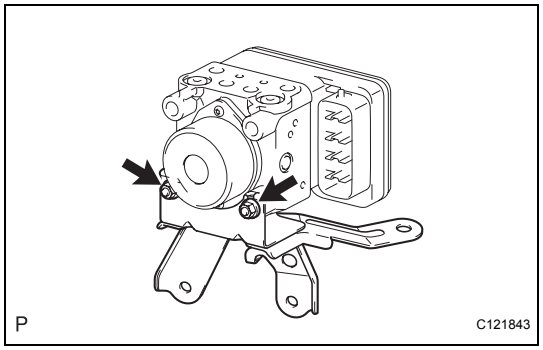

6. REMOVE BRAKE ACTUATOR BRACKET ASSEMBLY

(a) Remove the 2 nuts and the bracket.

INSTALLATION

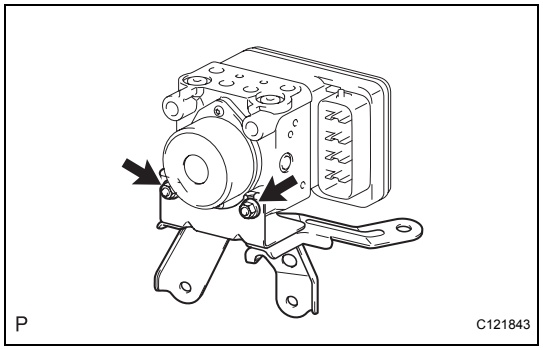

1. INSTALL BRAKE ACTUATOR BRACKET ASSEMBLY

(a) Install the actuator bracket with the 2 nuts.
Torque: 5.4 N*m (55 kgf*cm, 48 in.*lbf)
NOTICE:
Do not remove the hole plug before connecting the brake tube. New actuators are filled with brake fluid.

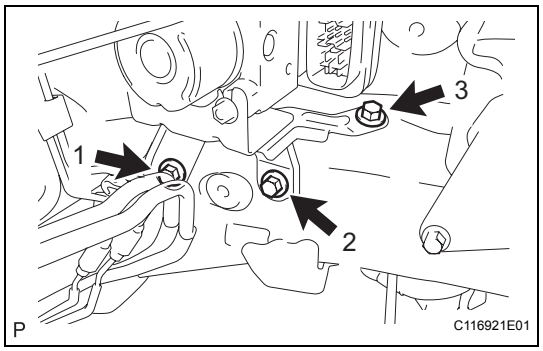

2. INSTALL BRAKE ACTUATOR

(a) Provisionally install the 3 bolts onto the actuator bracket in the sequence shown in the illustration.

(b) Tighten the 3 bolts in the sequence shown in the illustration.
Torque: 19 N*m (194 kgf*cm, 14 ft.*lbf)

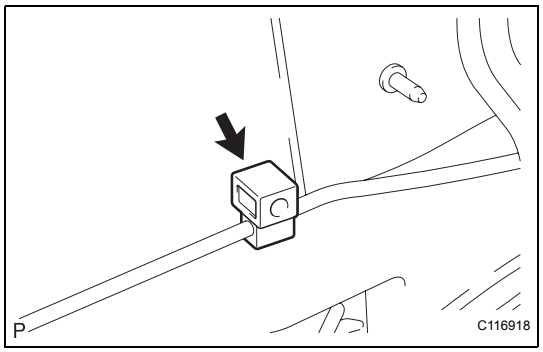

(c) Connect a new brake tube clamp.

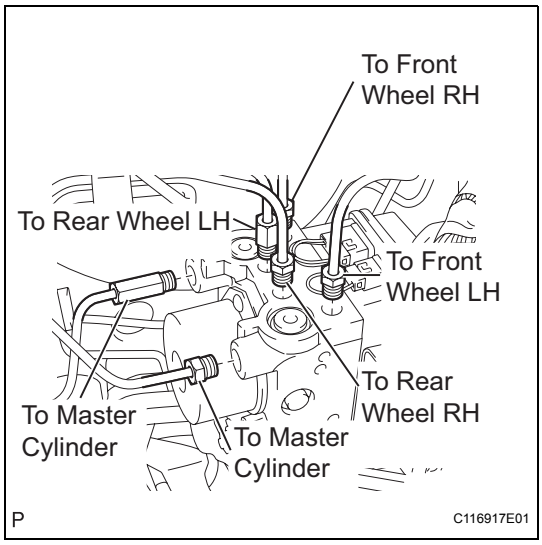

(d) Using SST, install each brake tube into the correct position of the actuator, as shown in the illustration.
SST 09023-00100
Torque: for use without SST
15 N*m (155 kgf*cm, 11 ft.*lbf)
for use with SST
14 N*m (143 kgf*cm, 10 ft.*lbf)
HINT:
- Use a torque wrench with a fulcrum length of 300 mm (11.81 in.).
- This torque value is effective when SST is parallel to a torque wrench.

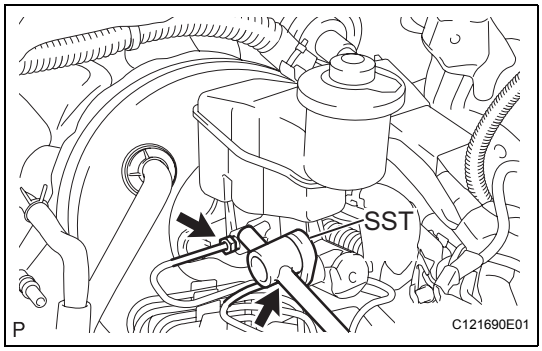

(e) Using SST, install the 2 brake tubes onto the brake master cylinder.
SST 09023-00100
Torque: for use without SST
15 N*m (155 kgf*cm, 11 ft.*lbf)
for use with SST
14 N*m (143 kgf*cm, 10 ft.*lbf)
HINT:
- Use a torque wrench with a fulcrum length of 300 mm (11.81 in.).
- This torque value is effective when SST is parallel to a torque wrench.

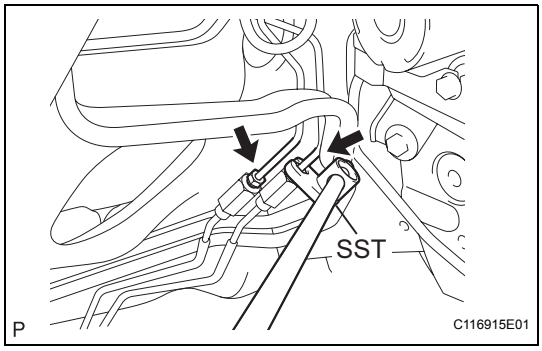

(f) Using SST, install the 2 brake tubes onto the brake tube No. 1 way.
SST 09023-00100
Torque: for use without SST
15 N*m (155 kgf*cm, 11 ft.*lbf)
for use with SST
14 N*m (143 kgf*cm, 10 ft.*lbf)
HINT:
- Use a torque wrench with a fulcrum length of 300 mm (11.81 in.).
- This torque value is effective when SST is parallel to a torque wrench.

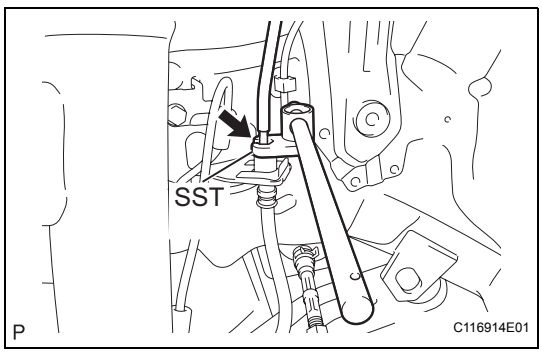

(g) Using SST, install the brake tube onto the front flexible hose.
SST 09023-00100
Torque: for use without SST
15 N*m (155 kgf*cm, 11 ft.*lbf)
for use with SST
14 N*m (143 kgf*cm, 10 ft.*lbf)
HINT:
- Use a torque wrench with a fulcrum length of 300 mm (11.81 in.).
- This torque value is effective when SST is parallel to a torque wrench.

(h) Connect the brake actuator connector.

BC

3. **INSTALL BATTERY CARRIER (See page EM-145)**
4. **INSTALL BATTERY TRAY**
5. **INSTALL BATTERY (See page EM-148)**
6. **FILL RESERVOIR WITH BRAKE FLUID (See page BR-10)**
7. **BLEED MASTER CYLINDER (See page BR-10)**
8. **BLEED BRAKE LINE (See page BR-12)**
9. **CHECK FLUID LEVEL IN RESERVOIR (See page BR-12)**
10. **CHECK FOR BRAKE FLUID LEAKAGE**
11. **CHECK ACTUATOR WITH INTELLIGENT TESTER** (See page BC-14)

FRONT SPEED SENSOR

COMPONENTS

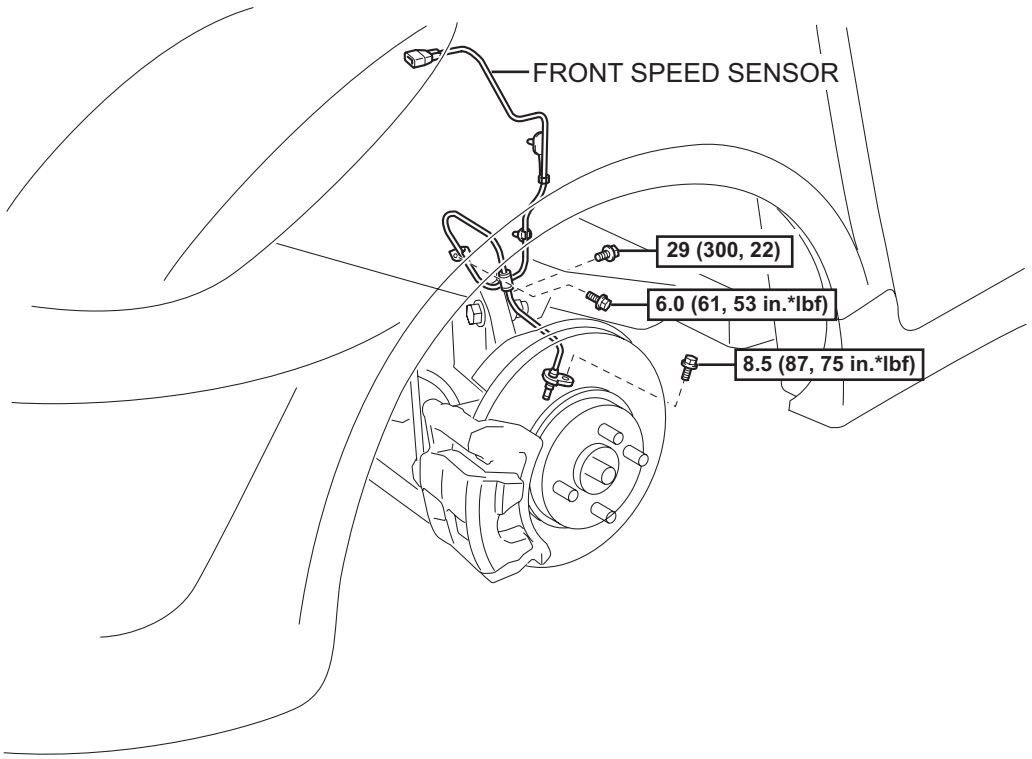

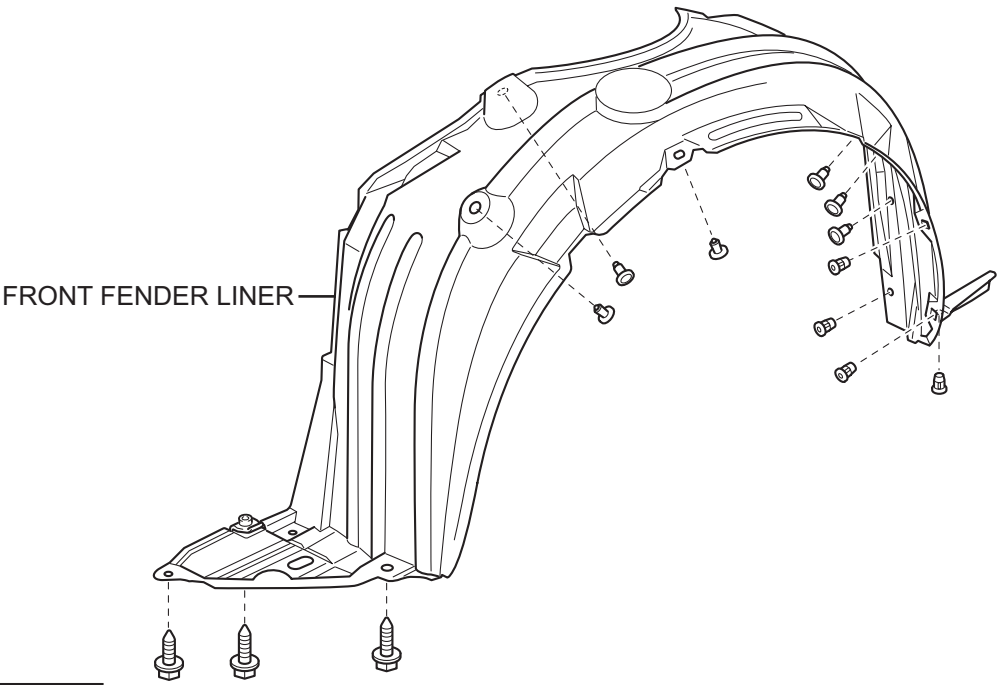

N*m (kgf*cm, ft*lbf) :Specified torque

Y

C125281E01

BC

REMOVAL

1. **DISCONNECT CABLE FROM NEGATIVE BATTERY TERMINAL**
2. **REMOVE FRONT WHEEL**
3. **REMOVE FRONT FENDER LINER**
   (a) Remove the 3 screws, 6 clips and 4 grommets and remove the front fender liner.
4. **REMOVE FRONT SPEED SENSOR**

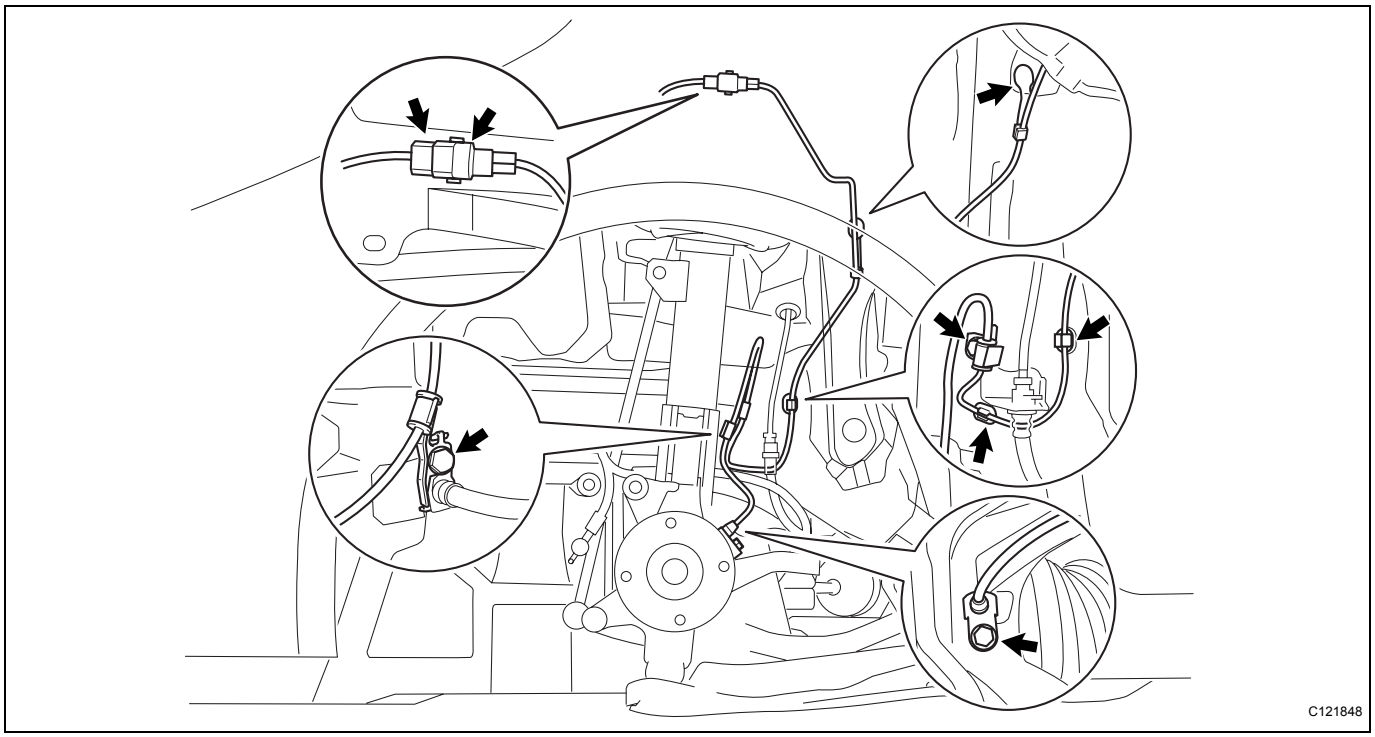

(a) Remove the speed sensor clip from the body.
(b) Disconnect the speed sensor connector.
(c) Remove the 3 clips.
(d) Remove the bolt and separate the clamp from the body.
(e) Remove the bolt and separate the clamp from the shock absorber.
(f) Remove the bolt and remove the speed sensor from the steering knuckle.

NOTICE:

- **Keep the speed sensor tip and installation portion free of foreign matter.**
- **Remove the speed sensor without turning it from its original installation angle.**

INSPECTION

1. INSPECT FRONT SPEED SENSOR

(a) Check the connector case and terminals for any deformation or corrosion.

Standard:

No deformation or corrosion.

If necessary, replace the speed sensor.

INSTALLATION

1. INSTALL FRONT SPEED SENSOR

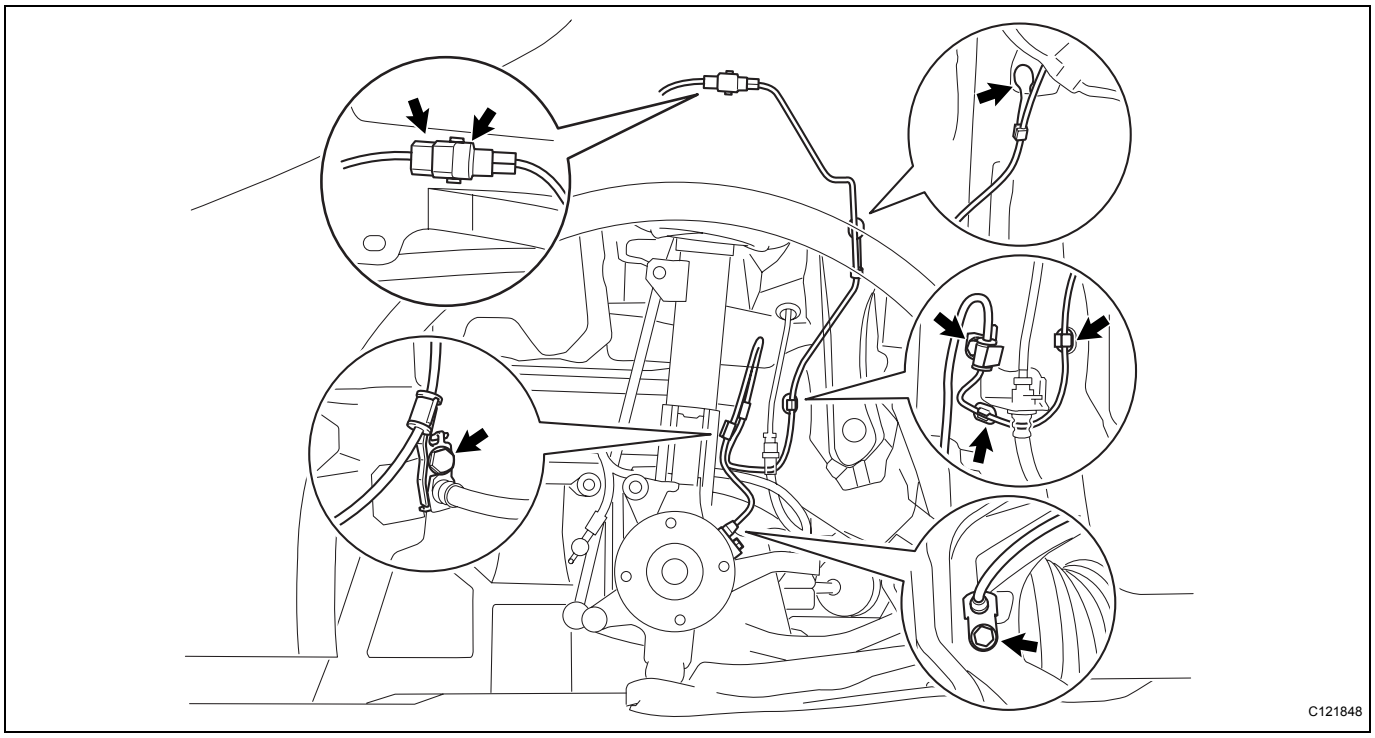

(a) Install the speed sensor onto the steering knuckle with the bolt.
Torque: 8.5 N*m (87 kgf*cm, 75 in.*lbf)
NOTICE:
- **Check that the speed sensor tip and installation portion are free of foreign matter.**
- **Install the speed sensor without turning it from its original installation angle.**

(b) Install the clamp onto the shock absorber with the bolt.
Torque: 29 N*m (300 kgf*cm, 22 ft.*lbf)

(c) Install the clamp onto the body with the bolt.
Torque: 6.0 N*m (61 kgf*cm, 53 in.*lbf)

(d) Install the 3 clips.

(e) Connect the speed sensor connector.

(f) Install the speed sensor clip onto the body.

2. INSTALL FRONT FENDER LINER

(a) Install the front fender liner with the 3 screws, 6 clips and 4 grommets.
NOTICE:
The speed sensor wire should not protrude beyond the front fender liner.

3. INSTALL FRONT WHEEL
Torque: 103 N*m (1,050 kgf*cm, 76 ft.*lbf)

4. CONNECT CABLE TO NEGATIVE BATTERY TERMINAL
Torque: 5.4 N*m (55 kgf*cm, 48 in.*lbf)

5. CHECK ABS SENSOR SIGNAL
(See page BC-14)

SKID CONTROL SENSOR

COMPONENTS

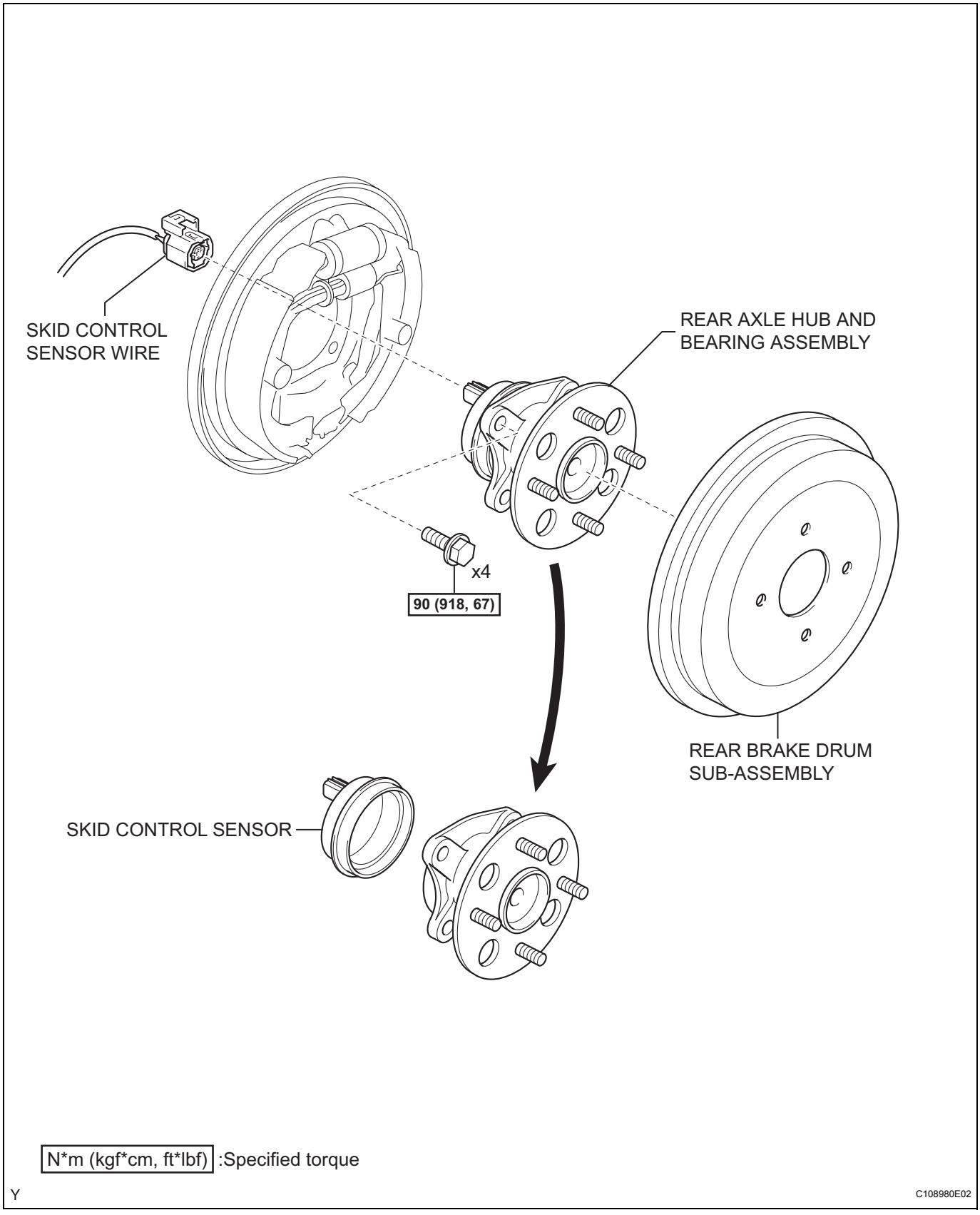

N*m (kgf*cm, ft*lbf) :Specified torque

Y

C108980E02

REMOVAL

1. **DISCONNECT CABLE FROM NEGATIVE BATTERY TERMINAL**
2. **REMOVE REAR WHEEL**
3. **REMOVE REAR BRAKE DRUM SUB-ASSEMBLY (See page BR-60)**
4. **DISCONNECT SKID CONTROL SENSOR WIRE (See page AH-14)**
5. **REMOVE REAR AXLE HUB AND BEARING ASSEMBLY (See page AH-14)**
6. **REMOVE SKID CONTROL SENSOR**

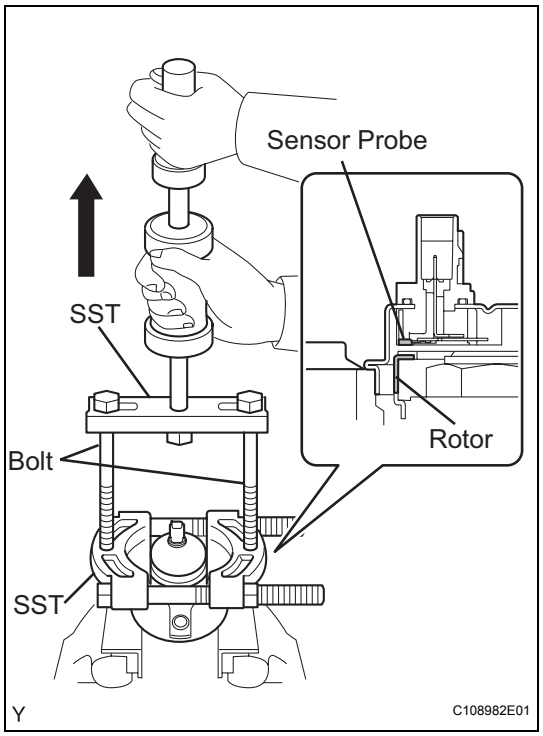

(a) Install the 4 hub nuts and the 4 hub bolts onto the rear axle hub, and then fix the rear axle hub in a vice between aluminum plates.

NOTICE:

If the skid control sensor is dropped or heavily damaged, replace the rear axle hub and bearing.

(b) Using a 3 mm pin punch and hammer, remove the 2 pins from SST (09520-00031) and remove the attachment (09521-00010).

(c) Using SST and the 2 bolts (90101-12007), remove the skid control sensor from the rear axle hub.

SST 09520-00031 (09520-00040), 09521-00020, 09950-00020

NOTICE:

- **Pull the skid control sensor off straight, being careful not to make contact with the skid control sensor rotor.**
- **If the skid control sensor rotor is damaged or deformed, replace the rear axle hub and bearing.**
- **Do not damage the skid control sensor or rear axle hub contact surfaces.**
- **Keep the sensor rotor free of foreign matter.**

INSPECTION

1. INSPECT SKID CONTROL SENSOR

(a) Check the connector case and terminals for any deformation or corrosion.

Standard:

No deformation or corrosion.

If necessary, replace the speed sensor.

INSTALLATION

1. **INSTALL SKID CONTROL SENSOR**
   (a) Wipe the sealant off the skid control sensor installation surface using white gasoline.
   NOTICE:
   Keep the sensor rotor free of foreign matter.

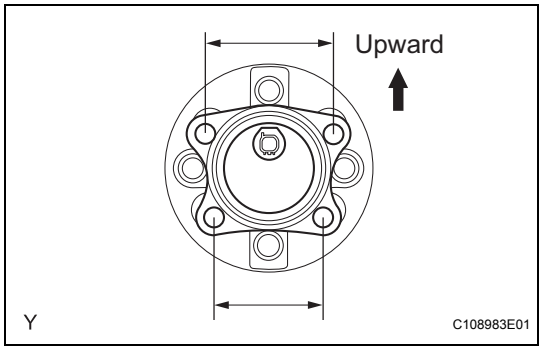

   (b) Install the skid control sensor onto the rear axle hub in the highest possible installation position.
   HINT:
   The distance between the installation holes should be larger on the upper side than the lower side.

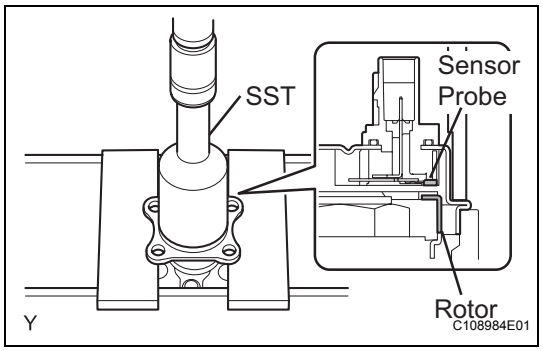

   (c) Using SST and a press, install a new skid control sensor into the rear axle hub until it is flush with the end.
   SST 09214-76011
   NOTICE:
   - **Do not use a hammer when installing.**
   - **Check for any foreign matter on the sensor probe.**
   - **Press the skid control sensor in slowly without turning it.**

2. **INSTALL REAR AXLE HUB AND BEARING ASSEMBLY (See page AH-14)**
3. **INSPECT REAR AXLE HUB BEARING (See page AH-2)**
4. **CONNECT SKID CONTROL SENSOR WIRE (See page AH-14)**
5. **INSTALL REAR BRAKE DRUM SUB-ASSEMBLY**
6. **ADJUST REAR DRUM BRAKE SHOE CLEARANCE (See page BR-67)**
7. **INSTALL REAR WHEEL**
   Torque: 103 N*m (1,050 kgf*cm, 76 ft.*lbf)
8. **CONNECT CABLE TO NEGATIVE BATTERY TERMINAL**
   Torque: 5.4 N*m (55 kgf*cm, 48 in.*lbf)
9. **CHECK ABS SENSOR SIGNAL**
   (See page BC-14)

BRAKE SYSTEM

PRECAUTION

1. **Necessary care must be taken to replace each part properly as it could affect the brake system performance. This could cause driving hazards. Replace each part with an identical part with the same number.**
2. **It is very important to keep parts and the area clean when repairing the brake system.**
3. **If the vehicle is equipped with a mobile communication system, refer to the precautions in the INTRODUCTION section.**

SYSTEM DIAGRAM

w/ ABS:

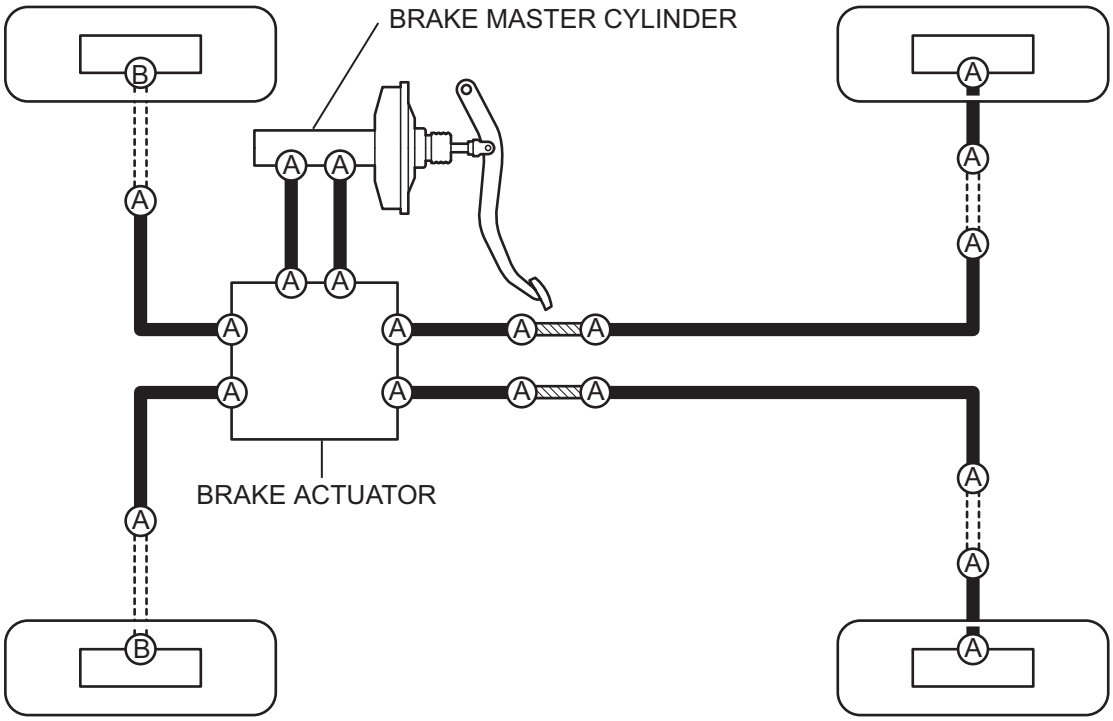

: Brake Tube

: Flexible Hose

: Brake Tube Way

Ⓐ : **for use without SST:**

Union Nut Torque: 15 N*m (155 kgf*cm, 11 ft*lbf)

for use with SST:

Union Nut Torque: 14 N*m (143 kgf*cm, 10 ft*lbf)

Ⓑ : Union Bolt Torque: 30 N*m (310 kgf*cm, 22 ft*lbf)

BR

P

C130323E03

w/o ABS:

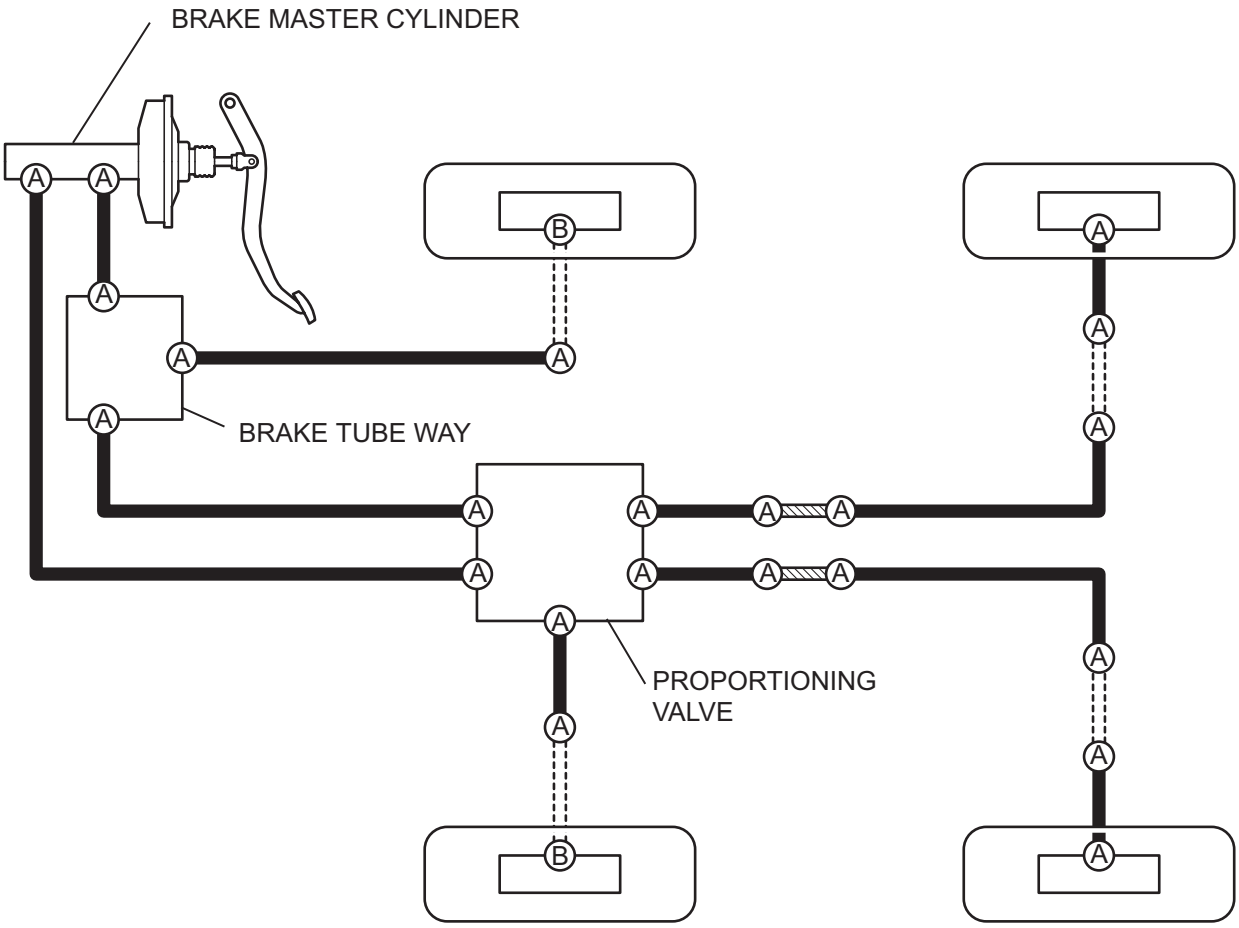

▬ : Brake Tube

⁝⁝⁝⁝ : Flexible Hose

▨ : Brake Tube Way

Ⓐ : **for use without SST:**

Union Nut Torque: 15 N*m (155 kgf*cm, 11 ft*lbf)

for use with SST:

Union Nut Torque: 14 N*m (143 kgf*cm, 10 ft*lbf)

Ⓑ : Union Bolt Torque: 30 N*m (310 kgf*cm, 22 ft*lbf)

BR

P

C133161E01

PROBLEM SYMPTOMS TABLE

HINT:
Use the table below to help you find the cause of the problem. The numbers indicate the ranked order of probability of each of the possible causes. Check each part in the order suggested. If necessary, replace the applicable parts.

Symptom	Suspected area	See page
Low pedal or spongy pedal	1. Fluid leakage in brake system	-
	2. Air in brake system	BR-10
	3. Piston seal (Worn or damaged)	BR-50
	4. Wheel cylinder cup (Damaged)	BR-62
	5. Brake master cylinder (Faulty)	BR-29
Brake drag	1. Brake pedal free play (Minimum)	BR-8
	2. Parking brake lever travel (Out of adjustment)	PB-2
	3. Rear drum brake shoe clearance (Out of adjustment)	BR-67
	4. Pad (Cracked or distorted)	BR-51
	5. Brake shoe (Cracked or distorted)	BR-62
	6. Front disc brake piston (Stuck)	BR-50
	7. Piston (Stuck)	BR-62
	8. Front disc brake piston (Frozen)	BR-50
	9. Piston (Frozen)	BR-62
	10. Tension or return spring (Faulty)	BR-60
	11. Booster system (Vacuum leakage)	BR-5
	12. Brake master cylinder (Faulty)	BR-29
Brake pull	1. Front disc brake piston (Stuck)	BR-50
	2. Piston (Stuck)	BR-62
	3. Pad (Oily)	BR-51
	4. Brake shoe (Oily)	BR-62
	5. Front disc brake piston (Frozen)	BR-50
	6. Piston (Frozen)	BR-62
	7. Front disc (Scored)	BR-51
	8. Rear brake drum (Scored)	BR-62
	9. Pad (Cracked or distorted)	BR-51
	10. Brake shoe (Cracked or distorted)	BR-62
Hard pedal but braking inefficient	1. Fluid leakage in brake system	-
	2. Air in brake system	BR-10
	3. Front disc brake piston (Stuck)	BR-50
	4. Piston (Stuck)	BR-62
	5. Pad (Cracked or distorted)	BR-51
	6. Brake shoe (Cracked or distorted)	BR-62
	7. Pad (Oily)	BR-51
	8. Brake shoe (Oily)	BR-62
	9. Pad (Glazed)	BR-51
	10. Brake shoe (Glazed)	BR-62
	11. Front disc (Scored)	BR-51
	12. Rear brake drum (Scored)	BR-62
	13. Booster system (Vacuum leakage)	BR-5

Symptom	Suspected area	See page
Noise from brakes	1. Pad (Cracked or distorted)	BR-51
	2. Brake shoe (Cracked or distorted)	BR-62
	3. Installation bolt (Loose)	BR-48
	4. Front disc (Scored)	BR-51
	5. Rear brake drum (Scored)	BR-62
	6. Pad support plate (Loose)	BR-51
	7. Sliding pin (Worn)	BR-48
	8. Pad (Dirty)	BR-51
	9. Brake shoe (Dirty)	BR-62
	10. Pad (Glazed)	BR-51
	11. Brake shoe (Glazed)	BR-62
	12. Tension or return spring (Faulty)	BR-60
	13. Anti-squeal shim (Damaged)	BR-48
	14. Shoe hold down spring (Damaged)	BR-60

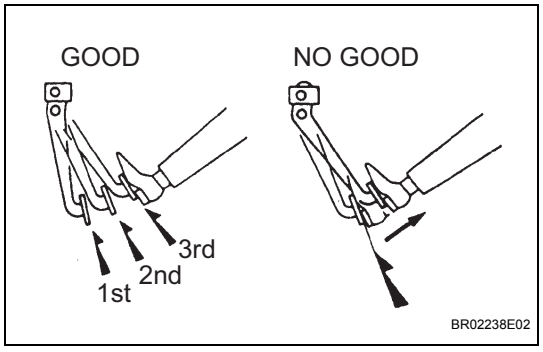

ON-VEHICLE INSPECTION

1. INSPECT BRAKE BOOSTER

(a) Check the air tightness.

(1) Start the engine and stop it after 1 or 2 minutes. Depress the brake pedal several times slowly.
HINT:
- If the pedal can be depressed to the floor on the 1st time, but cannot be depressed as far on the 2nd or 3rd times, the booster is airtight. If not, inspect the vacuum check valve.
- If the vacuum check valve is normal, replace the brake booster assembly.

(2) Depress the brake pedal while the engine is running, and stop the engine with the pedal depressed.
HINT:
- If there is no change in the pedal reserve distance after holding the pedal for 30 seconds, the booster is airtight. If not, inspect the vacuum check valve.
- If the vacuum check valve is normal, replace the brake booster assembly.

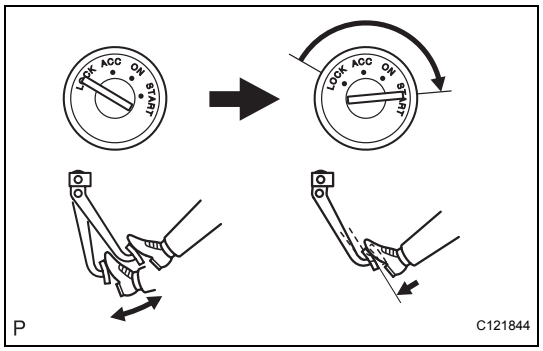

(b) Check the operation.

(1) Depress the brake pedal several times with the engine stopped and check that there is no change in the pedal reserve distance.

(2) Depress the brake pedal and start the engine.
HINT:
- If the pedal goes down slightly, the operation is normal. If not, inspect the vacuum check valve.
- If the vacuum check valve is normal, replace the brake booster assembly.

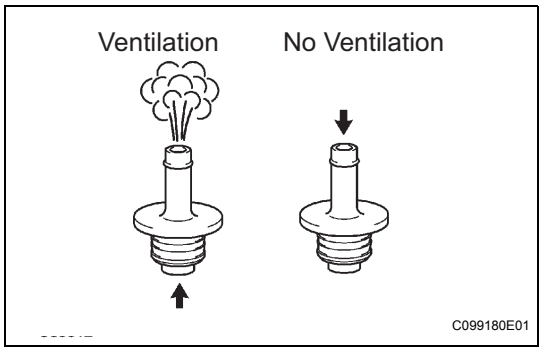

2. INSPECT VACUUM CHECK VALVE

(a) Check the vacuum check valve.
  (1) Slide the clip and disconnect the vacuum hose.
  (2) Remove the vacuum check valve from the brake booster.
  (3) Check that there is ventilation from the booster to the engine, and no ventilation from the engine to the booster.
  If any fault is found, replace the vacuum hose assembly.
  (4) Install the vacuum check valve onto the brake booster.
  (5) Connect the vacuum hose with the clip.

3. INSPECT PROPORTIONING VALVE (w/o ABS)

(a) Remove the bleeder plug from the front brake caliper and rear wheel cylinder.
(b) for Hatchback:

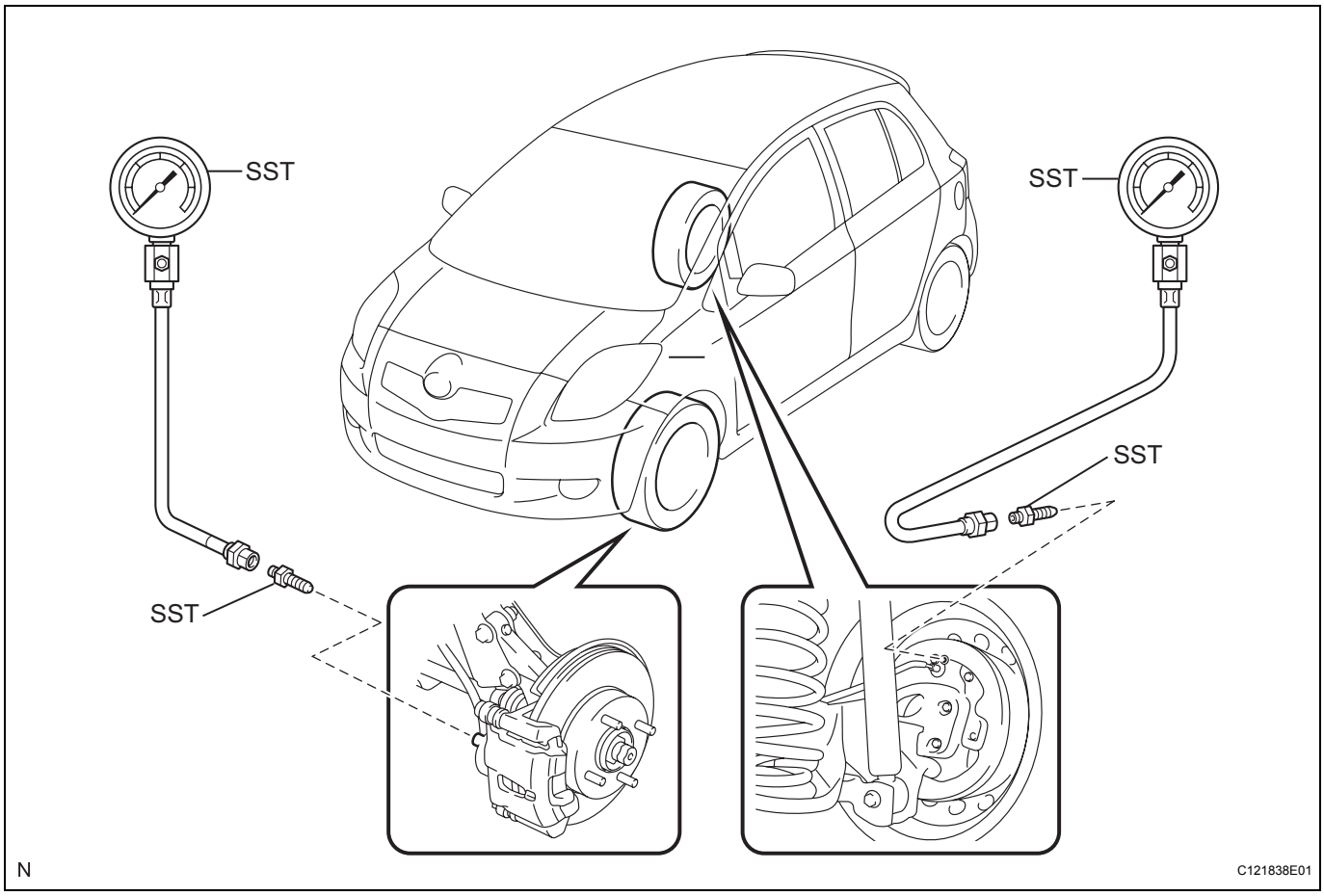

  (1) Install SST and the bleed the air.
  SST 09709-29018
  (2) Raise the front brake caliper pressure and inspect the rear wheel cylinder pressure.

Standard fluid pressure

Front Brake Caliper Pressure	Rear Wheel Cylinder Pressure
1,500 kPa (15.3 kgf/cm^2, 218 psi)	1,500 kPa (15.3 kgf/cm^2, 218 psi)
5,000 kPa (51.0 kgf/cm^2, 725 psi)	2,350 kPa (24.0 kgf/cm^2, 341 psi)

Front Brake Caliper Pressure	Rear Wheel Cylinder Pressure
8,000 kPa (81.6 kgf/cm^2, 1,160 psi)	3,100 kPa (31.6 kgf/cm^2, 450 psi)

HINT:
When inspecting the fluid pressure, inspect the left front and right rear together, and the right front and left rear together.
If the rear wheel cylinder pressure is incorrect, replace the proportioning valve.

(3) Remove SST.

(c) for Sedan:

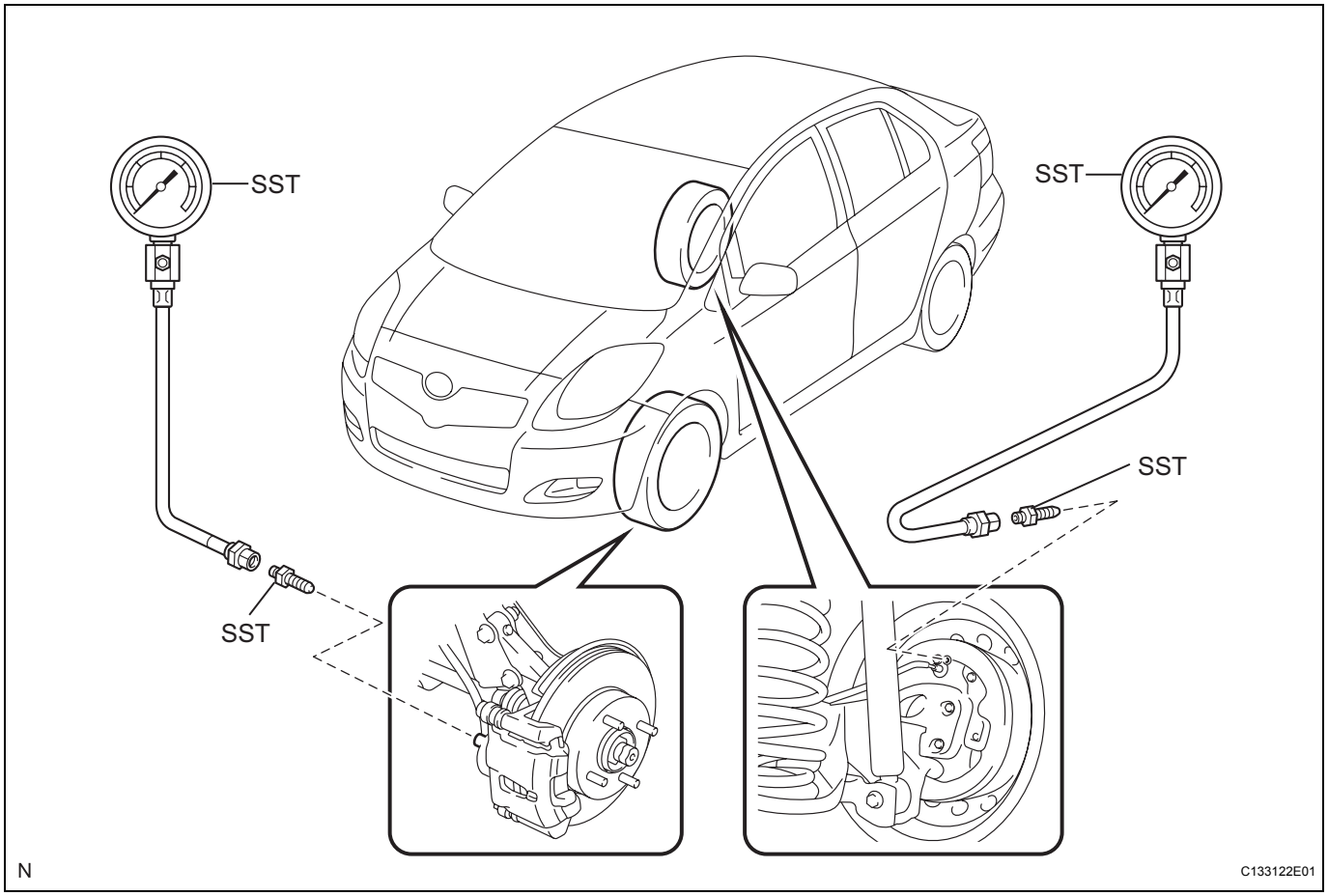

(1) Install SST and the bleed the air.
SST 09709-29018

(2) Raise the front brake caliper pressure and inspect the rear wheel cylinder pressure.

Standard fluid pressure

Front Brake Caliper Pressure	Rear Wheel Cylinder Pressure
1,500 kPa (15.3 kgf/cm^2, 218 psi)	1,500 kPa (15.3 kgf/cm^2, 218 psi)
5,000 kPa (51.0 kgf/cm^2, 725 psi)	2,350 kPa (24.0 kgf/cm^2, 341 psi)
8,000 kPa (81.6 kgf/cm^2, 1,160 psi)	3,100 kPa (31.6 kgf/cm^2, 450 psi)

HINT:
When inspecting the fluid pressure, inspect the left front and right rear together, and the right front and left rear together.

If the rear wheel cylinder pressure is incorrect, replace the proportioning valve.

(3) Remove SST.

(d) Install the bleeder plug onto the front brake caliper and rear wheel cylinder.
Torque: 8.3 N*m (85 kgf*cm, 73 in.*lbf)

(e) Bleed the brake fluid (See page BR-10).

(f) Check the brake fluid leakage.

ADJUSTMENT

1. **REMOVE INSTRUMENT PANEL UNDER COVER SUB-ASSEMBLY**
   Hatchback: (See page IP-67)
   Sedan: (See page IP-44)

2. **REMOVE LOWER INSTRUMENT PANEL FINISH PANEL SUB-ASSEMBLY**
   Hatchback: (See page IP-69)
   Sedan: (See page IP-45)

3. **INSPECT AND ADJUST BRAKE PEDAL**
   (a) Inspect the brake pedal height.
   Pedal height from floor

w/ ABS	w/o ABS
107.3 to 117.3 mm (4.224 to 4.618 in.)	107.8 to 117.8 mm (4.244 to 4.638 in.)

If the pedal height is incorrect, adjust it.

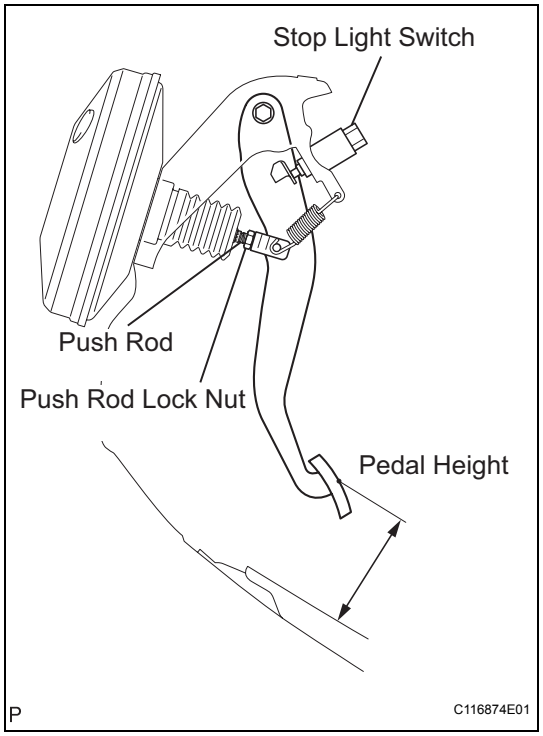

   (b) Adjust the brake pedal height.
   (1) Disconnect the connector from the stop light switch.
   (2) Turn the stop light switch counterclockwise, and remove the stop light switch.
   (3) Loosen the push rod lock nut.
   (4) Adjust the pedal height by turning the pedal push rod.
   Pedal height from floor

w/ ABS	w/o ABS
107.3 to 117.3 mm (4.224 to 4.618 in.)	107.8 to 117.8 mm (4.244 to 4.638 in.)

   (5) Tighten the push rod lock nut.
   Torque: 26 N*m (265 kgf*cm, 19 ft.*lbf)

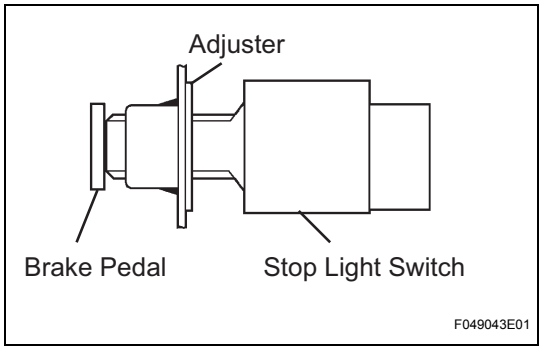

   (6) Insert the stop light switch into the adjuster until it just touches the brake pedal.
   NOTICE:
   Do not depress the brake pedal.

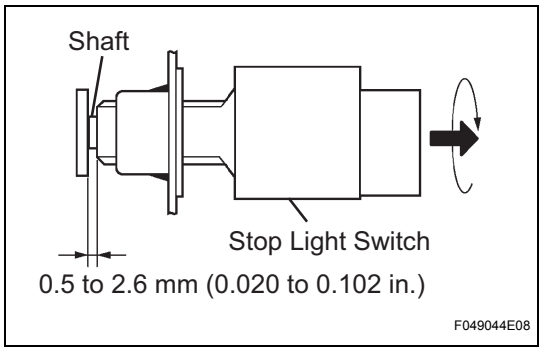

   (7) Make a quarter turn clockwise to install the stop light switch.
   NOTICE:
   Do not depress the brake pedal.
   HINT:
   The turning torque for installing the stop light switch:
   Torque: 1.5 N*m (15 kgf*cm, 13 in.*lbf) or less

BR

(8) Check the stop light switch clearance.
Stop light switch clearance:
0.5 to 2.6 mm (0.020 to 0.102 in.)
(9) Connect the connector to the stop light switch.

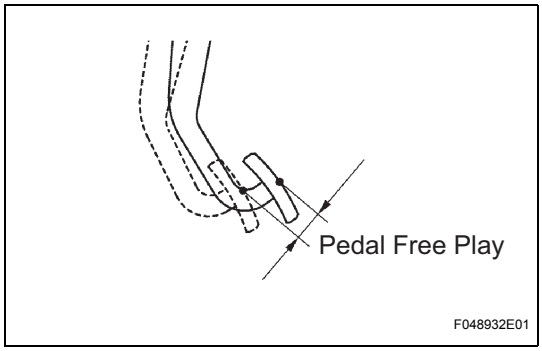

(c) Inspect the brake pedal free play.
(1) Stop the engine and depress the brake pedal several times until there is no vacuum left in the booster.
(2) Push in the pedal until the beginning of the resistance is felt. Measure the distance as shown.
Pedal free play:
1.0 to 6.0 mm (0.039 to 0.236 in.)
If incorrect, troubleshoot the brake system.

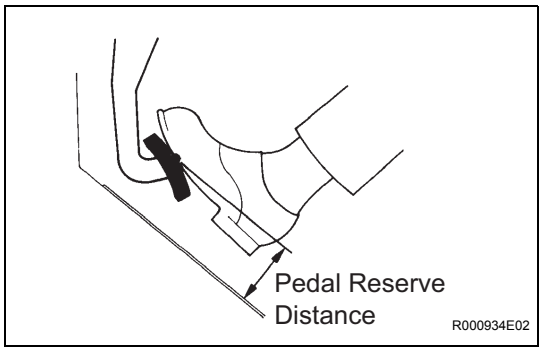

(d) Inspect the brake pedal reserve distance.
(1) Release the parking brake lever. With the engine running, depress the pedal and measure the pedal reserve distance as shown.
Pedal reserve distance from floor at 294 N (30 kgf, 66.1 lbf)

w/ ABS	w/o ABS
More than 73 mm (2.87 in.)	More than 70 mm (2.75 in.)

HINT:
Sound and resistance from the brake booster when the brake pedal is depressed without a vacuum does not indicate a problem.
If incorrect, troubleshoot the brake system.

4. INSTALL LOWER INSTRUMENT PANEL FINISH PANEL SUB-ASSEMBLY
Hatchback: (See page IP-78)
Sedan: (See page IP-54)

5. INSTALL INSTRUMENT PANEL UNDER COVER SUB-ASSEMBLY
Hatchback: (See page IP-80)
Sedan: (See page IP-55)

BRAKE FLUID

BLEEDING

NOTICE:
Immediately wash off any brake fluid that comes into contact with any painted surfaces.
HINT:
If any work is done on the brake system or if air in the brake lines is suspected, bleed the air from the system.

1. FILL RESERVOIR WITH BRAKE FLUID

(a) Disengage the 3 clips and separate the hood to cowl top seal.
(b) Remove the cowl top ventilator louver.

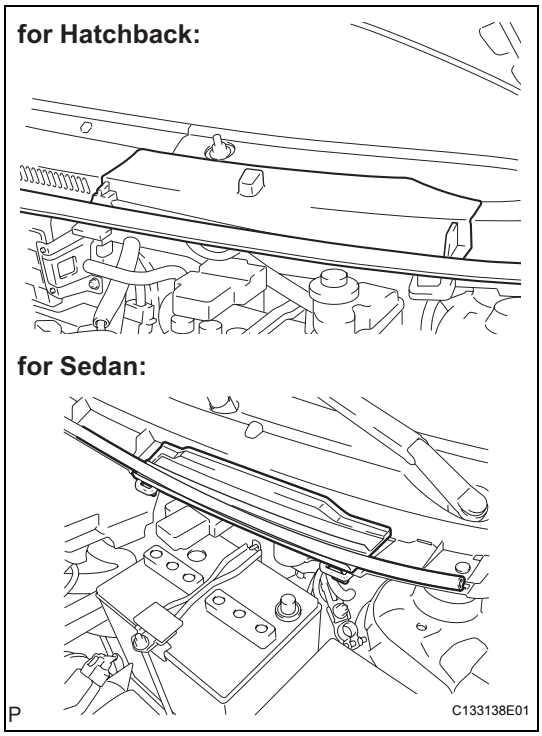

(c) Set the brake fluid can upside down on the reservoir.
Fluid:
SAE J1703 or FMVSS No. 116 DOT3

2. BLEED MASTER CYLINDER

HINT:
If the master cylinder has been disassembled or if the reservoir becomes empty, bleed the air from the master cylinder.

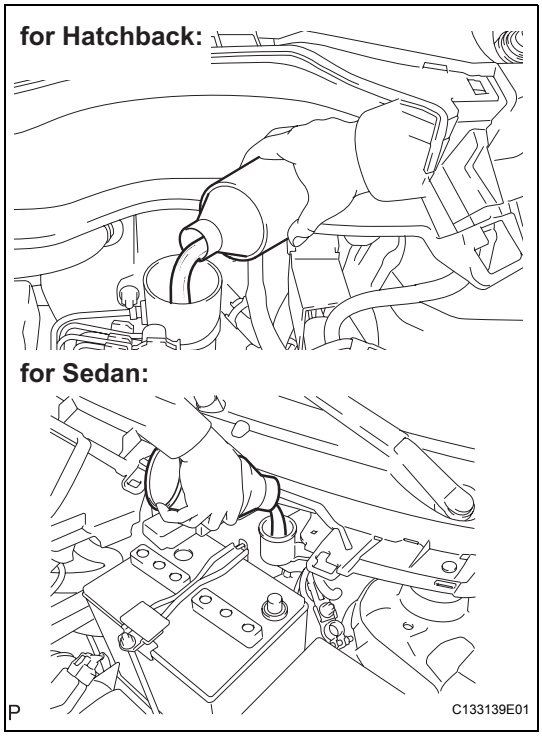

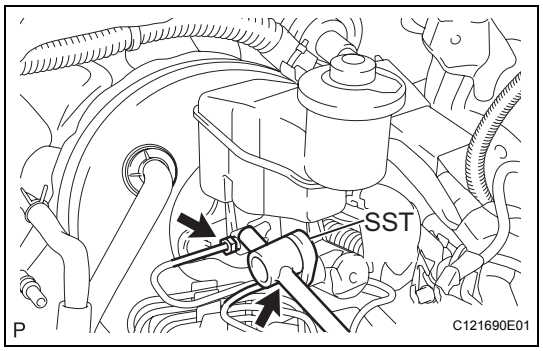

(a) Using SST, disconnect the brake tubes from the master cylinder.
SST 09023-00100

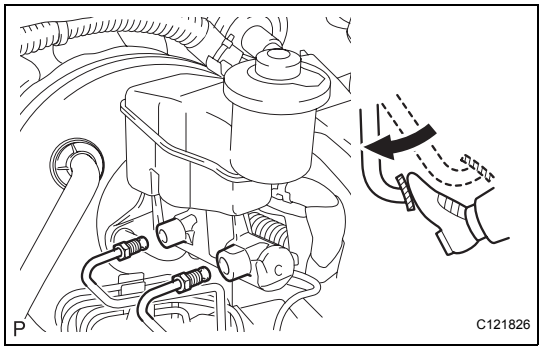

(b) Slowly depress the brake pedal and hold it there (Step A).

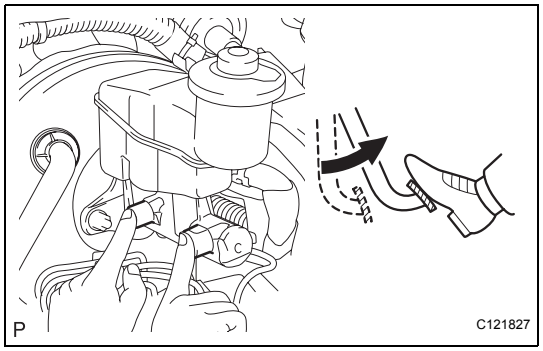

(c) Block the outer holes with your fingers, and release the brake pedal (Step B).
(d) Repeat step A and B 3 or 4 times.

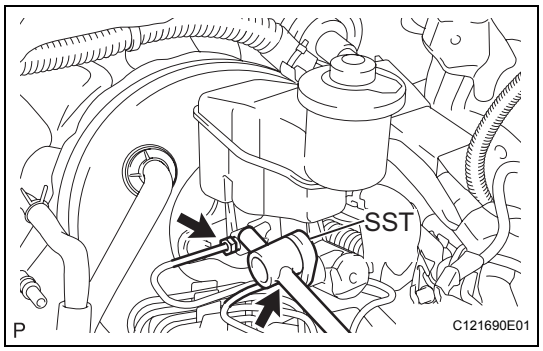

(e) Using SST, connect the brake tubes to the master cylinder.
SST 09023-00100
Torque: for use without SST
15 N*m (155 kgf*cm, 11 ft.*lbf)
for use with SST
14 N*m (143 kgf*cm, 10 ft.*lbf)
HINT:
- Use a torque wrench with a fulcrum length of 300 mm (11.81 in.).
- This torque value is effective when SST is parallel to a torque wrench.

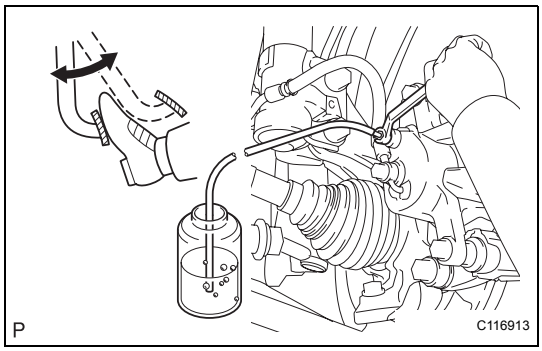

3. BLEED BRAKE LINE

(a) Connect the vinyl tube to the bleeder plug.
(b) Depress the brake pedal several times, then loosen the bleeder plug with the pedal depressed (Step C).
(c) At the point where the fluid stops coming out, tighten the bleeder plug, then release the brake pedal (Step D).
(d) Repeat step C and D until all the air in the fluid is completely bled out.
(e) Tighten the bleeder plug.
Torque: 8.3 N*m (85 kgf*cm, 73 in.*lbf)
(f) Repeat the above procedure to bleed the air out of the brake line for each wheel.

4. CHECK FLUID LEVEL IN RESERVOIR

(a) Check the fluid level and add fluid if necessary.
Fluid:
SAE J1703 or FMVSS No. 116 DOT3

BRAKE PEDAL SUPPORT

COMPONENTS

for Hatchback:

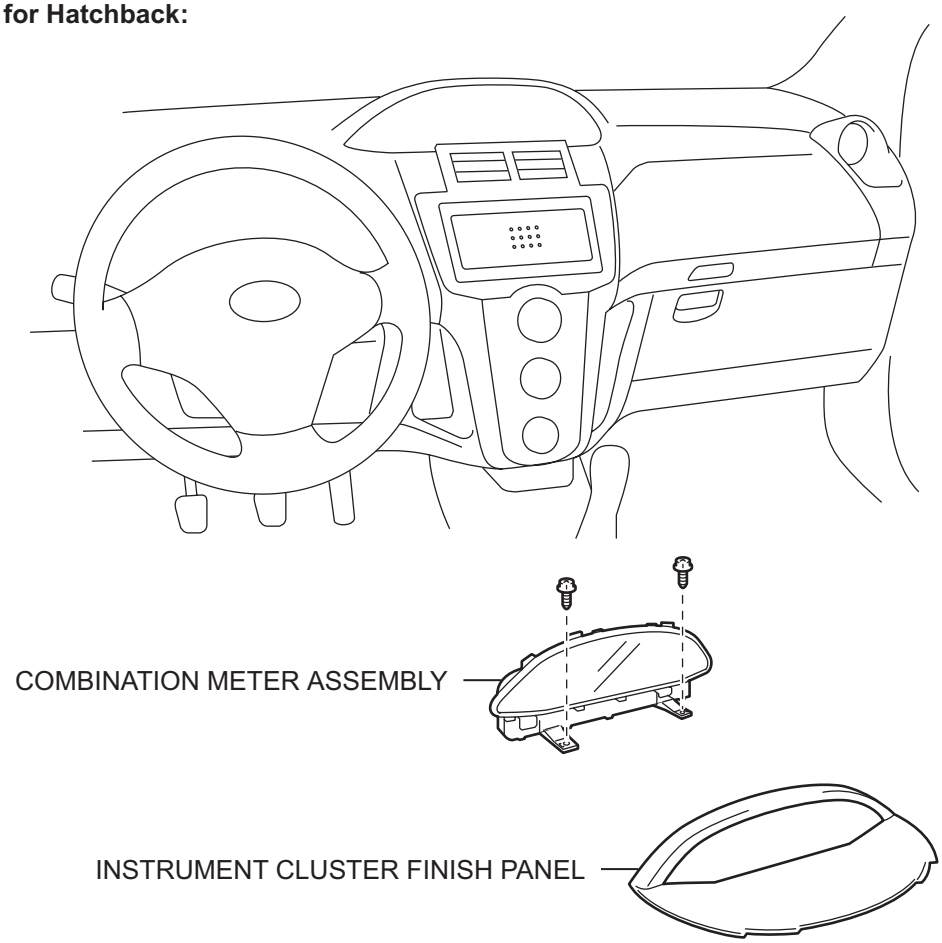

E107796E03

for Sedan:

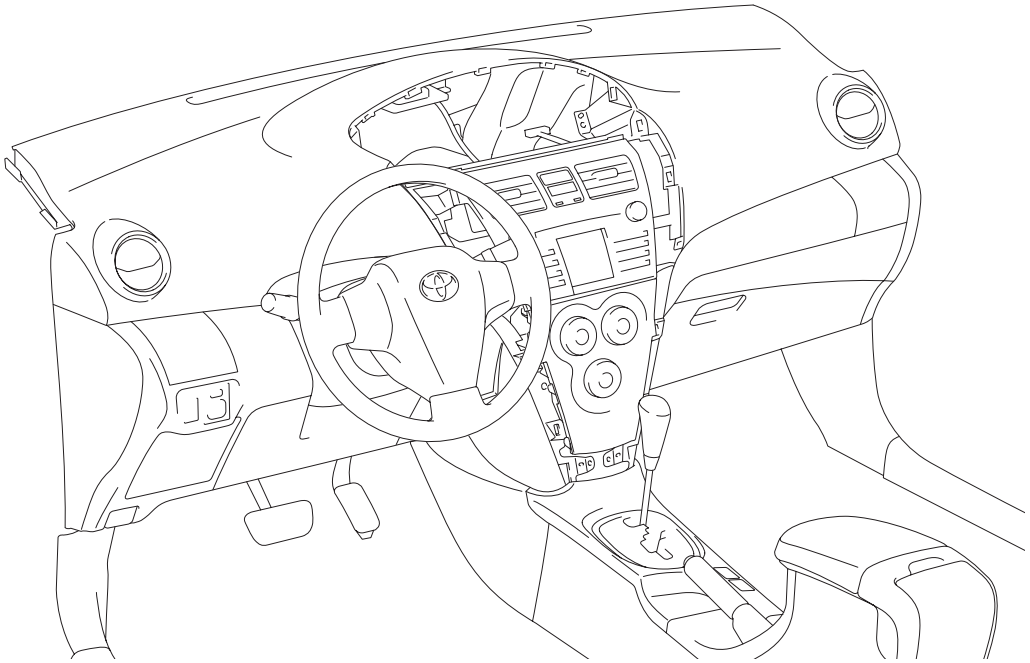

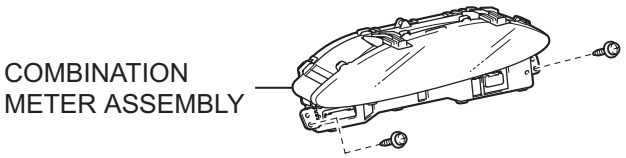



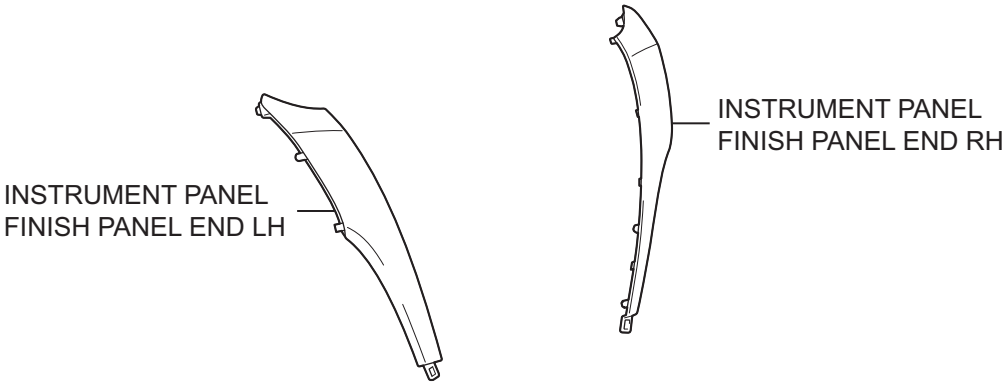

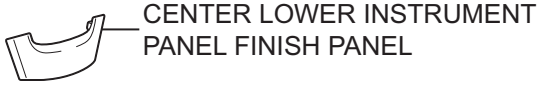

BR

P

E116817E02

for Hatchback:

w/ Curtain Shield Airbag:

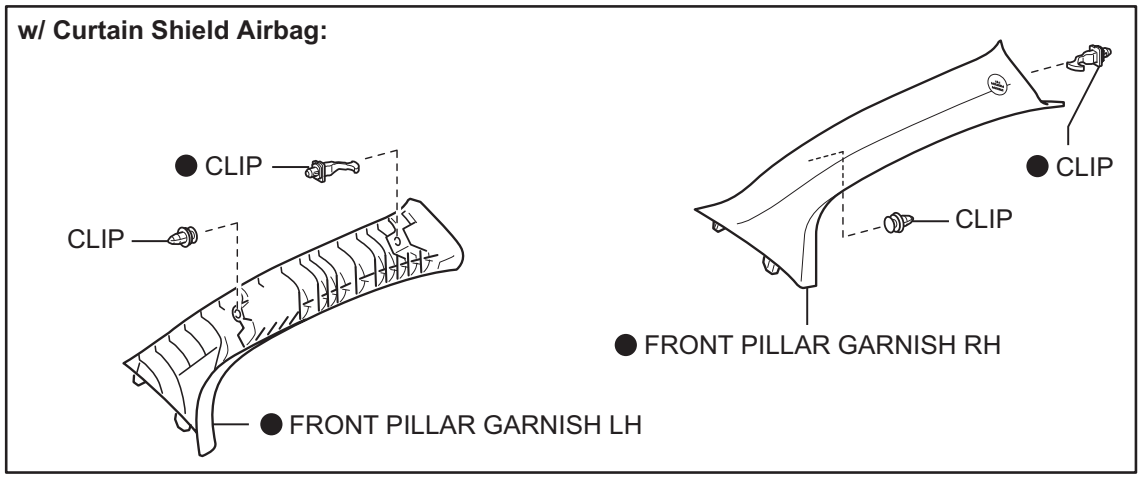

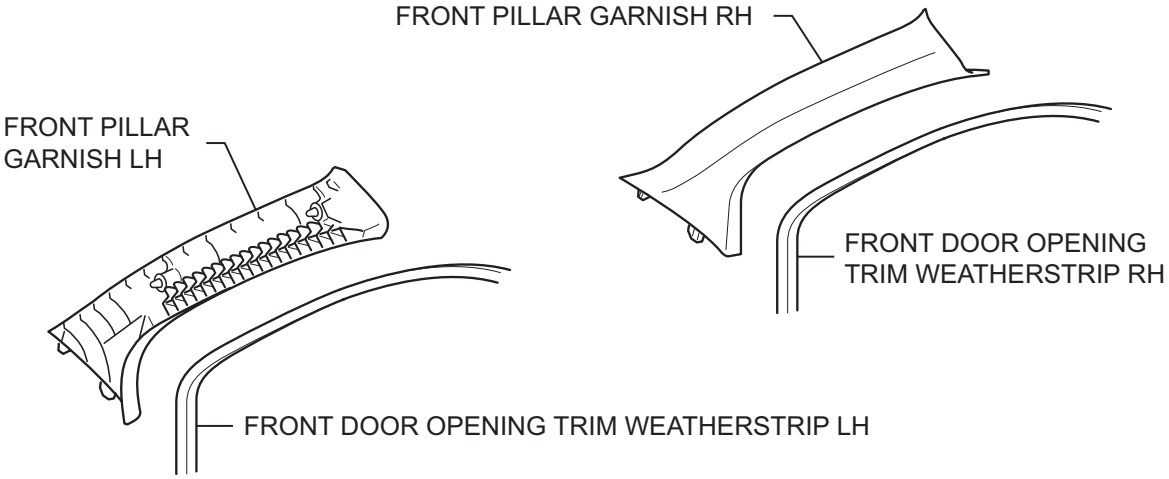

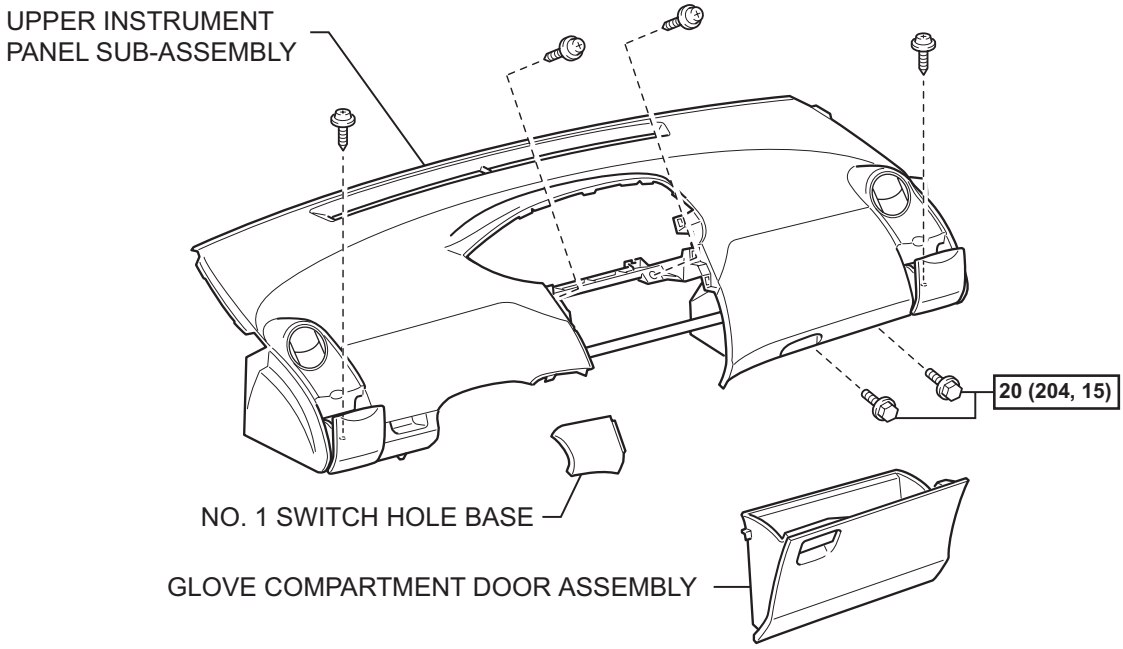

BR

N*m (kgf*cm, ft.*lbf) : Specified torque

● Non-reusable part

0

B108209E02

for Sedan:

w/ Curtain Shield Airbag:

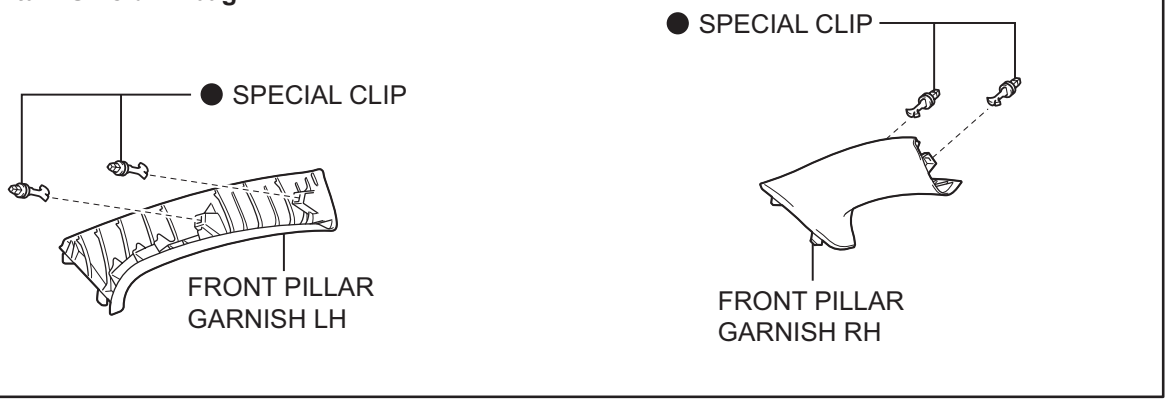

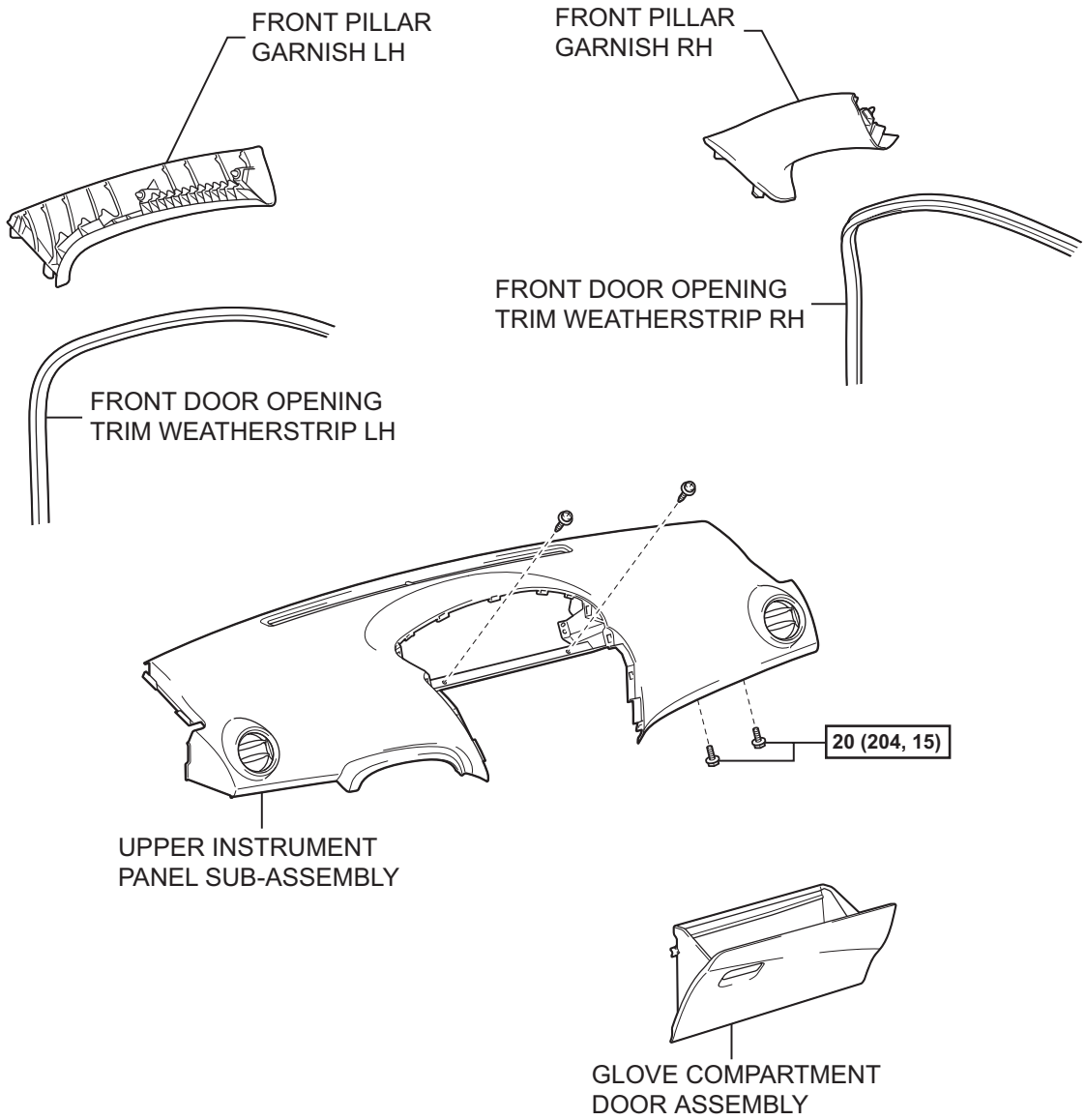

N*m (kgf*cm, ft*lbf) : Specified torque

● Non-reusable part

P

B132310E04

BR

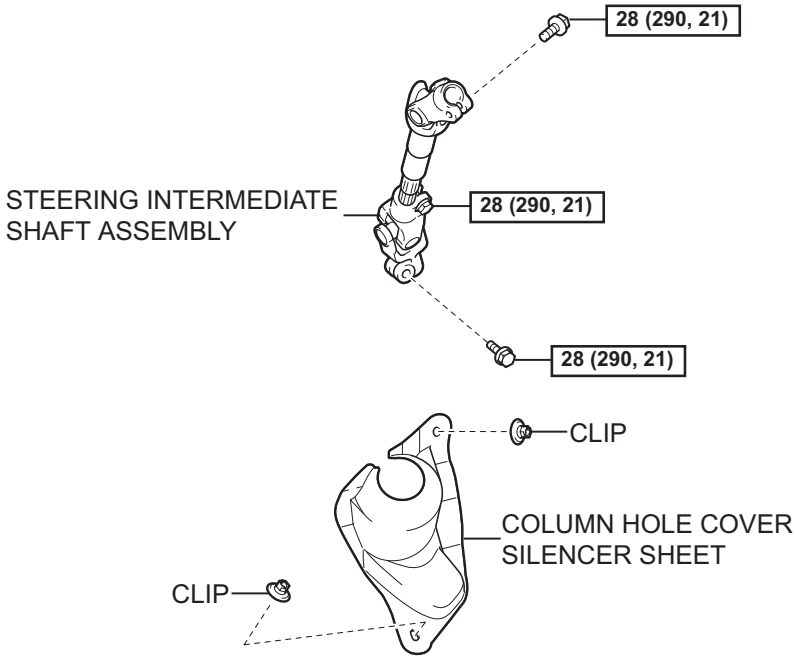

for Hatchback:

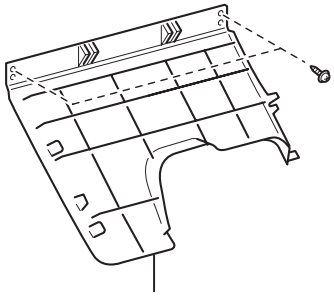

LOWER INSTRUMENT PANEL FINISH PANEL SUB-ASSEMBLY

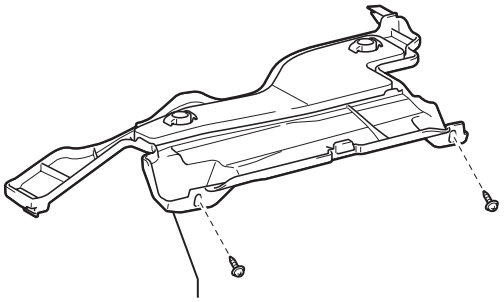

INSTRUMENT PANEL UNDER COVER SUB-ASSEMBLY

for Sedan:

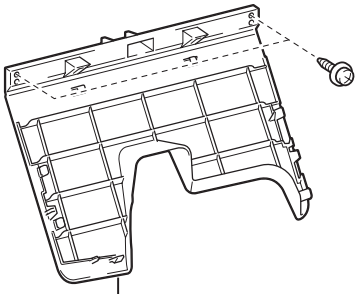

LOWER INSTRUMENT PANEL FINISH PANEL SUB-ASSEMBLY

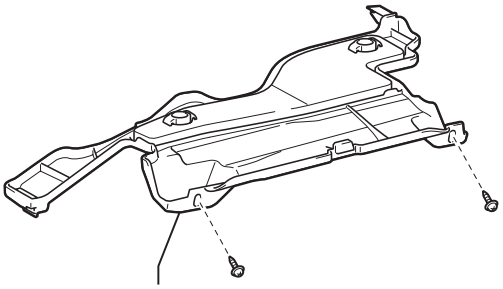

INSTRUMENT PANEL UNDER COVER SUB-ASSEMBLY

BR

N*m (kgf*cm, ft*lbf) : Specified torque

P

C133140E01

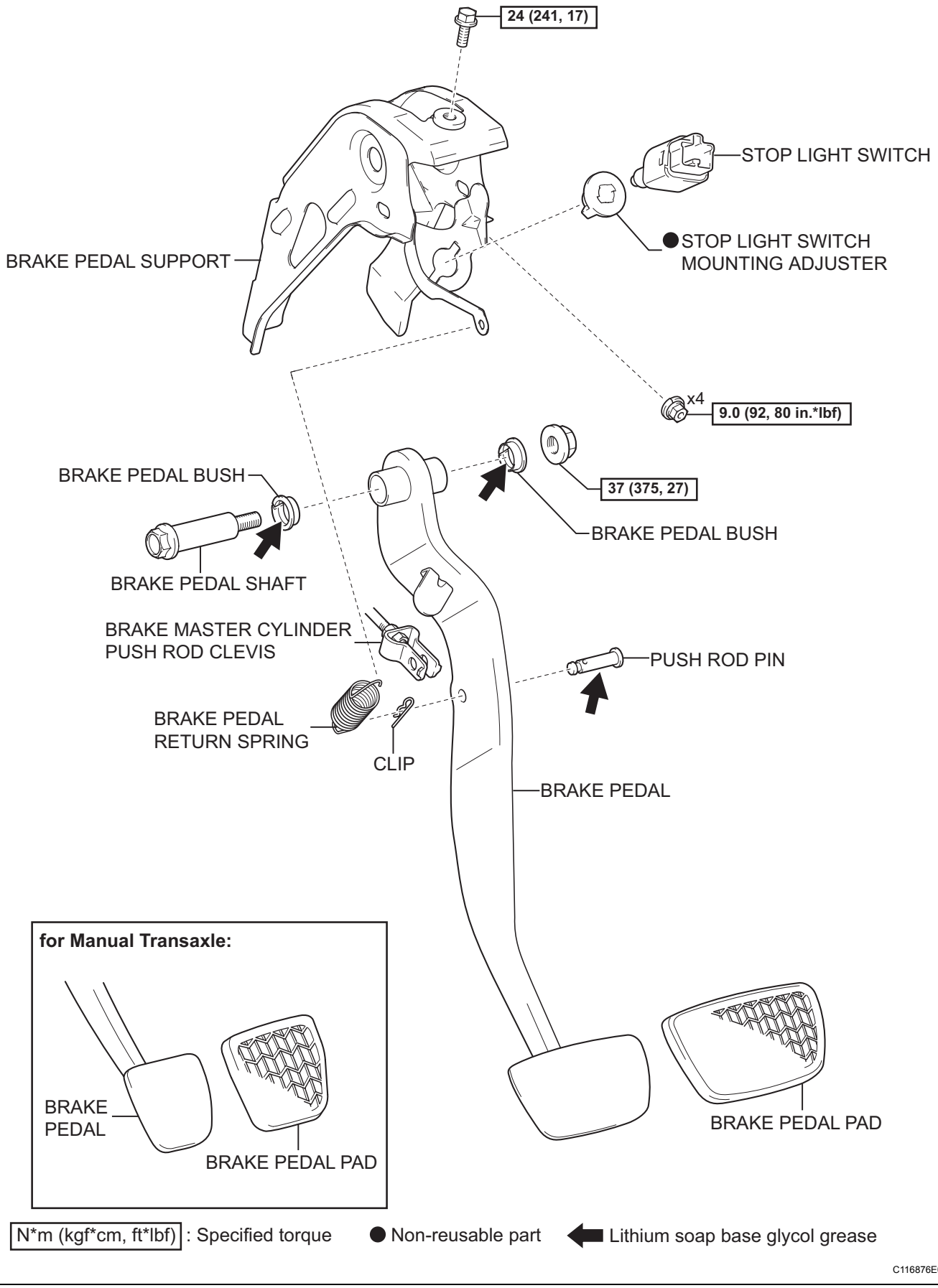
24 (241, 17)
STOP LIGHT SWITCH
STOP LIGHT SWITCH MOUNTING ADJUSTER
BRAKE PEDAL SUPPORT
x4
9.0 (92, 80 in.*lbf)
BRAKE PEDAL BUSH
37 (375, 27)
BRAKE PEDAL BUSH
BRAKE PEDAL SHAFT
BRAKE MASTER CYLINDER PUSH ROD CLEVIS
PUSH ROD PIN
BRAKE PEDAL RETURN SPRING
CLIP
BRAKE PEDAL
for Manual Transaxle:
BRAKE PEDAL
BRAKE PEDAL PAD
BRAKE PEDAL PAD
N*m (kgf*cm, ft*lbf) : Specified torque
Non-reusable part
Lithium soap base glycol grease
P
C116876E01

REMOVAL

1. **DISCONNECT CABLE FROM NEGATIVE BATTERY TERMINAL**
2. **REMOVE CENTER LOWER INSTRUMENT PANEL FINISH PANEL (for Sedan) (See page ME-138)**
3. **REMOVE INSTRUMENT PANEL FINISH PANEL END LH**
   Hatchback: (See page IP-19)
   Sedan: (See page IP-5)
4. **REMOVE INSTRUMENT PANEL FINISH PANEL END RH**
   Hatchback: (See page IP-19)
   Sedan: (See page IP-5)
5. **REMOVE INSTRUMENT CLUSTER FINISH PANEL**
   Hatchback: (See page IP-19)
   Sedan: (See page IP-5)
6. **REMOVE COMBINATION METER ASSEMBLY**
   Hatchback: (See page IP-19)
   Sedan: (See page IP-5)
7. **SEPARATE FRONT DOOR OPENING TRIM WEATHERSTRIP RH**
   Hatchback: (See page IP-19)
   Sedan: (See page IP-5)
8. **SEPARATE FRONT DOOR OPENING TRIM WEATHERSTRIP LH**
   Hatchback: (See page IP-19)
   Sedan: (See page IP-5)
9. **REMOVE FRONT PILLAR GARNISH RH**
   Hatchback: (See page IP-19)
   Sedan: (See page IP-5)
10. **REMOVE FRONT PILLAR GARNISH LH**
    Hatchback: (See page IP-19)
    Sedan: (See page IP-5)
11. **REMOVE NO. 1 SWITCH HOLE BASE (for Hatchback) (See page IP-20)**
12. **REMOVE GLOVE COMPARTMENT DOOR ASSEMBLY**
    Hatchback: (See page IP-20)
    Sedan: (See page IP-6)
13. **REMOVE UPPER INSTRUMENT PANEL SUB-ASSEMBLY**
    Hatchback: (See page IP-21)
    Sedan: (See page IP-6)
14. **REMOVE INSTRUMENT PANEL UNDER COVER SUB-ASSEMBLY**
    Hatchback: (See page IP-67)
    Sedan: (See page IP-44)

15. REMOVE LOWER INSTRUMENT PANEL FINISH PANEL SUB-ASSEMBLY
Hatchback: (See page IP-69)
Sedan: (See page IP-45)

16. REMOVE COLUMN HOLE COVER SILENCER SHEET (See page PS-74)

17. REMOVE STEERING INTERMEDIATE SHAFT ASSEMBLY (See page SR-32)

18. REMOVE STOP LIGHT SWITCH

(a) Disconnect the connector from the stop light switch.

(b) Disconnect the wire harness clamp from the pedal support.

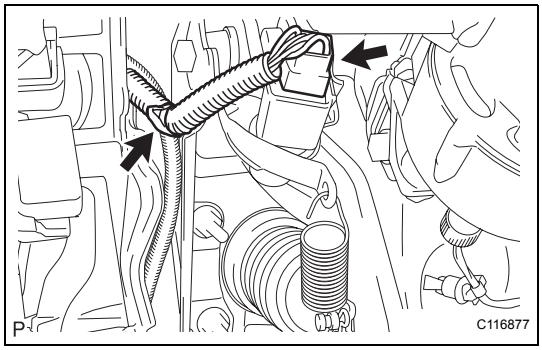

(c) Turn the stop light switch counterclockwise, and remove the stop light switch.

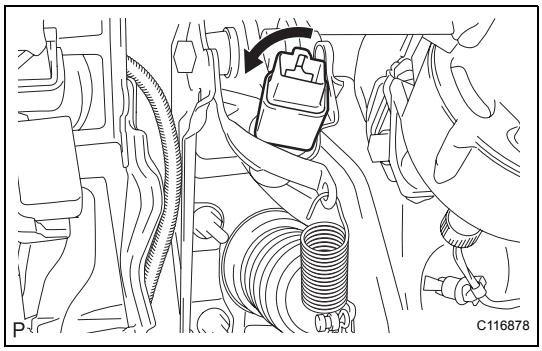

19. REMOVE STOP LIGHT SWITCH MOUNTING ADJUSTER

(a) Remove the stop light switch mounting adjuster from the pedal support.

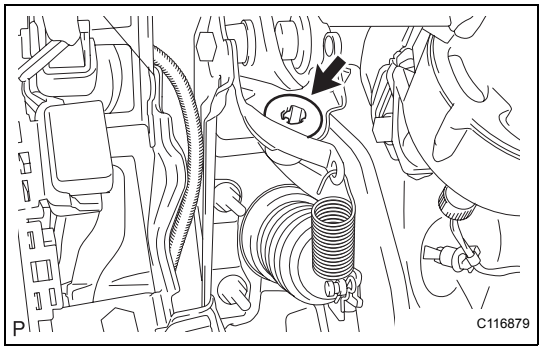

20. SEPARATE BRAKE MASTER CYLINDER PUSH ROD CLEVIS

(a) Remove the brake pedal return spring.

(b) Remove the clip and the push rod pin and separate the push rod clevis from the brake pedal.

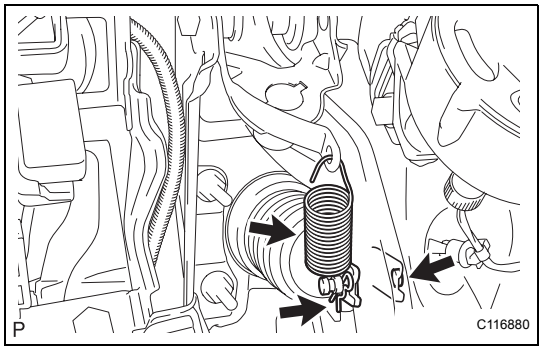

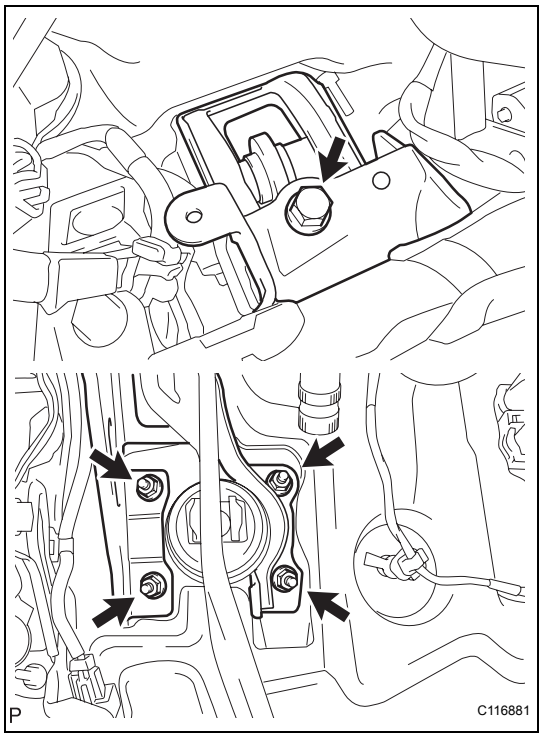

21. REMOVE BRAKE PEDAL SUPPORT

(a) Remove the 4 nuts and bolt and remove the pedal support.

22. REMOVE BRAKE PEDAL

(a) Remove the nut and brake pedal shaft and remove the brake pedal from the pedal support.

23. REMOVE BRAKE PEDAL BUSH

(a) Remove the 2 brake pedal bushes from the brake pedal.

24. REMOVE BRAKE PEDAL PAD

(a) Remove the brake pedal pad from the brake pedal.

INSTALLATION

1. INSTALL BRAKE PEDAL PAD

(a) Install the brake pedal pad onto the brake pedal.

2. INSTALL BRAKE PEDAL BUSH

(a) Apply lithium soap base glycol grease to the 2 bushes.

(b) Install the 2 bushes onto the brake pedal.

3. INSTALL BRAKE PEDAL

(a) Install the brake pedal onto the pedal support with the brake pedal shaft and nut.
Torque: 37 N*m (375 kgf*cm, 27 ft.*lbf)

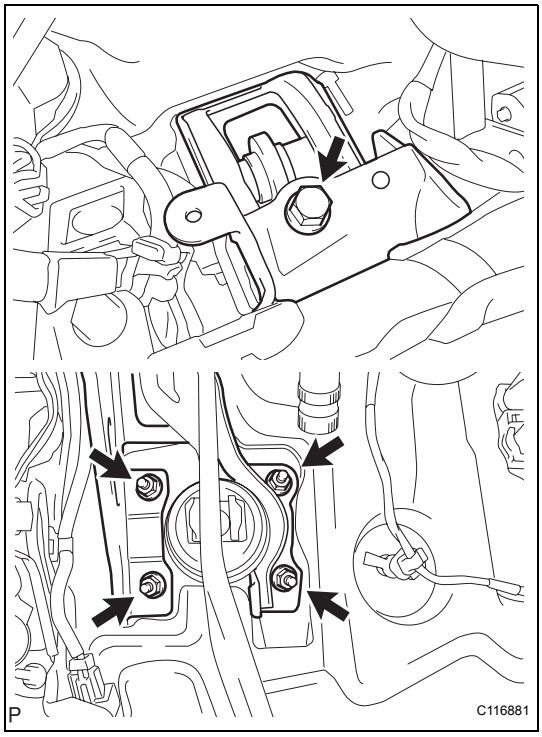

4. INSTALL BRAKE PEDAL SUPPORT

(a) Install the pedal support with the bolt and 4 nuts.
Torque: Bolt
24 N*m (241 kgf*cm, 17 ft.*lbf)
Nut
9.0 N*m (92 kgf*cm, 80 in.*lbf)

5. INSTALL BRAKE MASTER CYLINDER PUSH ROD CLEVIS

(a) Apply lithium soap base glycol grease to the push rod pin.

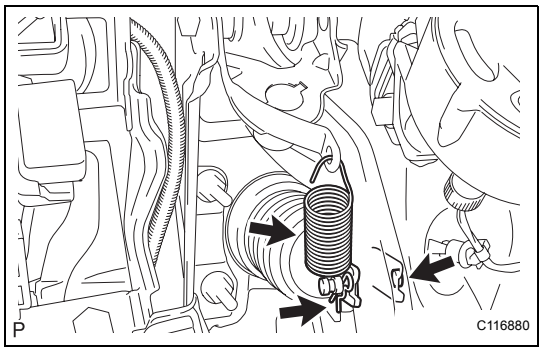

(b) Install the push rod clevis with the push rod pin and clip.

(c) Install the brake pedal return spring.

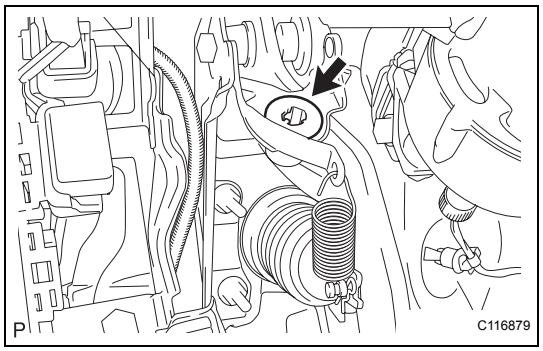

6. **INSTALL STOP LIGHT SWITCH MOUNTING ADJUSTER**
   (a) Install a new stop light switch mounting adjuster onto the pedal support.

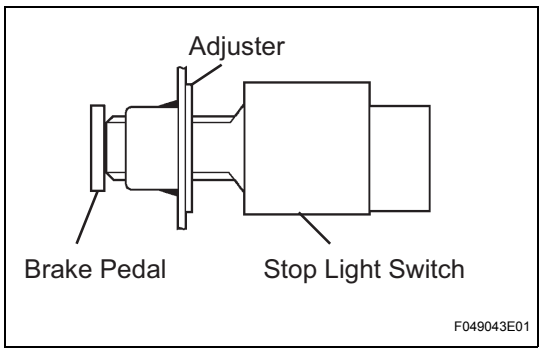

7. **INSTALL STOP LIGHT SWITCH**
   (a) Insert the stop light switch into the adjuster until it just touches the brake pedal.
   NOTICE:
   Do not depress the brake pedal.

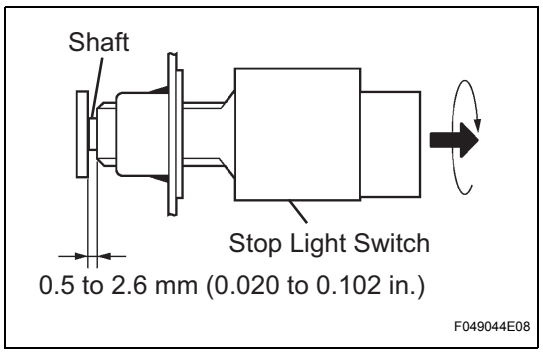

   (b) Make a quarter turn clockwise to install the stop light switch.
   NOTICE:
   Do not depress the brake pedal.
   HINT:
   The turning torque for installing the stop light switch:
   Torque: 1.5 N*m (15 kgf*cm, 13 in.*lbf) or less
   (c) Check the stop light switch clearance.
   Stop light switch clearance:
   0.5 to 2.6 mm (0.020 to 0.102 in.)
   (d) Connect the wire harness clamp onto the pedal support.
   (e) Connect the connector to the stop light switch.

8. **INSPECT AND ADJUST BRAKE PEDAL (See page BR-8)**

9. **INSTALL STEERING INTERMEDIATE SHAFT ASSEMBLY (See page SR-39)**

10. **INSTALL COLUMN HOLE COVER SILENCER SHEET (See page SR-39)**

11. **INSTALL LOWER INSTRUMENT PANEL FINISH PANEL SUB-ASSEMBLY**
    Hatchback: (See page IP-78)
    Sedan: (See page IP-54)

12. **INSTALL INSTRUMENT PANEL UNDER COVER SUB-ASSEMBLY**
    Hatchback: (See page IP-80)
    Sedan: (See page IP-55)

13. **INSTALL UPPER INSTRUMENT PANEL SUB-ASSEMBLY**
    Hatchback: (See page IP-29)

Sedan: (See page IP-11)

14. **INSTALL GLOVE COMPARTMENT DOOR ASSEMBLY**
Hatchback: (See page IP-32)
Sedan: (See page IP-13)

15. **INSTALL NO. 1 SWITCH HOLE BASE (for Hatchback) (See page IP-32)**

16. **INSTALL FRONT PILLAR GARNISH RH**
Hatchback: (See page IP-32)
Sedan: (See page IP-14)

17. **INSTALL FRONT PILLAR GARNISH LH**
Hatchback: (See page IP-32)
Sedan: (See page IP-14)

18. **INSTALL FRONT DOOR OPENING TRIM WEATHERSTRIP RH**
Hatchback: (See page IP-32)
Sedan: (See page IP-14)

19. **INSTALL FRONT DOOR OPENING TRIM WEATHERSTRIP LH**
Hatchback: (See page IP-32)
Sedan: (See page IP-14)

20. **INSTALL COMBINATION METER ASSEMBLY**
Hatchback: (See page IP-32)
Sedan: (See page IP-14)

21. **INSTALL INSTRUMENT CLUSTER FINISH PANEL**
Hatchback: (See page IP-32)
Sedan: (See page IP-14)

22. **INSTALL INSTRUMENT PANEL FINISH PANEL END RH**
Hatchback: (See page IP-32)
Sedan: (See page IP-14)

23. **INSTALL INSTRUMENT PANEL FINISH PANEL END LH**
Hatchback: (See page IP-33)
Sedan: (See page IP-14)

24. **INSTALL CENTER LOWER INSTRUMENT PANEL FINISH PANEL (for Sedan) (See page ME-142)**

25. **CONNECT CABLE TO NEGATIVE BATTERY TERMINAL**
Torque: 5.4 N*m (55 kgf*cm, 48 in.*lbf)

26. **INSPECT SRS WARNING LIGHT**
(See page RS-31)

BRAKE MASTER CYLINDER

COMPONENTS

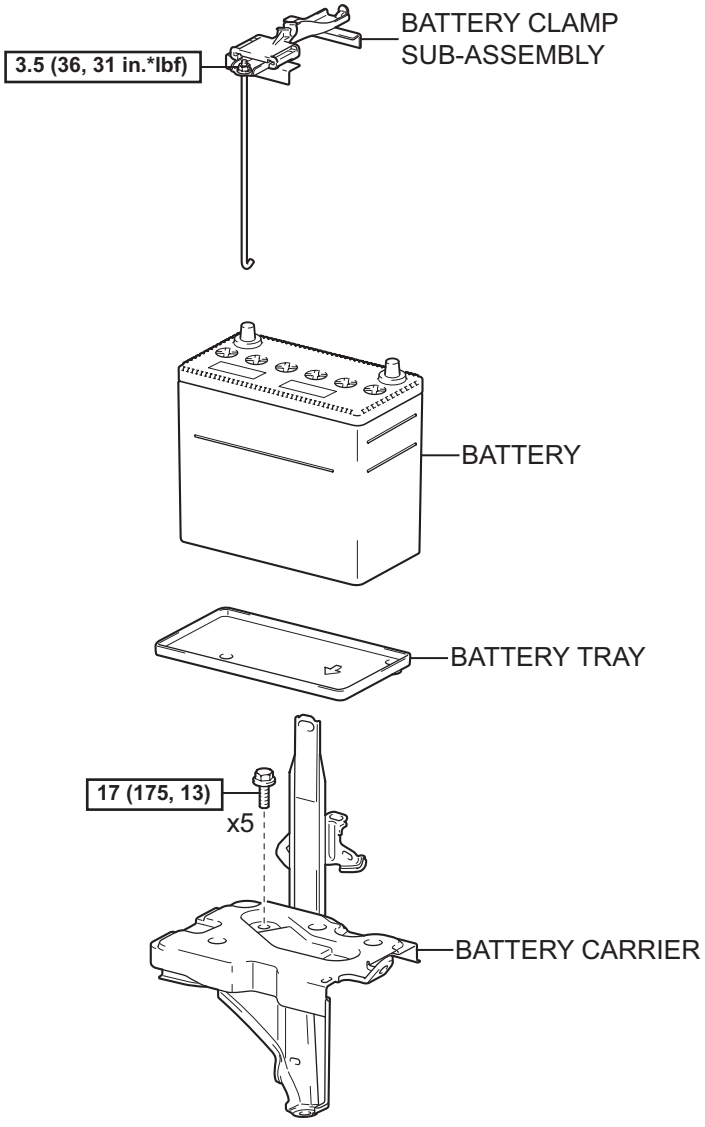

N*m (kgf*cm, ft*lbf) : Specified torque

P

C107526E05

BR

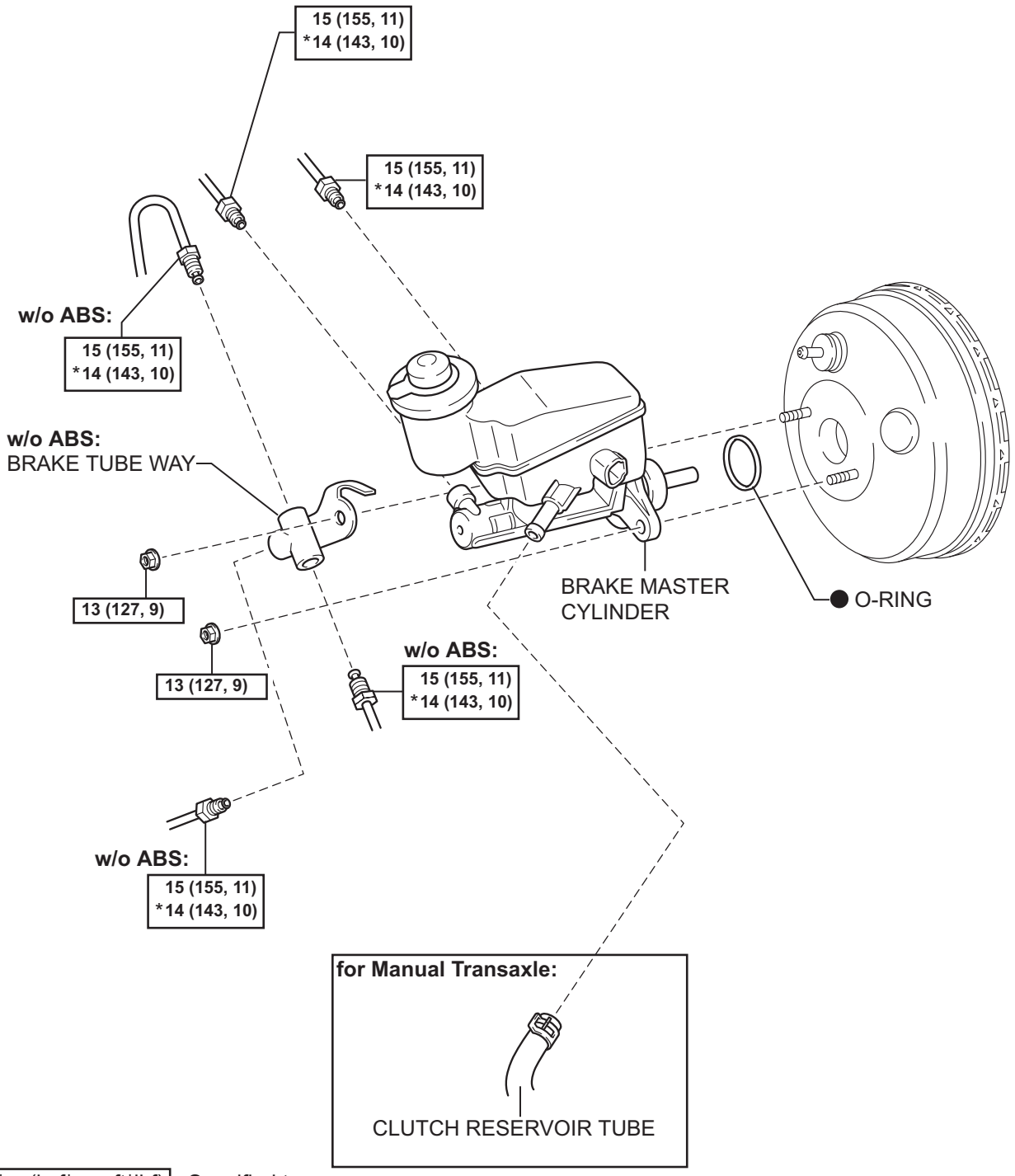

BR

N*m (kgf*cm, ft*lbf) : Specified torque

● Non-reusable part

* For use with SST

N

C121830E03

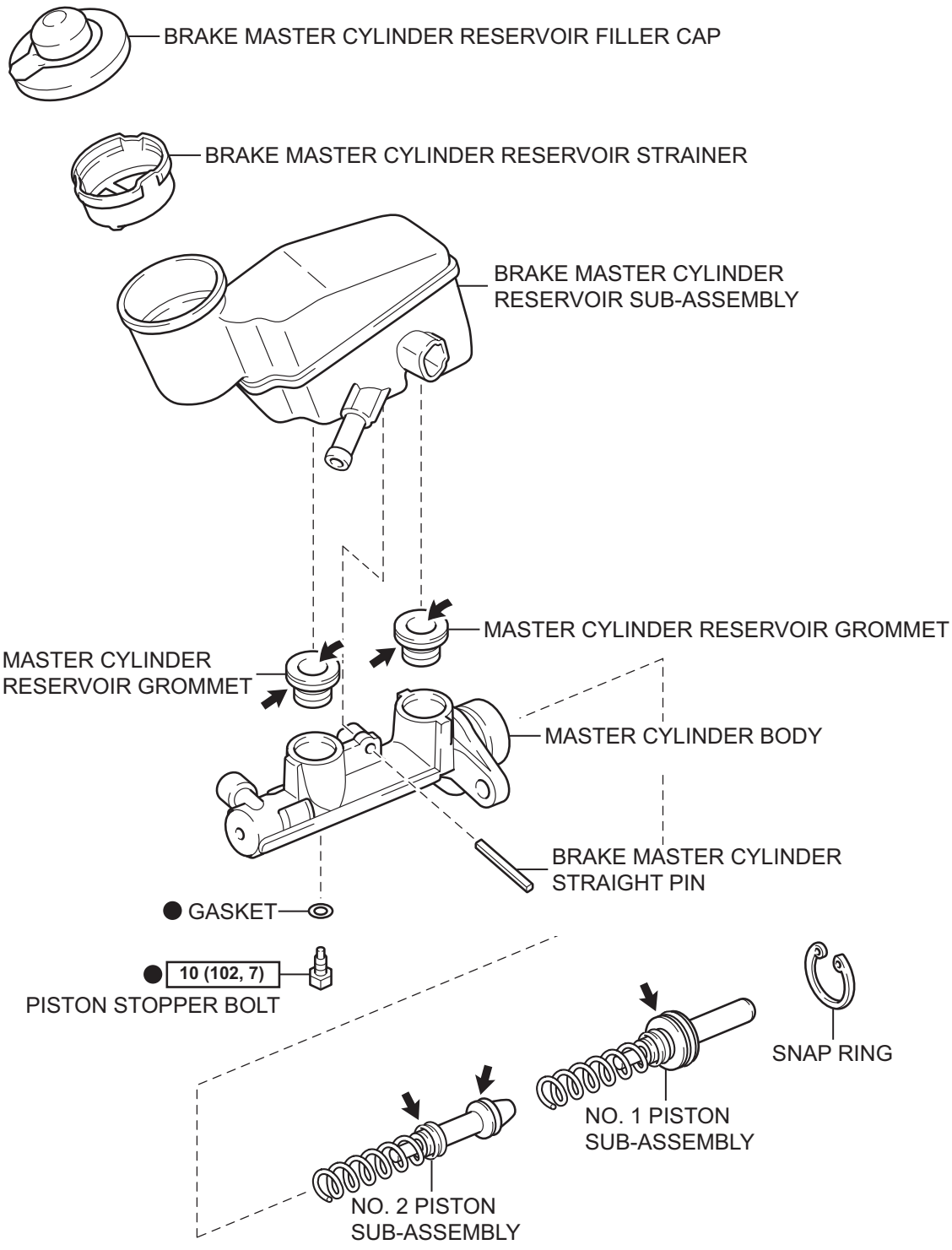

N*m (kgf*cm, ft*lbf) : Specified torque

● Non-reusable part

⬅ Lithium soap base glycol

N

C121831E01

BR

REMOVAL

1. **DRAIN BRAKE FLUID**
   NOTICE:
   Immediately wash off any brake fluid that comes into contact with any painted surfaces.
2. **REMOVE BATTERY (See page EM-122)**
3. **REMOVE BATTERY TRAY**
4. **REMOVE BATTERY CARRIER (See page EM-125)**
5. **DISCONNECT CLUTCH RESERVOIR TUBE (for Manual Transaxle)**
   (a) Slide the clip and disconnect the reservoir tube.
6. **REMOVE BRAKE MASTER CYLINDER**
   NOTICE:
   Remove the brake master cylinder after depressing the brake pedal several times and bleeding the vacuum pressure from inside the brake booster.
   (a) Disconnect the brake fluid level warning switch connector.

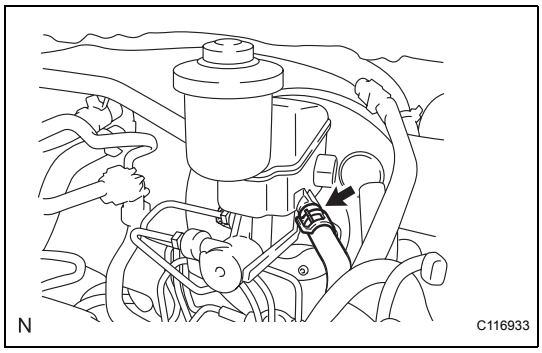

   (b) w/o ABS:
      (1) Using SST, separate the 3 brake tubes from the brake tube way.
      SST 09023-00100

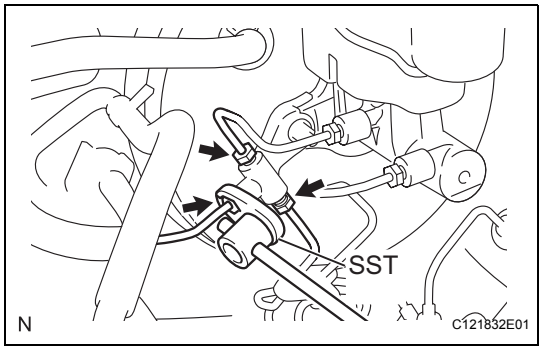

   (c) Using SST, separate the 2 brake tubes from the brake master cylinder.
      SST 09023-00100

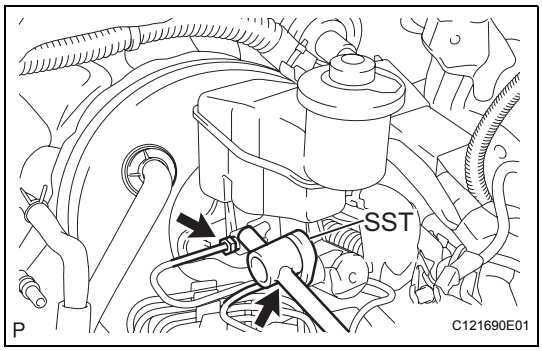

   (d) w/ ABS:
      (1) Remove the 2 nuts and remove the brake master cylinder.

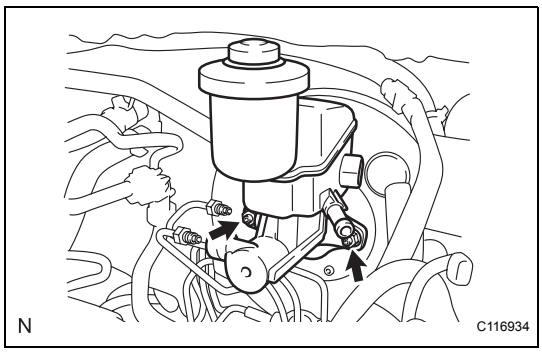

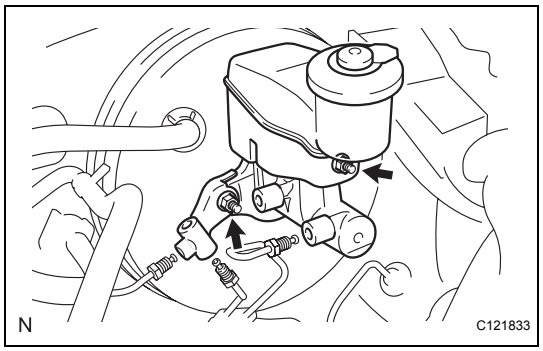

(e) w/o ABS:
  (1) Remove the 2 nuts and brake tube way and remove the brake master cylinder.
(f) Remove the O-ring from the brake master cylinder.

DISASSEMBLY

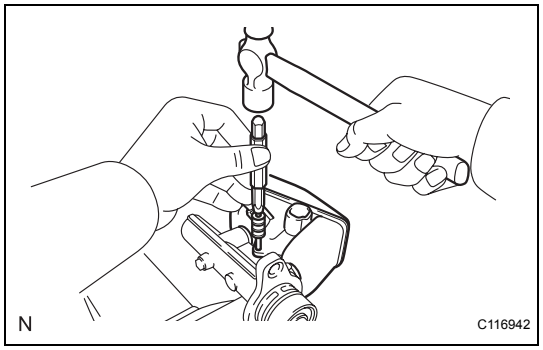

1. REMOVE BRAKE MASTER CYLINDER RESERVOIR SUB-ASSEMBLY

(a) Fix the brake master cylinder in a vise between aluminum plates.
NOTICE:
Do not overtighten the vise.
(b) Using a pin punch and hammer, tap out the straight pin.
(c) Remove the master cylinder reservoir and 2 grommets.
(d) Remove the filler cap and strainer from the master cylinder reservoir.

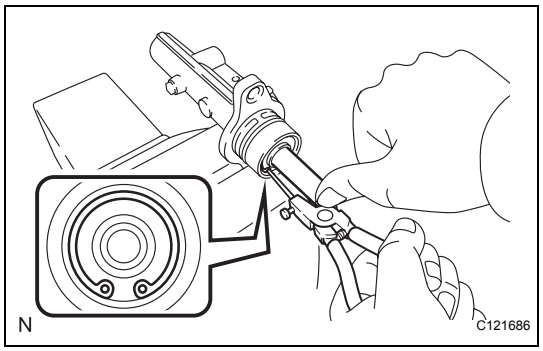

2. REMOVE BRAKE MASTER CYLINDER KIT

(a) Push in the piston and remove the snap ring using snap ring pliers.

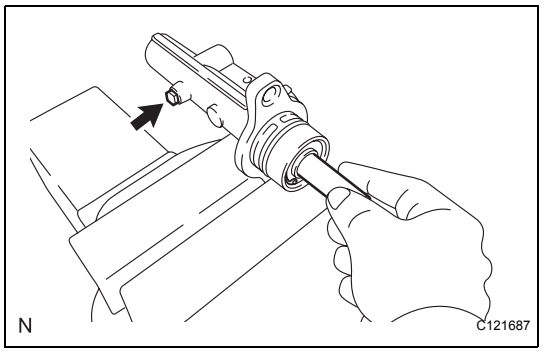

(b) Push in the piston and remove the piston stopper bolt and gasket.
(c) Remove No. 1 piston from the master cylinder body by pulling it straight out.
NOTICE:
Do not scratch the inside of the cylinder body.

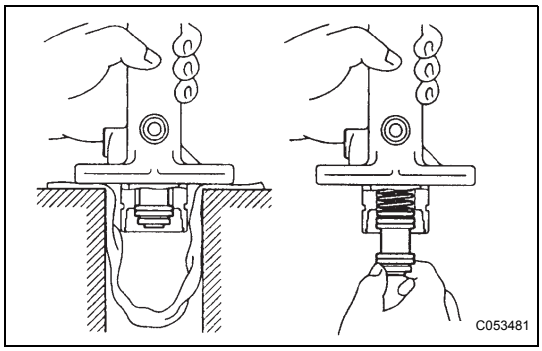

(d) Tap the flanged part against wooden blocks until the end of No. 2 piston comes out. When the end of No. 2 piston comes out, pull No. 2 piston straight out of the master cylinder body.
NOTICE:
Do not scratch the inside of the cylinder body.

INSPECTION

1. INSPECT BRAKE MASTER CYLINDER

(a) Check the inside of the master cylinder body for scratch.

If scratched, replace the brake master cylinder sub-assembly with a new one.

REASSEMBLY

1. INSTALL BRAKE MASTER CYLINDER KIT

(a) Fix the master cylinder body in a vise between aluminum plates.
NOTICE:
Do not overtighten the vise.

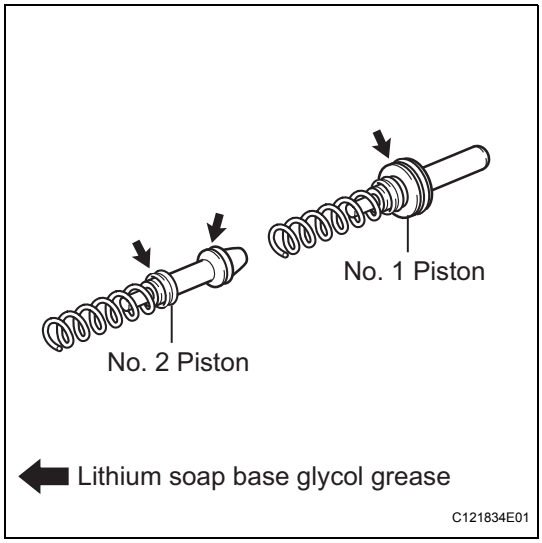

(b) Apply lithium soap base glycol grease to the rubber part as shown in the illustration.

(c) Install No. 1 piston and No. 2 piston onto the master cylinder body.
NOTICE:
- **Install the piston straight while being not to careful damage the inside of the cylinder.**
- **Do not damage the lip of the cylinder cup.**

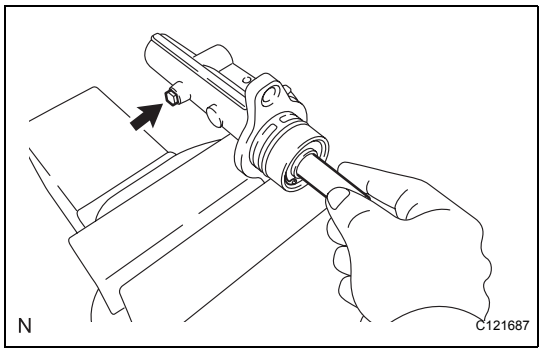

(d) Push in the piston and install a new gasket and a new piston stopper bolt.
Torque: 10 N*m (102 kgf*cm, 7 ft.*lbf)

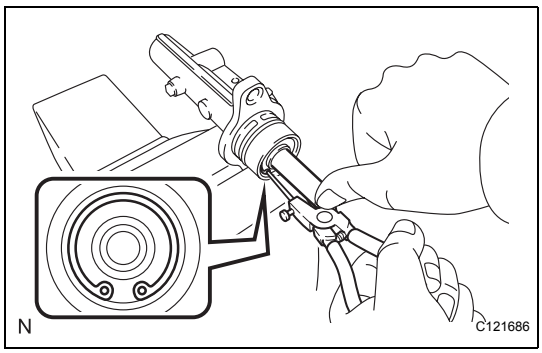

(e) Install the snap ring using snap ring pliers with the piston pushed in.
NOTICE:
Do not scratch the inside of the cylinder body.

2. INSTALL BRAKE MASTER CYLINDER RESERVOIR SUB-ASSEMBLY

(a) Install the strainer and filler cap onto the master cylinder reservoir.

(b) Apply lithium soap base glycol grease to the 2 grommets and install them onto the master cylinder body.

(c) Install the master cylinder reservoir onto the master cylinder body.

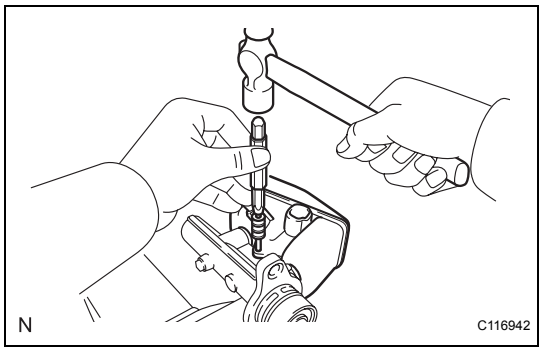

(d) Using a pin punch and hammer, tap in the straight pin.

INSTALLATION

1. INSPECT AND ADJUST BRAKE BOOSTER PUSH ROD

(a) Set SST on the master cylinder and lower the rod of SST until it just touches the piston.
SST 09737-00013

(b) Apply chalk to the flat tip of the SST rod. Turn SST upside down and measure the clearance between the brake booster push rod and SST.
Standard Clearance:
-0.21 to 0 mm (-0.0083 to 0 in.)
If there is clearance between the SST main body and the shell of the brake booster, the push rod is protruding too far. If the chalk does not stick to the tip of the brake booster push rod, the push rod protrusion is insufficient.

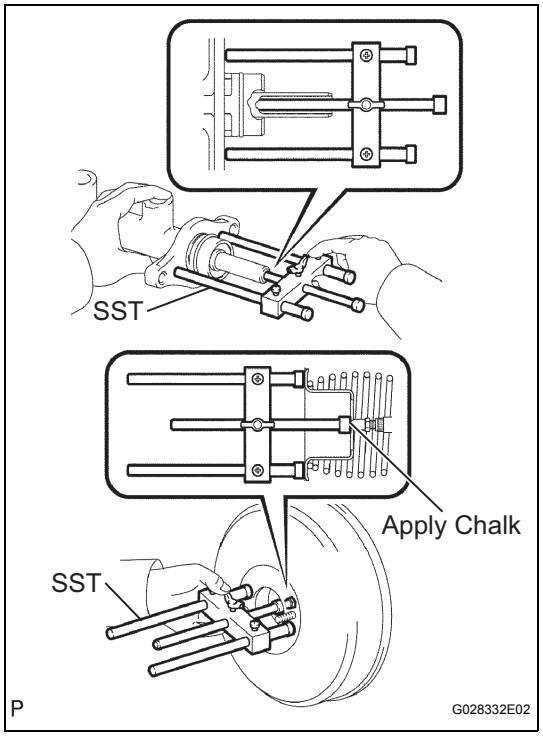

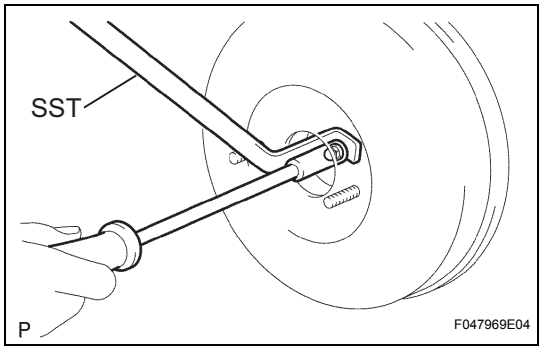

(c) If the clearance is not within the standard, adjust the length by holding the rod using SST and turning the tip of the rod using a 7 mm socket driver.
SST 09737-00020
NOTICE:
Check the push rod clearance again after adjusting.

2. INSTALL BRAKE MASTER CYLINDER

(a) Install a new O-ring onto the brake master cylinder.

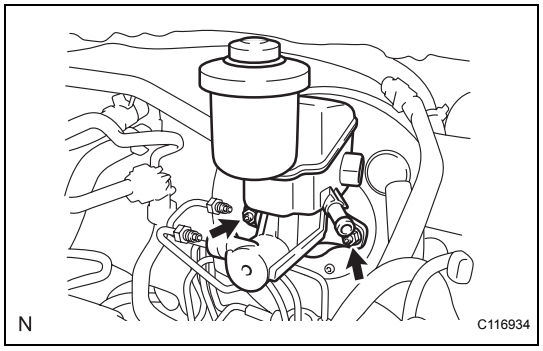

(b) w/ ABS:
(1) Install the brake master cylinder with the 2 nuts.
Torque: 13 N*m (127 kgf*cm, 9 ft.*lbf)

BR

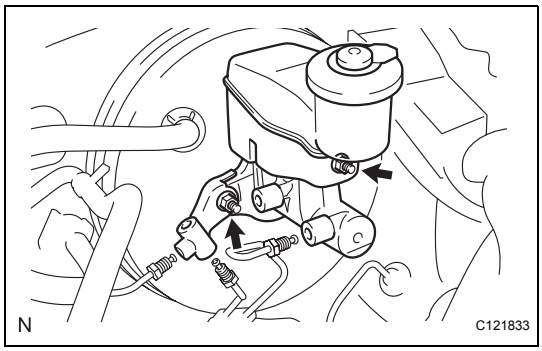

(c) w/o ABS:
(1) Install the brake master cylinder and brake tube way with the 2 nuts.
Torque: 13 N*m (127 kgf*cm, 9 ft.*lbf)

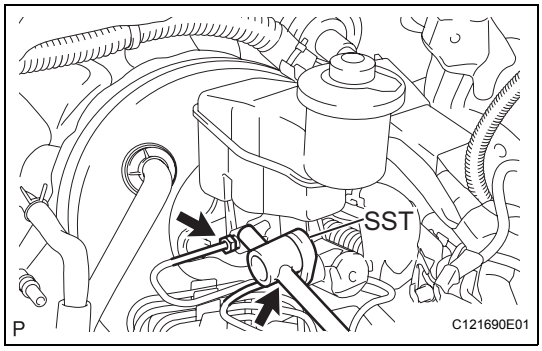

(d) Using SST, install the 2 brake tubes onto the brake master cylinder.
SST 09023-00100
Torque: for use without SST
15 N*m (155 kgf*cm, 11 ft.*lbf)
for use with SST
14 N*m (143 kgf*cm, 10 ft.*lbf)
HINT:
- Use a torque wrench with a fulcrum length of 300 mm (11.81 in.).
- This torque value is effective when SST is parallel to a torque wrench.

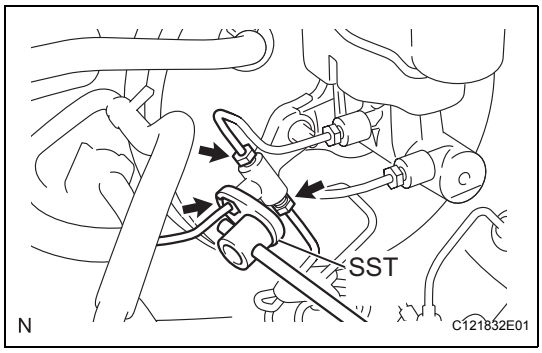

(e) w/o ABS:
(1) Using SST, install the 3 brake tubes to the brake tube way.
SST 09023-00100
Torque: for use without SST
15 N*m (155 kgf*cm, 11 ft.*lbf)
for use with SST
14 N*m (143 kgf*cm, 10 ft.*lbf)
HINT:
- Use a torque wrench with a fulcrum length of 300 mm (11.81 in.).
- This torque value is effective when SST is parallel to a torque wrench.

(f) Connect the brake fluid level warning switch connector.

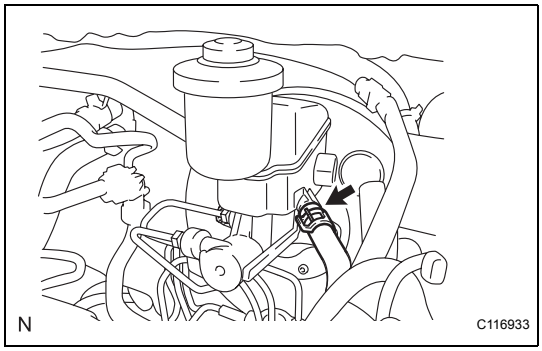

3. CONNECT CLUTCH RESERVOIR TUBE (for Manual Transaxle)
(a) Connect the reservoir tube with the clip.

4. INSTALL BATTERY CARRIER (See page EM-145)

5. INSTALL BATTERY TRAY

6. INSTALL BATTERY (See page EM-148)

7. FILL RESERVOIR WITH BRAKE FLUID (See page BR-10)

8. BLEED MASTER CYLINDER (See page BR-10)

9. BLEED BRAKE LINE (See page BR-12)

10. CHECK FLUID LEVEL IN RESERVOIR (See page BR-12)

11. CHECK FOR BRAKE FLUID LEAKAGE

BRAKE BOOSTER

COMPONENTS

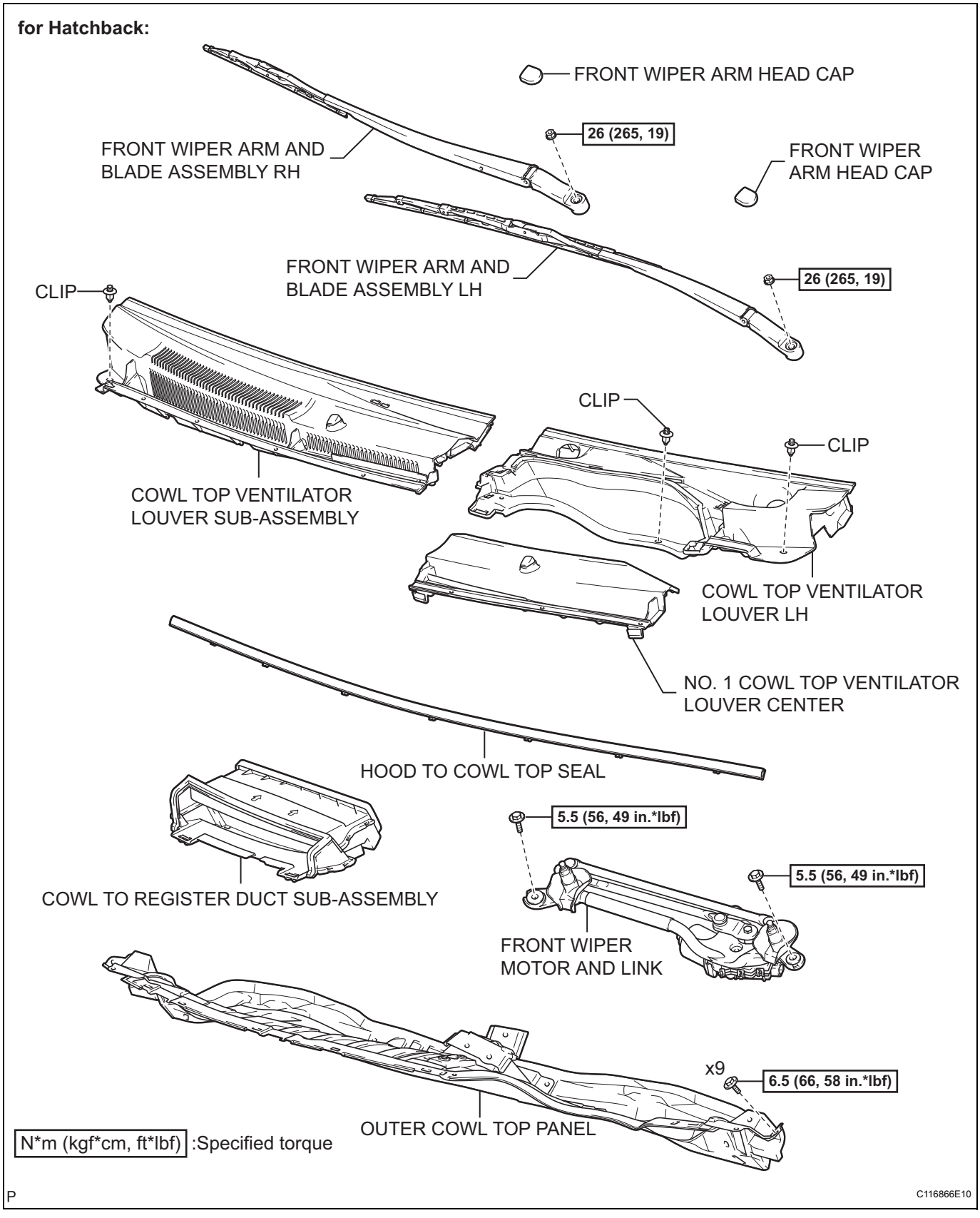

BR

for Sedan:

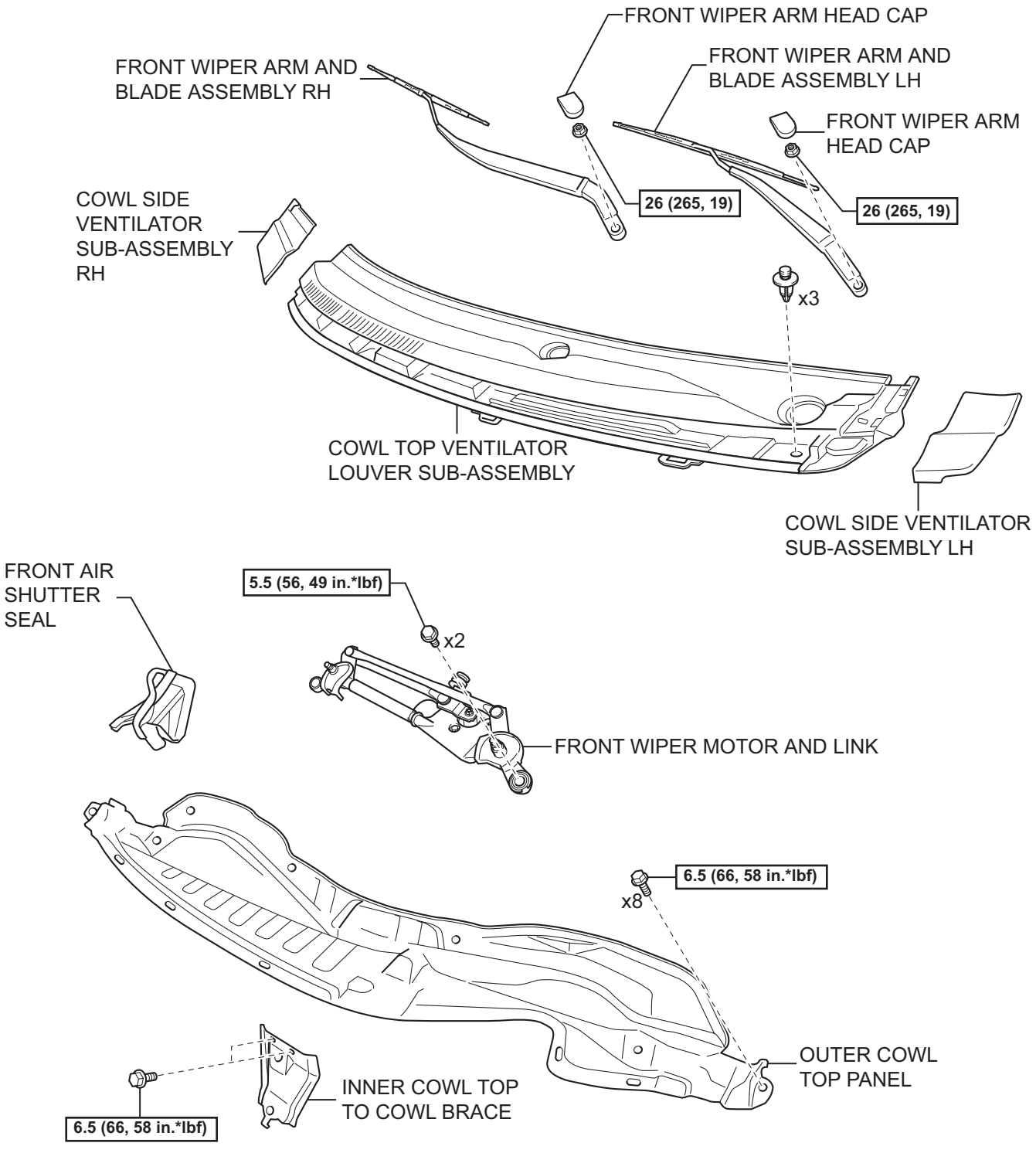

N*m (kgf*cm, ft*lbf) : Specified torque

Y

A133320E07

BR

for Hatchback:

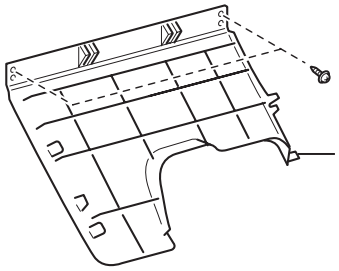

LOWER INSTRUMENT PANEL
FINISH PANEL SUB-ASSEMBLY

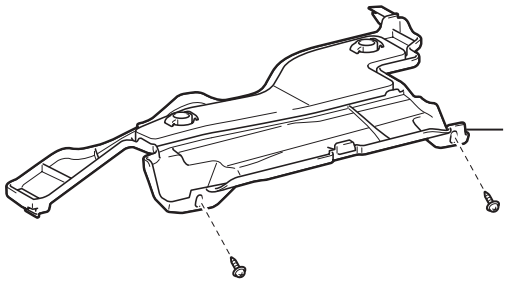

INSTRUMENT PANEL UNDER
COVER SUB-ASSEMBLY

---

for Sedan:

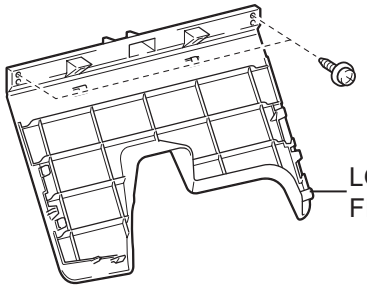

LOWER INSTRUMENT PANEL
FINISH PANEL SUB-ASSEMBLY

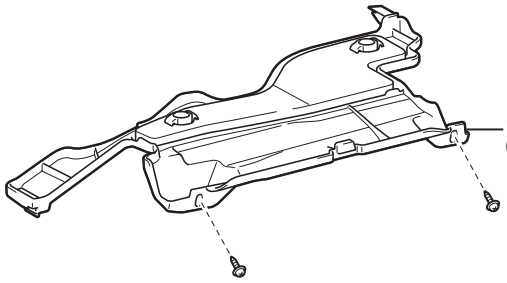

INSTRUMENT PANEL UNDER
COVER SUB-ASSEMBLY

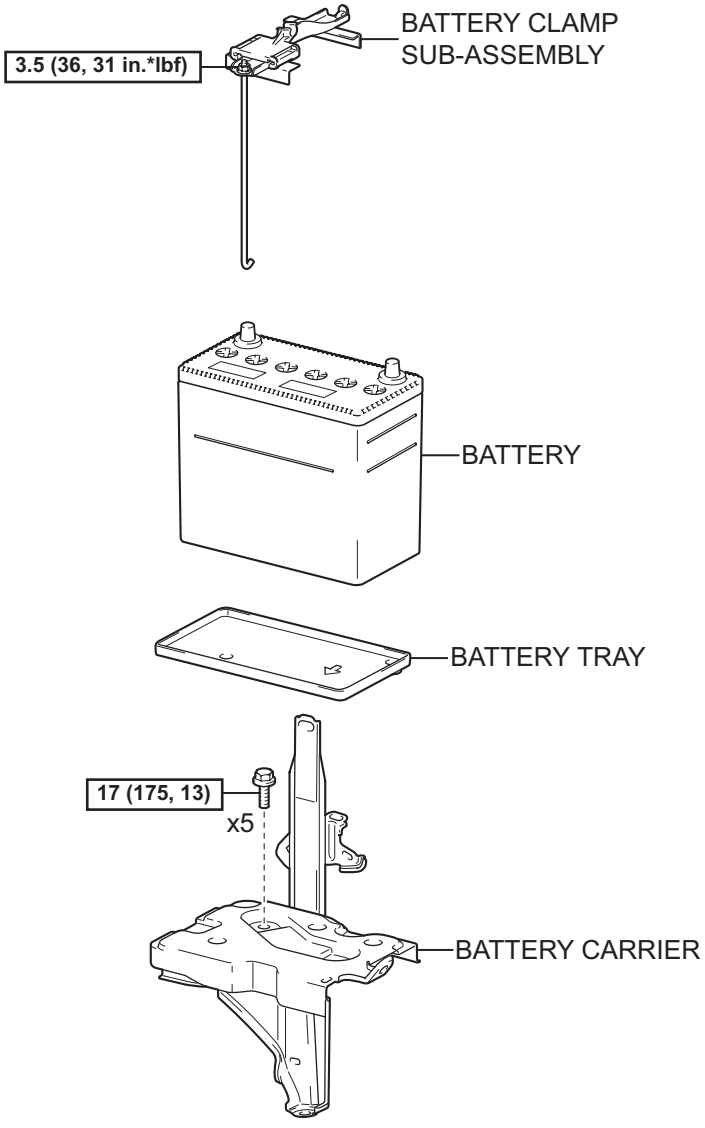

N*m (kgf*cm, ft*lbf) : Specified torque

P

C107526E05

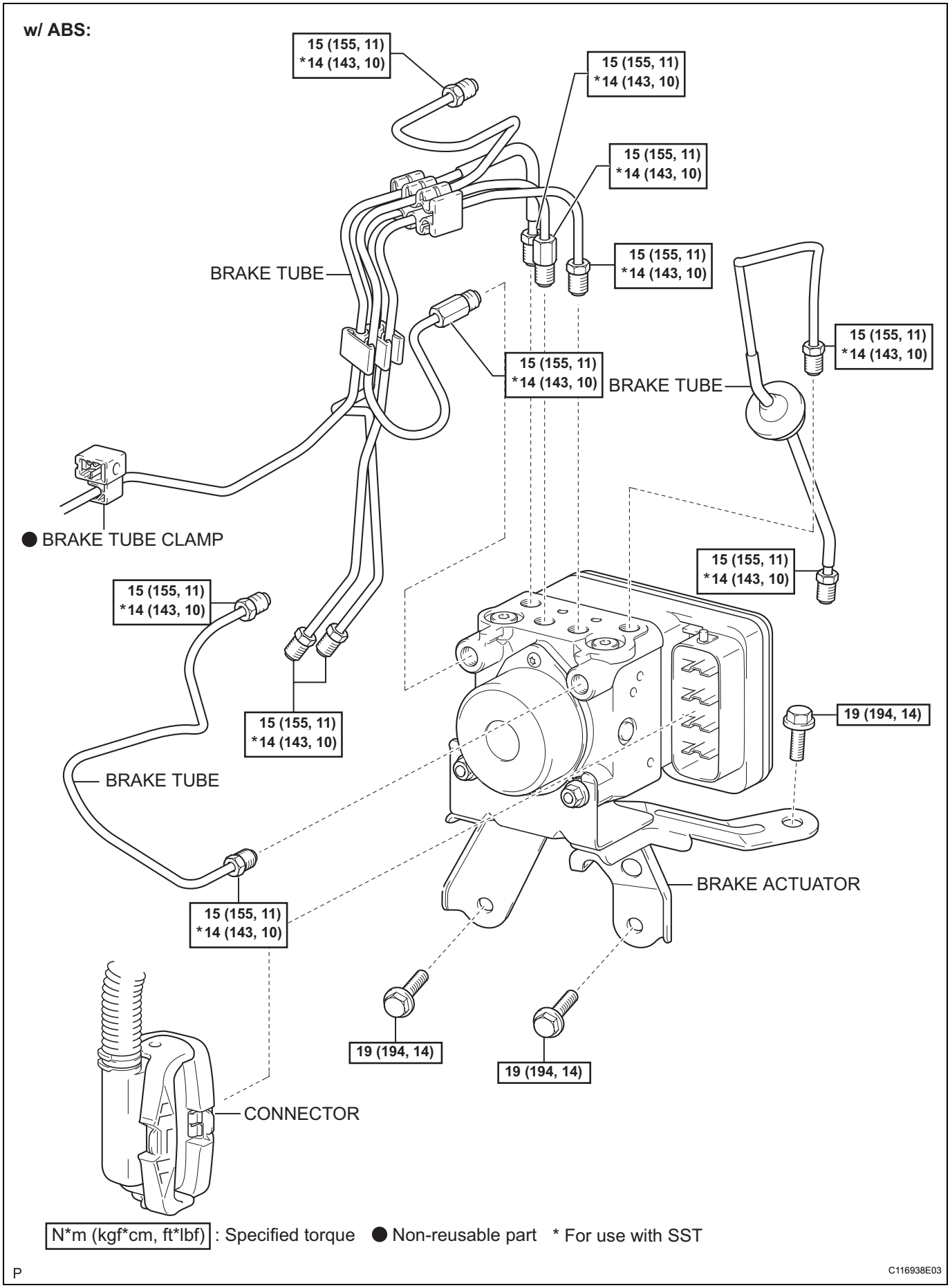
w/ ABS:
15 (155, 11)
*14 (143, 10)
BRAKE TUBE
BRAKE TUBE
BRAKE TUBE
● BRAKE TUBE CLAMP
19 (194, 14)
BRAKE ACTUATOR
CONNECTOR
N*m (kgf*cm, ft*lbf) : Specified torque ● Non-reusable part * For use with SST
P
C116938E03

w/ ABS:

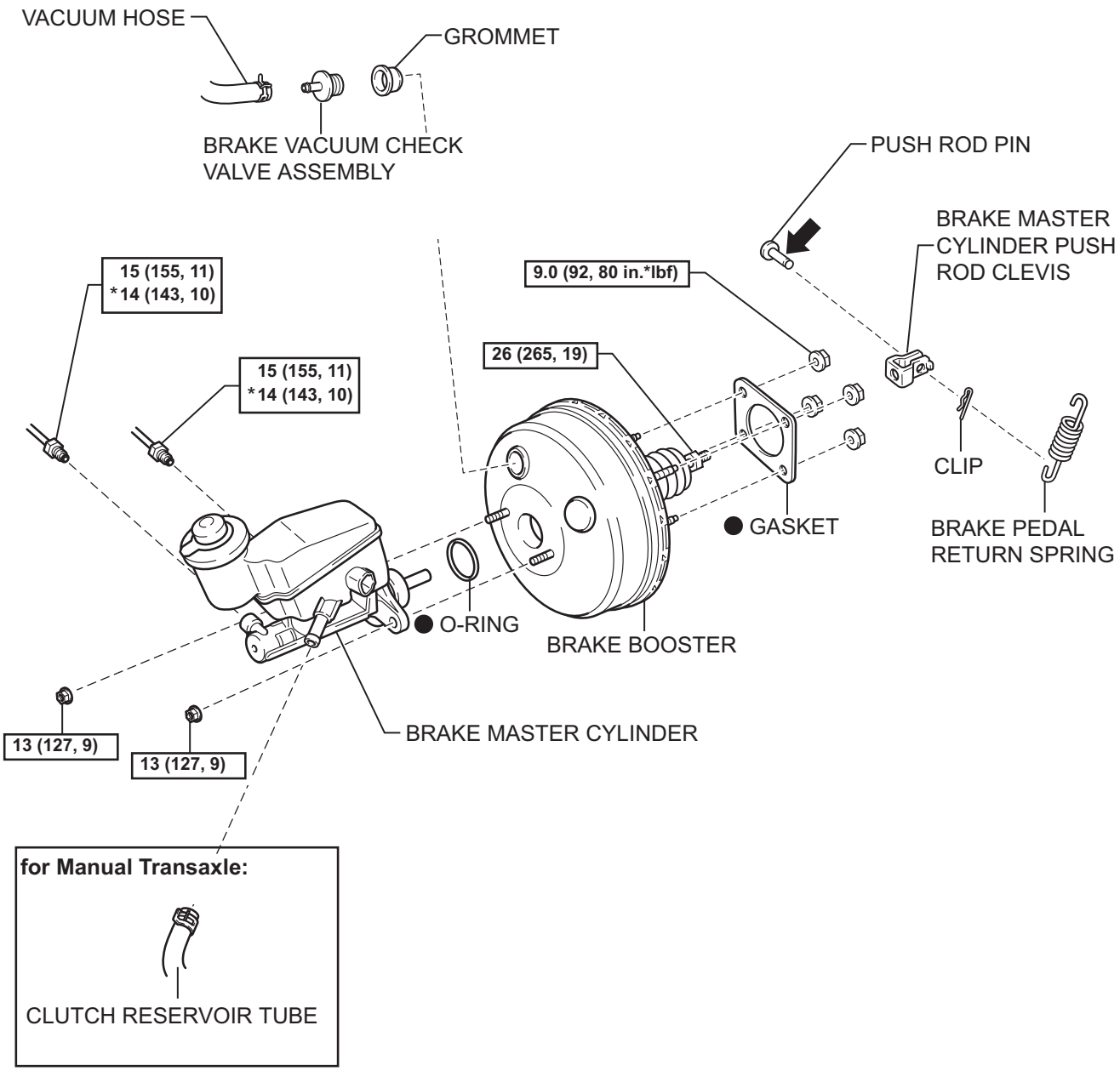

N*m (kgf*cm, ft*lbf) : Specified torque

● Non-reusable part

⬅ Lithium soap base glycol grease * For use with SST

N

C116940E03

BR

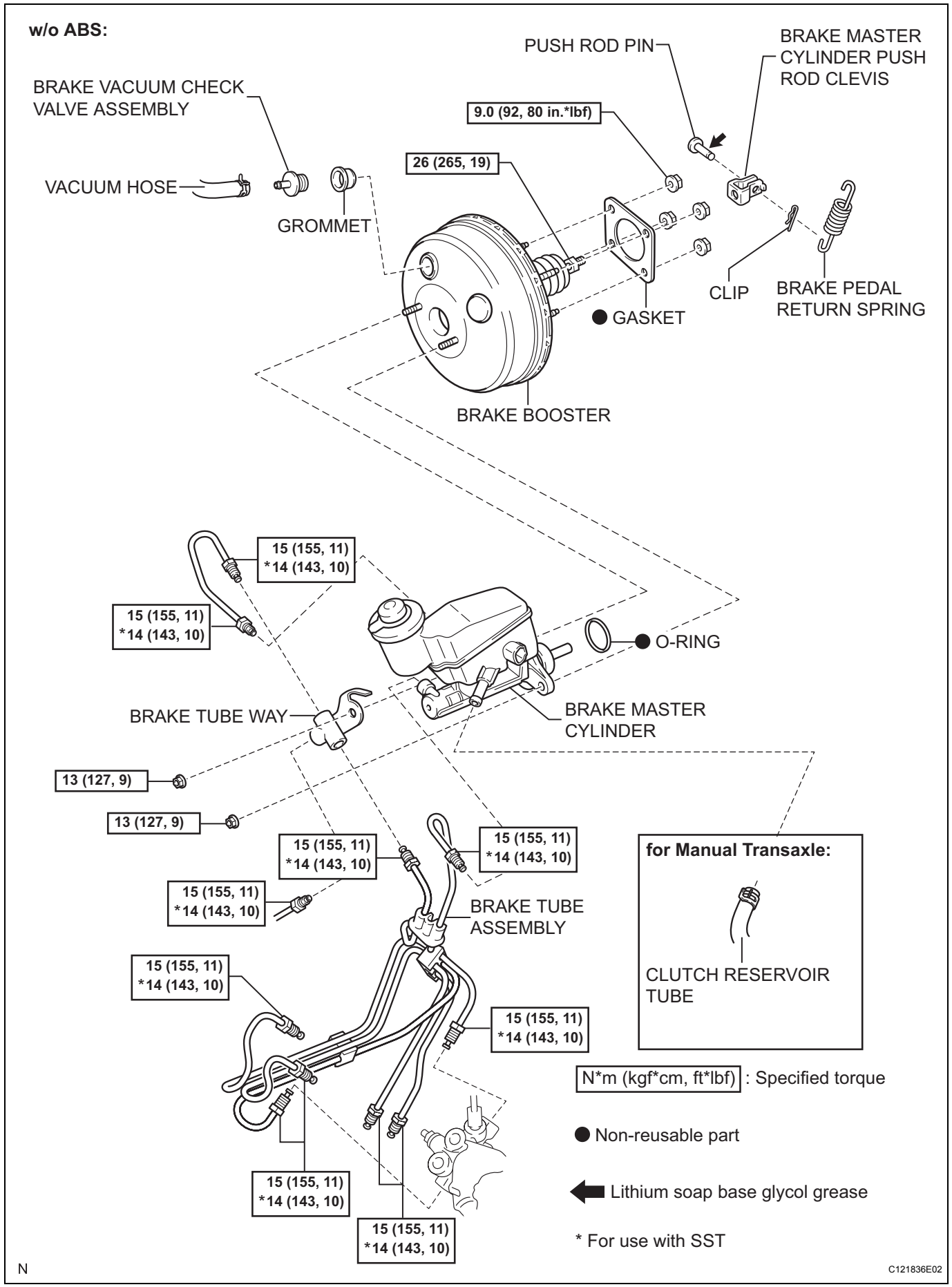
w/o ABS:
PUSH ROD PIN
BRAKE MASTER CYLINDER PUSH ROD CLEVIS
BRAKE VACUUM CHECK VALVE ASSEMBLY
9.0 (92, 80 in.*lbf)
26 (265, 19)
VACUUM HOSE
GROMMET
CLIP
BRAKE PEDAL RETURN SPRING
● GASKET
BRAKE BOOSTER
15 (155, 11)
*14 (143, 10)
15 (155, 11)
*14 (143, 10)
● O-RING
BRAKE TUBE WAY
BRAKE MASTER CYLINDER
13 (127, 9)
13 (127, 9)
15 (155, 11)
*14 (143, 10)
15 (155, 11)
*14 (143, 10)
15 (155, 11)
*14 (143, 10)
BRAKE TUBE ASSEMBLY
15 (155, 11)
*14 (143, 10)
15 (155, 11)
*14 (143, 10)
15 (155, 11)
*14 (143, 10)
15 (155, 11)
*14 (143, 10)
for Manual Transaxle:
CLUTCH RESERVOIR TUBE
N*m (kgf*cm, ft*lbf) : Specified torque
● Non-reusable part
Lithium soap base glycol grease
* For use with SST
N
C121836E02

BR

REMOVAL

1. **DISCONNECT CABLE FROM NEGATIVE BATTERY TERMINAL**
2. **DRAIN BRAKE FLUID**
   NOTICE:
   Immediately wash off any brake fluid that comes into contact with any painted surfaces.
3. **REMOVE FRONT WIPER ARM HEAD CAP**
   Hatchback: (See page WW-17)
   Sedan: (See page WW-9)
4. **REMOVE FRONT WIPER ARM AND BLADE ASSEMBLY LH**
   Hatchback: (See page WW-17)
   Sedan: (See page WW-9)
5. **REMOVE FRONT WIPER ARM AND BLADE ASSEMBLY RH**
   Hatchback: (See page WW-17)
   Sedan: (See page WW-9)
6. **REMOVE HOOD TO COWL TOP SEAL (for Hatchback) (See page WW-18)**
7. **REMOVE COWL SIDE VENTILATOR SUB-ASSEMBLY LH (for Sedan) (See page WW-10)**
8. **REMOVE COWL SIDE VENTILATOR SUB-ASSEMBLY RH (for Sedan) (See page WW-10)**
9. **REMOVE COWL TOP VENTILATOR LOUVER SUB-ASSEMBLY**
   Hatchback: (See page WW-18)
   Sedan: (See page WW-10)
10. **REMOVE COWL TOP VENTILATOR LOUVER LH (for Hatchback) (See page WW-18)**
11. **REMOVE FRONT WIPER MOTOR AND LINK**
    Hatchback: (See page WW-19)
    Sedan: (See page WW-10)
12. **REMOVE COWL TO REGISTER DUCT SUB-ASSEMBLY (for Hatchback) (See page EM-122)**
13. **REMOVE FRONT AIR SHUTTER SEAL (for Sedan) (See page EM-123)**
14. **REMOVE OUTER COWL TOP PANEL**
    Hatchback: (See page EM-123)
    Sedan: (See page EM-123)
15. **REMOVE INSTRUMENT PANEL UNDER COVER SUB-ASSEMBLY**
    Hatchback: (See page IP-67)
    Sedan: (See page IP-44)
16. **REMOVE LOWER INSTRUMENT PANEL FINISH PANEL SUB-ASSEMBLY**
    Hatchback: (See page IP-69)

Sedan: (See page IP-45)

17. **REMOVE BATTERY (See page EM-122)**
18. **REMOVE BATTERY TRAY**
19. **REMOVE BATTERY CARRIER (See page EM-125)**
20. **REMOVE BRAKE ACTUATOR (w/ ABS) (See page BC-89)**
21. **DISCONNECT CLUTCH RESERVOIR TUBE (for Manual Transaxle) (See page BR-28)**
22. **REMOVE BRAKE MASTER CYLINDER (See page BR-28)**
23. **SEPARATE BRAKE MASTER CYLINDER PUSH ROD CLEVIS (See page BR-20)**
24. **REMOVE BRAKE BOOSTER**

(a) w/o ABS:

(1) Using SST, separate the 2 brake tubes from the brake tube No. 1 way.
SST 09023-00100

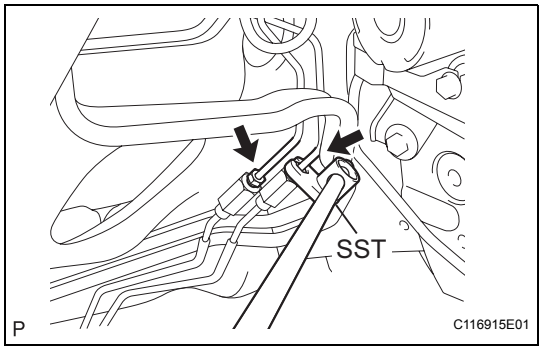

(2) Using SST, remove the brake tube assembly from the proportioning valve.
SST 09023-00100

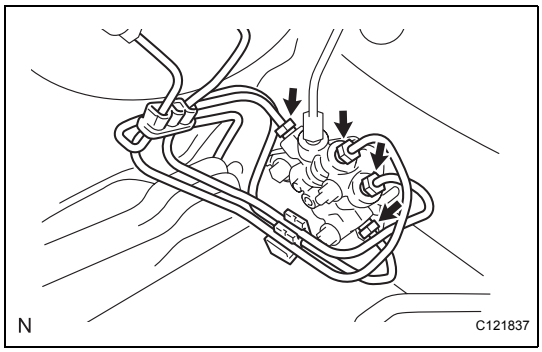

(b) Slide the clip and disconnect the vacuum hose from the check valve.

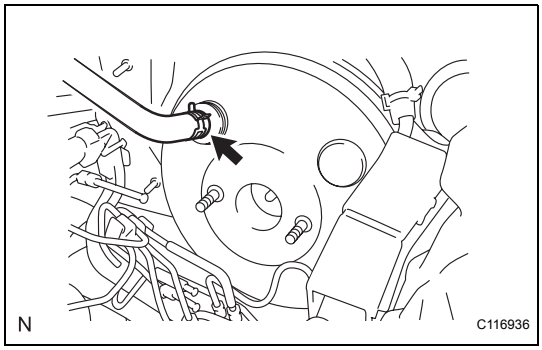

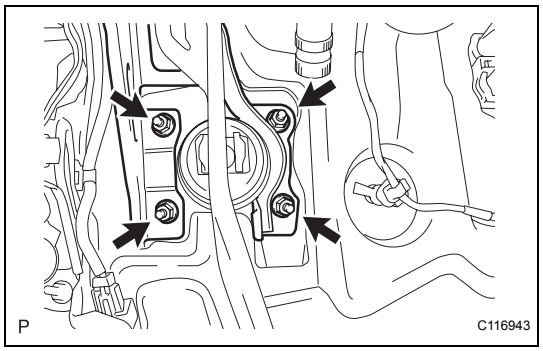

(c) Remove the 4 nuts and remove the brake booster.
(d) Remove the gasket from the brake booster.
(e) Loosen the push rod lock nut and remove the push rod clevis.

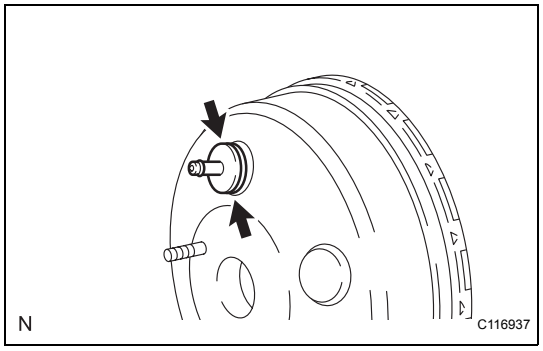

25. REMOVE BRAKE VACUUM CHECK VALVE ASSEMBLY

(a) Remove the vacuum check valve from the brake booster.
(b) Remove the grommet from the brake booster.

INSTALLATION

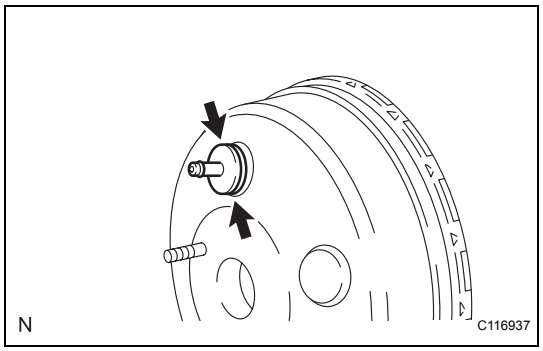

1. INSTALL BRAKE VACUUM CHECK VALVE ASSEMBLY

(a) Install the grommet onto the brake booster.
(b) Install the vacuum check valve onto the brake booster.

2. INSTALL BRAKE BOOSTER

(a) Provisionally install the push rod clevis onto the brake booster.
HINT:
Tighten the push rod lock nut when adjusting the brake pedal height.
(b) Install a new gasket onto the brake booster.
(c) Install the brake booster with the 4 nuts.
Torque: 9.0 N*m (92 kgf*cm, 80 in.*lbf)

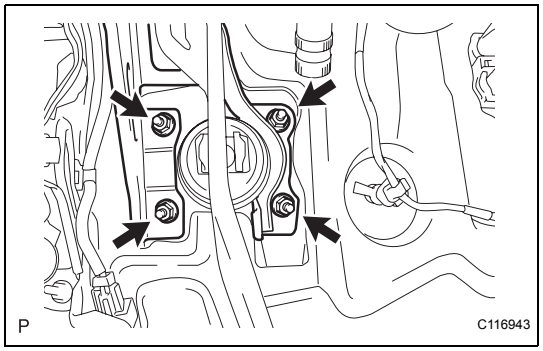

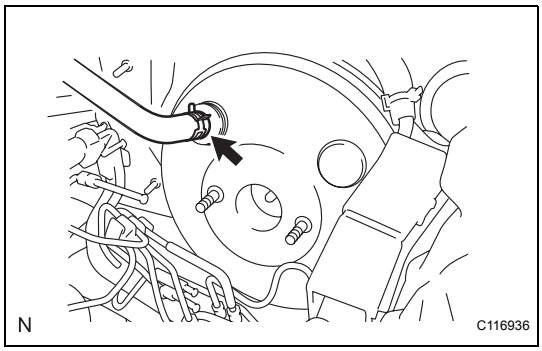

(d) Connect the vacuum hose to the vacuum check valve with the clip.

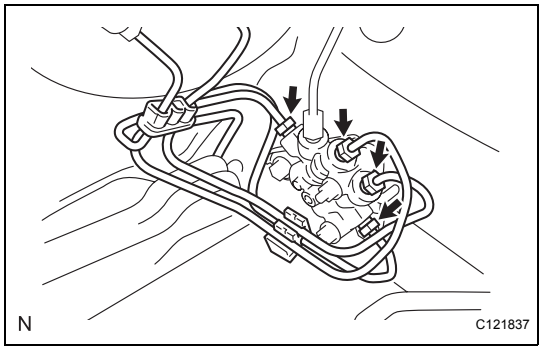

(e) w/o ABS:

(1) Using SST, install the brake tube assembly onto the proportioning valve.
SST 09023-00100
Torque: for use without SST
15 N*m (155 kgf*cm, 11 ft.*lbf)
for use with SST
14 N*m (143 kgf*cm, 10 ft.*lbf)
HINT:
- Use a torque wrench with a fulcrum length of 300 mm (11.81 in.).
- This torque value is effective when SST is parallel to a torque wrench.

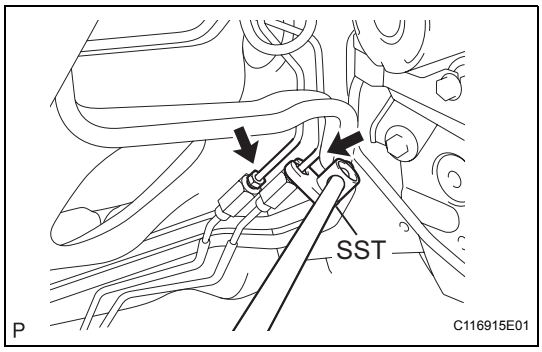

(2) Using SST, install the 2 brake tubes onto the brake tube No. 1 way.
SST 09023-00100
Torque: for use without SST
15 N*m (155 kgf*cm, 11 ft.*lbf)
for use with SST
14 N*m (143 kgf*cm, 10 ft.*lbf)
HINT:
- Use a torque wrench with a fulcrum length of 300 mm (11.81 in.).
- This torque value is effective when SST is parallel to a torque wrench.

3. **INSTALL BRAKE MASTER CYLINDER PUSH ROD CLEVIS (See page BR-21)**
4. **INSPECT AND ADJUST BRAKE BOOSTER PUSH ROD (See page BR-31)**
5. **INSTALL BRAKE MASTER CYLINDER (See page BR-32)**
6. **CONNECT CLUTCH RESERVOIR TUBE (for Manual Transaxle) (See page BR-33)**
7. **INSTALL BRAKE ACTUATOR (w/ ABS) (See page BC-91)**
8. **INSTALL BATTERY CARRIER (See page EM-145)**
9. **INSTALL BATTERY TRAY**
10. **INSTALL BATTERY (See page EM-148)**

11. **INSTALL LOWER INSTRUMENT PANEL FINISH PANEL SUB-ASSEMBLY**
Hatchback: (See page IP-78)
Sedan: (See page IP-54)

12. **INSTALL INSTRUMENT PANEL UNDER COVER SUB-ASSEMBLY**
Hatchback: (See page IP-80)
Sedan: (See page IP-55)

13. **INSTALL OUTER COWL TOP PANEL**
Hatchback: (See page EM-146)
Sedan: (See page EM-147)

14. **INSTALL COWL TO REGISTER DUCT SUB-ASSEMBLY (for Hatchback) (See page EM-147)**

15. **INSTALL FRONT AIR SHUTTER SEAL (for Sedan) (See page EM-148)**

16. **INSTALL FRONT WIPER MOTOR AND LINK**
Hatchback: (See page WW-21)
Sedan: (See page WW-12)

17. **INSTALL COWL TOP VENTILATOR LOUVER LH (for Hatchback) (See page WW-21)**

18. **INSTALL COWL TOP VENTILATOR LOUVER SUB-ASSEMBLY**
Hatchback: (See page WW-21)
Sedan: (See page WW-12)

19. **INSTALL HOOD TO COWL TOP SEAL (for Hatchback) (See page WW-22)**

20. **INSTALL COWL SIDE VENTILATOR SUB-ASSEMBLY LH (for Sedan) (See page WW-13)**

21. **INSTALL COWL SIDE VENTILATOR SUB-ASSEMBLY RH (for Sedan) (See page WW-13)**

22. **INSTALL FRONT WIPER ARM AND BLADE ASSEMBLY LH**
Hatchback: (See page WW-22)
Sedan: (See page WW-13)

23. **INSTALL FRONT WIPER ARM AND BLADE ASSEMBLY RH**
Hatchback: (See page WW-23)
Sedan: (See page WW-14)

24. **INSTALL FRONT WIPER ARM HEAD CAP**
Hatchback: (See page WW-23)
Sedan: (See page WW-15)

25. **CONNECT CABLE TO NEGATIVE BATTERY TERMINAL**
Torque: 5.4 N*m (55 kgf*cm, 48 in.*lbf)

26. **FILL RESERVOIR WITH BRAKE FLUID (See page BR-10)**

27. **BLEED MASTER CYLINDER (See page BR-10)**

28. **BLEED BRAKE LINE (See page BR-12)**
29. **CHECK FLUID LEVEL IN RESERVOIR (See page BR-12)**
30. **CHECK FOR BRAKE FLUID LEAKAGE**
31. **INSPECT AND ADJUST BRAKE PEDAL (See page BR-8)**

FRONT BRAKE

COMPONENTS

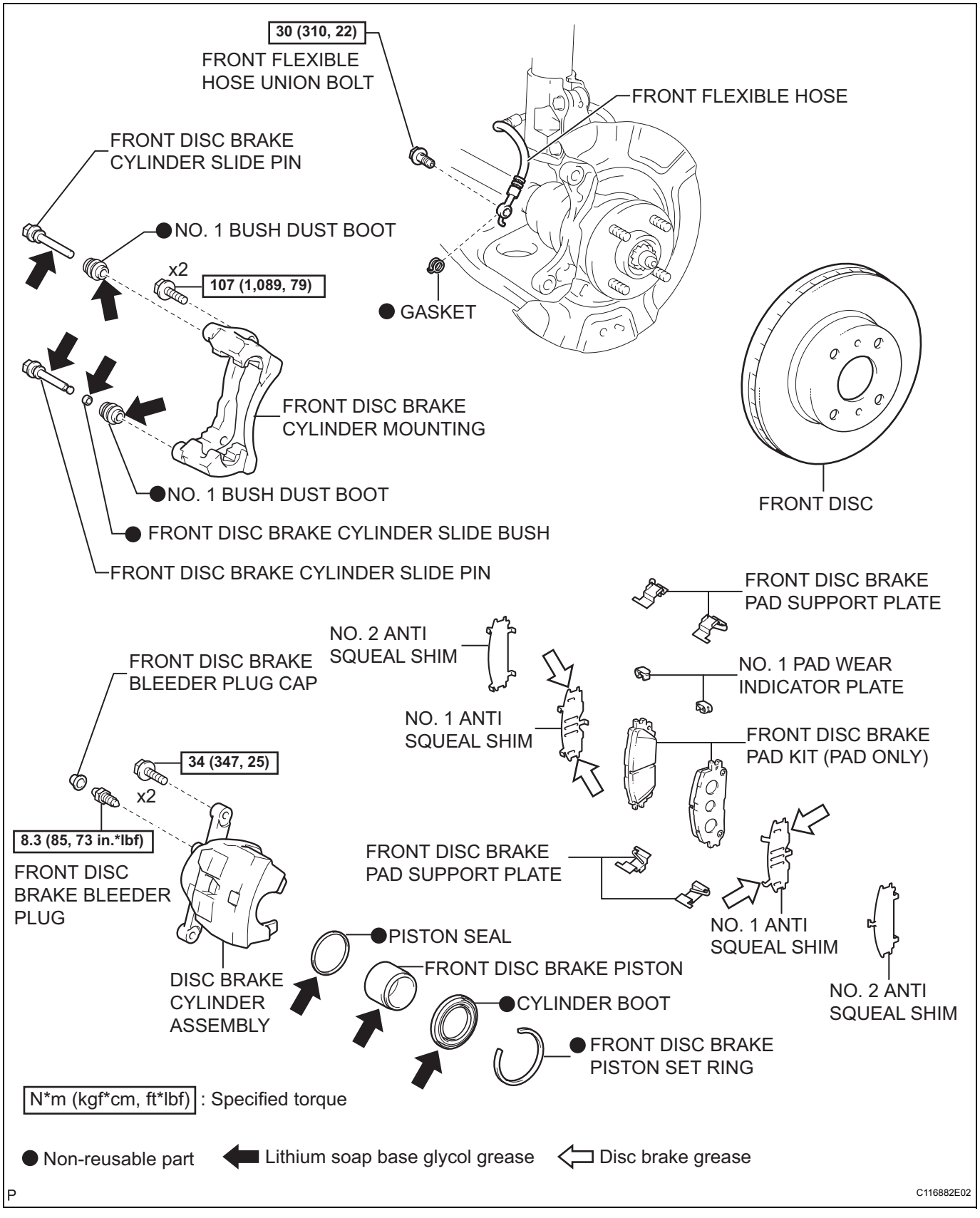

BR

REMOVAL

1. **REMOVE FRONT WHEEL**

2. **DRAIN BRAKE FLUID**
   NOTICE:
   Immediately wash off any brake fluid that comes into contact with any painted surfaces.

3. **DISCONNECT FRONT FLEXIBLE HOSE**
   (a) Remove the union bolt and gasket and separate the flexible hose from the disc brake cylinder.

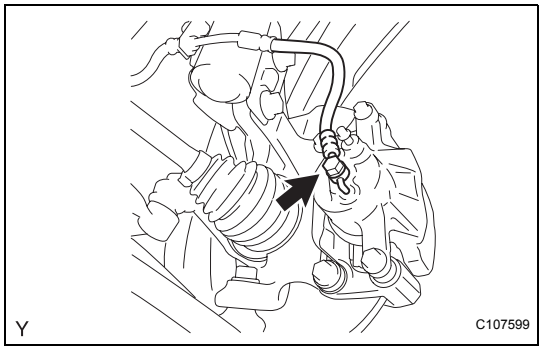

4. **REMOVE DISC BRAKE CYLINDER ASSEMBLY**
   (a) Fix the slide pin with a spanner, remove the 2 bolts and remove the disc brake cylinder.

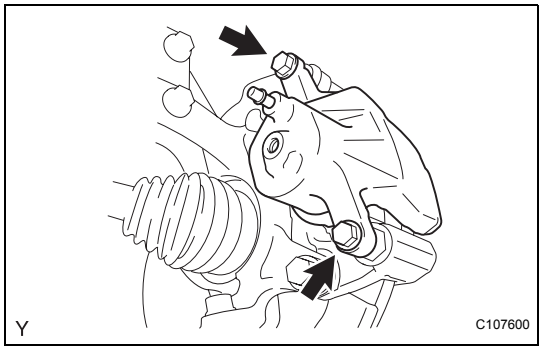

5. **REMOVE FRONT DISC BRAKE PAD KIT (PAD ONLY)**
   (a) Remove the 2 disc brake pads from the disc brake cylinder mounting.

6. **REMOVE FRONT ANTI SQUEAL SHIM KIT**
   (a) Remove the No. 1 anti squeal shim and No. 2 anti squeal shim from each brake pad.

7. **REMOVE NO. 1 PAD WEAR INDICATOR PLATE**
   (a) Remove the indicator plate from each brake pad.

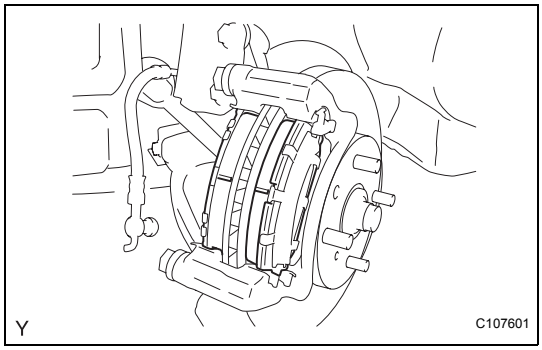

8. **REMOVE FRONT DISC BRAKE PAD SUPPORT PLATE**
   (a) Remove the 4 disc brake pad support plates from the disc brake cylinder mounting.

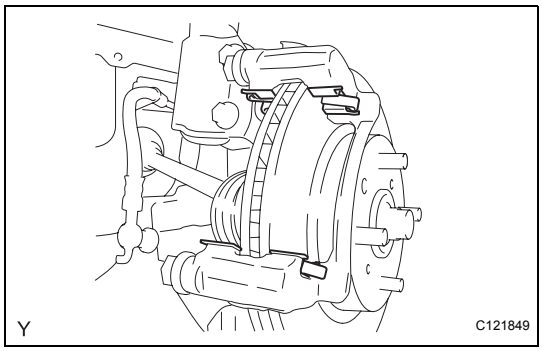

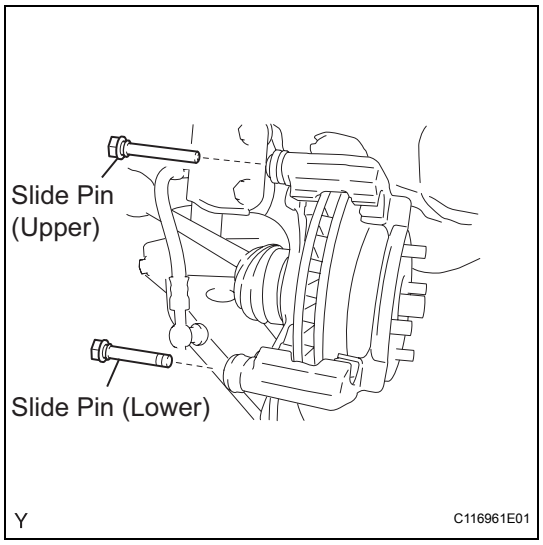

9. REMOVE FRONT DISC BRAKE CYLINDER SLIDE PIN

(a) Remove the slide pin (upper) and slide pin (lower) from the disc brake cylinder mounting.

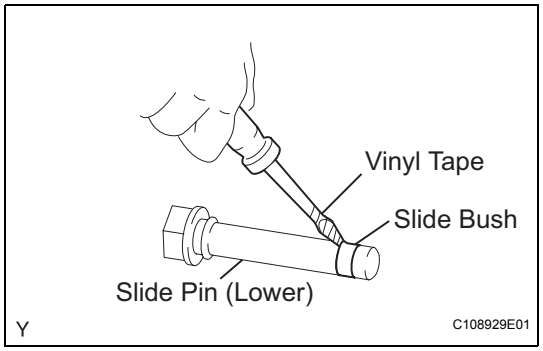

10. REMOVE FRONT DISC BRAKE CYLINDER SLIDE BUSH

(a) Using a screwdriver with its tip wrapped in protective tape, remove the slide bush from the slide pin (lower).

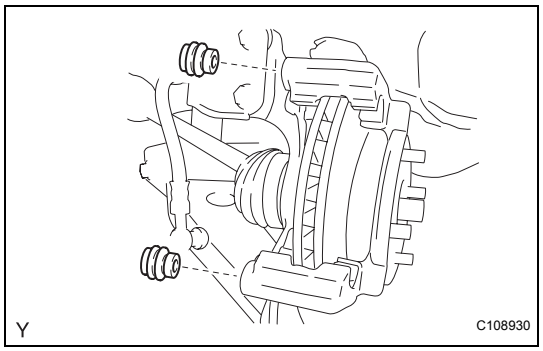

11. REMOVE NO. 1 BUSH DUST BOOT

(a) Remove the 2 dust boots from the disc brake cylinder mounting.

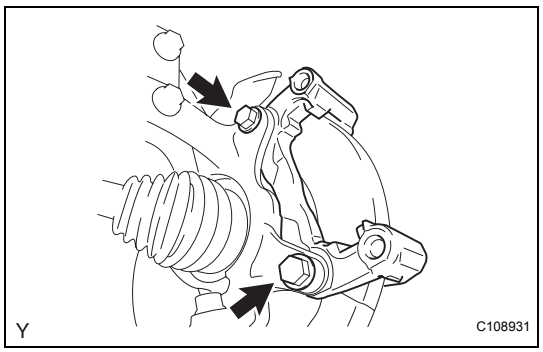

12. REMOVE FRONT DISC BRAKE CYLINDER MOUNTING

(a) Remove the 2 bolts and remove the disc brake cylinder mounting from the steering knuckle.

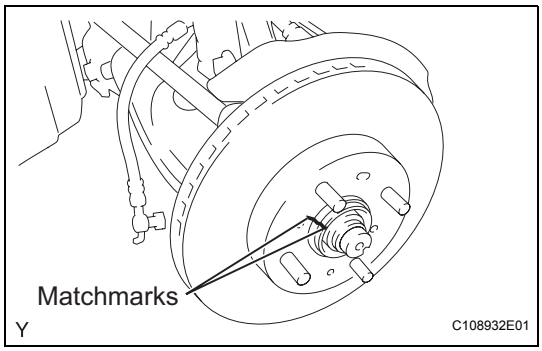

13. REMOVE FRONT DISC

(a) Place matchmarks on the disc and axle hub and remove the disc.

DISASSEMBLY

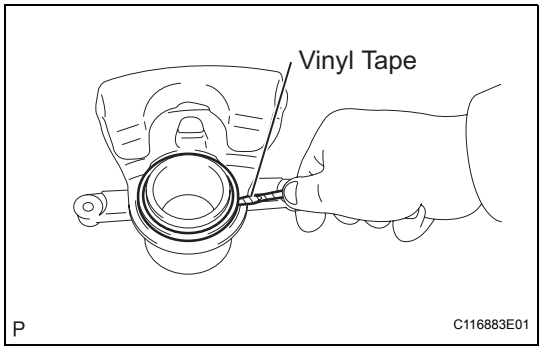

1. REMOVE CYLINDER BOOT

(a) Using a screwdriver with its tip wrapped in protective tape, remove the set ring and cylinder boot from the disc brake cylinder.

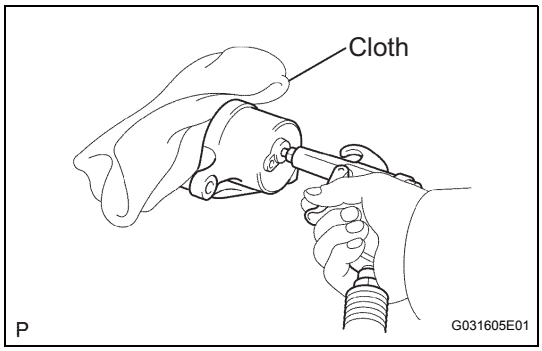

2. REMOVE FRONT DISC BRAKE PISTON

(a) Place a shop rag or piece of cloth between the piston and disc brake cylinder.

(b) Apply compressed air to remove the piston from the disc brake cylinder.

CAUTION:
Do not place your fingers in front of the piston when applying compressed air.
NOTICE:
Do not spatter the brake fluid.

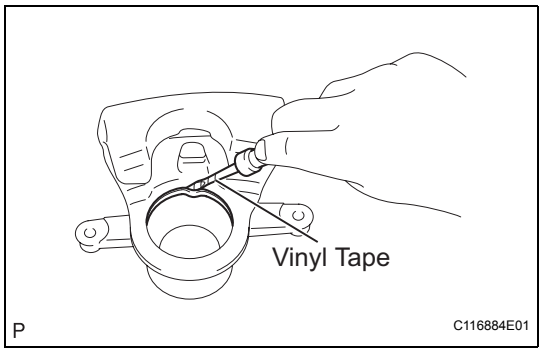

3. REMOVE PISTON SEAL

(a) Using a screwdriver with its tip wrapped in protective tape, remove the piston seal from the disc brake cylinder.

NOTICE:
Do not damage the inner surface or piston seal groove of the cylinder.

4. REMOVE FRONT DISC BRAKE BLEEDER PLUG CAP

5. REMOVE FRONT DISC BRAKE BLEEDER PLUG

INSPECTION

1. INSPECT BRAKE CYLINDER AND PISTON

(a) Check the cylinder bore and piston for rust and scoring.
If necessary, replace the disc brake cylinder and piston.

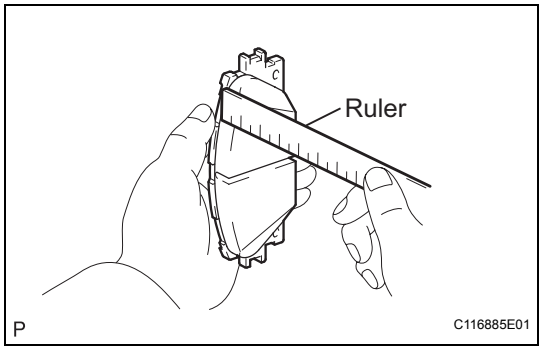

2. INSPECT PAD LINING THICKNESS

(a) Using a ruler, measure the pad lining thickness.
Standard thickness:
12.0 mm (0.472 in.)
Minimum thickness:
1.0 mm (0.039 in.)
If the pad lining thickness is equal to or less than the minimum thickness, replace the disc brake pad kit.

3. INSPECT FRONT DISC BRAKE PAD SUPPORT PLATE

(a) Make sure that the disc brake pad supports have sufficient rebound, that there is no deformation, cracks or wear, and that all rust and dirt are removed.
If necessary, replace the disc brake pad support plate.

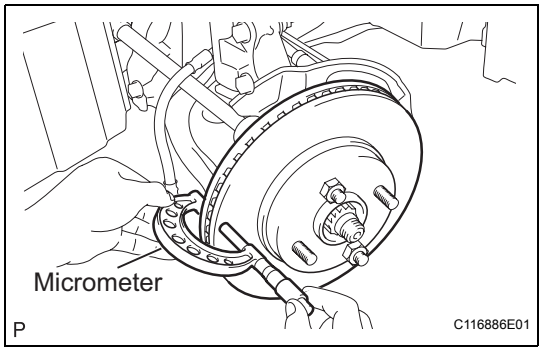

4. INSPECT DISC THICKNESS

(a) Using a micrometer, measure the disc thickness.
Standard thickness:
22.0 mm (0.866 in.)
Minimum thickness:
19.0 mm (0.748 in.)
If the disc thickness is less than the minimum, replace the front disc.

5. INSPECT DISC RUNOUT

(a) Check the bearing play in the axial direction and check for the axle hub runout (See page AH-1).

(b) Provisionally fasten the front disc together with the hub nuts.
Torque: 103 N*m (1,050 kgf*cm, 76 ft.*lbf)

(c) Using a dial indicator, measure the disc runout 10 mm (0.39 in.) away from the outer edge of the front disc.
Maximum disc runout:
0.05 mm (0.0020 in.)
If the runout exceeds the maximum value, change the installation positions of the disc and axle to make the minimum runout. If the runout exceeds the maximum even when the installation positions are changed, grind the disc. If the disc thickness is less than the minimum, replace the front disc.

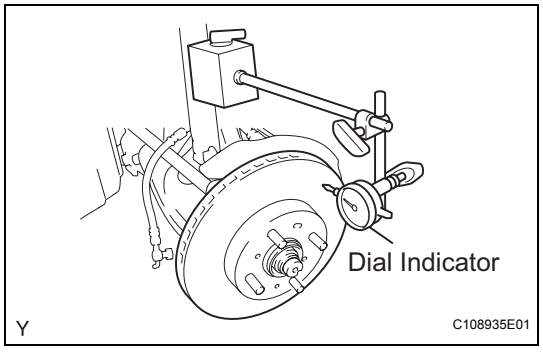

REASSEMBLY

1. **TEMPORARILY TIGHTEN FRONT DISC BRAKE BLEEDER PLUG**
2. **INSTALL FRONT DISC BRAKE BLEEDER PLUG CAP**
3. **INSTALL PISTON SEAL**
   (a) Apply lithium soap base glycol grease to a new piston seal.
   (b) Install the piston seal onto the disc brake cylinder.
   NOTICE:
   Securely install the piston seal into the groove of the disc brake cylinder.
4. **INSTALL FRONT DISC BRAKE PISTON**
   (a) Apply lithium soap base glycol grease to the piston and a new cylinder boot.
   (b) Install the cylinder boot onto the piston.
   (c) Install the piston into the disc brake cylinder.
   NOTICE:
   Do not forcibly install the piston into the disc brake cylinder.

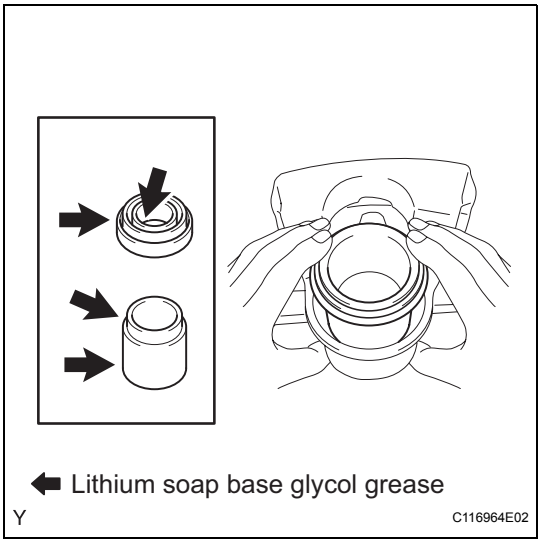

5. **INSTALL CYLINDER BOOT**
   (a) Install the cylinder boot into the disc brake cylinder.
   NOTICE:
   Securely install the cylinder boot into the groove of the disc brake cylinder.
   (b) Using a screwdriver, install a new set ring.
   NOTICE:
   Do not damage the cylinder boot.

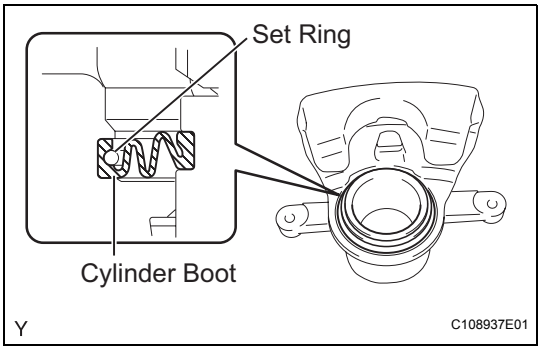

INSTALLATION

1. **INSTALL FRONT DISC**
   (a) Align the matchmarks of the disc and axle hub and install the disc.
   NOTICE:
   When replacing the disc, select the position that gives the minimum disc runout.

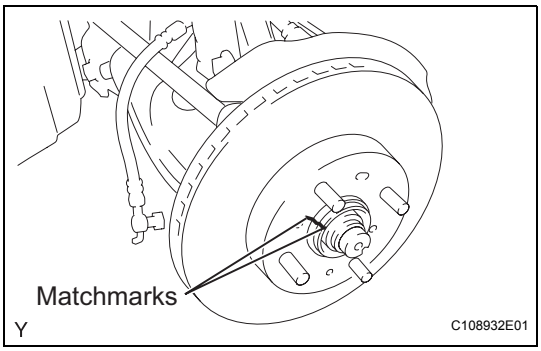

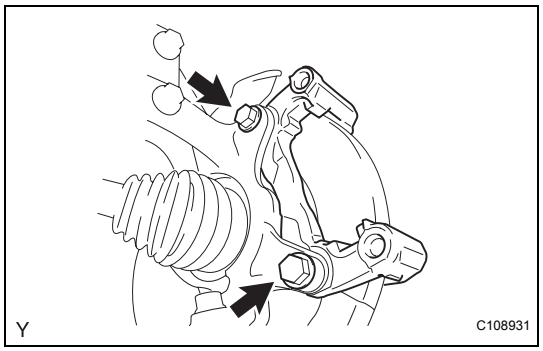

2. INSTALL FRONT DISC BRAKE CYLINDER MOUNTING

(a) Install the disc brake cylinder mounting onto the steering knuckle with the 2 bolts.
Torque: 107 N*m (1,089 kgf*cm, 79 ft.*lbf)

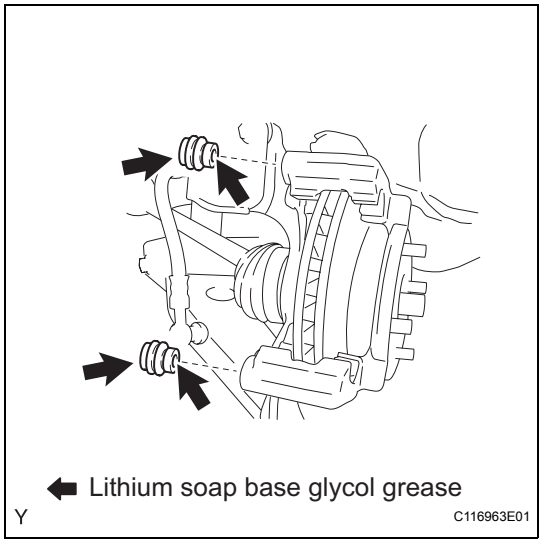

3. INSTALL NO. 1 BUSH DUST BOOT

(a) Apply lithium soap base glycol grease to 2 new dust boots.
(b) Install the 2 dust boots onto the disc brake cylinder mounting.

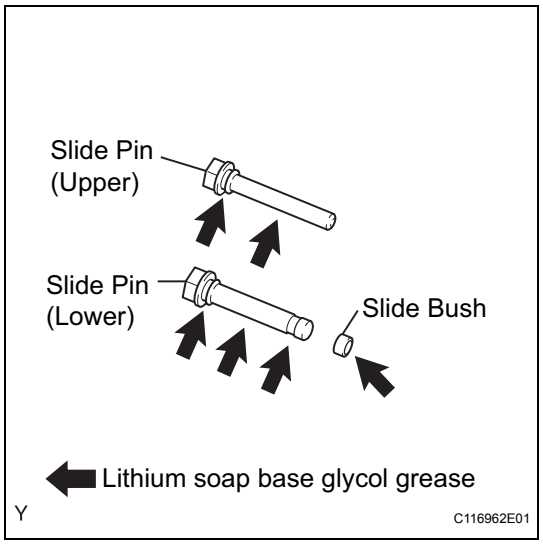

4. INSTALL FRONT DISC BRAKE CYLINDER SLIDE BUSH

(a) Apply lithium soap base glycol grease to the slide pins and a new slide bush, as shown in the illustration.
(b) Install the slide bush onto the slide pin (lower).

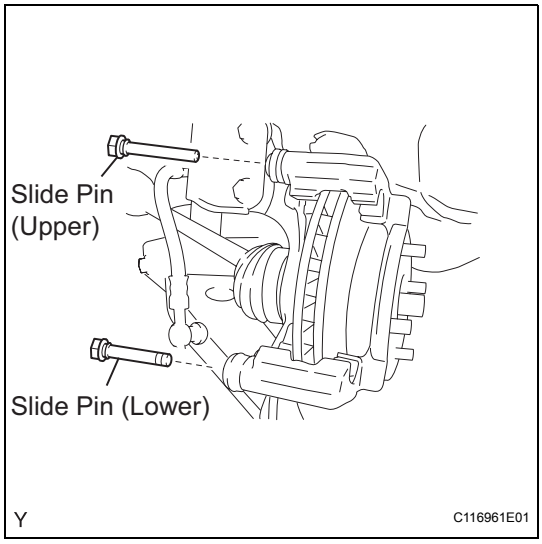

5. INSTALL FRONT DISC BRAKE CYLINDER SLIDE PIN

(a) Install the slide pin (upper) and slide pin (lower) onto the cylinder mounting.

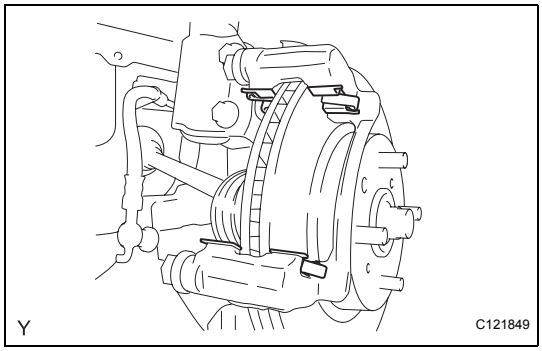

6. INSTALL FRONT DISC BRAKE PAD SUPPORT PLATE

(a) Install the 4 disc brake pad support plates onto the disc brake cylinder mounting.

7. INSTALL NO. 1 PAD WEAR INDICATOR PLATE

(a) Install the indicator plates onto the upper side of the brake pad.

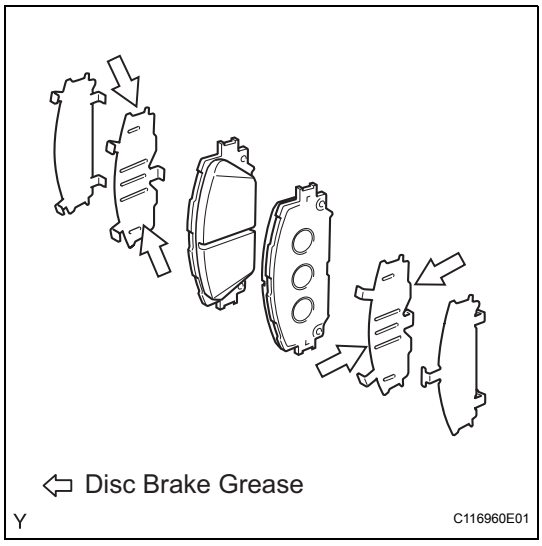

8. INSTALL FRONT ANTI SQUEAL SHIM KIT

(a) Apply disc brake grease to both sides of each No. 1 anti-squeal shim.

(b) Install the anti squeal shims onto each brake pad.

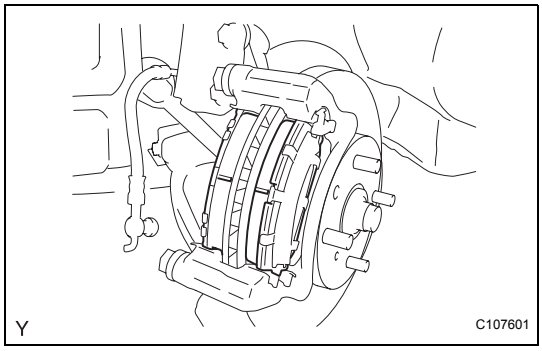

9. INSTALL FRONT DISC BRAKE PAD KIT (PAD ONLY)

(a) Install the 2 disc brake pads onto the disc brake cylinder mounting.

NOTICE:

There should be no oil or grease on the friction surfaces of the disc brake pads or the front disc.

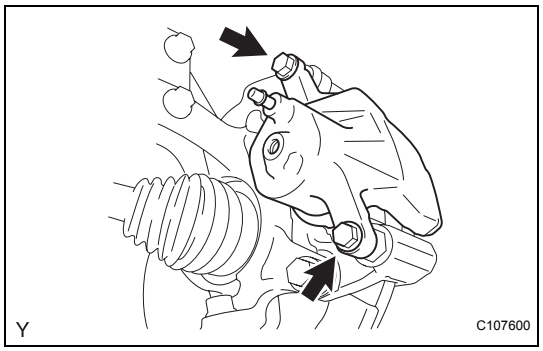

10. **INSTALL DISC BRAKE CYLINDER ASSEMBLY**
    (a) Install the disc brake cylinder onto the disc brake cylinder mounting with the 2 bolts.
    Torque: 34 N*m (347 kgf*cm, 25 ft.*lbf)

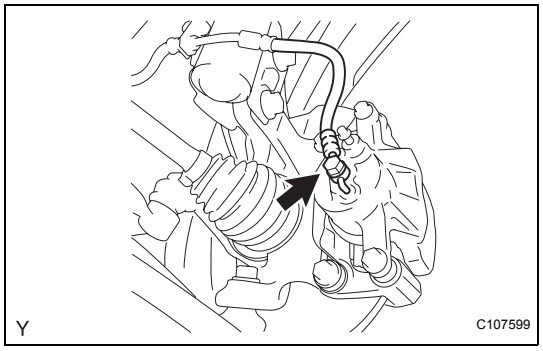

11. **CONNECT FRONT FLEXIBLE HOSE**
    (a) Connect the flexible hose with the union bolt and a new gasket.
    Torque: 30 N*m (310 kgf*cm, 22 ft.*lbf)
    HINT:
    Install the flexible hose lock securely into the lock hole in the disc brake cylinder.
12. **FILL RESERVOIR WITH BRAKE FLUID (See page BR-10)**
13. **BLEED MASTER CYLINDER (See page BR-10)**
14. **BLEED BRAKE LINE (See page BR-12)**
15. **CHECK FLUID LEVEL IN RESERVOIR (See page BR-12)**
16. **CHECK FOR BRAKE FLUID LEAKAGE**
17. **INSTALL FRONT WHEEL**
    Torque: 103 N*m (1,050 kgf*cm, 76 ft.*lbf)

FRONT BRAKE FLEXIBLE HOSE

COMPONENTS

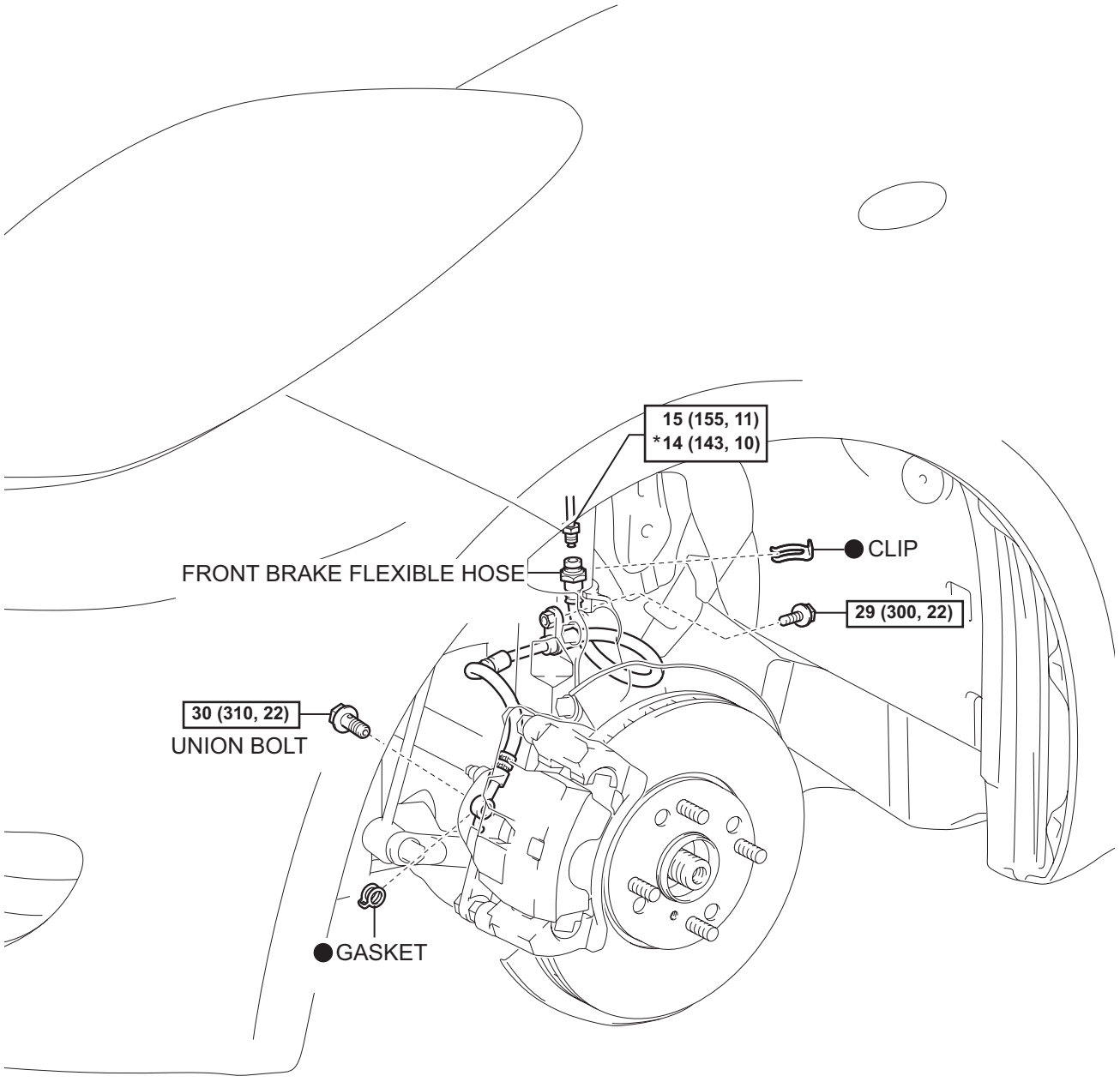

BR

N*m (kgf*cm, ft*lbf) : Specified torque

● Non-reusable part

* For use with SST

P

C116890E02

REMOVAL

1. **REMOVE FRONT WHEEL**
2. **DRAIN BRAKE FLUID**
   NOTICE:
   Immediately wash off any brake fluid that comes into contact with any painted surfaces.
3. **REMOVE FRONT BRAKE FLEXIBLE HOSE**
   (a) Using SST, separate the brake tube.
   SST 09023-00100
   (b) Remove the clip.
   (c) w/ ABS:
   (1) Remove the bolt and separate the flexible hose and speed sensor.
   (d) w/o ABS:
   (1) Remove the bolt and separate the flexible hose.
   (e) Remove the union bolt and gasket and remove the flexible hose from the disc brake cylinder.

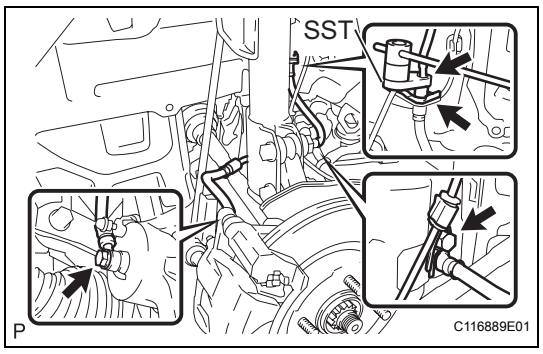

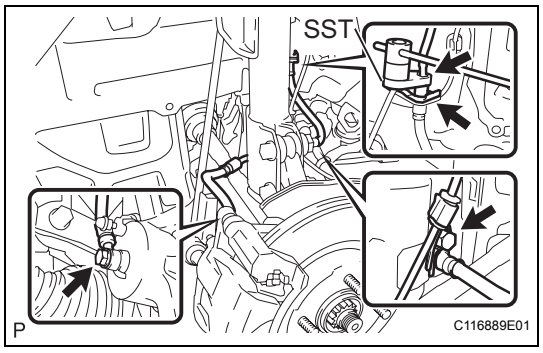

INSTALLATION

1. **INSTALL FRONT BRAKE FLEXIBLE HOSE**
   (a) Install the flexible hose with the union bolt and a new gasket.
   Torque: 30 N*m (310 kgf*cm, 22 ft.*lbf)
   HINT:
   Install the flexible hose lock securely into the lock hole in the disc brake cylinder.
   (b) w/ ABS:
   (1) Install the flexible hose and speed sensor with the bolt.
   Torque: 29 N*m (300 kgf*cm, 22 ft.*lbf)
   NOTICE:
   Install the flexible hose and speed sensor without twisting them.
   (c) w/o ABS:
   (1) Install the flexible hose with the bolt.
   Torque: 29 N*m (300 kgf*cm, 22 ft.*lbf)
   NOTICE:
   Install the flexible hose without twisting it.
   (d) Install a new clip.
   (e) Using SST, install the brake tube.
   SST 09023-00100
   Torque: for use without SST
   15 N*m (155 kgf*cm, 11 ft.*lbf)
   for use with SST
   14 N*m (143 kgf*cm, 10 ft.*lbf)
   HINT:
   - Use a torque wrench with a fulcrum length of 300 mm (11.81 in.).
   - This torque value is effective when SST is parallel to a torque wrench.
2. **FILL RESERVOIR WITH BRAKE FLUID (See page BR-10)**

BR

3. **BLEED MASTER CYLINDER (See page BR-10)**
4. **BLEED BRAKE LINE (See page BR-12)**
5. **CHECK FLUID LEVEL IN RESERVOIR (See page BR-12)**
6. **CHECK FOR BRAKE FLUID LEAKAGE**
7. **INSTALL FRONT WHEEL**
   Torque: 103 N*m (1,050 kgf*cm, 76 ft.*lbf)

REAR DRUM BRAKE

COMPONENTS

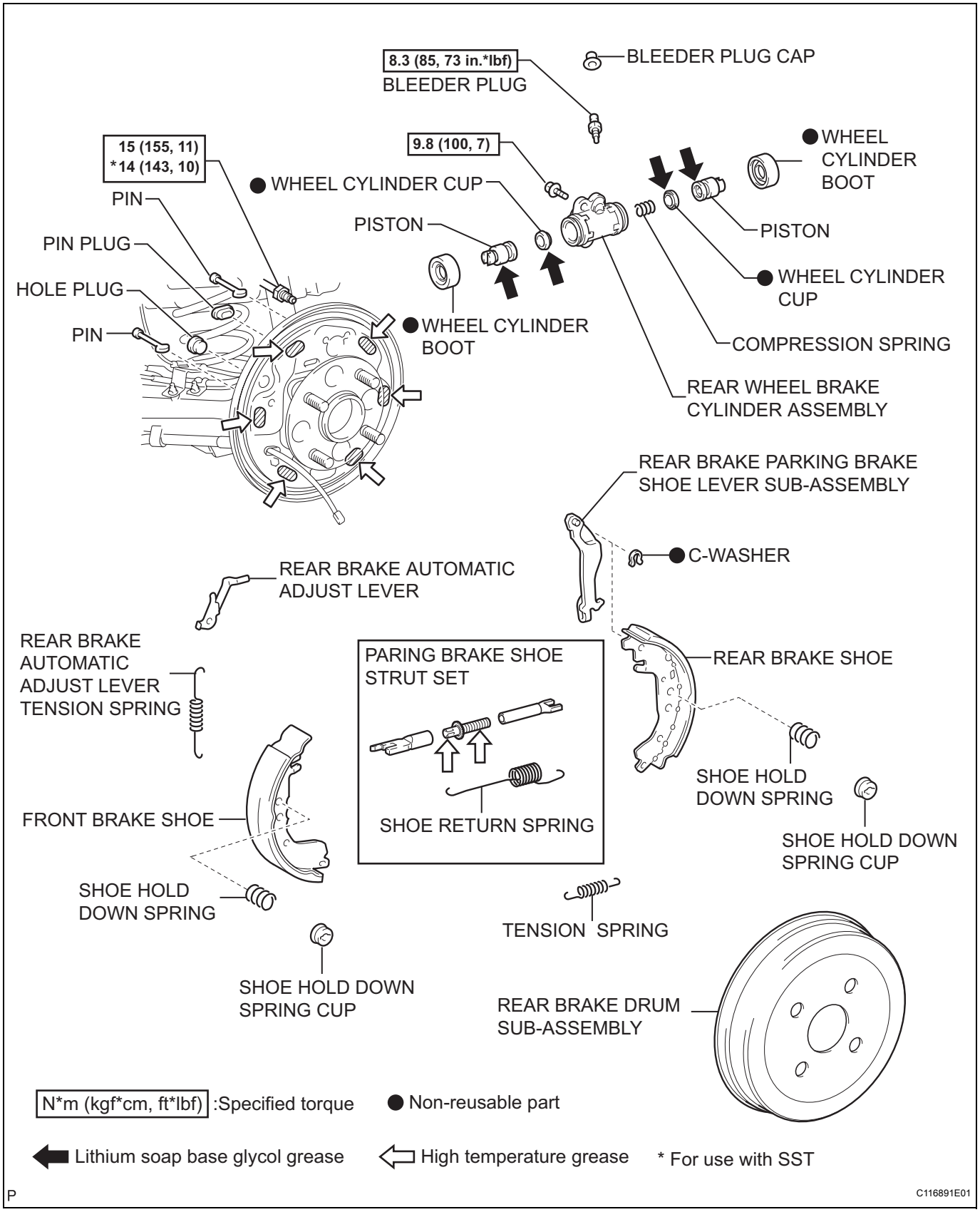

BR

REMOVAL

1. **REMOVE REAR WHEEL**
2. **DRAIN BRAKE FLUID**
   NOTICE:
   Immediately wash off any brake fluid that comes into contact with any painted surfaces.
3. **REMOVE REAR BRAKE DRUM SUB-ASSEMBLY**
   (a) Release the parking brake and remove the rear brake drum.
   If the rear brake drum cannot be removed easily, perform the following procedure.
   (b) Remove the hole plug and insert a screwdriver through the hole into the backing plate, and hold the automatic adjust lever away from the adjuster.
   (c) Using another screwdriver, contract the brake shoe by turning the adjusting bolt.

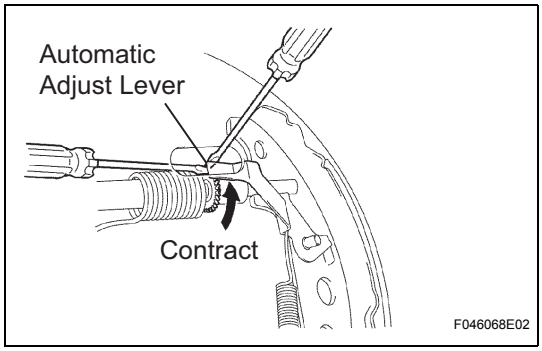

DISASSEMBLY

1. **REMOVE REAR BRAKE SHOE KIT**
   (a) Using SST, separate the shoe return spring from the front brake shoe.
   SST 09703-30010
   NOTICE:
   Do not damage the wheel cylinder boot.

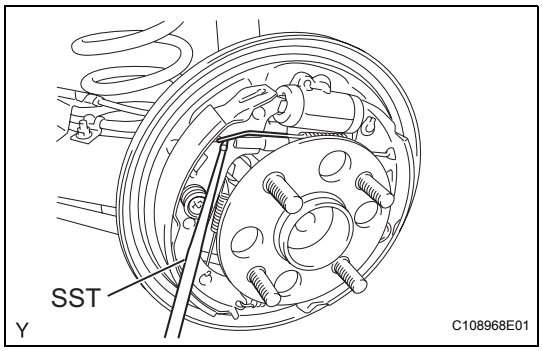

   (b) Using SST, remove the shoe hold down spring cup, shoe hold down spring, pin and front brake shoe.
   SST 09718-00010
   (c) Remove the tension spring.

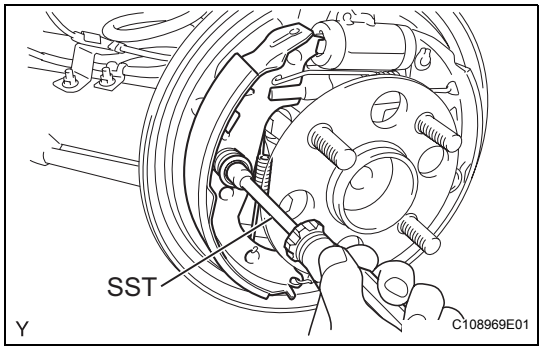

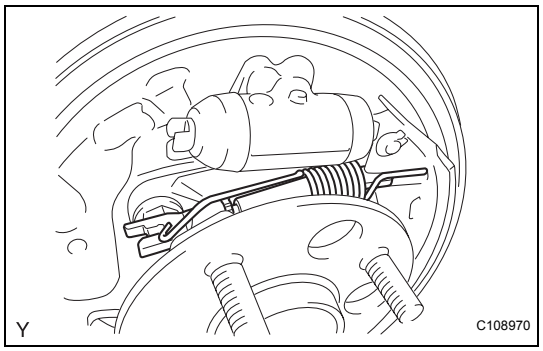

(d) Remove the shoe return spring from the rear brake shoe and remove the parking brake shoe strut set.

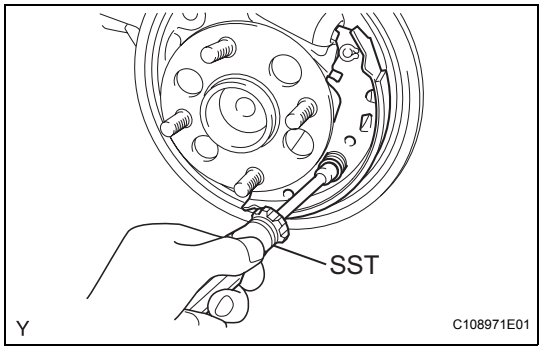

(e) Using SST, remove the shoe hold down spring cup, shoe hold down spring, pin and rear brake shoe.
SST 09718-00010

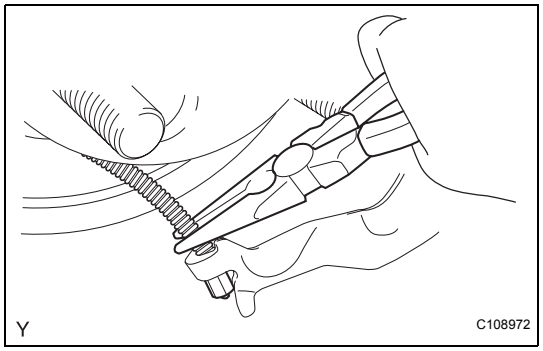

(f) Using needle-nose pliers, separate the parking brake cable.

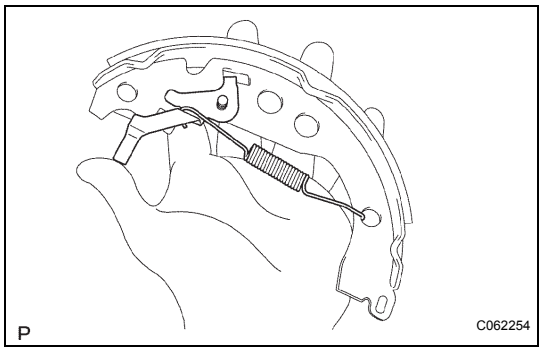

2. REMOVE REAR BRAKE AUTOMATIC ADJUST LEVER

(a) Remove the automatic adjust lever tension spring and remove the automatic adjust lever.

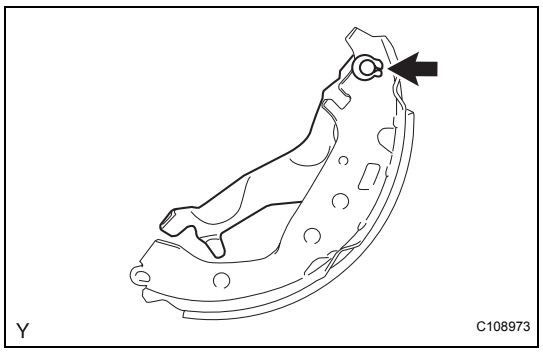

3. REMOVE REAR BRAKE PARKING BRAKE SHOE LEVER SUB-ASSEMBLY

(a) Using a screwdriver, remove the C-washer and remove the parking brake shoe lever.

BR

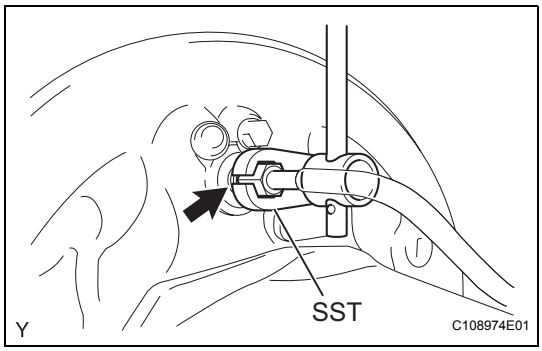

4. REMOVE REAR WHEEL BRAKE CYLINDER ASSEMBLY

(a) Using SST, separate the brake tube from the rear wheel brake cylinder.
SST 09023-00100
HINT:
Use a container to catch the brake fluid.

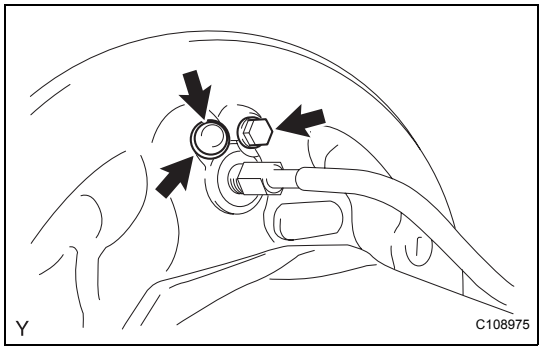

(b) Remove the bleeder plug cap.
(c) Remove the bleeder plug.
(d) Remove the bolt and remove the rear wheel brake cylinder.

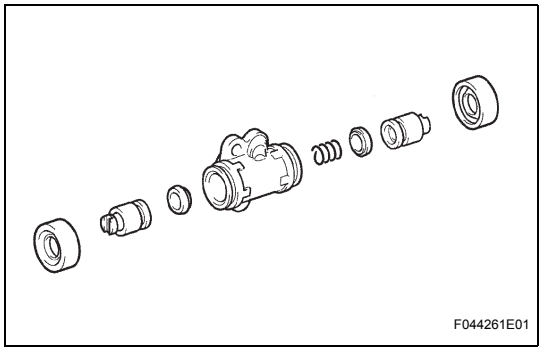

5. REMOVE REAR WHEEL CYLINDER KIT

(a) Remove the 2 wheel cylinder boots from the wheel brake cylinder.
(b) Remove the 2 pistons.
(c) Remove the compression spring.
(d) Remove the wheel cylinder cup from each piston.

INSPECTION

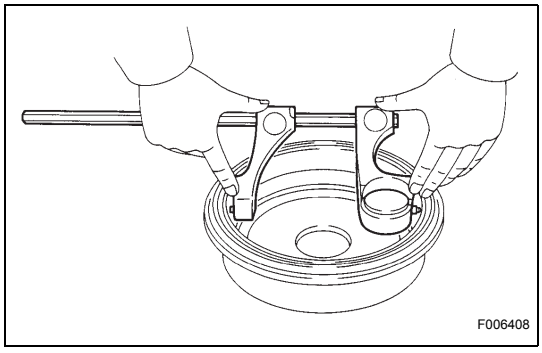

1. INSPECT REAR BRAKE DRUM INSIDE DIAMETER

(a) Using a brake drum gauge or the equivalent, measure the inside diameter of the brake drum.
Standard inside diameter:
200 mm (7.874 in.)
Maximum inside diameter:
201 mm (7.913 in.)
If the inside diameter is greater than the maximum, replace the brake drum.

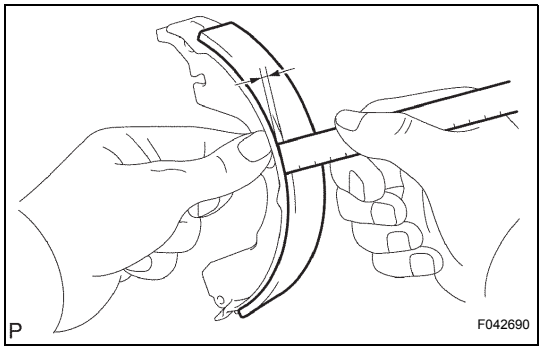

2. INSPECT REAR BRAKE SHOE LINING THICKNESS

(a) Using a ruler, measure the thickness of the shoe lining.
Standard thickness:
4.0 mm (0.157 in.)
Minimum thickness:
1.0 mm (0.039 in.)
If the lining thickness is equal to or less than the minimum value, or if there is any severe or uneven wear, replace the brake shoe.

NOTICE:
If the brake shoes need replacing, they must be replaced as a set.

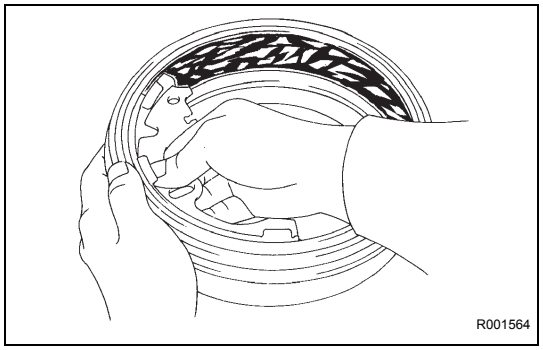

3. INSPECT REAR BRAKE DRUM AND REAR BRAKE SHOE LINING FOR PROPER CONTACT

(a) Apply chalk to the inside surface of the drum, then grind the brake shoe lining so that they fit together properly.
If the contact between the drum and the shoe lining is improper, repair it using a brake shoe grinder or replace the brake shoe assembly.

4. INSPECT WHEEL BRAKE CYLINDER

Check the cylinder bore and piston for rust and scoring.

REASSEMBLY

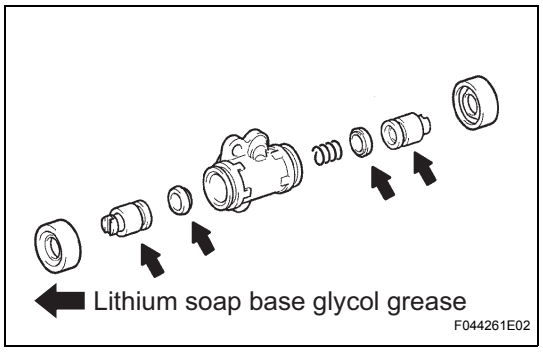

1. INSTALL REAR WHEEL CYLINDER KIT

(a) Apply lithium soap base glycol grease to 2 new wheel cylinder cups and the 2 pistons.
(b) Install the wheel cylinder cup onto each piston.
(c) Install the compression spring and 2 pistons onto the wheel brake cylinder.
(d) Install 2 new wheel cylinder boots onto the wheel brake cylinder.

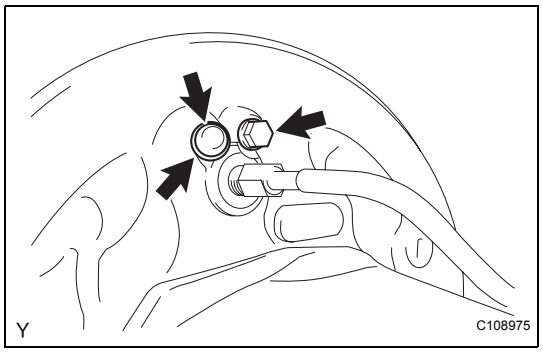

2. INSTALL REAR WHEEL BRAKE CYLINDER ASSEMBLY

(a) Install the wheel brake cylinder with the bolt.
Torque: 9.8 N*m (100 kgf*cm, 7 ft.*lbf)
(b) Provisionally install the bleeder plug.
(c) Install the bleeder plug cap.

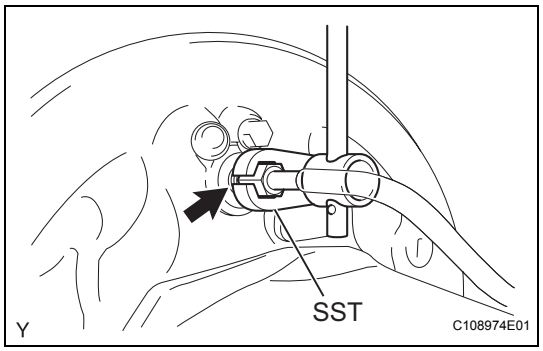

(d) Using SST, install the brake tube.
SST 09023-00100
Torque: for use without SST
15 N*m (155 kgf*cm, 11 ft.*lbf)
for use with SST
14 N*m (143 kgf*cm, 10 ft.*lbf)
HINT:
- Use a torque wrench with a fulcrum length of 300 mm (11.81 in.).
- This torque value is effective when SST is parallel to a torque wrench.

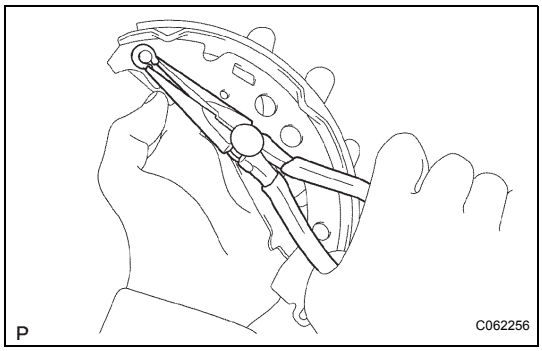

3. INSTALL REAR BRAKE PARKING BRAKE SHOE LEVER SUB-ASSEMBLY

(a) Using needle-nose pliers, install the parking brake shoe lever with a new C-washer.

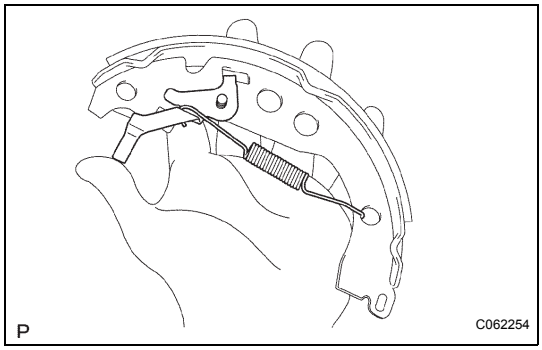

4. INSTALL REAR BRAKE AUTOMATIC ADJUST LEVER

(a) Install the automatic adjust lever and automatic adjust lever tension spring onto the front brake shoe.

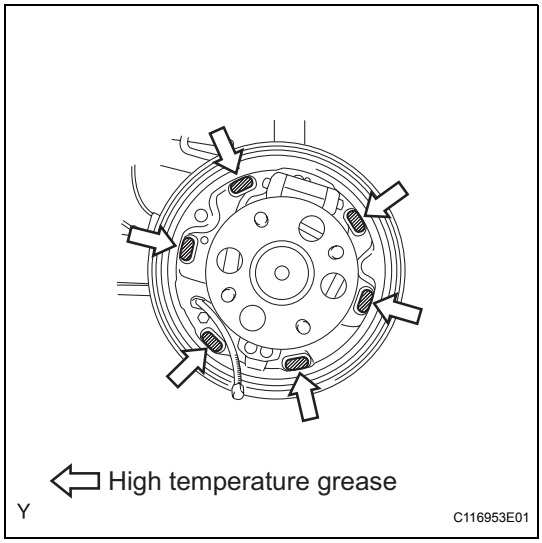

5. INSTALL REAR BRAKE SHOE KIT

(a) Apply high temperature grease to the surface of the backing plate which is in contact with the shoe.

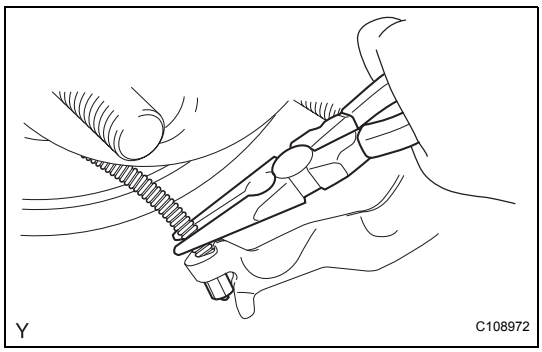

(b) Using needle-nose pliers, install the parking brake cable onto the parking brake shoe lever.

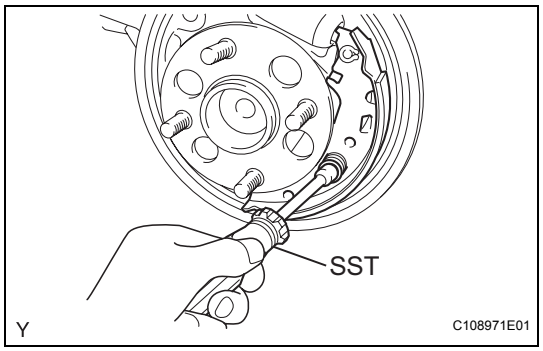

(c) Using SST, install the rear brake shoe, pin, shoe hold down spring and shoe hold down spring cup.
SST 09718-00010

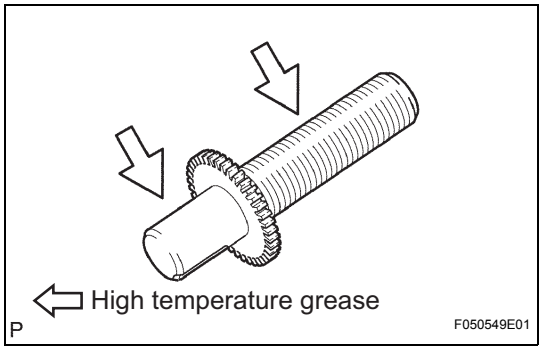

(d) Apply high temperature grease to the adjusting bolt.

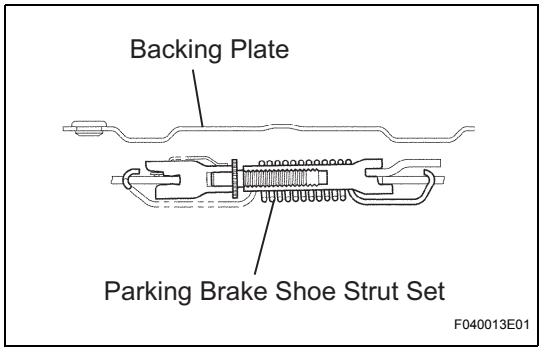

(e) Install the parking brake shoe strut set as shown in the illustration.

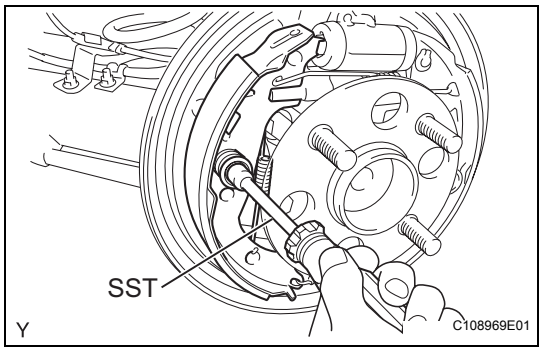

(f) Using SST, install the front brake shoe, pin, shoe hold down spring and shoe hold down spring cup.
SST 09718-00010

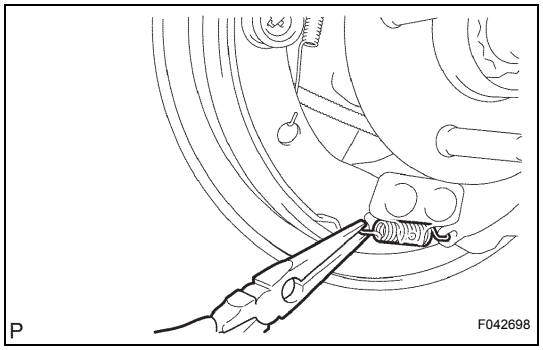

(g) Using needle-nose pliers, install the tension spring onto the front brake shoe and rear brake shoe.

BR

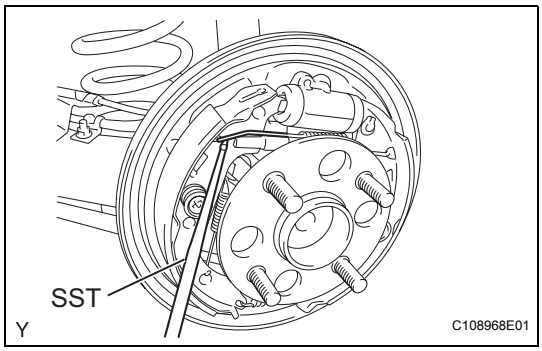

(h) Using SST, install the shoe return spring onto the front brake shoe.
SST 09703-30010
NOTICE:
Do not damage the wheel cylinder boot.

6. CHECK REAR DRUM BRAKE INSTALLATION

(a) Check that each part is installed properly.

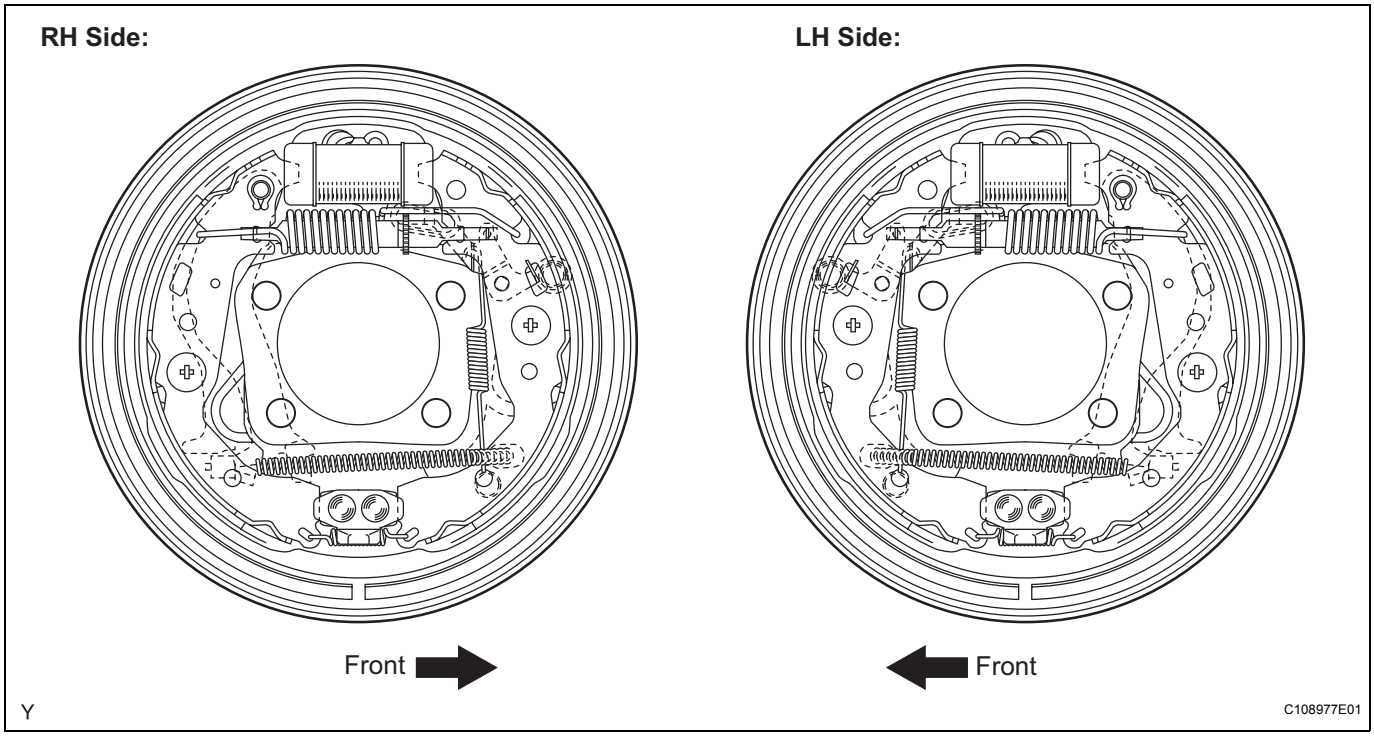

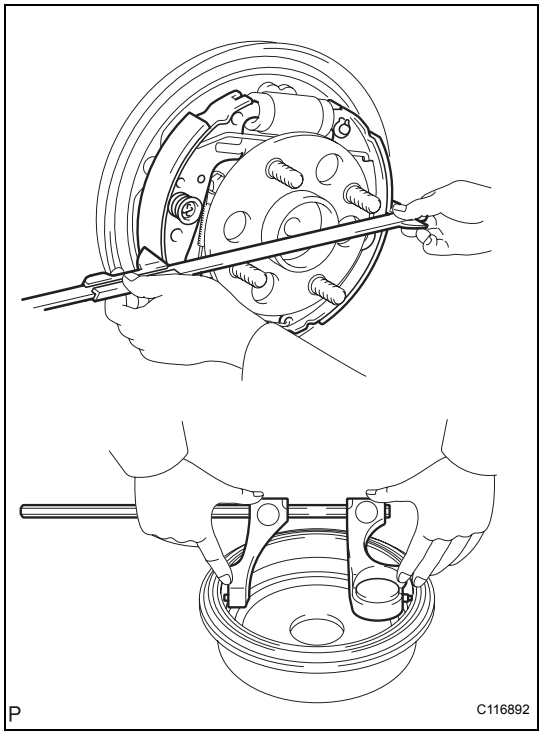

(b) Measure the brake drum inner diameter and the diameter of the brake shoes. Check that the difference between the diameters is equal to the specified shoe clearance.
Shoe clearance:
0.6 mm (0.024 in.)
NOTICE:
There should be no oil or grease adhering to the friction surfaces of the shoe lining or the drum.

INSTALLATION

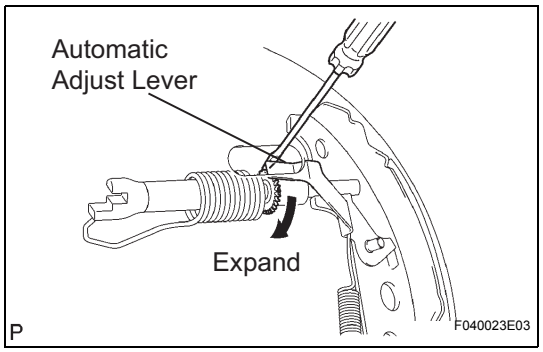

1. **INSTALL REAR BRAKE DRUM SUB-ASSEMBLY**
2. **ADJUST REAR DRUM BRAKE SHOE CLEARANCE**
   (a) Provisionally install the 2 hub nuts.
   (b) Remove the hole plug, and turn the adjuster to expand the shoe until the drum locks.
   (c) Using a screwdriver, release the adjuster 12 notches.
   (d) Install the hole plug.
3. **FILL RESERVOIR WITH BRAKE FLUID (See page BR-10)**
4. **BLEED MASTER CYLINDER (See page BR-10)**
5. **BLEED BRAKE LINE (See page BR-12)**
6. **CHECK FLUID LEVEL IN RESERVOIR (See page BR-12)**
7. **CHECK FOR BRAKE FLUID LEAKAGE**
8. **INSTALL REAR WHEEL**
   Torque: 103 N*m (1,050 kgf*cm, 76 ft.*lbf)
9. **INSPECT PARKING BRAKE LEVER TRAVEL (See page PB-1)**
10. **ADJUST PARKING BRAKE LEVER TRAVEL (See page PB-2)**

REAR BRAKE FLEXIBLE HOSE

COMPONENTS

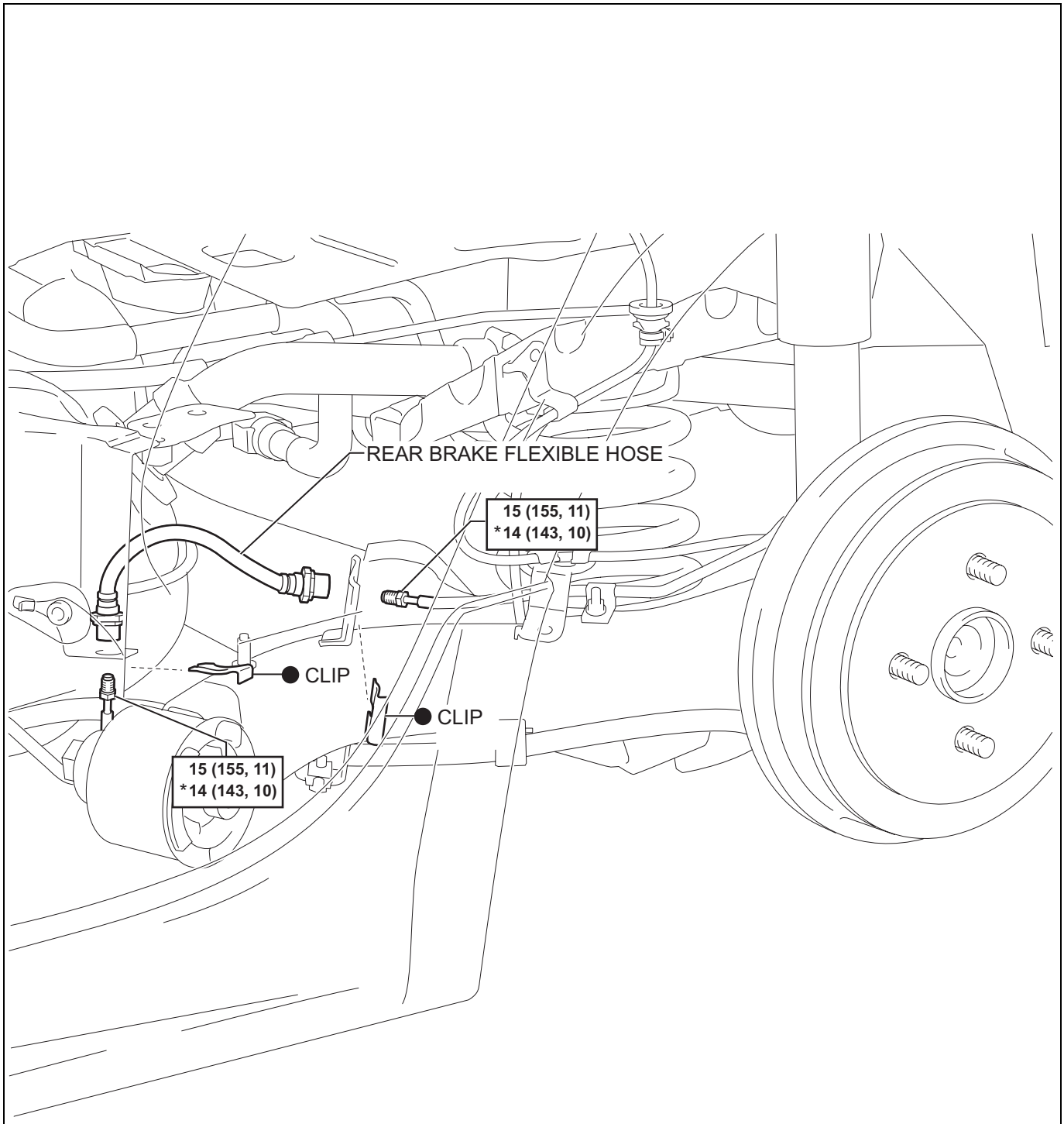

BR

N*m (kgf*cm, ft*lbf) : Specified torque

● Non-reusable part

* For use with SST

P

C116901E02

REMOVAL

1. **REMOVE REAR WHEEL**
2. **DRAIN BRAKE FLUID**
   NOTICE:
   Immediately wash off any brake fluid that comes into contact with any painted surfaces.
3. **REMOVE REAR BRAKE FLEXIBLE HOSE**
   (a) Using SST, separate the brake tubes.
   SST 09023-00100
   (b) Remove the 2 clips and flexible hose from the axle beam.

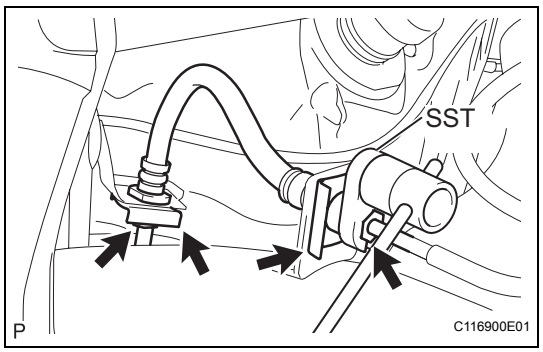

INSTALLATION

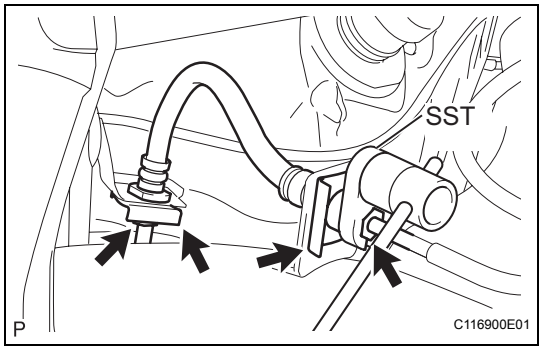

1. **INSTALL REAR BRAKE FLEXIBLE HOSE**
   (a) Install the flexible hose with the 2 new clips onto the axle beam.
   (b) Using SST, install the 2 brake tubes onto the flexible hose.
   SST 09023-00100
   Torque: for use without SST
   15 N*m (155 kgf*cm, 11 ft.*lbf)
   for use with SST
   14 N*m (143 kgf*cm, 10 ft.*lbf)
   HINT:
   - Use a torque wrench with a fulcrum length of 300 mm (11.81 in.).
   - This torque value is effective when SST is parallel to a torque wrench.
2. **FILL RESERVOIR WITH BRAKE FLUID (See page BR-10)**
3. **BLEED MASTER CYLINDER (See page BR-10)**
4. **BLEED BRAKE LINE (See page BR-12)**
5. **CHECK FLUID LEVEL IN RESERVOIR (See page BR-12)**
6. **CHECK FOR BRAKE FLUID LEAKAGE**
7. **INSTALL REAR WHEEL**
   Torque: 103 N*m (1,050 kgf*cm, 76 ft.*lbf)

PROPORTIONING VALVE

COMPONENTS

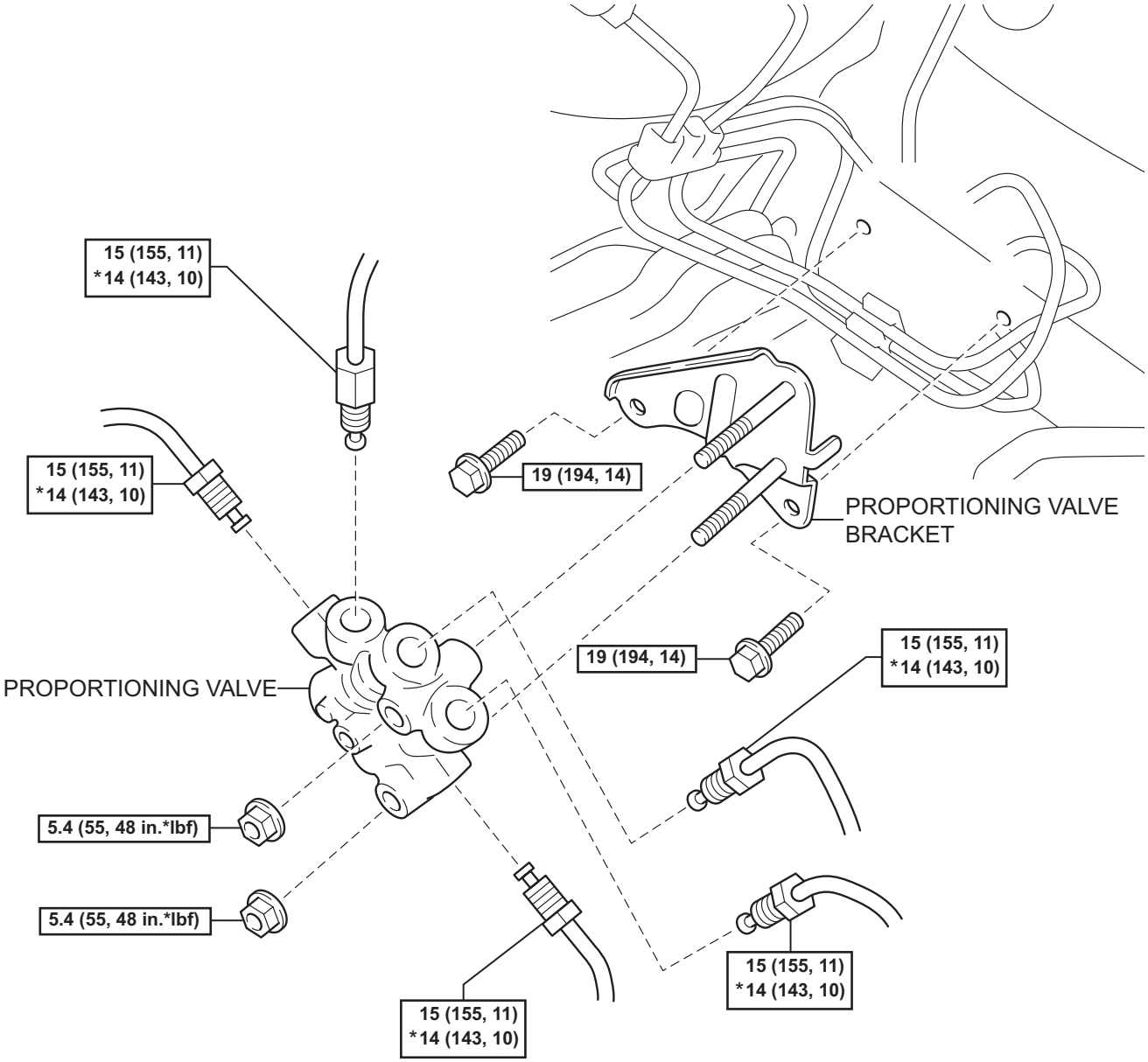

BR

N*m (kgf*cm, ft*lbf) : Specified torque

* For use with SST

N

C121839E02

REMOVAL

1. DRAIN BRAKE FLUID

NOTICE:

Immediately wash off any brake fluid that comes into contact with any painted surfaces.

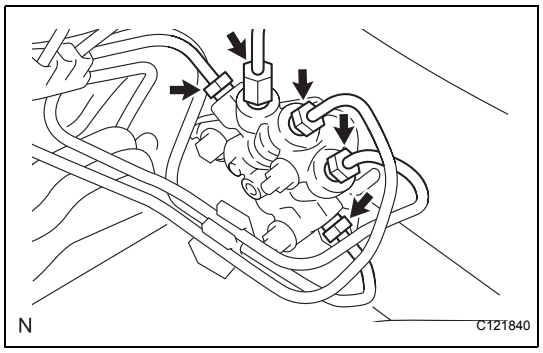

2. REMOVE PROPORTIONING VALVE

(a) Using SST, separate the 5 brake tubes from the proportioning valve.

SST 09023-00100

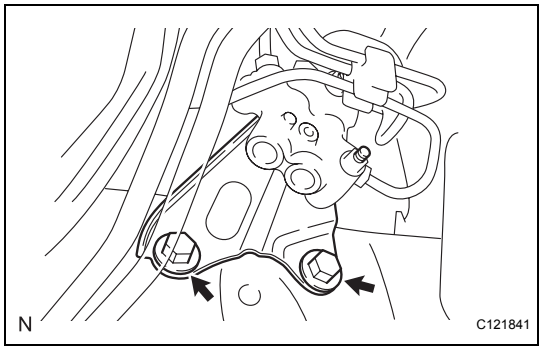

(b) Remove the 2 bolts and remove the proportioning vale bracket.

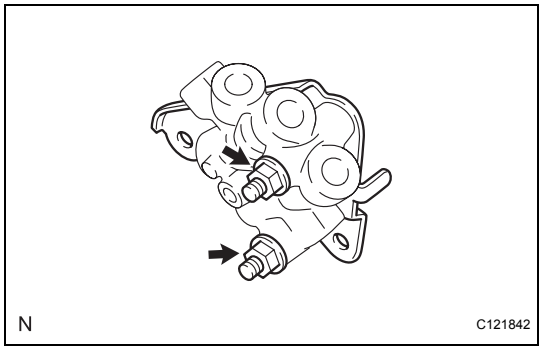

(c) Remove the 2 nuts and remove the proportioning valve from the proportioning valve bracket.

INSTALLATION

1. INSTALL PROPORTIONING VALVE

(a) Install the proportioning valve onto the proportioning valve bracket with the 2 nuts.

Torque: 5.4 N*m (55 kgf*cm, 48 in.*lbf)

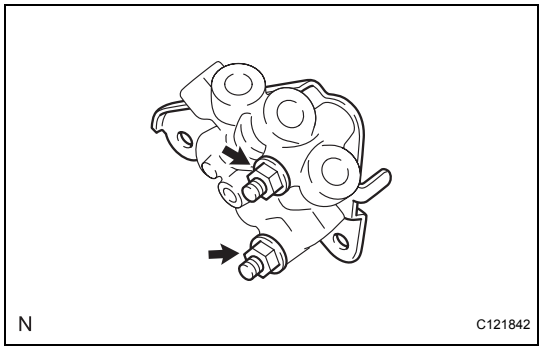

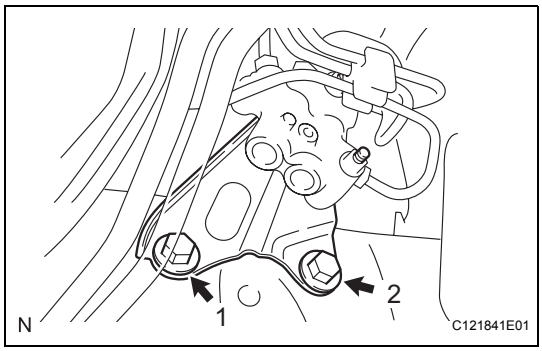

(b) Install the 2 bolts onto the proportioning valve bracket in the sequence order shown in the illustration.
Torque: 19 N*m (194 kgf*cm, 14 ft.*lbf)

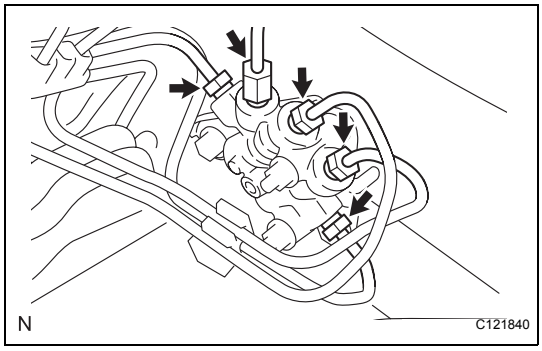

(c) Using SST, install the 5 brake tubes onto the proportioning valve.
SST 09023-00100
Torque: for use without SST
15 N*m (155 kgf*cm, 11 ft.*lbf)
for use with SST
14 N*m (143 kgf*cm, 10 ft.*lbf)
HINT:
- Use a torque wrench with a fulcrum length of 300 mm (11.81 in.).
- This torque value is effective when SST is parallel to a torque wrench.

2. **FILL RESERVOIR WITH BRAKE FLUID (See page BR-10)**
3. **BLEED MASTER CYLINDER (See page BR-10)**
4. **BLEED BRAKE LINE (See page BR-12)**
5. **CHECK FLUID LEVEL IN RESERVOIR (See page BR-12)**
6. **CHECK FOR BRAKE FLUID LEAKAGE**

PARKING BRAKE SYSTEM

PROBLEM SYMPTOMS TABLE

HINT:
Use the table below to help you find the cause of the problem. The numbers indicate the ranked order of probability of each of the possible causes. Check each part in the order suggested. If necessary, replace the applicable parts.

Symptom	Suspected area	See page
Brake drag	1. Parking brake lever travel (Out of adjustment)	PB-1
	2. Parking brake wire (Sticking)	PB-17
	3. Rear drum brake shoe clearance (Out of adjustment)	BR-67
	4. Parking brake shoe lining (Cracked or distorted)	BR-62
	5. Tension or return spring (Damaged)	BR-60

ADJUSTMENT

1. **REMOVE REAR WHEEL**
2. **ADJUST REAR DRUM BRAKE SHOE CLEARANCE (See page BR-67)**
3. **INSTALL REAR WHEEL**
   Torque: 103 N*m (1,050 kgf*cm, 76 ft.*lbf)
4. **INSPECT PARKING BRAKE LEVER TRAVEL**
   (a) Slowly pull the parking brake lever to the fully applied position, counting the number of clicks.
   Parking brake lever travel:
   6 to 9 clicks at 200 N (20 kgf, 45 lbf)
5. **REMOVE CENTER LOWER INSTRUMENT PANEL FINISH PANEL (for Sedan) (See page PB-6)**
6. **REMOVE SHIFT LEVER KNOB SUB-ASSEMBLY (for Manual Transaxle)**
7. **REMOVE SHIFTING HOLE COVER SUB-ASSEMBLY (for Hatchback Manual Transaxle) (See page PB-6)**
8. **REMOVE UPPER CONSOLE PANEL SUB-ASSEMBLY (for Sedan) (See page PB-6)**
9. **REMOVE REAR CONSOLE BOX COVER (for Hatchback) (See page PB-6)**
10. **REMOVE REAR UPPER CONSOLE PANEL SUB-ASSEMBLY (for Sedan) (See page PB-7)**
11. **REMOVE CONSOLE BOX CARPET (See page PB-7)**
12. **REMOVE REAR CONSOLE BOX ASSEMBLY (See page PB-8)**
13. **ADJUST PARKING BRAKE LEVER TRAVEL**
    (a) Loosen the lock nut and turn the adjusting nut until the parking brake lever travel is corrected to within the specified range.
    Parking brake lever travel:
    6 to 9 clicks at 200 N (20 kgf, 45 lbf)
    (b) Tighten the lock nut.
    Torque: 5.4 N*m (55 kgf*cm, 48 in.*lbf)
    (c) Operate the parking brake lever 3 to 4 times, and check the parking brake lever travel.
    (d) Check whether the parking brake drags or not.
    (e) When operating the parking brake lever, check that the brake warning light illuminates.
    Standard:
    Brake warning light always illuminates at the first click.
14. **INSTALL REAR CONSOLE BOX ASSEMBLY (See page PB-10)**
15. **INSTALL CONSOLE BOX CARPET (See page PB-11)**
16. **INSTALL REAR CONSOLE BOX COVER (for Hatchback) (See page PB-11)**

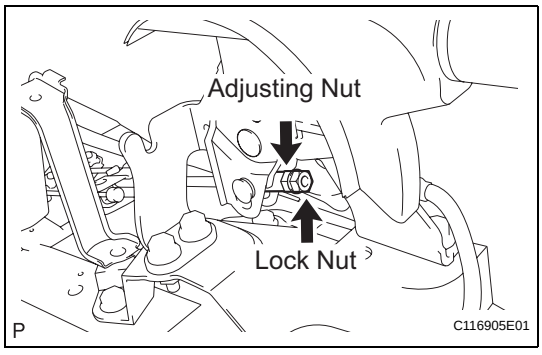

PB

17. **INSTALL REAR UPPER CONSOLE PANEL SUB-ASSEMBLY (for Sedan) (See page IP-89)**
18. **INSTALL SHIFTING HOLE COVER SUB-ASSEMBLY (for Hatchback Manual Transaxle) (See page PB-12)**
19. **INSTALL UPPER CONSOLE PANEL SUB-ASSEMBLY (for Sedan) (See page PB-12)**
20. **INSTALL SHIFT LEVER KNOB SUB-ASSEMBLY (for Manual Transaxle)**
21. **INSTALL CENTER LOWER INSTRUMENT PANEL FINISH PANEL (for Sedan) (See page PB-12)**

PARKING BRAKE LEVER

COMPONENTS

for Hatchback:

for Manual Transaxle:

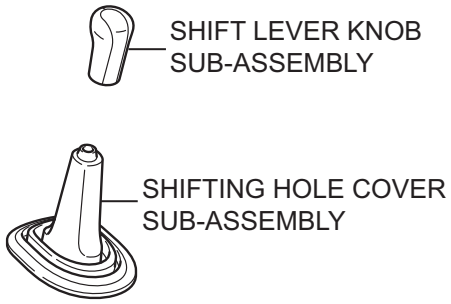

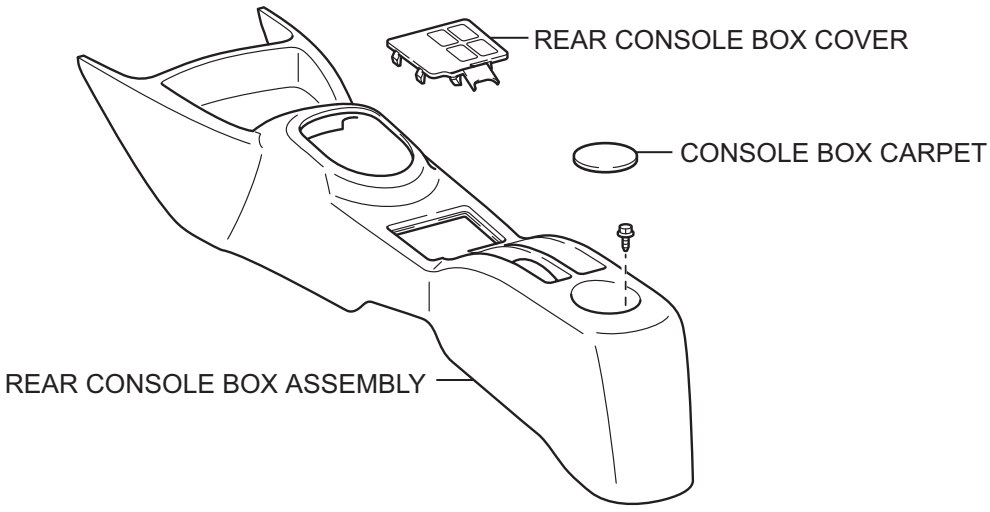

T

C133142E01

PB

for Sedan:

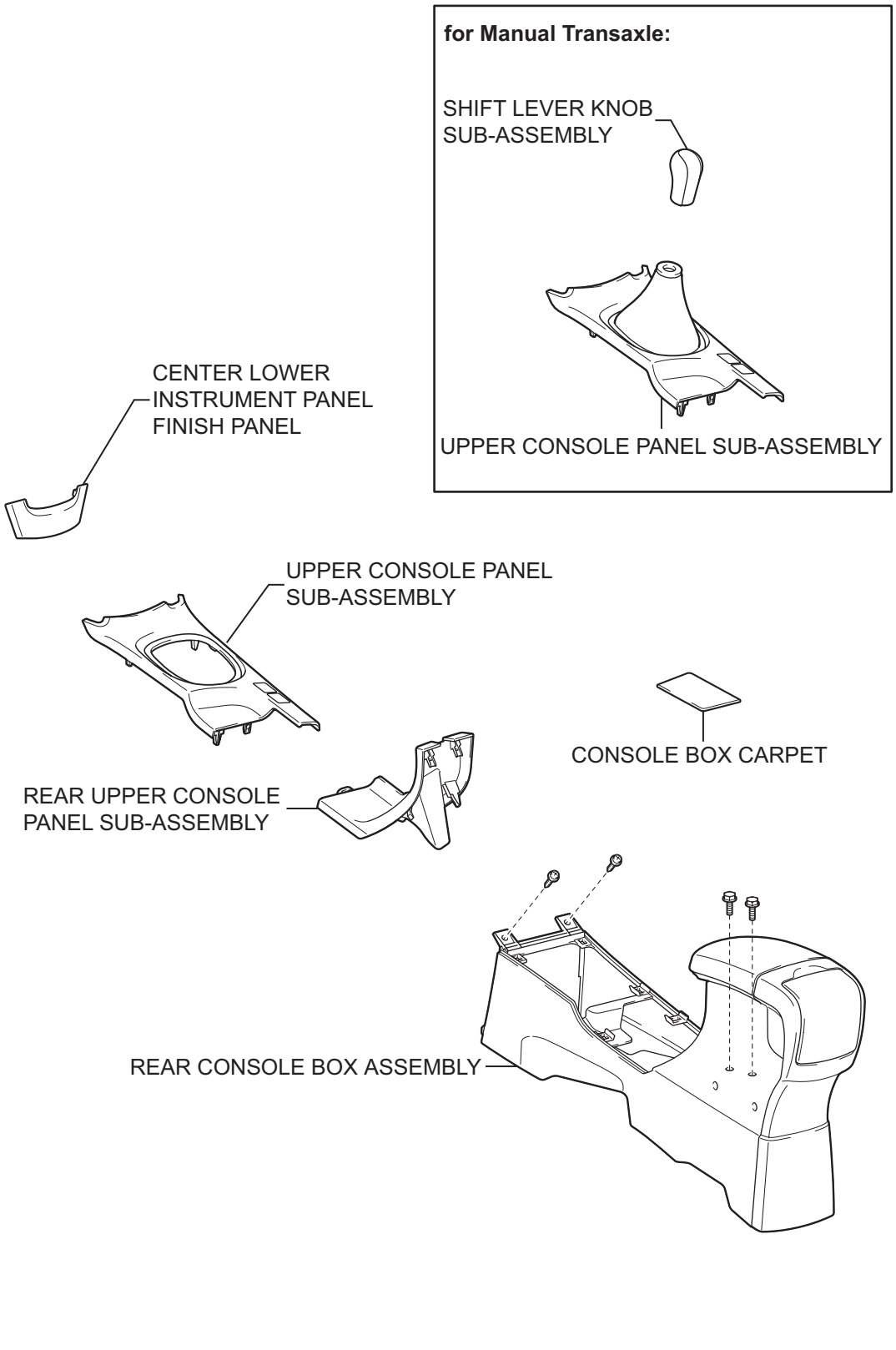
for Manual Transaxle:
SHIFT LEVER KNOB SUB-ASSEMBLY
UPPER CONSOLE PANEL SUB-ASSEMBLY
CENTER LOWER INSTRUMENT PANEL FINISH PANEL
UPPER CONSOLE PANEL SUB-ASSEMBLY
CONSOLE BOX CARPET
REAR UPPER CONSOLE PANEL SUB-ASSEMBLY
REAR CONSOLE BOX ASSEMBLY

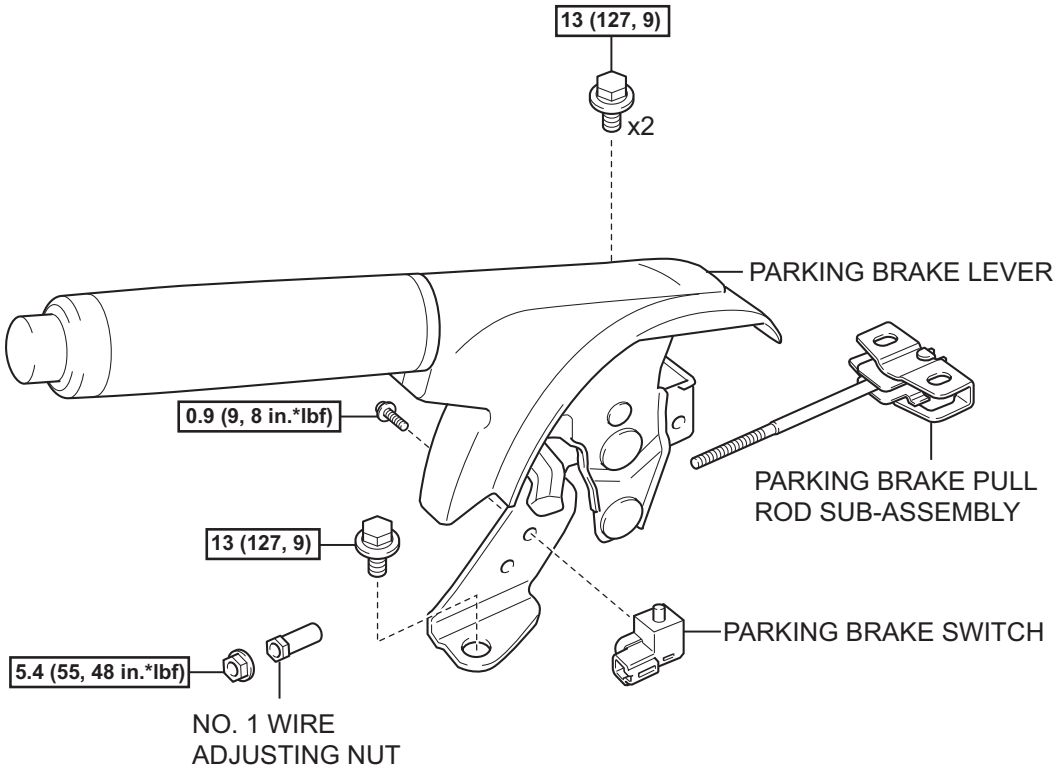

N*m (kgf*cm, ft*lbf) :Specified torque

Y

C109014E01

PB

REMOVAL

1. DISCONNECT CABLE FROM NEGATIVE BATTERY TERMINAL

2. REMOVE CENTER LOWER INSTRUMENT PANEL FINISH PANEL (for Sedan)

(a) Disengage the 2 claws and 2 clips and remove the instrument panel finish panel.

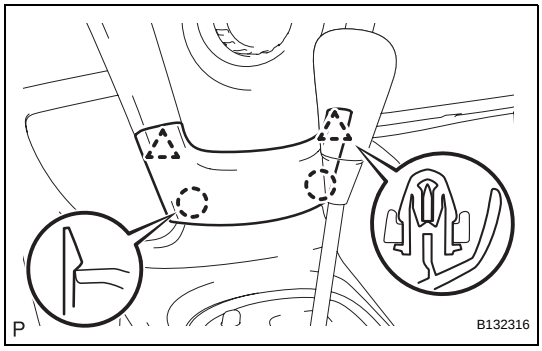

3. REMOVE SHIFT LEVER KNOB SUB-ASSEMBLY (for Manual Transaxle)

4. REMOVE SHIFTING HOLE COVER SUB-ASSEMBLY (for Hatchback Manual Transaxle)

(a) Disengage the 6 claws and remove the shifting hole cover.

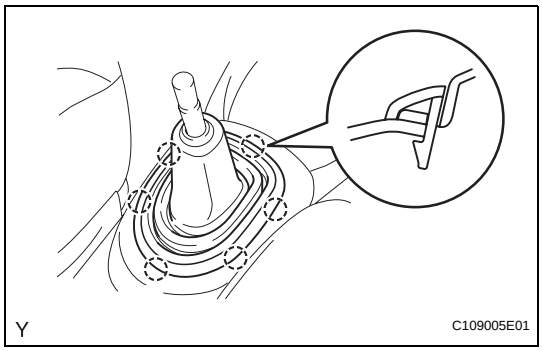

5. REMOVE UPPER CONSOLE PANEL SUB-ASSEMBLY (for Sedan)

(a) Shift the shift lever into the N position.

(b) Disengage the 5 clips and the claw and remove the upper console panel.

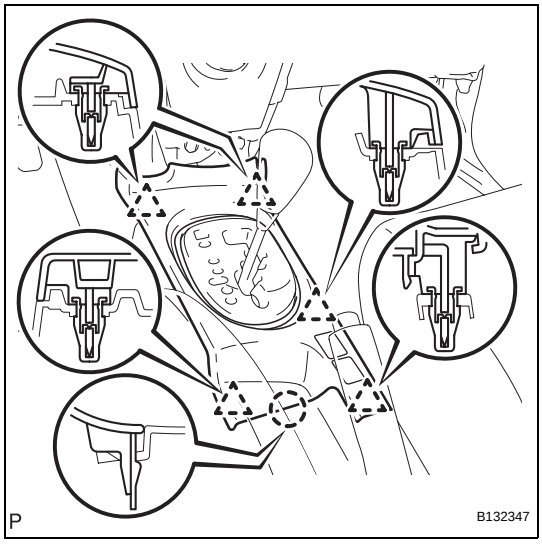

6. REMOVE REAR CONSOLE BOX COVER (for Hatchback)

(a) Disengage the 8 claws and remove the rear console box cover.

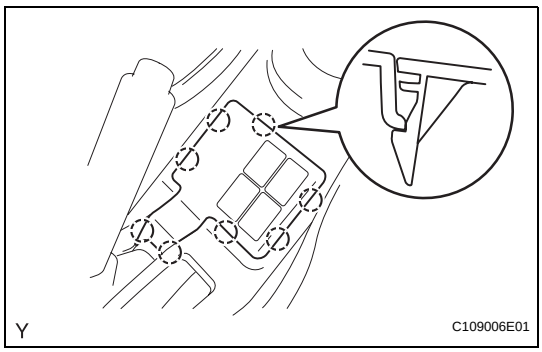

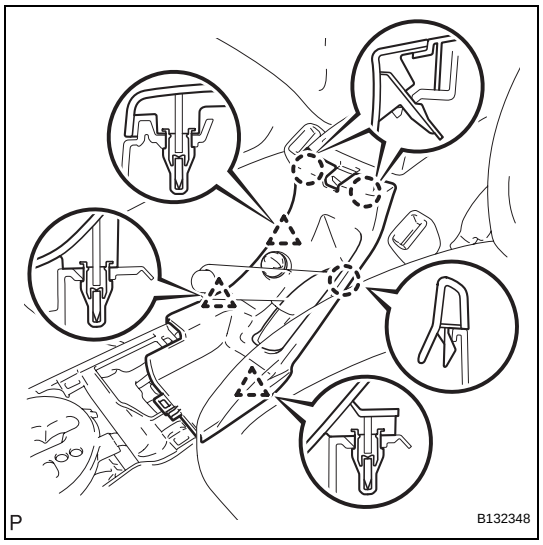

7. REMOVE REAR UPPER CONSOLE PANEL SUB-ASSEMBLY (for Sedan)

(a) Disengage the 3 clips and 3 claws.

(b) Disconnect the connector and remove the rear upper console panel.

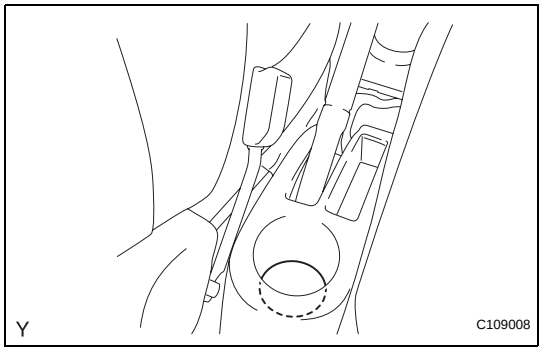

8. REMOVE CONSOLE BOX CARPET

(a) for Hatchback:

(1) Remove the console box carpet.

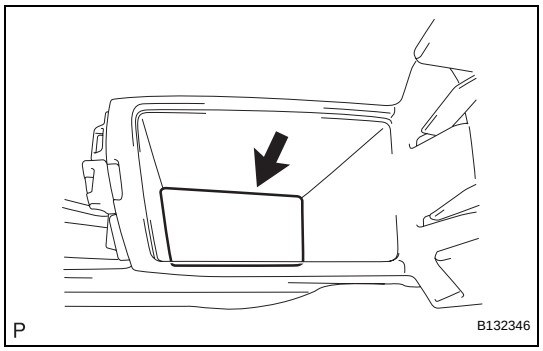

(b) for Sedan:

(1) Remove the console box carpet.

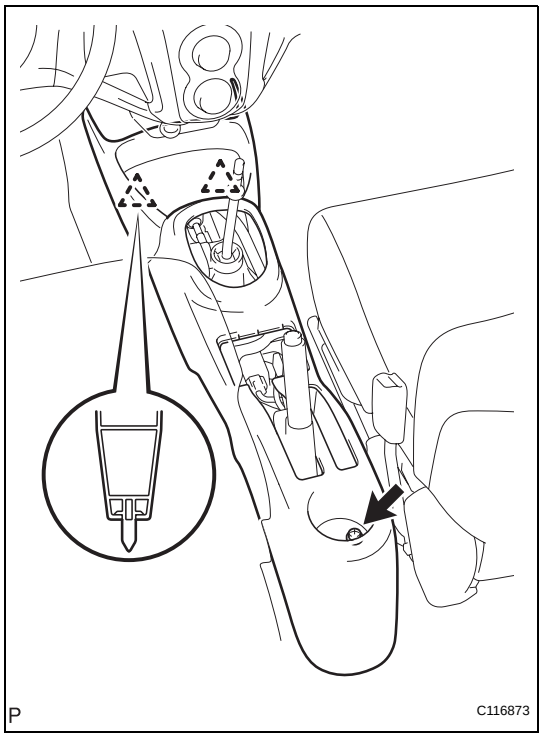

9. REMOVE REAR CONSOLE BOX ASSEMBLY

(a) for Hatchback:
  (1) Remove the bolt.
  (2) Disengage the 2 clips to remove the rear console box.

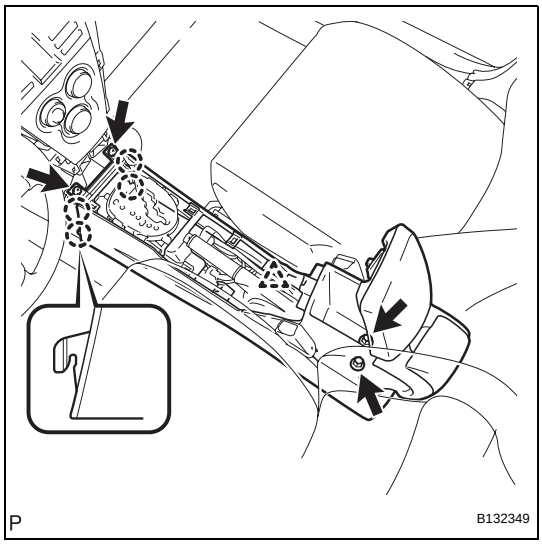

(b) for Sedan:
  (1) Disconnect the clamp.
  (2) Remove the 2 bolts and 2 screws.
  (3) Disengage the 4 claws and remove the rear console box.

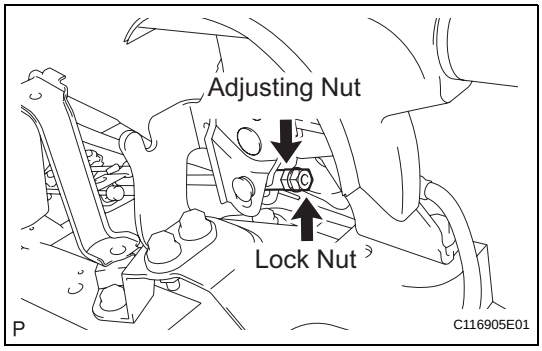

10. LOOSEN NO. 1 WIRE ADJUSTING NUT

(a) Loosen the lock nut and the adjusting nut.

11. DISCONNECT NO. 3 PARKING BRAKE CABLE ASSEMBLY

(a) Disconnect the parking brake cable from the parking brake equalizer.

12. DISCONNECT NO. 2 PARKING BRAKE CABLE ASSEMBLY

(a) Disconnect the parking brake cable from the parking brake equalizer.

13. REMOVE PARKING BRAKE LEVER

(a) Disconnect the parking brake switch connector.

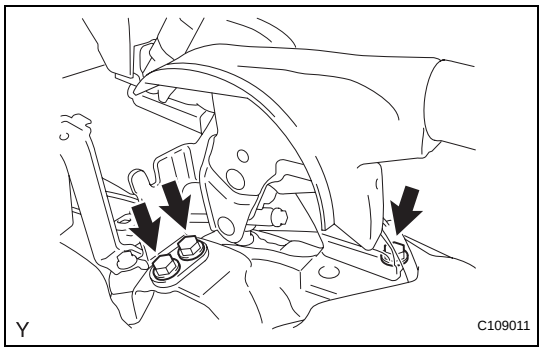

(b) Remove the 3 bolts and remove the parking brake lever.

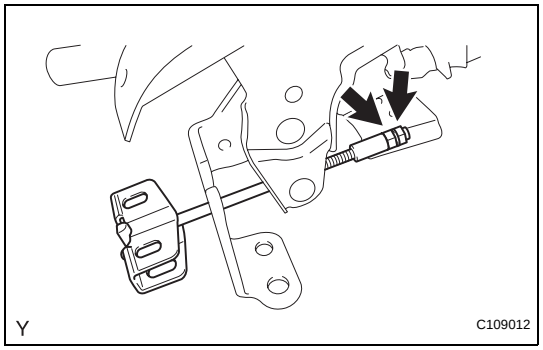

(c) Remove the lock nut and adjusting nut to remove the parking brake pull rod and parking brake equalizer.

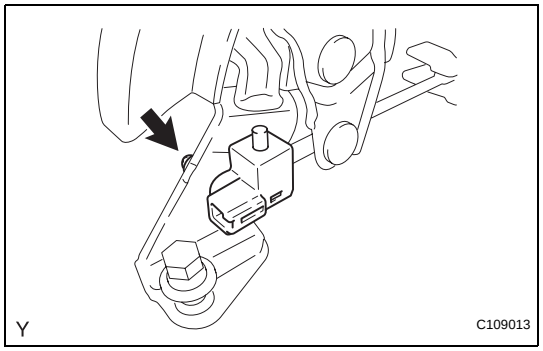

14. REMOVE PARKING BRAKE SWITCH

(a) Remove the screw and remove the parking brake switch.

INSTALLATION

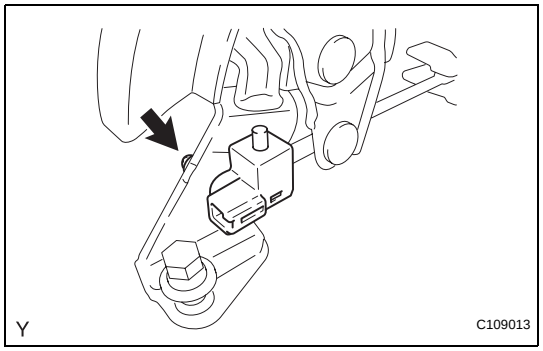

1. INSTALL PARKING BRAKE SWITCH

(a) Install the parking brake switch with the screw.
Torque: 0.9 N*m (9 kgf*cm, 8 in.*lbf)

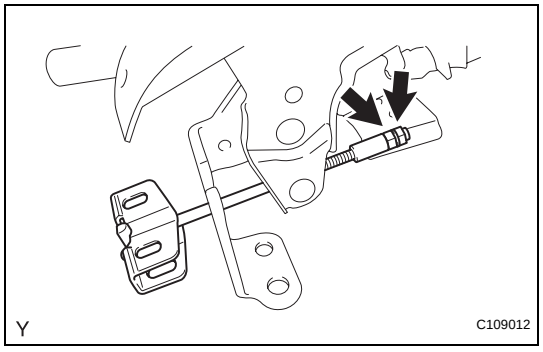

2. INSTALL PARKING BRAKE LEVER

(a) Install the parking brake pull rod and parking brake equalizer, and then provisionally install the adjusting nut and the lock nut.

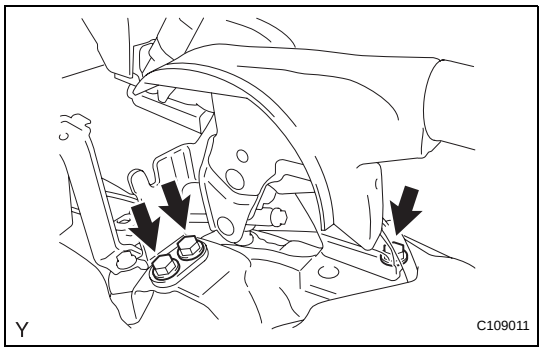

(b) Install the parking brake lever with the 3 bolts.
Torque: 13 N*m (127 kgf*cm, 9 ft.*lbf)
(c) Connect the parking brake switch connector.

3. INSTALL NO. 2 PARKING BRAKE CABLE ASSEMBLY
(a) Connect the parking brake cable to the parking brake equalizer.

4. INSTALL NO. 3 PARKING BRAKE CABLE ASSEMBLY
(a) Connect the parking brake cable to the parking brake equalizer.

5. INSPECT PARKING BRAKE LEVER TRAVEL (See page PB-1)

6. ADJUST PARKING BRAKE LEVER TRAVEL (See page PB-2)

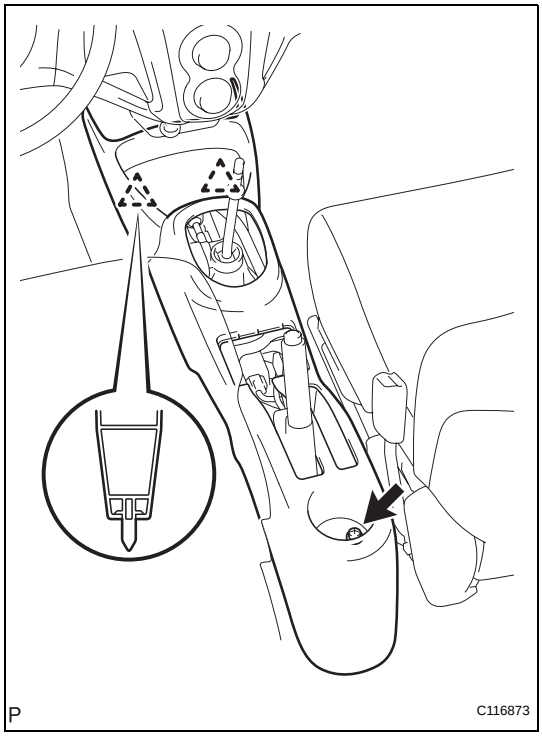

7. INSTALL REAR CONSOLE BOX ASSEMBLY
(a) for Hatchback:
(1) Engage the 2 clips and install the rear console box.
(2) Install the bolt.

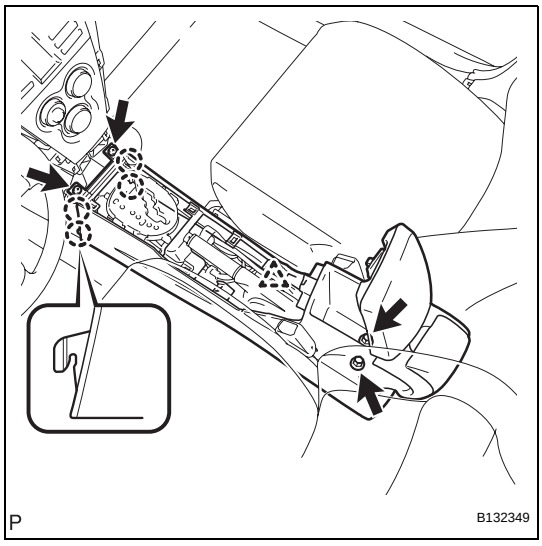

(b) for Sedan:
(1) Engage the 4 claws and install the rear console box.
(2) Install the 2 bolts and 2 screws.
(3) Connect the clamp.

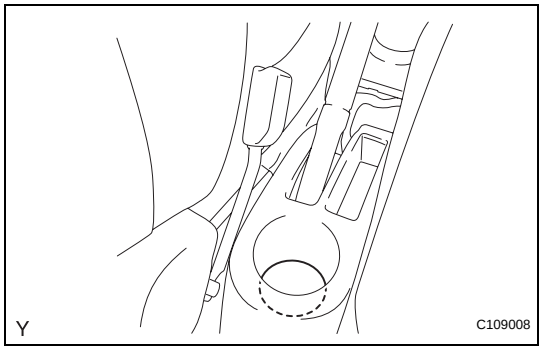

8. INSTALL CONSOLE BOX CARPET

(a) for Hatchback:

(1) Install the console box carpet.

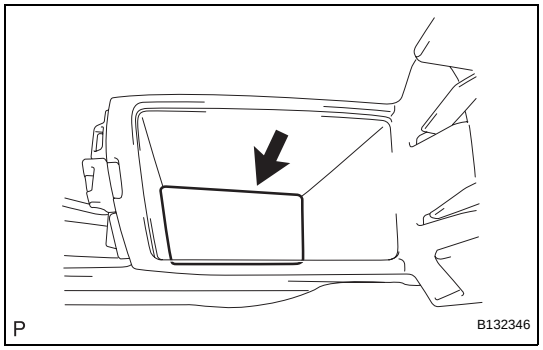

(b) for Sedan:

(1) Install the console box carpet.

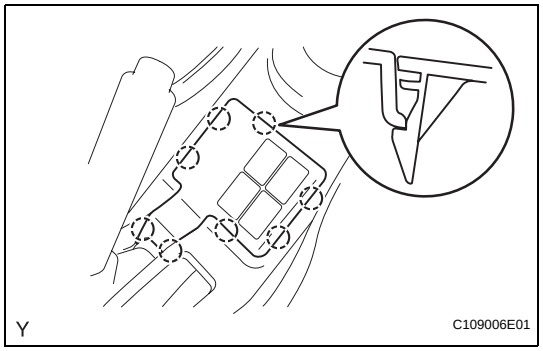

9. INSTALL REAR CONSOLE BOX COVER (for Hatchback)

(a) Engage the 8 claws to install the rear console box cover.

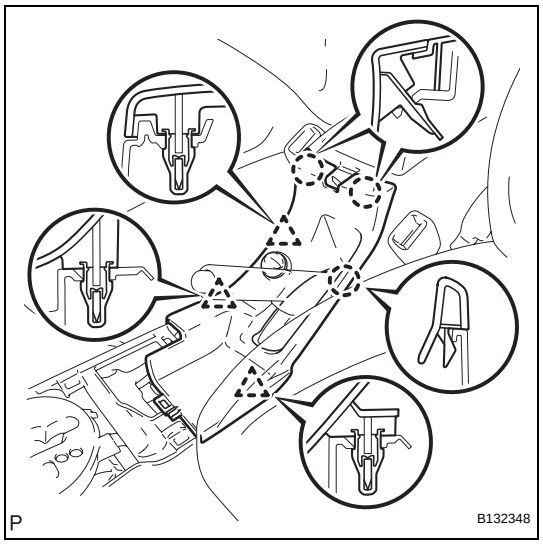

10. INSTALL REAR UPPER CONSOLE PANEL SUB-ASSEMBLY (for Sedan)

(a) Connect the connector.

(b) Engage the 3 clips and 3 claws and install the rear upper console panel.

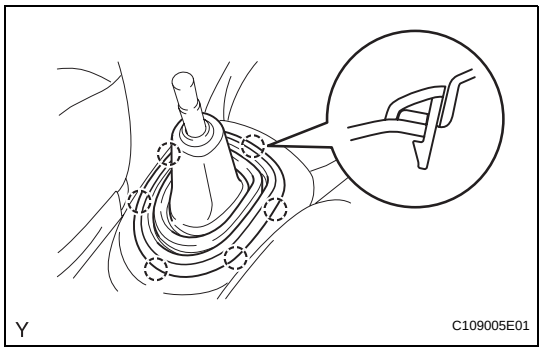

11. INSTALL SHIFTING HOLE COVER SUB-ASSEMBLY (for Hatchback Manual Transaxle)

(a) Engage the 6 claws to install the shifting hole cover.

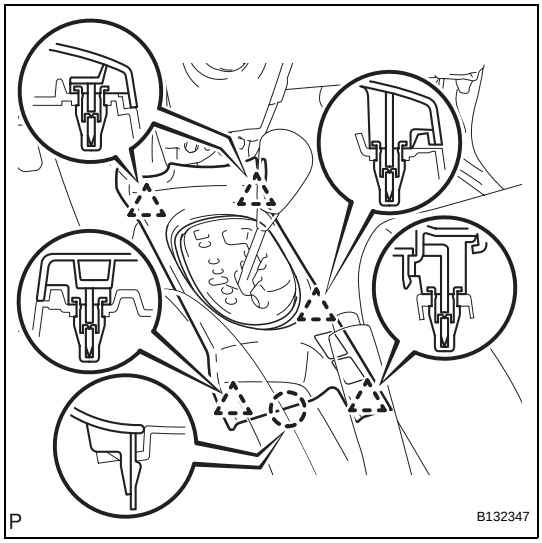

12. INSTALL UPPER CONSOLE PANEL SUB-ASSEMBLY (for Sedan)

(a) Engage the 5 clips and the claw and install the upper console panel.

13. INSTALL SHIFT LEVER KNOB SUB-ASSEMBLY (for Manual Transaxle)

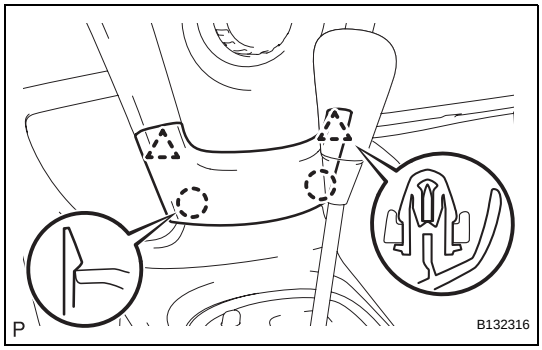

14. INSTALL CENTER LOWER INSTRUMENT PANEL FINISH PANEL (for Sedan)

(a) Engage the 2 claws and 2 clips and install the instrument panel finish panel.

15. CONNECT CABLE TO NEGATIVE BATTERY TERMINAL

Torque: 5.4 N*m (55 kgf*cm, 48 in.*lbf)

PARKING BRAKE CABLE

COMPONENTS

for Hatchback:

for Manual Transaxle:

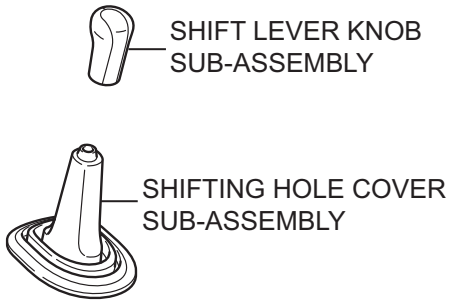

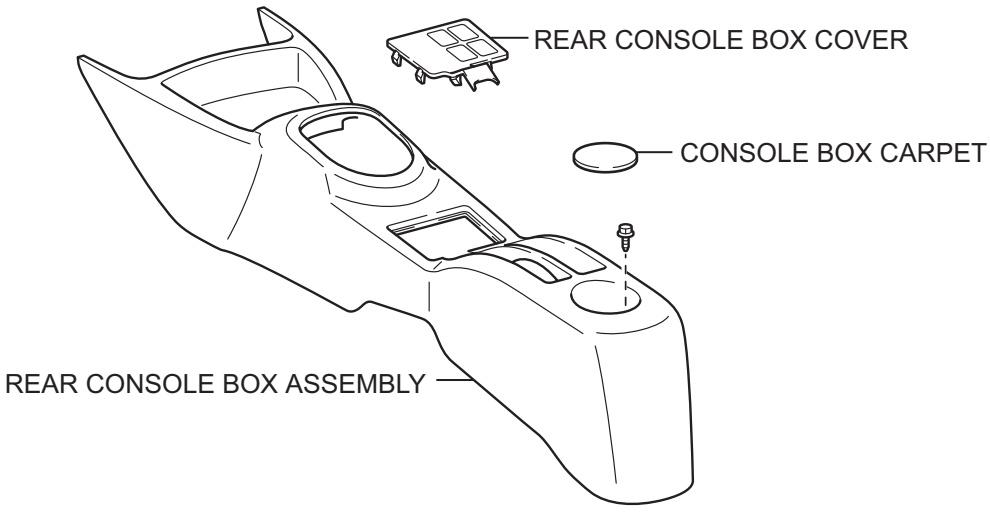

T

C133142E01

PB

for Sedan:

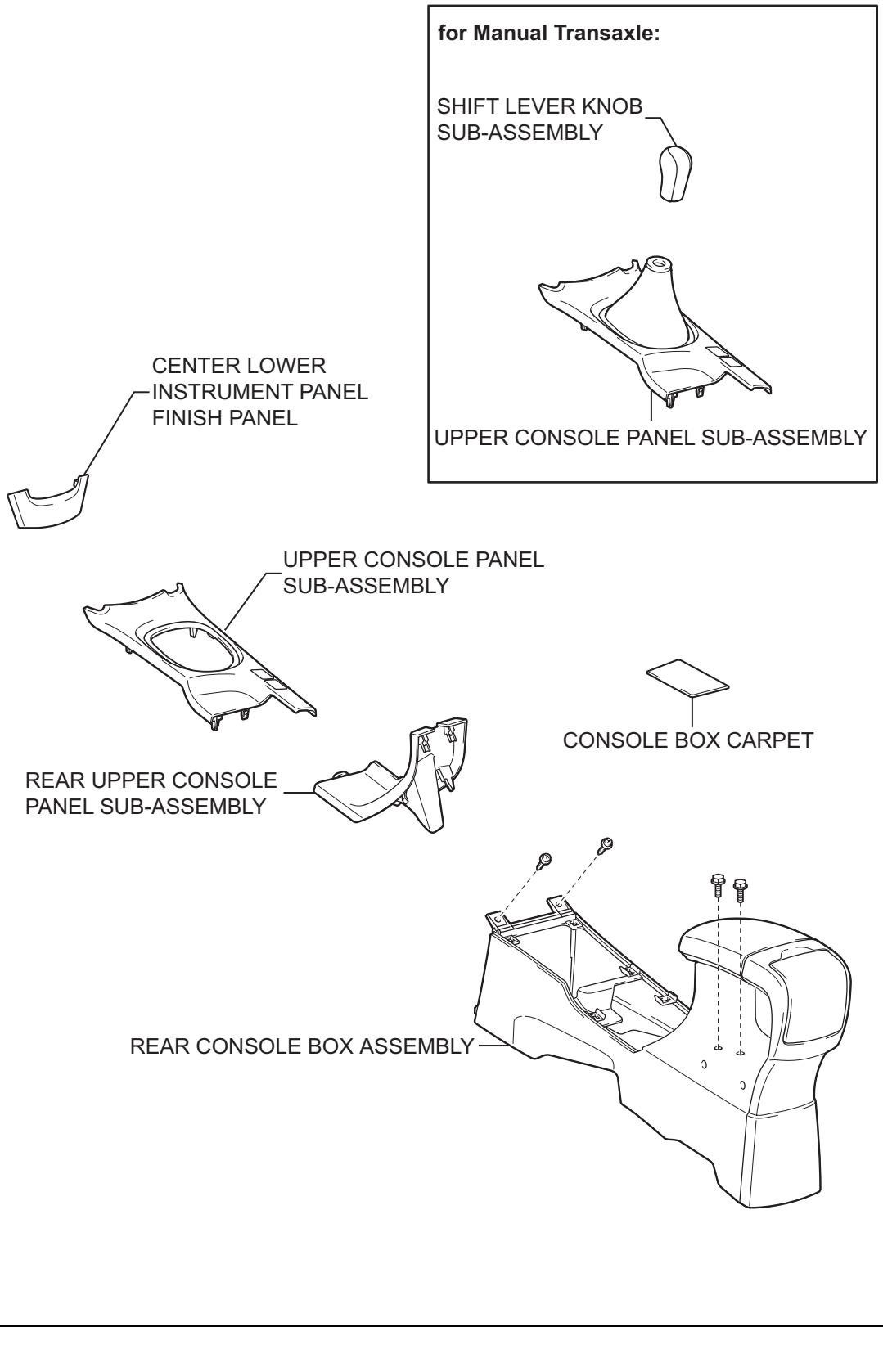

PB

P

B132385E02

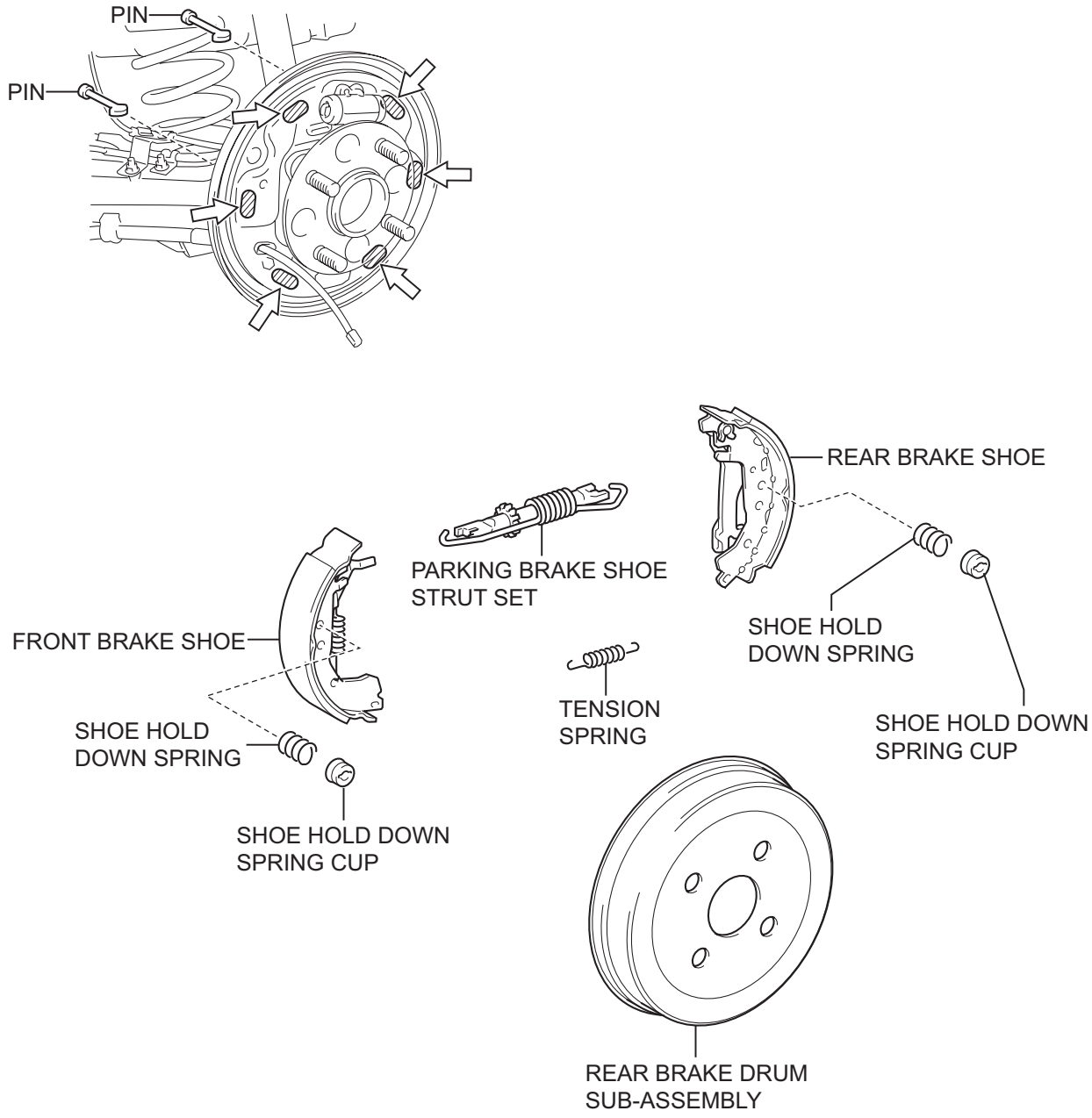

Y

C126203E02

PB

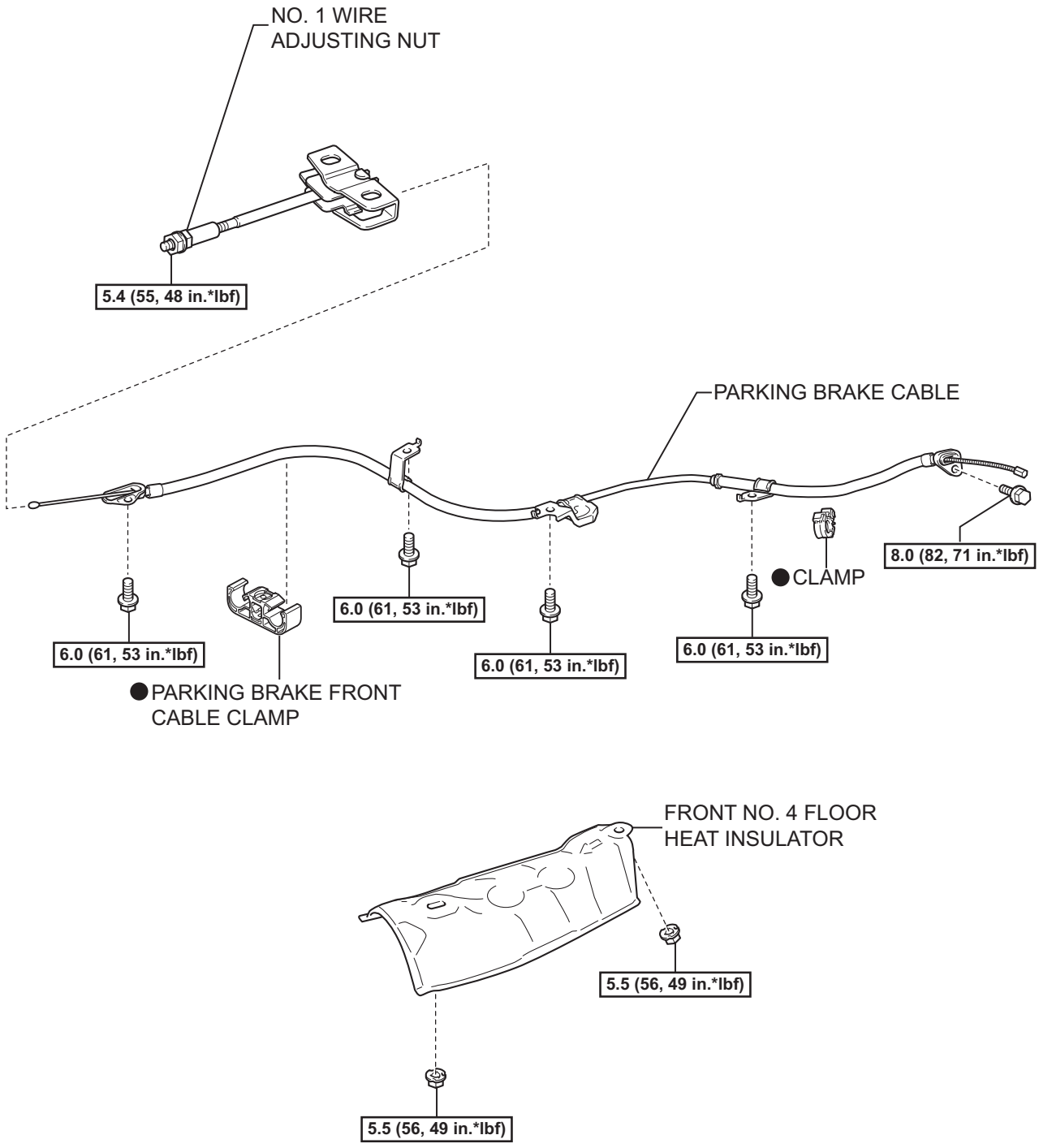

PB

N*m (kgf*cm, ft*lbf) : Specified torque

● Non-reusable part

Y

C126199E02

REMOVAL

1. **REMOVE CENTER LOWER INSTRUMENT PANEL FINISH PANEL (for Sedan) (See page PB-6)**
2. **REMOVE SHIFT LEVER KNOB SUB-ASSEMBLY (for Manual Transaxle)**
3. **REMOVE SHIFTING HOLE COVER SUB-ASSEMBLY (for Hatchback Manual Transaxle) (See page PB-6)**
4. **REMOVE UPPER CONSOLE PANEL SUB-ASSEMBLY (for Sedan) (See page PB-6)**
5. **REMOVE REAR CONSOLE BOX COVER (for Hatchback) (See page PB-6)**
6. **REMOVE REAR UPPER CONSOLE PANEL SUB-ASSEMBLY (for Sedan) (See page PB-7)**
7. **REMOVE CONSOLE BOX CARPET (See page PB-7)**
8. **REMOVE REAR CONSOLE BOX ASSEMBLY (See page PB-8)**
9. **REMOVE REAR WHEEL**
10. **REMOVE REAR BRAKE DRUM SUB-ASSEMBLY (See page BR-60)**
11. **REMOVE REAR BRAKE SHOE KIT (See page BR-60)**
12. **REMOVE FRONT NO. 4 FLOOR HEAT INSULATOR**
    (a) Remove the 2 nuts and remove the heat insulator.
13. **LOOSEN NO. 1 WIRE ADJUSTING NUT (See page PB-8)**
14. **REMOVE PARKING BRAKE CABLE**
    (a) Disconnect the cable end from the equalizer.
    (b) Remove cable clamp A from the body.
    (c) Remove the 4 bolts.

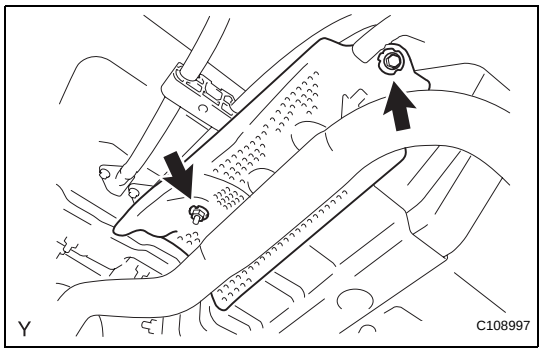

(d) Using pliers, pinch both ends of the claw of cable clamp B and flex the clamp to remove it.

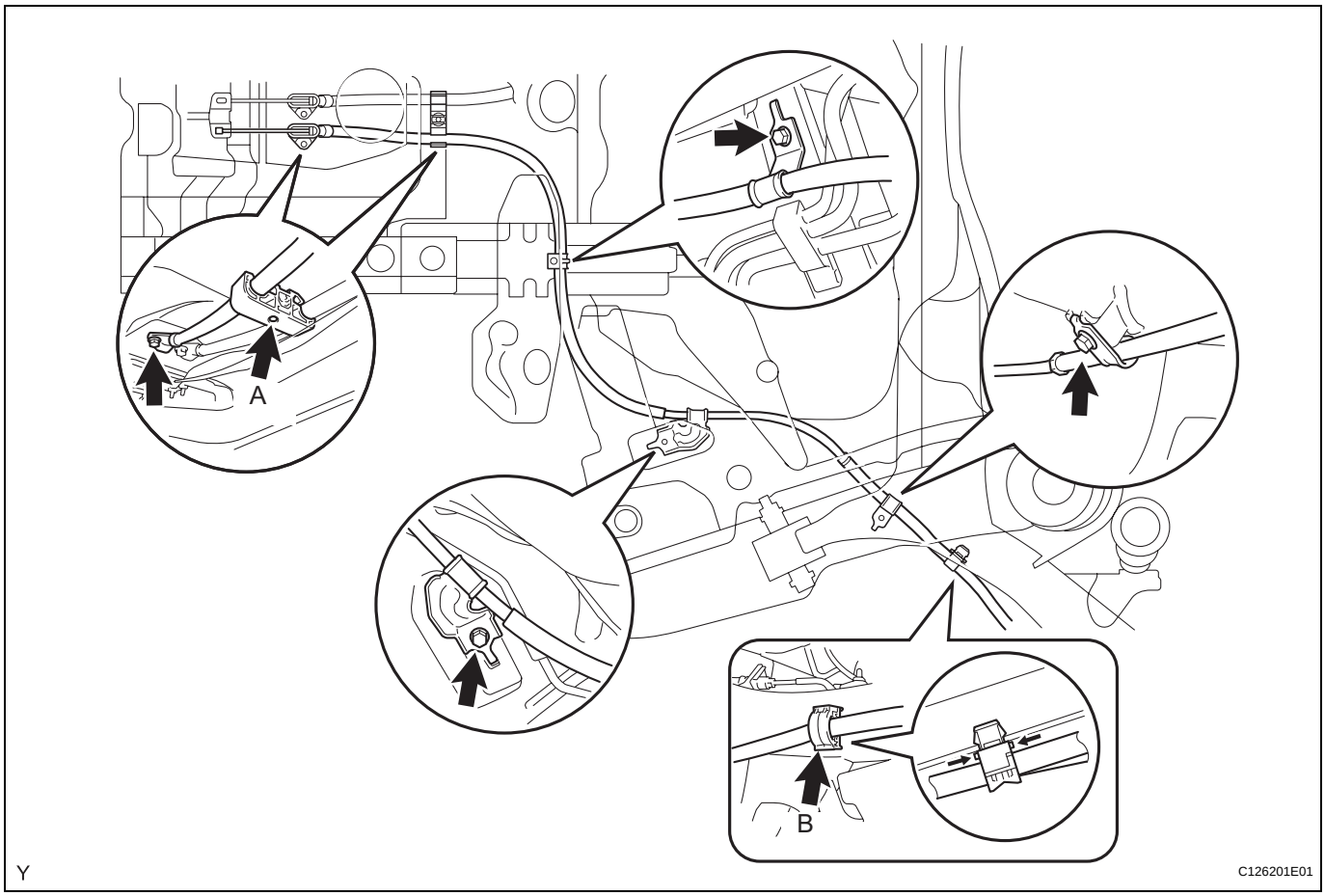

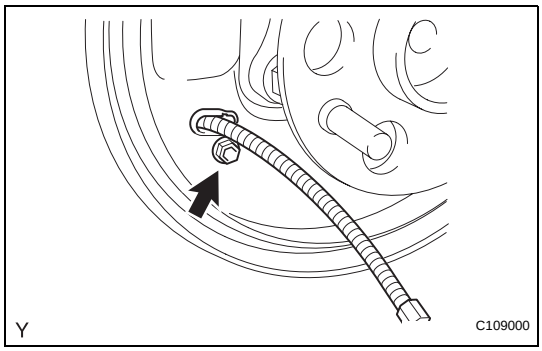

(e) Remove the bolt and remove the parking brake cable from the backing plate.

(f) Remove the cable clamp B from the parking brake cable.
HINT:
Replace the cable clamp B with a new one when installing the parking brake cable.

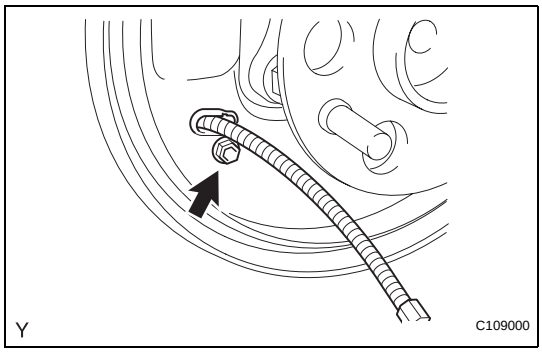

INSTALLATION

1. INSTALL PARKING BRAKE CABLE

(a) Install the parking brake cable onto the backing plate with the bolt.
Torque: 8.0 N*m (82 kgf*cm, 71 in.*lbf)

(b) Install a new cable clamp B onto the rear axle beam.
NOTICE:
Securely install the clamp.

(c) Tighten the 4 bolts.
Torque: 6.0 N*m (61 kgf*cm, 53 in.*lbf)

(d) Pass the parking brake cable through a new cable clamp A, and then install cable clamp A onto the stud bolt.
NOTICE:
Securely install the clamp.
(e) Connect the cable end to the equalizer.

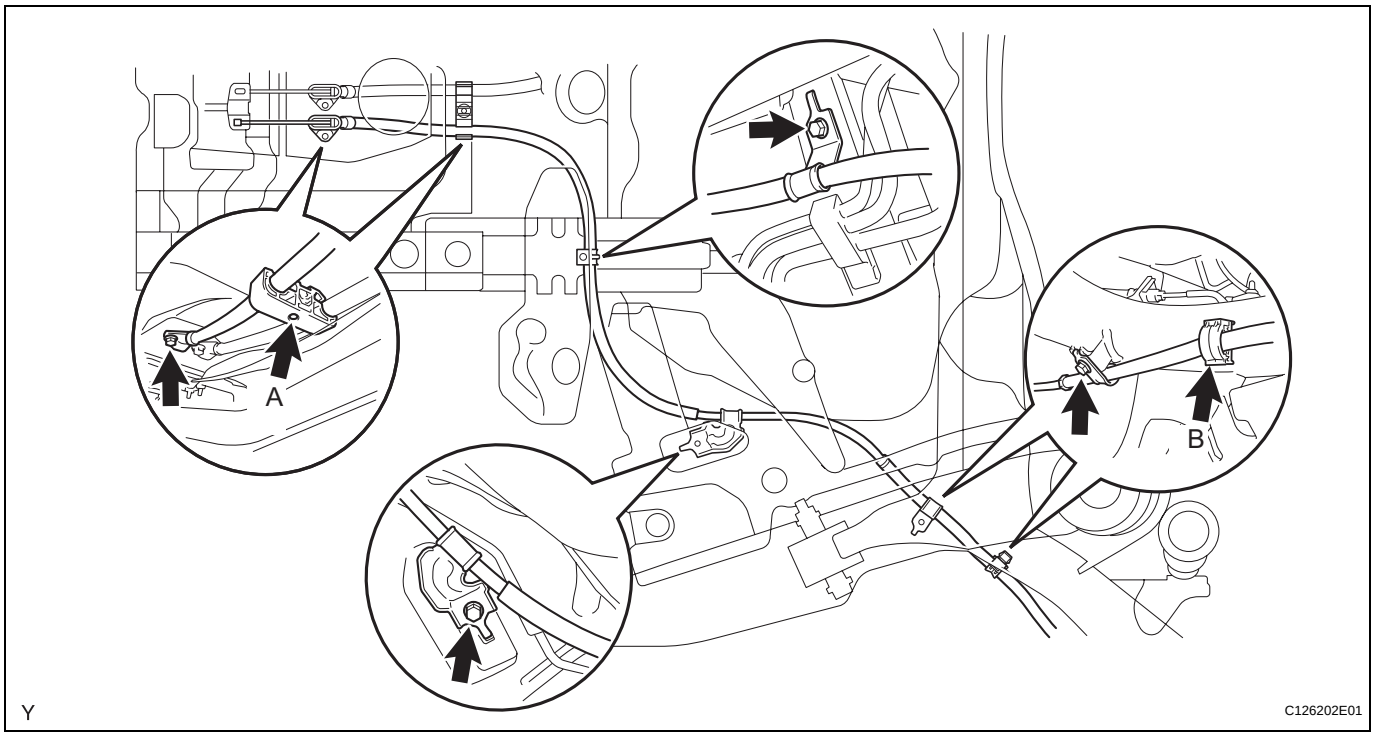

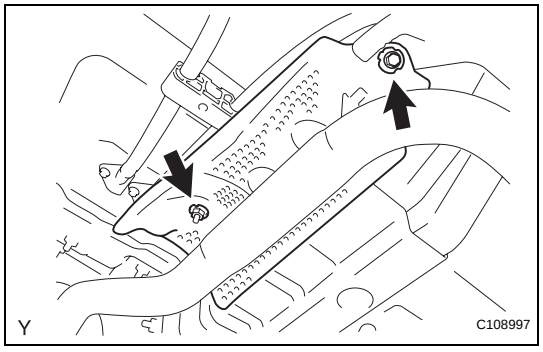

2. **INSTALL FRONT NO. 4 FLOOR HEAT INSULATOR**
(a) Install the heat insulator with the 2 nuts.
Torque: 5.5 N*m (56 kgf*cm, 49 in.*lbf)
3. **INSTALL REAR BRAKE SHOE KIT (See page BR-64)**
4. **CHECK REAR DRUM BRAKE INSTALLATION (See page BR-66)**
5. **INSTALL REAR BRAKE DRUM SUB-ASSEMBLY**
6. **ADJUST REAR DRUM BRAKE SHOE CLEARANCE (See page BR-67)**
7. **INSTALL REAR WHEEL**
Torque: 103 N*m (1,050 kgf*cm, 76 ft.*lbf)
8. **INSPECT PARKING BRAKE LEVER TRAVEL (See page PB-1)**
9. **ADJUST PARKING BRAKE LEVER TRAVEL (See page PB-2)**
10. **INSTALL REAR CONSOLE BOX ASSEMBLY (See page PB-10)**
11. **INSTALL CONSOLE BOX CARPET (See page PB-11)**
12. **INSTALL REAR CONSOLE BOX COVER (for Hatchback) (See page PB-11)**

13. **INSTALL REAR UPPER CONSOLE PANEL SUB-ASSEMBLY (for Sedan) (See page PB-11)**
14. **INSTALL SHIFTING HOLE COVER SUB-ASSEMBLY (for Hatchback Manual Transaxle) (See page PB-12)**
15. **INSTALL UPPER CONSOLE PANEL SUB-ASSEMBLY (for Sedan) (See page PB-12)**
16. **INSTALL SHIFT LEVER KNOB SUB-ASSEMBLY (for Manual Transaxle)**
17. **INSTALL CENTER LOWER INSTRUMENT PANEL FINISH PANEL (for Sedan) (See page PB-12)**

PARKING BRAKE SWITCH

COMPONENTS

for Hatchback:

for Manual Transaxle:

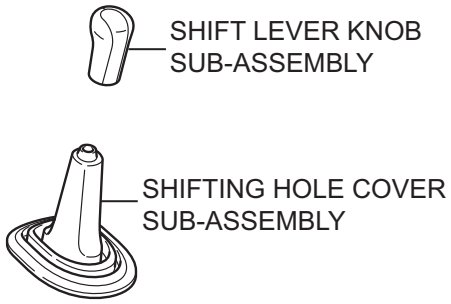

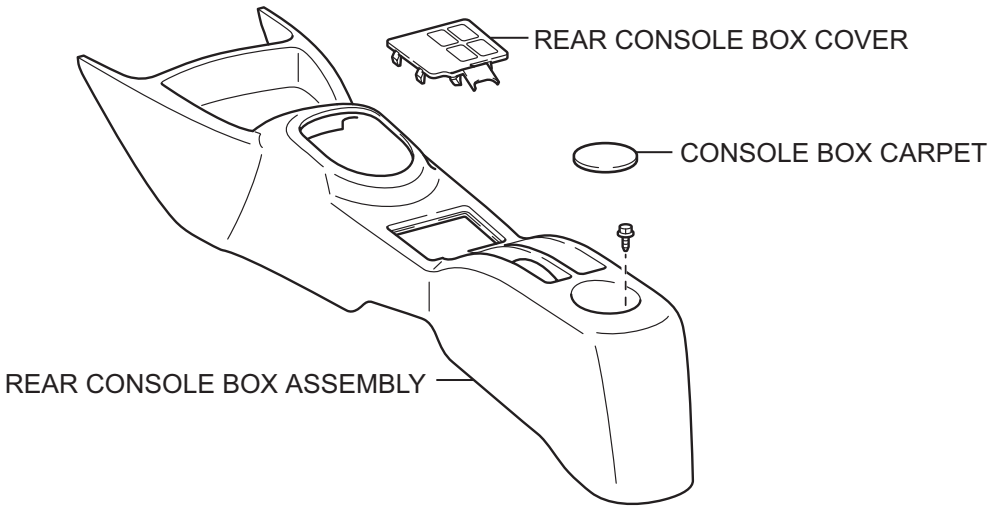

T

C133142E01

PB

for Sedan:

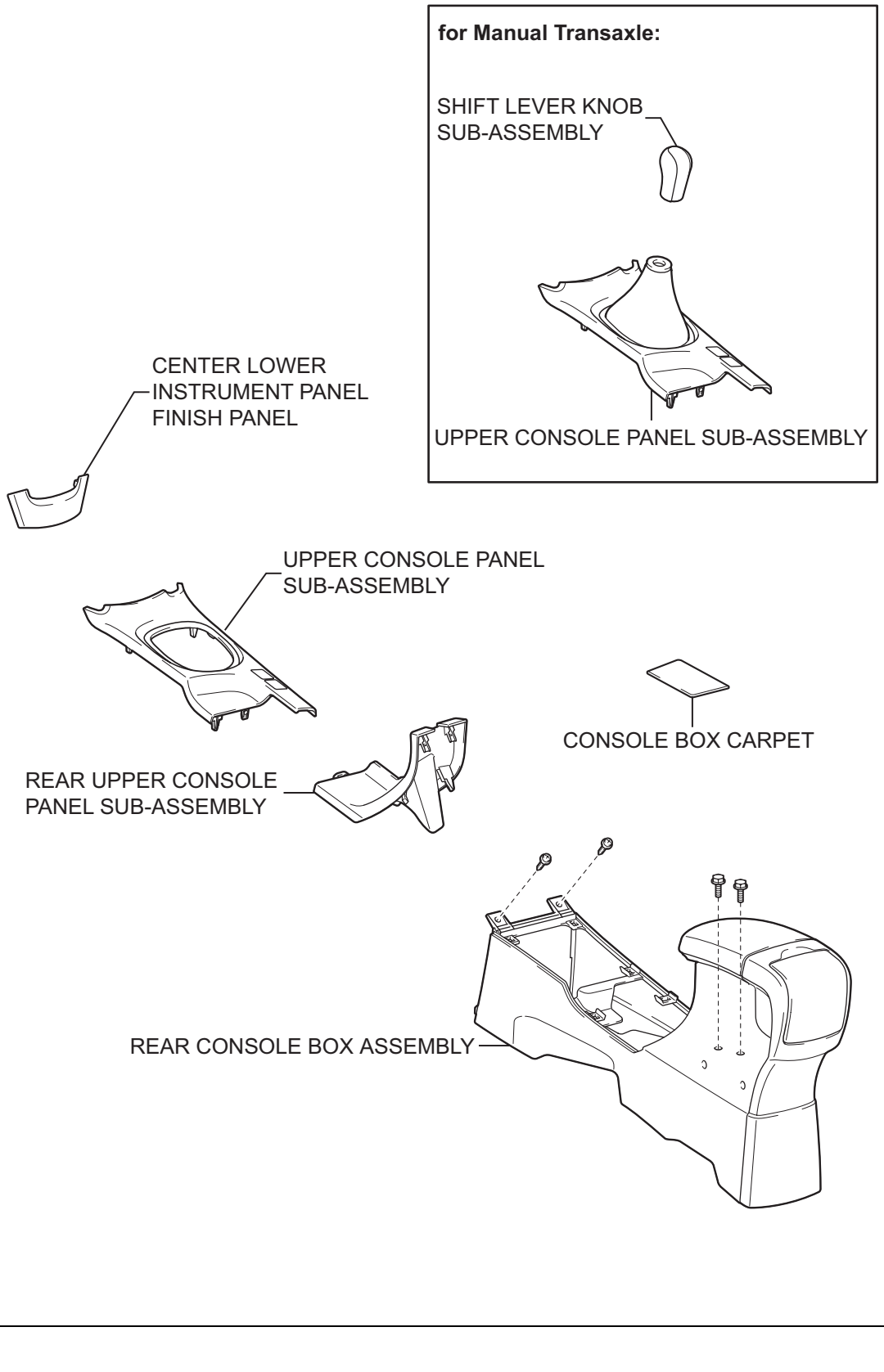

PB

P

B132385E02

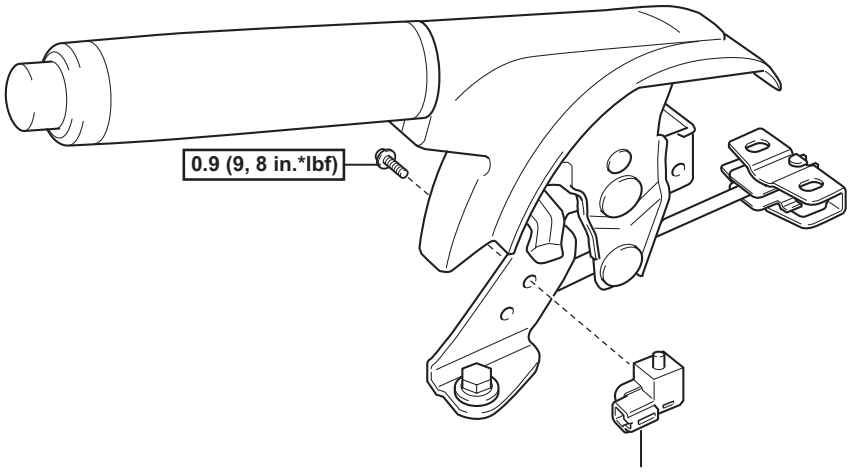

N*m (kgf*cm, ft*lbf) :Specified torque

Y

C110336E01

REMOVAL

1. **DISCONNECT CABLE FROM NEGATIVE BATTERY TERMINAL**
2. **REMOVE CENTER LOWER INSTRUMENT PANEL FINISH PANEL (for Sedan) (See page PB-6)**
3. **REMOVE SHIFT LEVER KNOB SUB-ASSEMBLY (for Manual Transaxle)**
4. **REMOVE SHIFTING HOLE COVER SUB-ASSEMBLY (for Hatchback Manual Transaxle) (See page PB-6)**
5. **REMOVE UPPER CONSOLE PANEL SUB-ASSEMBLY (for Sedan) (See page PB-6)**
6. **REMOVE REAR CONSOLE BOX COVER (for Hatchback) (See page PB-6)**
7. **REMOVE REAR UPPER CONSOLE PANEL SUB-ASSEMBLY (for Sedan) (See page PB-7)**
8. **REMOVE CONSOLE BOX CARPET (See page PB-7)**
9. **REMOVE REAR CONSOLE BOX ASSEMBLY (See page PB-8)**
10. **REMOVE PARKING BRAKE SWITCH**
    (a) Disconnect the parking brake switch connector.
    (b) Remove the screw and remove the parking brake switch.

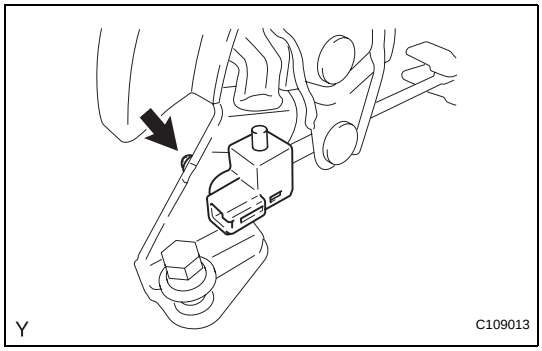

INSPECTION

1. **INSPECT PARKING BRAKE SWITCH**
   (a) Check the resistance.
      (1) Using an ohmmeter, measure the resistance between the terminals.

Standard resistance

Tester Connection	Switch Condition	Specified Condition
1 - Ground	Released	Below 1 Ω
1 - Ground	Pushed in	10 kΩ or higher

If the result is not as specified, replace the parking brake switch.

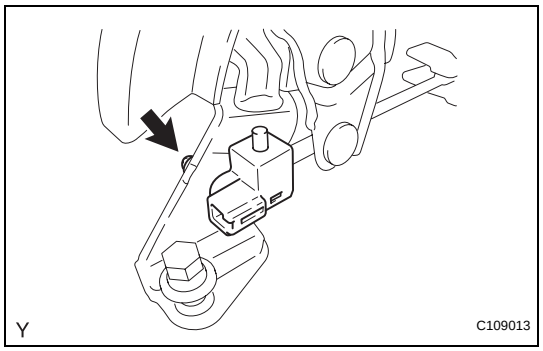

INSTALLATION

1. **INSTALL PARKING BRAKE SWITCH**
   (a) Install the parking brake switch with the screw.
   Torque: 0.9 N*m (9 kgf*cm, 8 in.*lbf)
   (b) Connect the parking brake switch connector.
2. **INSTALL REAR CONSOLE BOX ASSEMBLY (See page PB-10)**
3. **INSTALL CONSOLE BOX CARPET (See page PB-11)**
4. **INSTALL REAR CONSOLE BOX COVER (for Hatchback) (See page PB-11)**
5. **INSTALL REAR UPPER CONSOLE PANEL SUB-ASSEMBLY (for Sedan) (See page PB-11)**
6. **INSTALL SHIFTING HOLE COVER SUB-ASSEMBLY (for Hatchback Manual Transaxle) (See page PB-12)**
7. **INSTALL UPPER CONSOLE PANEL SUB-ASSEMBLY (for Sedan) (See page PB-12)**
8. **INSTALL SHIFT LEVER KNOB SUB-ASSEMBLY (for Manual Transaxle)**
9. **INSTALL CENTER LOWER INSTRUMENT PANEL FINISH PANEL (for Sedan) (See page PB-12)**
10. **CONNECT CABLE TO NEGATIVE BATTERY TERMINAL**
    Torque: 5.4 N*m (55 kgf*cm, 48 in.*lbf)

STEERING SYSTEM

PRECAUTION

1. HANDLING PRECAUTIONS FOR SRS AIRBAG SYSTEM

(See page RS-1)

2. HANDLING PRECAUTIONS FOR STEERING COLUMN

(a) When handling the steering column assembly.

(1) Avoid any impact to the steering column assembly, especially to the motor or the torque sensor. Replace with a new one if dropped or subjected to any severe impacts.

(2) Do not pull the wire harness when moving the steering column assembly.

(3) When the steering column assembly or other steering-related parts have been removed and either reinstalled or replaced, perform steering center point adjustment (zero point calibration).

(b) When disconnecting or reconnecting the connectors.

(1) When disconnecting connectors related to the electronic motor power steering system, turn the ignition switch to ON (the engine is stopped), center the steering wheel, turn the ignition switch to OFF, and then disconnect the connectors.

(2) When reconnecting connectors related to the electronic motor power steering system, make sure that the ignition switch is turned to OFF. Center the steering wheel and then turn the ignition switch to ON (the engine is stopped).

NOTICE:

Do not turn the ignition switch to ON when the steering wheel is not centered

(3) If the above operations are not carried out correctly, the steering center point (zero point) will deviate, causing a difference in steering effort between right and left turns. If there is a difference in the steering effort between right and left turns, perform the steering center point adjustment (zero point calibration).

PROBLEM SYMPTOMS TABLE

STEERING

Symptom	Suspected area	See page
Hard steering	Front tires (Improperly inflated or unevenly worn)	TW-1
	Front wheel alignment (Incorrect)	SP-2
	Front suspension (lower ball joint)	SP-23
	Steering intermediate shaft (for Sedan)	SR-12
	Steering intermediate shaft (for Hatchback)	SR-30
	Steering column assembly (for Sedan)	SR-12
	Steering column assembly (for Hatchback)	SR-30
	Steering gear assembly (for Sedan)	PS-63
	Steering gear assembly (for Hatchback)	PS-73
	Power steering ECU (for Sedan)	PS-83
	Power steering ECU (for Hatchback)	PS-89
Poor return	Front tires (Improperly inflated or unevenly worn)	TW-1
	Front wheel alignment (Incorrect)	SP-2
	Steering column assembly (for Sedan)	SR-12
	Steering column assembly (for Hatchback)	SR-30
	Steering gear assembly (for Sedan)	PS-63
	Steering gear assembly (for Hatchback)	PS-73
	Power steering ECU (for Sedan)	PS-83
	Power steering ECU (for Hatchback)	PS-89
No free play or excessive play	Steering intermediate shaft (for Sedan)	SR-12
	Steering intermediate shaft (for Hatchback)	SR-30
	Steering gear assembly (for Sedan)	PS-63
	Steering gear assembly (for Hatchback)	PS-73
Knocking (or clunking) sound occurs when steering wheel turned while power steering in operation	Steering intermediate shaft (for Sedan)	SR-12
	Steering intermediate shaft (for Hatchback)	SR-30
	Front suspension (lower ball joint)	SP-23
	Front axle hub (Hub bearing)	AH-6
	Steering gear assembly (for Sedan)	PS-63
	Steering gear assembly (for Hatchback)	PS-73
Friction sound occurs when steering wheel turned during low speed driving	Power steering motor (for Sedan)	SR-12
	Power steering motor (for Hatchback)	SR-30
	Steering column assembly (for Sedan)	SR-12
	Steering column assembly (for Hatchback)	SR-30
High-pitched sound (squealing sound) occurs when steering wheel turned slowly with vehicle stopped	Power steering motor (for Sedan)	SR-12
	Power steering motor (for Hatchback)	SR-30
Steering wheel vibrates and noise occurs when steering wheel turned while vehicle stopped	Power steering motor (for Sedan)	SR-12
	Power steering motor (for Hatchback)	SR-30
	Steering column assembly (for Sedan)	SR-12
	Steering column assembly (for Hatchback)	SR-30

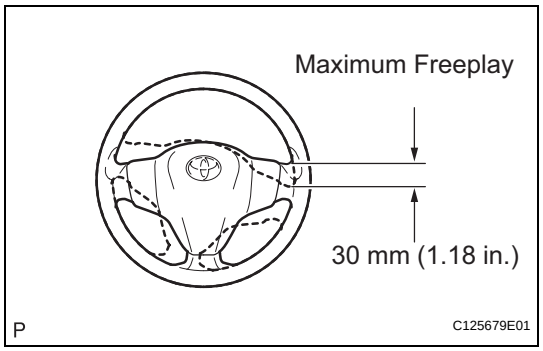

ON-VEHICLE INSPECTION

1. CHECK STEERING WHEEL FREE PLAY

(a) Stop the vehicle and align the tires facing straight ahead.

(b) Turn the steering wheel gently right and left, and check the steering wheel free play.

Maximum Free Play:
30 mm (1.18 in.)

(c) If the freeplay exceeds the maximum, replace the steering intermediate shaft sub-assembly or steering gear.

REPAIR

1. CORRECT STEERING OFF CENTER

(a) Check whether the steering wheel is off-center.

(1) Apply masking tape to the top center of the steering wheel and the steering column upper cover.

(2) Drive the vehicle in a straight line for 100 meters at a constant speed of 35 mph (56 km/h), holding the steering wheel to maintain the course.

(3) Draw a line on the masking tape, as shown in the illustration.

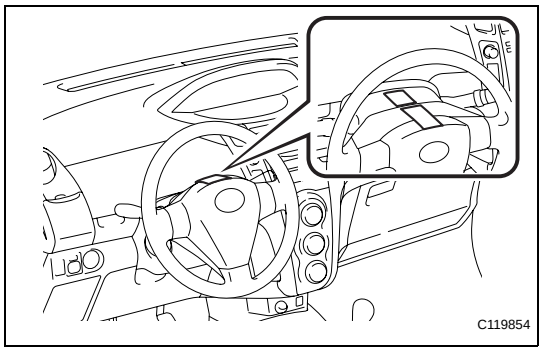

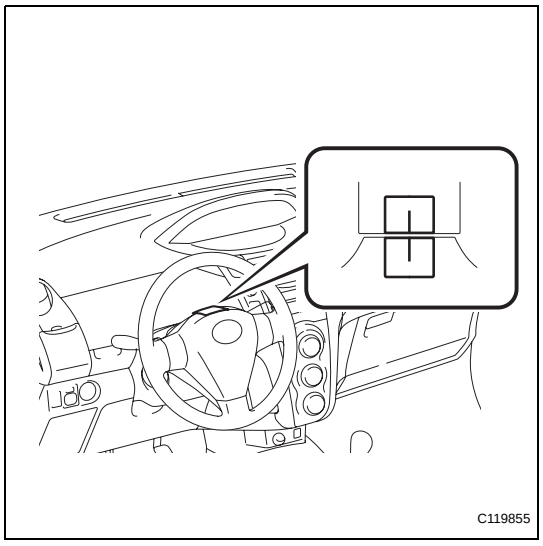

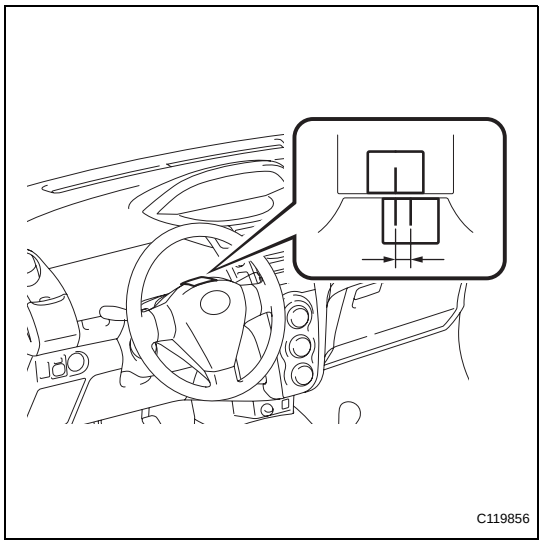

(4) Turn the steering wheel to the straight position.
HINT:
Look at the upper surface of the steering wheel, the steering spokes and the SRS airbag line to determine the straight position.
(5) Draw another line on the masking tape on the steering wheel, as shown in the illustration.
(6) Measure the distance between the 2 lines on the masking tape on the steering wheel.
(7) Convert the measured distance to the steering angle.
HINT:
- Measured distance of 1 mm (0.04 in.) = Approximately 1 degree steering angle.
- Make a note of the steering angle.

(b) Adjust the steering angle

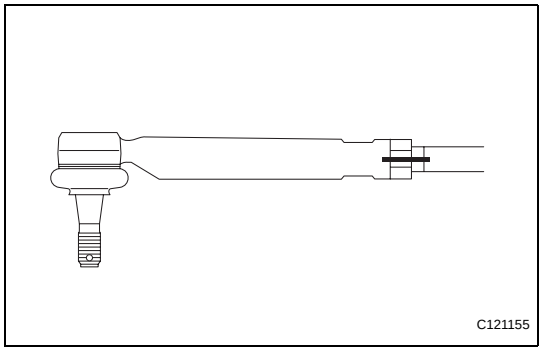

(c) For steps (1) and (2) below, carry out RH and LH procedures separately.
(1) Draw a line on the tie rod and rack end where it can easily be seen.
(2) Using a paper gauge, measure the distance between the tie rod end and the rack end screw.

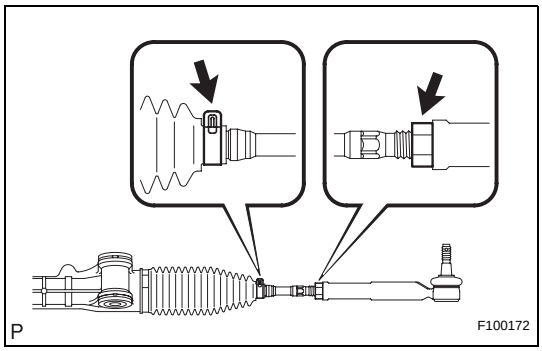

(3) Remove the RH and LH boot clips from the rack boots.
(4) Loosen the RH and LH lock nuts.
(5) Turn the RH and LH rack ends by the same amount (but in opposite directions) in accordance with the steering angle.
HINT:
- Electronic Power Steering:
  1 turn (360°) of rack end (1.25 mm (0.049 in.) horizontal movement) - 10.5° of steering angle.

(6) Tighten the RH and LH lock nuts.
Torque: 74 N*m (755 kgf*cm, 55 ft.*lbf)
NOTICE:
Make sure that the difference in length between the RH and LH tie rod ends and rack end screws is less than 1.5 mm (0.059 in.).
(7) Install the RH and LH boot clips.

STEERING COLUMN ASSEMBLY (for Sedan)

COMPONENTS

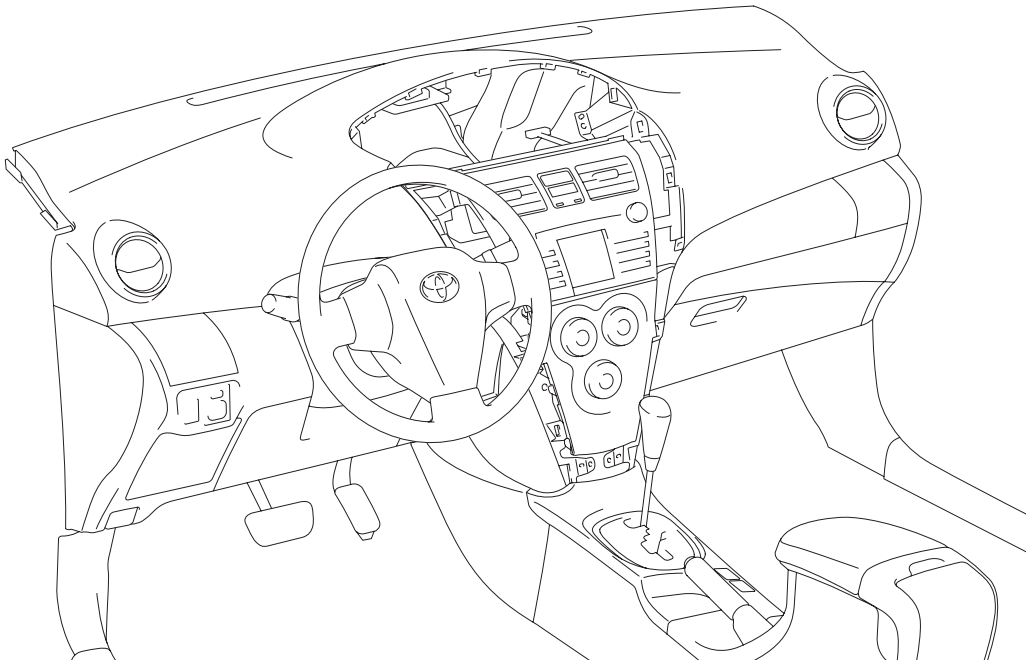

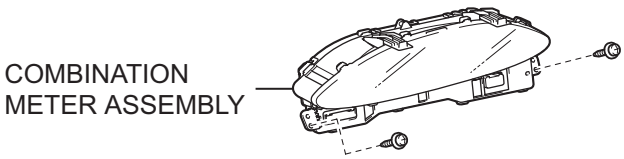









P

E116817E01

SR

w/ Curtain Shield Airbag:

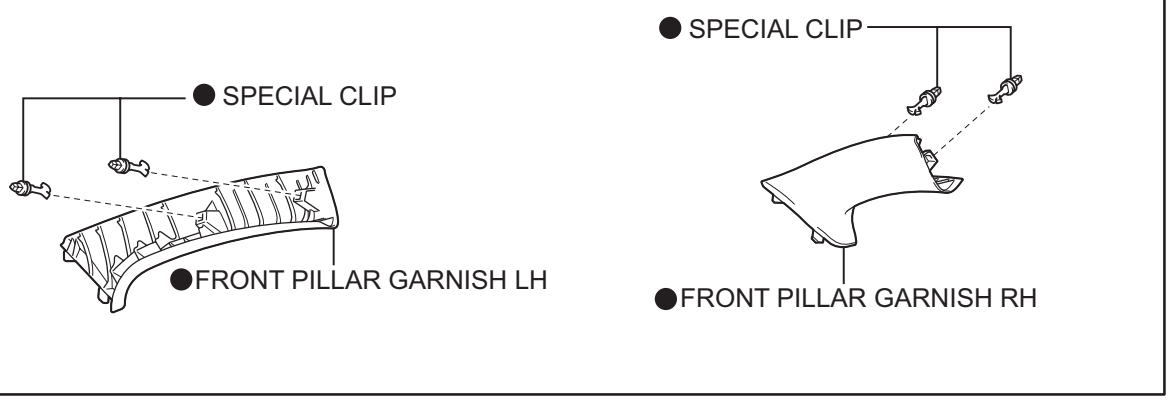

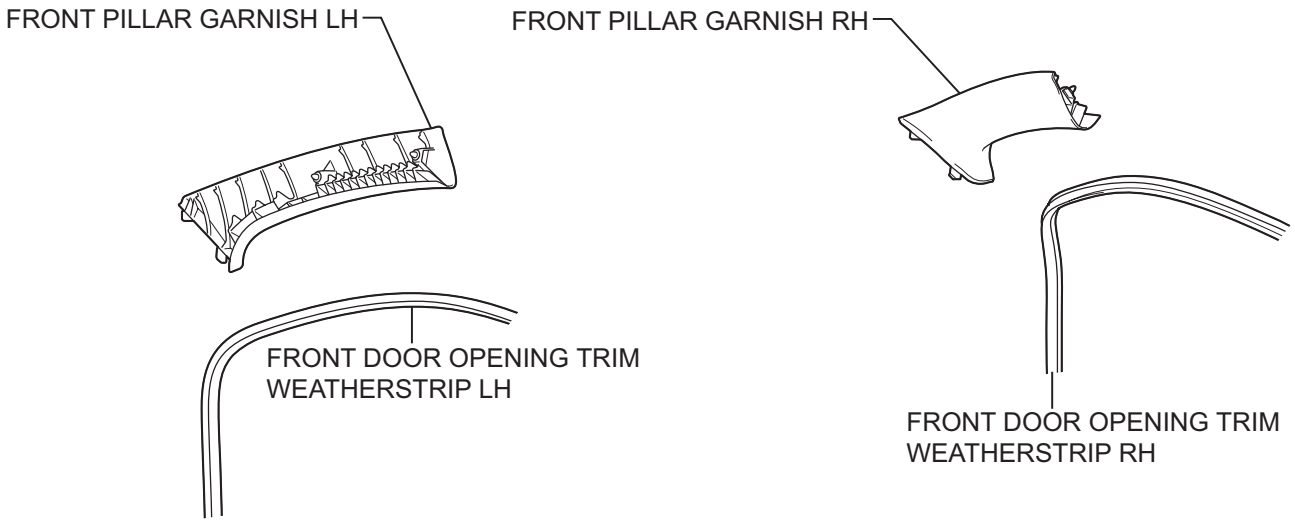

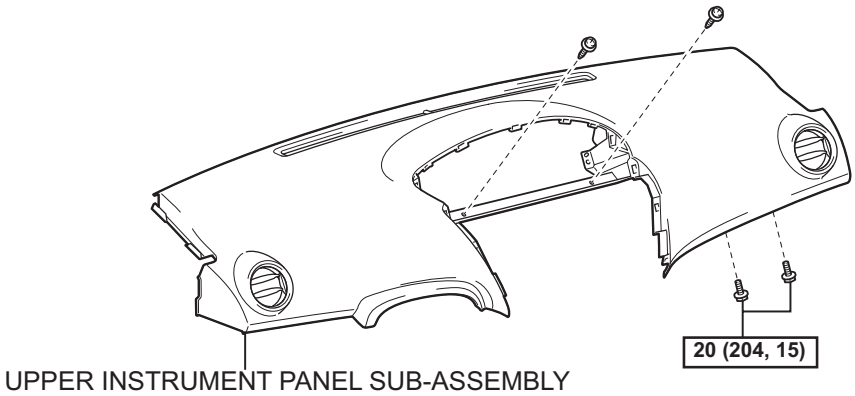

SR

N*m (kgf*cm, ft*lbf) : Specified torque ● Non-reusable part

P

C139115E02

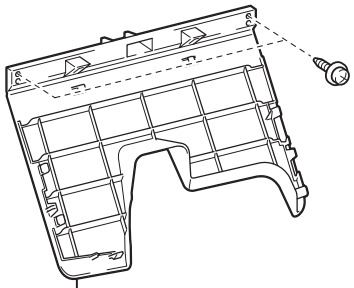

INSTRUMENT LOWER PANEL FINISH PANEL SUB-ASSEMBLY

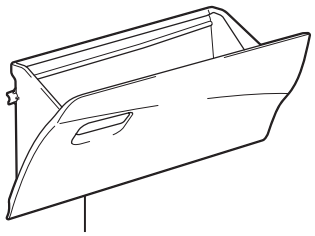

GLOVE COMPARTMENT DOOR ASSEMBLY

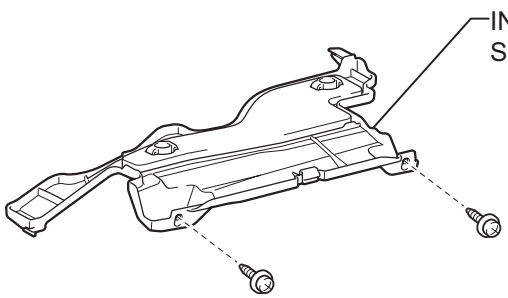

P

C139116E01

SR

for Manual Transaxle:

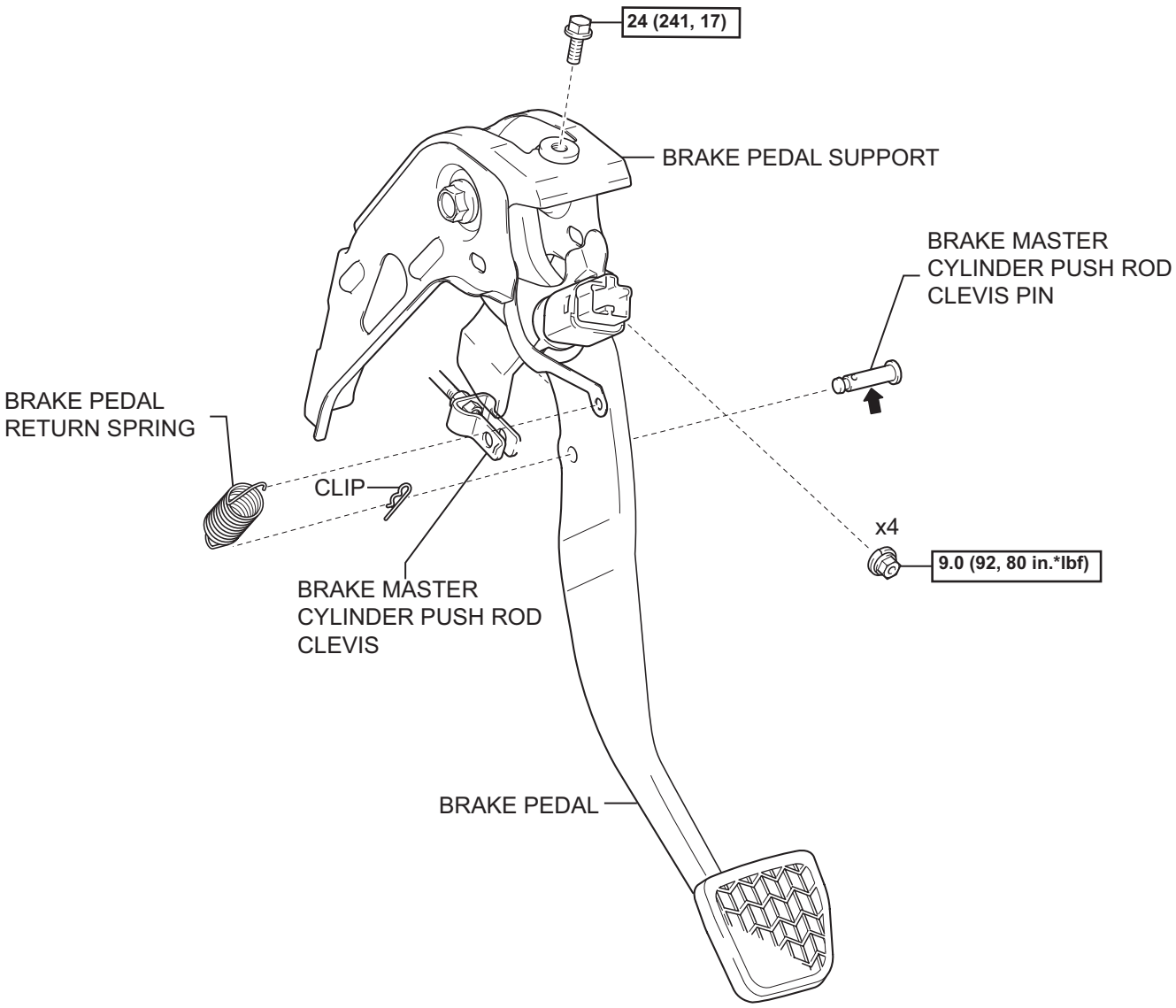

SR

N*m (kgf*cm, ft.*lbf) : Specified torque ⬅ Lithium Soap base glycol grease

P

C118552E01

for Automtic Transaxle:

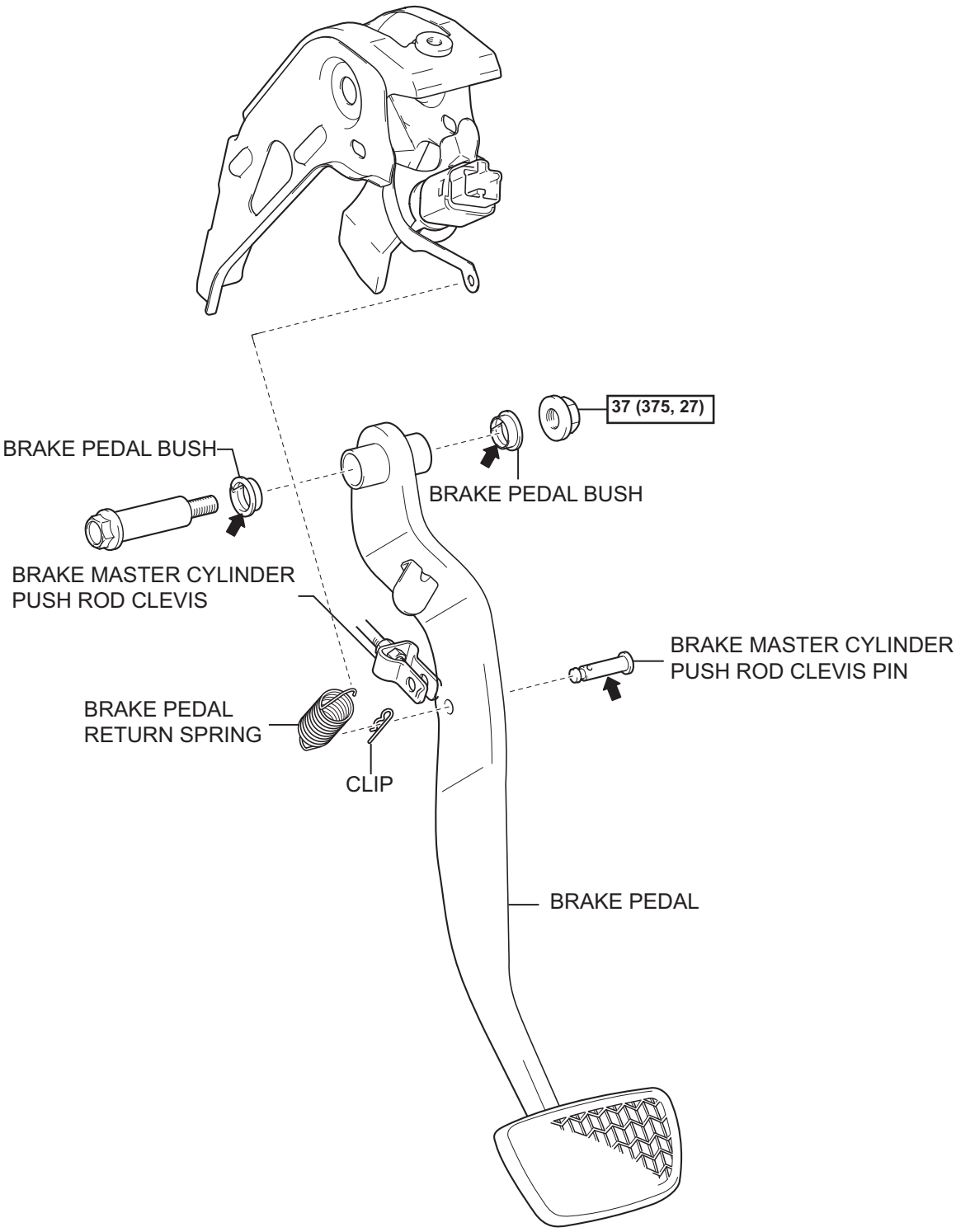

N*m (kgf*cm, ft.*lbf) : Specified torque ⬅ Lithium Soap base glycol grease

P

C118551E01

SR

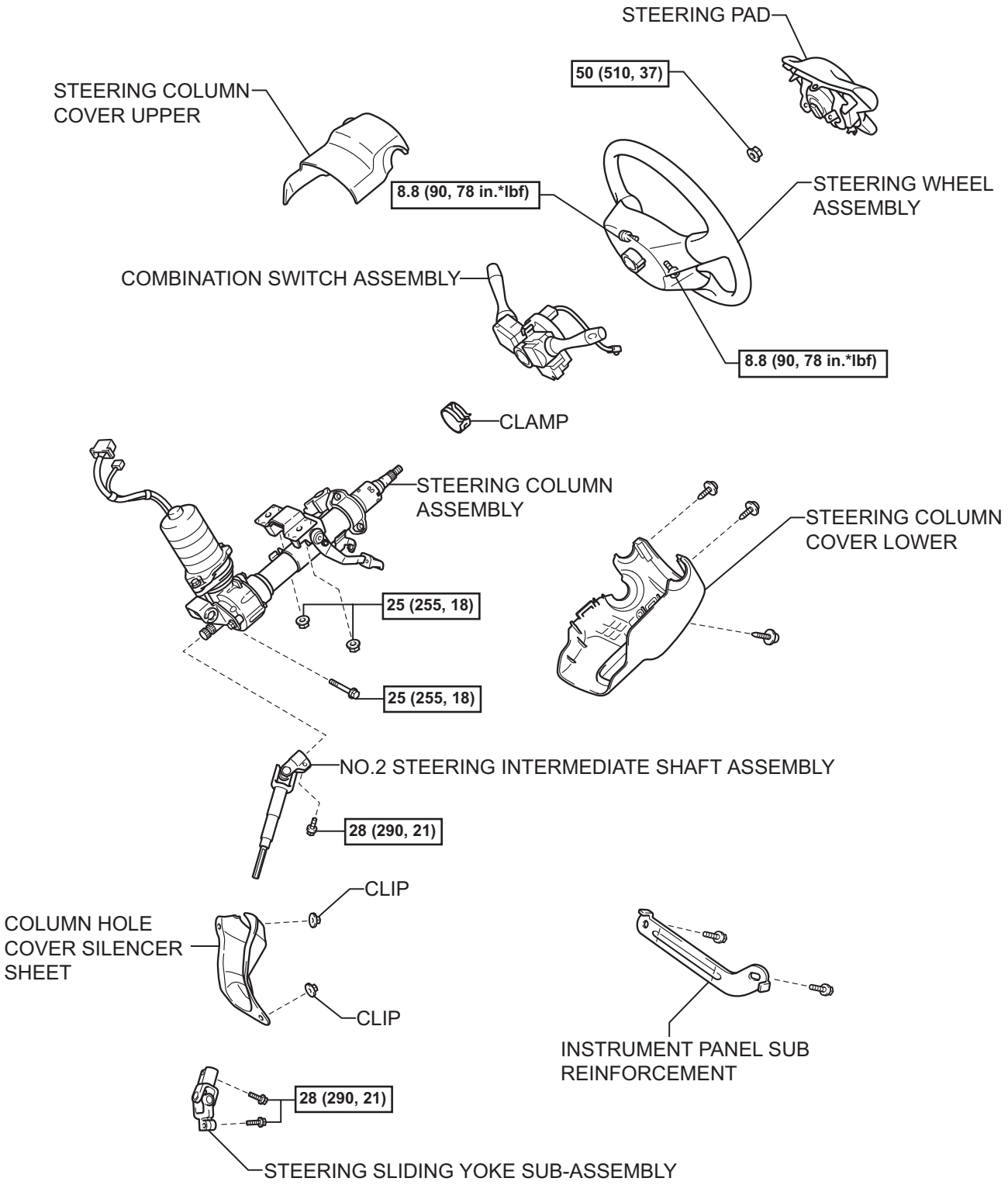

N*m (kgf*cm, ft.*lbf) : Specified torque

N

C139113E01

SR

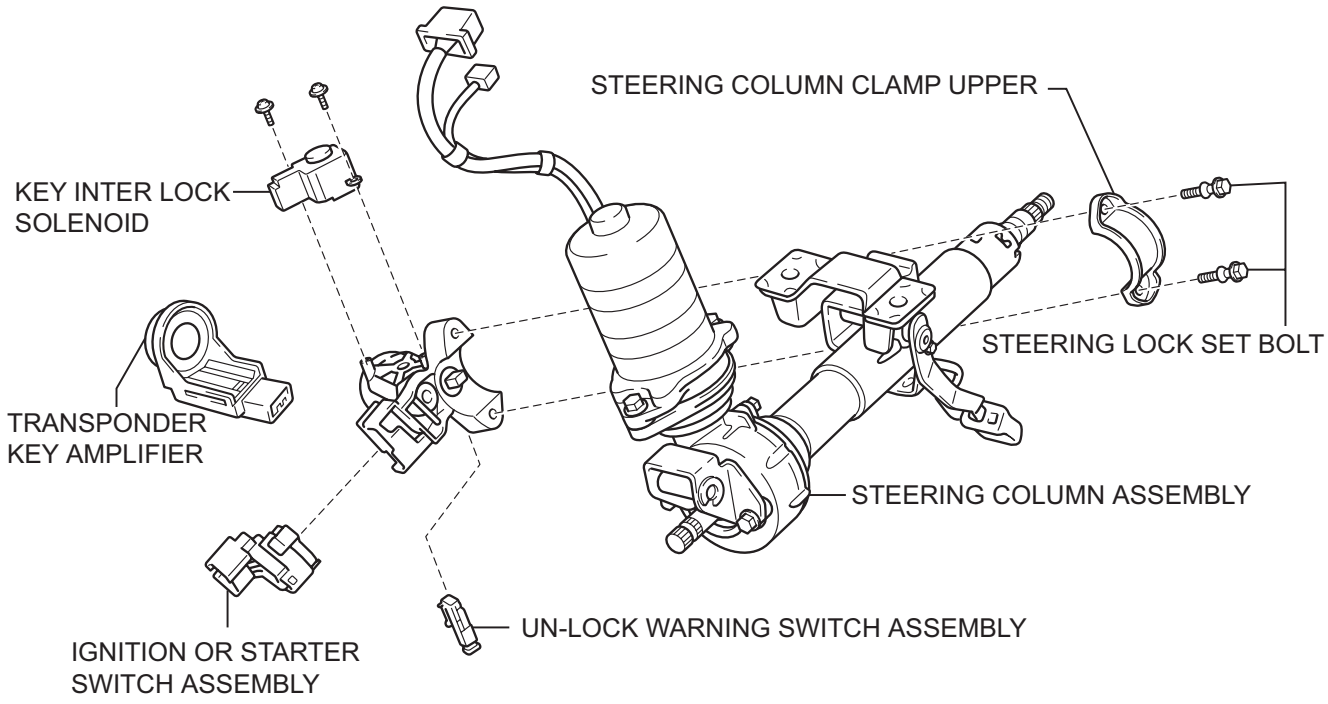

N

C117187E06

SR

REMOVAL

CAUTION:
Some of these service operations affect the SRS airbag system. Read the precautionary notices concerning the SRS airbag system before servicing (See page RS-1).

1. **DISCONNECT CABLE FROM NEGATIVE BATTERY TERMINAL**
2. **PLACE FRONT WHEELS FACING STRAIGHT AHEAD**
3. **REMOVE STEERING PAD (See page RS-309)**
4. **REMOVE STEERING WHEEL ASSEMBLY**
   (a) Remove the nut and place matchmarks on the steering wheel assembly and steering column assembly.

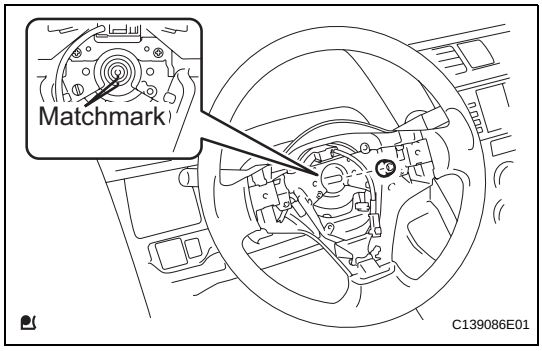

   (b) Using SST, remove the steering wheel assembly.
   NOTICE:
   Apply a small amount of grease to the threads and tip of the SST center bolt before using.

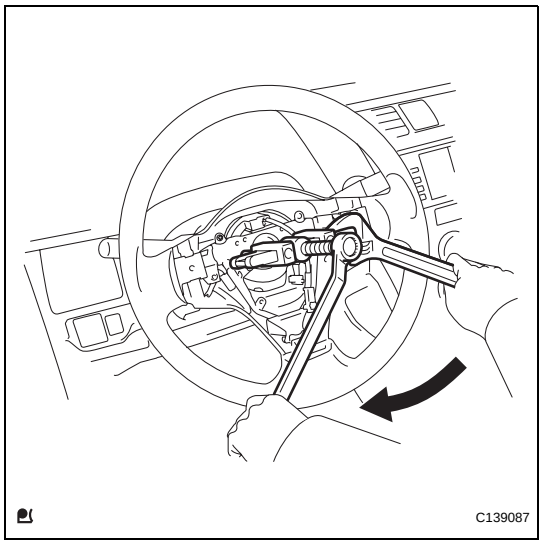

5. **REMOVE STEERING COLUMN COVER**
   (a) Remove the 3 screws, disengage the 2 claws, release the tilt lever and remove the steering column lower cover.

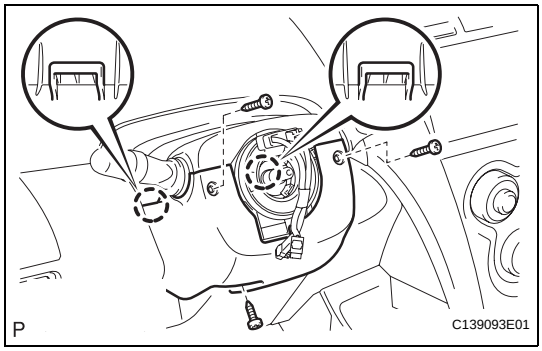

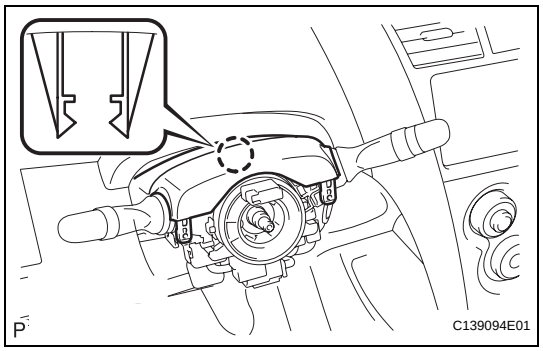

(b) Disengage the claw and remove the steering column upper cover.

6. **REMOVE COMBINATION SWITCH ASSEMBLY**
   (a) Disconnect all connectors from the turn signal switch with spiral cable.

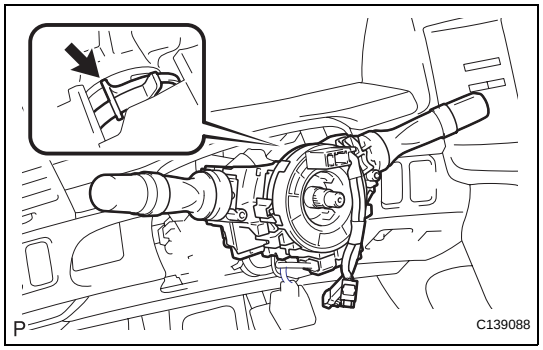

(b) Disengage the clamp indicated by the arrow in the illustration and remove the combination switch assembly from the steering column assembly.

7. **REMOVE INSTRUMENT PANEL FINISH PANEL LOWER CENTER (See page ME-138)**
8. **REMOVE INSTRUMENT PANEL FINISH PANEL END LH (See page ME-138)**
9. **REMOVE INSTRUMENT PANEL FINISH PANEL END RH (See page ME-138)**
10. **REMOVE INSTRUMENT CLUSTER FINISH PANEL (See page ME-139)**
11. **REMOVE COMBINATION METER ASSEMBLY (See page ME-139)**
12. **SEPARATE FRONT DOOR OPENING TRIM WEATHERSTRIP RH (See page IP-5)**
13. **SEPARATE FRONT DOOR OPENING TRIM WEATHERSTRIP LH (See page IP-5)**
14. **REMOVE FRONT PILLAR GARNISH RH (See page IR-18)**
15. **REMOVE FRONT PILLAR GARNISH LH (See page IR-19)**
16. **REMOVE GLOVE COMPARTMENT DOOR ASSEMBLY (See page IP-6)**
17. **REMOVE UPPER INSTRUMENT PANEL SUB-ASSEMBLY (See page IP-6)**

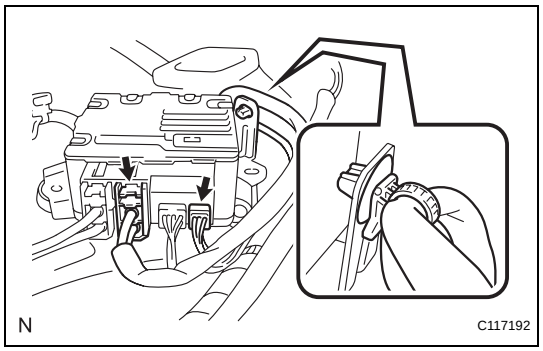

18. **DISCONNECT POWER STEERING ECU**
    (a) Detach the power steering motor harness and torque sensor wire harness clamps from the power steering ECU side.
    (b) Disconnect the 2 steering column assembly connectors from the power steering ECU.
19. **REMOVE INSTRUMENT PANEL UNDER COVER SUB-ASSEMBLY LH (See page IR-14)**
20. **REMOVE INSTRUMENT LOWER PANEL FINISH PANEL SUB-ASSEMBLY (See page IP-45)**

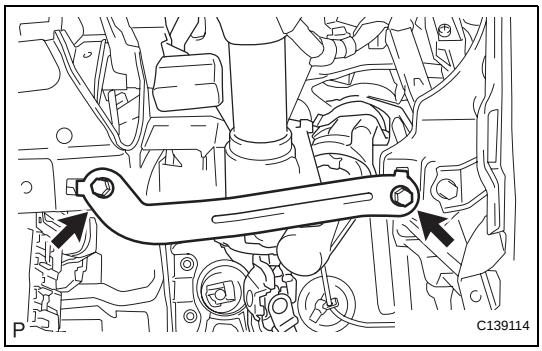

21. REMOVE INSTRUMENT PANEL SUB REINFORCEMENT

(a) Remove the 2 bolts and remove the reinforcement instrument panel sub.

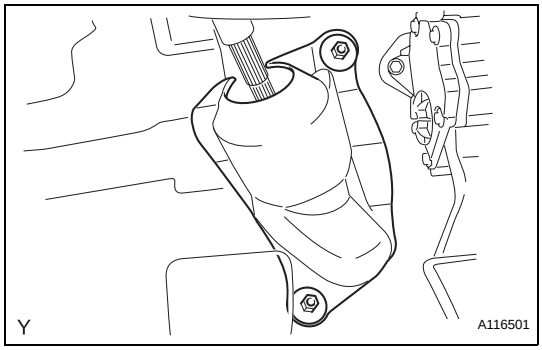

22. REMOVE COLUMN HOLE COVER SILENCER SHEET

(a) Pull back the floor carpet, remove the 2 clips and remove the column hole cover silencer sheet.

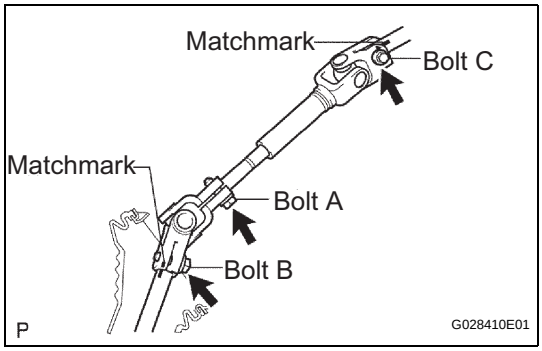

23. REMOVE NO.2 STEERING INTERMEDIATE SHAFT ASSEMBLY

(a) Loosen bolt A.
(b) Place matchmarks on the steering intermediate assembly and steering gear assembly.
(c) Remove bolt B and detach the steering intermediate assembly from the steering gear assembly.
(d) Place matchmarks on the steering intermediate assembly and steering column assembly.
(e) Remove bolt C and detach the steering intermediate shaft assembly from the steering column assembly.

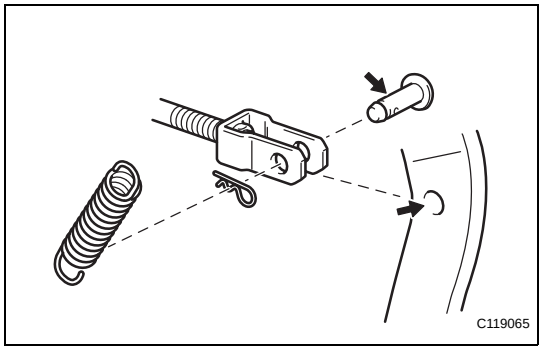

24. REMOVE BRAKE PEDAL PAD (for Automatic Transaxle)

(a) Using needle-nose pliers, remove the brake pedal return spring.
(b) Remove the clip from the brake master cylinder push rod clevis pin.
(c) Remove the brake master cylinder push rod clevis pin and detach the push rod clevis from the brake pedal.
(d) Remove the bolt, nut and 2 brake pedal bushes, and remove the brake pedal assembly.

25. REMOVE BRAKE MASTER CYLINDER PUSH ROD CLEVIS (for Manual Transaxle) (See page BR-20)

26. REMOVE BRAKE PEDAL SUPPORT (for Manual Transaxle) (See page BR-21)

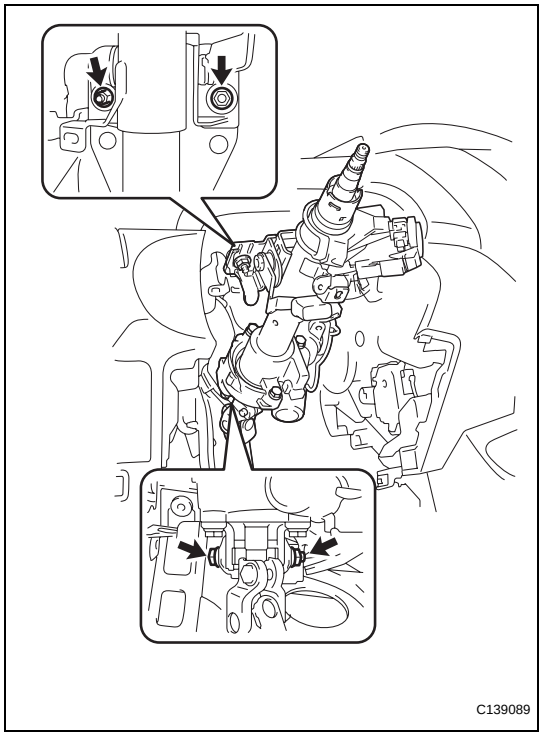

27. REMOVE STEERING COLUMN ASSEMBLY

(a) Disconnect all connectors and detach all wire harness clamps from the steering column assembly.

(b) Remove the bolt and 2 nuts and remove the steering column assembly from the instrument panel reinforcement assembly.

DISASSEMBLY

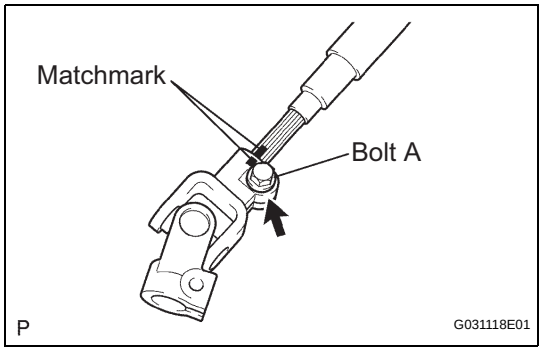

1. REMOVE STEERING SLIDING YOKE SUB-ASSEMBLY

(a) Place matchmarks on steering intermediate shaft assembly No. 2 and the steering sliding yoke.

(b) Remove bolt A and remove the steering sliding yoke from steering intermediate shaft No. 2.

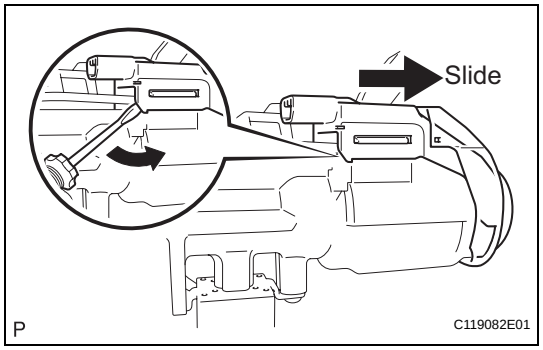

2. REMOVE TRANSPONDER KEY AMPLIFIER

(a) Disengage the 2 claws and slide the transponder key amplifier in the direction shown in the illustration, to detach it from the steering column upper with switch bracket assembly.

3. REMOVE STEERING COLUMN UPPER WITH SWITCH BRACKET ASSEMBLY

(a) Fix the steering column assembly in a vise between aluminum plates.

NOTICE:

Do not overtighten the vise.

(b) Using a drill, drill a hole in each of the 2 steering lock set bolts, to insert an screw extractor.

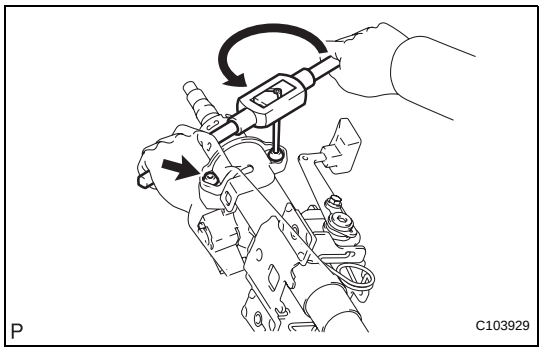

(c) Using the screw extractor, remove the 2 steering lock set bolts and remove the steering column upper with switch bracket assembly and steering column clamp upper.

4. REMOVE IGNITION SWITCH LOCK CYLINDER ASSEMBLY

(a) Turn the ignition switch to on (ACC).

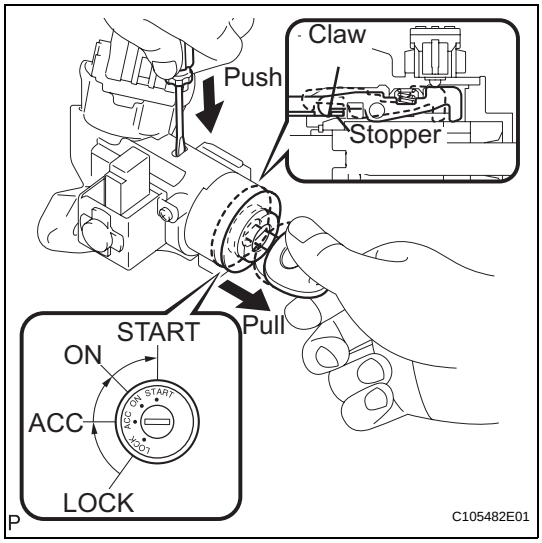

(b) Insert the tip of a screwdriver into the hole in the steering column bracket assembly upper, as shown in the illustration, and pull the ignition switch lock cylinder assembly out until its claw comes into contact with the stopper of the steering column bracket assembly upper.

NOTICE:

Pull the ignition switch lock cylinder assembly out until its claw comes into contact with the stopper of the steering column bracket assembly upper. Otherwise, the following procedure cannot be conducted properly.

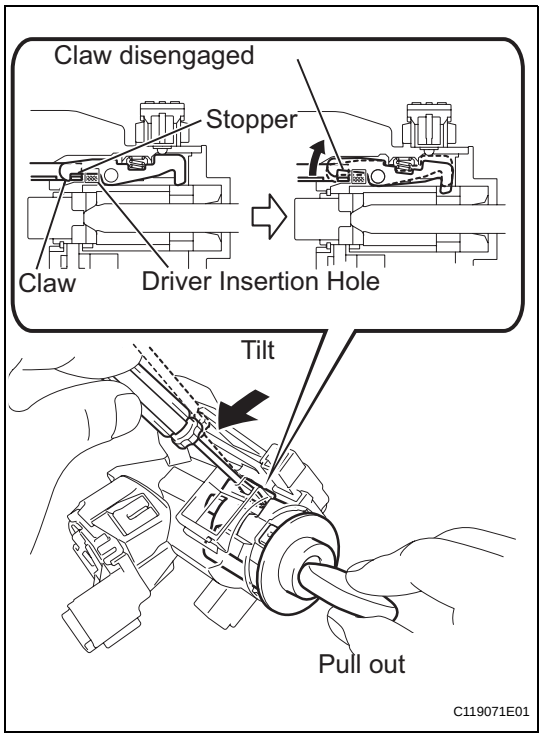

(c) Insert the tip of a screwdriver into the hole in the steering column bracket and tilt it downward, as shown in the illustration, to disengage the claw of the ignition switch lock cylinder. Then pull out the ignition switch lock cylinder.

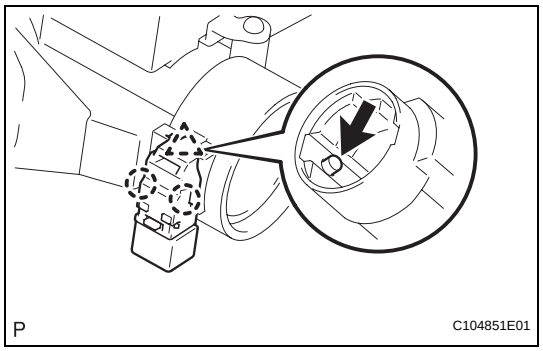

5. REMOVE UN-LOCK WARNING SWITCH ASSEMBLY

(a) Push up the unlock warning switch assembly center portion to disengage the 2 claws.
HINT:
Slide the unlock warning switch assembly, in the direction shown by the arrow in the illustration, to remove it.

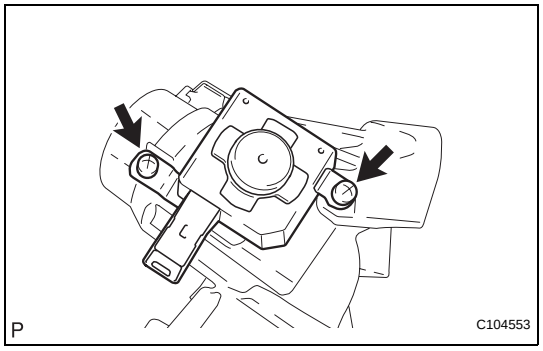

6. REMOVE KEY INTER LOCK SOLENOID

(a) for Automtic Transaxle:
(1) Remove the 2 screws and remove the key lock solenoid from the steering column bracket assembly upper.

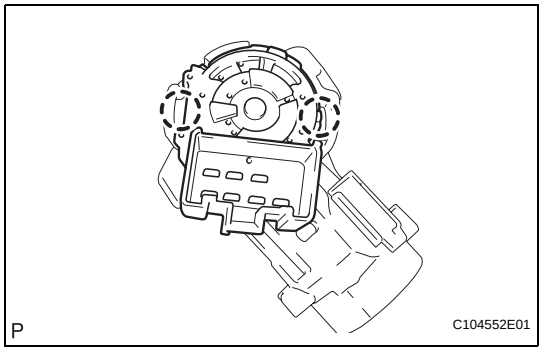

7. REMOVE IGNITION OR STARTER SWITCH ASSEMBLY

(a) Disengage the 2 claws and remove the ignition (starter) switch assembly from the steering column bracket assembly upper.

REASSEMBLY

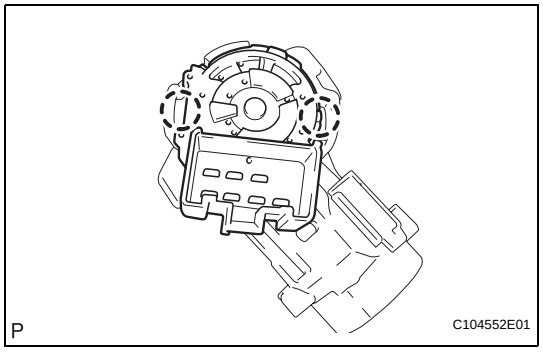

1. INSTALL IGNITION OR STARTER SWITCH ASSEMBLY

(a) Engage the 2 claws to install the ignition (starter) switch assembly onto the steering column bracket assembly upper.

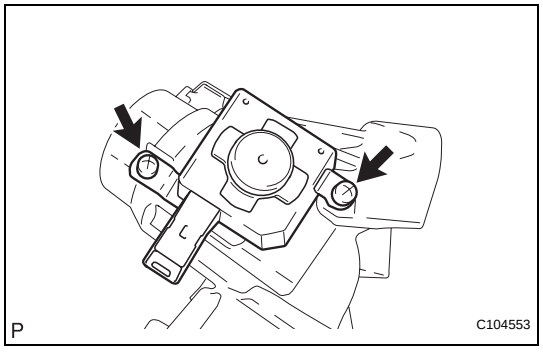

2. INSTALL KEY INTER LOCK SOLENOID

(a) for Automtic Transaxle:
(1) Install the key interlock solenoid onto the steering column bracket assembly upper with the 2 screws.

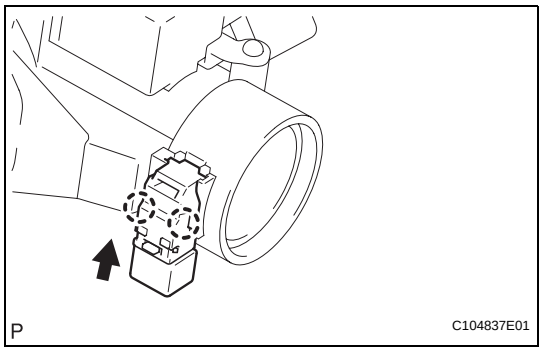

3. INSTALL UN-LOCK WARNING SWITCH ASSEMBLY

(a) Engage the 2 claws to install the un-lock warning switch assembly onto the steering column bracket assembly upper.
HINT:
Slide the unlock warning switch assembly, in the direction shown by the arrow in the illustration, to install it.

4. INSTALL IGNITION SWITCH LOCK CYLINDER ASSEMBLY

(a) Turn the ignition switch to on (ACC).

(b) Install the ignition switch lock cylinder assembly into the steering column bracket assembly upper.

(c) Make sure that the ignition switch lock cylinder assembly is securely fixed onto the ignition switch lock cylinder assembly.

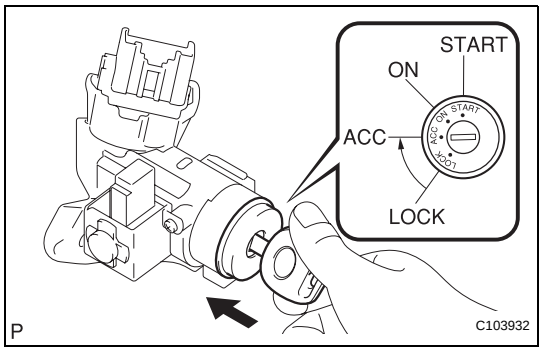

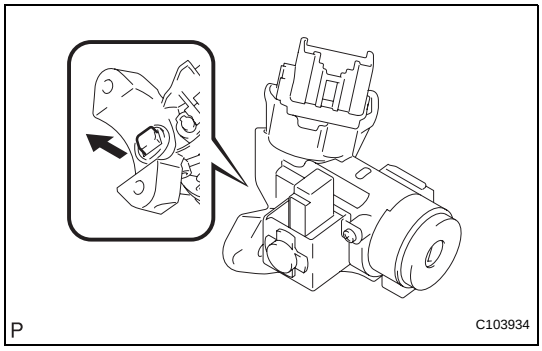

5. INSPECT STEERING LOCK OPERATION

(a) Remove the key and check that the steering lock function is activated.

(b) Insert the key, turn the ignition switch to on (ACC) and check that the steering lock function is inactivated.

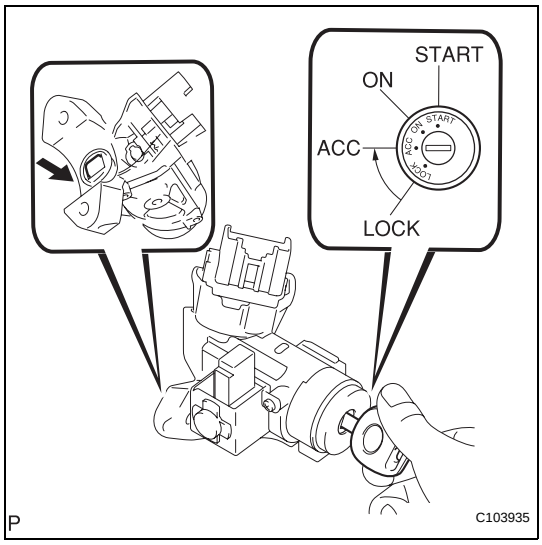

6. INSTALL STEERING COLUMN UPPER W/SWITCH BRACKET ASSEMBLY

(a) Fix the steering column assembly in a vise between aluminum plates.
NOTICE:
Do not overtighten the vise.

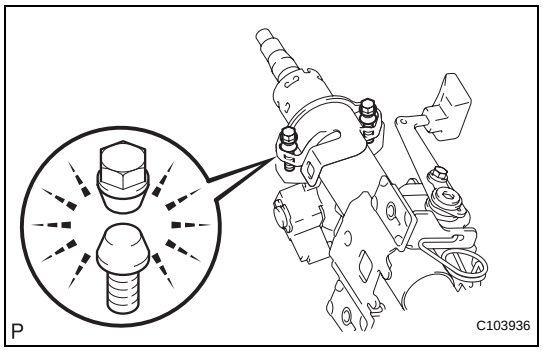

(b) Install the steering column upper with switch bracket assembly and steering column clamp upper with 2 new steering lock set bolts, and then tighten the bolts until their heads come off.

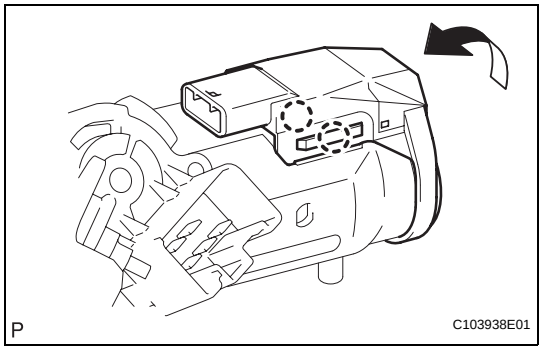

7. INSTALL TRANSPONDER KEY AMPLIFIER

(a) Engage the 2 claws and install the transponder key amplifier onto the steering column upper with the switch bracket.

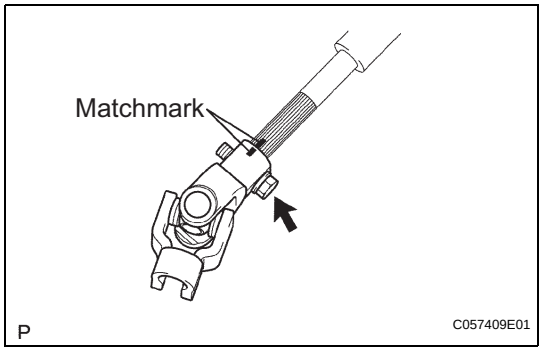

8. INSTALL STEERING SLIDING YOKE SUB-ASSEMBLY

(a) Align the matchmarks on steering intermediate shaft assembly No. 2 and steering sliding yoke and provisionally install them with the bolt.

INSTALLATION

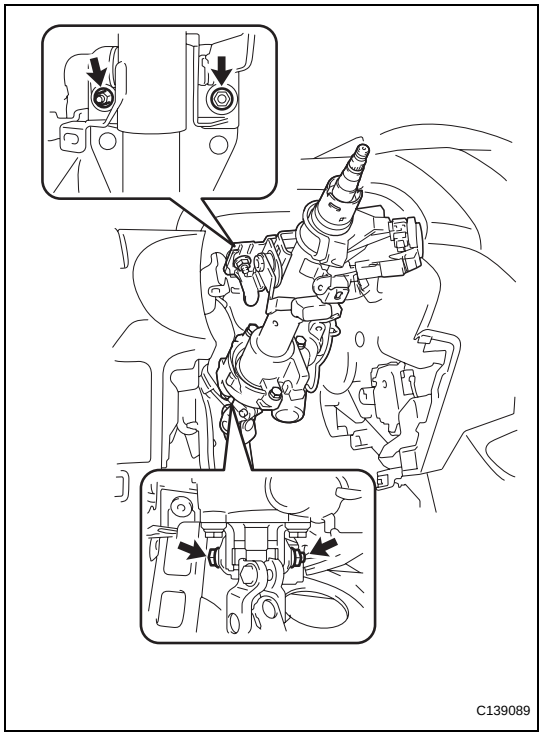

1. INSTALL STEERING COLUMN ASSEMBLY

(a) Install the steering column assembly onto the instrument panel reinforcement assembly with the bolt and 2 nuts.
Torque: 25 N*m (255 kgf*cm, 18 ft.*lbf)

(b) Connect all the connectors and clamp the wire harnesses onto the steering column assembly bracket.

2. INSTALL BRAKE PEDAL (for Automatic Transaxle)

(a) Apply MP grease No. 2 to the brake master cylinder push rod clevis pin and installation surfaces.

(b) Install the 2 brake pedal bushes, and install the brake pedal with the nut and brake pedal shaft.
Torque: 37 N*m (375 kgf*cm, 27 ft.*lbf)

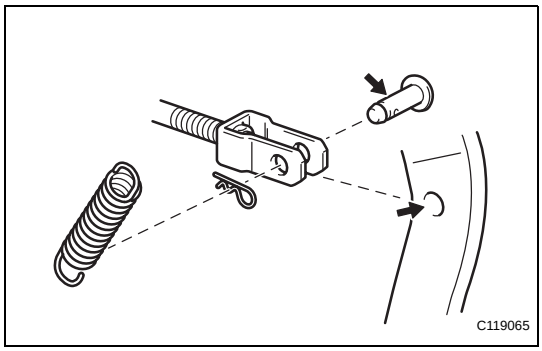

(c) Apply lithium soap base glycol grease to the brake master cylinder push rod clevis pin and installation surfaces.
(d) Connect the brake master cylinder push rod clevis to the brake pedal with the brake master cylinder push rod clevis pin, install the clip onto the brake master cylinder push rod clevis pin, and then install the brake pedal return spring.

3. INSTALL BRAKE PEDAL SUPPORT (for Manual Transaxle) (See page BR-21)

4. INSTALL BRAKE MASTER CYLINDER PUSH ROD CLEVIS (for Manual Transaxle) (See page BR-21)

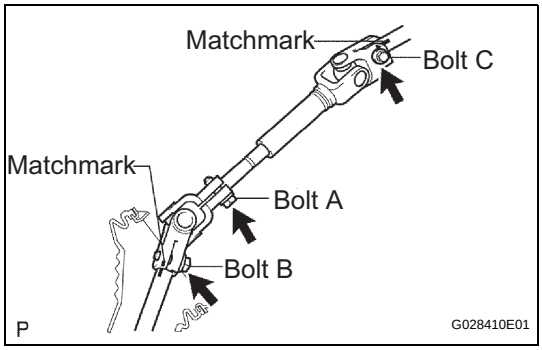

5. INSTALL NO.2 STEERING INTERMEDIATE SHAFT ASSEMBLY
(a) Connect all the connectors and clamp the wire harnesses onto the steering column assembly bracket.
(b) Align the matchmarks on steering intermediate shaft assembly No. 2 and the steering sliding yoke and provisionally install them with bolt C.
Torque: 28 N*m (290 kgf*cm, 21 ft.*lbf)
(c) Align the matchmarks on the steering sliding yoke and steering gear assembly and install them with bolt B.
Torque: 28 N*m (290 kgf*cm, 21 ft.*lbf)
(d) Tighten bolt A.
Torque: 28 N*m (290 kgf*cm, 21 ft.*lbf)

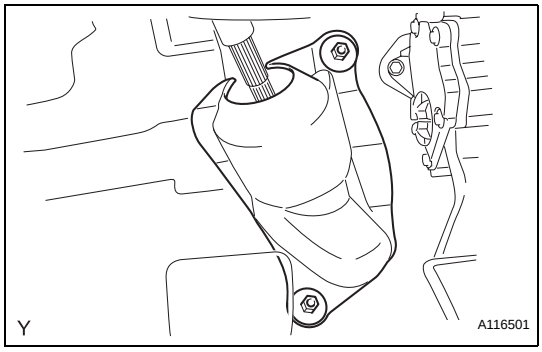

6. INSTALL COLUMN HOLE COVER SILENCER SHEET
(a) Install the column hole cover plate with the 2 clips.
(b) Install the floor carpet.

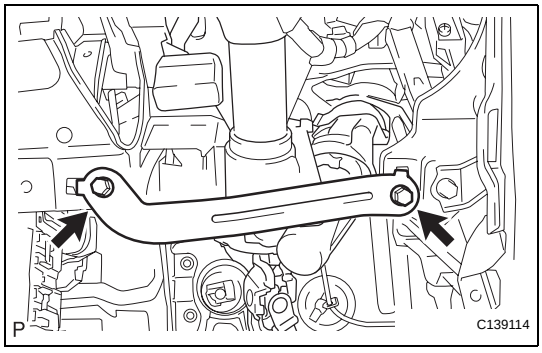

7. INSTALL INSTRUMENT PANEL SUB REINFORCEMENT
(a) Align the 2 claws and install the reinforcement instrument panel sub with the 2 bolts.

8. INSTALL INSTRUMENT LOWER PANEL FINISH PANEL SUB-ASSEMBLY (See page IP-54)

9. INSTALL INSTRUMENT PANEL UNDER COVER SUB-ASSEMBLY LH (See page IR-35)

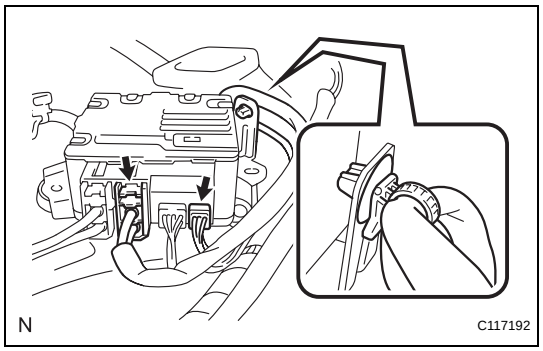

10. INSTALL POWER STEERING ECU

(a) Connect the 2 steering column assembly connectors to the power steering ECU.

(b) Install the power steering motor harness and torque sensor wire harness clamps onto the side of the power steering ECU.

(c) Tilt the steering column assembly up and down to make sure that the power steering motor harness and torque sensor wire harness do not interfere with any components.

11. INSTALL UPPER INSTRUMENT PANEL SUB-ASSEMBLY (See page IP-11)

12. INSTALL GLOVE COMPARTMENT DOOR ASSEMBLY (See page IP-13)

13. INSTALL FRONT PILLAR GARNISH RH (See page IR-29)

14. INSTALL FRONT PILLAR GARNISH LH (See page IR-30)

15. INSTALL FRONT DOOR OPENING TRIM WEATHERSTRIP RH (See page IP-14)

16. INSTALL FRONT DOOR OPENING TRIM WEATHERSTRIP LH (See page IP-14)

17. INSTALL COMBINATION METER ASSEMBLY (See page ME-140)

18. INSTALL INSTRUMENT CLUSTER FINISH PANEL (See page ME-140)

19. INSTALL INSTRUMENT PANEL FINISH PANEL END RH (See page ME-141)

20. INSTALL INSTRUMENT PANEL FINISH PANEL END LH (See page ME-141)

21. INSTALL INSTRUMENT PANEL FINISH PANEL LOWER CENTER (See page ME-142)

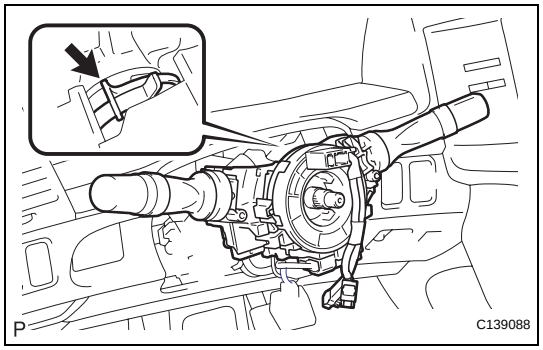

22. INSTALL COMBINATION SWITCH ASSEMBLY

(a) Install the combination switch assembly onto the steering column assembly with the clamp.

(b) Connect all the connectors to the turn signal switch with spiral cable.

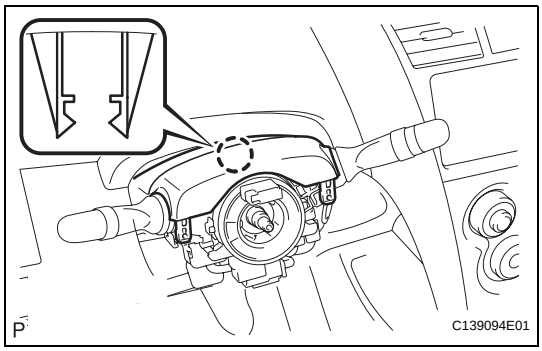

23. INSTALL STEERING COLUMN COVER

(a) Engage the claw to install the steering column upper cover.

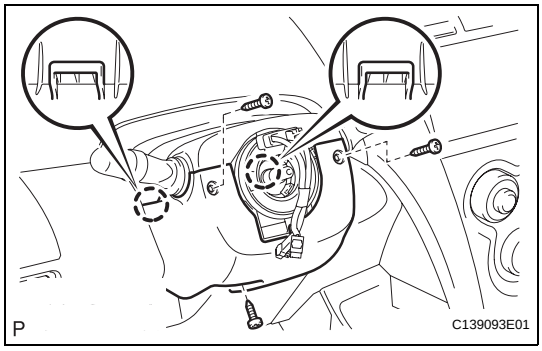

(b) Engage the 2 claws to install the steering column lower cover.

(c) Install the 3 screws.

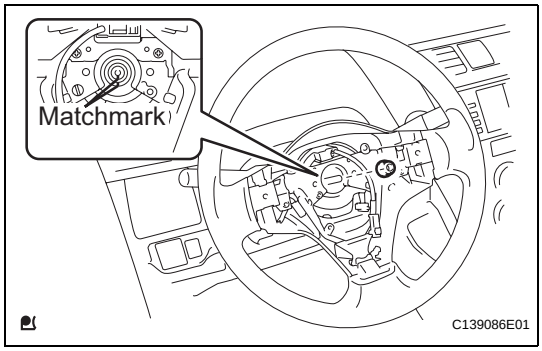

24. INSTALL STEERING WHEEL ASSEMBLY

(a) Align the matchmarks and install the steering wheel assembly onto the steering column assembly.

(b) Install the nut.
Torque: 50 N*m (510 kgf*cm, 37 ft.*lbf)

(c) Connect all connectors to the spiral cable.

25. INSTALL STEERING PAD (See page RS-310)

26. POSITION FRONT WHEELS FACING STRAIGHT AHEAD

27. CHECK SRS WARNING LIGHT
(See page RS-31)

28. PERFORM CALIBRATION OF TORQUE SENSOR ZERO POINT
(See page PS-12)

STEERING COLUMN ASSEMBLY (for Hatchback)

COMPONENTS

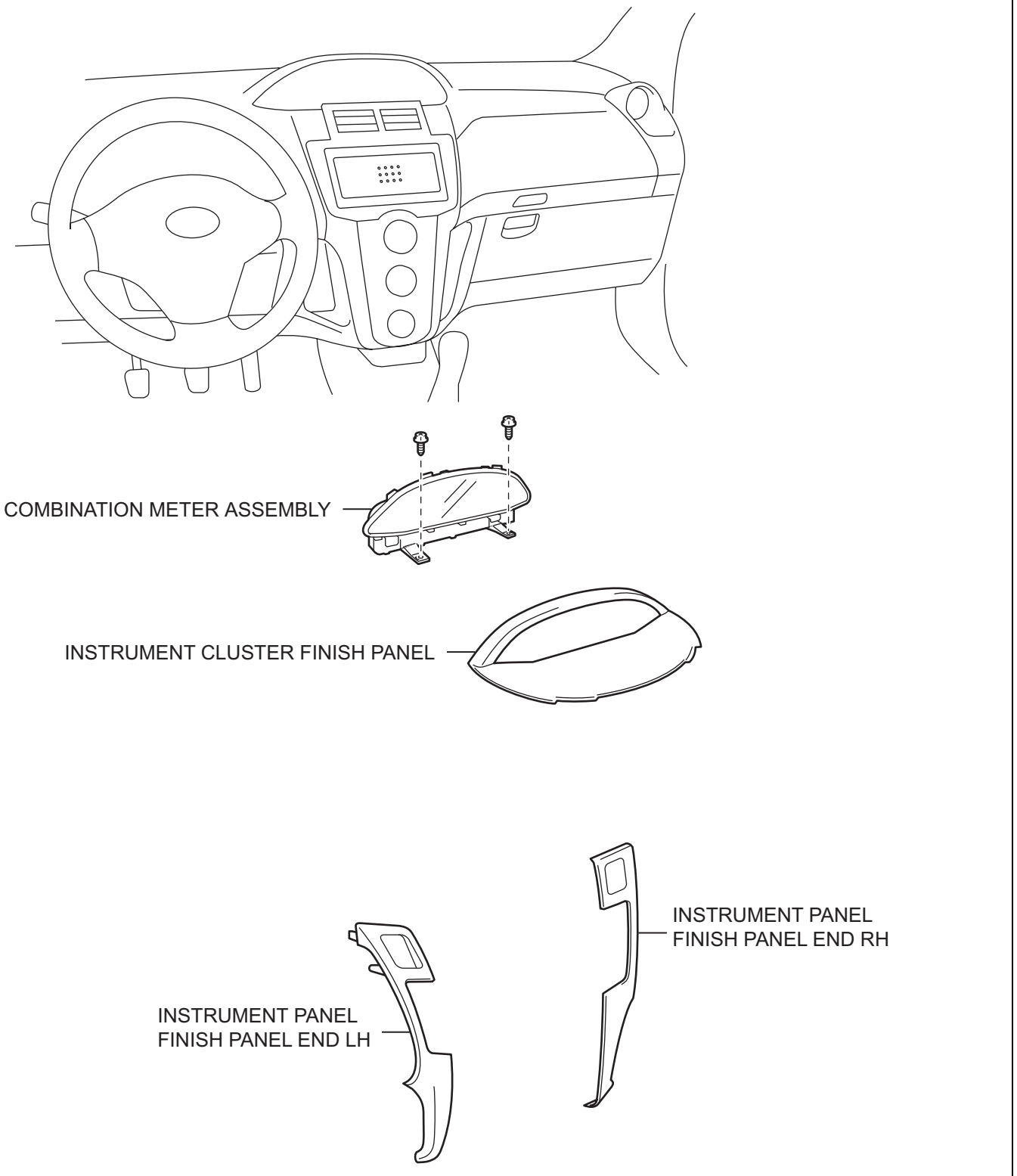

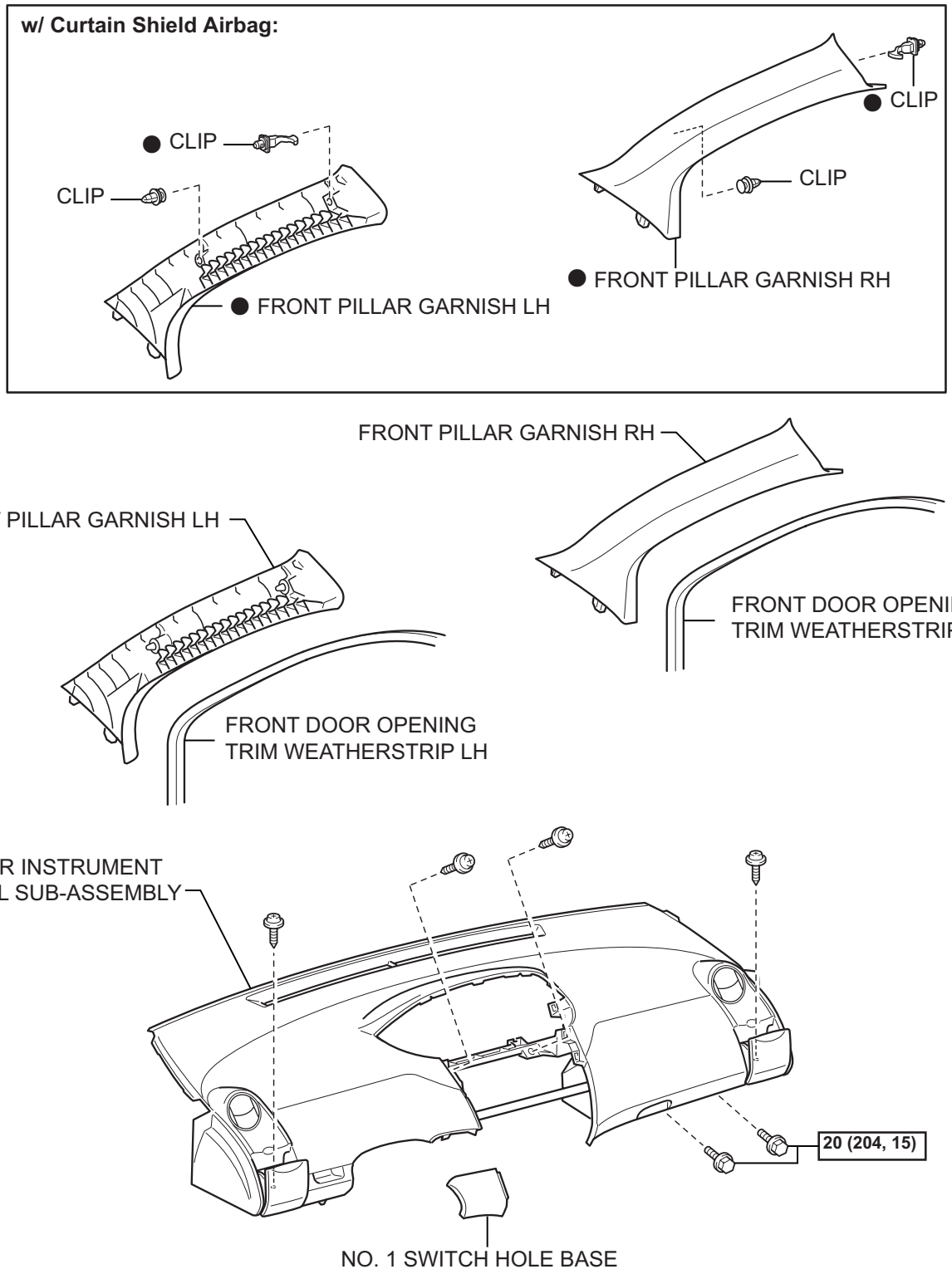

SR

N*m (kgf*cm, ft.*lbf) : Specified torque ● Non-reusable part

C119857E02

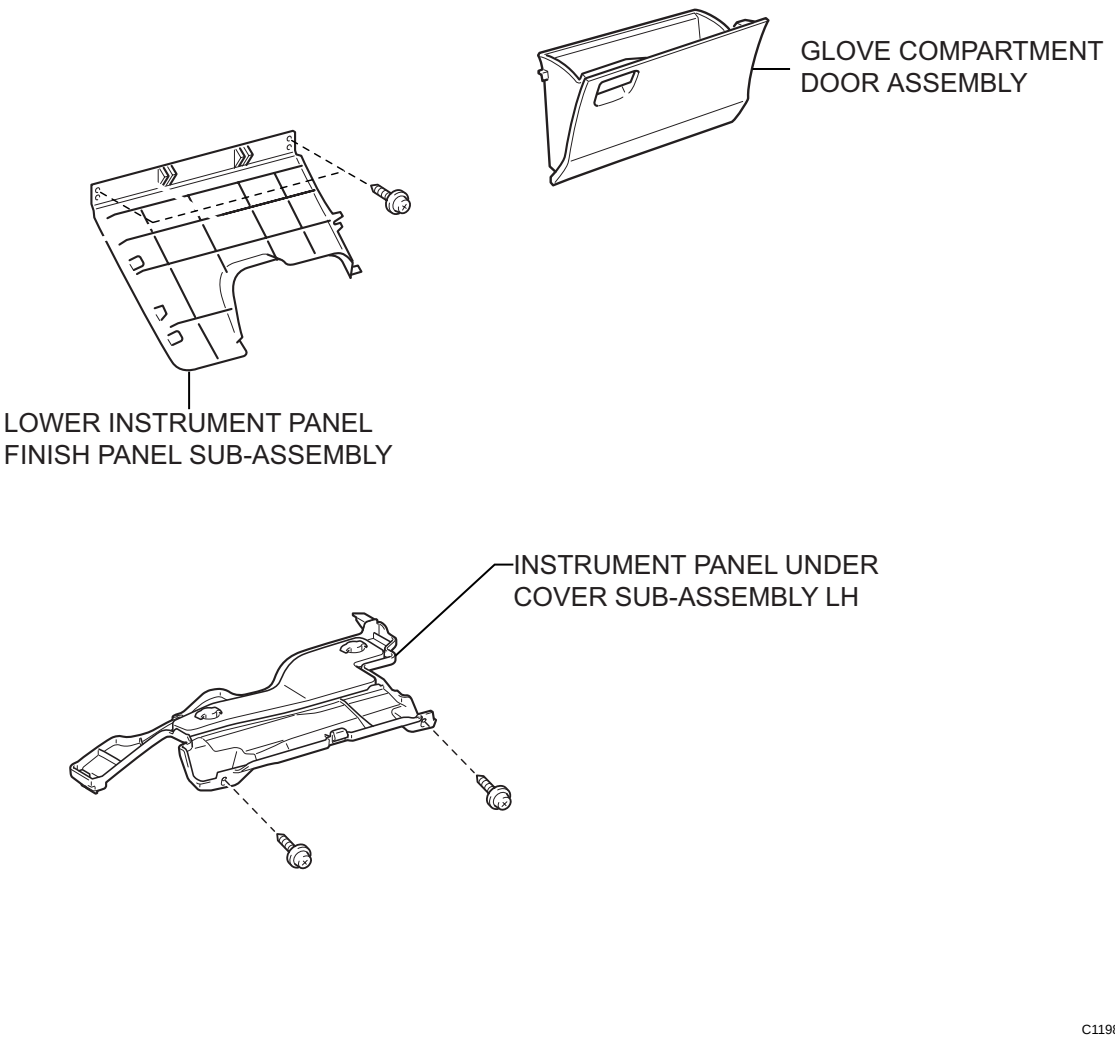
GLOVE COMPARTMENT
DOOR ASSEMBLY
LOWER INSTRUMENT PANEL
FINISH PANEL SUB-ASSEMBLY
INSTRUMENT PANEL UNDER
COVER SUB-ASSEMBLY LH
C119858E02

for Manual Transaxle:

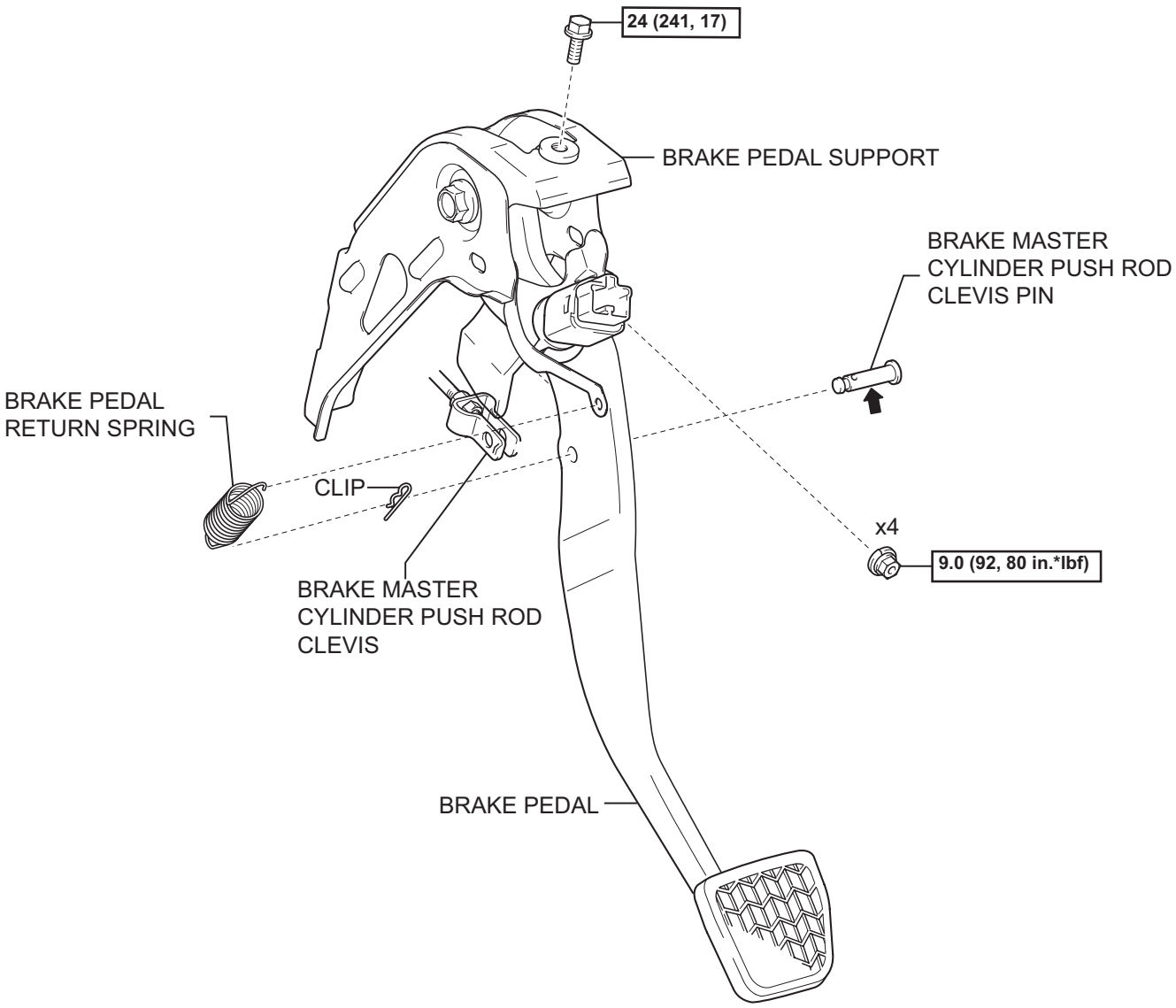

SR

N*m (kgf*cm, ft.*lbf) : Specified torque ⬅ Lithium Soap base glycol grease

P

C118552E01

for Automtic Transaxle:

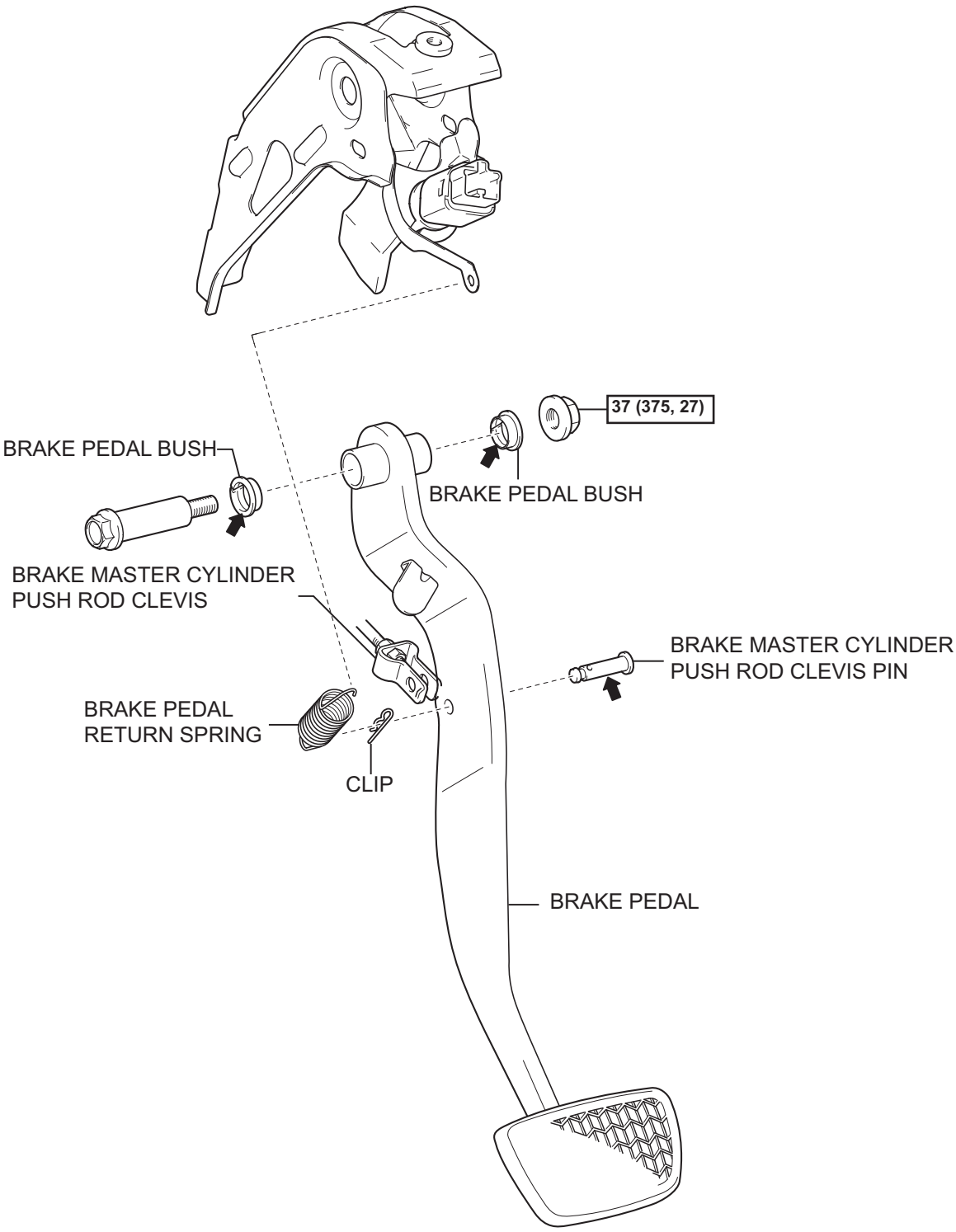

N*m (kgf*cm, ft.*lbf) : Specified torque ⬅ Lithium Soap base glycol grease

P

C118551E01

SR

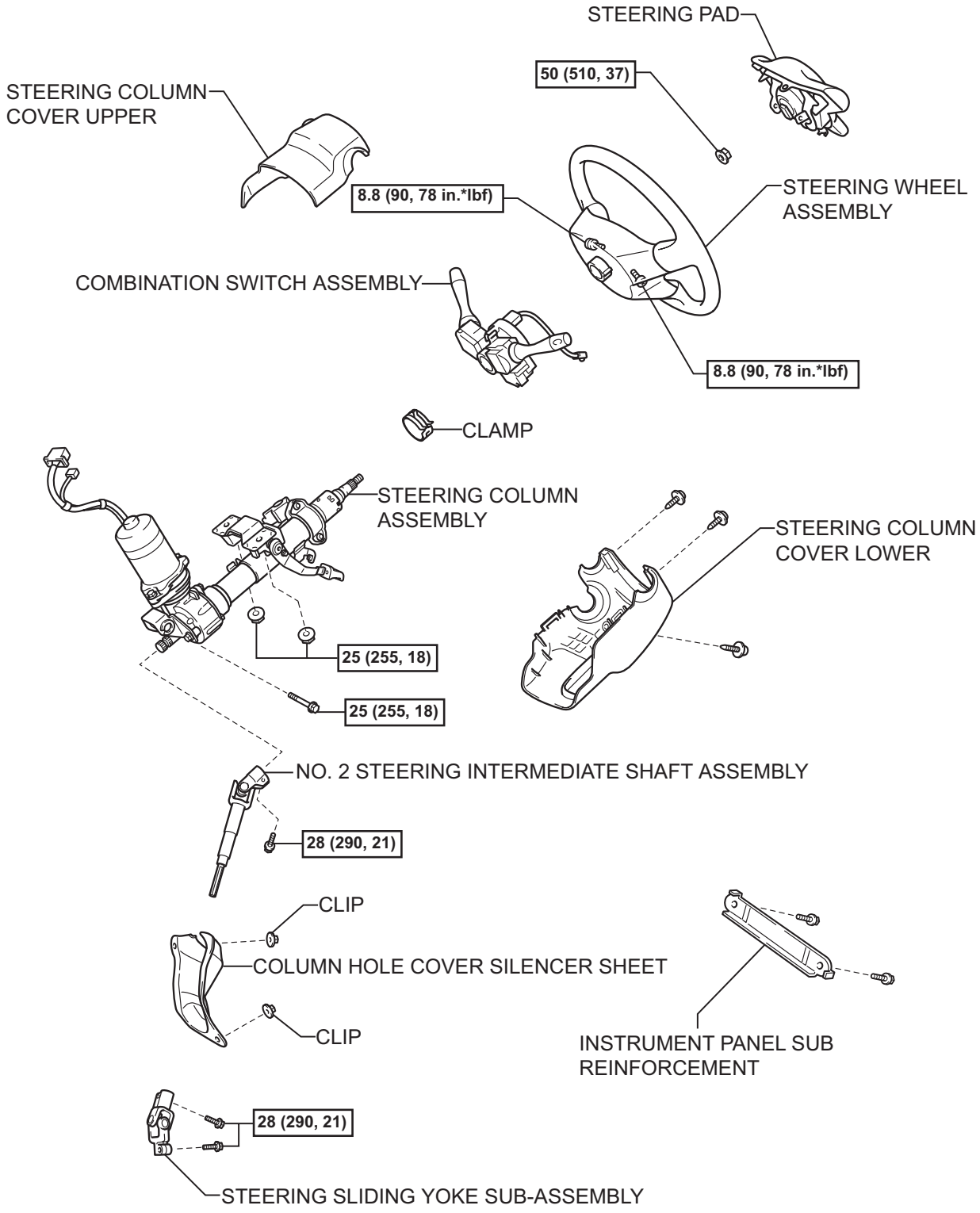

N*m (kgf*cm, ft.*lbf) : Specified torque

N

C125682E01

SR

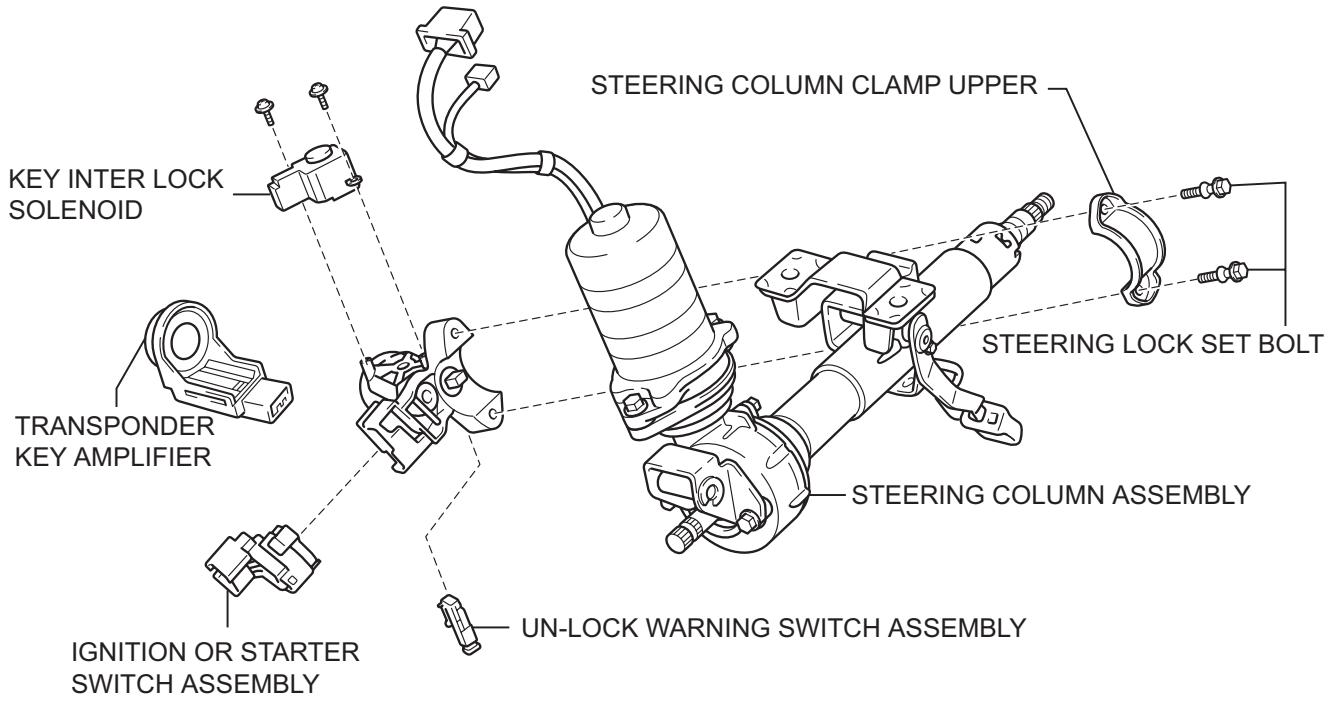

N

C117187E05

SR

REMOVAL

CAUTION:
Some of these service operations affect the SRS airbag system. Read the precautionary notices concerning the SRS airbag system before servicing
RS-1

1. **POSITION FRONT WHEELS FACING STRAIGHT AHEAD**
2. **DISCONNECT CABLE FROM NEGATIVE BATTERY TERMINAL**
3. **REMOVE STEERING PAD (See page RS-309)**
4. **REMOVE STEERING WHEEL ASSEMBLY**
   (a) Remove the nut and place matchmarks on the steering wheel assembly and steering column assembly.

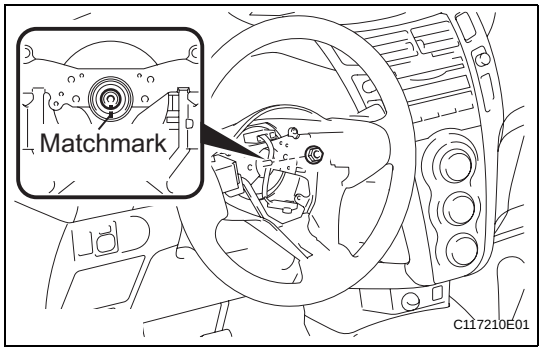

   (b) Using SST, remove the steering wheel assembly.
   SST 09950-50013 (09951-05010, 09952-05010, 09953-05020, 09954-05021)
   NOTICE:
   Apply a small amount of grease to the threads and tip of the SST center bolt before using.

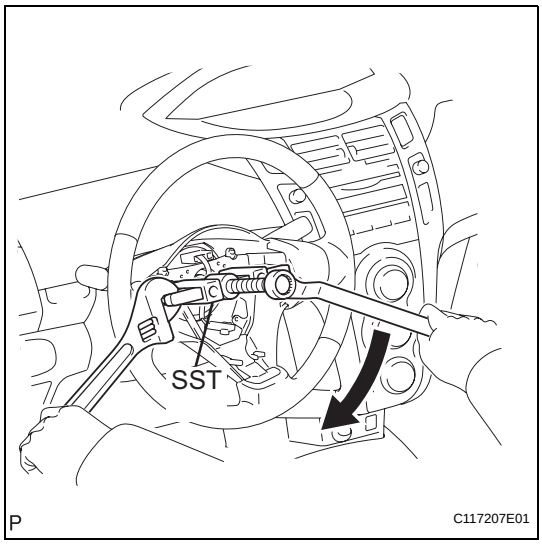

5. **REMOVE STEERING COLUMN COVER**
   (a) Remove the 3 screws, disengage the 2 claws, release the tilt lever and remove the steering column lower cover.

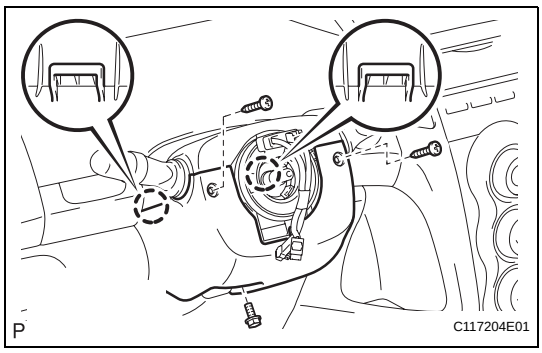

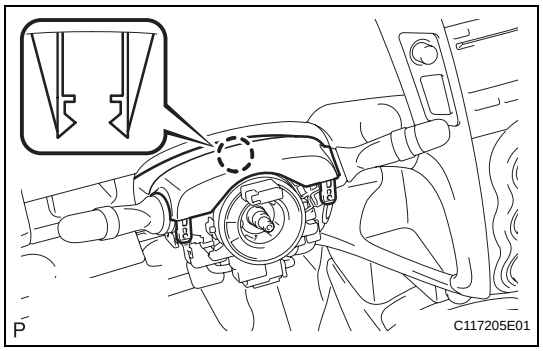

(b) Disengage the claw and remove the steering column upper cover.

6. REMOVE COMBINATION SWITCH ASSEMBLY

(a) Disconnect all connectors from the turn signal switch with spiral cable.

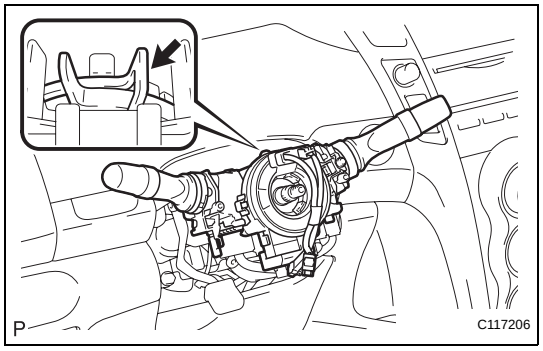

(b) Disengage the clamp indicated by the arrow in the illustration and remove the turn signal switch assembly with spiral cable from the steering column assembly.

7. REMOVE INSTRUMENT PANEL FINISH PANEL END LH (See page ME-145)

8. REMOVE INSTRUMENT PANEL FINISH PANEL END RH (See page ME-145)

9. REMOVE INSTRUMENT CLUSTER FINISH PANEL (See page ME-145)

10. REMOVE COMBINATION METER ASSEMBLY (See page ME-146)

11. REMOVE FRONT DOOR OPENING TRIM WEATHERSTRIP RH (See page IR-50)

12. REMOVE FRONT DOOR OPENING TRIM WEATHERSTRIP LH

HINT:
Use the same procedure for the RH side as for the LH side.

13. REMOVE FRONT PILLAR GARNISH RH (See page IR-58)

14. REMOVE FRONT PILLAR GARNISH LH (See page IR-59)

15. REMOVE GLOVE COMPARTMENT DOOR ASSEMBLY (See page IP-20)

16. REMOVE NO. 1 SWITCH HOLE BASE (See page IP-20)

17. REMOVE UPPER INSTRUMENT PANEL SUB-ASSEMBLY (See page IP-21)

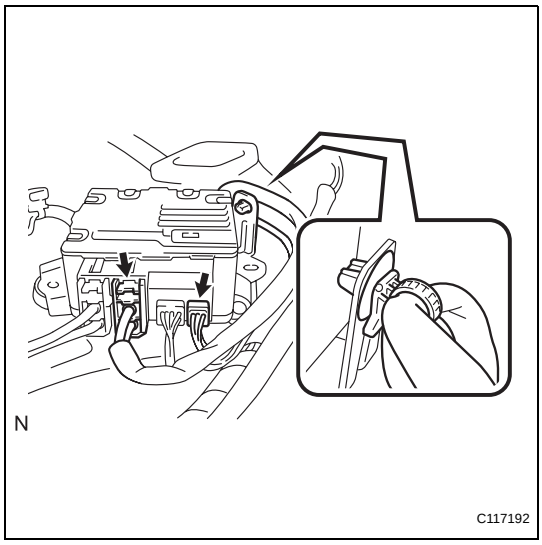

18. DISCONNECT POWER STEERING ECU

(a) Detach the power steering motor harness and torque sensor wire harness clamps from the power steering ECU side.

(b) Disconnect the 2 steering column assembly connectors from the power steering ECU.

19. REMOVE INSTRUMENT PANEL UNDER COVER SUB-ASSEMBLY LH (See page IR-50)

20. REMOVE LOWER INSTRUMENT PANEL FINISH PANEL SUB-ASSEMBLY (See page IP-69)

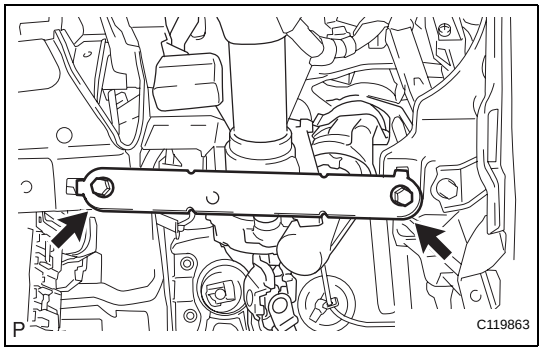

21. REMOVE INSTRUMENT PANEL SUB REINFORCEMENT

(a) Remove the 2 bolts and remove the reinforcement instrument panel sub.

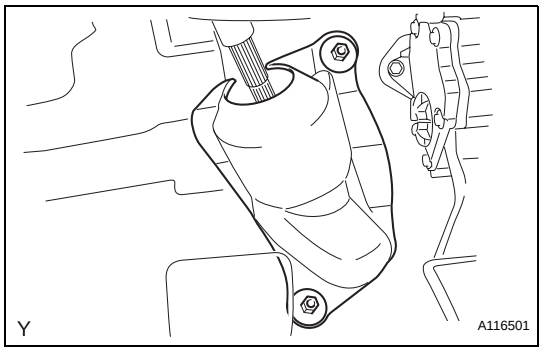

22. REMOVE COLUMN HOLE COVER SILENCER SHEET

(a) Pull back the floor carpet, remove the 2 clips and remove the column hole cover silencer sheet.

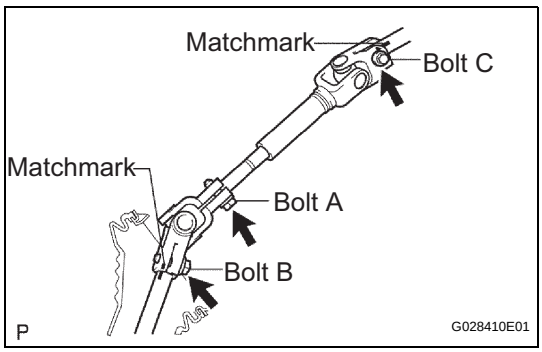

23. REMOVE NO. 2 STEERING INTERMEDIATE SHAFT ASSEMBLY

(a) Loosen bolt A.

(b) Place matchmarks on the steering intermediate assembly and steering gear assembly.

(c) Remove bolt B and detach the steering intermediate assembly from the steering gear assembly.

(d) Place matchmarks on the steering intermediate assembly and steering column assembly.

(e) Remove bolt C and detach the steering intermediate shaft assembly from the steering column assembly.

24. REMOVE BRAKE PEDAL (for Automatic Transaxle)

(a) Using needle-nose pliers, remove the brake pedal return spring.

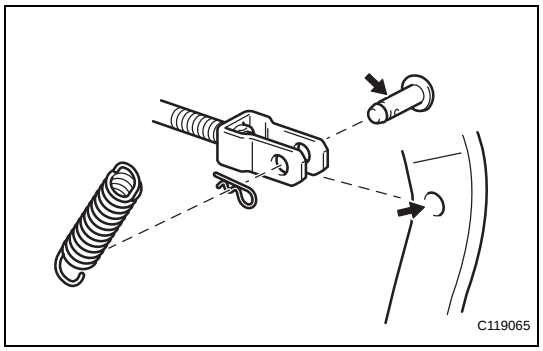

(b) Remove the clip from the brake master cylinder push rod clevis pin.
(c) Remove the brake master cylinder push rod clevis pin and detach the push rod clevis from the brake pedal
(d) Remove the bolt, nut and 2 brake pedal bushes, and remove the brake pedal assembly.

25. REMOVE BRAKE MASTER CYLINDER PUSH ROD CLEVIS (for Manual Transaxle) (See page BR-20)

26. REMOVE BRAKE PEDAL SUPPORT (for Manual Transaxle) (See page BR-21)

27. REMOVE STEERING COLUMN ASSEMBLY

(a) Disconnect all connectors and detach all wire harness clamps from the steering column assembly.

(b) Remove the 3 bolts and remove the steering column assembly from the instrument panel reinforcement assembly.

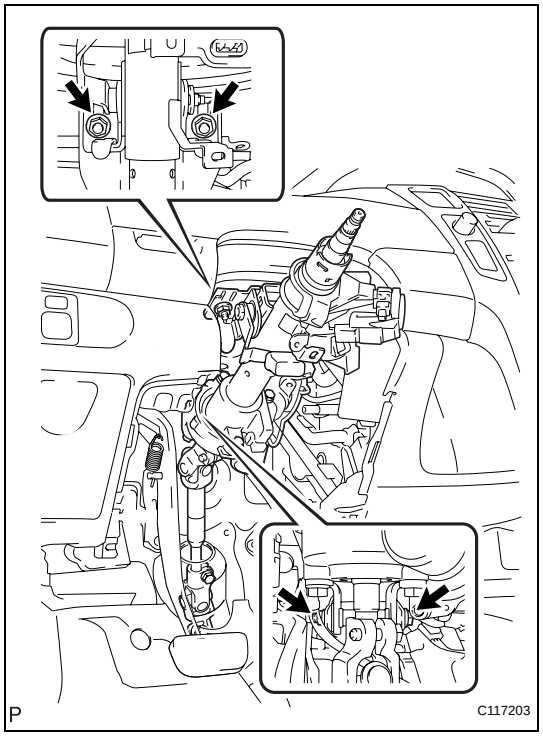

DISASSEMBLY

1. REMOVE STEERING SLIDING YOKE SUB-ASSEMBLY

(a) Place matchmarks on No. 2 steering intermediate shaft assembly and the steering sliding yoke.
(b) Remove bolt A and remove the steering sliding yoke from No. 2 steering intermediate shaft.

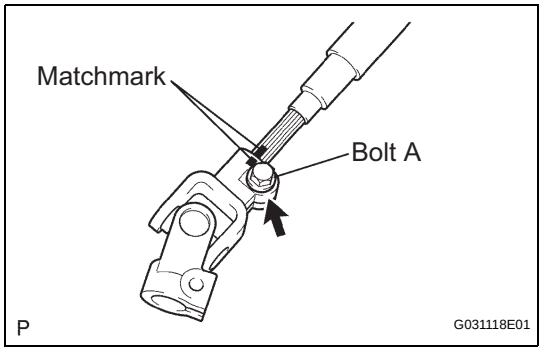

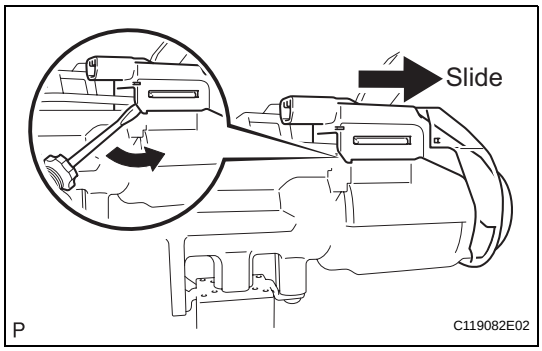

2. REMOVE TRANSPONDER KEY AMPLIFIER

(a) Disengage the 2 claws and slide the transponder key amplifier in the direction shown in the illustration, to detach it from the steering column upper with switch bracket assembly.

3. REMOVE STEERING COLUMN UPPER

(a) Fix the steering column assembly in a vise between aluminum plates.
NOTICE:
Do not overtighten the vise.

(b) Using a drill, drill a hole in each of the 2 steering lock set bolts, to insert a screw extractor.

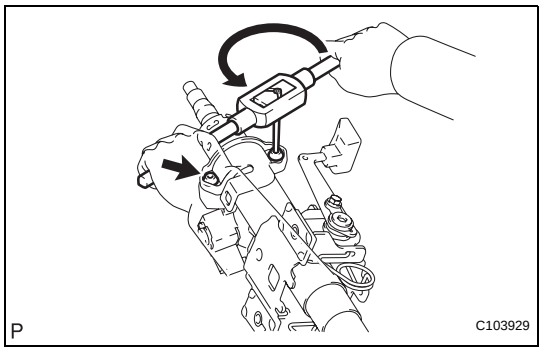

(c) Using the screw extractor, remove the 2 steering lock set bolts and remove the steering column upper w/ switch bracket assembly and steering column clamp upper.

4. REMOVE IGNITION SWITCH LOCK CYLINDER ASSEMBLY

(a) Turn the ignition switch to ACC.

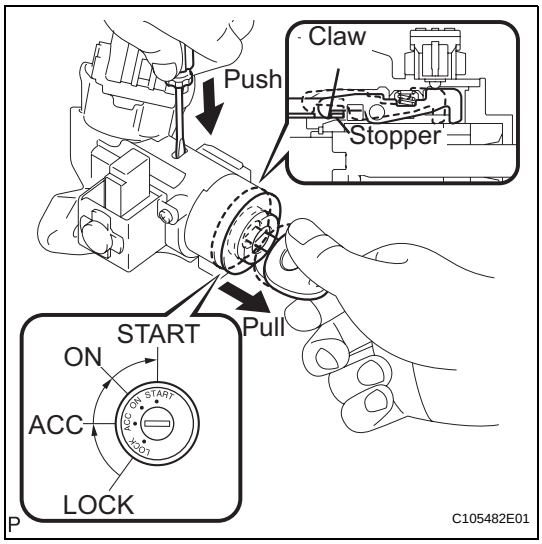

(b) Insert the tip of a screwdriver into the hole in the steering column bracket assembly upper, as shown in the illustration, and pull the ignition switch lock cylinder assembly out until its claw comes into contact with the stopper of the steering column bracket assembly upper.
NOTICE:
Pull the ignition switch lock cylinder assembly out until its claw comes into contact with the stopper of the steering column bracket assembly upper. Otherwise, the following procedure cannot be conducted properly.

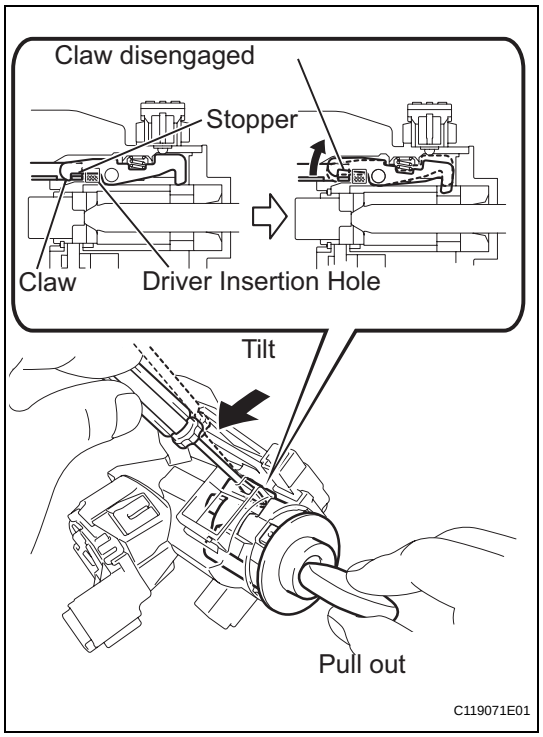

(c) Insert the tip of a screwdriver into the hole in the steering column bracket and tilt it downward, as shown in the illustration, to disengage the claw of the ignition switch lock cylinder. Then pull out the ignition switch lock cylinder.

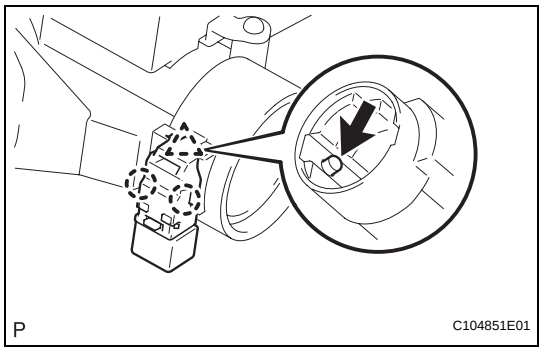

5. REMOVE UN-LOCK WARNING SWITCH ASSEMBLY

(a) Push up the un-lock warning switch assembly center portion to disengage the 2 claws.
HINT:
Slide the un-lock warning switch assembly, in the direction shown by the arrow in the illustration, to remove it.

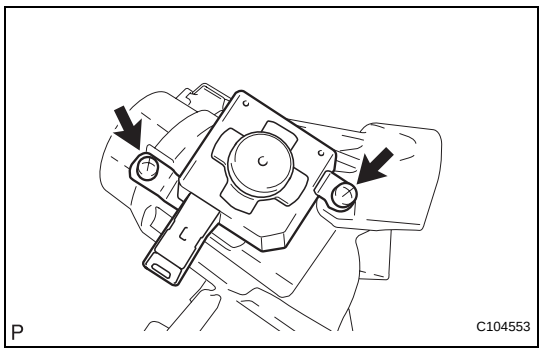

6. REMOVE KEY INTER LOCK SOLENOID (for Automatic Transaxle)

(a) Remove the 2 screws and remove the key lock solenoid from the steering column bracket assembly upper.

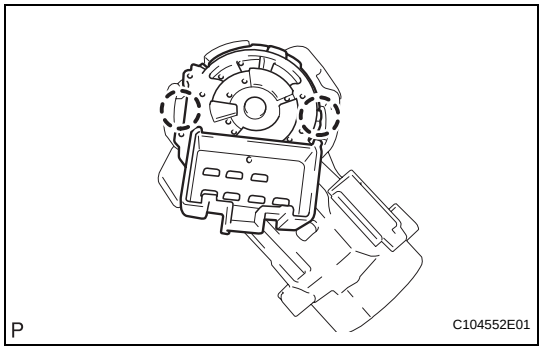

7. REMOVE IGNITION OR STARTER SWITCH ASSEMBLY

(a) Disengage the 2 claws and remove the ignition (starter) switch assembly from the steering column bracket assembly upper.

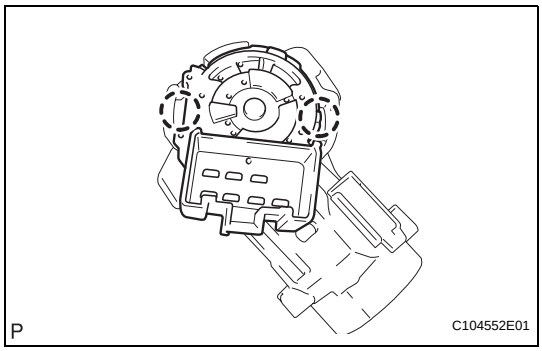

REASSEMBLY

1. INSTALL IGNITION OR STARTER SWITCH ASSEMBLY

(a) Engage the 2 claws to install the ignition (starter) switch assembly onto the steering column bracket assembly upper.

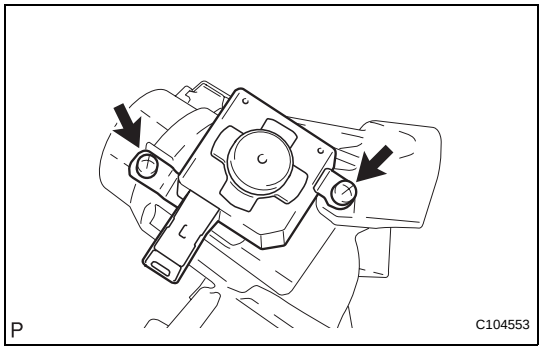

2. INSTALL KEY INTER LOCK SOLENOID (for Automatic Transaxle)

(a) Install the key inter lock solenoid onto the steering column bracket assembly upper with the 2 screws.

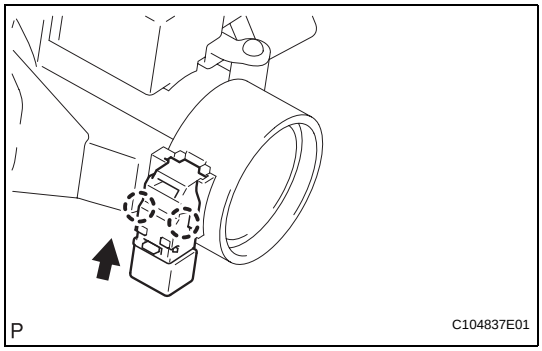

3. INSTALL UN-LOCK WARNING SWITCH ASSEMBLY

(a) Engage the 2 claws to install the un-lock warning switch assembly onto the steering column bracket assembly upper.

HINT:

Slide the un-lock warning switch assembly, in the direction shown by the arrow in the illustration, to install it.

4. INSTALL IGNITION SWITCH LOCK CYLINDER ASSEMBLY

(a) Turn the ignition switch to ACC.

(b) Install the ignition switch lock cylinder assembly into the steering column bracket assembly upper.

(c) Make sure that the ignition switch lock cylinder assembly is securely fixed onto the ignition switch lock cylinder assembly.

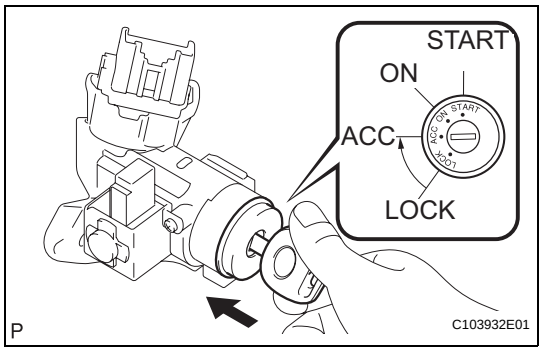

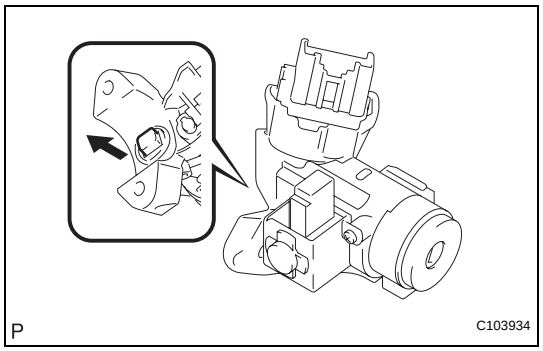

5. INSPECT STEERING LOCK OPERATION

(a) Remove the key and check that the steering lock function is activated.

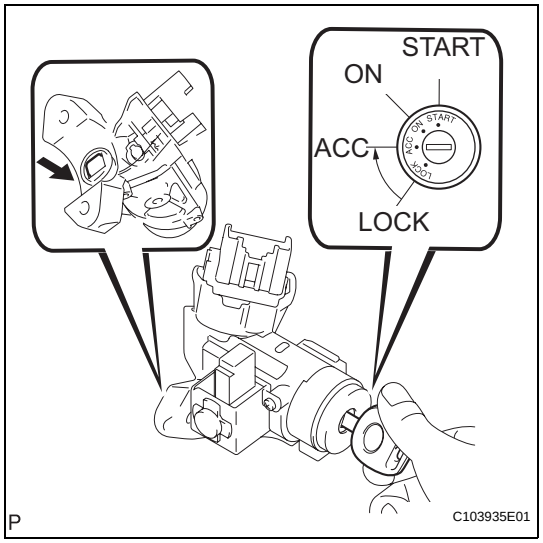

(b) Insert the key, turn the ignition switch to ACC and check that the steering lock function is inactivated.

6. INSTALL STEERING COLUMN UPPER W/SWITCH BRACKET ASSEMBLY

(a) Fix the steering column assembly in a vise between aluminum plates.

NOTICE:

Do not overtighten the vise.

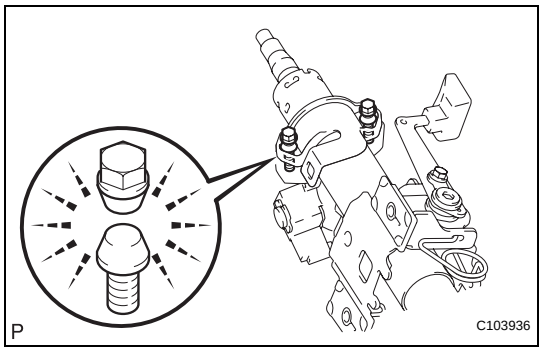

(b) Install the steering column upper with switch bracket assembly and steering column clamp upper with 2 new steering lock set bolts, and then tighten the bolts until their heads come off.

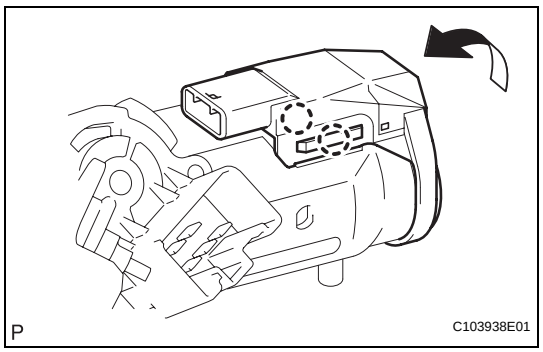

7. INSTALL TRANSPONDER KEY AMPLIFIER

(a) Engage the 2 claws and install the transponder key amplifier onto the steering column upper with the switch bracket.

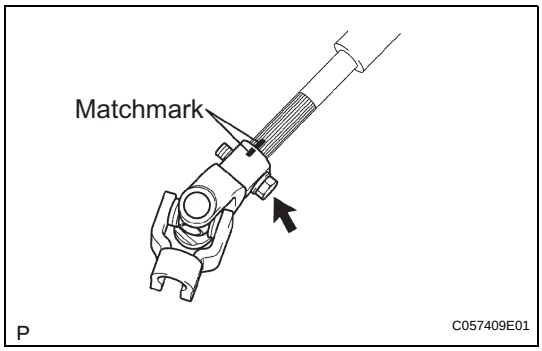

8. INSTALL STEERING SLIDING YOKE SUB-ASSEMBLY

(a) Align the matchmarks on steering intermediate shaft assembly No. 2 and the steering sliding yoke and provisionally install them with the bolt.

INSTALLATION

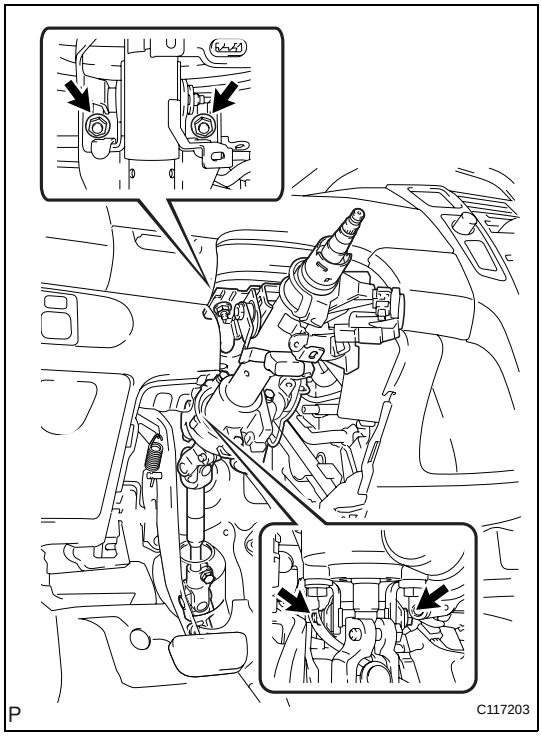

1. INSTALL STEERING COLUMN ASSEMBLY

(a) Install the steering column assembly onto the instrument panel reinforcement assembly with the 3 bolts.
Torque: 25 N*m (255 kgf*cm, 18 ft.*lbf)

(b) Connect all the connectors and clamp the wire harnesses onto the steering column assembly bracket.

2. INSTALL BRAKE PEDAL (for Automatic Transaxle)

(a) Apply MP grease No. 2 to the brake pedal bush and its installation surfaces.

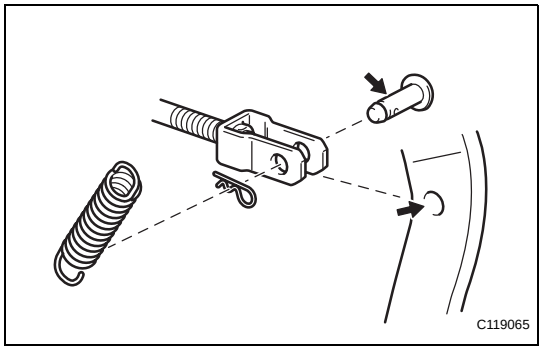

(b) Install the 2 brake pedal bushes, and install the brake pedal with the nut and brake pedal shaft.
Torque: 37 N*m (375 kgf*cm, 27 ft.*lbf)

(c) Apply lithium soap base glycol grease to the brake master cylinder push rod clevis pin and its installation point.

(d) Connect the brake master cylinder push rod clevis to the brake pedal with the brake master cylinder push rod clevis pin, install the clip onto the brake master cylinder push rod clevis pin, and then install the brake pedal return spring.

(e) Connect all the connectors and clamp the wire harnesses onto the steering column assembly bracket.

3. INSTALL BRAKE PEDAL SUPPORT (for Manual Transaxle) (See page BR-21)

4. INSTALL BRAKE MASTER CYLINDER PUSH ROD CLEVIS (for Manual Transaxle) (See page BR-21)

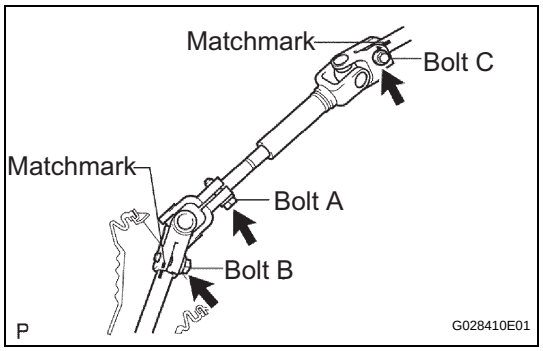

5. **INSTALL NO. 2 STEERING INTERMEDIATE SHAFT ASSEMBLY**
   (a) Align the matchmarks on steering intermediate shaft assembly No. 2 and the steering sliding yoke and provisionally install them with bolt C.
   Torque: 28 N*m (290 kgf*cm, 21 ft.*lbf)
   (b) Align the matchmarks on the steering sliding yoke and steering gear assembly and install them with bolt B.
   Torque: 28 N*m (290 kgf*cm, 21 ft.*lbf)
   (c) Tighten bolt A.
   Torque: 28 N*m (290 kgf*cm, 21 ft.*lbf)

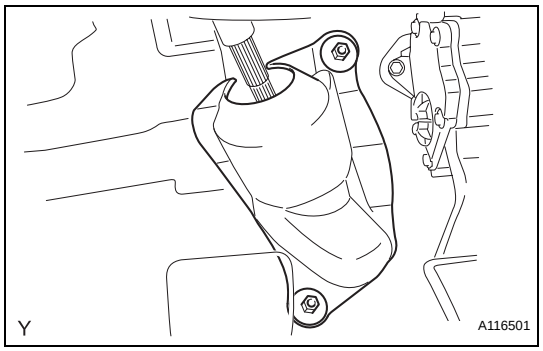

6. **INSTALL COLUMN HOLE COVER SILENCER SHEET**
   (a) Install the column hole cover plate with the 2 clips.
   (b) Install the floor carpet.

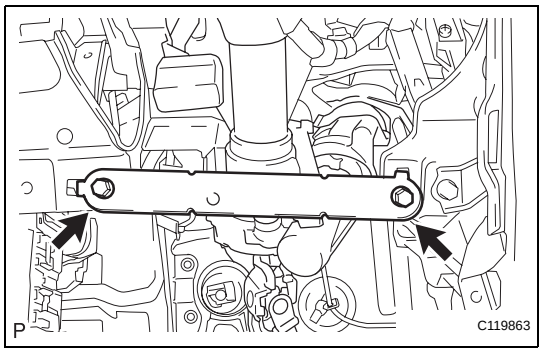

7. **INSTALL INSTRUMENT PANEL SUB REINFORCEMENT**
   (a) Align the 2 claws and install the reinforcement instrument panel sub with the 2 bolts.

8. **INSTALL LOWER INSTRUMENT PANEL FINISH PANEL SUB-ASSEMBLY (See page IP-78)**

9. **INSTALL INSTRUMENT PANEL UNDER COVER SUB-ASSEMBLY LH (See page IR-82)**

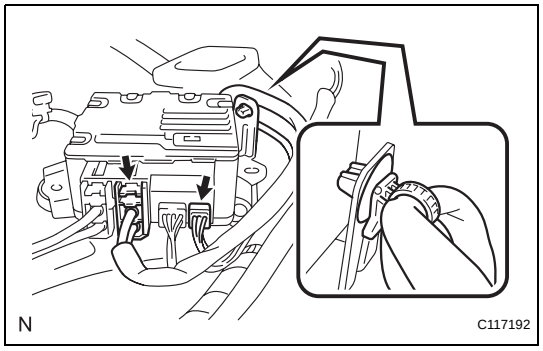

10. **CONNECT POWER STEERING ECU**
    (a) Connect the 2 steering column assembly connectors to the power steering ECU.
    (b) Install the power steering motor harness and torque sensor wire harness clamps onto the side of the power steering ECU.
    (c) Tilt the steering column assembly up and down to make sure that the power steering motor harness and torque sensor wire harness do not interfere with any components.

11. **INSTALL UPPER INSTRUMENT PANEL SUB-ASSEMBLY (See page IP-29)**

12. **INSTALL GLOVE COMPARTMENT DOOR ASSEMBLY (See page IP-32)**

13. **INSTALL NO. 1 SWITCH HOLE BASE (See page IP-32)**

14. **INSTALL FRONT PILLAR GARNISH RH (See page IR-71)**

15. **INSTALL FRONT PILLAR GARNISH LH (See page IR-72)**

16. **INSTALL FRONT DOOR OPENING TRIM WEATHERSTRIP RH (See page IR-81)**

17. **INSTALL FRONT DOOR OPENING TRIM WEATHERSTRIP LH**
HINT:
Use the same procedure for the RH side as for the LH side.

18. **INSTALL COMBINATION METER ASSEMBLY (See page ME-148)**

19. **INSTALL INSTRUMENT CLUSTER FINISH PANEL (See page ME-148)**

20. **INSTALL INSTRUMENT PANEL FINISH PANEL END RH (See page ME-149)**

21. **INSTALL INSTRUMENT PANEL FINISH PANEL END LH (See page ME-149)**

22. **INSTALL COMBINATION SWITCH ASSEMBLY**
(a) Install the turn signal switch assembly with spiral cable onto the steering column assembly with the clamp
(b) Connect all the connectors to the turn signal switch with spiral cable.

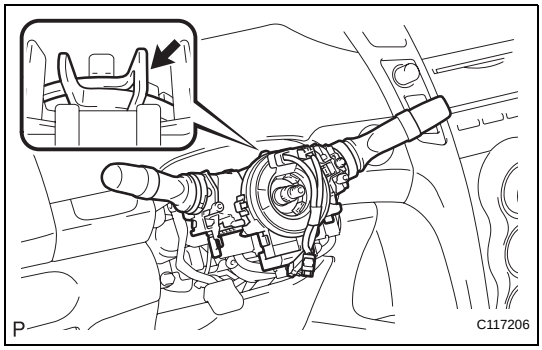

23. **INSTALL STEERING COLUMN COVER**
(a) Engage the claw to install the steering column upper cover.

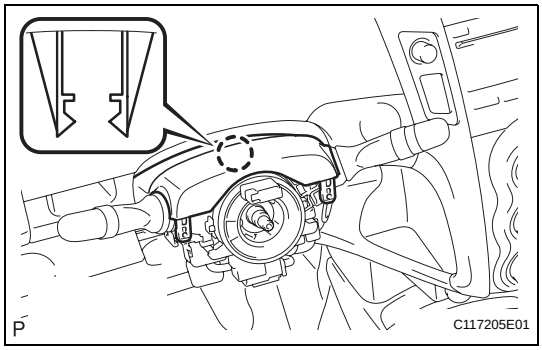

(b) Engage the 2 claws to install the steering column lower cover.
(c) Install the 3 screws.

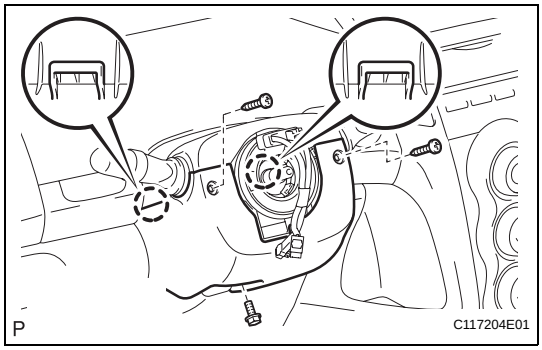

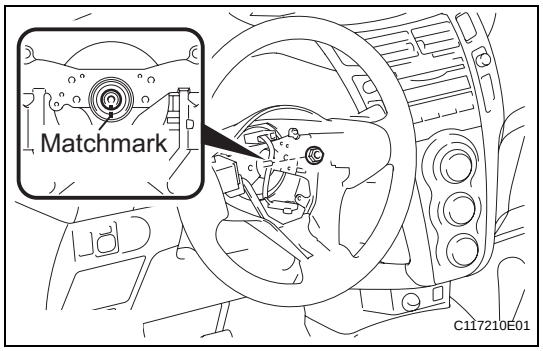

24. INSTALL STEERING WHEEL ASSEMBLY

(a) Align the matchmarks and install the steering wheel assembly onto the steering column assembly.

(b) Install the nut.
Torque: 50 N*m (510 kgf*cm, 37 ft.*lbf)

(c) Connect all the connectors to the spiral cable.

25. INSTALL STEERING PAD (See page RS-310)

26. POSITION FRONT WHEELS FACING STRAIGHT AHEAD

27. CONNECT CABLE TO NEGATIVE BATTERY TERMINAL
Torque: 5.4 N*m (55 kgf*cm, 48 in.*lbf)

28. INSPECT SRS WARNING LIGHT TURNS OFF
(See page RS-31)

29. PERFORM CALIBRATION OF TORQUE SENSOR ZERO POINT
(See page PS-12)

POWER STEERING SYSTEM

ON-VEHICLE INSPECTION

1. CHECK STEERING EFFORT (TORQUE)

NOTICE:

Some of these service operations may affect the SRS airbags. Read the precautionary notices concerning the SRS airbags before servicing.

(a) Stop the vehicle on a level, paved road and align the wheels facing straight ahead.

(b) Disconnect the cable from the negative battery terminal.

(c) Remove the steering pad (See page RS-309).

(d) Connect the cable to the negative battery terminal.

(e) Using a torque wrench, check that the steering wheel set nut is properly tightened.

Torque: 50 N*m (510 kgf*cm, 37 ft.*lbf)

(f) Turn the ignition switch to ON (the engine is stopped) so that the power steering is ready to operate.

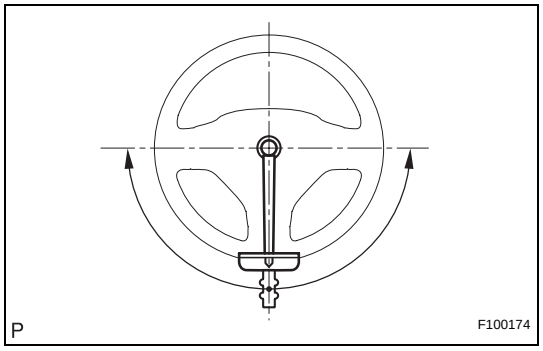

(g) Turn the steering wheel 90 degrees to the right and check the steering effort (torque) while turning. Check the opposite direction in the same manner.

Steering effort (Reference):

5.5 N*m (56 kgf*cm, 49 in.*lbf)

(h) Align the front wheels facing straight ahead.

(i) Disconnect the cable from the negative battery terminal.

(j) Install the steering pad (See page RS-310).

(k) Connect the cable to the negative battery terminal.

(l) Clear the DTCs (See page RS-38).

(m) Inspect the airbag warning light (See page RS-31).

2. CHECK STEERING WHEEL FREE PLAY

(a) Turn the ignition switch to ON so that the power steering is ready to operate.

(b) Align the wheels facing straight ahead.

(c) Gently turn the steering wheel right and left with your finger and check the steering wheel freeplay.

Maximum freeplay:

30 mm (1.18 in.)

HINT:

If the freeplay is outside the specifications, replace intermediate shaft No. 2 or the steering gear with a new one.

ELECTRONIC POWER STEERING SYSTEM

PRECAUTION

1. HANDLING PRECAUTION

(a) When handling the electronic parts;
- Avoid any impact to parts such as ECUs and relays. Replace with new ones if dropped or subjected to a severe blow.
- Do not expose to high temperatures or humidity.
- Do not touch the connector terminals, in order to prevent deformation or malfunctions due to static electricity.
- When the power steering ECU has been replaced with a new one, perform the torque sensor zero point calibration. (See page PS-12)

(b) When handling the steering column assembly;
- Avoid any impact to the steering column assembly, especially to the motor and torque sensor. Replace with new ones if dropped or subjected to a severe blow.
- Do not pull the wire harness when moving the steering column assembly.
- When the steering column assembly has been replaced, perform the torque sensor zero point calibration after initializing the torque sensor zero point. (See page PS-12)

(c) When disconnecting and reconnecting the connectors;
- When disconnecting the connectors related to the electronic power steering system, turn the ignition switch on, center the steering wheel, turn the ignition switch off, and then disconnect the connectors.
- When reconnecting the connectors related to the electronic power steering system, ensure that the ignition switch is off. Center the steering wheel and then turn the ignition switch on.
  NOTICE:
  Do not turn the ignition switch on when the steering wheel is not centered.
- If the above operations are not carried out properly, the steering center point (zero point) will deviate, which may lead to a difference in steering effort between turning right and left. If there is a difference in steering effort between turning right and left, perform the torque sensor zero point calibration. (See page PS-12)

2. PRECAUTIONS FOR CAN COMMUNICATION

(a) CAN communication lines are used to receive information from the skid control ECU (ABS ECU) and the ECM, and to transmit warnings to the combination meter. When there are any problems in the CAN communication lines, DTCs of the CAN communication line are output.

(b) Perform troubleshooting of the communication line problems when the CAN communication DTCs are output. Be sure to start troubleshooting on the electronic power steering system after confirming that the CAN communication system is normal.

(c) Since the CAN communication line has its own length and route, it cannot be repaired temporarily with the bypass wire, etc.

PARTS LOCATION

HATCHBACK:

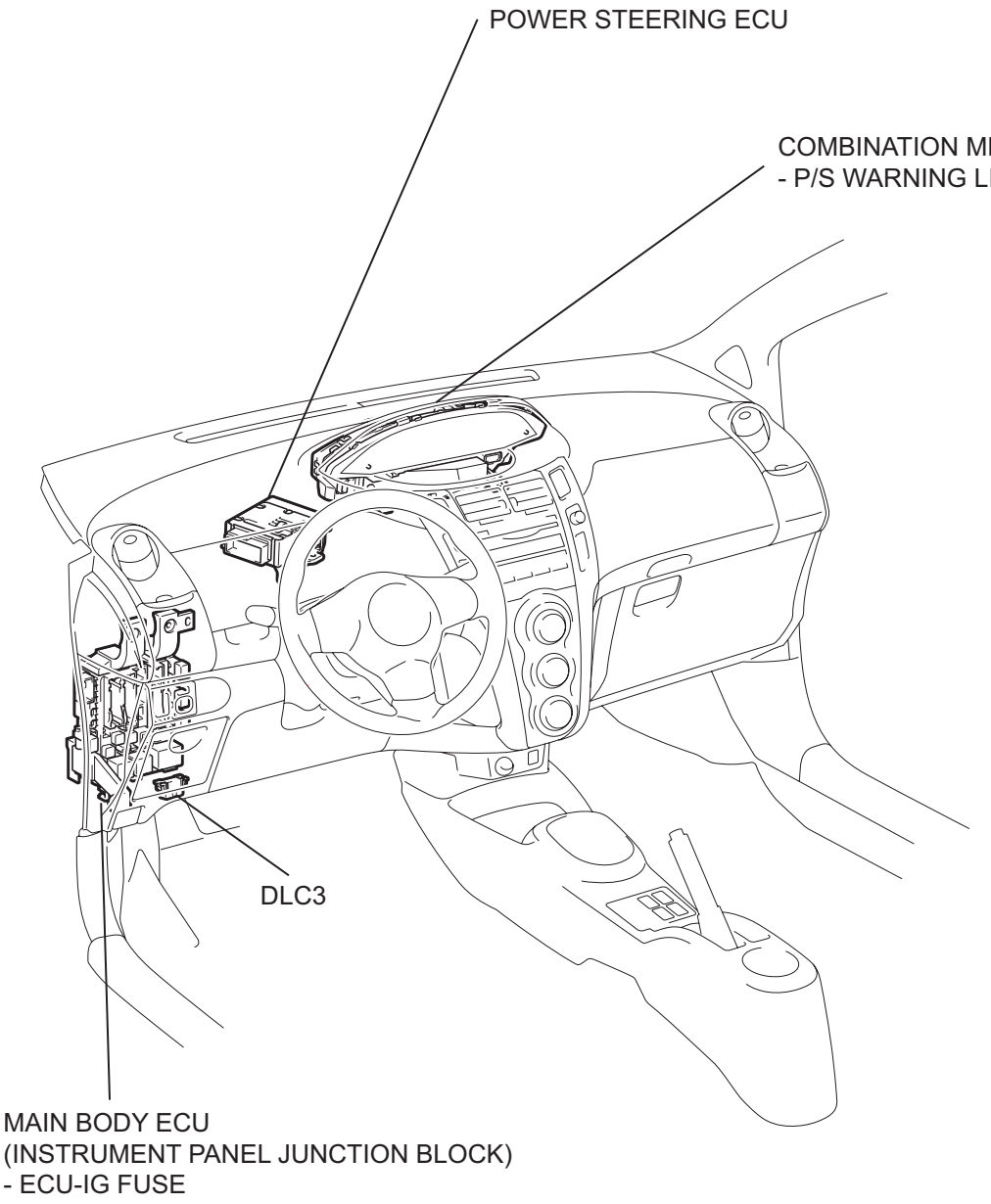

C117896E02

HATCHBACK:

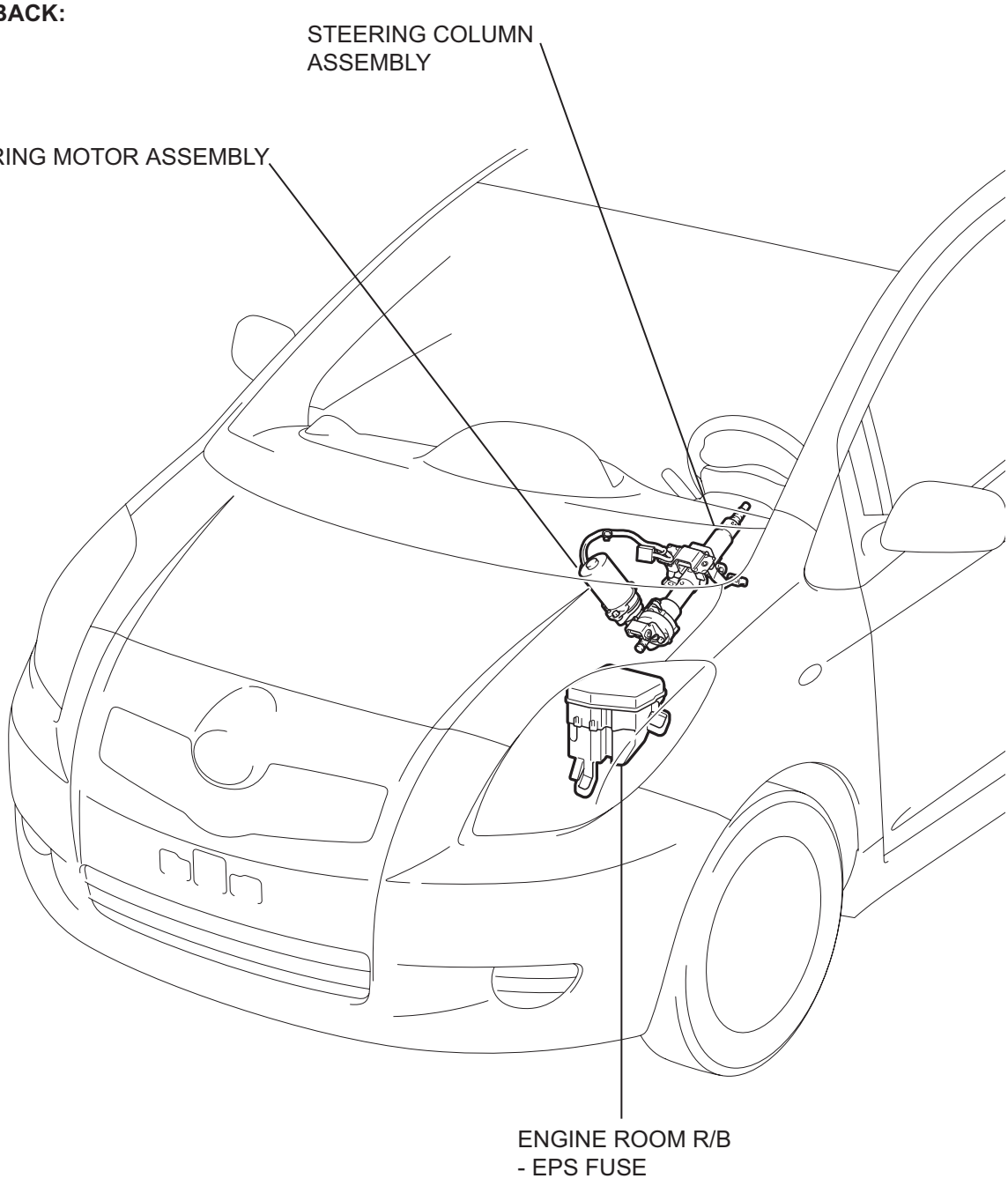

P

C117899E02

SEDAN:

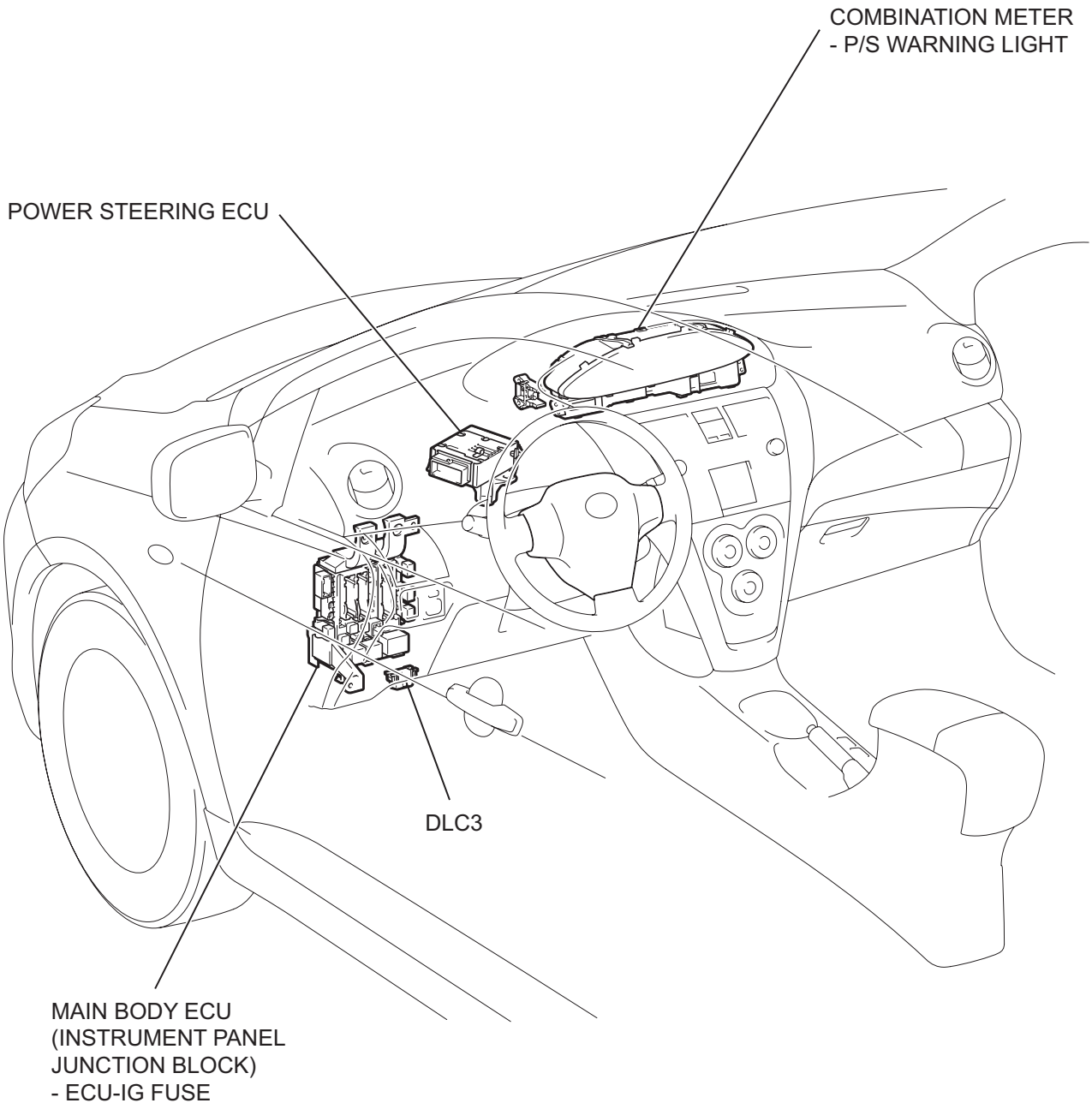

P

C138624E03

SEDAN:

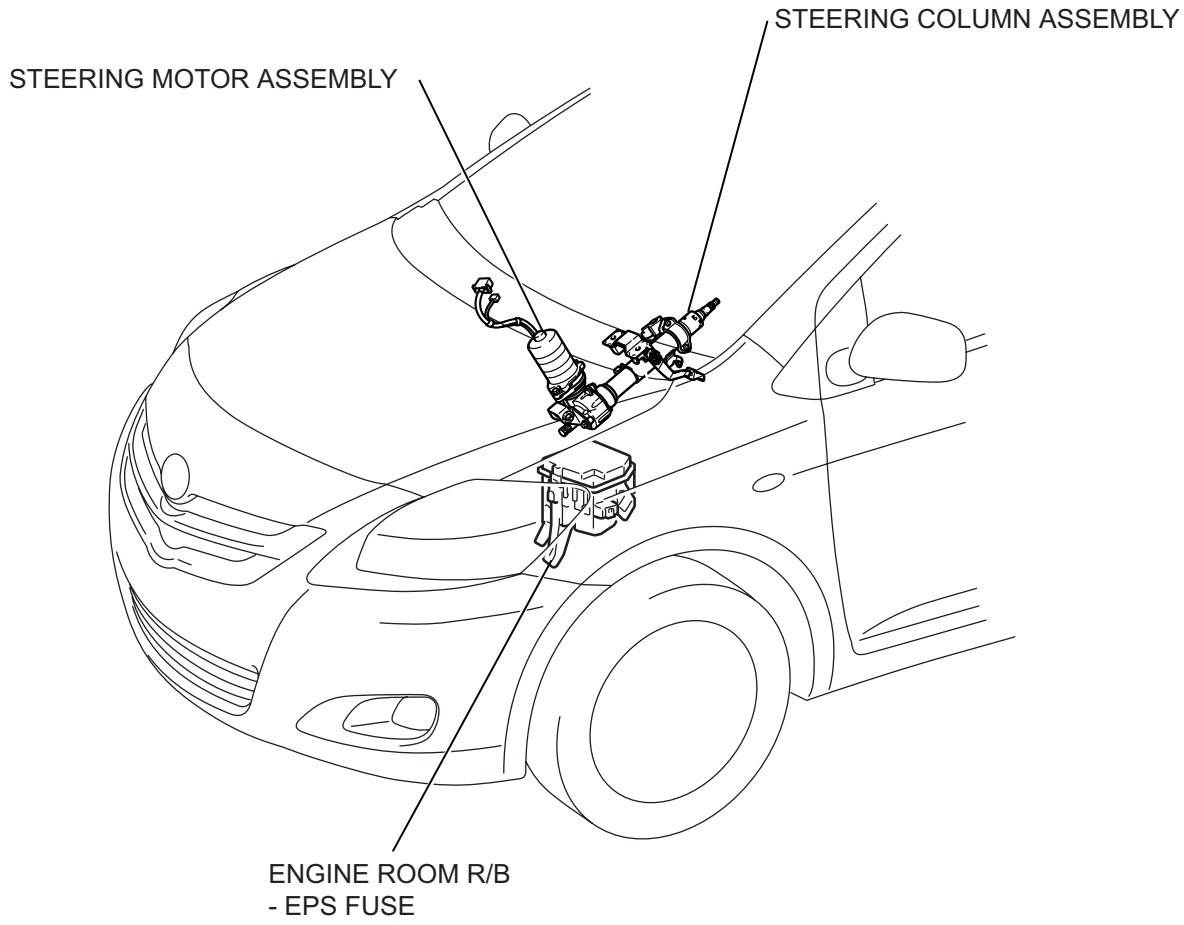

C138622E02

SYSTEM DIAGRAM

w/ ABS:

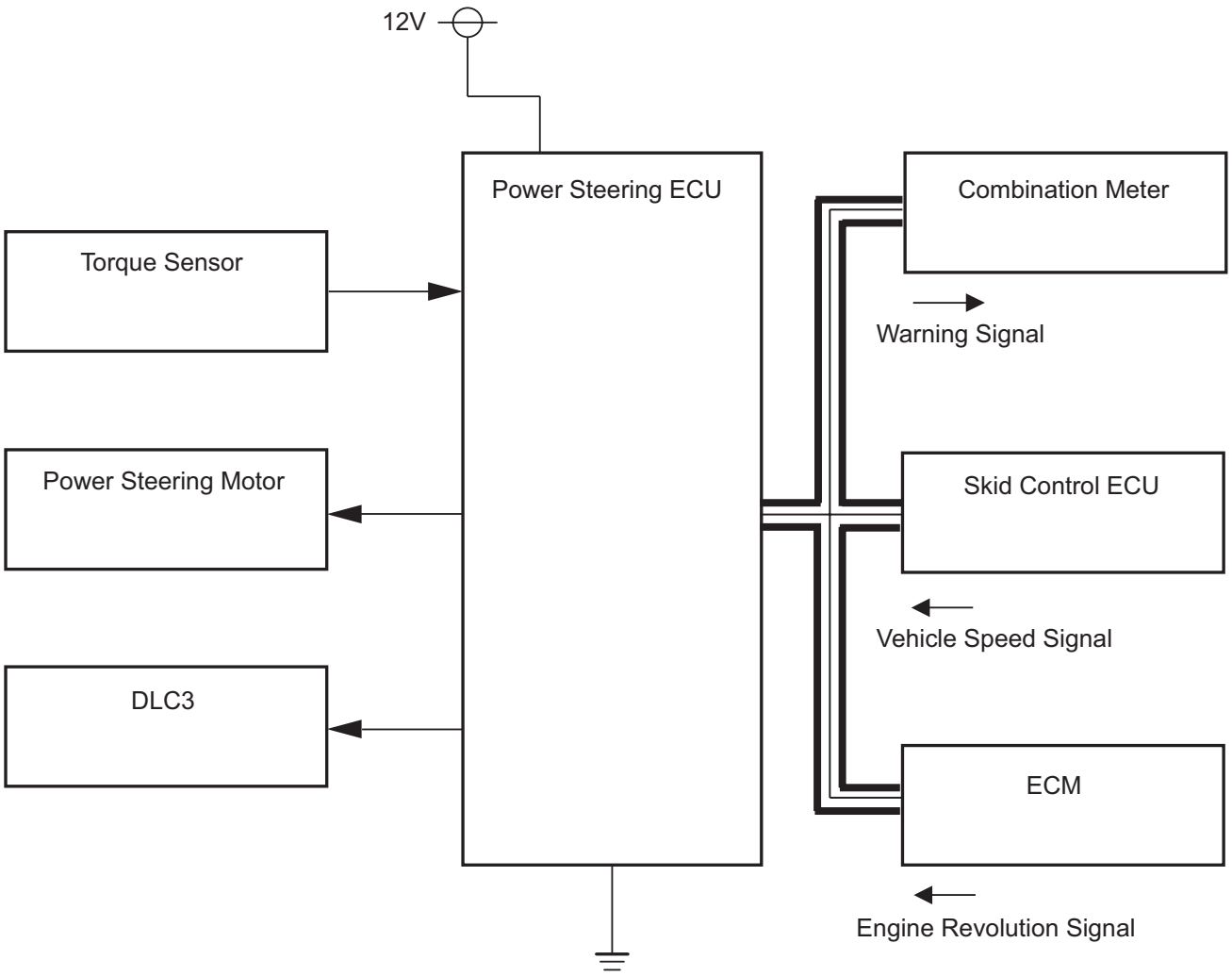

w/o ABS:

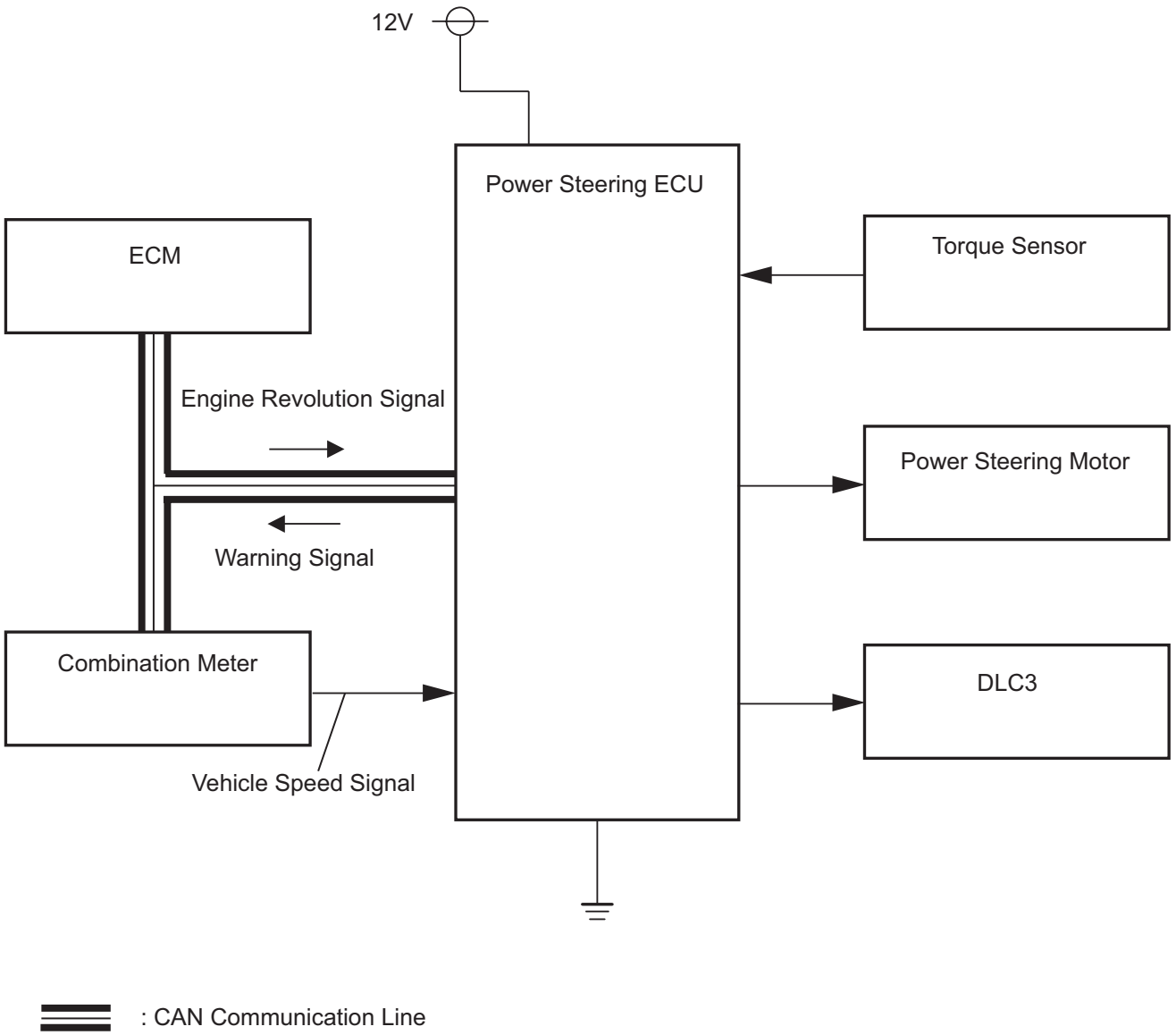
12V
Power Steering ECU
ECM
Torque Sensor
Engine Revolution Signal
Power Steering Motor
Warning Signal
Combination Meter
DLC3
Vehicle Speed Signal
: CAN Communication Line
C122331E01

SYSTEM DESCRIPTION

1. DESCRIPTION

The EPS (Electronic Power Steering) system generates torque through the operation of the motor and the reduction gear installed on the column shaft in order to assist power steering effort.

The power steering ECU determines the direction and the amount of assisting power in accordance with the vehicle speed signals and signals from the torque sensor built into the steering column assembly. As a result, steering effort is controlled to be light during low speed driving and moderately high during high speed driving.

(a) Power steering ECU:
The power steering ECU calculates assisting power based on steering torque signals from the torque sensor and vehicle speed signals from the skid control ECU.
For vehicles without ABS, the power steering ECU receives vehicle speed signals from the speedometer.

(b) Torque sensor:
The torque sensor detects the steering effort generated when the steering wheel is turned and converts it to an electrical signal.

(c) EPS motor:
The EPS motor is activated by the current from the power steering ECU and generates torque to assist the steering effort.

HOW TO PROCEED WITH TROUBLESHOOTING

Perform troubleshooting according to the following flowchart.
HINT:
For further details, see the page given.
The intelligent tester can be used in steps 3, 4, 7, 10 and 13.

1 VEHICLE BROUGHT TO WORKSHOP

NEXT

2 CUSTOMER PROBLEM ANALYSIS

NEXT

3 CHECK DTC AND FREEZE FRAME DATA

(a) Record DTCs and freeze frame data. (See page PS-25)

NEXT

4 CLEAR DTC AND FREEZE FRAME DATA

HINT:
Clear DTC and FREEZE FRAME DATA (See page PS-25).

NEXT

5 PROBLEM SYMPTOM CONFIRMATION

- SYMPTOM DOES NOT OCCUR: GO TO STEP 6
- SYMPTOM OCCURS: GO TO STEP 7

6 SYMPTOM SIMULATION

NEXT

7 CHECK DTC

(a) Recheck for DTCs (See page PS-25).
HINT:
- Refer to the diagnostic trouble code chart when any DTCs are output.

PS

- When any CAN communication system DTCs are output, perform troubleshooting on the CAN communication system first.
- When communication to the power steering ECU is not established through the intelligent tester, inspect terminals SIL of the DLC3 and the power steering ECU, and the IG circuit of the power steering ECU.

→ **NORMAL SYSTEM CODE OUTPUT: GO TO STEP 8**

→ **DTC OUTPUT: GO TO STEP 9**

8	PROBLEM SYMPTOMS TABLE

HINT:
Refer to PROBLEM SYMPTOMS TABLE (See page PS-21).

NEXT

9	DTC CHART

HINT:
Refer to DIAGNOSTIC TROUBLE CODE CHART (See page PS-29).

NEXT

10	CIRCUIT INSPECTION

NEXT

11	PROBLEM IDENTIFICATION

NEXT

12	REPAIR OR REPLACE

NEXT

13	CONFIRMATION TEST

NEXT

PS

END

CALIBRATION

1. TORQUE SENSOR ZERO POINT CALIBRATION (USING INTELLIGENT TESTER)

NOTICE:

Perform the torque sensor zero point calibration when any of the following conditions occur.

- The steering column assembly (containing the torque sensor) has been replaced.
- The power steering ECU has been replaced.
- The steering wheel has been replaced.
- The steering gear assembly has been replaced.
- There is a difference in steering effort between turning right and left.

(a) Center the steering wheel and align the front wheels straight ahead.

(b) Connect the intelligent tester to the DLC3.

(c) Turn the ignition switch on and turn the tester on.

(d) Initialize the torque sensor zero point calibration signal and perform the zero point calibration by following the prompts on the tester screen.

(e) Confirm that no DTCs are output after the zero point calibration is completed.

1. When DTC C1515/15 is output, see page PS-35.
2. When DTC C1516/16 is output, see page PS-36.
3. When DTC C1534/34 is output, see page PS-40.

NOTICE:

Do not touch the steering wheel during the calibration.

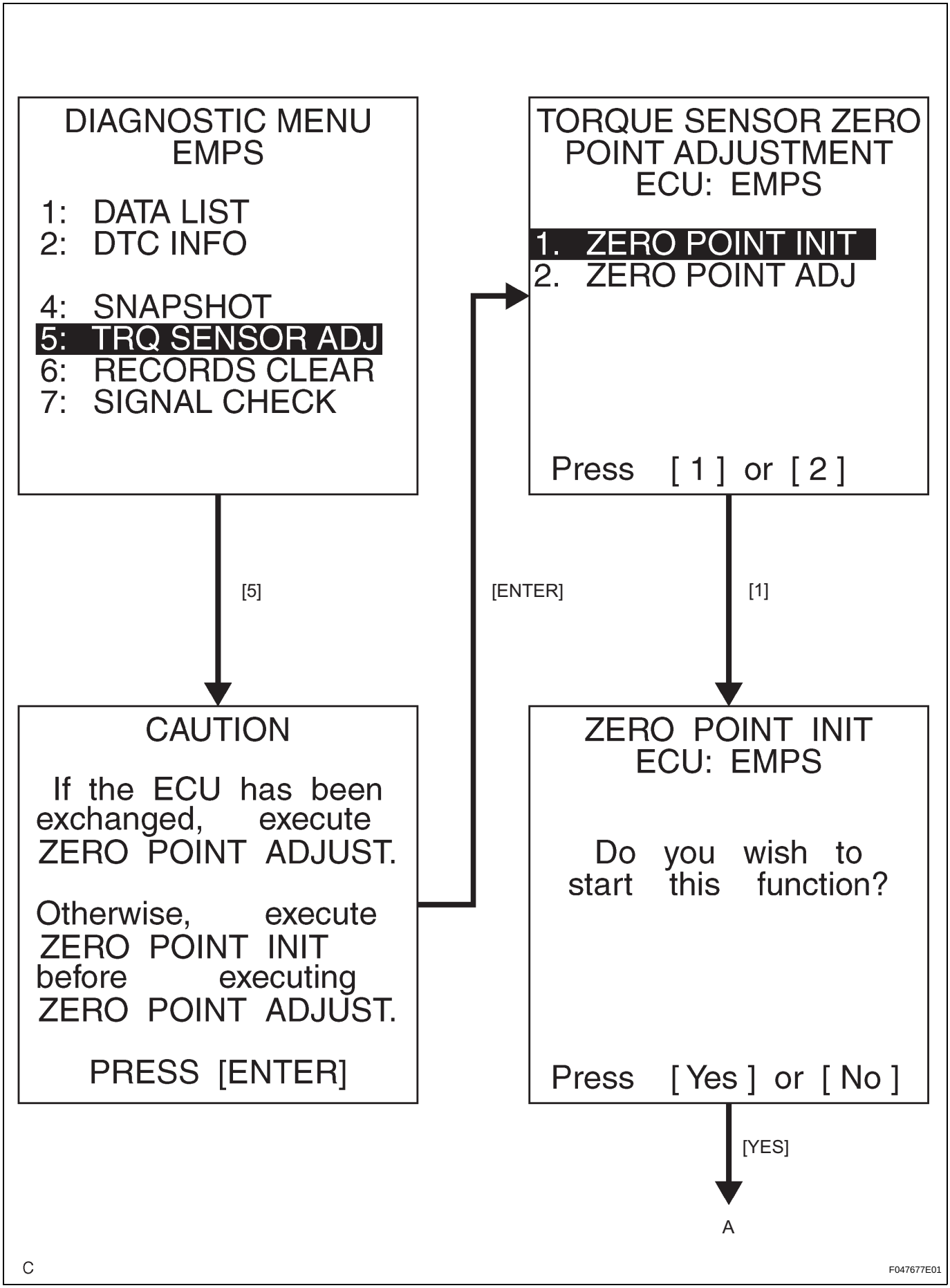
DIAGNOSTIC MENU
EMPS
1: DATA LIST
2: DTC INFO
4: SNAPSHOT
5: TRQ SENSOR ADJ
6: RECORDS CLEAR
7: SIGNAL CHECK
[5]
CAUTION
If the ECU has been exchanged, execute ZERO POINT ADJUST.
Otherwise, execute ZERO POINT INIT before executing ZERO POINT ADJUST.
PRESS [ENTER]
[ENTER]
TORQUE SENSOR ZERO POINT ADJUSTMENT
ECU: EMPS
1. ZERO POINT INIT
2. ZERO POINT ADJ
Press [1] or [2]
[1]
ZERO POINT INIT
ECU: EMPS
Do you wish to start this function?
Press [Yes] or [No]
[YES]
A
C
F047677E01

PS

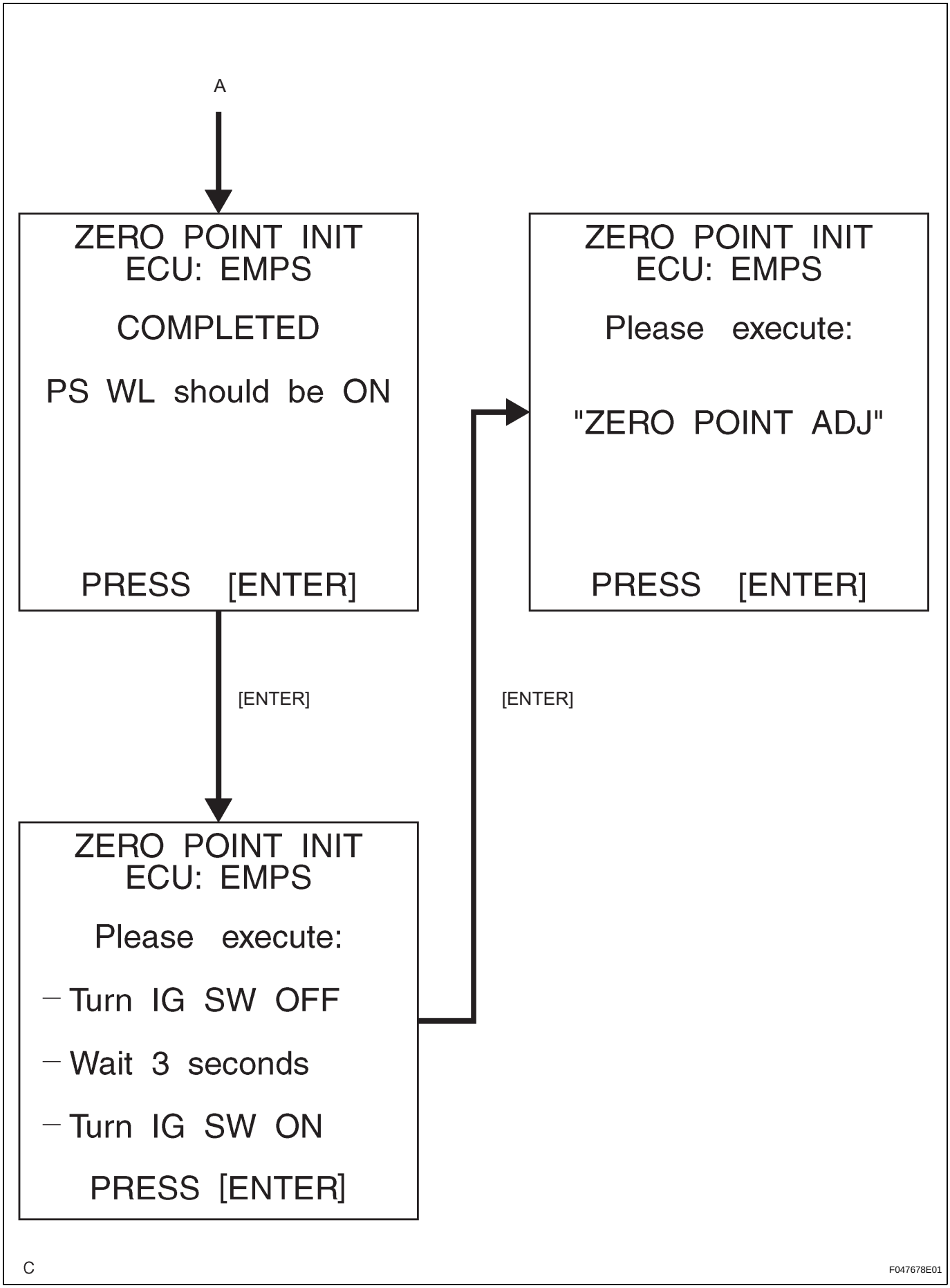
A
ZERO POINT INIT
ECU: EMPS
COMPLETED
PS WL should be ON
PRESS [ENTER]
[ENTER]
ZERO POINT INIT
ECU: EMPS
Please execute:
"ZERO POINT ADJ"
PRESS [ENTER]
[ENTER]
ZERO POINT INIT
ECU: EMPS
Please execute:
– Turn IG SW OFF
– Wait 3 seconds
– Turn IG SW ON
PRESS [ENTER]
C
F047678E01

PS

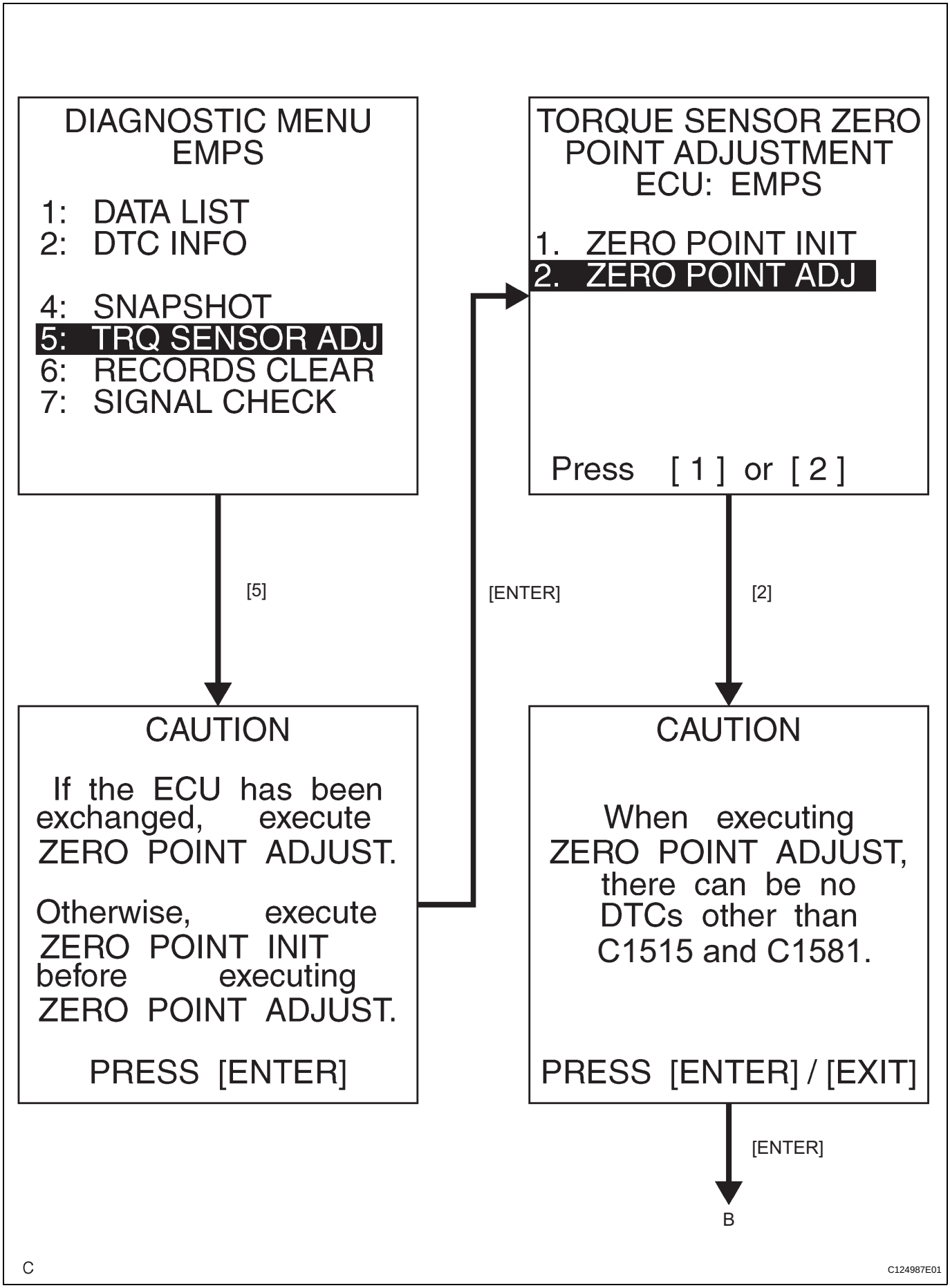
DIAGNOSTIC MENU
EMPS
1: DATA LIST
2: DTC INFO
4: SNAPSHOT
5: TRQ SENSOR ADJ
6: RECORDS CLEAR
7: SIGNAL CHECK
[5]
CAUTION
If the ECU has been exchanged, execute ZERO POINT ADJUST.
Otherwise, execute ZERO POINT INIT before executing ZERO POINT ADJUST.
PRESS [ENTER]
[ENTER]
TORQUE SENSOR ZERO POINT ADJUSTMENT
ECU: EMPS
1. ZERO POINT INIT
2. ZERO POINT ADJ
Press [1] or [2]
[2]
CAUTION
When executing ZERO POINT ADJUST, there can be no DTCs other than C1515 and C1581.
PRESS [ENTER] / [EXIT]
[ENTER]
B
C
C124987E01

PS

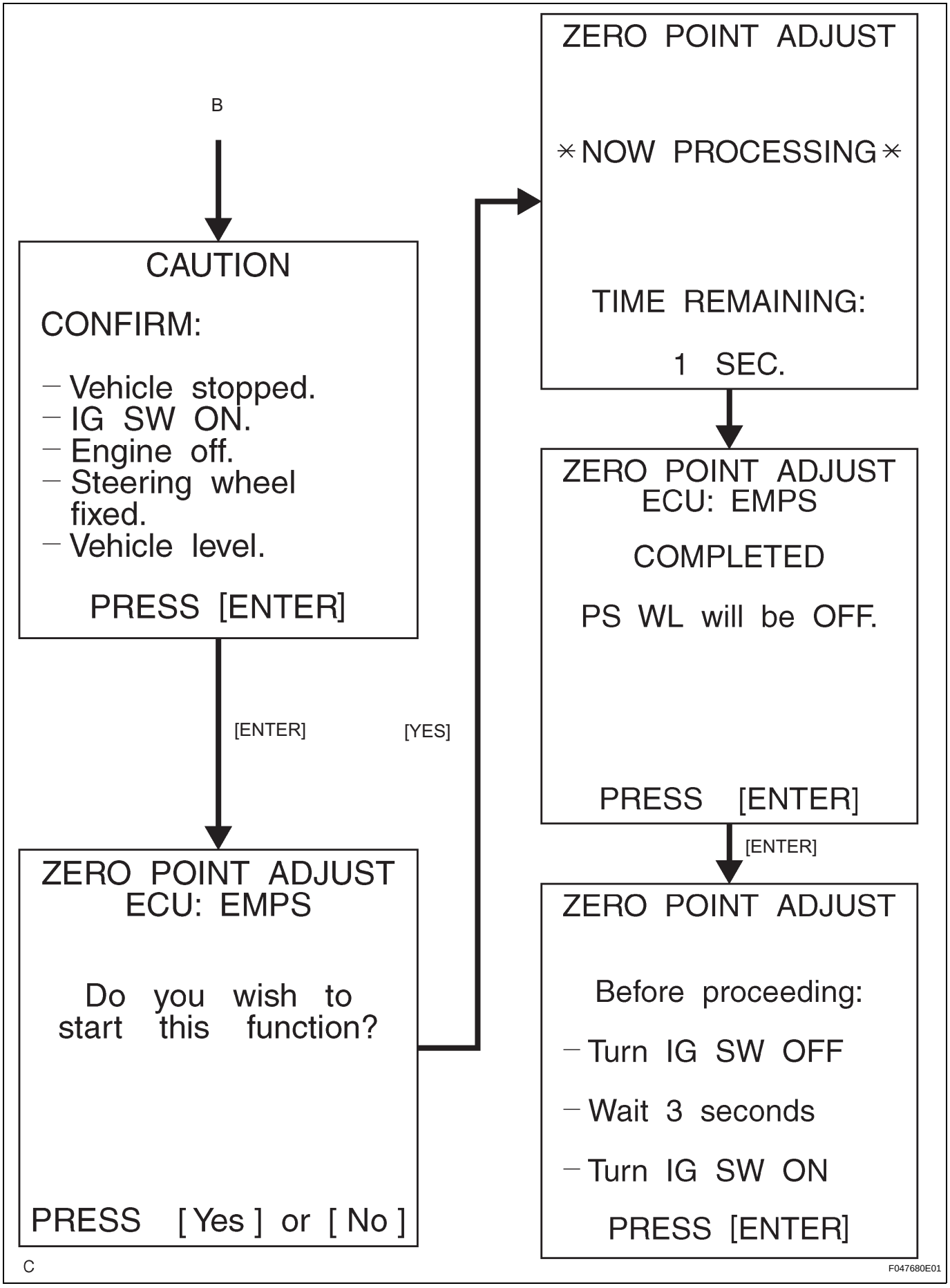
B
CAUTION
CONFIRM:
– Vehicle stopped.
– IG SW ON.
– Engine off.
– Steering wheel fixed.
– Vehicle level.
PRESS [ENTER]
[ENTER]
ZERO POINT ADJUST
ECU: EMPS
Do you wish to start this function?
PRESS [Yes] or [No]
[YES]
ZERO POINT ADJUST
* NOW PROCESSING *
TIME REMAINING:
1 SEC.
ZERO POINT ADJUST
ECU: EMPS
COMPLETED
PS WL will be OFF.
PRESS [ENTER]
[ENTER]
ZERO POINT ADJUST
Before proceeding:
– Turn IG SW OFF
– Wait 3 seconds
– Turn IG SW ON
PRESS [ENTER]
C
F047680E01

PS

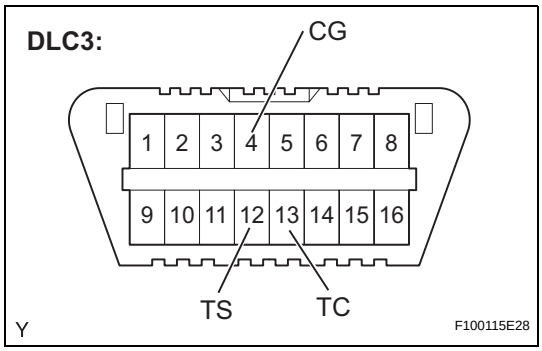

2. TORQUE SENSOR ZERO POINT CALIBRATION (USING SST CHECK WIRE)

(a) Center the steering wheel and align the front wheels straight ahead.

(b) Initialize the torque sensor zero point calibration signal.

HINT:

If the power steering ECU is replaced, initialization is not necessary.

(1) Stop the vehicle and turn the ignition switch off.

(2) Using SST, connect terminals TS and CG of the DLC3.

SST 09843-18040

(3) Using SST, connect terminals TC and CG of the DLC3.

SST 09843-18040

(4) Turn the ignition switch on.

(5) Disconnect and reconnect terminal TC of the DLC3 20 times or more within 20 seconds.

(6) Check that DTC C1515/15 is output.

(c) Perform the torque sensor zero point calibration.

NOTICE:

Do not touch the steering wheel during the calibration.

HINT:

Check whether any DTCs except C1515/15 are output.

(1) Stop the vehicle and turn the ignition switch off.

(2) Using SST, connect terminals TS and CG of the DLC3 and turn the ignition switch on.

SST 09843-18040

(3) Wait for 7 seconds after the P/S warning light comes on.

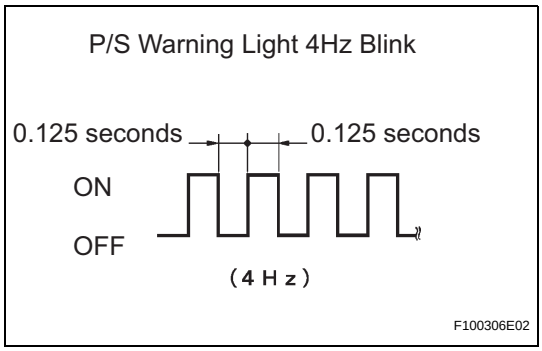

(4) Confirm that the P/S warning light blinks at intervals of 0.125 seconds (4Hz blink).

(5) Disconnect the SST.

SST 09843-18040

(6) Confirm that no DTCs are output.

1. When DTC C1515/15 is output, see page PS-35.
2. When DTC C1516/16 is output, see page PS-36.
3. When DTC C1534/34 is output, see page PS-40.

TEST MODE PROCEDURE

NOTICE:
The torque sensor zero point calibration is performed automatically when the test mode inspection is conducted after the power steering ECU has been replaced with a new one.
HINT:

- Speed sensor signals can be checked easily in test mode.
- Test mode code C1571/71 is stored during the transition to test mode. This code does not indicate a malfunction since the code will be cleared when the ECU determines that the sensor is normal.
- The test mode code is cleared simultaneously when test mode is terminated.

1. TEST MODE START-UP

(a) When using an intelligent tester;
(1) Connect the intelligent tester to the DLC3.
(2) Turn the ignition switch on and enter test mode by following the instructions on the tester screen.

(b) When not using an intelligent tester;
(1) Turn the ignition switch off and connect terminals 12 (TS) and 4 (CG) of the DLC3.
SST 09843-18040
(2) Turn the ignition switch on.

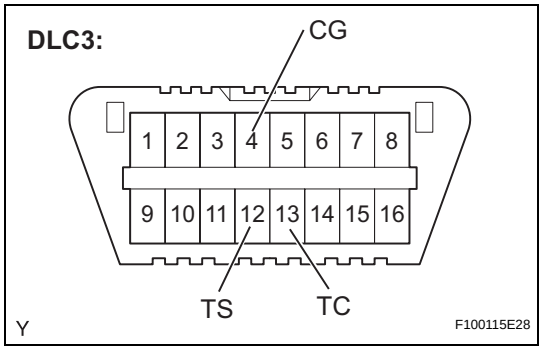

NOTICE:

- **Be sure to connect the correct terminals of the connector, otherwise a malfunction may occur.**
- **If the torque sensor zero point calibration has not been performed, the torque sensor zero point calibration is performed automatically when test mode is entered.**

2. CHECK TEST MODE DISPLAY

(a) The P/S warning light blinks as shown on the left when test mode is entered.
NOTICE:
If the torque sensor zero point calibration has not been performed, the P/S warning comes on until the torque sensor zero point calibration is completed, and shows the test mode blink pattern after the torque sensor zero point calibration is completed.

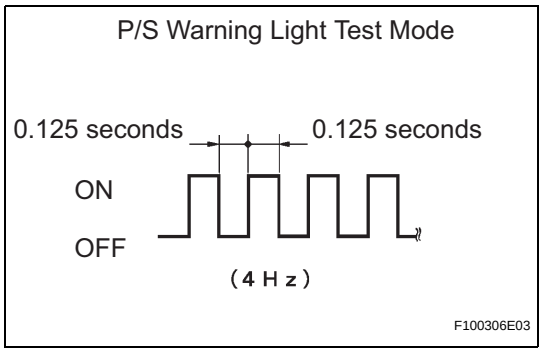

3. CHECK VEHICLE SPEED SIGNAL (W/O ABS)

(a) Drive the vehicle until the vehicle speed reaches 6 mph (10 Km/h) or more.

When system is normal:

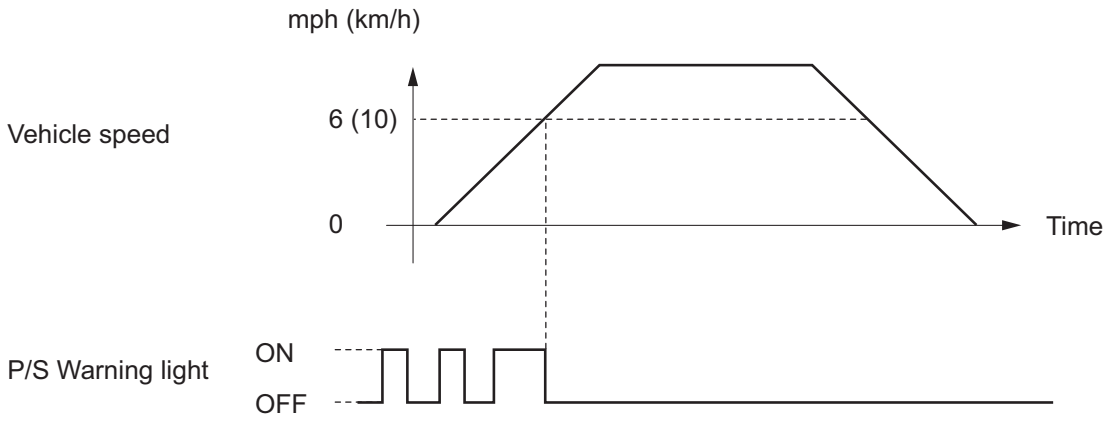

4Hz blink	Light blinks until test mode code C1571/71 cleared. Light goes off at 6 mph (10 km/h) or more.

C117900E01

4. READ TEST MODE CODE

(a) When using an intelligent tester;

(1) Check the DTCs in test mode.

NOTICE:

Test mode code is cleared when test mode is terminated.

(b) When not using an intelligent tester;

(1) Turn the ignition switch off.

(2) Connect terminals 12 (TS) and 4 (CG) of the DLC3, and also terminals 13 (TC) and 4 (CG) of the DLC3.

SST 09843-18040

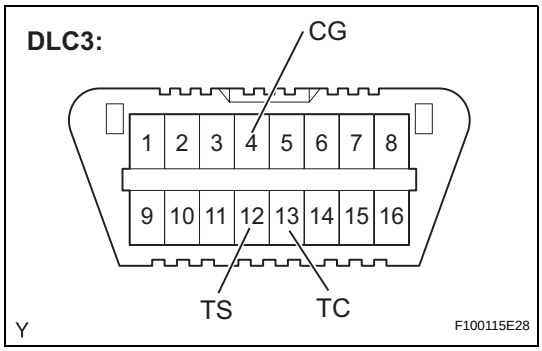

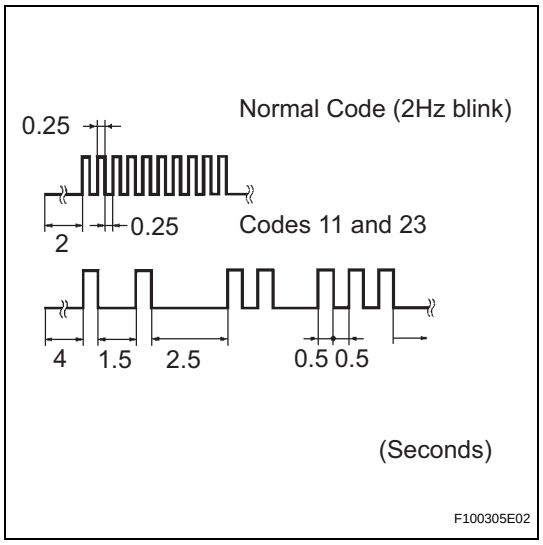

(3) Read the number of times that the P/S warning light on the combination meter blinks.
- To indicate the normal code, the P/S warning light comes on for 0.25 seconds at intervals of 0.25 seconds (2Hz blink).
- When outputting a DTC, the P/S warning light displays it at intervals of 4 seconds. When outputting two or more DTCs, the P/S warning light displays each DTC at intervals of 2.5 seconds, and repeats from the first one 4 seconds after indicating the last one.
- If two or more malfunctions are detected at the same time, DTCs are displayed in ascending numerical order.

5. END OF TEST MODE

(a) When using an intelligent tester;
(1) Return to normal mode by following the instructions on the tester screen.
(2) Turn the ignition switch off and disconnect the tester.

(b) When not using an intelligent tester;
(1) Turn the ignition switch off and disconnect terminals 13 (TC) and 4 (CG), and terminals 12 (TS) and 4 (CG) of the DLC3.
SST 09843-18040
(2) Turn the ignition switch on.

TEST MODE CODE

Code	Detection Item	Conditions to clear code	Trouble areas
C1571/71	Vehicle speed check	Vehicle speed 6 mph (10 Km/h) or more	If code cannot be cleared, any of following areas may malfunction. • Speed sensor • Combination meter • Power steering ECU • Wire harness and connector

PROBLEM SYMPTOMS TABLE

for Hatchback

Symptom	Suspected area	See page
Heavy steering	Front tires (improperly inflated, unevenly worn)	TW-1
	Front wheel alignment (incorrect)	SP-2
	Front suspension (Lower ball joint)	SP-23
	Steering gear assembly	PS-73
	Power steering motor	SR-30
	Battery and power source system	-
	Power source voltage of power steering ECU	IN-26
	Power steering ECU	PS-89
Steering effort differs between turning right and left or uneven	Steering center point (zero point) not recorded completely	PS-12
	Front tires (improperly inflated, unevenly worn)	TW-1
	Front wheel alignment (incorrect)	SP-2
	Front suspension (Lower ball joint)	SP-23
	Steering gear assembly	PS-73
	Torque sensor (built into steering column)	SR-30
	Steering column assembly	SR-30
	Power steering motor	SR-30
	Power steering ECU	PS-89
While driving, steering effort does not change in accordance with vehicle speed or steering wheel does not return properly	Front suspension (Lower ball joint)	SP-23
	Speed sensor (w/ ABS)	BC-14
	Skid control ECU (ABS ECU)	BC-89
	Combination meter (w/o ABS)	ME-145
	Torque sensor (built into steering column)	SR-30
	Power steering motor	SR-30
	Power steering ECU	PS-89
	Controlling CAN communication system	CA-9
Friction occurs when turning steering wheel during low speed driving	Power steering motor	SR-30
	Steering column assembly	SR-30
High-pitched sound (squeaking) occurs when turning steering wheel slowly when vehicle stopped	Power steering motor	SR-30
Steering wheel vibrates and noise occurs when turning steering wheel with vehicle stopped	Power steering motor	SR-30
	Steering column assembly	SR-30
P/S warning always indicated on combination meter	Power source voltage of power steering ECU	IN-26
	Combination meter	ME-145
	Power steering ECU	PS-89

for Sedan

Symptom	Suspected area	See page
Heavy steering	Front tires (improperly inflated, unevenly worn)	TW-1
	Front wheel alignment (incorrect)	SP-2
	Front suspension (Lower ball joint)	SP-23
	Steering gear assembly	PS-63
	Power steering motor	SR-12
	Battery and power source system	-
	Power source voltage of power steering ECU	IN-26
	Power steering ECU	PS-83

Symptom	Suspected area	See page
Steering effort differs between turning right and left or uneven	Steering center point (zero point) not recorded completely	PS-12
	Front tires (improperly inflated, unevenly worn)	TW-1
	Front wheel alignment (incorrect)	SP-2
	Front suspension (Lower ball joint)	SP-23
	Steering gear assembly	PS-63
	Torque sensor (built into steering column)	SR-12
	Steering column assembly	SR-12
	Power steering motor	SR-12
	Power steering ECU	PS-83
While driving, steering effort does not change in accordance with vehicle speed or steering wheel does not return properly	Front suspension (Lower ball joint)	SP-23
	Speed sensor (w/ABS)	BC-14
	Skid control ECU (ABS ECU)	BC-89
	Combination meter (w/o ABS)	ME-138
	Torque sensor (built into steering column)	SR-12
	Power steering motor	SR-12
	Power steering ECU	PS-83
	Controlling CAN communication system	CA-9
Friction occurs when turning steering wheel during low speed driving	Power steering motor	SR-12
	Steering column assembly	SR-12
High-pitched sound (squeaking) occurs when turning steering wheel slowly when vehicle stopped	Power steering motor	SR-12
Steering wheel vibrates and noise occurs when turning steering wheel with vehicle stopped	Power steering motor	SR-12
	Steering column assembly	SR-12
P/S warning always indicated on combination meter	Power source voltage of power steering ECU	IN-26
	Combination meter	ME-138
	Power steering ECU	PS-83

TERMINALS OF ECU

Power Steering ECU:

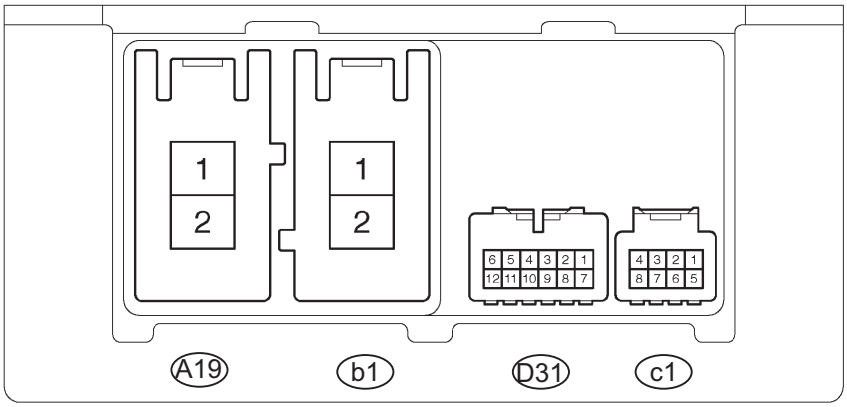

N

F044303E02

Symbols (Terminals No.)	Terminal Description	Condition	Specified Condition
PIG (A19-1) - PGND (A19-2)	EPS fuse	Always	11 to 14 V
PGND (A19-2) - Body ground	Body ground	Always	Below 1 Ω
M1 (b1-1) - PGND (A19-2)	Power steering motor	1. With ignition switch on, turn steering wheel to left 2. With ignition switch on, turn steering wheel to right	1. 11 to 14 V 2. Below 1 V
M2 (b1-2) - PGND (A19-2)	Power steering motor	1. With ignition switch on, turn steering wheel to left 2. With ignition switch on, turn steering wheel to right	1. Below 1 V 2. 11 to 14 V
CANH (D31-1) - CANL (D31-7)	CAN BUS	Ignition switch off	108 to 132 Ω
SIL (D31-2) - PGND (A19-2)	DLC3	Communication established by connecting intelligent tester to DLC3	Pulse generation (See waveform 1)
IG (D31-6) - PGND (A19-2)	ECU-IG fuse	Ignition switch on	11 to 14 V
TS (D31-11) - PGND (A19-2)	DLC3	Ignition switch on	11 to 14 V
SPD* (D31-5) - PGND (A19-2)	Speed signal	Ignition switch on	Pulse generation (See waveform 2)
TRQ1 (c1 -5) - PGND (A19-2)	Torque sensor	With ignition switch on, turn steering wheel to left and right	0.3 to 4.7 V
TRQV (c1-6) - PGND (A19-2)	Torque sensor	Ignition switch on	7.5 to 8.5 V
TRQ2 (c1-7) - PGND (A19-2)	Torque sensor	With ignition switch on, turn steering wheel to left and right	0.3 to 4.7 V
TRQG (c1-8) - PGND (A19-2)	Torque sensor	Always	Below 1 Ω

* Only for vehicles without ABS

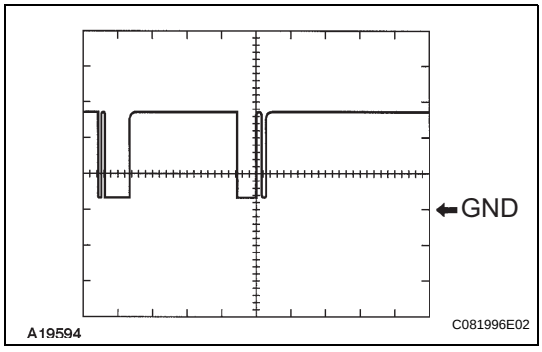

A19594

C081996E02

1. Waveform 1 Reference

Terminal	SIL - Body ground
Tool setting	5 V/DIV, 1 ms/DIV
Condition	Communication established by connecting intelligent tester to DLC3

PS

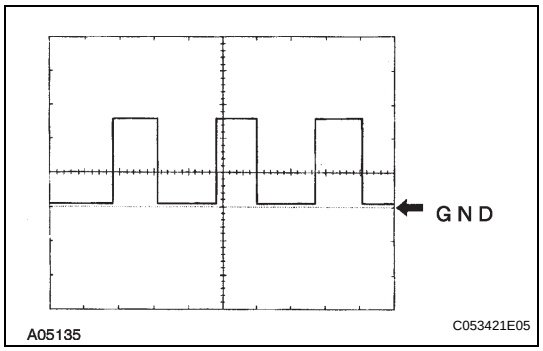

2. Waveform 2
Reference

Terminal	SPD - Body ground
Tool setting	5 V/DIV, 20 ms/DIV
Condition	Vehicle speed approximately 12.4 mph (20 km/h)

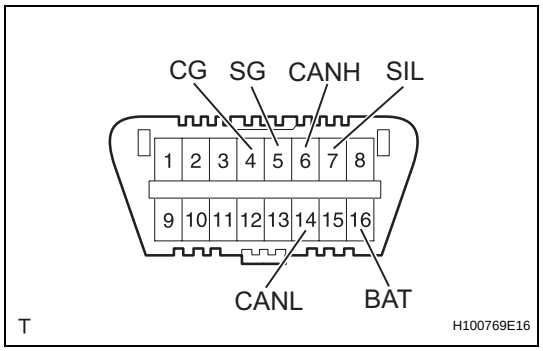

DIAGNOSIS SYSTEM

1. CHECK DLC3

(a) Check the DLC3:
The ECU uses ISO 15765-4 for communication. The terminal arrangement of the DLC3 complies with SAE J1962 and matches the ISO 15765-4 format.

Symbols (Terminal No.)	Terminal Description	Condition	Specified Condition
SIL (7) - SG (5)	Bus "+" line	During transmission	Pulse generation
CG (4) - Body ground	Chassis ground	Always	Below 1 Ω
SG (5) - Body ground	Signal ground	Always	Below 1 Ω
BAT (16) - Body ground	Battery positive	Always	11 to 14 V
CANH (6) - CANL (14)	CAN bus line	Ignition switch OFF*	54 to 69 Ω
CANH (6) - CG (4)	HIGH-level CAN bus line	Ignition switch OFF*	200 Ω or higher
CANL (14) - CG (4)	LOW-level CAN bus line	Ignition switch OFF*	200 Ω or higher
CANH (6) - BAT (16)	HIGH-level CAN bus line	Ignition switch OFF*	6 kΩ or higher
CANL (14) - BAT (16)	LOW-level CAN bus line	Ignition switch OFF*	6 kΩ or higher

NOTICE:

***: Before measuring the resistance, leave the vehicle as is for at least 1 minute and do not operate the ignition switch, any other switches or the doors.**

If the result is not as specified, the DLC3 may have a malfunction. Repair or replace the harness and connector.

HINT:

Connect the cable of the intelligent tester to the CAN VIM, connect the CAN VIM to the DLC3, turn the ignition switch ON and attempt to use the tester. If the display indicates that a communication error has occurred, there is a problem either with the vehicle or with the tester.

- If communication is normal when the tester is connected to another vehicle, inspect the DLC3 of the original vehicle.

- If communication is still not possible when the tester is connected to another vehicle, the problem is probably in the tester itself. Consult the Service Department listed in the tester's instruction manual.

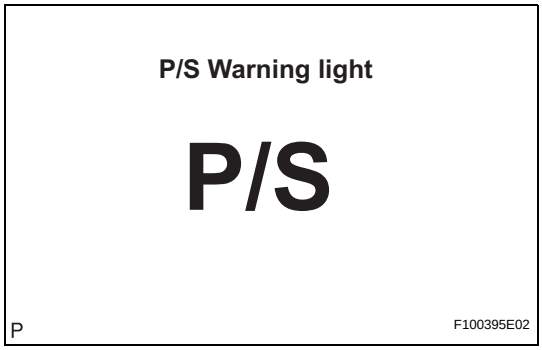

2. WARNING LIGHT

(a) When a problem occurs in the electronic power steering system, the P/S warning light on the combination meter comes on to inform the driver of the problem.

DTC CHECK / CLEAR

1. CHECK DTC

(a) When using an intelligent tester;

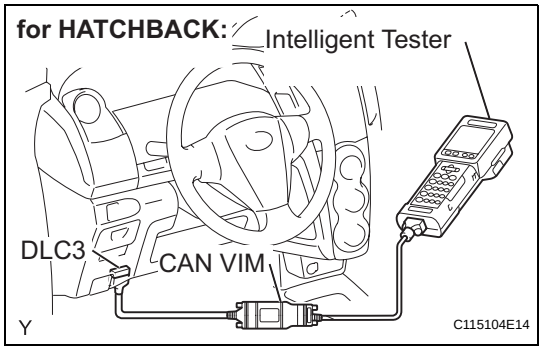

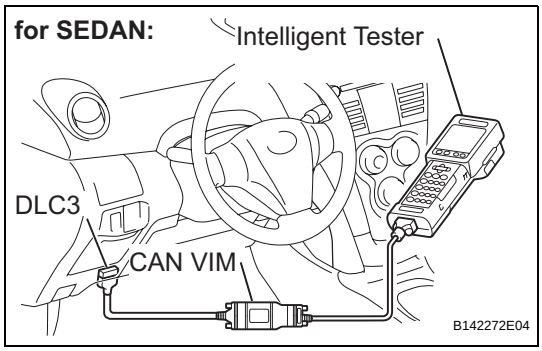

(1) Connect the intelligent tester to the DLC3.
(2) Turn the ignition switch on and turn the tester on.
(3) Read the DTCs by following the prompts on the intelligent tester.
HINT:
Refer to the intelligent tester operator's manual for further details.

(b) When not using an intelligent tester;

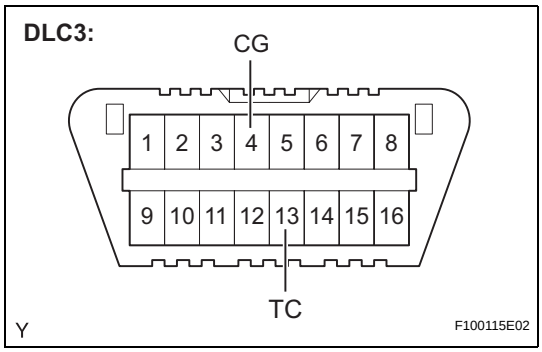

(1) Using SST, connect terminals 13 (TC) and 4 (CG) of the DLC3.
SST 09843-18040
(2) Turn the ignition switch on.

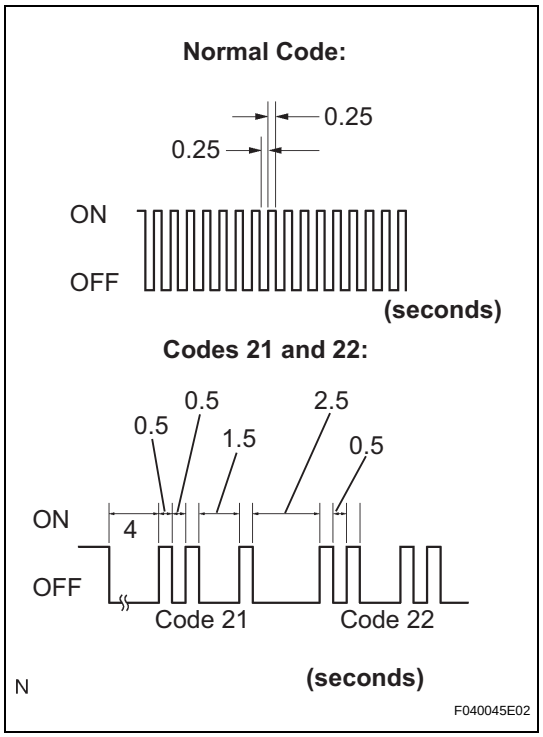

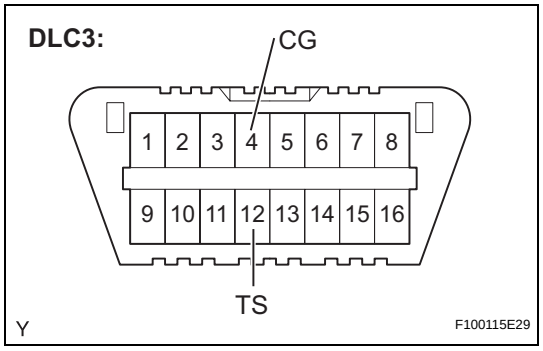

(3) Read and write down any DTCs indicated by the P/S warning light on the combination meter. Refer to the chart on the left for examples of a normal code and DTCs 21 and 22.
HINT:
- If the P/S warning light does not blink to display any DTCs set or the normal code, inspect the circuit shown in the table below.

Trouble Area	See Page
EPS warning light circuit	PS-53

- If two or more malfunctions are detected simultaneously, DTCs will be displayed in ascending numerical order.

(4) Refer to the Diagnostic Trouble Code Chart (See page PS-29) for DTC information.

2. CLEAR DTC

(a) When using an intelligent tester;
(1) Connect the intelligent tester to the DLC3.
(2) Turn the ignition switch on and turn the tester on.
(3) Clear the DTCs by following the prompts on the intelligent tester.
(4) Turn the ignition switch off.
(5) Disconnect the intelligent tester from the DLC3.

(b) When not using an intelligent tester;
(1) Using SST, connect terminals 12 (TS) and 4 (CG) of the DLC3.
SST 09843-18040
(2) Turn the ignition switch on.
(3) Disconnect the SST check wire from terminal 4 (CG) and reconnect it, and repeat this procedure 4 times or more within 8 seconds.
(4) Check that the P/S warning light blinks a code to indicate normality.
(5) Turn the ignition switch off.
(6) Remove the SST from the DLC3.

FAIL-SAFE CHART

When a problem occurs in the electronic power steering system, the P/S warning light on the combination meter comes on, and the ECU stops the steering power assist, maintains the amount of power assist constant, or reduces the amount of power assist to protect the system.

DTC No.	Malfunction	Fail-safe
C1511/11 C1512/12 C1513/13 C1514/14	Torque sensor malfunction	Assist force restricted
C1517/17	Torque sensor malfunction	Power assist stopped
C1524/24	Motor malfunction	Power assist stopped
C1531/31 C1532/32	Power steering ECU malfunction	Power assist stopped
C1533/33	Temperature sensor malfunction in power steering ECU	Assist force restricted
C1534/34	EEPROM abnormal	Assist force restricted
C1535/35	Steering wheel location data error	Power assist stopped
C1541/41 C1542/42	Speed sensor malfunction	Amount of power assist remains constant at speed of 43 mph (70 Km/h)
C1551/51	IG power source voltage error	Assist force restricted
C1552/52	PIG power source voltage error	Assist force restricted
C1553/53	Overvoltage at IG and PIG terminals	Assist force restricted
C1554/54	Power source relay malfunction	Power assist stopped
C1555/55	Motor relay malfunction	Power assist stopped
U0073	CAN bus malfunction	-
U0105	ECM communication error	Amount of power assist remains constant at speed of 43 mph (70 Km/h)
U0121	ABS ECU communication error	Amount of power assist remains constant at speed of 43 mph (70 Km/h)
-	Extremely high temperature in ECU	Assist force restricted until normal ECU temperature recovers
-	Power source voltage drop	Assist force suspended until voltage recovers

HINT:

The amount of power assist may be decreased to prevent the motor and ECUs from overheating if the steering wheel is continuously turned when the vehicle is either stopped or driven at a low speed, or if the steering wheel is kept at either full lock position for a long time. In such cases, the amount of power assist returns to normal if the steering wheel is not turned for approximately 10 minutes with the engine idling.

DATA LIST / ACTIVE TEST

1. DATA LIST

(a) Connect an intelligent tester to the DLC3.
(b) Turn the ignition switch on and turn the tester on.
(c) Operate the intelligent tester according to the prompts on the tester and select DATA LIST.

Item	Item Description	Inspection Condition	Reference value
TRQ1	Torque sensor 1 output value: Minimum: 0 V, Maximum: 5 V	1. Steering wheel not turned (without load) 2. Steering wheel turned to right with vehicle stopped 3. Steering wheel turned to left with vehicle stopped	1. 2.3 to 2.7 V 2. 2.5 to 4.7 V 3. 0.3 to 2.5 V
TRQ2	Torque sensor 2 output value: Minimum: 0 V, Maximum: 5 V	1. Steering wheel not turned (without load) 2. Steering wheel turned to right with vehicle stopped 3. Steering wheel turned to left with vehicle stopped	1. 2.3 to 2.7 V 2. 2.5 to 4.7 V 3. 0.3 to 2.5 V
TRQ3	Torque value for assist control: Minimum: 0 V, Maximum: 5 V	1. Steering wheel not turned (without load) 2. Steering wheel turned to right with vehicle stopped 3. Steering wheel turned to left with vehicle stopped	1. 2.3 to 2.7 V 2. 2.5 to 4.7 V 3. 0.3 to 2.5 V
SPD	Vehicle speed from meter: Minimum: 0 mph (km/h), Maximum: 158.5 mph (255 km/h)	1. Vehicle stopped 2. Vehicle driven at constant speed	1. 0 mph (km/h) 2. No significant fluctuation
MOTOR ACTUAL	Current to motor: Minimum: -128 A, Maximum: 127 A	-	-
COMMAND VALUE	Requested current to motor: Minimum: -128 A, Maximum: 127 A	-	-
THERMISTOR TEMP	ECU substrate temperature: Minimum: -50 °C, Maximum: 205 °C	Ignition switch on	-
PIG SUPPLY	Power source voltage to activate motor: Minimum: 0 V, Maximum: 25.5 V	Power steering in operation	11 to 14 V
IG SUPPLY	ECU power source voltage: Minimum: 0 V, Maximum: 25.5 V	-	11 to 14 V
TRQ1 ZERO VAL	Zero point value of torque sensor 1: Minimum: 0 V, Maximum: 5 V	Steering wheel not turned (without load)	2.3 to 2.7 V
TRQ2 ZERO VAL	Zero point value of torque sensor 2: Minimum: 0 V, Maximum: 5 V	Steering wheel not turned (without load)	2.3 to 2.7 V
TRQ3 ZERO VAL	Zero point value of torque sensor for assist control: Minimum: 0 V, Maximum: 5 V	Steering wheel not turned (without load)	2.3 to 2.7 V
MOTOR TERMINAL(+)	Motor terminal M1 voltage: Minimum: 0 V, Maximum: 25.5 V	1. Steering wheel turned to right 2. Steering wheel turned to left	1. Below 1 V 2. 11 to 14 V
MOTOR TERMINAL(-)	Motor terminal M2 voltage: Minimum: 0 V, Maximum: 25.5 V	1. Steering wheel turned to right 2. Steering wheel turned to left	1. 11 to 14 V 2. Below 1 V
MTR OVERHEAT	Continuous overheat prevention control record: REC/UNREC	-	-
MTR LOW POWER	PIG power source voltage drop record: REC/UNREC	-	-

Item	Item Description	Inspection Condition	Reference value
CONTROL MODE	Codes indicating DTC detection timing during ECU control displayed in hexadecimal	-	-
IG ON/OFF TIMES	Number of times ignition switch turned on after DTC detection: Minimum: 0 time, Maximum: 255 times	-	-
# CODE	Number of detected DTCs when freeze frame data stored: Minimum: 0 time, Maximum: 255 times	-	-
ECU ID	ECU identification information	-	-
TEST MODE STAT	Selected mode: NORMAL MODE / TEST MODE	-	-

DIAGNOSTIC TROUBLE CODE CHART

HINT:

- If any DTCs are displayed during the DTC check, inspect the circuit listed for those DTCs. For details of each DTC, refer to the page indicated in the DTC chart.
- Test mode code C1571/71 is stored during the transition to test mode. This code does not indicate a malfunction since the code will be cleared when the ECU determines that the sensor is normal. The test mode code is cleared simultaneously when test mode is terminated.
- The P/S warning light remains illuminated during test mode and starts blinking when the speed sensor is determined to be normal.

DTC No.	Detection Item	Trouble Areas	Normal Return	P/S Warning Light	See page
C1511/11	Torque Sensor 1 Malfunction	• Steering column assembly (Torque sensor) • Power steering ECU	Ignition switch on again	○	PS-32
C1512/12	Torque Sensor Circuit Malfunction	• Steering column assembly (Torque sensor) • Power steering ECU	Ignition switch on again	○	PS-32
C1513/13	Torque Sensor Circuit Malfunction	• Steering column assembly (Torque sensor) • Power steeing ECU	Ignition switch on again	○	PS-32
C1514/14	Torque Sensor Power Source Circuit Malfunction	• Steering column assembly (Torque sensor) • Power steering ECU	Ignition switch on again	○	PS-32
C1515/15	Torque Sensor Zero Point Adjustment is not Initialized	• Torque sensor zero point calibration not performed • Steering column assembly	After calibrating torque sensor zero point	○	PS-35
C1516/16	Torque Sensor Zero Point Adjustment Incomplete	• Torque sensor zero point calibration failure • Steering column assembly	After calibrating torque sensor zero point normally	○	PS-36
C1517/17	Torque Sensor Hold Malfunction	• Steering column assembly (Torque sensor) • Power steering ECU	Ignition switch on again	○	PS-32
C1524/24	Motor Circuit Malfunction	• Steering column assembly • Power steering ECU	Ignition switch on again	○	PS-37
C1531/31	EPS ECU Circuit Malfunction	• Power steering ECU	Ignition switch on again	○	PS-40
C1532/32	EPS ECU Circuit Malfunction	• Power steering ECU	Ignition switch on again	○	PS-40
C1533/33	EPS ECU Circuit Malfunction	• Power steering ECU	Ignition switch on again	○	PS-40

DTC No.	Detection Item	Trouble Areas	Normal Return	P/S Warning Light	See page
C1534/34	EPS ECU Circuit Malfunction	• Power steering ECU	Ignition switch on again	-	PS-40
C1535/35	Steering Wheel Location Data Error	• Power steering ECU	-	O	PS-40
C1541/41 *1	Speed Sensor Malfunction	• Speed sensor • Speed sensor circuit • Combination meter • Power steering ECU	Ignition switch on again	O	PS-41
C1542/42 *1	Speed Sensor Malfunction	• Speed sensor • Speed sensor circuit • Combination meter • Power steering ECU	Return to normal	X	PS-41
C1551/51	IG Power Source Circuit Malfunction	• ECU-IG fuse • IG power source circuit • Power steering ECU	Ignition switch on again and after normal confirmation	O	PS-44
C1552/52	PIG Power Source Circuit	• EPS fuse • PIG power source circuit • Power steering ECU	Ignition switch on again and after normal confirmation	O	PS-46
C1553/53	When Resetting Voltage, Vehicle is Being Driven	• IG and PIG power source circuit • Power steering ECU	Ignition switch on again and after normal confirmation	O	PS-46
C1554/54	EPS Relay Circuit	• EPS fuse • PIG power source circuit • Power steering ECU	Ignition switch on again	O	PS-46
C1555/55	EPS Motor Relay Circuit	• Power steering ECU	Ignition switch on again	O	PS-46
C1571/71 *1	Speed Sensor Malfunction (Test Mode DTC)	• Speed sensor • Speed sensor circuit • Combination meter • Power steering ECU	-	-	PS-41
C1581/81	Assist Map Un-Writing	• Power steeering ECU	-	O	PS-49
U0073	Control Module Communication Bus OFF	• CAN communication system	Ignition switch on again and after normal confirmation	O	PS-50
U0105	Lost Communication with ECM	• CAN communication system • ECM	Ignition switch on again and after normal confirmation	O	PS-50
U0121 *2	Lost Communication with Anti-lock Brake System (ABS) Control Module	• CAN communication system • ABS ECU	Ignition switch on again and after notmal confirmation	O	PS-50

(Warning light) O---turn on, X---turn off (Normal reset)
*1---w/o ABS, *2---w/ ABS

DTC	C1511/11	Torque Sensor 1 Malfunction

DTC	C1512/12	Torque Sensor Circuit Malfunction

DTC	C1513/13	Torque Sensor Circuit Malfunction

DTC	C1514/14	Torque Sensor Power Source Circuit Malfunction

DTC	C1517/17	Torque Sensor Hold Malfunction

DESCRIPTION

The torque sensor converts the rotation torque input from the steering wheel into electric signals and sends them to the power steering ECU.

DTC No.	Detection Item	Trouble Area
C1511/11	Torque sensor (TRQ1) signal error or stop	• Torque sensor (built into steering column assembly) • Power steering ECU
C1512/12	Torque sensor (TRQ2) signal error or stop	
C1513/13	Deviation between torque sensor TRQ1 and TRQ2 exceeds specified value	
C1514/14	Torque sensor power source voltage error	
C1517/17	Temporary control due to malfunction related to torque sensor continues for long time	

WIRING DIAGRAM

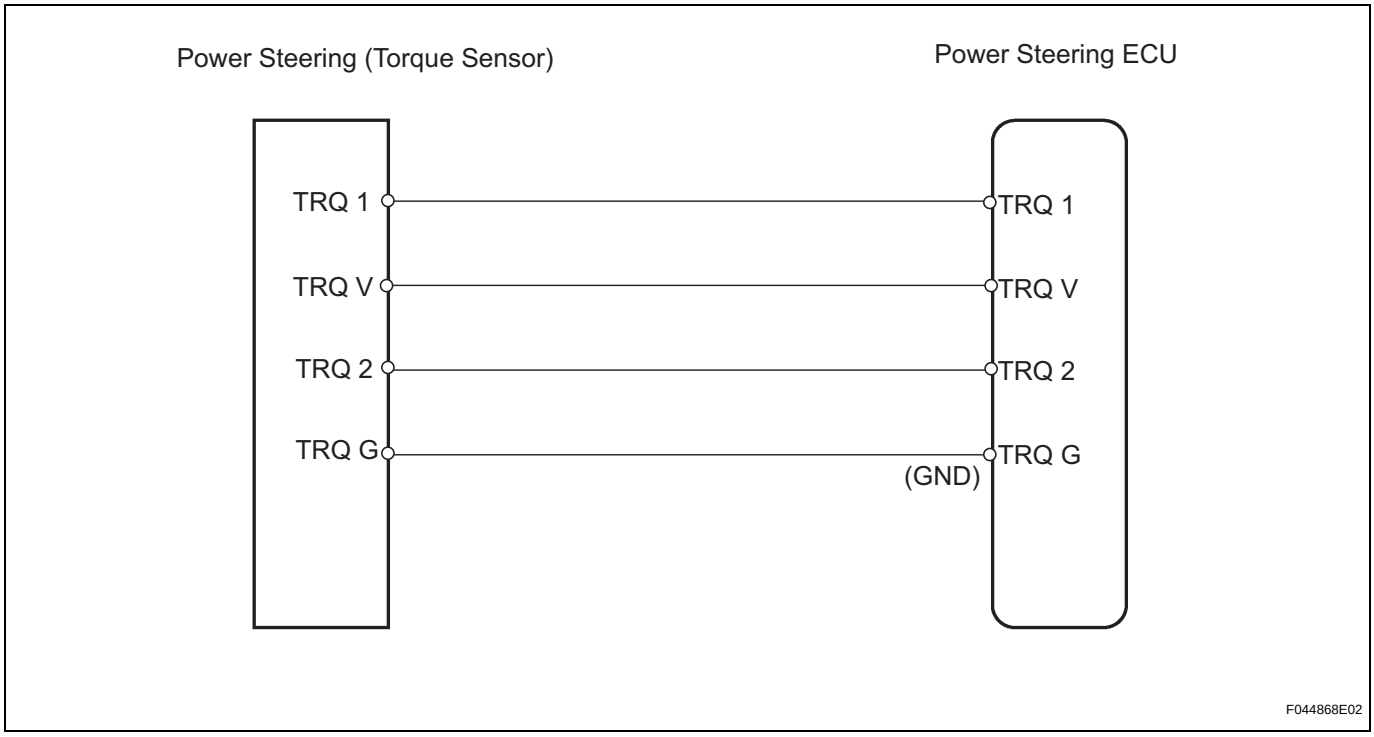

INSPECTION PROCEDURE

1 READ VALUE OF DATA LIST (TRQ1, TRQ2)

(a) Connect the intelligent tester to DLC3.
(b) Turn the ignition switch on and turn the tester on.
(c) Select the items [TRQ1] and [TRQ2] in the DATA LIST.
(d) Measure the voltage.

Item	Item Description	Inspection Condition	Reference Value
TRQ1	Torque sensor 1 output value Minimum: 0 V, Maximum: 5 V	1. Steering wheel not turned (without load) 2. Turning steering wheel to right with vehicle stopped 3. Turning steering wheel to left with vehicle stopped	1. 2.3 to 2.7 V 2. 2.5 to 4.7 V 3. 0.3 to 2.5 V
TRQ2	Torque sensor 2 output value Minimum: 0 V, Maximum: 5 V		

(e) Check the difference in the values between [TRQ1] and [TRQ2].

OK:

The voltage difference is below 0.3 V.

OK → **CHECK INTERMITTENT PROBLEMS**

NG

2 INSPECT POWER STEERING ECU (OUTPUT)

Power Steering ECU:

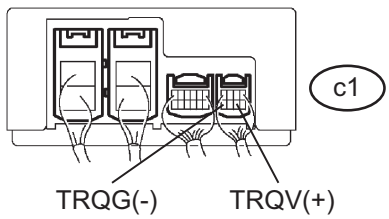

G21778

(a) Turn the ignition switch on.
(b) Measure the voltage.

Standard voltage

Tester Connection	Condition	Specified condition
TRQV (c1-6) - TRQG (c1-8)	Ignition switch on	7.5 to 8.5 V

NG → **REPLACE POWER STEERING ECU**

OK

3 INSPECT STEERING COLUMN ASSEMBLY (TORQUE SENSOR)

Power Steering ECU:

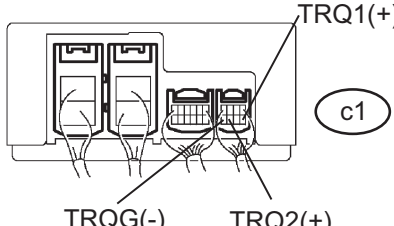

G21778

(a) Turn the ignition switch on.
(b) Measure the voltage.

Standard voltage

Tester Connection	Condition (Steering Position)	Specified Condition
TRQ1 (c1-5) - TRQG (c1-8)	Center position	2.3 to 2.7 V
TRQ2 (c1-7) - TRQG (c1-8)	Center position	2.3 to 2.7 V
TRQ1 (c1-5) - TRQG (c1-8)	Turned to right	2.5 to 4.7 V

PS

Tester Connection	Condition (Steering Position)	Specified Condition
TRQ2 (c1-7) - TRQG (c1-8)	Turned to right	2.5 to 4.7 V
TRQ1 (c1-5) - TRQG (c1-8)	Turned to left	0.3 to 2.5 V
TRQ2 (c1-7) - TRQG (c1-8)	Turned to left	0.3 to 2.5 V

NG → **REPLACE STEERING COLUMN ASSEMBLY**

OK

REPLACE POWER STEERING ECU

DTC	C1515/15	Torque Sensor Zero Point Adjustment is not Initialized

DESCRIPTION

This DTC does not indicate a malfunction. The power steering ECU outputs this DTC when it determines that the torque sensor zero point calibration has not been performed.

DTC No.	DTC Detection Condition	Trouble Area
C1515/15	Torque sensor zero point calibration not performed.	• Torque sensor zero point calibration • Steering column assembly

INSPECTION PROCEDURE

1	PERFORM ZERO POINT CALIBRATION (TORQUE SENSOR)

NEXT

2	CONFIRM DTC

(a) Check for DTCs (See page PS-25).

Result

DTC still output even after performing torque sensor zero point calibration 3 times.	A
DTC still output even after performing torque sensor zero point calibration once or twice.	B
Normal system code output.	C

HINT:
The steering column assembly must be replaced if C1515/15 is still output even after the torque sensor zero point calibration is performed 3 times.

B	Go to step 1
C	END

A

REPLACE STEERING COLUMN ASSEMBLY

DTC	C1516/16	Torque Sensor Zero Point Adjustment Incomplete

DESCRIPTION

This DTC does not indicate a malfunction. The power steering ECU outputs this DTC when it determines that the torque sensor zero point calibration has not been completed successfully.

DTC No.	DTC Detection Condition	Trouble area
C1516/16	Torque sensor zero point calibration not completed successfully.	• Torque sensor zero point calibration failure • Steering column assembly

INSPECTION PROCEDURE

1	CLEAR DTC

NEXT

2	PERFORM INITIALIZATION (TORQUE SENSOR ZERO POINT)

NEXT

3	PERFORM ZERO POINT CALIBRATION (TORQUE SENSOR)

NEXT

4	CONFIRM DTC

(a) Check for DTCs (See page PS-25).

Result

DTC still output even after performing torque sensor zero point calibration 3 times.	A
DTC still output even after performing torque sensor zero point calibration once or twice.	B
Normal system code output.	C

HINT:
The steering column assembly must be replaced if C1516/16 is still output even after the torque sensor zero point calibration is performed 3 times.

B → Go to step 1

C → END

A

REPLACE STEERING COLUMN ASSEMBLY

PS

DTC	C1524/24	Motor Circuit Malfunction

DESCRIPTION

The power steering ECU supplies the current to the power steering motor through the motor circuit.

DTC No.	DTC Detection Condition	Trouble Area
C1524/24	Short (or open) in motor circuit or abnormal voltage or current in motor circuit.	• Steering column assembly • Power steering ECU

WIRING DIAGRAM

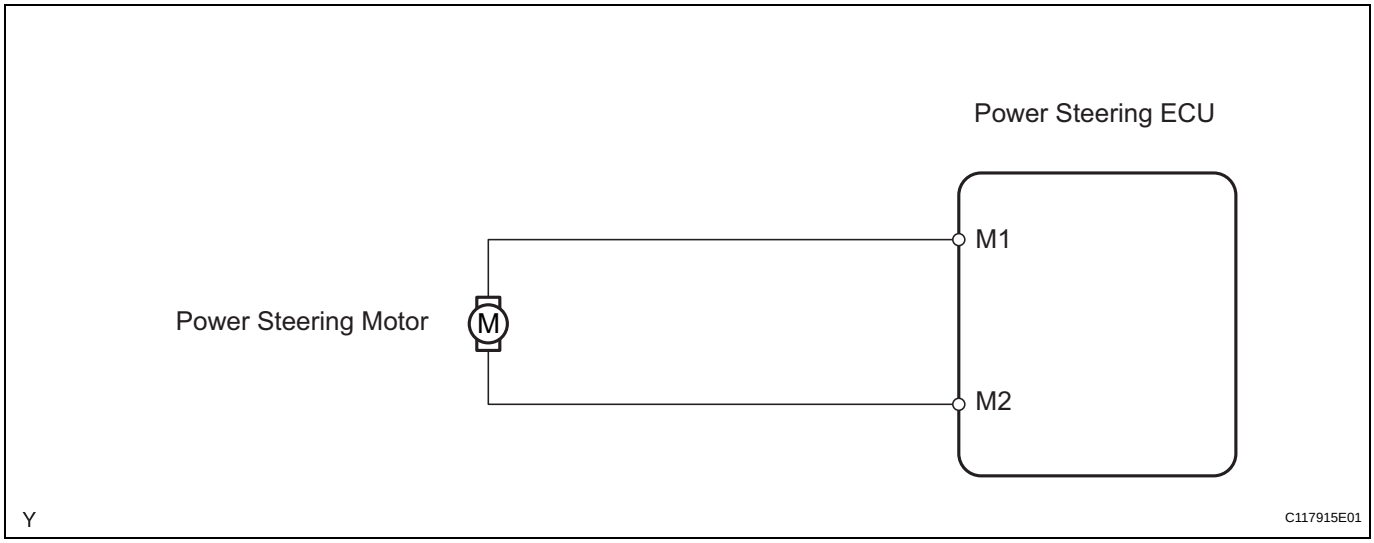

INSPECTION PROCEDURE

1	READ VALUE OF DATA LIST (MOTOR ACTUAL CURRENT)

(a) Connect the intelligent tester to the DLC3.
(b) Turn the ignition switch on and turn the tester on.
(c) Select the items [MOTOR ACTUAL CURRENT] and [COMMAND VALUE] in the DATA LIST and read the value displayed on the intelligent tester.

Standard current

Data List Item	Steering Position (Left Turned)	Steering Position (Center)	Steering Position (Right Turned)
MOTOR ACTUAL	10 A to 55 A	-1 A to +1 A	-55 A to -10 A
COMMAND VALUE	55 A	0 A	-55 A

HINT:
The current changes when steering wheel is turned.

OK → CHECK INTERMITTENT PROBLEMS

NG

2 INSPECT POWER STEERING ECU

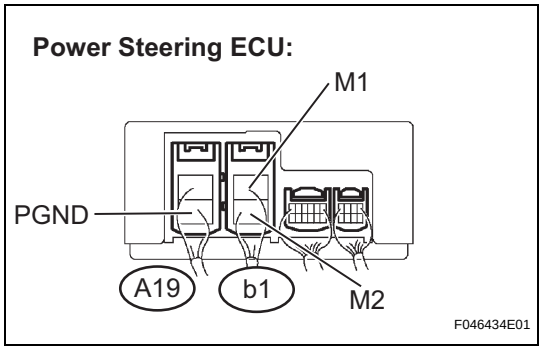

(a) Turn the ignition switch on.
(b) Measure the voltage.

Standard voltage

Tester Connection	Condition (Steering Position)	Specified Condition
M1 (b1-1) - PGND (A19-2)	Turned to right	Below 1 V
M1 (b1-1) - PGND (A19-2)	Turned to left	11 to 14 V
M2 (b1-2) - PGND (A19-2)	Turned to right	11 to 14 V
M2 (b1-2) - PGND (A19-2)	Turned to left	Below 1 V

OK → Go to step 4

NG

3 CHECK HARNESS AND CONNECTOR (POWER STEERING ECU - BODY GROUND)

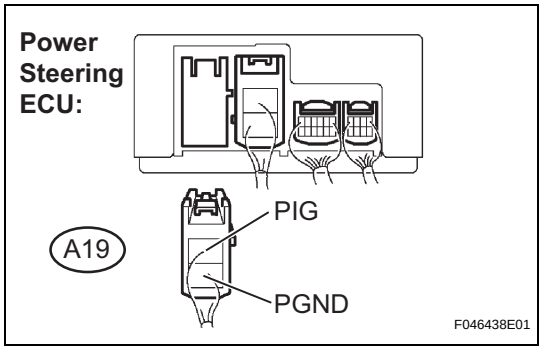

(a) Disconnect the connector from the power steering ECU.
(b) Measure the resistance and the voltage.

Standard

Tester Connection	Condition	Specified Condition
PGND (A19-2) - Body ground	Always	Below 1 Ω
PIG (A19-1) - Body ground	Ignition switch on.	11 to 14 V

NG → REPAIR OR REPLACE HARNESS OR CONNECTOR

OK

4 INSPECT STEERING COLUMN ASSEMBLY (POWER STEERING MOTOR)

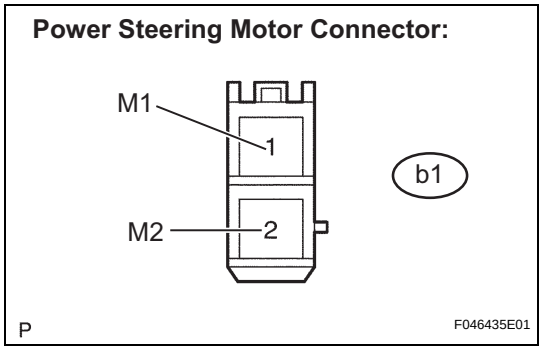

(a) Disconnect the connector from the power steering ECU.
(b) Measure the resistance.

Standard resistance

Tester Connection	Condition	Specified Condition
M1 (b1-1) - M2 (b1-2)	Always	0.08 to 0.15 Ω
M1 (b1-1) - Body ground	Always	1 MΩ or higher
M2 (b1-2) - Body ground	Always	1 MΩ or higher

NG → REPLACE STEERING COLUMN ASSEMBLY

PS

OK

REPLACE POWER STEERING ECU

DTC	C1531/31	EPS ECU Circuit Malfunction

DTC	C1532/32	EPS ECU Circuit Malfunction

DTC	C1533/33	EPS ECU Circuit Malfunction

DTC	C1534/34	EPS ECU Circuit Malfunction

DTC	C1535/35	Steering Wheel Location Data Error

DESCRIPTION

The fail-safe function operates to stop power assist when DTCs indicating ECU malfunctions are output. However, the power assist operation continues when DTC C1534/34 is output because it indicates an EEPROM error in the ECU.

DTC No.	DTC Detection Condition	Trouble Area
C1531/31	ECU internal malfunction (CPU malfunction)	Power steering ECU
C1532/32	ECU internal malfunction (Peripheral circuit malfunction)	
C1533/33	ECU internal malfunction (Substrate temperature sensor malfunction)	
C1534/34	ECU internal malfunction (EEPROM error)	
C1535/35	Steering wheel location data error (LHD or RHD)	

INSPECTION PROCEDURE

1	CONFIRM DTC

(a) Check for DTCs.

OK:

DTCs other than C1531/31, C1532/32, C1533/33, C1534/34 and C1535/35 are not output.

NG → **REPAIR CIRCUITS INDICATED BY OUTPUT DTCS**

OK

REPLACE POWER STEERING ECU

DTC	C1541/41	Speed Sensor Malfunction

DTC	C1542/42	Speed Sensor Malfunction

DTC	C1571/71	Speed Sensor Malfunction (Test Mode DTC)

DESCRIPTION

The power steering ECU controls the assisting power in accordance with the vehicle speed signals from the combination meter.

HINT:

These DTCs are only for vehicles without a skid control ECU (ABS ECU).

When the sensor is normal, a pulse signal (43 Hz at 37 mph [60 km/h]) that alternates between 0 V and 5 V is transmitted to the ECU.

DTC No.	Detection Item	Trouble Area
C1541/41	Speed sensor malfunction.	• Speed sensor • Speed sensor circuit • Combination meter • Power steering ECU
C1542/42		
C1571/71	Speed sensor malfunction (Test mode).	

WIRING DIAGRAM

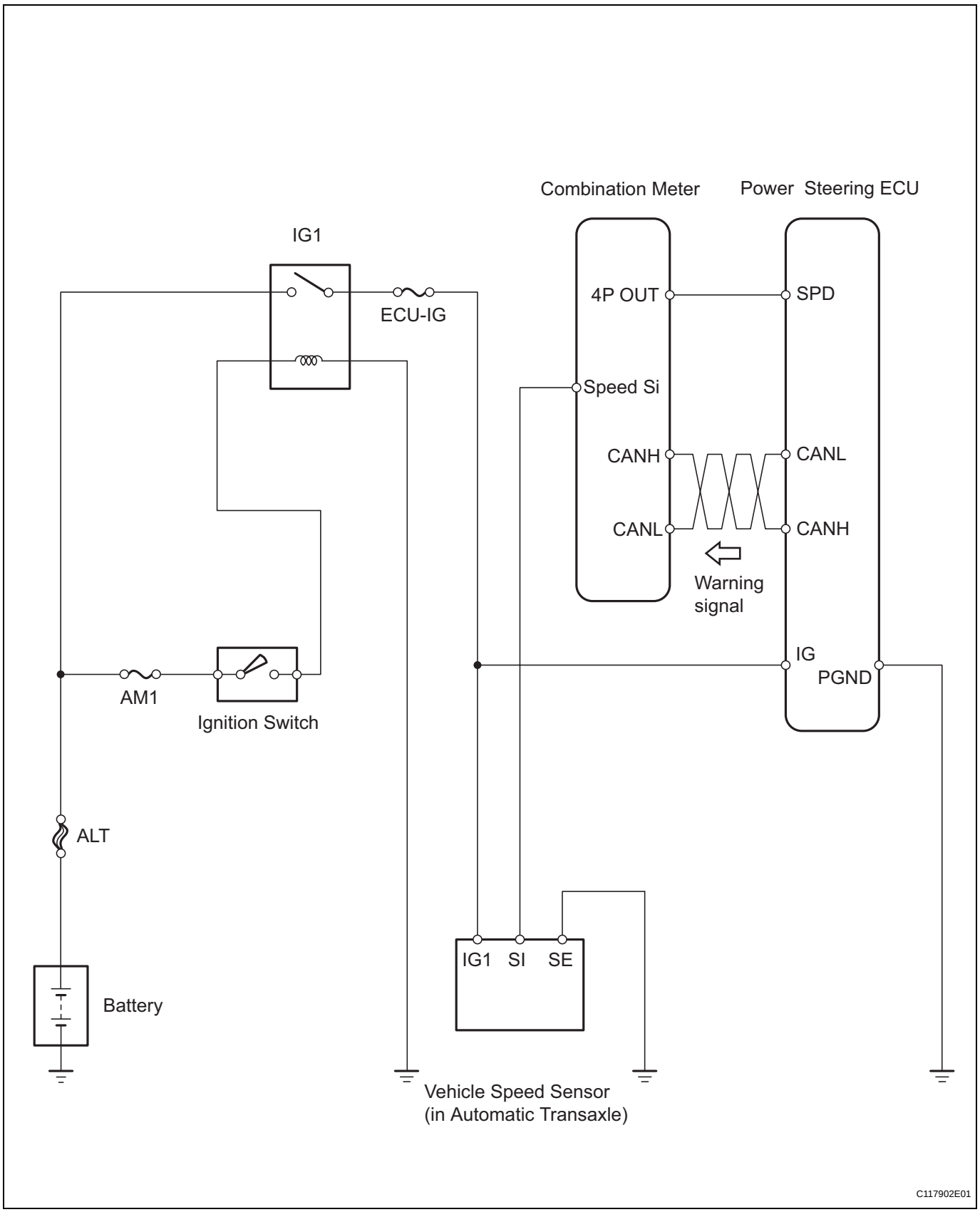

INSPECTION PROCEDURE

HINT:

Confirm that DTC C1571/71 has been cleared by activating test mode after the repair is completed.

1	READ VALUE OF DATA LIST (SPD)

(a) Connect the intelligent tester to the DLC3.
(b) Turn the ignition switch on and turn the tester on.
(c) Select the item [SPD] in the DATA LIST and read the value displayed on the intelligent tester.
(d) Drive the vehicle and check that there is no significant difference between the speed value displayed by the intelligent tester and the speed value displayed by the speedometer.
OK:
Speed values are same.
HINT:
There is tolerance of + - 10 % in the speedometer indication.

OK → **CHECK INTERMITTENT PROBLEMS**

NG

2	CHECK HARNESS AND CONNECTOR (POWER STEERING ECU - COMBINATION METER)

Combination Meter (harness side):

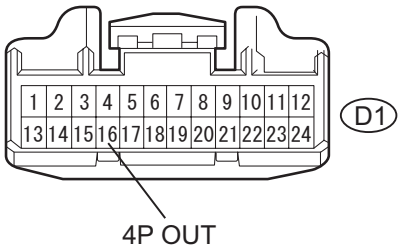

Power steering ECU:

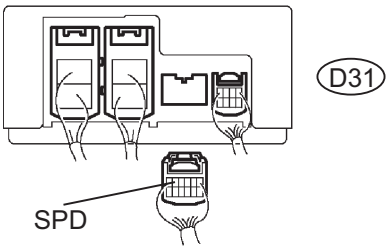

C122913E01

(a) Disconnect the connectors from the power steering ECU and the combination meter.
(b) Measure the resistance.
Standard resistance

Tester Connection	Condition	Specified Condition
SPD (D31-5) - 4P OUT (D1-16)	Always	Below 1 Ω
SPD (D31-5) - Body ground	Always	10 kΩ or higher

NG → **REPAIR OR REPLACE HARNESS OR CONNECTOR**

OK

GO TO COMBINATION METER SYSTEM

DTC	C1551/51	IG Power Source Circuit Malfunction

DESCRIPTION

The power steering ECU distinguishes the ignition switch status as on or off through the IG power source circuit.

DTC No.	DTC Detection Condition	Trouble Area
C1551/51	Open or short in IG power source circuit with ignition switch on.	• ECU-IG fuse • IG power source circuit • Power steering ECU

WIRING DIAGRAM

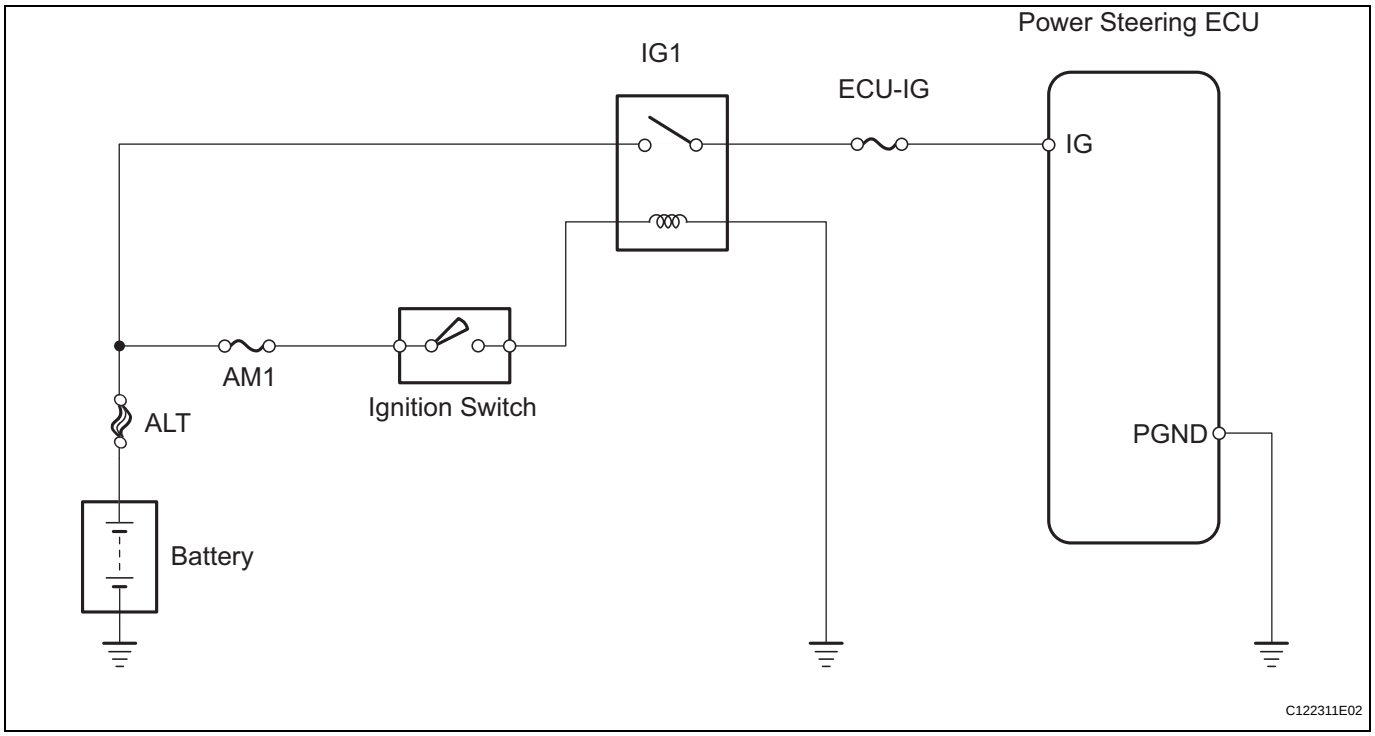

INSPECTION PROCEDURE

1	READ VALUE OF DATA LIST (IG SUPPLY)

(a) Connect the intelligent tester to the DLC3.
(b) Turn the ignition switch on and turn the tester on.
(c) Select the item [IG SUPPLY] in the DATA LIST and read the value displayed on the intelligent tester.
Standard voltage:
11 to 14 V

OK → **CHECK INTERMITTENT PROBLEMS**

NG

PS

2	INSPECT FUSE (ECU-IG)

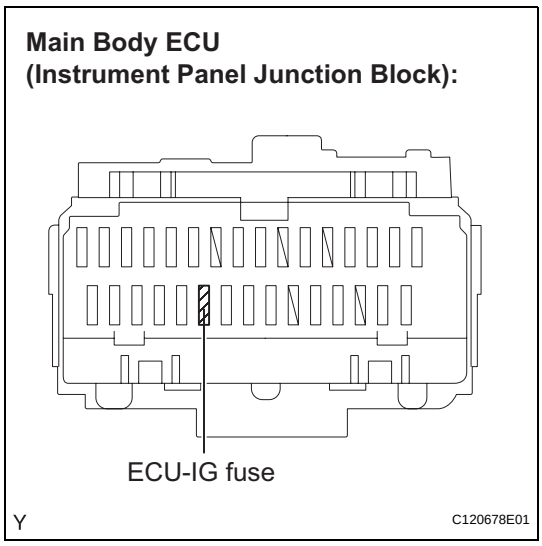

(a) Remove the ECU-IG fuse from the instrument panel J/B.
(b) Check the resistance of the fuse.
Standard resistance:
Below 1 Ω

NG → **INSPECT SHORT CIRCUIT IN COMPONENTS AND WIRES CONNECTED TO FUSE**

OK

3	CHECK HARNESS AND CONNECTOR (POWER STEERING ECU - BODY GROUND)

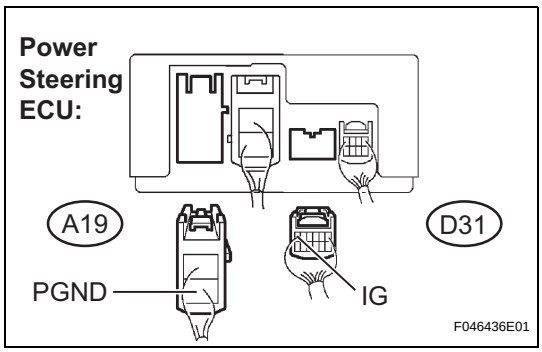

(a) Disconnect the connectors from the power steering ECU.
(b) Measure the voltage and the resistance.
Standard

Tester Connection	Condition	Specified Condition
IG (D31-6) - Body ground	Ignition switch on	11 to 14 V
PGND (A19-2) - Body ground	Always	Below 1 Ω

NG → **REPAIR OR REPLACE HARNESS OR CONNECTOR**

OK

REPLACE POWER STEERING ECU

DTC	C1552/52	PIG Power Source Circuit

DTC	C1553/53	When Resetting Voltage, Vehicle is Being Driven

DTC	C1554/54	EPS Relay Circuit

DTC	C1555/55	EPS Motor Relay Circuit

DESCRIPTION

When a problem occurs in the system, the power source relay circuit and the motor relay circuit are shut off to stop the power assist. The ECU must be replaced when there is a problem with the relays because each relay is built into the ECU.

DTC No.	DTC Detection Condition	Trouble Area
C1552/52	PIG power source circuit malfunction	• EPS fuse • PIG power source circuit • Power steering ECU
C1553/53	Abnormal overvoltage	• IG and PIG power source circuit • Power steering ECU
C1554/54	Power source relay circuit malfunction	• EPS fuse • PIG power source circuit • Power steering ECU
C1555/55	Motor relay circuit malfunction	• Power steering ECU

WIRING DIAGRAM

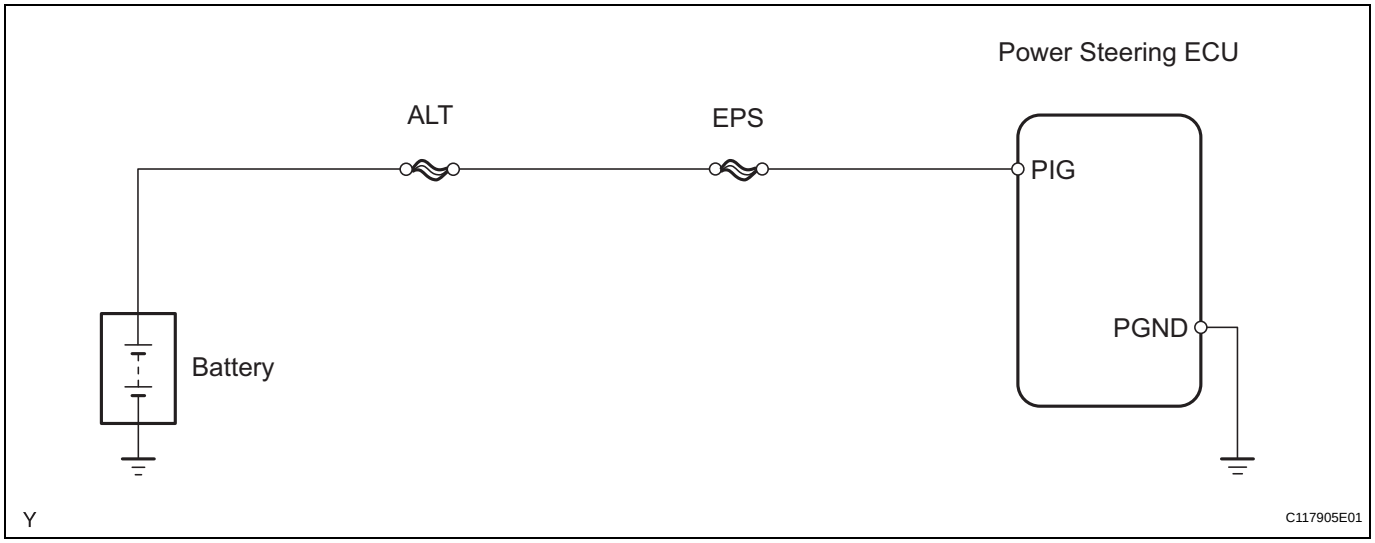

INSPECTION PROCEDURE

1	READ VALUE OF DATA LIST (PIG SUPPLY)

(a) Connect the intelligent tester to the DLC3.
(b) Select the item [PIG SUPPLY] in the DATA LIST and read the value displayed on the intelligent tester.

PS

Standard voltage:
Always 11 to 14 V

OK → **CHECK INTERMITTENT PROBLEMS**

NG

2 INSPECT FUSE (EPS FUSE)

Engine Room R/B:

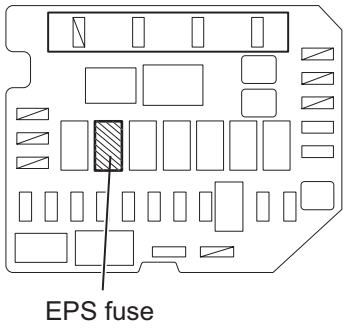

C117909E01

(a) Remove the EPS fuse from the engine room R/B.
(b) Measure the resistance of the fuse.
Standard resistance:
Below 1Ω

NG → **INSPECT SHORT CIRCUIT IN COMPONENTS AND WIRES CONNECTED TO FUSE**

OK

3 CHECK HARNESS AND CONNECTOR (POWER STEERING ECU - BODY GROUND)

Power Steering ECU:

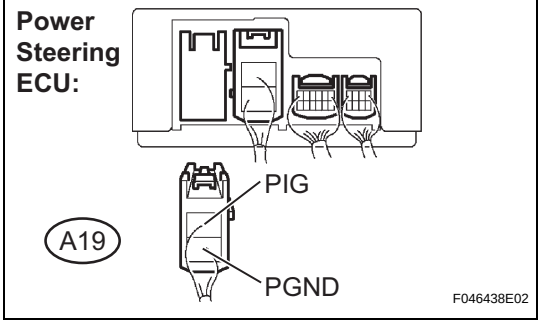

F046438E02

(a) Disconnect the connector from the power steering ECU.
(b) Measure the voltage and the resistance.
Standard

Tester Connection	Condition	Specified Condition
PIG (A19-1) - Body ground	Always	11 to 14 V
PGND (A19-2) - Body ground	Always	Below 1 Ω

NG → **REPAIR OR REPLACE HARNESS OR CONNECTOR**

OK

4	INSPECT STEERING COLUMN ASSEMBLY (POWER STEERING MOTOR)

Power Steering Motor Connector:

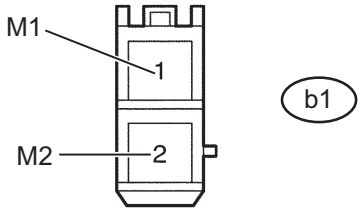

(a) Disconnect the connector from the power steering ECU.
(b) Measure the resistance.

Standard resistance

Tester Connection	Condition	Specified Condition
M1 (b1-1) - M2 (b1-2)	Always	0.08 to 0.15 Ω
M1 (b1-1) - Body ground	Always	1 MΩ or higher
M2 (b1-2) - Body ground	Always	1 MΩ or higher

NG → **REPLACE STEERING COLUMN ASSEMBLY**

OK

REPLACE POWER STEERING ECU

DTC	C1581/81	Assist Map Un-Writing

DESCRIPTION

The power steering ECU outputs this DTC when it determines that the assist map is not written in the ECU.
The power steering ECU must be replaced when this DTC is output because this malfunction cannot be repaired.
HINT:
The assist map data is written in the power steering ECU to control assisting power. The assist map is selected from five types based on the vehicle specification communication data (designation and grade package information).

DTC No.	DTC Detection Condition	Trouble Area
C1581/81	Assist map not written in power steering ECU	Power steering ECU

INSPECTION PROCEDURE

1	CONFIRM DTC

(a) Check for DTCs (See page PS-25).
OK:
DTCs other than C1581/81 are not output.

NG → **REPAIR CIRCUITS INDICATED BY OUTPUT DTCS**

OK

REPLACE POWER STEERING ECU

DTC	U0073	Control Module Communication Bus OFF

DTC	U0105	Lost Communication with ECM

DTC	U0121	Lost Communication with Anti-lock Brake System (ABS) Control Module

DESCRIPTION

The power steering ECU receives signals from the ECM and the skid control ECU (ABS ECU) via the CAN communication system.

DTC No.	DTC Detection Condition	Trouble Area
U0073	CAN communication error (CAN bus off)	• CAN communication system
U0105	ECM communication error	• CAN communication system • ECM
U0121	Skid control ECU (ABS ECU) communication error	• CAN communication system • Skid control ECU (ABS ECU)

HINT:
When two or more DTCs starting with [U] are output simultaneously, inspect the connectors and wire harness of each ECU.

WIRING DIAGRAM

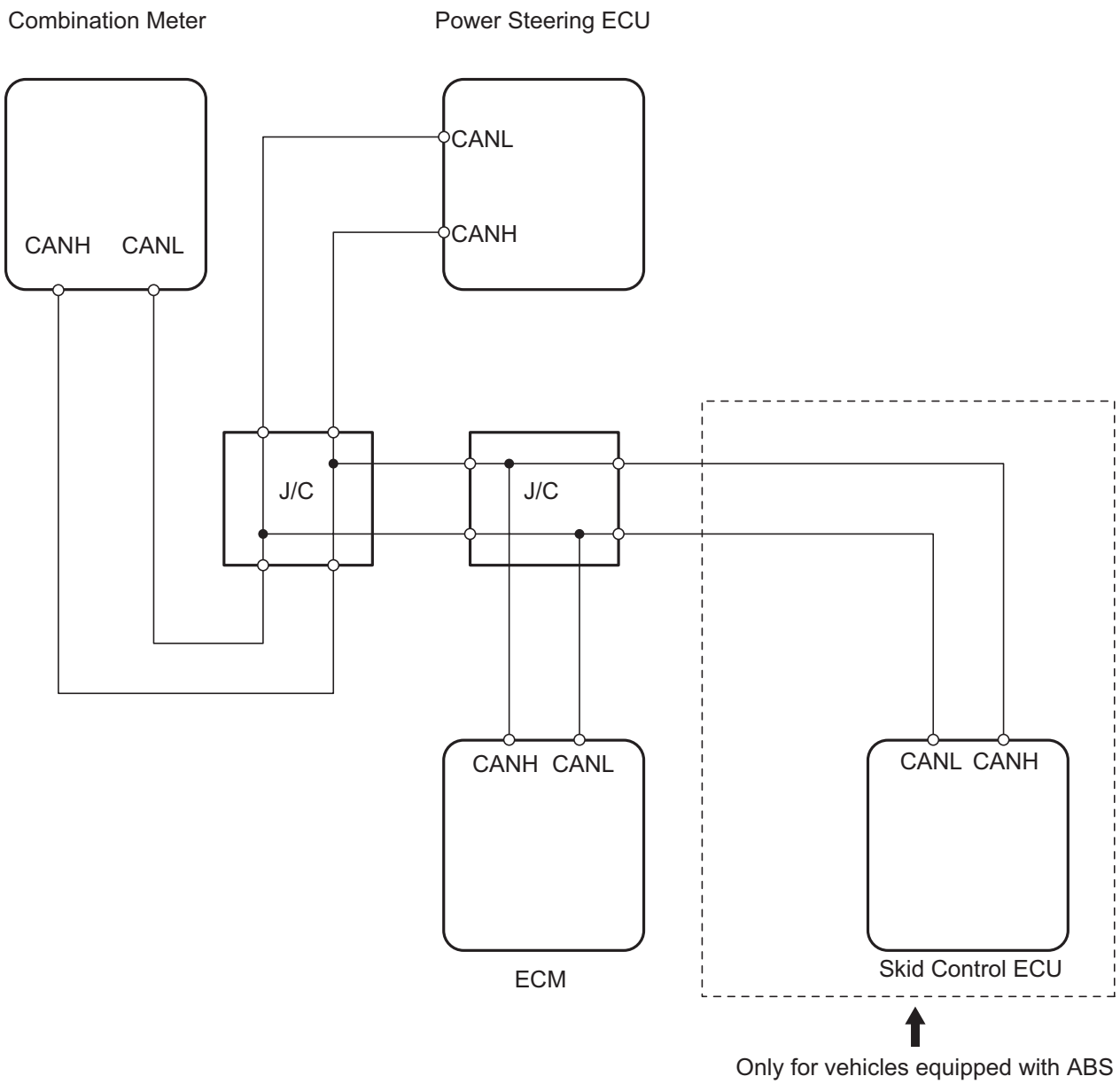

Y

C117903E01

INSPECTION PROCEDURE

1	CONFIRM DTC

(a) Check for DTCs (See page PS-25).
OK:
DTCs other than U0073, U0105 and U0121 are not output.

NG → **REPAIR CIRCUITS INDICATED BY OUTPUT DTCS**

OK

GO TO CAN COMMUNICATION SYSTEM

EPS Warning Light Circuit

DESCRIPTION

If the power steering ECU detects a malfunction, the P/S warning light comes on. At this time, the power steering ECU stores a DTC in its memory.

WIRING DIAGRAM

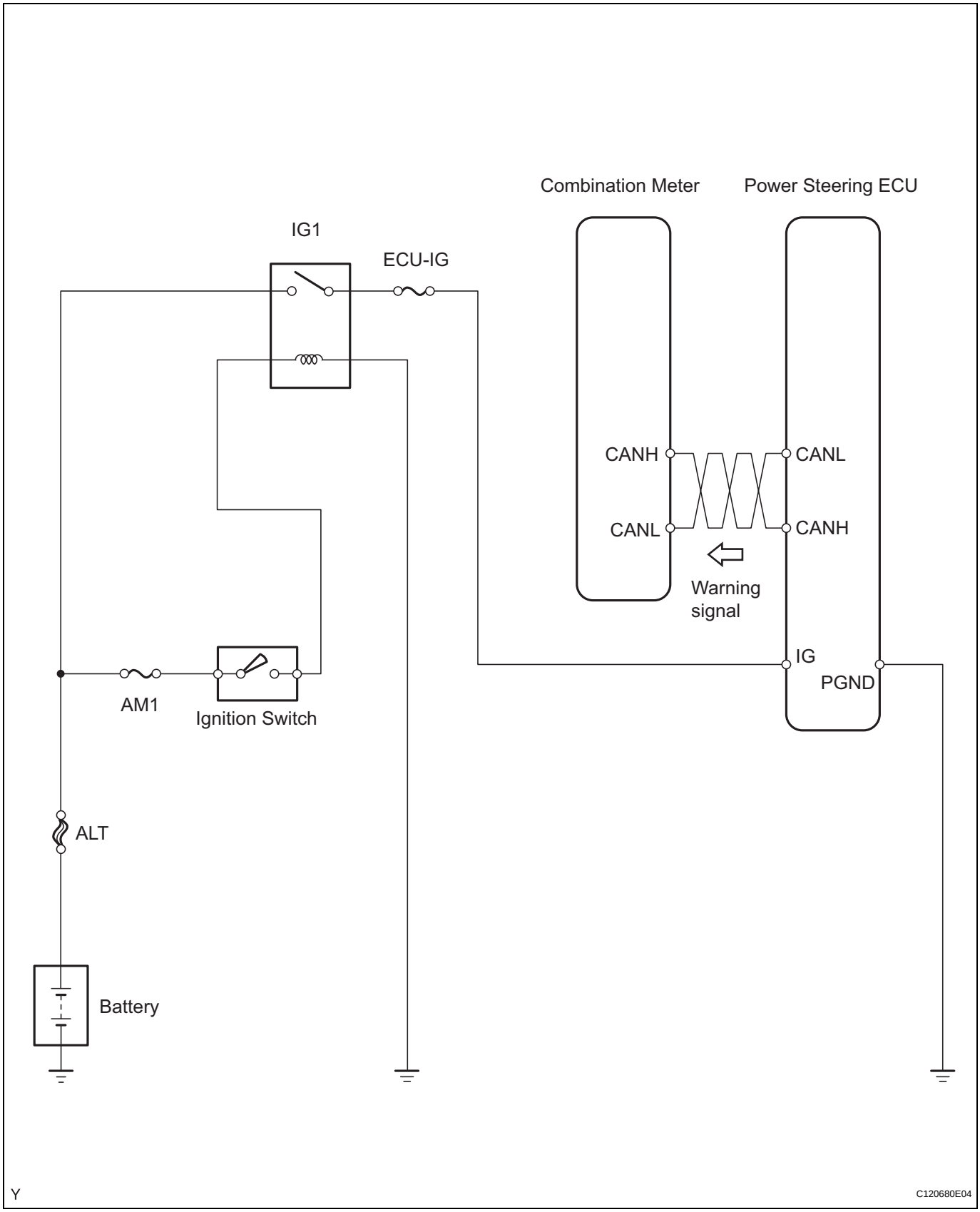

INSPECTION PROCEDURE

1 **INSPECT CAN COMMUNICATION SYSTEM**

(a) Using the intelligent tester, check for DTCs and confirm that there are no problems in the CAN communication system.
OK:
DTCs are not output.

NG → **GO TO CAN COMMUNICATION SYSTEM**

OK

2 **READ VALUE OF DATA LIST (IG SUPPLY)**

(a) Connect the intelligent tester to the DLC3.
(b) Turn the ignition switch on and turn the tester on.
(c) Select the item [IG SUPPLY] in the DATA LIST and read value displayed on the intelligent tester.
Standard voltage:
11 to 14 V

NG → **INSPECT POWER SOURCE CIRCUIT (IG) (See page PS-45)**

OK

3 **CHECK HARNESS AND CONNECTOR (POWER STEERING ECU - BODY GROUND)**

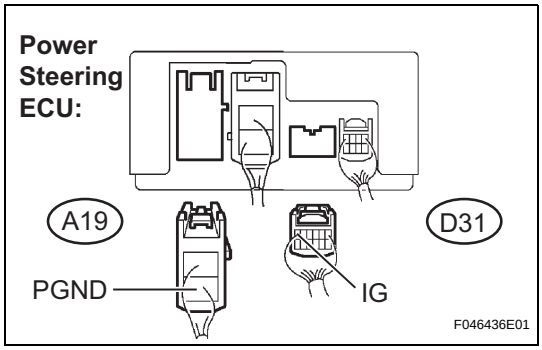

(a) Disconnect the connectors from the power steering ECU.
(b) Measure the voltage and the resistance.
Standard

Tester Connection	Condition	Specified Condition
IG (D31-6) - Body ground	Ignition switch on	11 to 14 V
PGND (A19-2) - Body ground	Always	Below 1 Ω

NG → **REPAIR OR REPLACE HARNESS OR CONNECTOR**

OK

4 **REPLACE POWER STEERING ECU**

NOTICE:
After replacing the power steering ECU, perform the torque sensor zero point calibration.

NEXT

PS

5	CHECK PS WARNING LIGHT (COMBINATION METER)

(a) Check that the P/S warning light on the combination meter does not come on.
OK:
The P/S warning light does not come on.

NG → **REPLACE COMBINATION METER**

OK

END

TS and CG Terminal Circuit

DESCRIPTION

The power steering ECU can be changed from normal mode to the mode for the torque sensor zero point calibration by turning the ignition switch on after the DLC3 TS and CG terminals have been connected.

WIRING DIAGRAM

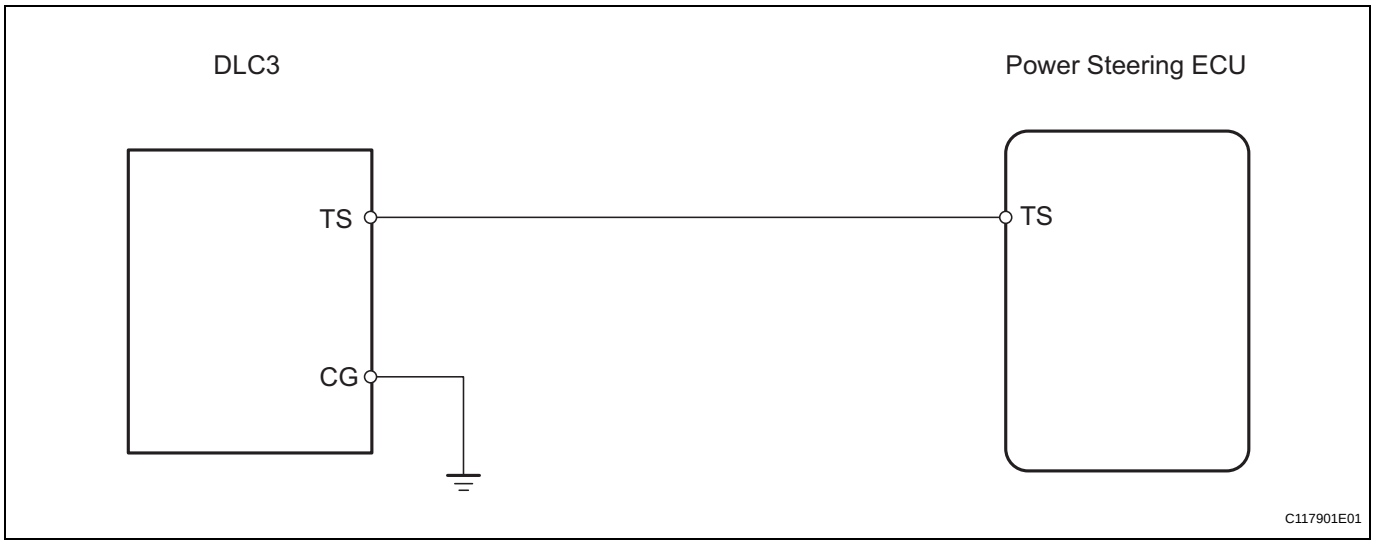

INSPECTION PROCEDURE

1	INSPECT DLC3 TERMINAL VOLTAGE

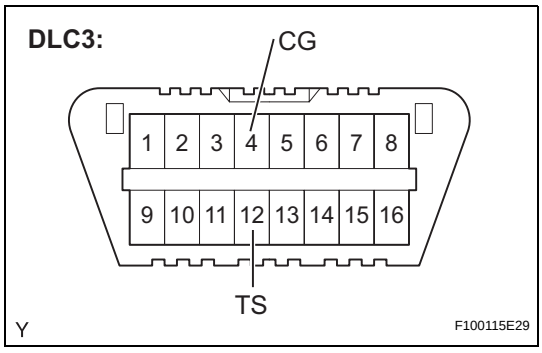

(a) Turn the ignition switch on.
(b) Measure the voltage.
Standard voltage

Tester Connection	Specified Condition
TS (12) - CG (4)	11 to 14 V

OK → **END**

NG

2	CHECK HARNESS AND CONNECTOR (DLC3 - BODY GROUND)

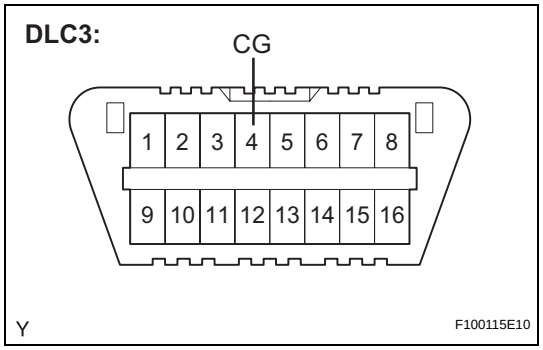

(a) Measure the resistance.
Standard resistance

Tester Connection	Specified Condition
CG (4) - Body ground	Below 1 Ω

NG → **REPAIR OR REPLACE HARNESS OR CONNECTOR**

OK

3	CHECK HARNESS AND CONNECTOR (POWER STEERING ECU - DLC3)

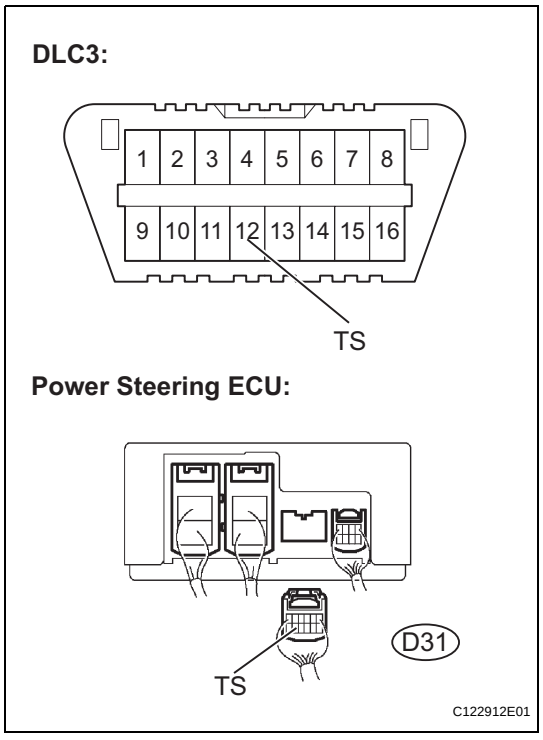

(a) Disconnect the connector from the power steering ECU.
(b) Measure the resistance.
Standard resistance

Tester Connection	Specified Condition
TS (D31-11) -TS (12)	Below 1 Ω
TS (D31-11) - Body ground	10 kΩ or higher

NG → **REPAIR OR REPLACE HARNESS OR CONNECTOR**

OK

REPLACE POWER STEERING ECU

POWER STEERING GEAR (for Sedan)

COMPONENTS

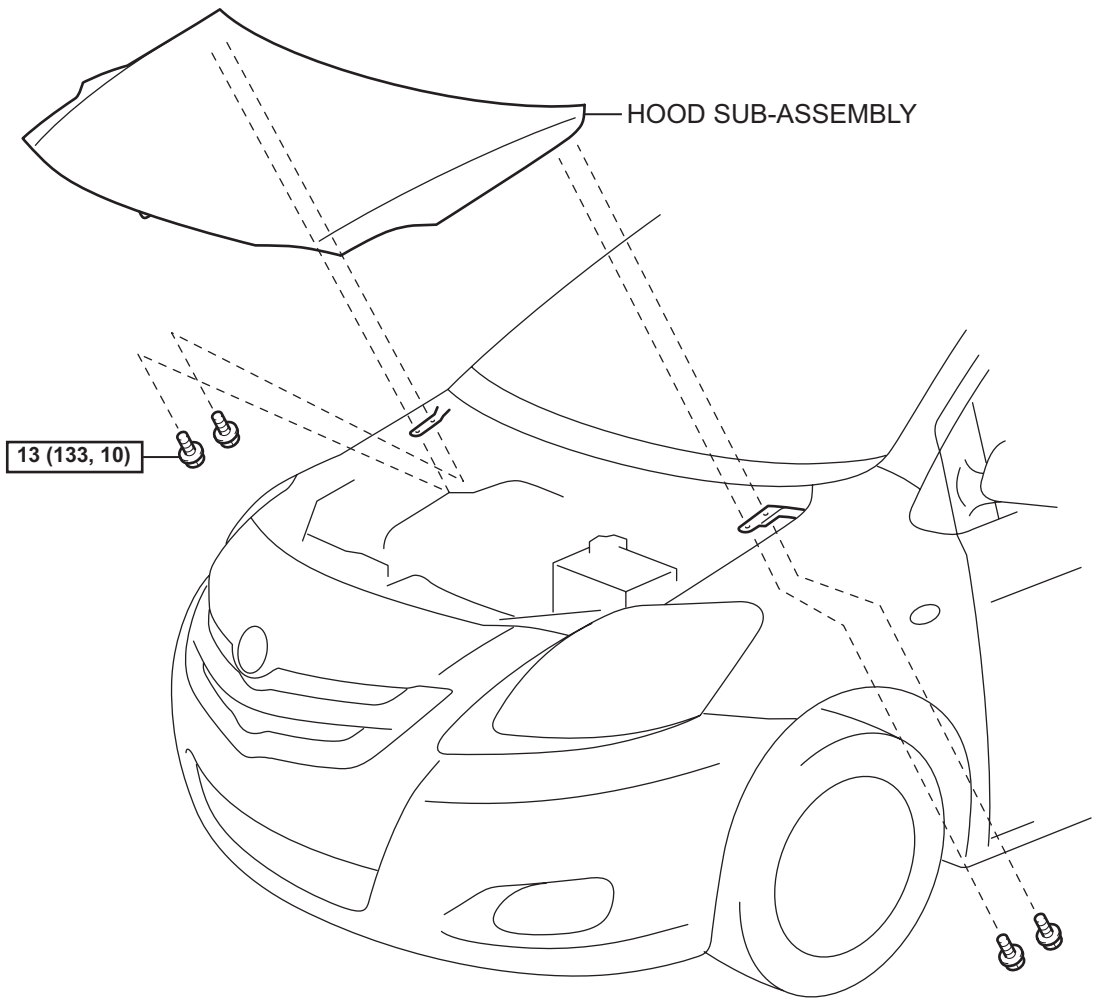

N*m (kgf*cm, ft*lbf) : Specified torque

B135922E01

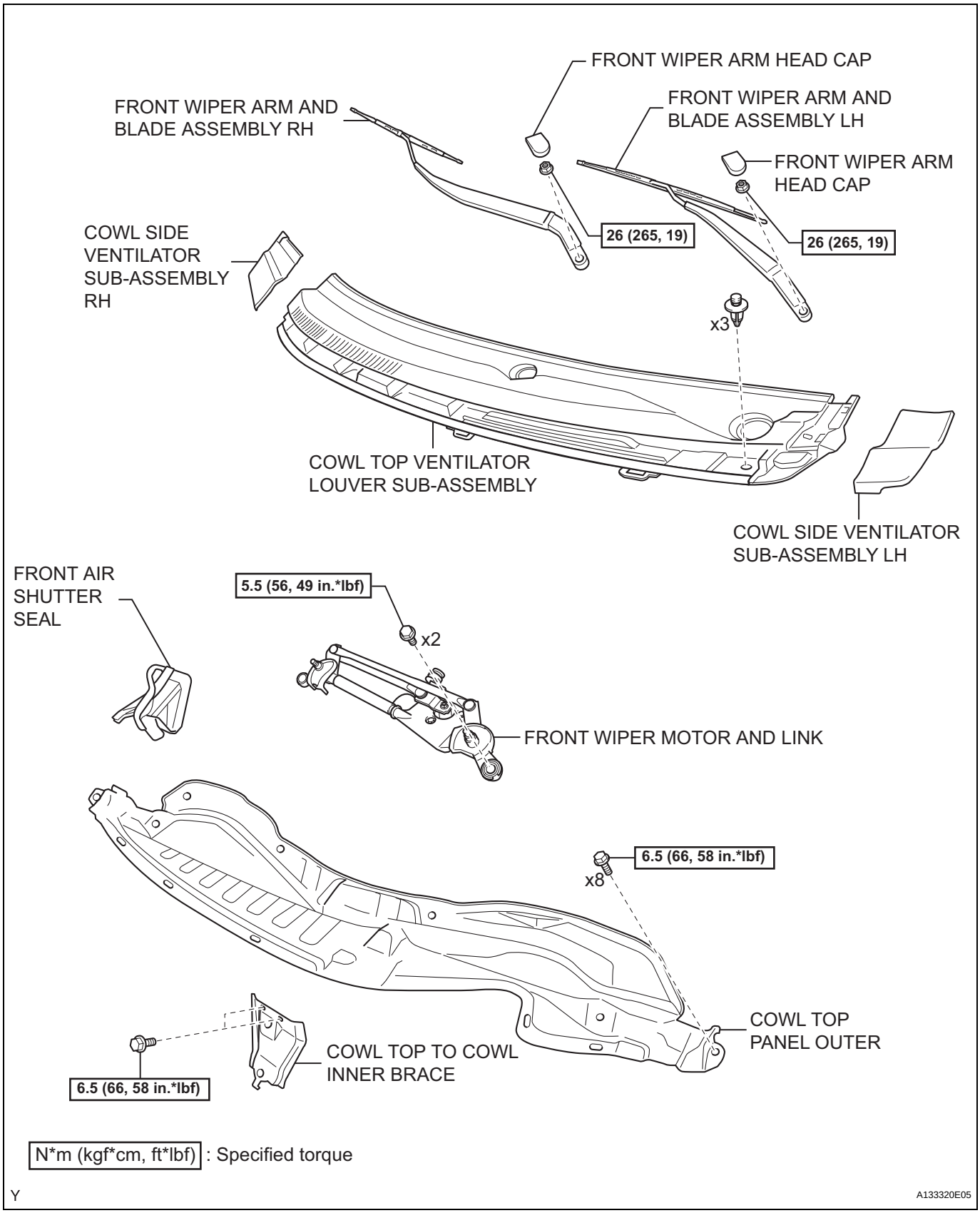
FRONT WIPER ARM HEAD CAP
FRONT WIPER ARM AND BLADE ASSEMBLY RH
FRONT WIPER ARM AND BLADE ASSEMBLY LH
FRONT WIPER ARM HEAD CAP
26 (265, 19)
26 (265, 19)
COWL SIDE VENTILATOR SUB-ASSEMBLY RH
x3
COWL TOP VENTILATOR LOUVER SUB-ASSEMBLY
COWL SIDE VENTILATOR SUB-ASSEMBLY LH
FRONT AIR SHUTTER SEAL
5.5 (56, 49 in.*lbf)
x2
FRONT WIPER MOTOR AND LINK
6.5 (66, 58 in.*lbf)
x8
COWL TOP PANEL OUTER
COWL TOP TO COWL INNER BRACE
6.5 (66, 58 in.*lbf)
N*m (kgf*cm, ft*lbf) : Specified torque
Y
A133320E05

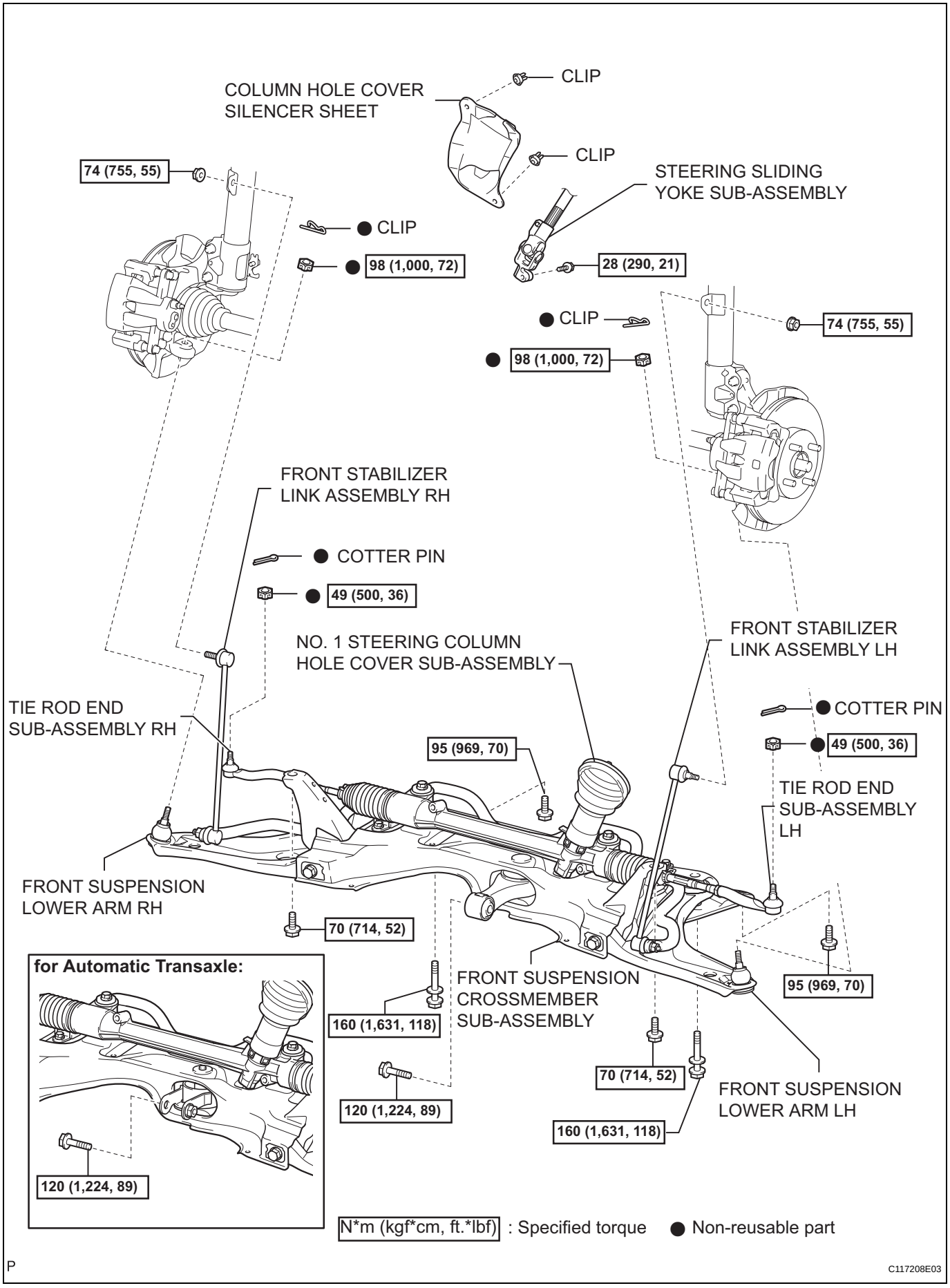
CLIP
COLUMN HOLE COVER SILENCER SHEET
CLIP
74 (755, 55)
STEERING SLIDING YOKE SUB-ASSEMBLY
● CLIP
● 98 (1,000, 72)
28 (290, 21)
● CLIP
74 (755, 55)
● 98 (1,000, 72)
FRONT STABILIZER LINK ASSEMBLY RH
● COTTER PIN
● 49 (500, 36)
NO. 1 STEERING COLUMN HOLE COVER SUB-ASSEMBLY
FRONT STABILIZER LINK ASSEMBLY LH
TIE ROD END SUB-ASSEMBLY RH
● COTTER PIN
● 49 (500, 36)
95 (969, 70)
TIE ROD END SUB-ASSEMBLY LH
FRONT SUSPENSION LOWER ARM RH
70 (714, 52)
for Automatic Transaxle:
160 (1,631, 118)
FRONT SUSPENSION CROSSMEMBER SUB-ASSEMBLY
95 (969, 70)
70 (714, 52)
120 (1,224, 89)
FRONT SUSPENSION LOWER ARM LH
160 (1,631, 118)
120 (1,224, 89)
N*m (kgf*cm, ft.*lbf) : Specified torque
● Non-reusable part
P
C117208E03

PS

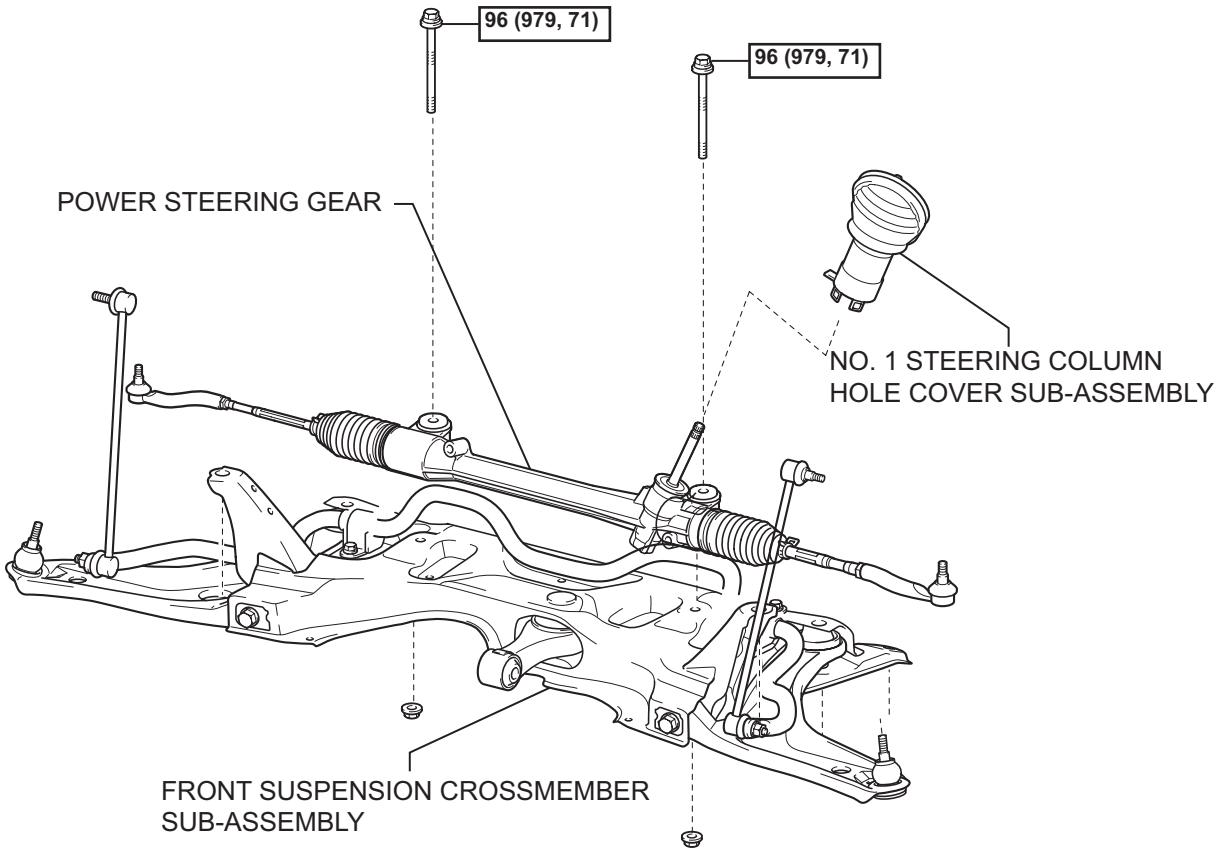

N*m (kgf*cm, ft.*lbf) : Specified torque

PS

C119861E02

REMOVAL

1. **POSITION FRONT WHEELS FACING STRAIGHT AHEAD**
2. **DISCONNECT CABLE FROM NEGATIVE BATTERY TERMINAL**
3. **REMOVE HOOD SUB-ASSEMBLY**
   (a) Remove the 4 bolts and remove the hood.
4. **REMOVE FRONT WIPER ARM HEAD CAP (See page WW-9)**
5. **REMOVE FRONT WIPER ARM AND BLADE ASSEMBLY LH (See page WW-9)**
6. **REMOVE FRONT WIPER ARM AND BLADE ASSEMBLY RH (See page WW-9)**
7. **REMOVE COWL SIDE VENTILATOR SUB-ASSEMBLY LH (See page WW-10)**
8. **REMOVE COWL SIDE VENTILATOR SUB-ASSEMBLY RH (See page WW-10)**
9. **REMOVE COWL TOP VENTILATOR LOUVER SUB-ASSEMBLY (See page WW-10)**
10. **REMOVE FRONT WIPER MOTOR AND LINK (See page WW-10)**
11. **REMOVE FRONT AIR SHUTTER SEAL (See page EM-123)**
12. **REMOVE COWL TOP PANEL OUTER (See page BR-41)**
13. **REMOVE COLUMN HOLE COVER SILENCER SHEET**
    (a) Remove the floor carpet and 2 clips and remove the column hole cover silencer.

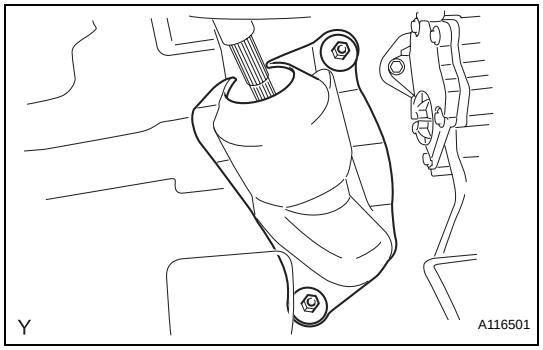

14. **REMOVE STEERING SLIDING YOKE SUB-ASSEMBLY**
    (a) Use a seat belt to fix the steering wheel assembly, in order to avoid breakage of the spiral cable.

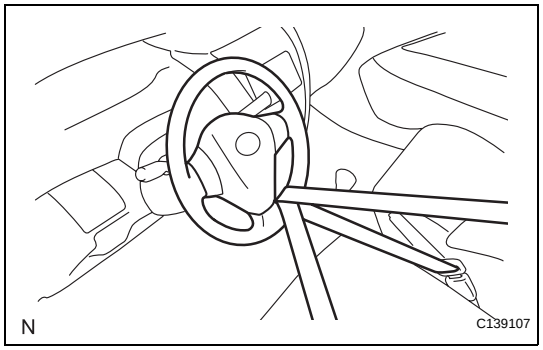

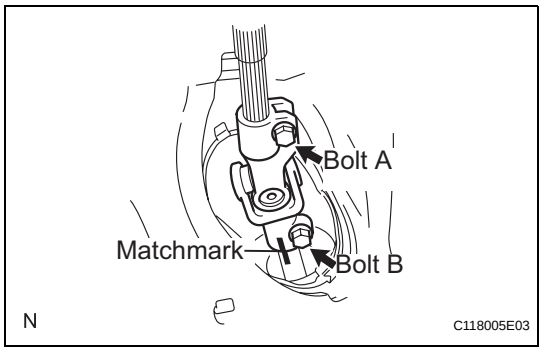

(b) Place matchmarks on the sliding yoke of the steering intermediate shaft assembly and the power steering.
(c) Loosen bolt A, remove bolt B and separate the steering intermediate shaft assembly.

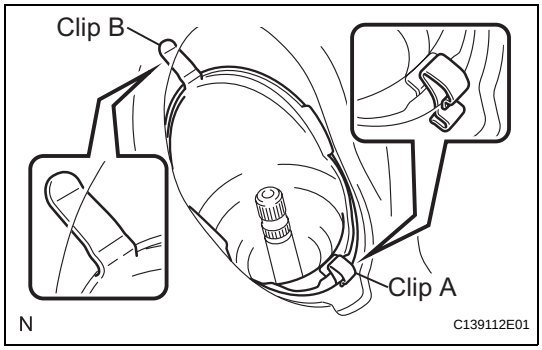

15. REMOVE NO. 1 STEERING COLUMN HOLE COVER SUB-ASSEMBLY
(a) Remove clip A, separate clip B from the body and separate No. 1 steering column hole cover sub-assembly.

16. REMOVE FRONT WHEEL

17. REMOVE TIE ROD END SUB-ASSEMBLY LH (See page DS-3)

18. REMOVE TIE ROD END SUB-ASSEMBLY RH
HINT:
Use the same procedure for the RH side as for the LH side.

19. REMOVE FRONT STABILIZER LINK ASSEMBLY LH (See page DS-4)

20. REMOVE FRONT STABILIZER LINK ASSEMBLY RH
HINT:
Use the same procedure for the RH side as for the LH side.

21. REMOVE FRONT SUSPENSION LOWER ARM LH (See page DS-4)

22. REMOVE FRONT SUSPENSION LOWER ARM RH
HINT:
Use the same procedure for the RH side as for the LH side.

23. SUSPEND ENGINE ASSEMBLY
(a) 1NZ-FE
(1) Remove the bolt and remove the radio setting condenser.
(2) Remove the bolt and remove the air-fuel ratio sensor wiring bracket.

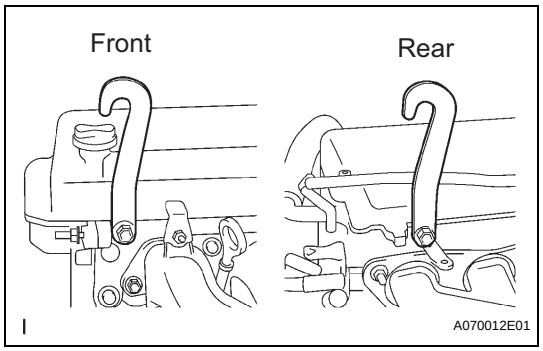

(3) Install the engine hanger with the bolt in the position shown in the illustration.
Part No.:
Engine hanger :
12281-21010
Bolt:
91642-81025
Torque: 40 N*m (408 kgf*cm, 30 ft.*lbf)

(4) Using an engine sling device and a chain block, support the engine assembly w/transaxle and front suspension crossmember.

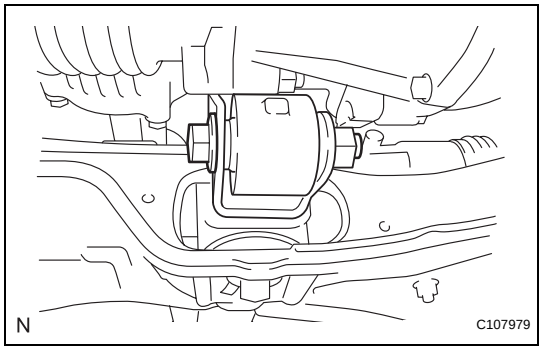

24. REMOVE FRONT SUSPENSION CROSSMEMBER SUB-ASSEMBLY

(a) Remove the bolt and separate the engine moving control rod.

(b) Support the front suspension crossmember with a transmission jack.

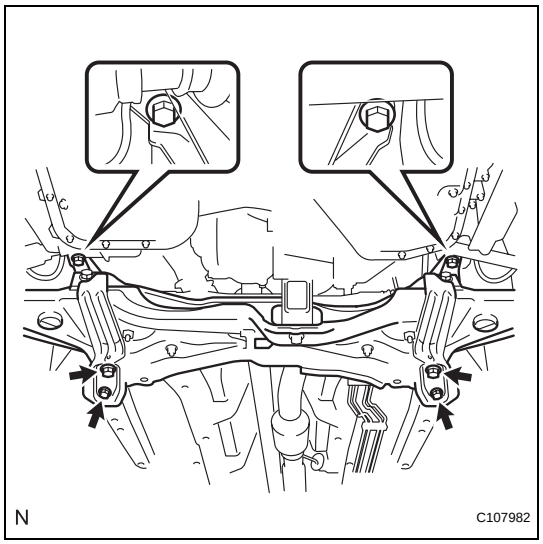

(c) Remove the 6 bolts and remove the suspension crossmember.

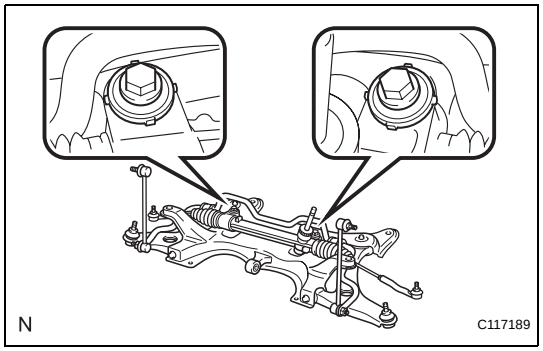

25. REMOVE POWER STEERING GEAR

(a) Remove the 2 bolts and 2 nuts and remove the power steering gear from the suspension crossmember.
NOTICE:
Keep the nut from rotating while turning the bolt.

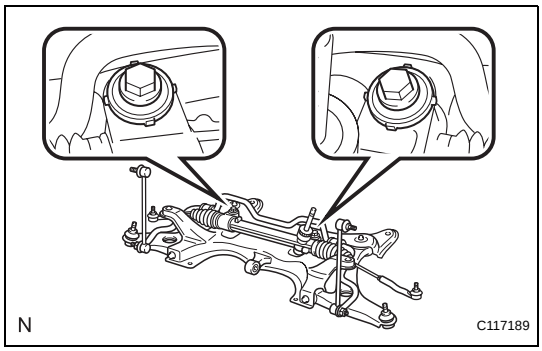

INSTALLATION

1. INSTALL POWER STEERING GEAR

(a) Install the power steering gear onto the front suspension crossmember with the 2 bolts and 2 nuts.

Torque: 96 N*m (979 kgf*cm, 71 ft.*lbf)

NOTICE:

Keep the nut from rotating while turning the bolt.

2. INSTALL FRONT SUSPENSION CROSSMEMBER SUB-ASSEMBLY

(a) Support the front suspension crossmember with a transmission jack.

(b) Provisionally install the front suspension crossmember onto the body with the 6 bolts.

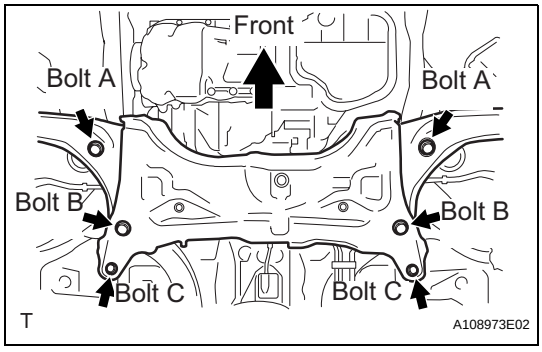

Bolt	Underhead Length (mm)
A	38
B	99
C	45

(c) By inserting SST into the datum holes in the front suspension crossmembers RH and LH alternately, tighten bolts A, B and C on both sides to the specified torque, in several steps.

SST 09670-00011

Torque: 70 N*m (714 kgf*cm, 52 ft.*lbf) for Bolt A
160 N*m (1,631 kgf*cm, 118 ft.*lbf) for Bolt B
95 N*m (969 kgf*cm, 70 ft.*lbf) for Bolt C

NOTICE:

- **Insert SST into the datum hole in a vertical orientation.**
- **If SST can not be inserted into the datum hole vertically, loosen all the bolts and then insert SST again.**

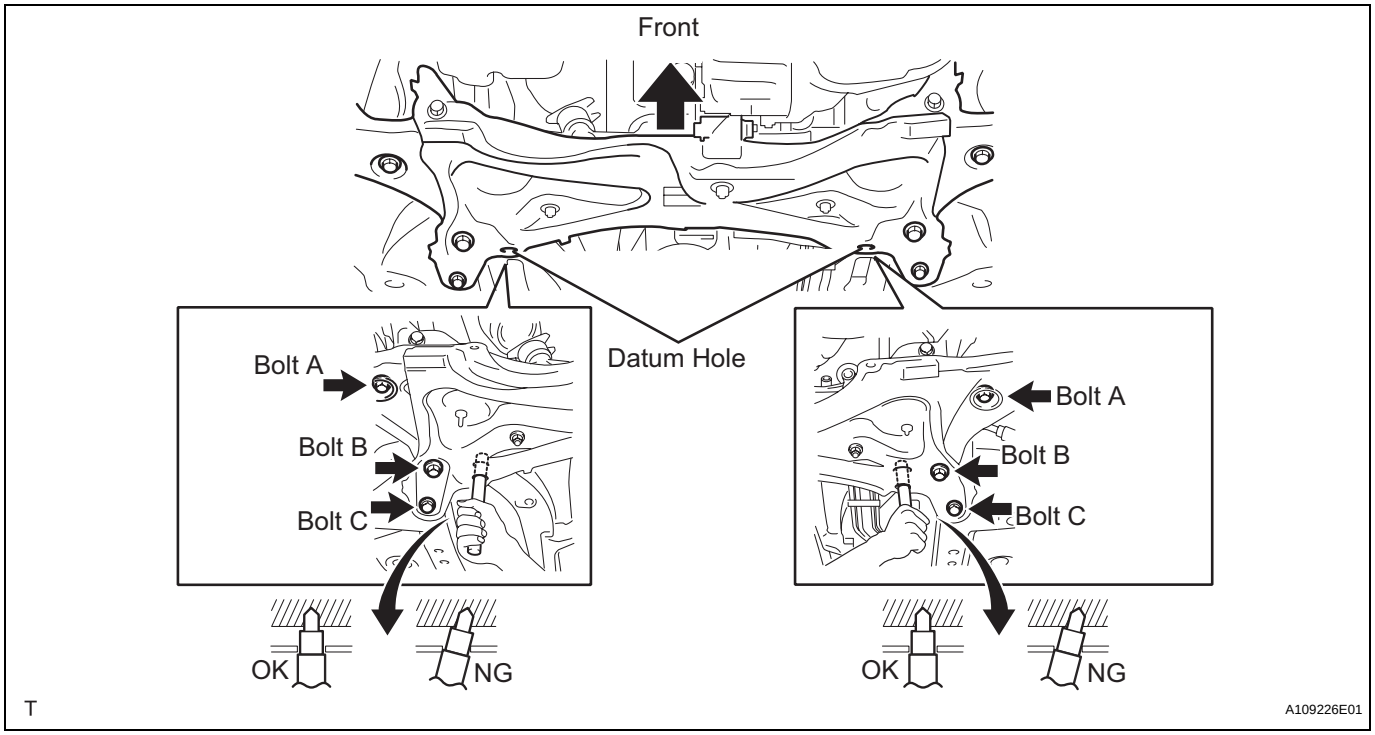

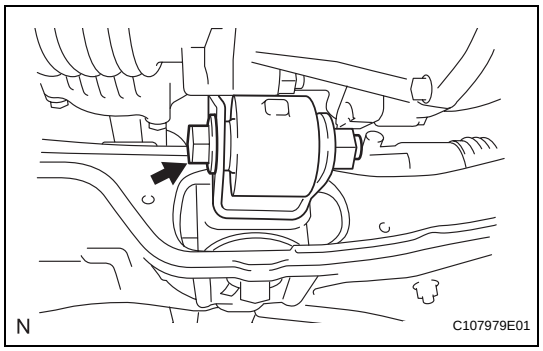

(d) Install the engine moving control rod with the bolt.
Torque: 120 N*m (1,224 kgf*cm, 89 ft.*lbf)

3. **INSTALL FRONT SUSPENSION LOWER ARM LH (See page DS-14)**
4. **INSTALL FRONT SUSPENSION LOWER ARM RH**
HINT:
Use the same procedure for the LH side.
5. **INSTALL FRONT STABILIZER LINK ASSEMBLY LH (See page DS-14)**
6. **INSTALL FRONT STABILIZER LINK ASSEMBLY RH**
HINT:
Use the same procedure for the LH side.
7. **INSTALL TIE ROD END SUB-ASSEMBLY LH (See page DS-15)**
8. **INSTALL TIE ROD END SUB-ASSEMBLY RH**
HINT:
Use the same procedure for the LH side.
9. **INSTALL FRONT WHEEL**
Torque: 103 N*m (1,050 kgf*cm, 76 ft.*lbf)

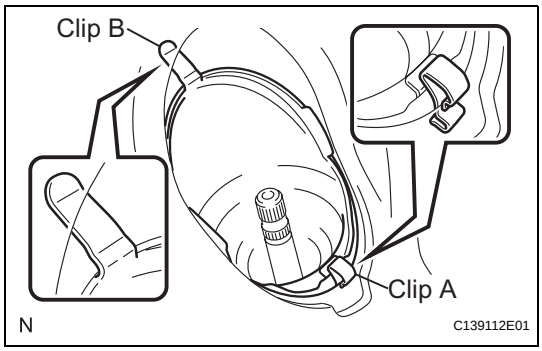

10. **INSTALL NO. 1 STEERING COLUMN HOLE COVER SUB-ASSEMBLY**
    (a) Install clip B onto the body portion and install No. 1 steering column hole cover sub-assembly onto the body portion with clip A.
    NOTICE:
    Make sure that the lip portion of hole cover No. 1 is not damaged.

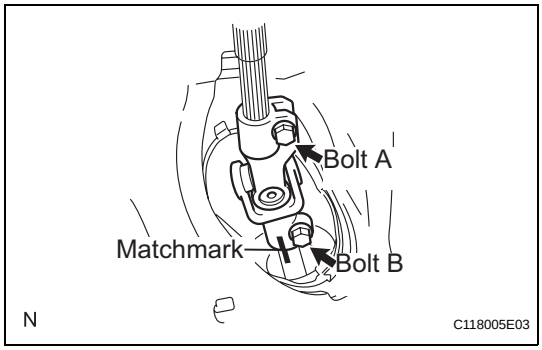

11. **INSTALL STEERING SLIDING YOKE SUB-ASSEMBLY**
    (a) Align the matchmarks and install the sliding yoke onto the intermediate shaft.
    Torque: 28 N*m (290 kgf*cm, 21 ft.*lbf)
    (b) Tighten bolt A.
    Torque: 28 N*m (290 kgf*cm, 21 ft.*lbf)

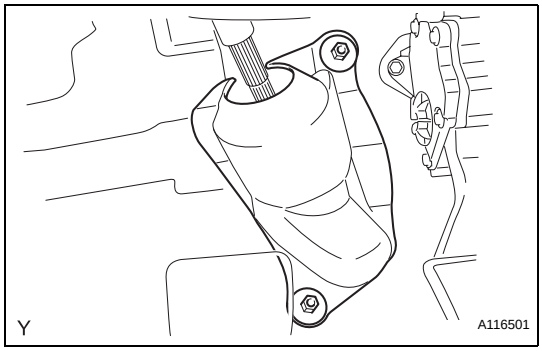

12. **INSTALL COLUMN HOLE COVER SILENCER SHEET**
    (a) Install the column hole cover silencer sheet with the 2 clips.
    (b) Install the floor carpet.
13. **INSTALL COWL TOP PANEL OUTER (See page BR-45)**
14. **INSTALL FRONT AIR SHUTTER SEAL (See page EM-148)**
15. **INSTALL WINDSHIELD WIPER MOTOR AND LINK (See page WW-12)**
16. **REMOVE COWL TOP VENTILATOR LOUVER SUB-ASSEMBLY (See page WW-12)**
17. **INSTALL COWL SIDE VENTILATOR SUB-ASSEMBLY LH (See page WW-13)**
18. **INSTALL COWL SIDE VENTILATOR SUB-ASSEMBLY RH (See page WW-13)**
19. **INSTALL FRONT WIPER ARM AND BLADE ASSEMBLY LH (See page WW-13)**
20. **INSTALL FRONT WIPER ARM AND BLADE ASSEMBLY RH (See page WW-14)**
21. **INSTALL FRONT WIPER ARM HEAD CAP (See page WW-15)**
22. **PROVISIONALLY TIGHTEN HOOD SUB-ASSEMBLY**
    (a) Provisionally install the hood with the 4 bolts.
    HINT:
    Tighten the bolts to the specified torque after inspecting the hood.
23. **INSPECT HOOD SUB-ASSEMBLY (See page ED-1)**

24. **ADJUST HOOD SUB-ASSEMBLY (See page ED-2)**
25. **CONNECT CABLE TO NEGATIVE BATTERY TERMINAL**
    Torque: 5.4 N*m (55 kgf*cm, 48 ft.*lbf)
26. **POSITION FRONT WHEELS FACING STRAIGHT AHEAD**
27. **INSPECT AND ADJUST FRONT WHEEL ALIGNMENT**
    (See page SP-2)
28. **CHECK ABS SPEED SENSOR SIGNAL**
    (See page BC-14)

POWER STEERING GEAR (for Hatchback)

COMPONENTS

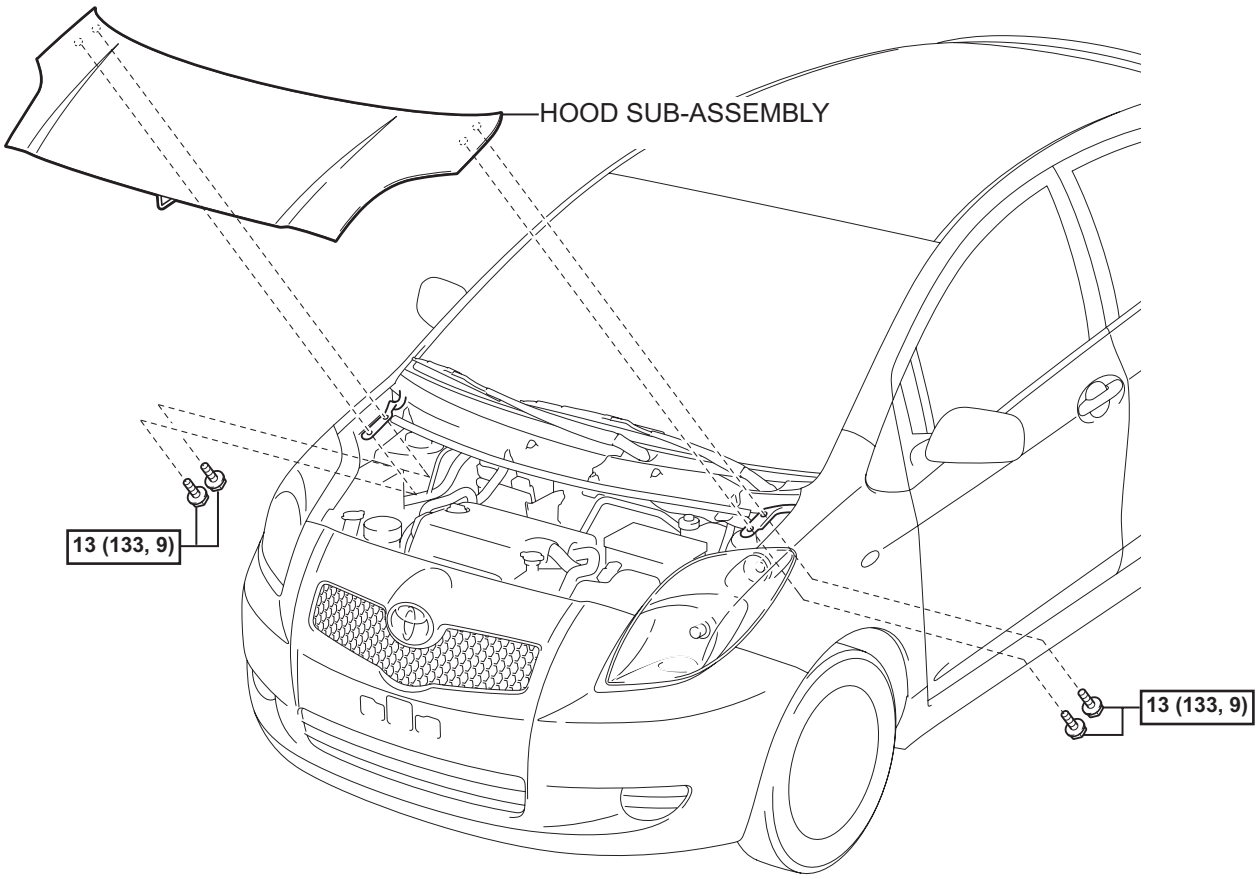

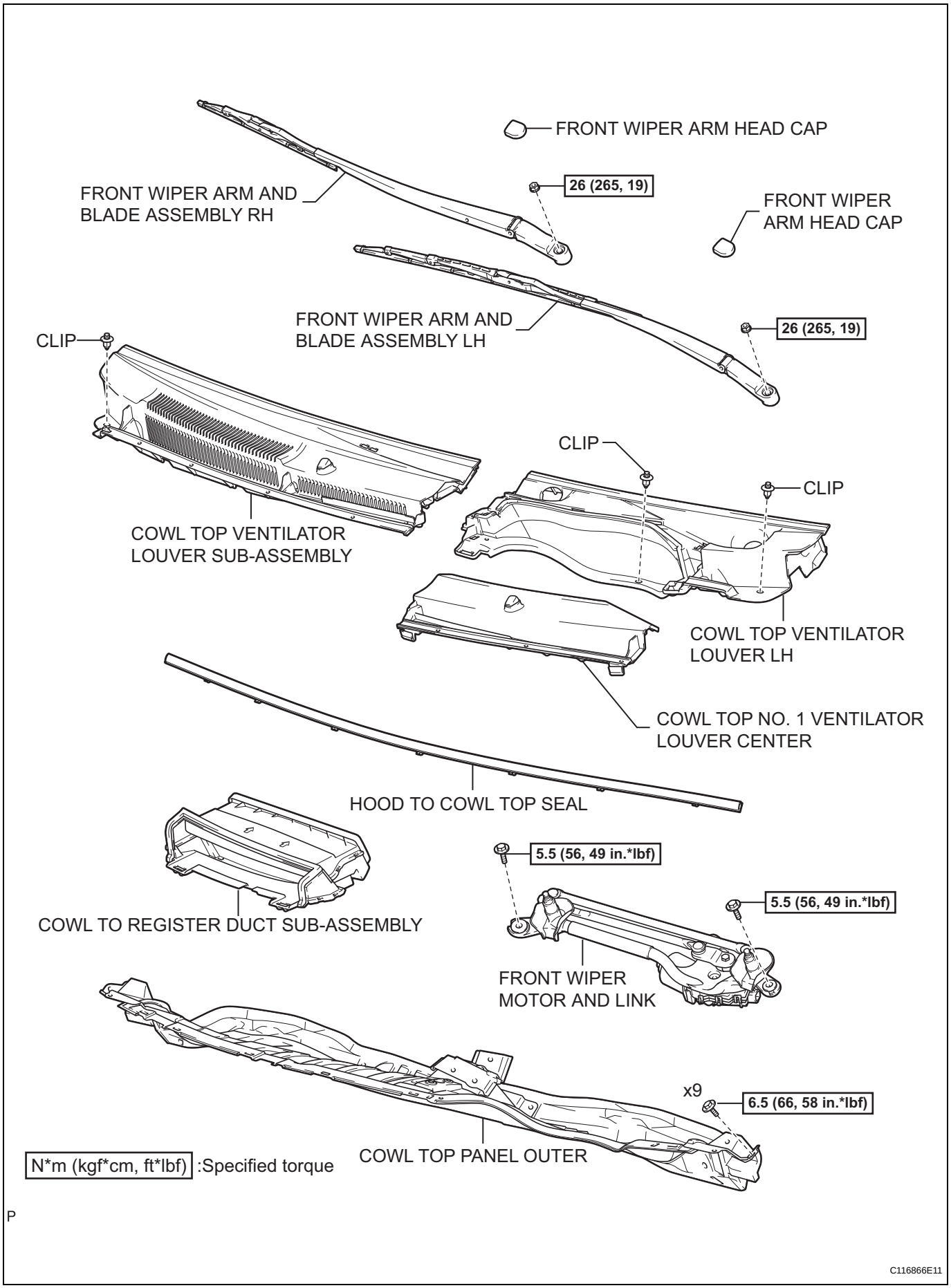
FRONT WIPER ARM HEAD CAP
26 (265, 19)
FRONT WIPER ARM AND BLADE ASSEMBLY RH
FRONT WIPER ARM HEAD CAP
FRONT WIPER ARM AND BLADE ASSEMBLY LH
26 (265, 19)
CLIP
CLIP
CLIP
COWL TOP VENTILATOR LOUVER SUB-ASSEMBLY
COWL TOP VENTILATOR LOUVER LH
COWL TOP NO. 1 VENTILATOR LOUVER CENTER
HOOD TO COWL TOP SEAL
5.5 (56, 49 in.*lbf)
5.5 (56, 49 in.*lbf)
COWL TO REGISTER DUCT SUB-ASSEMBLY
FRONT WIPER MOTOR AND LINK
x9
6.5 (66, 58 in.*lbf)
COWL TOP PANEL OUTER
N*m (kgf*cm, ft*lbf) :Specified torque
C116866E11

PS

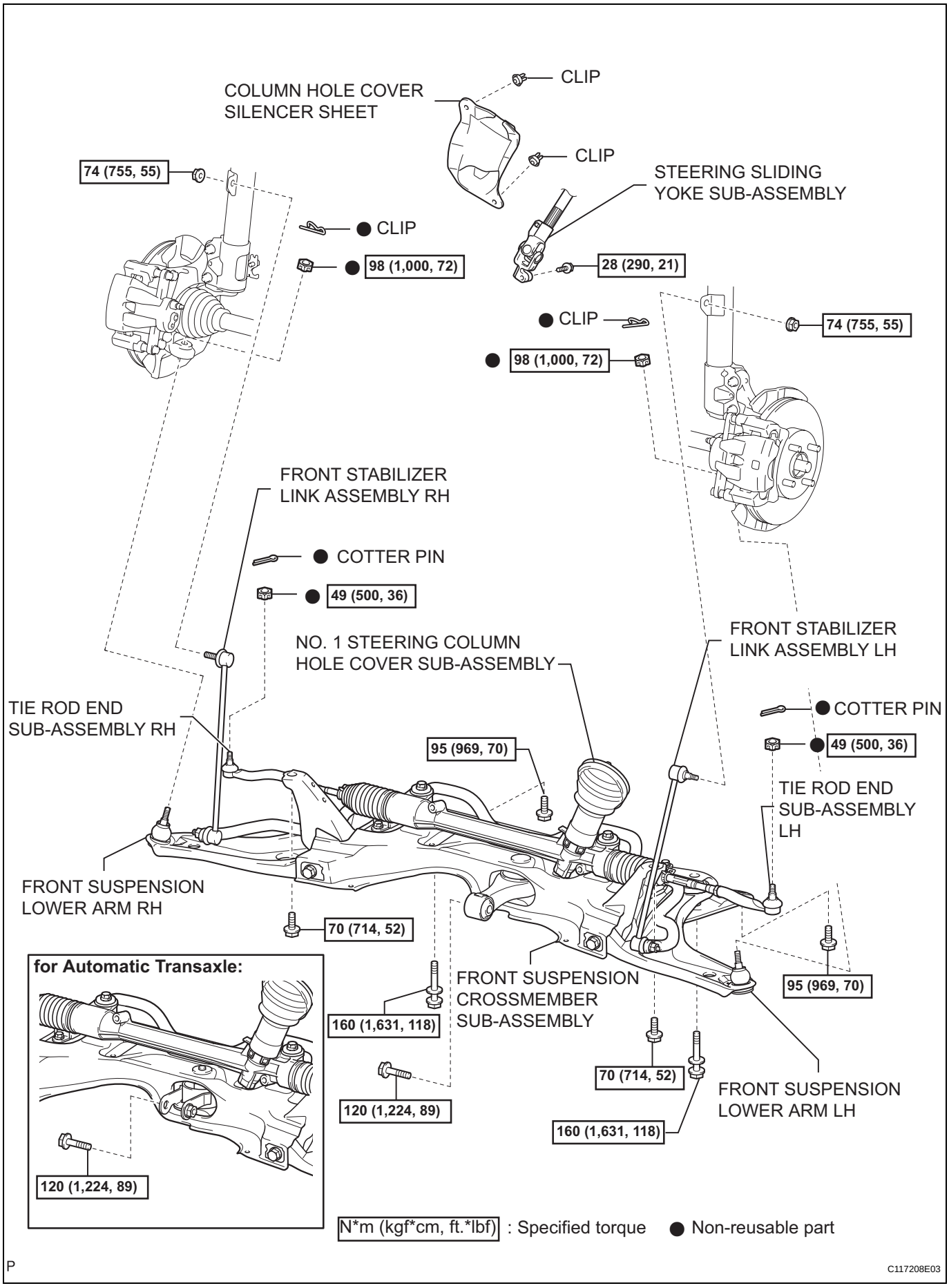
CLIP
COLUMN HOLE COVER SILENCER SHEET
CLIP
74 (755, 55)
STEERING SLIDING YOKE SUB-ASSEMBLY
● CLIP
● 98 (1,000, 72)
28 (290, 21)
● CLIP
74 (755, 55)
● 98 (1,000, 72)
FRONT STABILIZER LINK ASSEMBLY RH
● COTTER PIN
● 49 (500, 36)
NO. 1 STEERING COLUMN HOLE COVER SUB-ASSEMBLY
FRONT STABILIZER LINK ASSEMBLY LH
TIE ROD END SUB-ASSEMBLY RH
● COTTER PIN
● 49 (500, 36)
95 (969, 70)
TIE ROD END SUB-ASSEMBLY LH
FRONT SUSPENSION LOWER ARM RH
70 (714, 52)
for Automatic Transaxle:
120 (1,224, 89)
160 (1,631, 118)
FRONT SUSPENSION CROSSMEMBER SUB-ASSEMBLY
95 (969, 70)
70 (714, 52)
120 (1,224, 89)
160 (1,631, 118)
FRONT SUSPENSION LOWER ARM LH
N*m (kgf*cm, ft.*lbf) : Specified torque
● Non-reusable part
P
C117208E03

PS

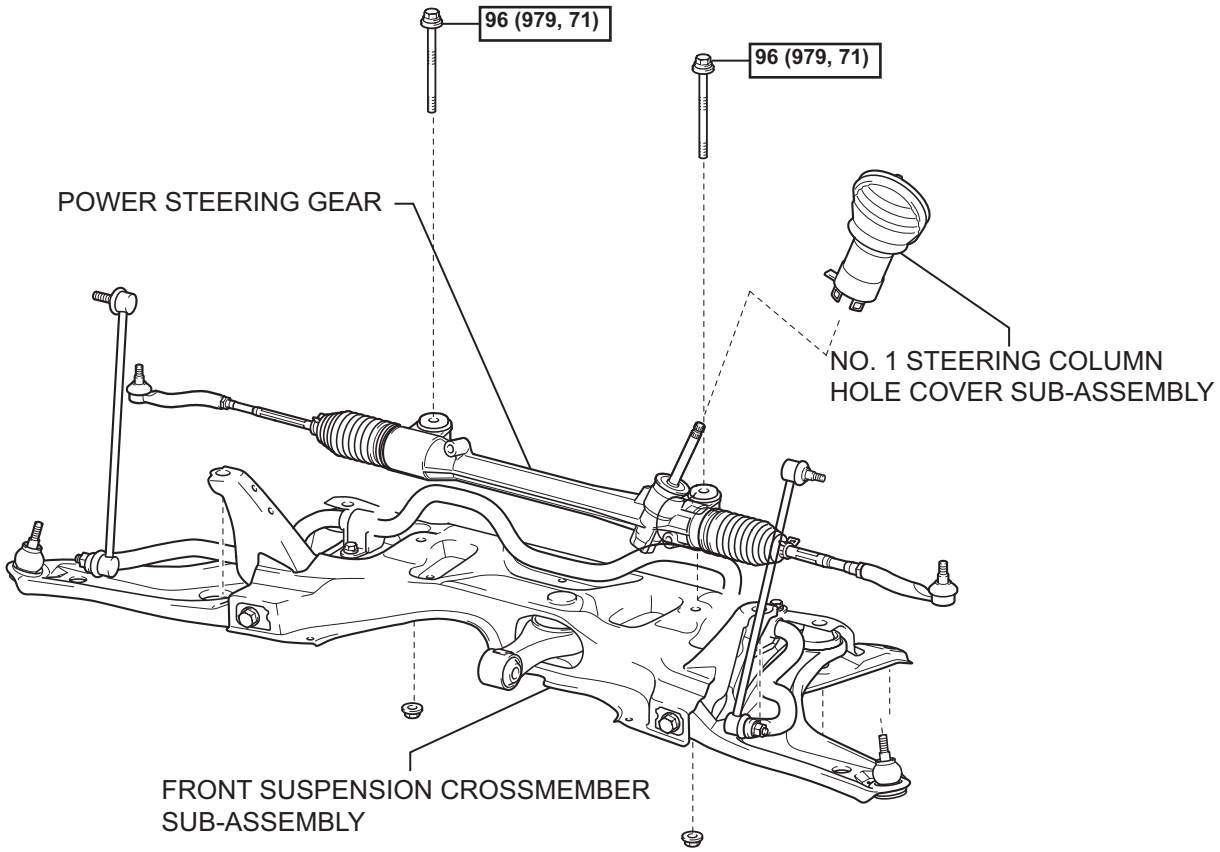

N*m (kgf*cm, ft.*lbf) : Specified torque

C119861E02

REMOVAL

1. **POSITION FRONT WHEELS FACING STRAIGHT AHEAD**
2. **DISCONNECT CABLE FROM NEGATIVE BATTERY TERMINAL**
3. **REMOVE HOOD SUB-ASSEMBLY**
   (a) Remove the 4 bolts and remove the hood.
4. **REMOVE FRONT WIPER ARM HEAD CAP (See page WW-17)**
5. **REMOVE FRONT WIPER ARM AND BLADE ASSEMBLY LH (See page WW-17)**
6. **REMOVE FRONT WIPER ARM AND BLADE ASSEMBLY RH (See page WW-17)**
7. **REMOVE HOOD TO COWL TOP SEAL (See page WW-18)**
8. **REMOVE COWL TOP VENTILATOR LOUVER SUB-ASSEMBLY (See page WW-18)**
9. **REMOVE COWL TOP VENTILATOR LOUVER LH (See page WW-18)**
10. **REMOVE WINDSHIELD WIPER MOTOR AND LINK (See page WW-19)**
11. **REMOVE COWL TO REGISTER DUCT SUB-ASSEMBLY (See page EM-122)**
12. **REMOVE COWL TOP PANEL OUTER (See page EM-123)**
13. **REMOVE COLUMN HOLE COVER SILENCER SHEET**
    (a) Remove the floor carpet and 2 clips and remove the column hole cover silencer.

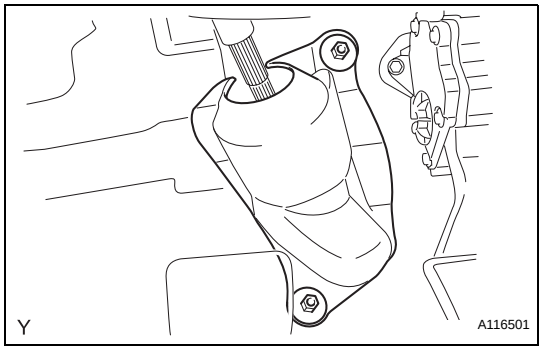

14. **REMOVE STEERING SLIDING YOKE SUB-ASSEMBLY**
    (a) Use a seat belt to fix the steering wheel assembly, in order to avoid breakage of the spiral cable.

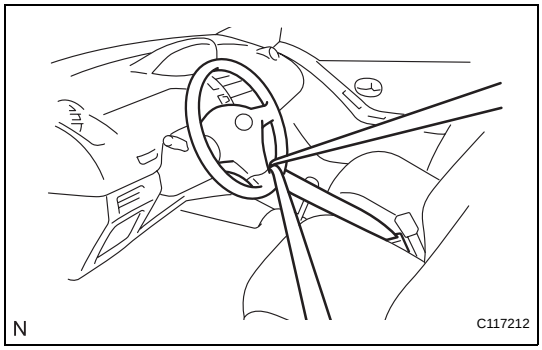

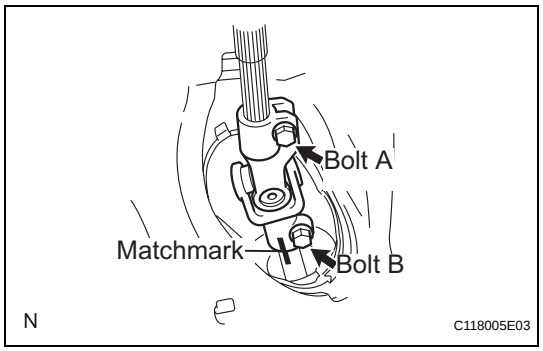

(b) Place the matchmarks on the sliding yoke of the steering intermediate shaft assembly and the power steering.
(c) Loosen bolt A, remove bolt B and separate the steering intermediate shaft assembly

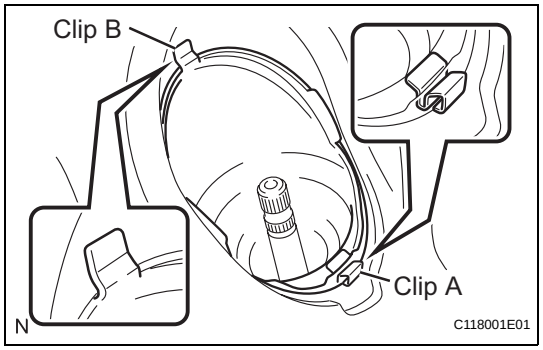

15. REMOVE NO. 1 STEERING COLUMN HOLE COVER SUB-ASSEMBLY

(a) Remove clip A, separate clip B from the body and separate No. 1 steering column hole cover sub-assembly.
NOTICE:
Do not damage clip B.

16. REMOVE FRONT WHEEL

17. REMOVE TIE ROD END SUB-ASSEMBLY (See page DS-3)

18. REMOVE TIE ROD END SUB-ASSEMBLY
HINT:
Use the same procedure for the RH side as for the LH side.

19. REMOVE FRONT STABILIZER LINK ASSEMBLY LH (See page DS-4)

20. REMOVE FRONT STABILIZER LINK ASSEMBLY RH
HINT:
Use the same procedure for the RH side as for the LH side.

21. REMOVE FRONT SUSPENSION LOWER ARM LH (See page DS-4)

22. REMOVE FRONT SUSPENSION LOWER ARM RH
HINT:
Use the same procedure for the RH side as for the LH side.

23. SUSPEND ENGINE ASSEMBLY

(a) 1NZ-FE
(1) Remove the bolt and remove the radio setting condenser.
(2) Remove the bolt and remove the air-fuel ratio sensor wiring bracket.

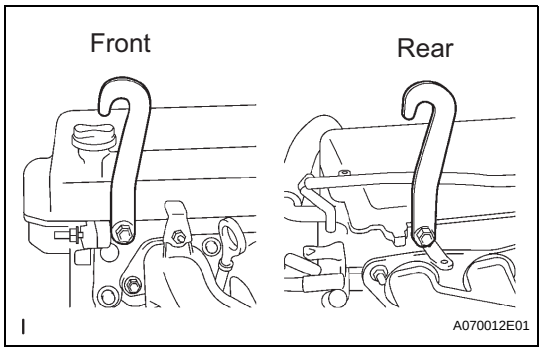

(3) Install the engine hanger with the bolt in the position shown in the illustration.
Part No. :
Engine hanger : 12281-21010
Bolt :
91642-81025
Torque: 40 N*m (408 kgf*cm, 30 ft.*lbf)

(4) Using an engine sling device and chain block, support the engine assembly with transaxle and front suspension crossmember.

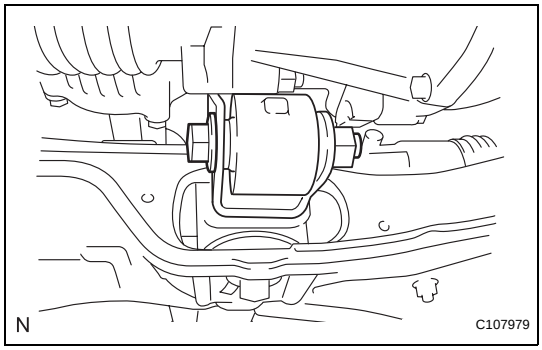

24. REMOVE FRONT SUSPENSION CROSSMEMBER SUB-ASSEMBLY

(a) Remove the bolt and separate the engine moving control rod.

(b) Support the front suspension crossmember with a tool such as a transmission jack.

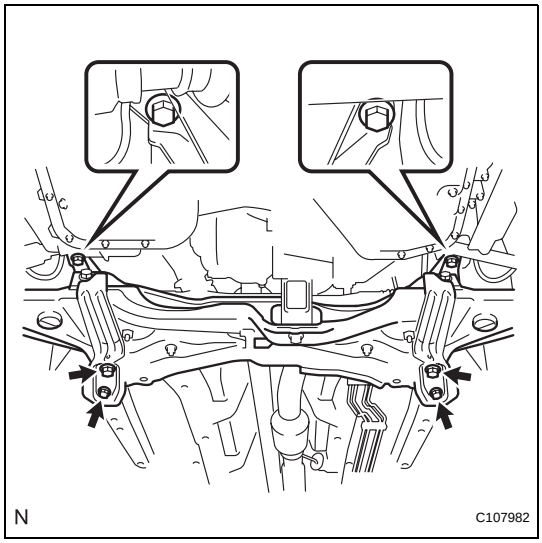

(c) Remove the 6 bolts and remove the suspension crossmember.

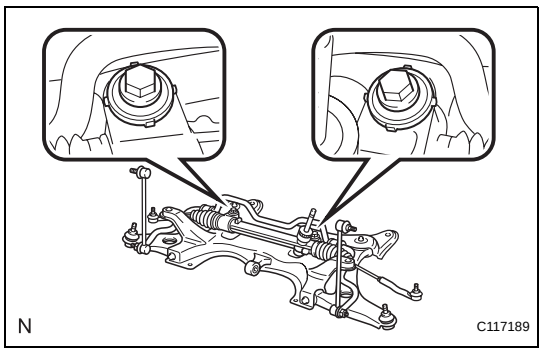

25. REMOVE POWER STEERING GEAR

(a) Remove the 2 bolts and 2 nuts and remove the power steering gear from the suspension crossmember.
NOTICE:
Keep the nut from rotating while turning the bolt.

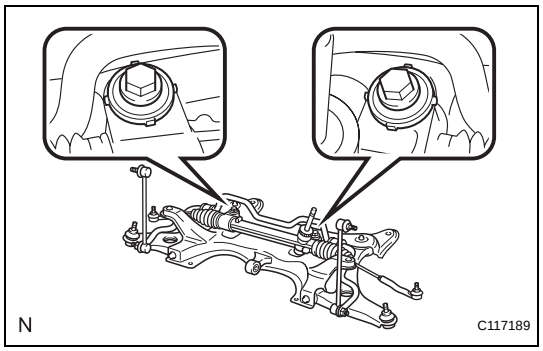

INSTALLATION

1. INSTALL POWER STEERING GEAR

(a) Install the power steering gear onto the front suspension crossmember with the 2 bolts and 2 nuts.

Torque: 96 N*m (979 kgf*cm, 71 ft.*lbf)

NOTICE:

Keep the nut from rotating while turning the bolt.

2. INSTALL FRONT SUSPENSION CROSSMEMBER SUB-ASSEMBLY

SST 09670-00010

(a) Support the front suspension crossmember with a tool such as transmission jack.

(b) Provisionally install the front suspension crossmember into the vehicle with the 6 bolts

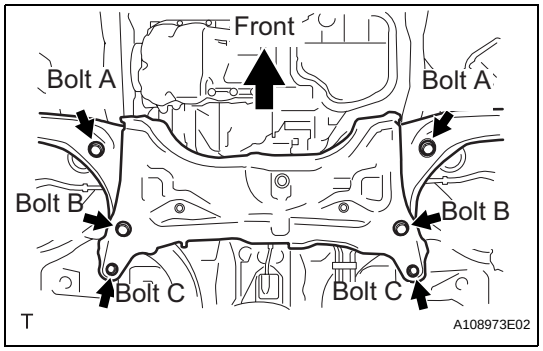

Bolt	Underhead Length (mm)
A	38
B	99
C	45

(c) By inserting SST into the datum holes in the front suspension crossmembers RH and LH sides alternately, tighten bolts A, B and C on both sides to the specified torque, in several steps.

Torque: 70 N*m (714 kgf*cm, 52 ft.*lbf) for Bolt A
160 N*m (1,631 kgf*cm, 118 ft.*lbf) for Bolt B
95 N*m (969 kgf*cm, 70 ft.*lbf) for Bolt C

NOTICE:

- **Insert SST into the datum holes in a vertical orientation.**
- **If SST can not be inserted into the datum holes vertically, loosen all the bolts and then insert SST again.**

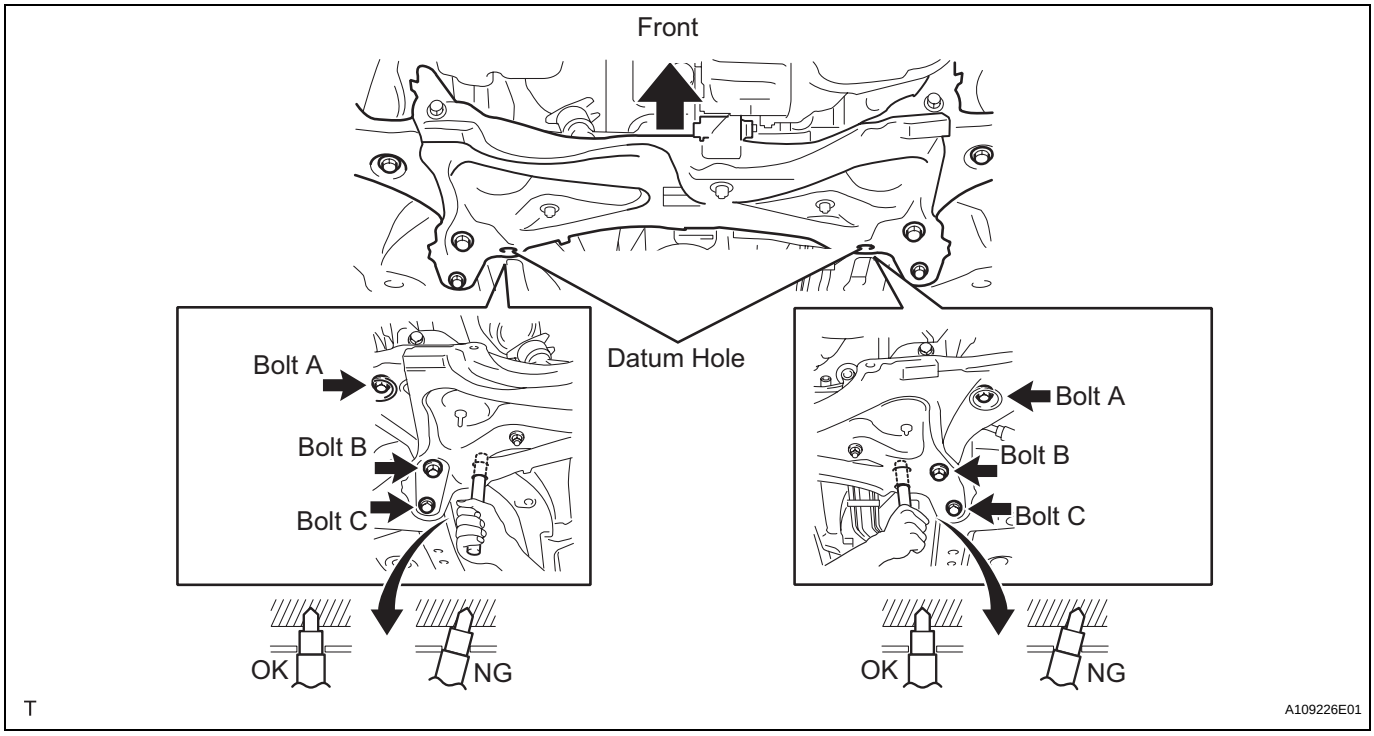

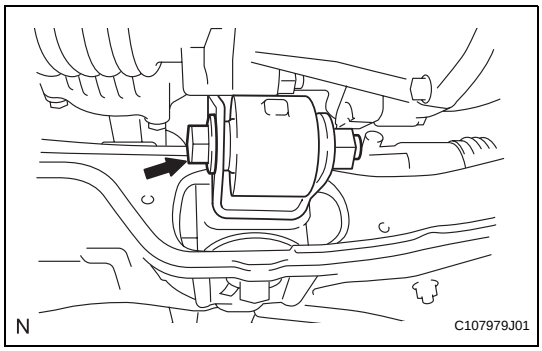

(d) Install the engine moving control rod with the bolt.
Torque: 120 N*m (1224 kgf*cm, 89 ft.*lbf)

3. **INSTALL FRONT SUSPENSION LOWER ARM LH (See page DS-14)**
4. **INSTALL FRONT SUSPENSION LOWER ARM RH**
HINT:
Use the same procedure for the LH side.
5. **INSTALL FRONT STABILIZER LINK ASSEMBLY LH (See page DS-4)**
6. **INSTALL FRONT STABILIZER LINK ASSEMBLY RH**
HINT:
Use the same procedure for the LH side.
7. **INSTALL TIE ROD END SUB-ASSEMBLY LH (See page DS-15)**
8. **INSTALL TIE ROD END SUB-ASSEMBLY RH**
HINT:
Use the same procedure for the LH side.
9. **INSTALL FRONT WHEEL**
Torque: 103 N*m (1,050 kgf*cm, 76 ft.*lbf)

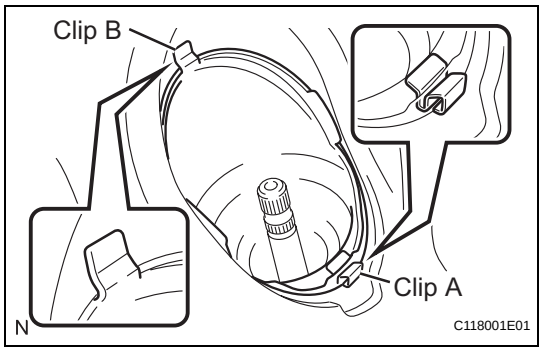

10. **INSTALL NO. 1 STEERING COLUMN HOLE COVER SUB-ASSEMBLY**
    (a) Install clip B onto the body portion and install No. 1 steering column hole cover sub-assembly onto the body portion with clip A.
    NOTICE:
    Make sure that the lip portion of No. 1 steering column hole cover sub-assembly is not damaged.

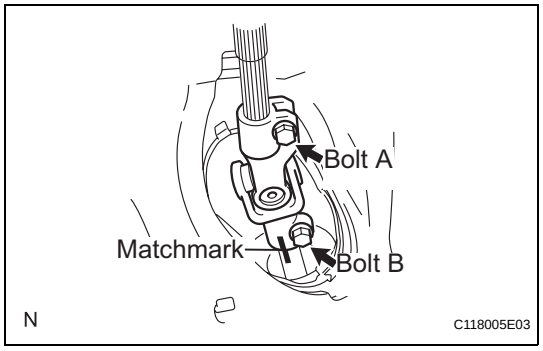

11. **INSTALL STEERING SLIDING YOKE SUB-ASSEMBLY**
    (a) Align the matchmarks and install the sliding yoke onto the intermediate shaft.
    Torque: 28 N*m (290 kgf*cm, 21 ft.*lbf)
    (b) Tighten bolt A.
    Torque: 28 N*m (290 kgf*cm, 21 ft.*lbf)

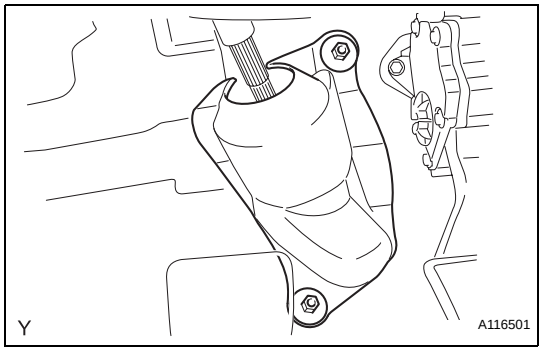

12. **INSTALL COLUMN HOLE COVER SILENCER SHEET**
    (a) Install the column hole cover silencer sheet with the 2 clips.
    (b) Install the floor carpet

13. **INSTALL COWL TOP PANEL OUTER (See page EM-146)**

14. **INSTALL COWL TO REGISTER DUCT SUB-ASSEMBLY (See page EM-147)**

15. **INSTALL WINDSHIELD WIPER MOTOR AND LINK (See page WW-21)**

16. **INSTALL COWL TOP VENTILATOR LOUVER LH (See page WW-21)**

17. **INSTALL COWL TOP VENTILATOR LOUVER SUB-ASSEMBLY (See page WW-21)**

18. **INSTALL HOOD TO COWL TOP SEAL (See page WW-22)**

19. **INSTALL FRONT WIPER ARM AND BLADE ASSEMBLY LH (See page WW-17)**

20. **INSTALL FRONT WIPER ARM AND BLADE ASSEMBLY RH (See page WW-23)**

21. **INSTALL FRONT WIPER ARM HEAD CAP (See page WW-23)**

22. **TEMPORARILY TIGHTEN HOOD SUB-ASSEMBLY**
    (a) Provisionally install the hood with the 4 bolts.
    HINT:
    Tighten the bolts to the specified torque after inspecting the hood.

23. **INSPECT HOOD SUB-ASSEMBLY (See page ED-3)**

24. **ADJUST HOOD SUB-ASSEMBLY (See page ED-4)**
25. **CONNECT CABLE TO NEGATIVE BATTERY TERMINAL**
    Torque: 5.4 N*m (55 kgf*cm, 48 in.*lbf)
26. **POSITION FRONT WHEELS FACING STRAIGHT AHEAD**
27. **INSPECT AND ADJUST FRONT WHEEL ALIGNMENT**
    (See page SP-2)
28. **CHECK ABS SPEED SENSOR SIGNAL**
    (See page BC-14)

POWER STEERING ECU (for Sedan)

COMPONENTS

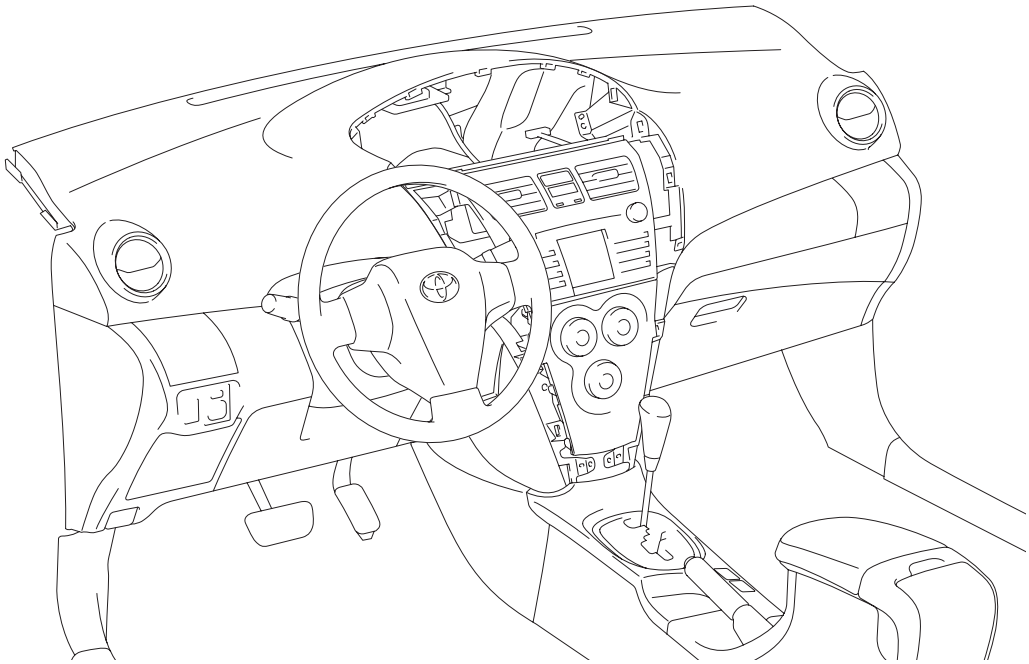

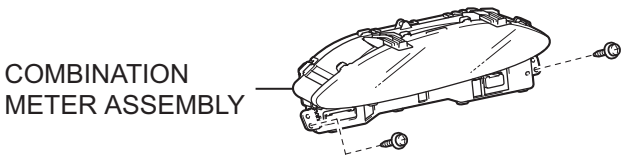



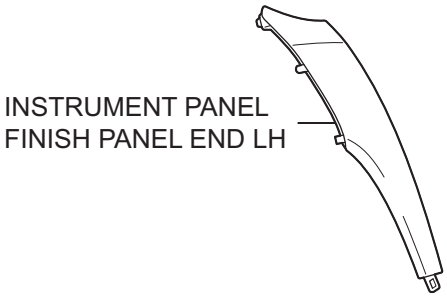

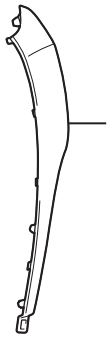



P

E116817E01

w/ Curtain Shield Airbag:

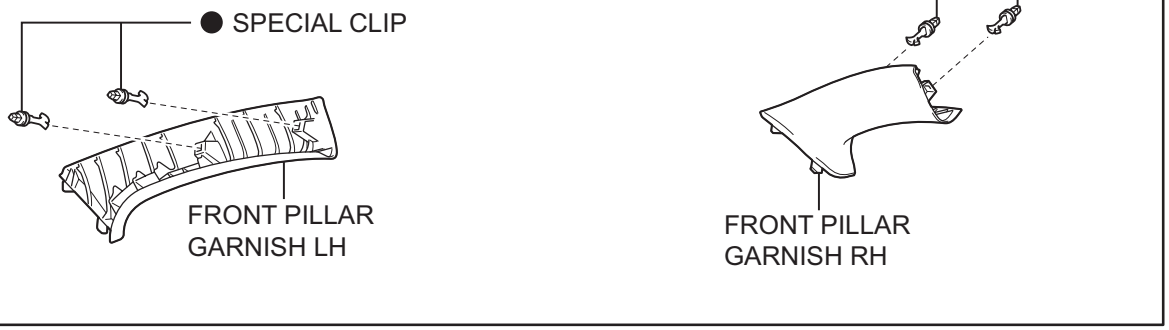

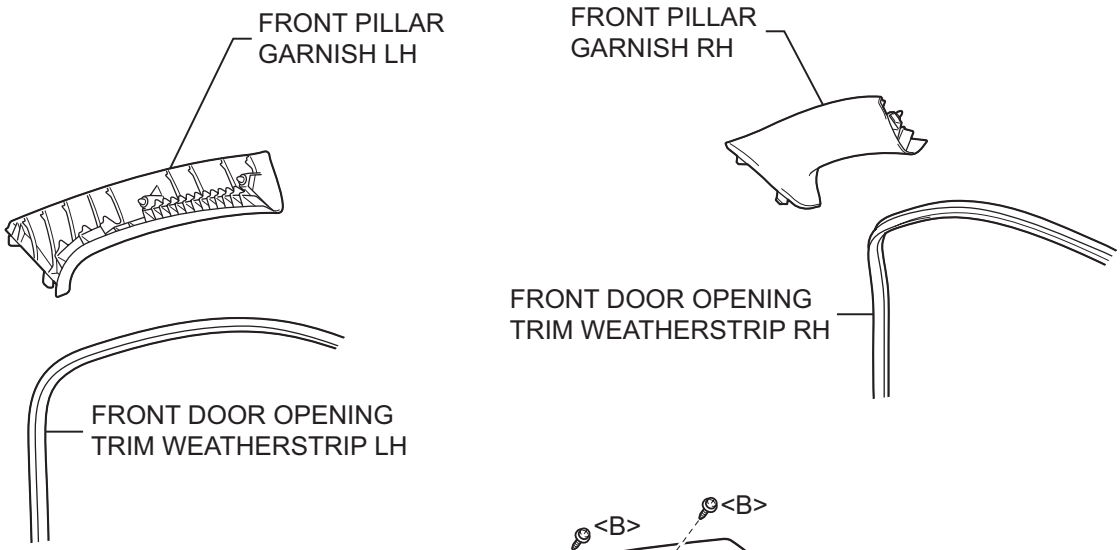

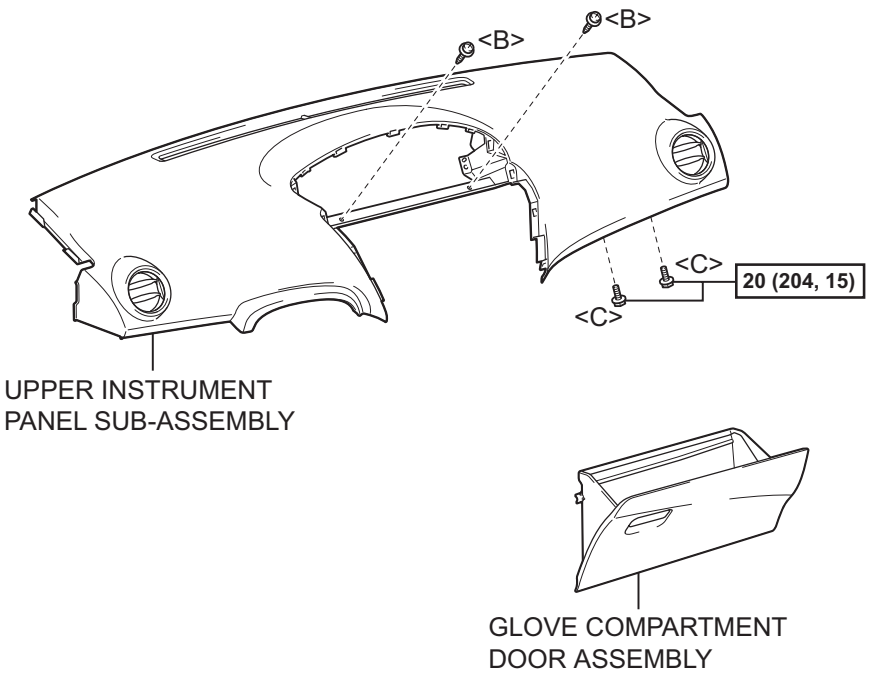

PS

N*m (kgf*cm, ft*lbf) : Specified torque

● Non-reusable part

P

B132310E02

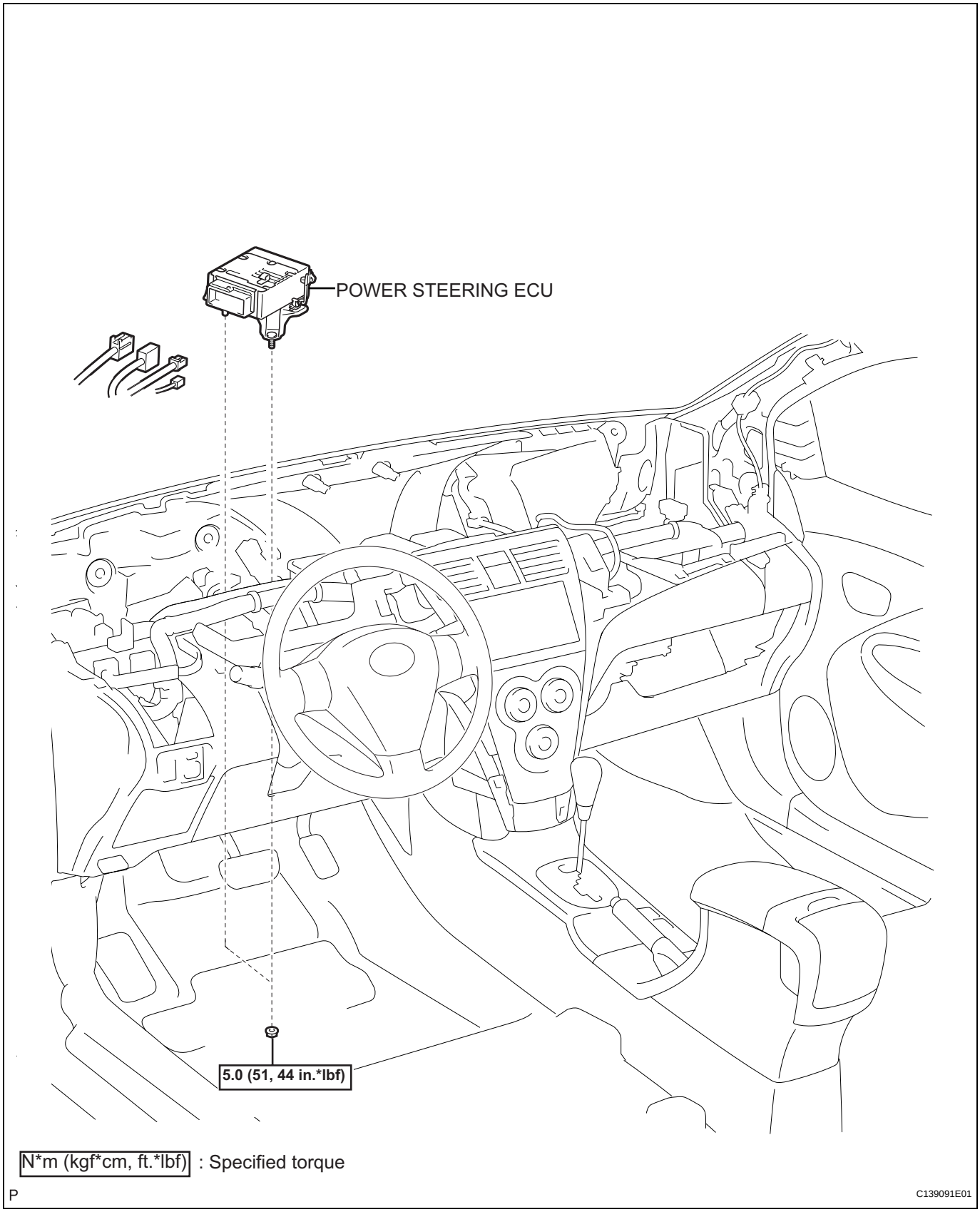

N*m (kgf*cm, ft.*lbf) : Specified torque

P

C139091E01

REMOVAL

HINT:
Use the same procedure for both the RH and LH sides.

1. **DISCONNECT CABLE FROM NEGATIVE BATTERY TERMINAL**
   (a) Wait for at least 90 seconds after disconnecting the cable to prevent the airbag from working.
2. **REMOVE INSTRUMENT PANEL FINISH PANEL LOWER CENTER (See page ME-138)**
3. **REMOVE INSTRUMENT PANEL FINISH PANEL END LH (See page ME-138)**
4. **REMOVE INSTRUMENT PANEL FINISH PANEL END RH (See page ME-138)**
5. **REMOVE INSTRUMENT CLUSTER FINISH PANEL (See page ME-139)**
6. **REMOVE COMBINATION METER ASSEMBLY (See page ME-139)**
7. **SEPARATE FRONT DOOR OPENING TRIM WEATHERSTRIP RH**
   (a) Separate the front door opening trim weatherstrip.
8. **SEPARATE FRONT DOOR OPENING TRIM WEATHERSTRIP LH**
   (a) Separate the front door opening trim weatherstrip.
9. **REMOVE FRONT PILLAR GARNISH RH (See page IR-18)**
10. **REMOVE FRONT PILLAR GARNISH LH (See page IR-19)**
11. **REMOVE GLOVE COMPARTMENT DOOR ASSEMBLY (See page IP-6)**
12. **REMOVE UPPER INSTRUMENT PANEL SUB-ASSEMBLY (See page IP-6)**
13. **REMOVE POWER STEERING ECU**
    (a) Separate the wire harness clamp.

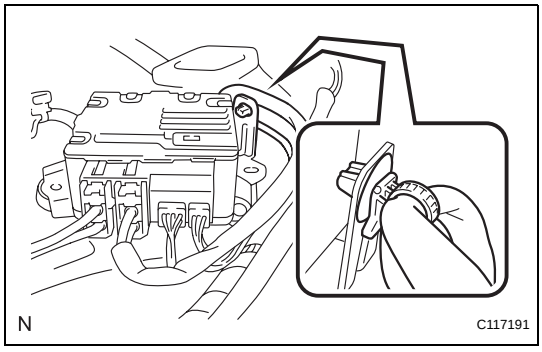

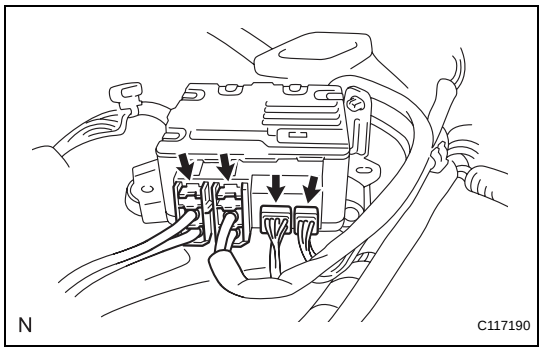

(b) Disconnect the 4 connectors.

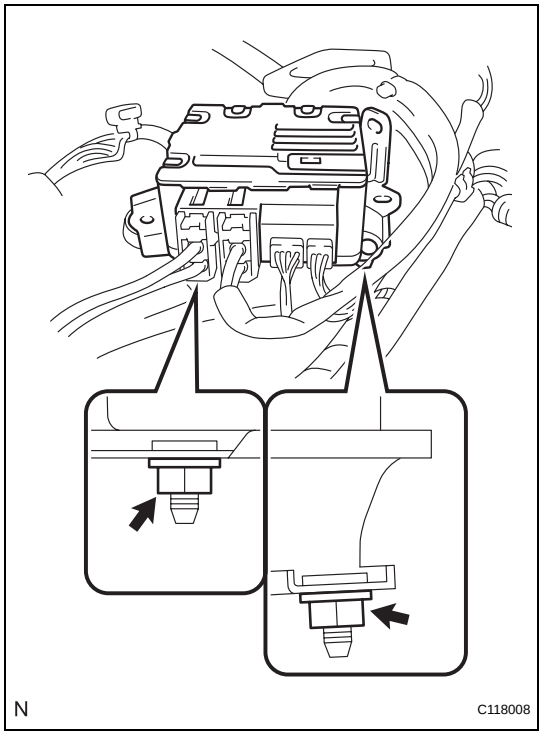

(c) Remove the 2 nuts and remove the power steering ECU.

INSTALLATION

1. INSTALL POWER STEERING ECU

(a) Install the power steering ECU with the 2 nuts.
Torque: 5.0 N*m (51 kgf*cm, 44 in.*lbf)

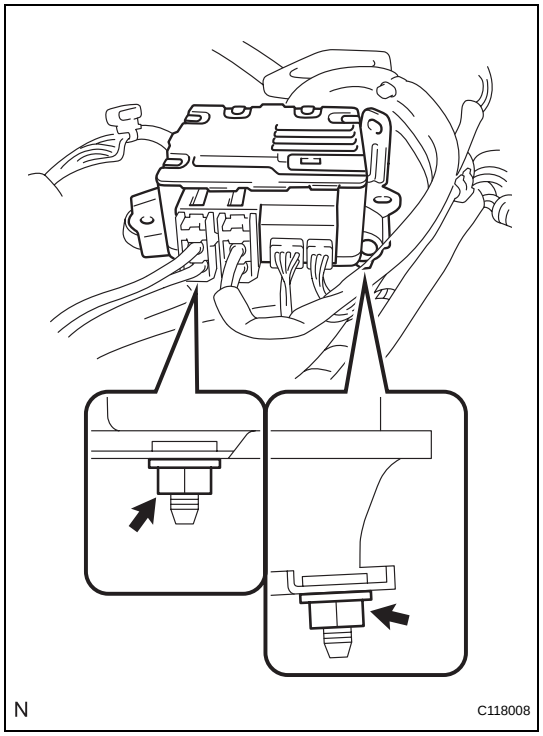

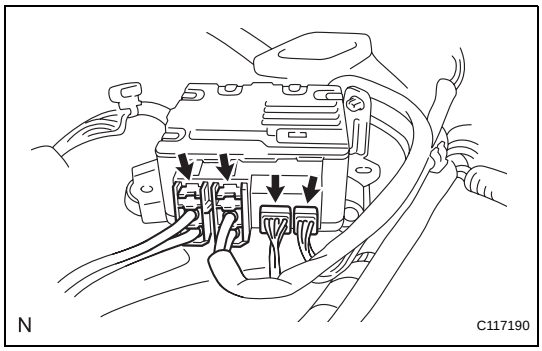

(b) Connect the 4 connectors.

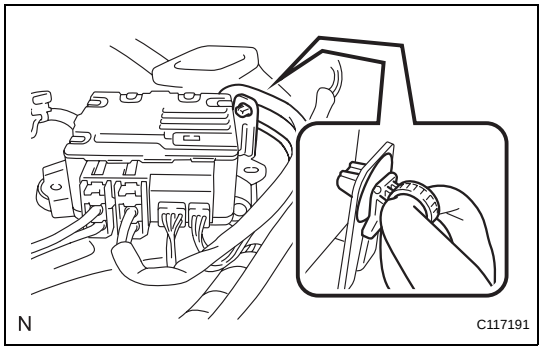

(c) Install the wire harness clamp.
NOTICE:
Make sure that the wire harness of the steering column assembly is installed onto the power steering ECU bracket and that it is not pulled too tightly.

2. **INSTALL UPPER INSTRUMENT PANEL SUB-ASSEMBLY (See page IP-11)**
3. **INSTALL GLOVE COMPARTMENT DOOR ASSEMBLY (See page IP-13)**
4. **INSTALL FRONT PILLAR GARNISH RH (See page IR-29)**
5. **INSTALL FRONT PILLAR GARNISH LH (See page IR-30)**
6. **INSTALL FRONT DOOR OPENING TRIM WEATHERSTRIP RH (See page IR-34)**
7. **INSTALL FRONT DOOR OPENING TRIM WEATHERSTRIP LH (See page IP-14)**
8. **INSTALL COMBINATION METER ASSEMBLY (See page ME-140)**
9. **INSTALL INSTRUMENT CLUSTER FINISH PANEL (See page ME-140)**
10. **INSTALL INSTRUMENT PANEL FINISH PANEL END RH (See page ME-141)**
11. **INSTALL INSTRUMENT PANEL FINISH PANEL END LH (See page ME-141)**
12. **INSTALL INSTRUMENT PANEL FINISH PANEL LOWER CENTER (See page ME-142)**
13. **CONNECT CABLE TO NEGATIVE BATTERY TERMINAL**
Torque: 5.4 N*m (55 kgf*cm, 48 in.*lbf)
14. **CHECK SRS WARNING LIGHT**
(See page RS-31)
15. **PERFORM ZERO POINT CALIBRATION**
(See page PS-12)

POWER STEERING ECU (for Hatchback)

COMPONENTS

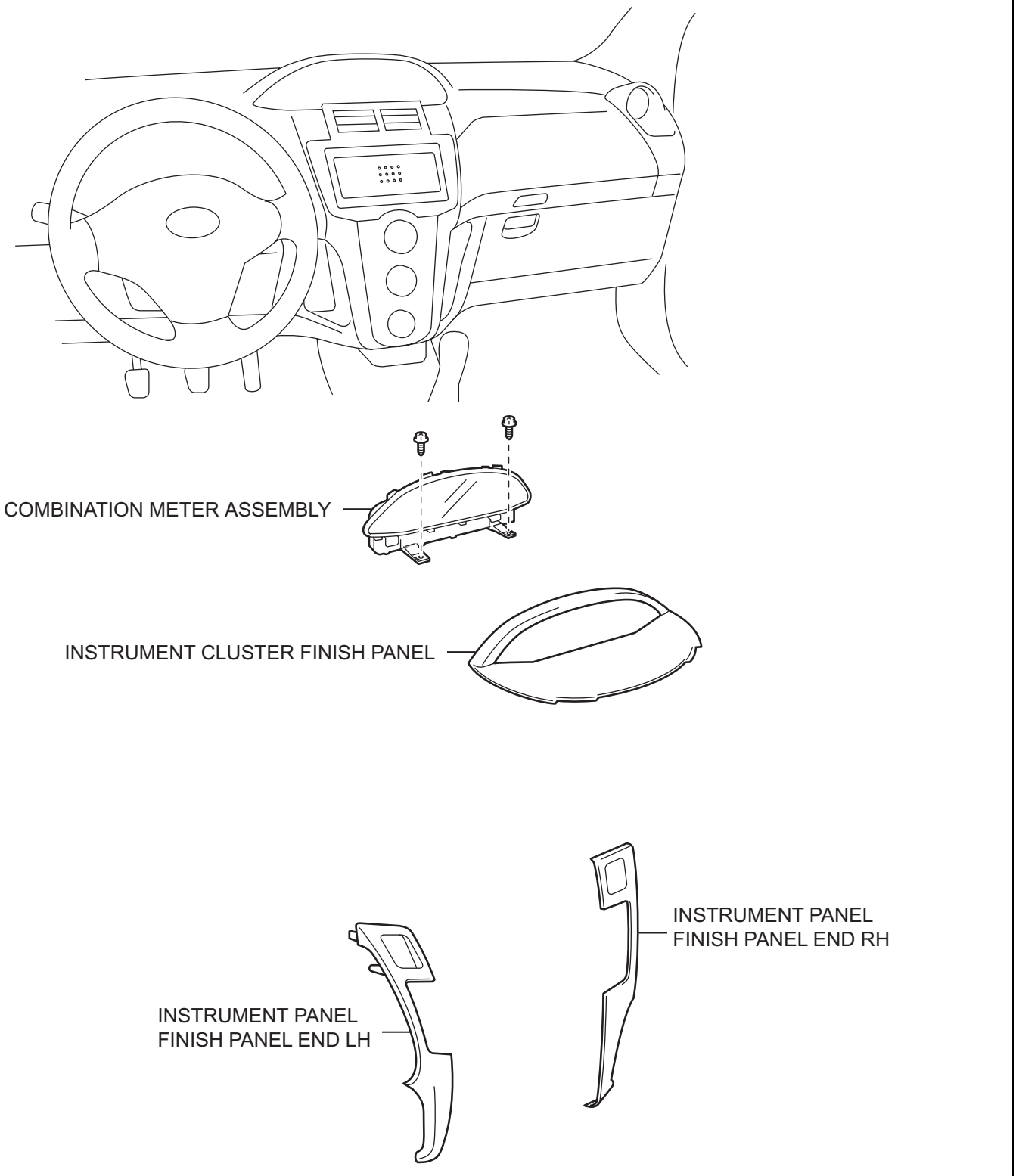

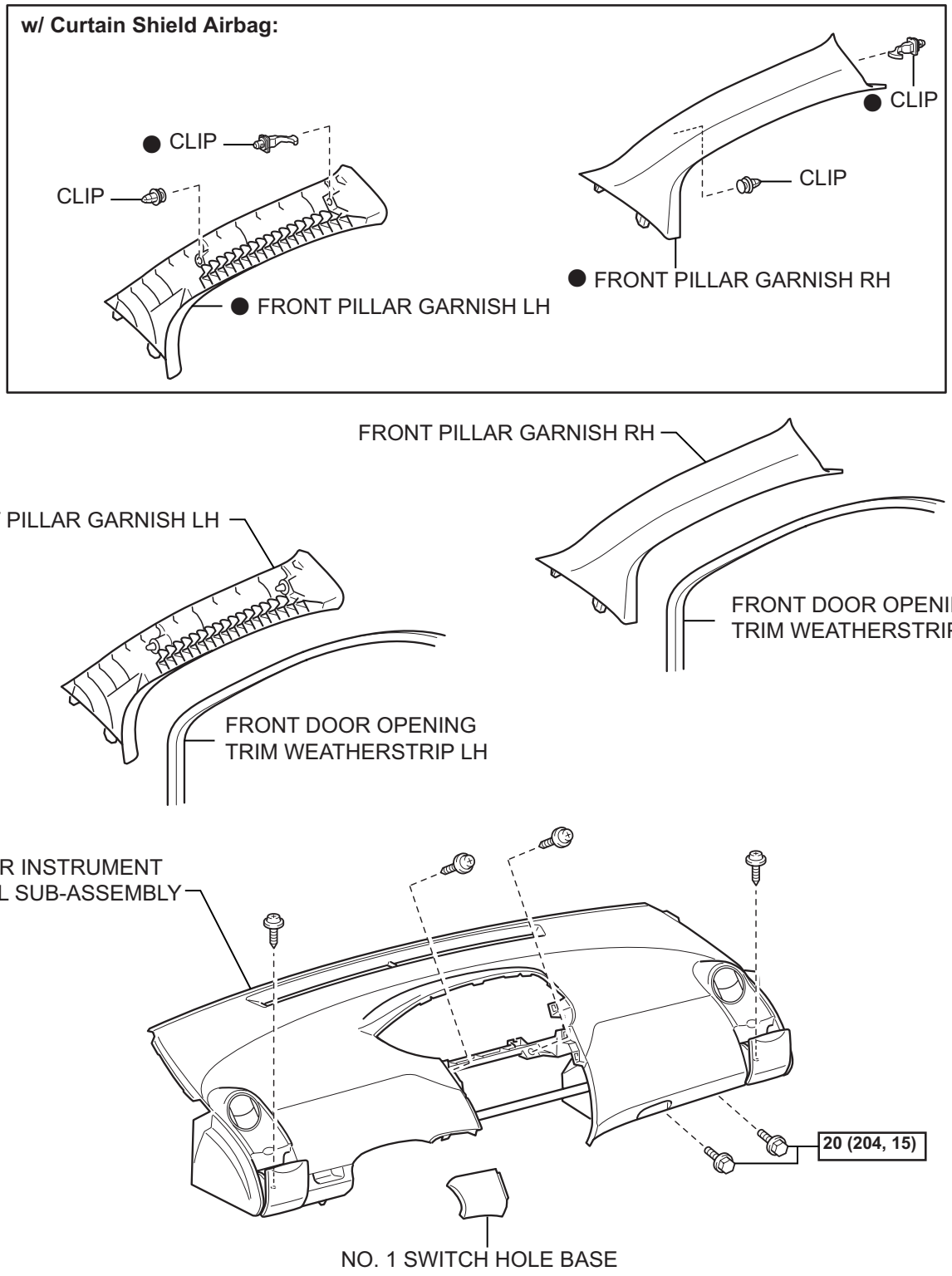

PS

N*m (kgf*cm, ft.*lbf) : Specified torque ● Non-reusable part

C119857E02

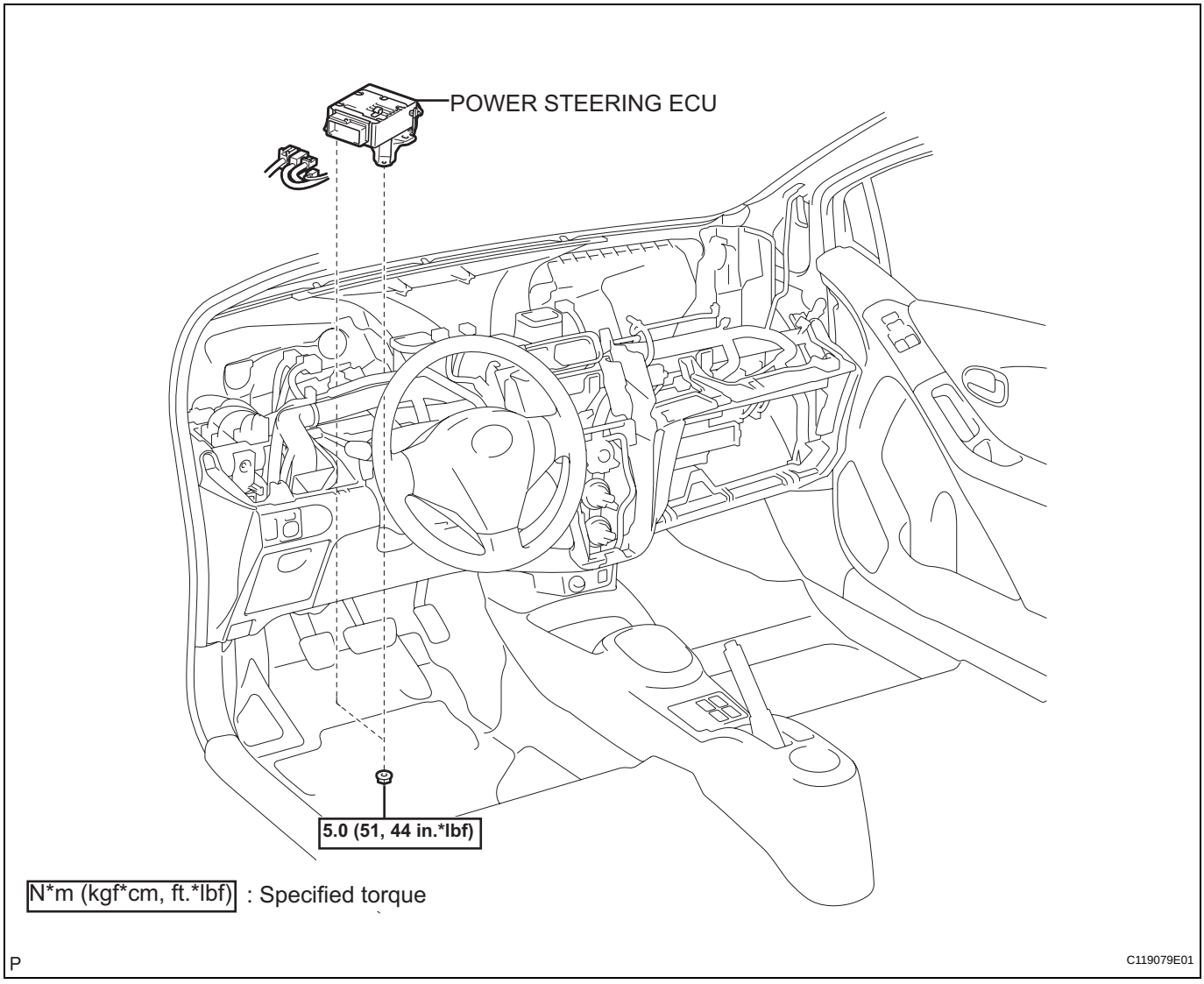
POWER STEERING ECU
5.0 (51, 44 in.*lbf)
N*m (kgf*cm, ft.*lbf) : Specified torque
P
C119079E01

REMOVAL

1. **DISCONNECT CABLE FROM NEGATIVE BATTERY TERMINAL**
2. **REMOVE INSTRUMENT PANEL FINISH PANEL END LH (See page ME-145)**
3. **REMOVE INSTRUMENT PANEL FINISH PANEL END RH (See page ME-145)**
4. **REMOVE INSTRUMENT CLUSTER FINISH PANEL (See page ME-145)**
5. **REMOVE COMBINATION METER ASSEMBLY (See page ME-146)**
6. **REMOVE FRONT DOOR OPENING TRIM WEATHERSTRIP RH (See page IR-50)**
7. **REMOVE FRONT DOOR OPENING TRIM WEATHERSTRIP LH**
   HINT:
   Use the same procedure for the RH side as for the LH side.
8. **REMOVE FRONT PILLAR GARNISH RH (See page IR-58)**
9. **REMOVE FRONT PILLAR GARNISH LH (See page IR-59)**
10. **REMOVE NO. 1 SWITCH HOLE BASE (See page IP-20)**
11. **REMOVE GLOVE COMPARTMENT DOOR ASSEMBLY (See page IP-20)**
12. **REMOVE UPPER INSTRUMENT PANEL SUB-ASSEMBLY (See page IP-21)**
13. **REMOVE POWER STEERING ECU**
    (a) Separate the wire harness clamp.

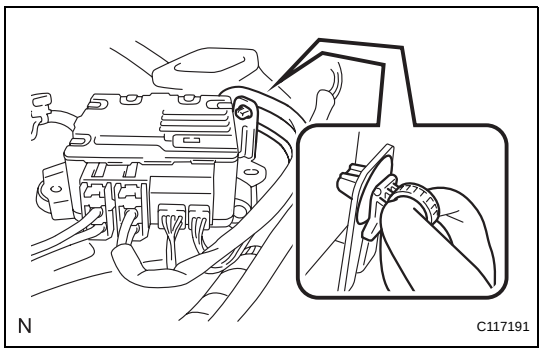

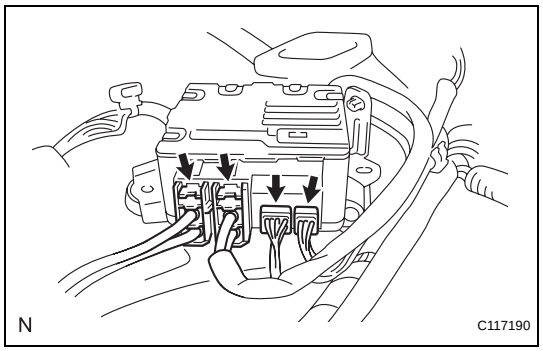

(b) Disconnect the 4 connectors.

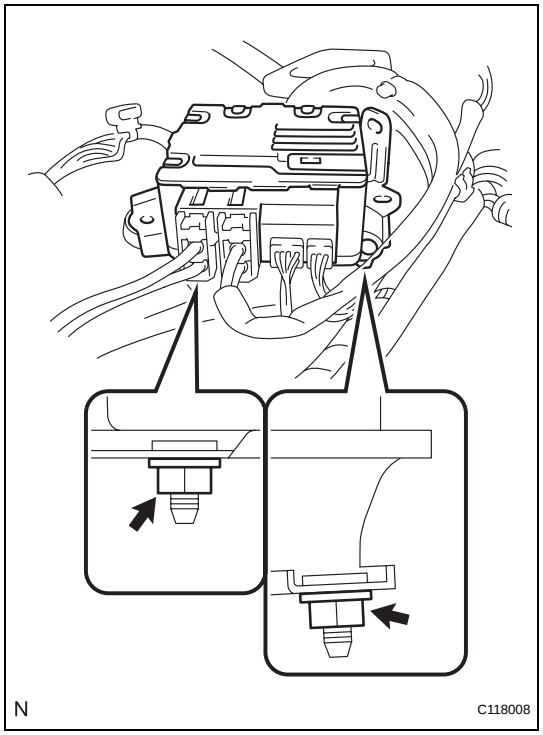

(c) Remove the 2 nuts and remove the power steering ECU.

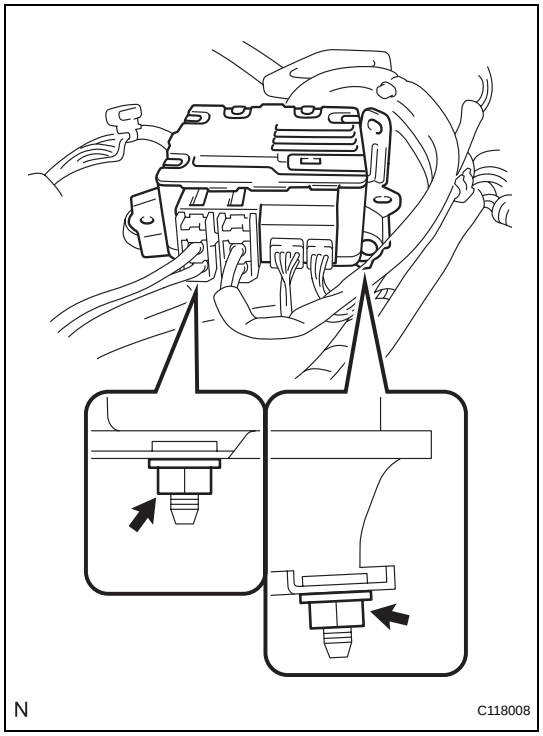

INSTALLATION

1. INSTALL POWER STEERING ECU

(a) Install the power steering ECU with the 2 nuts.
Torque: 5.0 N*m (51 kgf*cm, 44 in.*lbf)

PS

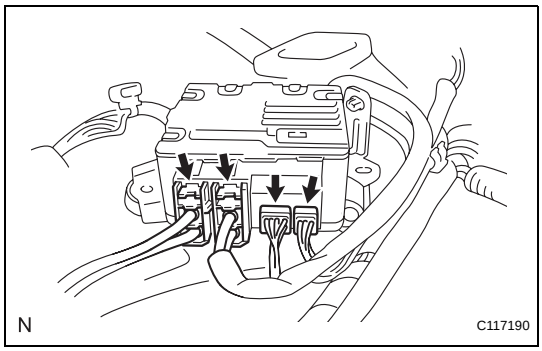

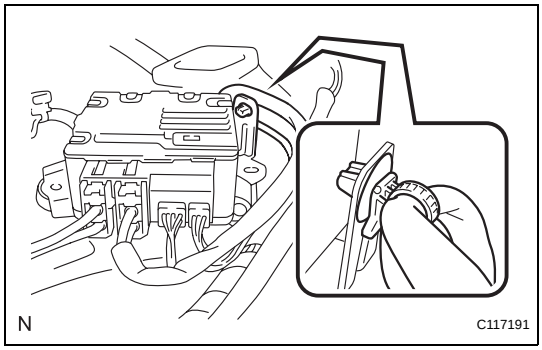

(b) Connect the 4 connectors.

(c) Install the wire harness clamp.
NOTICE:
Make sure that the wire harness of the steering column assembly is installed onto the power steering ECU bracket and that it is not pulled too tightly.

2. **INSTALL UPPER INSTRUMENT PANEL SUB-ASSEMBLY (See page IP-29)**
3. **INSTALL NO. 1 SWITCH HOLE BASE (See page IP-32)**
4. **INSTALL GLOVE COMPARTMENT DOOR ASSEMBLY (See page IP-32)**
5. **INSTALL FRONT PILLAR GARNISH RH (See page IR-71)**
6. **INSTALL FRONT PILLAR GARNISH LH (See page IR-72)**
7. **INSTALL FRONT DOOR OPENING TRIM WEATHERSTRIP RH (See page IR-81)**
8. **INSTALL FRONT DOOR OPENING TRIM WEATHERSTRIP LH**
   HINT:
   Use the same procedure for the RH side as for the LH side.
9. **INSTALL COMBINATION METER ASSEMBLY (See page ME-148)**
10. **INSTALL INSTRUMENT CLUSTER FINISH PANEL (See page ME-148)**
11. **INSTALL INSTRUMENT PANEL FINISH PANEL END RH (See page ME-149)**
12. **INSTALL INSTRUMENT PANEL FINISH PANEL END LH (See page IR-72)**
13. **CONNECT CABLE TO NEGATIVE BATTERY TERMINAL**
    Torque: 5.4 N*m (55 kgf*cm, 48 in.*lbf)
14. **PERFORM CALIBRATION OF TORQUE SENSOR ZERO POINT**
    (See page PS-12).

AIR CONDITIONING SYSTEM

PRECAUTION

1. **IF ANY OF FOLLOWING CONDITIONS ARE MET, KEEP ENGINE IDLING WITH A/C ON (ENGINE SPEED AT LESS THAN 2000 RPM) FOR AT LEAST 1 MINUTE:**
   - Refrigerant gas has been refilled or A/C parts have been replaced.
   - Long time has elapsed since engine was stopped.

   NOTICE:
   If the engine speed exceeds 2,000 rpm, the A/C compressor may be damaged.

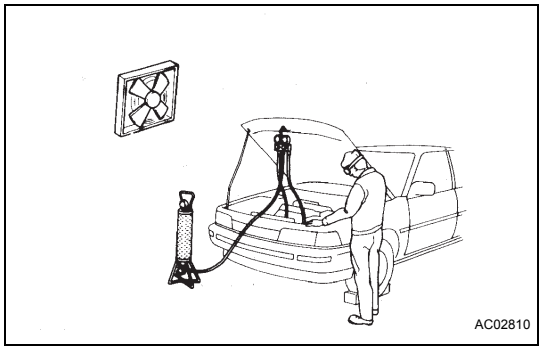

2. **DO NOT HANDLE REFRIGERANT IN ENCLOSED AREAS OR NEAR OPEN FLAMES**
3. **ALWAYS WEAR EYE PROTECTION**

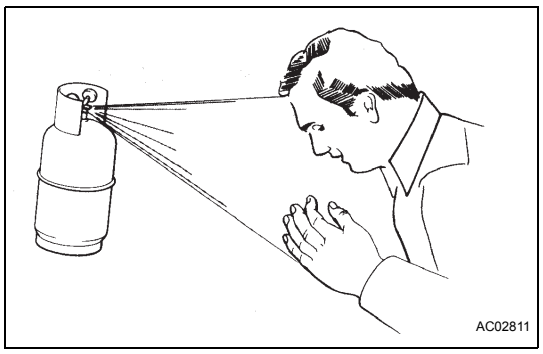

4. **BE CAREFUL NOT TO GET LIQUID REFRIGERANT IN YOUR EYES OR ON YOUR SKIN**
   If liquid refrigerant gets in your eyes or on your skin:
   (a) Wash the area with lots of cold water.
   CAUTION:
   Do not rub your eyes or skin.
   (b) Apply clean petroleum jelly to the skin.
   (c) Go immediately to a hospital or see a physician for professional treatment.
5. **NEVER HEAT CONTAINER OR EXPOSE IT TO NAKED FLAMES**
6. **BE CAREFUL NOT TO DROP CONTAINER OR SUBJECT IT TO PHYSICAL SHOCKS**

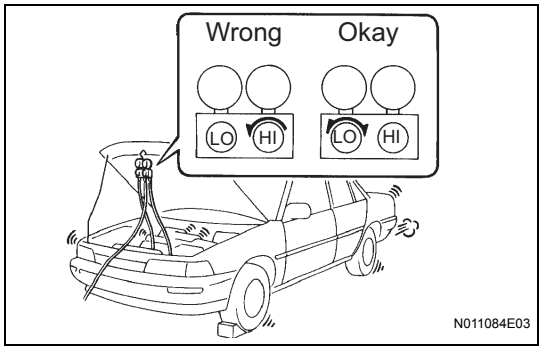

7. **DO NOT OPERATE COMPRESSOR WITH INSUFFICIENT REFRIGERANT IN REFRIGERANT SYSTEM**
   If there is not enough refrigerant in the refrigerant system, oil lubrication will be insufficient and compressor burnout may occur. Necessary care should be taken to avoid this.
8. **DO NOT OPEN HIGH PRESSURE MANIFOLD VALVE WHILE COMPRESSOR IS OPERATING**
   Open and close only the low pressure valve. Opening and closing the high pressure valve could cause the charging cylinder to rupture.

9. **BE CAREFUL NOT TO OVERCHARGE SYSTEM WITH REFRIGERANT**
   If the refrigerant is overcharged, it causes problems such as insufficient cooling, poor fuel economy and engine overheating.
10. **DO NOT OPERATE ENGINE AND COMPRESSOR WITHOUT REFRIGERANT**
    CAUTION:
    This may damage the inside of the compressor.

PARTS LOCATION

HATCHBACK:

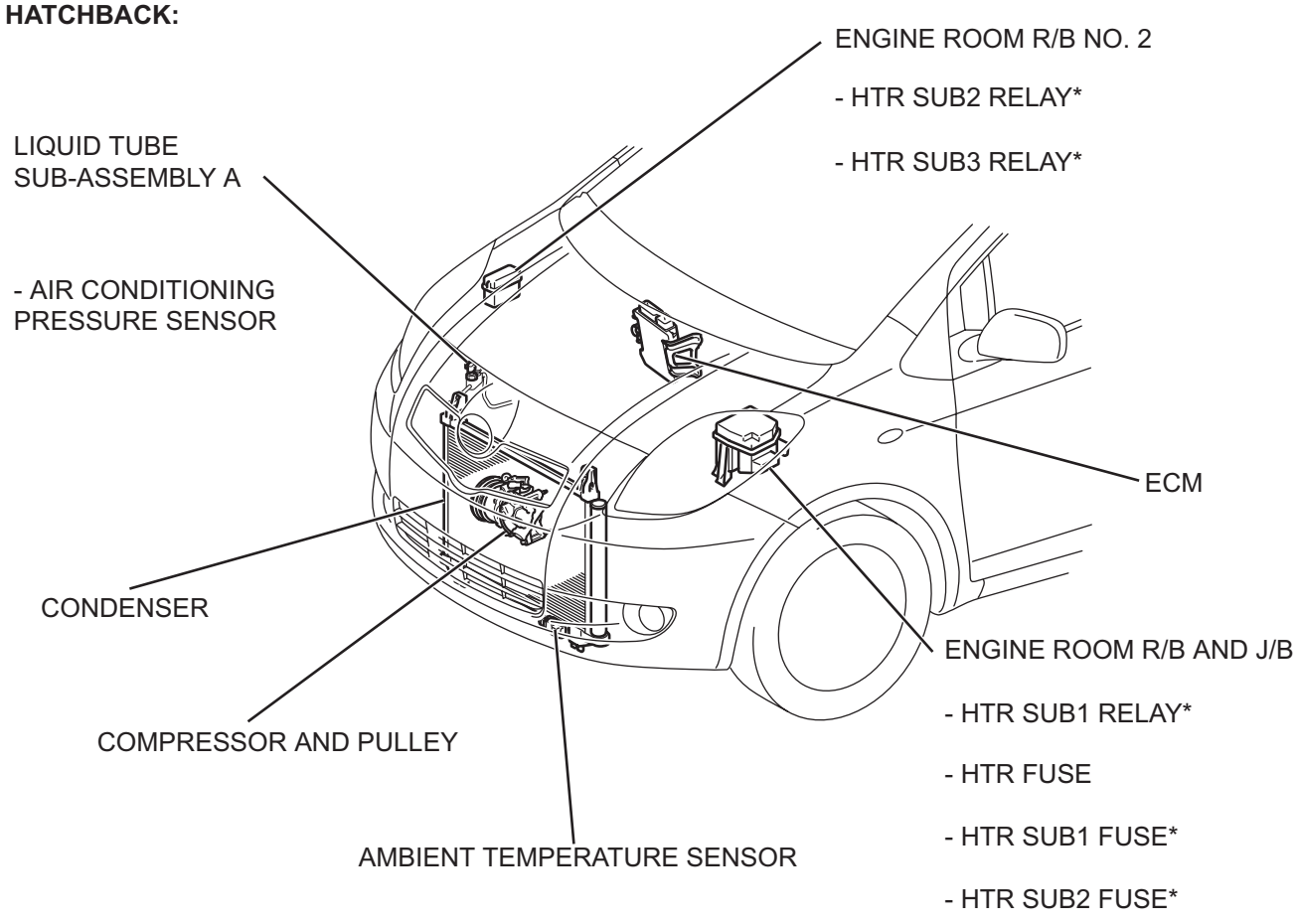

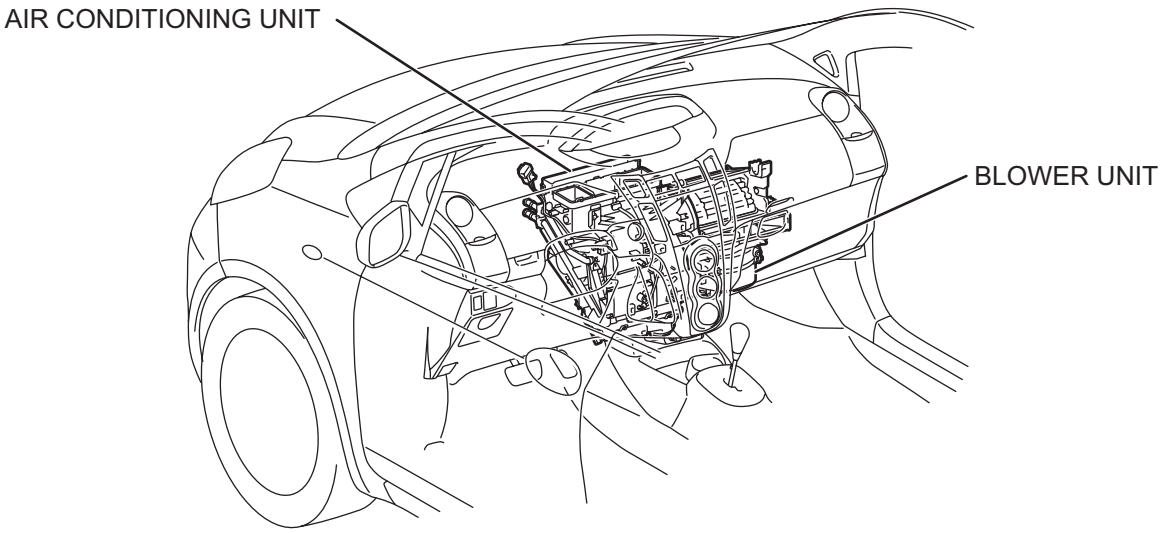

*: W/ PTC HEATER

H

E114512E05

AC

SEDAN:

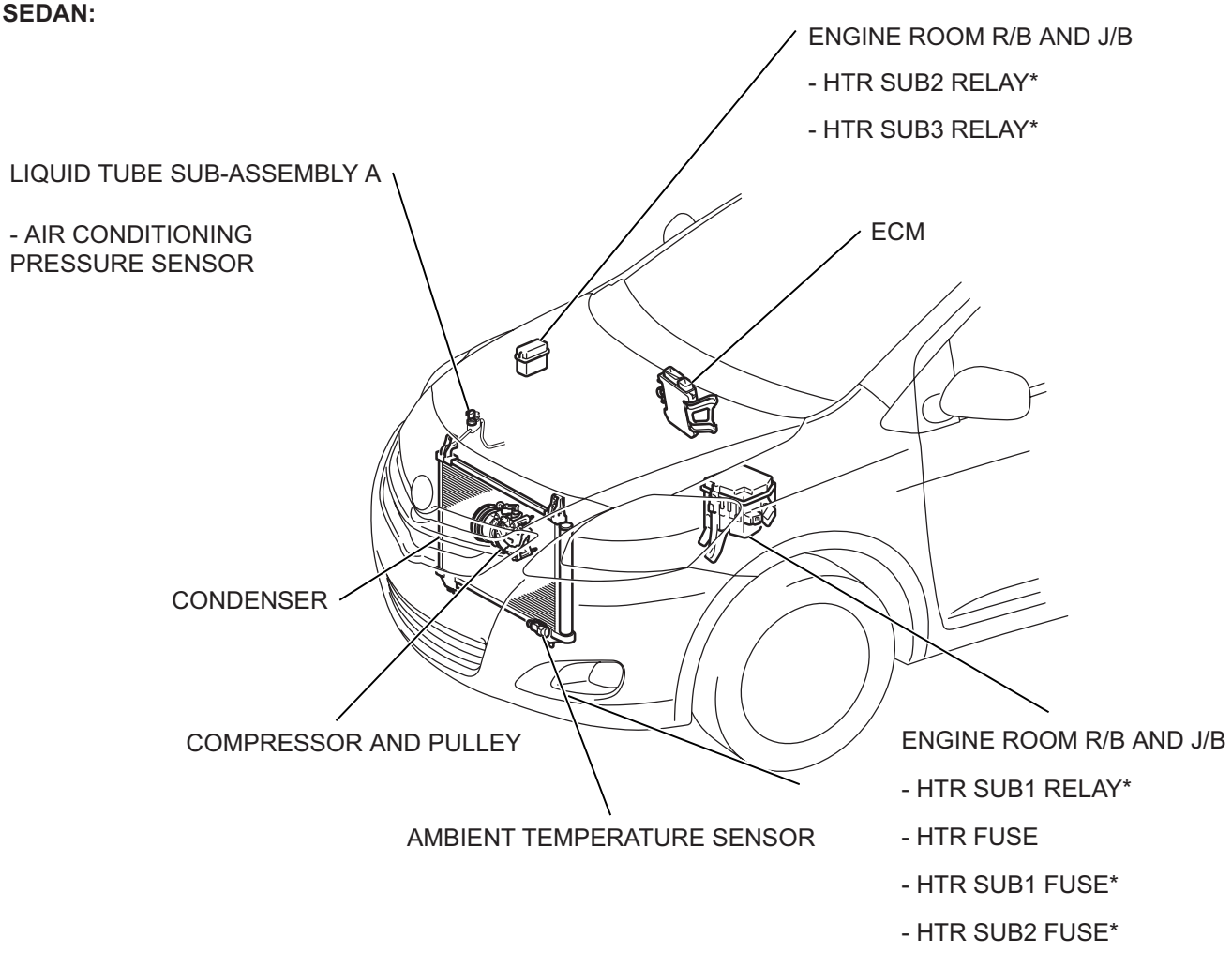

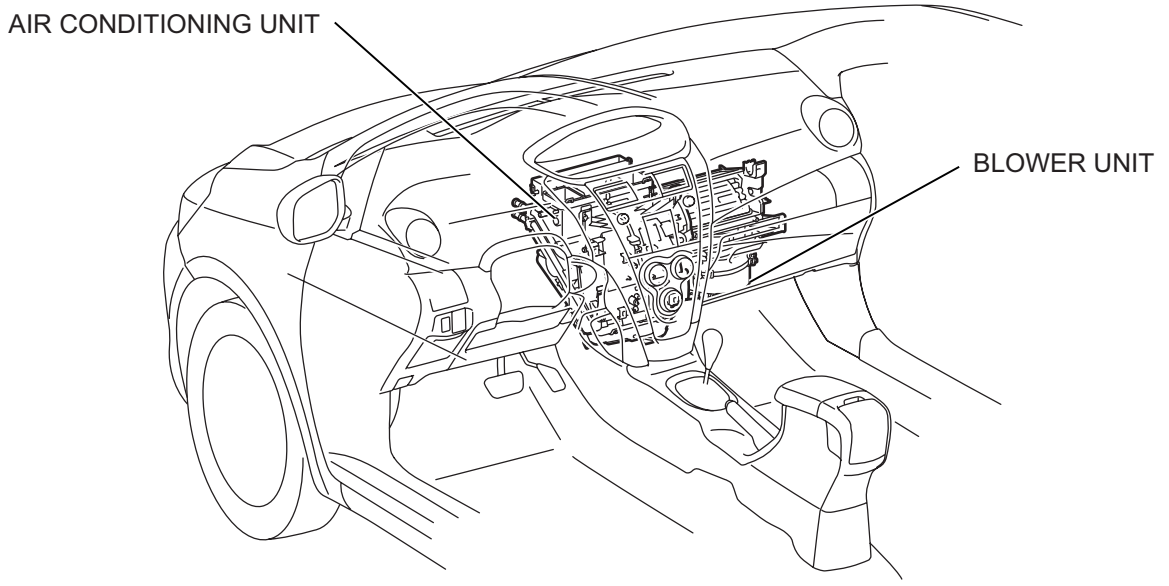

*: W/PTC HEATER

E133589E01

HATCHBACK:

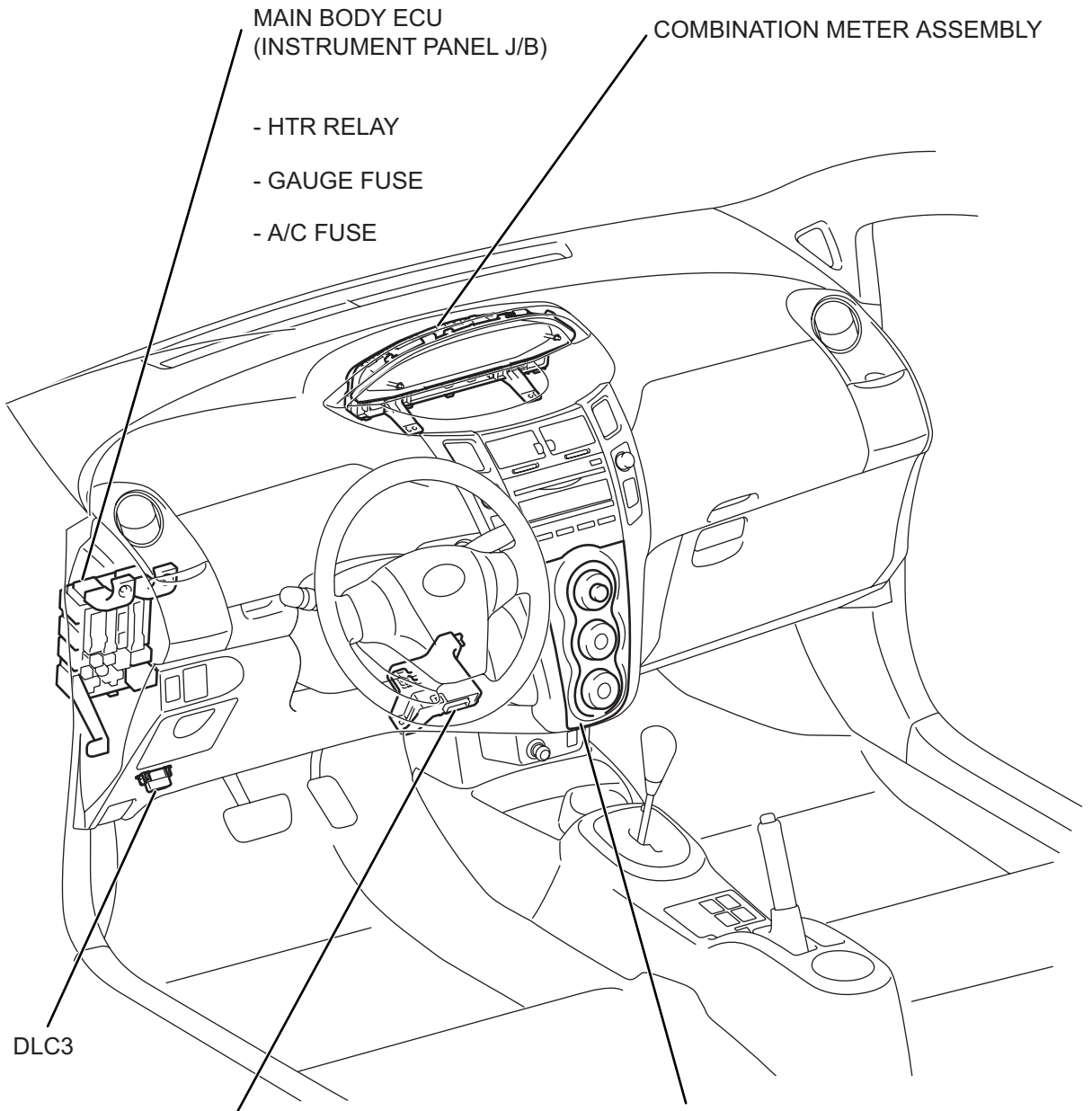

*: W/ PTC HEATER

E119791E03

SEDAN:

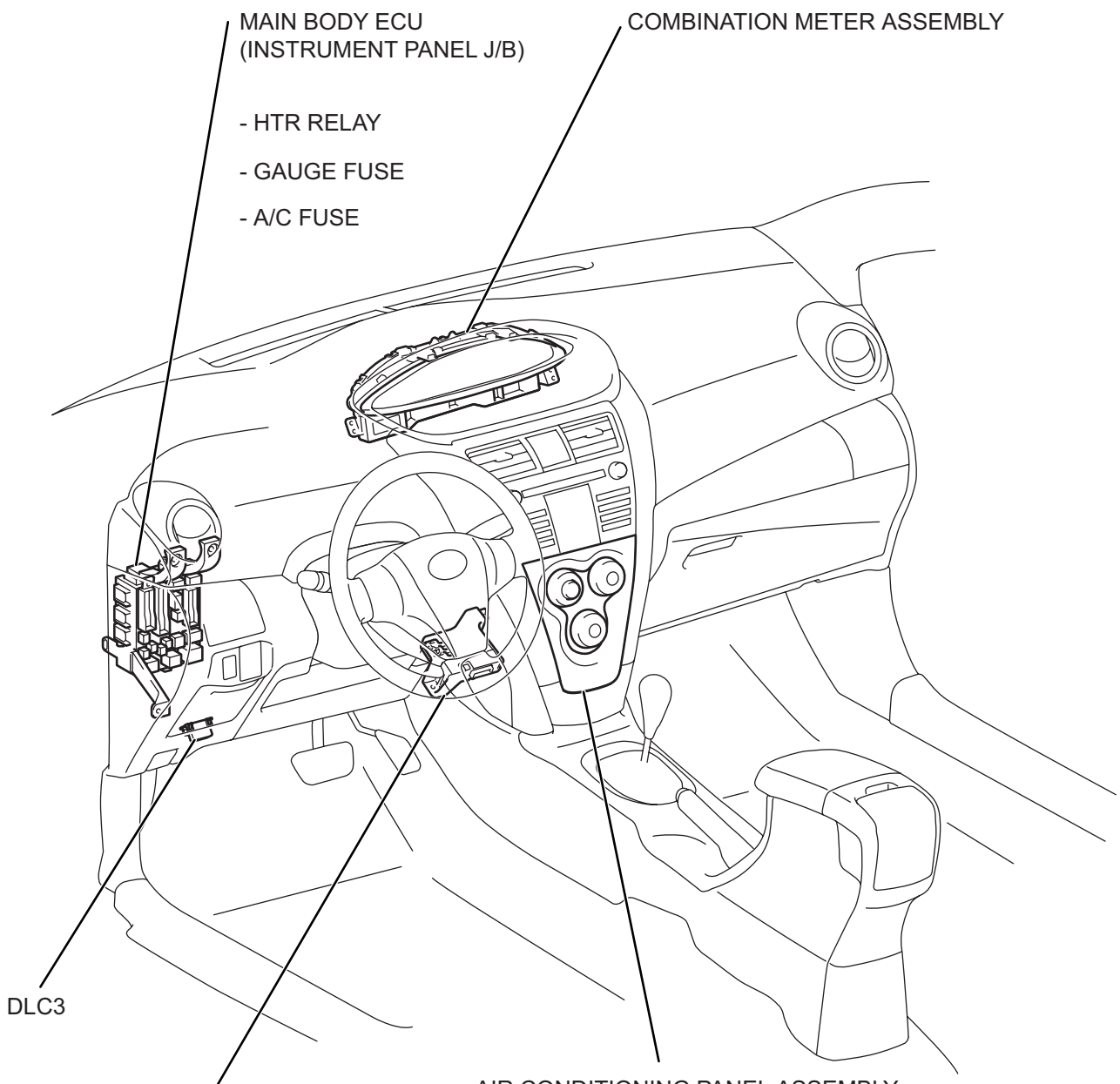

*: W/ PTC HEATER

E133590E01

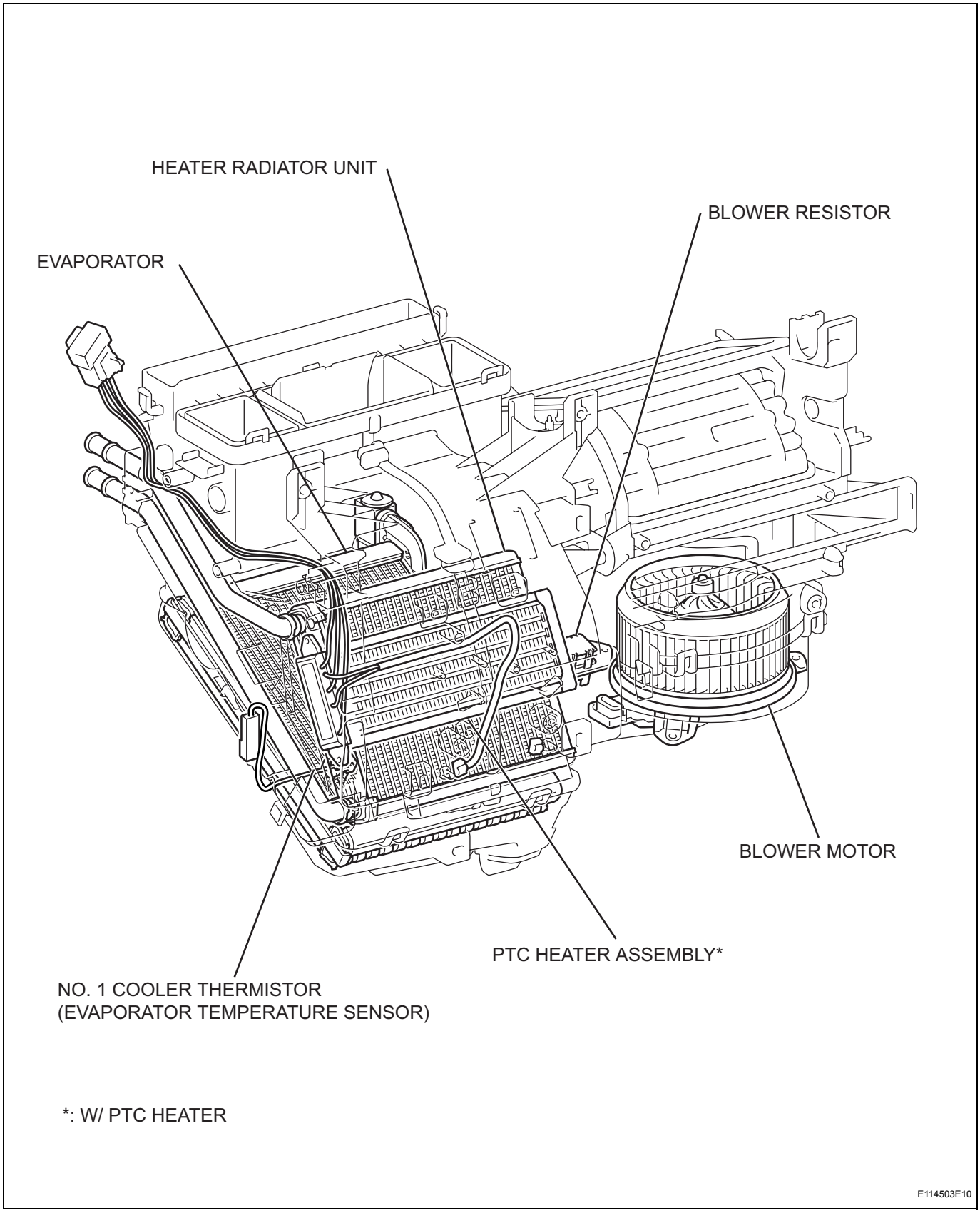
HEATER RADIATOR UNIT
BLOWER RESISTOR
EVAPORATOR
BLOWER MOTOR
PTC HEATER ASSEMBLY*
NO. 1 COOLER THERMISTOR
(EVAPORATOR TEMPERATURE SENSOR)
*: W/ PTC HEATER
E114503E10

SYSTEM DIAGRAM

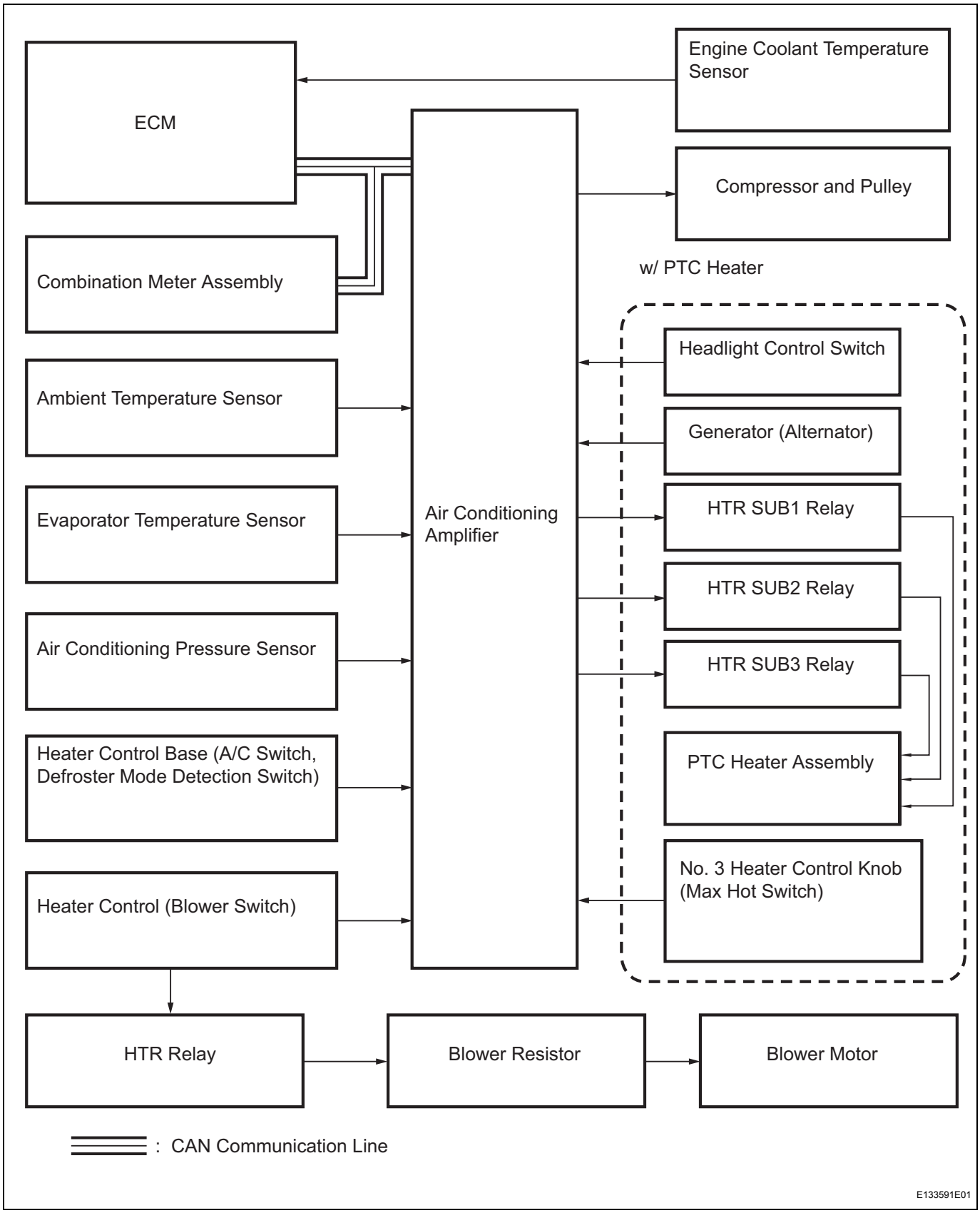

Communication table

Sender	Receiver	Signal	Communication line
Air conditioning amplifier	ECM	A/C compressor control signal	CAN
		Idle up request signal	
		Cooling fan motor driving request	
		PTC driving number request signal	
		Ambient temperature signal	
		External variable control solenoid current signal	
Combination meter	Air conditioning amplifier	Vehicle speed signal	CAN
ECM	Air conditioning amplifier	Engine revolution speed signal	CAN
		Engine coolant temperature signal	
		A/C control cut signal	
		Variable control prohibition signal	
		PTC heater permission number	

SYSTEM DESCRIPTION

1. GENERAL

(a) The air conditioning system has the following features:
The air conditioning amplifier controls the operation of parts, such as the air conditioning compressor, automatically in accordance with the operating conditions of the air conditioning system.

2. MODE POSITION AND DAMPER OPERATION

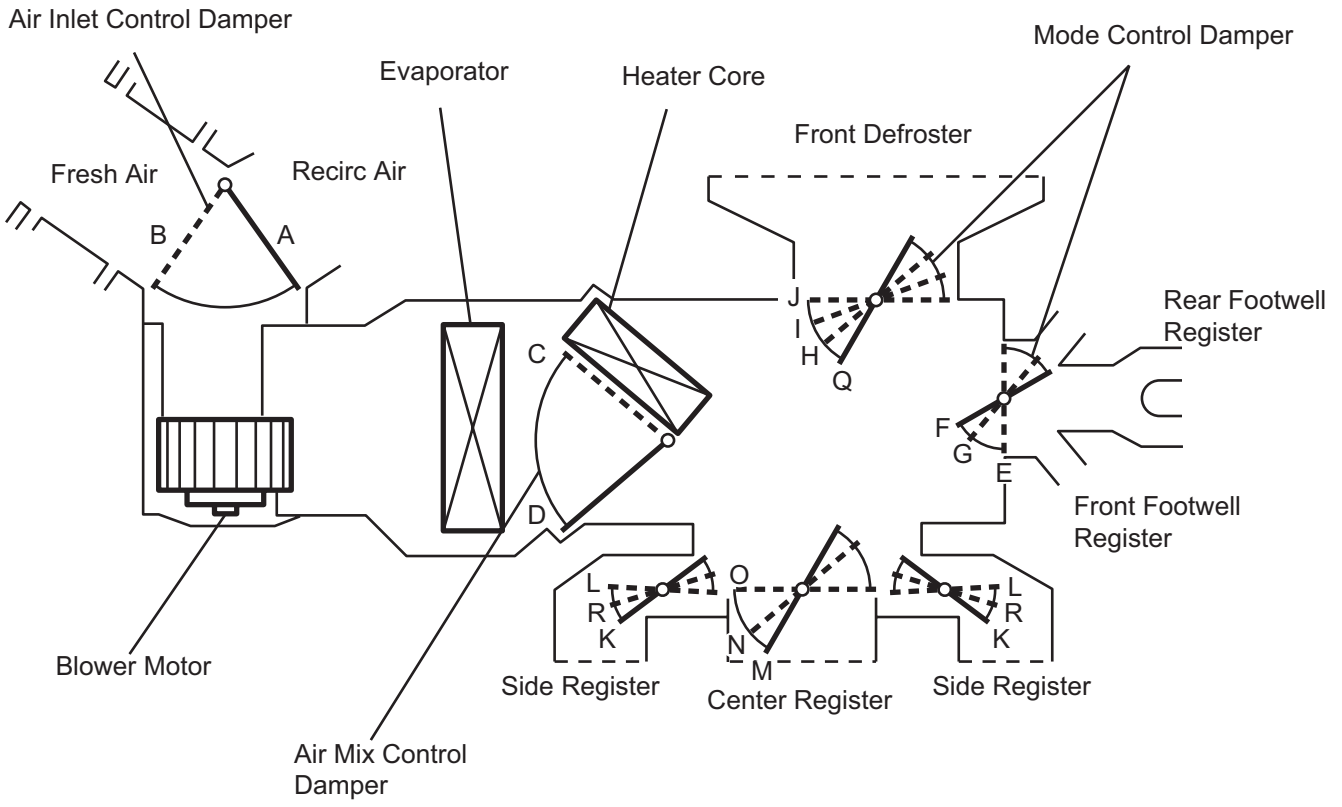

Control Damper	Control Position	Damper Position	Operation
Air Inlet Control Damper	FRESH	A	Allows outside air to enter.
	RECIRC	B	Recirculates internal air.
Air Mix Control Damper	COOL to HOT	C, D	Continuously changes mix ratio of warm and cool air between COOL and HOT.

Control Damper	Control Position	Damper Position	Operation
Mode Control Damper	FACE 	M, L, E, J	Blows air from center register and side registers.
	BI-LEVEL 	N, R, F, J	Blows air from center register, side registers, front footwell register and rear footwell register.
	FOOT 	O, K, F, I	Blows air from side registers, front footwell register, and rear footwell register. Also, blows some air from front defroster.
	FOOT/DEF 	O, K, G, H	Blows air from front defroster, side registers, front footwell register, and rear footwell register.
	DEF 	O, R, E, Q	Blows air from front defroster and side registers.

3. AIR OUTLET AND AIR FLOW VOLUME

HATCHBACK:

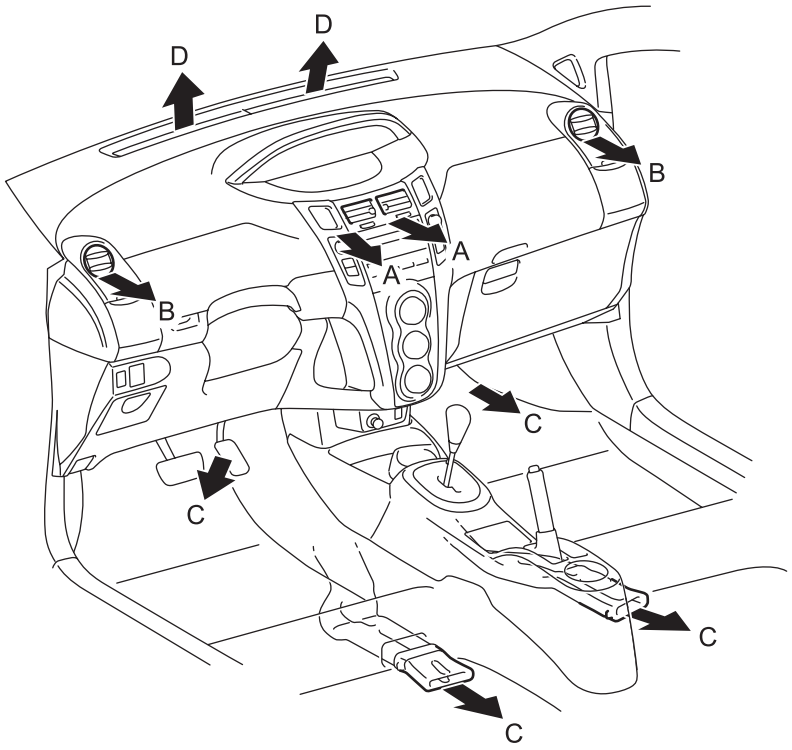

SEDAN:

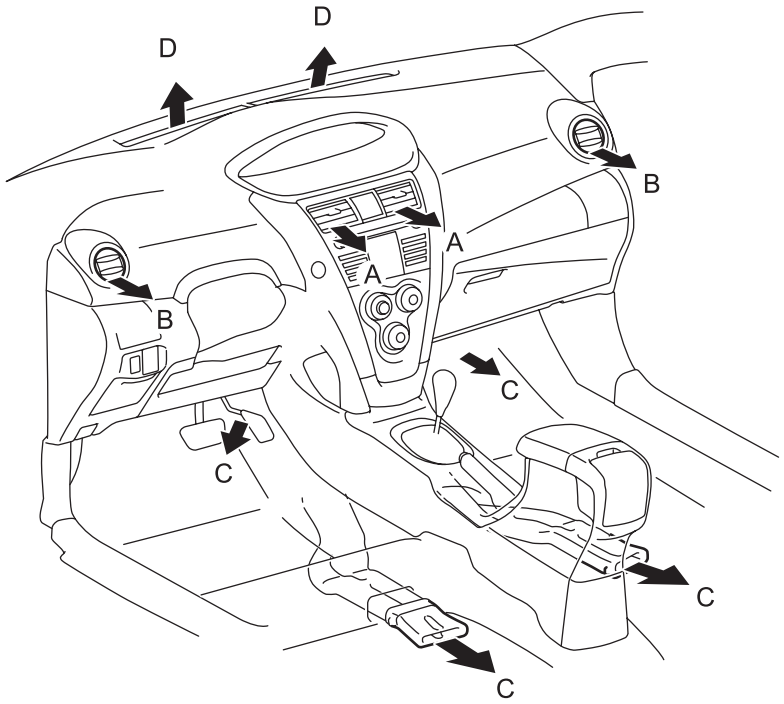

E133592E01

The circle size (○) indicates the proportion of the flow volume.

Air Outlet Mode		Air Outlet Position Symbol			
		A	B	C	D
		Center Face	Side Face	Foot	Defroster
	FACE	◯	◯	X	X
	BI-LEVEL	○	○	◯	X
	FOOT	X	○	◯	○
	FOOT/DEF	X	○	○	○
	DEF	X	○	X	◯

HOW TO PROCEED WITH TROUBLESHOOTING

HINT:

- Use these procedures to troubleshoot the air conditioning system.
- Use an intelligent tester in steps 4, 5 and 7.

1	VEHICLE BROUGHT TO WORKSHOP

NEXT

2	CUSTOMER PROBLEM ANALYSIS AND SYMPTOM CHECK

NEXT

3	INSPECT BATTERY VOLTAGE

Standard voltage:
11 to 14 V

If the voltage is below 11 V, recharge or replace the battery before proceeding.

NEXT

4	CHECK CAN COMMUNICATION SYSTEM

(a) Use an intelligent tester to check if the CAN communication system is functioning.
Result

Result	Proceed to
CAN DTC is not output	A
CAN DTC is output	B

B → GO TO CAN COMMUNICATION SYSTEM

A

5	CHECK DTC

(a) Check for DTCs and write down any DTCs that are output.
(b) Clear the DTCs.
(c) Referring to the DTCs written above, simulate the DTC output conditions and check whether any DTCs of the air conditioning system recur.
Result

Result	Proceed to
DTC is not output	A

Result	Proceed to
DTC is output	B

B → GO TO STEP 8

A

6 REFER TO PROBLEM SYMPTOMS TABLE

(See page AC-15)

Result	Proceed to
Fault is not listed in problem symptoms table	A
Fault is listed in problem symptoms table	B

B → GO TO STEP 8

A

7 OVERALL ANALYSIS AND TROUBLESHOOTING

(a) Data List / Active Test (See page AC-20).
(b) Terminals of ECU (See page AC-16).

NEXT

8 ADJUST, REPAIR OR REPLACE

NEXT

9 CONFIRMATION TEST

NEXT

END

PROBLEM SYMPTOMS TABLE

HINT:
Use the table below to help determine the causes of the problem symptom. The potential causes of the symptoms are listed in order of probability in the "Suspected Area" column of the table. Check each symptom by checking the suspected areas in the order they are listed. Replace parts as necessary.

Air conditioning system

Symptom	Suspected area	See page
No functions of A/C system operate	A/C Fuse	-
	Wire harness or connector	-
	Air conditioning amplifier	AC-16
Airflow Control: blower motor does not operate	HTR, GAUGE Fuse	-
	Blower motor circuit	AC-43
	Wire harness or connector	-
Airflow Control: blower motor does not change speed	Blower resistor	AC-203
	Blower motor	AC-200
	Heater control (for Hatchback)	AC-254
	Heater control (for Sedan)	AC-243
Temperature Control: No cool air comes out	Refrigerant volume	AC-62
	Refrigerant pressure	AC-62
	Heater control base (for Hatchback)	AC-253
	Heater control base (for Sedan)	AC-242
	Air conditioning pressure sensor	AC-230
	Compressor and pulley	AC-207
	Expansion valve	-
	Air conditioning amplifier	AC-16
	ECM	ES-26
	CAN communication	CA-9
Compressor and pulley do not operate	A/C Fuse	-
	Refrigerant pressure	AC-62
	Compressor and pulley	AC-207
	Air conditioning pressure sensor	AC-230
	Evaporator temperature sensor (for Hatchback)	AC-137
	Evaporator temperature sensor (for Sedan)	AC-96
	Air conditioning amplifier	AC-16
	ECM	ES-26
	CAN communication	CA-9

TERMINALS OF ECU

1. CHECK AIR CONDITIONING AMPLIFIER

w/o PTC Heater:

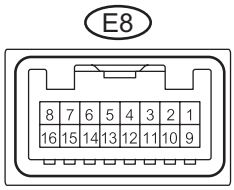

w/ PTC Heater:

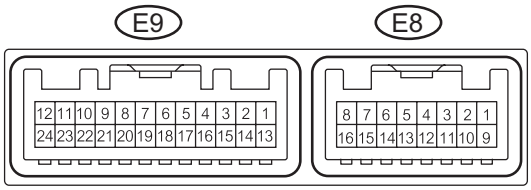

E114513E05

HINT:
Check from the rear of the connector while it is connected to the air conditioning amplifier.

Symbols (Terminals No.)	Wiring Color	Terminal Description	Condition	Specified Condition
S5-3 (E8-1) - GND (E8-12)	Y - W-B	Power supply for pressure sensor	Ignition switch: ON	4.5 to 5.5 V
TX+ (E8-2) - GND (E8-12)	V - W-B	CAN communication line	Ignition switch: ON	Pulse generation (see waveform 1)
TX- (E8-3) - GND (E8-12)	W - W-B	CAN communication line	Ignition switch: ON	Pulse generation (see waveform 2)
SG-2 (E8-4) - Body ground	L - Body ground	Ground for evaporator temperature sensor	Always	Below 1.0 Ω
TAM (E8-5) - SG-1 (E8-11)	W - B	Ambient temperature sensor signal	Ignition switch: ON	1.35 to 1.75 V
			Ambient temperature: 25 °C	
PRE (E8-6) - SG-1 (E8-11)	GR - B	A/C pressure sensor signal	Refrigerant pressure: normal	0.76 to 4.74 V
PRE (E8-6) - SG-1 (E8-11)	GR - B	A/C pressure sensor signal	Refrigerant pressure: abnormal (less than 0.196 MPa [2.0 kgf/cm^2] or more than 3.14 MPa [32 kgf/cm^2])	Below 0.76 V or 4.74 V or more
SOL+ (E8-7) - GND (E8-12)	LG - W-B	A/C compressor operation signal	Engine idling	Pulse generation (see waveform 3)
			Blower switch: 1	
			A/C switch: ON	
IG+ (E8-8) - GND (E8-12)	Y - W-B	Power source (IG)	Ignition switch: ON	11 to 14 V
SBLW (E8-9) - GND (E8-12)	BR - W-B	Blower motor ON signal	Ignition switch: ON	11 to 14 V → 0 V
			Blower switch: 0 → 1	
TE (E8-10) - SG-2 (E8-4)	GR - L	Evaporator temperature sensor signal	Ignition switch: ON	1.0 to 1.3 V
			Temperature near evaporator: 15°C (59°F)	
SG-1 (E8-11) - Body ground	B - Body ground	Ground for ambient temperature sensor	Always	Below 1.0 Ω
GND (E8-12) - Body ground	W-B - Body ground	Ground for main power supply	Always	Below 1.0 Ω

Symbols (Terminals No.)	Wiring Color	Terminal Description	Condition	Specified Condition
A/C (E8-15) - GND (E8-12)	LG - W-B	A/C switch signal	Ignition switch: ON	Below 1 V → 11 to 14 V
			Defroster: OFF	
			A/C switch: OFF → ON	
		Defroster mode detection switch signal	Ignition switch: ON	Below 1 V → 11 to 14 V
			A/C switch: OFF	
			Defroster: OFF → ON	
LED (E8-16) - Body ground	P - Body ground	A/C switch indicator signal	Engine idling	11 to 14 V → Below 4 V
			A/C switch: ON	
			Blower switch: 0 → 1	
PTC1* (E9-9) - GND (E8-12)	V - W-B	PTC heater relay operation signal	Engine idling	Below 1 V → 11 to 14 V
			No. 3 heater control knob: Max Hot	
			Engine coolant temperature: Below 65°C (149°F)	
			Ambient temperature: Below 10°C (50°F)	
			Blower switch: 0 → 1	
			Waiting time: 10 seconds	
PTC2* (E9-10) - GND (E8-12)	BR - W-B	PTC heater relay operation signal	Engine idling	Below 1 V → 11 to 14 V
			No. 3 heater control knob: Max Hot	
			Engine coolant temperature: Below 65°C (149°F)	
			Ambient temperature: Below 10°C (50°F)	
			Blower switch: 0 → 1	
			Waiting time: 20 seconds	
PTC3* (E9-12) - GND (E8-12)	R - W-B	PTC heater relay operation signal	Engine idling	Below 1 V → 11 to 14 V
			No. 3 heater control knob: Max Hot	
			Engine coolant temperature: Below 65°C (149°F)	
			Ambient temperature: Below 10°C (50°F)	
			Blower switch: 0 → 1	
			Waiting time: 30 seconds	
HEAT* (E9-14) - Body ground	LG - Body ground	MAX HOT switch detection signal	Ignition switch: ON	11 to 14 V
			No. 3 heater control knob: Max Hot	
HLS* (E9-23) - Body ground	LG - Body ground	Headlight control signal	Engine idling	11 to 14 V → Below 1 V
			Light control switch: OFF → HEAD	
ALT* (E9-24) - GND (E8-12)	P - W-B	Alternator operation signal	Engine idling	Pulse generation

*: w/ PTC heater

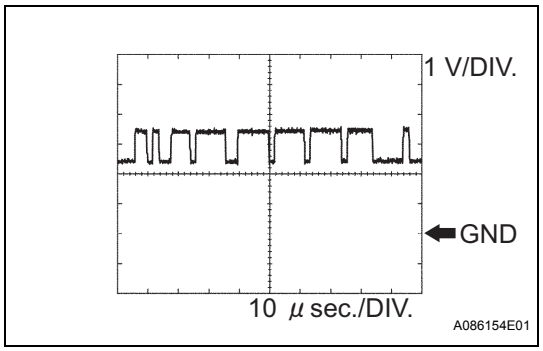

(a) Waveform 1 (Reference) : Using an oscilloscope
CAN communication signal

Terminal Name	Between TX+ (E8-2) - GND (E8-12)
Tester Range	1 V / DIV., 10 μsec. / DIV.
Condition	Ignition switch ON

HINT:
The waveform varies depending on the CAN communication signal.

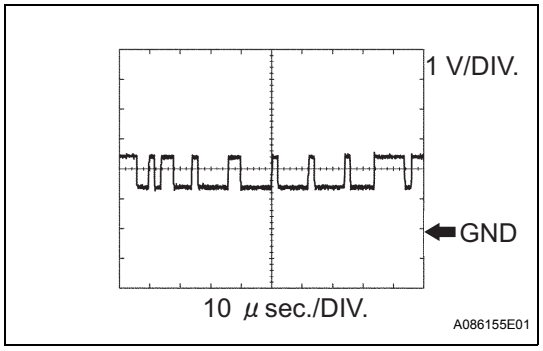

(b) Waveform 2 (Reference) : Using an oscilloscope
CAN communication signal

Terminal Name	Between TX- (E8-3) - GND (E8-12)
Tester Range	1 V / DIV., 10 μsec. / DIV.
Condition	Ignition switch ON

HINT:
The waveform varies depending on the CAN communication signal.

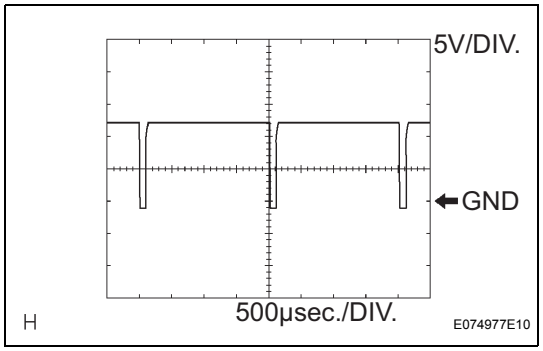

(c) Waveform 3 (Reference) : Using an oscilloscope
Compressor and pulley operation signal

Terminal Name	Between SOL+ (E8-7) - GND (E8-12)
Tester Range	5 V / DIV., 500 μsec. / DIV.
Condition	Engine idling, Blower switch 1, A/C switch ON

DIAGNOSIS SYSTEM

1. DESCRIPTION

(a) Air conditioning system data and the Diagnostic Trouble Codes (DTCs) can be read through the Data Link Connector 3 (DLC3) of the vehicle. When the system seems to be malfunctioning, use an intelligent tester with CAN VIM connected, to check for malfunctions and perform troubleshooting.

2. CHECK DLC3

(a) The ECU uses ISO 15765-4 for communication. The terminal arrangement of the DLC3 complies with SAE J1962 and matches the ISO 15765-4 format.

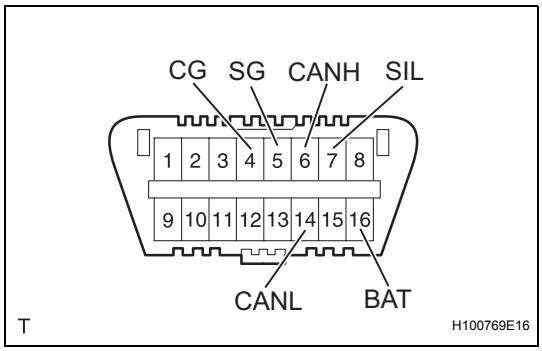

Symbols (Terminal No.)	Terminal Description	Condition	Specified Condition
SIL (7) - SG (5)	Bus " +" line	During transmission	Pulse generation
CG (4) - Body ground	Chassis ground	Always	Below 1 Ω
SG (5) - Body ground	Signal ground	Always	Below 1 Ω
BAT (16) - Body ground	Battery positive	Always	11 to 14 V
CANH (6) - CANL (14)	CAN bus line	Ignition switch OFF*	54 to 69 Ω
CANH (6) - CG (4)	HIGH-level CAN bus line	Ignition switch OFF*	200 Ω or higher
CANL (14) - CG (4)	LOW-level CAN bus line	Ignition switch OFF*	200 Ω or higher
CANH (6) - BAT (16)	HIGH-level CAN bus line	Ignition switch OFF*	6 kΩ or higher
CANL (14) - BAT (16)	LOW-level CAN bus line	Ignition switch OFF*	6 kΩ or higher

NOTICE:

***: Before measuring the resistance, leave the vehicle as is for at least 1 minute and do not operate the ignition switch, any other switches or the doors.**

If the result is not as specified, the DLC3 may have a malfunction. Repair or replace the harness and connector.

Hatchback:

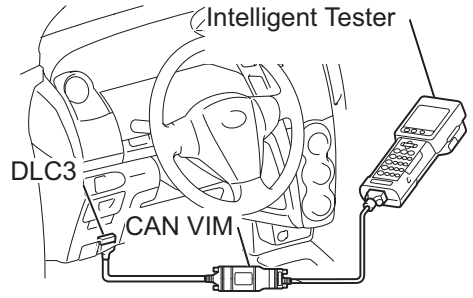

Sedan:

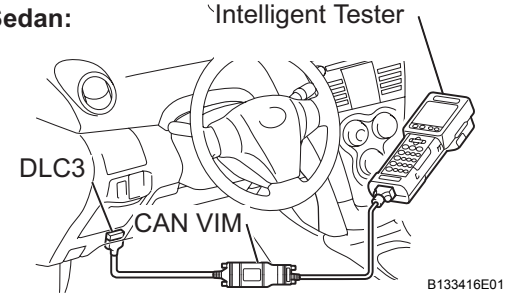

HINT:
Connect the cable of the intelligent tester to the CAN VIM, connect the CAN VIM to the DLC3, turn the ignition switch ON and attempt to use the tester. If the display indicates that a communication error has occurred, there is a problem either with the vehicle or with the tester.

- If communication is normal when the tester is connected to another vehicle, inspect the DLC3 of the original vehicle.
- If communication is still not possible when the tester is connected to another vehicle, the problem is probably in the tester itself. Consult the Service Department listed in the tester's instruction manual.

Hatchback:

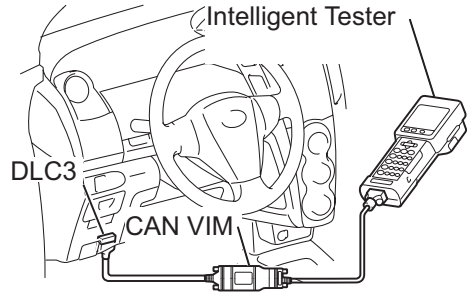

Sedan:

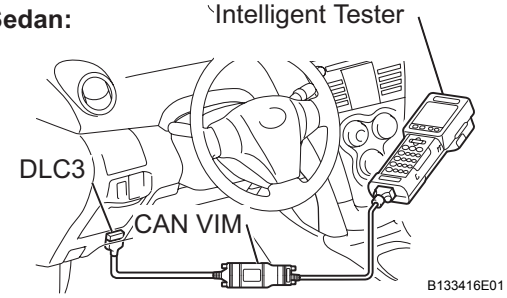

DTC CHECK / CLEAR

1. CHECK DTC

(a) Connect the intelligent tester with the CAN VIM to the DLC3.

(b) Turn the ignition switch ON and turn the intelligent tester ON.

(c) Read the DTC by following the prompts on the tester screen.
HINT:
Refer to the intelligent tester operator's manual for further details.

2. CLEAR DTC

(a) Connect the intelligent tester with the CAN VIM to the DLC3.

(b) Turn the ignition switch ON and turn the intelligent tester ON.

(c) Clear the DTC by following the prompts on the tester screen.
HINT:
Refer to the intelligent tester operator's manual for further details.

DATA LIST / ACTIVE TEST

1. READ DATA LIST

HINT:

Using the intelligent tester's DATA LIST allows switch, sensor, actuator and other item values to be read without removing any parts. Reading the DATA LIST early in troubleshooting is one way to save time.

(a) Connect the intelligent tester to the DLC3.

(b) Turn the ignition switch ON and turn the intelligent tester ON.

(c) Read the DATA LIST by following the prompts on the tester screen.

DATA LIST

Item	Measurement Item / Display (Range)	Normal Condition	Diagnostic Note
AMBI TEMP SENS	Ambient temperature sensor / Min.: -23.3°C (-9.94°F) Max.: 65.95°C (150.71°F)	Actual ambient temperature is displayed	-
COOLANT TEMP	Engine coolant temperature / Min.: 1.3°C (34.34°F) Max.: 90.55°C (194.99°F)	Actual engine coolant temperature is displayed after engine warmed up	-
AMBI TEMP	Adjusted ambient temperature Min.: -30.8°C (-23.44°F) Max.: 50.8°C (123.44°F)	-	-
EVAP FIN TEMP	Evaporator fin thermistor / Min.: -29.7°C (-21.46°F) Max.: 59.55°C (139.19°F)	Actual evaporator temperature is displayed	-
REG PRESS SENS	Regulator pressure sensor / Min.: 0 kgf / cm2G Max.: 38.25 kgf / cm2G	Actual regulator pressure is displayed	-
REG CTRL CURRNT	Regulator control current / Min.: 0 A Max.: 0.997 A	-	-
#CODES	Number of trouble codes / Min.: 0, Max.: 100	Number of DTCs displayed	-

2. PERFORM ACTIVE TEST

HINT:

Performing the intelligent tester's ACTIVE TEST allows relays, the VSV, actuators and other items to be operated without removing any parts. Performing the ACTIVE TEST early in troubleshooting is one way to save time. The Data List can be displayed in the Active Test.

(a) Connect the intelligent tester to the DLC3.

(b) Turn the ignition switch ON and turn the intelligent tester ON.

(c) Perform the ACTIVE TEST according to the display on the tester.

ACTIVE TEST

Item	Test Details / Display (Range)	Diagnostic Note
HEATER LEVEL	Heater Active Level / Min.: 0, Max.: 3	-
A/C MAG CLUTCH	Magnetic clutch relay / OFF, ON	-

DIAGNOSTIC TROUBLE CODE CHART

- If a trouble code is displayed during the DTC check, inspect the suspected areas listed for that code. For details of the code, refer to the "See page" in the DTC chart.
- Inspect the fuse and relay before investigating the suspected areas shown in the table below.

HINT:
When the air conditioning system functions properly, DTC B1400/00 is output.

Air conditioning system

DTC No.	Detection Item	Trouble Area	Memory	See page
B1412/12	Ambient Temperature Sensor Circuit	- Ambient temperature sensor - Harness and connector between ambient temperature sensor and air conditioning amplifier - Air conditioning amplifier	-	AC-23
B1413/13	Evaporator Temperature Sensor Circuit	- No .1 cooler thermistor (evaporator temperature sensor) - Harness and connector between No .1 cooler thermistor (evaporator temperature sensor) and air conditioning amplifier - Air conditioning amplifier	-	AC-27
B1423/23	Pressure Sensor Circuit	- Air conditioning pressure sensor - Harness and connector between air conditioning pressure sensor and air conditioning amplifier - Air conditioning amplifier	-	AC-31
B1451/51	Compressor Solenoid Circuit	- Compressor and pulley - Harness and connector between air conditioning amplifier and compressor and pulley - Air conditioning amplifier	-	AC-37
B1499/99	Multiplex Communication Circuit	- Air conditioning amplifier power source circuit - Air conditioning amplifier - ECM - Combination meter assembly - CAN communication line	-	AC-41

DTC	B1412/12	Ambient Temperature Sensor Circuit

DESCRIPTION

The ambient temperature sensor is installed in the front part of the condenser to detect the ambient temperature and control the air conditioner. The sensor is connected to the air conditioning amplifier and detects fluctuations in the ambient temperature. This data is used for controlling the room temperature. The sensor sends a signal to the air conditioning amplifier. The resistance of the ambient temperature sensor changes in accordance with the ambient temperature. As the temperature decreases, the resistance increases. As the temperature increases, the resistance decreases. The air conditioning amplifier applies a voltage (5 V) to the ambient temperature sensor and reads voltage changes as changes in the resistance of the ambient temperature sensor.

DTC No.	DTC Detection Condition	Trouble Area
B1412/12	Open or short in ambient temperature sensor circuit	• Ambient temperature sensor • Harness and connector between ambient temperature sensor and air conditioning amplifier • Air conditioning amplifier

WIRING DIAGRAM

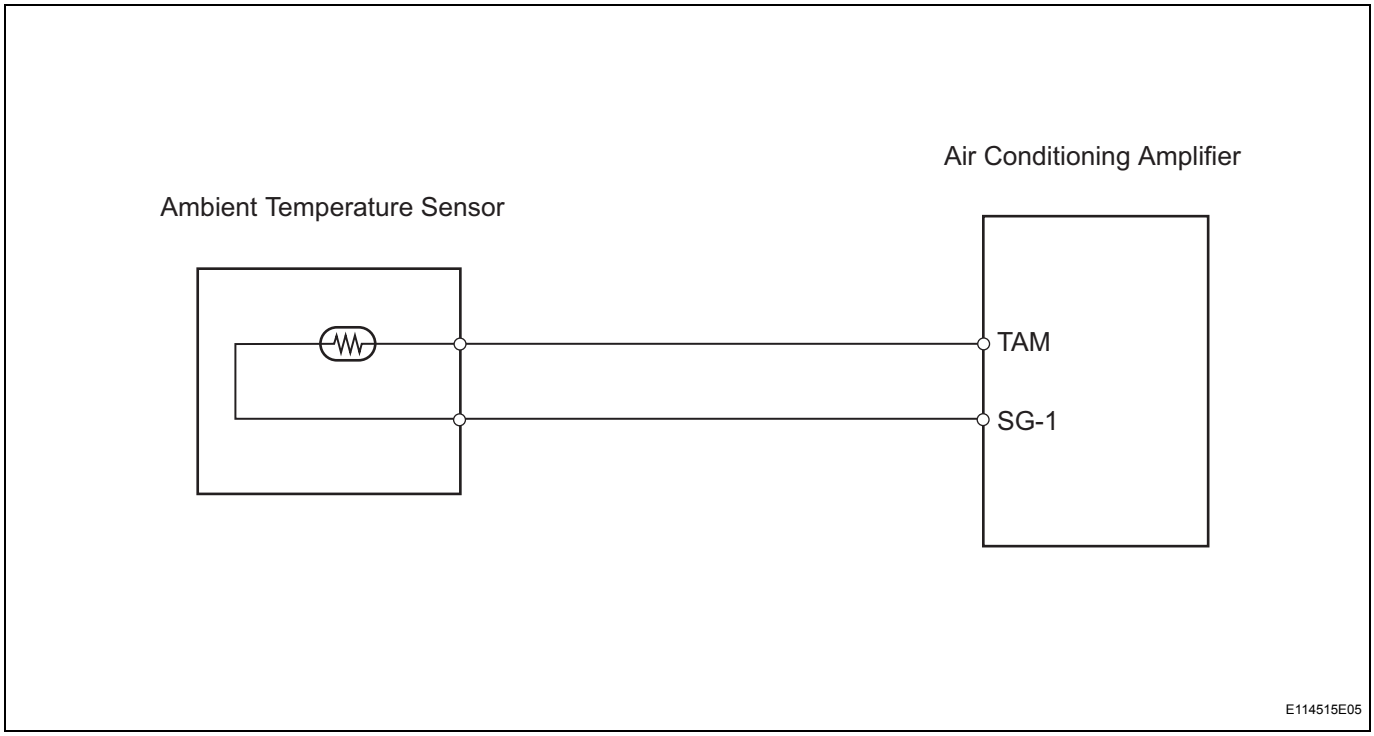

INSPECTION PROCEDURE

1	READ VALUE USING INTELLIGENT TESTER (AMBI TEMP SENS)

(a) Connect the intelligent tester with CAN VIM to the DLC3.
(b) Turn the ignition switch ON and turn the intelligent tester main switch ON.
(c) Select the item below in the DATA LIST, and read the value displayed on the intelligent tester.

AC

DATA LIST / AIR CONDITIONER

Item	Measurement Item / Display (Range)	Normal Condition	Diagnostic Note
AMBI TEMP SENS	Ambient temperature sensor / Min.: -23.3°C (-9.94°F) Max.: 65.95°C (150.71°F)	Actual ambient temperature is displayed	Open circuit: -23.3°C (-9.94°F) Short circuit: 65.95°C (150.71°F)

OK:

The display is as specified in the normal condition column.

Result

Result	Proceed to
NG	A
OK (Checking from the PROBLEM SYMPTOMS TABLE)	B
OK (Checking from the DTC)	C

B → PROCEED TO NEXT CIRCUIT INSPECTION SHOWN IN PROBLEM SYMPTOMS TABLE

C → REPLACE AIR CONDITIONING AMPLIFIER

A

2	INSPECT AMBIENT TEMPERATURE SENSOR

Component Side:

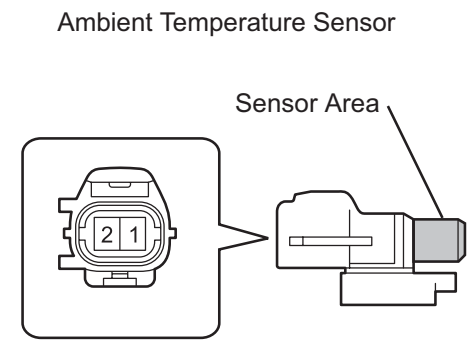

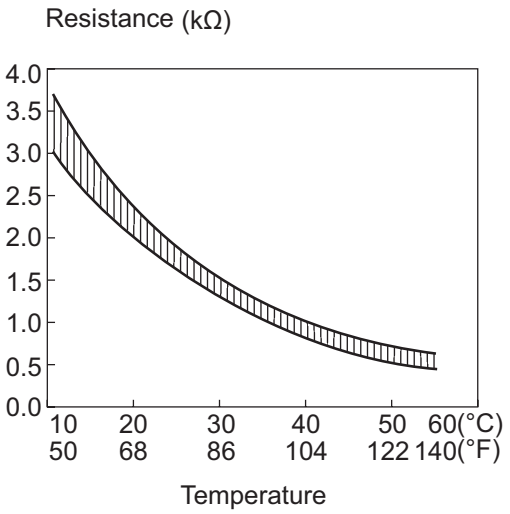

E106870E09

(a) Remove the ambient temperature sensor.
(b) Measure the resistance.
Standard resistance

Tester Connection	Condition	Specified Condition
1 - 2	10°C (50°F)	3.00 to 3.73 kΩ
1 - 2	15°C (59°F)	2.45 to 2.88 kΩ
1 - 2	20°C (68°F)	1.95 to 2.30 kΩ
1 - 2	25°C (77°F)	1.60 to 1.80 kΩ
1 - 2	30°C (86°F)	1.28 to 1.47 kΩ
1 - 2	35°C (95°F)	1.00 to 1.22 kΩ
1 - 2	40°C (104°F)	0.80 to 1.00 kΩ
1 - 2	45°C (113°F)	0.65 to 0.85 kΩ
1 - 2	50°C (122°F)	0.50 to 0.70 kΩ
1 - 2	55°C (131°F)	0.44 to 0.60 kΩ
1 - 2	60°C (140°F)	0.36 to 0.50 kΩ

NOTICE:
- **Touching the sensor even slightly may change the resistance value. Be sure to hold the connector of the sensor.**
- **When measuring, the sensor temperature must be the same as the ambient temperature.**

HINT:
As the temperature increases, the resistance decreases (see the graph on the left).
(c) Reinstall the ambient temperature sensor.

NG → **REPLACE AMBIENT TEMPERATURE SENSOR**

OK

3	CHECK HARNESS AND CONNECTOR (AMBIENT TEMPERATURE SENSOR - AIR CONDITIONING AMPLIFIER)

Wire Harness Side:

Ambient Temperature Sensor Connector

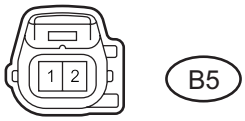

Front View

Air Conditioning Amplifier Connector

w/o PTC Heater:

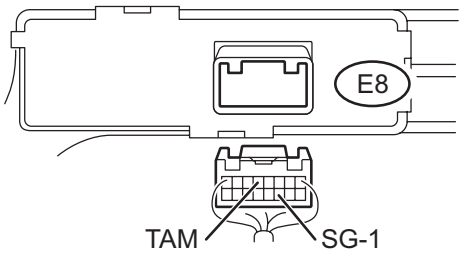

w/ PTC Heater:

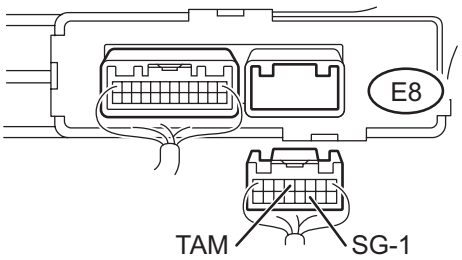

E119776E01

(a) Disconnect the B5 ambient temperature sensor connector.
(b) Disconnect the E8 air conditioning amplifier connector.
(c) Measure the resistance.

Standard resistance

Tester Connection	Specified Condition
B5-1 - E8-11 (SG-1)	Below 1 Ω
B5-2 - E8-5 (TAM)	Below 1 Ω
B5-1 - Body ground	10 kΩ or higher
B5-2 - Body ground	10 kΩ or higher

(d) Reconnect the ambient temperature sensor connector.
(e) Reconnect the air conditioning amplifier connector.

NG → **REPAIR OR REPLACE HARNESS OR CONNECTOR**

OK

REPLACE AIR CONDITIONING AMPLIFIER

DTC	B1413/13	Evaporator Temperature Sensor Circuit

DESCRIPTION

The No. 1 cooler thermistor (evaporator temperature sensor) is installed on the evaporator in the air conditioner unit to detect the temperature of the cooled air that has passed through the evaporator and to control the air conditioner. It sends signals to the air conditioning amplifier, which change in accordance with the resistance of the No. 1 cooler thermistor (evaporator temperature sensor). As the temperature decreases, the resistance increases. As the temperature increases, the resistance decreases. The air conditioning amplifier applies a voltage (5V) to the No. 1 cooler thermistor (evaporator temperature sensor) and reads voltage changes as changes in the resistance of the evaporator temperature sensor. This sensor is used for frost prevention.

DTC No.	DTC Detection Condition	Trouble Area
B1413/13	Open or short in evaporator temperature sensor circuit	• No. 1 cooler thermistor (evaporator temperature sensor) • Harness and connector between No. 1 cooler thermistor (evaporator temperature sensor) and air conditioning amplifier • Air conditioning amplifier

WIRING DIAGRAM

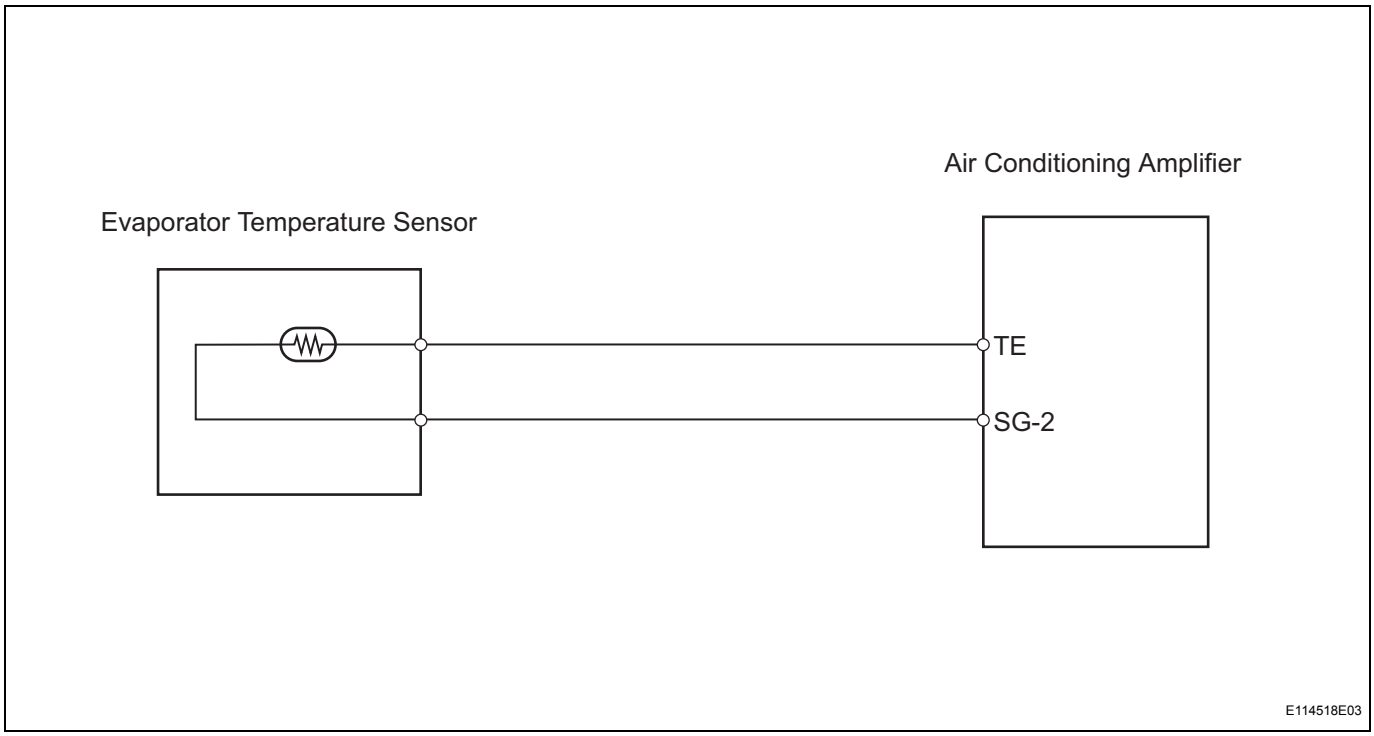

INSPECTION PROCEDURE

1	READ VALUE USING INTELLIGENT TESTER (EVAP FIN TEMP)

(a) Connect the intelligent tester with CAN VIM to the DLC3.
(b) Turn the ignition switch ON and turn the intelligent tester main switch ON.
(c) Select the item below in the DATA LIST, and read the value displayed on the intelligent tester.

AC

DATA LIST / AIR CONDITIONER

Item	Measurement Item / Display (Range)	Normal Condition	Diagnostic Note
EVAP FIN TEMP (Evaporator fin thermistor)	Evaporator fin thermistor / Min.: -29.7°C (-21.46°F) Max.: 59.55°C (139.019°F)	Actual evaporator temperature is displayed	Open circuit: -29.7°C (-21.46°F) Short circuit: 59.55°C (139.019°F)

OK:

The display is as specified in the normal condition column.

Result

Result	Proceed to
NG	A
OK (Checking from the PROBLEM SYMPTOMS TABLE)	B
OK (Checking from the DTC)	C

B → PROCEED TO NEXT CIRCUIT INSPECTION SHOWN IN PROBLEM SYMPTOMS TABLE

C → REPLACE AIR CONDITIONING AMPLIFIER

A

2	INSPECT NO. 1 COOLER THERMISTOR (EVAPORATOR TEMPERATURE SENSOR)

Component Side:

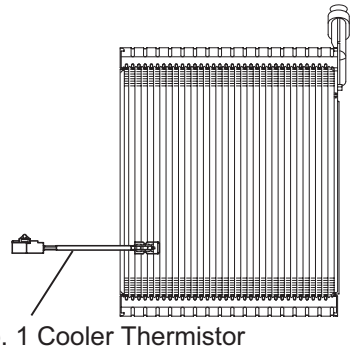

No. 1 Cooler Thermistor

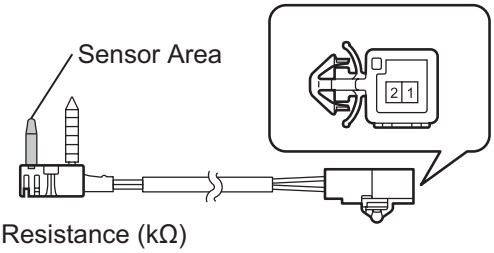

Resistance (kΩ)

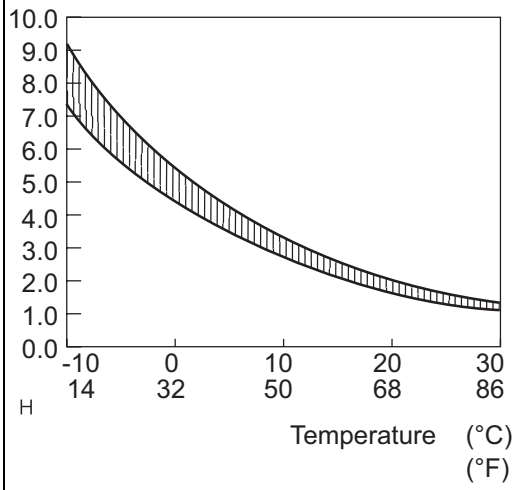

E113141E03

(a) Remove the evaporator temperature sensor.
(b) Measure the resistance.
Standard resistance

Tester Connection	Condition	Specified Condition
1 - 2	-10°C (14°F)	7.30 to 9.10 kΩ
1 - 2	-5°C (23°F)	5.65 to 6.95 kΩ
1 - 2	0°C (32°F)	4.40 to 5.35 kΩ
1 - 2	5°C (41°F)	3.40 to 4.15 kΩ
1 - 2	10°C (50°F)	2.70 to 3.25 kΩ
1 - 2	15°C (59°F)	2.14 to 2.58 kΩ
1 - 2	20°C (68°F)	1.71 to 2.05 kΩ
1 - 2	25°C (77°F)	1.38 to 1.64 kΩ
1 - 2	30°C (86°F)	1.11 to 1.32 kΩ

NOTICE:
- **Touching the sensor even slightly may change the resistance value. Be sure to hold the connector of the sensor.**
- **When measuring, the sensor temperature must be the same as the ambient temperature.**

HINT:
As the temperature increases, the resistance decreases (see the graph on the left).

(c) Reinstall the evaporator temperature sensor.

NG → **REPLACE NO. 1 COOLER THERMISTOR (EVAPORATOR TEMPERATURE SENSOR)**

OK

3	CHECK HARNESS AND CONNECTOR (No. 1 COOLER THERMISTOR - AIR CONDITIONING AMPLIFIER)

Wire Harness Side:

No. 1 Cooler Thermistor Connector

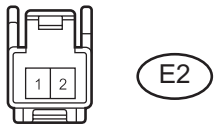

Front View

Air Conditioning Amplifier Connector

w/o PTC Heater:

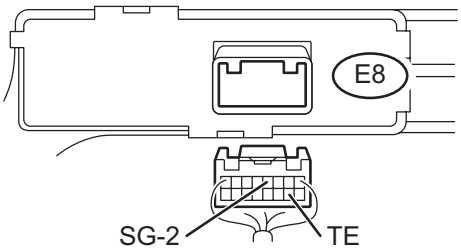

w/ PTC Heater:

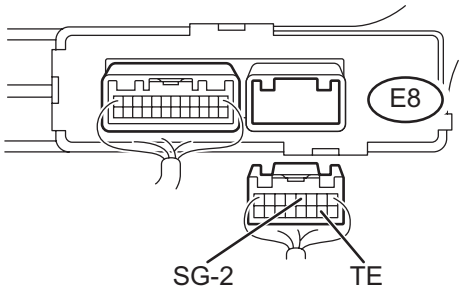

E119777E02

(a) Disconnect the E2 No. 1 cooler thermistor (evaporator temperature sensor) connector.
(b) Disconnect the E8 air conditioning amplifier connector.
(c) Measure the resistance.

Standard resistance

Tester Connection	Specified Condition
E2-2 - E8-10 (TE)	Below 1 Ω
E2-1 - E8-4 (SG-2)	Below 1 Ω
E2-2 - Body ground	10 kΩ or higher
E2-1 - Body ground	10 kΩ or higher

(d) Reconnect the No. 1 cooler thermistor connector.
(e) Reconnect the air conditioning amplifier connector.

NG → **REPAIR OR REPLACE HARNESS OR CONNECTOR**

OK

REPLACE AIR CONDITIONING AMPLIFIER

DTC	B1423/23	Pressure Sensor Circuit

DESCRIPTION

This DTC is output when the refrigerant pressure is either extremely low (0.19 Mpa [2.0 kgf/cm^2, 28 psi] or less) or extremely high (3.14 Mpa [32.0 kgf/cm^2, 455 psi] or more). The pressure sensor, which is installed on the pipe of the high pressure side, detects the refrigerant pressure and sends a refrigerant pressure signal to the air conditioning amplifier. The air conditioning amplifier determines the pressure from the signals in accordance with the sensor characteristics, and controls the compressor.

DTC No.	DTC Detection Condition	Trouble Area
B1423/23	Open or short in pressure sensor circuit	• Air conditioning pressure sensor • Harness and connector between air conditioning pressure sensor and air conditioning amplifier • Air conditioning amplifier

WIRING DIAGRAM

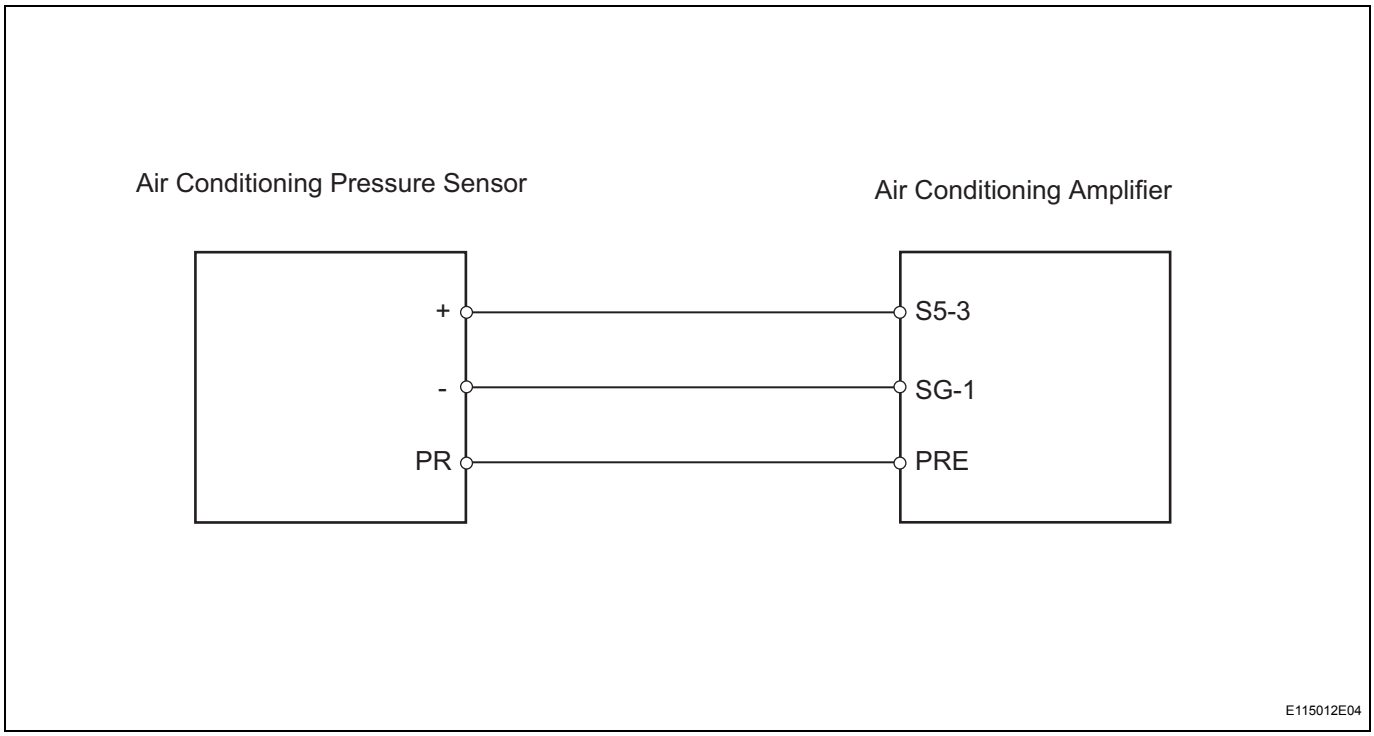

INSPECTION PROCEDURE

1	CHECK REFRIGERANT

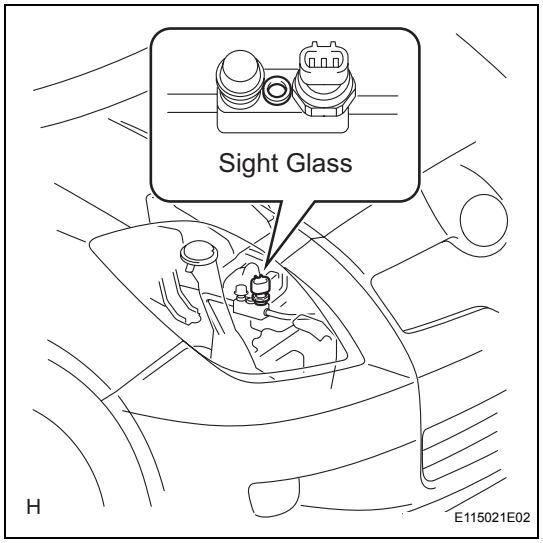

(a) Check the sight glass of the cooler unit refrigerant liquid pipe.
  (1) Prepare the vehicle in accordance with the chart below.

Item	Condition
Vehicle Doors	Fully open
Temperature Setting	MAX COLD
Blower Speed	HI
A/C Switch	ON

  (2) Compare the sight glass to the following chart.

Item	Symptom	Amount of Refrigerant	Corrective Procedures
1	Bubbles visible	Insufficient*	(1) Check for gas leakage and repair if necessary (2) Add refrigerant until bubbles disappear
2	No bubbles visible	Empty, insufficient or too much	Refer to items 3 and 4
3	No temperature difference between compressor inlet and outlet	Empty or nearly empty	(1) Check for gas leakage with gas leak detector and repair if necessary (2) Add refrigerant until bubbles disappear
4	Considerable temperature difference between compressor inlet and outlet	Correct or too much	Refer to items 5 and 6
5	Immediately after A/C turned OFF, refrigerant becomes clear	Too much	(1) Drain or discharge refrigerant (2) Bleed air and supply proper amount of purified refrigerant
6	Immediately after A/C turned OFF, refrigerant foams and then becomes clear	Correct	-

HINT:
*: If the ambient temperature is higher than usual but cooling is sufficient, bubbles in the sight glass are permissible.

NG → **CHARGE REFRIGERANT**

OK

2	READ VALUE OF INTELLIGENT TESTER (REG PRESS SENS)

(a) Connect the intelligent tester to the DLC3.
(b) Turn the ignition switch ON and turn the intelligent tester main switch ON.

(c) Select the item below in the DATA LIST, and read the value displayed on the intelligent tester.

DATA LIST / AIR CONDITIONER

Item	Measure Item / Display (Range)	Normal Condition	Diagnostic Note
REG PRESS SENS (Regulator pressure sensor)	Regulator Pressure Sensor / Min.: 0 kgf / cm 2G, Max.: 38.25 kgf / cm 2G	Actual regulator pressure is displayed	-

OK:

The display is as specified in the normal condition column.

Result

Result	Proceed to
NG	A
OK (Checking from the PROBLEM SYMPTOMS TABLE)	B
OK (Checking from the DTC)	C

B → PROCEED TO NEXT CIRCUIT INSPECTION SHOWN IN PROBLEM SYMPTOMS TABLE

C → REPLACE AIR CONDITIONING AMPLIFIER

A

3	CHECK HARNESS AND CONNECTOR (PRESSURE SENSOR - AIR CONDITIONING AMPLIFIER)

Wire Harness Side:

Air Conditioning Pressure Sensor Connector

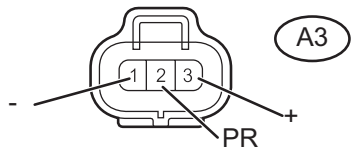

Front View

Air Conditioning Amplifier Connector

w/o PTC Heater:

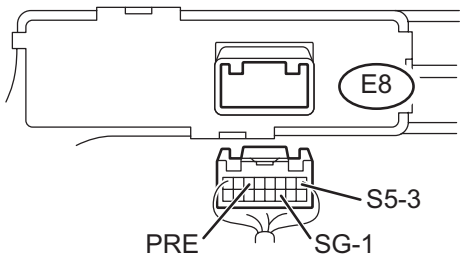

w/ PTC Heater:

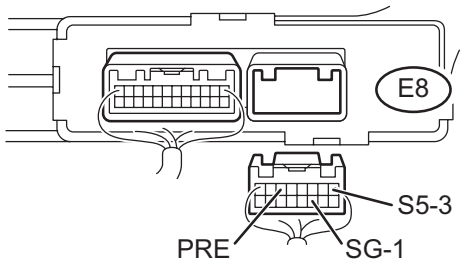

E119778E01

OK

(a) Disconnect the A3 air conditioning pressure sensor connector.
(b) Disconnect the E8 air conditioning amplifier connector.
(c) Measure the resistance.
Standard resistance

Tester Connection	Specified Condition
A3-1 (-) - E8-11 (SG-1)	Below 1 Ω
A3-2 (PR) - E8-6 (PRE)	Below 1 Ω
A3-3 (+) - E8-1 (S5-3)	Below 1 Ω
A3-1 (-) - Body ground	10 kΩ or higher
A3-2 (PR) - Body ground	10 kΩ or higher
A3-3 (+) - Body ground	10 kΩ or higher

(d) Reconnect the air conditioning pressure sensor connector.
(e) Reconnect the air conditioning amplifier connector.

NG → **REPAIR OR REPLACE HARNESS OR CONNECTOR**

4	INSPECT AIR CONDITIONING AMPLIFIER

Wire Harness Side:

Air Conditioning Amplifier Connector

w/o PTC Heater:

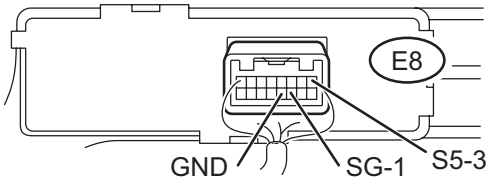

w/ PTC Heater:

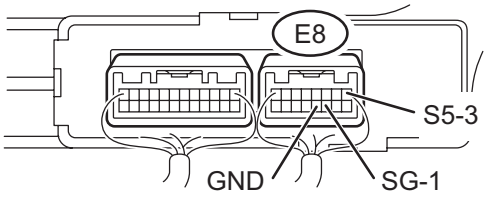

E119779E01

OK

(a) Remove the air conditioning amplifier with its connectors still connected.
(b) Measure the resistance.
Standard resistance

Tester Connection	Specified Condition
E8-11 (SG-1) - E8-12 (GND)	Below 1 Ω

(c) Turn the ignition switch ON.
(d) Measure the voltage.
Standard voltage

Tester Connection	Specified Condition
E8-1 (S5-3) - E8-11 (SG-1)	4.5 to 5.5 V

(e) Reinstall the air conditioning amplifier.

NG → **REPLACE AIR CONDITIONING AMPLIFIER**

5	INSPECT AIR CONDITIONING PRESSURE SENSOR

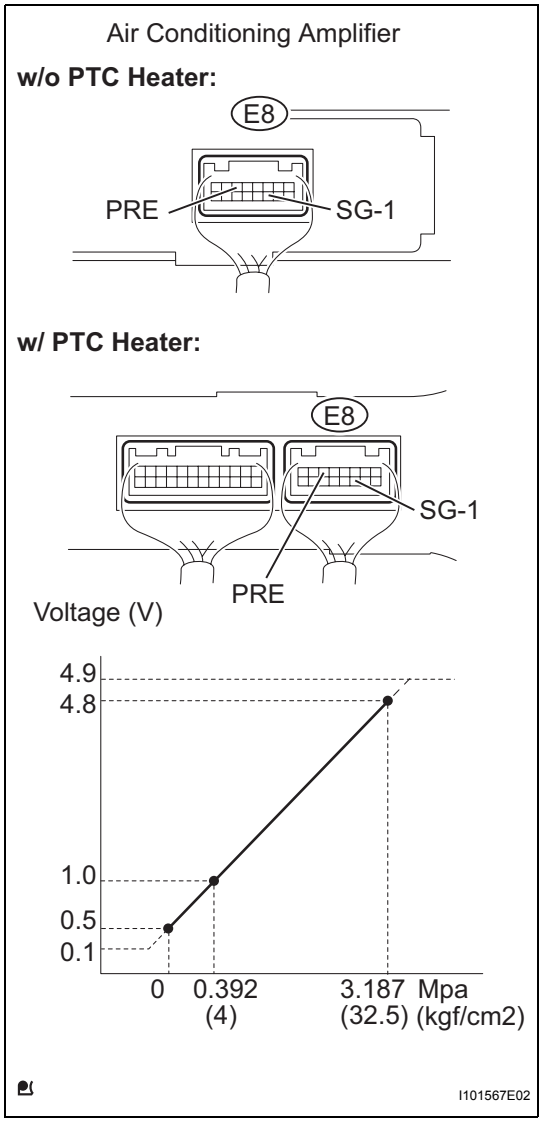

(a) Remove the air conditioning amplifier with its connectors still connected.
(b) Set the manifold gauge.
(c) Warm up the engine.
(d) Turn the A/C switch ON.
(e) Measure the voltage.
Standard voltage

Tester Connection	Refrigerant Pressure	Specified Condition
E8-6 (PRE) - E8-11 (SG-1)	0.196 to 3.14 MPa (2.0 to 32 kgf/cm2)	0.76 to 4.74 V

(f) Reinstall the air conditioning amplifier.

NG → **REPLACE LIQUID TUBE SUB-ASSEMBLY A (AIR CONDITIONING PRESSURE SENSOR)**

OK

REPLACE AIR CONDITIONING AMPLIFIER

DTC	B1451/51	Compressor Solenoid Circuit

DESCRIPTION

In this circuit, the compressor receives a refrigerant compression demand signal from the air conditioning amplifier.
Based on this signal, the compressor changes the degree of refrigerant compression.

DTC No.	DTC Detection Condition	Trouble Area
B1451/51	Open or short in solenoid of externally changeable compressor circuit	• Compressor and pulley • Harness and connector between air conditioning amplifier and compressor and pulley • Air conditioning amplifier

WIRING DIAGRAM

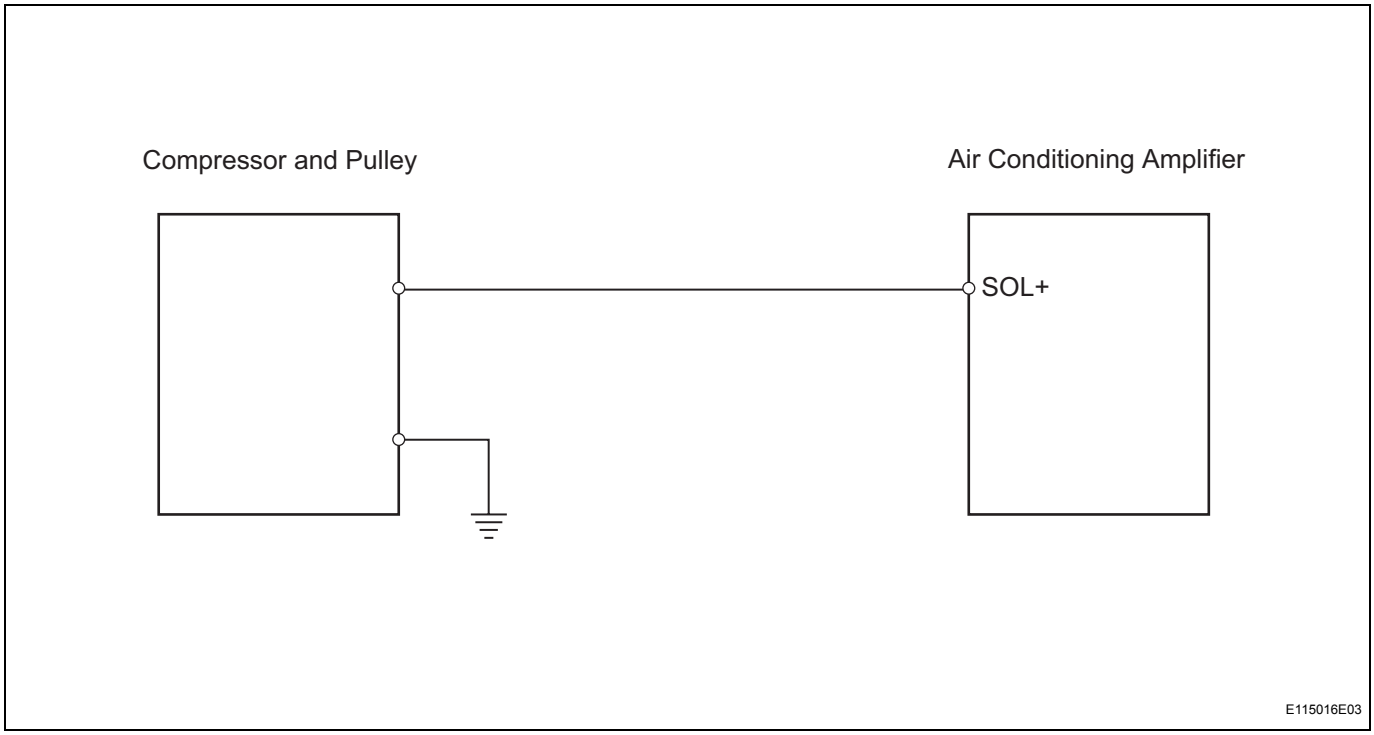

INSPECTION PROCEDURE

1	READ VALUE OF INTELLIGENT TESTER (REG CTRL CURRNT)

(a) Connect the intelligent tester with CAN VIM to the DLC3.
(b) Turn the ignition switch ON and turn the intelligent tester main switch ON.
(c) Select the items below in the DATA LIST, and read the value displayed on the intelligent tester.

DATA LIST / AIR CONDITIONER

ITEM	Measurement Item / Display	Normal Condition	Diagnostic Note
REG CTRL CURRNT (Regulator control current)	**Regulator control current / Min.: 0 A Max.: 0.997 A**	**Value changes between 0 A and 0.997 A in accordance with compressor and pulley operation**	**-**

AC

OK:
The display is as specified in the normal condition column.

Result

Result	Proceed to
NG	A
OK (Checking from the PROBLEM SYMPTOMS TABLE)	B
OK (Checking from the DTC)	C

B → **PROCEED TO NEXT CIRCUIT INSPECTION SHOWN IN PROBLEM SYMPTOMS TABLE**

C → **REPLACE AIR CONDITIONING AMPLIFIER**

A

2 INSPECT COMPRESSOR AND PULLEY

Component Side:

Compressor and Pulley

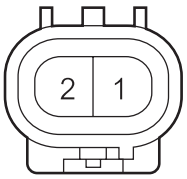

H

E115015E10

(a) Disconnect the C8 compressor and pulley connector.
(b) Measure the resistance.
Standard resistance

Tester Connection	Specified Condition
C8-1 - C8-2	10.1 to 11.1 Ω at 25°C (77°F)

(c) Reconnect the compressor and pulley connector.

NG → **REPLACE COMPRESSOR AND PULLEY**

OK

3	CHECK HARNESS AND CONNECTOR (COMPRESSOR AND PULLEY - AIR CONDITIONING AMPLIFIER)

Wire Harness Side:

Compressor and Pulley Connector

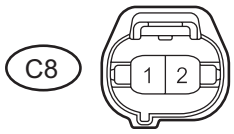

Front View

Air Conditioning Amplifier Connector

w/o PTC Heater

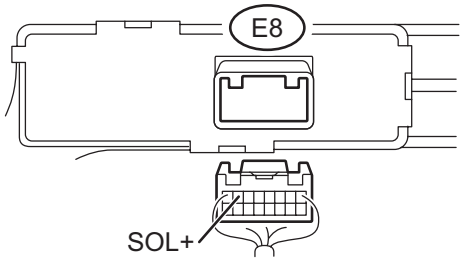

w/ PTC Heater

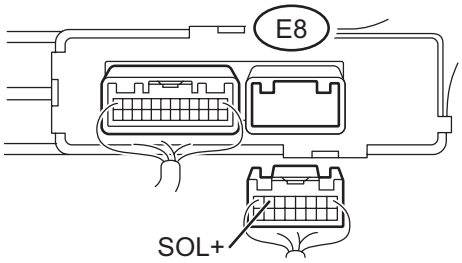

E119780E04

(a) Disconnect the C8 compressor and pulley connector.
(b) Disconnect the E8 air conditioning amplifier connector.
(c) Measure the resistance.

Standard resistance

Tester Connection	Specified Condition
C8-1 - E8-7 (SOL+)	Below 1 Ω
C8-1 - Body ground	10 kΩ or higher

(d) Reconnect the compressor and pulley connector.
(e) Reconnect the air conditioning amplifier connector.

NG → **REPAIR OR REPLACE HARNESS OR CONNECTOR**

OK

4	CHECK HARNESS AND CONNECTOR (COMPRESSOR AND PULLEY - BODY GROUND)

Wire Harness Side:

Compressor and Pulley Connector

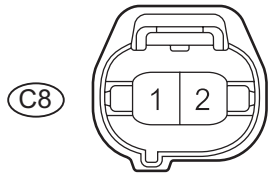

Front View

E119774E01

(a) Disconnect the C8 compressor and pulley connector.
(b) Measure the resistance.
Standard resistance

Tester Connection	Specified Condition
C8-2 - Body ground	Below 1 Ω

(c) Reconnect the compressor and pulley connector.

NG → **REPAIR OR REPLACE HARNESS OR CONNECTOR**

OK

REPLACE AIR CONDITIONING AMPLIFIER

DTC	B1499/99	Multiplex Communication Circuit

DESCRIPTION

The air conditioning amplifier communicates data with the ECM and combination meter assembly through the CAN communication system.

DTC No.	DTC Detection Condition	Trouble Area
B1499/99	Open in CAN communication line	• Air conditioning amplifier power source circuit • Air conditioning amplifier • ECM • Combination meter assembly • CAN communication line

WIRING DIAGRAM

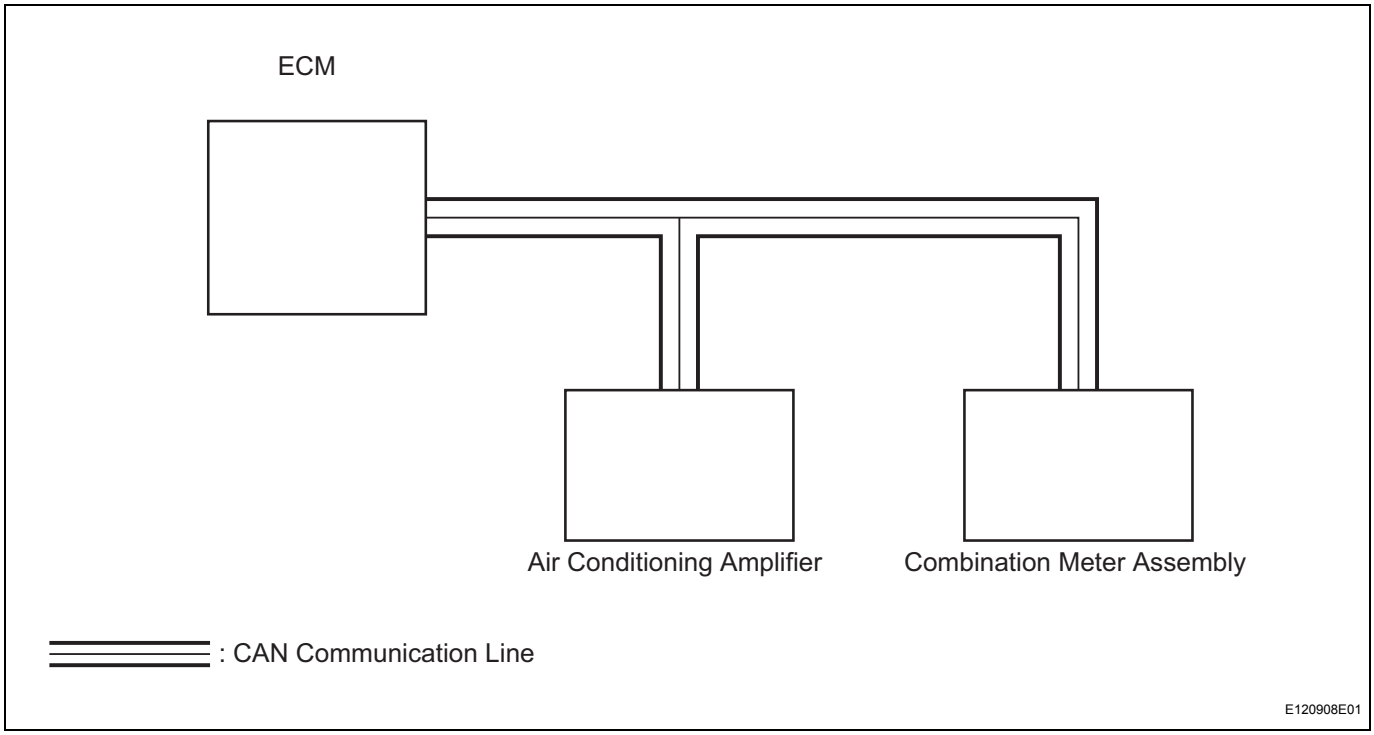

INSPECTION PROCEDURE

1	CHECK DTC OUTPUT (DTC B1499/99)

(a) Clear the DTC.
  (1) Connect an intelligent tester with CAN VIM to the DLC3 with the ignition switch turned OFF.
  (2) Turn the ignition switch ON and turn the intelligent tester main switch ON.
  (3) Clear the DTC by following the prompts on the tester screen.
  HINT:
  Refer to the intelligent tester operator's manual for further details.

(b) Read the DTC.

(1) Connect an intelligent tester with CAN VIM to the DLC3 with the ignition switch turned OFF.
(2) Turn the ignition switch ON and turn the intelligent tester main switch ON.
(3) Read the DTC by following the prompts on the tester screen.
HINT:
Refer to the intelligent tester operator's manual for further details.

Result

Result	Proceed to
DTC (B1499/99) is output	A
DTC (B1499/99) is not output	B

B → **SYSTEM IS OK**

A

GO TO CAN COMMUNICATION SYSTEM

Blower Motor Circuit

DESCRIPTION

When the heater control (blower switch) is set to position 1 or higher, the contact of the HTR relay is closed, current flows to the blower motor, and the blower motor operates. The blower motor speed can be changed by exchanging the ground and the blower resistor circuit with the heater control (blower switch).

WIRING DIAGRAM

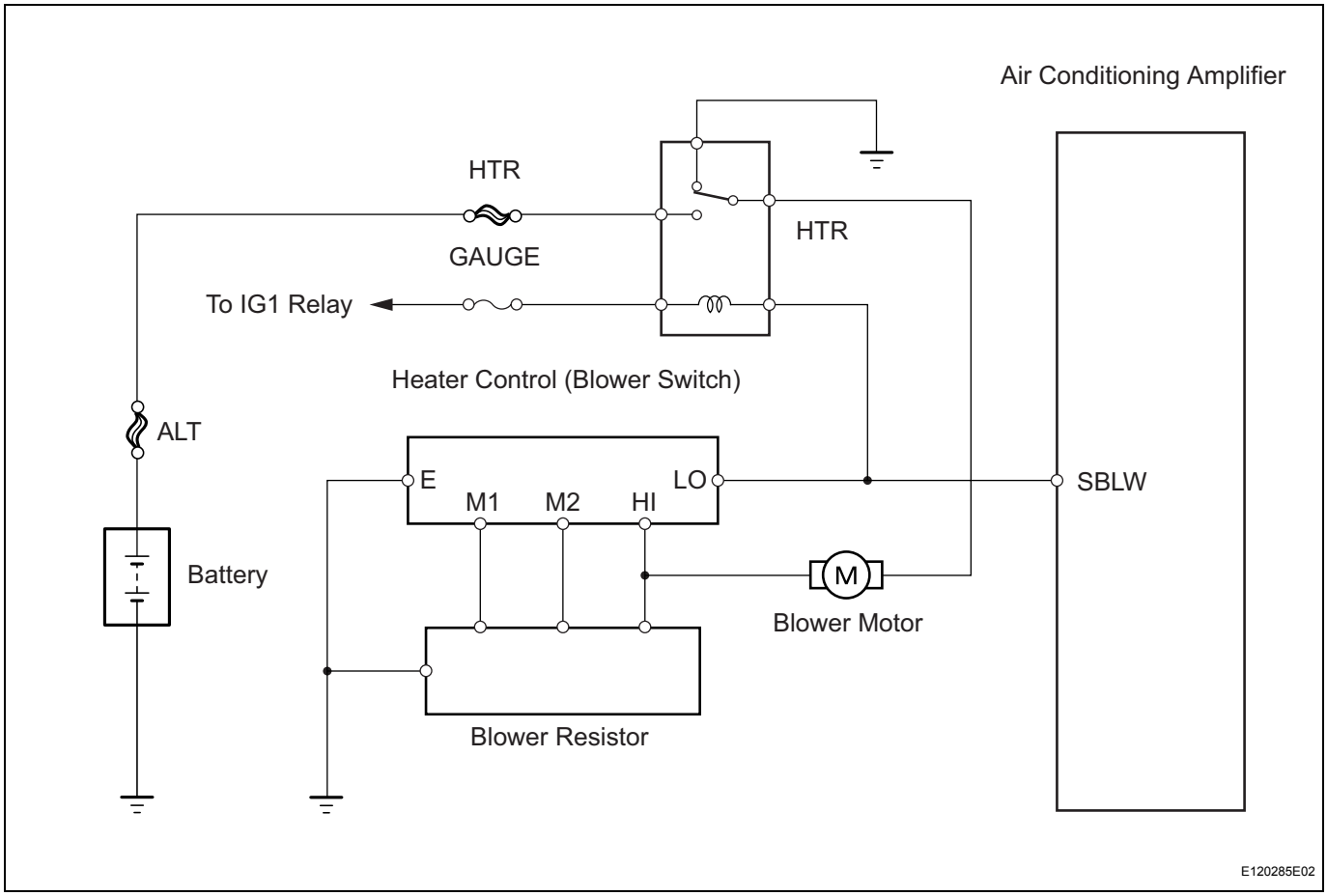

INSPECTION PROCEDURE

1	INSPECT FUSE (GAUGE, HTR)

(a) Remove the GAUGE fuse from the main body ECU.
(b) Remove the HTR fuse from the engine room relay block.
(c) Measure the resistance.

Standard resistance

Tester Item	Specified Condition
GAUGE fuse	Below 1 Ω
HTR fuse	Below 1 Ω

(d) Reinstall the GAUGE fuse.
(e) Reinstall the HTR fuse.

NG	REPLACE FUSE

AC

OK

2	INSPECT HTR RELAY

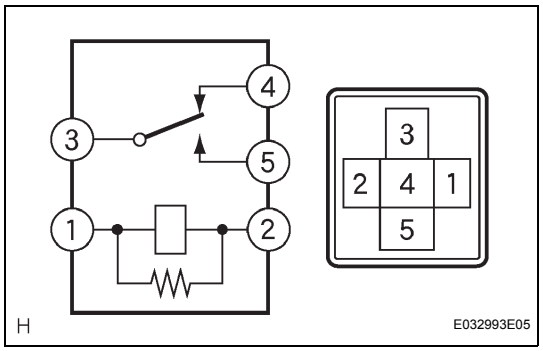

(a) Remove the HTR relay from the main body ECU.
(b) Measure the resistance.
Standard resistance

Tester Connection	Specified Condition
3 - 4	Below 1 Ω
3 - 5	10 kΩ or higher
3 - 4	10 kΩ or higher (when battery voltage is applied to terminals 1 and 2)
3 - 5	Below 1 Ω (when battery voltage is applied to terminals 1 and 2)

(c) Reinstall the HTR relay.

NG → REPLACE HTR RELAY

OK

3	INSPECT BLOWER MOTOR

Component Side:

Blower Motor

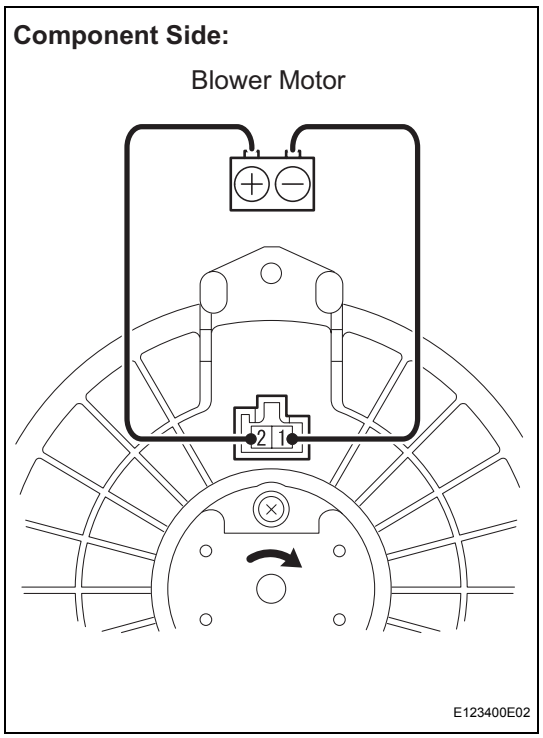

(a) Disconnect the E4 blower motor connector.
(b) Connect the positive (+) lead from the battery to terminal 2 and the negative (-) lead to terminal 1, then check that the blower motor operates smoothly.
OK:
The blower motor operates smoothly.
(c) Measure the current.
Standard current

Tester Connection	Specified Condition
E4-2 (+B) - E4-1 (GND)	1 to 3 A

(d) Reconnect the blower motor connector.

NG → REPLACE BLOWER MOTOR

OK

4	CHECK HARNESS AND CONNECTOR (HTR FUSE - MAIN BODY ECU)

Wire Harness Side:

Main Body ECU Rear View

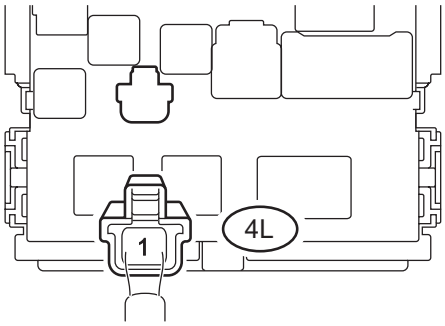

E120471E01

(a) Disconnect the 4L main body ECU connector.
(b) Measure the voltage.

Standard voltage

Tester Connection	Condition	Specified Condition
4L-1 - Body ground	Always	11 to 14 V

(c) Reconnect the main body ECU connector.

NG → **REPAIR OR REPLACE HARNESS OR CONNECTOR**

OK

5	CHECK MAIN BODY ECU

Main Body ECU Rear View:

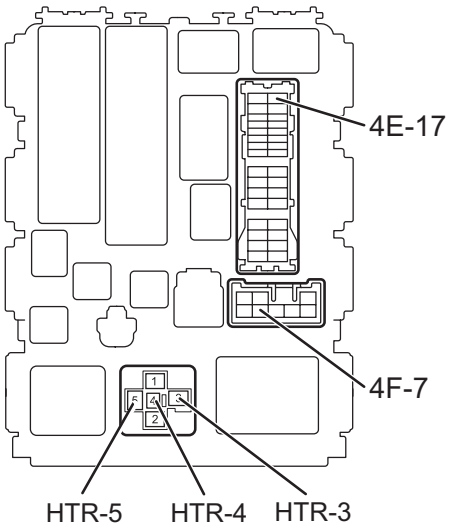

Main Body ECU Front View:

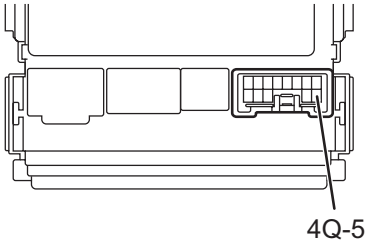

E120470E01

OK

(a) Remove the HTR relay from the main body ECU.
(b) Measure the resistance.
Standard resistance

Tester Connection	Specified Condition
4F-7 - HTR-3	Below 1 Ω
4E-17 - HTR-4	Below 1 Ω

(c) Measure the voltage.
Standard voltage

Tester Connection	Condition	Specified Condition
HTR-5 - Body ground	Always	11 to 14 V

(d) Reinstall the HTR relay.
(e) Measure the voltage.
Standard voltage

Tester Connection	Condition	Specified Condition
4Q-5 - Body ground	Ignition switch ON	11 to 14 V

NG → **REPLACE MAIN BODY ECU**

6	CHECK HARNESS AND CONNECTOR (MAIN BODY ECU - HEATER CONTROL (BLOWER SWITCH))

Wire Harness Side:

Heater Control (Blower Switch) Connector

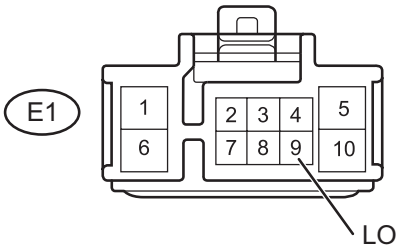

Front View

E120224E04

(a) Disconnect the E1 heater control (blower switch) connector.
(b) Measure the voltage.
Standard voltage

Tester Connection	Condition	Specified Condition
E1-9 (LO) - Body ground	Ignition switch ON	11 to 14 V

(c) Reconnect the heater control (blower switch) connector.

NG → **REPAIR OR REPLACE HARNESS OR CONNECTOR**

OK

7	CHECK HARNESS AND CONNECTOR (MAIN BODY ECU - BLOWER MOTOR)

Wire Harness Side:

Blower Motor Connector

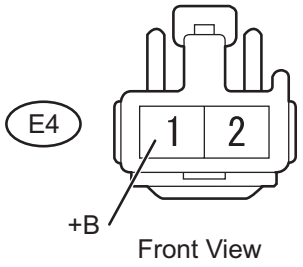

Front View

E119793E04

(a) Disconnect the E4 blower motor connector.
(b) Measure the voltage.
Standard voltage

Tester Connection	Condition	Specified Condition
E4-1 (+B) - Body ground	Ignition switch ON	11 to 14 V

(c) Reconnect the blower motor connector.

NG → **REPAIR OR REPLACE HARNESS OR CONNECTOR**

OK

8 CHECK HARNESS AND CONNECTOR (BLOWER RESISTOR - BLOWER MOTOR)

Wire Harness Side:

Blower Resistor Connector

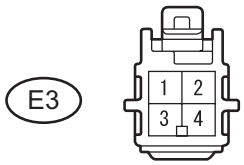

Front View

Blower Motor Connector

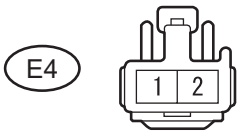

Front View

E120282E01

(a) Disconnect the E3 blower resistor connector.
(b) Disconnect the E4 blower motor connector.
(c) Measure the resistance.
Standard resistance

Tester Connection	Specified Condition
E3-4 - E4-1	Below 1 Ω

(d) Reconnect the blower resistor connector.
(e) Reconnect the blower motor connector.

NG → **REPAIR OR REPLACE HARNESS OR CONNECTOR**

OK

9 INSPECT BLOWER RESISTOR

Component Side:

Blower Resistor

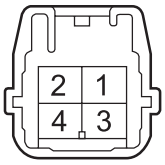

E120977E01

(a) Remove the blower resistor.
(b) Measure the resistance.
Standard resistance

Tester Connection	Specified Condition
4 - 1	3.12 to 3.60Ω
4 - 3	1.45 to 1.67Ω
4 - 2	0.52 to 0.60Ω

(c) Reinstall the blower resistor.

NG → **REPLACE BLOWER RESISTOR**

OK

10 INSPECT HEATER CONTROL (BLOWER SWITCH)

Component Side:

Heater Control (Blower Switch)

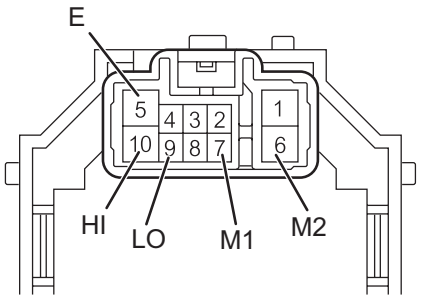

E117010E05

(a) Remove the heater control (blower switch).
(b) Measure the resistance.
Standard resistance

Switch Position	Tester Connection	Specified Condition
0	ALL - 5 (E)	10 kΩ or higher
1	9 (LO) - 5 (E)	Below 1 Ω
1 - 2	9 (LO) - 5 (E) - 7 (M1)	Below 1 Ω
2	9 (LO) - 5 (E) - 7 (M1)	Below 1 Ω
2 - 3	9 (LO) - 5 (E) - 7 (M1) - 6 (M2)	Below 1 Ω
3	9 (LO) - 5 (E) - 6 (M2)	Below 1 Ω
3 - 4	9 (LO) - 5 (E) - 6 (M2) - 10 (HI)	Below 1 Ω
4	9 (LO) - 5 (E) - 10 (HI)	Below 1 Ω

(c) Reinstall the heater control (blower switch).

NG → **REPLACE HEATER CONTROL**

OK

11 CHECK HARNESS AND CONNECTOR (HEATER CONTROL (BLOWER SWITCH) - BLOWER RESISTOR)

Wire Harness Side:

Heater Control (Blower Switch) Connector

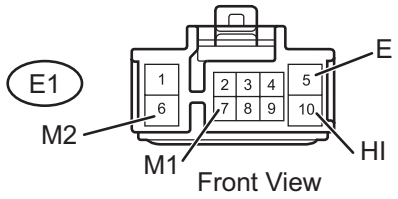

Blower Resistor Connector

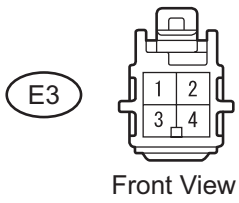

E120283E02

(a) Disconnect the E1 heater control (blower switch) connector.
(b) Disconnect the E3 blower resistor connector.
(c) Measure the resistance.
Standard resistance

Tester Connection	Specified Condition
E1-5 (E) - E3-1	Below 1 Ω
E1-6 (M2) - E3-2	Below 1 Ω
E1-7 (M1) - E3-3	Below 1 Ω
E1-10 (HI) - E3-4	Below 1 Ω

(d) Reconnect the heater control (blower switch) connector.
(e) Reconnect the blower resistor connector.

NG → **REPAIR OR REPLACE HARNESS OR CONNECTOR**

OK

REPAIR OR REPLACE HARNESS OR CONNECTOR (BLOWER RESISTOR - BODY GROUND)

AC

PTC Heater Circuit

DESCRIPTION

PTC heater relays are closed in accordance with signals from the air conditioning amplifier assembly and power is supplied to the PTC heater assembly installed on the radiator heater unit.

WIRING DIAGRAM

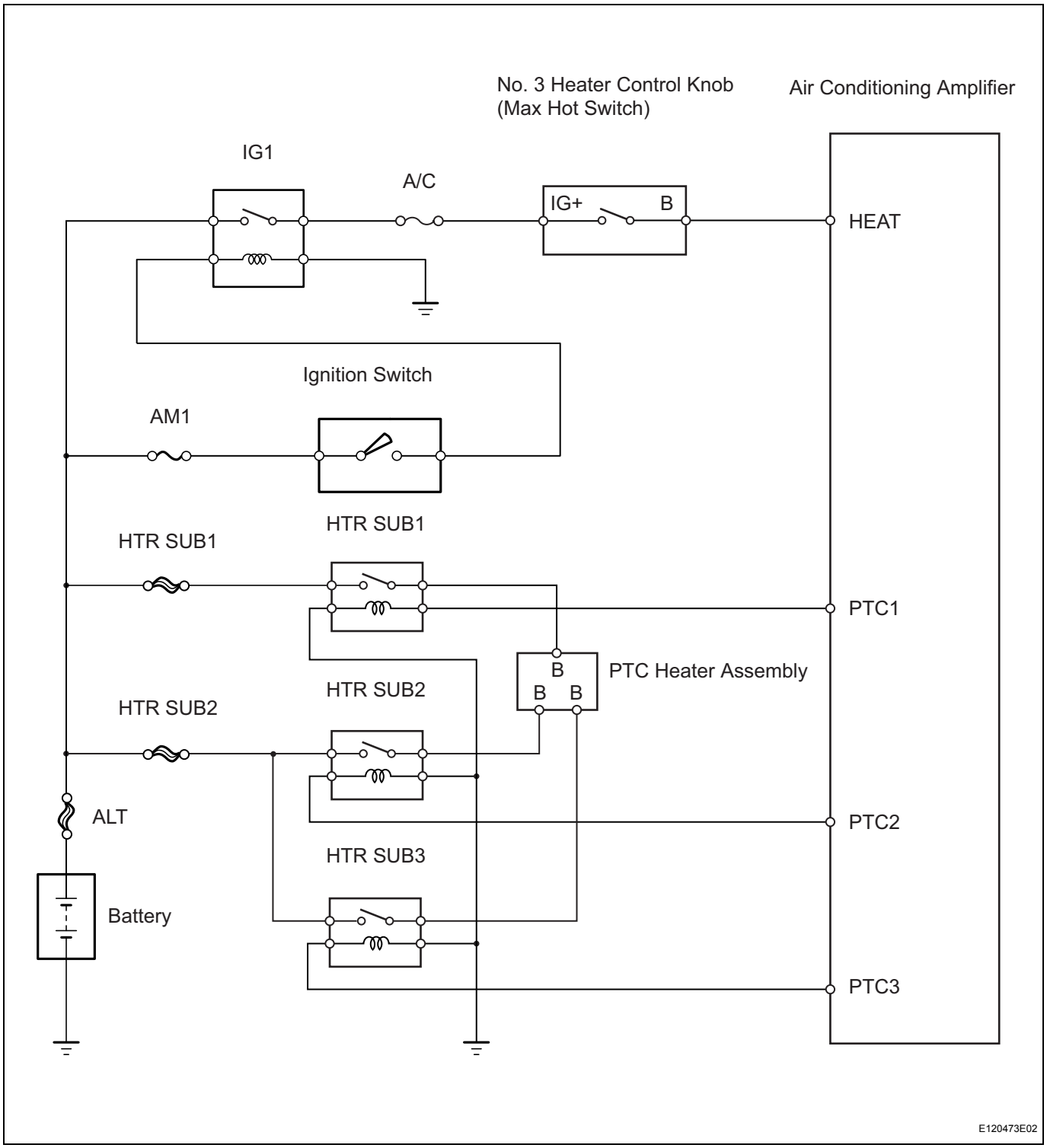

INSPECTION PROCEDURE

1	INSPECT FUSE (A/C, HTR SUB1, HTR SUB2)

(a) Remove the A/C fuse from the main body ECU.
(b) Remove the HTR SUB1 and HTR SUB2 fuses from the engine room relay block.
(c) Measure the resistance.
Standard resistance

Tester Item	Specified Condition
A/C fuse	Below 1 Ω
HTR SUB 1 fuse	Below 1 Ω
HTR SUB 2 fuse	Below 1 Ω

(d) Reinstall the A/C fuse.
(e) Reinstall the HTR SUB1 and HTR SUB2 fuses.

NG → REPLACE FUSE

OK

2	INSPECT NO. 3 HEATER CONTROL KNOB

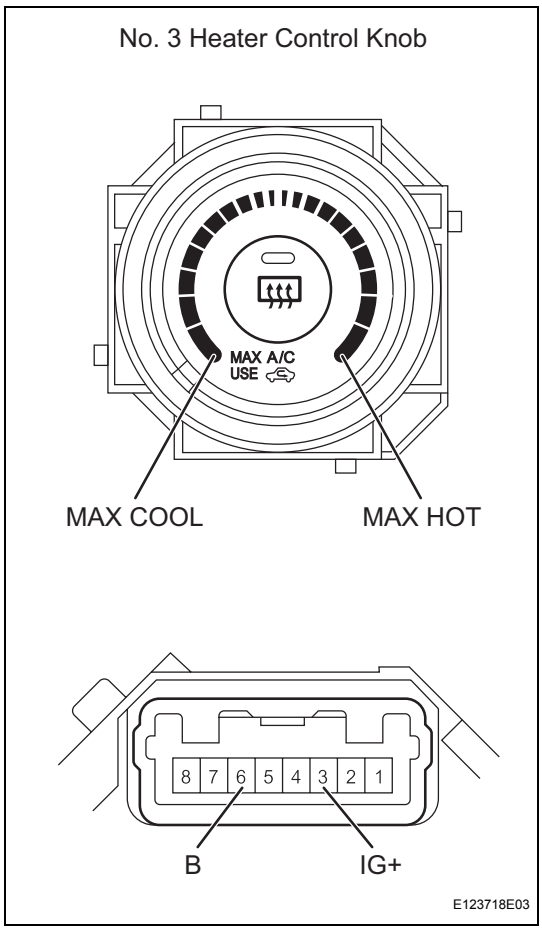

(a) Remove the No. 3 heater control knob.
(b) Measure the resistance.
Standard resistance

Tester Connection	Condition	Specified Condition
3 (IG+) - 6 (B)	Max hot position	Below 1 Ω
3 (IG+) - 6 (B)	Other than max hot position	10 kΩ or higher

(c) Reinstall the No. 3 heater control knob.

NG → REPLACE NO. 3 HEATER CONTROL KNOB

OK

AC

3	CHECK HARNESS AND CONNECTOR (MAIN BODY ECU - AIR CONDITIONING AMPLIFIER)

Wire Harness Side:

No. 3 Heater Control Knob Connector

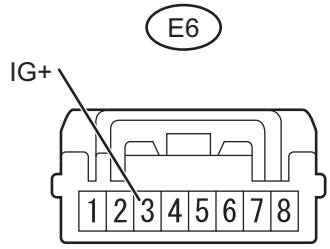

Front View

E120225E03

(a) Disconnect the E6 No. 3 heater control knob connector.
(b) Measure the voltage.

Standard voltage

Tester Connection	Condition	Specified Condition
E6-3 (IG+) - Body ground	Ignition switch ON	11 to 14 V

(c) Reconnect the No. 3 heater control knob connector.

NG → **REPAIR OR REPLACE HARNESS OR CONNECTOR**

OK

4	CHECK HARNESS AND CONNECTOR (No. 3 HEATER CONTROL KNOB - AIR CONDITIONING AMPLIFIER)

Wire Harness Side:

No. 3 Heater Control Knob Connector

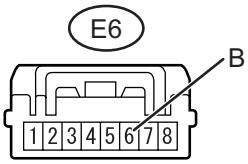

Front View

Air Conditioning Amplifier Connector

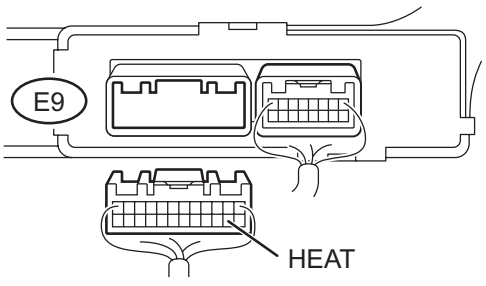

E120281E03

(a) Disconnect the E6 No. 3 heater control knob connector.
(b) Disconnect the E9 air conditioning amplifier connector.
(c) Measure the resistance.

Standard resistance

Tester Connection	Specified Condition
E6-6 (B) - E9-14 (HEAT)	Below 1 Ω

(d) Reconnect the No. 3 heater control knob connector.
(e) Reconnect the air conditioning amplifier connector.

NG → **REPAIR OR REPLACE HARNESS OR CONNECTOR**

AC

OK

5 INSPECT AIR CONDITIONING AMPLIFIER

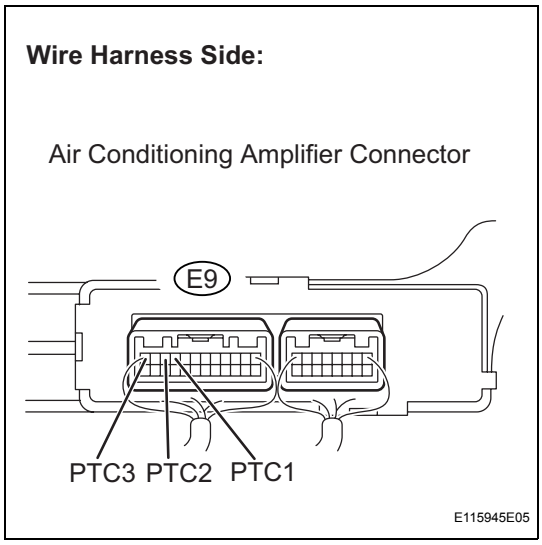

(a) Remove the air conditioning amplifier with its connectors still connected.
(b) Turn the ignition switch ON.
(c) When the PTC heater operating conditions are met (engine at idling speed or faster, ambient temperature is 10°C (50°F) or less, engine coolant temperature is 65°C (149°F) or less, and No. 3 heater control knob setting is MAX HOT), turn the blower switch to the Lo setting.
(d) Wait 30 seconds.
(e) Measure the voltage.

Standard voltage

Tester Connection	Specified Condition
E9-9 (PTC1) - Body ground	11 to 14 V
E9-10 (PTC2) - Body ground	11 to 14 V
E9-12 (PTC3) - Body ground	11 to 14 V

(f) Reinstall the air conditioning amplifier.

NG → REPLACE AIR CONDITIONING AMPLIFIER

OK

6 INSPECT PTC HEATER RELAY (HTR SUB1, HTR SUB2, HTR SUB3)

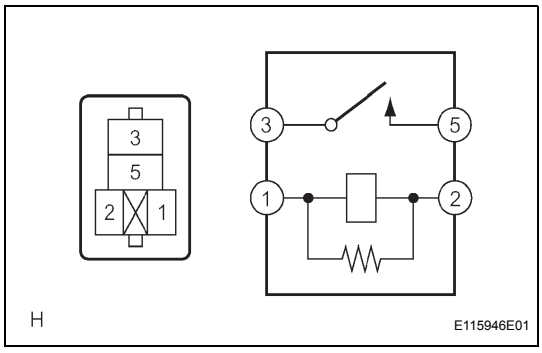

(a) Remove the HTR SUB1 relay from the engine room relay block.
(b) Remove the HTR SUB2 and HTR SUB3 relays from the engine room sub relay block.
(c) Measure the resistance.

Standard resistance

Tester Connection	Specified Condition
3 - 5	10 kΩ or higher
3 - 5	Below 1 Ω (when battery voltage is applied to terminals 1 and 2)

(d) Reinstall the HTR SUB1 relay.
(e) Reinstall the HTR SUB2 and HTR SUB3 relays.

NG → REPLACE PTC HEATER RELAY

OK

7	CHECK HARNESS AND CONNECTOR (AIR CONDITIONING AMPLIFIER - PTC HEATER RELAY)

Engine Room R/B:

HTR SUB1 Relay

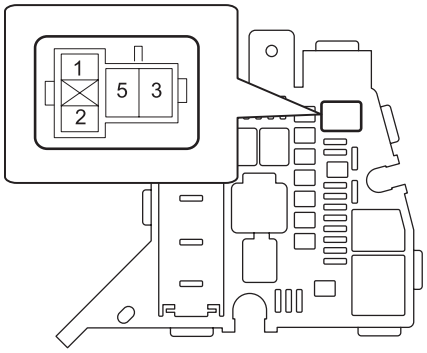

Engine Room R/B No. 2:

HTR SUB3 Relay HTR SUB2 Relay

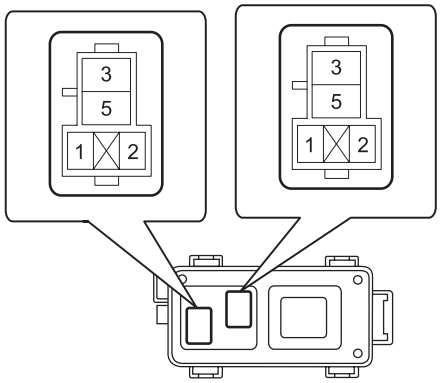

E120466E04

OK

(a) Remove the HTR SUB1 relay from the engine room R/B.
(b) Remove the HTR SUB2 and HTR SUB3 relays from the engine room R/B No. 2.
(c) Turn the ignition switch ON.
(d) When the PTC heater operating conditions are met (engine at idling speed or faster, ambient temperature is 10°C (50°F) or less, engine coolant temperature is 65°C (149°F) or less, and No. 3 heater control knob setting is MAX HOT), turn the blower switch to the Lo setting.
(e) Wait 30 seconds.
(f) Measure the voltage.
Standard voltage.

Tester Connection	Specified Condition
HTR SUB1-2 - Body ground	11 to 14V
HTR SUB2-2 - Body ground	11 to 14V
HTR SUB3-2 - Body ground	11 to 14V

(g) Reinstall the HTR SUB1 relay.
(h) Reinstall the HTR SUB2 and HTR SUB3 relays.

NG → **REPAIR OR REPLACE HARNESS OR CONNECTOR**

8 CHECK HARNESS AND CONNECTOR (PTC HEATER RELAY - BODY GROUND)

Engine Room R/B:

HTR SUB1 Relay

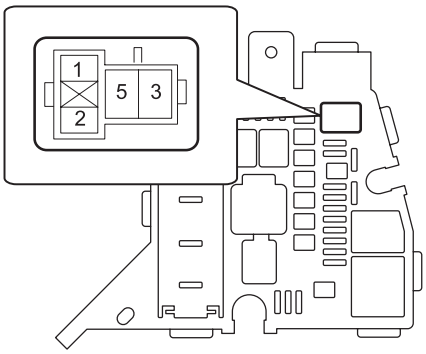

Engine Room R/B No. 2:

HTR SUB3 Relay HTR SUB2 Relay

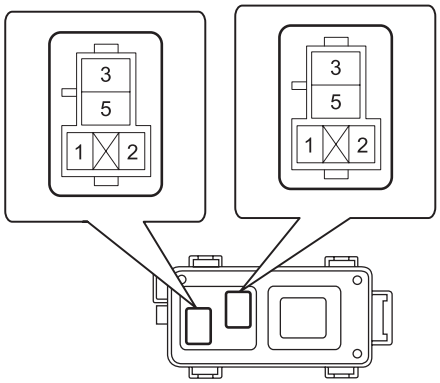

E120466E04

(a) Remove the HTR SUB1 relay from the engine room R/B.
(b) Remove the HTR SUB2 and HTR SUB3 relays from the engine room R/B No. 2.
(c) Measure the resistance.

Standard resistance

Tester Connection	Specified Condition
HTR SUB1-1 - Body ground	Below 1 Ω
HTR SUB2-1 - Body ground	Below 1 Ω
HTR SUB3-1 - Body ground	Below 1 Ω

(d) Reinstall the HTR SUB1 relay.
(e) Reinstall the HTR SUB2 and HTR SUB3 relays.

NG → **REPAIR OR REPLACE HARNESS OR CONNECTOR**

OK

9 INSPECT PTC HEATER ASSEMBLY

Component Side:

PTC Heater Assembly Connnector

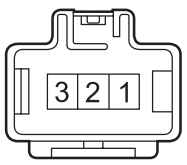

H

E115947E03

(a) Disconnect the A17 PTC heater assembly connector.
(b) Measure the resistance.

Standard resistance

Tester Connection	Specified Condition
1 - 2	Below 1 Ω
1 - 3	Below 1 Ω
2 - 3	Below 1 Ω

(c) Reconnect the PTC heater assembly connector.

NG → **REPLACE PTC HEATER ASSEMBLY**

AC

OK

10	CHECK HARNESS AND CONNECTOR (BATTERY - PTC HEATER RELAY)

Engine Room R/B:

HTR SUB1 Relay

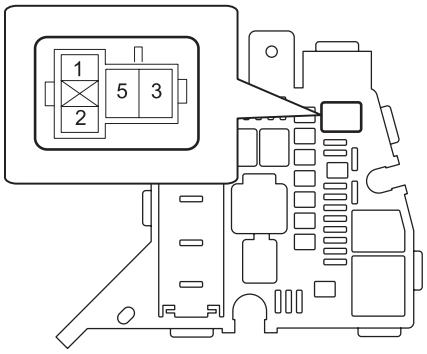

Engine Room R/B No. 2:

HTR SUB3 Relay HTR SUB2 Relay

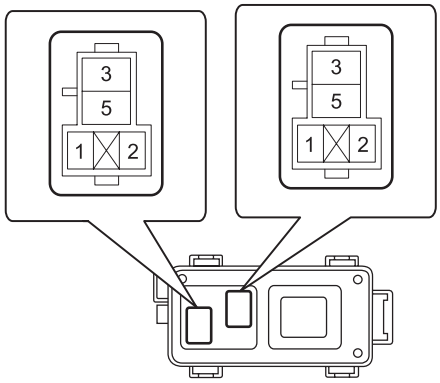

E120466E04

(a) Remove the HTR SUB1 relay from the engine room R/B.
(b) Remove the HTR SUB2 and HTR SUB3 relays from the engine room R/B No. 2.
(c) Measure the voltage.

Standard voltage

Tester Connection	Condition	Specified Condition
HTR SUB1-5 - Body ground	Always	11 to 14 V
HTR SUB2-5 - Body ground	Always	11 to 14 V
HTR SUB3-5 - Body ground	Always	11 to 14 V

(d) Reinstall the HTR SUB1 relay.
(e) Reinstall the HTR SUB2 and HTR SUB3 relays.

NG → **REPAIR OR REPLACE HARNESS OR CONNECTOR**

OK

11	CHECK HARNESS AND CONNECTOR (PTC HEATER RELAY - PTC HEATER ASSEMBLY)

Engine Room R/B:

HTR SUB1 Relay

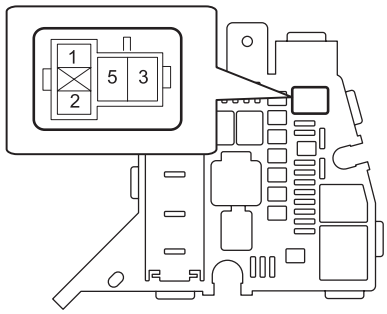

Engine Room R/B No. 2:

HTR SUB3 Relay HTR SUB2 Relay

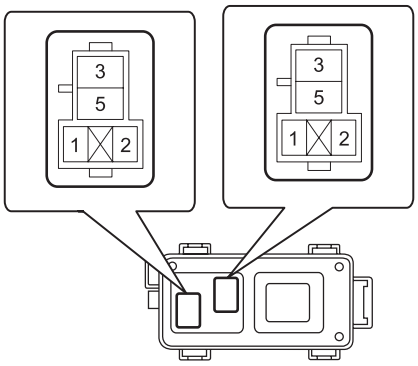

Wire Harness Side:

PTC Heater Assembly Connector

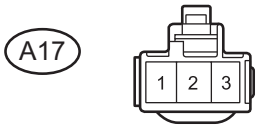

Front View

E120286E02

(a) Remove the HTR SUB1 relay from the engine room R/B.
(b) Remove the HTR SUB2 and HTR SUB3 relays from the engine room R/B No. 2.
(c) Disconnect the A17 PTC heater assembly connector.
(d) Measure the resistance.
Standard resistance

Tester Connection	Specified Condition
HTR SUB1-3 - A17-2 (B)	Below 1 Ω
HTR SUB2-3 - A17-3 (B)	Below 1 Ω
HTR SUB3-3 - A17-1 (B)	Below 1 Ω

(e) Reinstall the HTR SUB1 relay.
(f) Reinstall the HTR SUB2 and HTR SUB3 relays.
(g) Reconnect the PTC heater assembly connector.

NG → **REPAIR OR REPLACE HARNESS OR CONNECTOR**

OK

REPLACE AIR CONDITIONING AMPLIFIER

IG Power Source Circuit

DESCRIPTION

This is the main power source supplied to the air conditioning amplifier when the ignition switch is turned on. This power source is used for operating components such as the air conditioning amplifier.

WIRING DIAGRAM

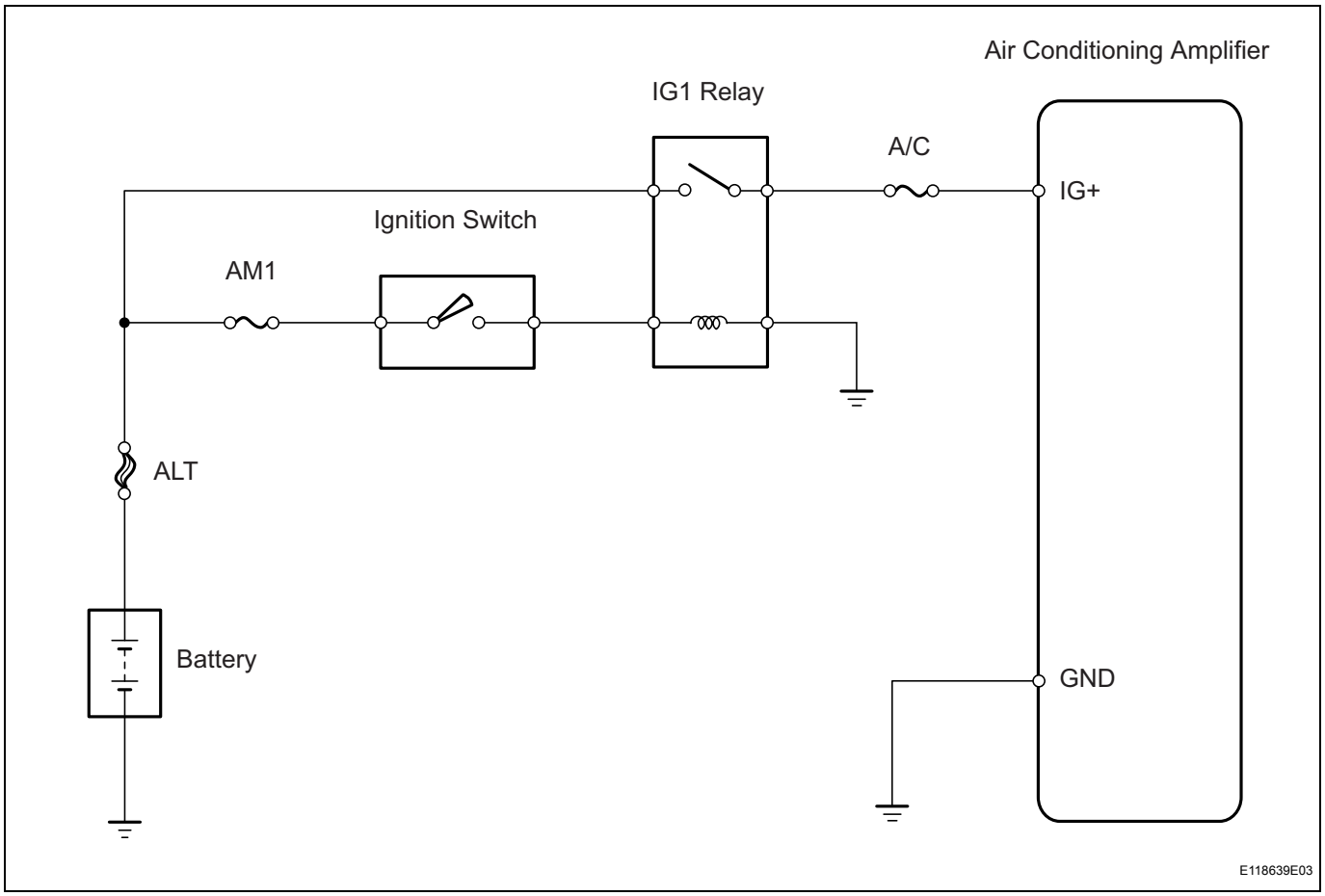

INSPECTION PROCEDURE

HINT:
Start the engine before the inspection. Check the IG1 relay or battery if the engine does not start.

1	INSPECT FUSE (A/C)

(a) Remove the A/C fuse from the main body ECU.
(b) Measure the resistance.
Standard resistance:
Bellow 1 Ω
(c) Reinstall the A/C fuse.

NG → **REPLACE FUSE**

OK

AC

2	INSPECT AIR CONDITIONING AMPLIFIER

Wire Harness Side:

Air Conditioning Amplifier Connector

w/o PTC Heater:

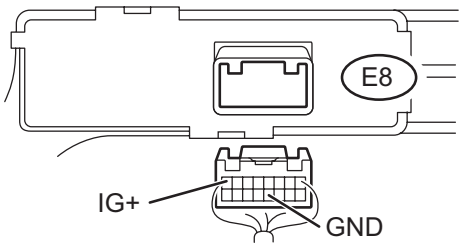

w/ PTC Heater:

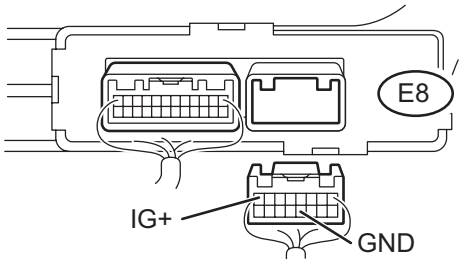

E119775E01

(a) Disconnect the E8 air conditioning amplifier connector.
(b) Measure the voltage.
Standard voltage

Tester Connection	Condition	Specified Condition
E8-8 (IG+) - E8-12 (GND)	Ignition switch ON	11 to 14 V

(c) Reconnect the air conditioning amplifier connector.

NG → **Go to step 3**

OK

REPLACE AIR CONDITIONING AMPLIFIER

3	CHECK HARNESS AND CONNECTOR (AIR CONDITIONING AMPLIFIER - MAIN BODY ECU)

Wire Harness Side:

Main Body ECU (Front View)

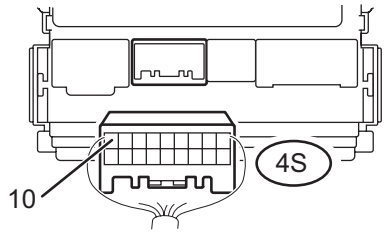

Air Conditioning Amplifier Connector

w/o PTC Heater:

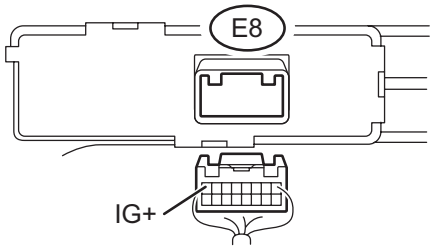

w/ PTC Heater:

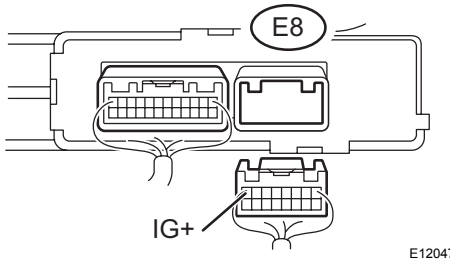

E120472E03

(a) Disconnect the E8 air conditioning amplifier connector.
(b) Disconnect the 4S main body ECU connector.
(c) Measure the resistance.

Standard resistance

Tester Connection	Specified Condition
E8-8 (IG+) - 4S-10	Below 1 Ω

(d) Reconnect the air conditioning amplifier connector.
(e) Reconnect the main body ECU connector.

NG → **REPAIR OR REPLACE HARNESS OR CONNECTOR**

OK

4	CHECK HARNESS AND CONNECTOR (AIR CONDITIONING AMPLIFIER - BODY GROUND)

(a) Disconnect the E8 air conditioning amplifier connector.

Wire Harness Side :

Air Conditioning Amplifier Connector

w/o PTC Heater:

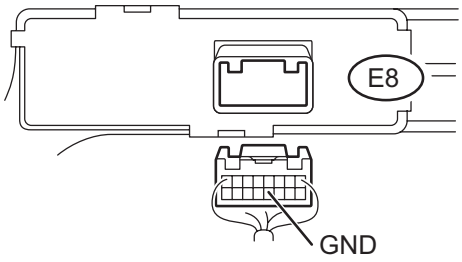

w/ PTC Heater:

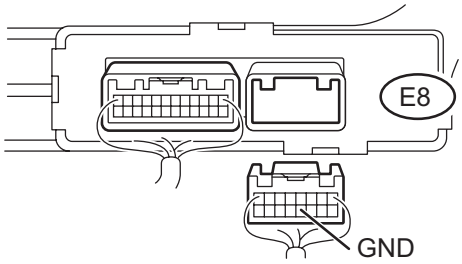

E119775E02

(b) Measure the resistance.
Standard resistance

Tester Connection	Specified Condition
E8-12 (GND) - Body ground	Below 1 Ω

(c) Reconnect the air conditioning amplifier connector.

NG → **REPAIR OR REPLACE HARNESS OR CONNECTOR**

OK

PROCEED TO NEXT CIRCUIT INSPECTION SHOWN IN PROBLEM SYMPTOMS TABLE

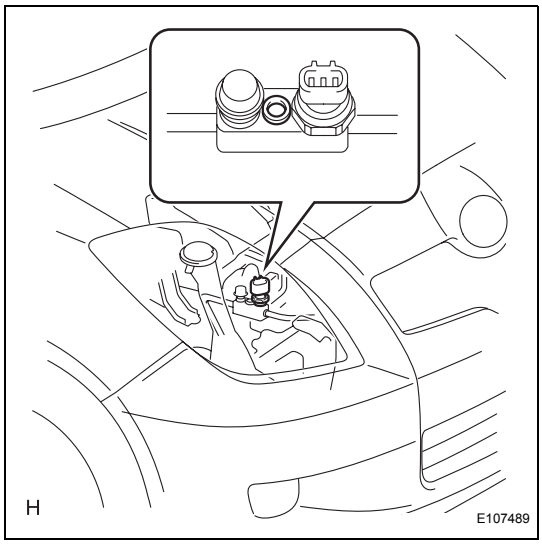

REFRIGERANT

ON-VEHICLE INSPECTION

1. INSPECT REFRIGERANT VOLUME

(a) Check the sight glass on liquid tube sub-assembly A.

Test conditions:
- Engine running at 1,500 rpm.
- Blower speed control switch at HI.
- A/C switch ON.
- Temperature control lever in MAX. COLD position.
- All doors fully open.

Item	Symptom	Amount of Refrigerant	Corrective Procedures
1	Bubbles visible	Insufficient*	(1) Check for gas leakage and repair if necessary (2) Add refrigerant until bubbles disappear
2	No bubbles visible	Empty, insufficient or too much	Refer to items 3 and 4
3	No temperature difference between compressor inlet and outlet	Empty or nearly empty	(1) Check for gas leakage with gas leak detector and repair if necessary (2) Add refrigerant until bubbles disappear
4	Considerable temperature difference between compressor inlet and outlet	Correct or too much	Refer to items 5 and 6
5	Immediately after A/C turned OFF, refrigerant becomes clear	Too much	(1) Drain or discharge refrigerant (2) Bleed air and supply proper amount of purified refrigerant
6	Immediately after A/C turned OFF, refrigerant foams and then becomes clear	Correct	-

HINT:

*: If the ambient temperature is higher than usual but cooling is sufficient, bubbles in the sight glass are permissible.

2. CHECK REFRIGERANT PRESSURE USING MANIFOLD GAUGE SET

(a) This is a method to identify trouble areas by using a manifold gauge set. Read the manifold gauge pressure under the following conditions.

Test conditions:
- Engine warm.
- All doors fully open.
- A/C switch ON.
- Blower speed control switch at HI.
- Engine running at 1,500 rpm.
- Air inlet mode damper set at recirculation.
- Temperature control lever in MAX. COLD position.
- Air temperature at air inlet 30 to 35°C (86 to 95°F).

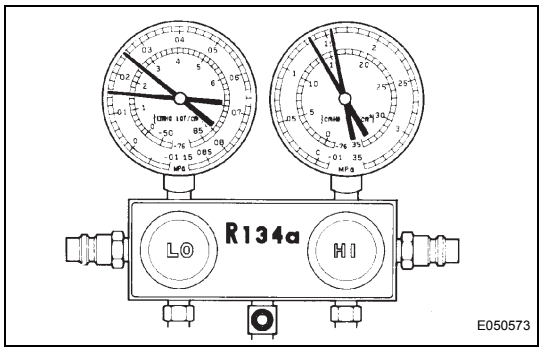

(1) When the refrigerant volume is correct, the gauge reading indicates as follows:
Low pressure side:
0.15 to 0.25 MPa (1.5 to 2.5 kgf/cm^2)
High pressure side:
1.37 to 1.57 MPa (14 to 16 kgf/cm^2)
HINT:
Pressure varies in accordance with certain conditions (outside air temperature, sunlight and wind).

(2) When there is moisture in the refrigeration system:

Condition: Air conditioning system periodically cools and then fails to cool.

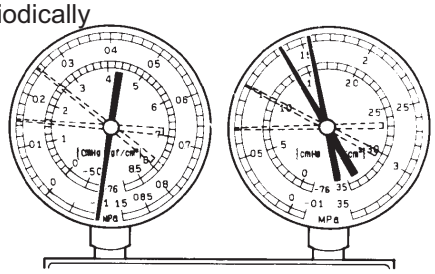

Symptoms	Probable Cause	Diagnosis	Corrective Actions
During operation, pressure on low pressure side cycles between normal and vacuum	Moisture in refrigeration system freezes at expansion valve orifice, causing temporary interruption of cycle However, when melted, returns to normal condition	• Receiver dryer oversaturated • Moisture in refrigeration system freezes at expansion valve orifice and blocks refrigerant circulation	1. Replace receiver dryer 2. Remove moisture from cycle by repeatedly evacuating air 3. Supply appropriate volume of new refrigerant

(3) When cooling is insufficient:

Condition: Air conditioning system does not function effectively.

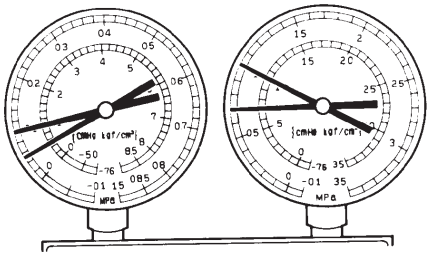

Symptoms	Probable Cause	Diagnosis	Corrective Actions
• Pressure low on both low and high pressure sides • Cooling performance insufficient	Gas leakage from refrigeration system	• Insufficient refrigerant • Refrigerant leakage	1. Check for gas leakage using gas leak detector, and repair if necessary 2. Supply appropriate volume of new refrigerant 3. If indicated pressure value close to 0 when connected to gauge, create vacuum after inspecting and repairing location of leakage

(4) When the circulation of the refrigerant is poor:

Condition: Air conditioning system does not function effectively.

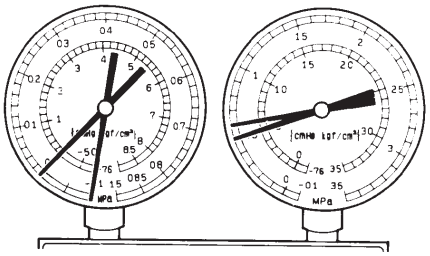

I022119E02

Symptoms	Probable Cause	Diagnosis	Corrective Action
• Pressure low on both low and high pressure sides • Frost exists on piping from condenser to A/C unit	Refrigerant flow obstructed by dirt in condenser	Condenser clogged	Replace condenser

(5) When the refrigerant does not circulate:

Condition: Air conditioning system does not function or functions intermittently.

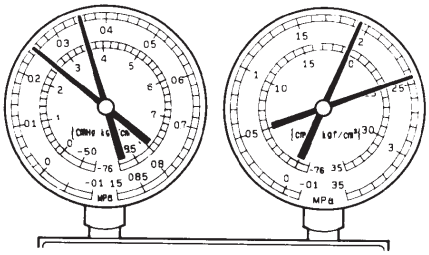

I022121E02

Symptoms	Probable Causes	Diagnosis	Corrective Actions
• Vacuum indicated on low pressure side, and extremely low pressure indicated on high pressure side • Frost or condensation seen on piping on both sides of condenser or expansion valve	• Refrigerant flow obstructed by moisture or dirt in refrigeration system • Refrigerant flow obstructed by gas leakage from expansion valve	Refrigerant does not circulate	1. Check expansion valve 2. Clean expansion valve with compressed air 3. Replace condenser 4. Evacuate air and then supply appropriate volume of new refrigerant 5. For gas leakage from expansion valve, replace expansion valve

(6) When the refrigerant is overcharged or cooling of condenser is insufficient:

Condition: Air conditioning system does not function effectively.

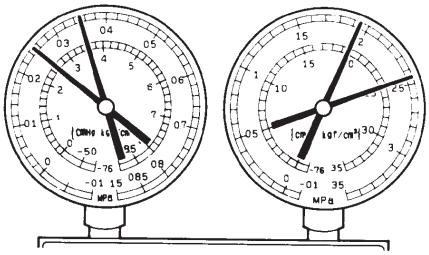

I022121E03

Symptoms	Probable Causes	Diagnosis	Corrective Actions
Pressure extremely high on both sides	• Excessive refrigerant • Cooling performance of condenser insufficient	• Excessive refrigerant • Cooling performance of condenser insufficient	1. Clean condenser fins 2. Check condenser fan motor operation by switching A/C ON 3. If 1 and 2 normal, check amount of refrigerant and supply appropriate volume of refrigerant

(7) When there is air in the refrigeration system:

Condition: Air conditioning system does not function.

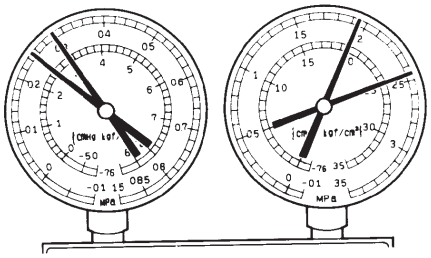

NOTE: These gauge indications occur when the refrigeration system opens and the refrigerant is supplied without performing vacuum purging.

I022122E02

Symptoms	Probable Causes	Diagnosis	Corrective Actions
• Pressure extremely high on both low and high pressure sides • Low pressure piping too hot to touch	Air in refrigeration system	• Air in refrigeration system • Insufficient vacuum purging	1. Check whether compressor oil dirty or insufficient 2. Evacuate air and supply new refrigerant

(8) When the expansion valve malfunctions:

Condition: Air conditioning system does not function effectively.

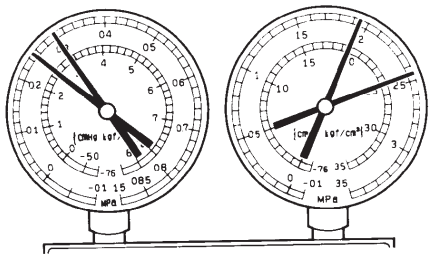

I022123E02

Symptoms	Probable Causes	Diagnosis	Corrective Actions
• Pressure extremely high on both low and high pressure sides • Frost or condensation on piping on low pressure side	Expansion valve malfunction	• Excessive refrigerant in low pressure piping • Expansion valve opening too wide	Replace expansion valve

(9) When the compressor is defective:

Condition: Air conditioning system does not function.

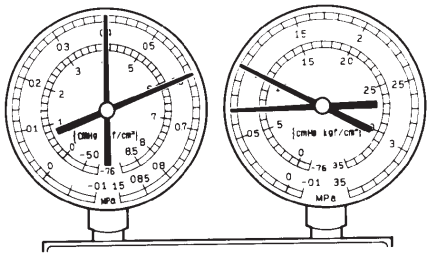

I022124E02

Symptoms	Probable Cause	Diagnosis	Corrective Actions
• Pressure extremely high on both low and high pressure sides • Pressure extremely low on high pressure side	Internal leakage in compressor	• Compression failure of compressor • Leakage from damaged valve or broken sliding parts in compressor	Repair or replace compressor

3. INSPECT IDLING SPEED

(a) Warm up the engine.

(b) Inspect the idling speed when these conditions are established.

- Engine warm
- Transmission shifted to either the neutral or the parking position.

Standard:

for manual transaxle

Condition	Idling Speed
Switch A/C OFF	550 to 650 rpm
Switch A/C ON (A/C Lo → Hi)	700 → 850 rpm

for automatic transaxle

Condition	Idling Speed
Switch A/C OFF	650 to 750 rpm
Switch A/C ON (A/C Lo → Hi)	700 → 850 rpm

If the idling speed is not as specified, check the idle control system.

REPLACEMENT

NOTICE:
When recharging refrigerant, collect together all the refrigerant remaining in the cycle, then recharge and seal the refrigerant as described below. (Do not overcharge.)

1. DISCHARGE REFRIGERANT FROM REFRIGERATION SYSTEM

(a) Start up the engine.
(b) Switch A/C ON.
(c) Turn the blower switch to ON.
(d) Operate the cooler compressor with an engine speed of approximately 1,000 rpm for 5 to 6 minutes to circulate the refrigerant and collect the remaining compressor oil from each component, in the cooler compressor.
(e) Stop the engine.
(f) Remove the caps from the service valves on the refrigerant line.
(g) Connect the Freon collection/recycling device to discharge the refrigerant gas remaining in the refrigeration system.
NOTICE:
Use the Freon collection/recycling device in accordance with the manufacturer's instruction manual.

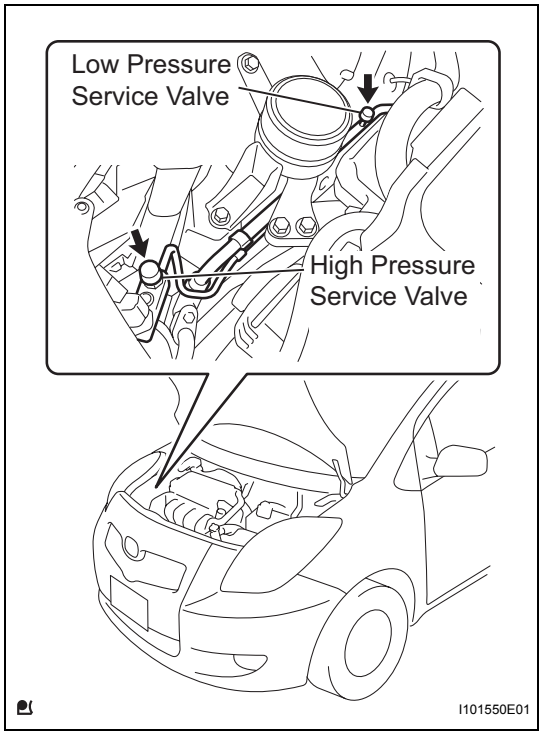

2. CHARGE REFRIGERANT

SST 07110-58060 (07117-58080, 07117-58090, 07117-78050, 07117-88060, 07117-88070, 07117-88080)

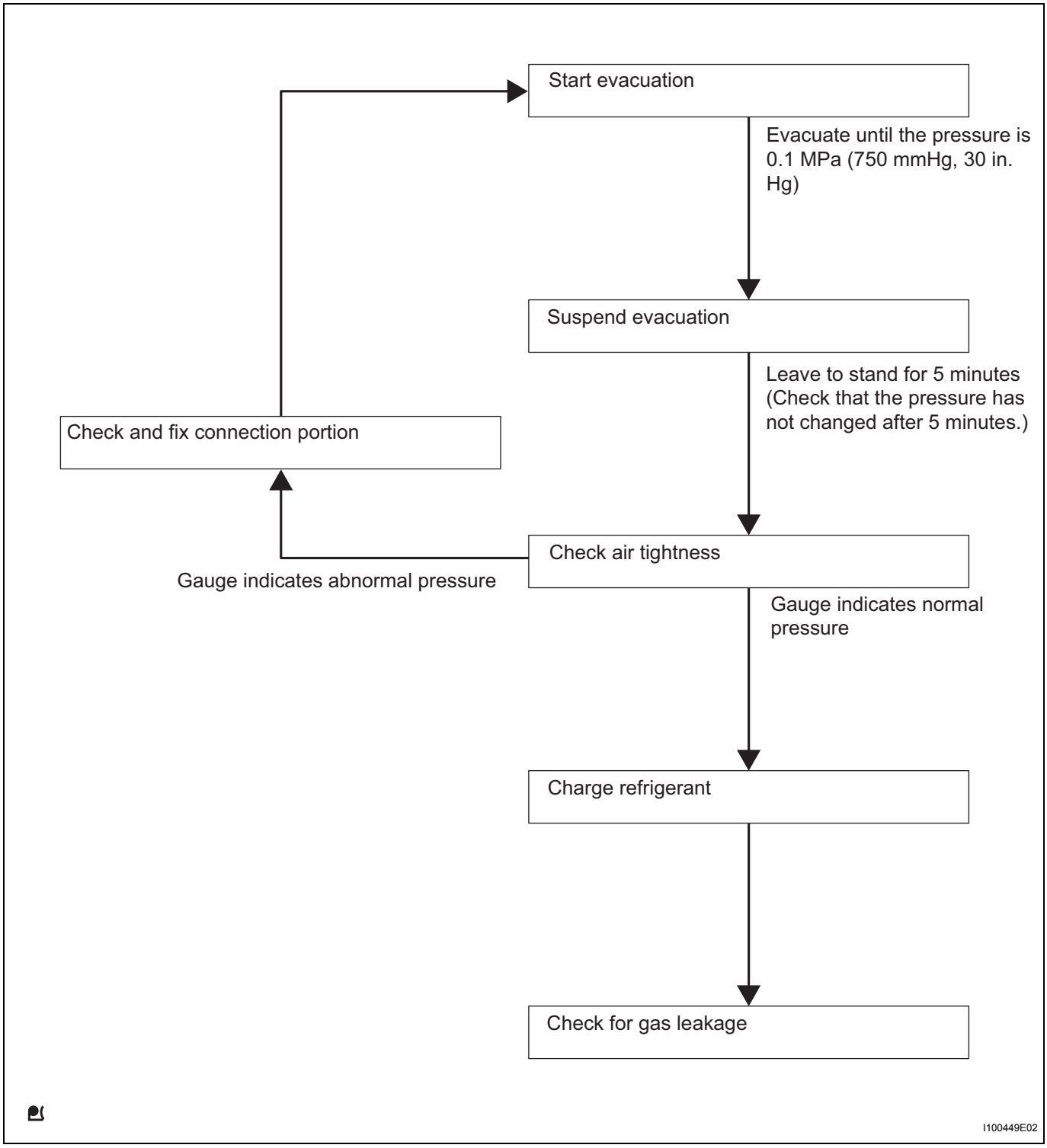

NOTICE:
Charge refrigerant in accordance with equipment manual.

(a) Perform vacuum purging using a vacuum pump.
(b) Charge refrigerant HFC-134a (R134a).
Standard:
330 to 390g (11.64 to 13.76oz.)

NOTICE:
Do not start the engine before charging it with refrigerant as the cooler compressor doesn't work properly without sufficient refrigerant. This could cause the compressor to overheat.
HINT:

- The relationship between refrigerant charge amount and pressure is as follows.

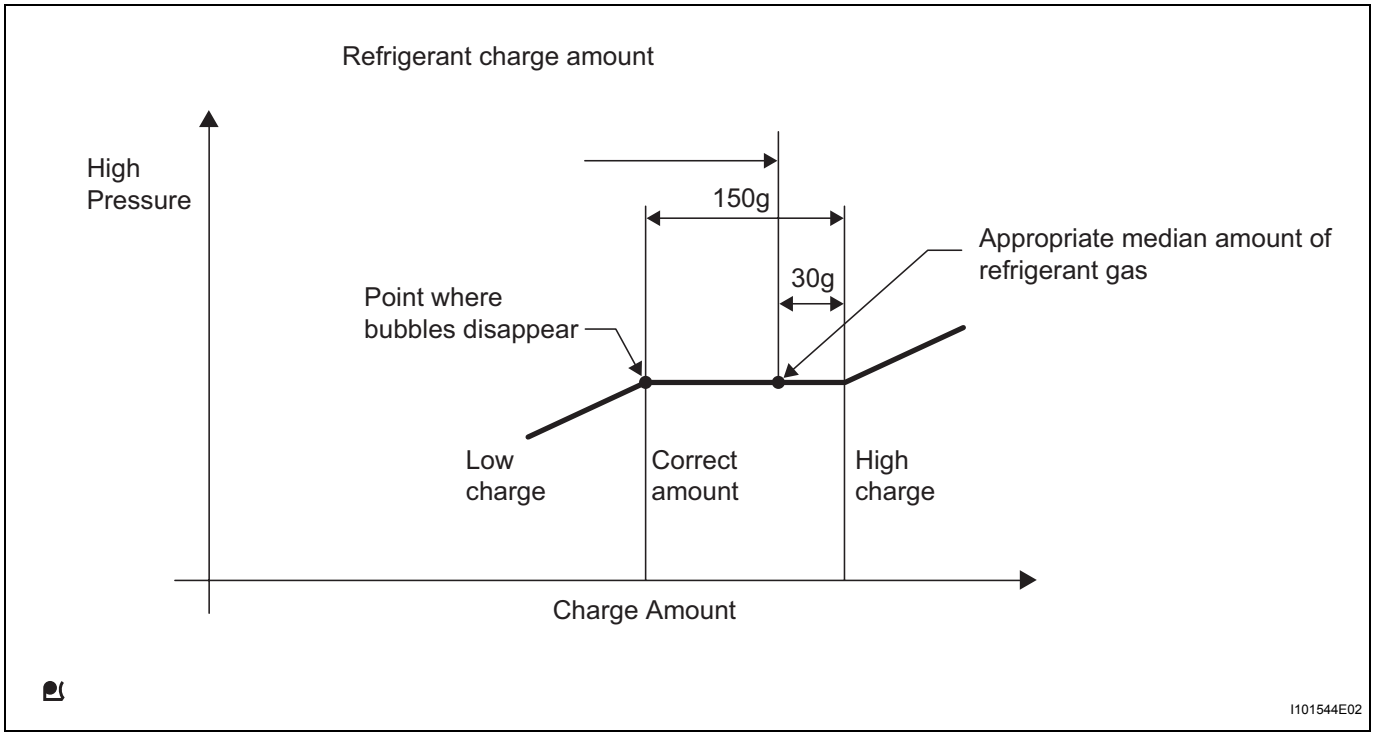

- High Charge Range:
  If refrigerant is overcharged, pressure rises on the high-pressure side. High-pressure cut off frequently occurs. This causes insufficient cooling performance and also insufficient compressor lubrication.
- Low Charge Range:
  Shortage of refrigerant causes insufficient cooling performance and low circulation of refrigerant oil, which shortens compressor life. Operation with insufficient coolant raises refrigerant temperature and causes heat deterioration of rubber seals and hoses. Cracking and thus refrigerant leakage may occur.

(1) Install the caps onto the service valves on the refrigerant line.

3. WARM UP ENGINE
NOTICE:
Warm up the engine at less than 2,000 rpm for 1 minute or more after charging it with refrigerant.

4. CHECK FOR REFRIGERANT LEAKAGE

(a) After recharging the refrigerant gas, check for refrigerant gas leakage using a halogen leak detector.

(b) Perform the operation as follows:
- Stop the engine.
- Secure good ventilation (the halogen leak detector may react to volatile gases other than refrigerant, such as evaporated gasoline or exhaust gas).
- Repeat the test 2 or 3 times.
- Make sure that some refrigerant remains in the refrigeration system.
  When compressor is off: approximately 392 to 588 kPa (4 to 6 kgf*cm^2, 57 to 85 psi)

HINT:
It is impossible for the above pressure to be maintained if there is leakage.

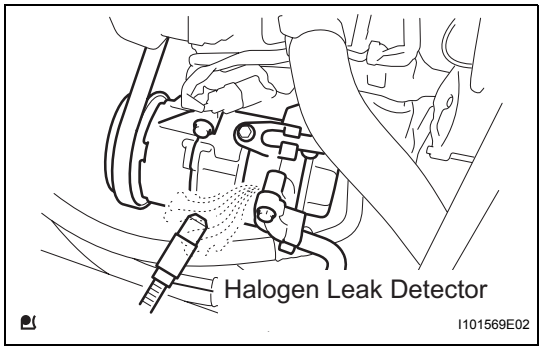

(c) Using the halogen leak detector, check the refrigerant line, especially the connection points, for leakage.

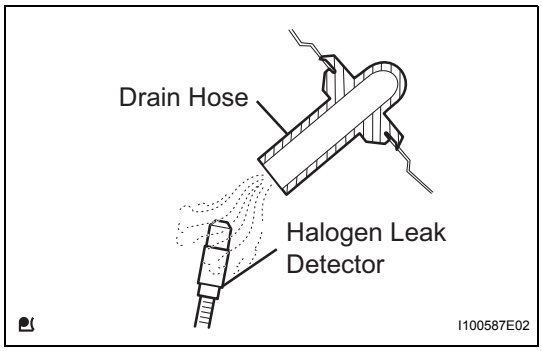

(d) Bring the halogen leak detector close to the drain hose before performing the test.
HINT:
- After the blower motor has stopped, leave the cooling unit for at least 15 minutes.
- Place the halogen leak detector sensor under the drain hose.
- When bringing the halogen leak detector close to the drain hose, make sure that the halogen leak detector does not react to the volatile gases.

If such a reaction is unavoidable, the vehicle must be lifted up.

(e) If a gas leak is not detected from the drain hose, remove the blower motor from the cooling unit. Insert the halogen leak detector sensor into the unit and perform the test.

(f) Disconnect the pressure switch connector and leave it for approximately 20 minutes. Bring the halogen leak detector close to the pressure switch and perform the test.

REFRIGERANT LINE

COMPONENTS

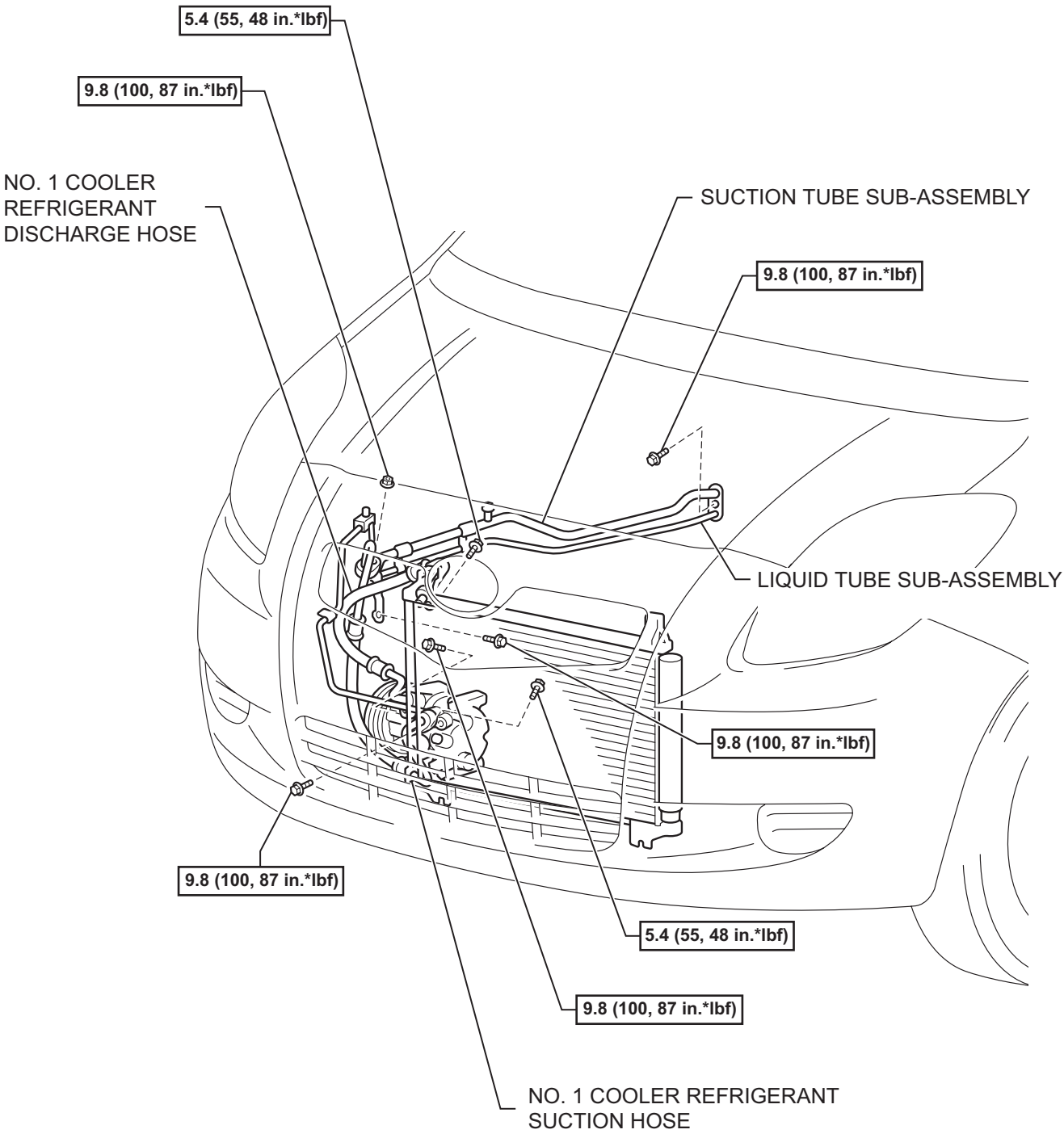

N*m (kgf*cm, ft*lbf) : Specified torque

N

I101611E01

AC

AIR CONDITIONING UNIT (for Sedan)

COMPONENTS

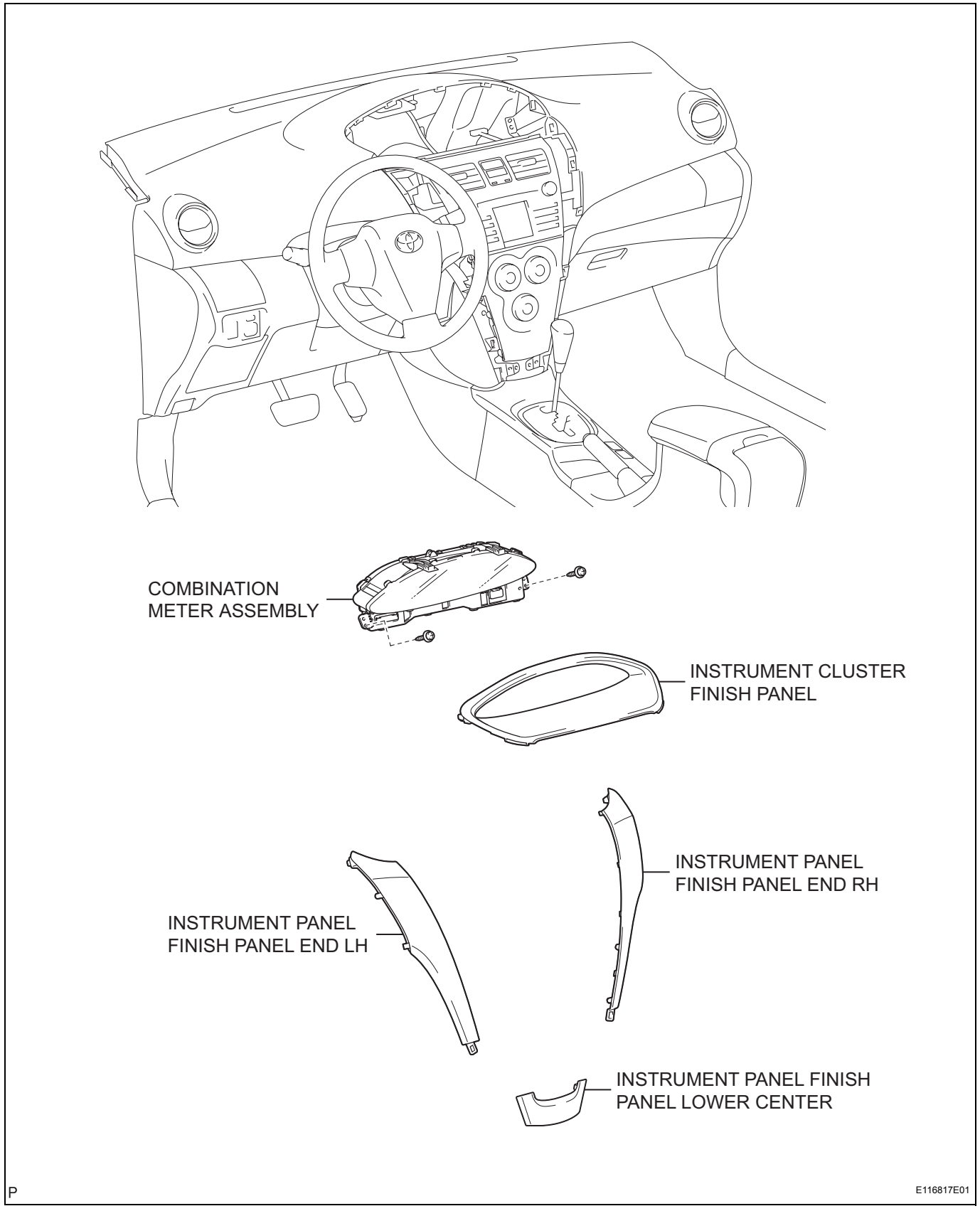

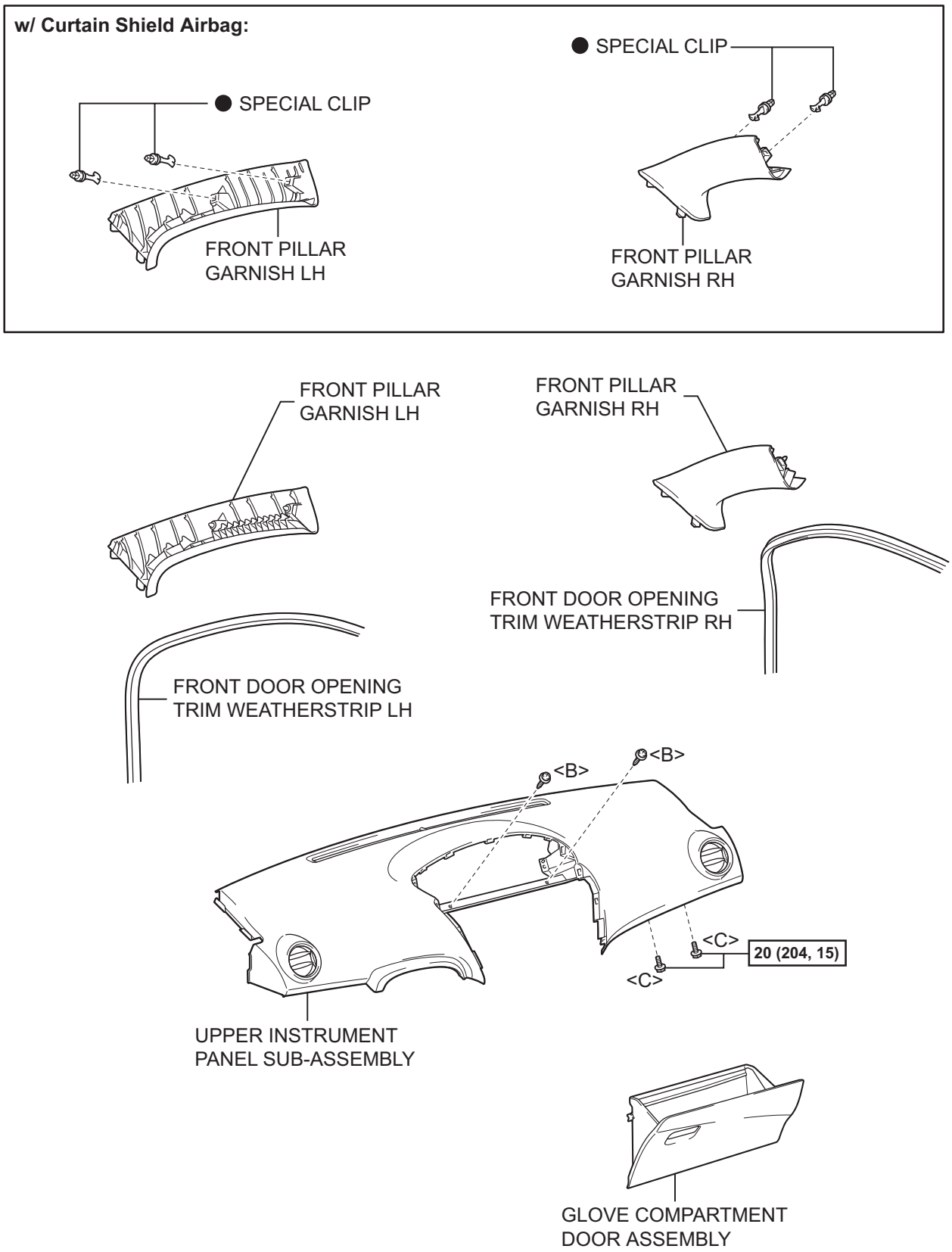

N*m (kgf*cm, ft*lbf) : Specified torque

● Non-reusable part

P

B132310E02

AC

for Integrated w/ Panel:

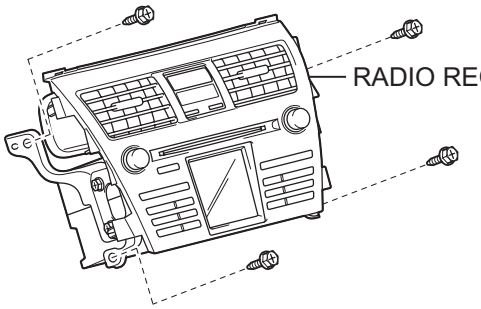

w/o Radio Receiver:

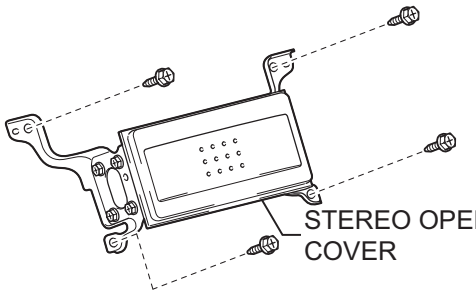

Except for Integrated w/ Panel:

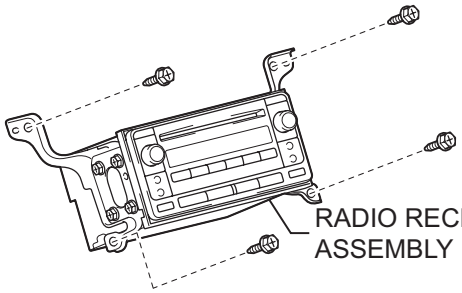

Except for Integrated w/ Panel:

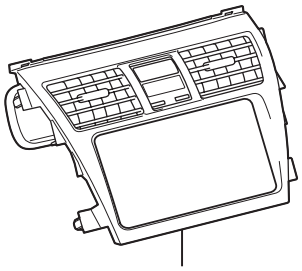

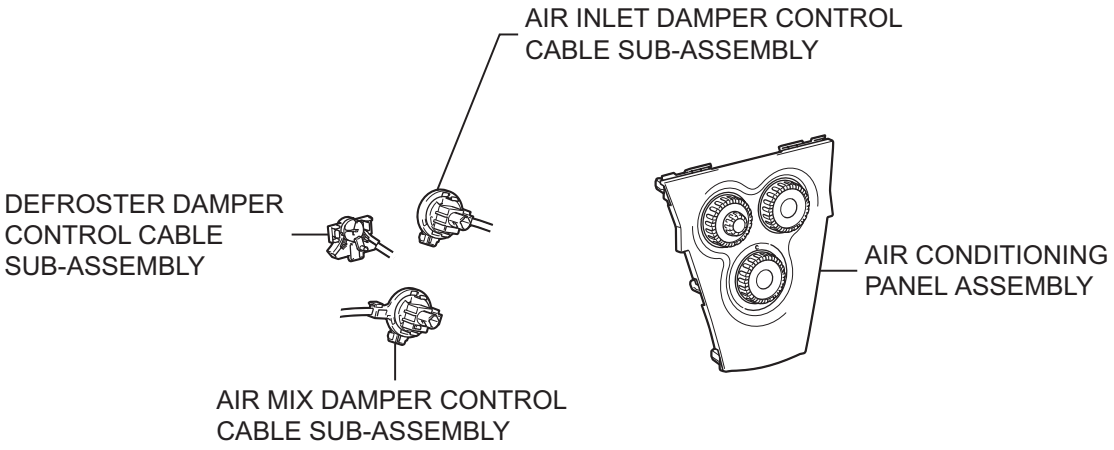

AC

P

B132383E01

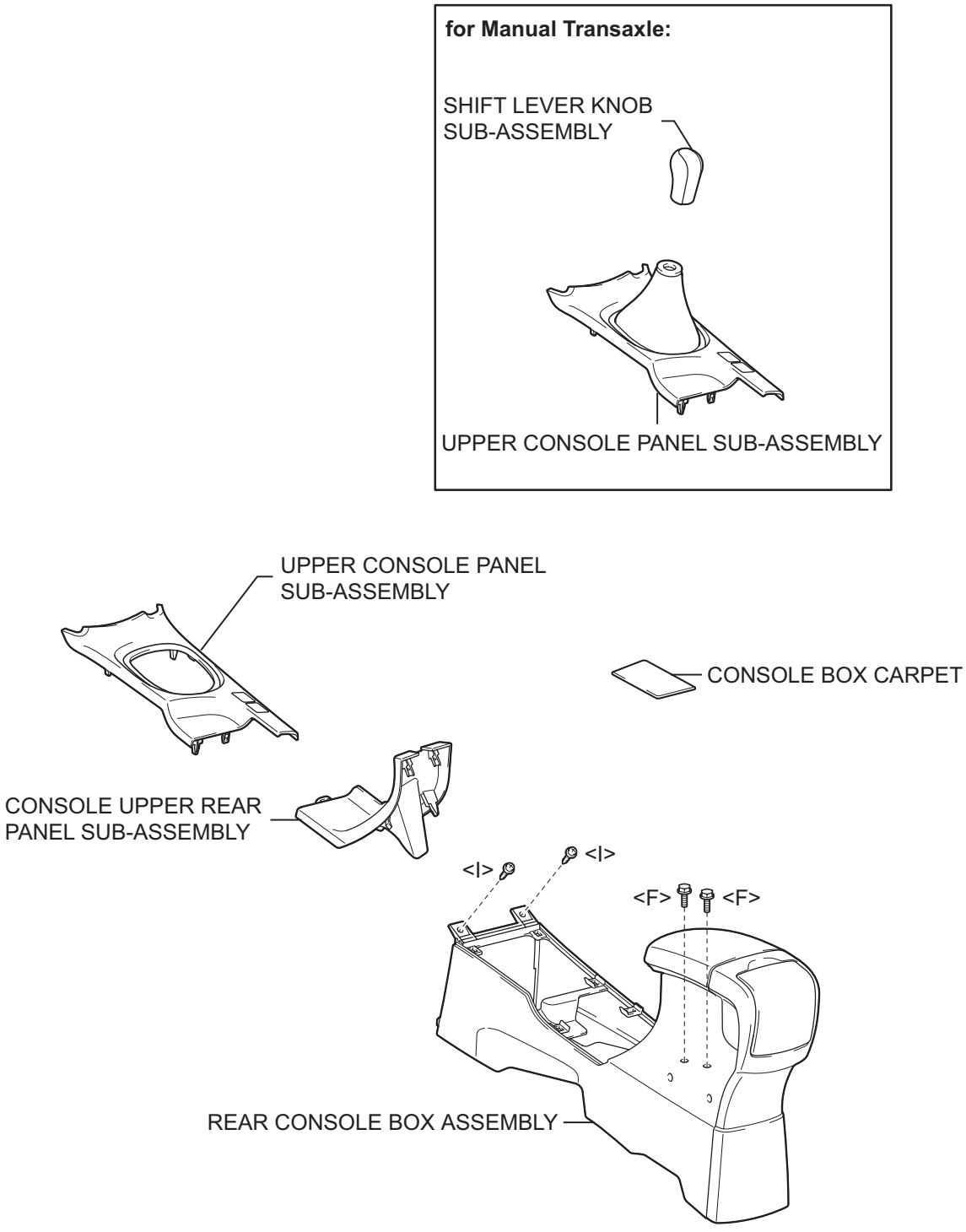
for Manual Transaxle:
SHIFT LEVER KNOB SUB-ASSEMBLY
UPPER CONSOLE PANEL SUB-ASSEMBLY
UPPER CONSOLE PANEL SUB-ASSEMBLY
CONSOLE BOX CARPET
CONSOLE UPPER REAR PANEL SUB-ASSEMBLY
<I>
<I>
<F>
<F>
REAR CONSOLE BOX ASSEMBLY

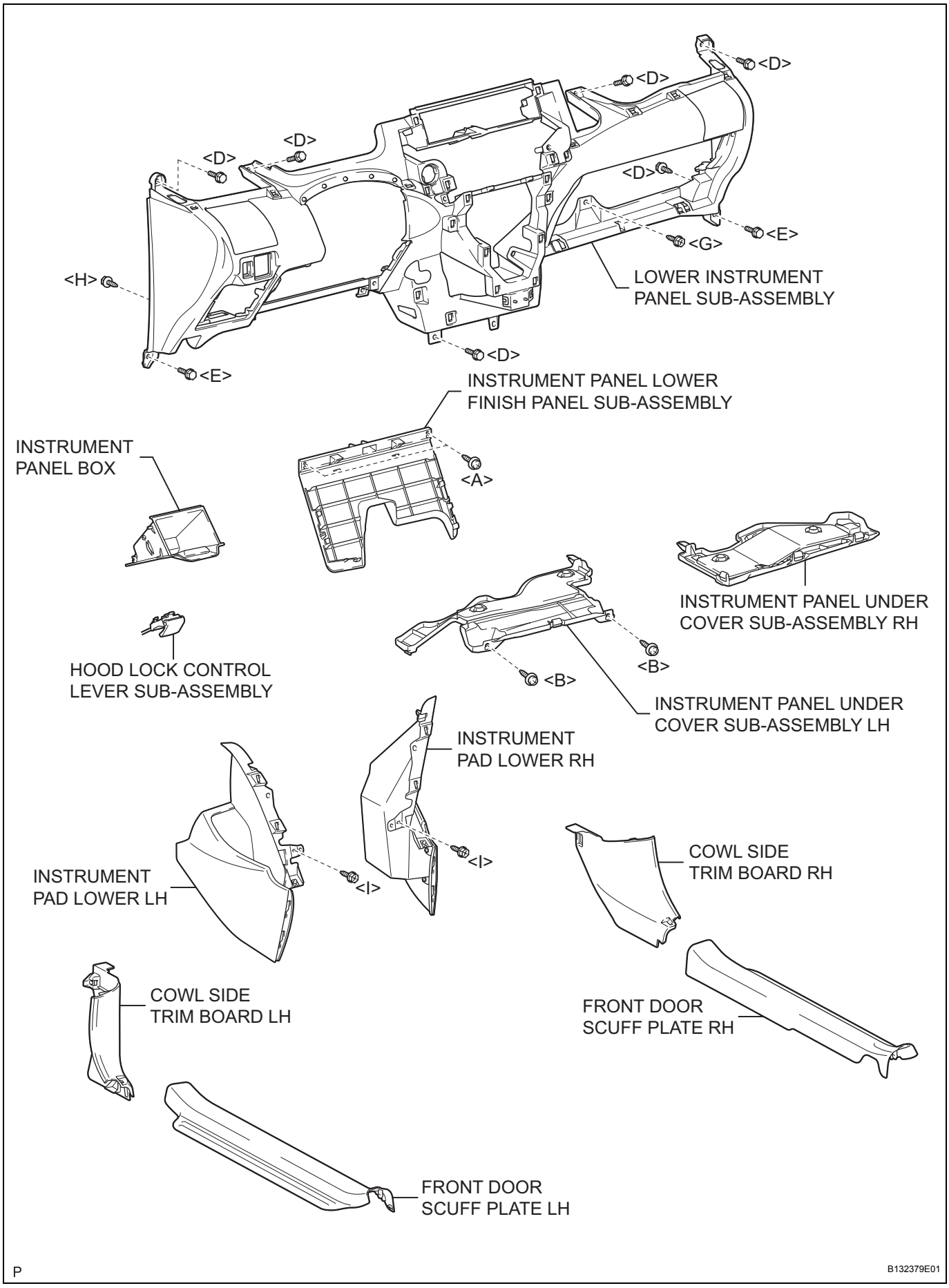

AC

P

B132379E01

for Manual Transaxle:

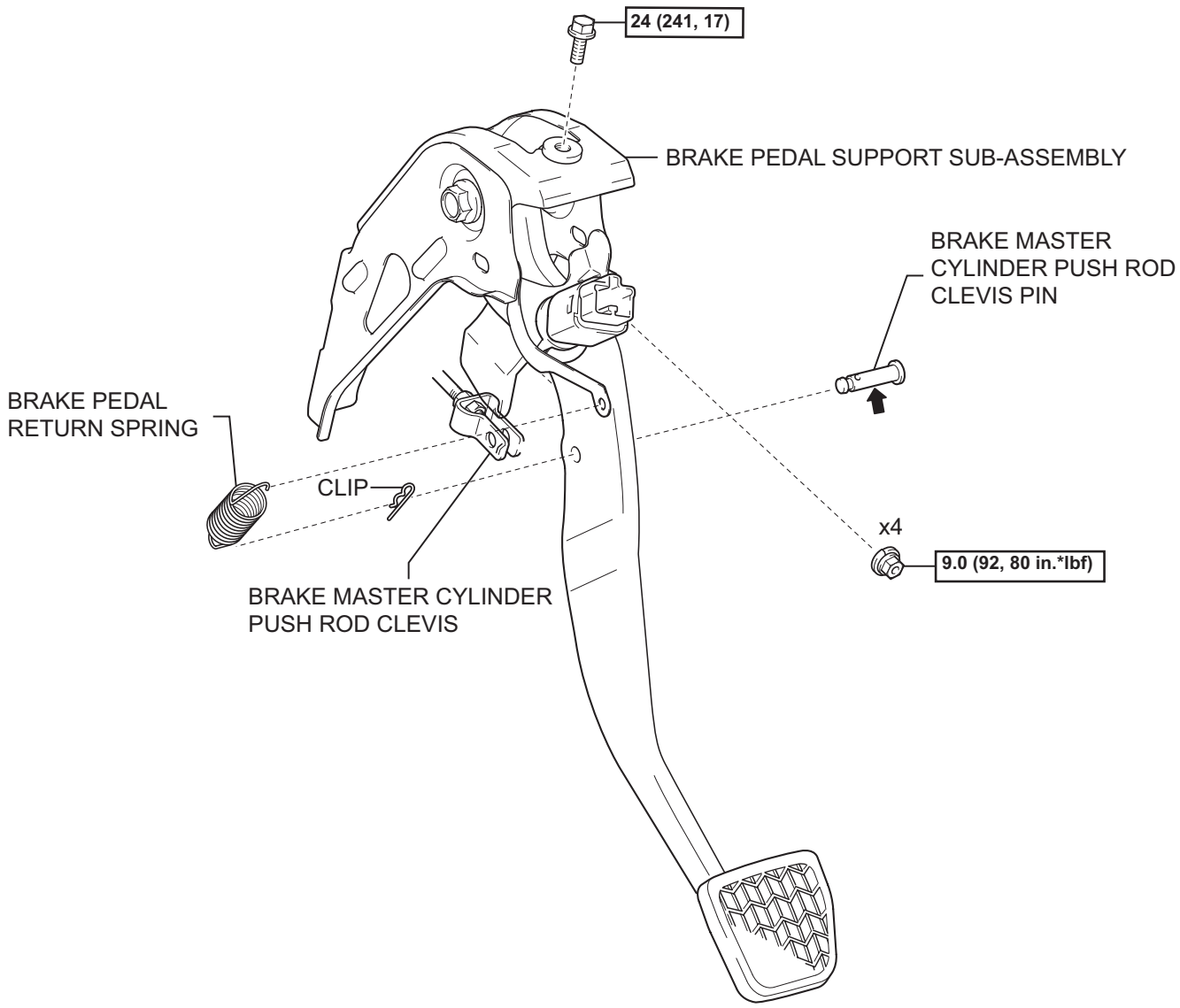

N*m (kgf*cm, ft.*lbf) : Specified torque ⬅ Lithium Soap base glycol grease

P

C118552E02

AC

for Automatic Transaxle:

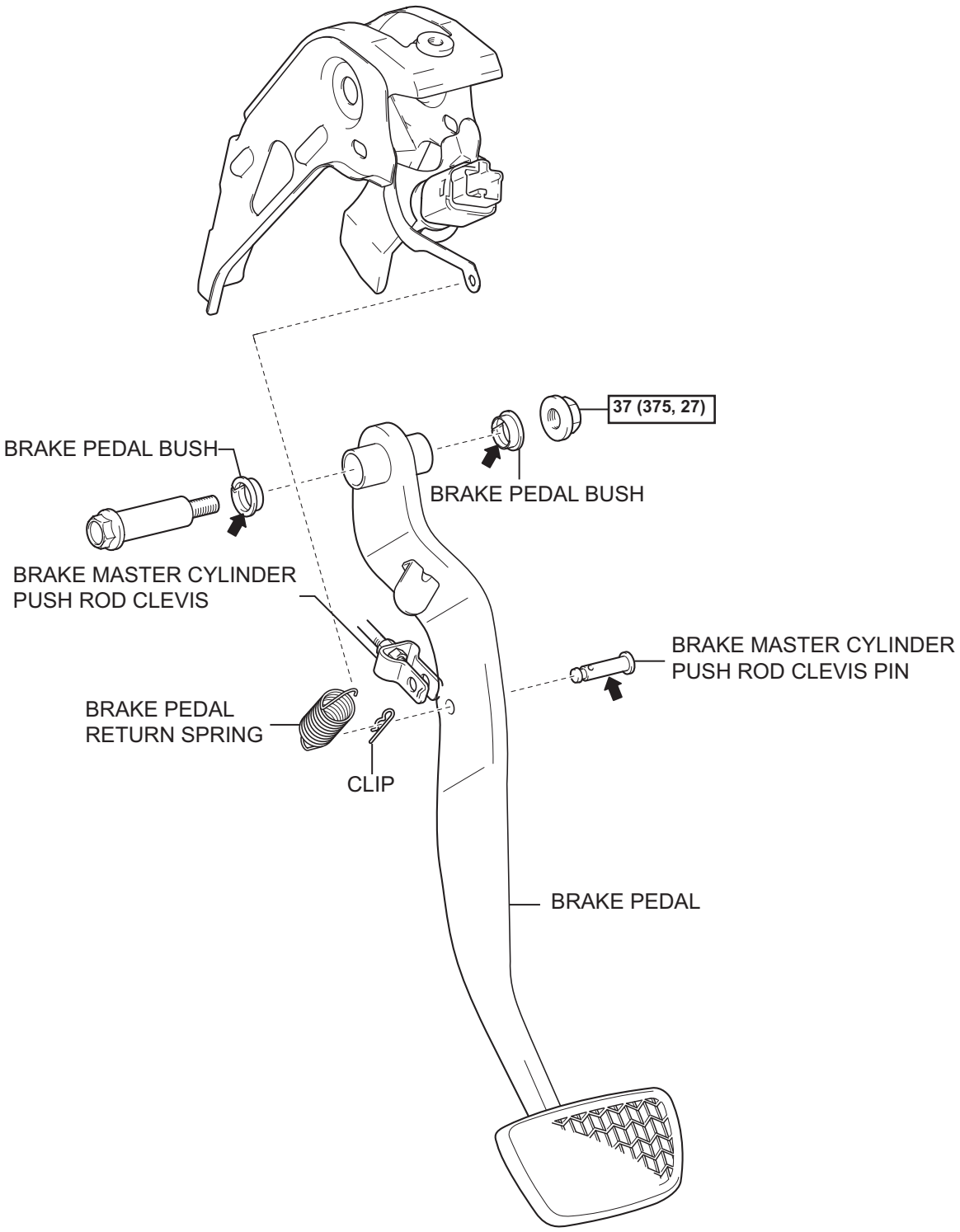

N*m (kgf*cm, ft.*lbf) : Specified torque ⬅ Lithium Soap base glycol grease

AC

P

C118551E03

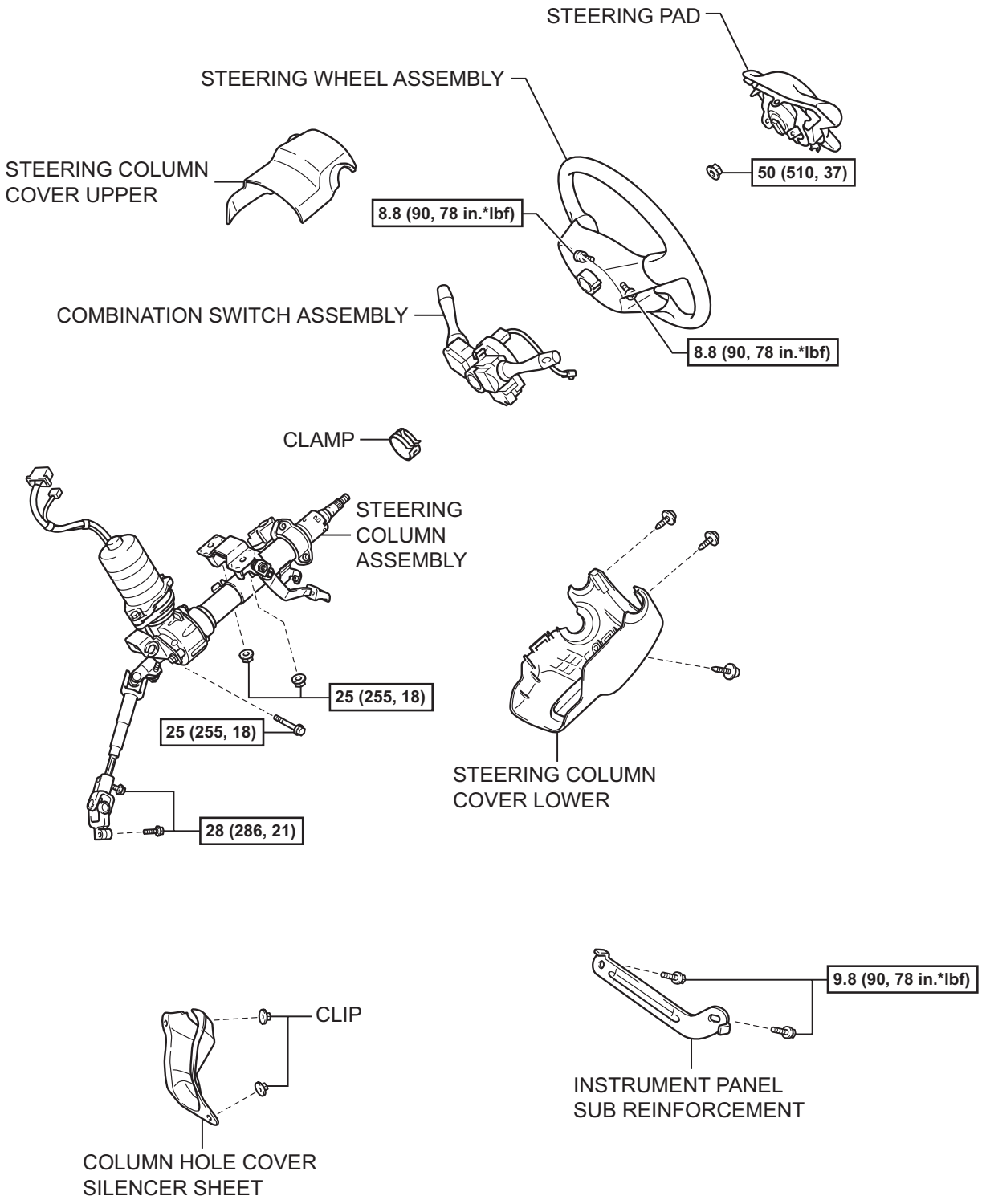

N*m (kgf*cm, ft*lbf) : Specified torque

N

I102629E01

AC

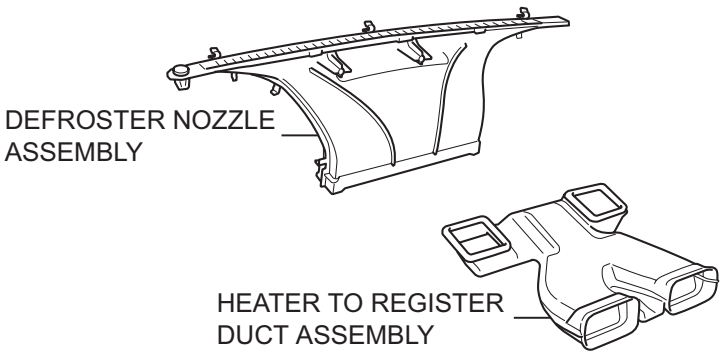

for Cold Area Specification Vehicles:

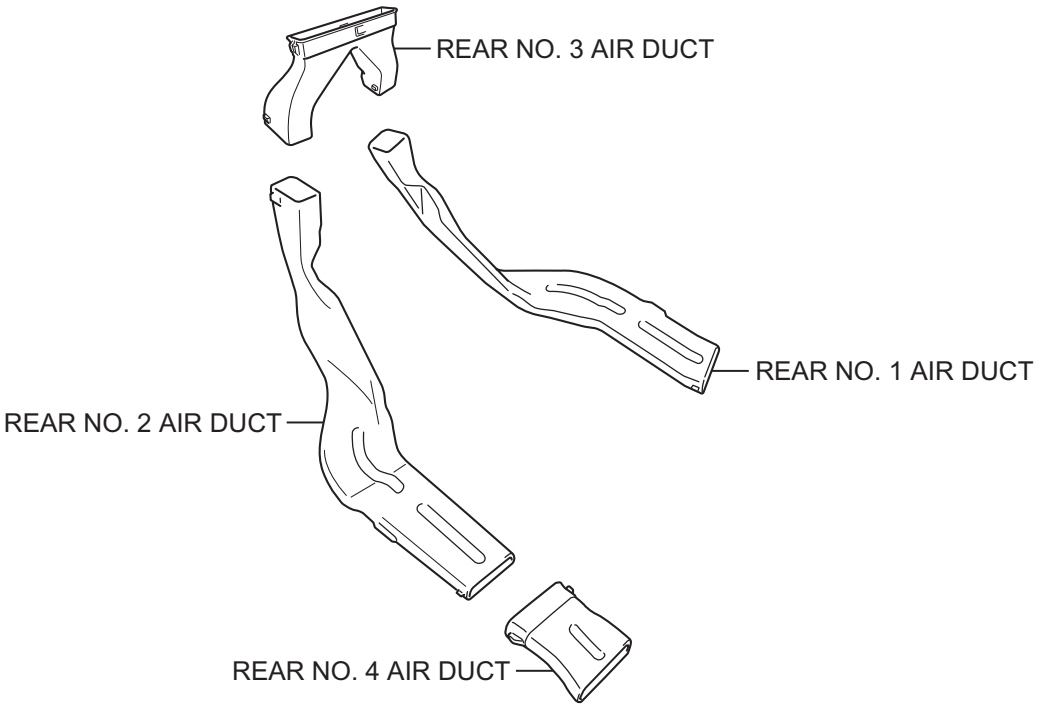

AC

Y

I102608E01

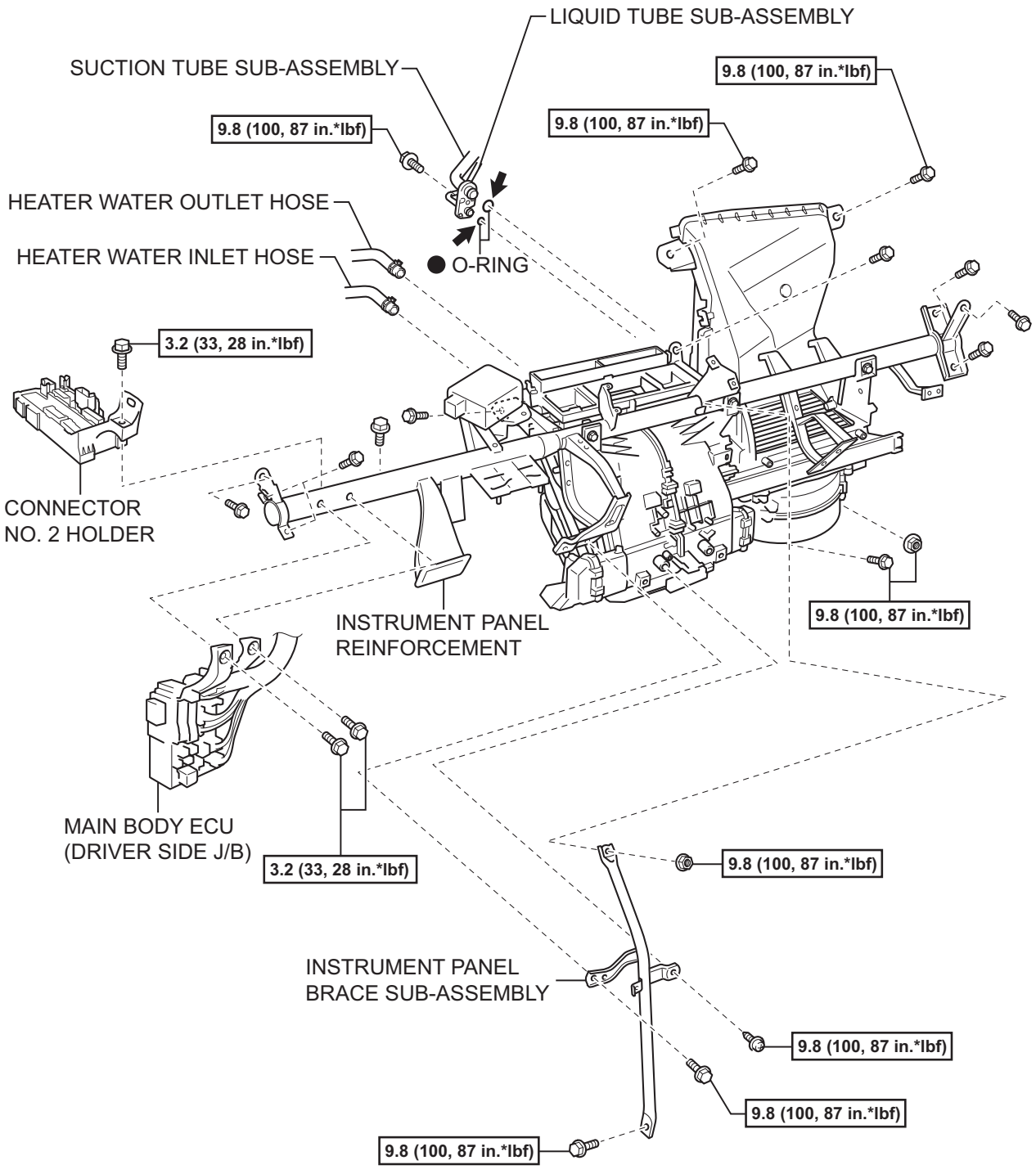

N*m (kgf*cm, ft*lbf) : Specified torque

● Non-reusable part ⬅ Compressor Oil ND-8 or the equivalent

Y

I102607E01

AC

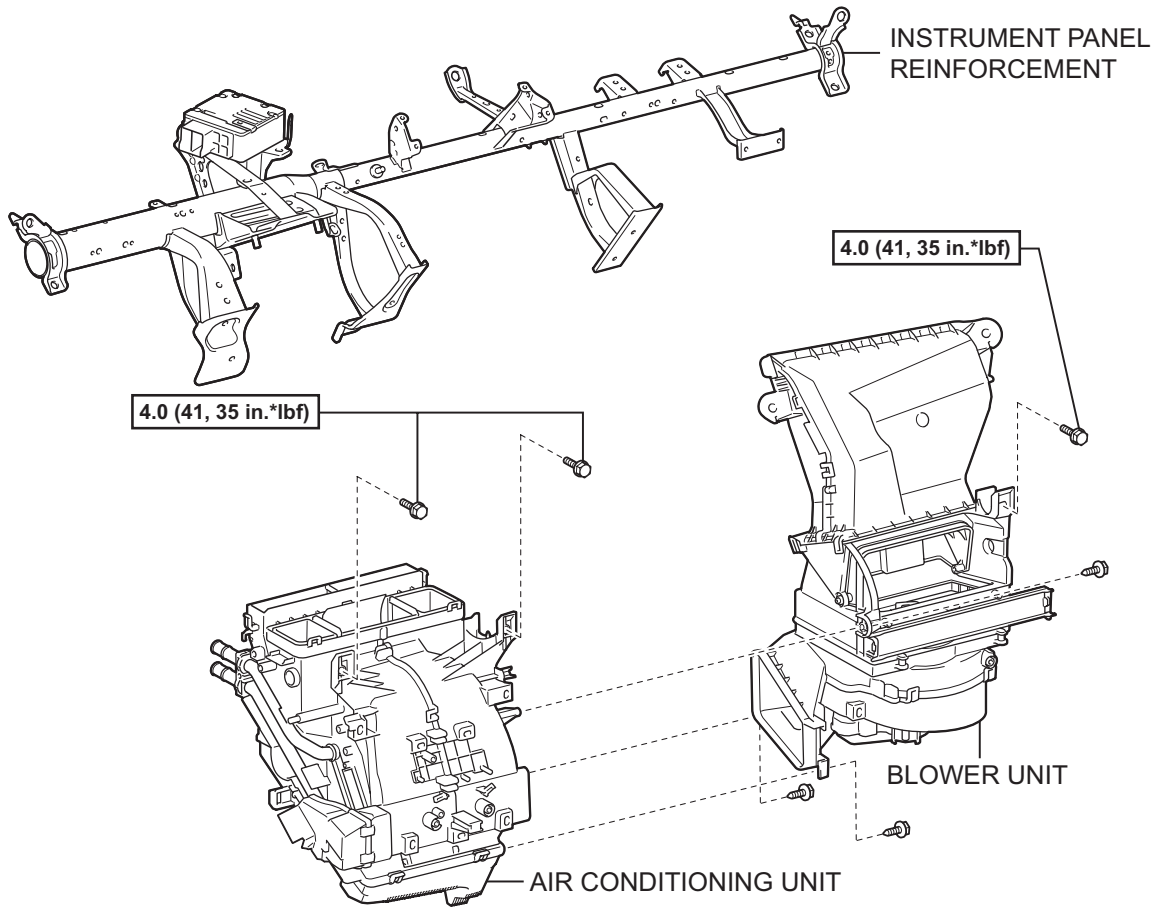

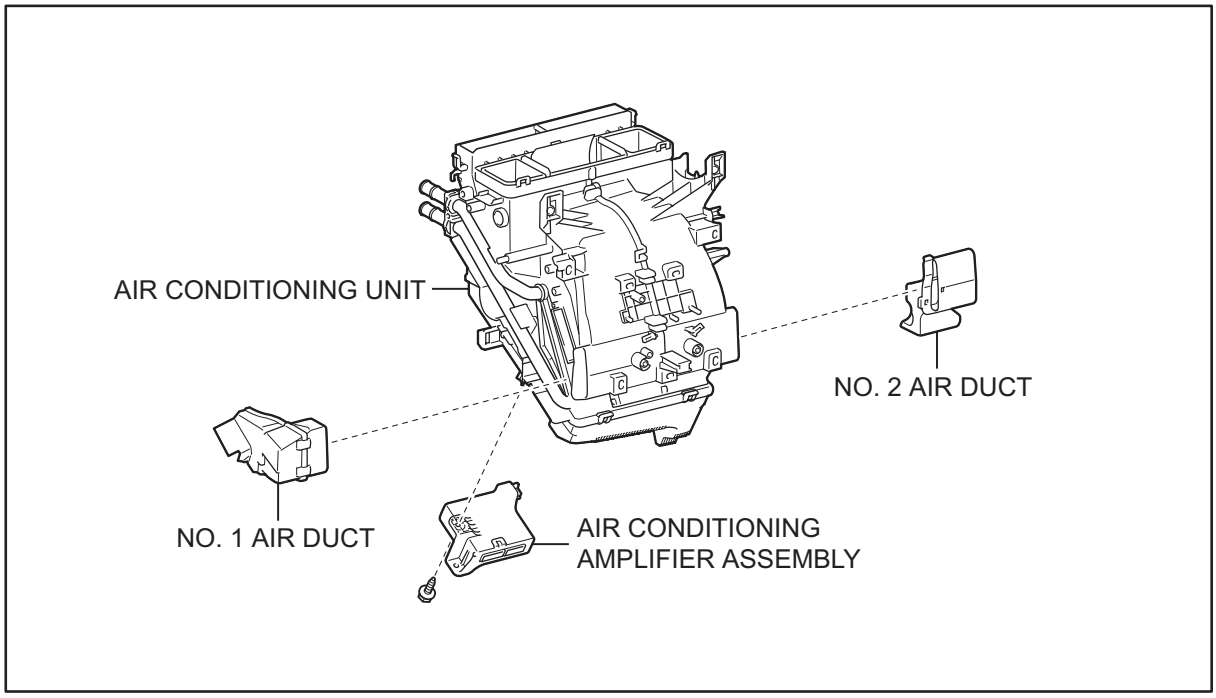

AC

N*m (kgf*cm, ft*lbf) : Specified torque

P

I102605E01

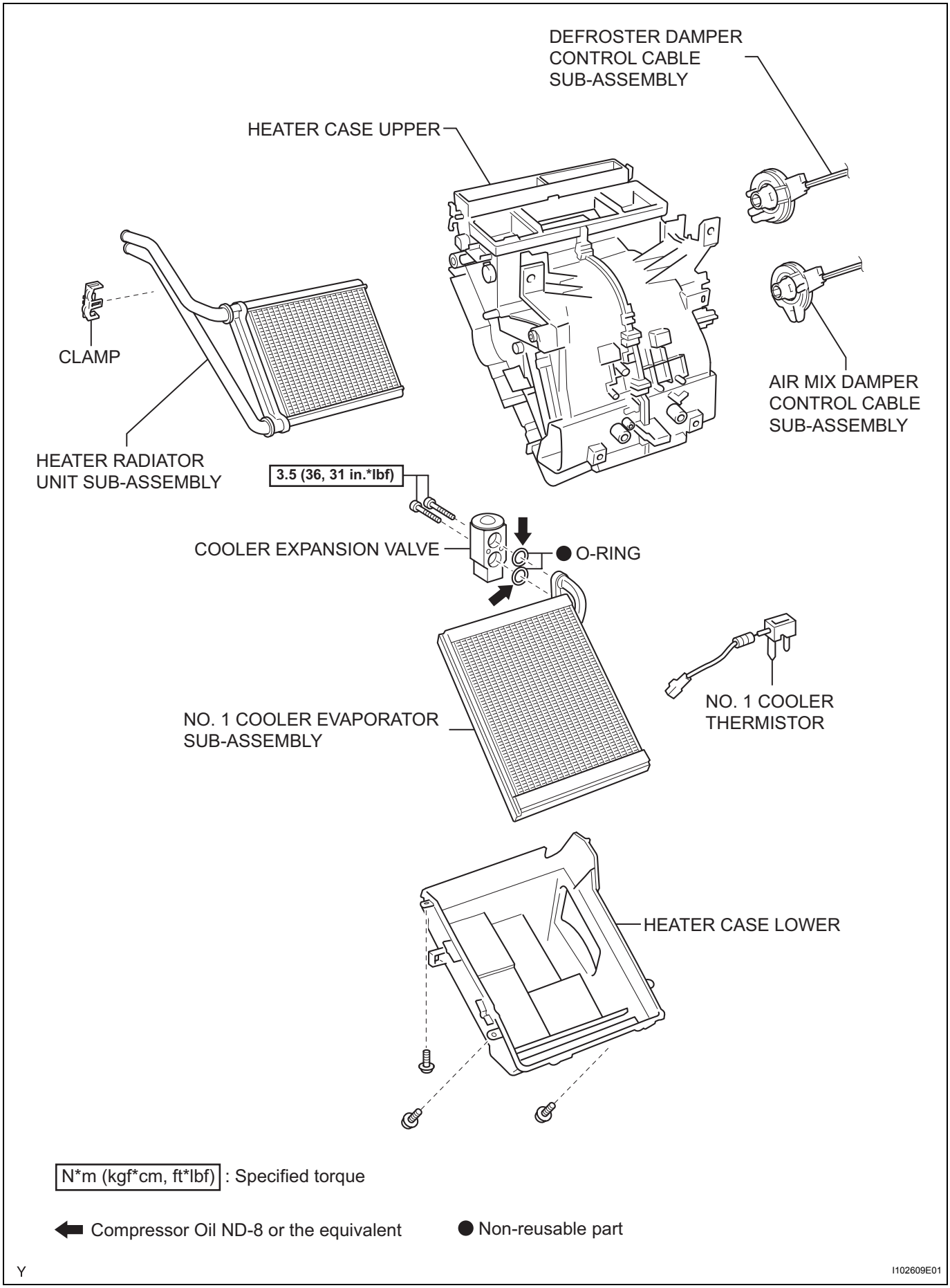
DEFROSTER DAMPER CONTROL CABLE SUB-ASSEMBLY
HEATER CASE UPPER
CLAMP
AIR MIX DAMPER CONTROL CABLE SUB-ASSEMBLY
HEATER RADIATOR UNIT SUB-ASSEMBLY
3.5 (36, 31 in.*lbf)
COOLER EXPANSION VALVE
● O-RING
NO. 1 COOLER EVAPORATOR SUB-ASSEMBLY
NO. 1 COOLER THERMISTOR
HEATER CASE LOWER
N*m (kgf*cm, ft*lbf) : Specified torque
⬅ Compressor Oil ND-8 or the equivalent
● Non-reusable part
Y
I102609E01

AC

REMOVAL

CAUTION:
Some of these service operations affect the SRS airbag system. Read the precautionary notices concerning the SRS airbag system before servicing (See page RS-1).
HINT:
Use the same procedure for both the RH and LH sides.

1. **DISCONNECT CABLE FROM NEGATIVE BATTERY TERMINAL**
   Wait for at least 90 seconds after disconnecting the cable to prevent the airbag from working.
2. **DISCHARGE REFRIGERANT FROM REFRIGERATION SYSTEM (See page AC-66)**
3. **DRAIN ENGINE COOLANT (for 1NZ-FE) (See page CO-8)**
4. **DISCONNECT SUCTION TUBE SUB-ASSEMBLY**
   (a) Remove the bolt.
   (b) Turn the hook type connector clockwise and disconnect the suction tube.
   (c) Remove the O-ring from the suction tube.
   NOTICE:
   Seal the openings of the disconnected parts using vinyl tape to prevent moisture and foreign matter from entering.

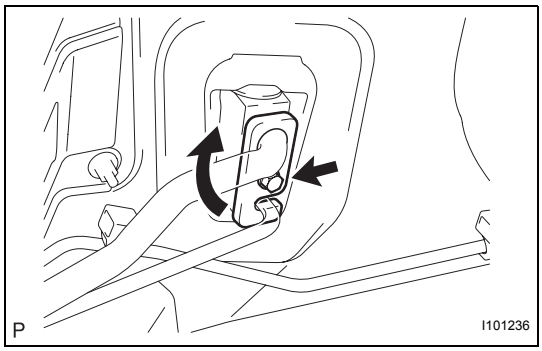

5. **DISCONNECT LIQUID TUBE SUB-ASSEMBLY**
   (a) Disconnect the liquid tube.
   (b) Remove the O-ring from the liquid tube.
   NOTICE:
   Seal the openings of the disconnected parts with vinyl tape to prevent moisture and foreign matter from entering.
6. **DISCONNECT HEATER WATER OUTLET HOSE**
   (a) Using pliers, grip the claws of the clip, slide the clip and disconnect the heater water outlet hose from the heater unit.

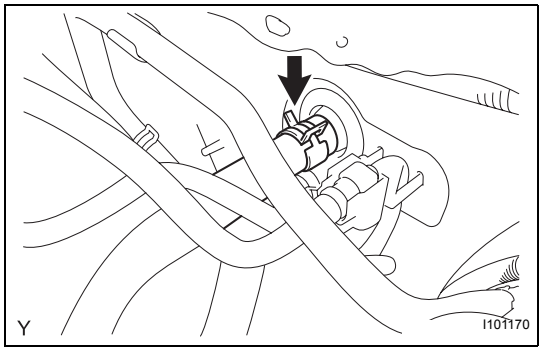

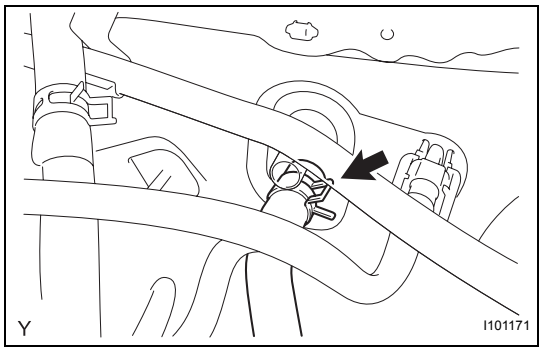

7. **DISCONNECT HEATER WATER INLET HOSE**
   (a) Using pliers, grip the claws of the clip, slide the clip and disconnect the heater water inlet hose from the heater unit.
8. **BOLTS, SCREWS AND NUTS TABLE (See page IP-41)**
9. **REMOVE INSTRUMENT PANEL FINISH PANEL LOWER CENTER (See page ME-138)**
10. **REMOVE INSTRUMENT PANEL FINISH PANEL END LH (See page ME-138)**
11. **REMOVE INSTRUMENT PANEL FINISH PANEL END RH (See page ME-138)**
12. **REMOVE INSTRUMENT CLUSTER FINISH PANEL (See page ME-139)**
13. **REMOVE COMBINATION METER ASSEMBLY (See page ME-139)**
14. **REMOVE INSTRUMENT CLUSTER FINISH PANEL CENTER SUB-ASSEMBLY (See page IP-43)**
15. **REMOVE STEREO OPENING COVER (w/o Radio Receiver) (See page IP-43)**
16. **REMOVE RADIO RECEIVER ASSEMBLY (See page AV-38)**
17. **REMOVE AIR CONDITIONING PANEL ASSEMBLY (See page AC-239)**
18. **DISCONNECT AIR MIX DAMPER CONTROL CABLE SUB-ASSEMBLY (See page AC-240)**
19. **DISCONNECT DEFROSTER DAMPER CONTROL CABLE SUB-ASSEMBLY (See page AC-240)**
20. **DISCONNECT AIR INLET DAMPER CONTROL CABLE SUB-ASSEMBLY (See page AC-240)**
21. **SEPARATE FRONT DOOR OPENING TRIM WEATHERSTRIP RH (See page IP-5)**
22. **SEPARATE FRONT DOOR OPENING TRIM WEATHERSTRIP LH (See page IP-5)**
23. **REMOVE FRONT PILLAR GARNISH RH (See page IR-18)**
24. **REMOVE FRONT PILLAR GARNISH LH (See page IR-19)**
25. **REMOVE GLOVE COMPARTMENT DOOR ASSEMBLY (See page IP-6)**
26. **REMOVE UPPER INSTRUMENT PANEL SUB-ASSEMBLY (See page IP-6)**
27. **REMOVE FRONT DOOR SCUFF PLATE RH (See page IR-14)**
28. **REMOVE FRONT DOOR SCUFF PLATE LH (See page IR-14)**

29. REMOVE INSTRUMENT PANEL UNDER COVER SUB-ASSEMBLY RH (See page IR-14)
30. REMOVE INSTRUMENT PANEL UNDER COVER SUB-ASSEMBLY LH (See page IR-14)
31. REMOVE COWL SIDE TRIM BOARD RH (See page IR-15)
32. REMOVE COWL SIDE TRIM BOARD LH (See page IR-15)
33. REMOVE SHIFT LEVER KNOB SUB-ASSEMBLY (for Manual Transaxle) (See page IP-84)
34. REMOVE UPPER CONSOLE PANEL SUB-ASSEMBLY (See page IP-84)
35. REMOVE CONSOLE UPPER REAR PANEL SUB-ASSEMBLY (See page IP-84)
36. REMOVE CONSOLE BOX CARPET (See page IP-85)
37. REMOVE REAR CONSOLE BOX ASSEMBLY (See page IP-85)
38. REMOVE INSTRUMENT PAD LOWER LH (See page IP-44)
39. REMOVE INSTRUMENT PAD LOWER RH (See page IP-45)
40. REMOVE INSTRUMENT PANEL LOWER FINISH PANEL SUB-ASSEMBLY (See page IP-45)
41. REMOVE INSTRUMENT PANEL BOX (See page IP-45)
42. DISCONNECT ANTENNA CORD SUB-ASSEMBLY (See page IP-46)
43. SEPARATE HOOD LOCK CONTROL LEVER SUB-ASSEMBLY (See page IP-46)
44. REMOVE LOWER INSTRUMENT PANEL SUB-ASSEMBLY (See page IP-46)
45. POSITION FRONT WHEELS FACING STRAIGHT AHEAD
46. REMOVE STEERING PAD (See page RS-309)
47. REMOVE STEERING WHEEL ASSEMBLY (See page SR-12)
48. REMOVE STEERING COLUMN COVER (See page SR-12)
49. REMOVE COMBINATION SWITCH ASSEMBLY (See page SR-13)
50. DISCONNECT POWER STEERING ECU (See page SR-13)
51. REMOVE INSTRUMENT PANEL SUB REINFORCEMENT (See page SR-14)

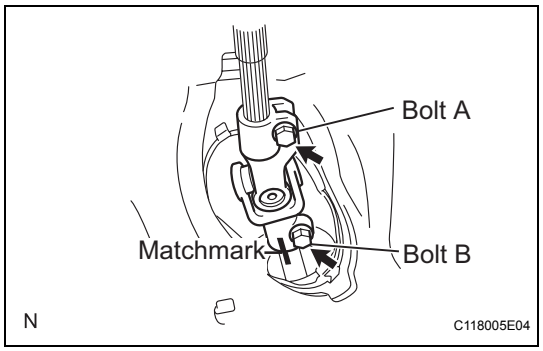

52. **REMOVE COLUMN HOLE COVER SILENCER SHEET (See page SR-14)**

53. **SEPARATE STEERING SLIDING YOKE SUB-ASSEMBLY**
    (a) Place matchmarks on the sliding yoke of the steering intermediate shaft and the power steering link.
    (b) Loosen bolt A, remove bolt B and remove the steering yoke.

54. **REMOVE BRAKE PEDAL (for Automatic Transaxle) (See page SR-14)**

55. **REMOVE BRAKE MASTER CYLINDER PUSH ROD CLEVIS (for Manual Transaxle) (See page BR-20)**

56. **REMOVE BRAKE PEDAL SUPPORT SUB-ASSEMBLY (for Manual Transaxle) (See page BR-21)**

57. **REMOVE STEERING COLUMN ASSEMBLY (See page SR-15)**

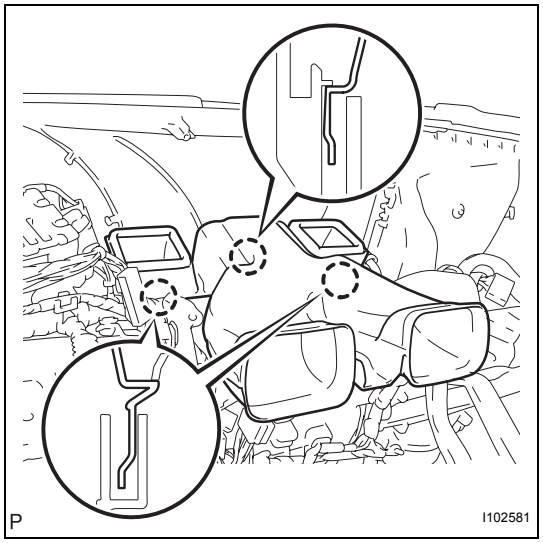

58. **REMOVE HEATER TO REGISTER DUCT ASSEMBLY**
    (a) Disengage the 3 claws and remove the heater to register duct.

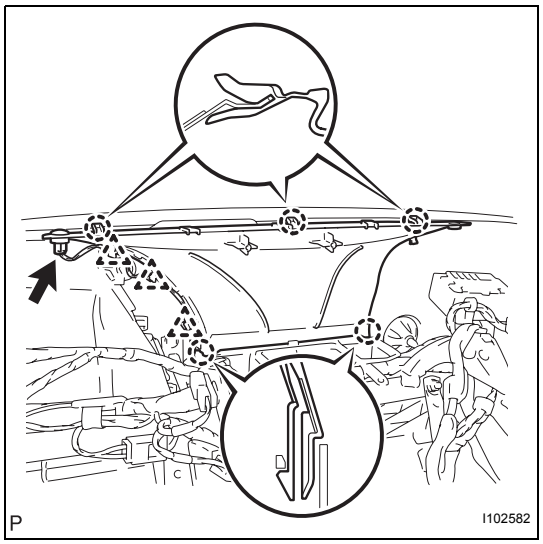

59. **REMOVE DEFROSTER NOZZLE ASSEMBLY**
    (a) Disconnect the connector and 3 clamps.
    (b) Disengage the 5 claws and remove the defroster nozzle.

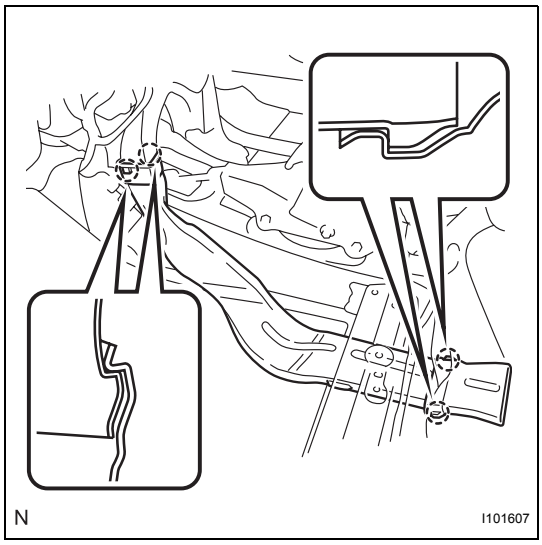

60. REMOVE REAR NO. 2 AIR DUCT (for Cold Area Specification Vehicles)

(a) Disengage the 4 claws and remove the air duct.

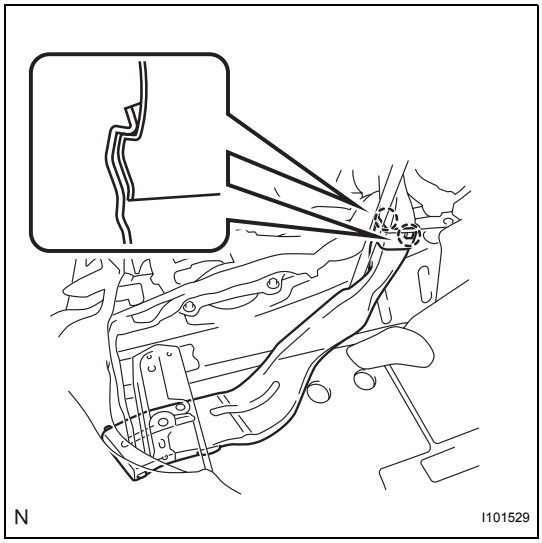

61. REMOVE REAR NO. 1 AIR DUCT (for Cold Area Specification Vehicles)

(a) Disengage the 2 claws and remove the air duct.

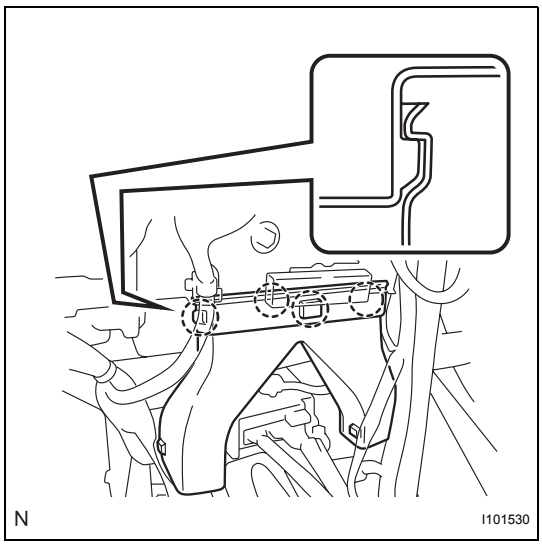

62. REMOVE REAR NO. 3 AIR DUCT (for Cold Area Specification Vehicles)

(a) Disengage the 4 claws and remove the air duct.

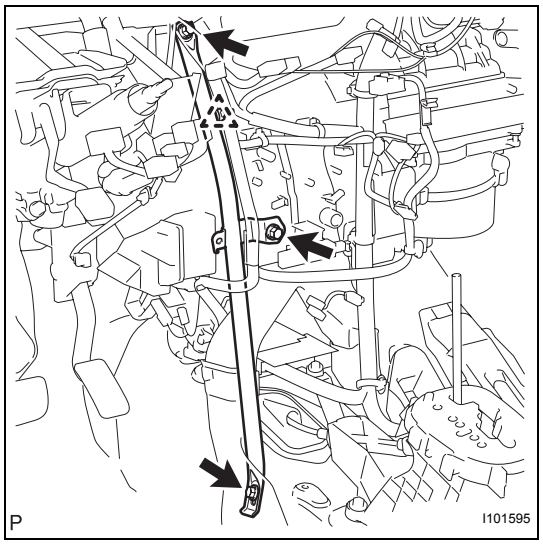

63. REMOVE INSTRUMENT PANEL BRACE SUB-ASSEMBLY

(a) Disengage the clamp.

(b) Remove the bolt, screw and nut and remove the instrument panel brace.

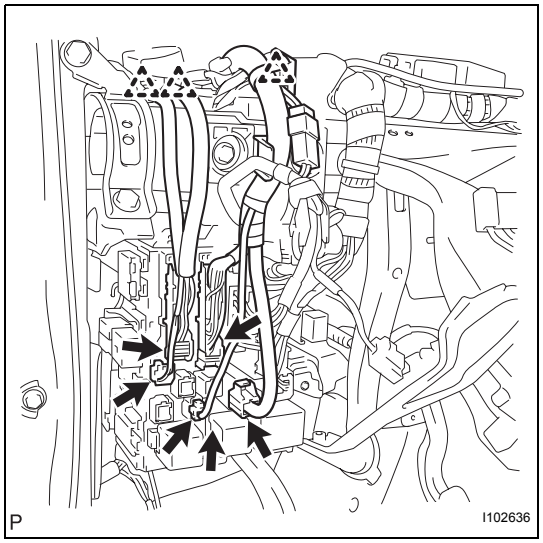

64. SEPARATE MAIN BODY ECU (DRIVER SIDE J/B)

(a) Disconnect the 5 connectors and the 3 clamps.

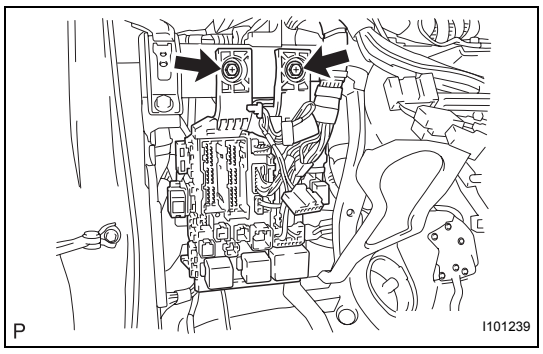

(b) Remove the 2 bolts and separate the main body ECU.

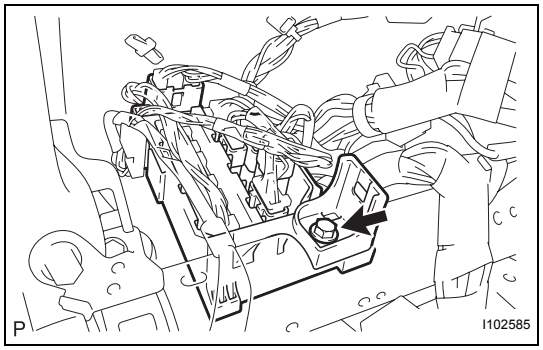

65. SEPARATE CONNECTOR NO. 2 HOLDER

(a) Remove the bolt.

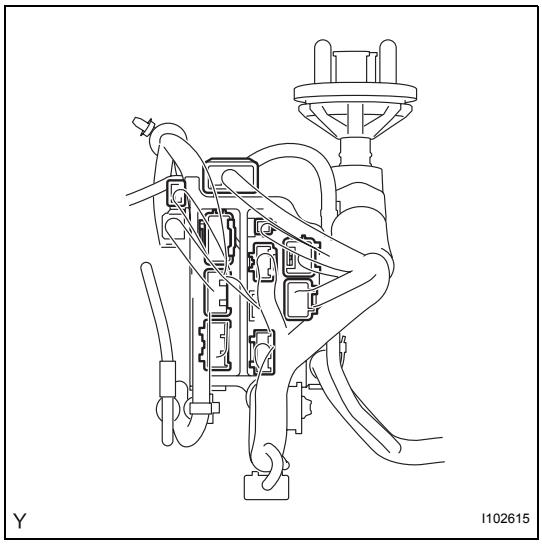

(b) Disconnect the connectors and separate the connector No. 2 holder.

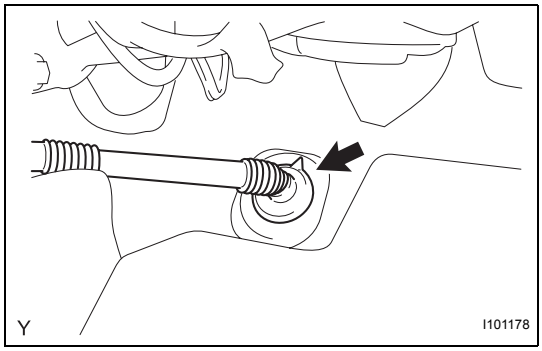

66. REMOVE INSTRUMENT PANEL REINFORCEMENT

(a) Disconnect the drain hose.

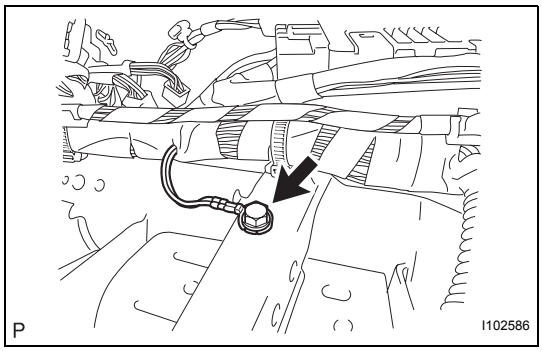

(b) Remove the bolt and disconnect the ground wire.

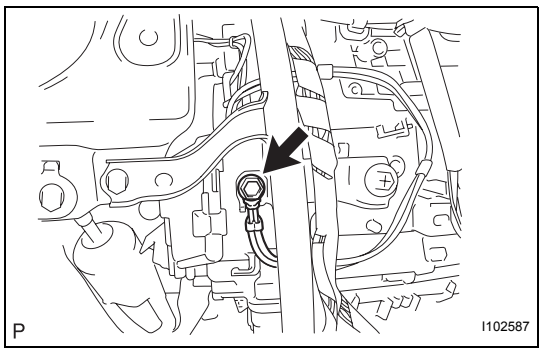

(c) Remove the bolt and disconnect the ground wire. (for Cold area specification vehicles)

(d) Disconnect the connectors.

(e) Disengage the clamps.

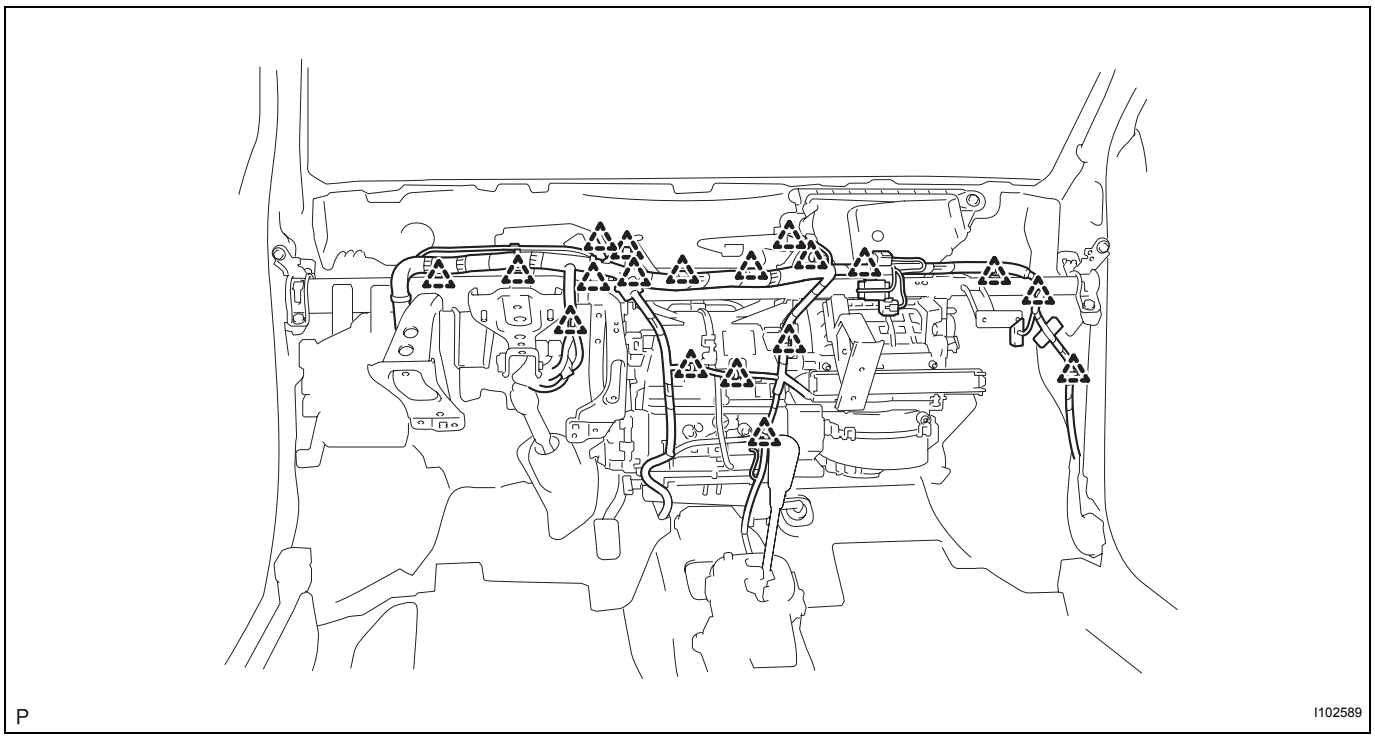

(f) Disconnect the connectors and clamps.

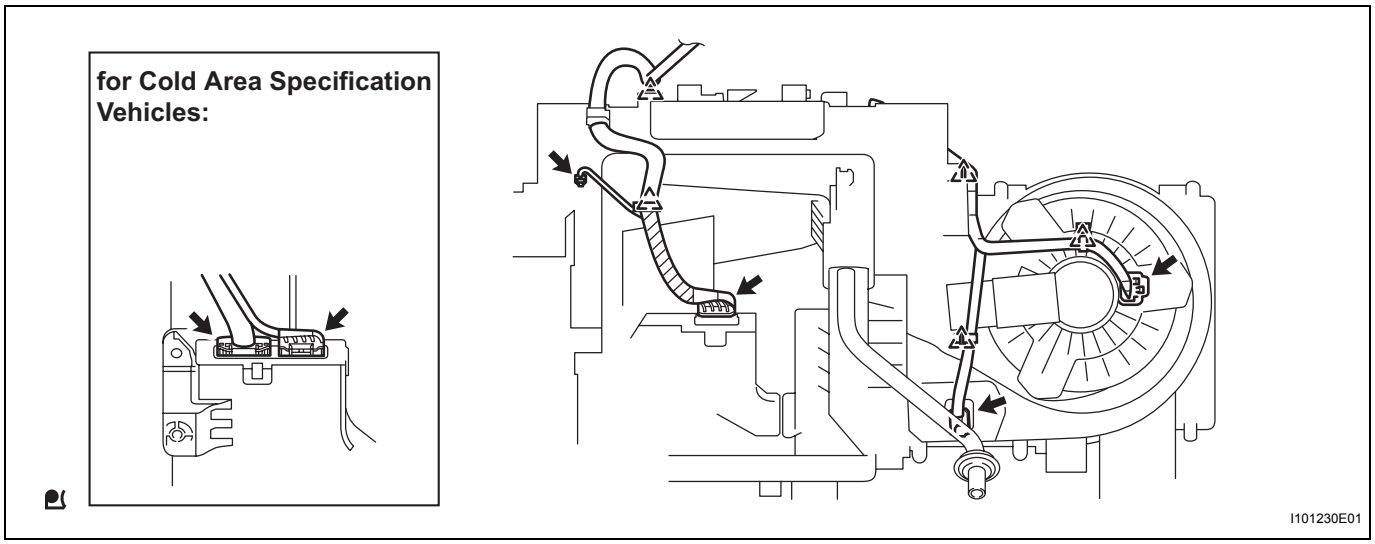

(g) Remove the 3 bolts and the nut.

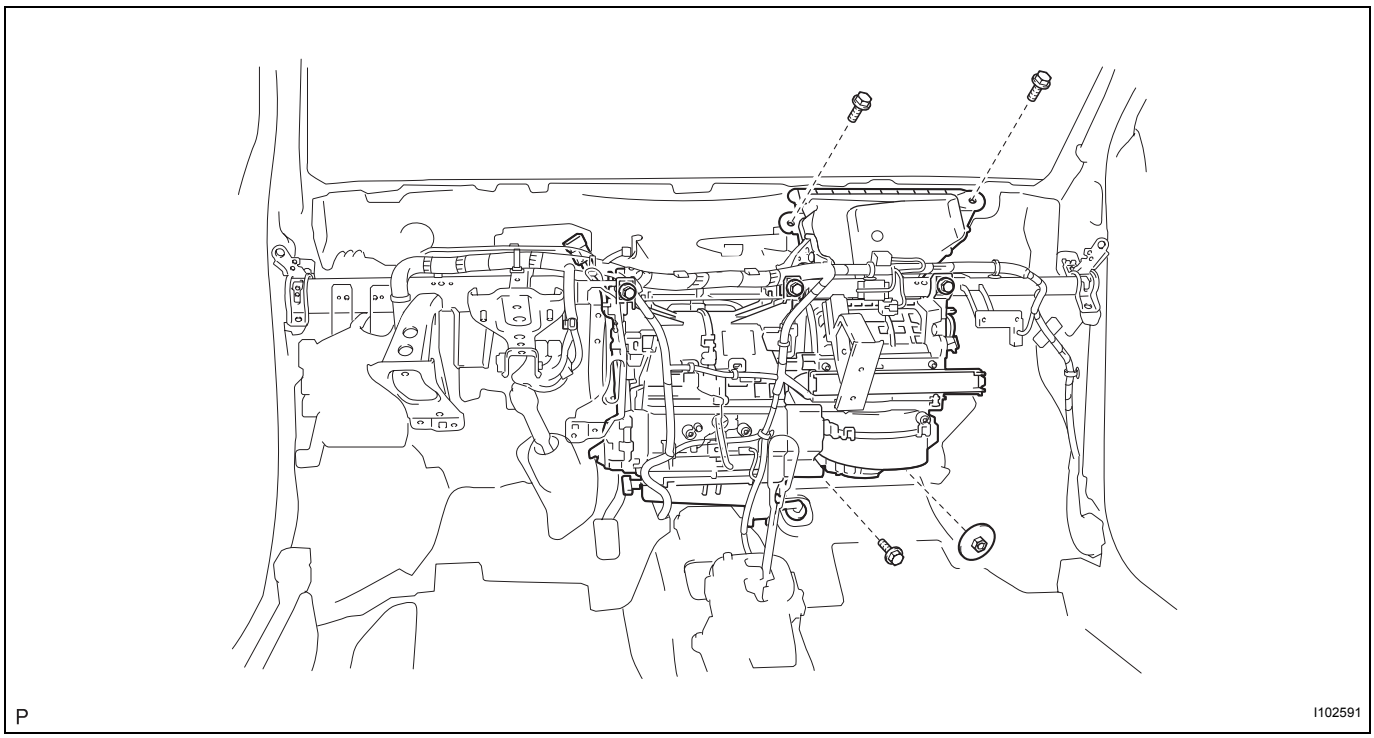

(h) Remove the 9 bolts and remove the instrument panel reinforcement together with the air conditioning unit.

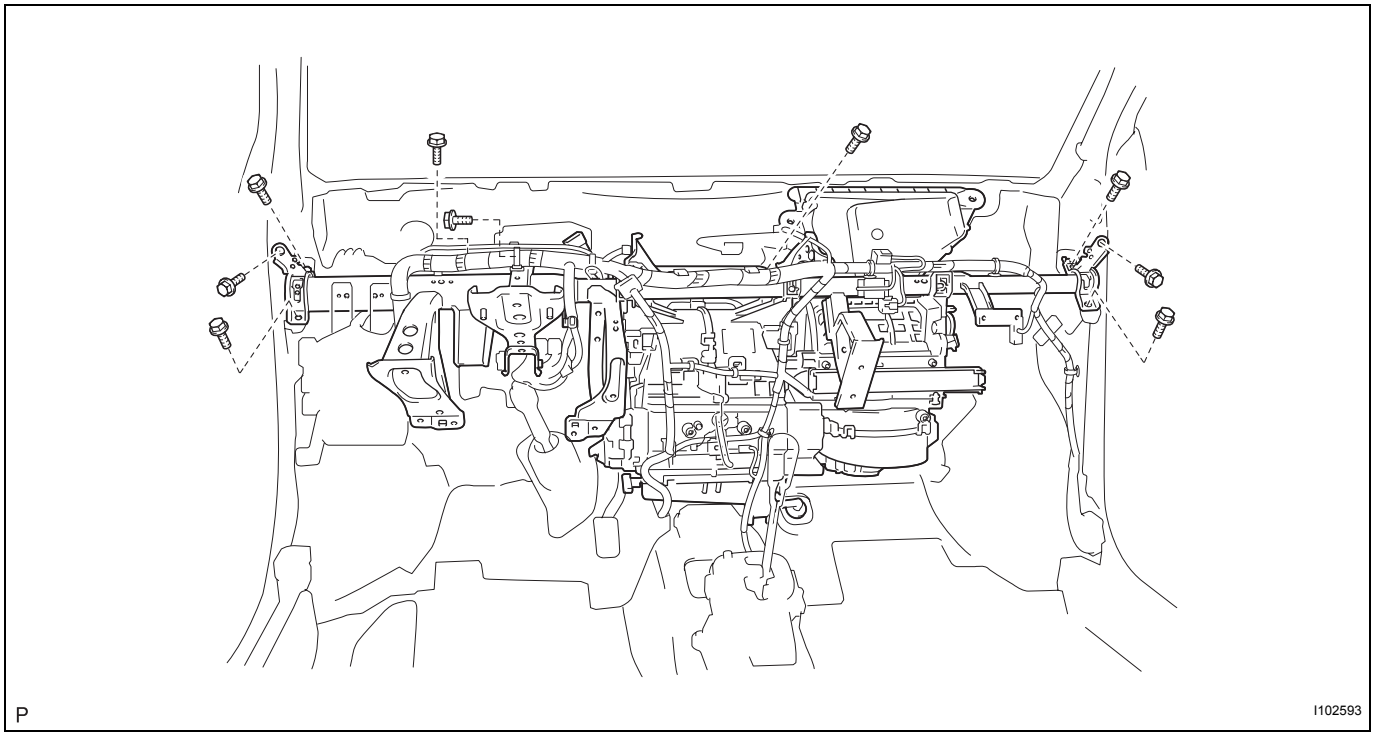

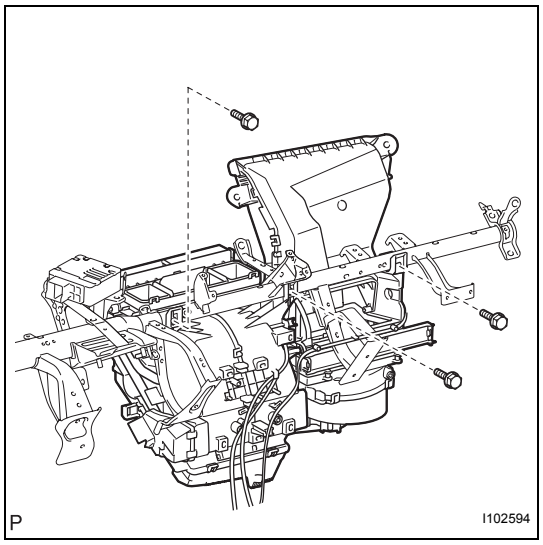

(i) Remove the 3 screws and the air conditioning unit.

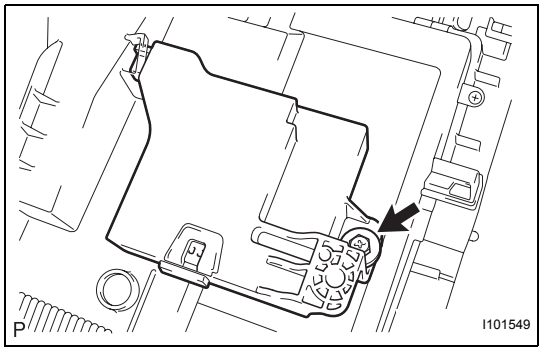

67. REMOVE AIR CONDITIONING AMPLIFIER ASSEMBLY

(a) Remove the screw and the air conditioning amplifier.

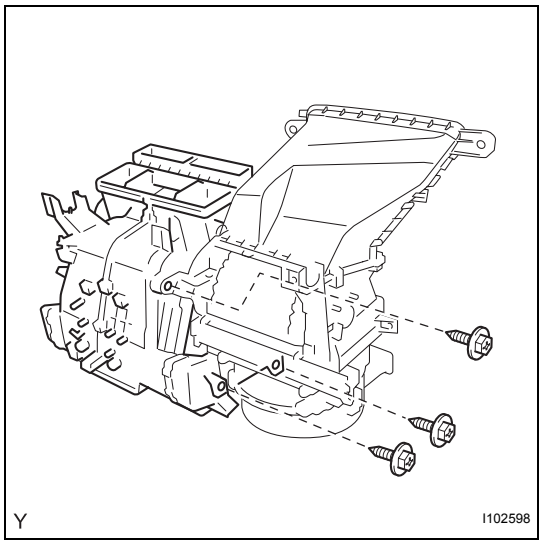

68. REMOVE AIR CONDITIONING UNIT

(a) Remove the 3 screws and the air conditioning unit.

DISASSEMBLY

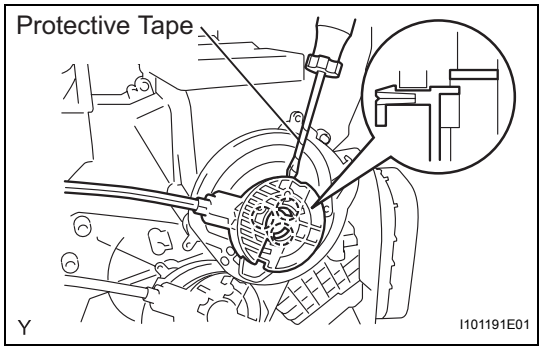

1. REMOVE DEFROSTER DAMPER CONTROL CABLE SUB-ASSEMBLY

(a) Using a screwdriver with its tip wrapped in protective tape, disengage the claw and remove the defroster damper control cable.

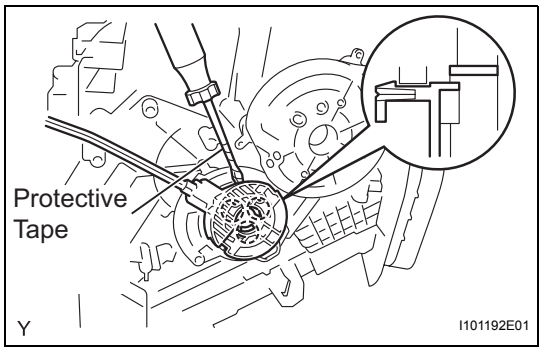

2. REMOVE AIR MIX DAMPER CONTROL CABLE SUB-ASSEMBLY

(a) Using a screwdriver with its tip wrapped in protective tape, disengage the claw and remove the air mix damper control cable.

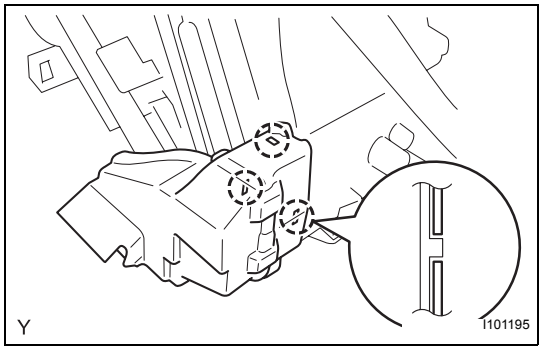

3. REMOVE NO. 1 AIR DUCT

(a) Disengage the 3 claws and remove the air duct.

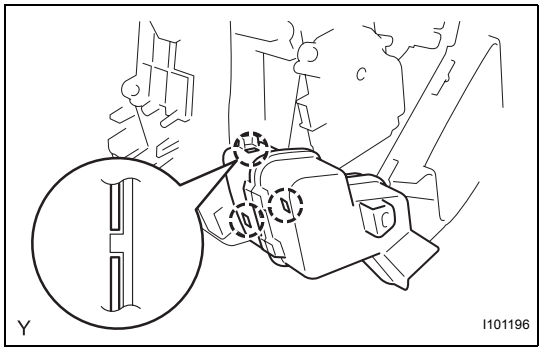

4. REMOVE NO. 2 AIR DUCT

(a) Disengage the 3 claws and remove the air duct.

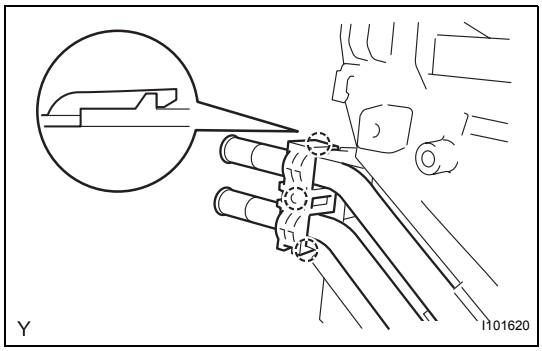

5. REMOVE HEATER RADIATOR UNIT SUB-ASSEMBLY

(a) Disengage the 3 claws and remove the clamp.

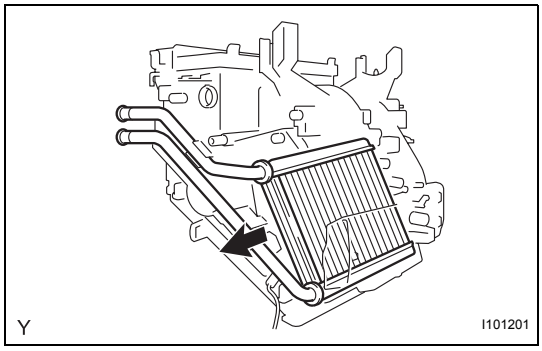

(b) Remove the heater radiator unit from the air conditioner radiator assembly.

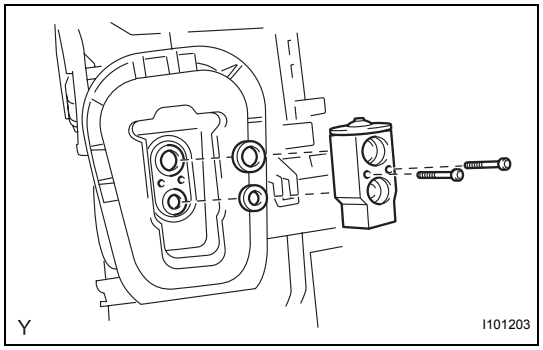

6. REMOVE COOLER EXPANSION VALVE

(a) Using a hexagon wrench 4, remove the 2 hexagon bolts and detach the cooler expansion valve.

(b) Remove the 2 O-rings from the No. 1 cooler evaporator.

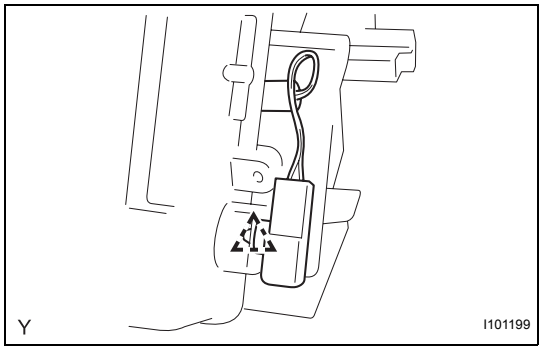

7. REMOVE NO. 1 COOLER EVAPORATOR SUB-ASSEMBLY

(a) Disengage the cooler thermistor connector.

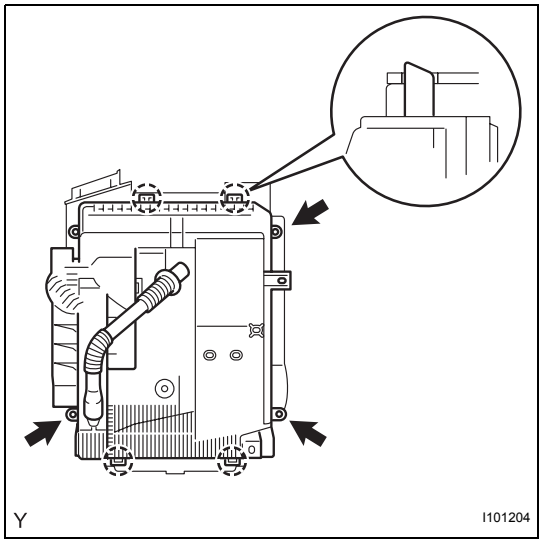

(b) Remove the 3 screws.

(c) Disengage the 4 claws and remove the heater case lower.

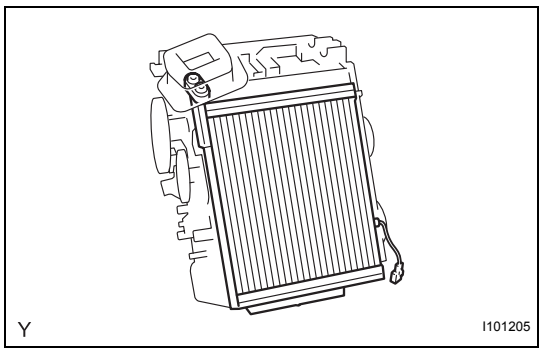

(d) Remove the cooler evaporator.

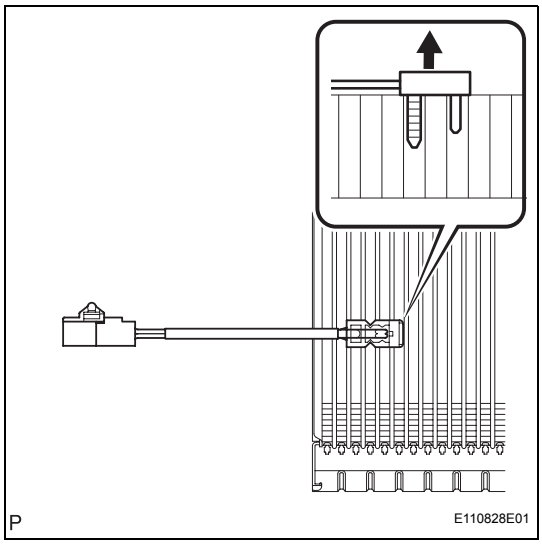

8. REMOVE NO. 1 COOLER THERMISTOR

(a) Remove the cooler thermistor from the cooler evaporator.

INSPECTION

1. INSPECT NO. 1 COOLER THERMISTOR

(a) Measure the resistance.

Standard resistance

Tester Connection	Condition	Specified Condition
1 - 2	-10°C (14°F)	7.30 to 9.10 kΩ
1 - 2	-5°C (23°F)	5.65 to 6.95 kΩ
1 - 2	0°C (32°F)	4.40 to 5.35 kΩ
1 - 2	5°C (41°F)	3.40 to 4.15 kΩ
1 - 2	10°C (50°F)	2.70 to 3.25 kΩ
1 - 2	15°C (59°F)	2.14 to 2.58 kΩ
1 - 2	20°C (68°F)	1.71 to 2.05 kΩ
1 - 2	25°C (77°F)	1.38 to 1.64 kΩ
1 - 2	30°C (86°F)	1.11 to 1.32 kΩ

NOTICE:

- **Touching the sensor even slightly may change the resistance value. Hold the connector of the sensor.**
- **When measuring the resistance, the temperature of the sensor and the cooler thermistor must be the same.**

HINT:

As the temperature increases, the resistance decreases (see the graph).

If the operation is not as specified, replace the cooler thermistor.

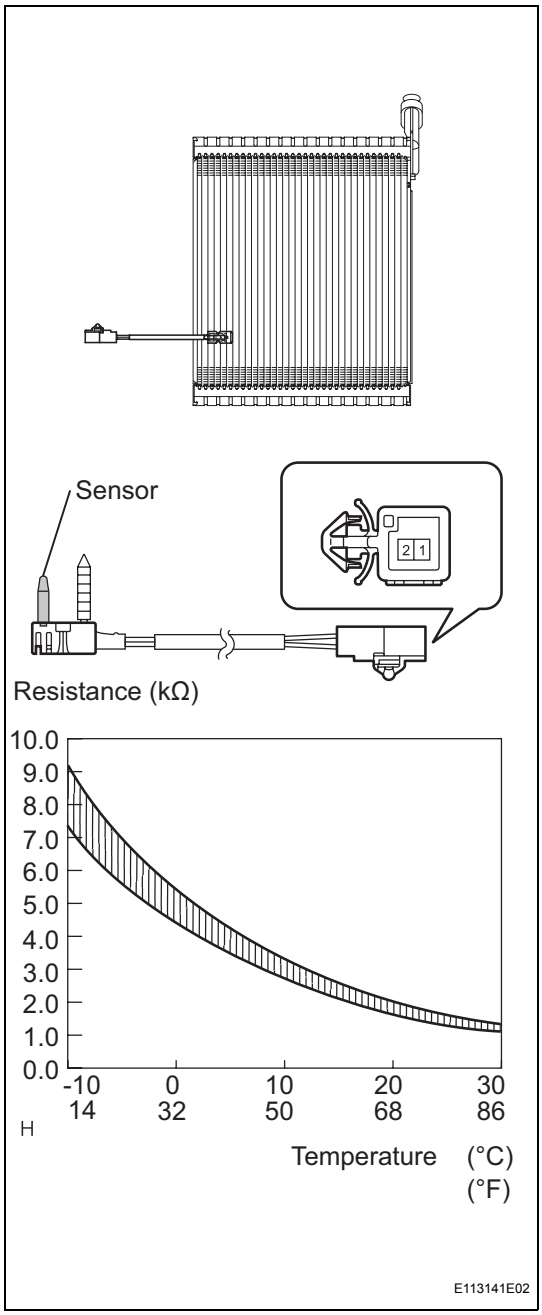

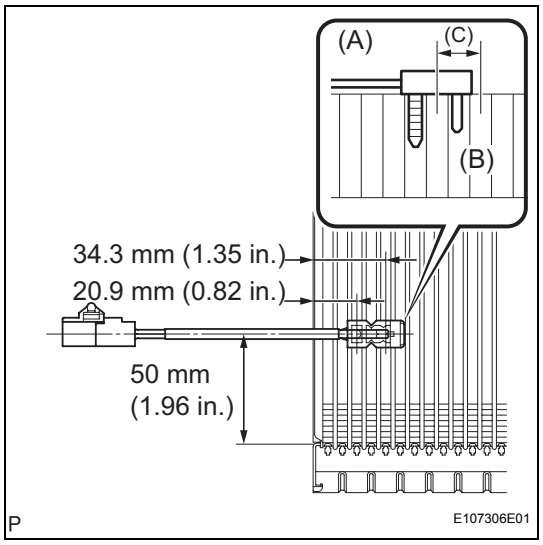

REASSEMBLY

1. INSTALL NO. 1 COOLER THERMISTOR

(a) Install the sensor onto the evaporator as shown in the illustration.

(b) Check that the sensor sticks to the evaporator surface as shown in the illustration (A: Sensor, B: Evaporator).

NOTICE:

If reusing the evaporator, do not reinsert the sensor in the same position that it was in before. Insert it within area C, shown in the illustration.

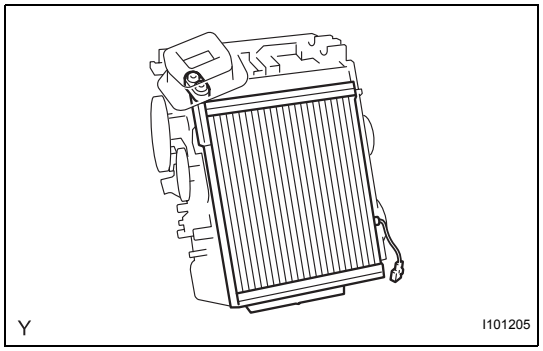

2. INSTALL NO. 1 COOLER EVAPORATOR SUB-ASSEMBLY

HINT:

If a new cooler evaporator is installed, add compressor oil to the cooler evaporator as follows.

Compressor oil:

ND-OIL8 or the equivalent. Add 40 cc (1.35 fl. oz.)

(a) Install the cooler evaporator.

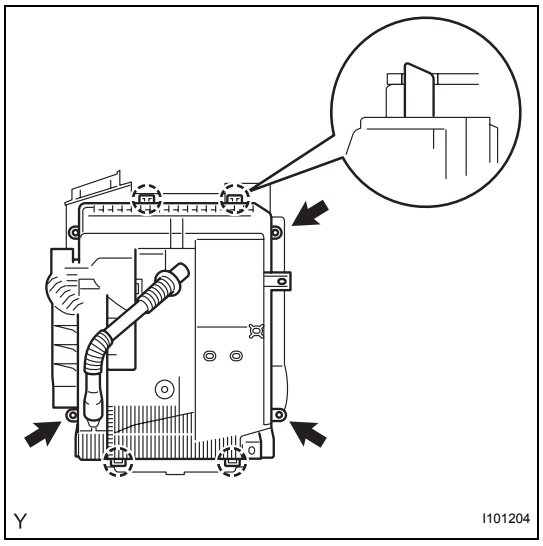

(b) Engage the 4 claws and install the heater case lower.

(c) Install the 3 screws.

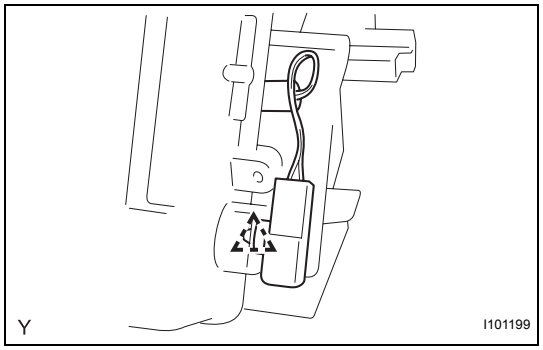

(d) Engage the cooler thermistor connector.

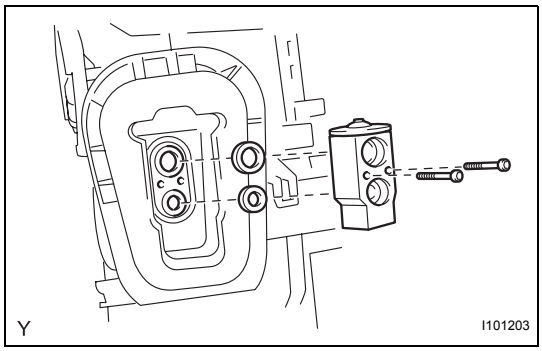

3. INSTALL COOLER EXPANSION VALVE

(a) Apply sufficient compressor oil (ND-OIL8) to 2 new O-rings and the fitting surface of the cooler expansion valve.
Compressor oil:
ND-OIL8 or the equivalent

(b) Install the 2 O-rings onto the cooler evaporator.

(c) Using a hexagon wrench 4, install the cooler expansion valve with the 2 hexagon bolts.
Torque: 3.5 N*m (36 kgf*cm, 31 in.*lbf)

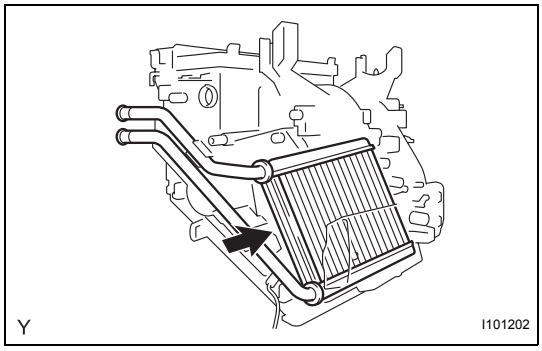

4. INSTALL HEATER RADIATOR UNIT SUB-ASSEMBLY

(a) Install the heater radiator unit onto the air conditioner radiator assembly.

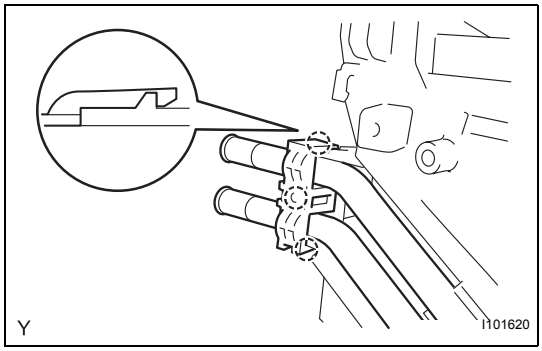

(b) Engage the 3 clips and install the clamp.

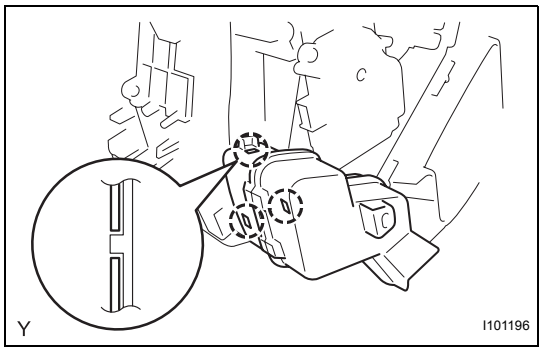

5. INSTALL NO. 2 AIR DUCT

(a) Engage the 3 claws and install the air duct.

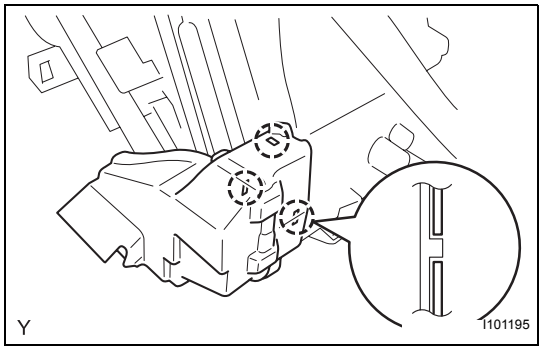

6. INSTALL NO. 1 AIR DUCT

(a) Engage the 3 claws and install the air duct.

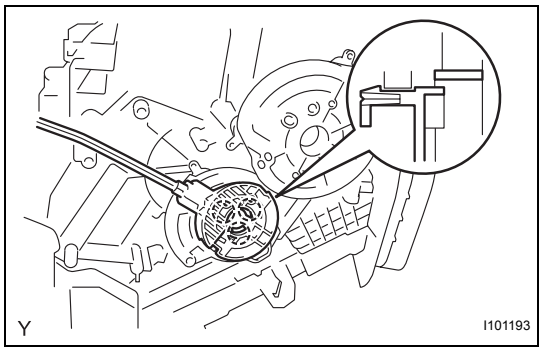

7. INSTALL AIR MIX DAMPER CONTROL CABLE SUB-ASSEMBLY

(a) Engage the claw and install the air mix damper control cable.

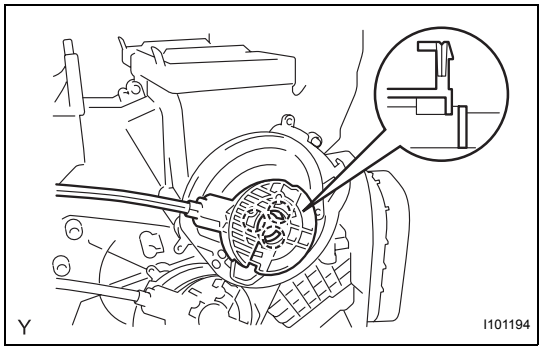

8. INSTALL DEFROSTER DAMPER CONTROL CABLE SUB-ASSEMBLY

(a) Engage the claw and install the defroster damper control cable.

INSTALLATION

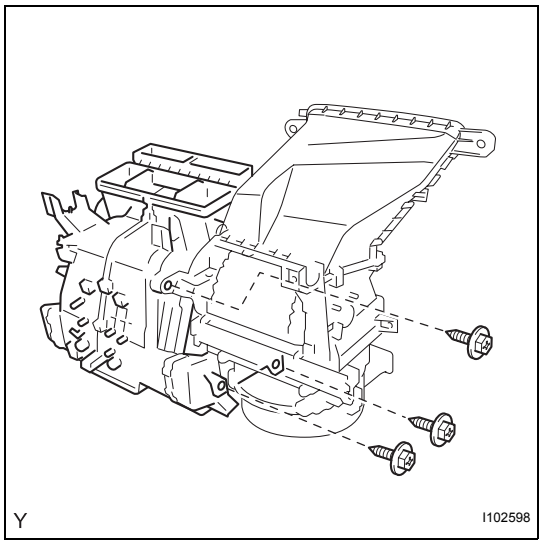

1. INSTALL AIR CONDITIONING UNIT

(a) Install the air conditioning unit with the 3 screws.

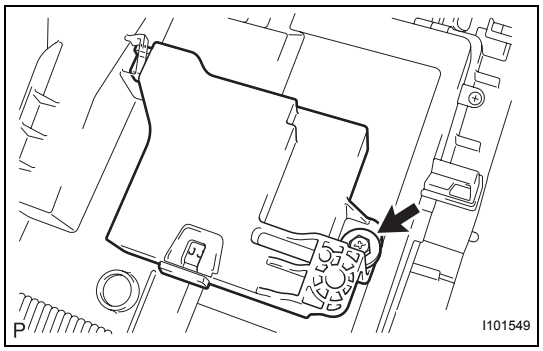

2. INSTALL AIR CONDITIONING AMPLIFIER ASSEMBLY

(a) Install the air conditioning amplifier with the screw.

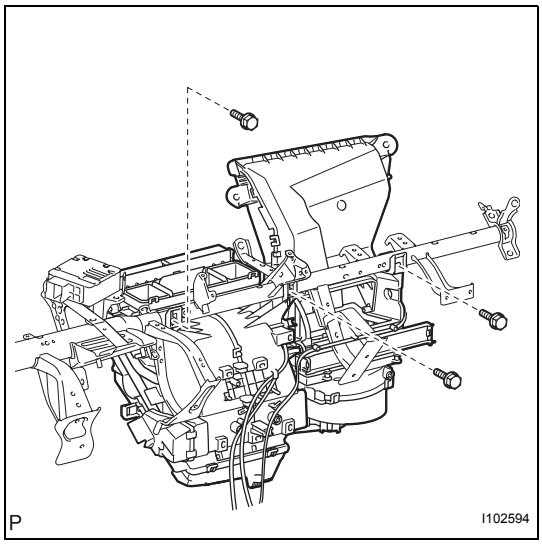

3. INSTALL INSTRUMENT PANEL REINFORCEMENT

(a) Provisionally tighten the air conditioning unit with the 3 screws.

(b) Install the instrument panel reinforcement and the air conditioning unit with the 9 bolts.

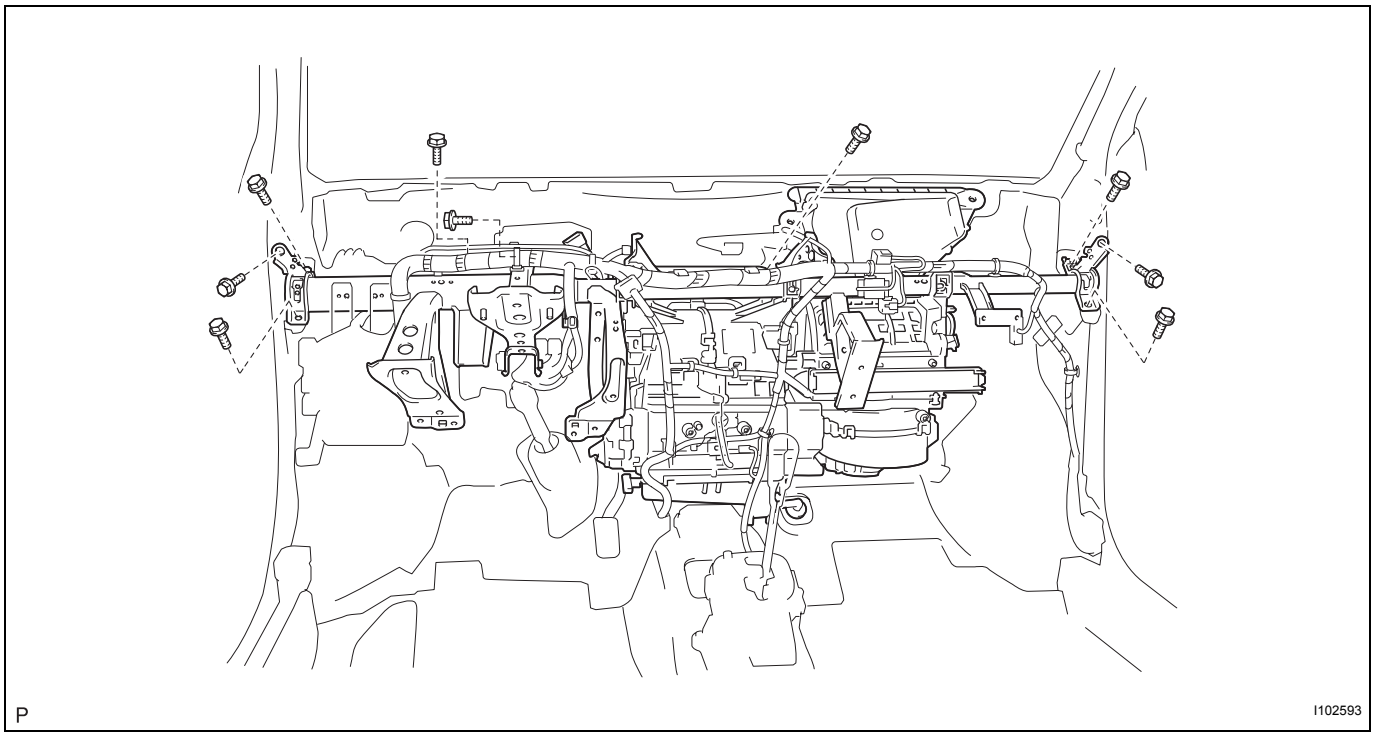

(c) Install the 3 screws, 3 bolts and the nut in the sequence shown in the illustration.

Torque: 4.0 N*m (41 kgf*cm, 35 in.*lbf) for screw
9.8 N*m (100 kgf*cm, 87 in.*lbf) for nut
9.8 N*m (100 kgf*cm, 87 in.*lbf) for bolt

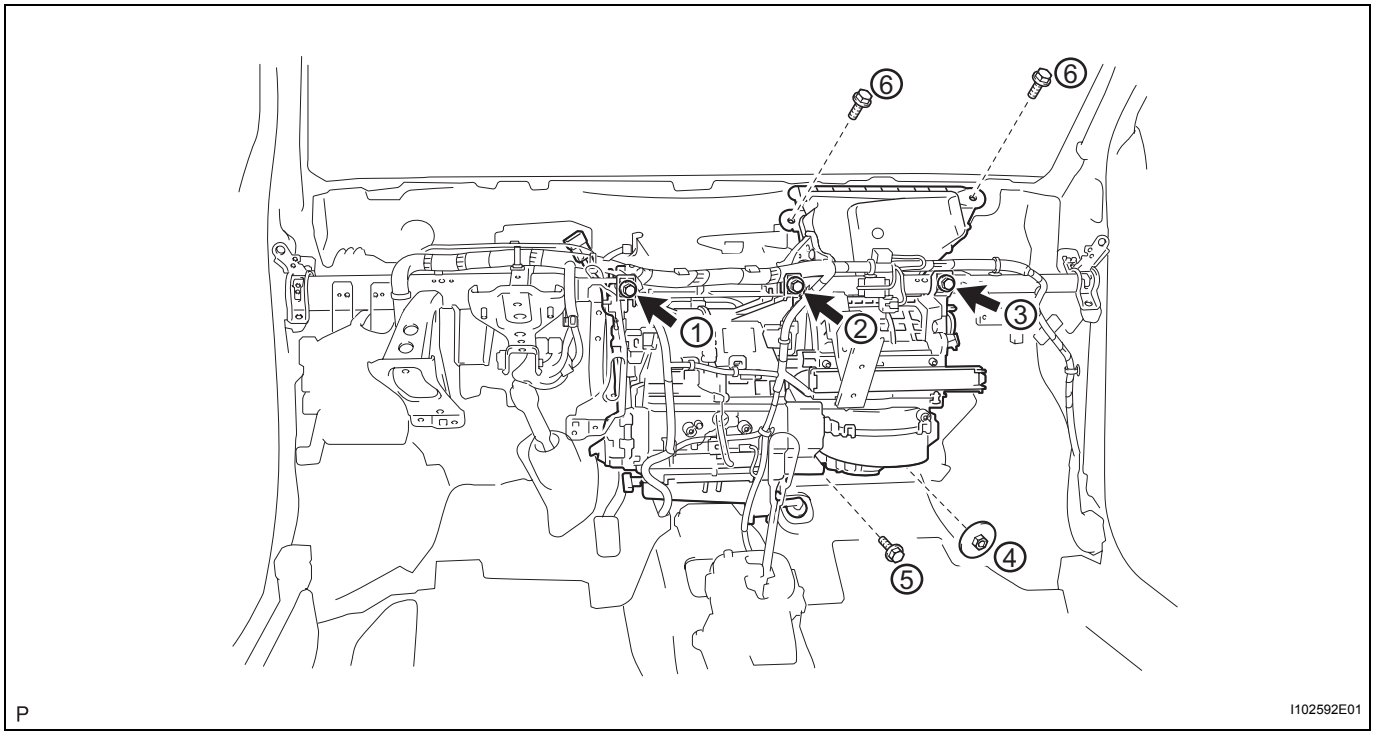

(d) Install the wire harness with the clamps and connect the connectors.

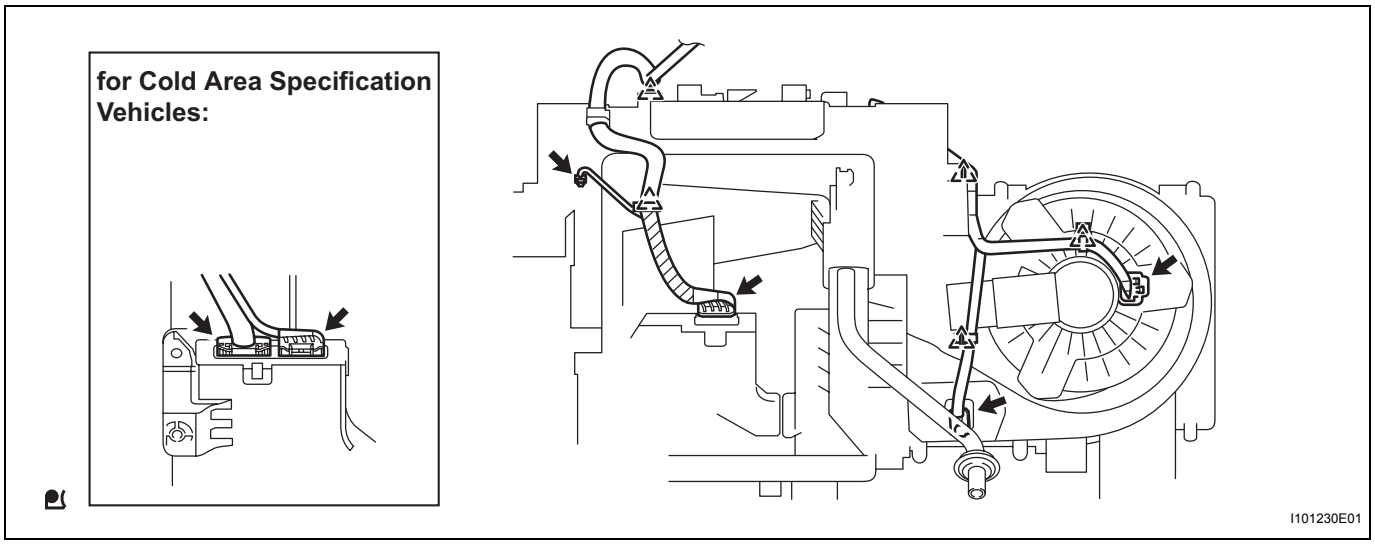

(e) Engage the clamps.

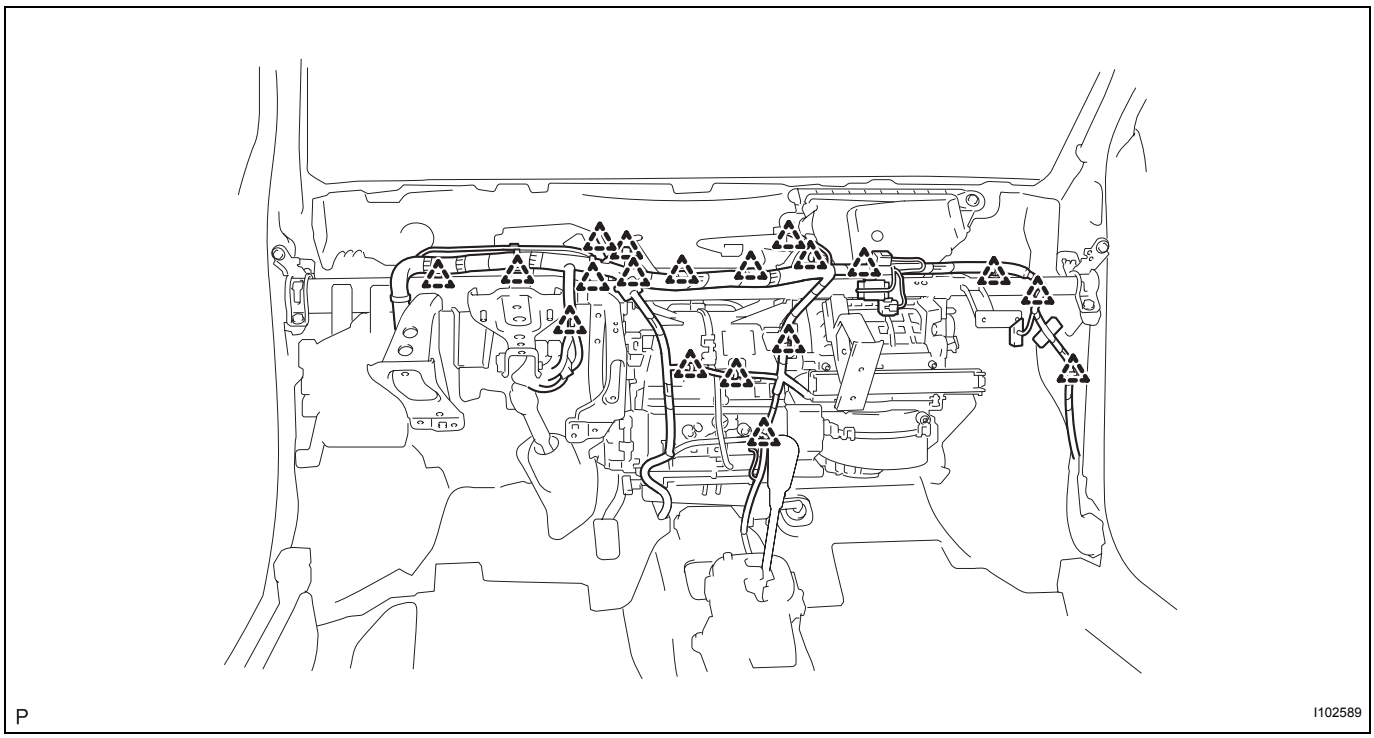

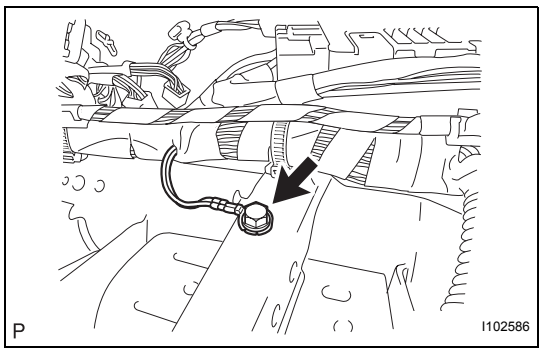

(f) Install the ground wire with the bolt.
Torque: 3.2 N*m (33 kgf*cm, 28 in.*lbf)

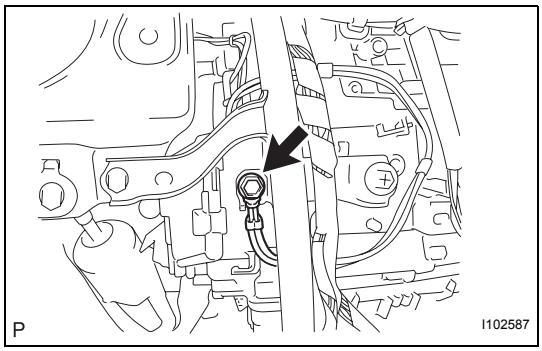

(g) Install the ground wire with the bolt. (for Cold area specification vehicles)
Torque: 8.0 N*m (82 kgf*cm, 71 in.*lbf)

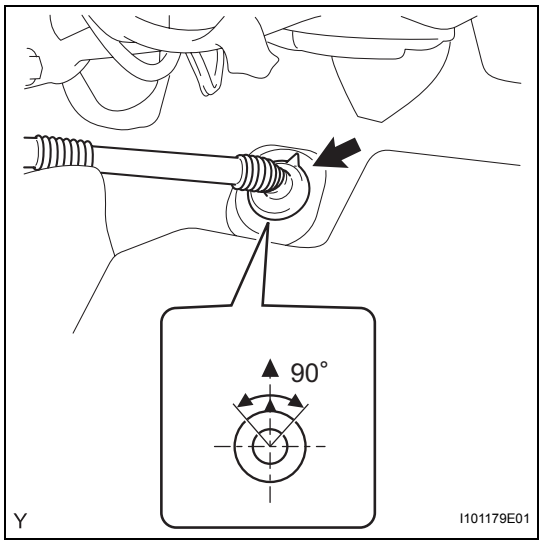

(h) Install the drain hose into the position shown in the illustration.
NOTICE:
- **Install the drain hose with its UP mark facing upward, within the 90 degree range shown in the illustration.**
- **Install the drain hose without twisting it.**

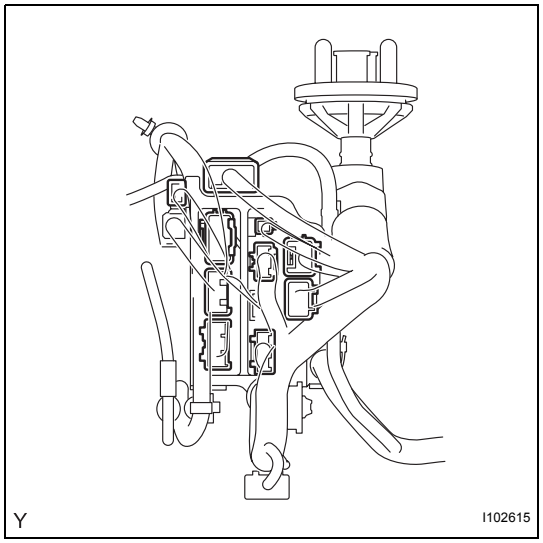

4. INSTALL CONNECTOR NO. 2 HOLDER

(a) Connect the connectors and install the wire harness.

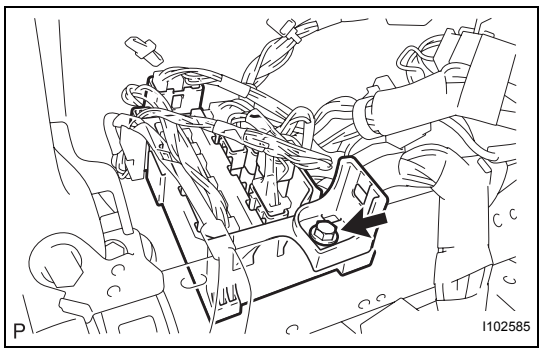

(b) Install the connector holder with the bolt.
Torque: 3.2 N*m (33 kgf*cm, 28 in.*lbf)

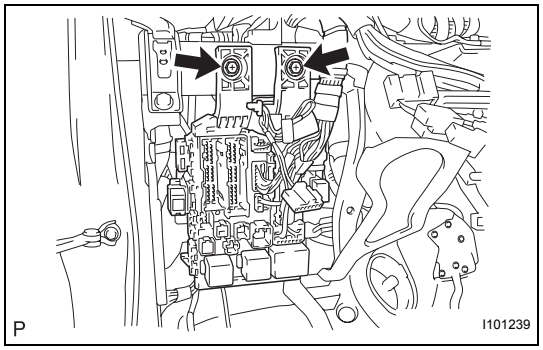

5. INSTALL MAIN BODY ECU (DRIVER SIDE J/B)

(a) Install the main body ECU with the 2 bolts.
Torque: 3.2 N*m (33 kgf*cm, 28 in.*lbf)

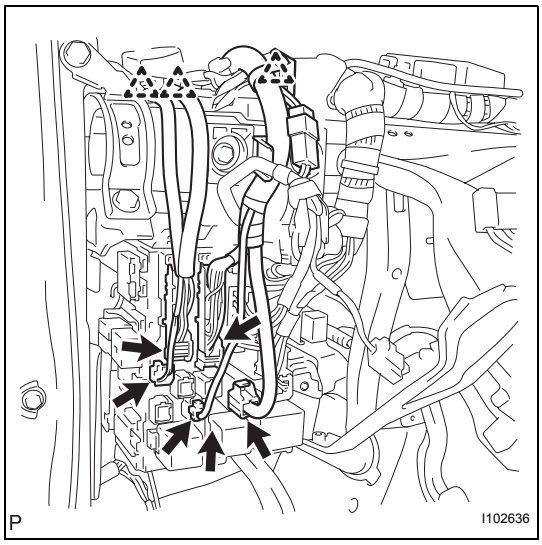

(b) Connect the 5 connectors and the 3 clamps.

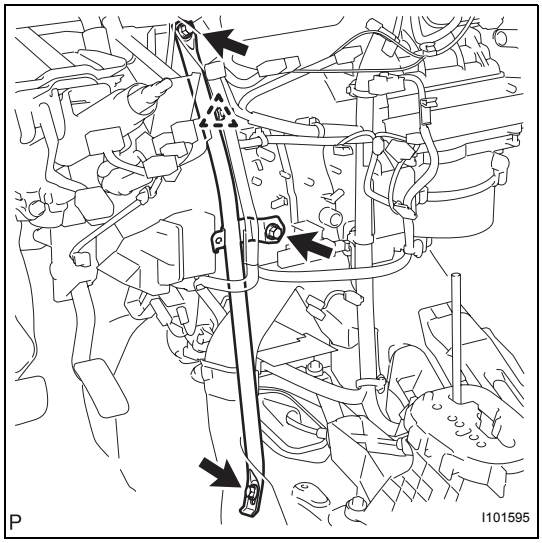

6. INSTALL INSTRUMENT PANEL BRACE SUB-ASSEMBLY

(a) Install the instrument panel brace with the bolt, screw and nut.

Torque: 9.8 N*m (100 kgf*cm, 87 in.*lbf) for screw
9.8 N*m (100 kgf*cm, 87 in.*lbf) for nut
9.8 N*m (100 kgf*cm, 87 in.*lbf) for bolt

(b) Engage the clamp.

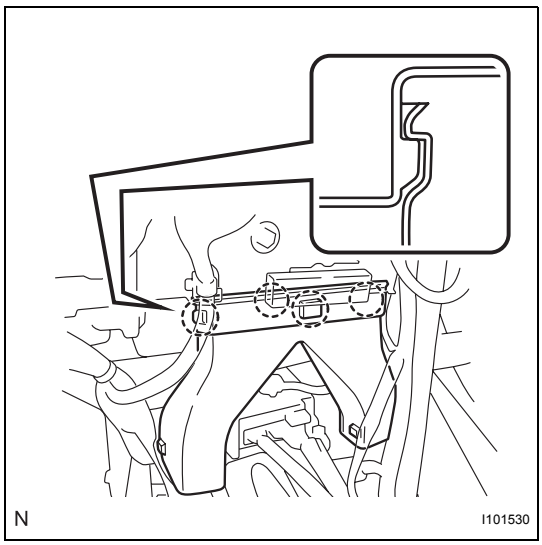

7. INSTALL REAR NO. 3 AIR DUCT (for Cold Area Specification Vehicles)

(a) Engage the 4 claws and install the air duct.

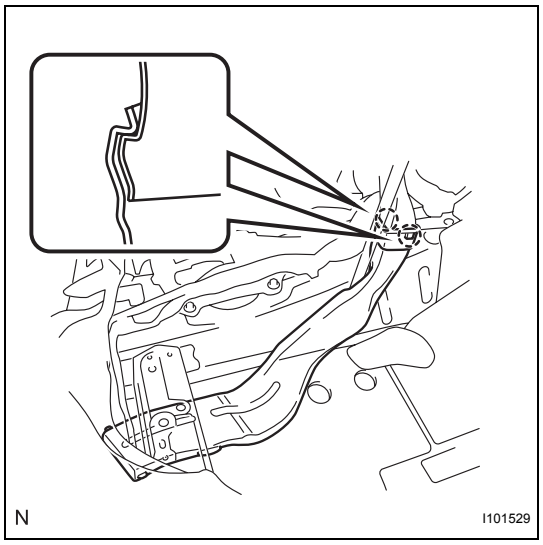

8. INSTALL REAR NO. 1 AIR DUCT (for Cold Area Specification Vehicles)

(a) Engage the 2 claws and install the air duct.

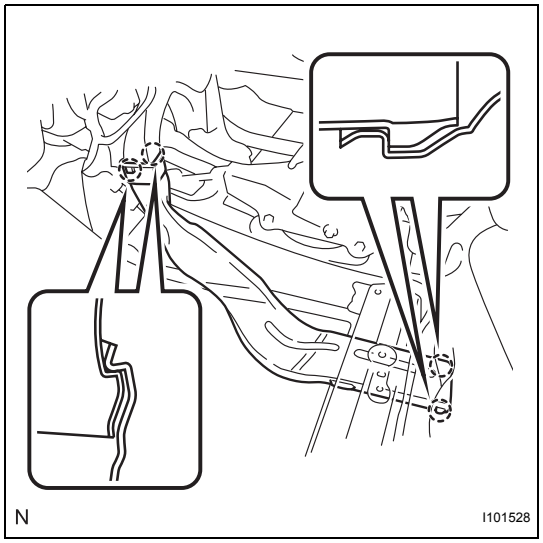

9. INSTALL REAR NO. 2 AIR DUCT (for Cold Area Specification Vehicles)

(a) Engage the 4 claws and install the air duct.

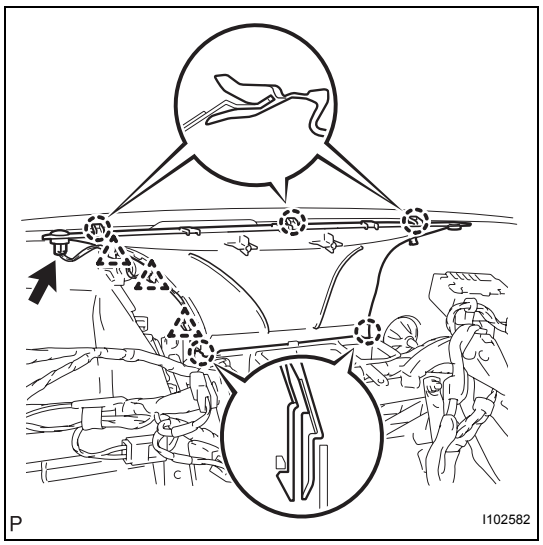

10. INSTALL DEFROSTER NOZZLE ASSEMBLY

(a) Engage the 5 claws and install the defroster nozzle.

(b) Connect the 3 clamps and connector and install the wire harness.

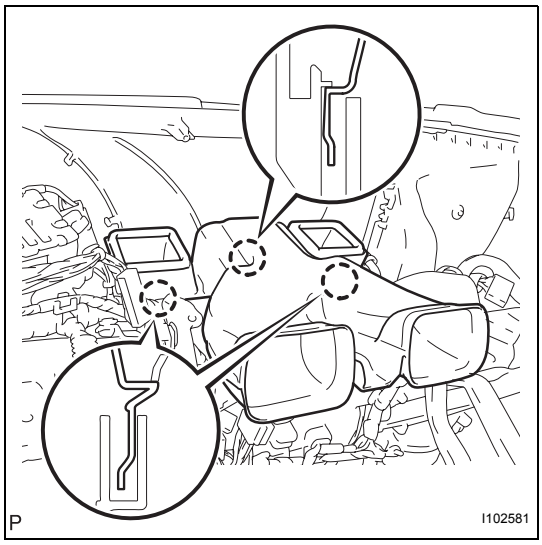

11. **INSTALL HEATER TO REGISTER DUCT ASSEMBLY**
    (a) Engage the 3 claws and install the heater to register duct.
12. **INSTALL STEERING COLUMN ASSEMBLY (See page SR-19)**
13. **INSTALL BRAKE PEDAL SUPPORT SUB-ASSEMBLY (for Manual Transaxle) (See page BR-21)**
14. **INSTALL BRAKE MASTER CYLINDER PUSH ROD CLEVIS (for Manual Transaxle) (See page BR-21)**
15. **INSTALL BRAKE PEDAL (for Automatic Transaxle) (See page SR-19)**

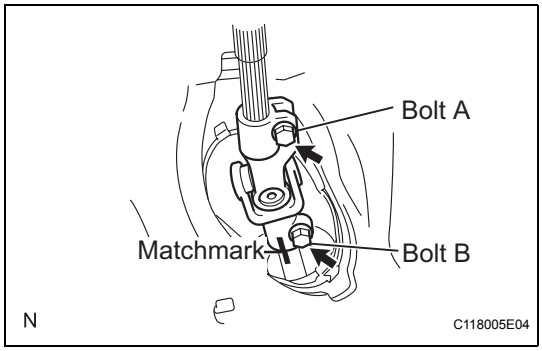

16. **INSTALL STEERING SLIDING YOKE SUB-ASSEMBLY**
    (a) Align the matchmarks and install the sliding yoke onto the power steering assembly with bolt B.
    Torque: 28 N*m (286 kgf*cm, 21 ft.*lbf)
    (b) Tighten bolt A.
    Torque: 28 N*m (286 kgf*cm, 21 ft.*lbf)
17. **INSTALL COLUMN HOLE COVER SILENCER SHEET (See page SR-20)**
18. **INSTALL INSTRUMENT PANEL SUB REINFORCEMENT**
19. **CONNECT POWER STEERING ECU (See page SR-21)**
20. **INSTALL COMBINATION SWITCH ASSEMBLY (See page SR-21)**
21. **INSTALL STEERING COLUMN COVER (See page SR-22)**
22. **INSTALL STEERING WHEEL ASSEMBLY (See page SR-22)**
23. **INSTALL STEERING PAD (See page RS-310)**
24. **INSTALL LOWER INSTRUMENT PANEL SUB-ASSEMBLY (See page IP-52)**
25. **CONNECT HOOD LOCK CONTROL LEVER SUB-ASSEMBLY (See page IP-53)**
26. **CONNECT ANTENNA CORD SUB-ASSEMBLY (See page IP-53)**
27. **INSTALL INSTRUMENT PANEL BOX (See page IP-53)**
28. **INSTALL INSTRUMENT PANEL LOWER FINISH PANEL SUB-ASSEMBLY (See page IP-54)**
29. **INSTALL INSTRUMENT PAD LOWER RH (See page IP-54)**

30. INSTALL INSTRUMENT PAD LOWER LH (See page IP-55)
31. INSTALL REAR CONSOLE BOX ASSEMBLY (See page IP-88)
32. INSTALL CONSOLE BOX CARPET (See page IP-88)
33. INSTALL CONSOLE UPPER REAR PANEL SUB-ASSEMBLY (See page IP-89)
34. INSTALL UPPER CONSOLE PANEL SUB-ASSEMBLY (See page IP-89)
35. INSTALL SHIFT LEVER KNOB SUB-ASSEMBLY (for Manual Transaxle) (See page IP-89)
36. INSTALL COWL SIDE TRIM BOARD RH (See page IR-34)
37. INSTALL COWL SIDE TRIM BOARD LH (See page IR-34)
38. INSTALL INSTRUMENT PANEL UNDER COVER SUB-ASSEMBLY RH (See page IR-35)
39. INSTALL INSTRUMENT PANEL UNDER COVER SUB-ASSEMBLY LH (See page IR-35)
40. INSTALL FRONT DOOR SCUFF PLATE RH (See page IR-35)
41. INSTALL FRONT DOOR SCUFF PLATE LH (See page IR-35)
42. INSTALL UPPER INSTRUMENT PANEL SUB-ASSEMBLY (See page IP-11)
43. INSTALL GLOVE COMPARTMENT DOOR ASSEMBLY (See page IP-13)
44. INSTALL FRONT PILLAR GARNISH RH (See page IR-29)
45. INSTALL FRONT PILLAR GARNISH LH (See page IR-30)
46. INSTALL FRONT DOOR OPENING TRIM WEATHERSTRIP RH (See page IP-14)
47. INSTALL FRONT DOOR OPENING TRIM WEATHERSTRIP LH (See page IP-14)
48. CONNECT AIR INLET DAMPER CONTROL CABLE SUB-ASSEMBLY (See page AC-246)
49. CONNECT DEFROSTER DAMPER CONTROL CABLE SUB-ASSEMBLY (See page AC-246)
50. CONNECT AIR MIX DAMPER CONTROL CABLE SUB-ASSEMBLY (See page AC-246)
51. INSTALL AIR CONDITIONING PANEL ASSEMBLY (See page AC-246)

52. **INSTALL STEREO OPENING COVER (w/o Radio Receiver) (See page IP-56)**

53. **INSTALL RADIO RECEIVER ASSEMBLY (See page AV-40)**

54. **INSTALL INSTRUMENT CLUSTER FINISH PANEL CENTER SUB-ASSEMBLY (See page IP-56)**

55. **INSTALL COMBINATION METER ASSEMBLY (See page ME-140)**

56. **INSTALL INSTRUMENT CLUSTER FINISH PANEL (See page ME-140)**

57. **INSTALL INSTRUMENT PANEL FINISH PANEL END RH (See page ME-141)**

58. **INSTALL INSTRUMENT PANEL FINISH PANEL END LH (See page ME-141)**

59. **INSTALL INSTRUMENT PANEL FINISH PANEL LOWER CENTER (See page ME-142)**

60. **CONNECT HEATER WATER INLET HOSE**

(a) Install the heater water inlet hose onto the heater unit.

NOTICE:
Perform the installation with the hose clip and mark at the correct angle as shown in the illustration.

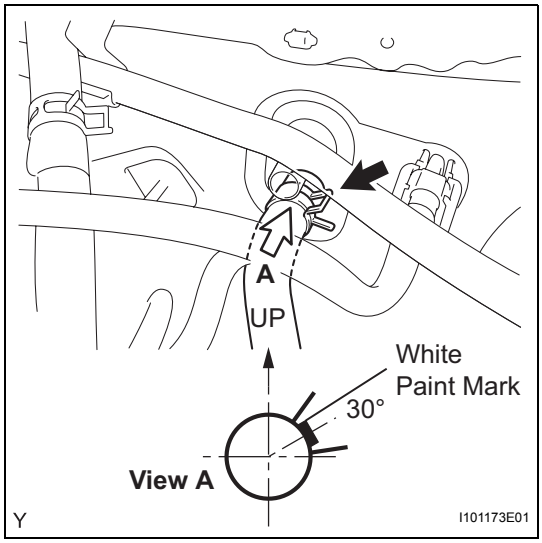

61. **CONNECT HEATER WATER OUTLET HOSE**

(a) Install the heater water outlet hose onto the heater unit.

NOTICE:
Perform the installation with the hose clip and mark at the correct angle as shown in the illustration.

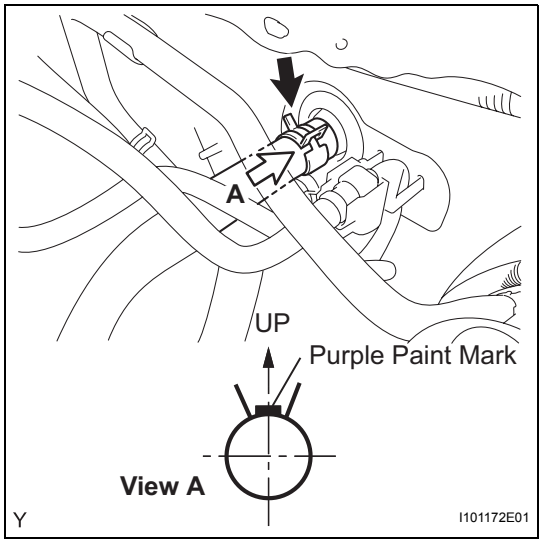

62. **INSTALL LIQUID TUBE SUB-ASSEMBLY**

(a) Remove the vinyl tape from the liquid tube and the connecting portion of the unit.

(b) Apply sufficient compressor oil (ND-OIL8) to a new O-ring and the connecting part of the liquid tube.

Compressor oil:
ND-OIL8 or the equivalent

(c) Install the O-ring onto the liquid tube.

(d) Connect the liquid tube to the unit.

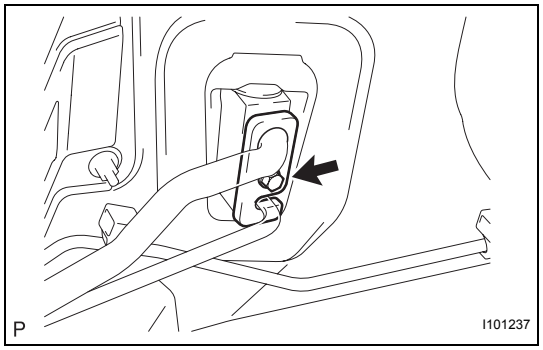

63. **INSTALL SUCTION TUBE SUB-ASSEMBLY**
    (a) Remove the vinyl tape from the suction tube and the connecting part of the unit.
    (b) Apply sufficient compressor oil (ND-OIL8) to a new O-ring and the connecting part of the suction tube.
    Compressor oil:
    ND-OIL8 or the equivalent
    (c) Install the O-ring onto the suction tube.
    (d) Insert the tube joints securely into the fitting holes and tighten the bolt.
    Torque: 9.8 N*m (100 kgf*cm, 87 in.*lbf)
64. **ADD ENGINE COOLANT (for 1NZ-FE) (See page CO-8)**
65. **CONNECT CABLE TO NEGATIVE BATTERY TERMINAL**
    Torque: 5.4 N*m (55 kgf*cm, 48 in.*lbf)
66. **CHECK SRS WARNING LIGHT**
    (See page RS-31)
67. **CHARGE REFRIGERANT (See page AC-67)**
68. **WARM UP ENGINE (See page AC-69)**
69. **CHECK FOR ENGINE COOLANT LEAK (for 1NZ-FE) (See page CO-1)**
70. **CHECK FOR REFRIGERANT LEAK (See page AC-69)**
71. **POSITION FRONT WHEELS FACING STRAIGHT AHEAD**
72. **PERFORM CALIBRATION OF TORQUE SENSOR ZERO POINT (See page SR-22)**

AIR CONDITIONING UNIT (for Hatchback)

COMPONENTS

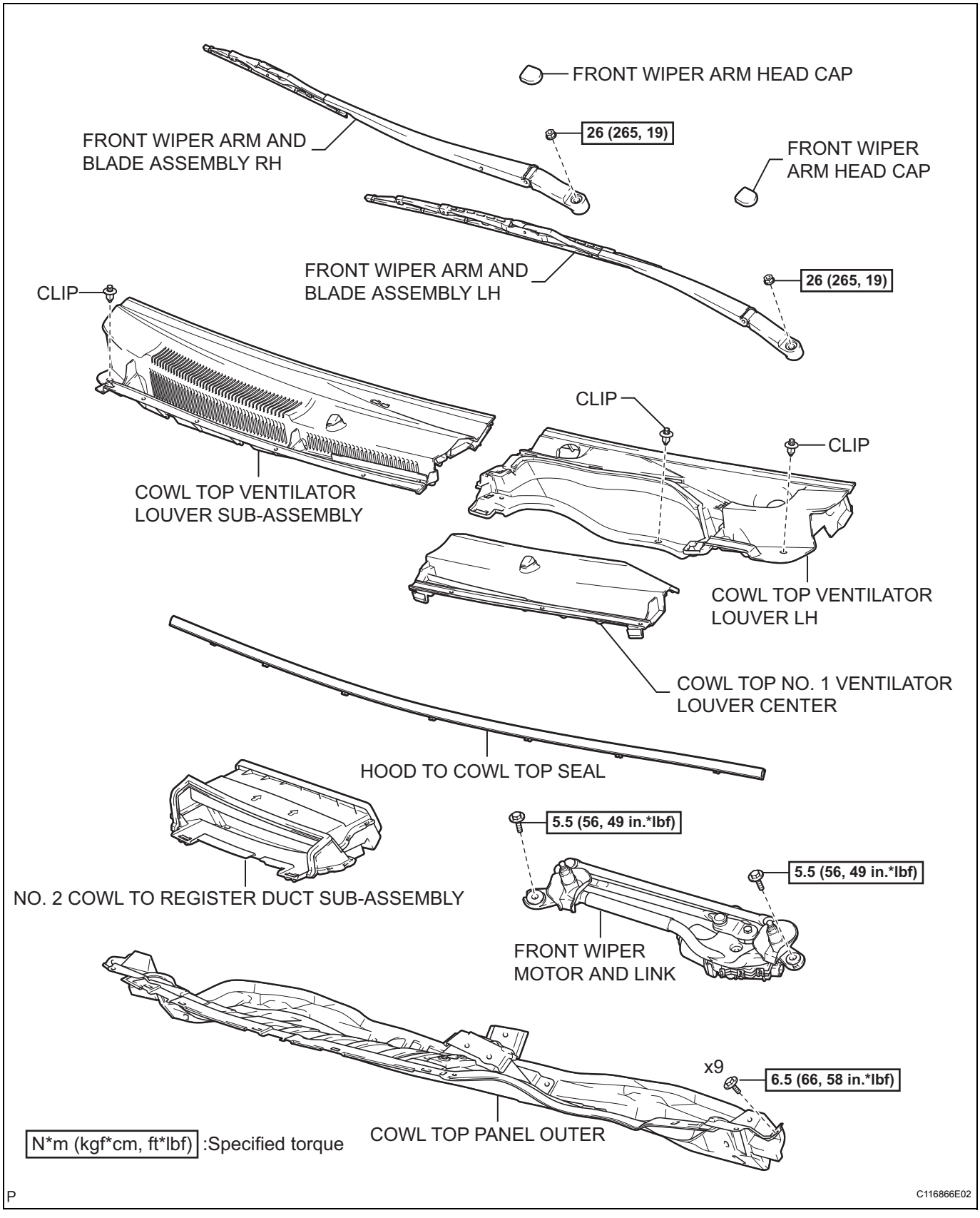

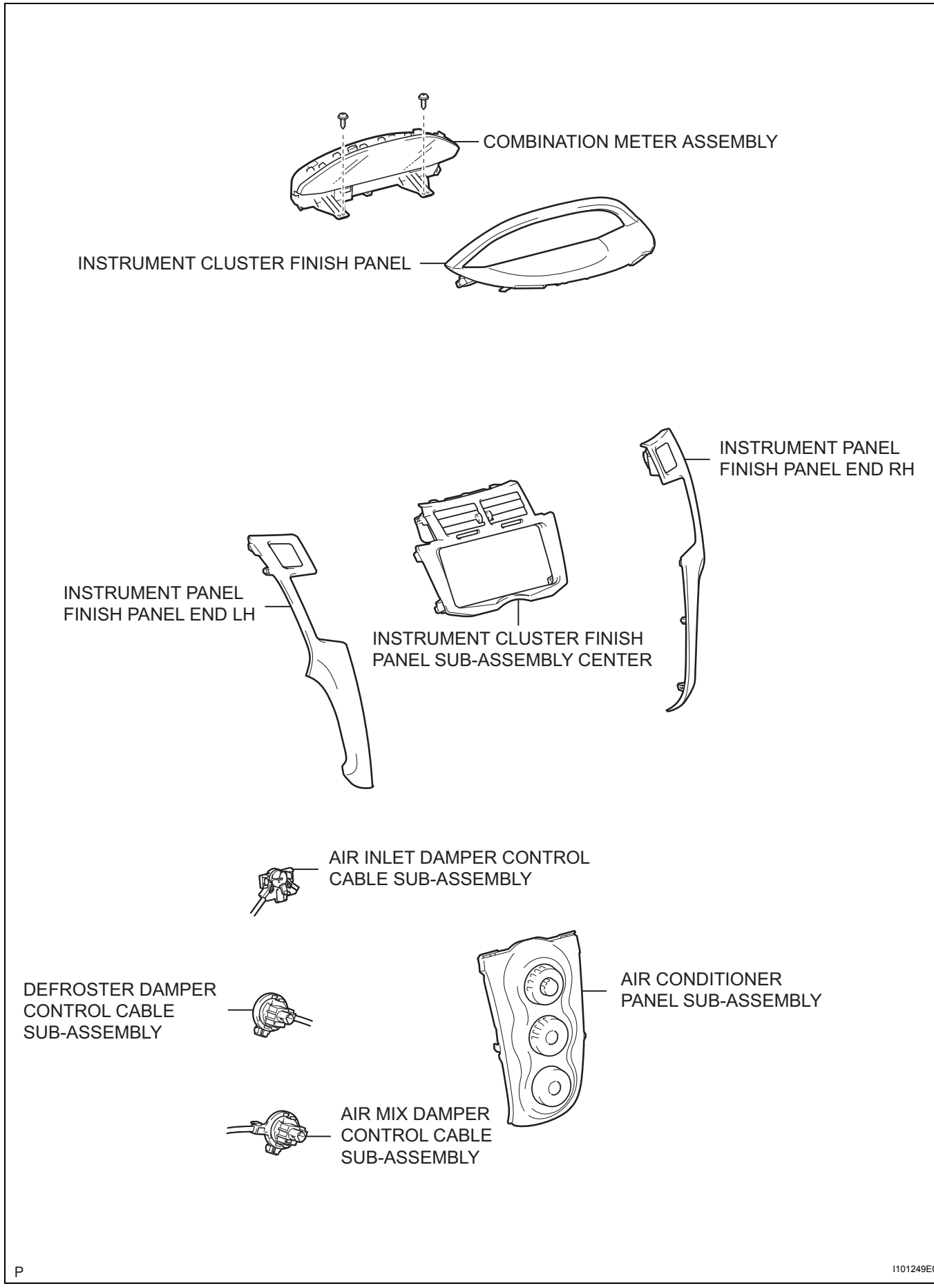
COMBINATION METER ASSEMBLY
INSTRUMENT CLUSTER FINISH PANEL
INSTRUMENT PANEL FINISH PANEL END RH
INSTRUMENT PANEL FINISH PANEL END LH
INSTRUMENT CLUSTER FINISH PANEL SUB-ASSEMBLY CENTER
AIR INLET DAMPER CONTROL CABLE SUB-ASSEMBLY
DEFROSTER DAMPER CONTROL CABLE SUB-ASSEMBLY
AIR CONDITIONER PANEL SUB-ASSEMBLY
AIR MIX DAMPER CONTROL CABLE SUB-ASSEMBLY
P
I101249E01

AC

w/o Radio Receiver:

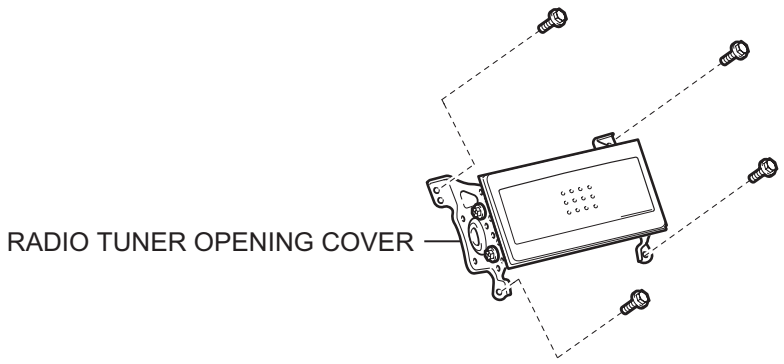

w/o CD Player:

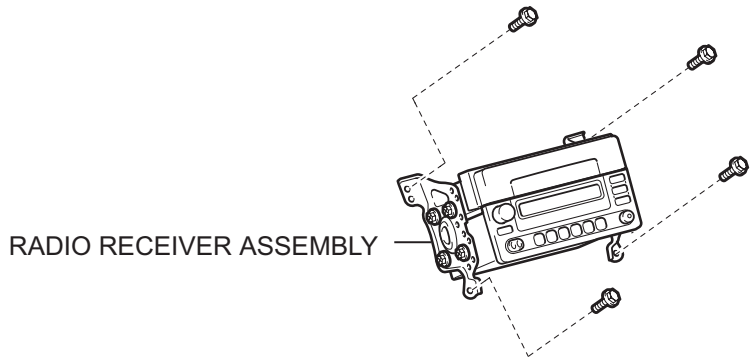

w/ CD Player:

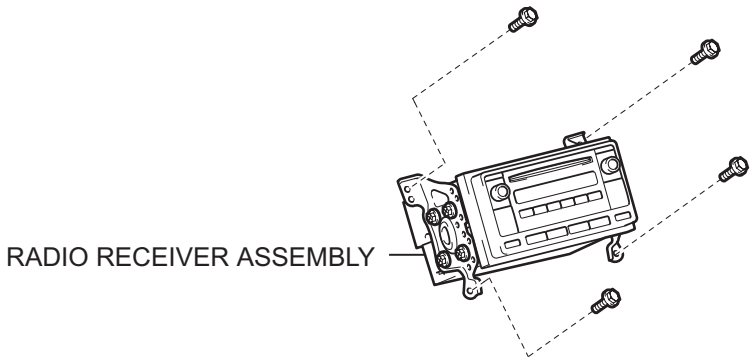

AC

P

I101560E01

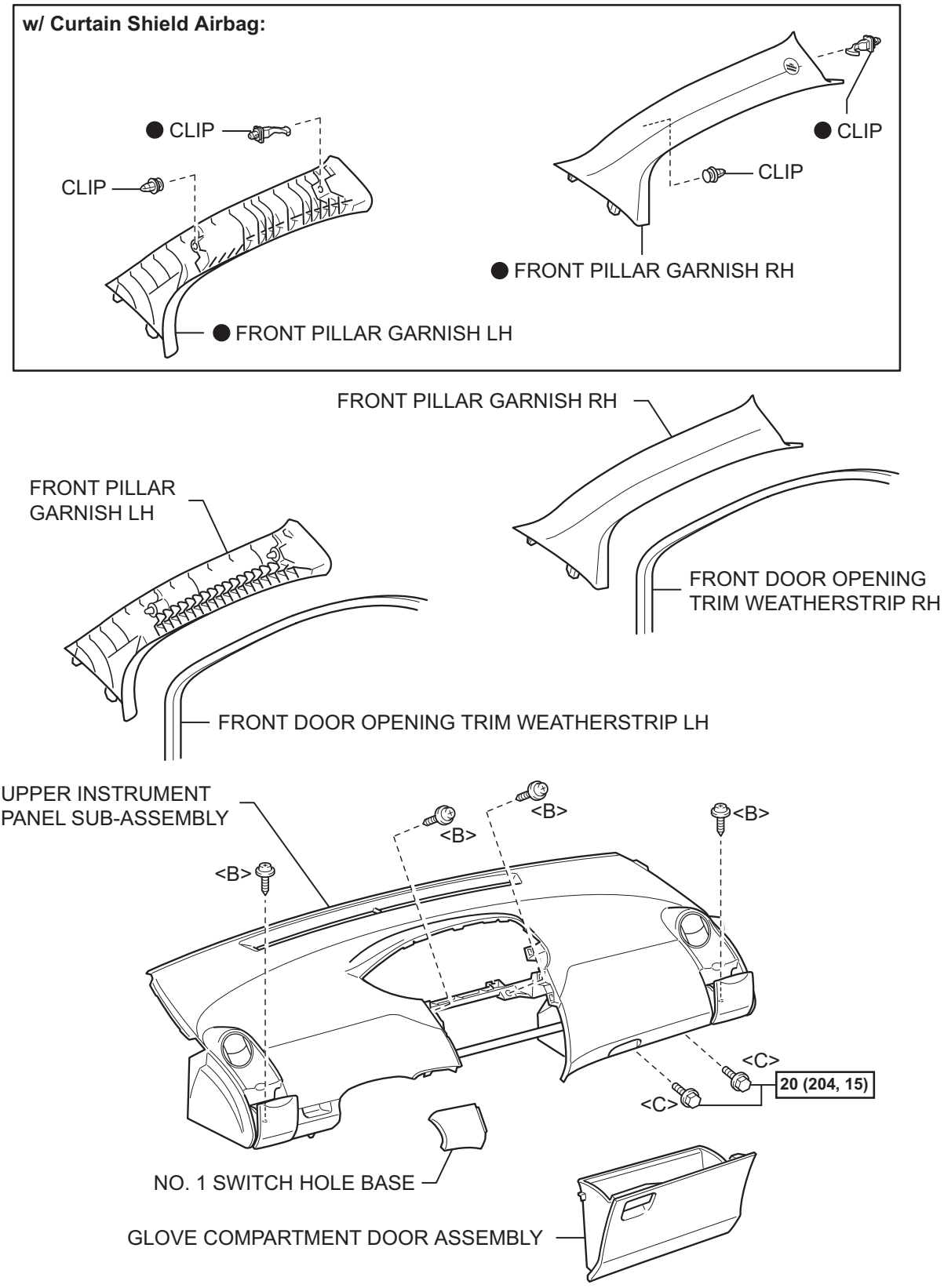

N*m (kgf*cm, ft.*lbf) : Specified torque

● Non-reusable part

0

B108209E01

AC

for Manual Transaxle:

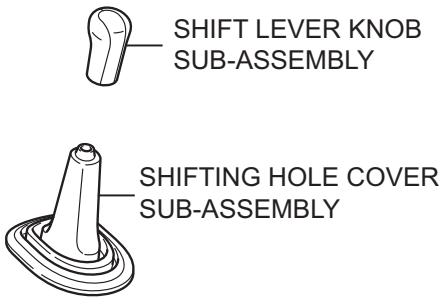

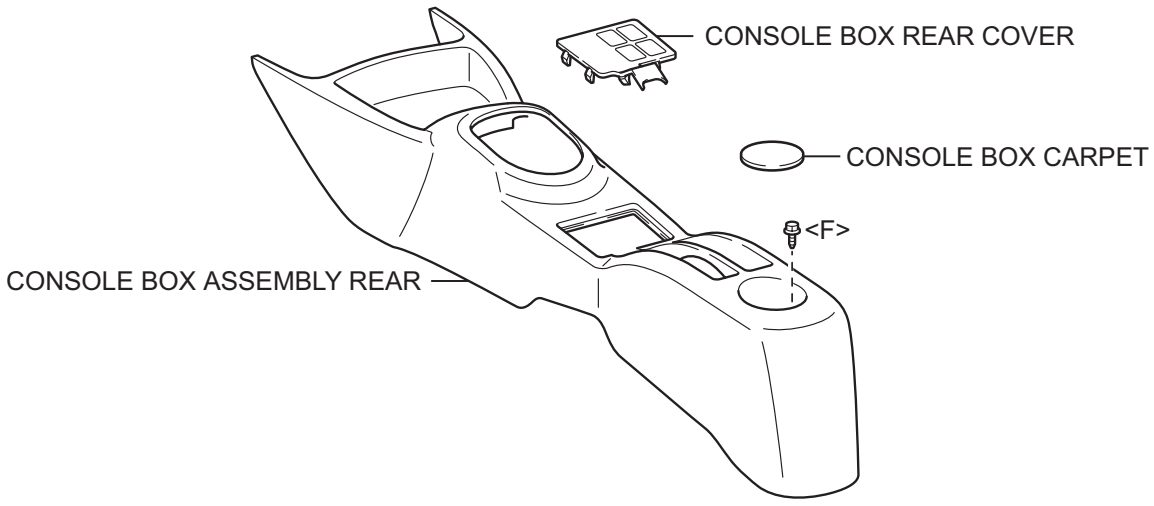

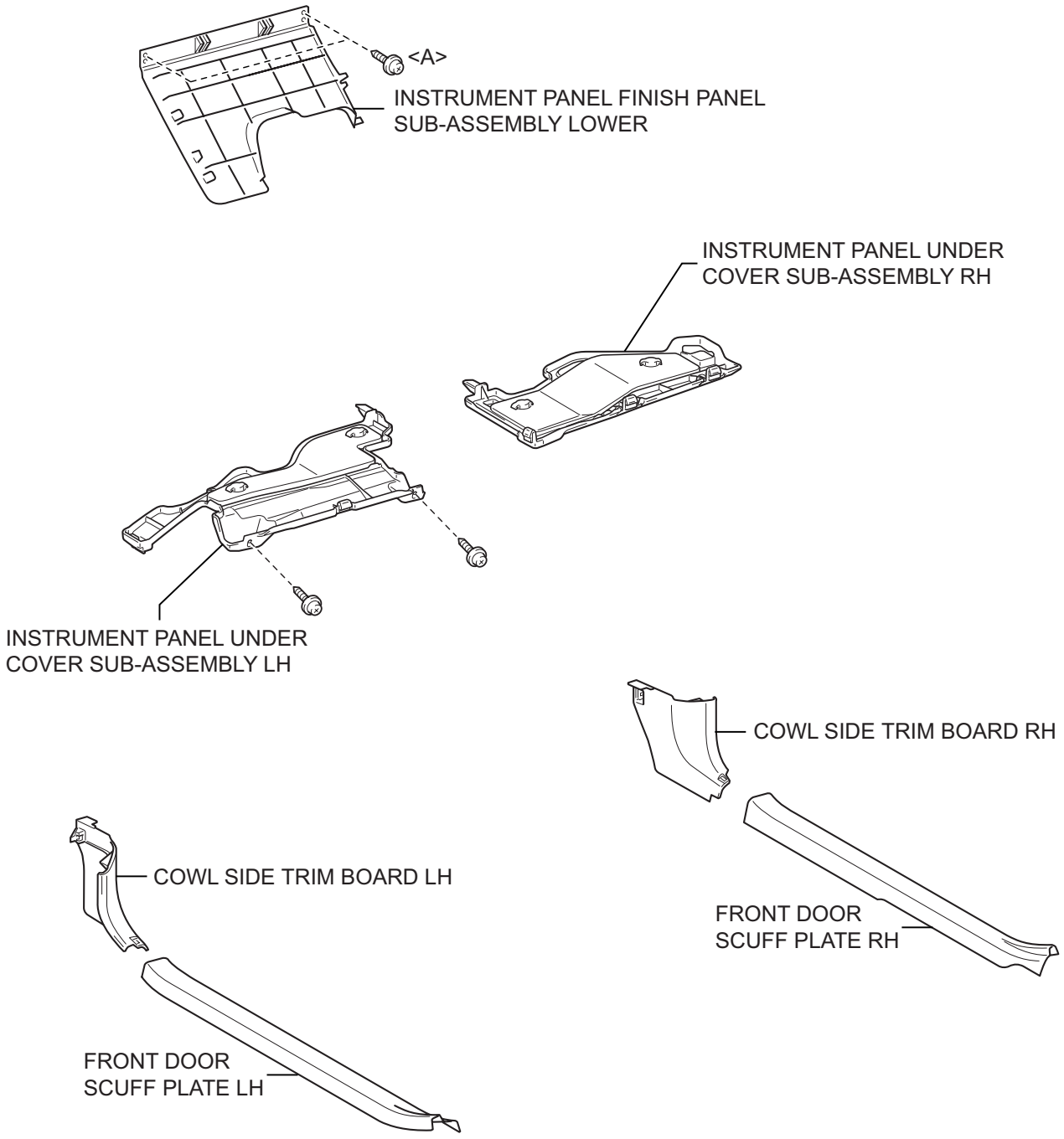

O

B108230E01

AC

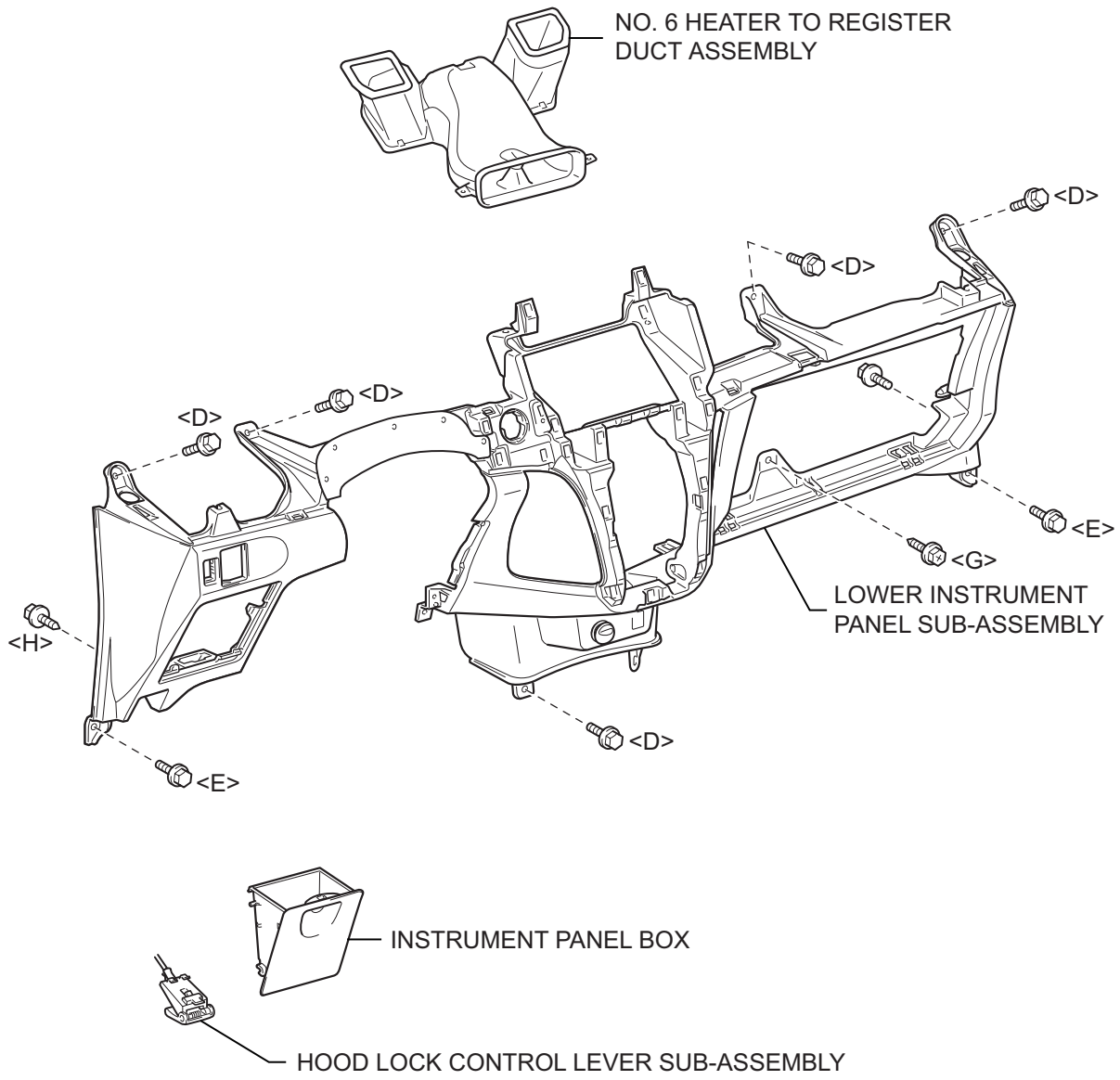

O

B108207E01

for Manual Transaxle:

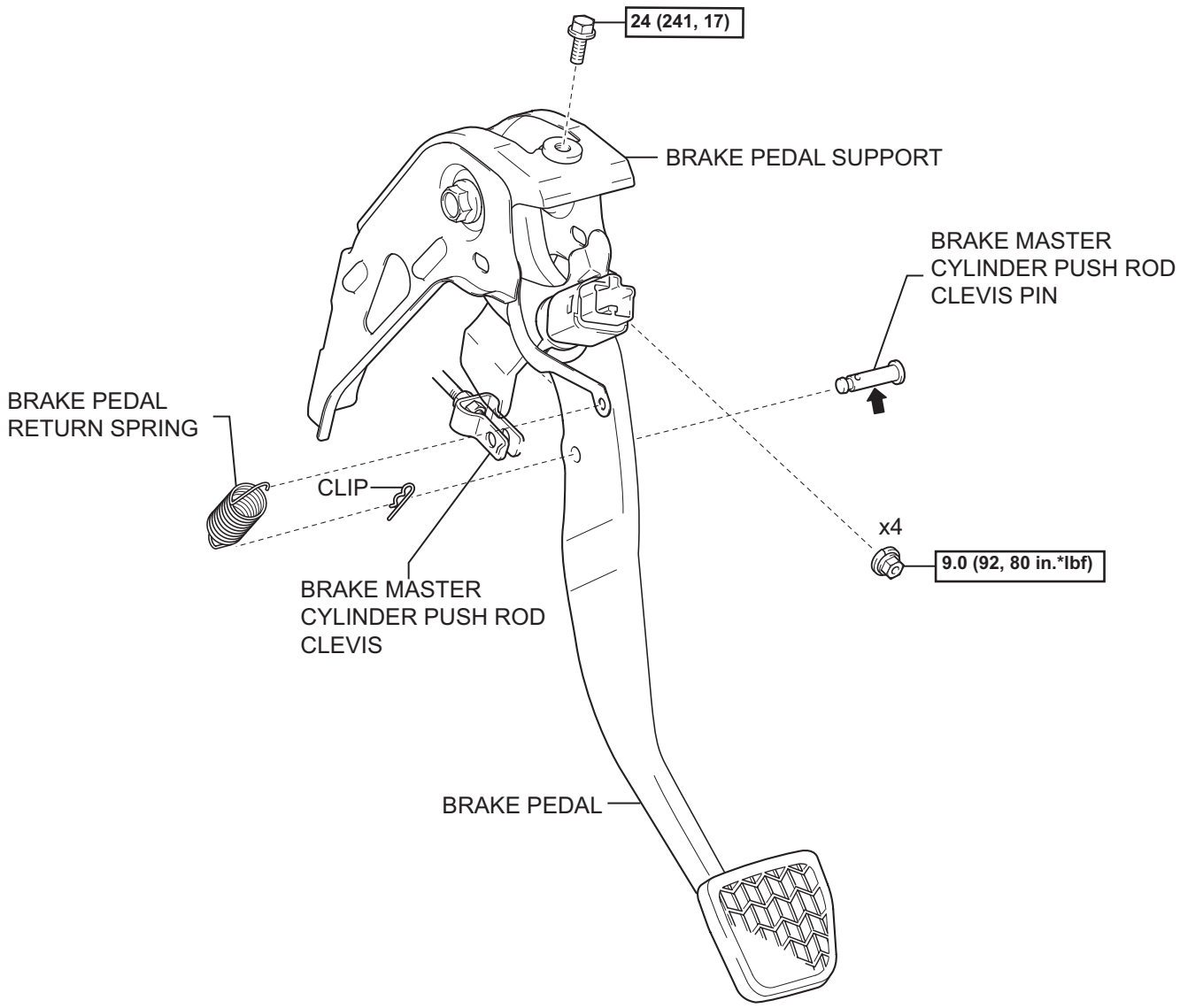

N*m (kgf*cm, ft.*lbf) : Specified torque ⬅ Lithium Soap base glycol grease

P

C118552E01

AC

for Automtic Transaxle:

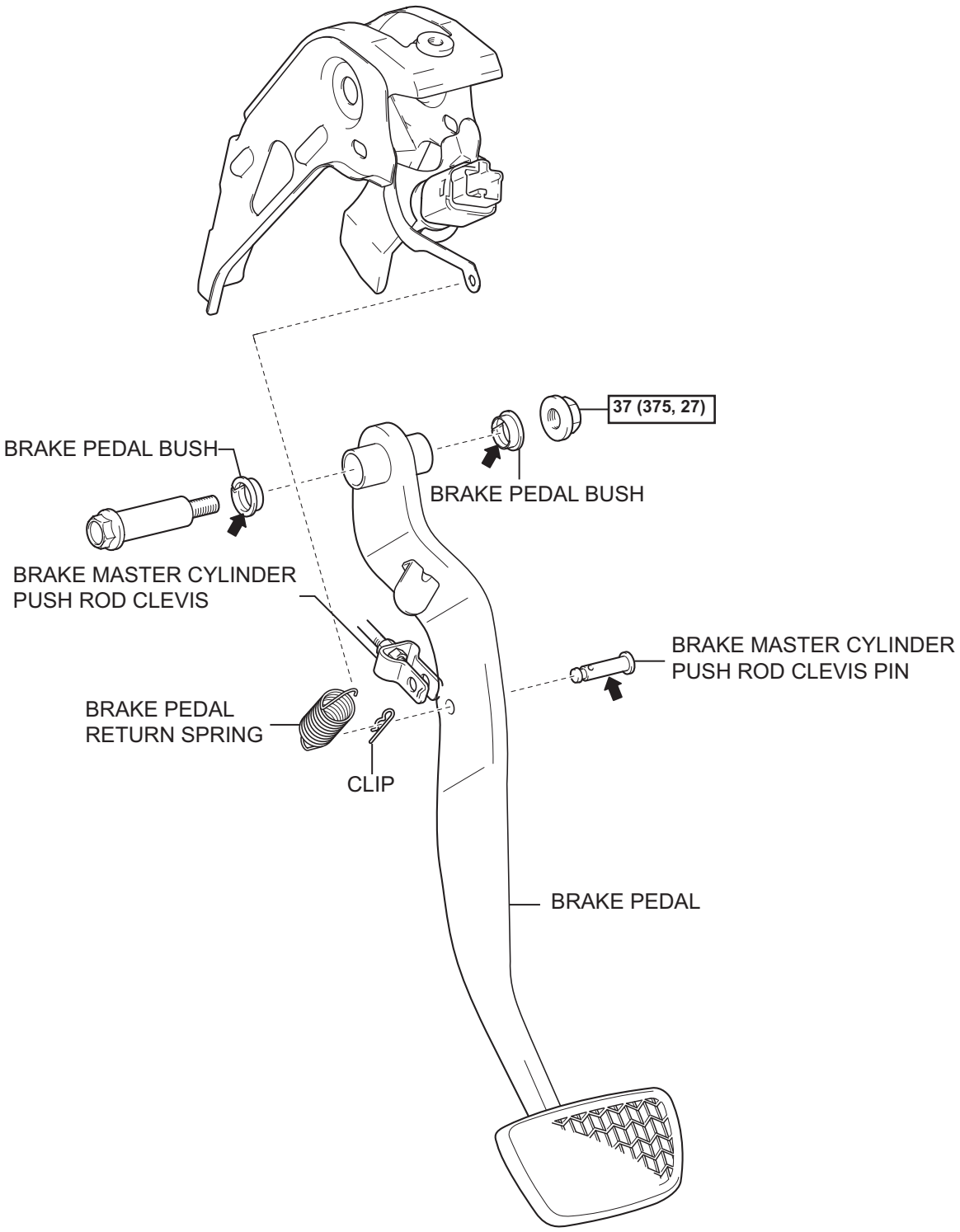

AC

N*m (kgf*cm, ft.*lbf) : Specified torque ⬅ Lithium Soap base glycol grease

P

C118551E01

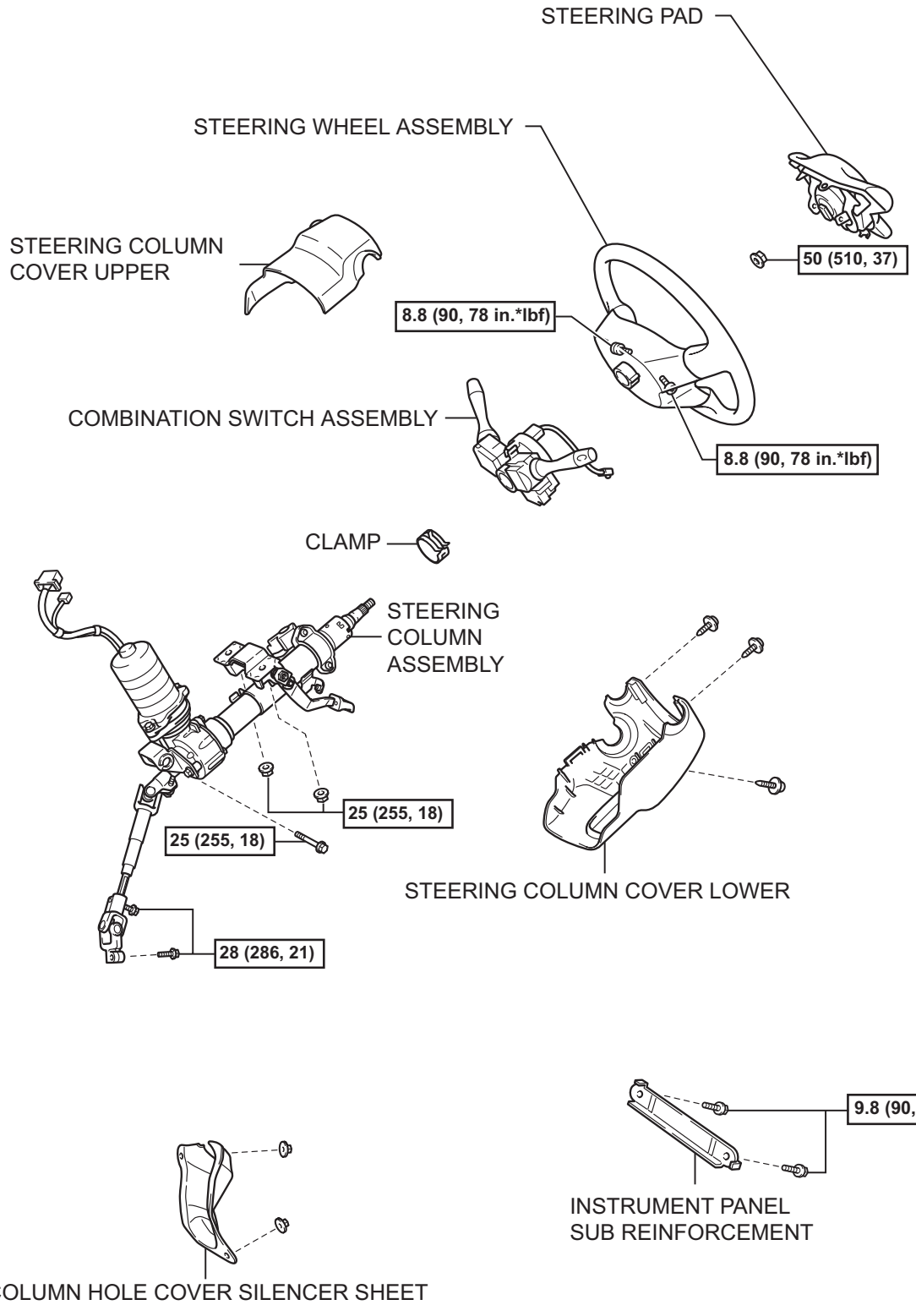

N*m (kgf*cm, ft.*lbf) : Specified torque

N

I101561E01

AC

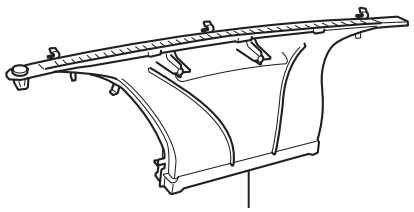

for Cold Area Specification Vehicles:

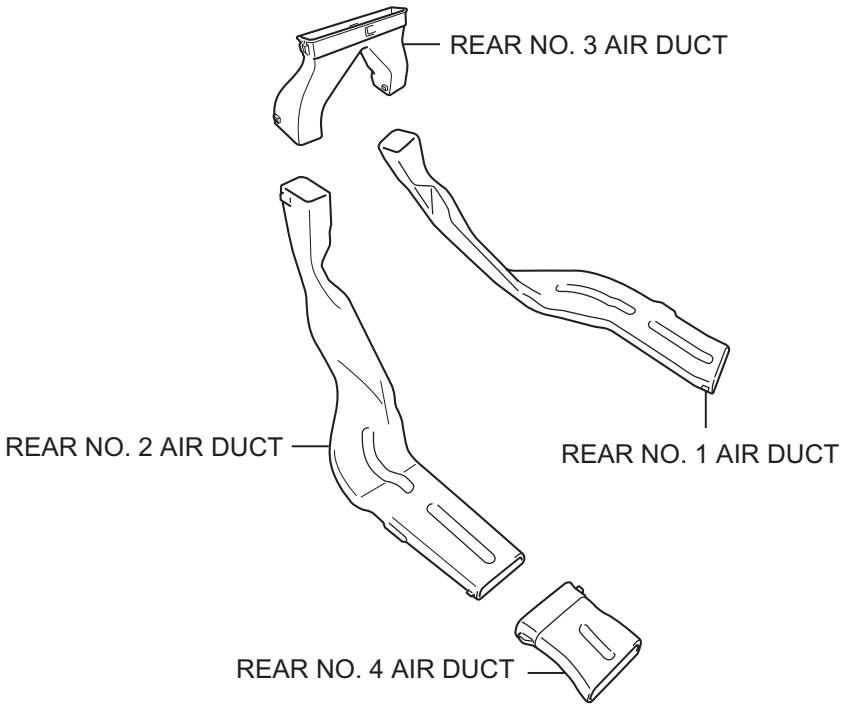

AC

Y

I101610E01

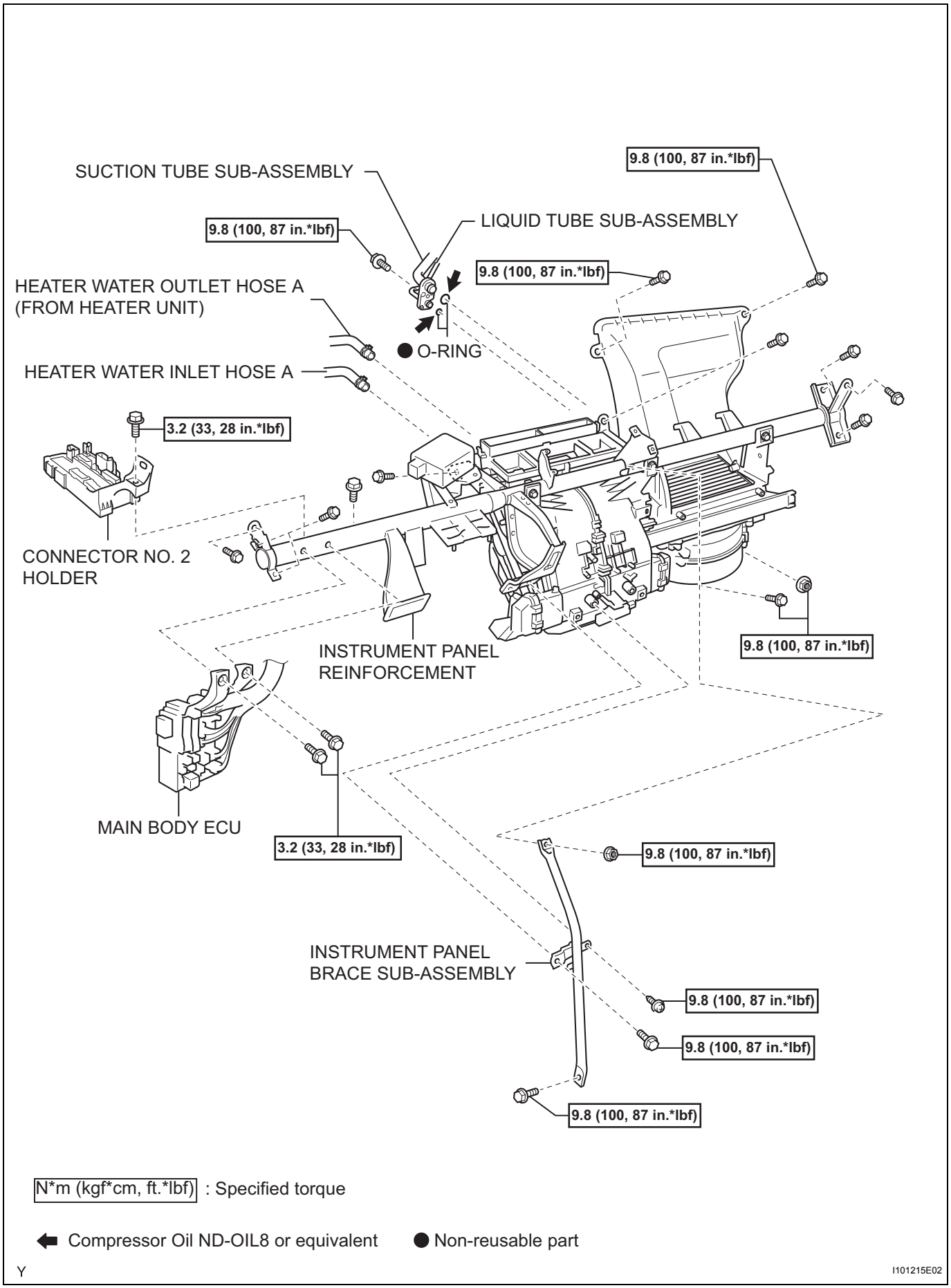
SUCTION TUBE SUB-ASSEMBLY
9.8 (100, 87 in.*lbf)
LIQUID TUBE SUB-ASSEMBLY
9.8 (100, 87 in.*lbf)
9.8 (100, 87 in.*lbf)
HEATER WATER OUTLET HOSE A
(FROM HEATER UNIT)
O-RING
HEATER WATER INLET HOSE A
3.2 (33, 28 in.*lbf)
CONNECTOR NO. 2
HOLDER
INSTRUMENT PANEL
REINFORCEMENT
9.8 (100, 87 in.*lbf)
MAIN BODY ECU
3.2 (33, 28 in.*lbf)
9.8 (100, 87 in.*lbf)
INSTRUMENT PANEL
BRACE SUB-ASSEMBLY
9.8 (100, 87 in.*lbf)
9.8 (100, 87 in.*lbf)
9.8 (100, 87 in.*lbf)
N*m (kgf*cm, ft.*lbf) : Specified torque
Compressor Oil ND-OIL8 or equivalent
Non-reusable part
Y
I101215E02

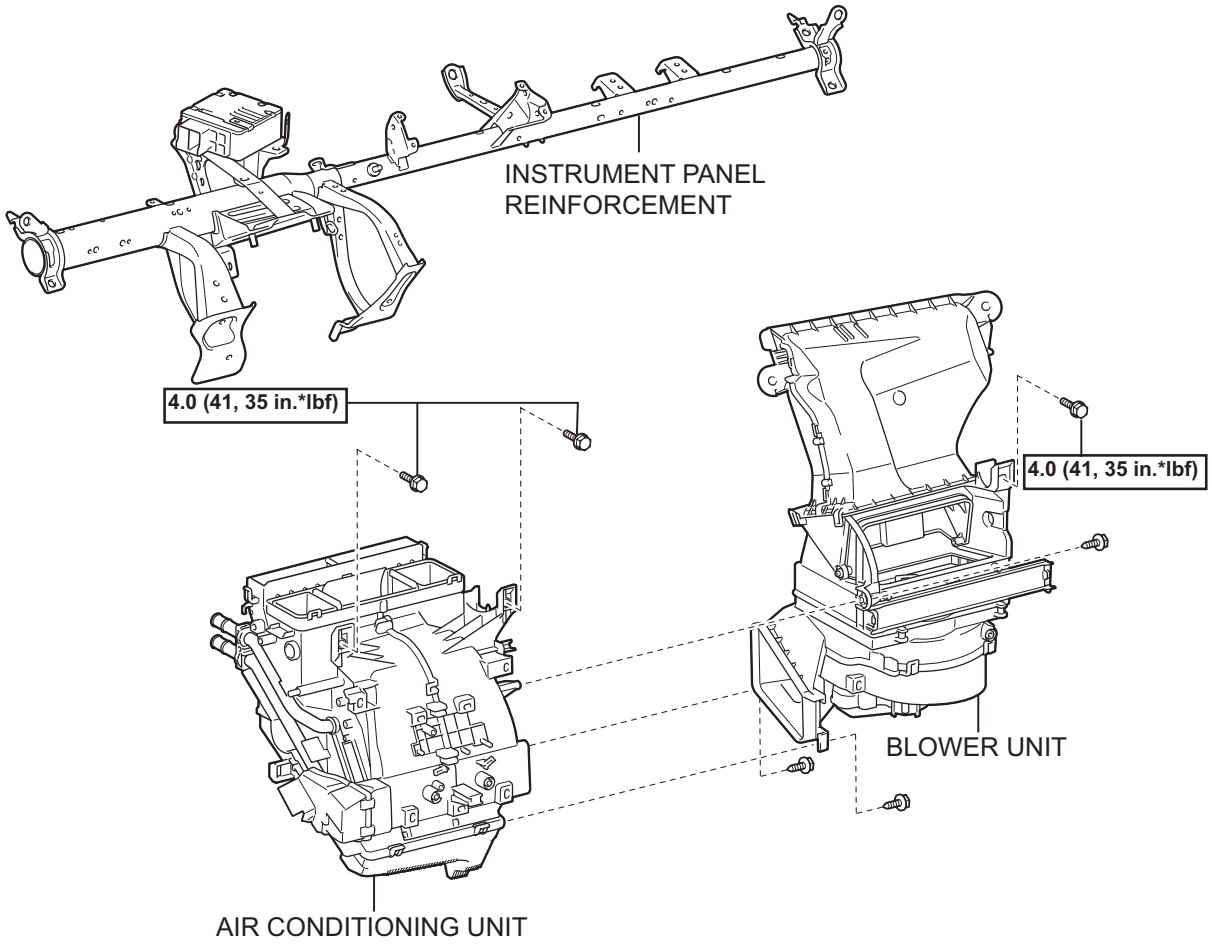

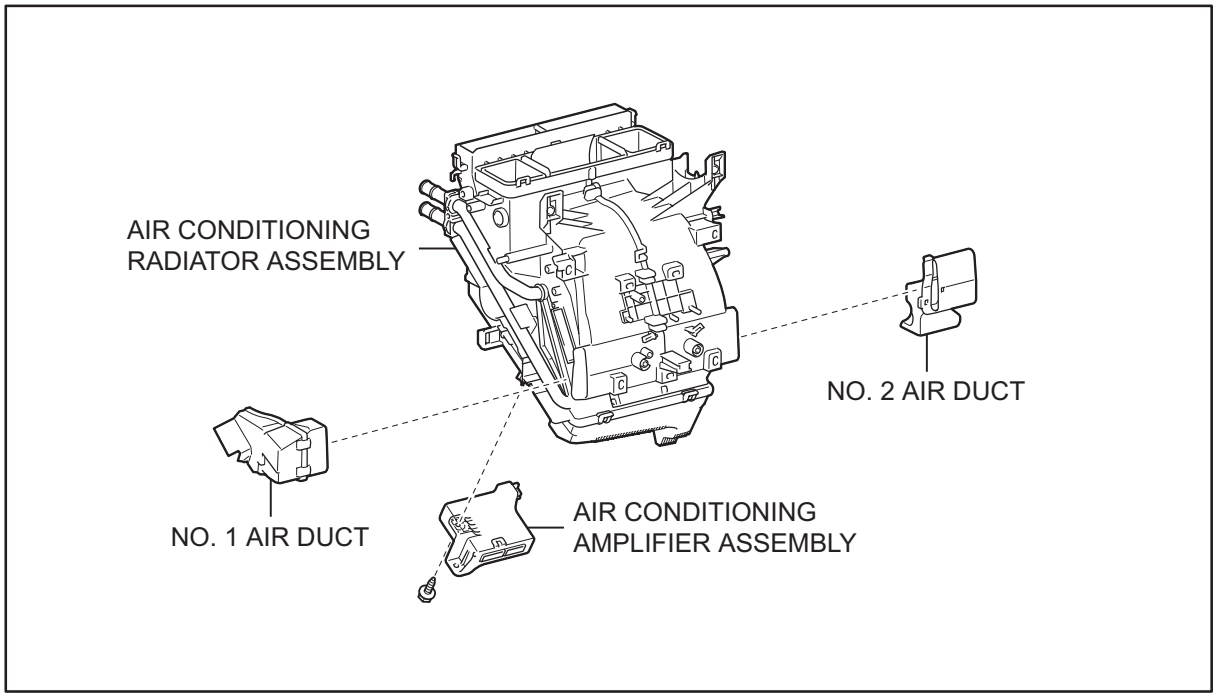

AC

N*m (kgf*cm, ft.*lbf) : Specified torque

P

I101574E01

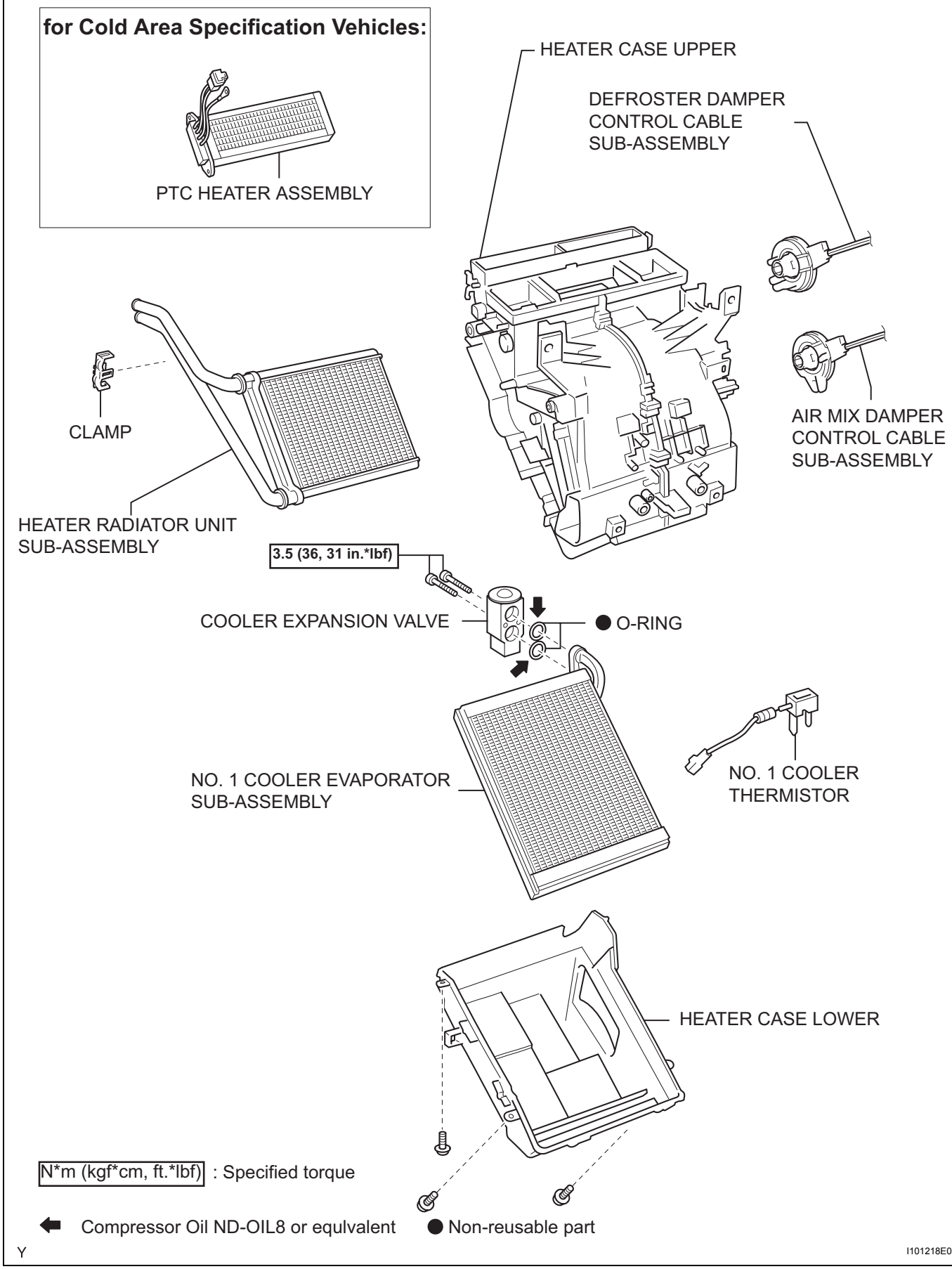
for Cold Area Specification Vehicles:
PTC HEATER ASSEMBLY
HEATER CASE UPPER
DEFROSTER DAMPER CONTROL CABLE SUB-ASSEMBLY
AIR MIX DAMPER CONTROL CABLE SUB-ASSEMBLY
CLAMP
HEATER RADIATOR UNIT SUB-ASSEMBLY
3.5 (36, 31 in.*lbf)
COOLER EXPANSION VALVE
● O-RING
NO. 1 COOLER EVAPORATOR SUB-ASSEMBLY
NO. 1 COOLER THERMISTOR
HEATER CASE LOWER
N*m (kgf*cm, ft.*lbf) : Specified torque
⬅ Compressor Oil ND-OIL8 or equlvalent
● Non-reusable part
Y
I101218E01

AC

REMOVAL

CAUTION:
Some of these service operations affect the SRS airbag system. Read the precautionary notices concerning the SRS airbag system before servicing (See page RS-31).
HINT:
Use the same procedure for both the RH and LH sides.

1. **DISCONNECT CABLE FROM NEGATIVE BATTERY TERMINAL**
   Wait for at least 90 seconds after disconnecting the cable to prevent the airbag from working.
2. **DISCHARGE REFRIGERANT FROM REFRIGERATION SYSTEM (See page AC-66)**
3. **DRAIN ENGINE COOLANT (See page CO-8)**
4. **REMOVE FRONT WIPER ARM HEAD CAP (See page WW-17)**
5. **REMOVE FRONT WIPER ARM AND BLADE ASSEMBLY LH (See page WW-17)**
6. **REMOVE FRONT WIPER ARM AND BLADE ASSEMBLY RH (See page WW-17)**
7. **REMOVE HOOD TO COWL TOP SEAL (See page WW-18)**
8. **REMOVE COWL TOP VENTILATOR LOUVER SUB-ASSEMBLY (See page WW-18)**
9. **REMOVE COWL TOP VENTILATOR LOUVER LH (See page WW-18)**
10. **REMOVE FRONT WIPER MOTOR AND LINK (See page WW-19)**
11. **REMOVE NO. 2 COWL TO REGISTER DUCT SUB-ASSEMBLY (See page EM-122)**
12. **REMOVE COWL TOP PANEL OUTER (See page EM-123)**
13. **DISCONNECT SUCTION TUBE SUB-ASSEMBLY**
    (a) Remove the bolt.
    (b) Turn the hook type connector clockwise and disconnect the suction tube.
    (c) Remove the O-ring from the suction tube.
    NOTICE:
    Seal the openings of the disconnected parts using vinyl tape to prevent moisture and foreign matter from entering.
14. **DISCONNECT LIQUID TUBE SUB-ASSEMBLY**
    (a) Disconnect the liquid tube.

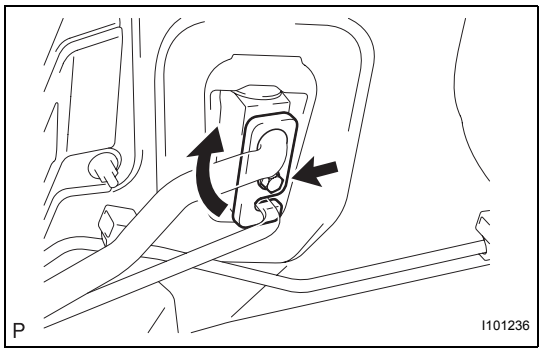

(b) Remove the O-ring from liquid tube.
NOTICE:
Seal the opening of the disconnected parts using vinyl tape to prevent moisture and foreign matter from entering.

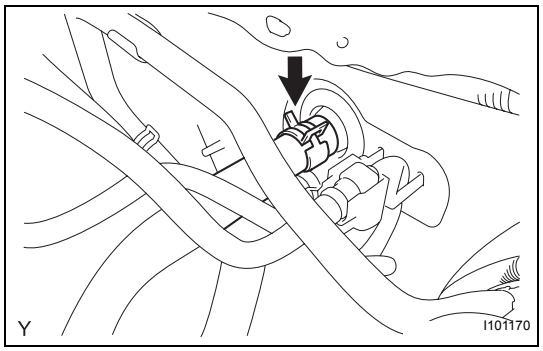

15. **DISCONNECT HEATER WATER OUTLET HOSE A (FROM HEATER UNIT)**
(a) Using pliers, grip the claws of the clip, slide the clip and disconnect the heater water outlet hose from the heater unit.

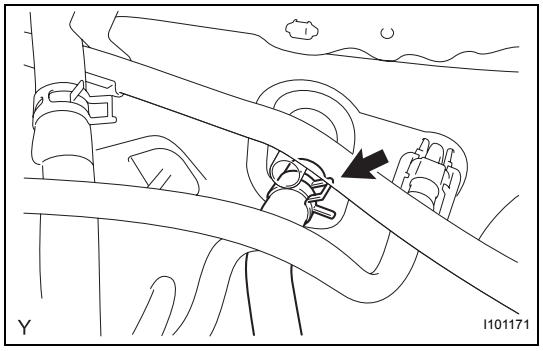

16. **DISCONNECT HEATER WATER INLET HOSE A**
(a) Using pliers, grip the claws of the clip, slide the clip and disconnect the heater water inlet hose from the heater unit.

17. **BOLTS, SCREWS AND NUTS TABLE (See page IP-66)**

18. **REMOVE INSTRUMENT PANEL FINISH PANEL END LH (See page ME-145)**

19. **REMOVE INSTRUMENT PANEL FINISH PANEL END RH (See page ME-145)**

20. **REMOVE INSTRUMENT CLUSTER FINISH PANEL (See page ME-145)**

21. **REMOVE COMBINATION METER ASSEMBLY (See page ME-146)**

22. **REMOVE INSTRUMENT CLUSTER FINISH PANEL SUB-ASSEMBLY CENTER (See page AC-250)**

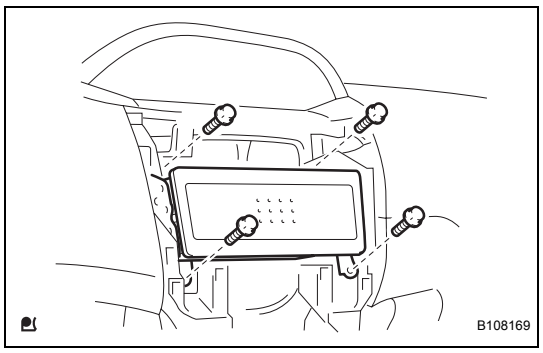

23. **REMOVE RADIO TUNER OPENING COVER (w/o Radio Receiver)**
(a) Remove the 4 bolts and the radio tuner opening cover.

24. **REMOVE RADIO RECEIVER ASSEMBLY (See page AV-44)**

25. **REMOVE AIR CONDITIONER PANEL SUB-ASSEMBLY (See page AC-250)**

26. **DISCONNECT AIR MIX DAMPER CONTROL CABLE SUB-ASSEMBLY (See page AC-251)**

27. **DISCONNECT DEFROSTER DAMPER CONTROL CABLE SUB-ASSEMBLY (See page AC-251)**

28. **DISCONNECT AIR INLET DAMPER CONTROL CABLE SUB-ASSEMBLY (See page AC-251)**

29. **REMOVE FRONT DOOR OPENING TRIM WEATHERSTRIP RH (See page IR-50)**

30. REMOVE FRONT DOOR OPENING TRIM WEATHERSTRIP LH (See page IR-50)
31. REMOVE FRONT PILLAR GARNISH RH (See page IR-58)
32. REMOVE FRONT PILLAR GARNISH LH (See page IR-59)
33. REMOVE NO. 1 SWITCH HOLE BASE (See page IP-20)
34. REMOVE GLOVE COMPARTMENT DOOR ASSEMBLY (See page IP-20)
35. REMOVE UPPER INSTRUMENT PANEL SUB-ASSEMBLY (See page IP-21)
36. REMOVE FRONT DOOR SCUFF PLATE RH (See page IR-49)
37. REMOVE FRONT DOOR SCUFF PLATE LH (See page IR-49)
38. REMOVE INSTRUMENT PANEL UNDER COVER SUB-ASSEMBLY RH (See page IR-50)
39. REMOVE INSTRUMENT PANEL UNDER COVER SUB-ASSEMBLY LH (See page IR-50)
40. REMOVE COWL SIDE TRIM BOARD RH (See page IR-50)
41. REMOVE COWL SIDE TRIM BOARD LH (See page IR-50)
42. REMOVE SHIFT LEVER KNOB SUB-ASSEMBLY (for Manual Transaxle) (See page IP-68)
43. REMOVE SHIFTING HOLE COVER SUB-ASSEMBLY (for Manual Transaxle) (See page IP-68)
44. REMOVE CONSOLE BOX REAR COVER (See page IP-68)
45. REMOVE CONSOLE BOX CARPET (See page IP-68)
46. REMOVE CONSOLE BOX ASSEMBLY REAR (See page IP-69)
47. REMOVE INSTRUMENT PANEL FINISH PANEL SUB-ASSEMBLY LOWER (See page IP-69)
48. REMOVE INSTRUMENT PANEL BOX (See page IP-70)
49. REMOVE NO. 6 HEATER TO REGISTER DUCT ASSEMBLY (See page IP-70)
50. DISCONNECT ANTENNA CORD SUB-ASSEMBLY (See page IP-70)
51. SEPARATE HOOD LOCK CONTROL LEVER SUB-ASSEMBLY (See page IP-71)
52. REMOVE LOWER INSTRUMENT PANEL SUB-ASSEMBLY (See page IP-71)

53. **POSITION FRONT WHEELS FACING STRAIGHT AHEAD**

54. **REMOVE STEERING PAD (See page RS-309)**

55. **REMOVE STEERING WHEEL ASSEMBLY (See page SR-30)**

56. **REMOVE STEERING COLUMN COVER (See page SR-30)**

57. **REMOVE COMBINATION SWITCH ASSEMBLY (See page SR-31)**

58. **DISCONNECT POWER STEERING ECU (See page SR-32)**

59. **REMOVE INSTRUMENT PANEL SUB REINFORCEMENT (See page SR-32)**

60. **REMOVE COLUMN HOLE COVER SILENCER SHEET (See page SR-32)**

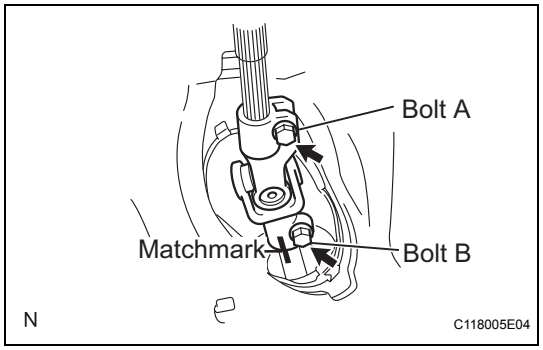

61. **SEPARATE STEERING SLIDING YOKE SUB-ASSEMBLY**
    (a) Place matchmarks on the sliding yoke of the steering intermediate shaft and the power steering link.
    (b) Loosen bolt A, remove bolt B and separate the steering yoke.

62. **REMOVE BRAKE PEDAL (for Automatic Transaxle) (See page SR-32)**

63. **REMOVE BRAKE MASTER CYLINDER PUSH ROD CLEVIS (for Manual Transaxle) (See page BR-20)**

64. **REMOVE BRAKE PEDAL SUPPORT SUB-ASSEMBLY (for Manual Transaxle) (See page BR-21)**

65. **REMOVE STEERING COLUMN ASSEMBLY (See page SR-33)**

66. **REMOVE DEFROSTER NOZZLE ASSEMBLY**
    (a) Disconnect the connectors and clamps.

(b) Disengage the 5 claws and remove the defroster nozzle.

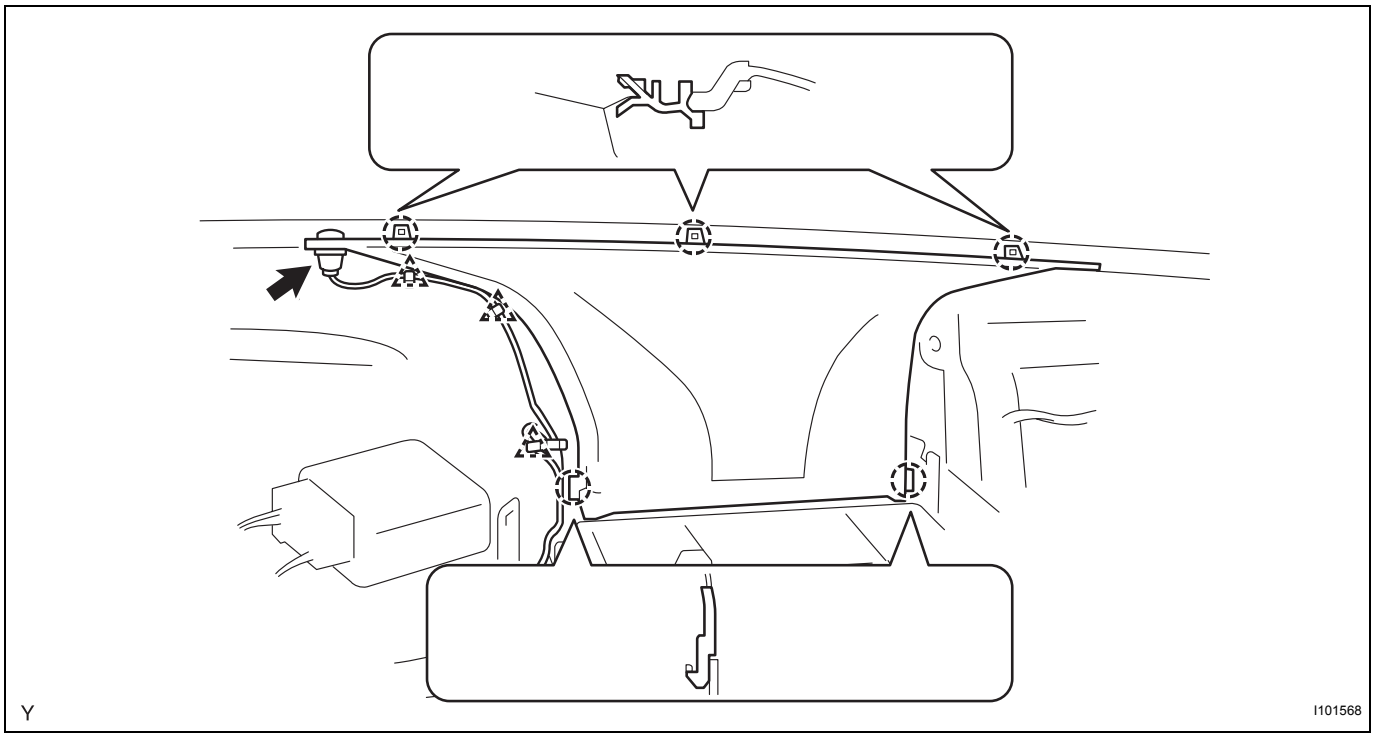

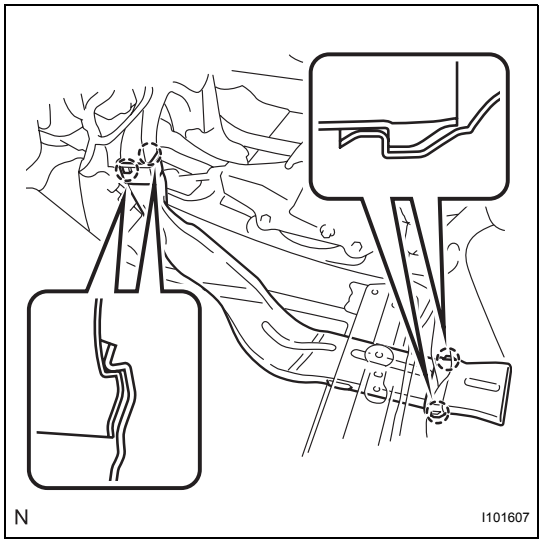

67. REMOVE REAR NO. 2 AIR DUCT (for Cold Area Specification Vehicles)

(a) Disengage the 4 claws and remove the air duct.

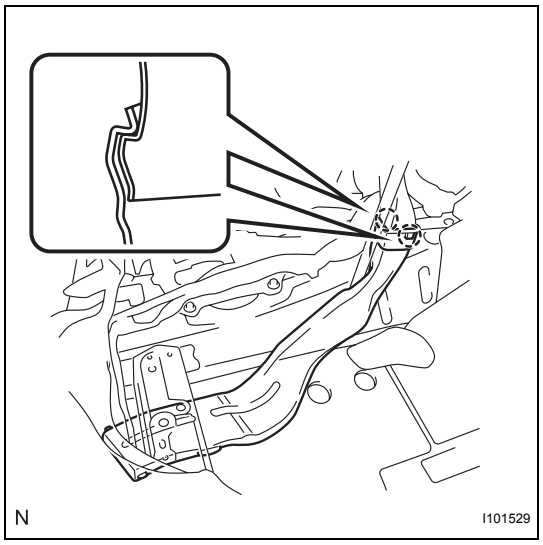

68. REMOVE REAR NO. 1 AIR DUCT (for Cold Area Specification Vehicles)

(a) Disengage the 2 claws and remove the air duct.

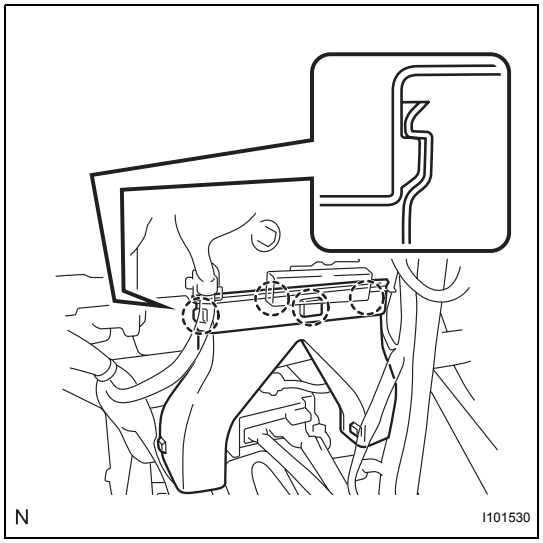

69. REMOVE REAR NO. 3 AIR DUCT (for Cold Area Specification Vehicles)

(a) Disengage the 4 claws and remove the air duct.

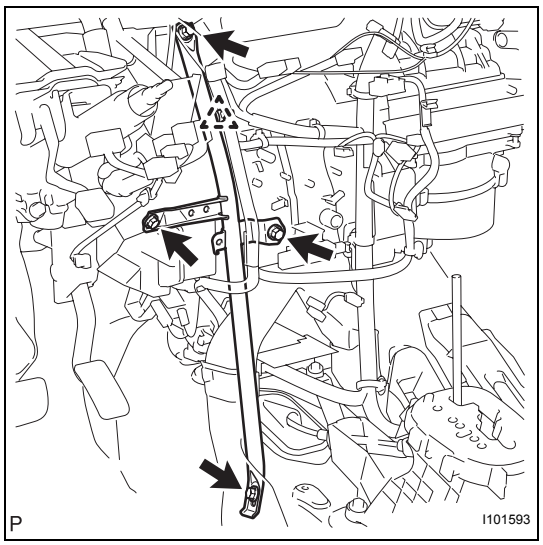

70. REMOVE INSTRUMENT PANEL BRACE SUB-ASSEMBLY

(a) Disengage the clamp.

(b) Remove 2 bolts, screw and nut and remove the instrument panel brace.

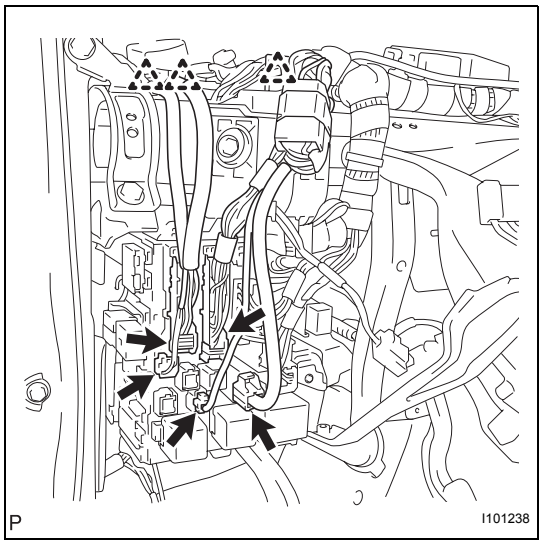

71. SEPARATE MAIN BODY ECU

(a) Disconnect the 5 connectors and 3 clamps.

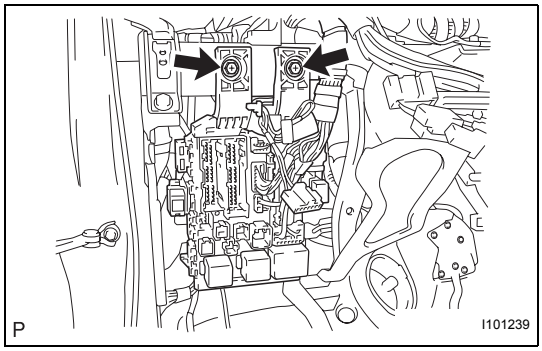

(b) Remove the 2 bolts and separate the main body ECU.

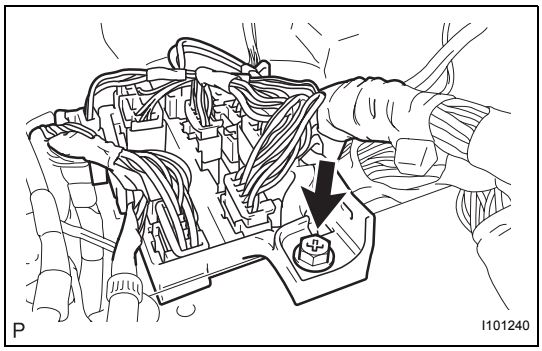

72. SEPARATE CONNECTOR NO. 2 HOLDER

(a) Remove the bolt.

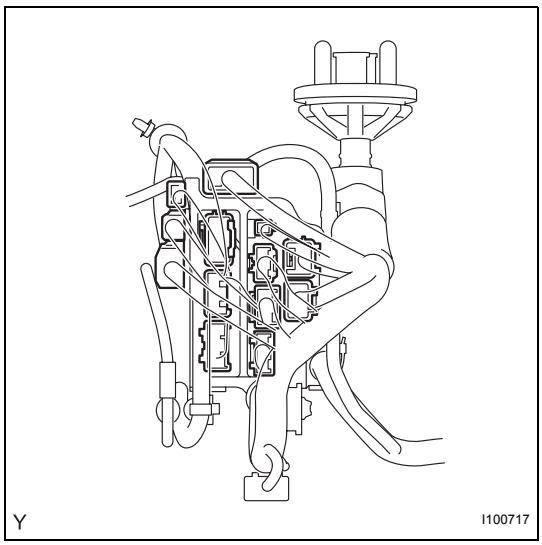

(b) Disconnect the connectors and separate the connector No. 2 holder.

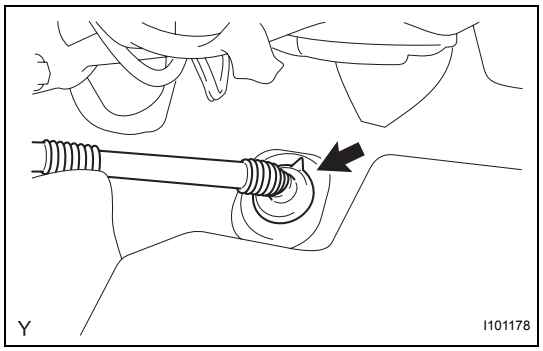

73. REMOVE INSTRUMENT PANEL REINFORCEMENT

(a) Disconnect the drain hose.

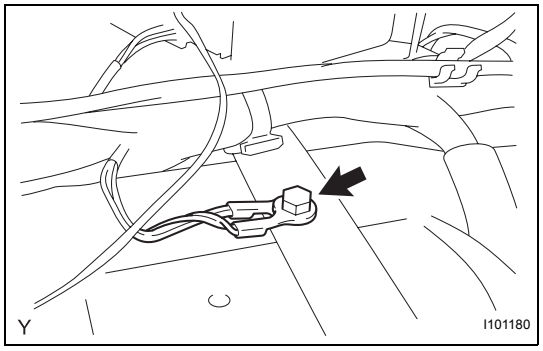

(b) Remove the bolt and disconnect the ground wire.

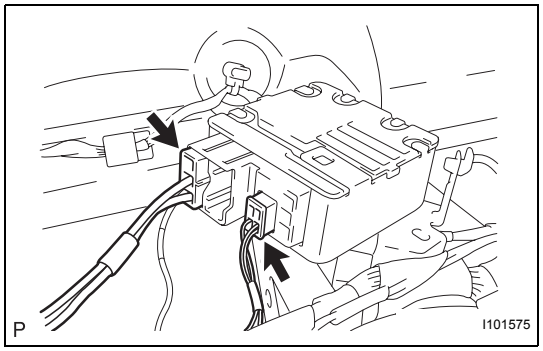

(c) Disconnect the connector.

(d) Disengage the clamps.

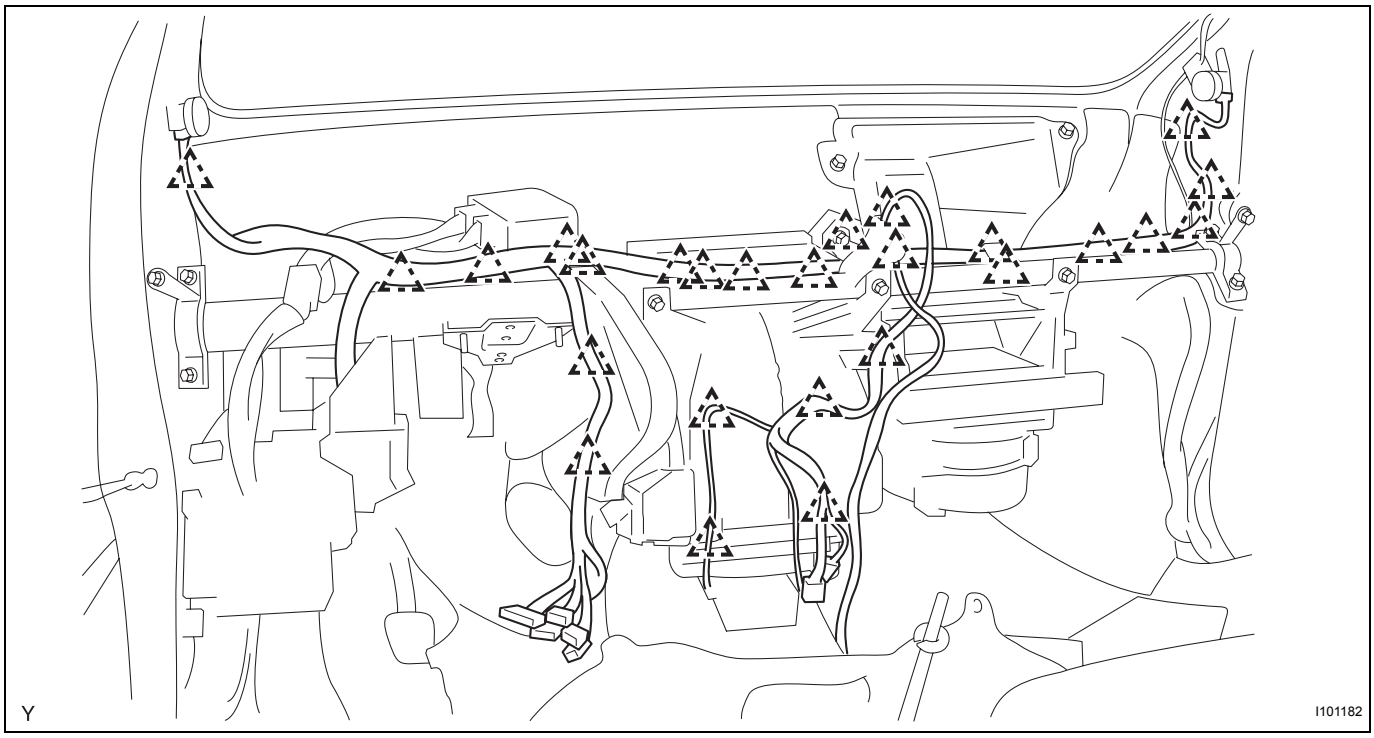

AC

(e) Disconnect the connectors and clamps.

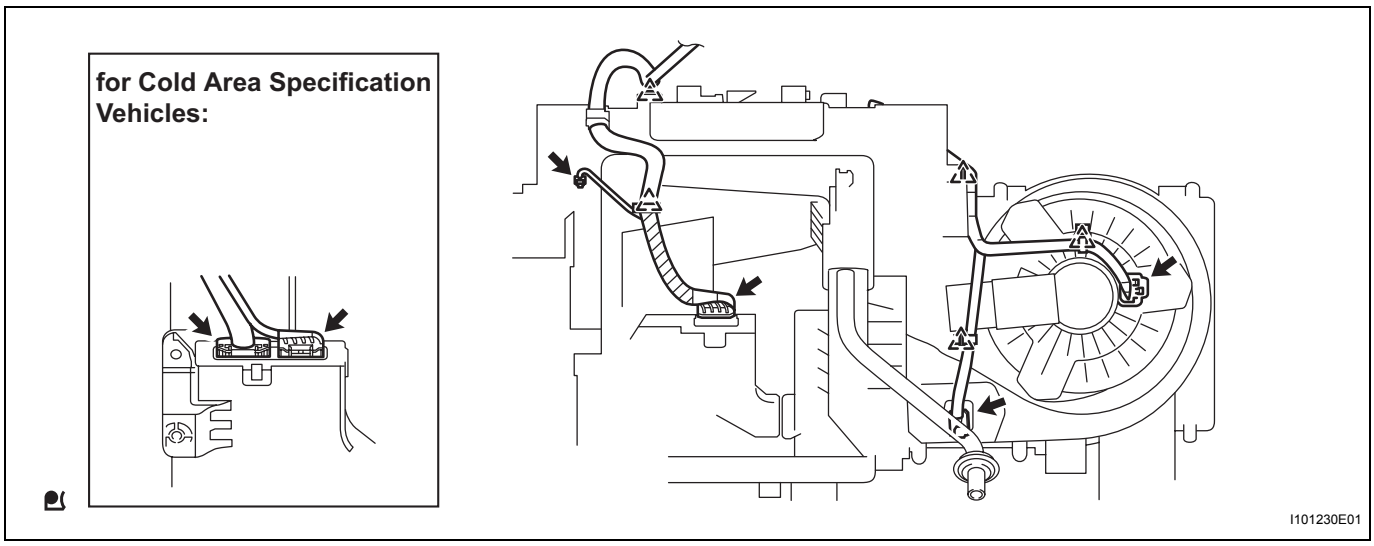

(f) Remove the 3 bolts and the nut.

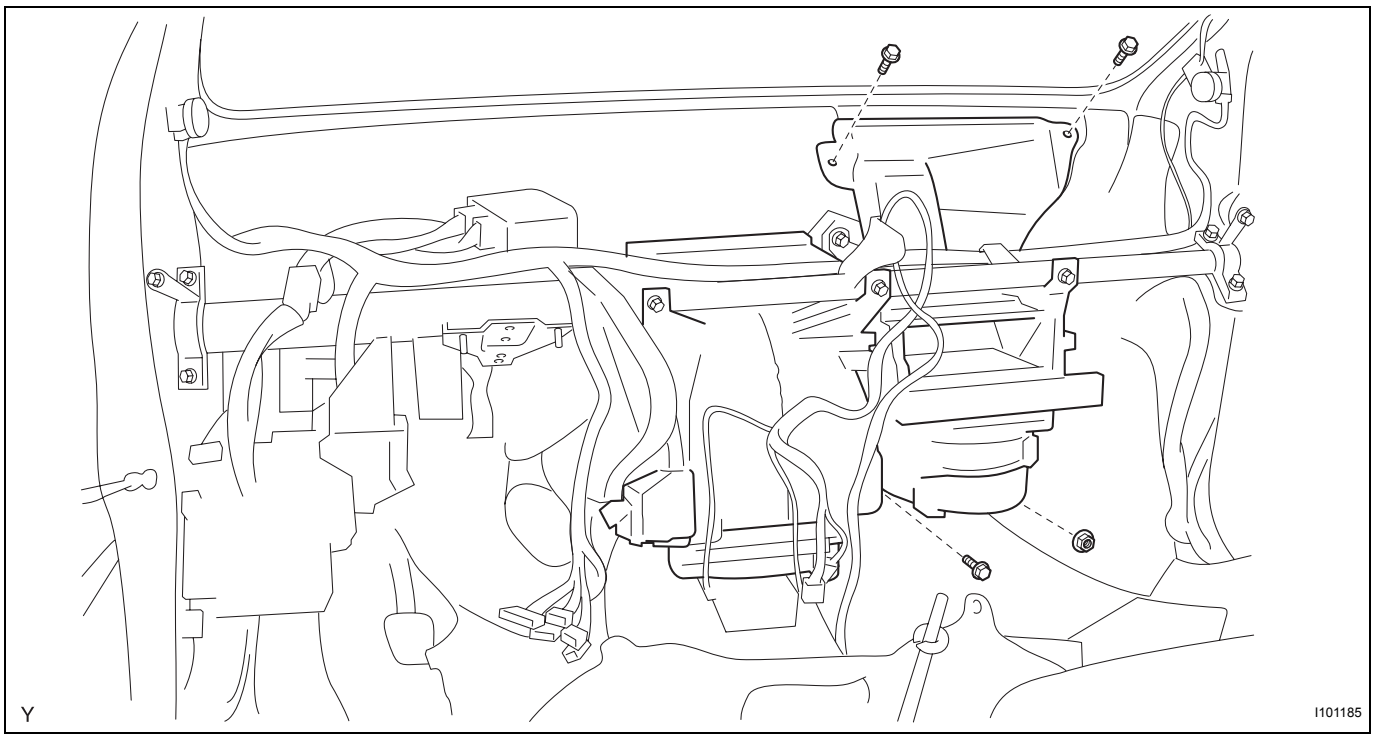

(g) Remove the 9 bolts and remove the instrument panel reinforcement together with the air conditioning unit.

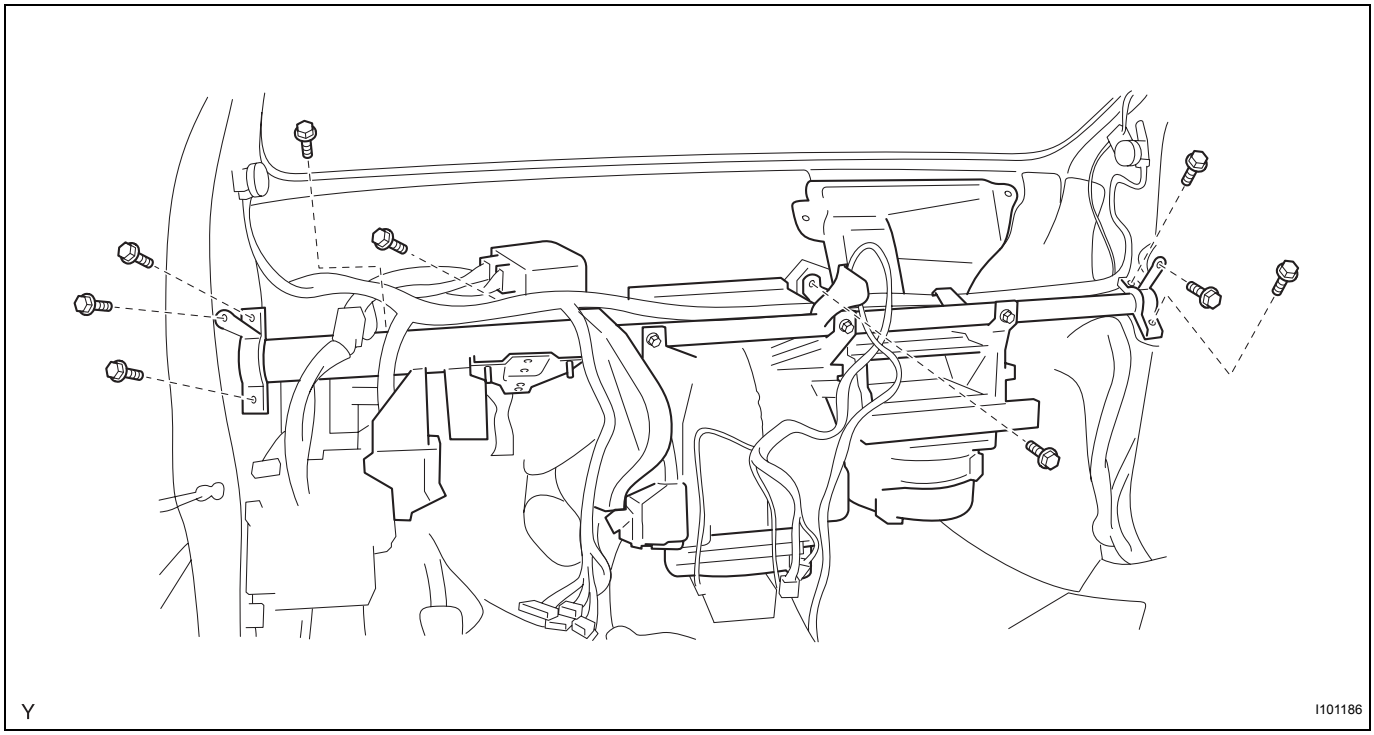

(h) Disconnect the connector and the 3 clamps.

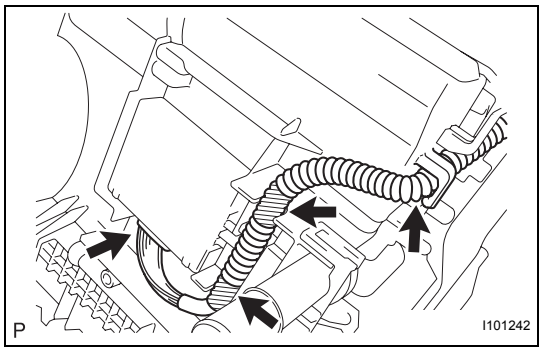

(i) Remove the 3 screws and the air conditioning unit.

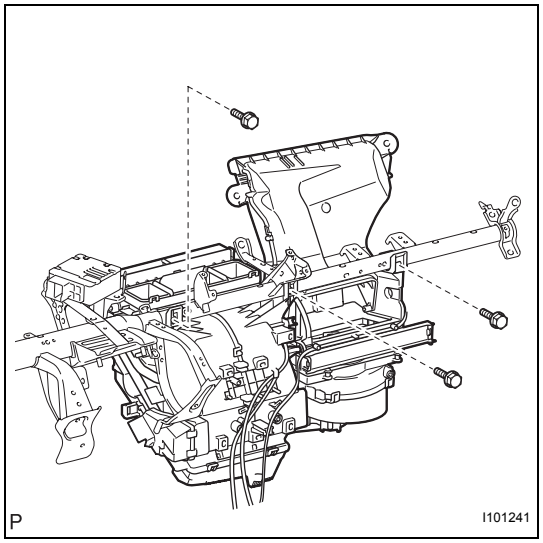

AC

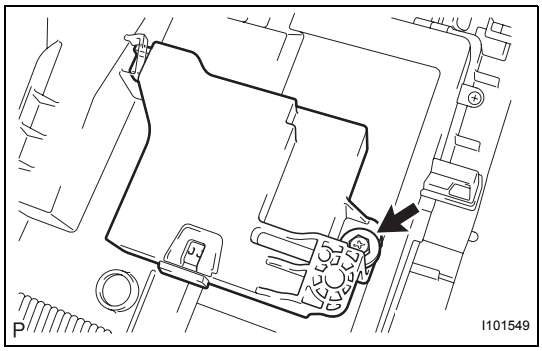

74. REMOVE AIR CONDITIONING AMPLIFIER ASSEMBLY

(a) Remove the screw and the air conditioning amplifier.

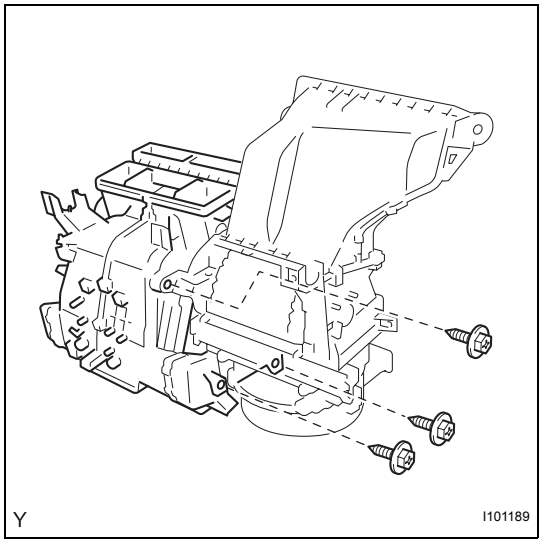

75. REMOVE AIR CONDITIONING UNIT

(a) Remove the 3 screws and the air conditioning unit.

DISASSEMBLY

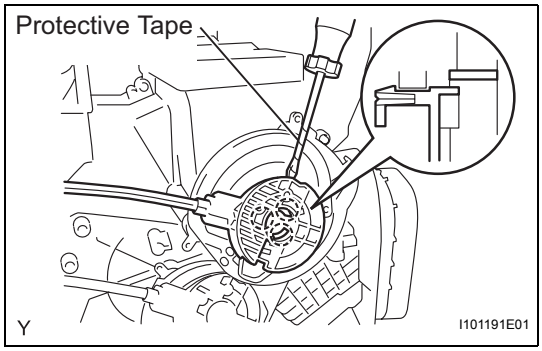

1. REMOVE DEFROSTER DAMPER CONTROL CABLE SUB-ASSEMBLY

(a) Using a screwdriver with its tip wrapped in protective tape, disengage the claw and remove the defroster damper control cable.

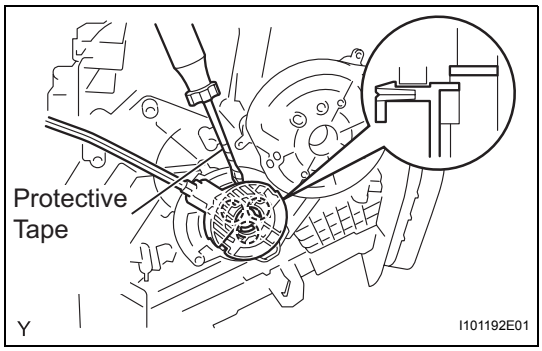

2. REMOVE AIR MIX DAMPER CONTROL CABLE SUB-ASSEMBLY

(a) Using a screwdriver with its tip wrapped in protective tape, disengage the claw and remove the air mix damper control cable.

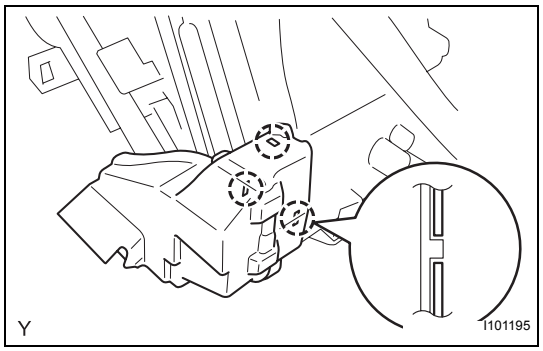

3. REMOVE NO. 1 AIR DUCT

(a) Disengage the 3 claws and remove the air duct.

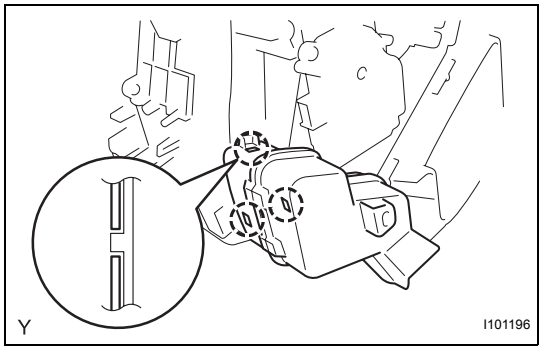

4. REMOVE NO. 2 AIR DUCT

(a) Disengage the 3 claws and remove the air duct.

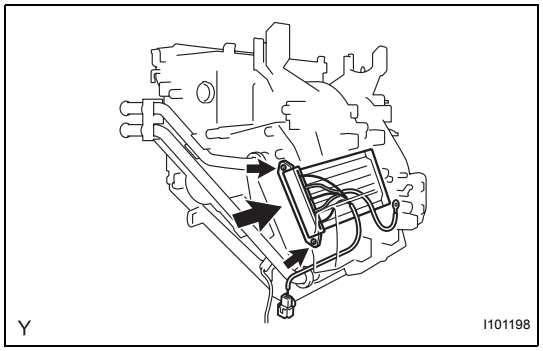

5. REMOVE PTC HEATER ASSEMBLY (for Cold Area Specification Vehicles)

(a) Remove the 2 screws and the PTC heater.

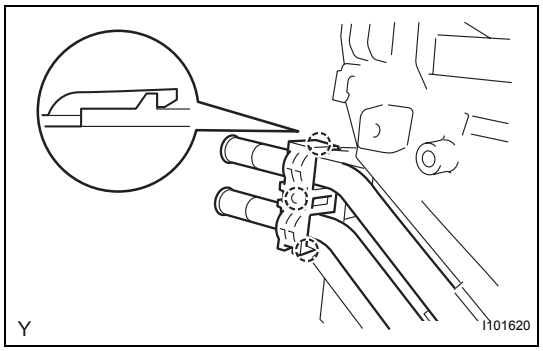

6. REMOVE HEATER RADIATOR UNIT SUB-ASSEMBLY

(a) Disengage the 3 claws and remove the clamp.

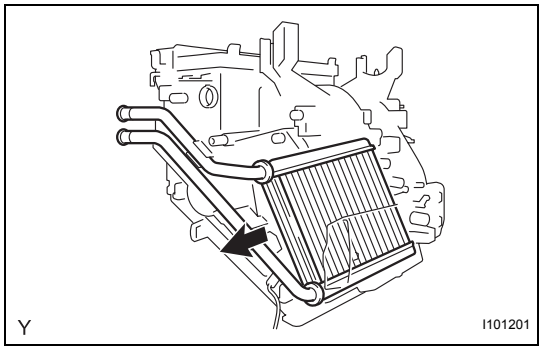

(b) Remove the heater radiator unit from the air conditioner radiator assembly.

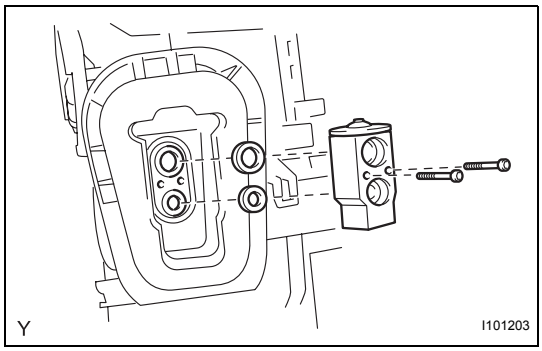

7. REMOVE COOLER EXPANSION VALVE

(a) Using a hexagon wrench 4, remove the 2 hexagon bolts and detach the cooler expansion valve.

(b) Remove the 2 O-rings from the cooler evaporator.

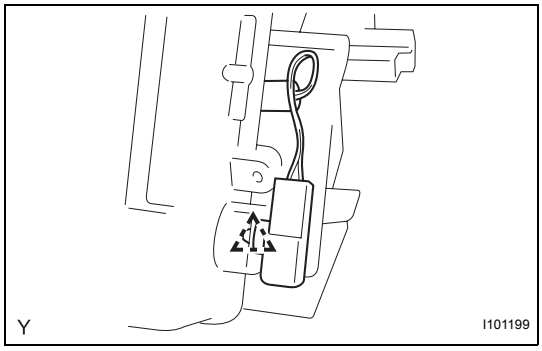

8. REMOVE NO. 1 COOLER EVAPORATOR SUB-ASSEMBLY

(a) Disengage the cooler thermistor connector.

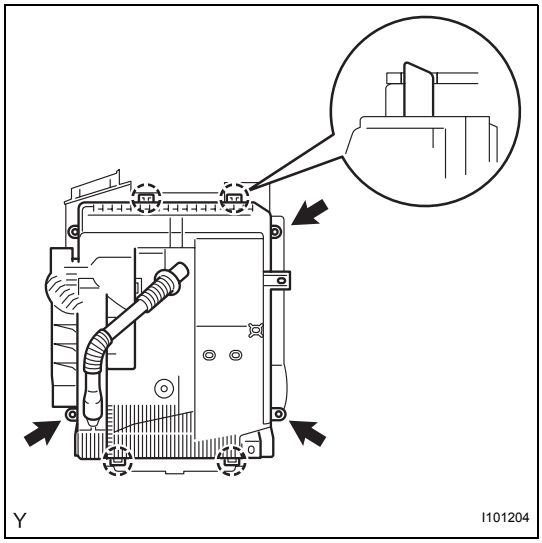

(b) Remove the 3 screws.

(c) Disengage the 4 claws and remove the heater case lower.

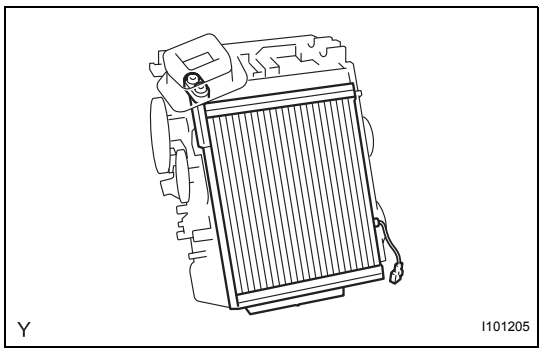

(d) Remove the cooler evaporator.

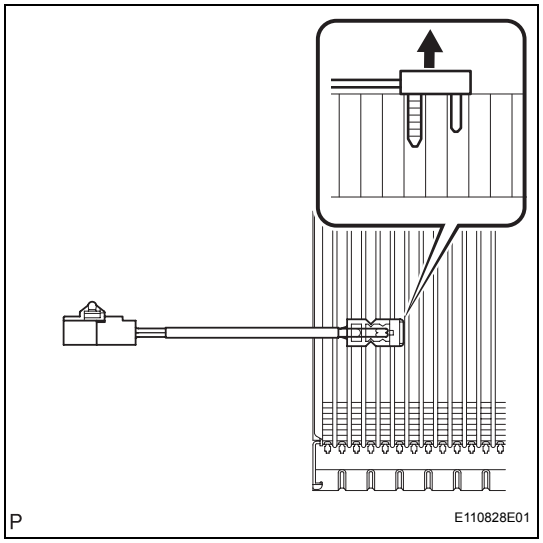

9. REMOVE NO. 1 COOLER THERMISTOR

(a) Remove the cooler thermistor from the cooler evaporator.

INSPECTION

1. INSPECT NO. 1 COOLER THERMISTOR

(a) Measure the resistance.

Standard resistance

Tester Connection	Condition	Specified Condition
1 - 2	-10°C (14°F)	7.30 to 9.10 kΩ
1 - 2	-5°C (23°F)	5.65 to 6.95 kΩ
1 - 2	0°C (32°F)	4.40 to 5.35 kΩ
1 - 2	5°C (41°F)	3.40 to 4.15 kΩ
1 - 2	10°C (50°F)	2.70 to 3.25 kΩ
1 - 2	15°C (59°F)	2.14 to 2.58 kΩ
1 - 2	20°C (68°F)	1.71 to 2.05 kΩ
1 - 2	25°C (77°F)	1.38 to 1.64 kΩ
1 - 2	30°C (86°F)	1.11 to 1.32 kΩ

NOTICE:

- **Touching the sensor even slightly may change the resistance value. Hold the connector of the sensor.**
- **When measuring the resistance, the temperature of the sensor and the cooler thermistor must be the same.**

HINT:

As the temperature increases, the resistance decreases (see the graph).

If the operation is not as specified, replace the cooler thermistor.

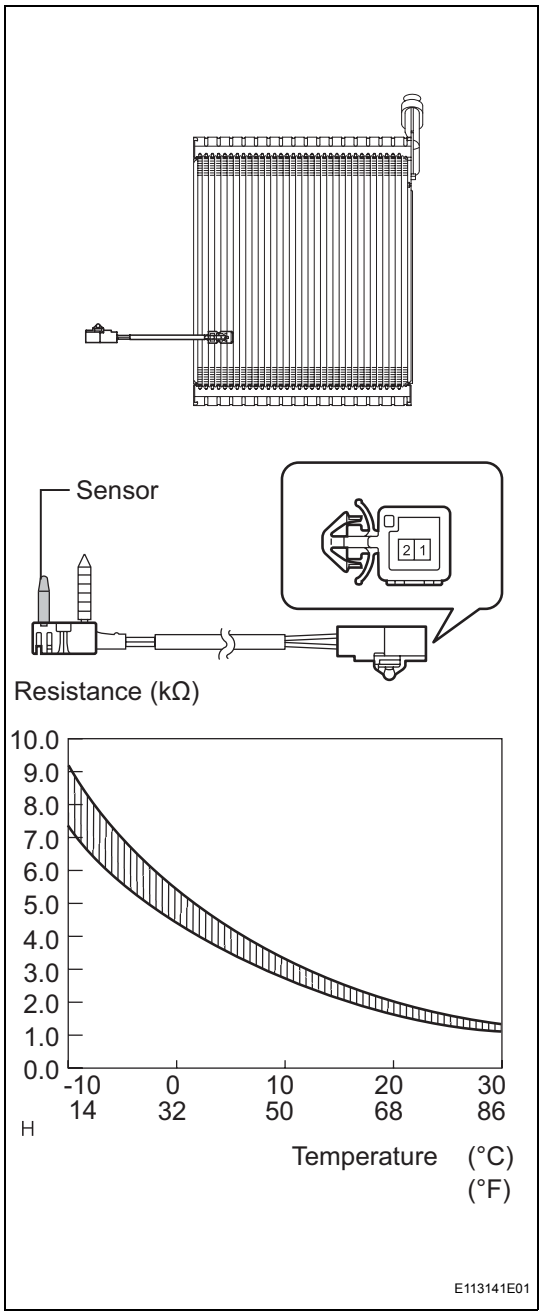

AC

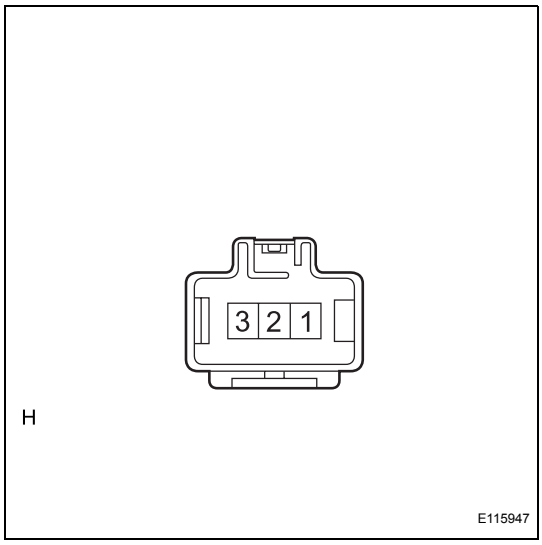

2. INSPECT PTC HEATER ASSEMBLY

(a) Measure the resistance.

Standard resistance

Tester Connection	Specified Condition
1 - 2	Below 1 Ω
2 - 3	Below 1 Ω
1 - 3	Below 1 Ω

If the resistance value is not as specified, replace the PTC heater assembly.

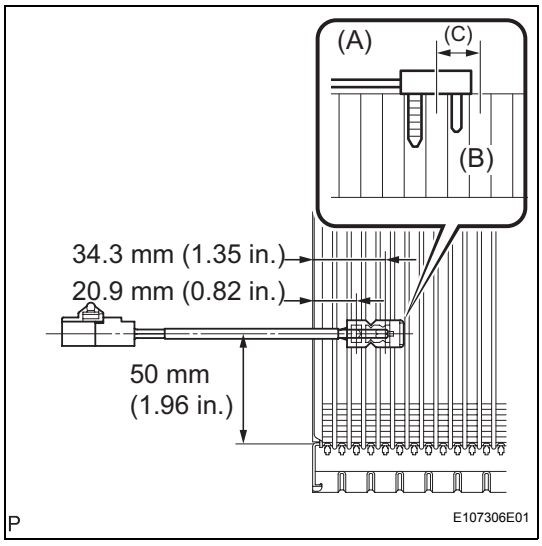

REASSEMBLY

1. INSTALL NO. 1 COOLER THERMISTOR

(a) Install the sensor onto the evaporator as shown in the illustration.

(b) Check that the sensor sticks to the evaporator surface as shown in the illustration (A: Sensor, B: Evaporator).

NOTICE:

If reusing the evaporator, do not reinsert the sensor in the same position that it was in before. Insert it within area C shown in the illustration.

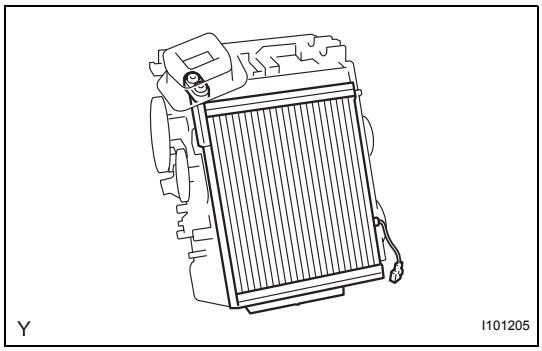

2. INSTALL NO. 1 COOLER EVAPORATOR SUB-ASSEMBLY

HINT:

If a new cooler evaporator is installed, add compressor oil to the cooler evaporator as follows.

Compressor oil:

ND-OIL8 or the equivalent. Add 40 cc (1.35 fl. oz.)

(a) Install the cooler evaporator.

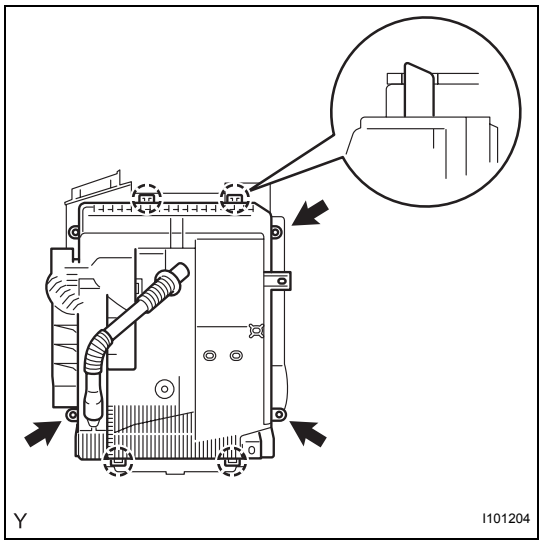

(b) Engage the 4 claws and install the heater case lower.
(c) Install the 3 screws.

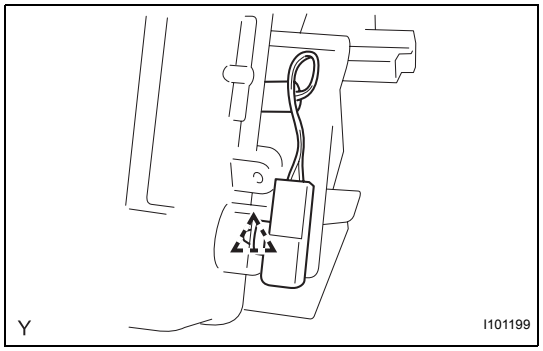

(d) Engage the cooler thermistor connector.

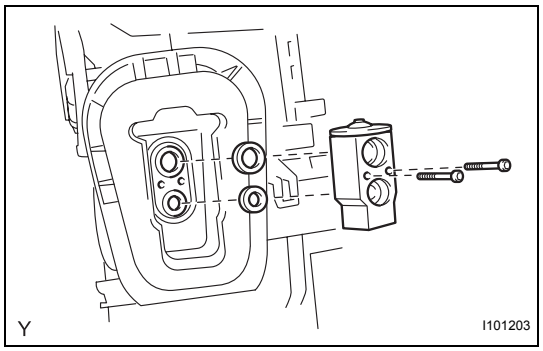

3. INSTALL COOLER EXPANSION VALVE

(a) Apply sufficient compressor oil (ND-OIL8) to 2 new O-rings and the fitting surface of the cooler expansion valve.
Compressor oil:
ND-OIL8 or the equivalent
(b) Install the 2 O-rings onto the cooler evaporator.
(c) Using a hexagon wrench 4, install the cooler expansion valve with the 2 hexagon bolts.
Torque: 3.5 N*m (36 kgf*cm, 31 in.*lbf)

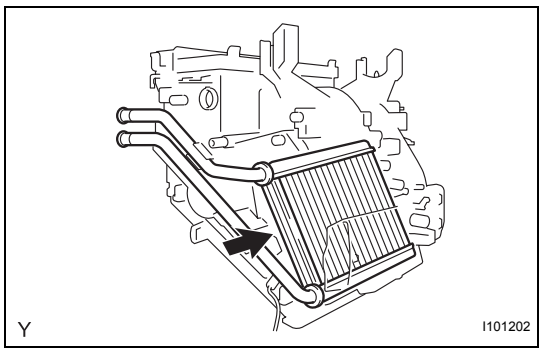

4. INSTALL HEATER RADIATOR UNIT SUB-ASSEMBLY

(a) Install the radiator heater unit onto the air conditioner radiator assembly.

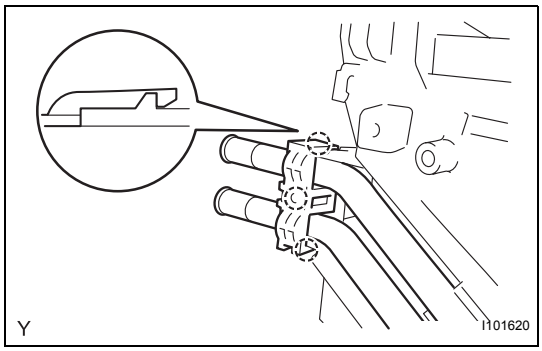

(b) Engage the 3 clips and install the clamp.

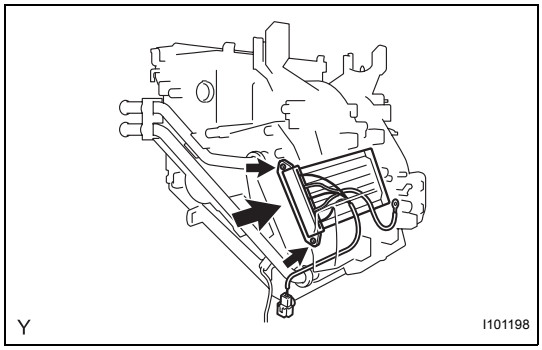

5. INSTALL PTC HEATER ASSEMBLY (for Cold Area Specification Vehicles)

(a) Install the PTC heater with the 2 screws.

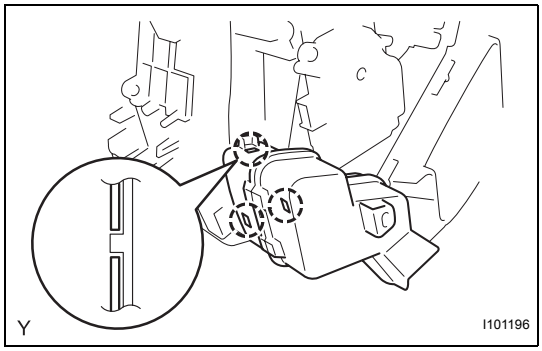

6. INSTALL NO. 2 AIR DUCT

(a) Engage the 3 claws and install the air duct.

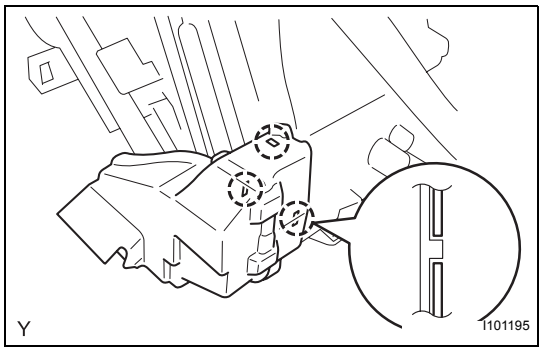

7. INSTALL NO. 1 AIR DUCT

(a) Engage the 3 claws and install the air duct.

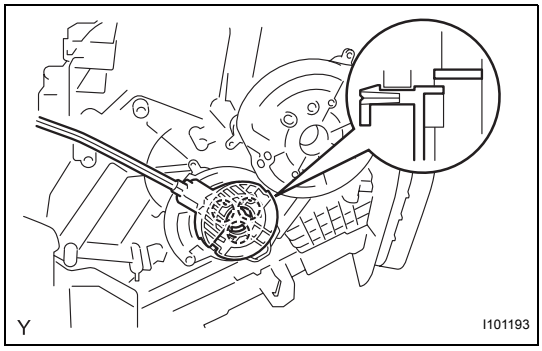

8. INSTALL AIR MIX DAMPER CONTROL CABLE SUB-ASSEMBLY

(a) Engage the claw and install the air mix damper control cable.

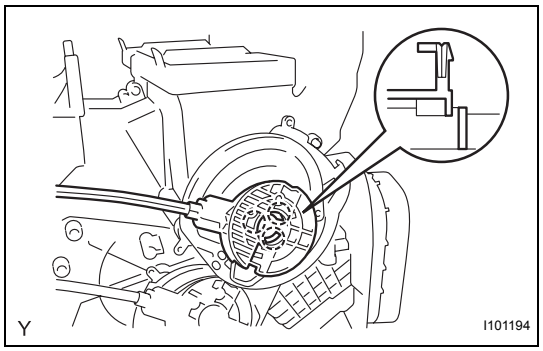

9. INSTALL DEFROSTER DAMPER CONTROL CABLE SUB-ASSEMBLY

(a) Engage the claw and install the defroster damper control cable.

INSTALLATION

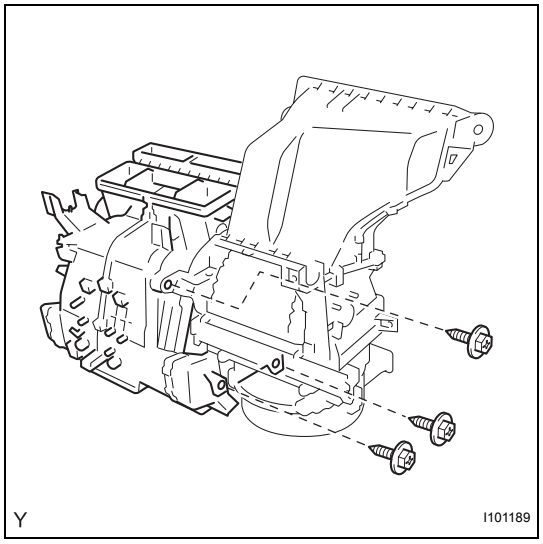

1. INSTALL AIR CONDITIONING UNIT

(a) Install the air conditioning unit with the 3 screws.

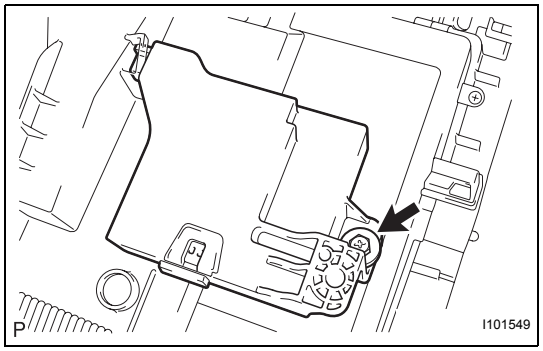

2. INSTALL AIR CONDITIONING AMPLIFIER ASSEMBLY

(a) Install the air conditioning amplifier with the screw.

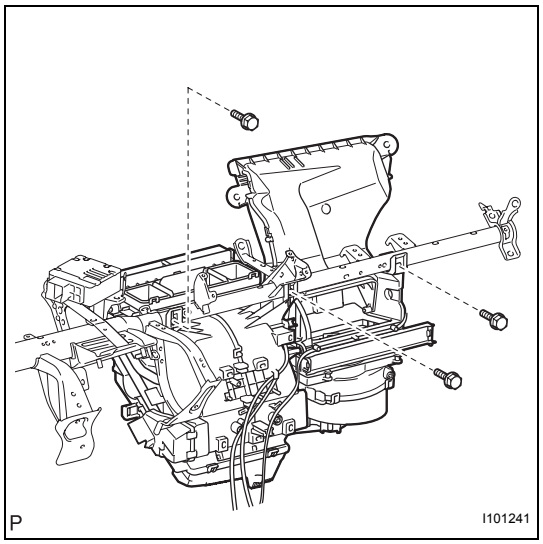

3. INSTALL INSTRUMENT PANEL REINFORCEMENT

(a) Provisionally tighten the air conditioning unit with the 3 screws.

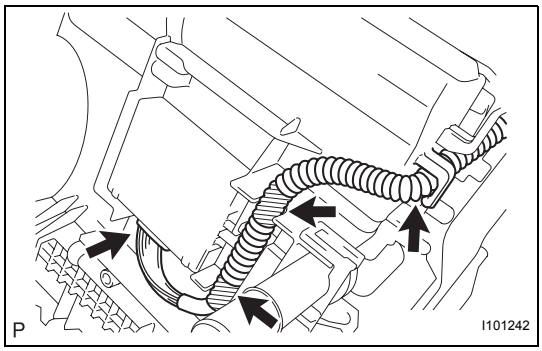

(b) Connect the connector and the 3 clamps.
(c) Install the instrument panel reinforcement and the air conditioning unit with the 9 bolts.

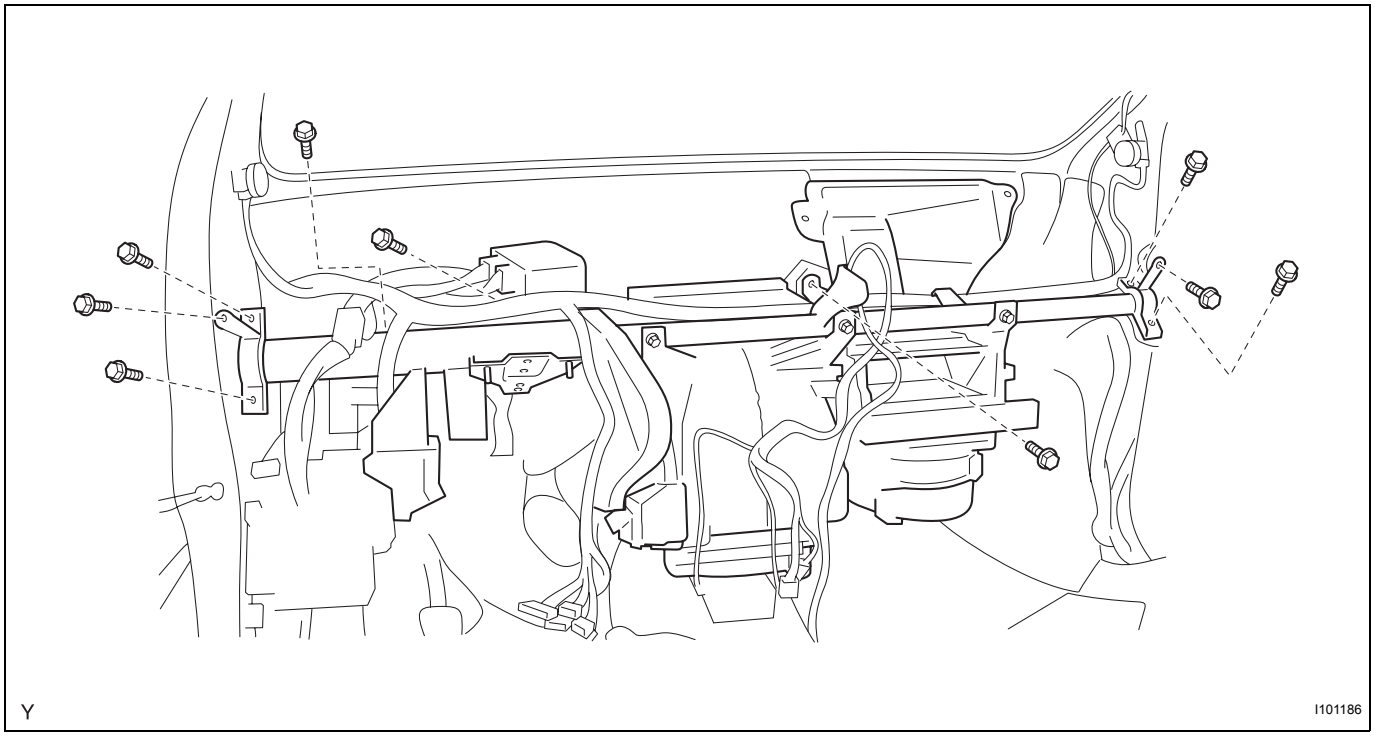

(d) Install the 3 screws, 3 bolts and nut in the sequence shown in the illustration.
Torque: 4.0 N*m (41 kgf*cm, 35 in.*lbf) for screw
9.8 N*m (100 kgf*cm, 87 in.*lbf) for nut
9.8 N*m (100 kgf*cm, 87 in.*lbf) for bolt

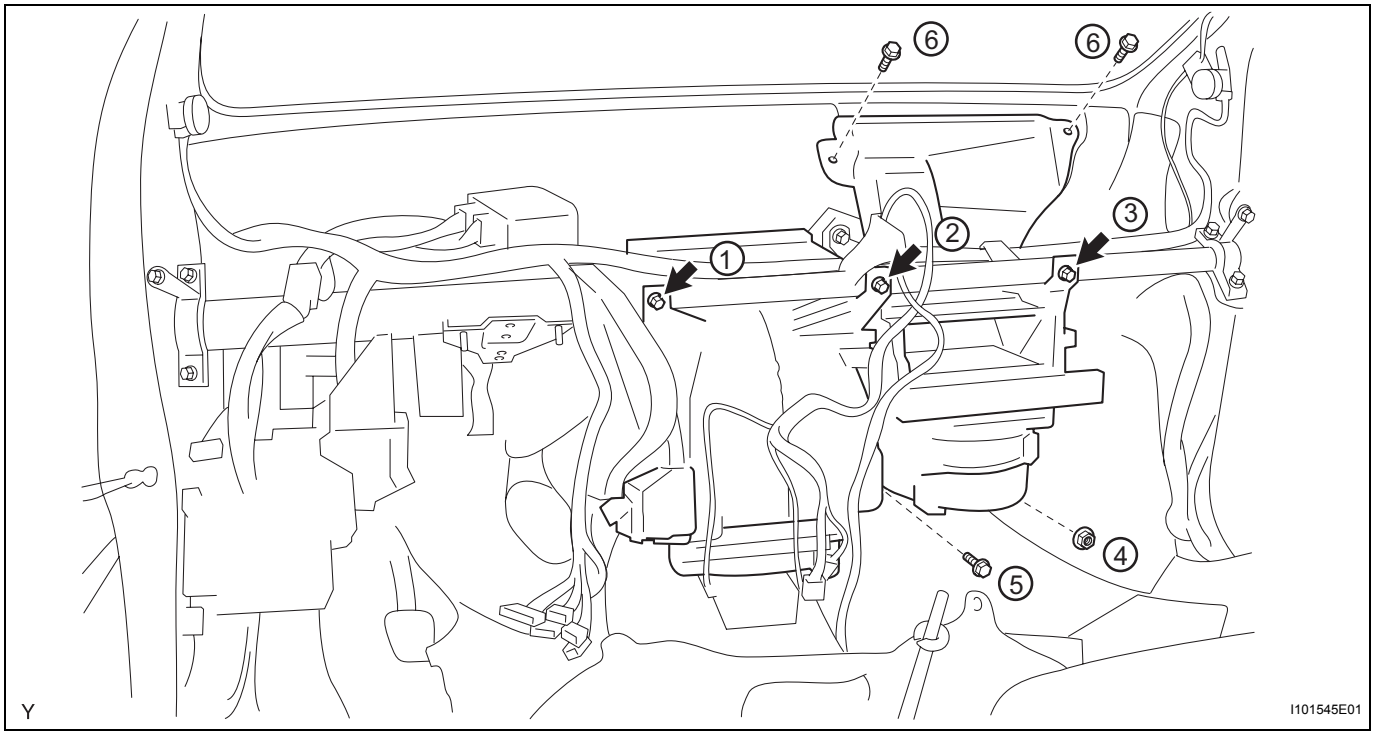

(e) Install the wire harness with the clamps and connectors.

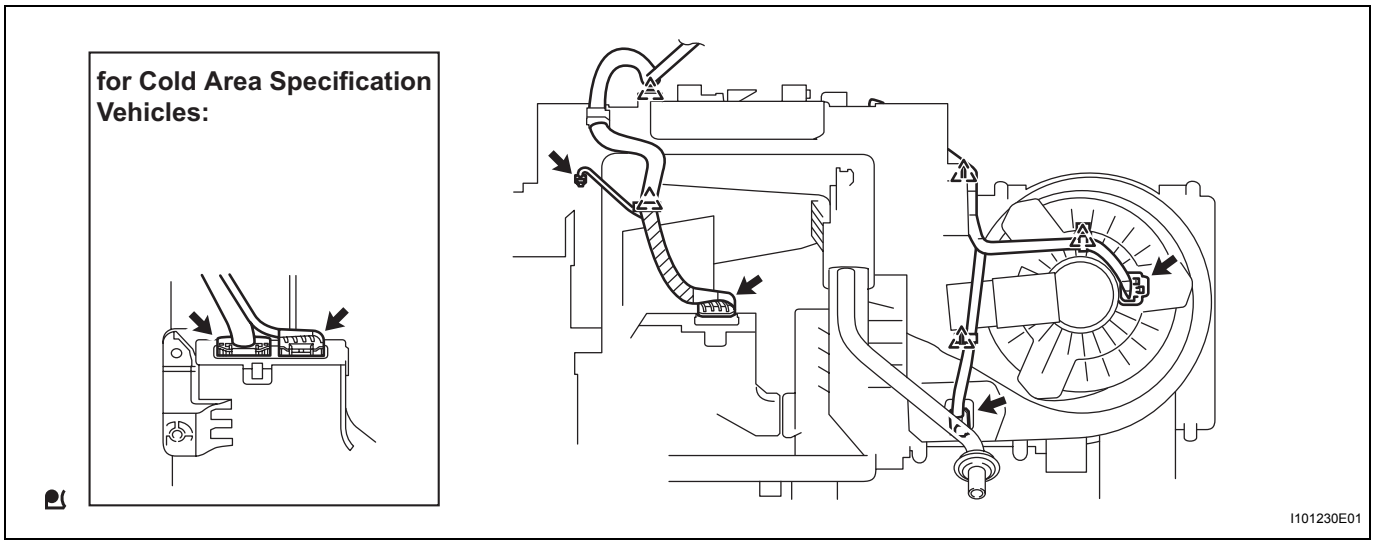

(f) Engage the clamps.

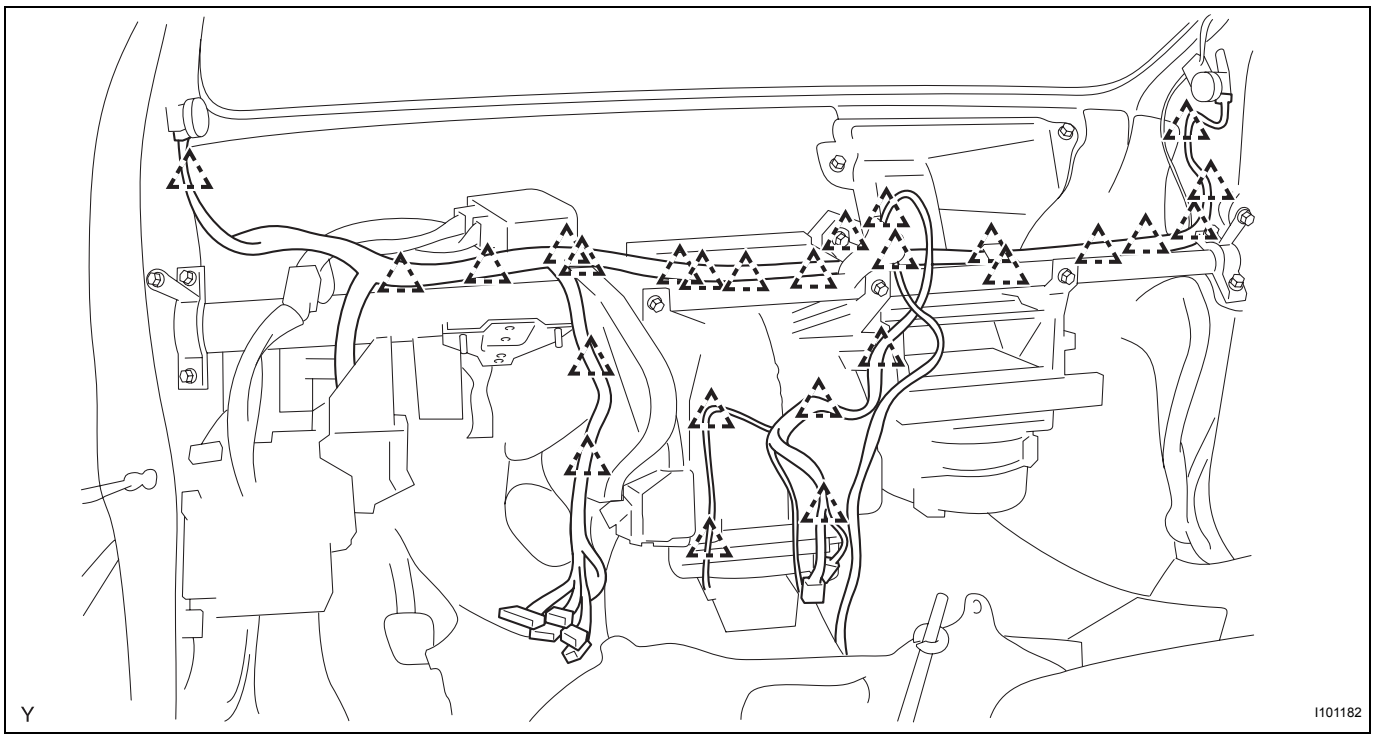

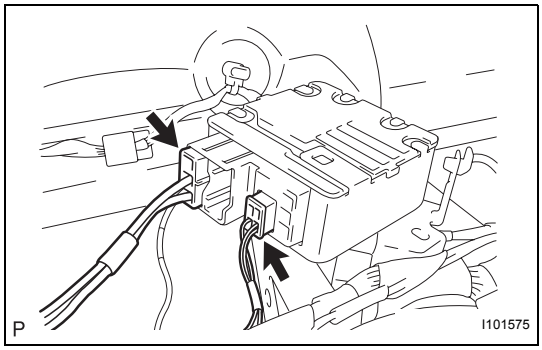

(g) Connect the connectors.

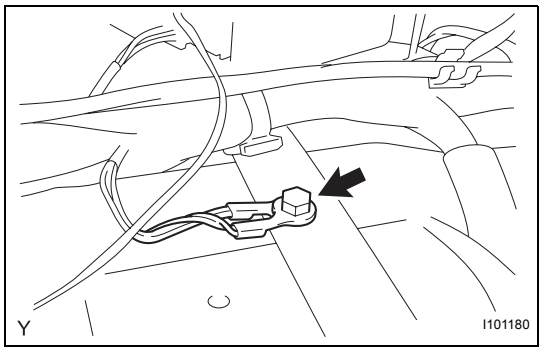

(h) Install the ground wire with the bolt.
Torque: 3.2 N*m (33 kgf*cm, 28 in.*lbf)

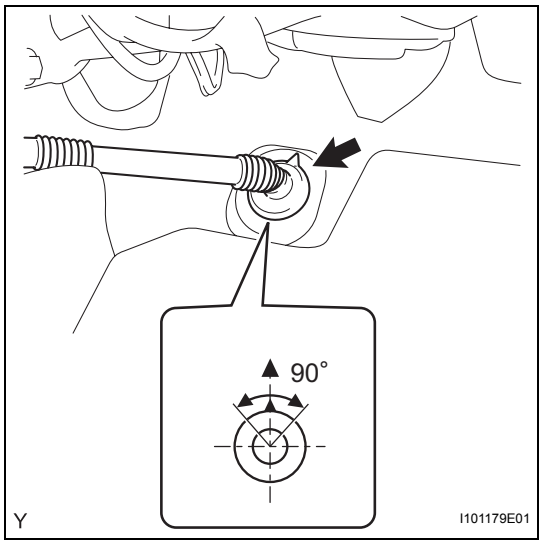

(i) Install the drain hose into the position shown in the illustration.
NOTICE:
- **Install the drain hose with its UP mark facing upward, within the 90 degree range shown in the illustration.**
- **Install the drain hose without twisting it.**

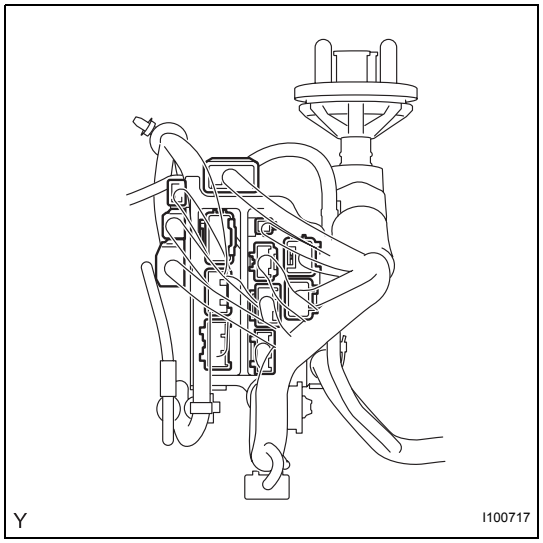

4. INSTALL CONNECTOR NO. 2 HOLDER

(a) Connect the connectors and install the wire harness.

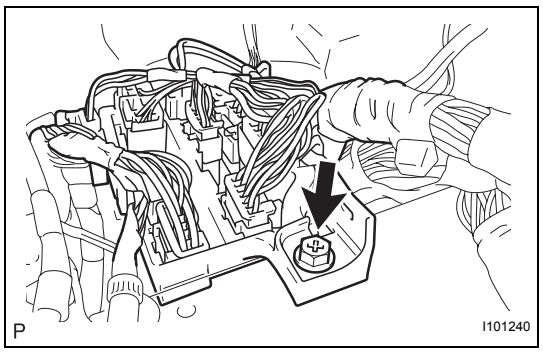

(b) Install the connector holder with the bolt.
Torque: 3.2 N*m (33 kgf*cm, 28 in.*lbf)

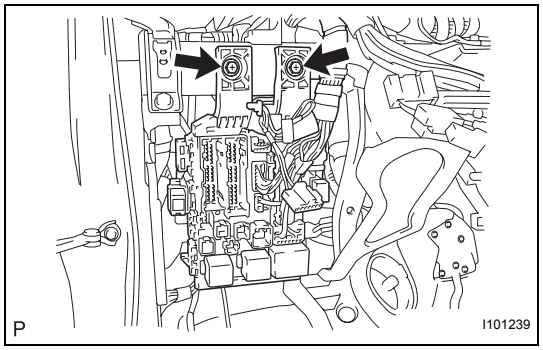

5. INSTALL MAIN BODY ECU

(a) Install the main body ECU with the 2 bolts.
Torque: 3.2 N*m (33 kgf*cm, 28 in.*lbf)

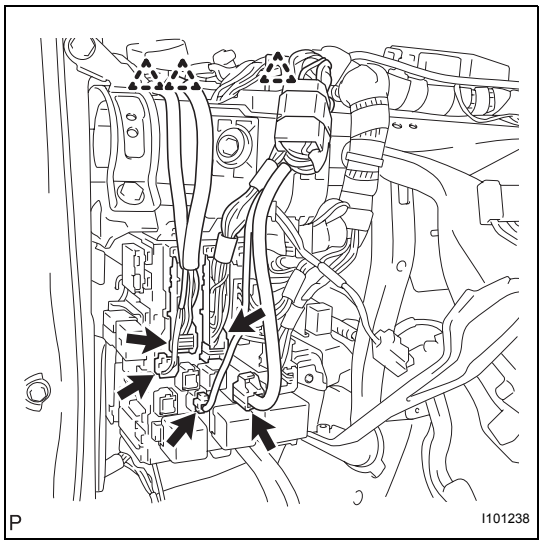

(b) Connect the 5 connectors and the 3 clamps.

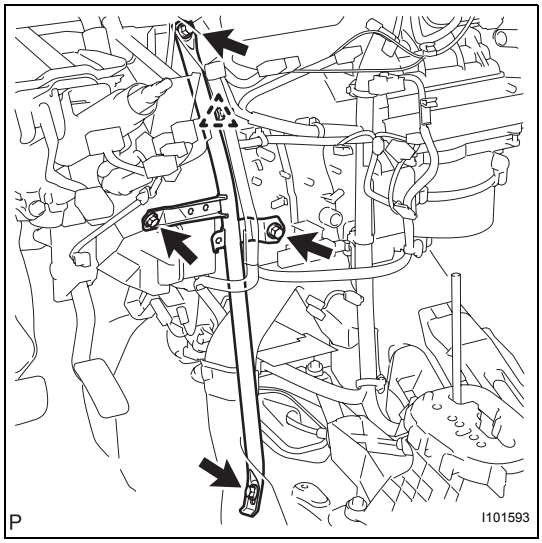

6. INSTALL INSTRUMENT PANEL BRACE SUB-ASSEMBLY

(a) Install the instrument panel brace with the 2 bolts, screw and nut.

Torque: 9.8 N*m (100 kgf*cm, 87 in.*lbf) for screw
9.8 N*m (100 kgf*cm, 87 in.*lbf) for nut
9.8 N*m (100 kgf*cm, 87 in.*lbf) for bolt

(b) Engage the clamp.

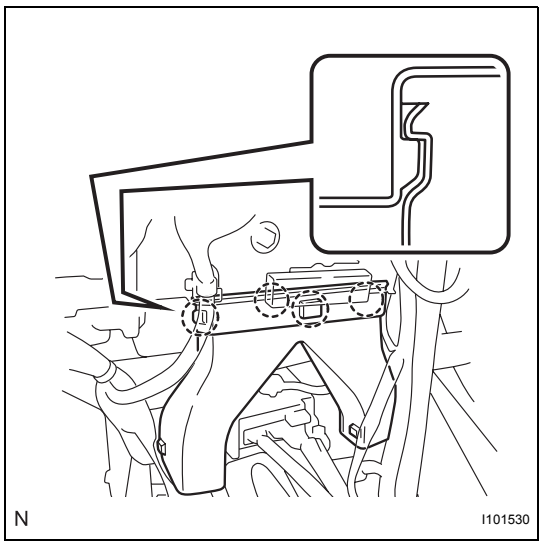

7. INSTALL REAR NO. 3 AIR DUCT (for Cold Area Specification Vehicles)

(a) Engage the 4 claws and install the air duct.

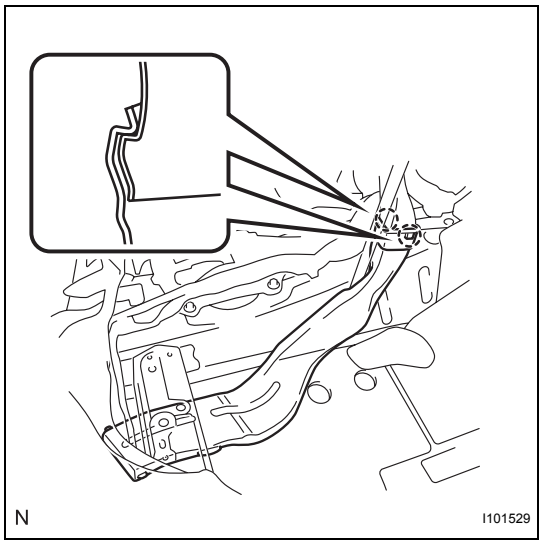

8. INSTALL REAR NO. 1 AIR DUCT (for Cold Area Specification Vehicles)

(a) Engage the 2 claws and install the air duct.

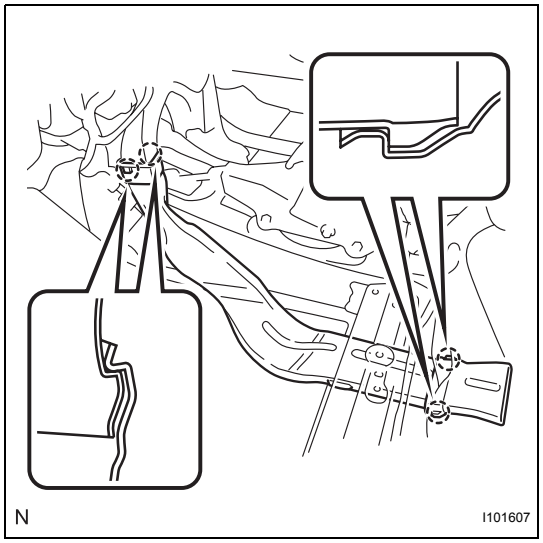

9. INSTALL REAR NO. 2 AIR DUCT (for Cold Area Specification Vehicles)

(a) Engage the 4 claws and install the air duct.

10. INSTALL DEFROSTER NOZZLE ASSEMBLY

(a) Engage the 5 claws and install the defroster nozzle.

(b) Connect the clamps and connectors and install the wire harness.

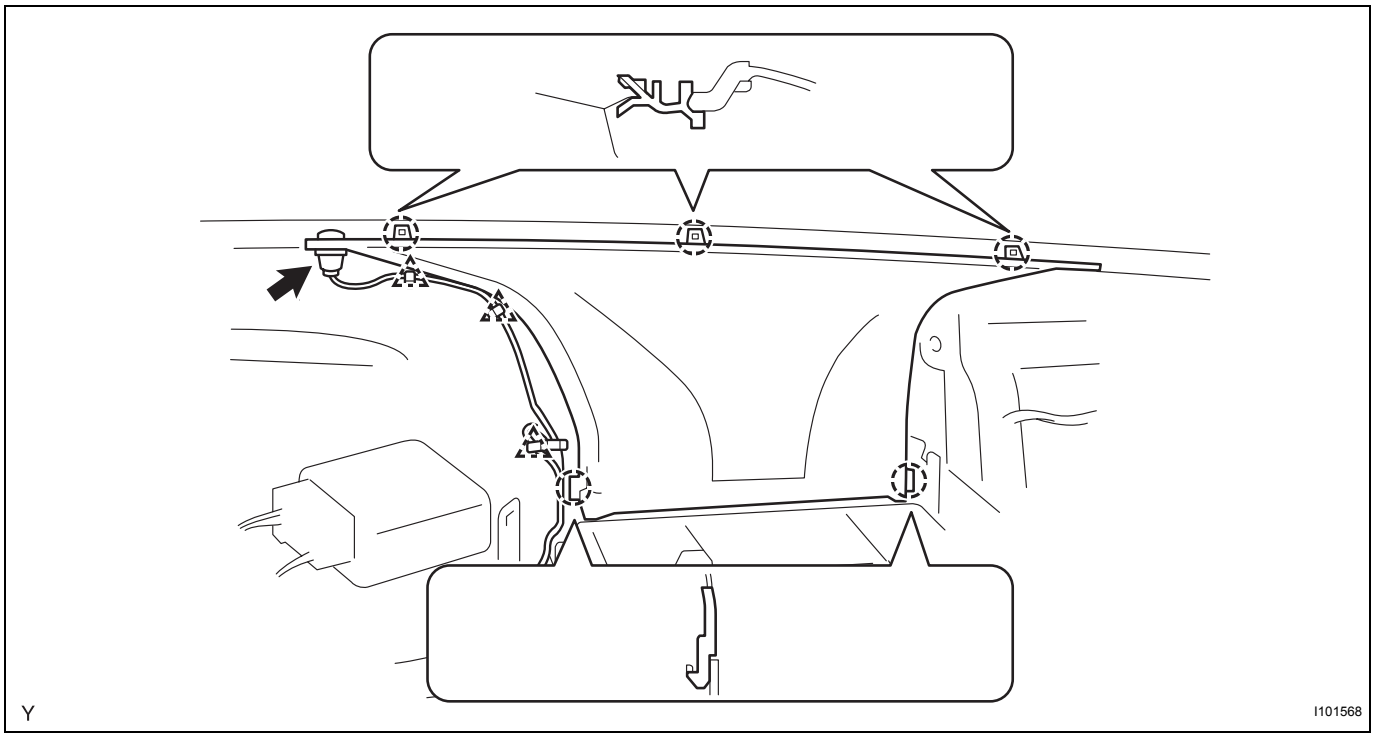

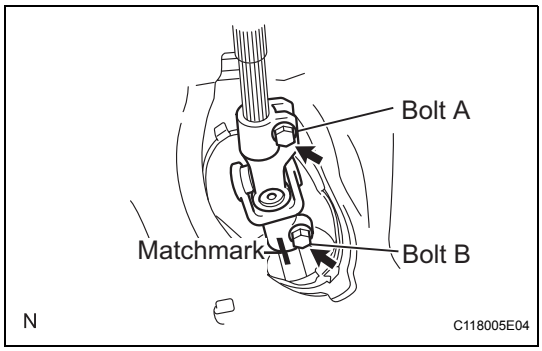

11. **INSTALL STEERING COLUMN ASSEMBLY (See page SR-38)**
12. **INSTALL BRAKE PEDAL SUPPORT SUB-ASSEMBLY (for Manual Transaxle) (See page BR-21)**
13. **INSTALL BRAKE MASTER CYLINDER PUSH ROD CLEVIS (for Manual Transaxle) (See page BR-21)**
14. **INSTALL BRAKE PEDAL (for Automatic Transaxle) (See page SR-38)**
15. **INSTALL STEERING SLIDING YOKE SUB-ASSEMBLY**
    (a) Align the matchmarks and install the sliding yoke onto the power steering assembly with bolt B.
    Torque: 28 N*m (286 kgf*cm, 21 ft.*lbf)
    (b) Tighten bolt A.
    Torque: 28 N*m (286 kgf*cm, 21 ft.*lbf)
16. **INSTALL COLUMN HOLE COVER SILENCER SHEET (See page SR-39)**
17. **INSTALL INSTRUMENT PANEL SUB REINFORCEMENT (See page SR-39)**
18. **CONNECT POWER STEERING ECU ASSEMBLY (See page SR-39)**
19. **INSTALL COMBINATION SWITCH ASSEMBLY (See page SR-40)**
20. **INSTALL STEERING COLUMN COVER (See page SR-40)**
21. **INSTALL STEERING WHEEL ASSEMBLY (See page SR-41)**
22. **INSTALL STEERING PAD (See page RS-310)**
23. **INSTALL LOWER INSTRUMENT PANEL SUB-ASSEMBLY (See page IP-75)**
24. **CONNECT HOOD LOCK CONTROL LEVER SUB-ASSEMBLY (See page IP-77)**
25. **CONNECT ANTENNA CORD SUB-ASSEMBLY (See page IP-77)**
26. **INSTALL NO. 6 HEATER TO REGISTER DUCT ASSEMBLY (See page IP-77)**
27. **INSTALL INSTRUMENT PANEL BOX (See page IP-78)**
28. **INSTALL INSTRUMENT PANEL FINISH PANEL SUB-ASSEMBLY LOWER (See page IP-78)**
29. **INSTALL CONSOLE BOX ASSEMBLY REAR (See page IP-79)**
30. **INSTALL CONSOLE BOX CARPET (See page IP-79)**
31. **INSTALL CONSOLE BOX REAR COVER (See page IP-79)**

32. INSTALL SHIFTING HOLE COVER SUB-ASSEMBLY (for Manual Transaxle) (See page IP-79)
33. INSTALL SHIFT LEVER KNOB SUB-ASSEMBLY (for Manual Transaxle) (See page IP-80)
34. INSTALL COWL SIDE TRIM BOARD RH (See page IR-81)
35. INSTALL COWL SIDE TRIM BOARD LH (See page IR-81)
36. INSTALL INSTRUMENT PANEL UNDER COVER SUB-ASSEMBLY LH (See page IR-82)
37. INSTALL INSTRUMENT PANEL UNDER COVER SUB-ASSEMBLY RH (See page IR-81)
38. INSTALL FRONT DOOR SCUFF PLATE RH (See page IR-82)
39. INSTALL FRONT DOOR SCUFF PLATE LH (See page IR-82)
40. INSTALL UPPER INSTRUMENT PANEL SUB-ASSEMBLY (See page IP-29)
41. INSTALL GLOVE COMPARTMENT DOOR ASSEMBLY (See page IP-32)
42. INSTALL NO. 1 SWITCH HOLE BASE (See page IP-32)
43. INSTALL FRONT PILLAR GARNISH RH (See page IR-71)
44. INSTALL FRONT PILLAR GARNISH LH (See page IR-72)
45. INSTALL FRONT DOOR OPENING TRIM WEATHERSTRIP RH (See page IR-81)
46. INSTALL FRONT DOOR OPENING TRIM WEATHERSTRIP LH (See page IR-81)
47. CONNECT AIR INLET DAMPER CONTROL CABLE SUB-ASSEMBLY (See page AC-257)
48. CONNECT DEFROSTER DAMPER CONTROL CABLE SUB-ASSEMBLY (See page AC-257)
49. CONNECT AIR MIX DAMPER CONTROL CABLE SUB-ASSEMBLY (See page AC-257)
50. INSTALL AIR CONDITIONER PANEL SUB-ASSEMBLY (See page AC-257)

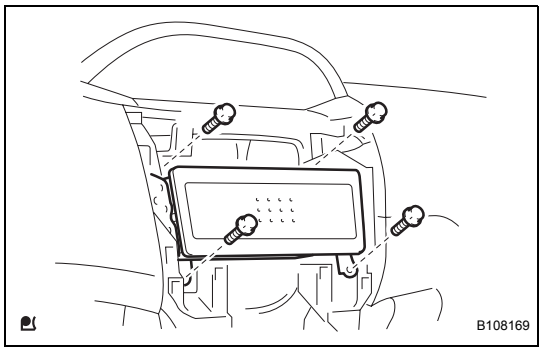

51. **INSTALL RADIO TUNER OPENING COVER (w/o Radio Receiver)**
    (a) Install the radio tuner opening cover with the 4 bolts.
52. **INSTALL RADIO RECEIVER ASSEMBLY (See page AV-46)**
53. **INSTALL INSTRUMENT CLUSTER FINISH PANEL SUB-ASSEMBLY CENTER (See page AC-258)**
54. **INSTALL COMBINATION METER ASSEMBLY (See page ME-148)**
55. **INSTALL INSTRUMENT CLUSTER FINISH PANEL (See page ME-148)**
56. **INSTALL INSTRUMENT PANEL FINISH PANEL END RH (See page ME-149)**
57. **INSTALL INSTRUMENT PANEL FINISH PANEL END LH (See page ME-149)**

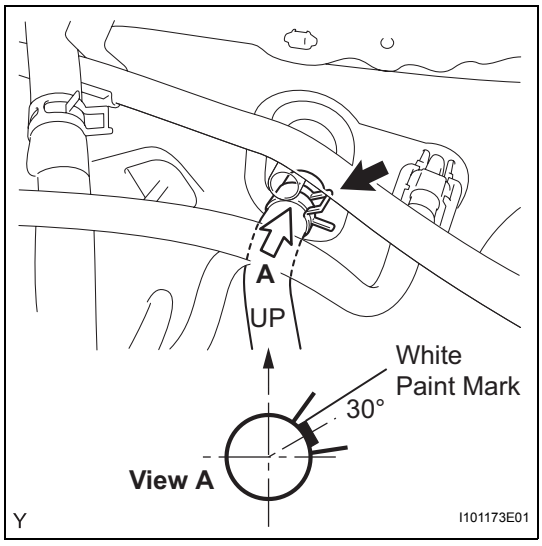

58. **CONNECT HEATER WATER INLET HOSE A**
    (a) Install the heater water inlet hose onto the heater unit.
    NOTICE:
    Perform the installation with the hose clip and mark at the correct angle.

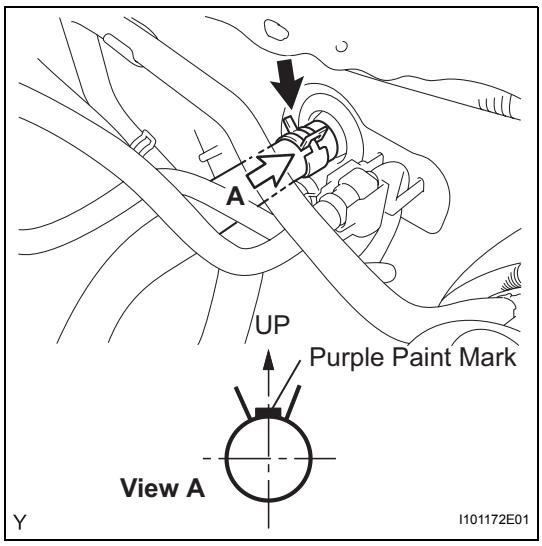

59. **CONNECT HEATER WATER OUTLET HOSE A (FROM HEATER UNIT)**
    (a) Install the heater water outlet hose onto the heater unit.
    NOTICE:
    Perform the installation with the hose clip and mark at the correct angle.
60. **INSTALL LIQUID TUBE SUB-ASSEMBLY**
    (a) Remove the vinyl tape from liquid tube and the connecting portion of the unit.
    (b) Apply sufficient compressor oil (ND-OIL8) to a new O-ring and the connecting part of liquid tube.
    Compressor oil:
    ND-OIL8 or the equivalent
    (c) Install the O-ring onto liquid tube.
    (d) connect liquid tube to the unit.
61. **INSTALL SUCTION TUBE SUB-ASSEMBLY**
    (a) Remove the vinyl tape from the suction tube and the connecting part of the unit.

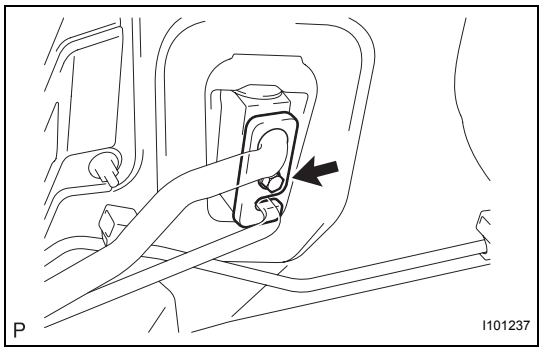

(b) Apply sufficient compressor oil (ND-OIL8) to a new O-ring and the connecting part of suction tube.
Compressor oil:
ND-OIL8 or the equivalent

(c) Install the O-ring onto the suction tube.

(d) Move the hook connector in the direction indicated by the arrow in the illustration.

(e) Insert the pipe joints securely into the fitting holes and tighten the bolt.
Torque: 9.8 N*m (100 kgf*cm, 87 in.*lbf)

62. **INSTALL COWL TOP PANEL OUTER (See page EM-146)**
63. **INSTALL NO. 2 COWL TO REGISTER DUCT SUB-ASSEMBLY (See page EM-147)**
64. **INSTALL FRONT WIPER MOTOR AND LINK (See page WW-21)**
65. **INSTALL COWL TOP VENTILATOR LOUVER LH (See page WW-21)**
66. **INSTALL COWL TOP VENTILATOR LOUVER SUB-ASSEMBLY (See page WW-21)**
67. **INSTALL HOOD TO COWL TOP SEAL (See page WW-22)**
68. **INSTALL FRONT WIPER ARM AND BLADE ASSEMBLY LH (See page WW-22)**
69. **INSTALL FRONT WIPER ARM AND BLADE ASSEMBLY RH (See page WW-23)**
70. **INSTALL FRONT WIPER ARM HEAD CAP (See page WW-23)**
71. **ADD ENGINE COOLANT (See page CO-8)**
72. **CONNECT CABLE TO NEGATIVE BATTERY TERMINAL**
Torque: 5.4 N*m (55 kgf*cm)
73. **CHECK SRS WARNING LIGHT**
RS-31
74. **CHARGE REFRIGERANT (See page AC-67)**
75. **WARM UP ENGINE (See page AC-69)**
76. **CHECK FOR ENGINE COOLANT (See page CO-1)**
77. **CHECK FOR REFRIGERANT LEAK (See page AC-69)**
78. **POSITION FRONT WHEELS FACING STRAIGHT AHEAD**

BLOWER UNIT (for Sedan)

COMPONENTS

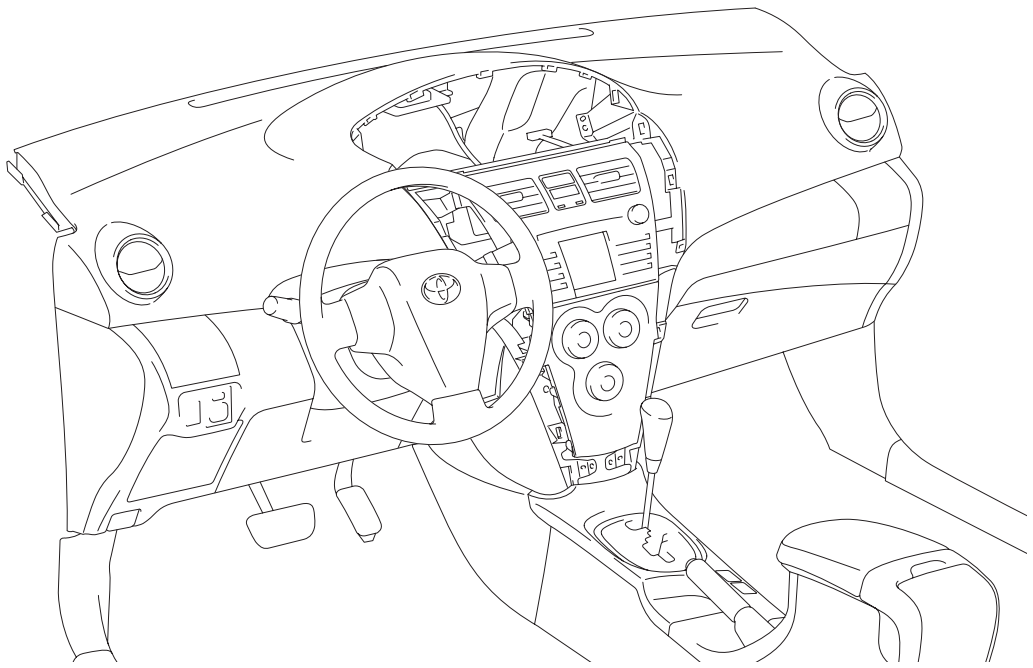

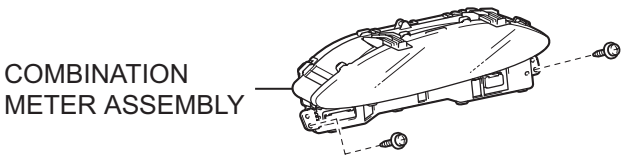



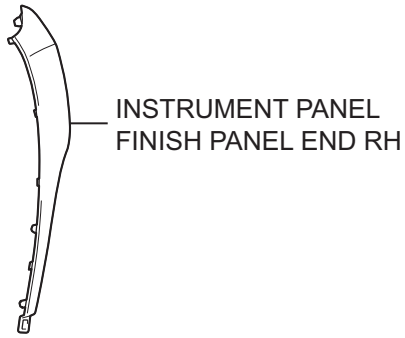

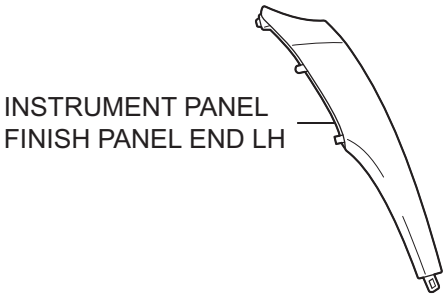



AC

P

E116817E01

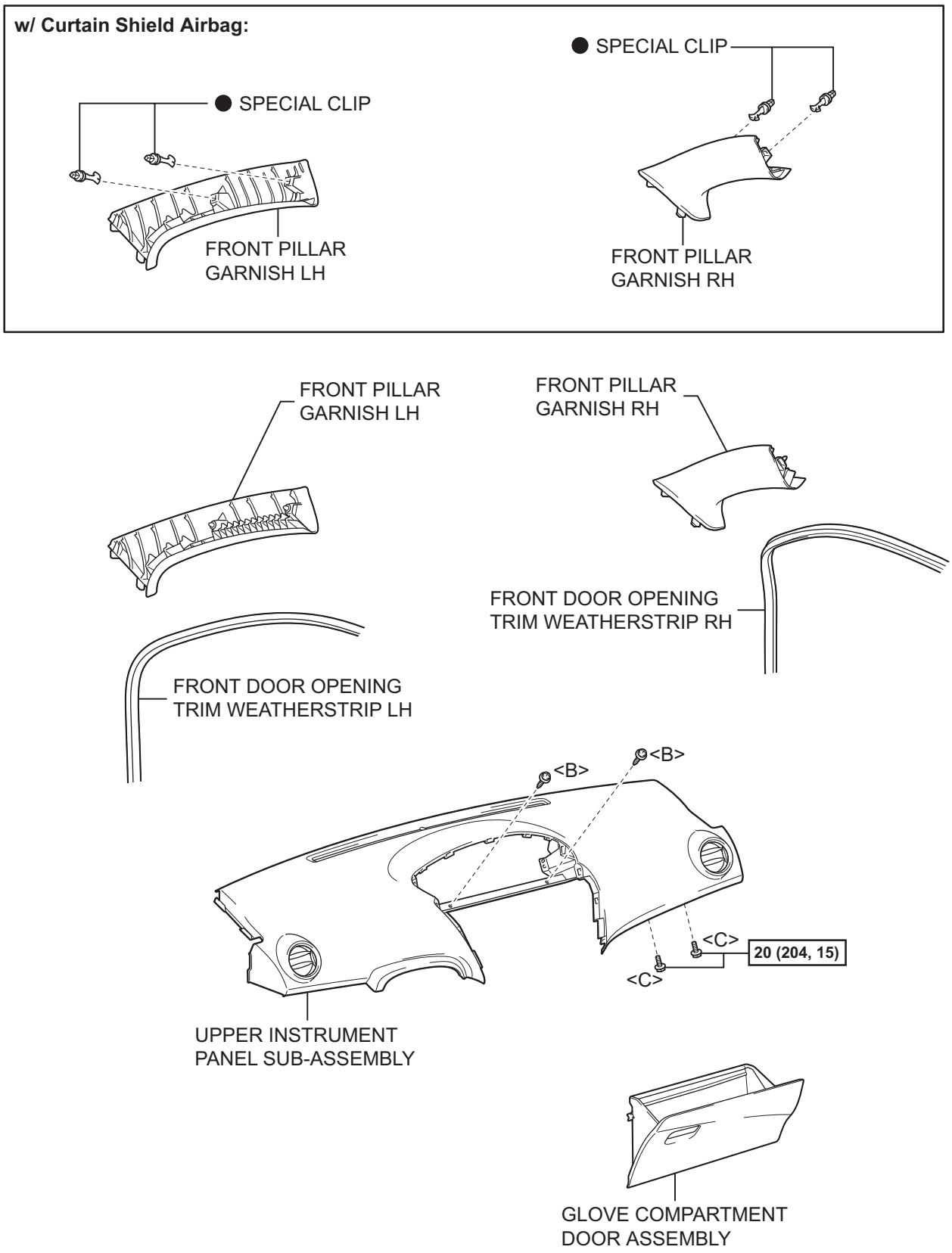

N*m (kgf*cm, ft*lbf) : Specified torque

● Non-reusable part

P

B132310E02

AC

for Integrated w/ Panel:

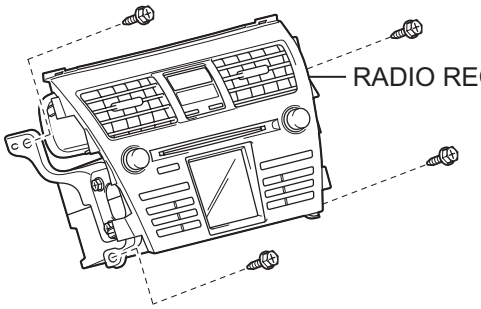

w/o Radio Receiver:

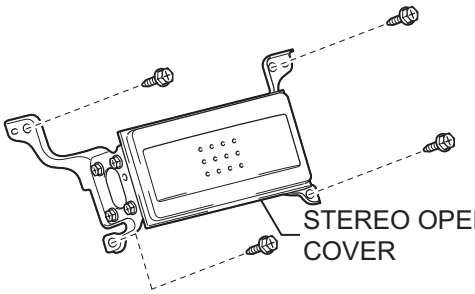

Except for Integrated w/ Panel:

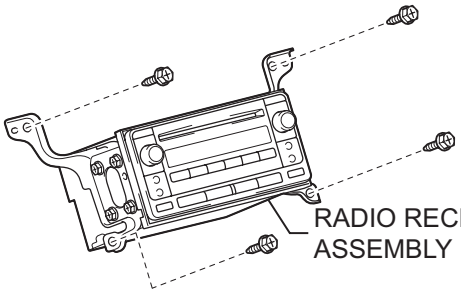

Except for Integrated w/ Panel:

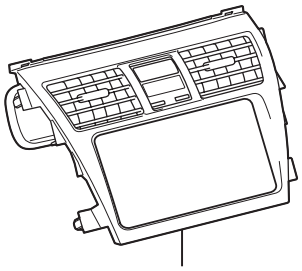

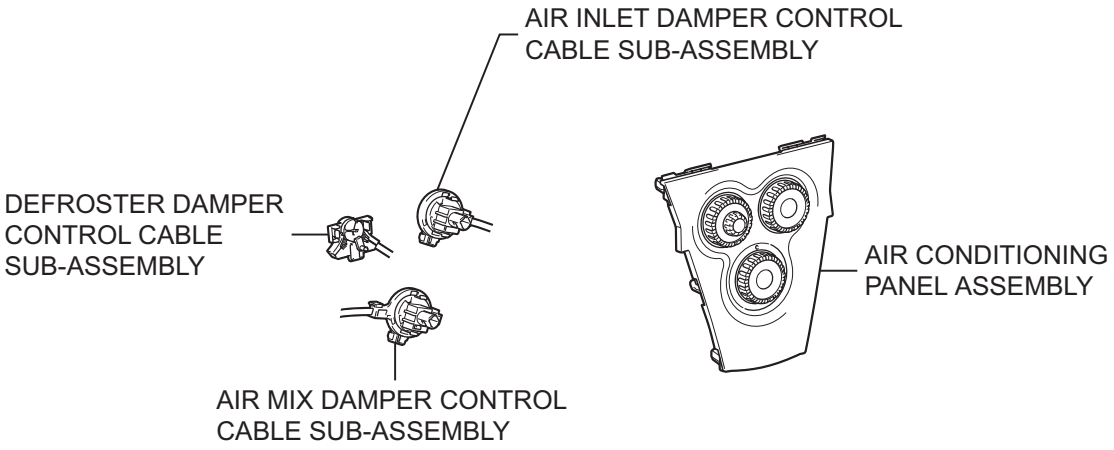

AC

P

B132383E01

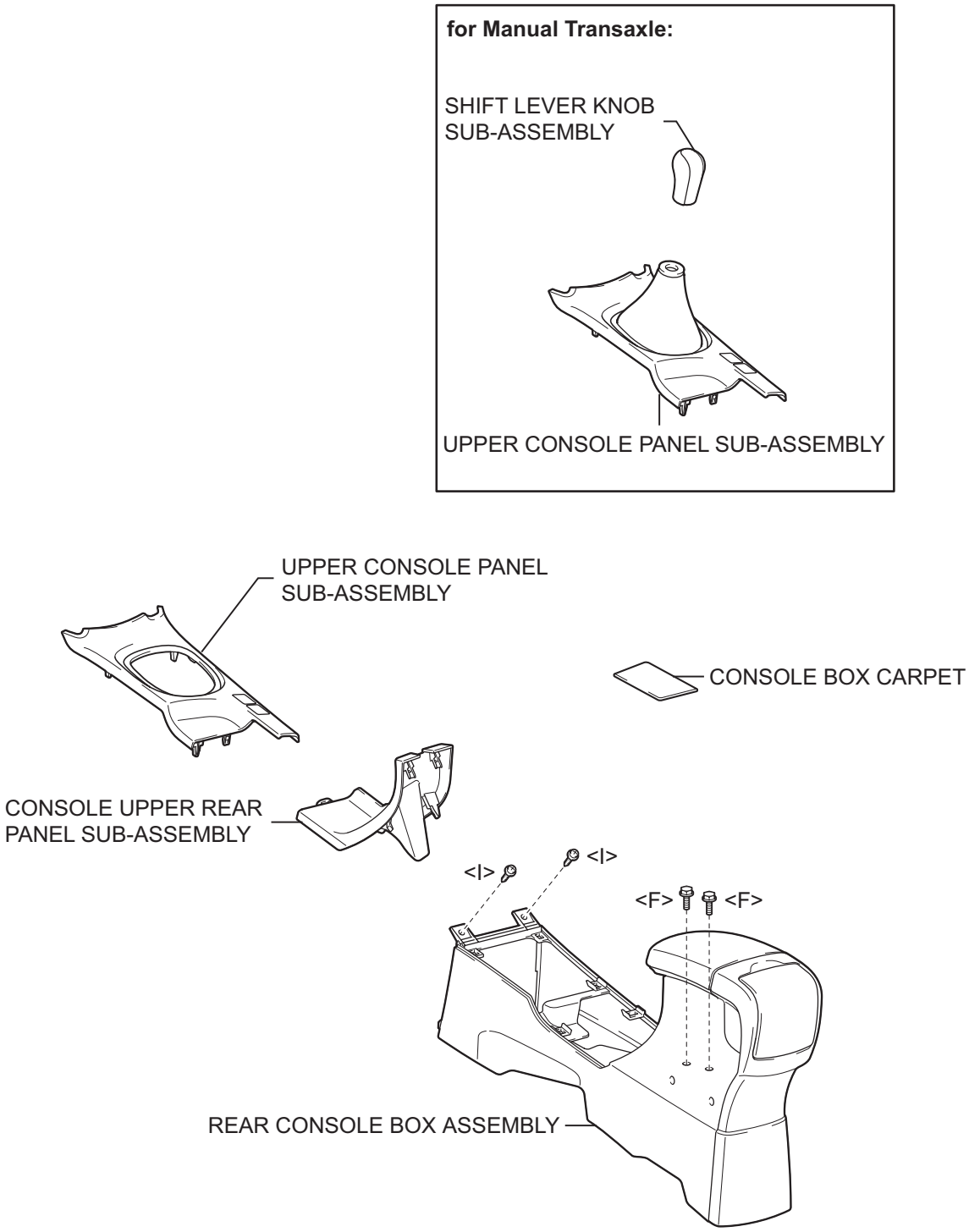
for Manual Transaxle:
SHIFT LEVER KNOB SUB-ASSEMBLY
UPPER CONSOLE PANEL SUB-ASSEMBLY
UPPER CONSOLE PANEL SUB-ASSEMBLY
CONSOLE BOX CARPET
CONSOLE UPPER REAR PANEL SUB-ASSEMBLY
<I>
<I>
<F>
<F>
REAR CONSOLE BOX ASSEMBLY

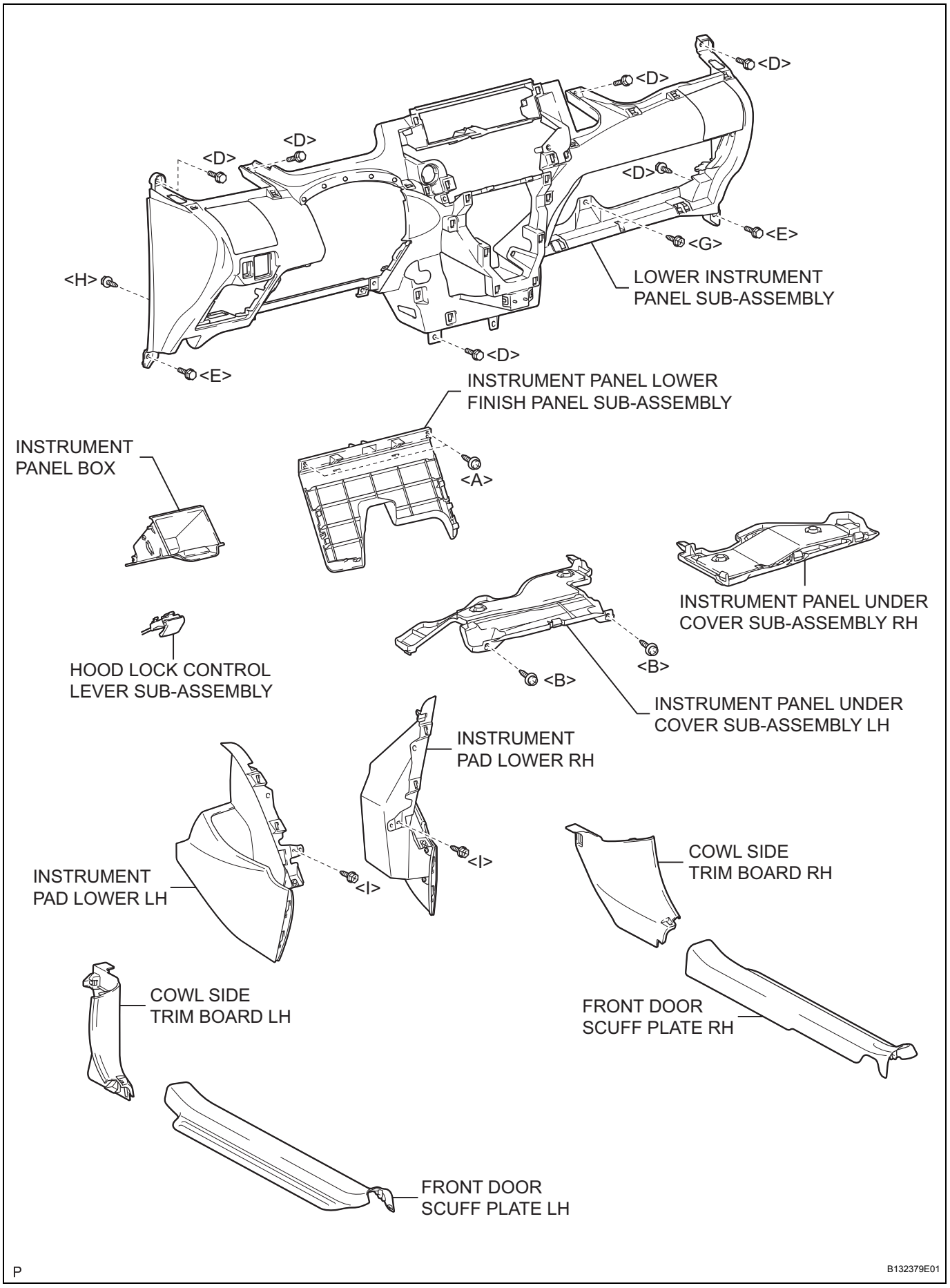

AC

P

B132379E01

for Manual Transaxle:

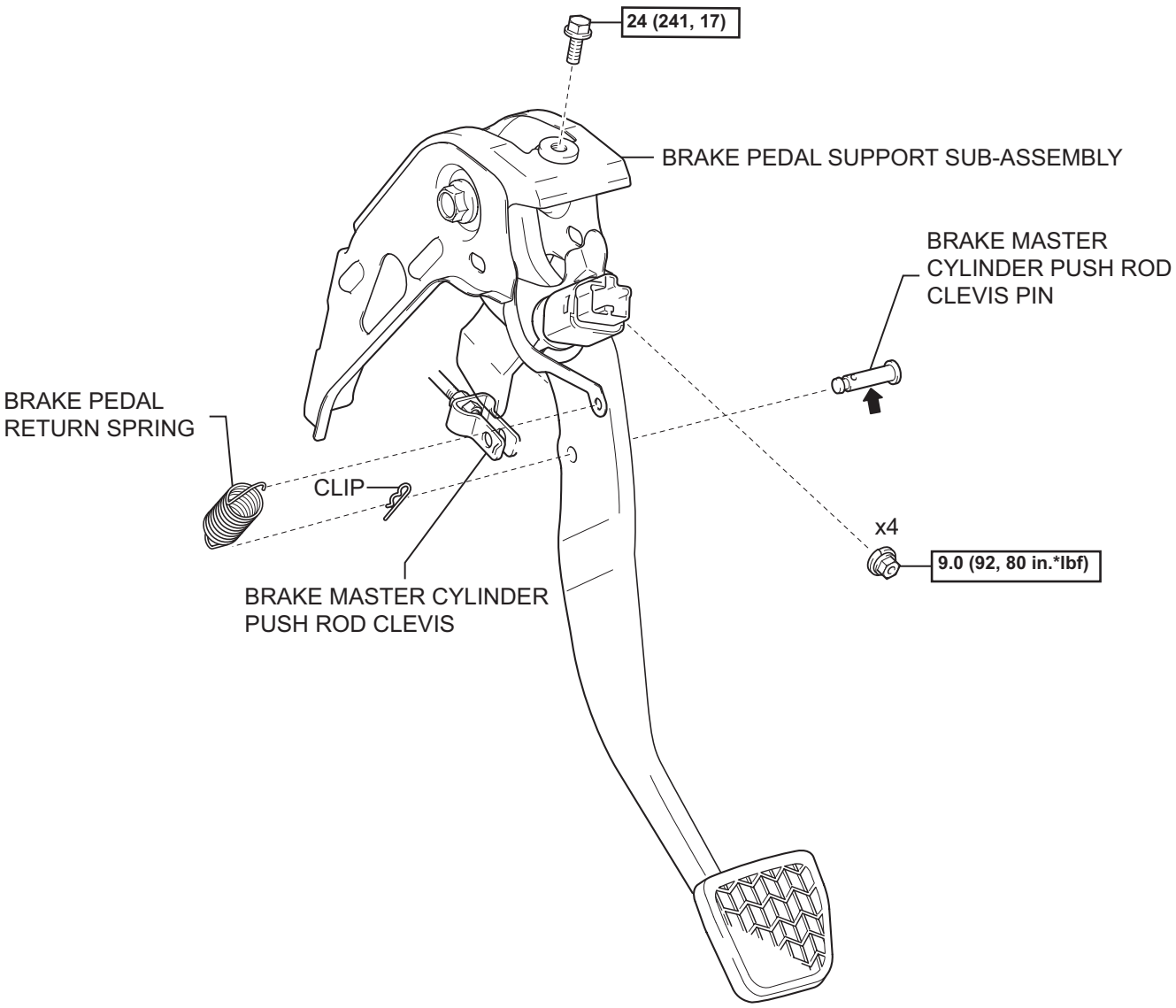

N*m (kgf*cm, ft.*lbf) : Specified torque ⬅ Lithium Soap base glycol grease

P

C118552E02

AC

for Automatic Transaxle:

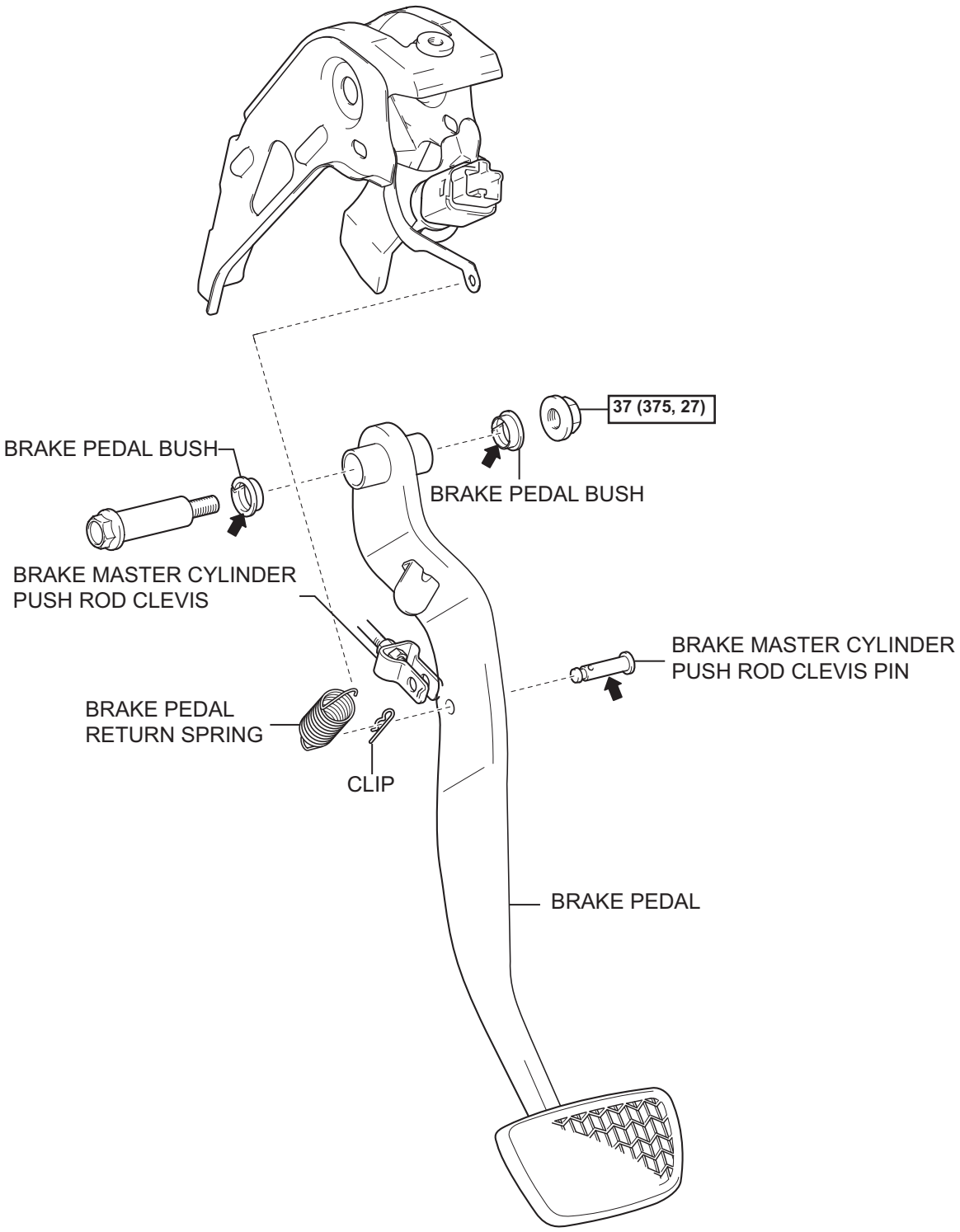

AC

N*m (kgf*cm, ft.*lbf) : Specified torque ⬅ Lithium Soap base glycol grease

P

C118551E03

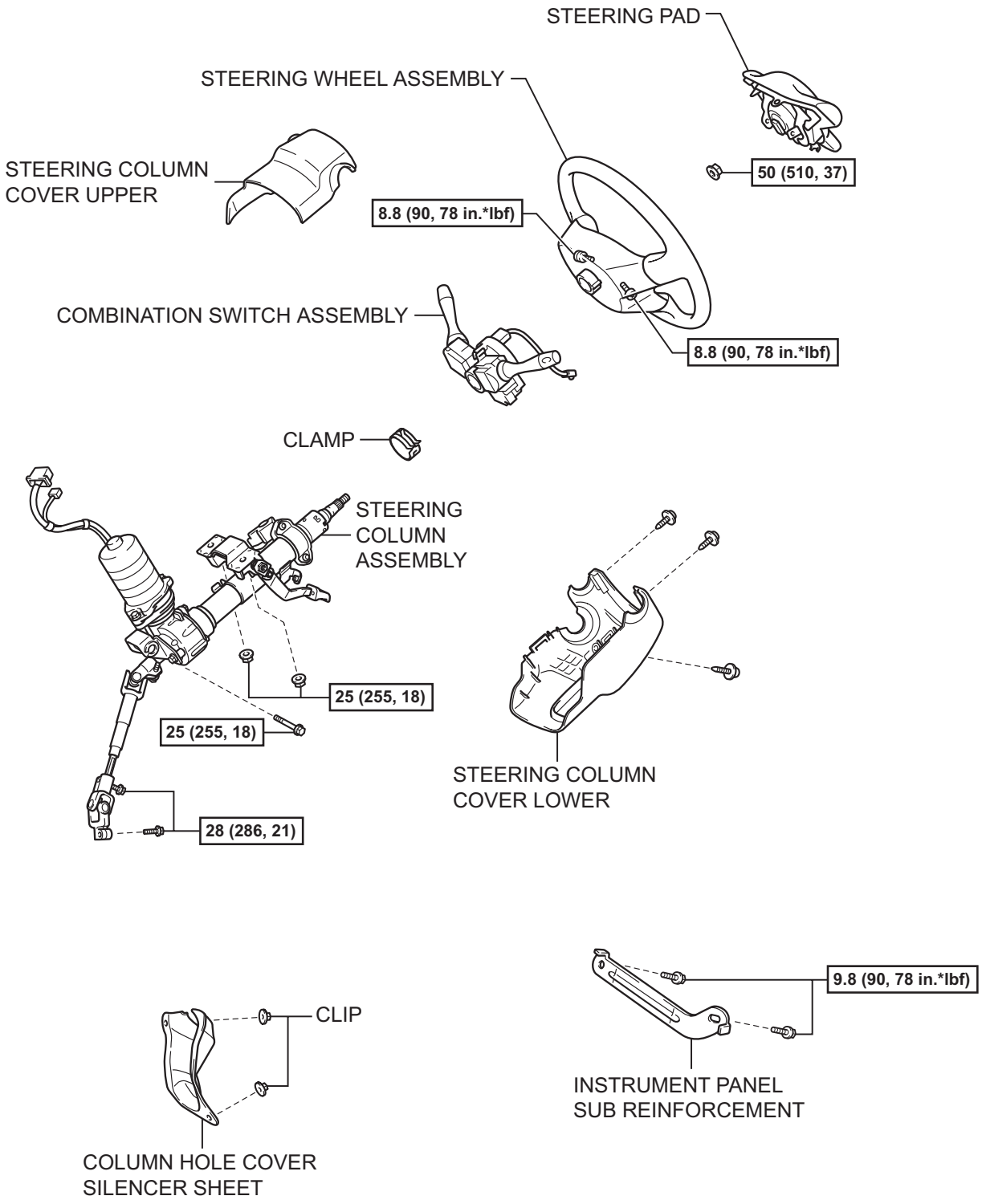

N*m (kgf*cm, ft*lbf) : Specified torque

N

I102629E01

AC

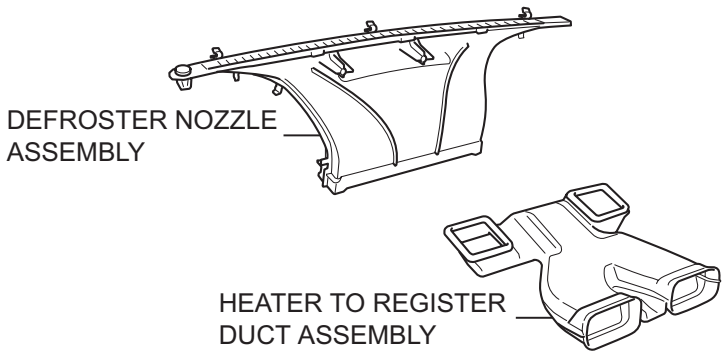

for Cold Area Specification Vehicles:

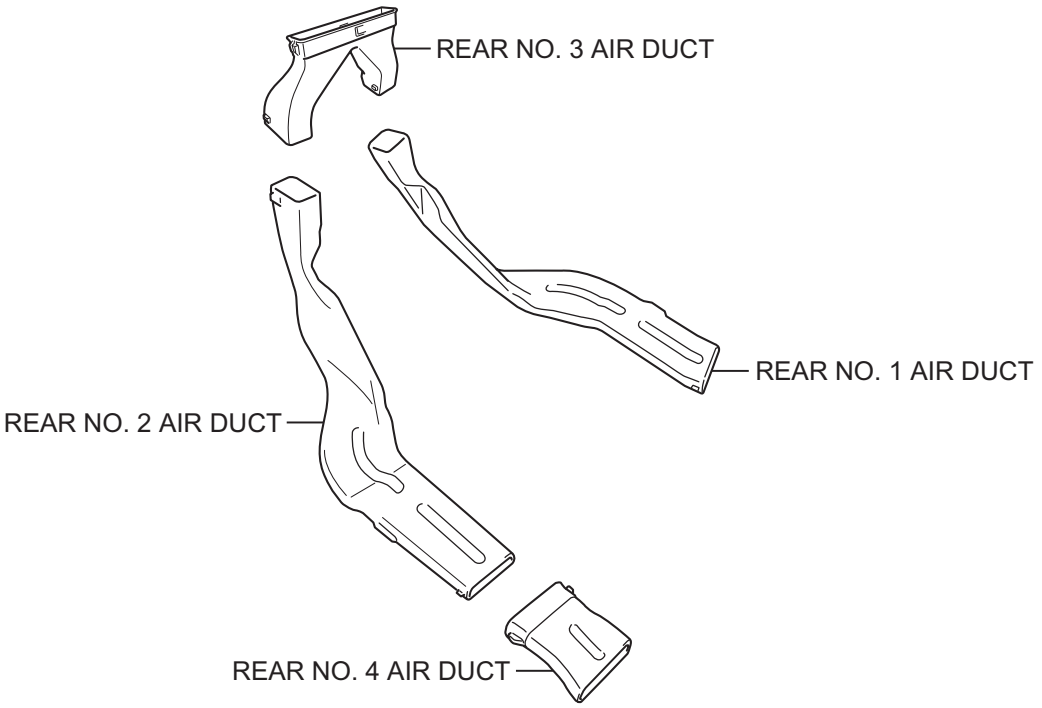

AC

Y

I102608E01

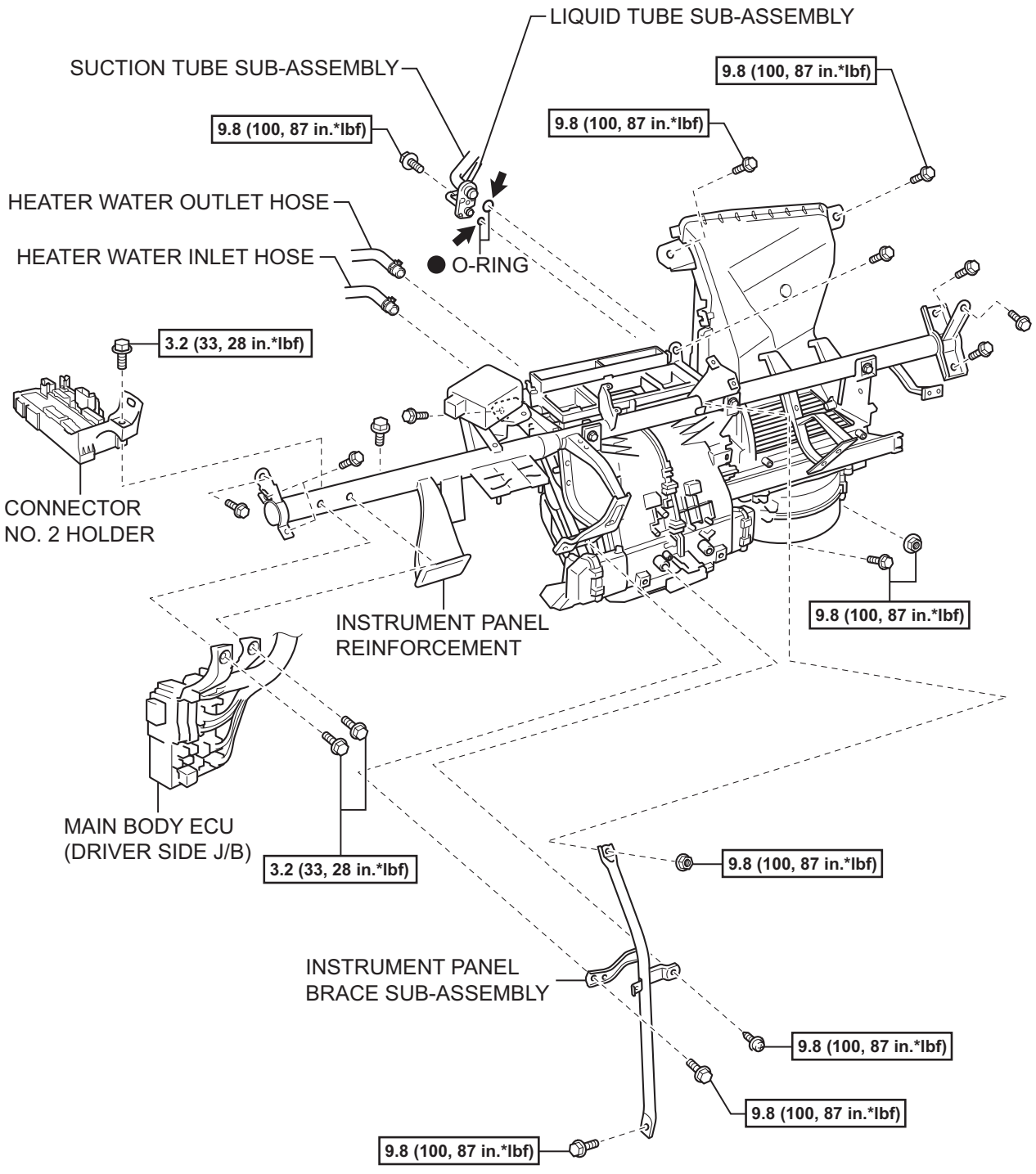

N*m (kgf*cm, ft*lbf) : Specified torque

● Non-reusable part ⬅ Compressor Oil ND-8 or the equivalent

Y

I102607E01

AC

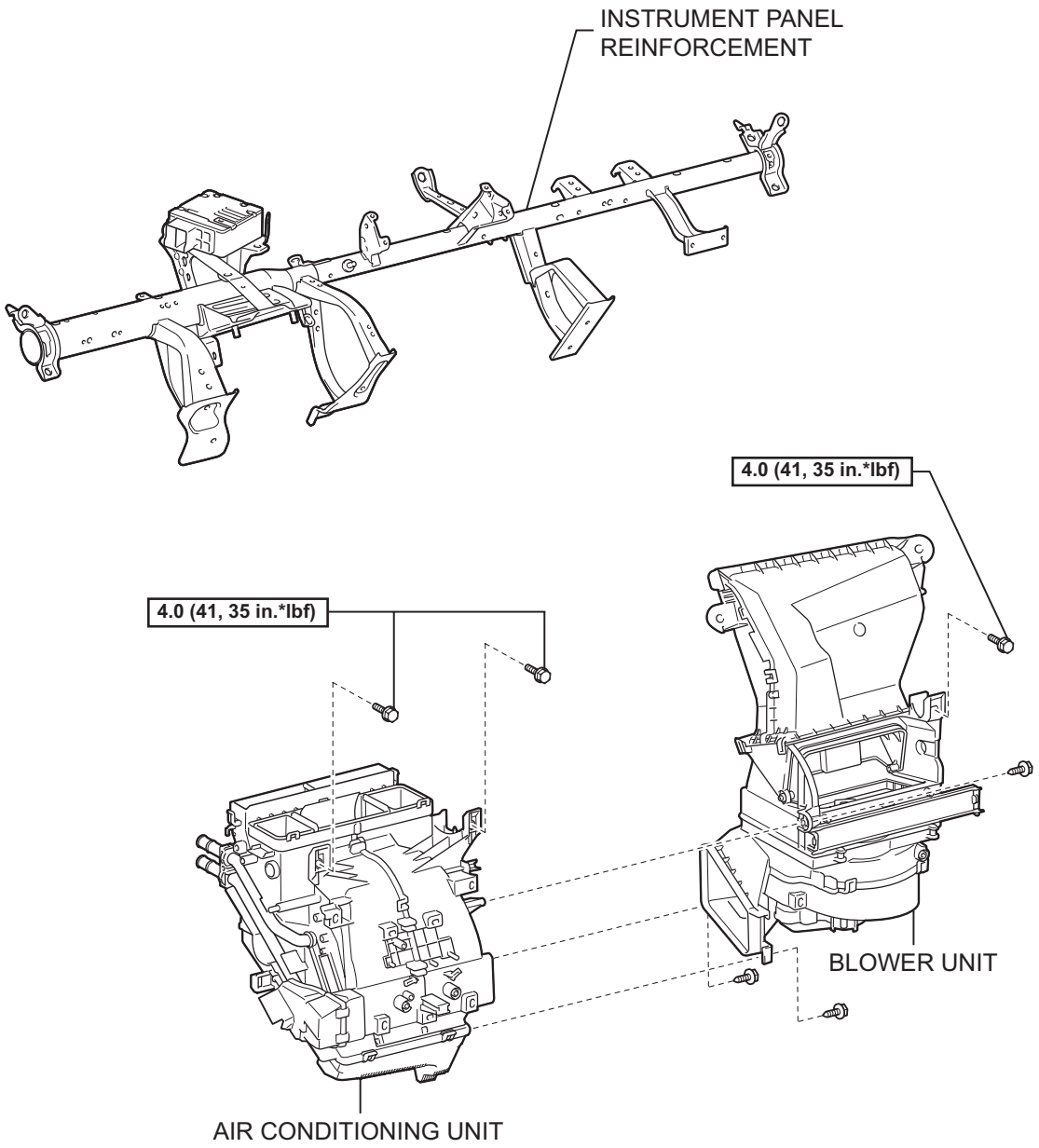

N*m (kgf*cm, ft*lbf) : Specified torque

AC

P

I102604E01

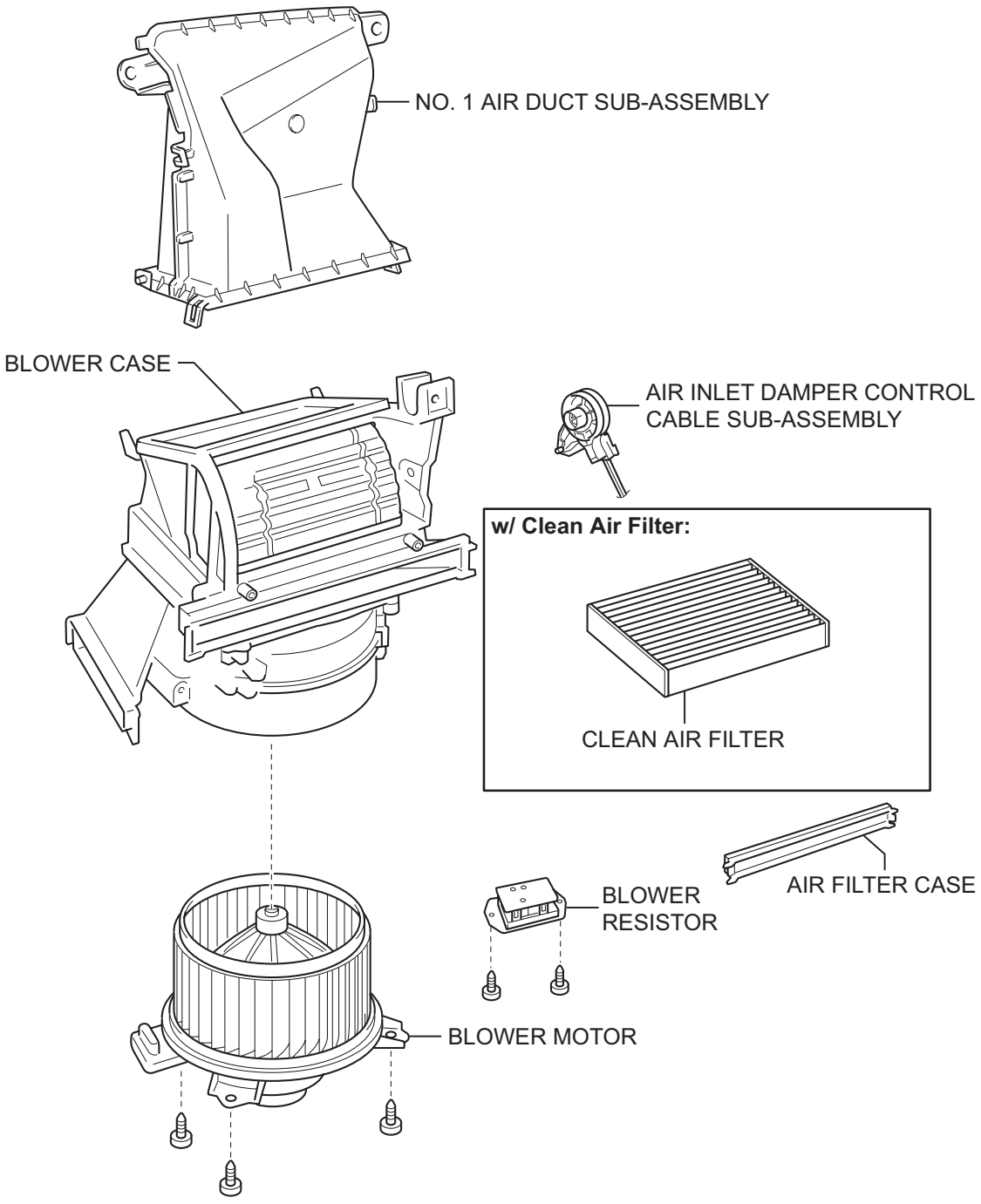

AC

Y

I102625E01

REMOVAL

CAUTION:
Some of these service operations affect the SRS airbag system. Read the precautionary notices concerning the SRS airbag system before servicing (See pageRS-1).
HINT:
Use the same procedure for both the RH and LH sides.

1. **DISCONNECT CABLE FROM NEGATIVE BATTERY TERMINAL**
   Wait for at least 90 seconds after disconnecting the cable to prevent the airbag from working.
2. **DISCHARGE REFRIGERANT FROM REFRIGERATION SYSTEM (See page AC-66)**
3. **DRAIN ENGINE COOLANT (for 1NZ-FE) (See page CO-8)**
4. **DISCONNECT SUCTION TUBE SUB-ASSEMBLY (See page AC-84)**
5. **DISCONNECT LIQUID TUBE SUB-ASSEMBLY (See page AC-84)**
6. **DISCONNECT HEATER WATER OUTLET HOSE (See page AC-84)**
7. **DISCONNECT HEATER WATER INLET HOSE (See page AC-85)**
8. **BOLTS, SCREWS AND NUTS TABLE (See page IP-41)**
9. **REMOVE INSTRUMENT PANEL FINISH PANEL LOWER CENTER (See page ME-138)**
10. **REMOVE INSTRUMENT PANEL FINISH PANEL END LH (See page ME-138)**
11. **REMOVE INSTRUMENT PANEL FINISH PANEL END RH (See page ME-138)**
12. **REMOVE INSTRUMENT CLUSTER FINISH PANEL (See page ME-139)**
13. **REMOVE COMBINATION METER ASSEMBLY (See page ME-139)**
14. **REMOVE INSTRUMENT CLUSTER FINISH PANEL CENTER SUB-ASSEMBLY (See page IP-43)**
15. **REMOVE STEREO OPENING COVER (w/o Radio Receiver) (See page IP-43)**
16. **REMOVE RADIO RECEIVER ASSEMBLY (See page AV-38)**
17. **REMOVE AIR CONDITIONING PANEL ASSEMBLY (See page AC-239)**
18. **DISCONNECT AIR MIX DAMPER CONTROL CABLE SUB-ASSEMBLY (See page AC-240)**

19. DISCONNECT DEFROSTER DAMPER CONTROL CABLE SUB-ASSEMBLY (See page AC-240)
20. DISCONNECT AIR INLET DAMPER CONTROL CABLE SUB-ASSEMBLY (See page AC-240)
21. SEPARATE FRONT DOOR OPENING TRIM WEATHERSTRIP RH (See page IP-5)
22. SEPARATE FRONT DOOR OPENING TRIM WEATHERSTRIP LH (See page IP-5)
23. REMOVE FRONT PILLAR GARNISH RH (See page IR-18)
24. REMOVE FRONT PILLAR GARNISH LH (See page IR-19)
25. REMOVE GLOVE COMPARTMENT DOOR ASSEMBLY (See page IP-6)
26. REMOVE UPPER INSTRUMENT PANEL SUB-ASSEMBLY (See page IP-6)
27. REMOVE FRONT DOOR SCUFF PLATE RH (See page IR-14)
28. REMOVE FRONT DOOR SCUFF PLATE LH (See page IR-14)
29. REMOVE INSTRUMENT PANEL UNDER COVER SUB-ASSEMBLY RH (See page IR-14)
30. REMOVE INSTRUMENT PANEL UNDER COVER SUB-ASSEMBLY LH (See page IR-14)
31. REMOVE COWL SIDE TRIM BOARD RH (See page IR-15)
32. REMOVE COWL SIDE TRIM BOARD LH (See page IR-15)
33. REMOVE SHIFT LEVER KNOB SUB-ASSEMBLY (for Manual Transaxle) (See page IP-84)
34. REMOVE UPPER CONSOLE PANEL SUB-ASSEMBLY (See page IP-84)
35. REMOVE CONSOLE UPPER REAR PANEL SUB-ASSEMBLY (See page IP-84)
36. REMOVE CONSOLE BOX CARPET (See page IP-85)
37. REMOVE REAR CONSOLE BOX ASSEMBLY (See page IP-85)
38. REMOVE INSTRUMENT PAD LOWER LH (See page IP-44)
39. REMOVE INSTRUMENT PAD LOWER RH (See page IP-45)
40. REMOVE INSTRUMENT PANEL LOWER FINISH PANEL SUB-ASSEMBLY (See page IP-45)
41. REMOVE INSTRUMENT PANEL BOX (See page IP-45)

42. DISCONNECT ANTENNA CORD SUB-ASSEMBLY (See page IP-46)
43. SEPARATE HOOD LOCK CONTROL LEVER SUB-ASSEMBLY (See page IP-46)
44. REMOVE LOWER INSTRUMENT PANEL SUB-ASSEMBLY (See page IP-46)
45. POSITION FRONT WHEELS FACING STRAIGHT AHEAD
46. REMOVE STEERING PAD (See page RS-309)
47. REMOVE STEERING WHEEL ASSEMBLY (See page SR-12)
48. REMOVE STEERING COLUMN COVER (See page SR-12)
49. REMOVE COMBINATION SWITCH ASSEMBLY (See page SR-13)
50. DISCONNECT POWER STEERING ECU (See page SR-13)
51. REMOVE INSTRUMENT PANEL SUB REINFORCEMENT (See page SR-14)
52. REMOVE COLUMN HOLE COVER SILENCER SHEET (See page SR-14)
53. SEPARATE STEERING SLIDING YOKE SUB-ASSEMBLY (See page AC-87)
54. REMOVE BRAKE PEDAL (for Automatic Transaxle) (See page SR-14)
55. REMOVE BRAKE MASTER CYLINDER PUSH ROD CLEVIS (for Manual Transaxle) (See page BR-20)
56. REMOVE BRAKE PEDAL SUPPORT SUB-ASSEMBLY (for Manual Transaxle) (See page BR-21)
57. REMOVE STEERING COLUMN ASSEMBLY (See page SR-15)
58. REMOVE HEATER TO REGISTER DUCT ASSEMBLY (See page AC-87)
59. REMOVE DEFROSTER NOZZLE ASSEMBLY (See page AC-87)
60. REMOVE REAR NO. 2 AIR DUCT (for Cold Area Specification Vehicles) (See page AC-88)
61. REMOVE REAR NO. 1 AIR DUCT (for Cold Area Specification Vehicles) (See page AC-88)
62. REMOVE REAR NO. 3 AIR DUCT (for Cold Area Specification Vehicles) (See page AC-88)
63. REMOVE INSTRUMENT PANEL BRACE SUB-ASSEMBLY (See page AC-89)

64. **SEPARATE MAIN BODY ECU (DRIVER SIDE J/B) (See page AC-89)**

65. **SEPARATE CONNECTOR NO. 2 HOLDER (See page AC-89)**

66. **REMOVE INSTRUMENT PANEL REINFORCEMENT (See page AC-90)**

67. **REMOVE BLOWER UNIT**
    (a) Remove the 3 screws and the blower unit.

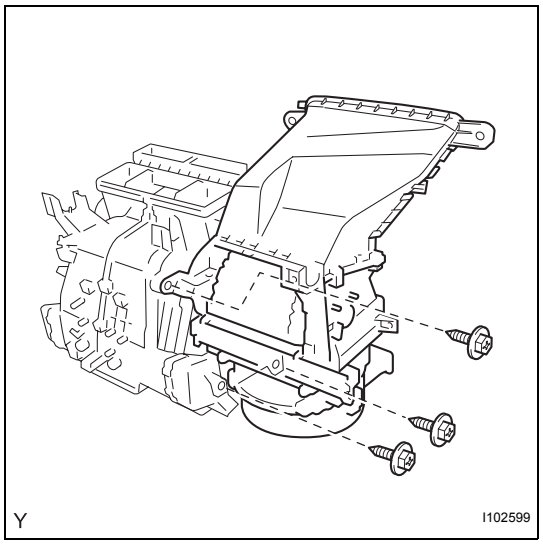

DISASSEMBLY

1. **REMOVE NO. 1 AIR DUCT SUB-ASSEMBLY**
    (a) Disengage the 2 claws and remove the air duct.

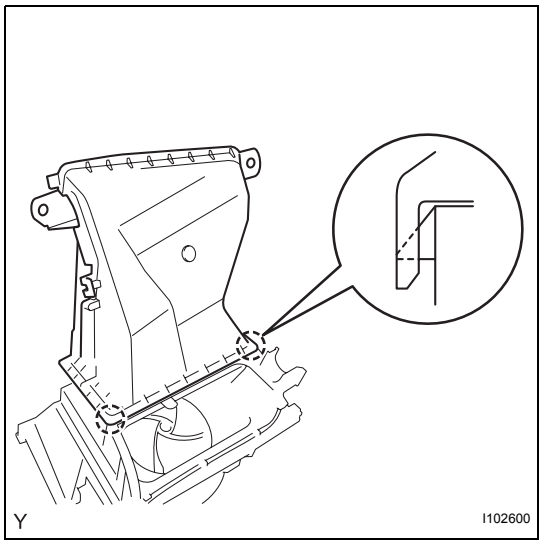

2. **REMOVE AIR INLET DAMPER CONTROL CABLE SUB-ASSEMBLY**
    (a) Disengage the 3 claws and remove the air inlet damper control cable.

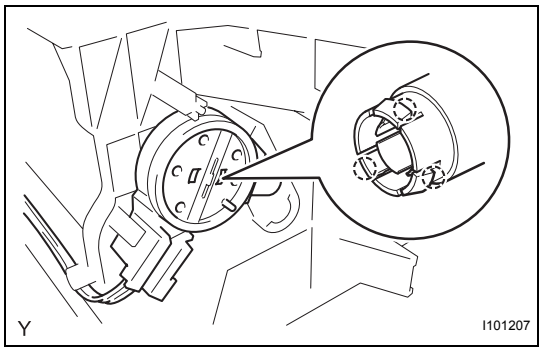

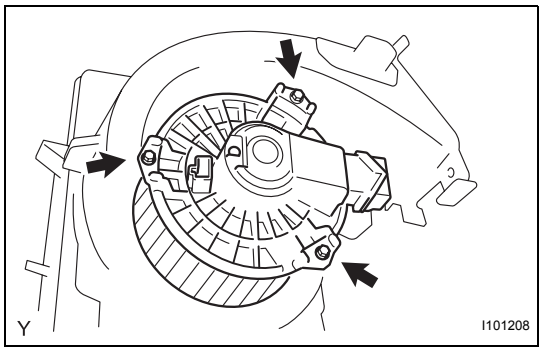

3. REMOVE BLOWER MOTOR

(a) Remove the 3 screws and the blower motor.

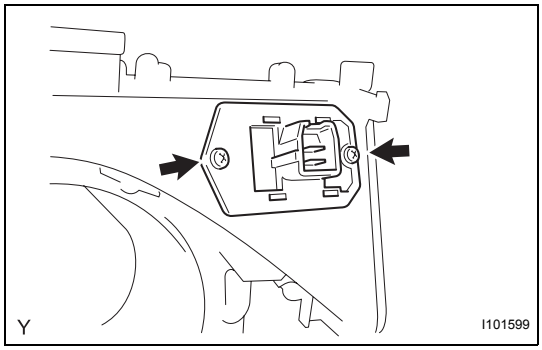

4. REMOVE BLOWER RESISTOR

(a) Remove the 2 screws and the blower resistor.

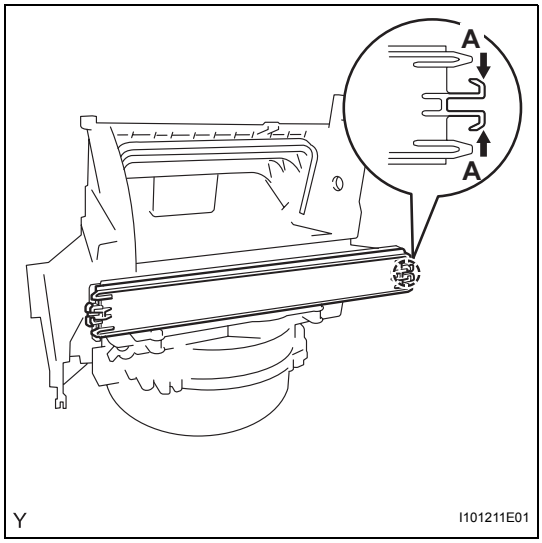

5. REMOVE AIR FILTER CASE

(a) Pinch portion A to disengage the claw and remove the air filter case.

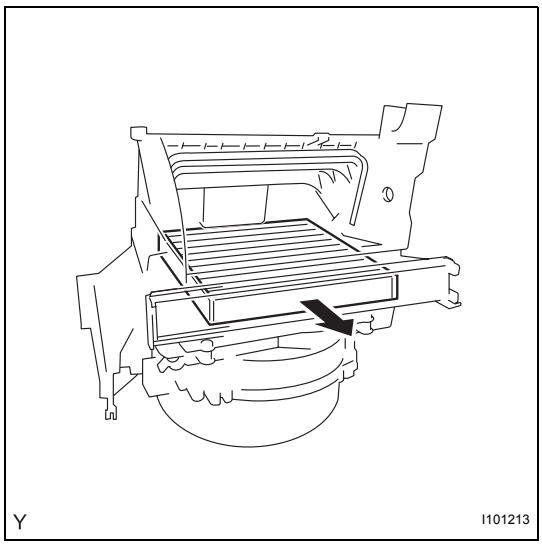

6. REMOVE CLEAN AIR FILTER

(a) Remove the clean air filter from the blower assembly.

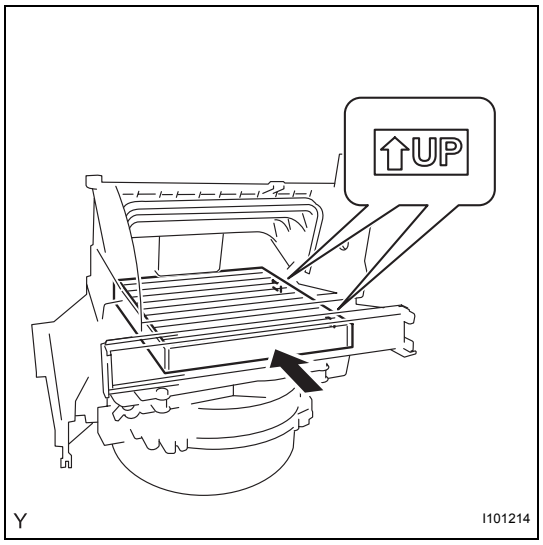

REASSEMBLY

1. INSTALL CLEAN AIR FILTER

(a) Install the clean air filter into the blower assembly.

NOTICE:
Install the clean air filter with its UP mark oriented in the correct direction.

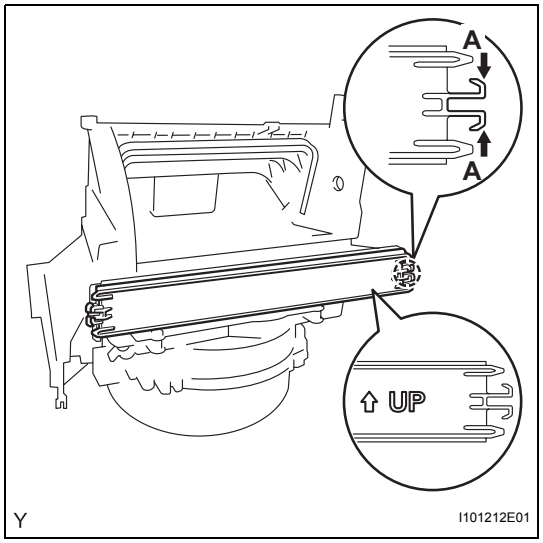

2. INSTALL AIR FILTER CASE

(a) Insert the rib of the air filter case into the blower assembly.

NOTICE:
Install the air filter case with its UP mark oriented in the correct direction.

(b) Pinch portion A to engage the claw and install the air filter case.

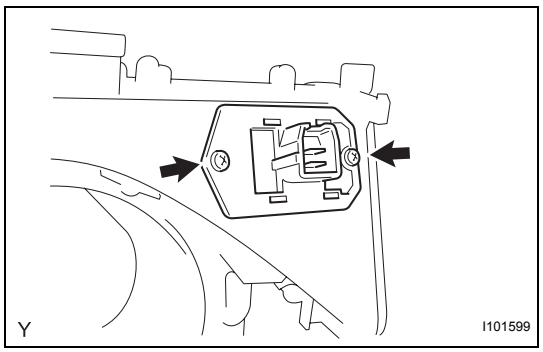

3. INSTALL BLOWER RESISTOR

(a) Install the blower resistor with the 2 screws.

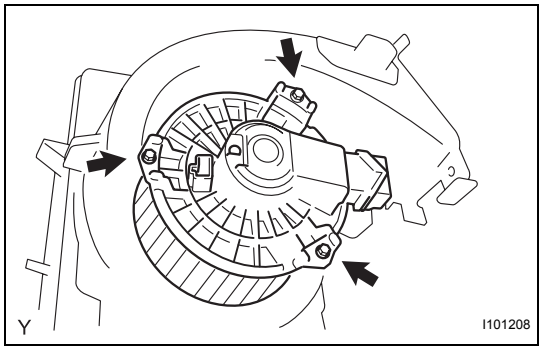

4. INSTALL BLOWER MOTOR

(a) Install the blower motor with the 3 screws.

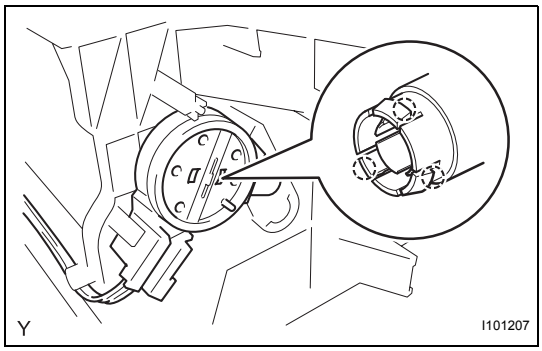

5. **INSTALL AIR INLET DAMPER CONTROL CABLE SUB-ASSEMBLY**
   (a) Engage the 3 claws and install the air inlet damper control cable.

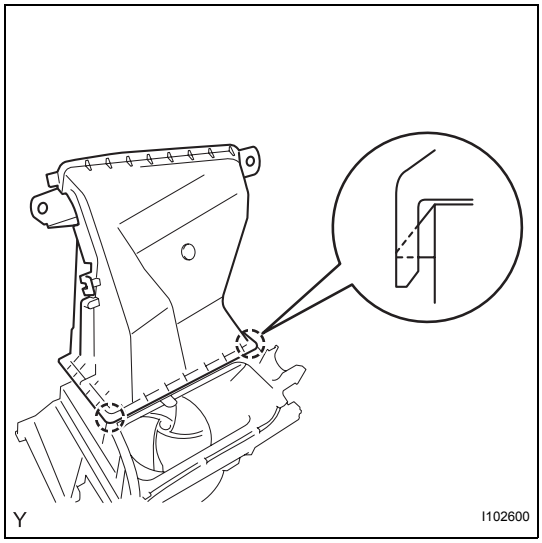

6. **INSTALL NO. 1 AIR DUCT SUB-ASSEMBLY**
   (a) Engage the 2 claws and install the air duct.

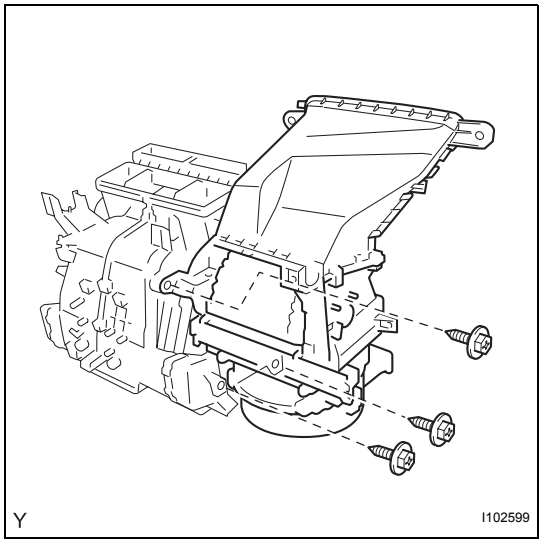

INSTALLATION

1. **INSTALL BLOWER UNIT**
   (a) Install the blower unit with the 3 screws.
2. **INSTALL INSTRUMENT PANEL REINFORCEMENT (See page AC-100)**
3. **INSTALL CONNECTOR NO. 2 HOLDER (See page AC-103)**
4. **INSTALL MAIN BODY ECU (DRIVER SIDE J/B) (See page AC-103)**
5. **INSTALL INSTRUMENT PANEL BRACE SUB-ASSEMBLY (See page AC-104)**
6. **INSTALL REAR NO. 3 AIR DUCT (for Cold Area Specification Vehicles) (See page AC-104)**
7. **INSTALL REAR NO. 1 AIR DUCT (for Cold Area Specification Vehicles) (See page AC-105)**
8. **INSTALL REAR NO. 2 AIR DUCT (for Cold Area Specification Vehicles) (See page AC-105)**
9. **INSTALL DEFROSTER NOZZLE ASSEMBLY (See page AC-105)**
10. **INSTALL HEATER TO REGISTER DUCT ASSEMBLY (See page AC-106)**

11. INSTALL STEERING COLUMN ASSEMBLY (See page SR-19)
12. INSTALL BRAKE PEDAL SUPPORT SUB-ASSEMBLY (for Manual Transaxle) (See page BR-21)
13. INSTALL BRAKE MASTER CYLINDER PUSH ROD CLEVIS (for Manual Transaxle) (See page BR-21)
14. INSTALL BRAKE PEDAL (for Automatic Transaxle) (See page SR-19)
15. INSTALL STEERING SLIDING YOKE SUB-ASSEMBLY (See page AC-106)
16. INSTALL COLUMN HOLE COVER SILENCER SHEET (See page SR-20)
17. INSTALL INSTRUMENT PANEL SUB REINFORCEMENT (See page SR-20)
18. CONNECT POWER STEERING ECU (See page SR-21)
19. INSTALL COMBINATION SWITCH ASSEMBLY (See page SR-21)
20. INSTALL STEERING COLUMN COVER (See page SR-22)
21. INSTALL STEERING WHEEL ASSEMBLY (See page SR-22)
22. INSTALL STEERING PAD (See page RS-310)
23. INSTALL LOWER INSTRUMENT PANEL SUB-ASSEMBLY (See page IP-52)
24. CONNECT HOOD LOCK CONTROL LEVER SUB-ASSEMBLY (See page IP-53)
25. CONNECT ANTENNA CORD SUB-ASSEMBLY (See page IP-53)
26. INSTALL INSTRUMENT PANEL BOX (See page IP-53)
27. INSTALL INSTRUMENT PANEL LOWER FINISH PANEL SUB-ASSEMBLY (See page IP-54)
28. INSTALL INSTRUMENT PAD LOWER RH (See page IP-54)
29. INSTALL INSTRUMENT PAD LOWER LH (See page IP-55)
30. INSTALL REAR CONSOLE BOX ASSEMBLY (See page IP-88)
31. INSTALL CONSOLE BOX CARPET (See page IP-88)
32. INSTALL CONSOLE UPPER REAR PANEL SUB-ASSEMBLY (See page IP-89)
33. INSTALL UPPER CONSOLE PANEL SUB-ASSEMBLY (See page IP-89)

34. INSTALL SHIFT LEVER KNOB SUB-ASSEMBLY (for Manual Transaxle) (See page IP-89)
35. INSTALL COWL SIDE TRIM BOARD RH (See page IR-34)
36. INSTALL COWL SIDE TRIM BOARD LH (See page IR-34)
37. INSTALL INSTRUMENT PANEL UNDER COVER SUB-ASSEMBLY RH (See page IR-35)
38. INSTALL INSTRUMENT PANEL UNDER COVER SUB-ASSEMBLY LH (See page IR-35)
39. INSTALL FRONT DOOR SCUFF PLATE RH (See page IR-35)
40. INSTALL FRONT DOOR SCUFF PLATE LH (See page IR-35)
41. INSTALL UPPER INSTRUMENT PANEL SUB-ASSEMBLY (See page IP-11)
42. INSTALL GLOVE COMPARTMENT DOOR ASSEMBLY (See page IP-13)
43. INSTALL FRONT PILLAR GARNISH RH (See page IR-29)
44. INSTALL FRONT PILLAR GARNISH LH (See page IR-30)
45. INSTALL FRONT DOOR OPENING TRIM WEATHERSTRIP RH (See page IP-14)
46. INSTALL FRONT DOOR OPENING TRIM WEATHERSTRIP LH (See page IP-14)
47. CONNECT AIR INLET DAMPER CONTROL CABLE SUB-ASSEMBLY (See page AC-246)
48. CONNECT DEFROSTER DAMPER CONTROL CABLE SUB-ASSEMBLY (See page AC-246)
49. CONNECT AIR MIX DAMPER CONTROL CABLE SUB-ASSEMBLY (See page AC-246)
50. INSTALL AIR CONDITIONING PANEL ASSEMBLY (See page AC-246)
51. INSTALL STEREO OPENING COVER (w/o Radio Receiver) (See page IP-56)
52. INSTALL RADIO RECEIVER ASSEMBLY (See page AV-40)
53. INSTALL INSTRUMENT CLUSTER FINISH PANEL CENTER SUB-ASSEMBLY (See page IP-56)
54. INSTALL COMBINATION METER ASSEMBLY (See page ME-140)
55. INSTALL INSTRUMENT CLUSTER FINISH PANEL (See page ME-140)

56. **INSTALL INSTRUMENT PANEL FINISH PANEL END RH (See page ME-141)**
57. **INSTALL INSTRUMENT PANEL FINISH PANEL END LH (See page ME-141)**
58. **INSTALL INSTRUMENT PANEL FINISH PANEL LOWER CENTER (See page ME-142)**
59. **CONNECT HEATER WATER INLET HOSE (See page AC-108)**
60. **CONNECT HEATER WATER OUTLET HOSE (See page AC-108)**
61. **INSTALL LIQUID TUBE SUB-ASSEMBLY (See page AC-108)**
62. **INSTALL SUCTION TUBE SUB-ASSEMBLY (See page AC-109)**
63. **ADD ENGINE COOLANT (for 1NZ-FE) (See page CO-8)**
64. **CONNECT CABLE TO NEGATIVE BATTERY TERMINAL**
    Torque: 5.4 N*m (55 kgf*cm, 48 in.*lbf)
65. **CHECK SRS WARNING LIGHT**
    (See page AC-109)
66. **CHARGE REFRIGERANT (See page AC-67)**
67. **WARM UP ENGINE (See page AC-69)**
68. **CHECK FOR ENGINE COOLANT LEAK (for 1NZ-FE) (See page CO-1)**
69. **CHECK FOR REFRIGERANT LEAK (See page AC-69)**
70. **POSITION FRONT WHEELS FACING STRAIGHT AHEAD**
71. **PERFORM CALIBRATION OF TORQUE SENSOR ZERO POINT (See page SR-22)**

BLOWER UNIT (for Hatchback)

COMPONENTS

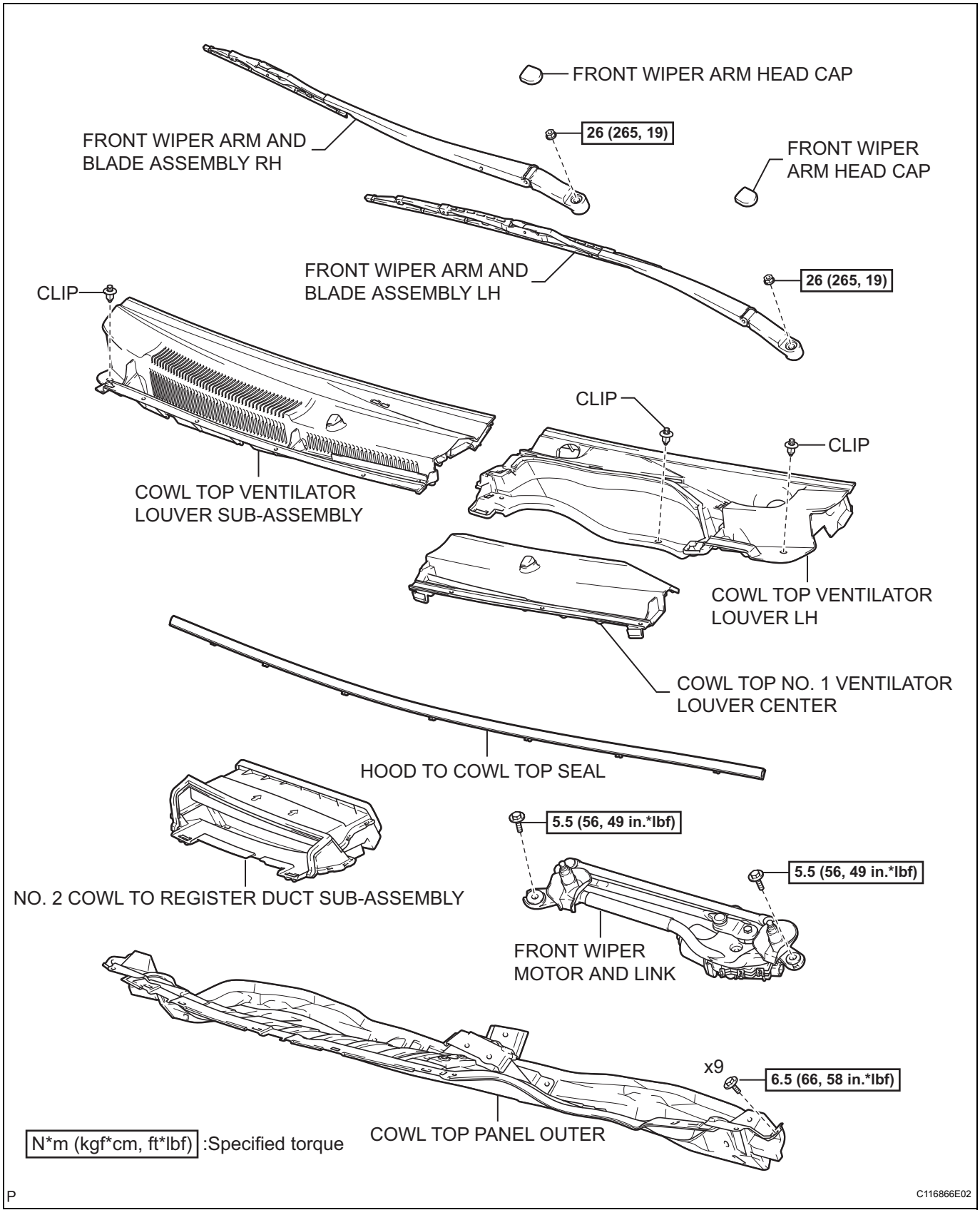

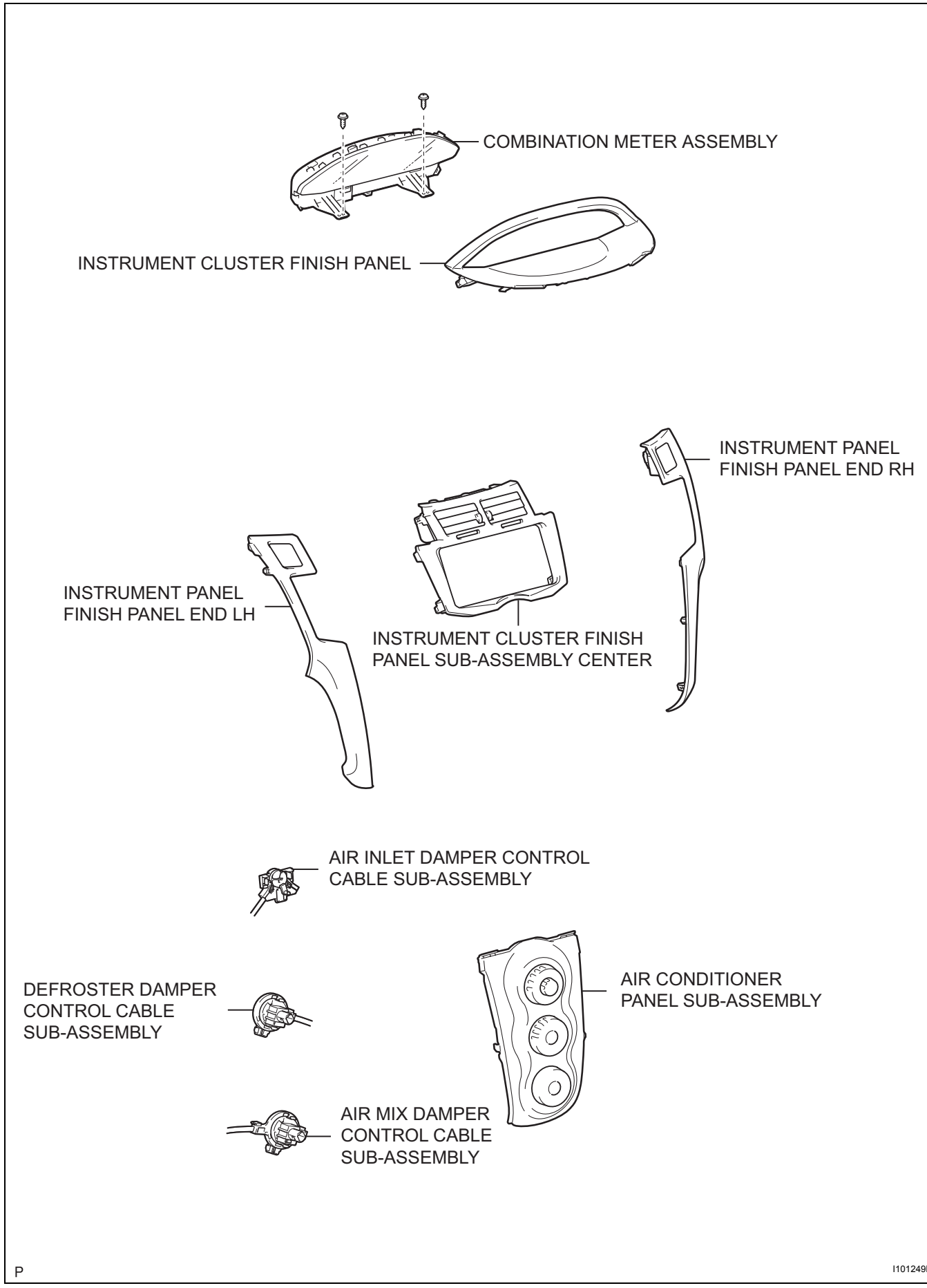
COMBINATION METER ASSEMBLY
INSTRUMENT CLUSTER FINISH PANEL
INSTRUMENT PANEL FINISH PANEL END RH
INSTRUMENT PANEL FINISH PANEL END LH
INSTRUMENT CLUSTER FINISH PANEL SUB-ASSEMBLY CENTER
AIR INLET DAMPER CONTROL CABLE SUB-ASSEMBLY
DEFROSTER DAMPER CONTROL CABLE SUB-ASSEMBLY
AIR CONDITIONER PANEL SUB-ASSEMBLY
AIR MIX DAMPER CONTROL CABLE SUB-ASSEMBLY
P
I101249E01

AC

w/o Radio Receiver:

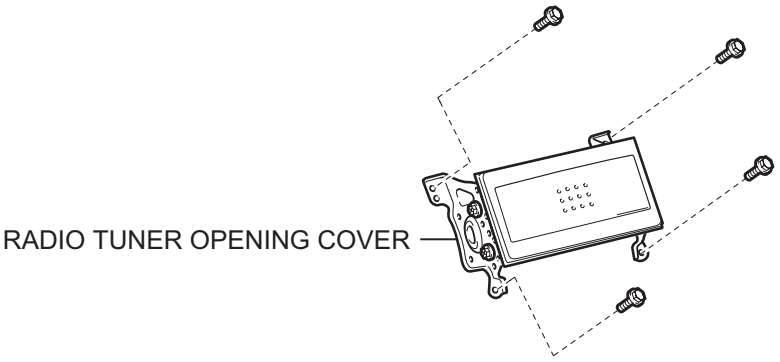

w/o CD Player:

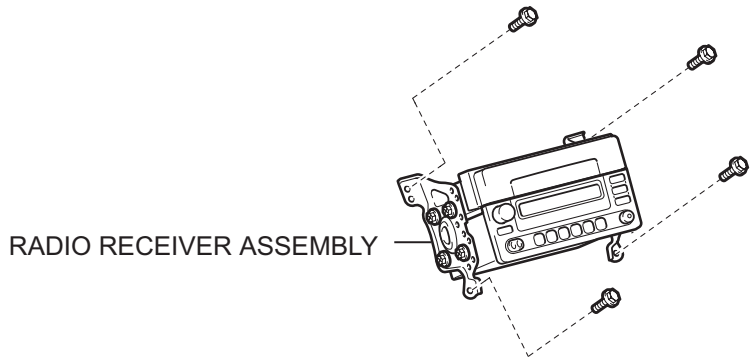

w/ CD Player:

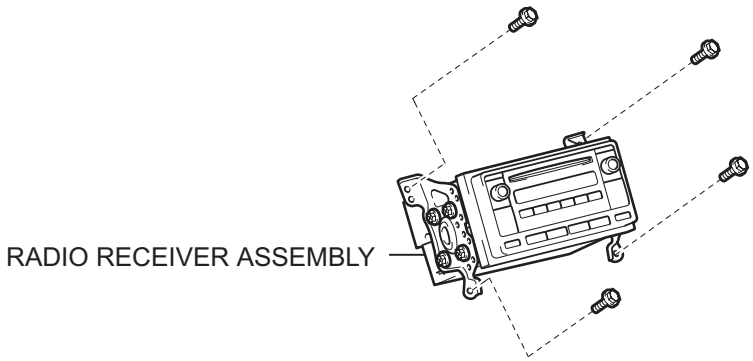

AC

P

I101560E01

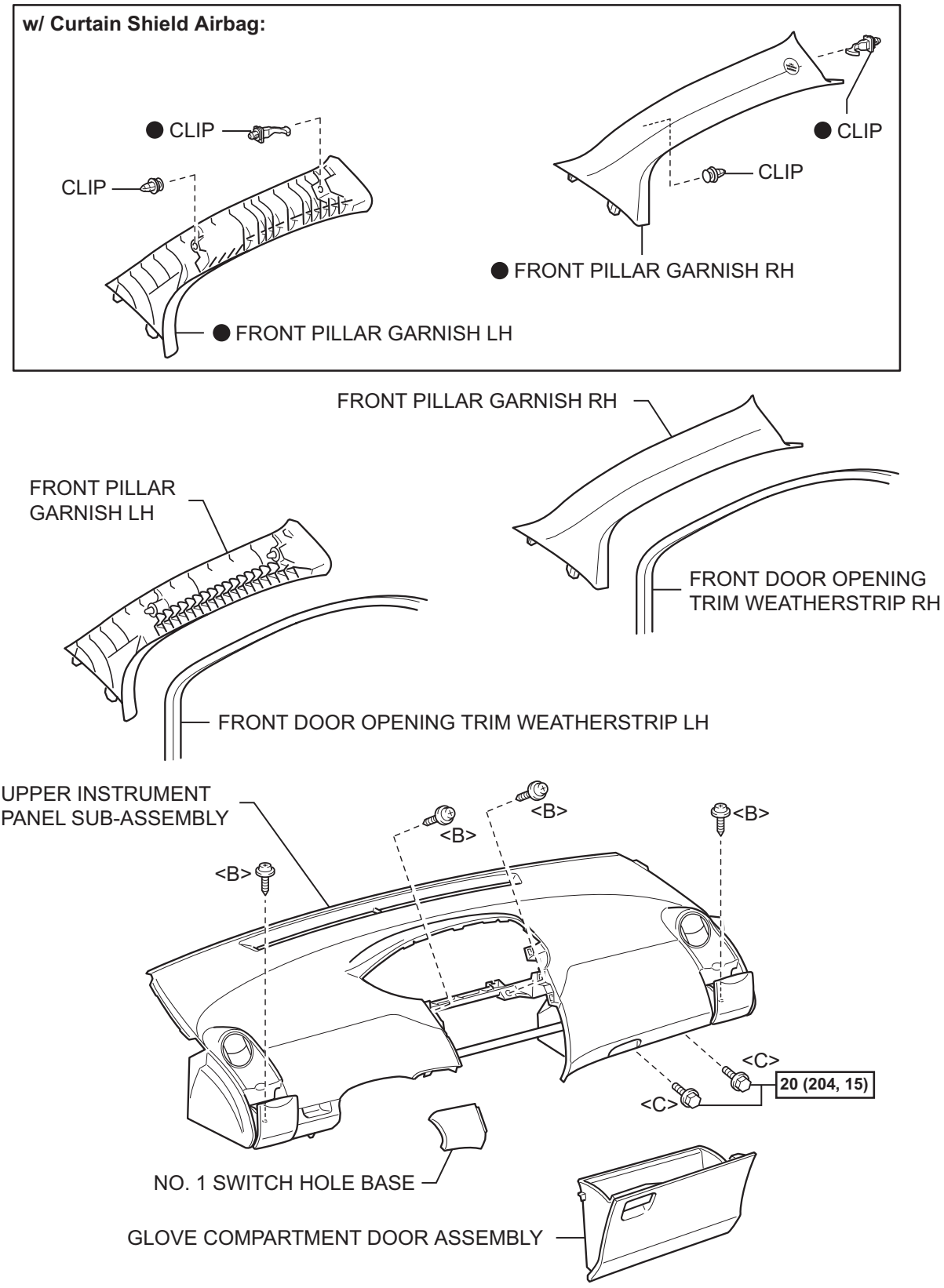

N*m (kgf*cm, ft.*lbf) : Specified torque

● Non-reusable part

B108209E01

AC

for Manual Transaxle:

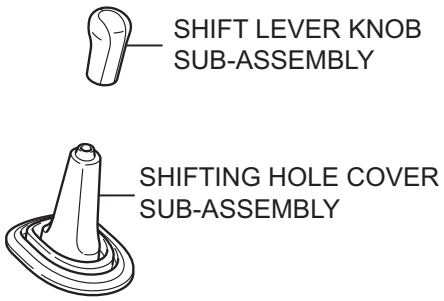

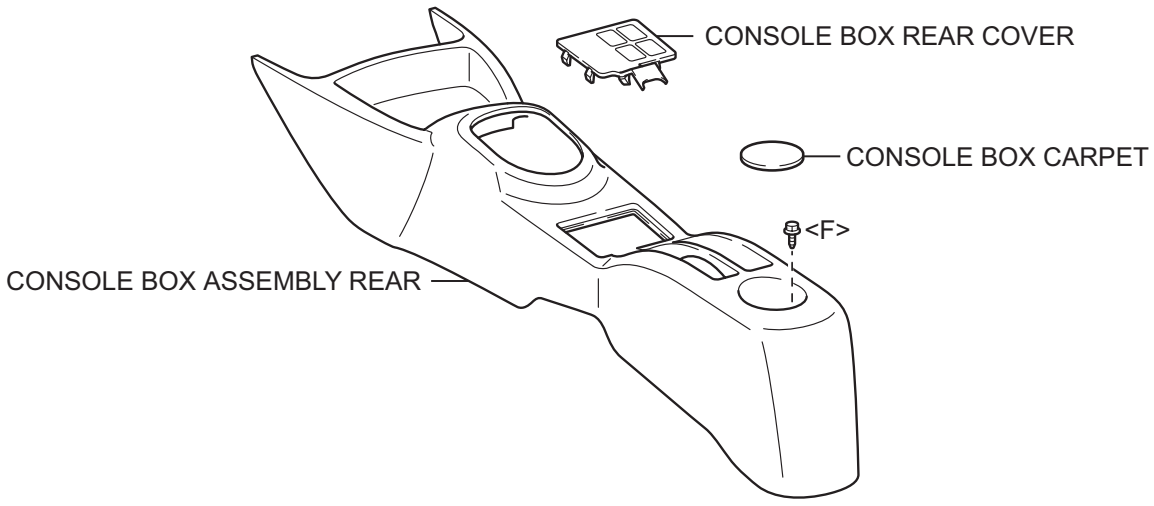

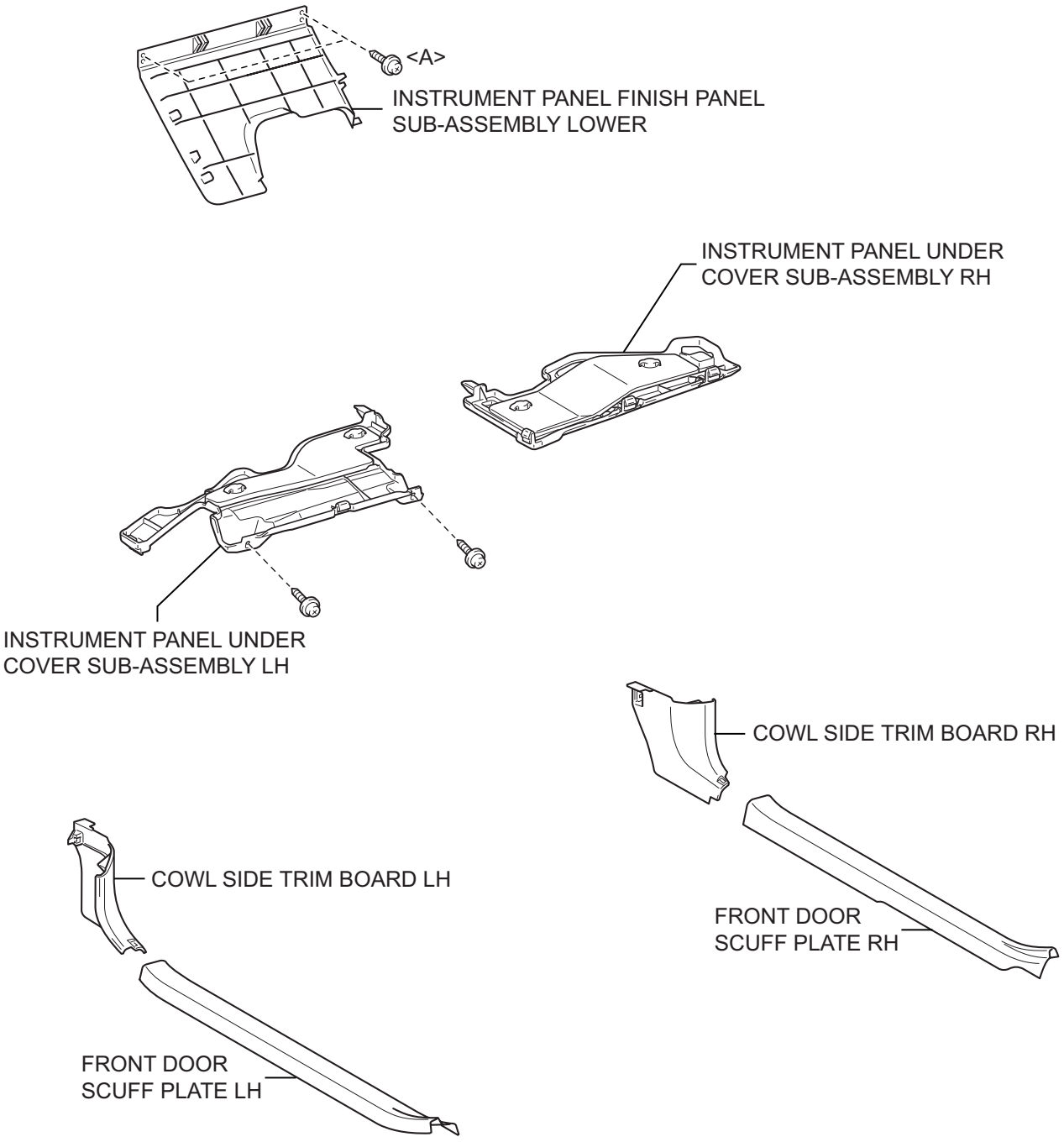

O

B108230E01

AC

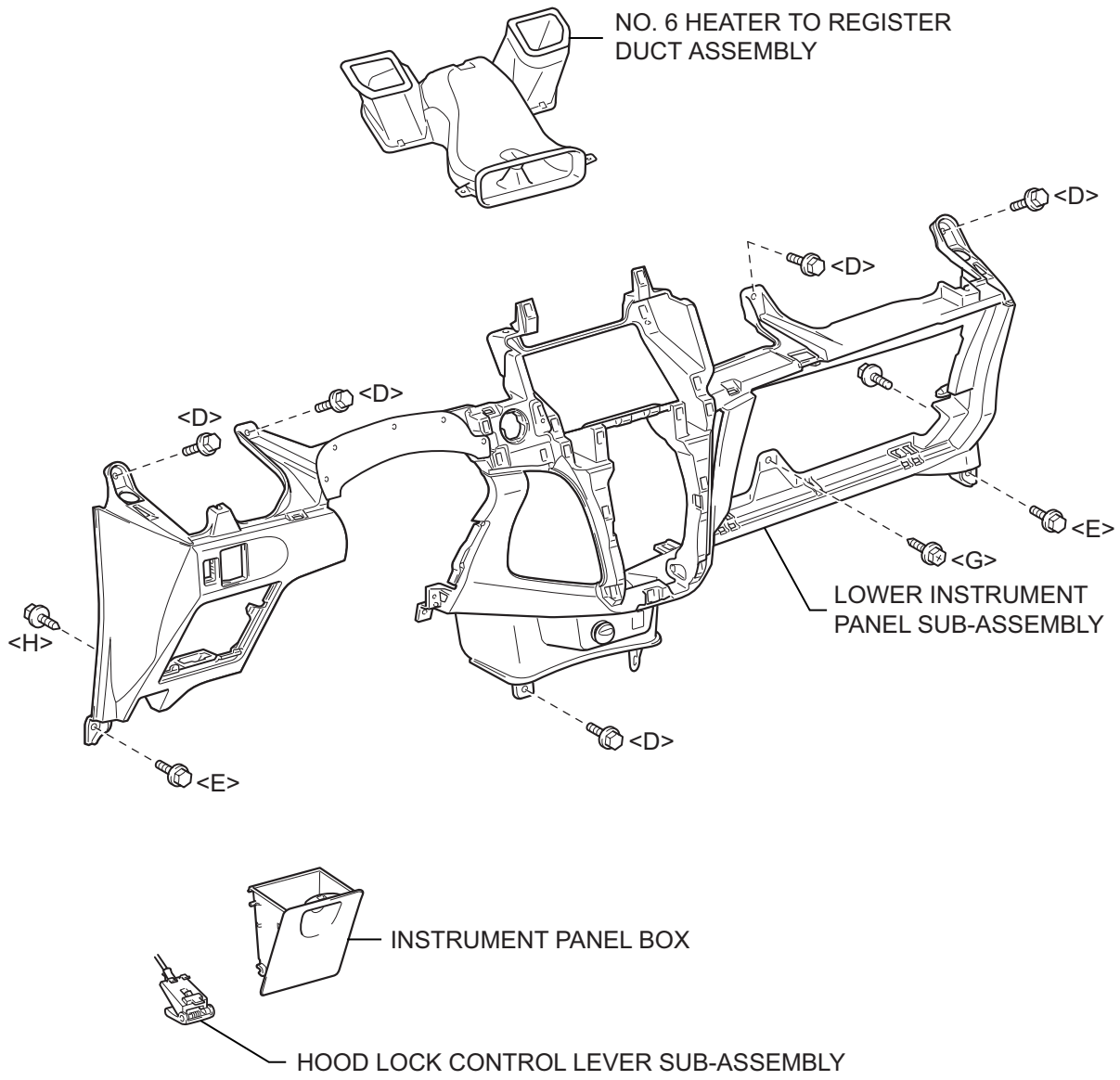
NO. 6 HEATER TO REGISTER DUCT ASSEMBLY
<D>
<D>
<D>
<D>
<E>
<G>
LOWER INSTRUMENT PANEL SUB-ASSEMBLY
<H>
<D>
<E>
INSTRUMENT PANEL BOX
HOOD LOCK CONTROL LEVER SUB-ASSEMBLY

B108207E01

for Manual Transaxle:

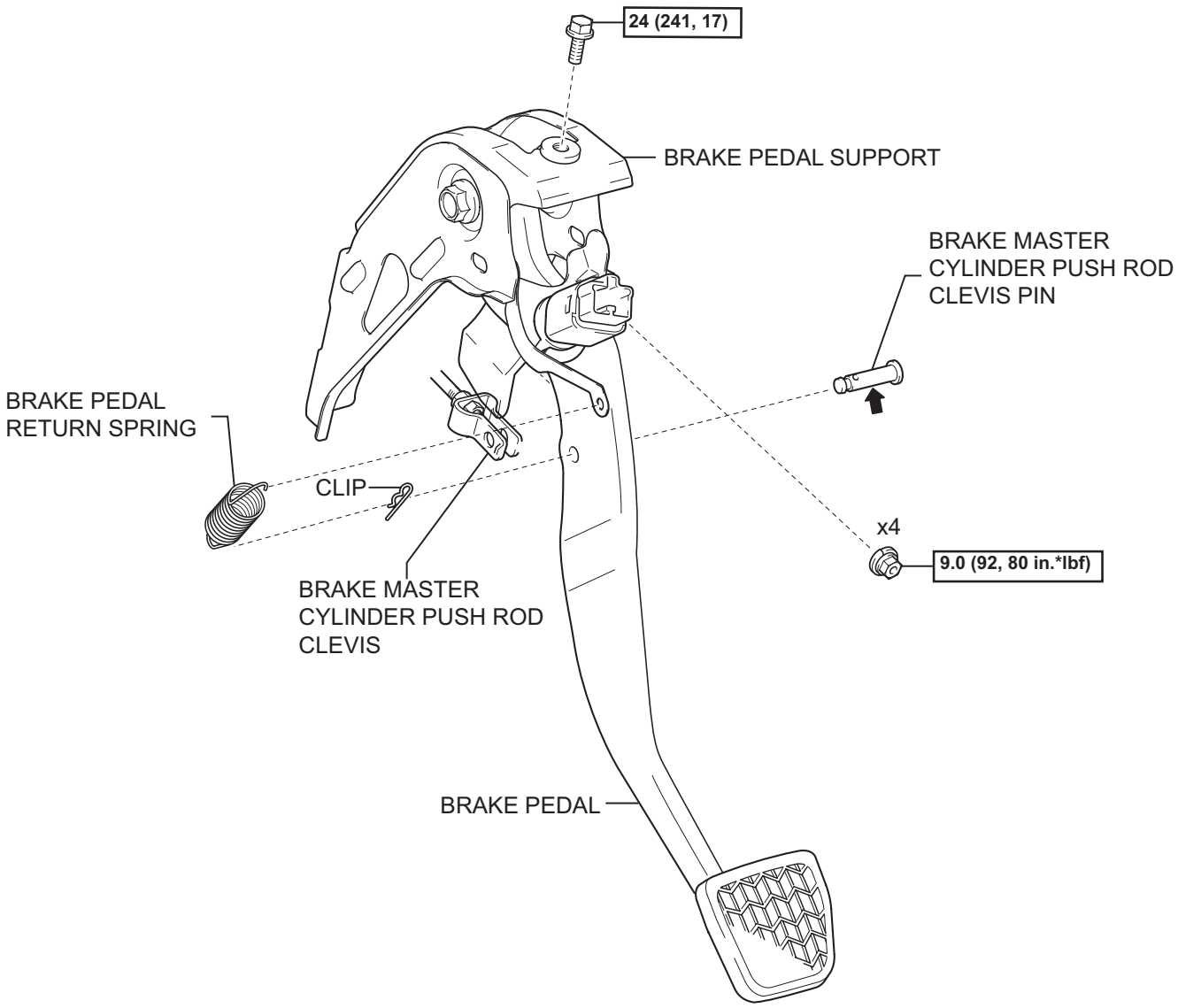

N*m (kgf*cm, ft.*lbf) : Specified torque ⬅ Lithium Soap base glycol grease

P

C118552E01

AC

for Automtic Transaxle:

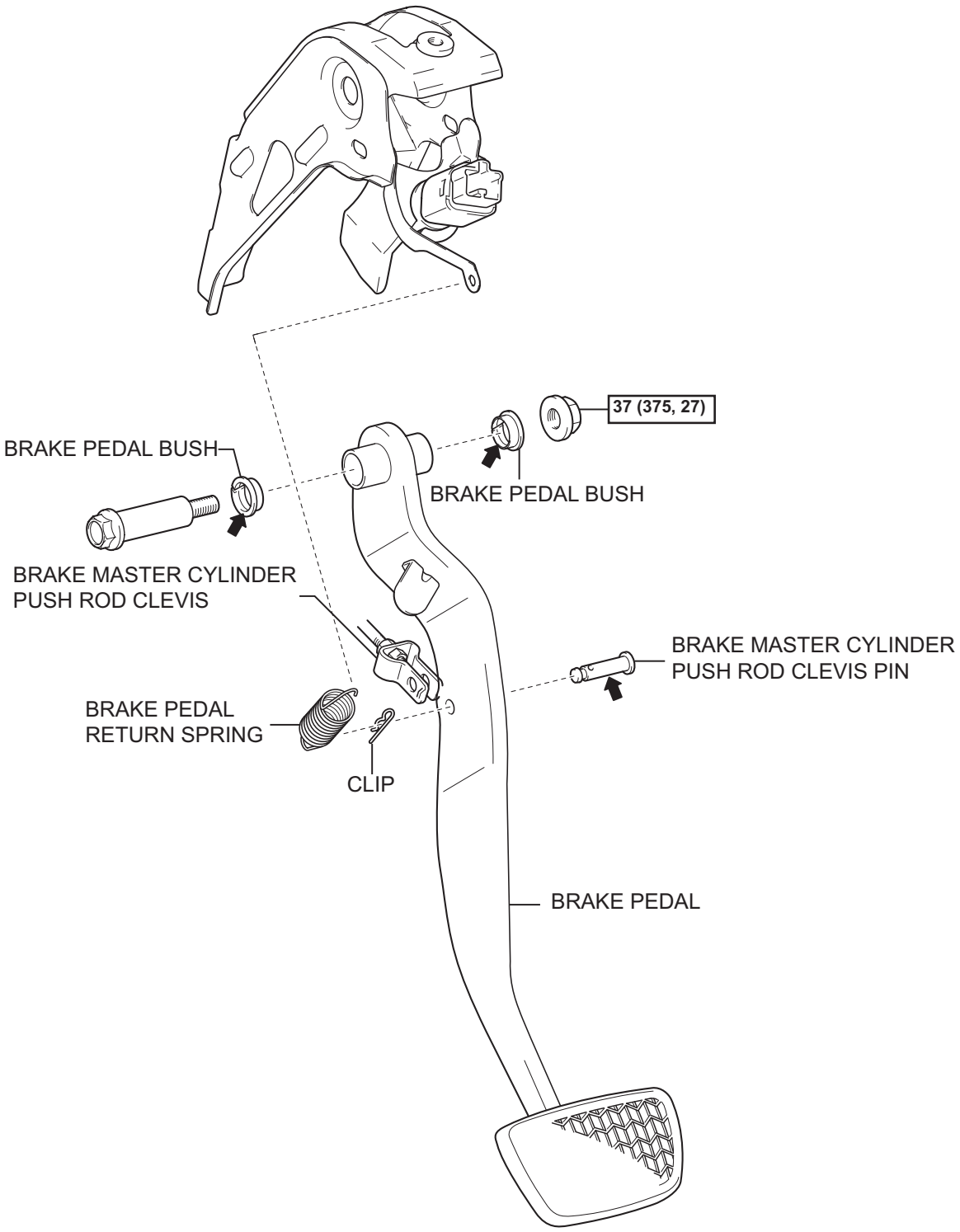

AC

N*m (kgf*cm, ft.*lbf) : Specified torque ⬅ Lithium Soap base glycol grease

P

C118551E01

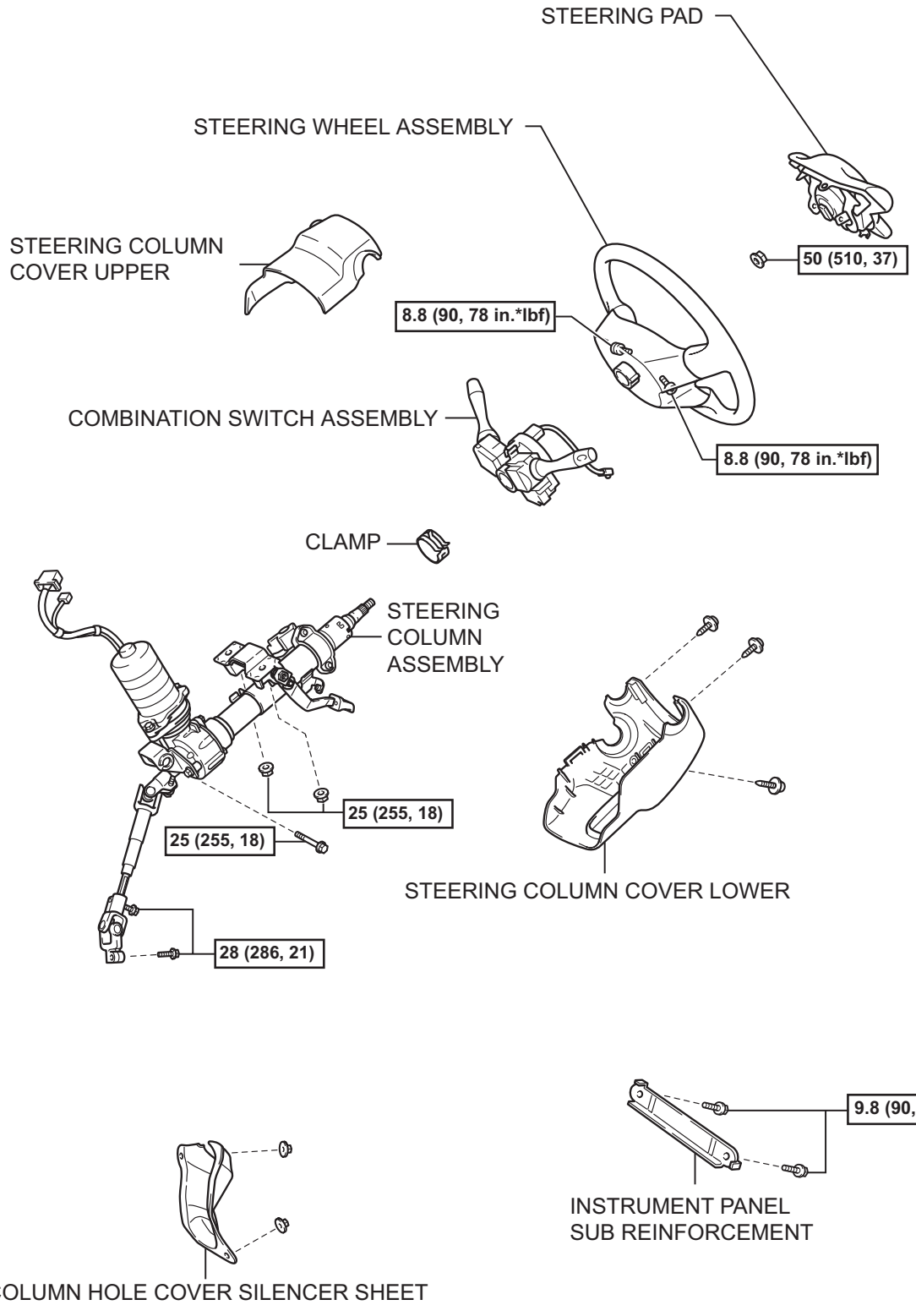

N*m (kgf*cm, ft.*lbf) : Specified torque

N

I101561E01

AC

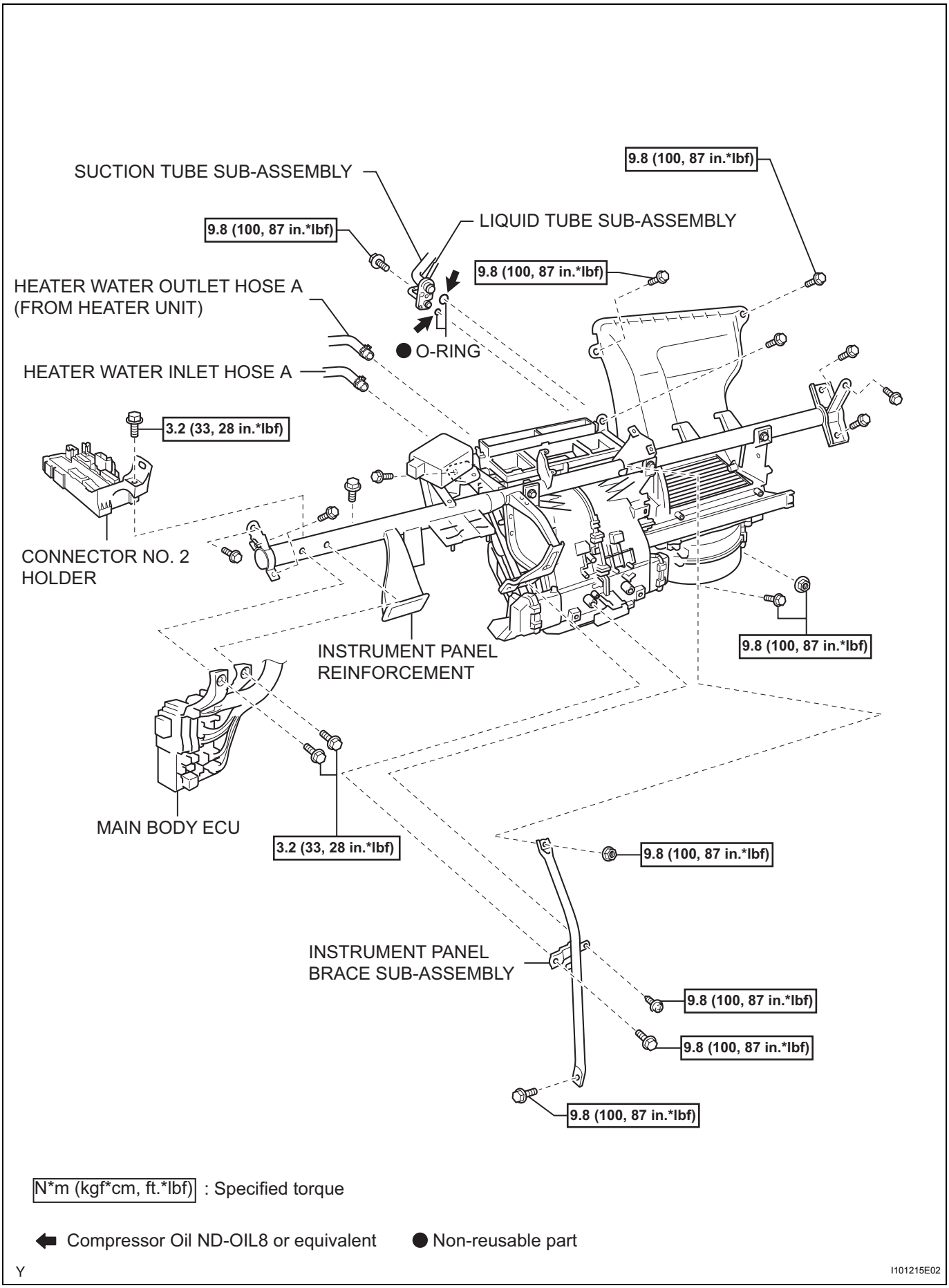

N*m (kgf*cm, ft.*lbf) : Specified torque

⬅ Compressor Oil ND-OIL8 or equivalent ● Non-reusable part

AC

Y

I101215E02

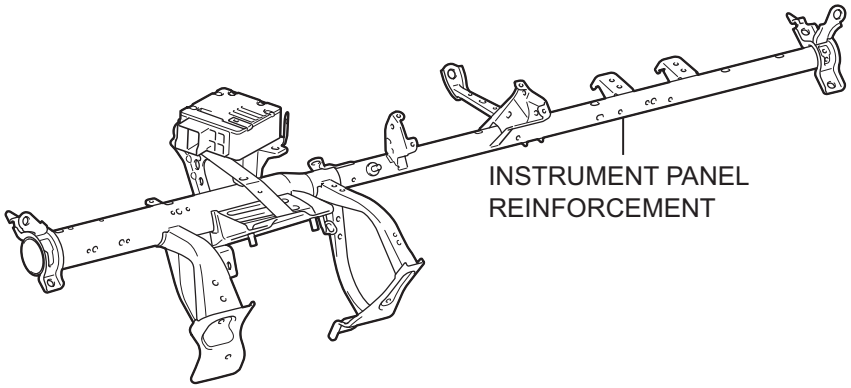

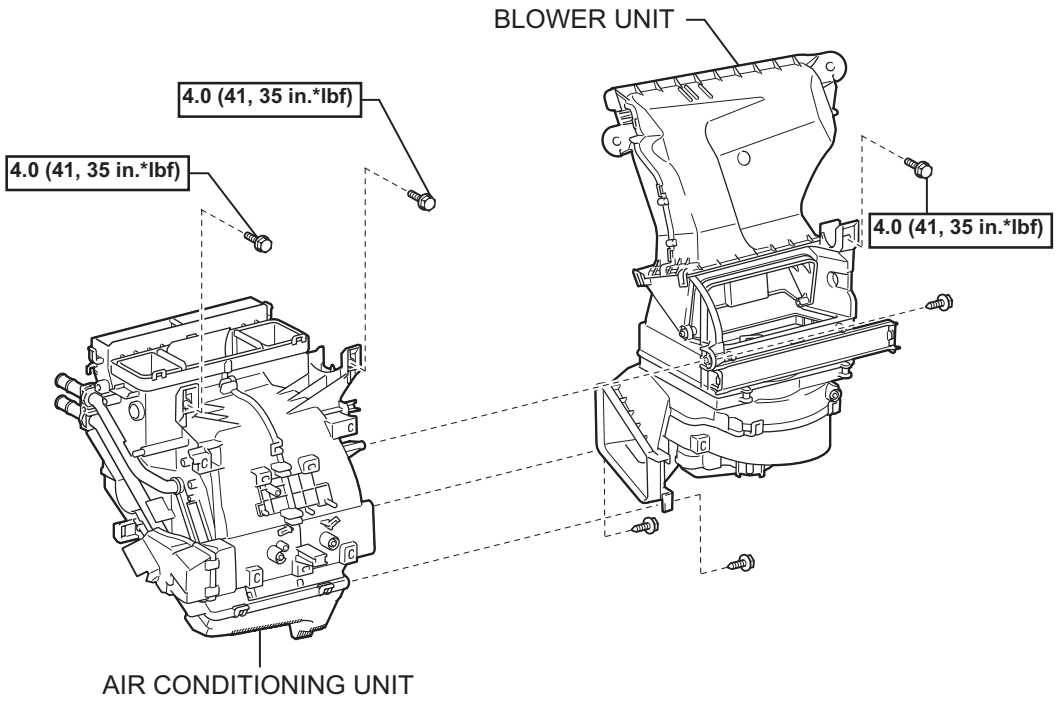

N*m (kgf*cm, ft.*lbf) : Specified torque

P

I101573E01

AC

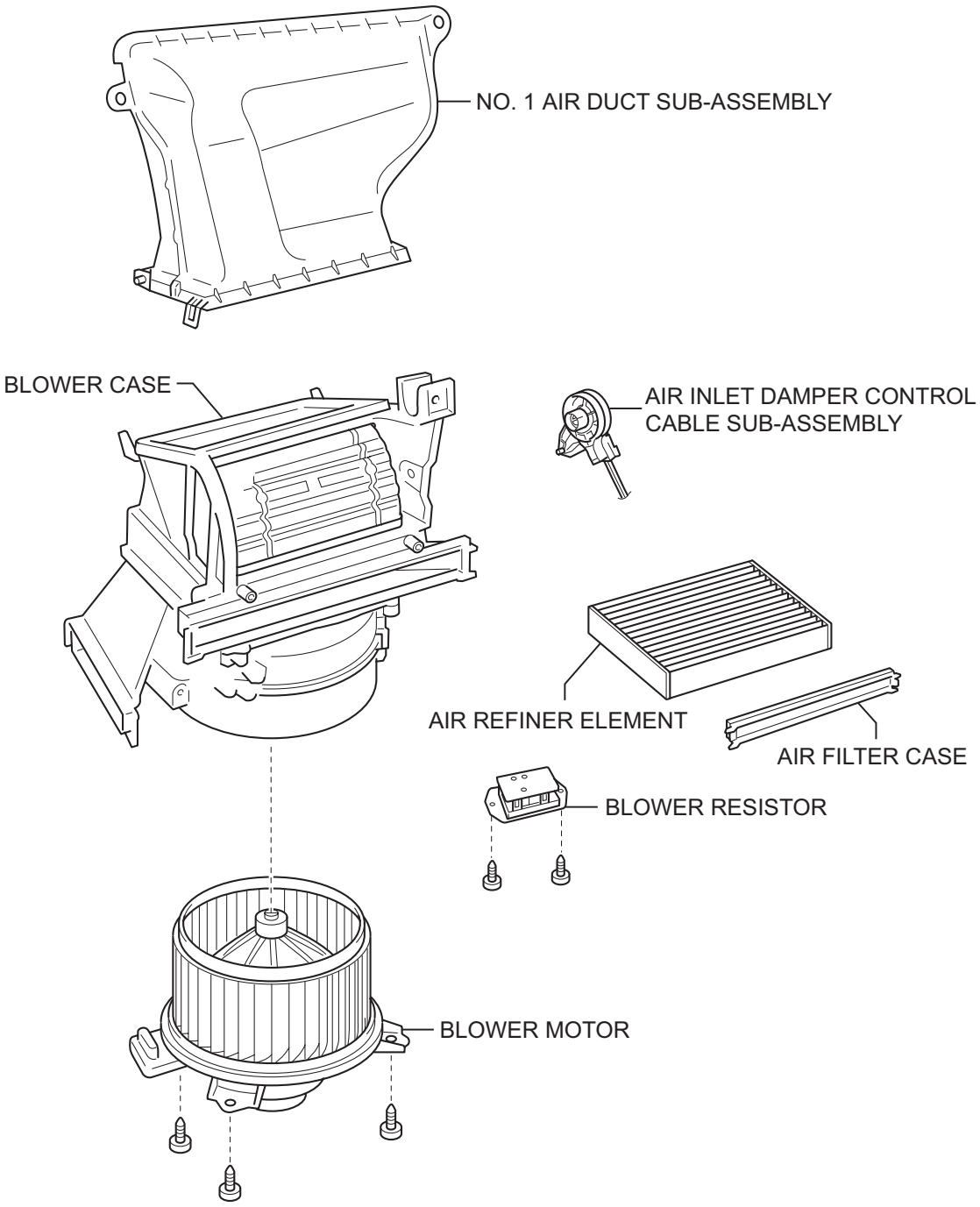

AC

Y

I101220E01

REMOVAL

CAUTION:
Some of these service operations affect the SRS airbag system. Read the precautionary notices concerning the SRS airbag system before servicing (See page RS-1).
HINT:
Use the same procedure for both the RH and LH sides.

1. **DISCONNECT CABLE FROM NEGATIVE BATTERY TERMINAL**
   Wait for at least 90 seconds after disconnecting the cable to prevent the airbag from working.
2. **DISCHARGE REFRIGERANT FROM REFRIGERATION SYSTEM (See page AC-66)**
3. **DRAIN ENGINE COOLANT (See page CO-8)**
4. **REMOVE FRONT WIPER ARM HEAD CAP (See page WW-17)**
5. **REMOVE FRONT WIPER ARM AND BLADE ASSEMBLY LH (See page WW-17)**
6. **REMOVE FRONT WIPER ARM AND BLADE ASSEMBLY RH (See page WW-17)**
7. **REMOVE HOOD TO COWL TOP SEAL (See page WW-18)**
8. **REMOVE COWL TOP VENTILATOR LOUVER SUB-ASSEMBLY (See page WW-18)**
9. **REMOVE COWL TOP VENTILATOR LOUVER LH (See page WW-18)**
10. **REMOVE FRONT WIPER MOTOR AND LINK (See page WW-19)**
11. **REMOVE NO. 2 COWL TO REGISTER DUCT SUB-ASSEMBLY (See page EM-122)**
12. **REMOVE COWL TOP PANEL OUTER (See page EM-123)**
13. **DISCONNECT SUCTION TUBE SUB-ASSEMBLY (See page AC-124)**
14. **DISCONNECT LIQUID TUBE SUB-ASSEMBLY (See page AC-124)**
15. **DISCONNECT HEATER WATER OUTLET HOSE A (FROM HEATER UNIT) (See page AC-125)**
16. **DISCONNECT HEATER WATER INLET HOSE A (See page AC-125)**
17. **BOLTS, SCREWS AND NUTS TABLE (See page IP-66)**
18. **REMOVE INSTRUMENT PANEL FINISH PANEL END LH (See page WW-17)**
19. **REMOVE INSTRUMENT PANEL FINISH PANEL END RH (See page WW-17)**

20. REMOVE INSTRUMENT CLUSTER FINISH PANEL (See page ME-145)
21. REMOVE COMBINATION METER ASSEMBLY (See page ME-146)
22. REMOVE INSTRUMENT CLUSTER FINISH PANEL SUB-ASSEMBLY CENTER (See page AC-250)
23. REMOVE RADIO TUNER OPENING COVER (w/o Radio Receiver) (See page AC-125)
24. REMOVE RADIO RECEIVER ASSEMBLY (See page AV-44)
25. REMOVE AIR CONDITIONER PANEL SUB-ASSEMBLY (See page AC-250)
26. DISCONNECT AIR MIX DAMPER CONTROL CABLE SUB-ASSEMBLY (See page AC-251)
27. DISCONNECT DEFROSTER DAMPER CONTROL CABLE SUB-ASSEMBLY (See page AC-251)
28. DISCONNECT AIR INLET DAMPER CONTROL CABLE SUB-ASSEMBLY (See page AC-251)
29. REMOVE FRONT DOOR OPENING TRIM WEATHERSTRIP RH (See page IR-50)
30. REMOVE FRONT DOOR OPENING TRIM WEATHERSTRIP LH (See page IR-50)
31. REMOVE FRONT PILLAR GARNISH RH (See page IR-58)
32. REMOVE FRONT PILLAR GARNISH LH (See page IR-59)
33. REMOVE NO. 1 SWITCH HOLE BASE (See page IP-20)
34. REMOVE GLOVE COMPARTMENT DOOR ASSEMBLY (See page IP-20)
35. REMOVE UPPER INSTRUMENT PANEL SUB-ASSEMBLY (See page IP-21)
36. REMOVE FRONT DOOR SCUFF PLATE RH (See page IR-49)
37. REMOVE FRONT DOOR SCUFF PLATE LH (See page IR-49)
38. REMOVE INSTRUMENT PANEL UNDER COVER SUB-ASSEMBLY RH (See page IR-50)
39. REMOVE INSTRUMENT PANEL UNDER COVER SUB-ASSEMBLY LH (See page IR-50)
40. REMOVE COWL SIDE TRIM BOARD RH (See page IR-50)
41. REMOVE COWL SIDE TRIM BOARD LH (See page IR-50)

42. REMOVE SHIFT LEVER KNOB SUB-ASSEMBLY (for Manual Transaxle) (See page IP-68)
43. REMOVE SHIFTING HOLE COVER SUB-ASSEMBLY (for Manual Transaxle) (See page IP-68)
44. REMOVE CONSOLE BOX REAR COVER (See page IP-68)
45. REMOVE CONSOLE BOX CARPET (See page IP-68)
46. REMOVE CONSOLE BOX ASSEMBLY REAR (See page IP-69)
47. REMOVE INSTRUMENT PANEL FINISH PANEL SUB-ASSEMBLY LOWER (See page IP-69)
48. REMOVE INSTRUMENT PANEL BOX (See page IP-70)
49. REMOVE NO. 6 HEATER TO REGISTER DUCT ASSEMBLY (See page IP-70)
50. DISCONNECT ANTENNA CORD SUB-ASSEMBLY (See page IP-70)
51. SEPARATE HOOD LOCK CONTROL LEVER SUB-ASSEMBLY (See page IP-71)
52. REMOVE LOWER INSTRUMENT PANEL SUB-ASSEMBLY (See page IP-71)
53. POSITION FRONT WHEELS FACING STRAIGHT AHEAD
54. REMOVE STEERING PAD (See page RS-309)
55. REMOVE STEERING WHEEL ASSEMBLY (See page SR-30)
56. REMOVE STEERING COLUMN COVER (See page SR-30)
57. REMOVE COMBINATION SWITCH ASSEMBLY (See page SR-31)
58. DISCONNECT POWER STEERING ECU (See page SR-32)
59. REMOVE INSTRUMENT PANEL SUB REINFORCEMENT (See page SR-32)
60. REMOVE COLUMN HOLE COVER SILENCER SHEET (See page SR-32)
61. SEPARATE STEERING SLIDING YOKE SUB-ASSEMBLY (See page AC-127)
62. REMOVE BRAKE PEDAL (for Automatic Transaxle) (See page SR-32)
63. REMOVE BRAKE MASTER CYLINDER PUSH ROD CLEVIS (for Manual Transaxle) (See page BR-20)
64. REMOVE BRAKE PEDAL SUPPORT SUB-ASSEMBLY (for Manual Transaxle) (See page BR-21)

65. **REMOVE STEERING COLUMN ASSEMBLY (See page SR-33)**

66. **REMOVE DEFROSTER NOZZLE ASSEMBLY (See page AC-127)**

67. **REMOVE REAR NO. 2 AIR DUCT (for Cold Area Specification Vehicles) (See page AC-128)**

68. **REMOVE REAR NO. 1 AIR DUCT (for Cold Area Specification Vehicles) (See page AC-129)**

69. **REMOVE REAR NO. 3 AIR DUCT (for Cold Area Specification Vehicles) (See page AC-129)**

70. **REMOVE INSTRUMENT PANEL BRACE SUB-ASSEMBLY (See page AC-129)**

71. **SEPARATE MAIN BODY ECU (See page AC-130)**

72. **SEPARATE CONNECTOR NO. 2 HOLDER (See page AC-130)**

73. **REMOVE INSTRUMENT PANEL REINFORCEMENT (See page AC-131)**

74. **REMOVE BLOWER UNIT**
    (a) Remove the 3 screws and the blower unit.

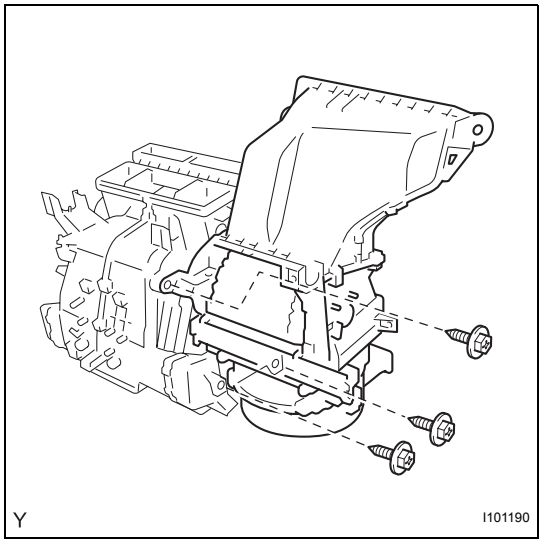

DISASSEMBLY

1. **REMOVE NO. 1 AIR DUCT SUB-ASSEMBLY**
    (a) Disengage the 2 claws and remove the air duct.

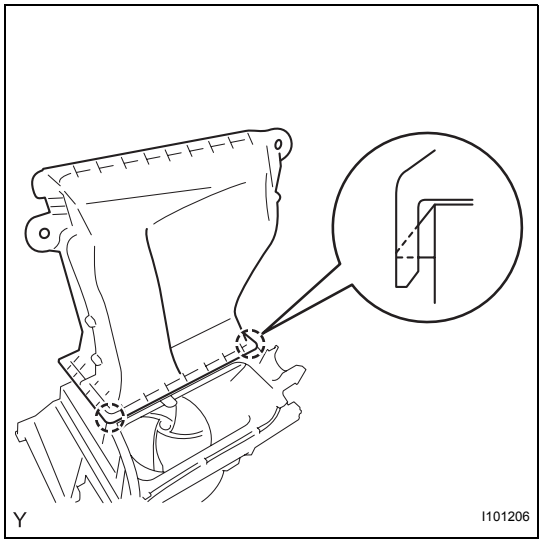

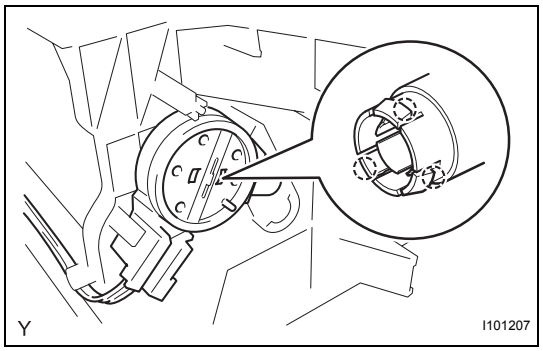

2. REMOVE AIR INLET DAMPER CONTROL CABLE SUB-ASSEMBLY

(a) Disengage the 3 claws and remove the air inlet damper control cable.

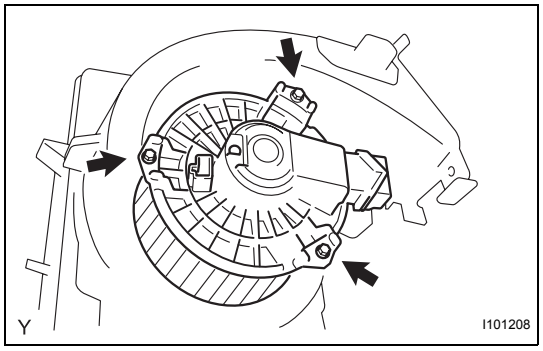

3. REMOVE BLOWER MOTOR

(a) Remove the 3 screws and the blower motor.

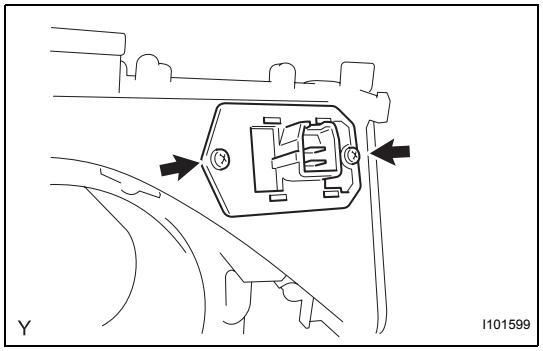

4. REMOVE BLOWER RESISTOR

(a) Remove the 2 screws and the blower resistor.

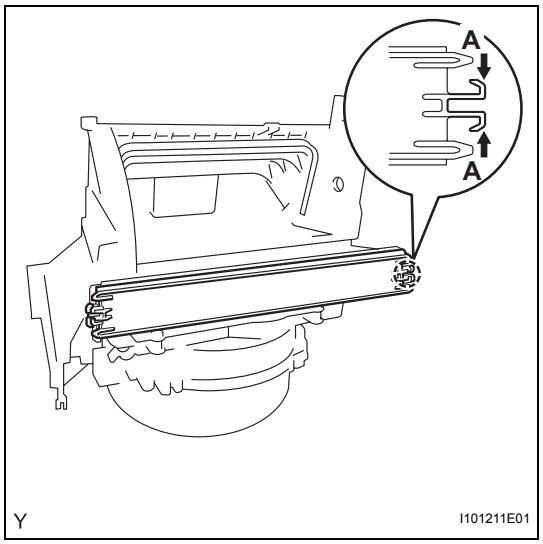

5. REMOVE AIR FILTER CASE

(a) Pinch portion A to disengage the claw and remove the air filter case.

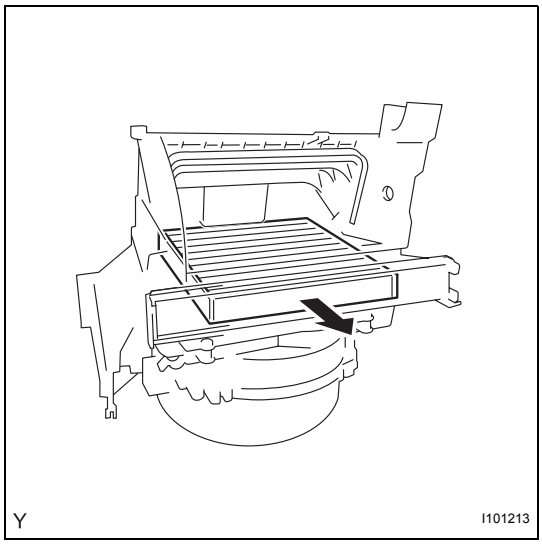

6. REMOVE AIR REFINER ELEMENT

(a) Remove the air refiner element from the blower assembly.

REASSEMBLY

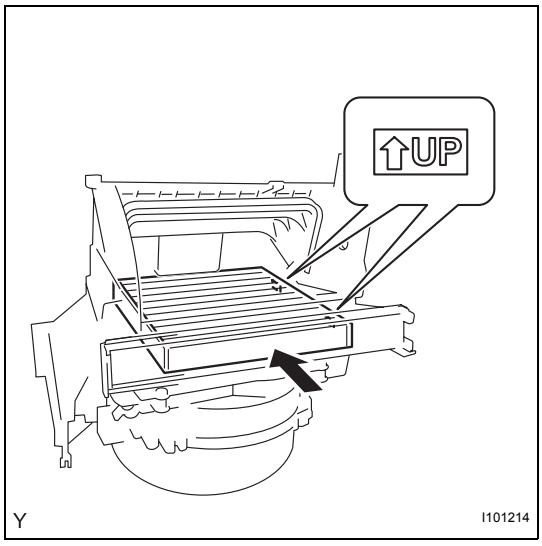

1. INSTALL AIR REFINER ELEMENT

(a) Install the air refiner element into the blower assembly.

NOTICE:

Install the air refiner element with its UP mark oriented in the correct direction.

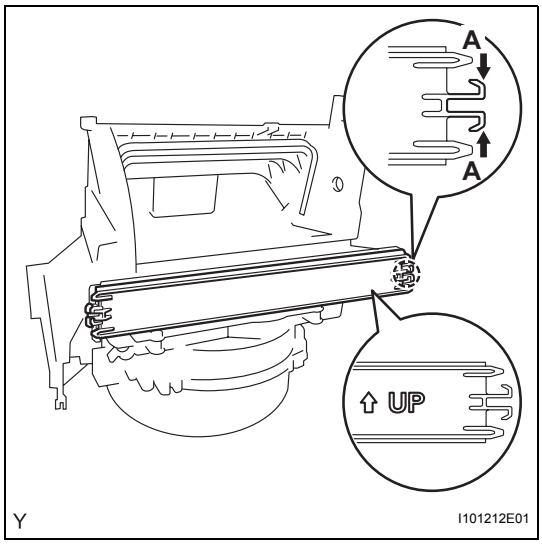

2. INSTALL AIR FILTER CASE

(a) Insert the rib of the air filter case into the blower assembly.

NOTICE:

Install the air filter case with its UP mark oriented in the correct direction.

(b) Pinch portion A to engage the claw and install the air filter case.

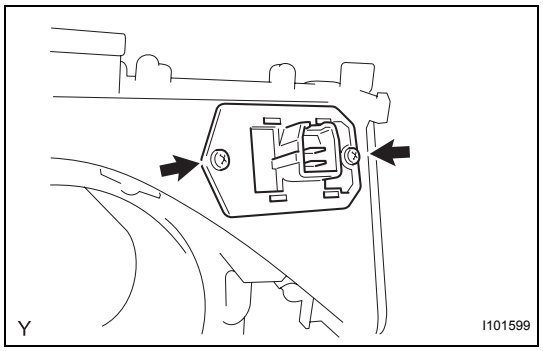

3. INSTALL BLOWER RESISTOR

(a) Install the blower resistor with the 2 screws.

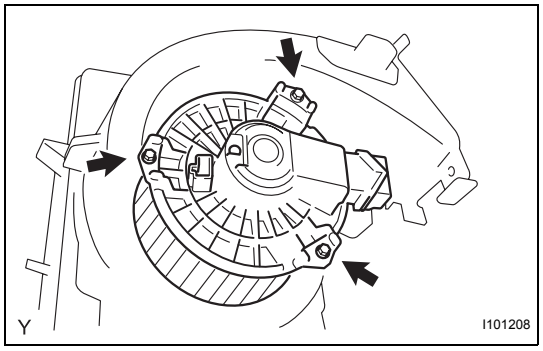

4. INSTALL BLOWER MOTOR

(a) Install the blower motor with the 3 screws.

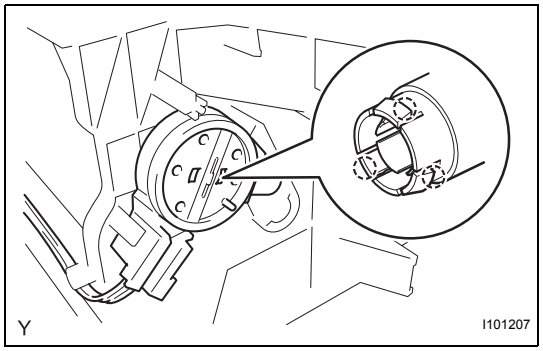

5. INSTALL AIR INLET DAMPER CONTROL CABLE SUB-ASSEMBLY

(a) Engage the 3 claws and install the air inlet damper control cable.

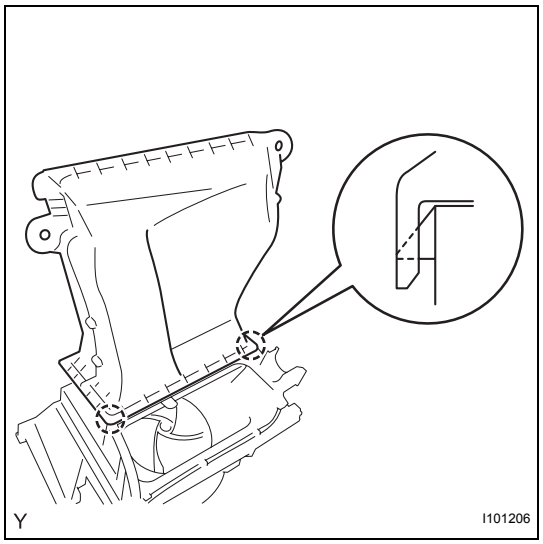

6. INSTALL NO. 1 AIR DUCT SUB-ASSEMBLY

(a) Engage the 2 claws and install the air duct.

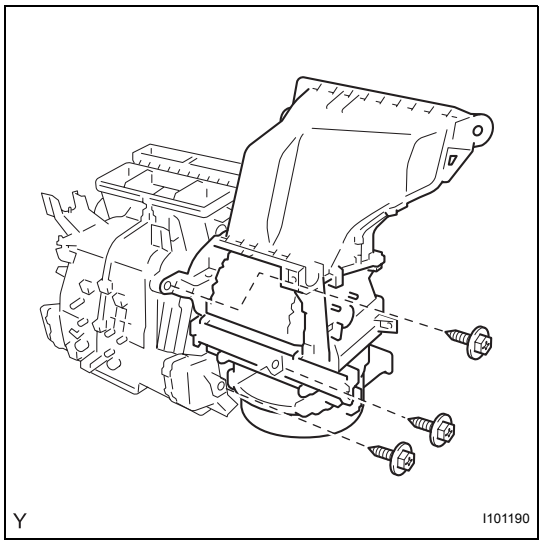

INSTALLATION

1. **INSTALL BLOWER UNIT**
   (a) Install the blower unit with the 3 screws.
2. **INSTALL INSTRUMENT PANEL REINFORCEMENT (See page AC-141)**
3. **INSTALL CONNECTOR NO. 2 HOLDER (See page AC-145)**
4. **INSTALL MAIN BODY ECU (See page AC-145)**
5. **INSTALL INSTRUMENT PANEL BRACE SUB-ASSEMBLY (See page AC-146)**
6. **INSTALL REAR NO. 3 AIR DUCT (for Cold Area Specification Vehicles) (See page AC-146)**
7. **INSTALL REAR NO. 1 AIR DUCT (for Cold Area Specification Vehicles) (See page AC-147)**
8. **INSTALL REAR NO. 2 AIR DUCT (for Cold Area Specification Vehicles) (See page AC-147)**
9. **INSTALL DEFROSTER NOZZLE ASSEMBLY (See page AC-147)**
10. **INSTALL STEERING COLUMN ASSEMBLY (See page SR-38)**
11. **INSTALL BRAKE PEDAL SUPPORT SUB-ASSEMBLY (for Manual Transaxle) (See page BR-21)**
12. **INSTALL BRAKE MASTER CYLINDER PUSH ROD CLEVIS (for Manual Transaxle) (See page BR-21)**
13. **INSTALL BRAKE PEDAL (for Automatic Transaxle) (See page SR-38)**
14. **INSTALL STEERING SLIDING YOKE SUB-ASSEMBLY (See page AC-148)**
15. **INSTALL COLUMN HOLE COVER SILENCER SHEET (See page SR-39)**
16. **INSTALL INSTRUMENT PANEL SUB REINFORCEMENT (See page SR-39)**
17. **CONNECT POWER STEERING ECU (See page SR-39)**
18. **INSTALL COMBINATION SWITCH ASSEMBLY (See page SR-40)**
19. **INSTALL STEERING COLUMN COVER (See page SR-40)**
20. **INSTALL STEERING WHEEL ASSEMBLY (See page SR-41)**
21. **INSTALL STEERING PAD (See page RS-310)**
22. **INSTALL LOWER INSTRUMENT PANEL SUB-ASSEMBLY (See page IP-75)**

23. CONNECT HOOD LOCK CONTROL LEVER SUB-ASSEMBLY (See page IP-77)
24. CONNECT ANTENNA CORD SUB-ASSEMBLY (See page IP-77)
25. INSTALL NO. 6 HEATER TO REGISTER DUCT ASSEMBLY (See page IP-77)
26. INSTALL INSTRUMENT PANEL BOX (See page IP-78)
27. INSTALL INSTRUMENT PANEL FINISH PANEL SUB-ASSEMBLY LOWER (See page IP-78)
28. INSTALL CONSOLE BOX ASSEMBLY REAR (See page IP-79)
29. INSTALL CONSOLE BOX CARPET (See page IP-79)
30. INSTALL CONSOLE BOX REAR COVER (See page IP-79)
31. INSTALL SHIFTING HOLE COVER SUB-ASSEMBLY (for Manual Transaxle) (See page IP-79)
32. INSTALL SHIFT LEVER KNOB SUB-ASSEMBLY (for Manual Transaxle) (See page IP-80)
33. INSTALL COWL SIDE TRIM BOARD RH (See page IR-81)
34. INSTALL COWL SIDE TRIM BOARD LH (See page IR-81)
35. INSTALL INSTRUMENT PANEL UNDER COVER SUB-ASSEMBLY LH (See page IR-82)
36. INSTALL INSTRUMENT PANEL UNDER COVER SUB-ASSEMBLY RH (See page IR-81)
37. INSTALL FRONT DOOR SCUFF PLATE RH (See page IR-82)
38. INSTALL FRONT DOOR SCUFF PLATE LH (See page IR-81)
39. INSTALL UPPER INSTRUMENT PANEL SUB-ASSEMBLY (See page IP-29)
40. INSTALL GLOVE COMPARTMENT DOOR ASSEMBLY (See page IP-32)
41. INSTALL NO. 1 SWITCH HOLE BASE (See page IP-32)
42. INSTALL FRONT PILLAR GARNISH RH (See page IR-71)
43. INSTALL FRONT PILLAR GARNISH LH (See page IR-72)
44. INSTALL FRONT DOOR OPENING TRIM WEATHERSTRIP RH (See page IR-81)
45. INSTALL FRONT DOOR OPENING TRIM WEATHERSTRIP LH (See page IR-81)

46. CONNECT AIR INLET DAMPER CONTROL CABLE SUB-ASSEMBLY (See page AC-257)
47. CONNECT DEFROSTER DAMPER CONTROL CABLE SUB-ASSEMBLY (See page AC-257)
48. CONNECT AIR MIX DAMPER CONTROL CABLE SUB-ASSEMBLY (See page AC-257)
49. INSTALL AIR CONDITIONER PANEL SUB-ASSEMBLY (See page AC-257)
50. INSTALL RADIO TUNER OPENING COVER (w/o Radio Receiver) (See page AC-150)
51. INSTALL RADIO RECEIVER ASSEMBLY (See page AV-46)
52. INSTALL INSTRUMENT CLUSTER FINISH PANEL SUB-ASSEMBLY CENTER (See page AC-258)
53. INSTALL COMBINATION METER ASSEMBLY (See page ME-148)
54. INSTALL INSTRUMENT CLUSTER FINISH PANEL (See page ME-148)
55. INSTALL INSTRUMENT PANEL FINISH PANEL END RH (See page ME-149)
56. INSTALL INSTRUMENT PANEL FINISH PANEL END LH (See page ME-149)
57. CONNECT HEATER WATER INLET HOSE A (See page AC-150)
58. CONNECT HEATER WATER OUTLET HOSE A (FROM HEATER UNIT) (See page AC-150)
59. INSTALL LIQUID TUBE SUB-ASSEMBLY (See page AC-150)
60. INSTALL SUCTION TUBE SUB-ASSEMBLY (See page AC-150)
61. INSTALL COWL TOP PANEL OUTER (See page EM-146)
62. INSTALL NO. 2 COWL TO REGISTER DUCT SUB-ASSEMBLY (See page EM-147)
63. INSTALL FRONT WIPER MOTOR AND LINK (See page WW-21)
64. INSTALL COWL TOP VENTILATOR LOUVER LH (See page WW-21)
65. INSTALL COWL TOP VENTILATOR LOUVER SUB-ASSEMBLY (See page WW-21)
66. INSTALL HOOD TO COWL TOP SEAL (See page WW-22)
67. INSTALL FRONT WIPER ARM AND BLADE ASSEMBLY LH (See page WW-22)

68. **INSTALL FRONT WIPER ARM AND BLADE ASSEMBLY RH (See page WW-23)**
69. **INSTALL FRONT WIPER ARM HEAD CAP (See page WW-23)**
70. **ADD ENGINE COOLANT (See page CO-8)**
71. **CONNECT CABLE TO NEGATIVE BATTERY TERMINAL**
    Torque: 5.4 N*m (55 kgf*cm)
72. **CHECK SRS WARNING LIGHT**
    RS-31
73. **CHARGE REFRIGERANT (See page AC-67)**
74. **WARM UP ENGINE (See page AC-69)**
75. **CHECK FOR ENGINE COOLANT LEAK (See page CO-1)**
76. **CHECK FOR REFRIGERANT LEAK (See page AC-69)**
77. **POSITION FRONT WHEELS FACING STRAIGHT AHEAD**

BLOWER MOTOR

COMPONENTS

for Hatchback:

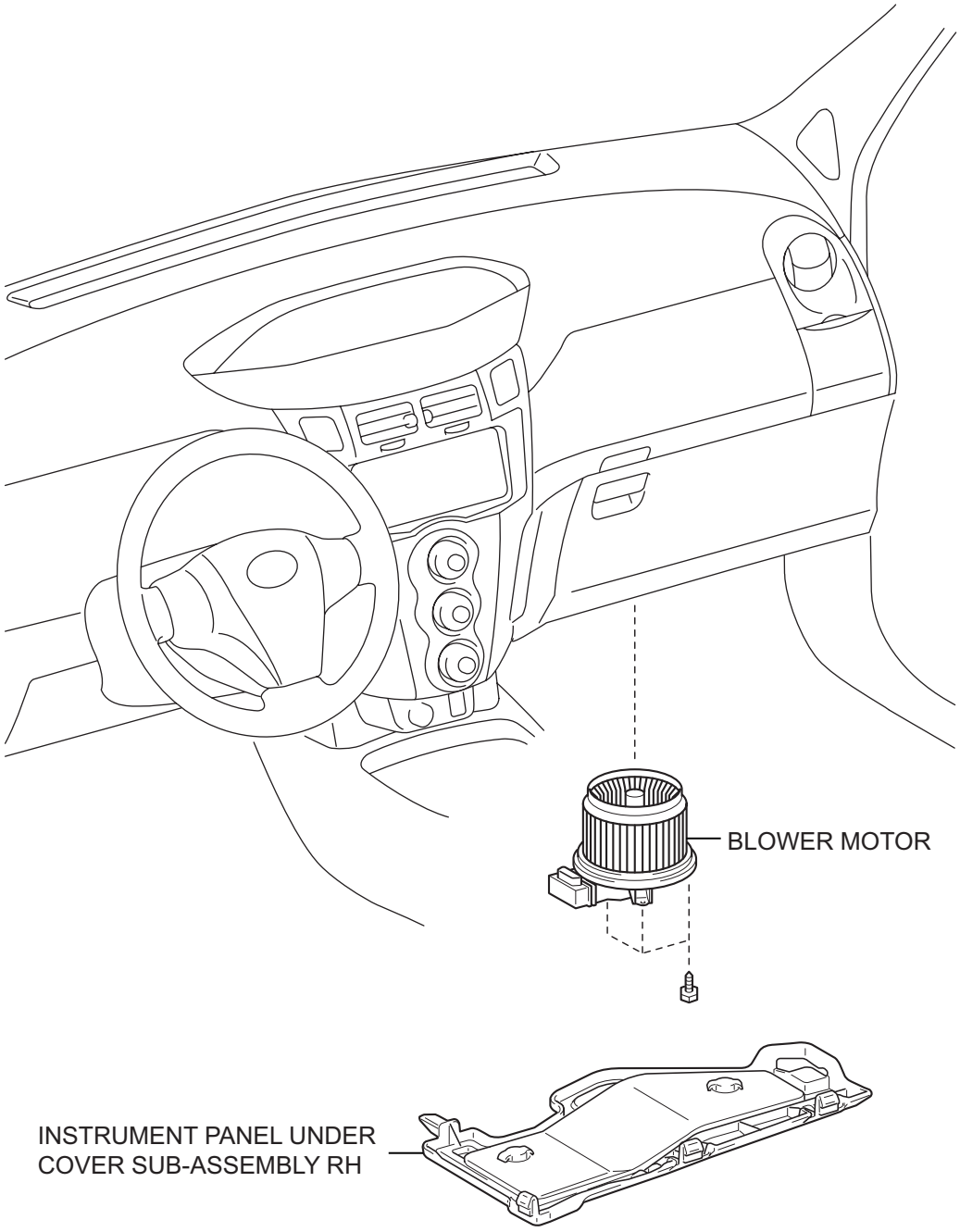

I101551E01

for Sedan:

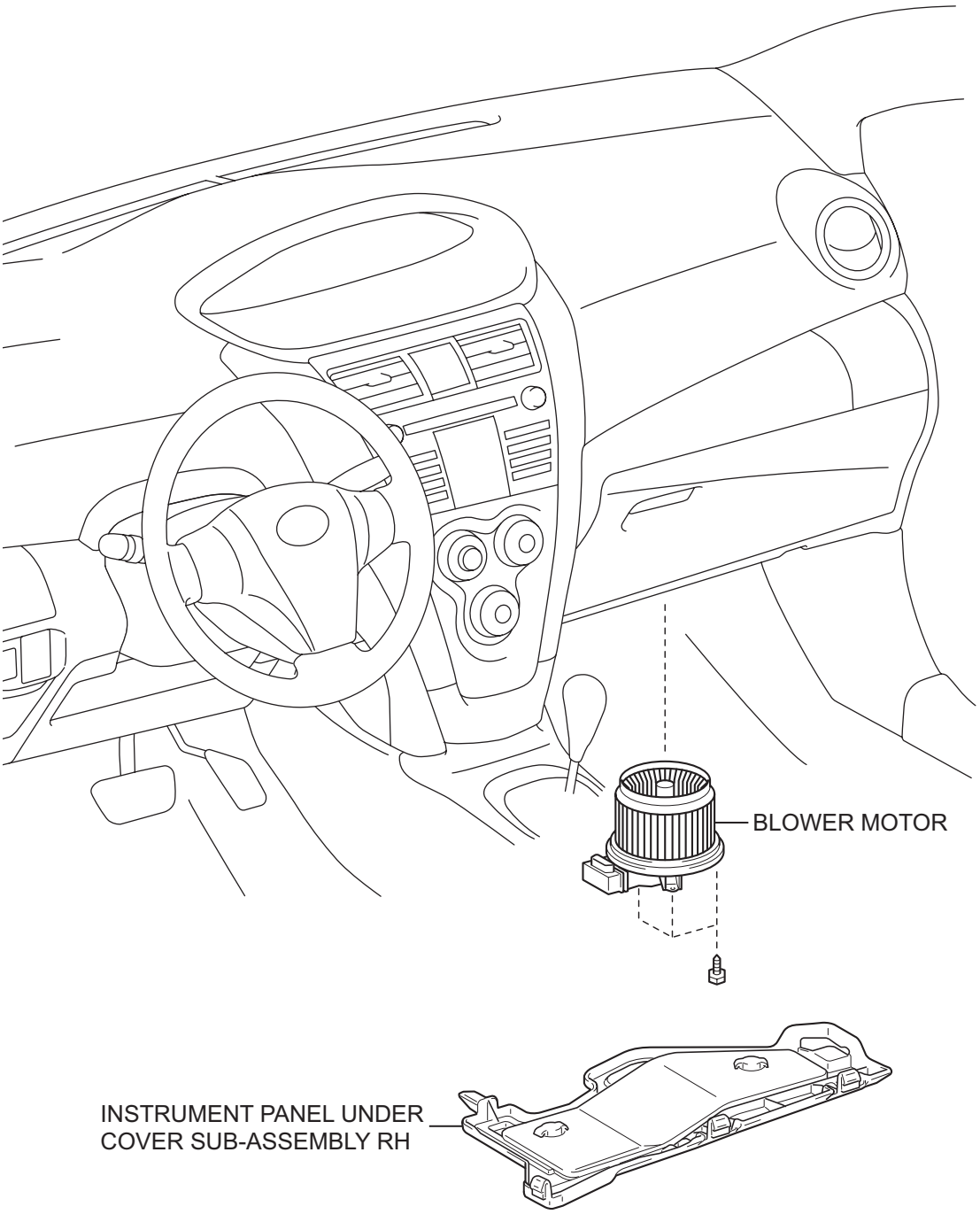

I102621E01

REMOVAL

1. **DISCONNECT CABLE FROM NEGATIVE BATTERY TERMINAL**
2. **REMOVE INSTRUMENT PANEL UNDER COVER SUB-ASSEMBLY RH (for Hatchback) (See page IR-50)**
3. **REMOVE INSTRUMENT PANEL UNDER COVER SUB-ASSEMBLY RH (for Sedan) (See page IR-14)**
4. **REMOVE BLOWER MOTOR**
   (a) Disconnect the connector and the clamp.
   (b) Remove the 3 screws and the blower motor.

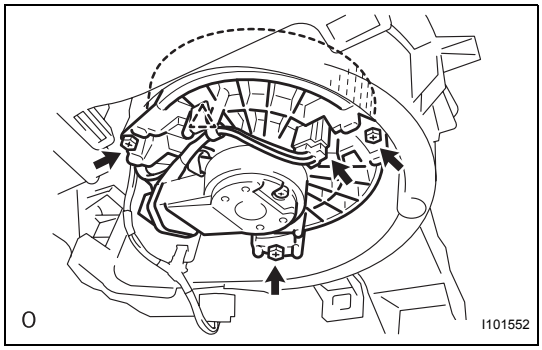

INSPECTION

1. **INSPECT BLOWER MOTOR**
   (a) Connect the positive (+) lead from the battery to terminal 2 and the negative (-) lead to terminal 1, then check that the motor operates smoothly.
   OK:
   The motor operates smoothly.
   If the operation is not as specified, replace the blower motor.
   (b) Measure the current.
   Standard current

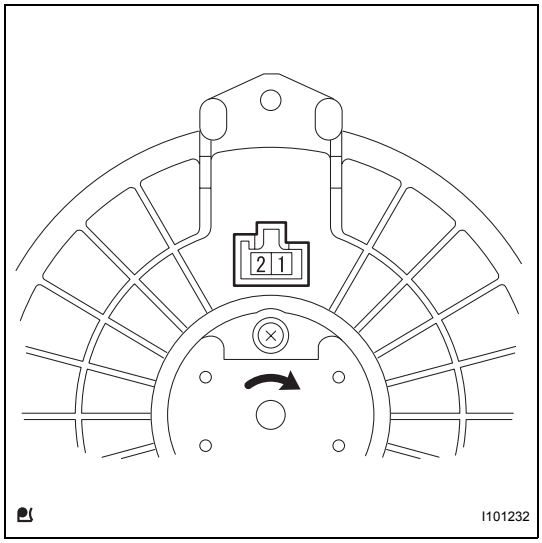

Tester Connection	Condition	Specified Condition
1 - 2	Blower motor operates	1 to 3 A

If the current value is not as specified, replace the blower motor.

INSTALLATION

1. **INSTALL BLOWER MOTOR**
   (a) Install the blower motor with the 3 screws.
   (b) Connect the connector and the clamp.
2. **INSTALL INSTRUMENT PANEL UNDER COVER SUB-ASSEMBLY RH (for Hatchback) (See page IR-81)**
3. **INSTALL INSTRUMENT PANEL UNDER COVER SUB-ASSEMBLY RH (for Sedan) (See page IR-35)**
4. **CONNECT CABLE TO NEGATIVE BATTERY TERMINAL**
   Torque: 5.4 N*m (55 kgf*cm, 48 in.*lbf)

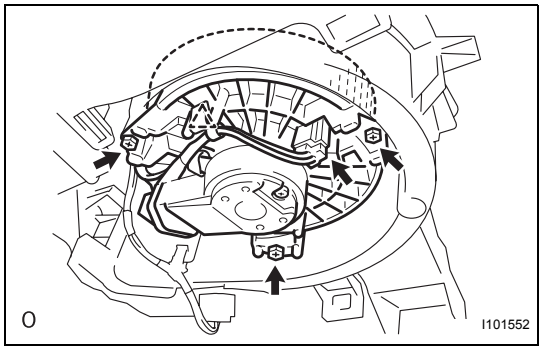

BLOWER RESISTOR

COMPONENTS

for Hatchback:

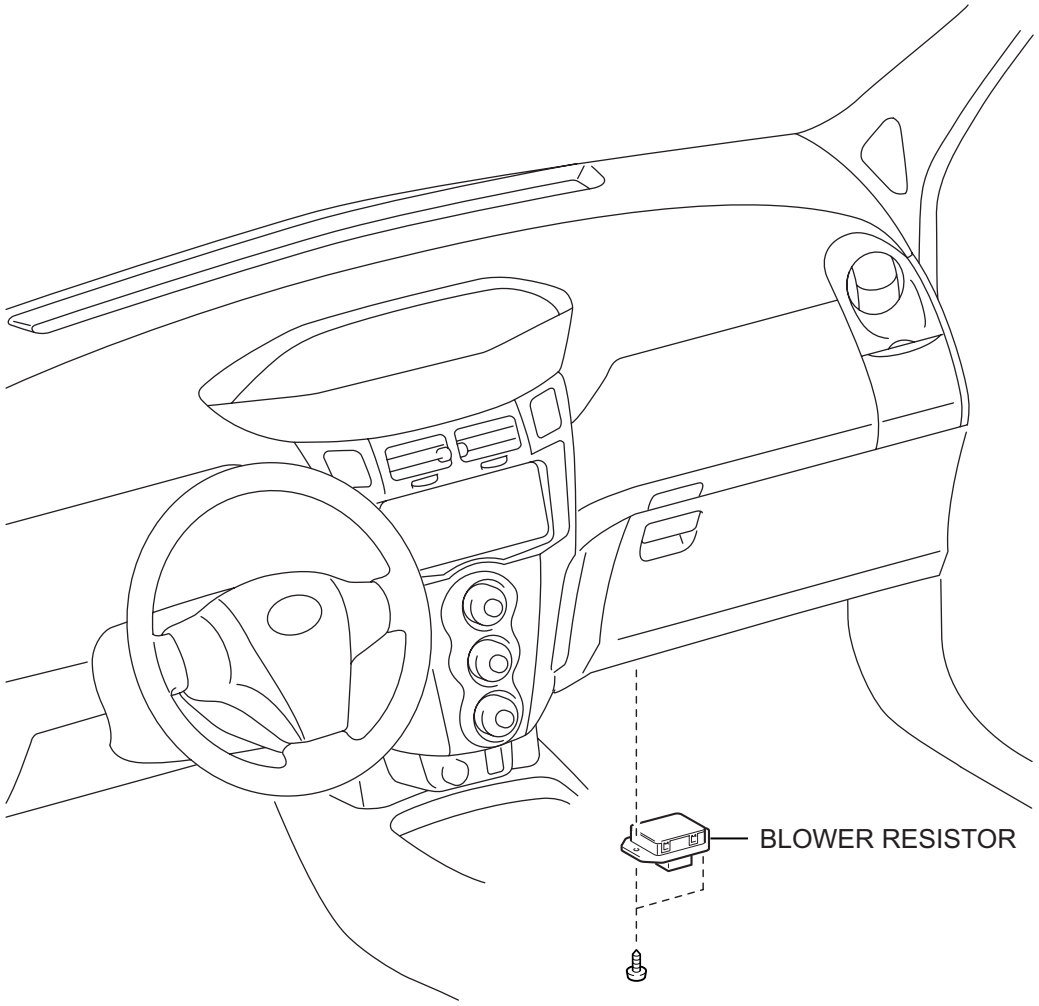

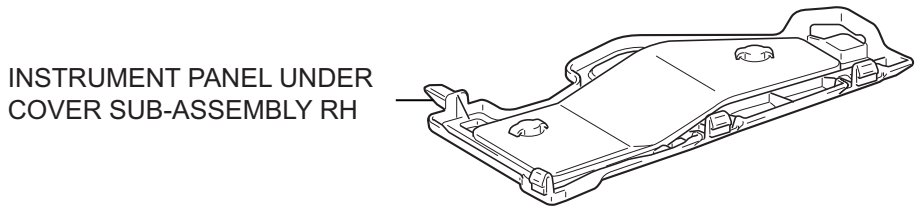

I101554E01

for Sedan:

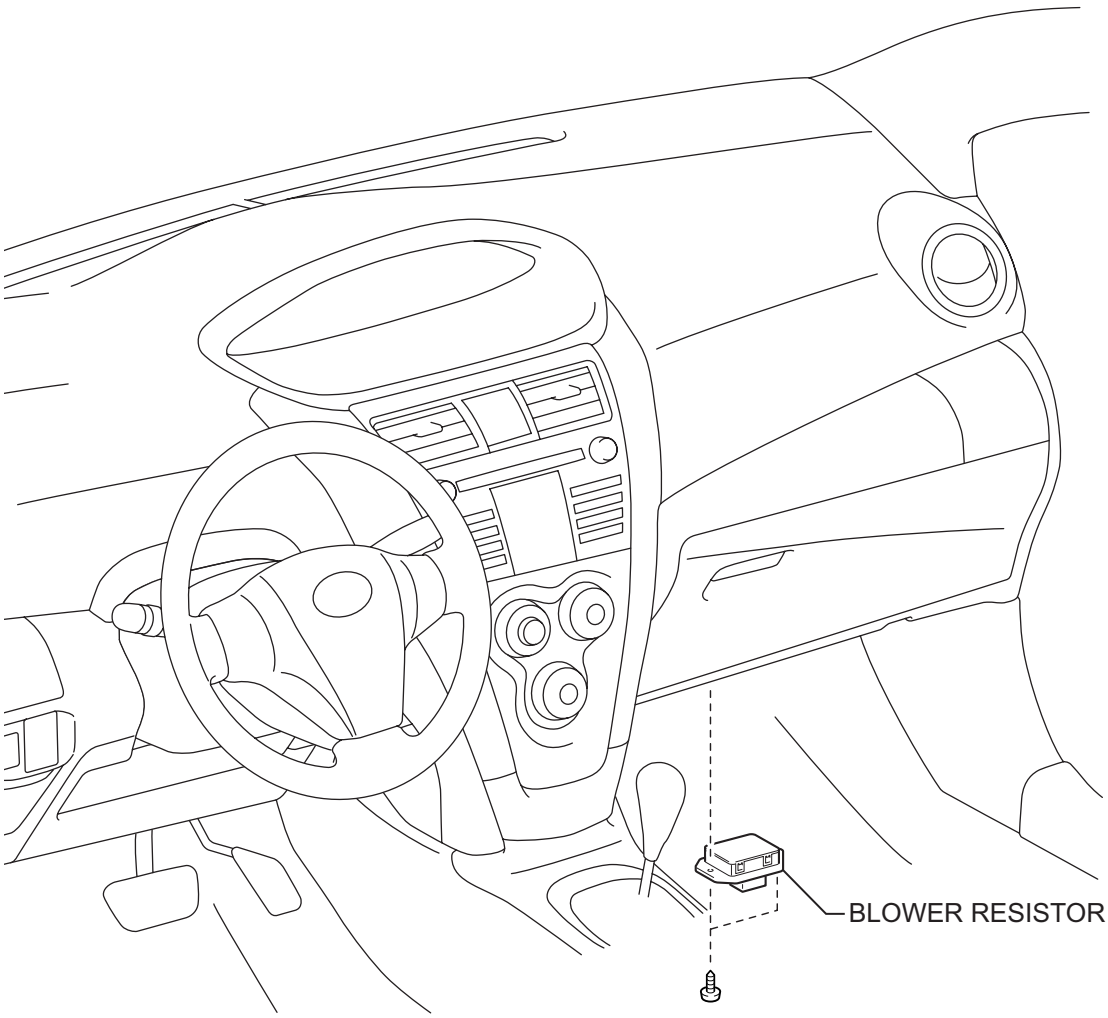

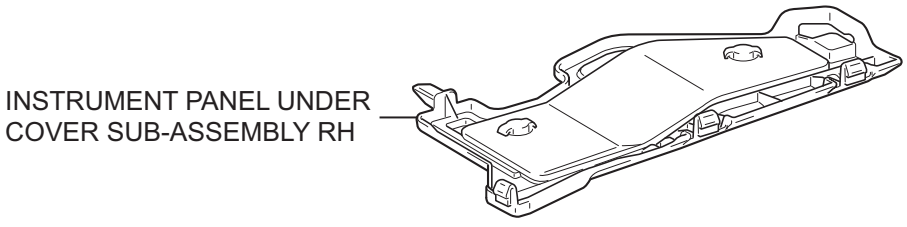

I102622E01

REMOVAL

1. **DISCONNECT CABLE FROM NEGATIVE BATTERY TERMINAL**
2. **REMOVE INSTRUMENT PANEL UNDER COVER SUB-ASSEMBLY RH (for Hatchback) (See page IR-50)**
3. **REMOVE INSTRUMENT PANEL UNDER COVER SUB-ASSEMBLY RH (for Sedan) (See page IR-14)**
4. **REMOVE BLOWER RESISTOR**
   (a) Pull back the floor carpet.

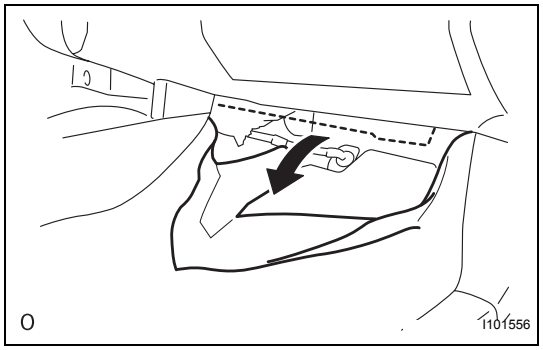

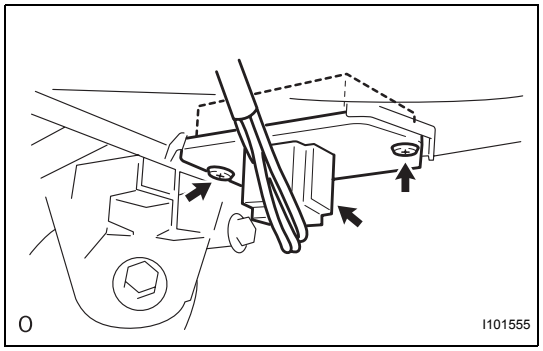

   (b) Disconnect the connector.
   (c) Remove the 2 screws and the blower resistor.

INSPECTION

1. **INSPECT BLOWER RESISTOR**
   (a) Measure the resistance.
   Standard resistance

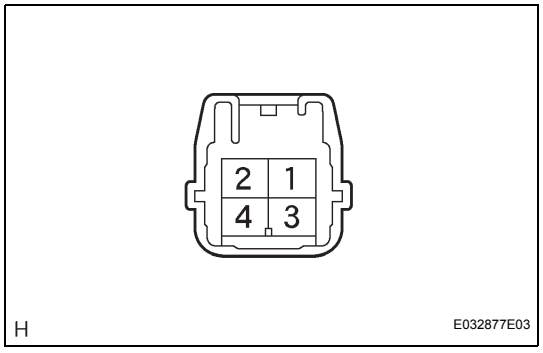

Tester Connection	Specified Condition
1 - 4	3.12 to 3.60 Ω
3 - 4	1.45 to 1.67 Ω
2 - 4	0.52 to 0.60 Ω

   If the resistance value is not as specified, replace the blower resistor.

INSTALLATION

1. **INSTALL BLOWER RESISTOR**
   (a) Install the blower resistor with the 2 screws.
   (b) Connect the connector.

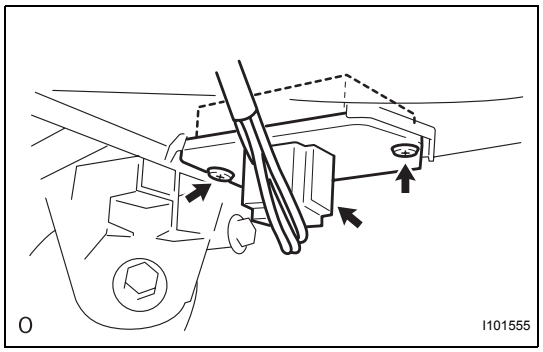

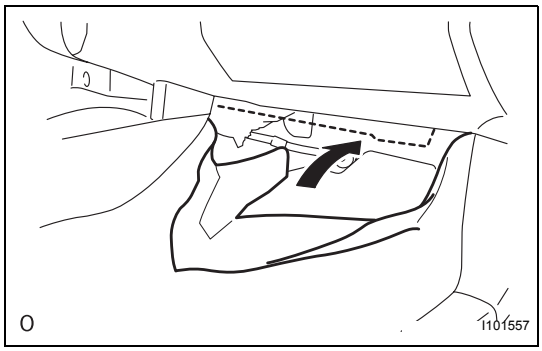

(c) Install the floor carpet.

2. **INSTALL INSTRUMENT PANEL UNDER COVER SUB-ASSEMBLY RH (for Hatchback) (See page IR-81)**

3. **INSTALL INSTRUMENT PANEL UNDER COVER SUB-ASSEMBLY RH (for Sedan) (See page IR-35)**

4. **CONNECT CABLE TO NEGATIVE BATTERY TERMINAL**
Torque: 5.4 N*m (55 kgf*cm, 48 in.*lbf)

COMPRESSOR AND PULLEY (for 1NZ-FE)

COMPONENTS

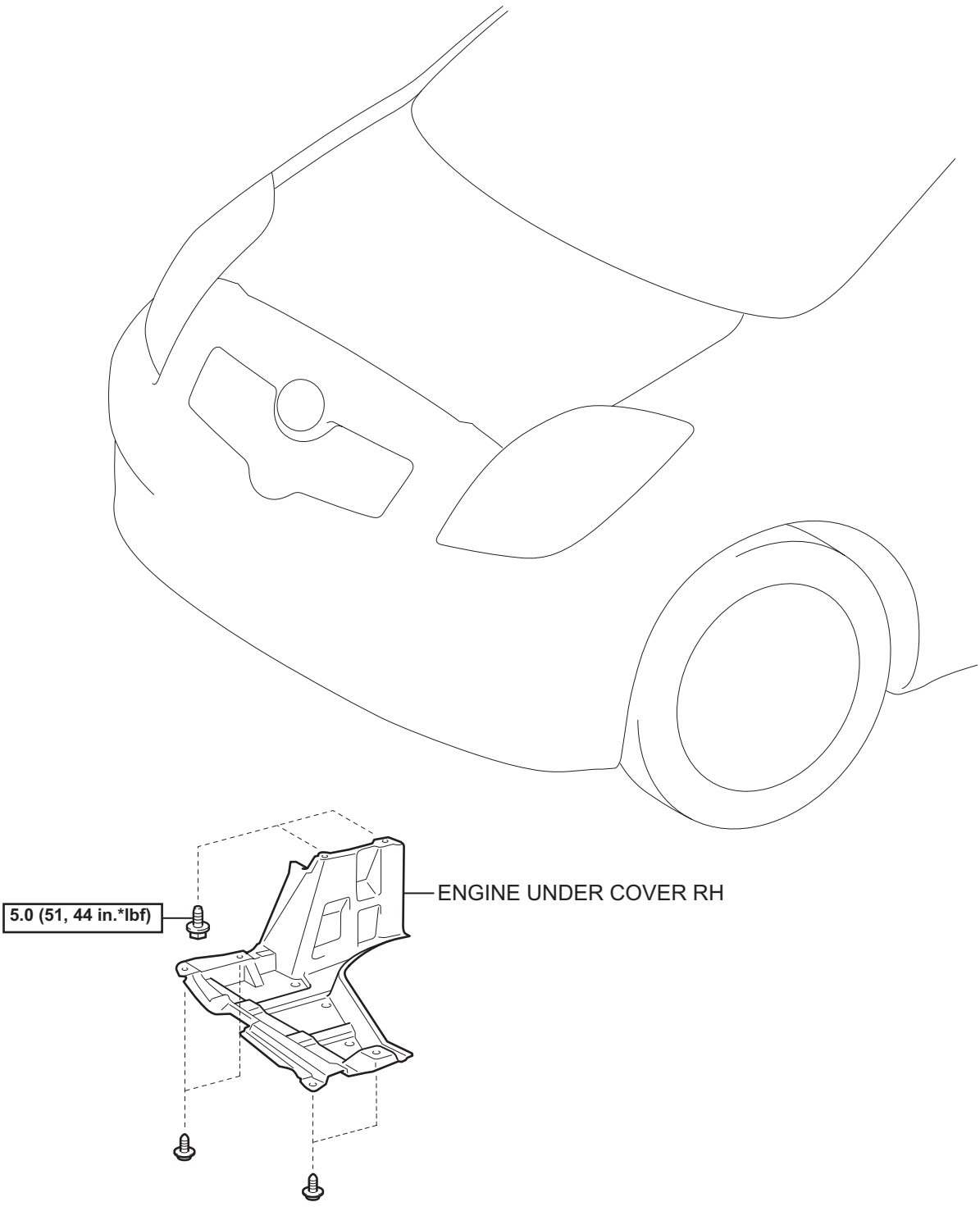

N*m (kgf*cm, ft.*lbf) : Specified torque

T

A115143E01

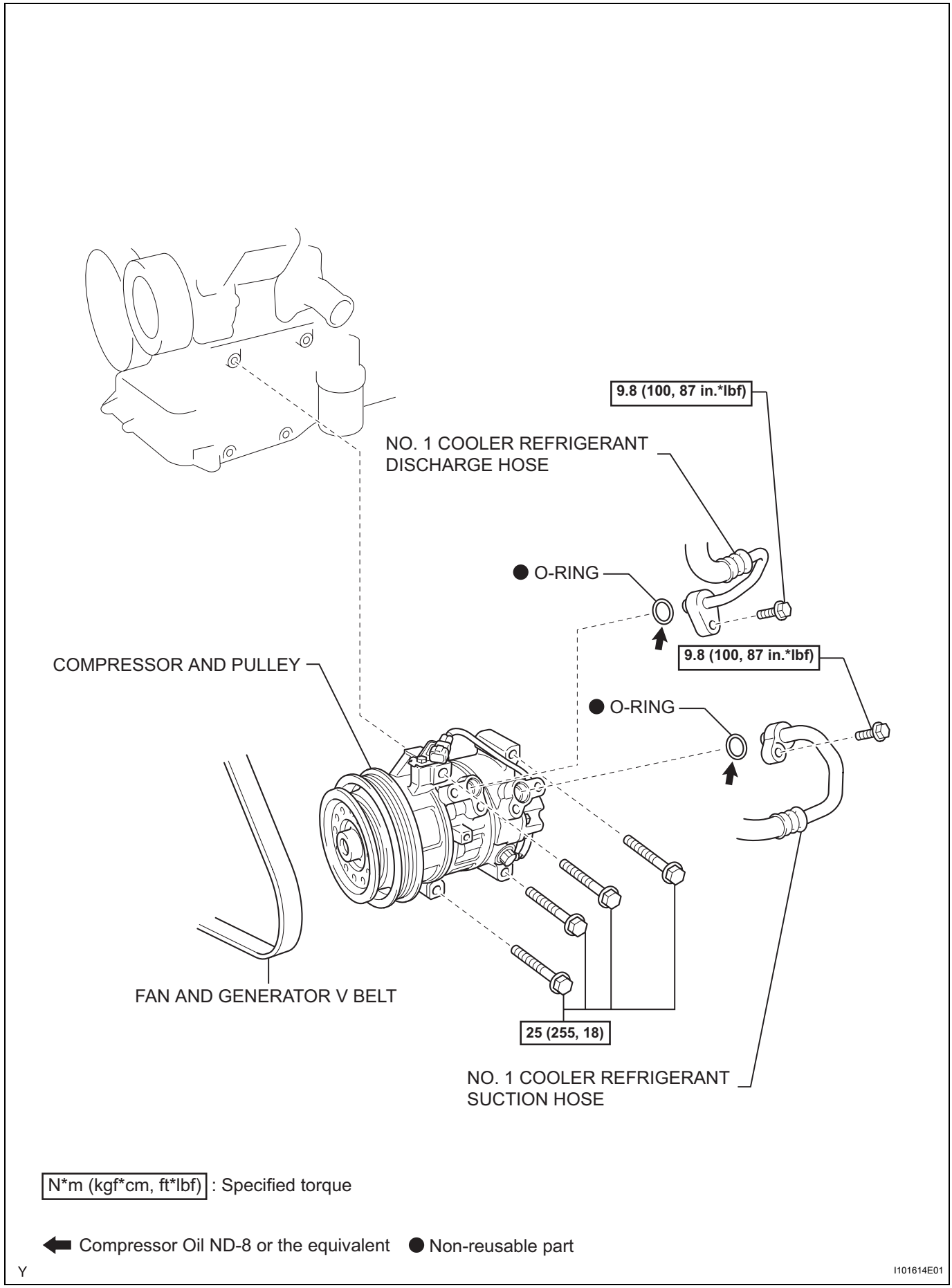

N*m (kgf*cm, ft*lbf) : Specified torque

AC

⬅ Compressor Oil ND-8 or the equivalent ● Non-reusable part

Y

I101614E01

ON-VEHICLE INSPECTION

1. INSPECT COMPRESSOR AND PULLEY

(a) Check the operation.

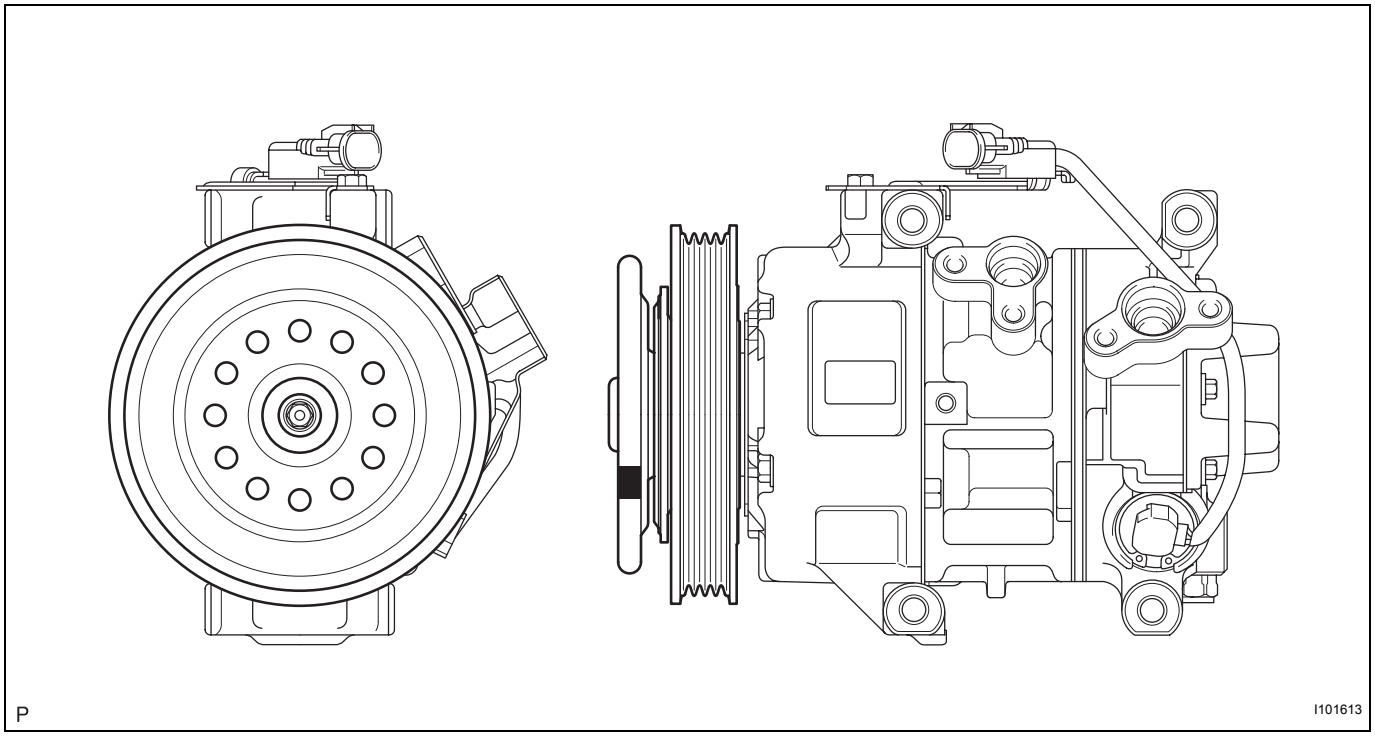

(1) Start the engine.

(2) Inspect the weight hub.

Standard:

The weight hub rotates along with the pulley.

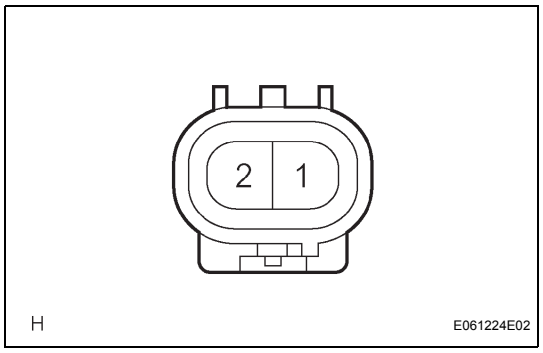

(b) Measure the resistance between terminals 1 and 2.

Standard resistance:

10.1 to 11.1 Ω at 25°C (77°F)

If the resistance is not as specified, replace the compressor and pulley.

REMOVAL

1. **DISCHARGE REFRIGERANT FROM REFRIGERATION SYSTEM (See page AC-66)**
2. **DISCONNECT CABLE FROM NEGATIVE BATTERY TERMINAL**
3. **REMOVE ENGINE UNDER COVER RH**
4. **REMOVE FAN AND GENERATOR V BELT (See page EM-7)**
5. **DISCONNECT NO. 1 COOLER REFRIGERANT SUCTION HOSE**
   (a) Remove the bolt and disconnect the suction hose.
   (b) Remove the O-ring from the suction hose.
   NOTICE:
   Seal the openings of the disconnected parts using vinyl tape to prevent moisture and foreign matter from entering.

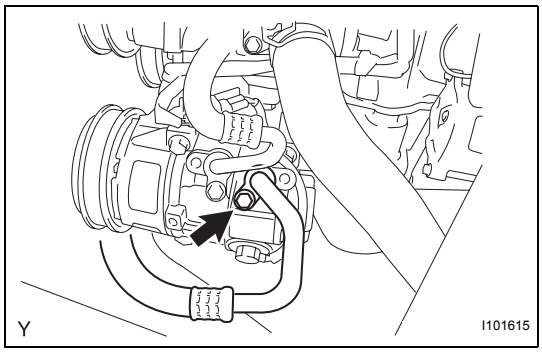

6. **DISCONNECT NO. 1 COOLER REFRIGERANT DISCHARGE HOSE**
   (a) Remove the bolt and disconnect the discharge hose.
   (b) Remove the O-ring from the discharge hose.
   NOTICE:
   Seal the openings of the disconnected parts using vinyl tape to prevent moisture and foreign matter from entering.

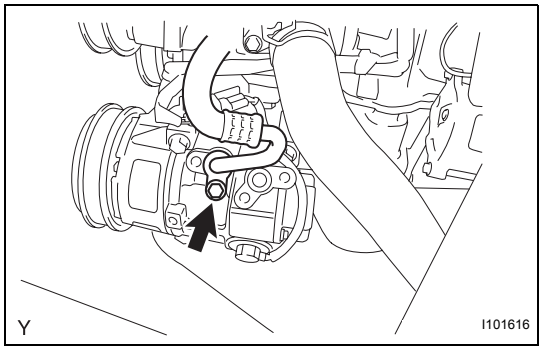

7. **REMOVE COMPRESSOR AND PULLEY**
   (a) Disconnect the connector.
   (b) Remove the 4 bolts and compressor.

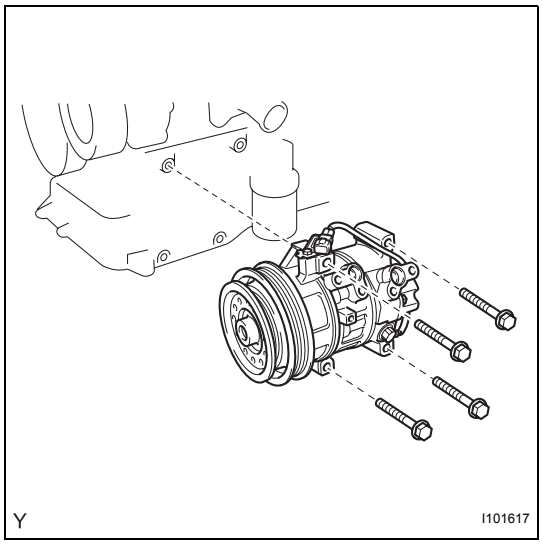

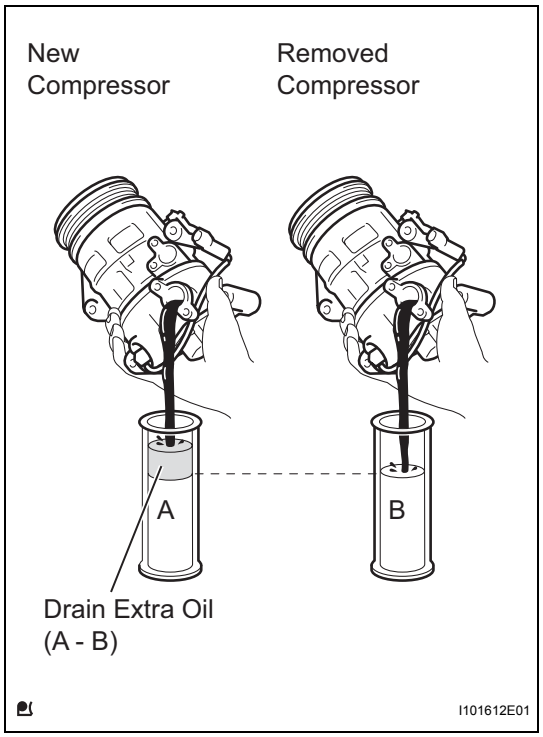

INSTALLATION

1. ADJUST COMPRESSOR OIL

(a) When replacing the compressor with a new one, gradually discharge the refrigerant gas from the service valve. Then drain the following amount of oil from the new compressor before installation, so that the amount of oil contained in it is the same as that in the compressor to be replaced.

HINT:

New compressors are filled with sufficient oil for the whole cycle. Therefore, it is necessary to drain residual oil from the condenser and cooling unit.

Standard:

(The amount of oil inside a new compressor: 90 (+15) cc (3.0 (+0.51) fl.oz.)) - (The amount of oil remaining in the removed compressor) = The amount of oil to be removed when replacing the compressor

NOTICE:

- **When checking the compressor oil level, observe the precautions for cooler removal/ installation.**
- **If a new compressor is installed without removing the amount of oil remaining in the pipes of the vehicle, the amount of oil becomes too large. This prevents heat exchange in the refrigerant cycle and causes refrigeration failure.**
- **If the amount of oil remaining in the removed compressor is too small, check for oil leakage.**
- **Use ND-OIL8 compressor oil.**

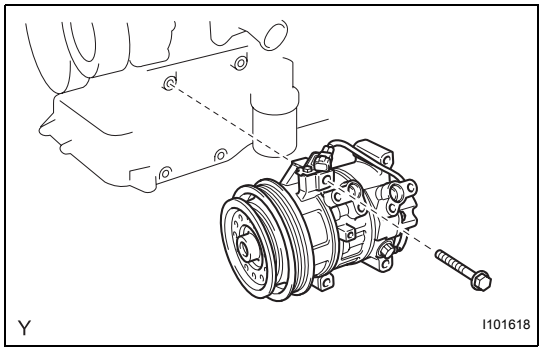

2. INSTALL COMPRESSOR AND PULLEY

(a) Provisionally tighten the compressor with the bolt.

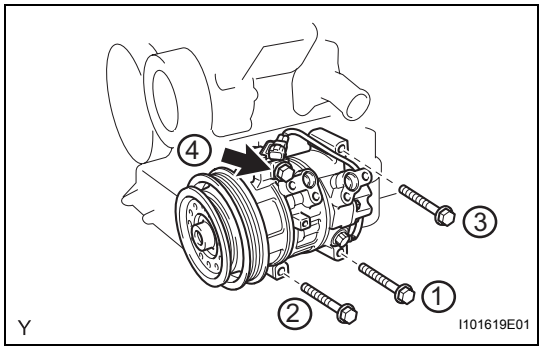

(b) Tighten the compressor with the 4 bolts.

Torque: 25 N*m (255 kgf*cm, 18 ft.*lbf)

NOTICE:

Tighten the bolts in the sequence shown in the illustration to install the compressor.

(c) Connect the connector.

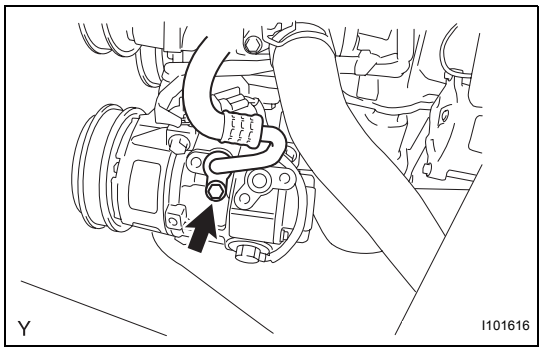

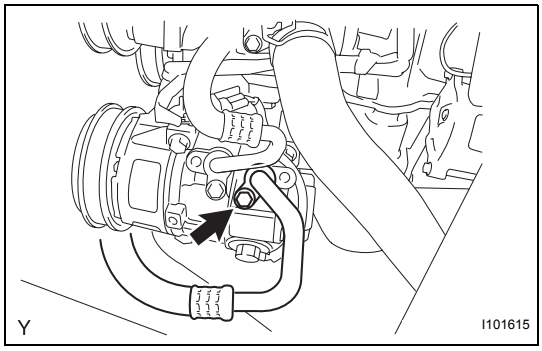

3. **INSTALL NO. 1 COOLER REFRIGERANT DISCHARGE HOSE**
   (a) Remove the attached vinyl tape from the hose.
   (b) Apply sufficient compressor oil (ND-OIL8) to a new O-ring and the fitting surface of the compressor.
   Compressor oil:
   ND-OIL8 or the equivalent
   (c) Install the O-ring onto the discharge hose.
   (d) Install the discharge hose onto the compressor with the bolt.
   Torque: 9.8 N*m (100 kgf*cm, 87 in.*lbf)

4. **INSTALL NO. 1 COOLER REFRIGERANT SUCTION HOSE**
   (a) Remove the attached vinyl tape from the hose.
   (b) Apply sufficient compressor oil (ND-OIL8) to a new O-ring and the fitting surface of the compressor.
   Compressor oil:
   ND-OIL8 or the equivalent
   (c) Install the O-ring onto the suction hose.
   (d) Install the suction hose onto the compressor with the bolt.
   Torque: 9.8 N*m (100 kgf*cm, 87 in.*lbf)

5. **INSTALL FAN AND GENERATOR V BELT (See page EM-7)**

6. **ADJUST FAN AND GENERATOR V BELT (See page EM-7)**

7. **INSPECT FAN AND GENERATOR V BELT (See page EM-8)**

8. **INSTALL ENGINE UNDER COVER RH**

9. **CONNECT CABLE TO NEGATIVE BATTERY TERMINAL**
   Torque: 5.4 N*m (55 kgf*cm, 48 in.*lbf)

10. **CHARGE REFRIGERANT (See page AC-67)**

11. **WARM UP ENGINE (See page AC-69)**

12. **CHECK FOR REFRIGERANT LEAK (See page AC-69)**

CONDENSER (for Sedan)

COMPONENTS

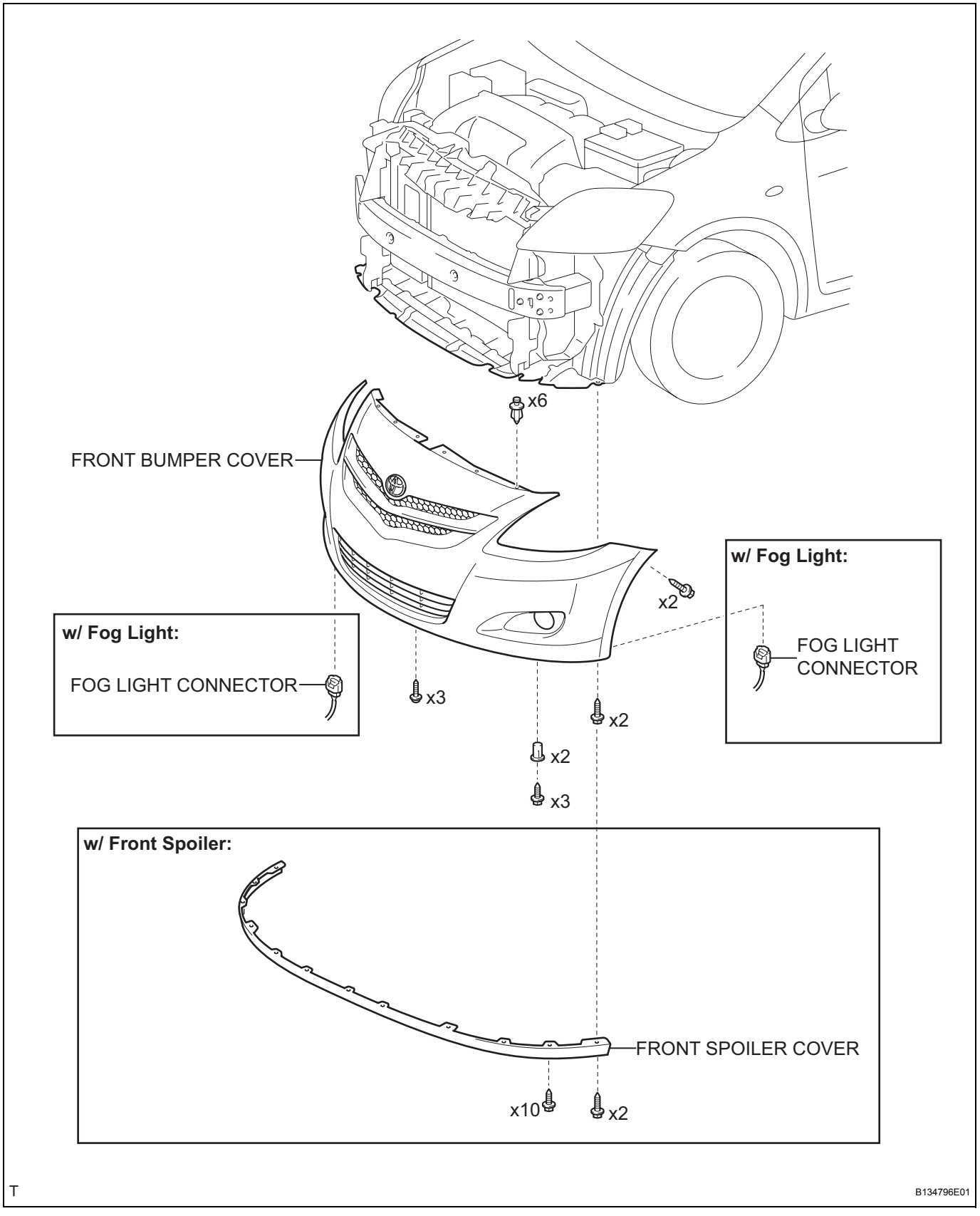

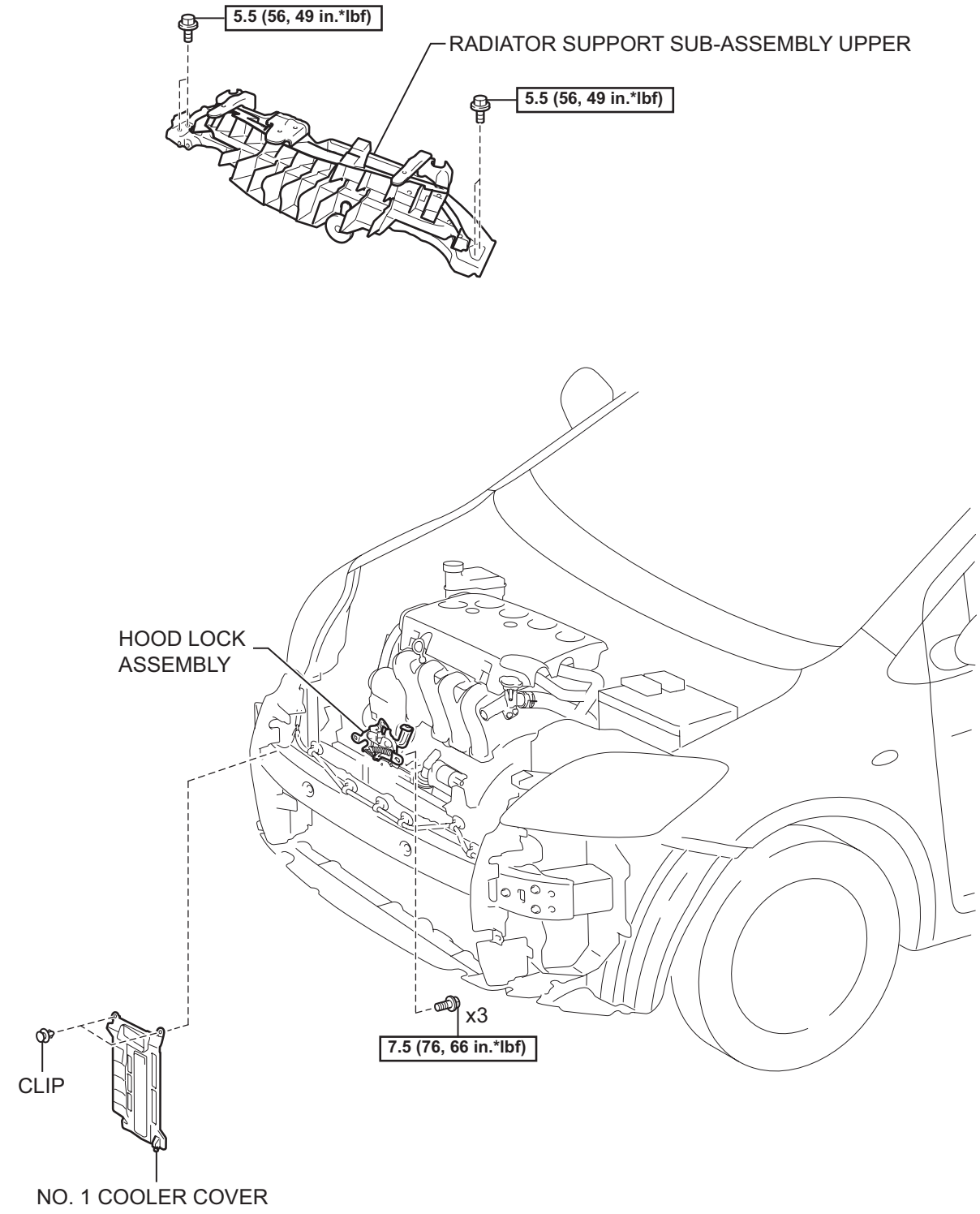

N*m (kgf*cm, ft.*lbf) : Specified torque

AC

T

I102628E01

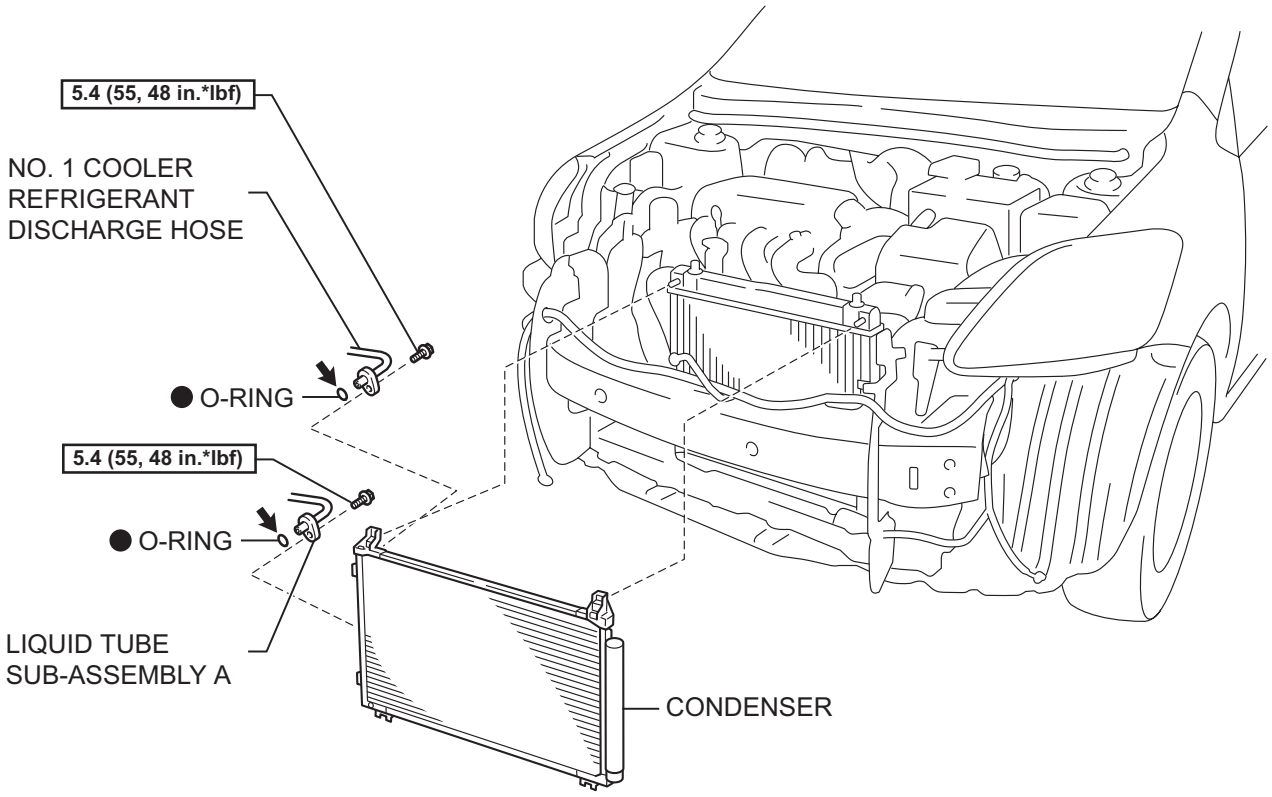

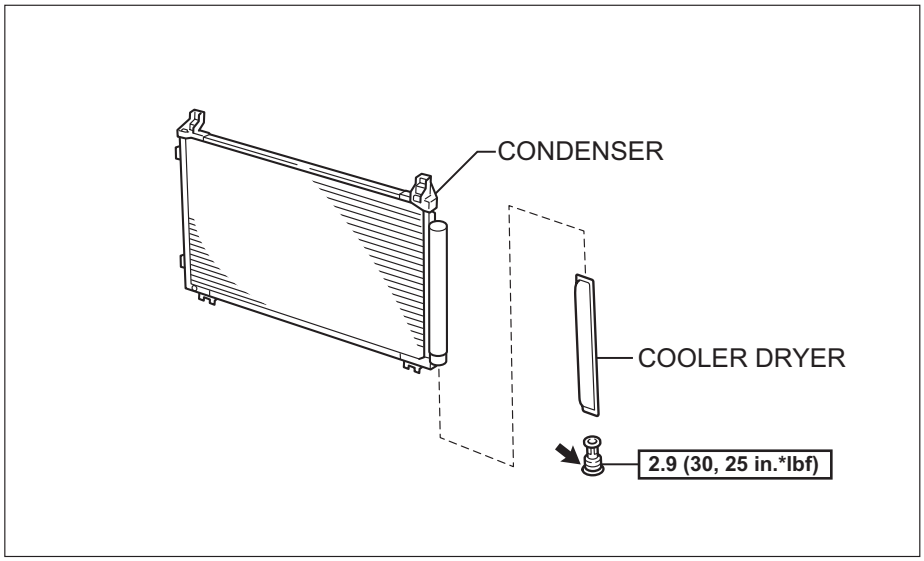

N*m (kgf*cm, ft*lbf) : Specified torque

⬅ Compressor Oil ND-8 or the equivalent ● Non-reusable part

N

I102574E02

AC

ON-VEHICLE INSPECTION

1. INSPECT CONDENSER ASSEMBLY

(a) If the fins of the cooler condenser assembly are dirty, clean them with water and dry them with compressed air.

NOTICE:

Do not damage the fins of the condenser assembly.

(b) If the fins of the cooler condenser assembly are bent, straighten them using a screwdriver or pliers.

2. CHECK CONDENSER FOR REFRIGERANT LEAKAGE

(a) Check the pipe joints for gas leakage, using a halogen leak detector.

(b) Check the tightening torque of the joints if gas leakage is detected from any pipe joints.

REMOVAL

1. **DISCHARGE REFRIGERANT FROM REFRIGERATION SYSTEM (See page AC-66)**
2. **DISCONNECT CABLE FROM NEGATIVE BATTERY TERMINAL**
3. **REMOVE FRONT SPOILER COVER (See page ET-6)**
4. **REMOVE FRONT BUMPER COVER (See page ET-6)**
5. **REMOVE NO. 1 COOLER COVER (See page CO-31)**
6. **SEPARATE HOOD LOCK ASSEMBLY (w/ Theft Deterrent System) (See page CO-32)**
7. **SEPARATE HOOD LOCK ASSEMBLY (w/o Theft Deterrent System) (See page CO-32)**
8. **REMOVE RADIATOR SUPPORT SUB-ASSEMBLY UPPER (See page CO-33)**
9. **DISCONNECT NO. 1 COOLER REFRIGERANT DISCHARGE HOSE**
   (a) Remove the bolt and disconnect the discharge hose from the cooler condenser.
   (b) Remove the O-ring from the discharge hose.
   NOTICE:
   Seal the openings of the disconnected parts using vinyl tape to prevent moisture and foreign matter from entering.

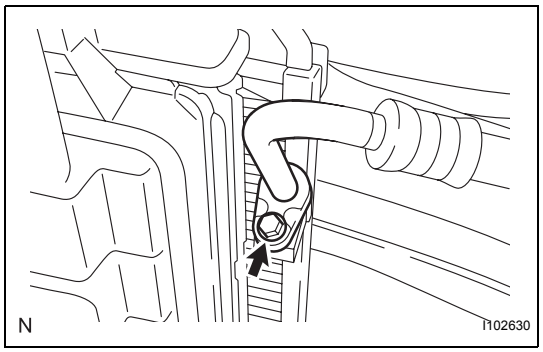

10. **DISCONNECT LIQUID TUBE SUB-ASSEMBLY A**
    (a) Remove the bolt and disconnect the liquid tube from the cooler condenser.
    (b) Remove the O-ring from the liquid tube.
    NOTICE:
    Seal the openings of the disconnected parts using vinyl tape to prevent moisture and foreign matter from entering.

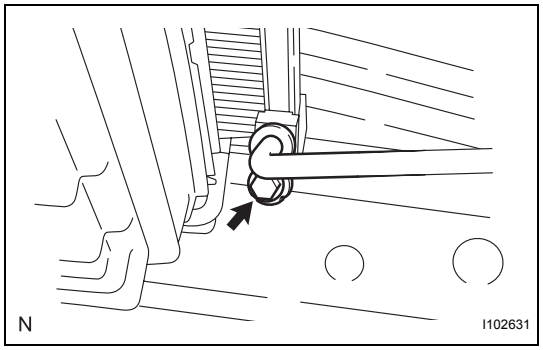

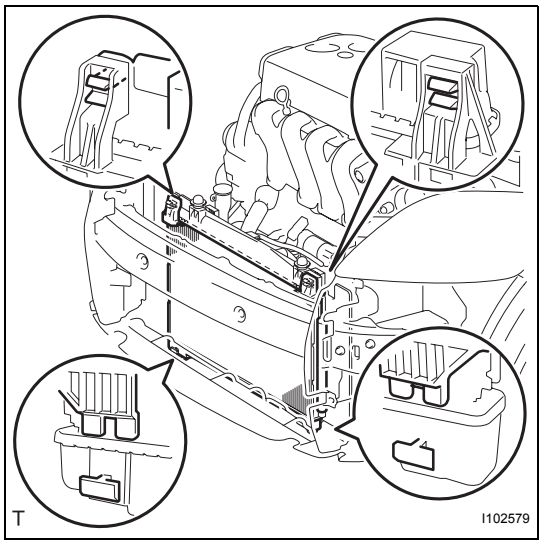

11. REMOVE CONDENSER

(a) Disengage the 2 claws and remove the condenser from the vehicle.

NOTICE:

Do not damage the condenser or radiator when removing the condenser.

DISASSEMBLY

1. REMOVE COOLER DRYER

(a) Using a 14 mm straight hexagon wrench, remove the cap from the modulator.

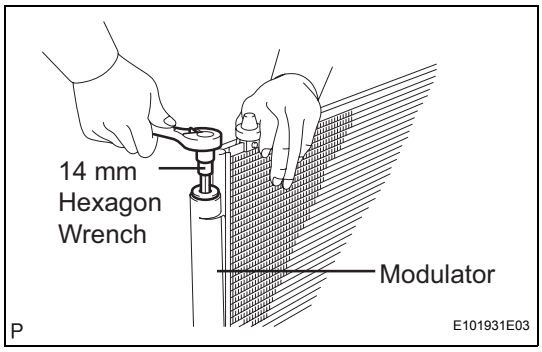

(b) Using pliers, remove the cooler dryer.

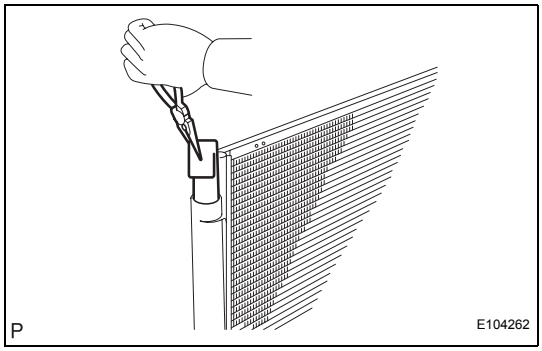

REASSEMBLY

1. INSTALL COOLER DRYER

(a) Using pliers, install the cooler dryer into the modulator.

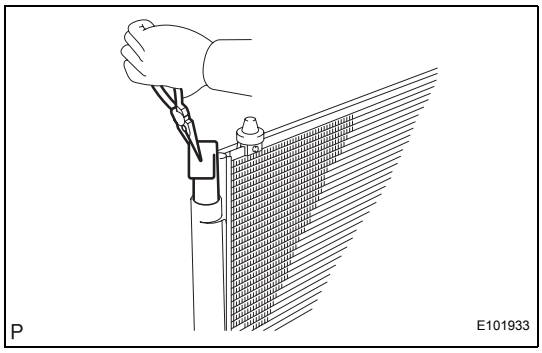

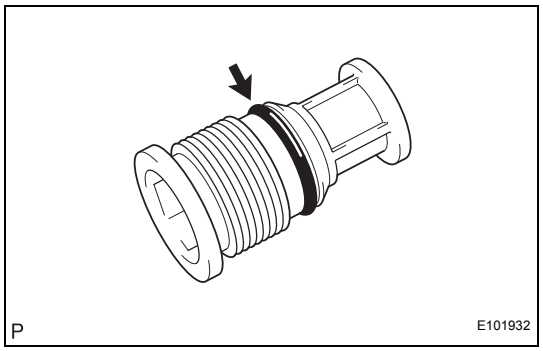

(b) Apply sufficient compressor oil to a new O-ring and the fitting surface of the cap.
Compressor oil:
ND-OIL 8 or the equivalent

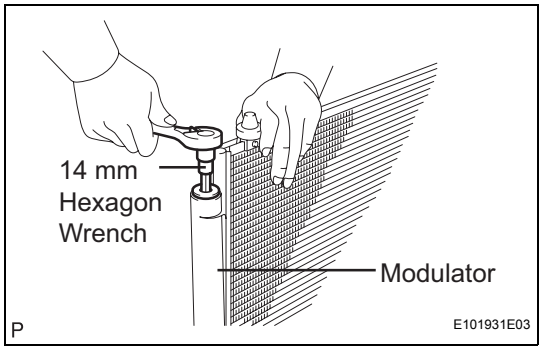

(c) Using a 14 mm straight hexagon wrench, install the cap onto the modulator.
Torque: 2.9 N*m (30 kgf*cm, 25 in.*lbf)

INSTALLATION

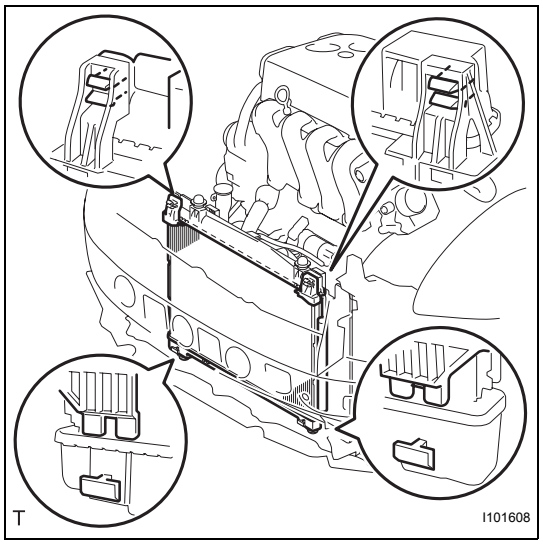

1. INSTALL CONDENSER

(a) Engage the 2 claws and install the condenser into the vehicle.
NOTICE:
Do not damage the condenser or radiator when installing the condenser.
HINT:
If a new condenser is installed, add compressor oil to the condenser as follows.
Compressor oil:
ND-OIL8 or the equivalent. Add 40 cc (1.35 fl. oz.)

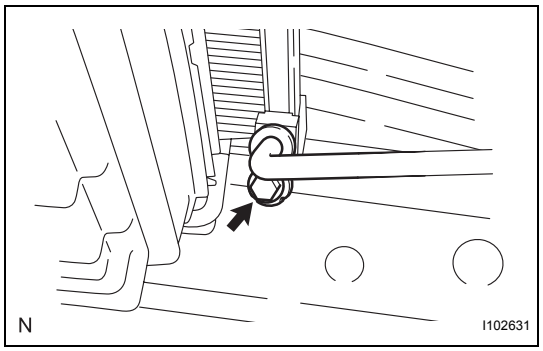

2. INSTALL LIQUID TUBE SUB-ASSEMBLY A

(a) Remove the attached vinyl tape from the pipe and the connecting part of the cooler condenser.
(b) Apply sufficient compressor oil to a new O-ring and the fitting surface of the pipe joint.
Compressor oil:
ND-OIL8 or the equivalent
(c) Install the O-ring onto the liquid tube.
(d) Install the liquid tube onto the cooler condenser with the bolt.
Torque: 5.4 N*m (55 kgf*cm, 48 in.*lbf)

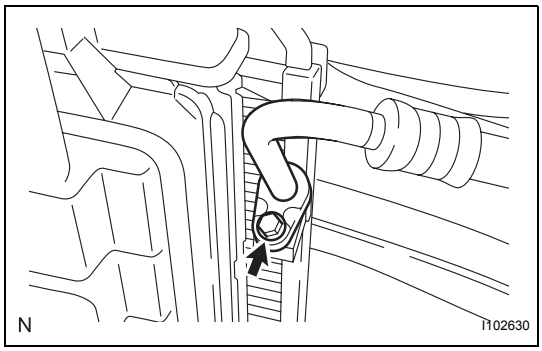

3. **INSTALL NO. 1 COOLER REFRIGERANT DISCHARGE HOSE**
   (a) Remove the attached vinyl tape from the hose and the connecting part of the cooler condenser.
   (b) Apply sufficient compressor oil to a new O-ring and the fitting surface of the hose joint.
   Compressor oil:
   ND-OIL8 or the equivalent
   (c) Install the O-ring onto the discharge hose.
   (d) Install the discharge hose onto the cooler condenser with the bolt.
   Torque: 5.4 N*m (55 kgf*cm, 48 in.*lbf)
4. **INSTALL RADIATOR SUPPORT SUB-ASSEMBLY UPPER (See page CO-40)**
5. **INSTALL HOOD LOCK ASSEMBLY (w/ Theft Deterrent System) (See page CO-40)**
6. **INSTALL HOOD LOCK ASSEMBLY (w/o Theft Deterrent System) (See page CO-41)**
7. **INSTALL NO. 1 COOLER COVER (See page CO-41)**
8. **INSTALL FRONT BUMPER COVER (See page ET-16)**
9. **INSTALL FRONT SPOILER COVER (See page ET-19)**
10. **ADJUST HOOD LOCK ASSEMBLY (See page CO-42)**
11. **CONNECT CABLE TO NEGATIVE BATTERY TERMINAL**
    Torque: 5.4 N*m (55 kgf*cm, 48 in.*lbf)
12. **CHARGE REFRIGERANT (See page AC-67)**
13. **WARM UP ENGINE (See page AC-69)**
14. **CHECK FOR REFRIGERANT LEAK (See page AC-69)**

CONDENSER (for Hatchback)

COMPONENTS

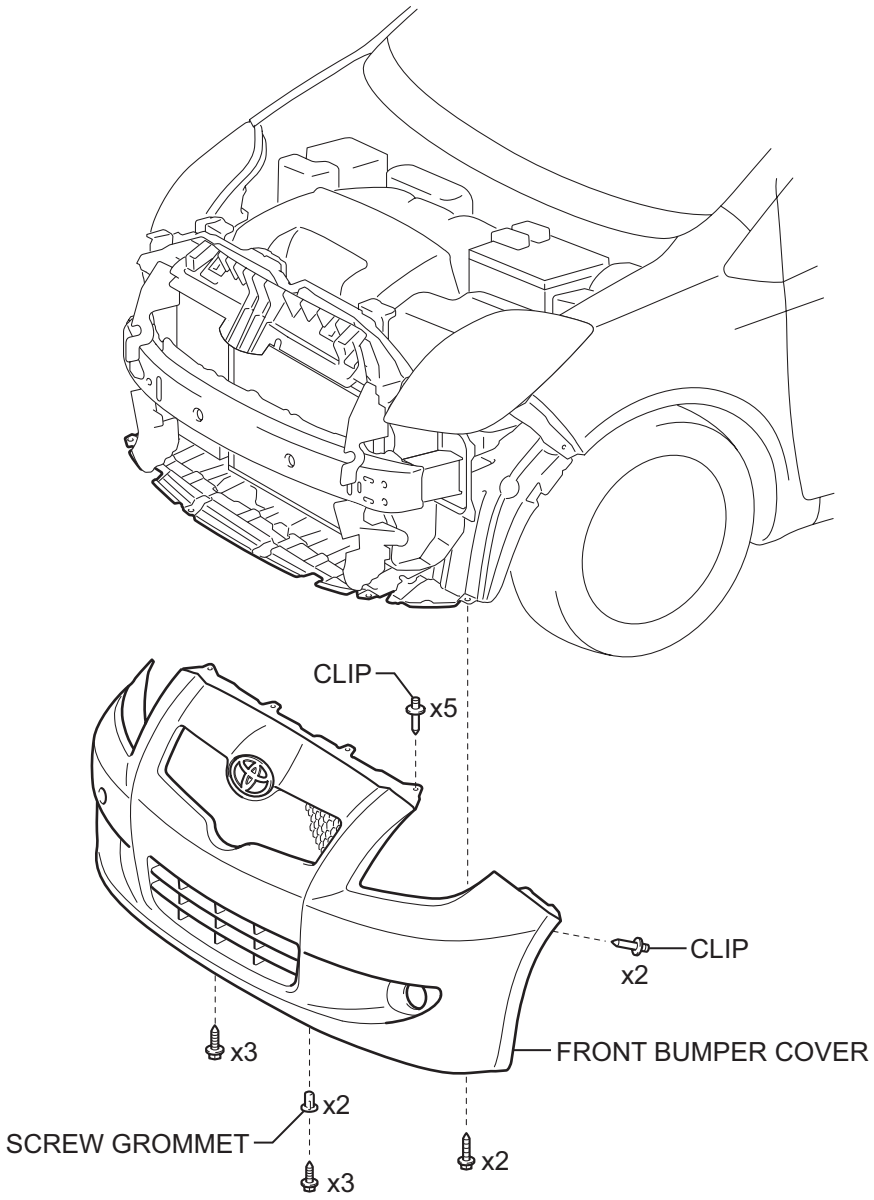

T

E117642E02

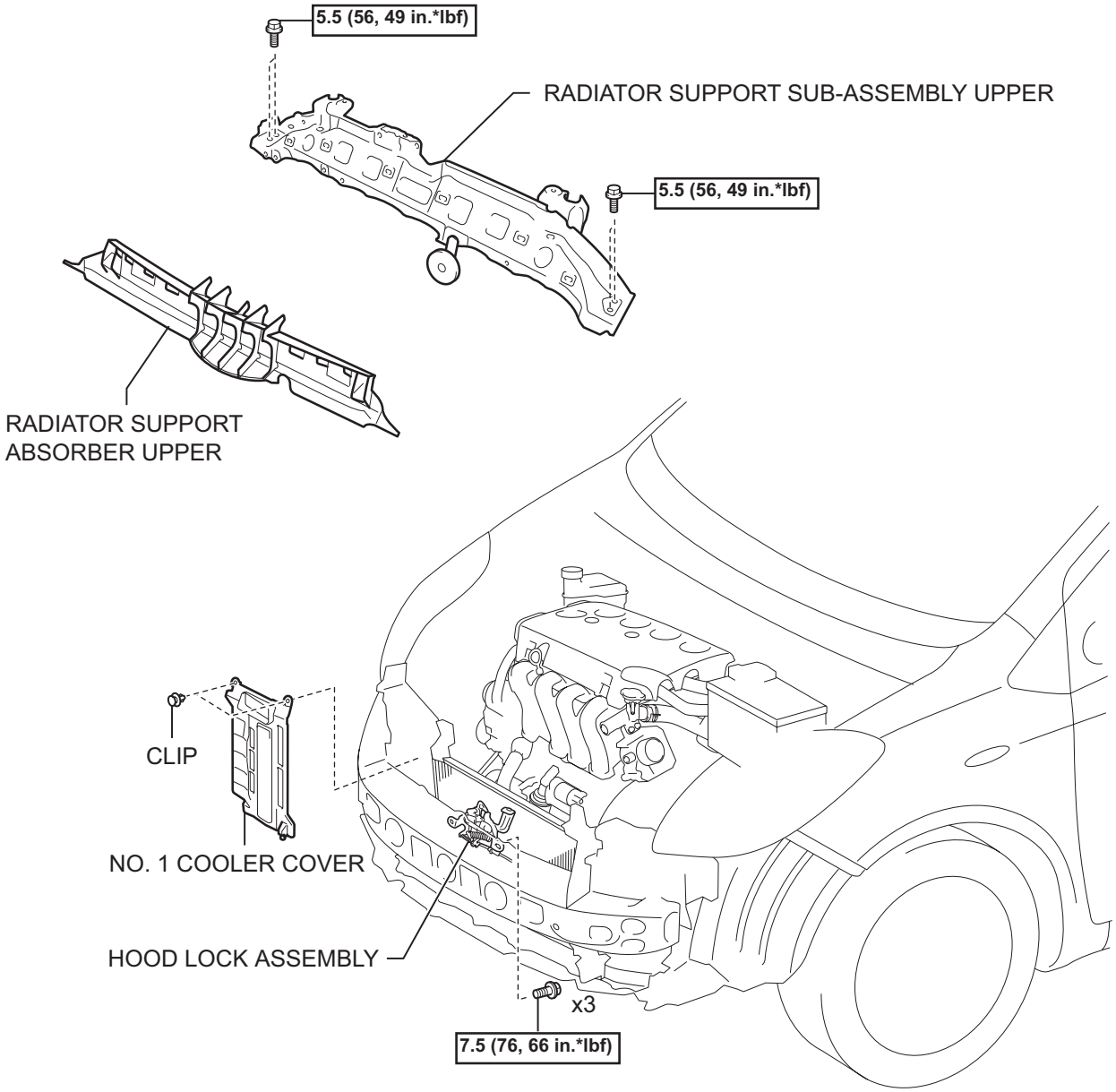

N*m (kgf*cm, ft.*lbf) : Specified torque

T

I101547E01

AC

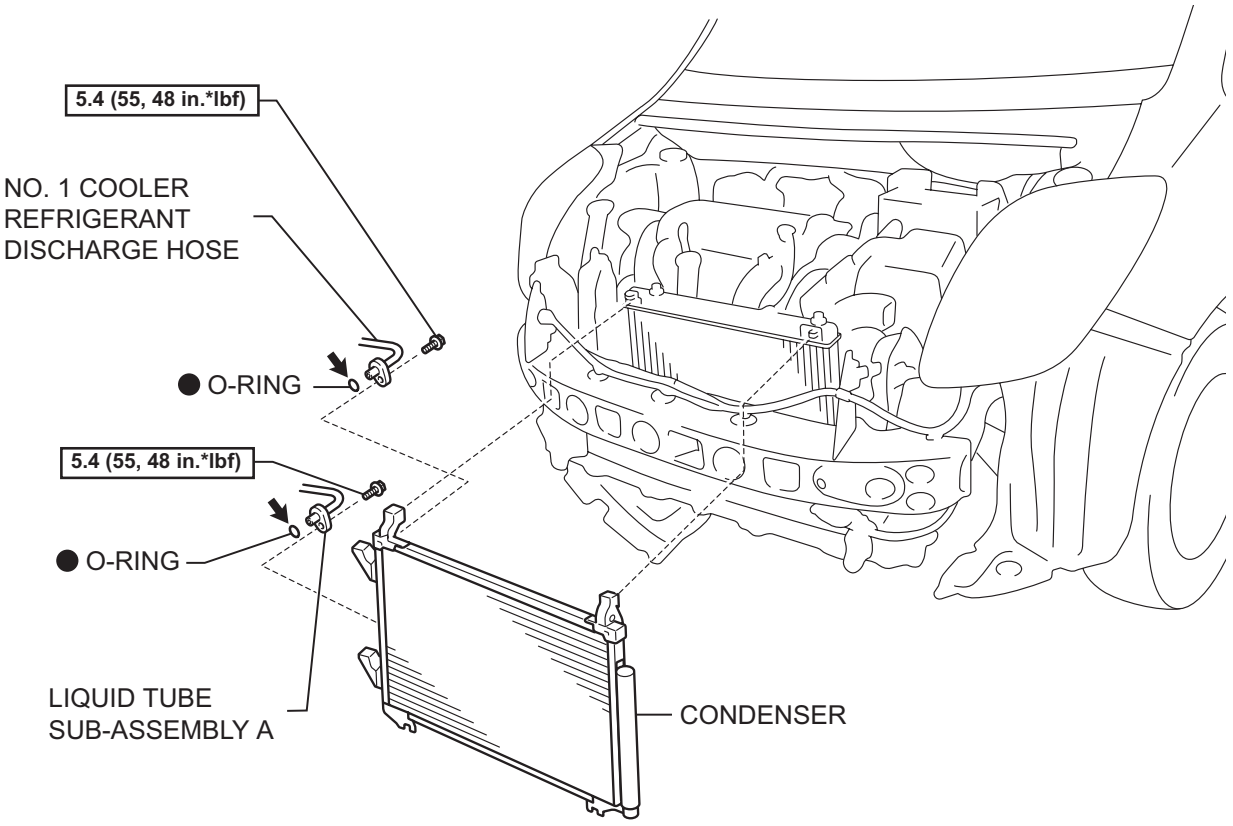

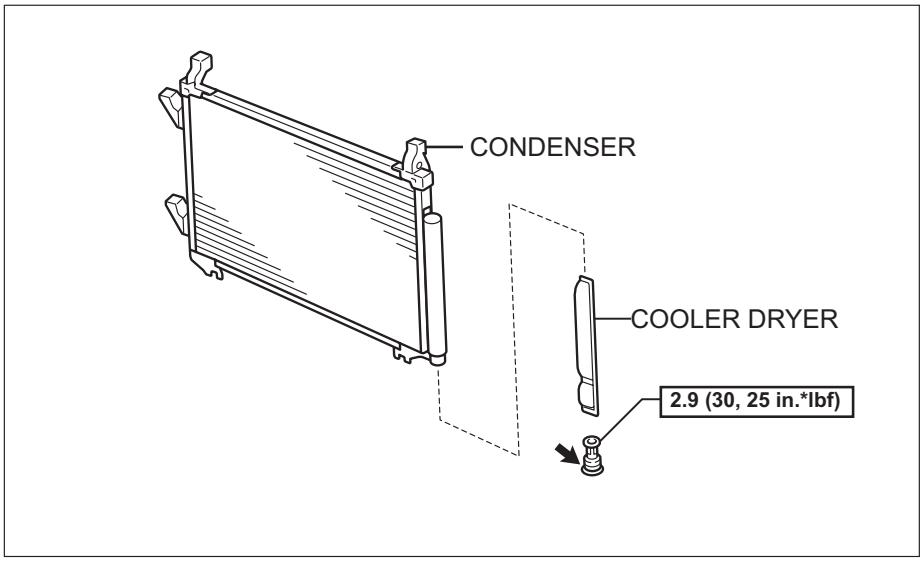

N*m (kgf*cm, ft.*lbf) : Specified torque

⬅ Compressor Oil ND-OIL8 equivalent ● Non-reusable part

AC

N

I101606E03

ON-VEHICLE INSPECTION

1. INSPECT CONDENSER ASSEMBLY

(a) If the fins of the cooler condenser assembly are dirty, clean them with water and dry them with compressed air.

NOTICE:

Do not damage the fins of the condenser assembly.

(b) If the fins of the cooler condenser assembly are bent, straighten them using a screwdriver or pliers.

2. CHECK CONDENSER FOR REFRIGERANT LEAKAGE

(a) Check the pipe joints for gas leakage, using a halogen leak detector.

(b) Check the tightening torque of the joints if gas leakage is detected from any pipe joints.

REMOVAL

1. **DISCHARGE REFRIGERANT FROM REFRIGERATION SYSTEM (See page AC-66)**
2. **DISCONNECT CABLE FROM NEGATIVE BATTERY TERMINAL**
3. **REMOVE FRONT BUMPER COVER (See page ET-24)**
4. **REMOVE RADIATOR SUPPORT ABSORBER UPPER (See page CO-31)**
5. **REMOVE NO. 1 COOLER COVER (See page CO-31)**
6. **SEPARATE HOOD LOCK ASSEMBLY (w/ Theft Deterrent System) (See page CO-32)**
7. **SEPARATE HOOD LOCK ASSEMBLY (w/o Theft Deterrent System) (See page CO-32)**
8. **REMOVE RADIATOR SUPPORT SUB-ASSEMBLY UPPER (See page CO-33)**
9. **DISCONNECT NO. 1 COOLER REFRIGERANT DISCHARGE HOSE**
   (a) Remove the bolt and disconnect the discharge hose from the cooler condenser.
   (b) Remove the O-ring from the discharge hose.
   NOTICE:
   Seal the openings of the disconnected parts using vinyl tape to prevent moisture and foreign matter from entering.

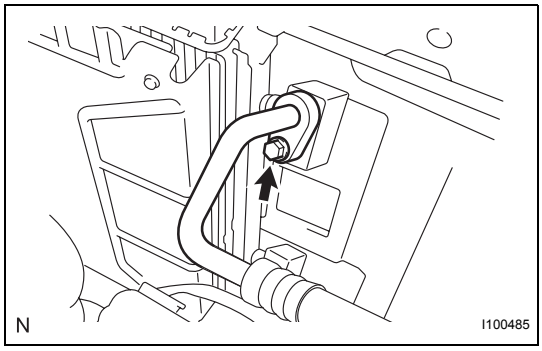

10. **DISCONNECT LIQUID TUBE SUB-ASSEMBLY A**
    (a) Remove the bolt and disconnect the liquid tube from the cooler condenser.
    (b) Remove the O-ring from the liquid tube.
    NOTICE:
    Seal the openings of the disconnected parts using vinyl tape to prevent moisture and foreign matter from entering.

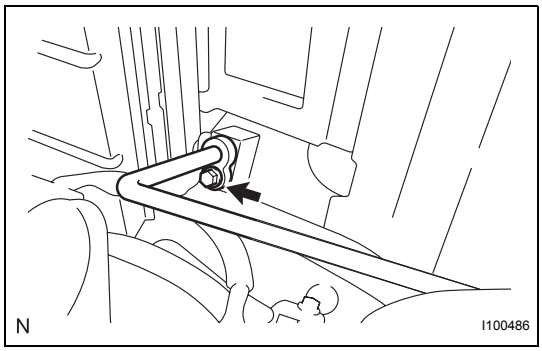

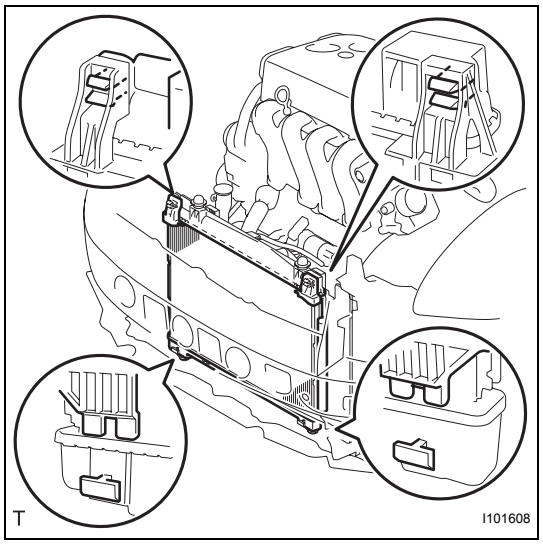

11. REMOVE CONDENSER

(a) Disengage the 2 claws and remove the condenser from the vehicle.

NOTICE:
Do not damage the condenser or radiator when removing the condenser.

DISASSEMBLY

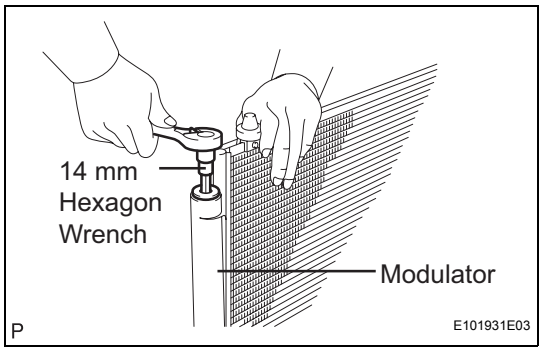

1. REMOVE COOLER DRYER

(a) Using a 14 mm straight hexagon wrench, remove the cap from the modulator.

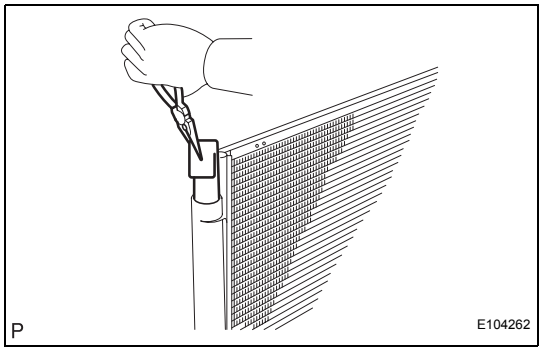

(b) Using pliers, remove the cooler dryer.

REASSEMBLY

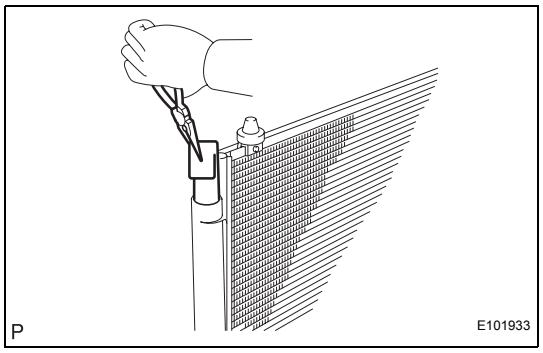

1. INSTALL COOLER DRYER

(a) Using pliers, install the cooler dryer onto the modulator.

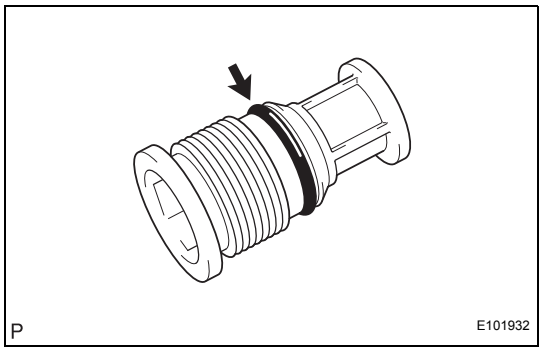

(b) Apply sufficient compressor oil to a new O-ring and the fitting surface of the cap.
Compressor oil:
ND-OIL 8 or the equivalent

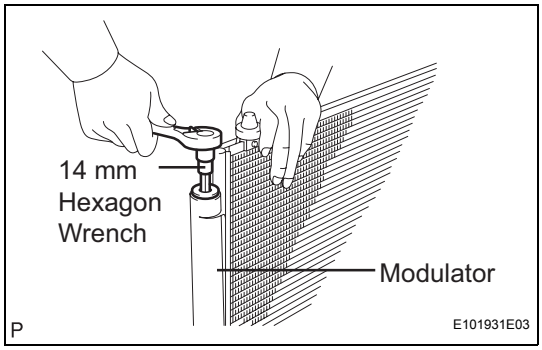

(c) Using a 14 mm straight hexagon wrench, install the cap onto the cooler condenser core.
Torque: 2.9 N*m (30 kgf*cm, 25 in.*lbf)

INSTALLATION

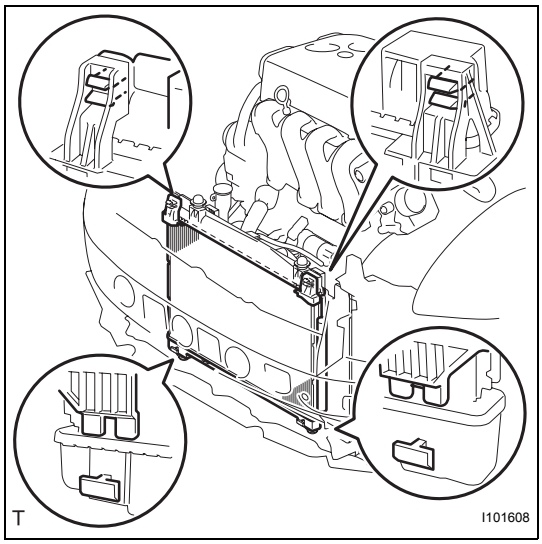

1. INSTALL CONDENSER

(a) Engage the 2 claws and install the condenser into the vehicle.
NOTICE:
Do not damage the condenser or radiator when installing the condenser.
HINT:
If a new condenser is installed, add compressor oil to the condenser as follows.
Compressor oil:
ND-OIL8 or the equivalent. Add 40 cc (1.35 fl. oz.)

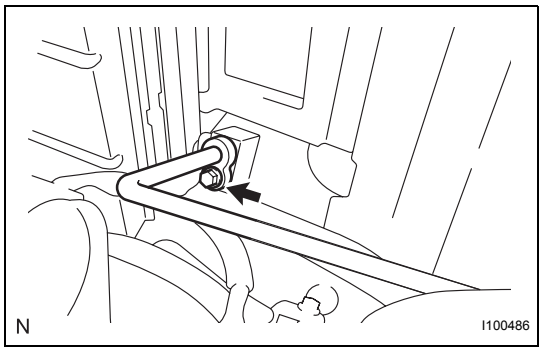

2. INSTALL LIQUID TUBE SUB-ASSEMBLY A

(a) Remove the attached vinyl tape from the pipe and the connecting part of the cooler condenser.
(b) Apply sufficient compressor oil to a new O-ring and the fitting surface of the pipe joint.
Compressor oil:
ND-OIL8 or the equivalent
(c) Install the O-ring onto the liquid tube.
(d) Install the tube onto the condenser with the bolt.
Torque: 5.4 N*m (55 kgf*cm, 48 in.*lbf)

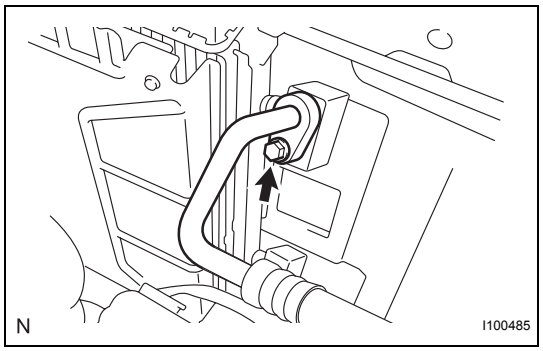

3. **INSTALL NO. 1 COOLER REFRIGERANT DISCHARGE HOSE**
   (a) Remove the attached vinyl tape from the hose and the connecting part of the cooler condenser.
   (b) Apply sufficient compressor oil to a new O-ring and the fitting surface of the hose joint.
   Compressor oil:
   ND-OIL8 or the equivalent
   (c) Install the O-ring onto the discharge hose.
   (d) Install the discharge hose onto the condenser with the bolt.
   Torque: 5.4 N*m (55 kgf*cm, 48 in.*lbf)
4. **INSTALL RADIATOR SUPPORT SUB-ASSEMBLY UPPER (See page CO-40)**
5. **INSTALL HOOD LOCK ASSEMBLY (w/ Theft Deterrent System) (See page CO-40)**
6. **INSTALL HOOD LOCK ASSEMBLY (w/o Theft Deterrent System) (See page CO-41)**
7. **INSTALL NO. 1 COOLER COVER (See page CO-41)**
8. **INSTALL RADIATOR SUPPORT ABSORBER UPPER (See page CO-42)**
9. **INSTALL FRONT BUMPER COVER (See page ET-33)**
10. **ADJUST HOOD LOCK ASSEMBLY (See page CO-42)**
11. **CONNECT CABLE TO NEGATIVE BATTERY TERMINAL**
    Torque: 5.4 N*m (55 kgf*cm, 48 in.*lbf)
12. **CHARGE REFRIGERANT (See page AC-67)**
13. **WARM UP ENGINE (See page AC-69)**
14. **CHECK FOR REFRIGERANT LEAK (See page AC-69)**

AMBIENT TEMPERATURE SENSOR

COMPONENTS

for Hatchback:

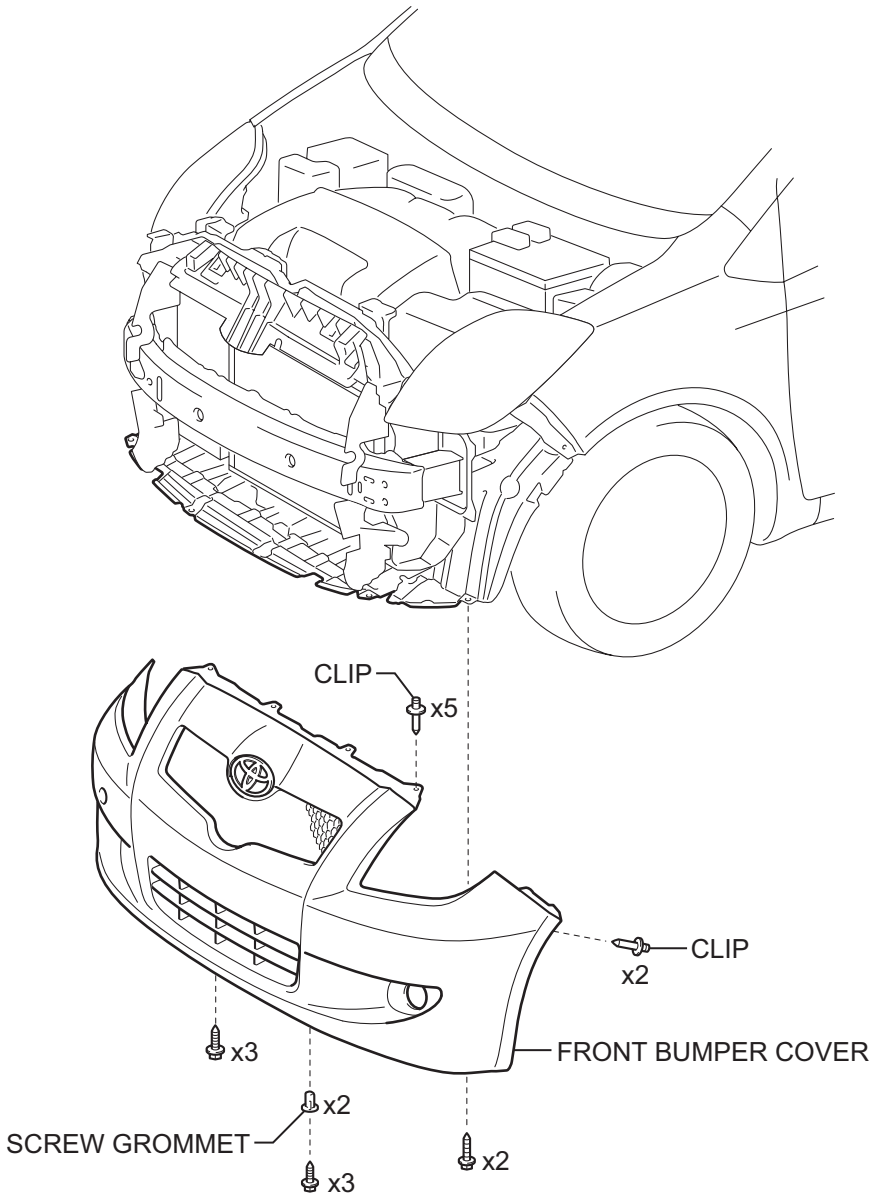

T

E117642E03

for Sedan:

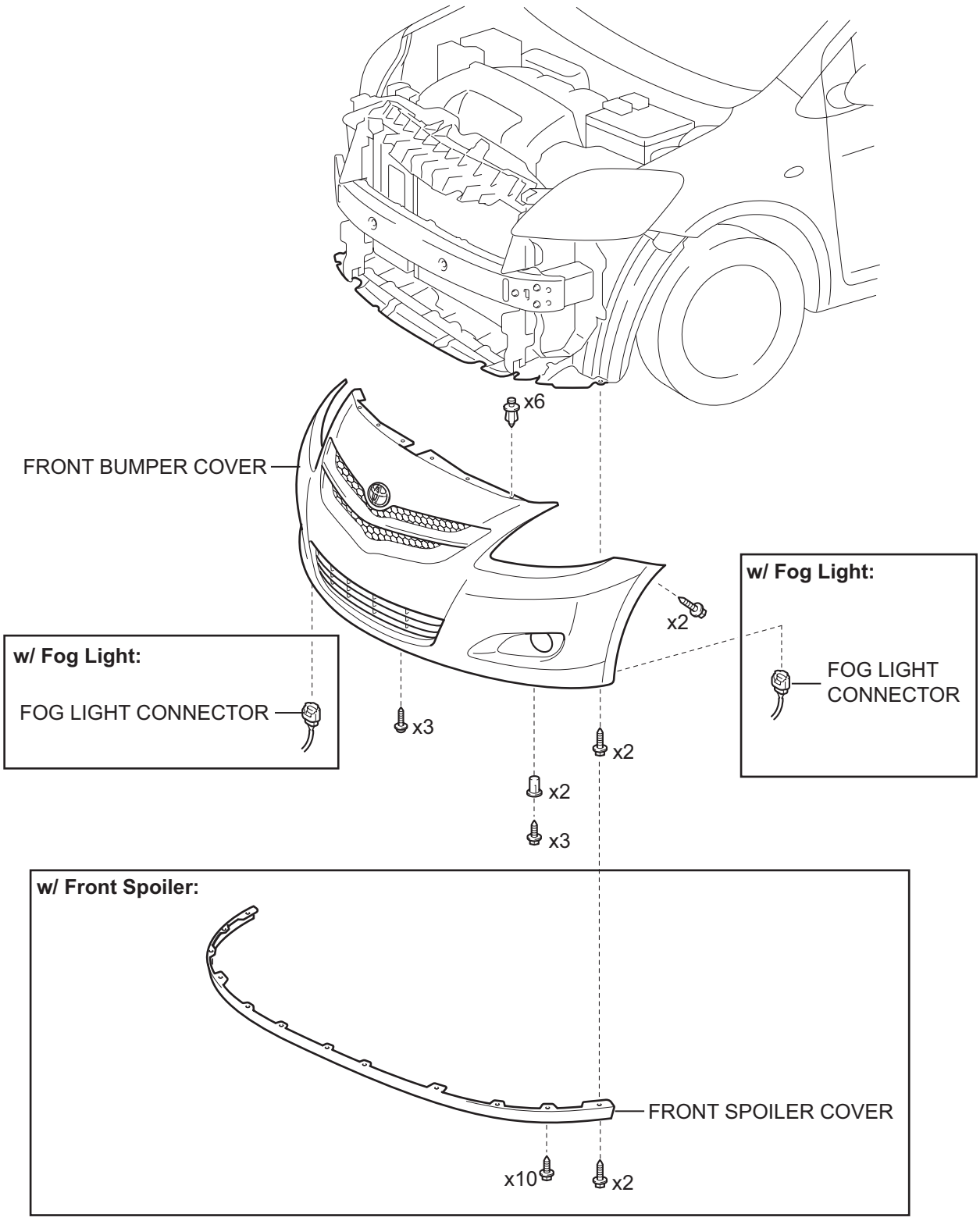

B134796E07

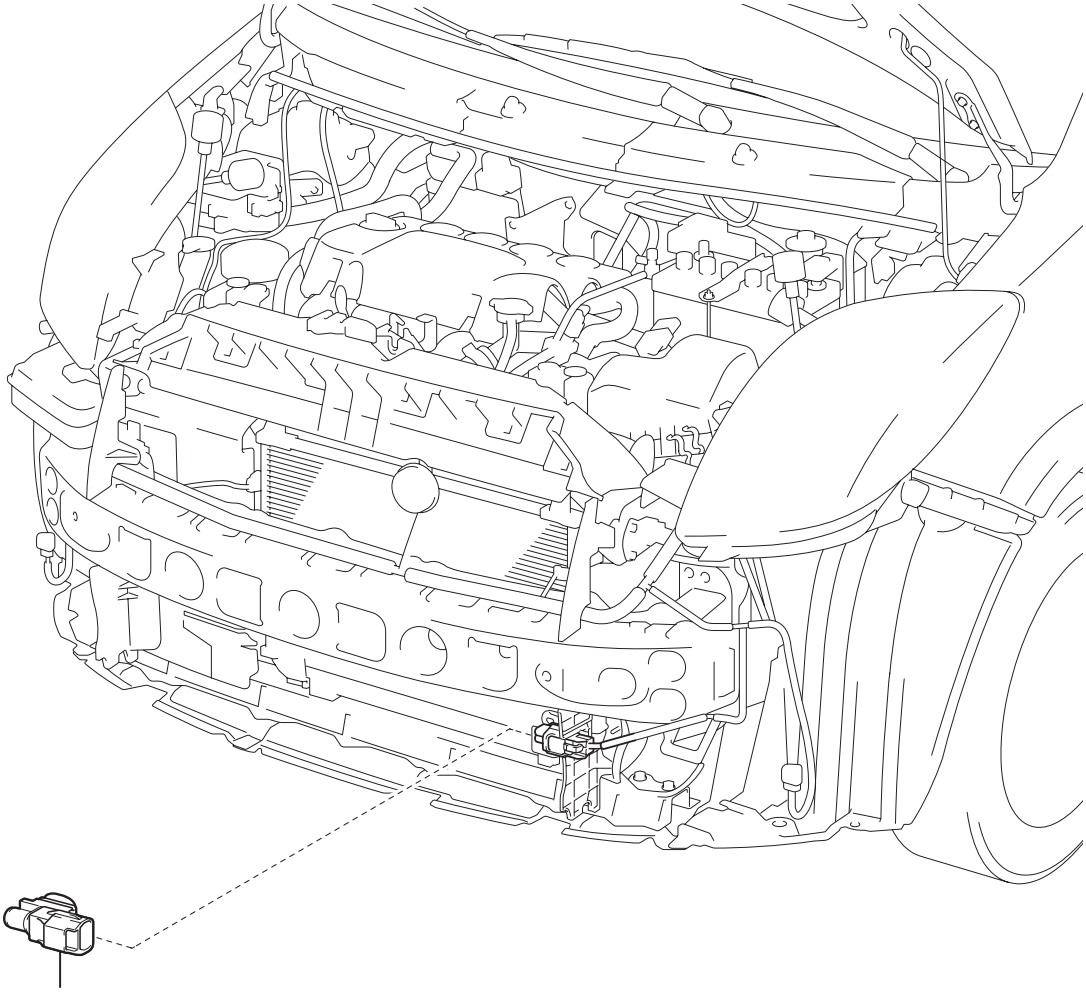

AMBIENT TEMPERATURE SENSOR

P

I101609E01

REMOVAL

1. **DISCONNECT CABLE FROM NEGATIVE BATTERY TERMINAL**
2. **REMOVE FRONT BUMPER COVER (for Hatchback) (See page ET-24)**
3. **REMOVE FRONT SPOILER COVER (for Sedan) (See page ET-6)**
4. **REMOVE FRONT BUMPER COVER (for Sedan) (See page ET-6)**
5. **REMOVE AMBIENT TEMPERATURE SENSOR**
   (a) Disconnect the connector.
   (b) Disengage the clamp and remove the ambient temperature sensor.

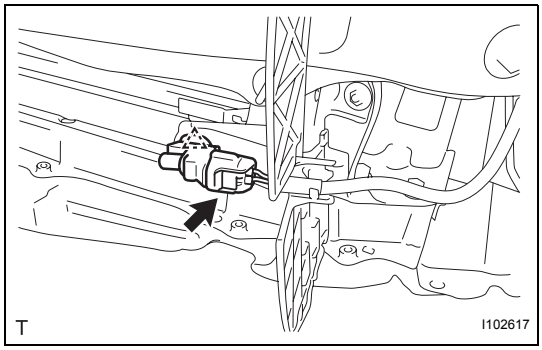

INSPECTION

1. **INSPECT AMBIENT TEMPERATURE SENSOR**
   (a) Measure the resistance.
   Standard resistance

Tester Connection	Condition	Specified Condition
1 - 2	10°C (50°F)	3.00 to 3.73 kΩ
1 - 2	15°C (59°F)	2.45 to 2.88 kΩ
1 - 2	20°C (68°F)	1.95 to 2.30 kΩ
1 - 2	25°C (77°F)	1.60 to 1.80 kΩ
1 - 2	30°C (86°F)	1.28 to 1.47 kΩ
1 - 2	35°C (95°F)	1.00 to 1.22 kΩ
1 - 2	40°C (104°F)	0.80 to 1.00 kΩ
1 - 2	45°C (113°F)	0.65 to 0.85 kΩ
1 - 2	50°C (122°F)	0.50 to 0.70 kΩ
1 - 2	55°C (131°F)	0.44 to 0.60 kΩ
1 - 2	60°C (140°F)	0.36 to 0.50 kΩ

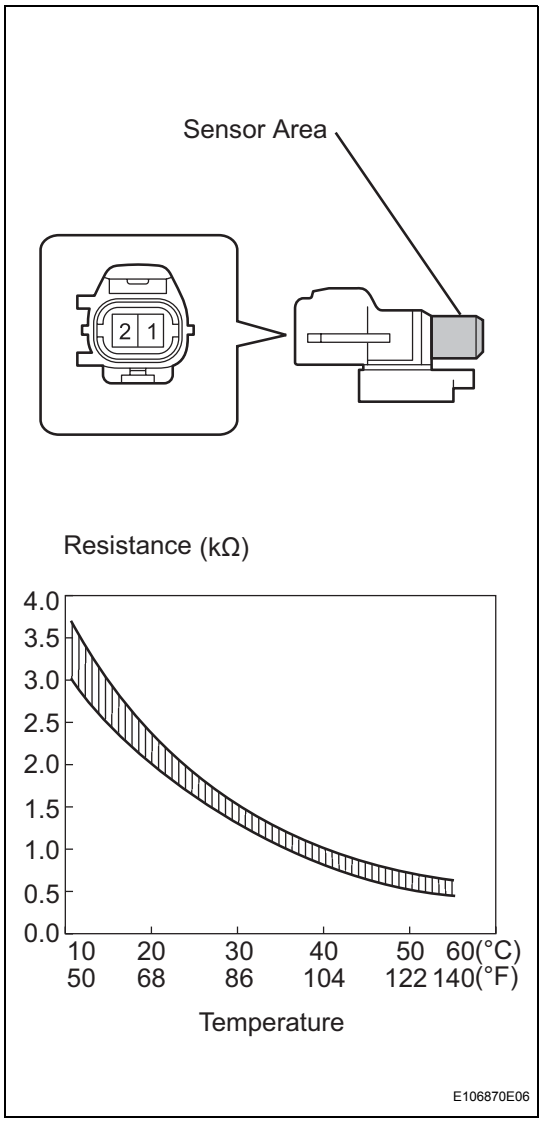

NOTICE:

- **Touching the sensor even slightly may change the resistance value. Hold the connector of the sensor.**
- **When measuring the resistance, the sensor temperature must be the same as the ambient temperature.**

HINT:
As the temperature increases, the resistance decreases (see the graph).
If the result is not as specified, replace the ambient temperature sensor.

AC

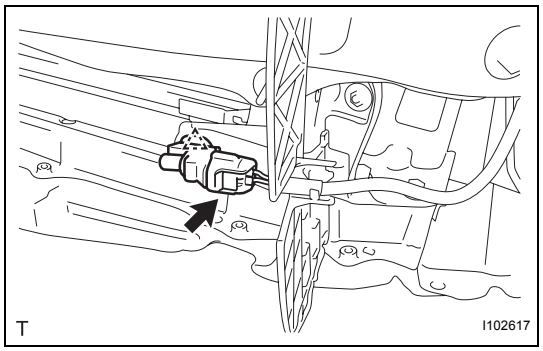

INSTALLATION

1. **INSTALL AMBIENT TEMPERATURE SENSOR**
   (a) Engage the clamp and install the ambient temperature sensor.
   (b) Connect the connector.
2. **INSTALL FRONT BUMPER COVER (for Hatchback) (See page ET-33)**
3. **INSTALL FRONT BUMPER COVER (for Sedan) (See page ET-16)**
4. **INSTALL FRONT SPOILER COVER (for Sedan) (See page ET-19)**
5. **CONNECT CABLE TO NEGATIVE BATTERY TERMINAL**
   Torque: 5.4 N*m (55 kgf*cm, 48 in.*lbf)

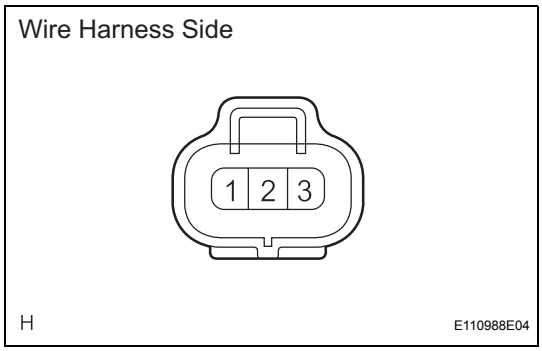

AIR CONDITIONING PRESSURE SENSOR

ON-VEHICLE INSPECTION

1. INSPECT PRESSURE SENSOR

(a) Check the wire harness.

(1) Disconnect the connector of the pressure sensor.

(2) Using an ohmmeter, measure the resistance of the wire harness side connector.

Standard resistance

Tester Connection	Specified Condition
1 - Body ground	Below 1 Ω

(3) Turn the ignition switch ON.

(4) Measure the voltage of the wire harness side connector.

Standard voltage

Tester Connection	Specified Condition
1 - 3	4.7 to 5.3 V

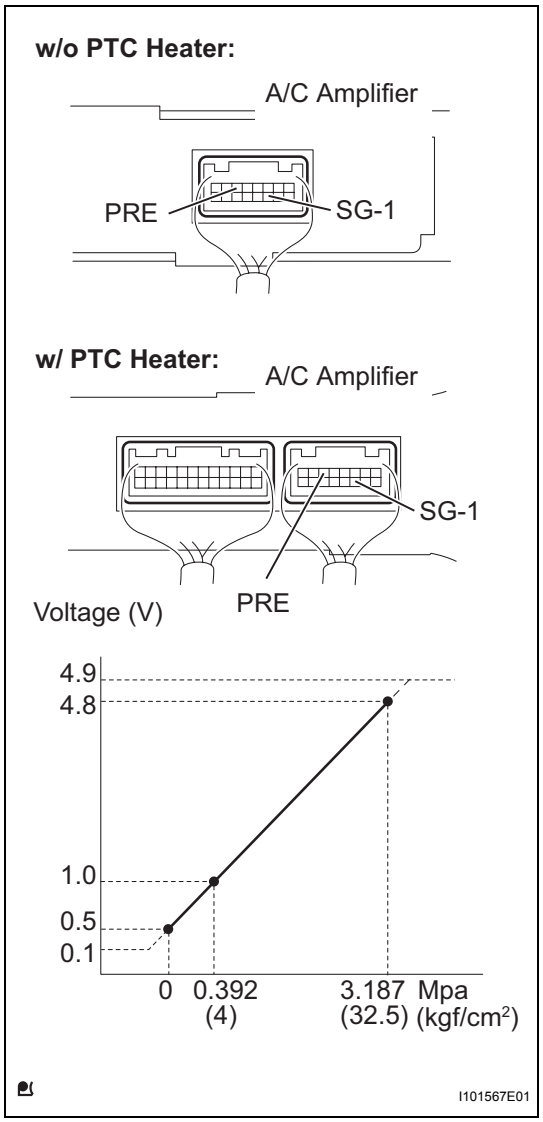

(b) Check the pressure sensor.
   (1) Set the manifold gauge.
   (2) Connect the connector to the pressure sensor.
   (3) Warm up the engine.
   (4) Switch A/C ON.
   (5) Using a voltmeter, measure the voltage between connector terminals 6 (PRE) and 11 (SG-1) of the air conditioner amplifier.
   HINT:
   Check from the rear of the connector while the it is connected to the air conditioning amplifier.
   Standard voltage

Refrigerant Pressure	Specified Condition
0.196 to 3.14 MPa (2.0 to 32 kgf/cm^2)	0.76 to 4.74 V

HEATER BLOWER MOTOR RELAY

COMPONENTS

for Hatchback:

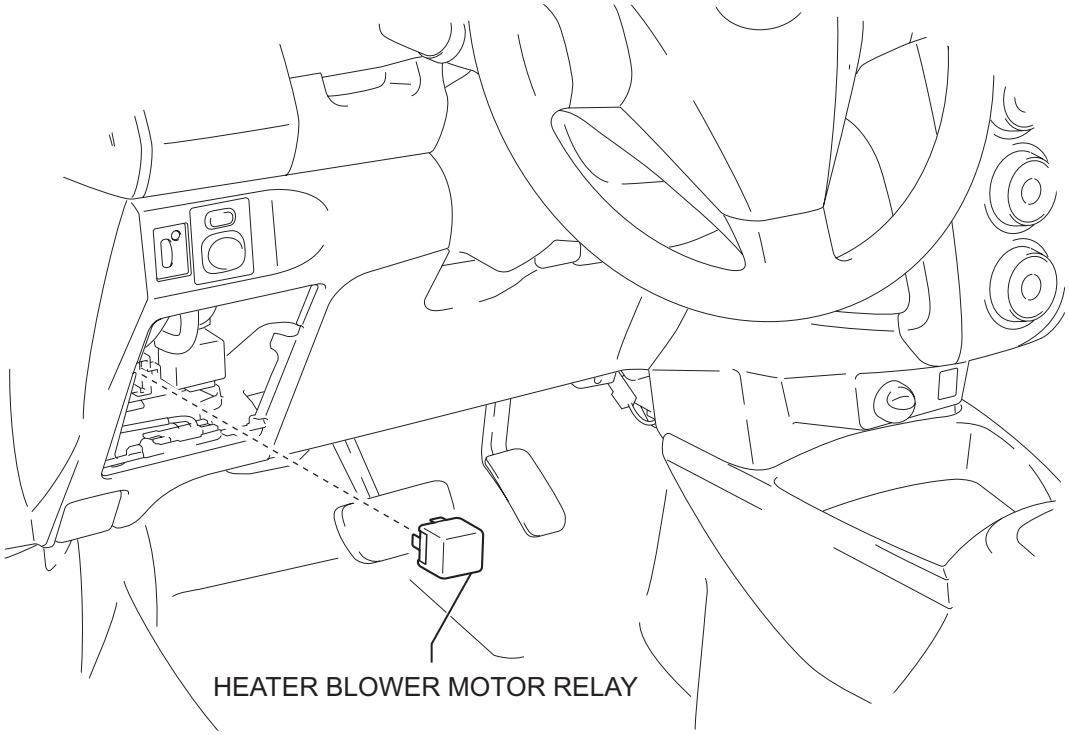

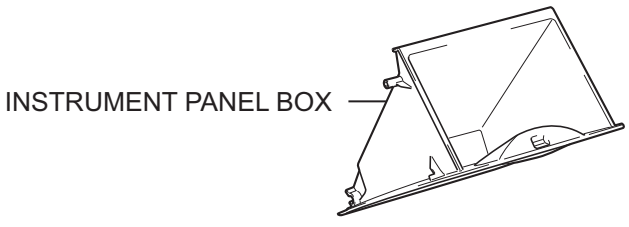

I101540E01

for Sedan:

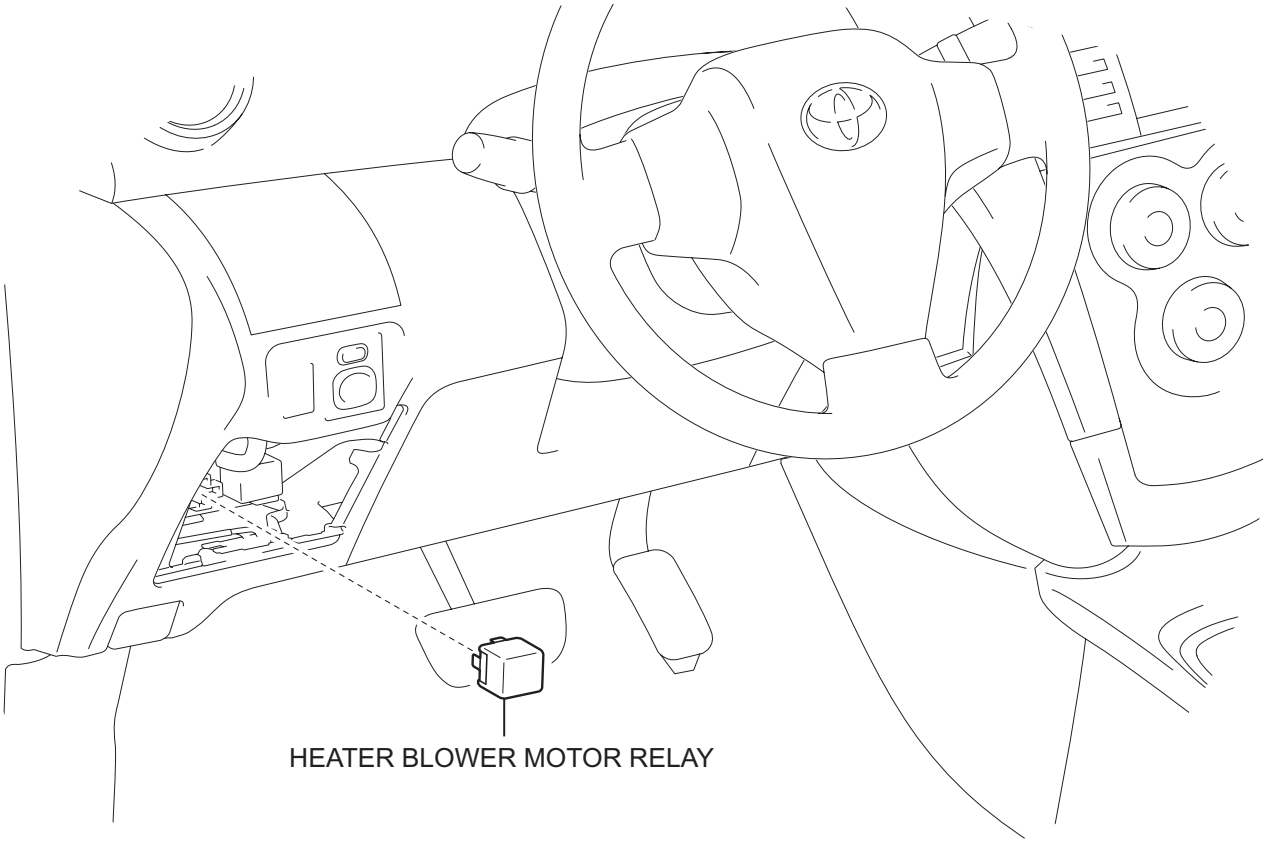

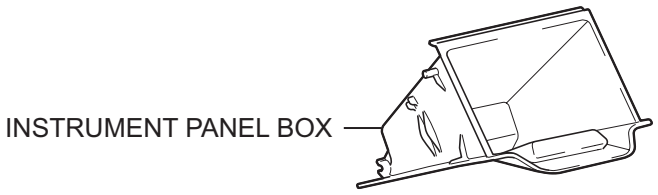

P

AC

I102619E01

REMOVAL

1. **DISCONNECT CABLE FROM NEGATIVE BATTERY TERMINAL**
2. **REMOVE INSTRUMENT PANEL BOX (for Hatchback) (See page IP-70)**
3. **REMOVE INSTRUMENT PANEL BOX (for Sedan) (See page IP-45)**
4. **REMOVE HEATER BLOWER MOTOR RELAY**
   (a) Remove the heater blower motor relay.

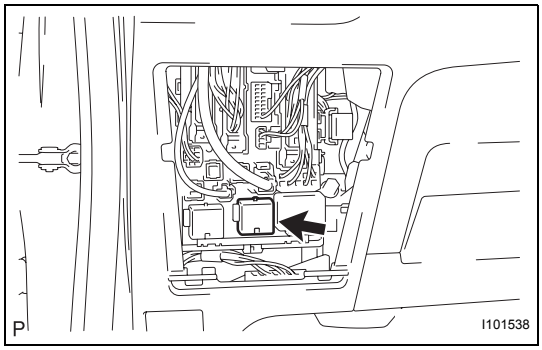

INSPECTION

1. **INSPECT HEATER BLOWER MOTOR RELAY**
   (a) Check the resistance.
      (1) Using an ohmmeter, measure the resistance between each terminal.
      Standard resistance

Tester Connection	Specified Condition
3 - 4	Below 1 Ω
3 - 4	10 kΩ or higher (Apply battery voltage to terminals 1 and 2)
3 - 5	10 kΩ or higher
3 - 5	Below 1 Ω (Apply battery voltage to terminals 1 and 2)

If the result is not as specified, replace the relay.

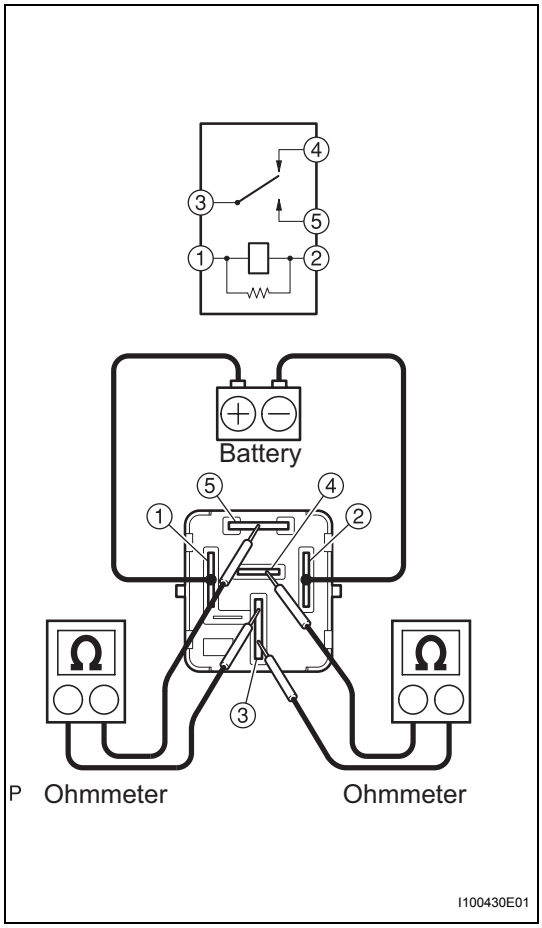

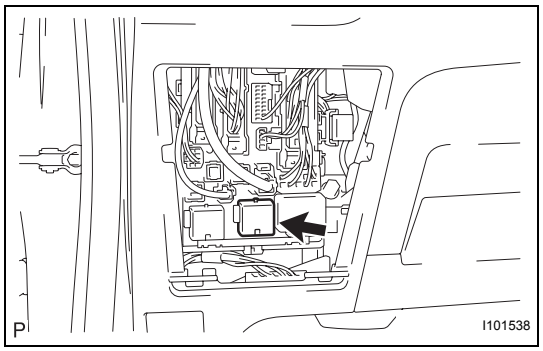

INSTALLATION

1. **INSTALL HEATER BLOWER MOTOR RELAY**
   (a) Install the heater blower motor relay.
2. **INSTALL INSTRUMENT PANEL BOX (for Hatchback) (See page IP-78)**
3. **INSTALL INSTRUMENT PANEL BOX (for Sedan) (See page IP-53)**
4. **CONNECT CABLE TO NEGATIVE BATTERY TERMINAL**
   Torque: 5.4 N*m (55 kgf*cm, 48 in.*lbf)

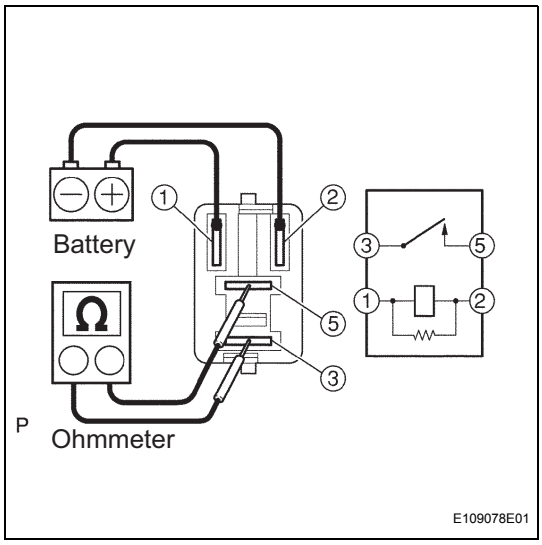

PTC HEATER RELAY

ON-VEHICLE INSPECTION

1. INSPECT PTC HEATER RELAY

(a) Check the resistance.

(1) Using an ohmmeter, measure the resistance between the terminals.

Standard resistance

Tester Connection	Specified Condition
3 - 5	10 kΩ or higher
3 - 5	Below 1 Ω (When battery voltage applied to terminals 1 and 2)

If the result is not as specified, replace the PTC heater relay.

AIR CONDITIONING PANEL ASSEMBLY (for Sedan)

COMPONENTS

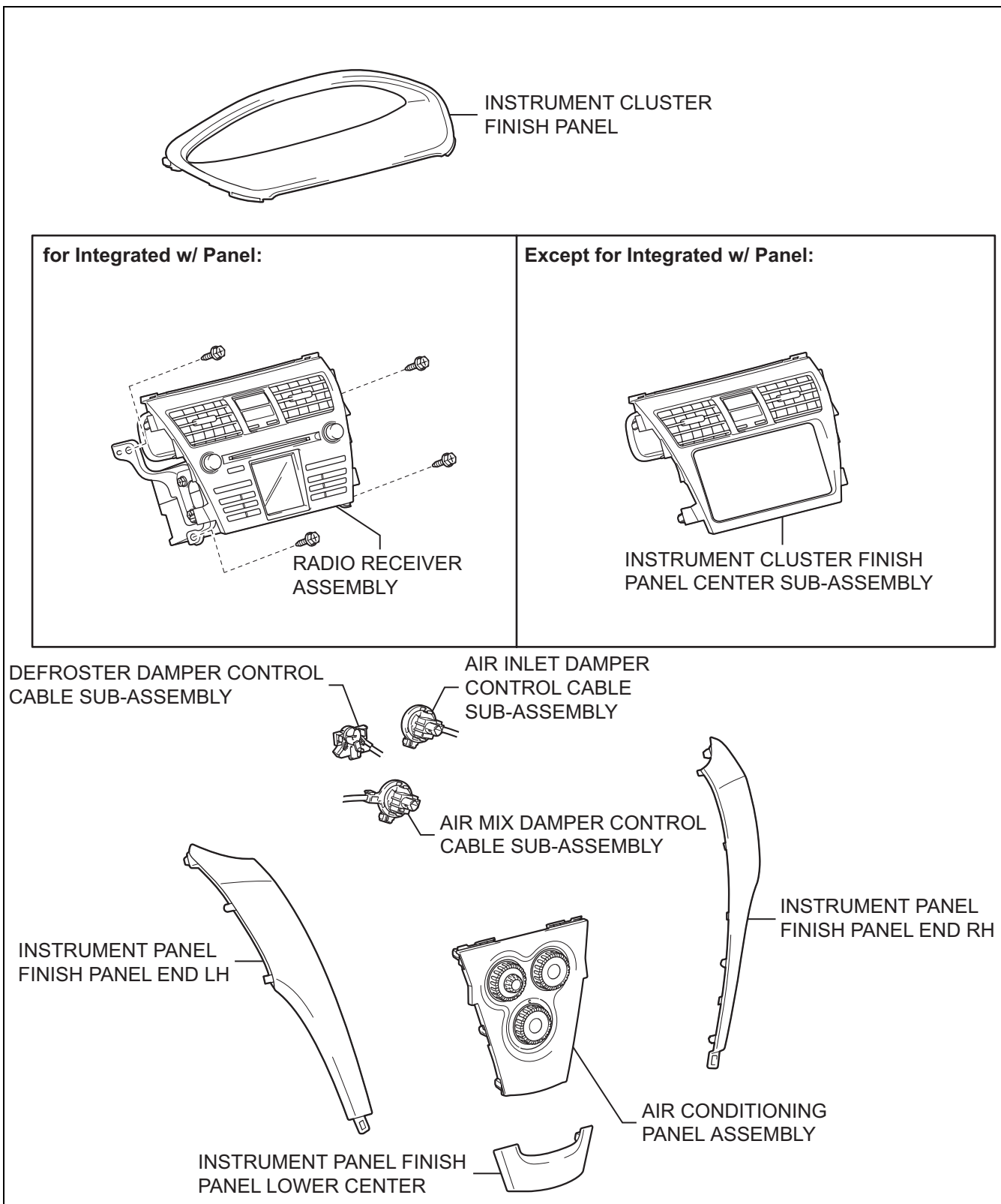

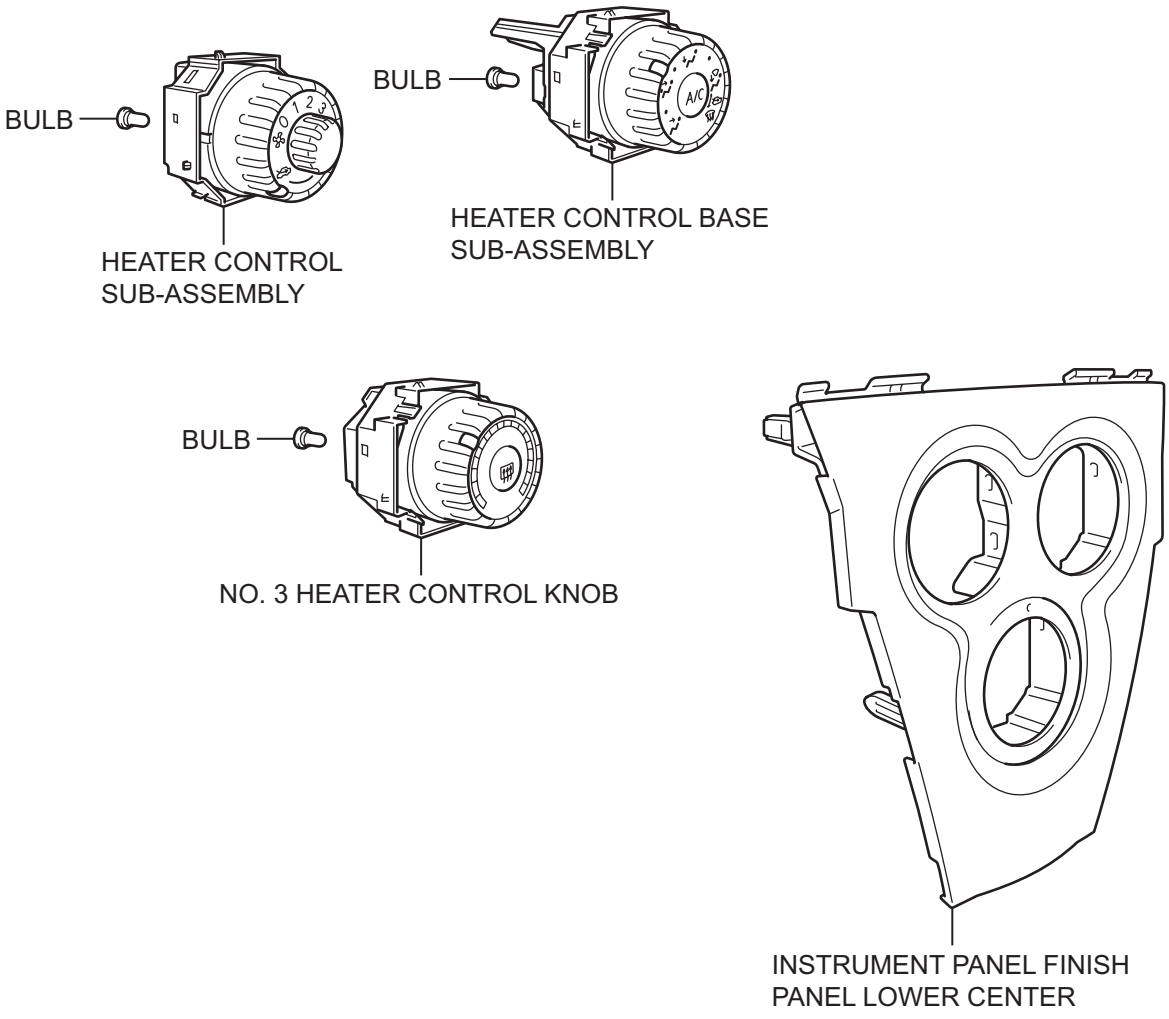
BULB
HEATER CONTROL
SUB-ASSEMBLY
BULB
HEATER CONTROL BASE
SUB-ASSEMBLY
BULB
NO. 3 HEATER CONTROL KNOB
INSTRUMENT PANEL FINISH
PANEL LOWER CENTER

I102565E01

REMOVAL

1. **DISCONNECT CABLE FROM NEGATIVE BATTERY TERMINAL**
2. **REMOVE INSTRUMENT PANEL FINISH PANEL LOWER CENTER (See page ME-138)**
3. **REMOVE INSTRUMENT PANEL FINISH PANEL END LH (See page ME-138)**
4. **REMOVE INSTRUMENT PANEL FINISH PANEL END RH (See page ME-138)**
5. **REMOVE INSTRUMENT CLUSTER FINISH PANEL (See page ME-139)**
6. **REMOVE RADIO RECEIVER ASSEMBLY**
7. **REMOVE INSTRUMENT CLUSTER FINISH PANEL CENTER SUB-ASSEMBLY**
   (a) Disengage the 2 claws and 4 clips and remove the instrument cluster finish panel center.

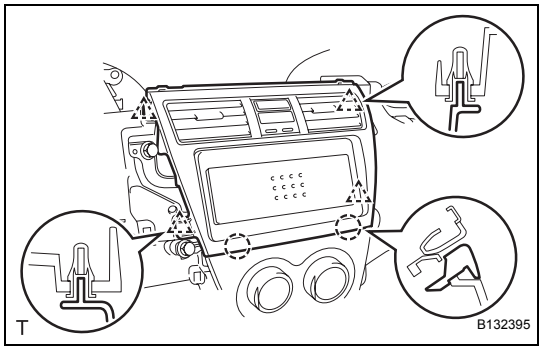

8. **REMOVE AIR CONDITIONING PANEL ASSEMBLY**
   (a) Disengage the 4 clips and 2 claws and remove the air conditioning panel.

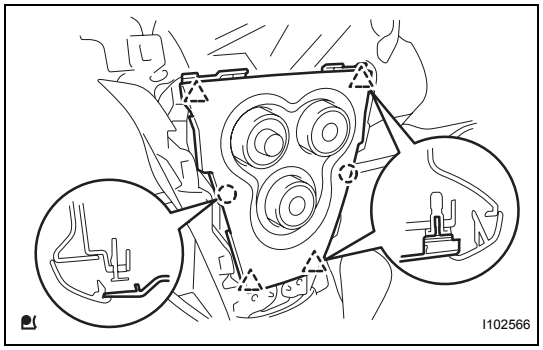

   (b) Disconnect the 3 connectors and 4 clamps.

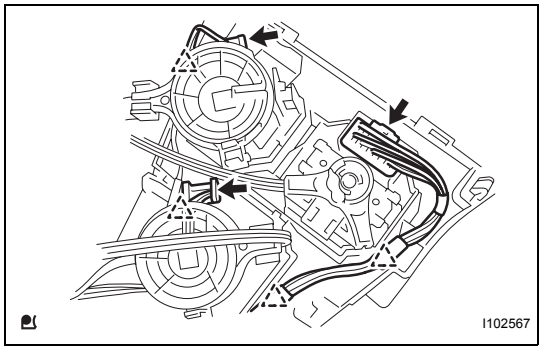

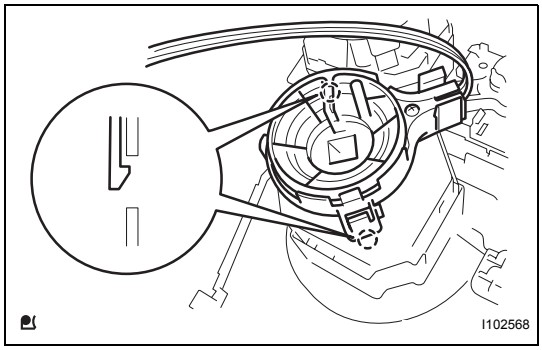

9. DISCONNECT AIR MIX DAMPER CONTROL CABLE SUB-ASSEMBLY

(a) Disconnect the air mix damper control cable from the clamp.

(b) Disengage the 2 claws and disconnect the air mix damper control cable.

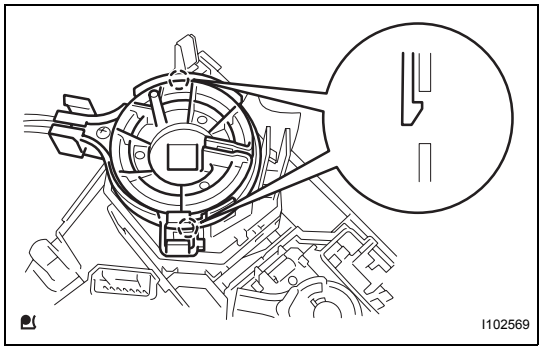

10. DISCONNECT DEFROSTER DAMPER CONTROL CABLE SUB-ASSEMBLY

(a) Disengage the 2 claws and disconnect the defroster damper control cable.

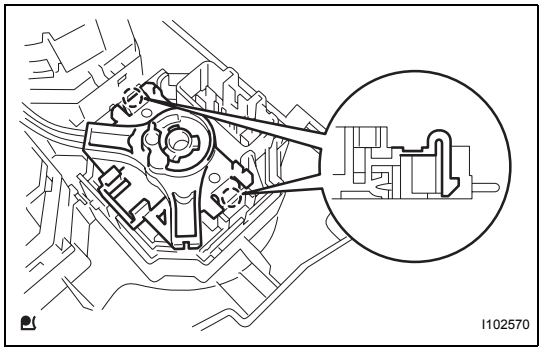

11. DISCONNECT AIR INLET DAMPER CONTROL CABLE SUB-ASSEMBLY

(a) Disengage the 2 claws and disconnect the air inlet damper control cable.

DISASSEMBLY

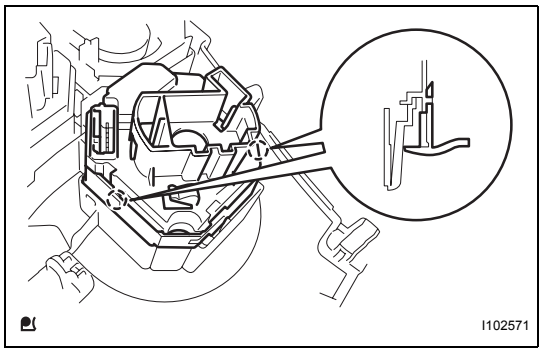

1. REMOVE NO. 3 HEATER CONTROL KNOB

(a) Disengage the 2 claws and remove the No. 3 heater control knob.

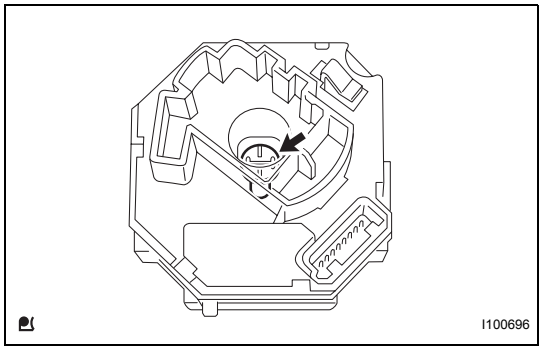

(b) Remove the bulb.

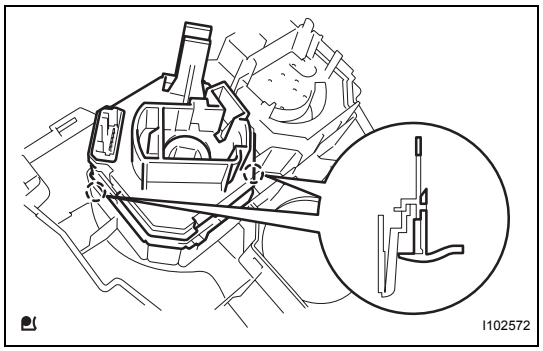

2. REMOVE HEATER CONTROL BASE SUB-ASSEMBLY

(a) Disengage the 2 claws and remove the heater control base.

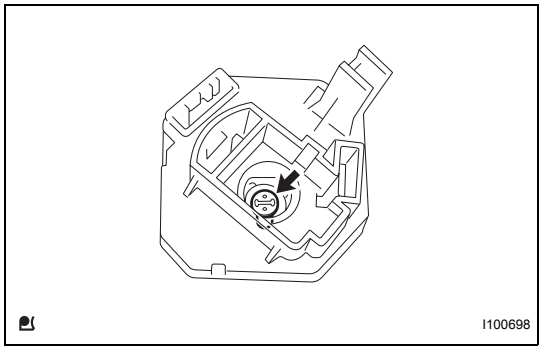

(b) Remove the bulb.

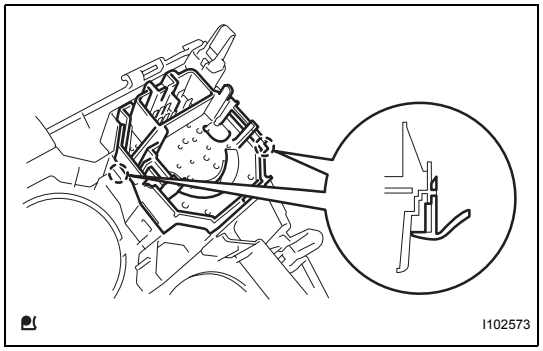

3. REMOVE HEATER CONTROL SUB-ASSEMBLY

(a) Disengage the 2 claws and remove the heater control.

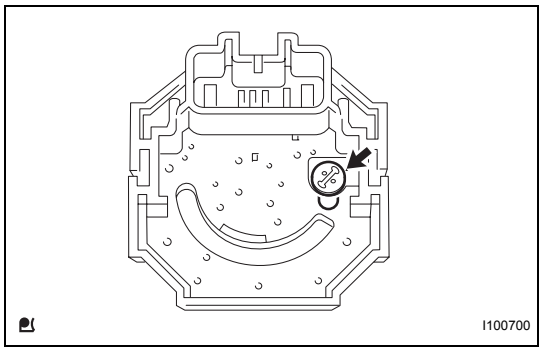

(b) Remove the bulb.

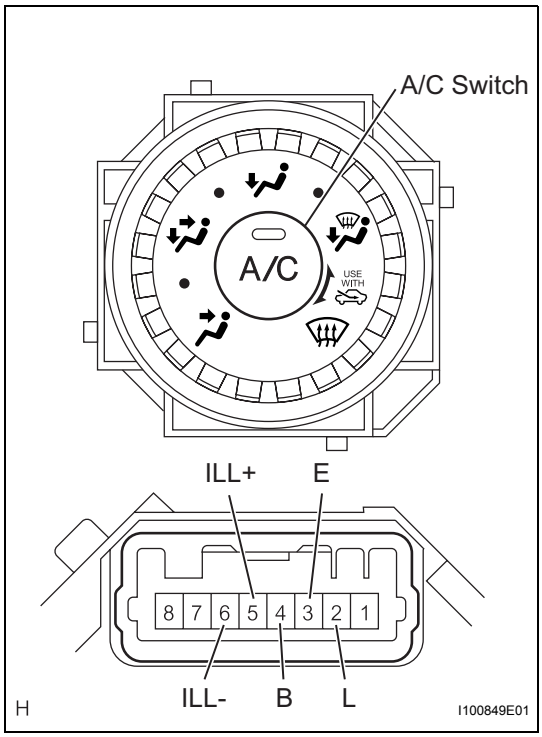

INSPECTION

1. INSPECT HEATER CONTROL BASE SUB-ASSEMBLY

(a) Check the heater control base resistance.

(1) Using an ohmmeter, measure the resistance and check the results in accordance with the values in the table below.

Standard resistance

Tester Connection	Condition	Specified Condition
2 (L) - 3 (E)	Always	10 kΩ or higher
2 (L) - 4 (B)	A/C switch OFF	10 kΩ or higher
3 (E) - 4 (B)	Always	10 kΩ or higher
2 (L) - 4 (B)	A/C switch ON	Below 1 Ω
5 (ILL+) - 6 (ILL-)	Always	Below 1 Ω

If the result is not as specified, replace the heater control base.

(b) Check the A/C indicator operation.

(1) Connect the positive (+) lead from the battery to terminal 2 (L) and the negative (-) lead to terminal (E).

(2) Push the A/C switch in and check that the indicator lights up.

Standard:

Indicator lights up

If the result is not as specified, replace the heater control base.

(c) Check the illumination operation.

(1) Connect the positive (+) lead from the battery to terminal 5 (ILL+) and the negative (-) lead to terminal 6 (ILL-), then check that the bulb illuminates.

Standard:

Bulb illuminates

If the result is not as specified, replace the bulb.

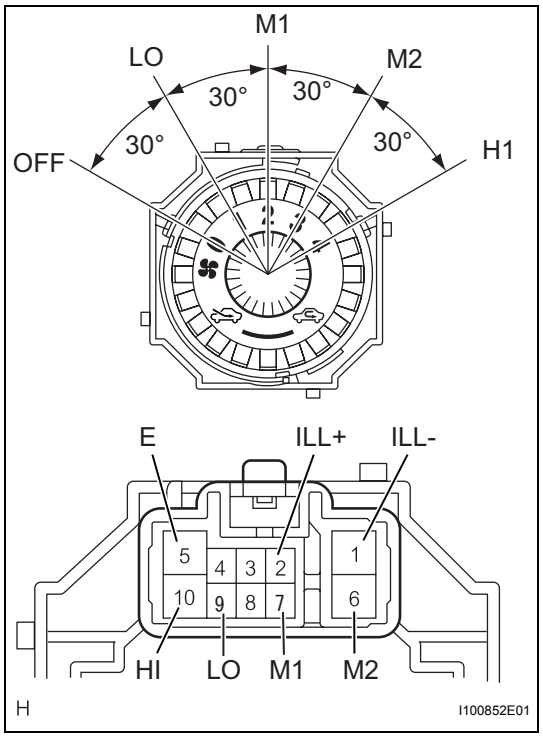

2. INSPECT HEATER CONTROL SUB-ASSEMBLY

(a) Check the heater control resistance.

(1) Using an ohmmeter, measure the resistance and check the results in accordance with the values in the table below.

Standard resistance

Switch Position	Tester Connection	Specified Condition
OFF	ALL - 5 (E)	10 kΩ or higher
LO	9 (LO) - 5 (E)	Below 1 Ω
LO - M1	9 (LO) - 5 (E) - 7 (M1)	Below 1 Ω
M1	9 (LO) - 5 (E) - 7 (M1)	Below 1 Ω
M1 - M2	9 (LO) - 5 (E) - 7 (M1) - 6 (M2)	Below 1 Ω
M2	9 (LO) - 5 (E) - 6 (M2)	Below 1 Ω
M2 - HI	9 (LO) - 5 (E) - 6 (M2) - 10 (HI)	Below 1 Ω
HI	9 (LO) - 5 (E) - 10 (HI)	Below 1 Ω

If the result is not as specified, replace the heater control.

(b) Check the illumination operation.

(1) Connect the positive (+) lead from the battery to terminal 2 (ILL+) and the negative (-) lead to terminal 1 (ILL-), then check that the bulb illuminates.

Standard:

Bulb illuminates

If the result is not as specified, replace the bulb.

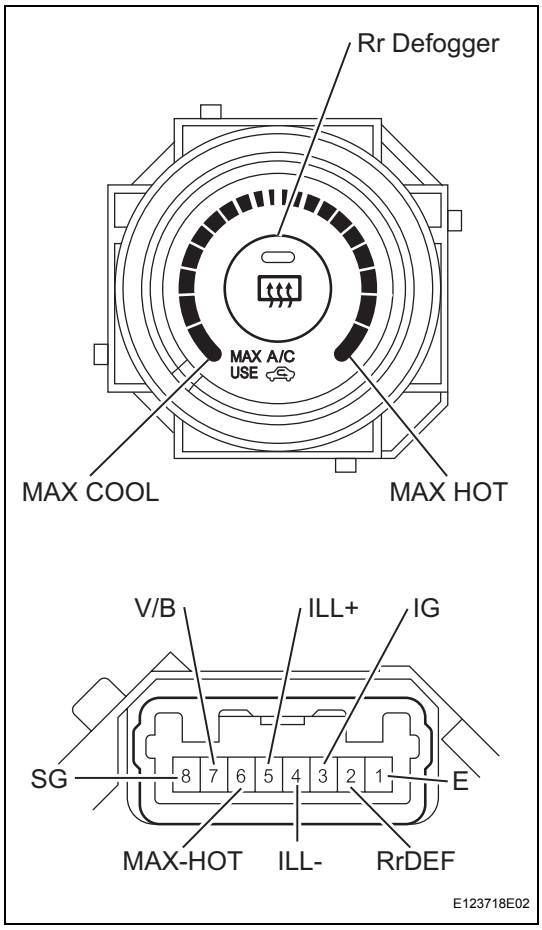

3. INSPECT NO. 3 HEATER CONTROL KNOB

(a) Check the No. 3 heater control knob resistance.

(1) Using an ohmmeter, measure the resistance and check the results in accordance with the values in the table below.

Standard resistance

Tester Connection	Condition	Specified Condition
2 (RrDEF) - 1 (E)	Rr. DEF switch OFF	10 kΩ or higher
2 (RrDEF) - 1 (E)	Rr. DEF switch ON	Below 1 Ω
3 (IG) - 6 (MAX HOT)	Except MAX HOT	10 kΩ or higher
3 (IG) - 6 (MAX HOT)	MAX HOT	Below 1 Ω
4 (ILL-) - 5 (ILL+)	Always	Below 1 Ω
7 (V/B) - 8 (SG)	Always	Below 1 Ω

If the result is not as specified, replace the No. 3 heater control knob.

(b) Check the Rr. DEF indicator operation.

(1) Connect the positive (+) lead from the battery to terminal 3 (IG) and the negative (-) lead to terminal 1 (E).

(2) Push the Rr. DEF switch in and check that the indicator lights up.

Standard:

Indicator lights up

If the result is not as specified, replace the No. 3 heater control knob.

(c) Check the illumination operation.

(1) Connect the positive (+) lead from the battery to terminal 5 (ILL+) and the negative (-) lead to terminal 4 (ILL-), then check that the bulb illuminates.

Standard:

Bulb illuminates

If the result is not as specified, replace the bulb.

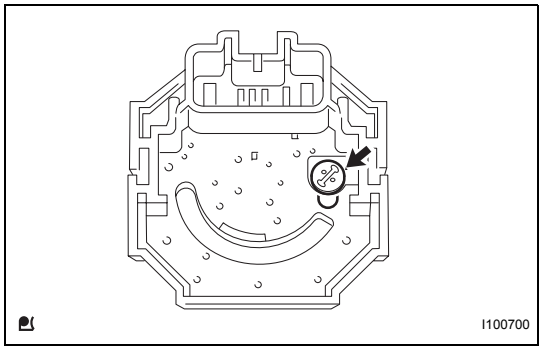

REASSEMBLY

1. INSTALL HEATER CONTROL SUB-ASSEMBLY

(a) Install the bulb.

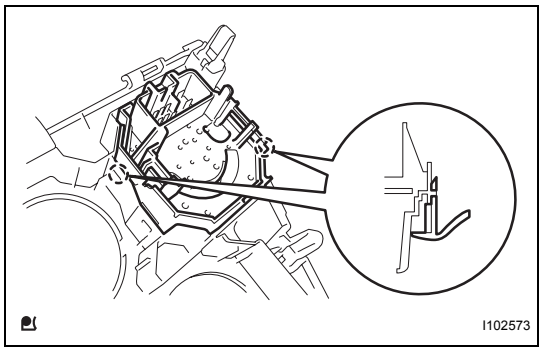

(b) Engage the 2 claws and install the heater control.

2. INSTALL HEATER CONTROL BASE SUB-ASSEMBLY

(a) Install the bulb.

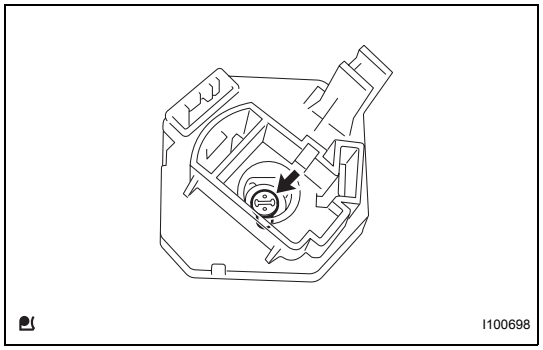

(b) Engage the 2 claws and install the heater control base.

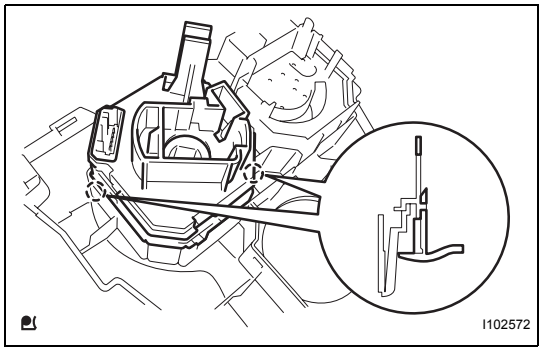

3. INSTALL NO. 3 HEATER CONTROL KNOB

(a) Install the bulb.

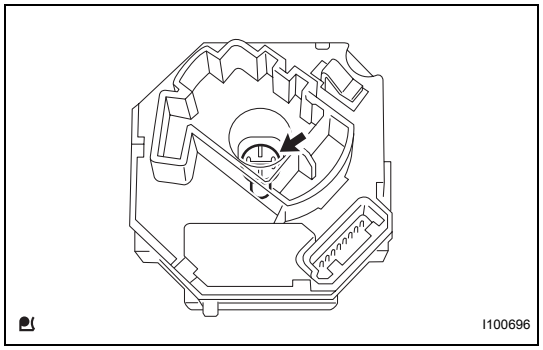

(b) Engage the 2 claws and install the No. 3 heater control knob.

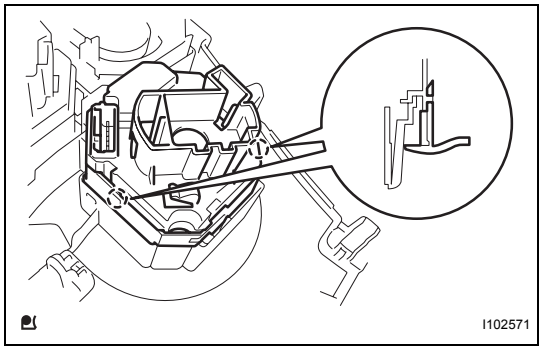

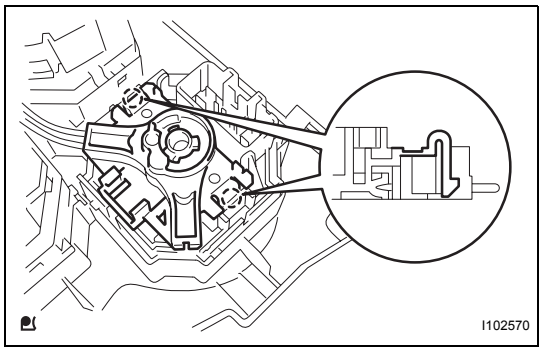

INSTALLATION

1. CONNECT AIR INLET DAMPER CONTROL CABLE SUB-ASSEMBLY

(a) Engage the 2 claws and connect the air inlet damper control cable.

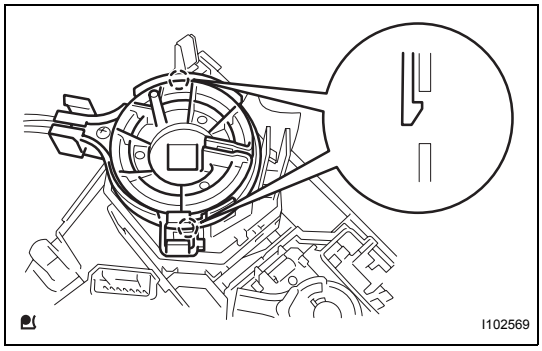

2. CONNECT DEFROSTER DAMPER CONTROL CABLE SUB-ASSEMBLY

(a) Engage the 2 claws and connect the defroster damper control cable.

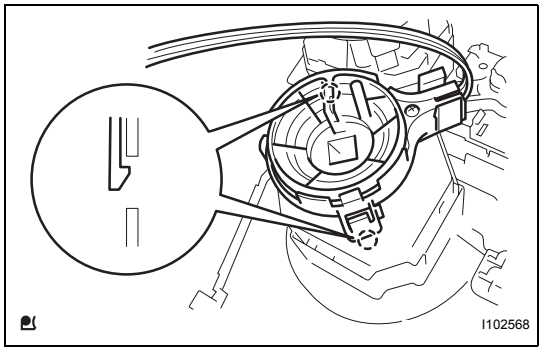

3. CONNECT AIR MIX DAMPER CONTROL CABLE SUB-ASSEMBLY

(a) Engage the 2 claws and connect the air mix control cable clamp.

(b) Connect the air mix damper control cable to the clamp.

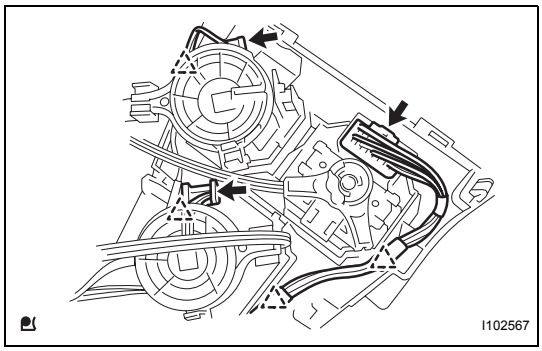

4. INSTALL AIR CONDITIONING PANEL ASSEMBLY

(a) Connect the 3 connectors and the 4 clamps.

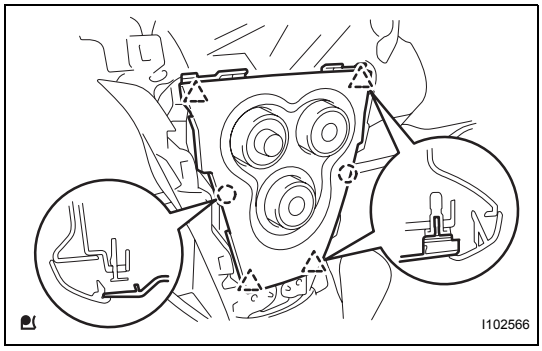

(b) Engage the 4 clips and 2 claws and install the air conditioning panel.

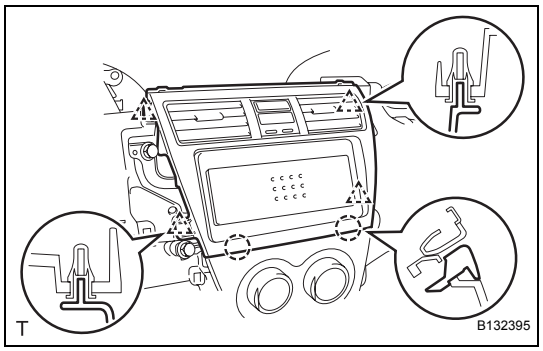

5. **INSTALL INSTRUMENT CLUSTER FINISH PANEL CENTER SUB-ASSEMBLY**
   (a) Engage the 4 clips and 2 claws and install the instrument cluster finish panel.
6. **INSTALL RADIO RECEIVER ASSEMBLY**
7. **INSTALL INSTRUMENT CLUSTER FINISH PANEL (See page ME-140)**
8. **INSTALL INSTRUMENT PANEL FINISH PANEL END RH (See page ME-141)**
9. **INSTALL INSTRUMENT PANEL FINISH PANEL END LH (See page ME-141)**
10. **INSTALL INSTRUMENT PANEL FINISH PANEL LOWER CENTER (See page ME-142)**
11. **CONNECT CABLE TO NEGATIVE BATTERY TERMINAL**
    Torque: 5.4 N*m (55 kgf*cm, 48 in.*lbf)

AIR CONDITIONING PANEL ASSEMBLY (for Hatchback)

COMPONENTS

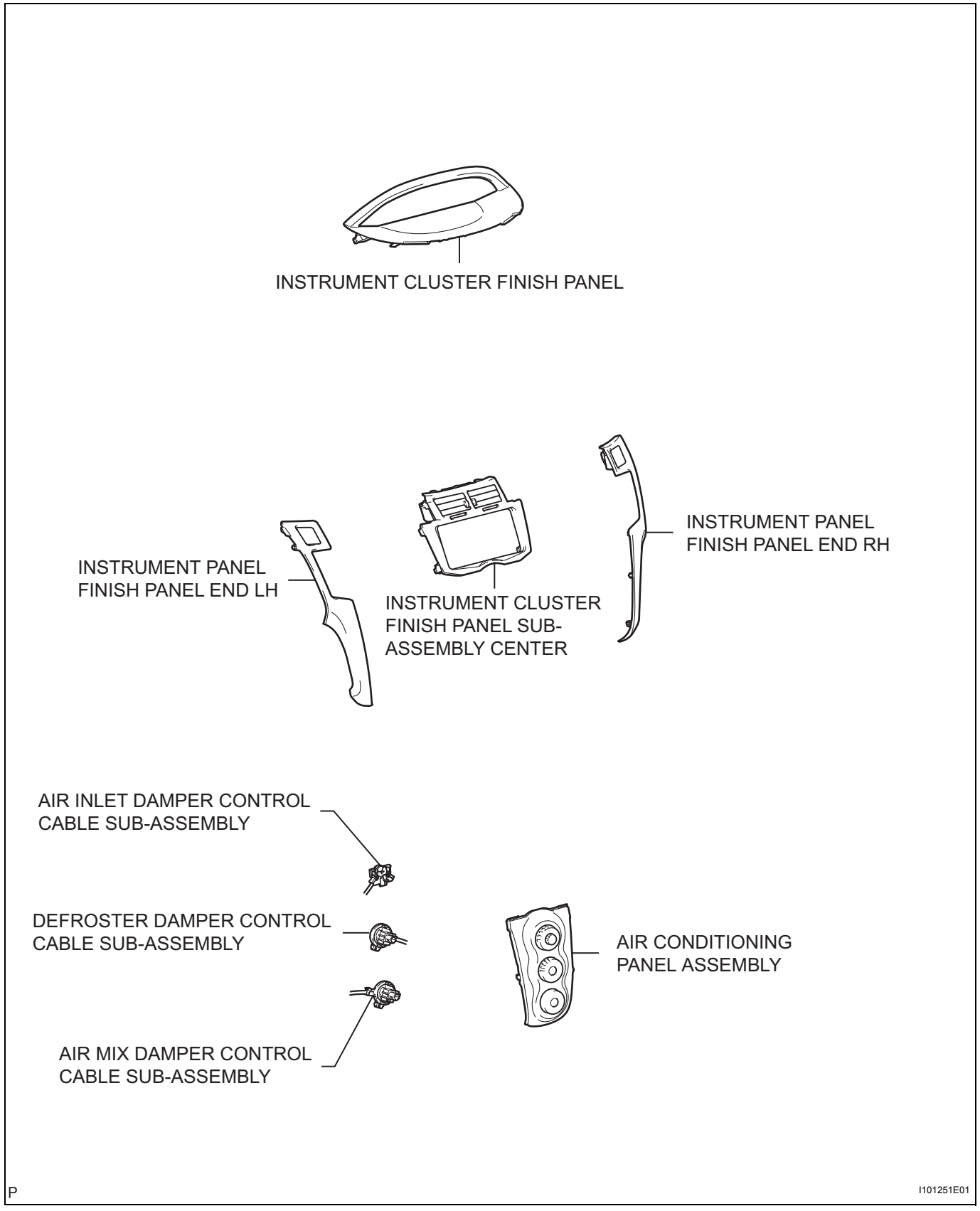

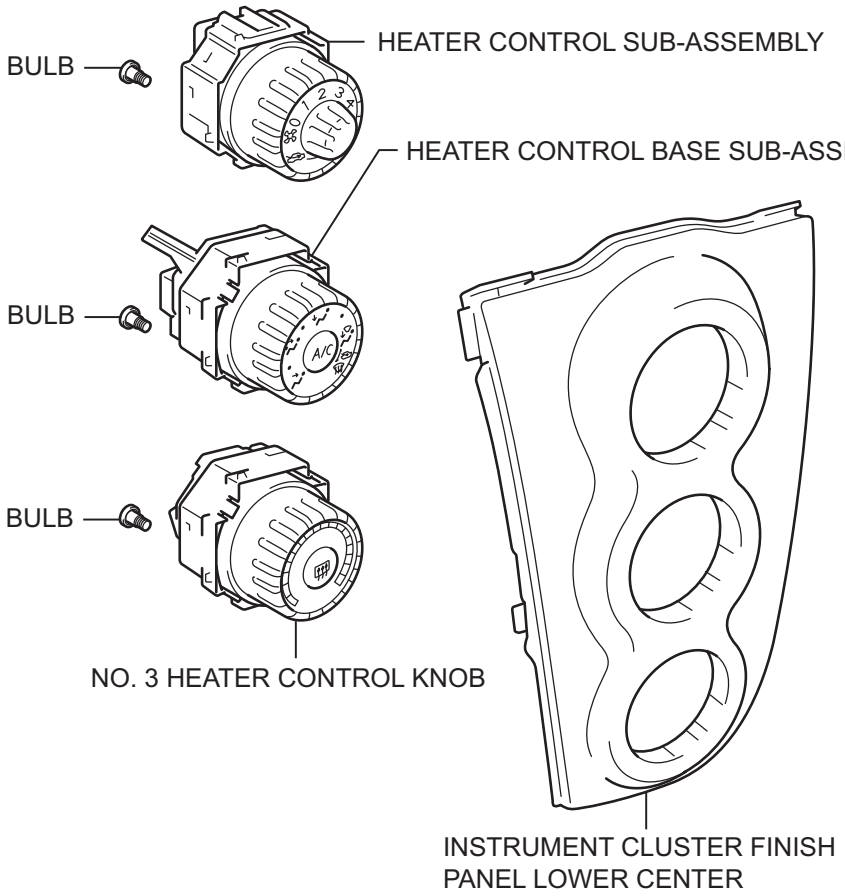
BULB
HEATER CONTROL SUB-ASSEMBLY
HEATER CONTROL BASE SUB-ASSEMBLY
BULB
BULB
NO. 3 HEATER CONTROL KNOB
INSTRUMENT CLUSTER FINISH
PANEL LOWER CENTER
I100683E01

REMOVAL

1. **DISCONNECT CABLE FROM NEGATIVE BATTERY TERMINAL**
2. **REMOVE INSTRUMENT PANEL FINISH PANEL END LH (See page ME-145)**
3. **REMOVE INSTRUMENT PANEL FINISH PANEL END RH (See page ME-145)**
4. **REMOVE INSTRUMENT CLUSTER FINISH PANEL (See page ME-145)**
5. **REMOVE INSTRUMENT CLUSTER FINISH PANEL SUB-ASSEMBLY CENTER**
   (a) Disengage the 2 claws and 4 clips and remove the instrument cluster finish panel center.
   NOTICE:
   - **Grip the rib portion of the instrument cluster finish panel center by hand to remove it.**
   - **To avoid breakage of the instrument cluster finish panel center when removing it, do not apply excessive force to the register or pull out the rink or panel portions.**

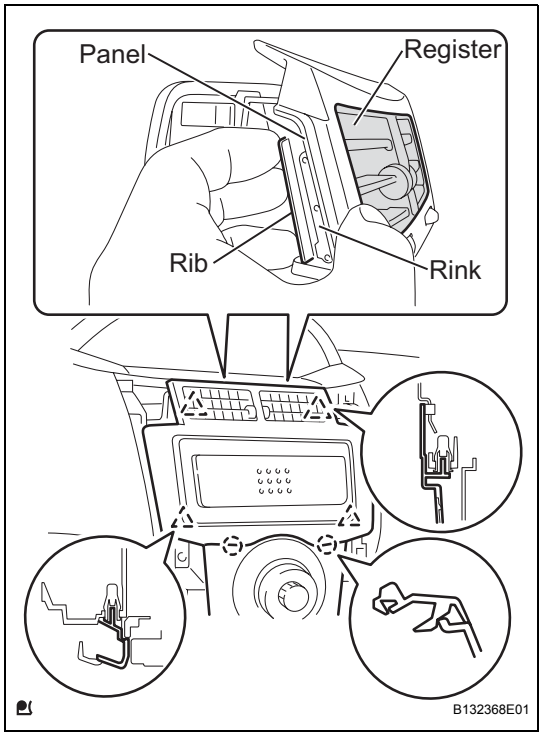

6. **REMOVE AIR CONDITIONING PANEL ASSEMBLY**
   (a) Disengage the 3 clips and 2 claws and remove the air conditioning panel.

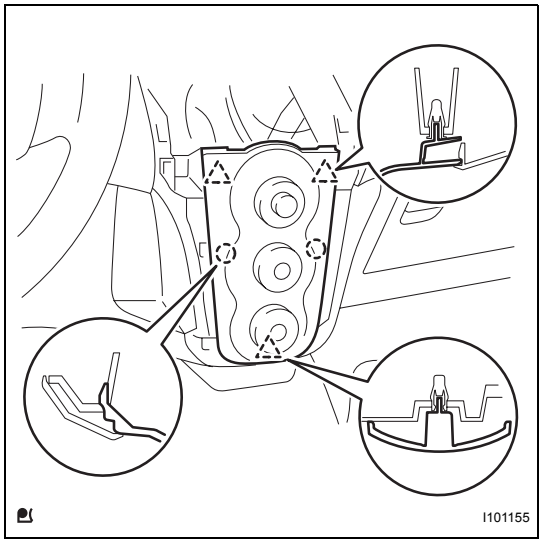

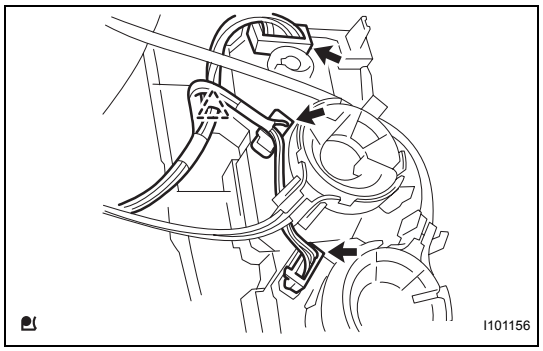

(b) Disconnect the 3 connectors and the clamp.

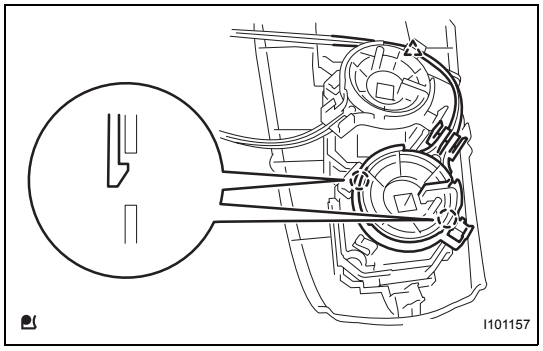

7. DISCONNECT AIR MIX DAMPER CONTROL CABLE SUB-ASSEMBLY

(a) Disconnect the air mix control cable from the clamp.
(b) Disengage the 2 claws and disconnect the air mix damper control cable.

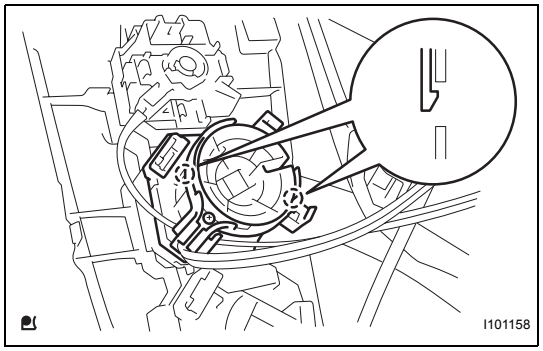

8. DISCONNECT DEFROSTER DAMPER CONTROL CABLE SUB-ASSEMBLY

(a) Disengage the 2 claws and disconnect the defroster damper control cable.

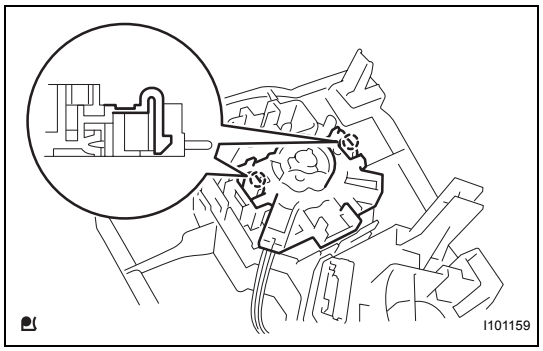

9. DISCONNECT AIR INLET DAMPER CONTROL CABLE SUB-ASSEMBLY

(a) Disengage the 2 claws and disconnect the air inlet damper control cable.

DISASSEMBLY

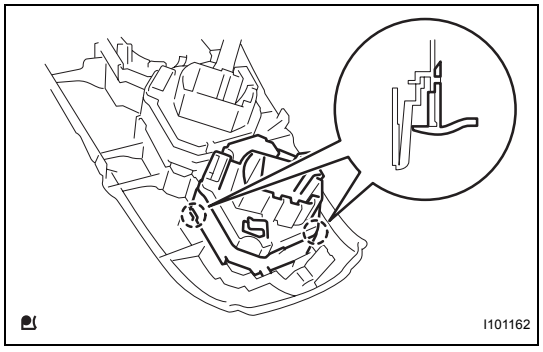

1. REMOVE NO. 3 HEATER CONTROL KNOB

(a) Disengage the 2 claws and remove the NO. 3 heater control knob.

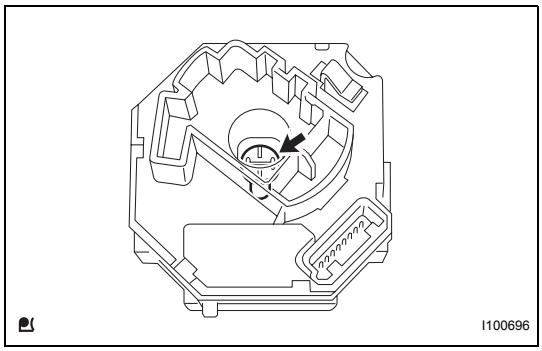

(b) Remove the bulb.

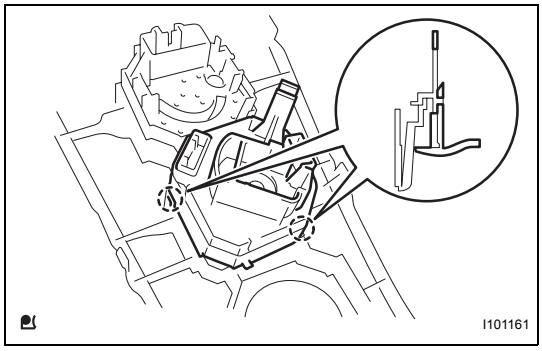

2. REMOVE HEATER CONTROL BASE SUB-ASSEMBLY

(a) Disengage the 2 claws and remove the heater control base.

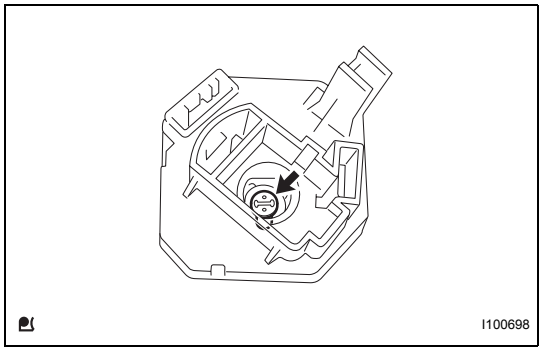

(b) Remove the bulb.

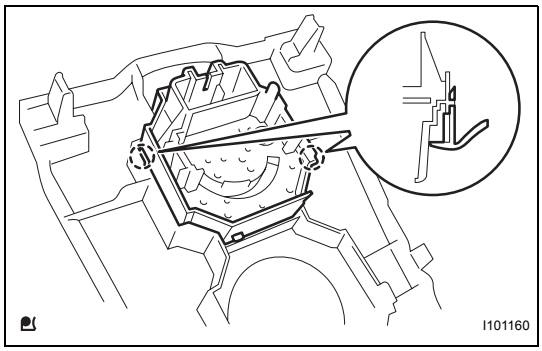

3. REMOVE HEATER CONTROL SUB-ASSEMBLY

(a) Disengage the 2 claws and remove the heater control.

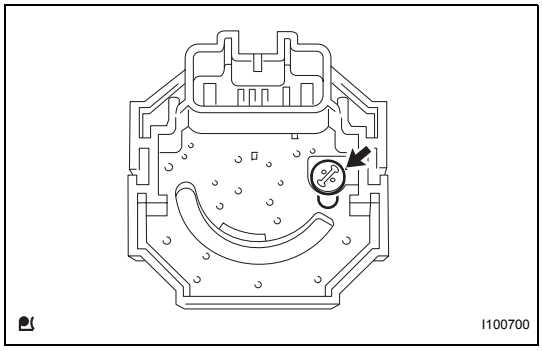

(b) Remove the bulb.

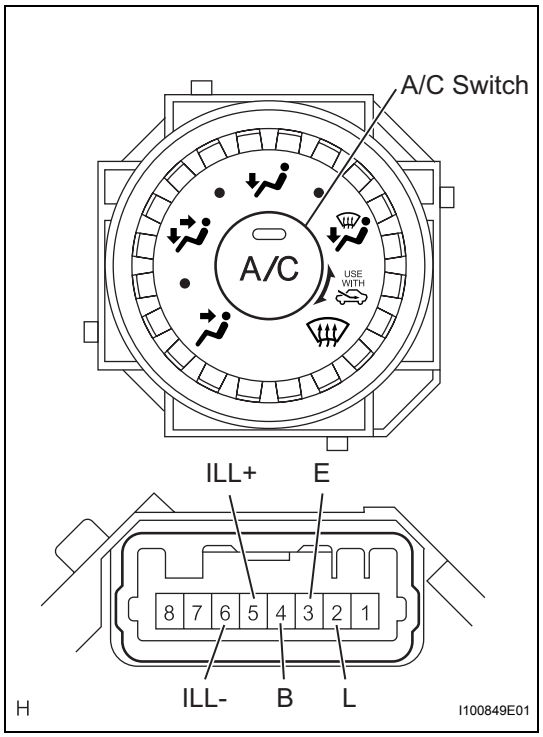

INSPECTION

1. INSPECT HEATER CONTROL BASE SUB-ASSEMBLY

(a) Check the heater control base resistance.

(1) Using an ohmmeter, measure the resistance and check the results in accordance with the values in the table below.

Standard resistance

Tester Connection	Condition	Specified Condition
2 (L) - 3 (E)	Always	10 kΩ or higher
2 (L) - 4 (B)	A/C switch OFF	10 kΩ or higher
3 (E) - 4 (B)	Always	10 kΩ or higher
2 (L) - 4 (B)	A/C switch ON	Below 1 Ω
5 (ILL+) - 6 (ILL-)	Always	Below 1 Ω

If the result is not as specified, replace the heater control base.

(b) Check the A/C indicator operation.

(1) Connect the positive (+) lead from the battery to terminal 2 (L) and the negative (-) lead to terminal (E).

(2) Push the A/C switch in and check that the indicator lights up.

Standard:

indicator lights up

If the result is not as specified, replace the heater control base.

(c) Check the illumination operation.

(1) Connect the positive (+) lead from the battery to terminal 5 (ILL+) and the negative (-) lead to terminal 6 (ILL-), then check that the bulb illuminates.

Standard:

Bulb illuminates

If the result is not as specified, replace the bulb.

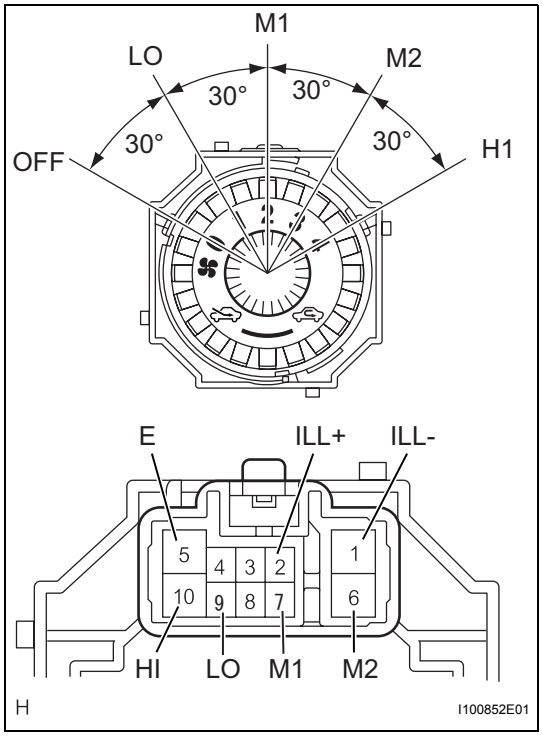

2. INSPECT HEATER CONTROL SUB-ASSEMBLY

(a) Check the heater control resistance.

(1) Using an ohmmeter, measure the resistance and check the results in accordance with the values in the table below.

Standard resistance

Switch Position	Tester Connection	Specified Condition
OFF	ALL - 5 (E)	10 kΩ or higher
LO	9 (LO) - 5 (E)	Below 1 Ω
LO - M1	9 (LO) - 5 (E) - 7 (M1)	Below 1 Ω
M1	9 (LO) - 5 (E) - 7 (M1)	Below 1 Ω
M1 - M2	9 (LO) - 5 (E) - 7 (M1) - 6 (M2)	Below 1 Ω
M2	9 (LO) - 5 (E) - 6 (M2)	Below 1 Ω
M2 - HI	9 (LO) - 5 (E) - 6 (M2) - 10 (HI)	Below 1 Ω
HI	9 (LO) - 5 (E) - 10 (HI)	Below 1 Ω

If the result is not as specified, replace the heater control.

(b) Check the illumination operation.

(1) Connect the positive (+) lead from the battery to terminal 2 (ILL+) and the negative (-) lead to terminal 1 (ILL-), then check that the bulb illuminates.

Standard:

Bulb illuminates

If the result is not as specified, replace the bulb.

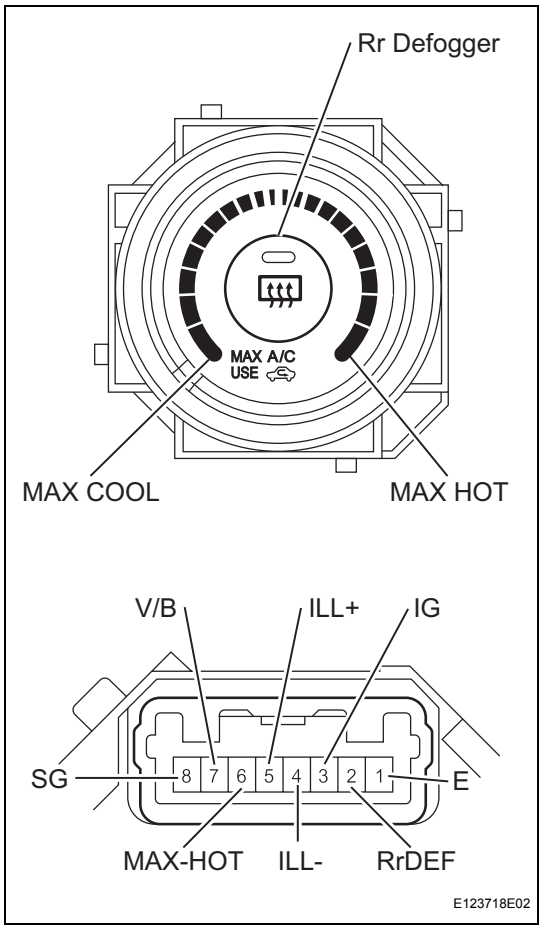

3. INSPECT NO. 3 HEATER CONTROL KNOB

(a) Check the No. 3 heater control knob resistance.

(1) Using an ohmmeter, measure the resistance and check the results in accordance with the values in the table below.

Standard resistance

Tester Connection	Condition	Specified Condition
2 (RrDEF) - 1 (E)	Rr. DEF switch OFF	10 kΩ or higher
2 (RrDEF) - 1 (E)	Rr. DEF switch ON	Below 1 Ω
3 (IG) - 6 (MAX HOT)	Except MAX HOT	10 kΩ or higher
3 (IG) - 6 (MAX HOT)	MAX HOT	Below 1 Ω
4 (ILL-) - 5 (ILL+)	Always	Below 1 Ω
7 (V/B) - 8 (SG)	Always	Below 1 Ω

If the result is not as specified, replace the No. 3 heater control knob.

(b) Check the Rr. DEF indicator operation.

(1) Connect the positive (+) lead from the battery to terminal 3 (IG) and the negative (-) lead to terminal 1 (E).

(2) Push the Rr. DEF switch in and check that the indicator lights up.

Standard:

indicator lights up

If the result is not as specified, replace the No. 3 heater control knob.

(c) Check the illumination operation.

(1) Connect the positive (+) lead from the battery to terminal 5 (ILL+) and the negative (-) lead to terminal 4 (ILL-), then check that the bulb illuminates.

Standard:

Bulb illuminates

If the result is not as specified, replace the bulb.

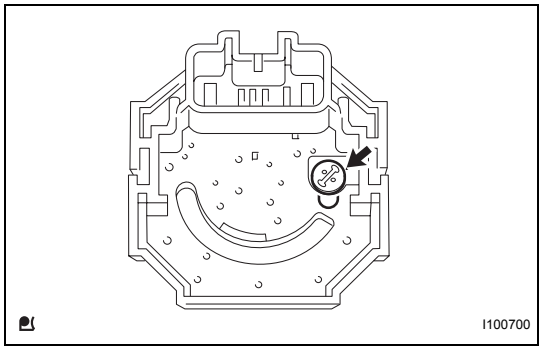

REASSEMBLY

1. INSTALL HEATER CONTROL SUB-ASSEMBLY

(a) Install the bulb.

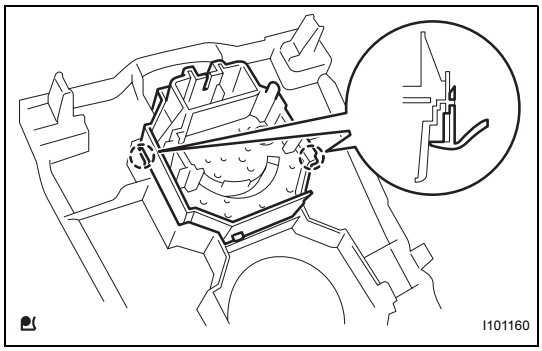

(b) Engage the 2 claws and install the heater control.

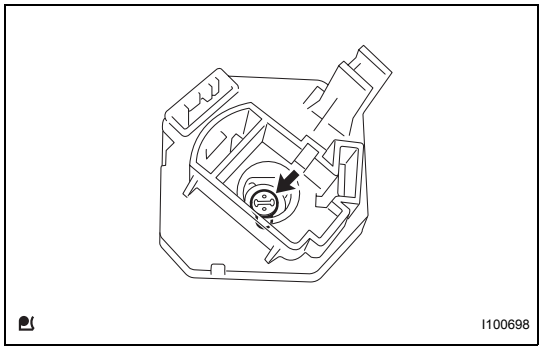

2. INSTALL HEATER CONTROL BASE SUB-ASSEMBLY

(a) Install the bulb.

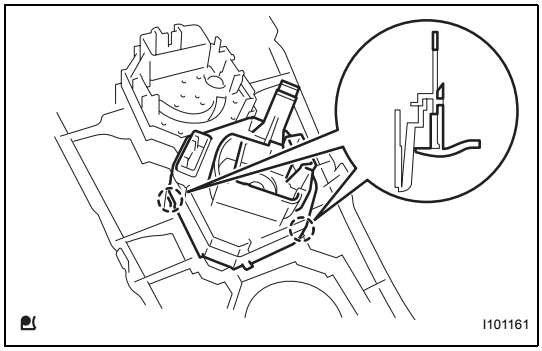

(b) Engage the 2 claws and install the heater control base.

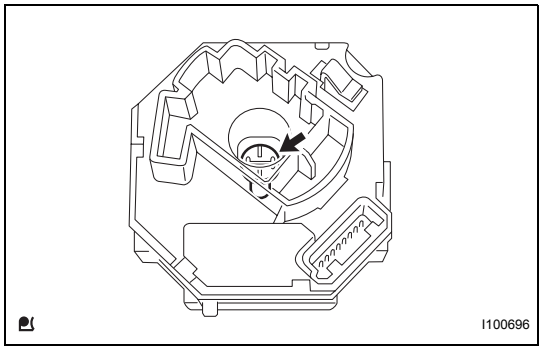

3. INSTALL NO. 3 HEATER CONTROL KNOB

(a) Install the bulb.

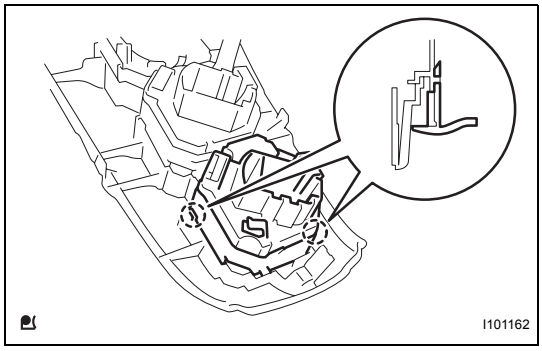

(b) Engage the 2 claws and install the No. 3 heater control knob.

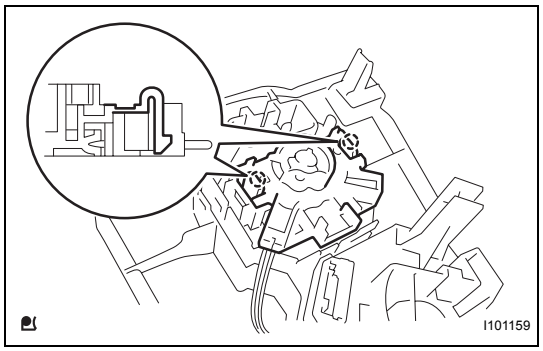

INSTALLATION

1. CONNECT AIR INLET DAMPER CONTROL CABLE SUB-ASSEMBLY

(a) Engage the 2 claws and connect the air inlet damper control cable.

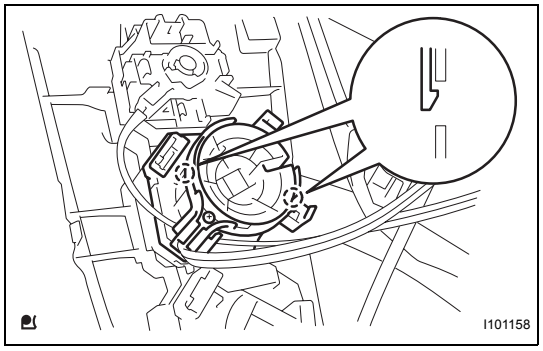

2. CONNECT DEFROSTER DAMPER CONTROL CABLE SUB-ASSEMBLY

(a) Engage the 2 claws and connect the defroster damper control cable.

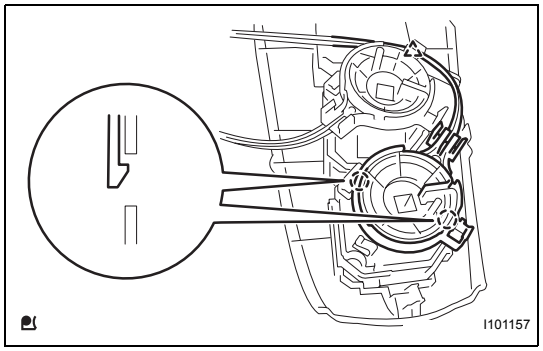

3. CONNECT AIR MIX DAMPER CONTROL CABLE SUB-ASSEMBLY

(a) Engage the 2 claws and connect the air mix control cable clamp.

(b) Connect the defroster damper control cable to the clamp.

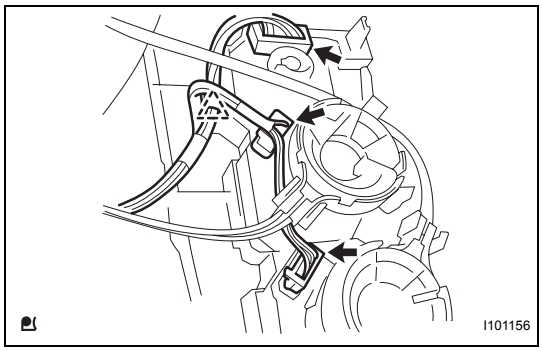

4. INSTALL AIR CONDITIONING PANEL ASSEMBLY

(a) Connect the 3 connectors and the clamp.

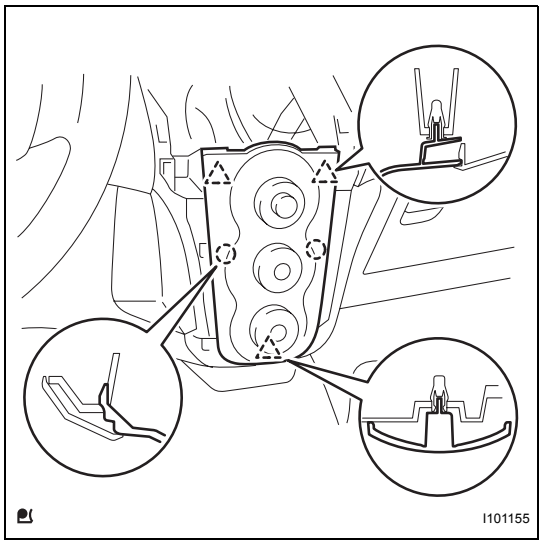

(b) Engage the 3 clips and 2 claws and install the air conditioning panel.

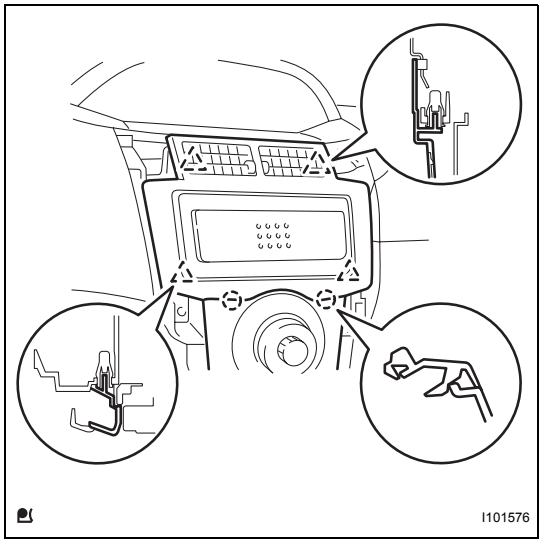

5. **INSTALL INSTRUMENT CLUSTER FINISH PANEL SUB-ASSEMBLY CENTER**
   (a) Engage the 4 clips and 2 claws and install the air conditioning panel.
6. **INSTALL INSTRUMENT CLUSTER FINISH PANEL (See page ME-148)**
7. **INSTALL INSTRUMENT PANEL FINISH PANEL END RH (See page ME-149)**
8. **INSTALL INSTRUMENT PANEL FINISH PANEL END LH (See page ME-149)**
9. **CONNECT CABLE TO NEGATIVE BATTERY TERMINAL**
   Torque: 5.4 N*m (55 kgf*cm, 48 in.*lbf)

AIR CONDITIONING AMPLIFIER

COMPONENTS

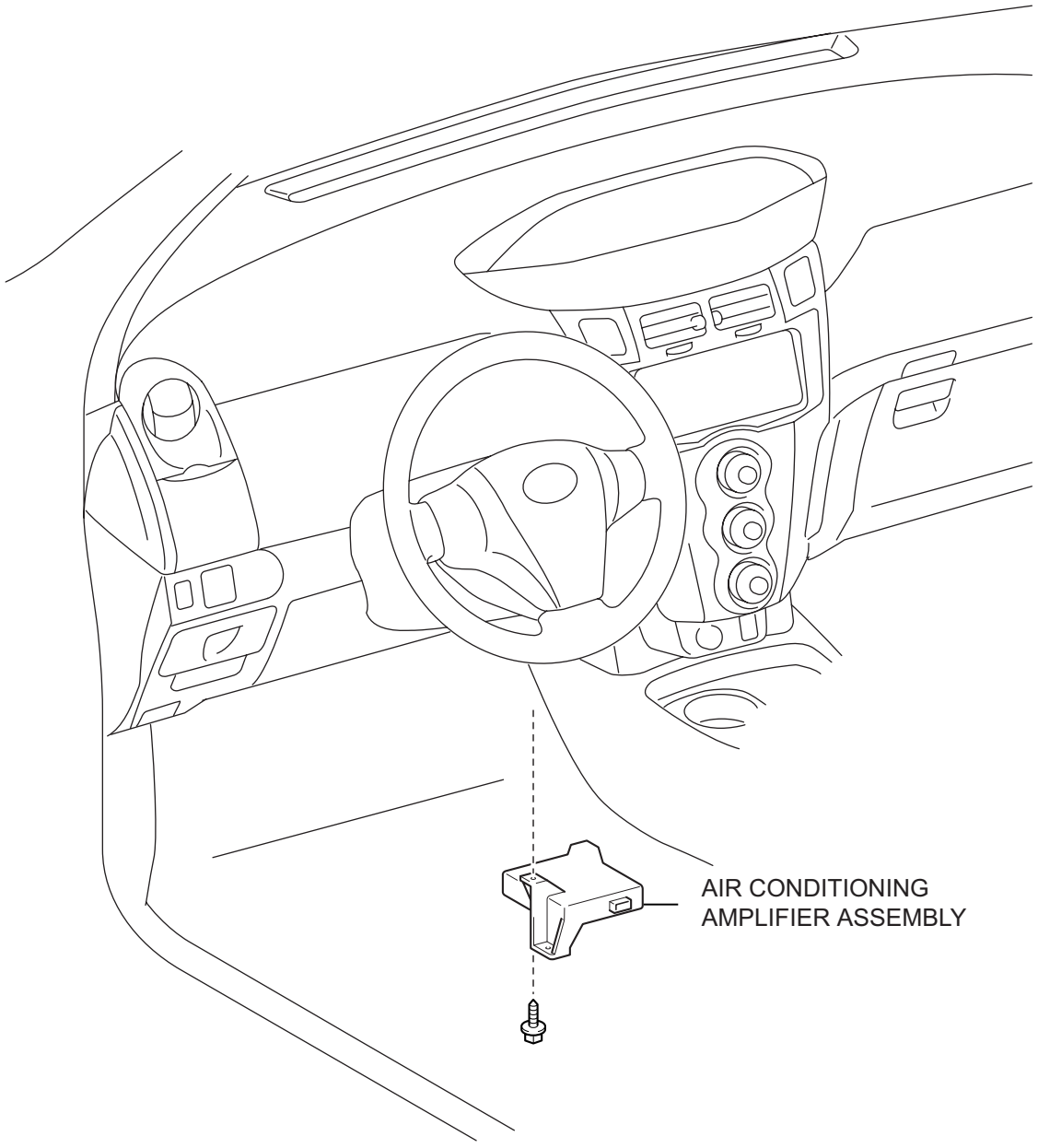

O

I101558E01

REMOVAL

1. **DISCONNECT CABLE FROM NEGATIVE BATTERY TERMINAL**

2. **REMOVE AIR CONDITIONING AMPLIFIER ASSEMBLY**
   (a) Remove the screw.
   (b) Disconnect the connector and remove the air conditioning amplifier.

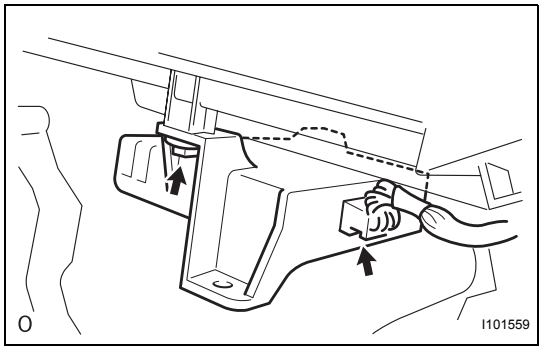

INSTALLATION

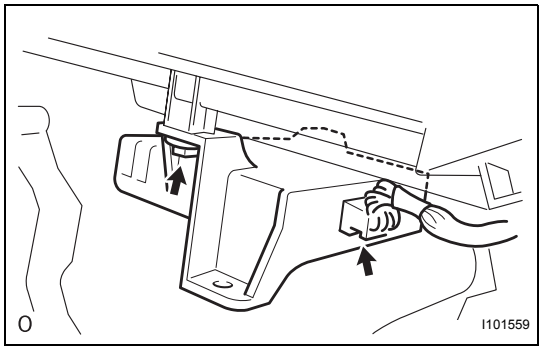

1. **INSTALL AIR CONDITIONING AMPLIFIER ASSEMBLY**
   (a) Connect the connector.
   (b) Install the air conditioning amplifier with the screw.

2. **CONNECT CABLE TO NEGATIVE BATTERY TERMINAL**
   Torque: 5.4 N*m (55 kgf*cm, 48 in.*lbf)

AIRBAG SYSTEM

PRECAUTION

CAUTION:

- **The vehicle is equipped with a Supplemental Restraint System (SRS), which consists of a driver airbag, front passenger airbag, side airbags, curtain shield airbags and front seat belt pretensioners. Failure to carry out service operations in the correct sequence could cause the SRS to unexpectedly deploy during servicing, possibly leading to a serious accident. Furthermore, if a mistake is made in servicing the SRS, it is possible that the SRS may fail to operate when required. Before performing servicing (including removal or installation of parts, inspection or replacement), be sure to read the following items carefully, then follow the correct procedures as indicated in the repair manual.**
- **Wait at least 90 seconds after the ignition switch is turned off and the negative (-) terminal cable is disconnected from the battery before starting the operation.**
  (The SRS is equipped with a back-up power source, so if work is started within 90 seconds of disconnecting the negative (-) terminal cable of the battery, the SRS may be deployed).
- **Do not directly expose the steering pad, front passenger airbag assembly, center airbag sensor assembly, front airbag sensor, front seat inner belt assembly, seat position sensor, occupant classification ECU, front seat side airbag assembly, side airbag sensor, curtain shield airbag assembly, rear airbag sensor or front seat outer belt assembly to hot air or flames.**

NOTICE:

- **Malfunction symptoms of the SRS are difficult to confirm, so DTCs are the most important source of information when troubleshooting. When troubleshooting the SRS, always inspect DTCs before disconnecting the battery.**
- **Even in the case of a minor collision when the SRS does not deploy, the following parts should be inspected.**
  - **Steering pad**
  - **Front passenger airbag assembly**
  - **Center airbag sensor assembly**
  - **Front airbag sensor**
  - **Front seat inner belt assembly**
  - **Seat position sensor**
  - **Occupant classification ECU**
  - **Front seat side airbag assembly**
  - **Side airbag sensor**
  - **Curtain shield airbag assembly**
  - **Rear airbag sensor**

- **Front seat outer belt assembly**

- **Before commencing repair work, remove the airbag sensor if any kind of shock is likely to occur to the airbag sensor during the operation.**
- **Never use SRS parts from another vehicle. When replacing parts, replace them with new ones.**
- **Never disassemble or repair any of the following parts in order to reuse them. If any of these parts have been dropped, or a defect is found (e.g. cracks, dents or any other defects) in any of the housings, brackets or connectors, then replace the part with a new one.**
  - **Steering pad**
  - **Front passenger airbag assembly**
  - **Center airbag sensor assembly**
  - **Front airbag sensor**
  - **Front seat inner belt assembly**
  - **Seat position sensor**
  - **Occupant classification ECU**
  - **Front seat side airbag assembly**
  - **Side airbag sensor**
  - **Curtain shield airbag assembly**
  - **Rear airbag sensor**
  - **Front seat outer belt assembly**
- **Use a volt/ohmmeter with high impedance (10 kΩ/V minimum) for troubleshooting the electrical circuits.**
- **Information labels are attached to the periphery of the SRS components. Follow the instructions in the cautions.**
- **After work on the SRS is completed, perform the SRS warning light check (See page RS-31).**
- **When the negative (-) terminal cable is disconnected from the battery, the memory will be cleared. Therefore make a record of the contents stored in each system before starting work. When the work is finished, reset each system as it was before. Never use a back-up power supply from outside the vehicle to avoid erasing the memory in any system.**
- **If the vehicle is equipped with a mobile communication system, refer to the precautions in the INTRODUCTION section.**

HINT:

In the airbag system, the center airbag sensor assembly, front airbag sensor LH and RH, side airbag sensor LH and RH, rear airbag sensor LH and RH are collectively referred to as the airbag sensors.

1. HANDLING PRECAUTIONS FOR AIRBAG SENSORS

(a) Before starting the following operations, wait for at least 90 seconds after disconnecting the negative (-) terminal cable from the battery:

(1) Replacement of the airbag sensors

(2) Adjustment of the front/rear doors of the vehicle equipped with the side airbags and curtain shield airbags (fitting adjustment)

(b) When connecting or disconnecting the airbag sensor connectors, ensure that each sensor is installed in the vehicle.
(c) Do not use the airbag sensors which have been dropped during the operation or transportation.
(d) Do not disassemble the airbag sensors.

2. INSPECTION PROCEDURE FOR VEHICLE INVOLVED IN ACCIDENT

(a) When the airbag has not deployed, confirm the DTCs by checking the SRS warning light. If there is any malfunction in the SRS airbag system, perform troubleshooting.
(b) When any of the airbags have deployed, replace the airbag sensors and check the installation condition.

3. SRS CONNECTORS

(a) SRS connectors are located as shown in the following illustration.

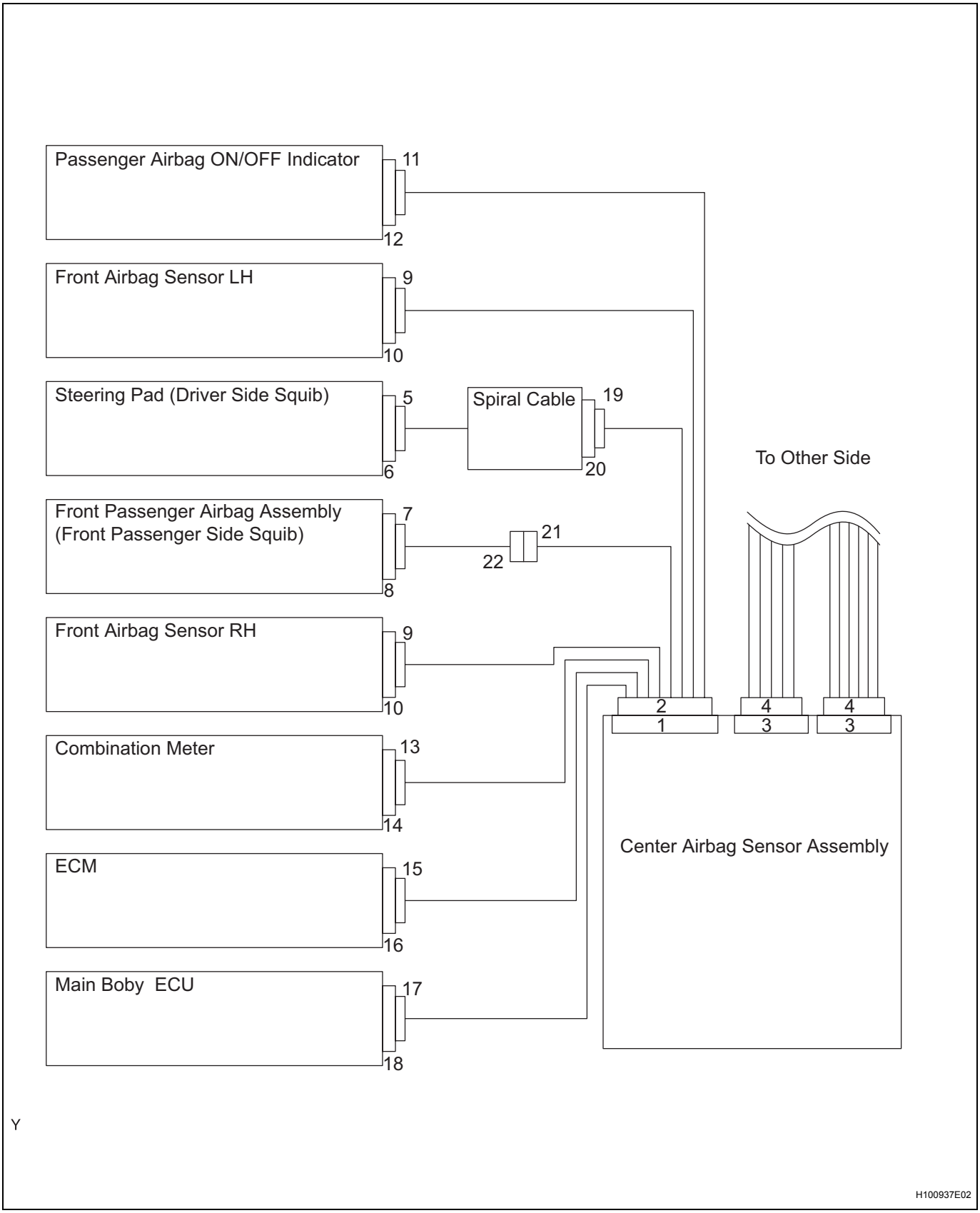

RS

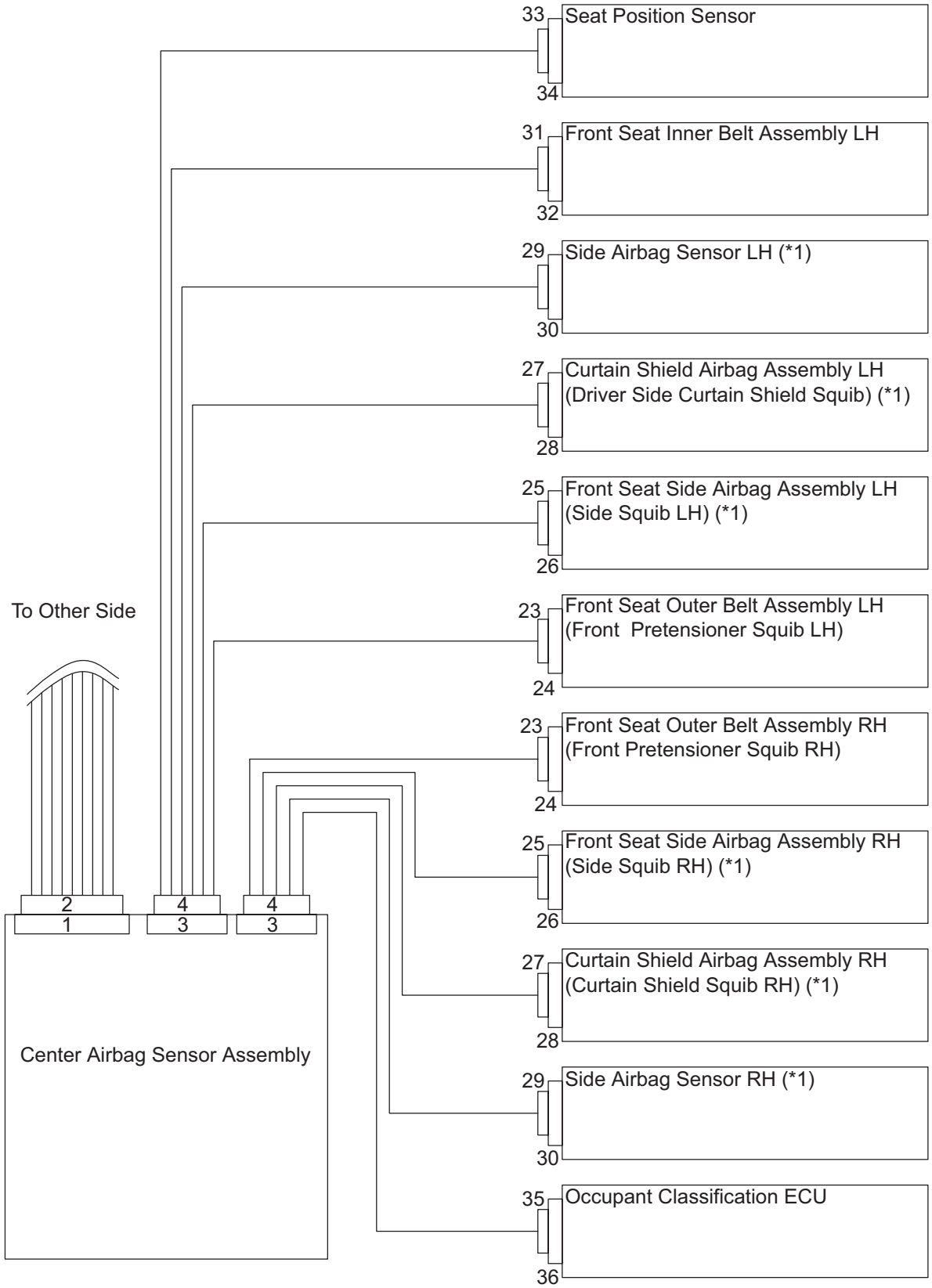

*1: w/ Side Airbag Assembly and Curtain Shield Airbag Assembly

Y

H100938E02

No.	Item	Application
(1)	Terminal Twin-Lock Mechanism	Connectors 2, 4, 9, 11, 13, 15, 19, 21, 22, 25, 29, 31, 33
(2)	Activation Prevention Mechanism	Connectors 2, 4, 6, 8, 20, 22, 24, 26, 28
(3)	Half Connection Prevention Mechanism	Connectors 9, 19, 21, 26, 29
(4)	Connector Position Assurance Mechanism	Connector 9
(5)	Connector Lock Mechanism (1)	Connectors 5, 7, 23, 27
(6)	Connector Lock Mechanism (2)	Connectors 2, 4
(7)	Improper Connection Prevention Lock Mechanism	Connectors 1, 3

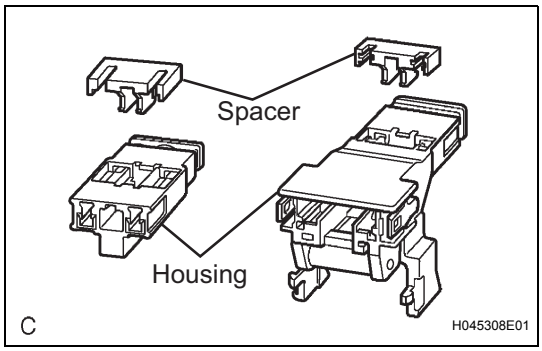

(b) All connectors in the SRS except the seat position sensor connector and the occupant classification ECU connector are colored yellow to distinguish them from other connectors. Some connectors have special functions, and are specially designed for the SRS. These connectors use durable gold-plated terminals, and are placed in the locations shown on the previous page to ensure high reliability.

(1) Terminal twin-lock mechanism:
Each connector is a two-piece component consisting of a housing and a spacer. This design enables the terminal to be locked securely by two locking devices (the retainer and the lance) to prevent the terminals from becoming disconnected.

(2) Activation prevention mechanism:
Each connector contains a short spring plate. When the connector is disconnected, the short spring plate creates a short circuit by automatically connecting the positive (+) and negative (-) terminals of the squib.

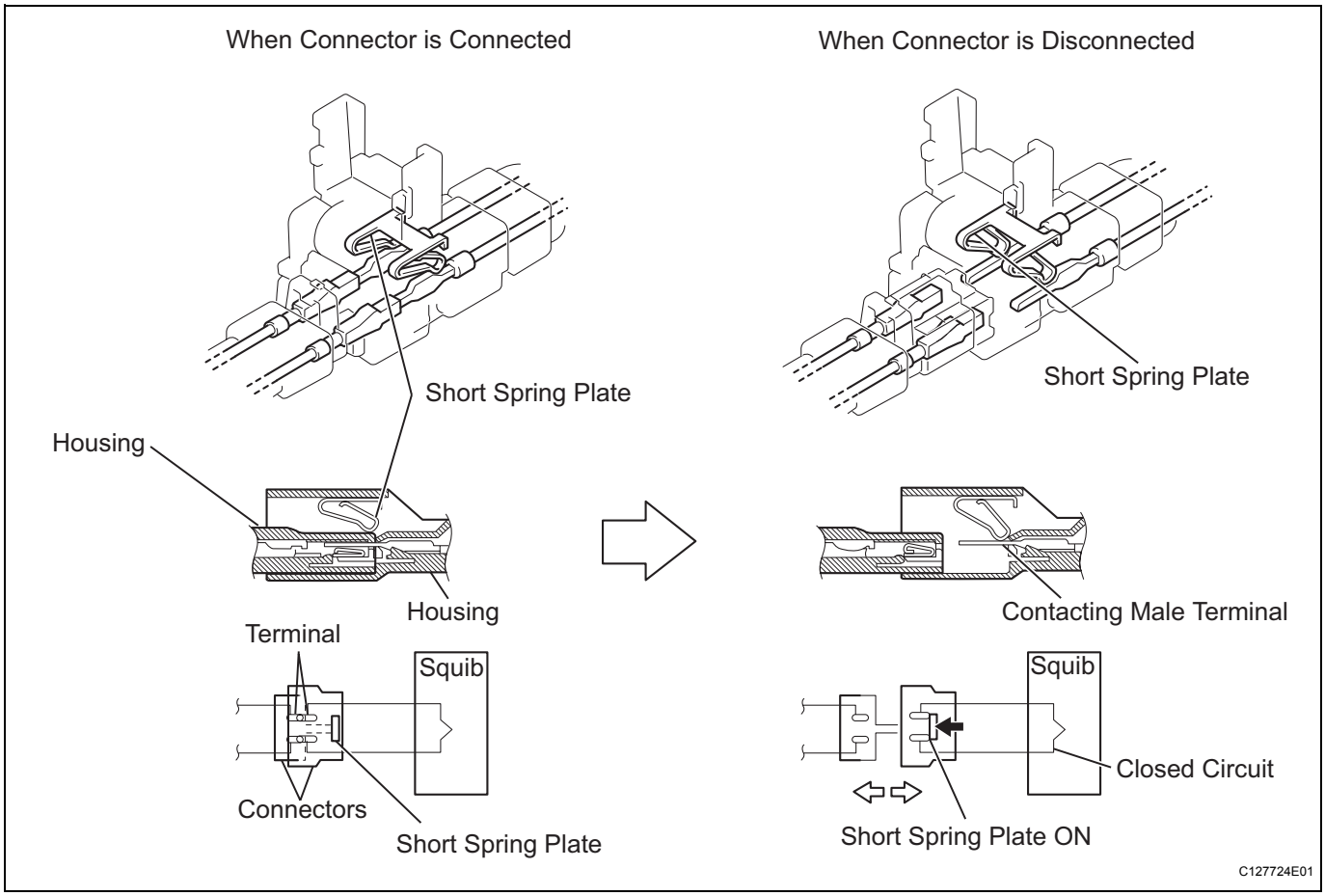

(3) Half connection prevention mechanism:
If the connector is not completely connected, the connector is disconnected by the spring operation so that no continuity exists.

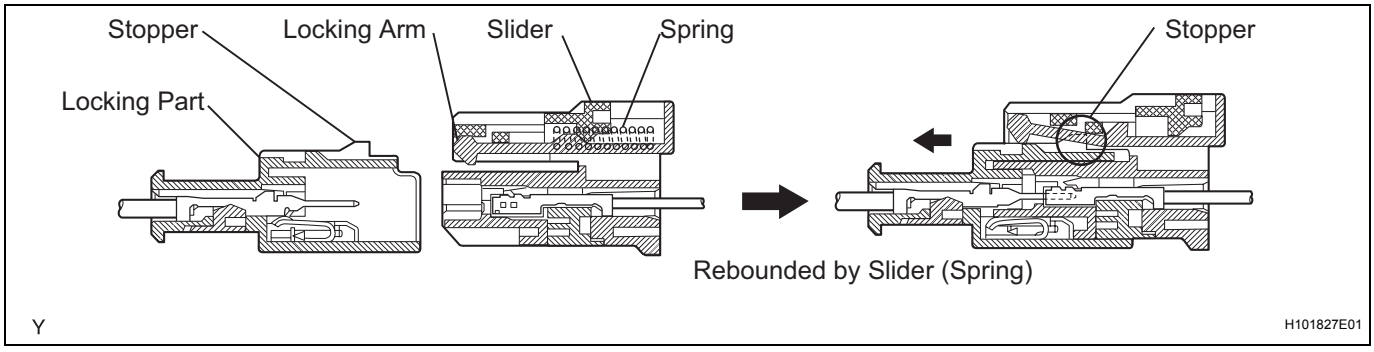

(4) Connector position assurance mechanism:
The CPA (yellow part) slides, which completes the connector engagement, only when the housing lock (white part) is completely engaged.

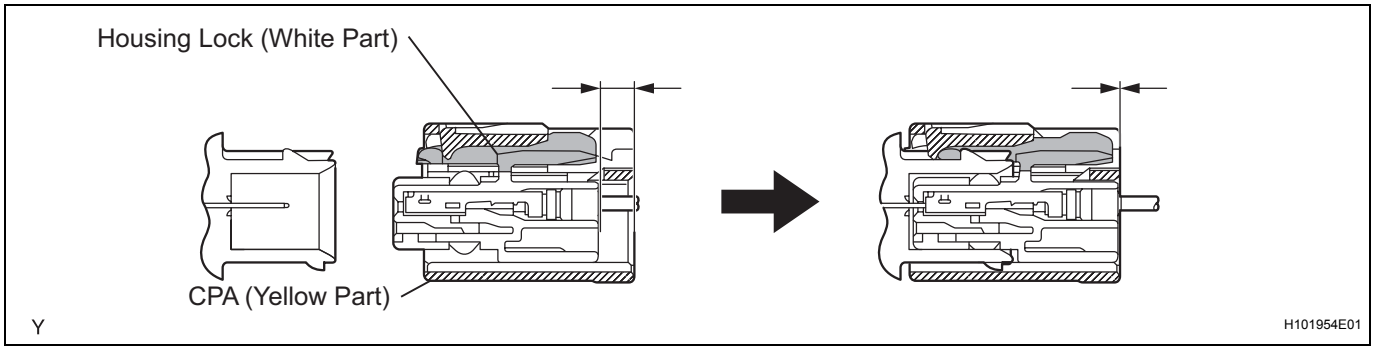

(5) Connector lock mechanism (1):
Locking the connector lock button connects the connector.

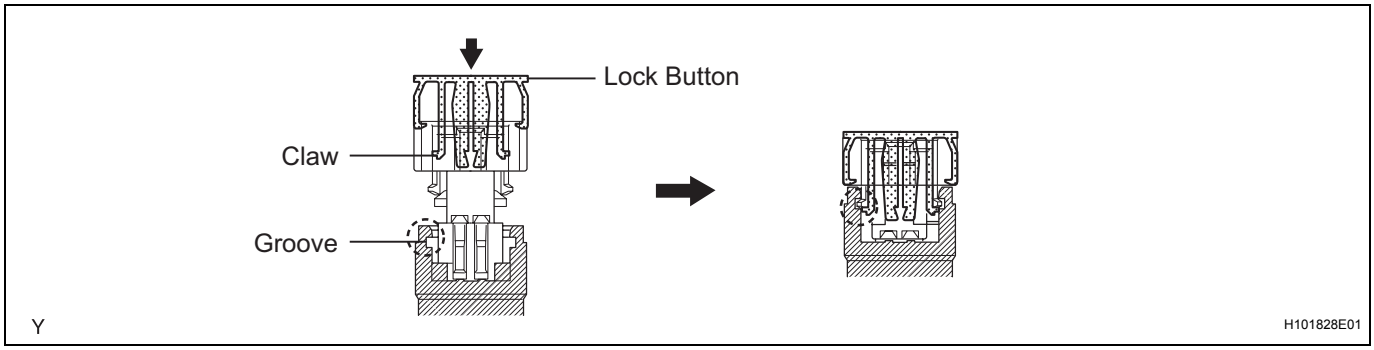

(6) Connector lock mechanism (2):
Both the primary lock with holder lances and the secondary lock with a retainer prevent the connectors from becoming disconnected.

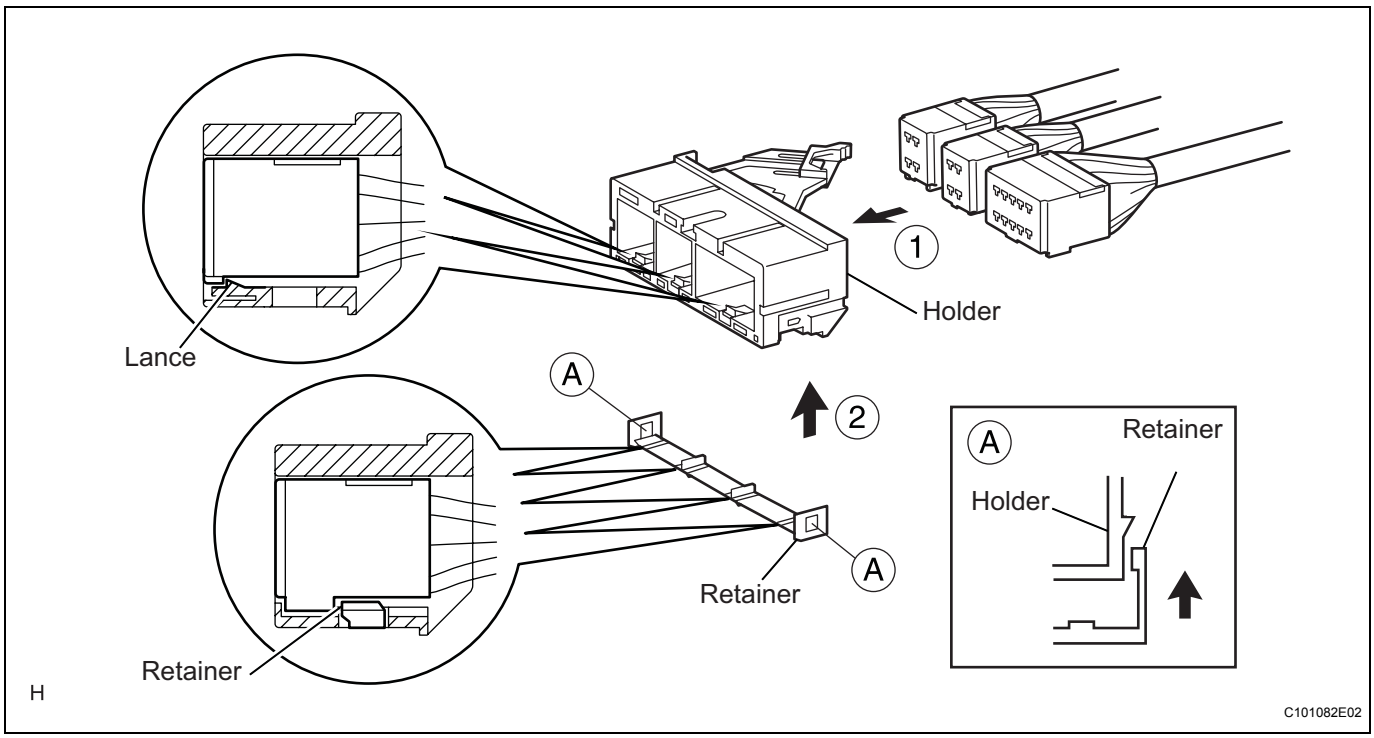

(7) Improper connection prevention lock mechanism:
When connecting the holder, the lever is pushed into the end by rotating around the A axis to lock the holder securely.

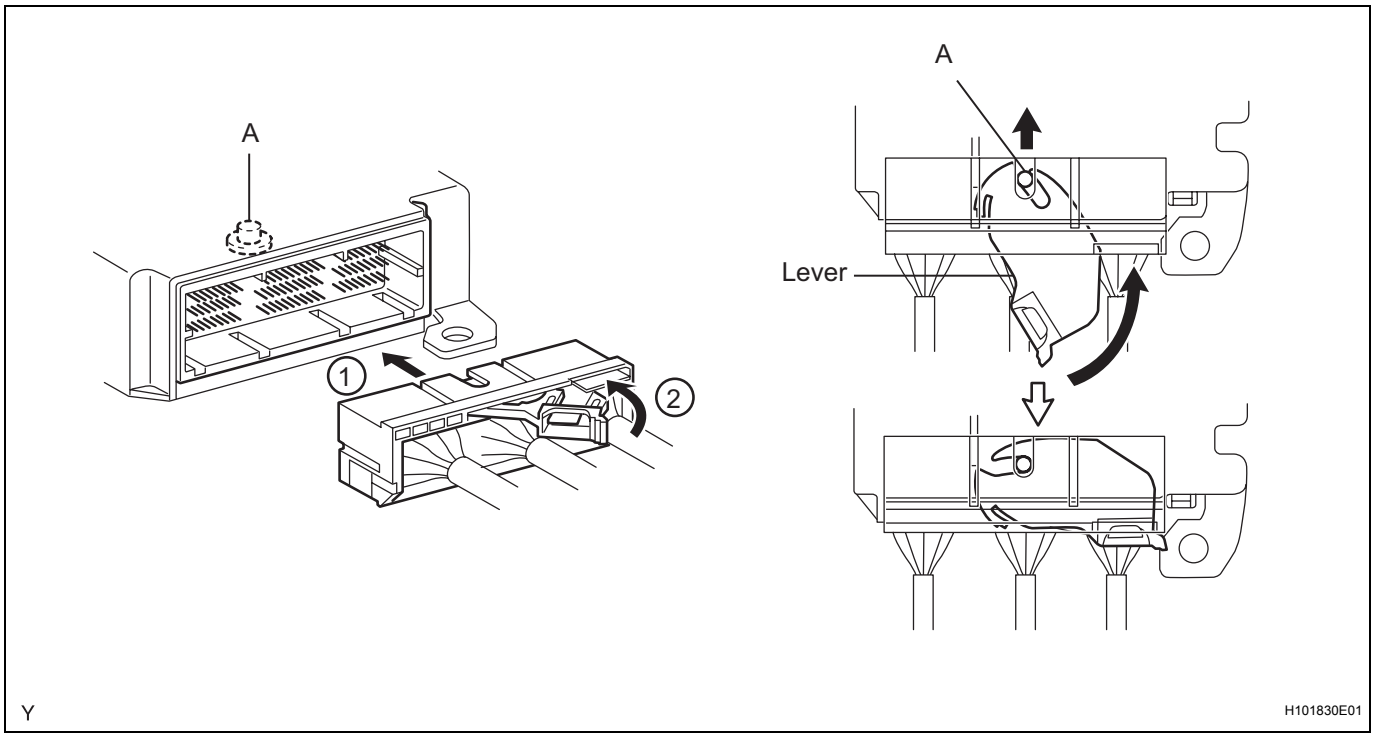

4. DISCONNECTION OF CONNECTORS FOR STEERING PAD, FRONT PASSENGER AIRBAG ASSEMBLY (SQUIB SIDE), CURTAIN SHIELD AIRBAG ASSEMBLY AND FRONT SEAT OUTER BELT ASSEMBLY

HINT:
Tape up the screwdriver tip before use.

(a) Release the lock button (yellow part) of the connector using a screwdriver.

(b) Insert the screwdriver tip between the connector and the base, and then raise the connector.

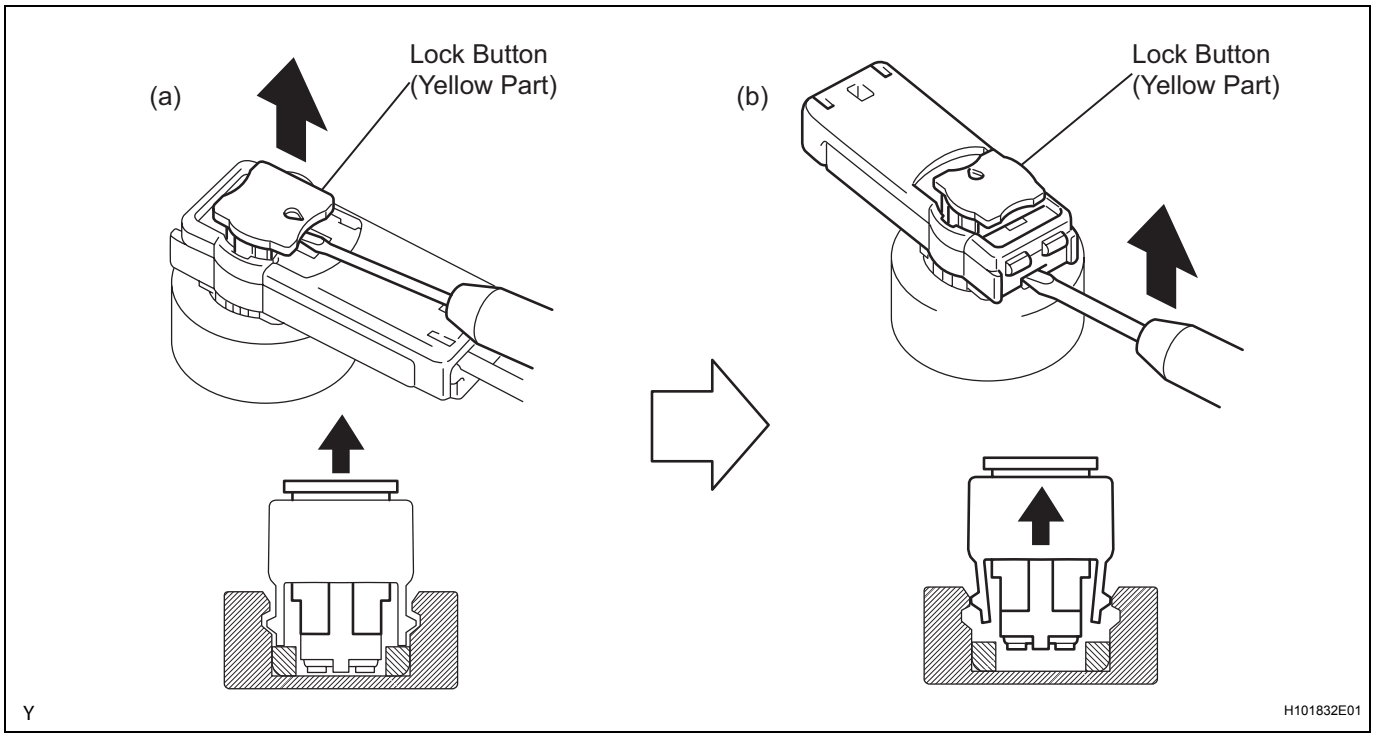

5. CONNECTION OF CONNECTORS FOR STEERING PAD, FRONT PASSENGER AIRBAG ASSEMBLY (SQUIB SIDE), CURTAIN SHIELD AIRBAG ASSEMBLY AND FRONT SEAT OUTER BELT ASSEMBLY

(a) Connect the connector.

(b) Push the lock button (yellow part) of the connector down securely. (When locking, a click sound can be heard.)

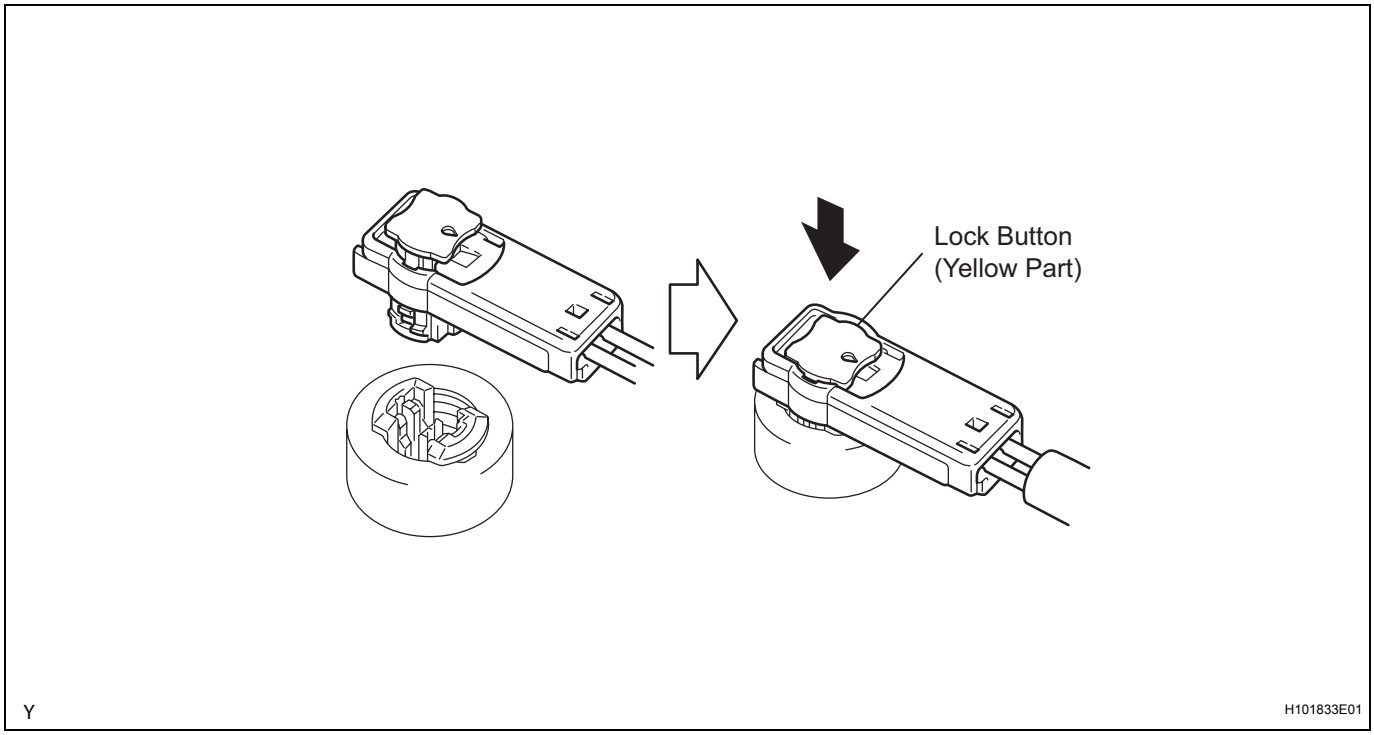

6. DISCONNECTION OF CONNECTORS FOR FRONT PASSENGER AIRBAG ASSEMBLY (INSTRUMENT PANEL WIRE SIDE)

(a) Place a finger on the slider, slide the slider to release the lock, and then disconnect the connector.

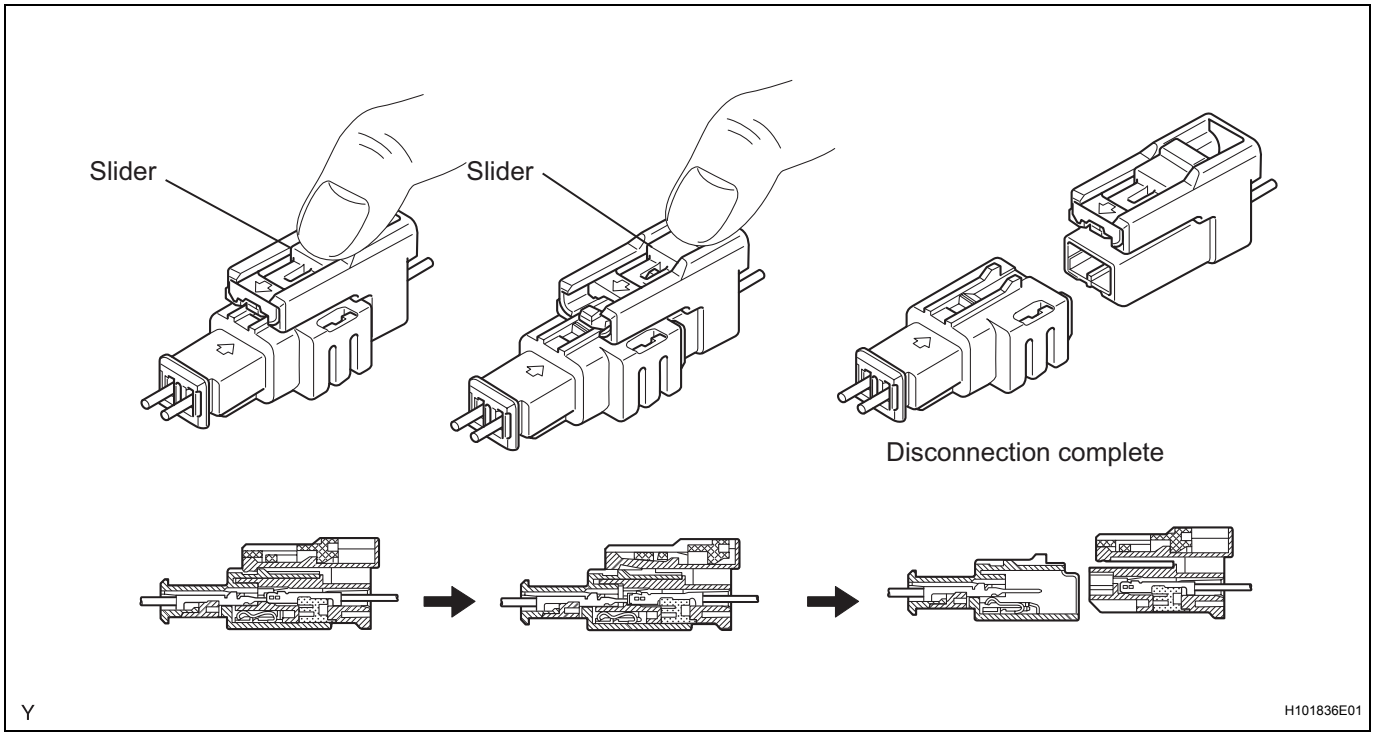

7. CONNECTION OF CONNECTORS FOR FRONT PASSENGER AIRBAG ASSEMBLY (INSTRUMENT PANEL WIRE SIDE)

(a) Connect the connector as shown in the illustration. (When locking, make sure that the slider returns to its original position and a click sound can be heard.)
HINT:
When connecting, the slider sides. Do not touch the slider while connecting, as this may result in an insecure fit.

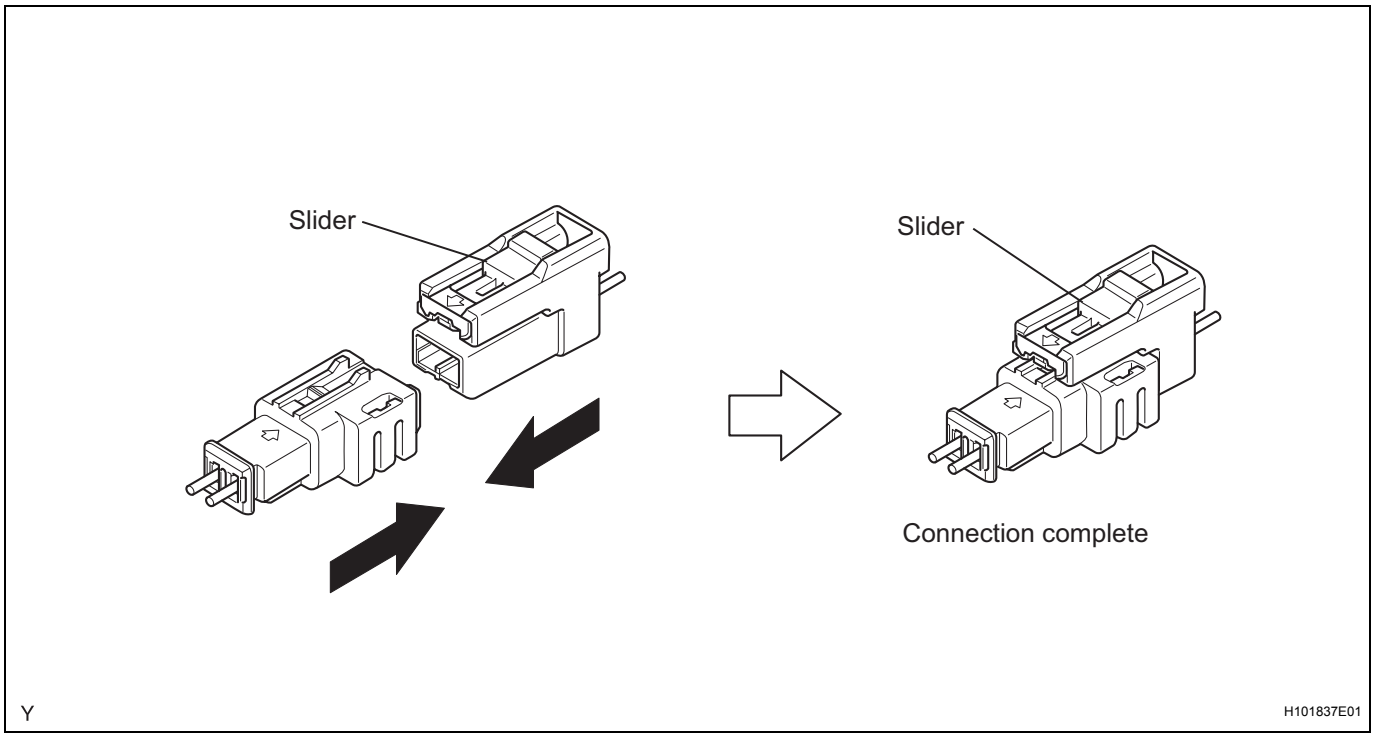

8. DISCONNECTION OF CONNECTORS FOR FRONT SEAT SIDE AIRBAG ASSEMBLY AND REAR SEAT AIRBAG ASSEMBLY

(a) Place a finger on the slider, slide the slider to release the lock, and then disconnect the connector.

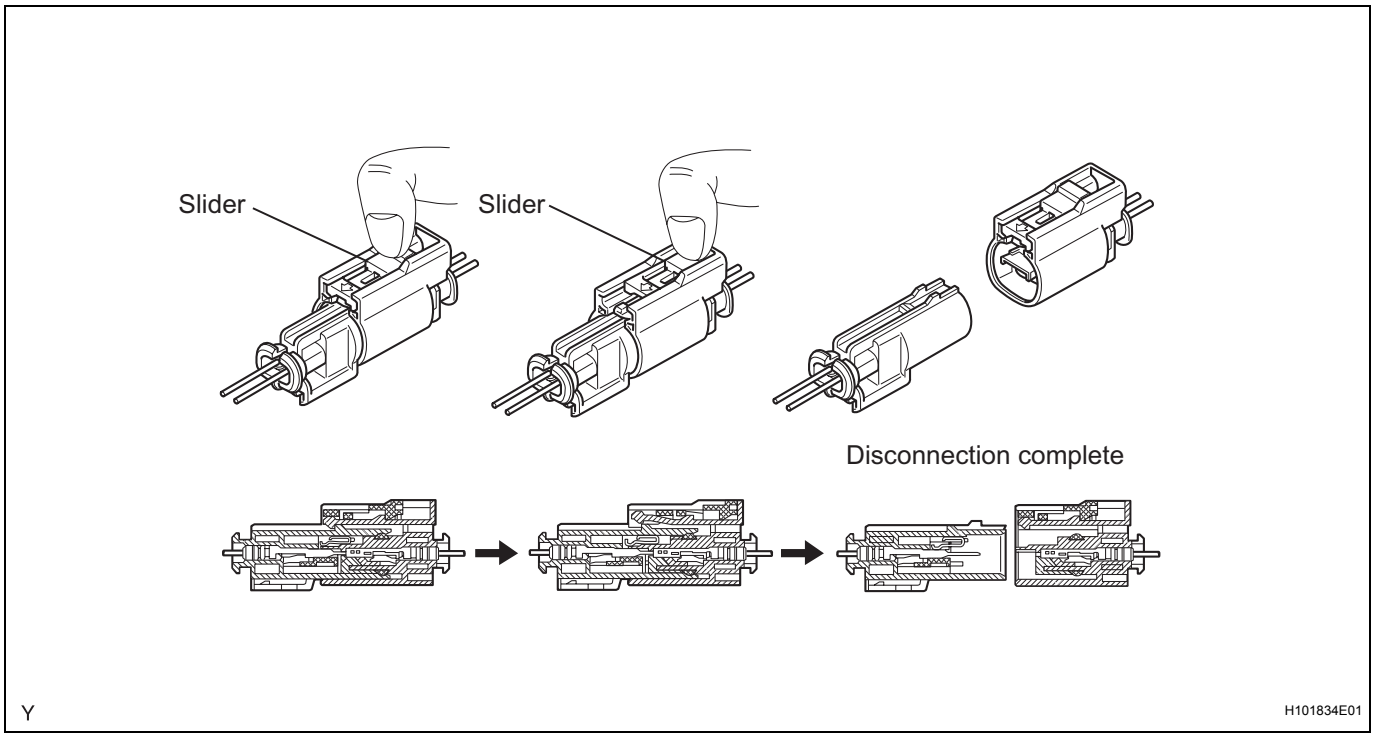

9. CONNECTION OF CONNECTORS FOR FRONT SEAT SIDE AIRBAG ASSEMBLY AND REAR SEAT AIRBAG ASSEMBLY

(a) Connect the connector as shown in the illustration. (When locking, make sure that the slider returns to its original position and a click sound can be heard.)
HINT:
When connecting, the slider slides. Do not touch the slider while connecting, as this may result in an insecure fit.

RS

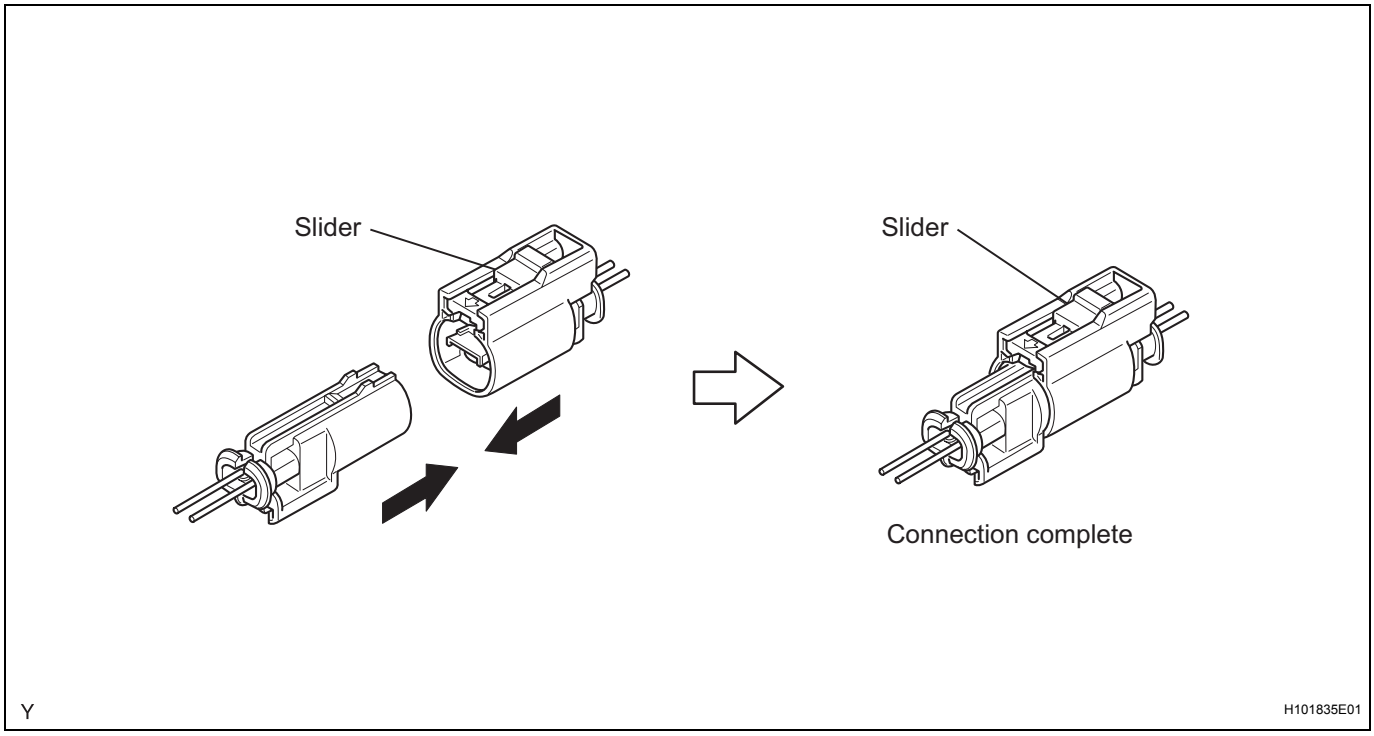

10. DISCONNECTION OF CONNECTORS FOR CENTER AIRBAG SENSOR ASSEMBLY

(a) Pull the lever by pushing part A as shown in the illustration and disconnect the holder (with connectors).

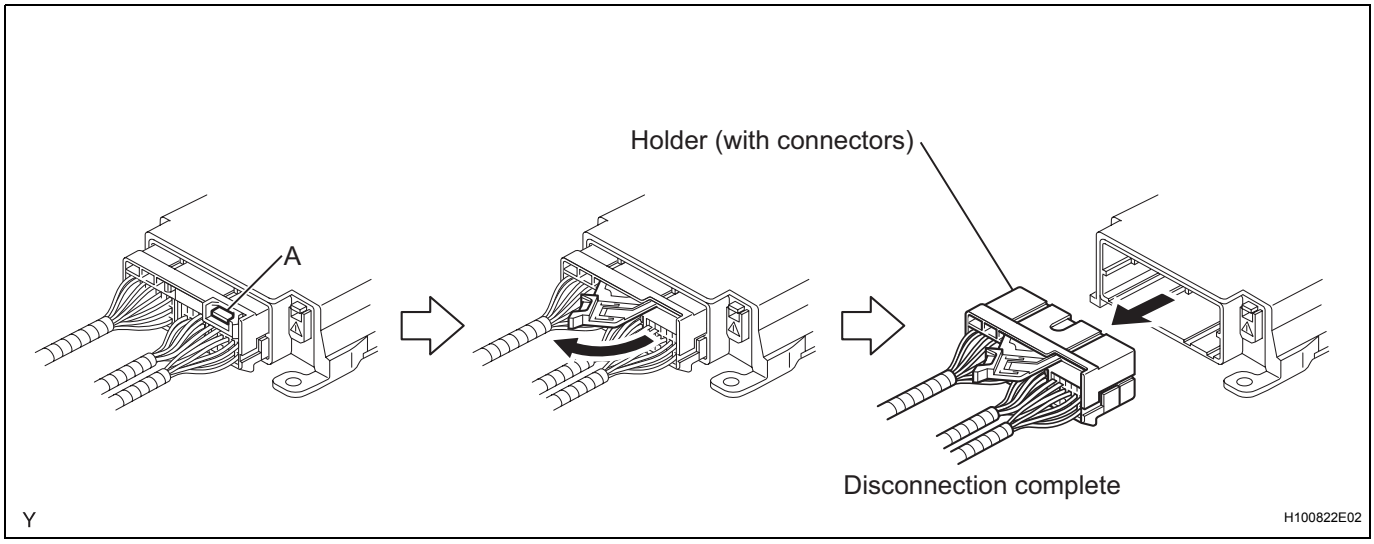

HINT:
Perform the following procedures when replacing the holder.

(b) Remove the holder.
(1) Using a screwdriver, unlock the retainer.

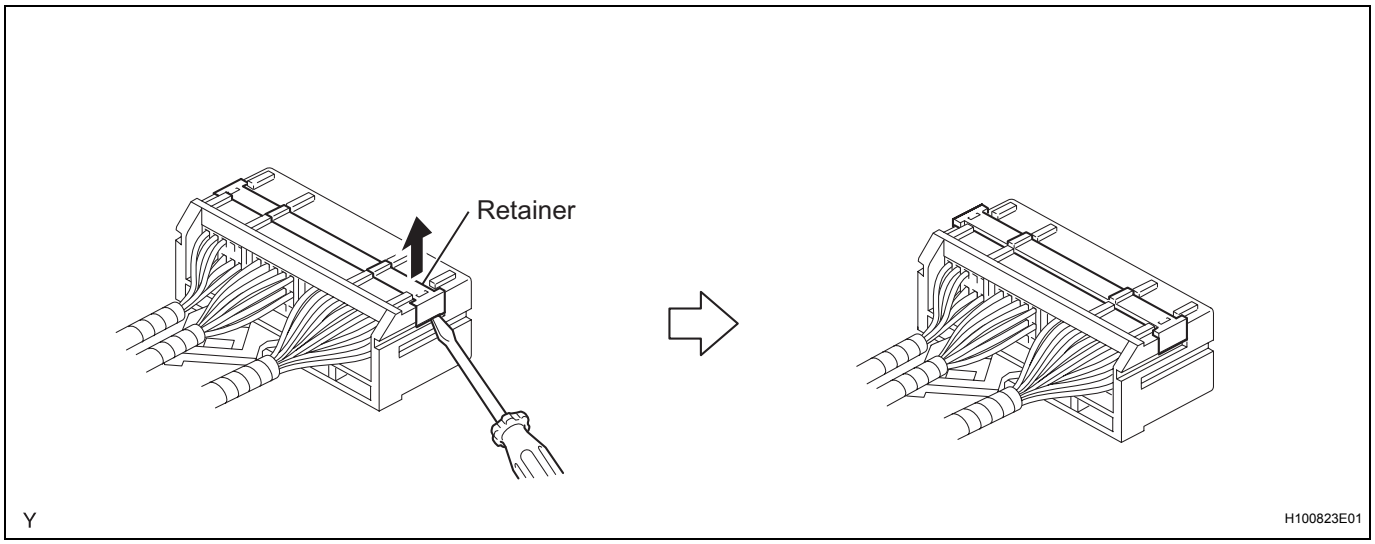

(2) Release the fitting lances and remove the holder.

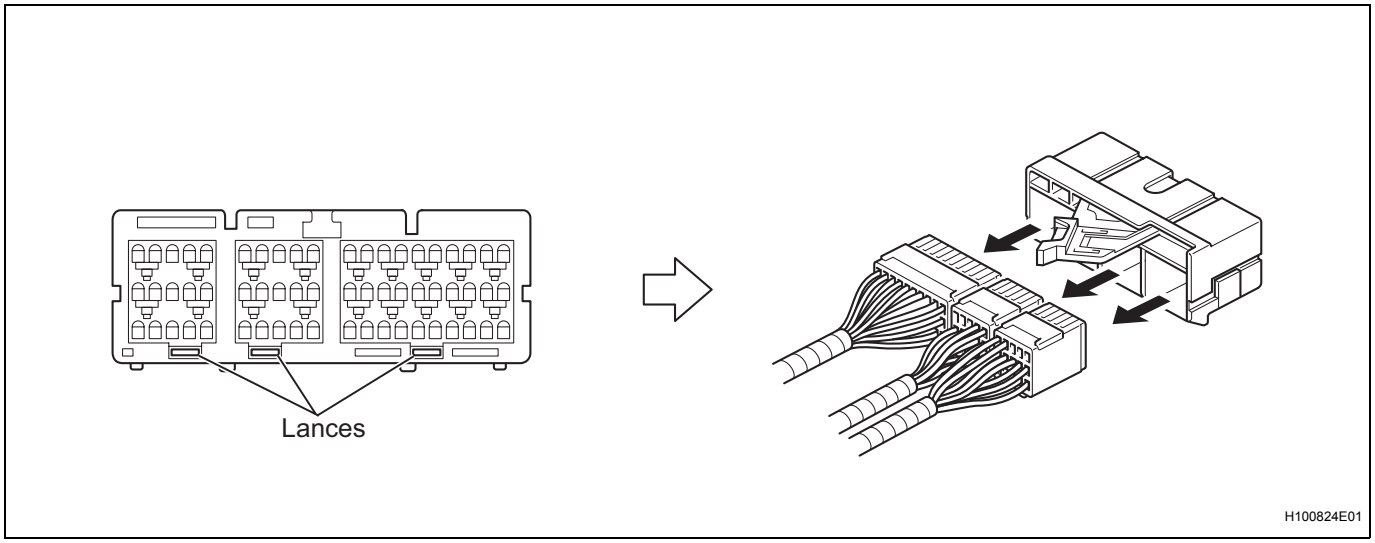

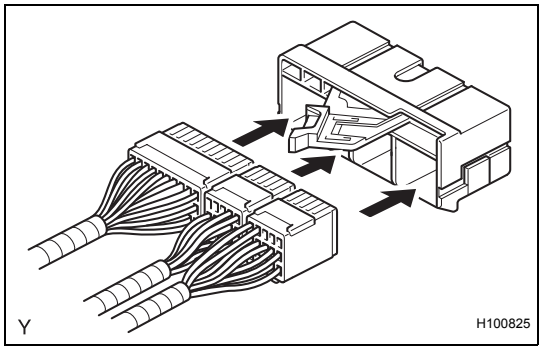

(c) Install the holder.
(1) Install the connectors into the holder. (When locking, a click sound can be heard.)
HINT:
The retainer is locked when the holder is connected.

11. CONNECTION OF CONNECTORS FOR CENTER AIRBAG SENSOR ASSEMBLY

(a) Firmly insert the holder (with connectors) into the center airbag sensor assembly until it cannot be pushed any further.

(b) Push the lever to connect the holder (with connectors). (When locking, a click sound can be heard.)
HINT:
The holder slides into the center airbag sensor assembly when it is being connected. Do not hold the holder while connecting, as it may result in an insecure fit.

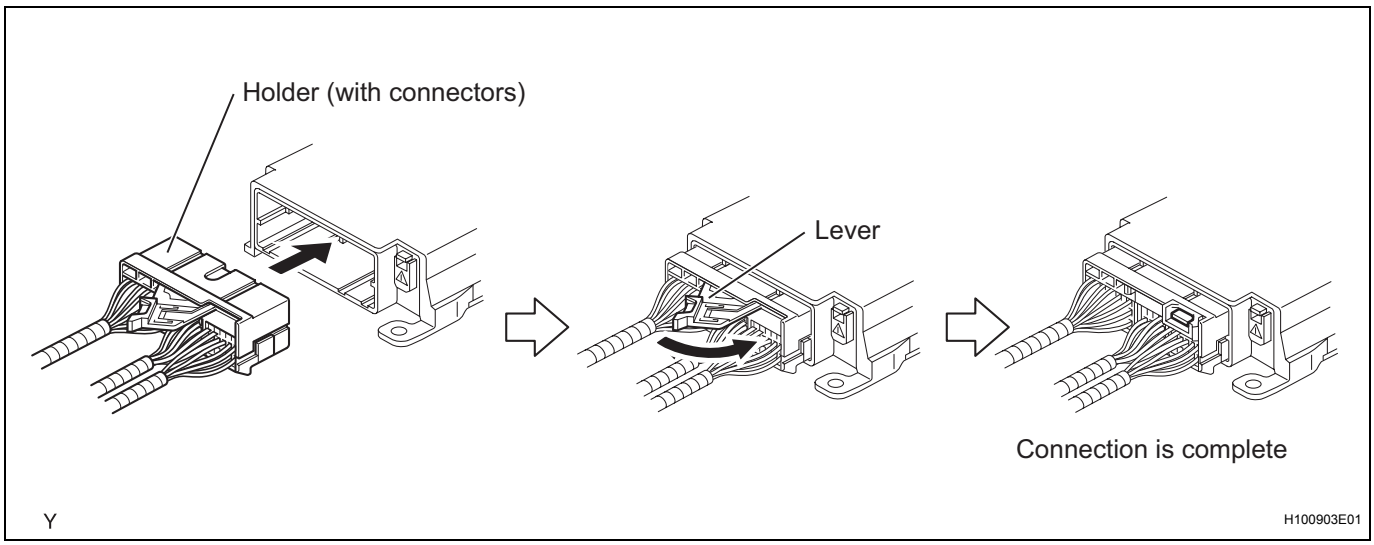

12. DISCONNECTION OF CONNECTORS FOR FRONT AIRBAG SENSOR

(a) Push down the housing lock (white part) and slide the CPA (yellow part). (At this time, the connector cannot be disconnected yet.)

(b) Push down the housing lock (white part) again and disconnect the connector.
HINT:
Do not push down part A shown in the illustration when disconnecting.

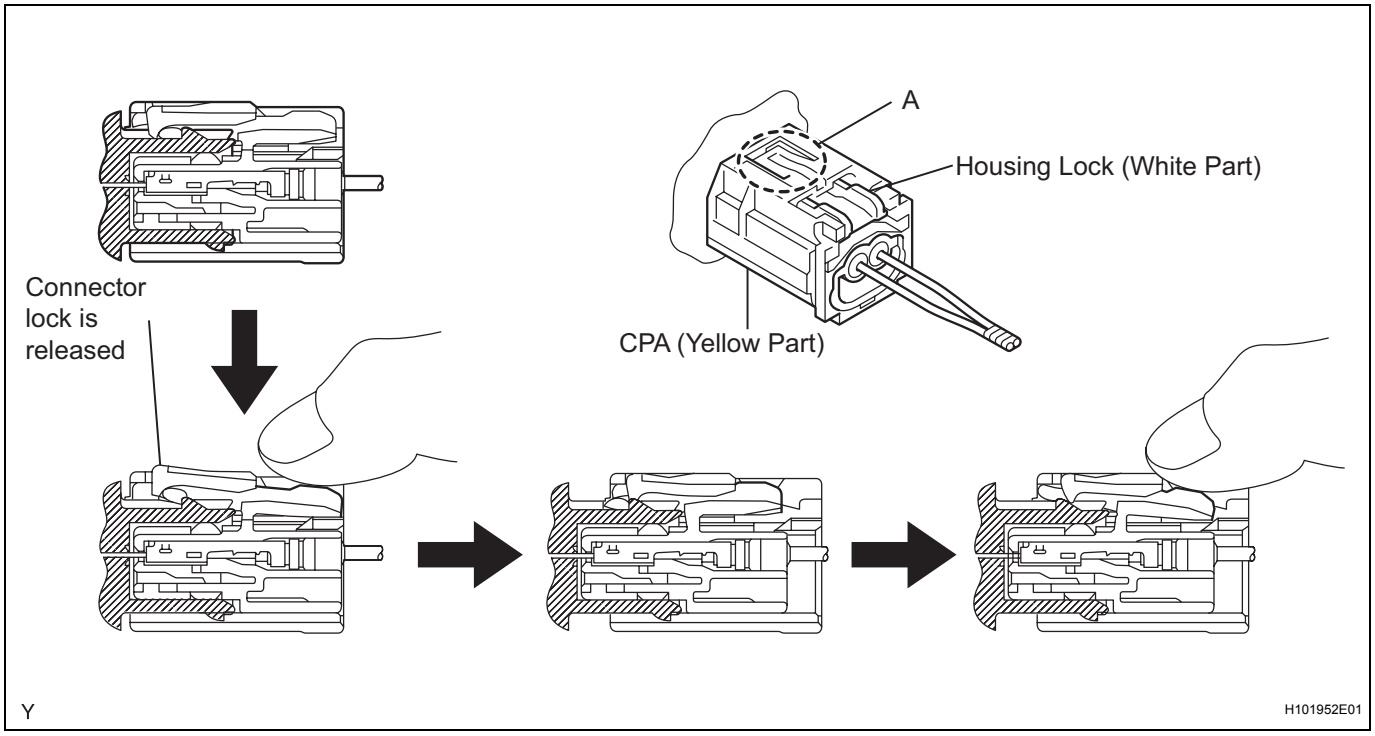

(c) After disconnecting the connector, check that the position of the housing lock (white part) is as shown in the illustration.

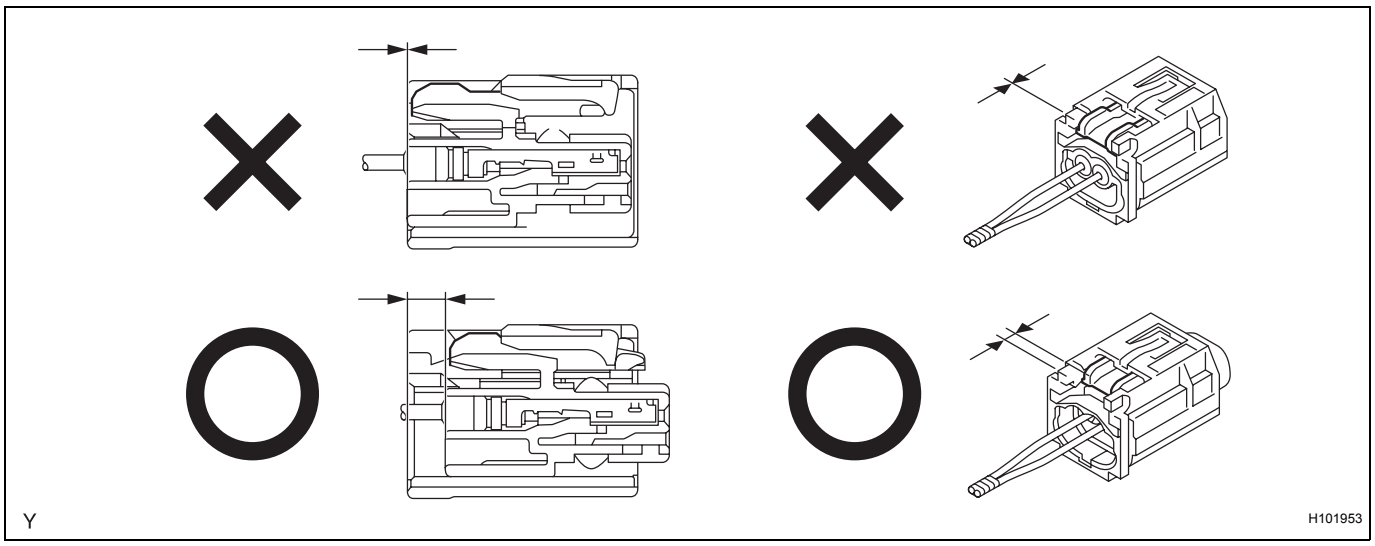

13. CONNECTION OF CONNECTORS FOR FRONT AIRBAG SENSOR

(a) Before connecting the connectors, check that the position of the housing lock (white part) is as shown in the illustration.

RS

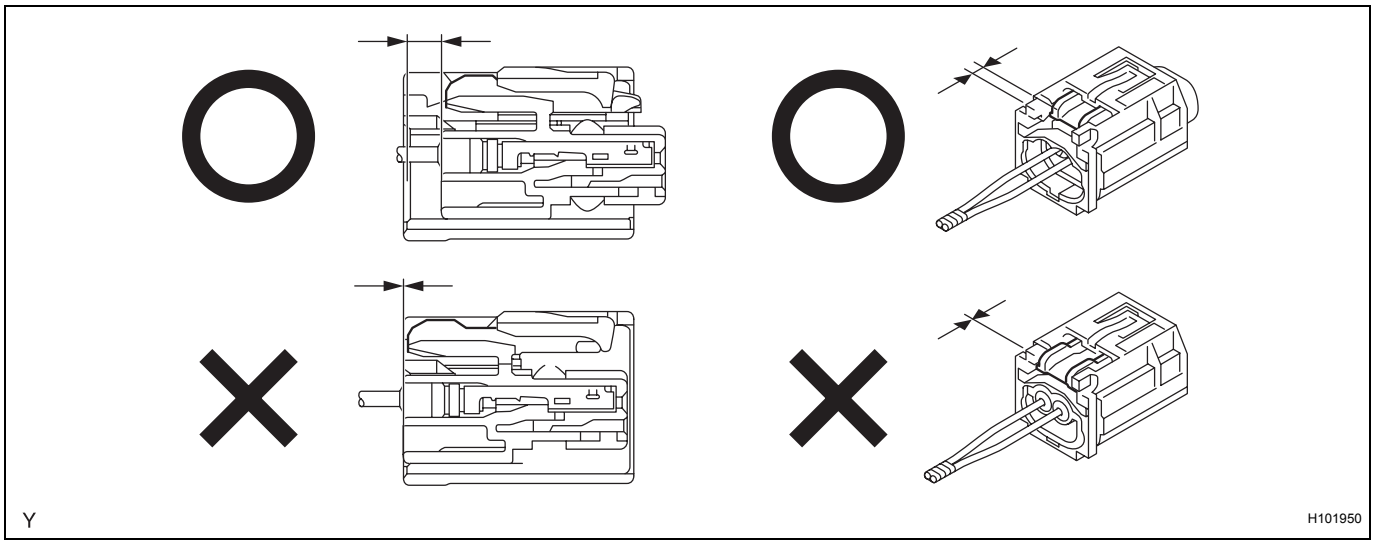

(b) Be sure to engage the connectors until they are locked. (When locking, make sure that a click sound can be heard.)
HINT:
When connecting them, the housing lock (white part) slides. Do not hold the housing lock (white part) and part A, as it may result in an insecure fit.

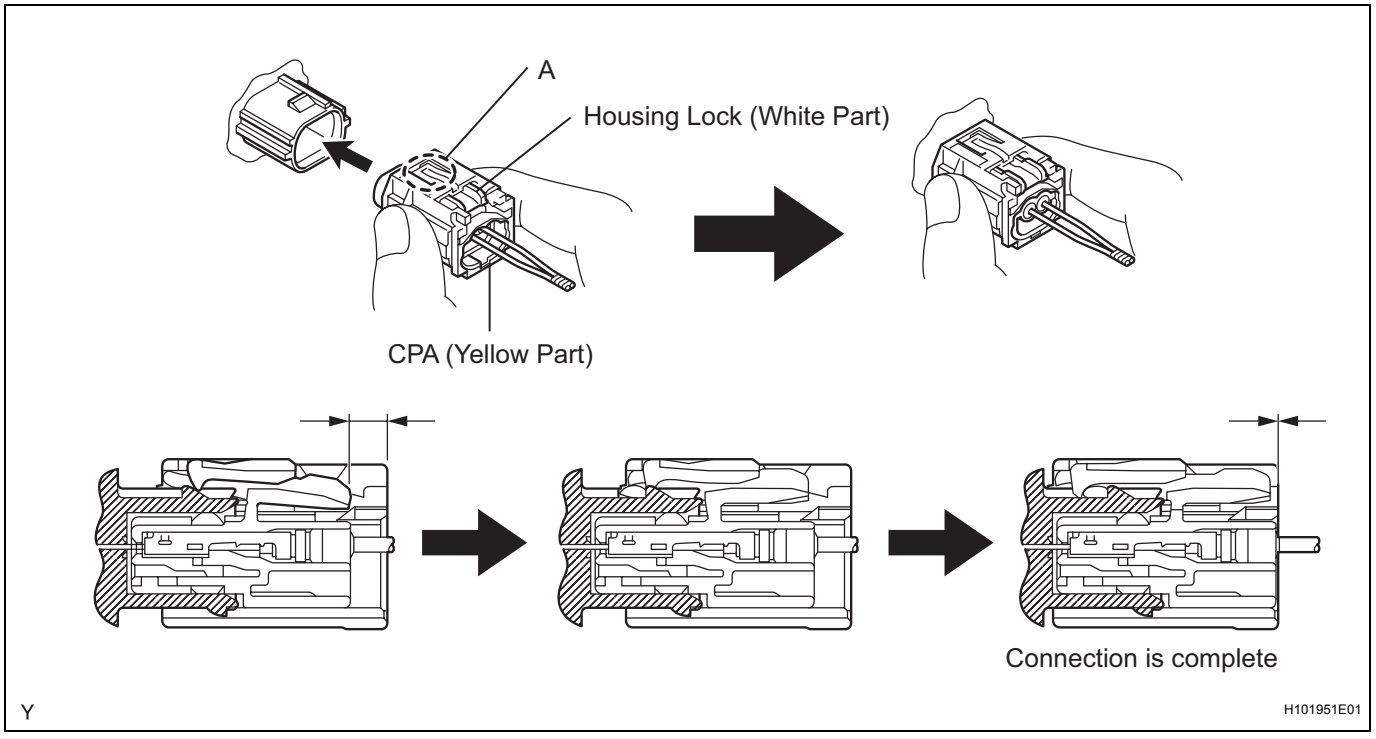

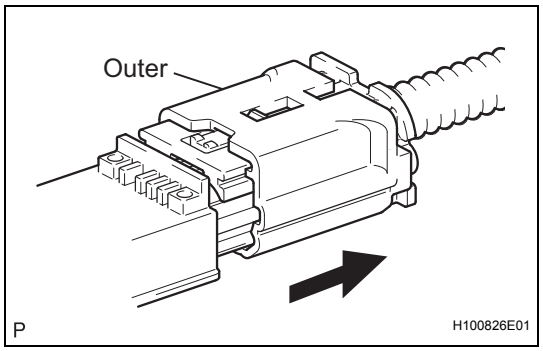

14. DISCONNECTION OF CONNECTORS FOR SIDE AIRBAG SENSOR AND REAR AIRBAG SENSOR

(a) While holding both sides of the outer connector locking sleeve, slide the outer in the direction shown by the arrow.

(b) When the connector lock is released, the connectors are disconnected.
HINT:
Be sure to hold both outer flanks. Holding the top and bottom sides will make disconnection difficult.

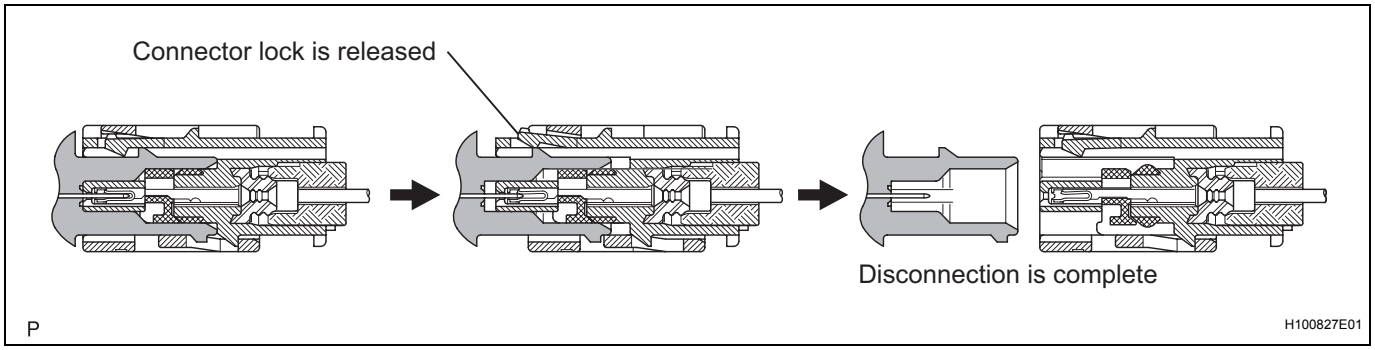

15. CONNECTION OF CONNECTORS FOR SIDE AIRBAG SENSOR AND REAR AIRBAG SENSOR

(a) Connect the connector as shown in the illustration. (When locking, make sure that the outer returns to its original position and a click sound can be heard)
HINT:
When connecting, the outer slides. Do not hold the outer while connecting, as it may result in an insecure fit.

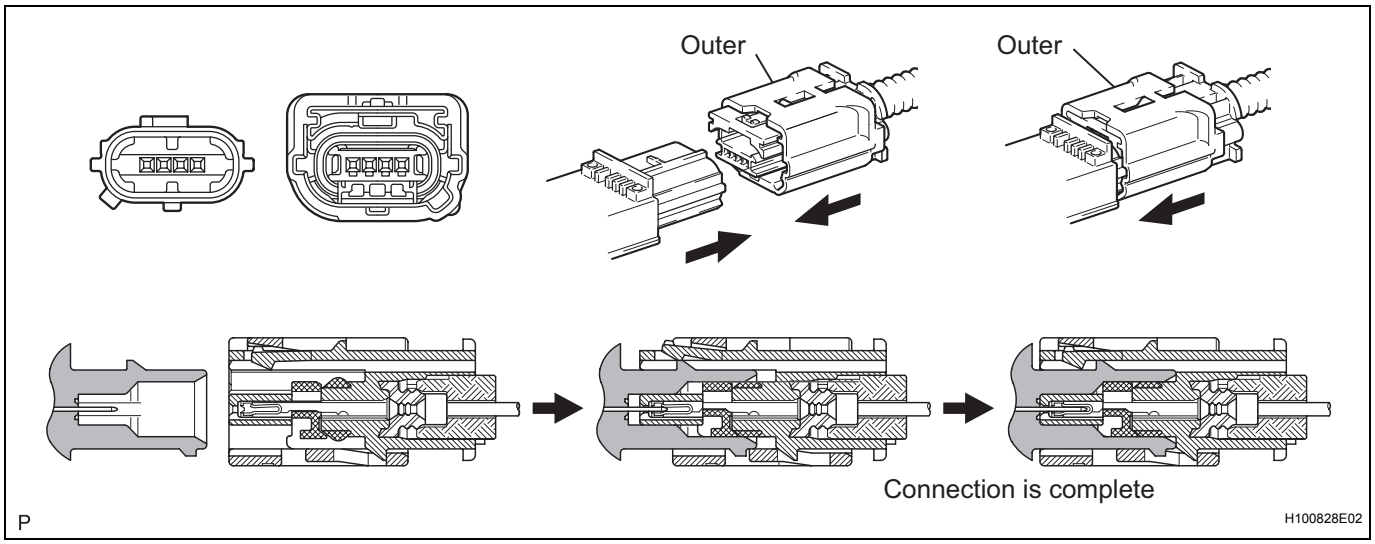

PARTS LOCATION

HATCHBACK:

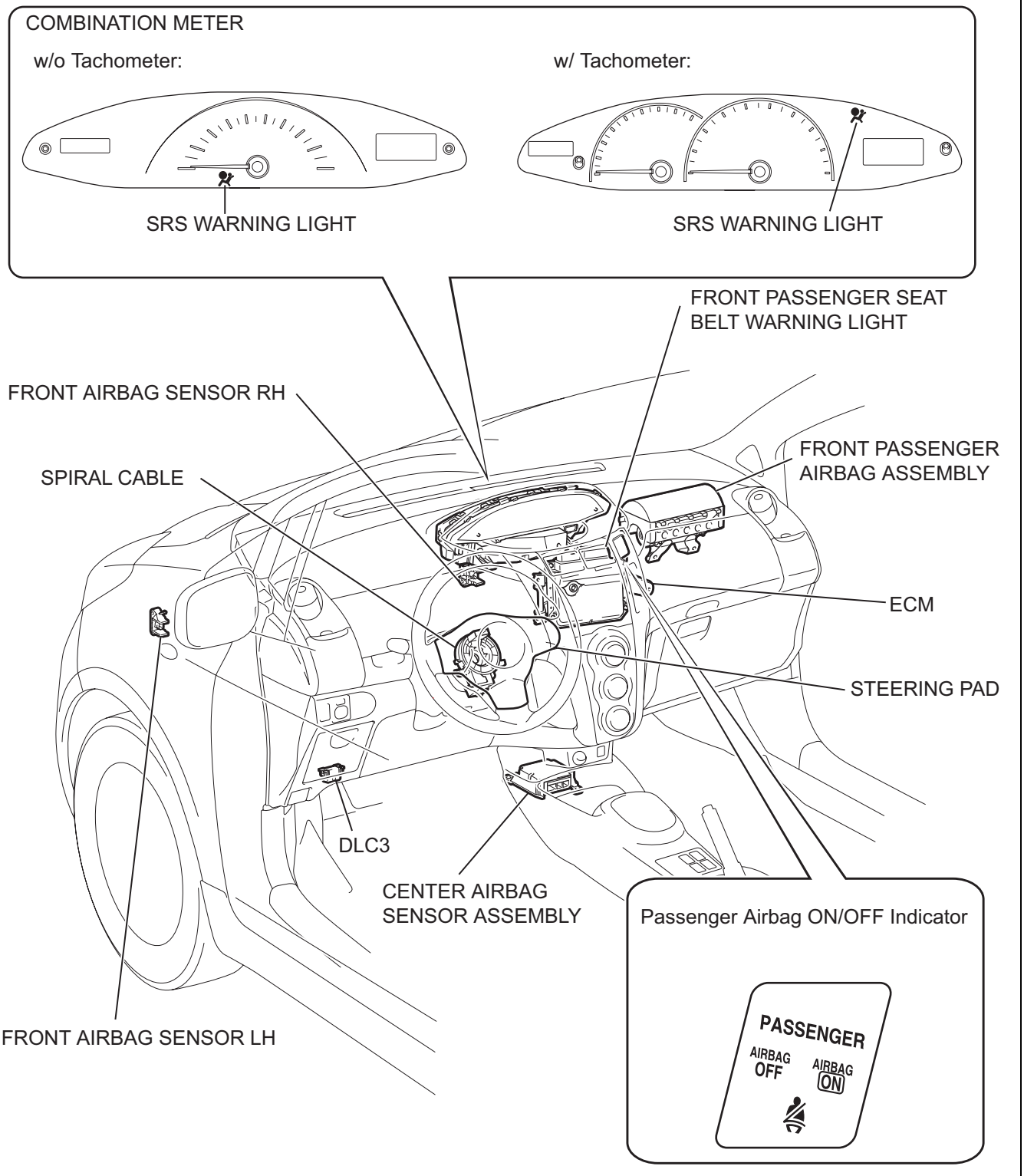

P

H100912E02

HATCHBACK:

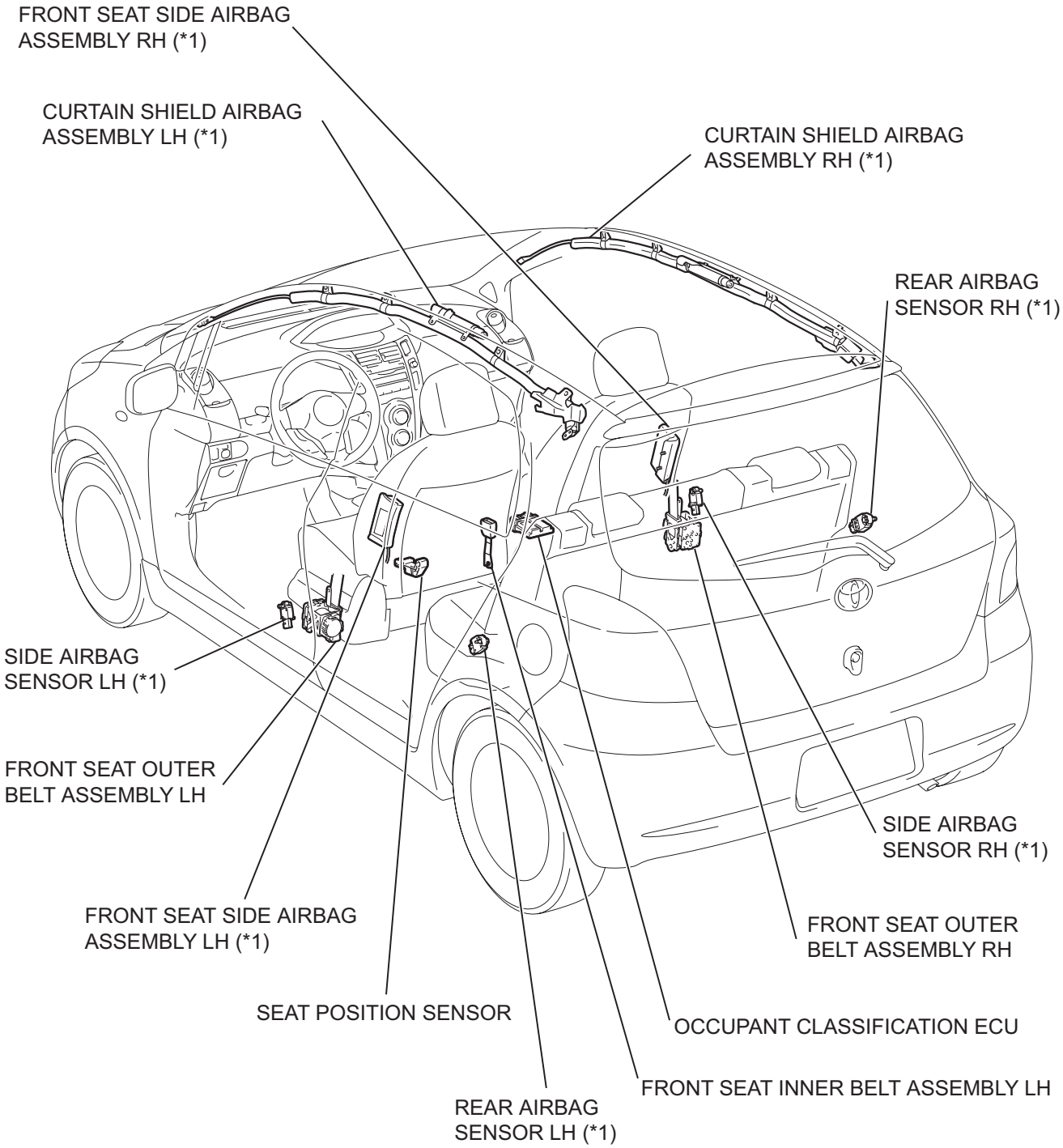

*1: w/ Side Airbag Assembly and Curtain Shield Airbag Assembly

P

C141225E01

SEDAN:

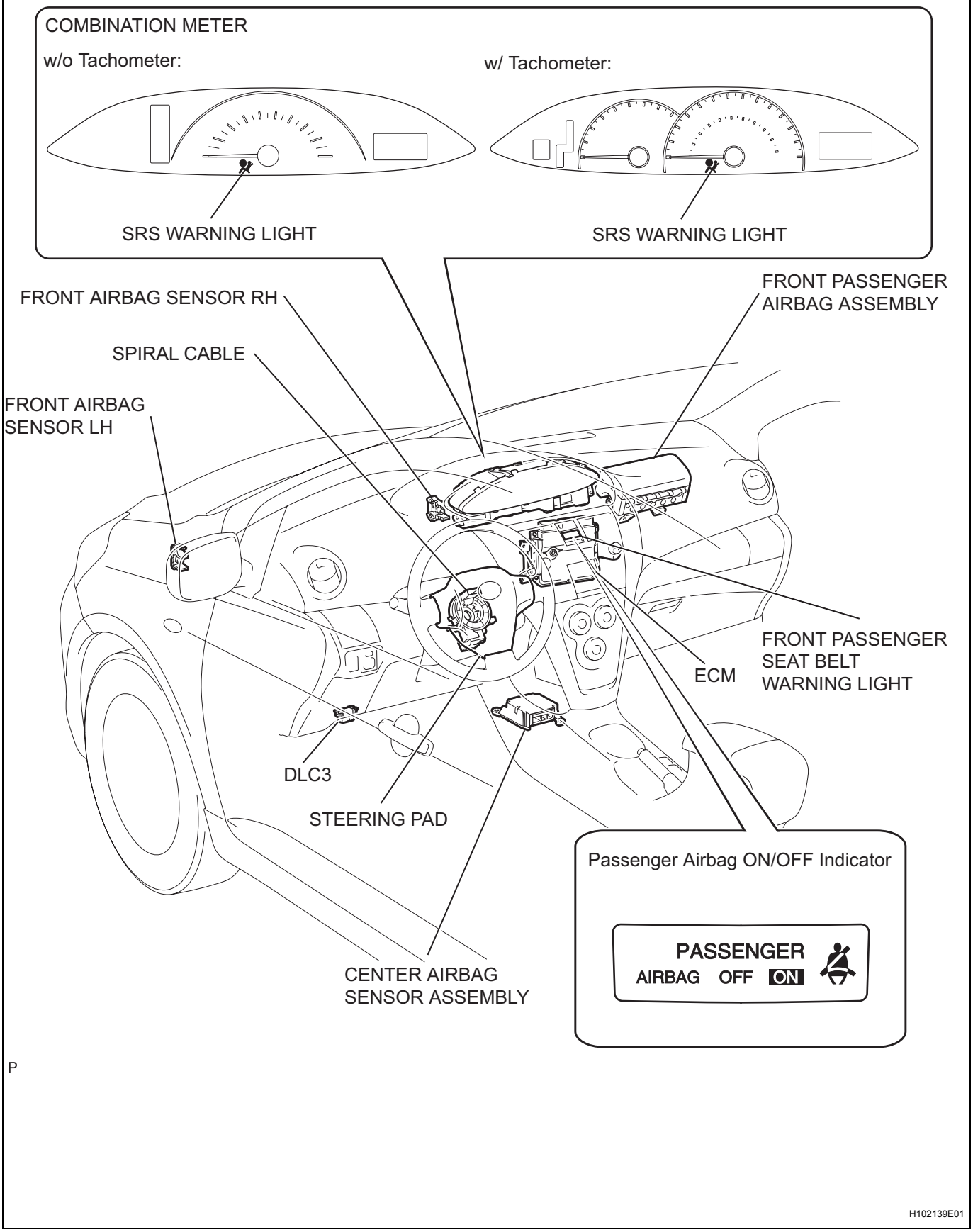
COMBINATION METER
w/o Tachometer:
w/ Tachometer:
SRS WARNING LIGHT
SRS WARNING LIGHT
FRONT AIRBAG SENSOR RH
FRONT PASSENGER AIRBAG ASSEMBLY
SPIRAL CABLE
FRONT AIRBAG SENSOR LH
ECM
FRONT PASSENGER SEAT BELT WARNING LIGHT
DLC3
STEERING PAD
Passenger Airbag ON/OFF Indicator
PASSENGER
AIRBAG OFF ON
CENTER AIRBAG SENSOR ASSEMBLY
H102139E01

SEDAN:

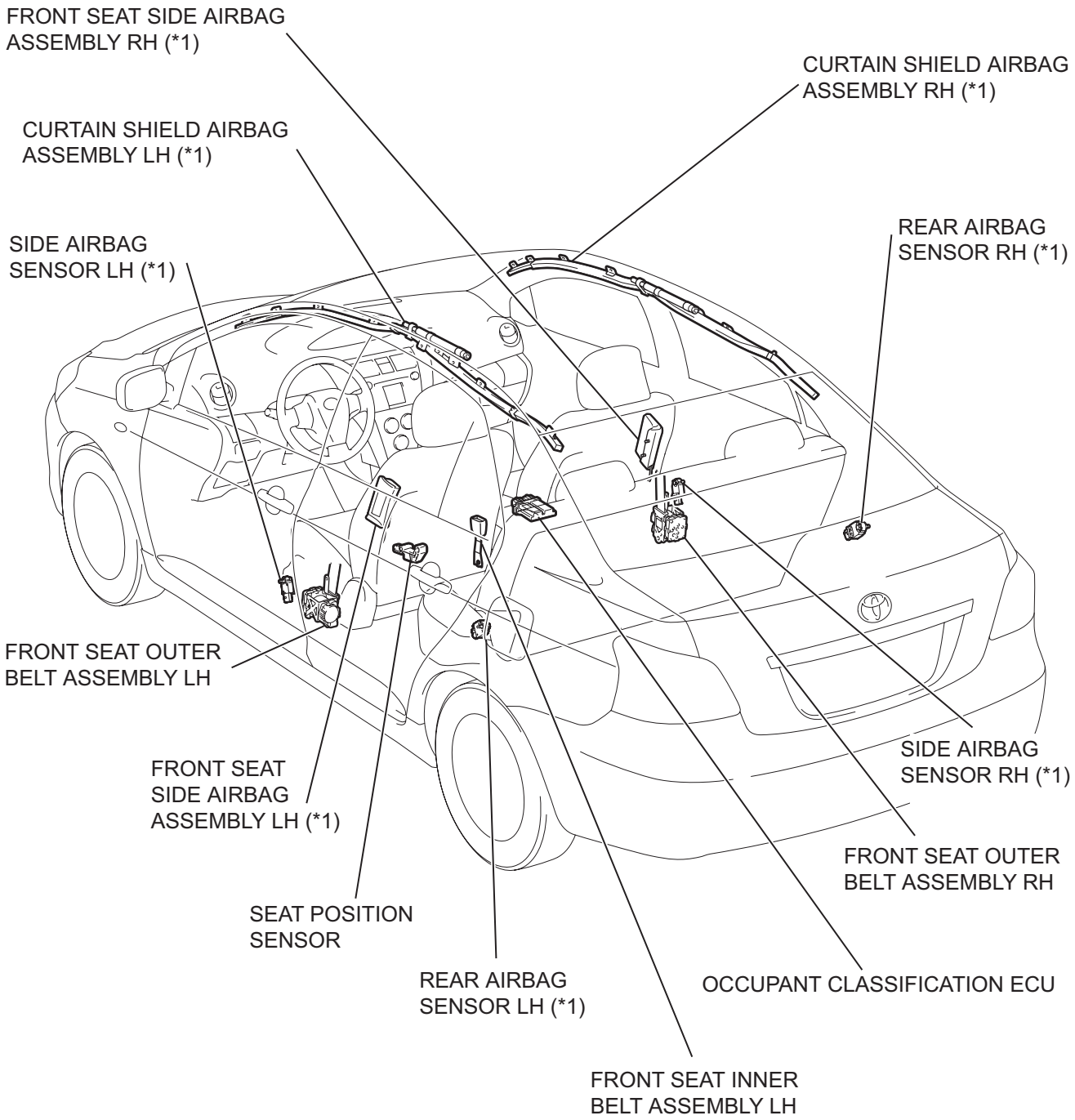

*1: w/ Side Airbag Assenmbly and Curtain Shield Airbag Assembly

P

C141226E02

SYSTEM DIAGRAM

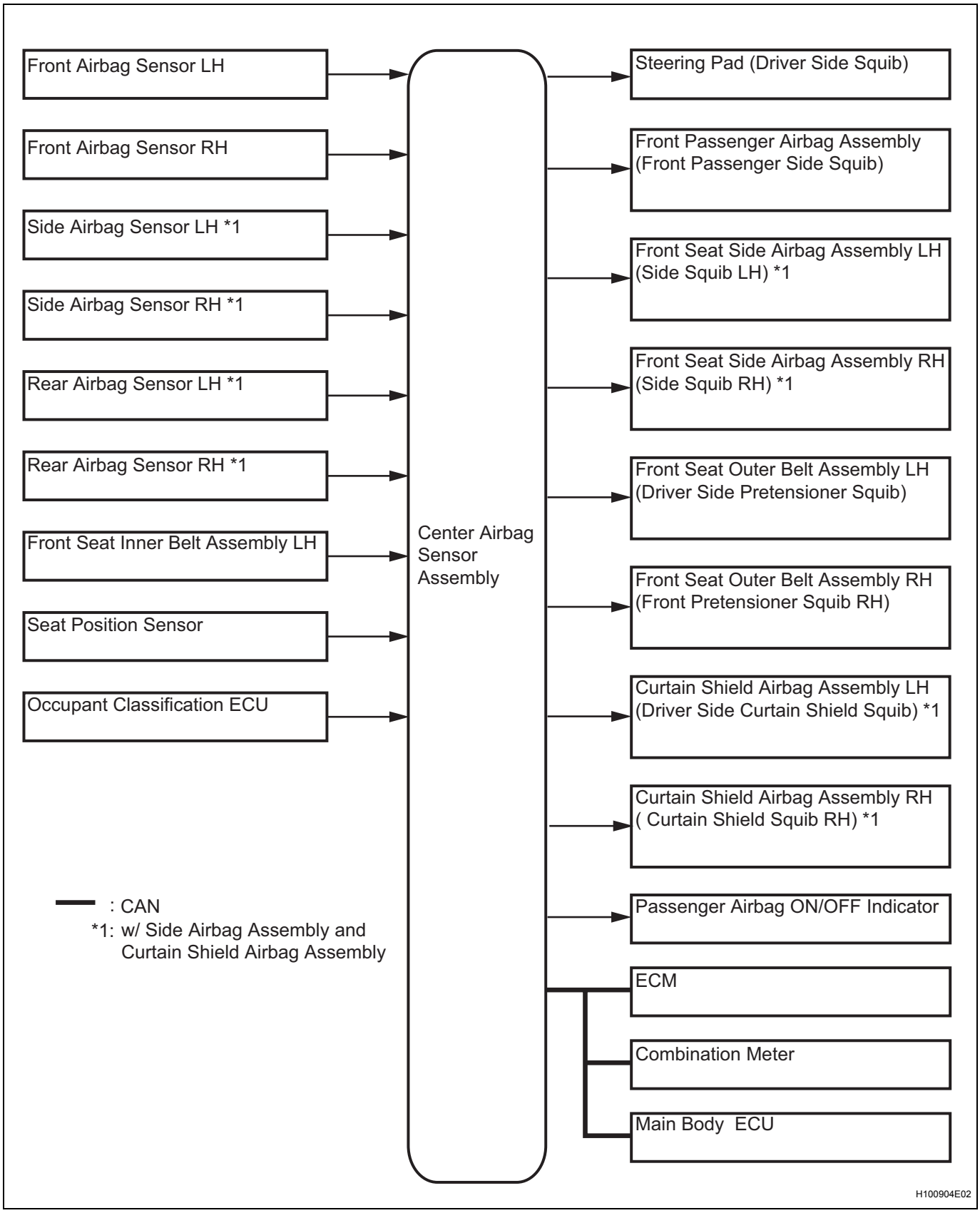

SYSTEM DESCRIPTION

1. GENERAL

(a) Airbag for Frontal Collision

(1) The dual-stage SRS driver and front passenger airbags deploy simultaneously in the event of a frontal impact collision as supplements to the seat belts. The dual-stage SRS airbag system controls the airbag inflation output by judging the extent of the impact, the seat position and whether the seat belt is fastened.

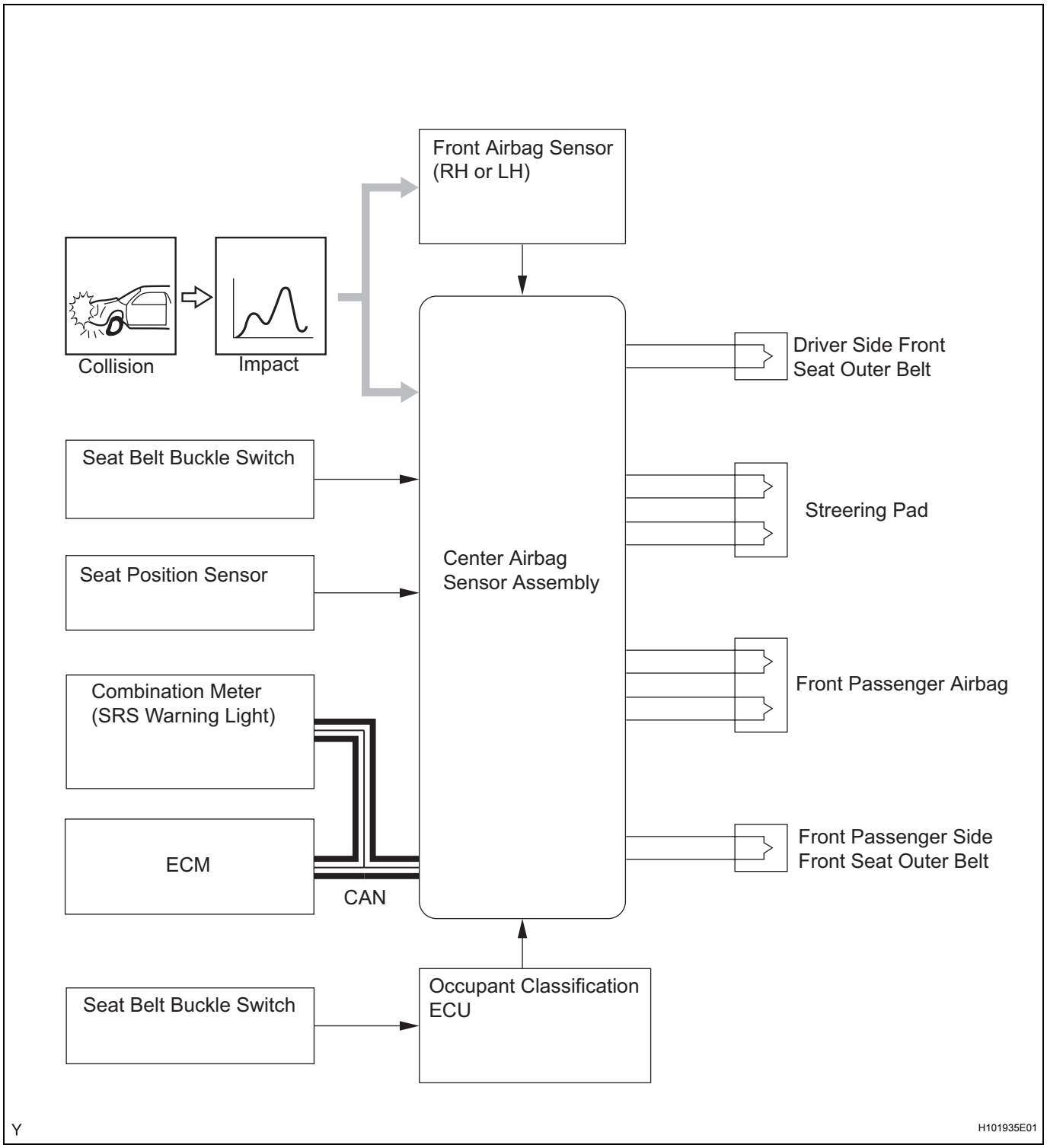

(b) Airbag for Side/Rear Side Collision
(1) SRS side and curtain shield airbags deploy simultaneously in the event of a side collision. Only the curtain shield airbag deploys in the event of a rear side collision.

RS

Airbag for Side Collision :

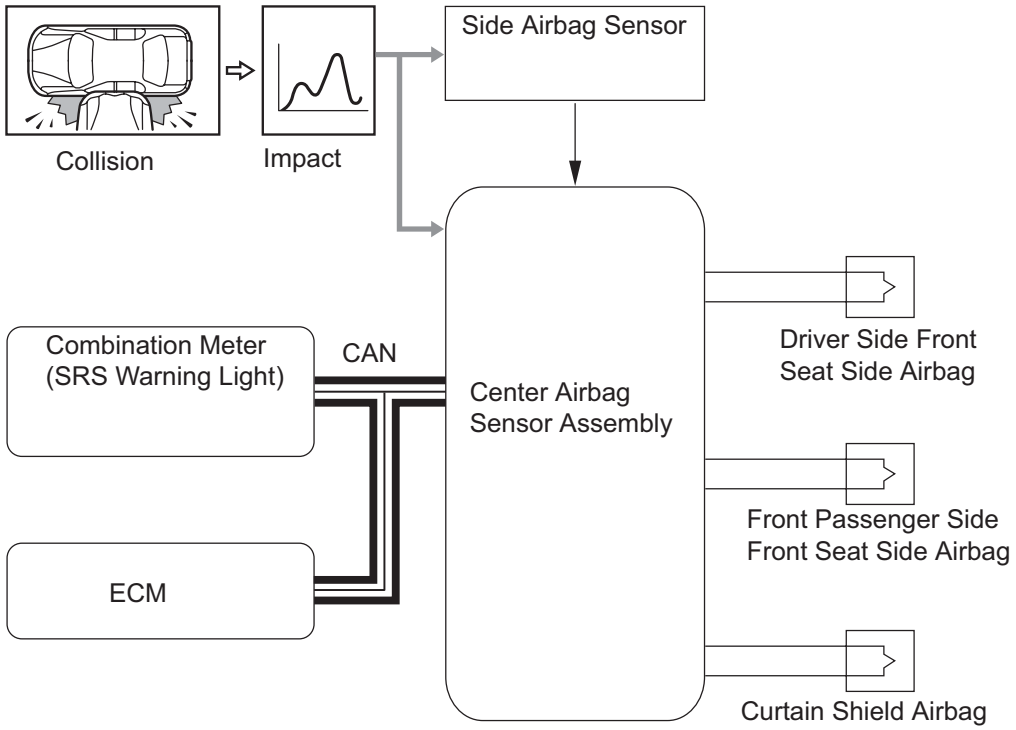

Airbag for Rear Side Collision :

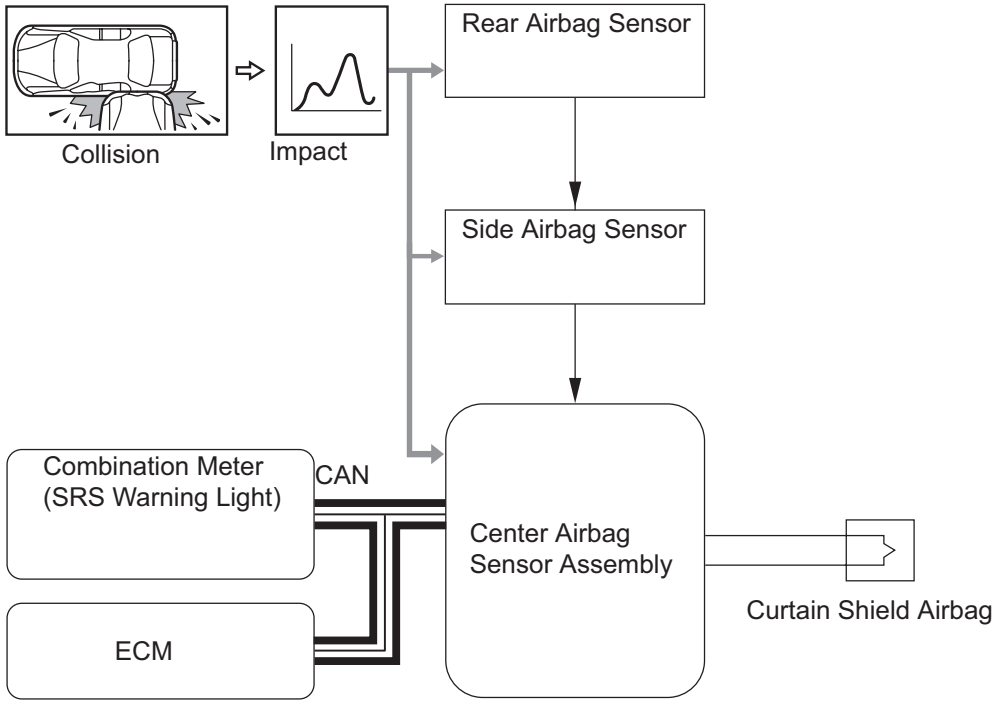

H101946E01

2. MAIN COMPONENTS

Component	Description
SRS Driver & Front Passenger Airbags	Help reduce shocks to heads and chests of driver and front passenger in event of frontal impact collision as supplements to seat belts
Front Airbag Sensor	Converts distortion created in sensor into electrical signal based on deceleration of vehicle during front collision
Seat Belt Buckle Switch	Integrated into front seat inner belt assembly and detects whether seat belt fastened (for driver seat)
Seat Position Sensor	Detects sliding position of seat (for driver seat)
Front Seat Side and Curtain Shield Airbags	Help reduce shocks to heads and chests of driver, front passenger and outer rear passengers in event of side or rear side collision
Side Airbag Sensor and Rear Airbag Sensor	Convert distortion created in sensors into electrical signal based on deceleration of vehicle during side or rear side collision

HOW TO PROCEED WITH TROUBLESHOOTING

1 VEHICLE BROUGHT TO WORKSHOP

NEXT

2 CUSTOMER PROBLEM ANALYSIS (See page IN-26)

(a) Confirm problem symptoms.

NEXT

3 CHECK CAN COMMUNICATION SYSTEM (See page CA-22)

Result	Proceed to
DTCs NOT OUTPUT	A
DTCs OUTPUT	B

B → CHECK CAN COMMUNICATION CIRCUIT

A

4 WARNING LIGHT CHECK (See page RS-31)

NEXT

5 DTC CHECK (Present and Past DTCs) (See page RS-38)

Result	Proceed to
DTCs OUTPUT	A
DTCs NOT OUTPUT	B

B → PROBLEM SYMPTOMS TABLE

A

6 DTC CHART (See page RS-42)

NEXT

7 CIRCUIT INSPECTION

NEXT

8	REPAIR OR REPLACEMENT

NEXT

RS

9	DTC CLEARANCE (Present and Past DTCs) (See page RS-38)

NEXT

10	DTC CHECK (Present and Past DTCs) (See page RS-38)

Result	Proceed to
DTCs NOT OUTPUT	A
DTCs OUTPUT	B

B → Go to step 6

A

END

PROBLEM SYMPTOMS TABLE

Symptom	Suspected area	See page
The SRS warning light goes off after the primary check, but comes on again.	SRS Warning Light Remains ON	RS-196
Approximately 6 seconds after the ignition switch is turned on, the SRS warning light sometimes comes on.	SRS Warning Light Remains ON	RS-196
The SRS warning light always comes on even when no DTSs are output.	SRS Warning Light Remains ON	RS-196
With the ignition switch on, the SRS warning light does not come on.	SRS Warning Light does not Come On	RS-202
Although the SRS warning light operates normally, DTC or a normal system code is not displayed.	TC and CG Terminal Circuit	RS-205
Although terminals TC and CG of the DLC3 are not connected, a DTC or a normal system code is displayed.	TC and CG Terminal Circuit	RS-205

TERMINALS OF ECU

Center Airbag Sensor Assembly:

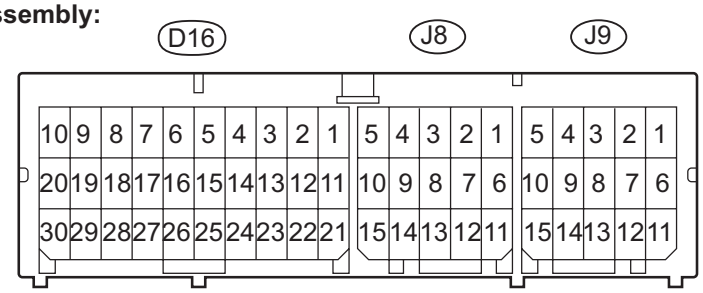

Terminal No.	Terminal Symbol	Destination
D16-1	P2+	Front passenger airbag (Front passenger side squib 2nd step)
D16-2	P2-	Front passenger airbag (Front passenger side squib 2nd step)
D16-3	P-	Front passenger airbag (Front passenger side squib)
D16-4	P+	Front passenger airbag (Front passenger side squib)
D16-5	D+	Steering pad (Driver side squib)
D16-6	D-	Steering pad (Driver side squib)
D16-7	D2-	Steering pad (Driver side squib 2nd step)
D16-8	D2+	Steering pad (Driver side squib 2nd step)
D16-13	CANH	CAN
D16-16	SIL	DLC3
D16-17	P-AB	Front passenger seat belt warning light (Passenger airbag ON/OFF indicator)
D16-21	IG2	IGN fuse
D16-22	CANL	CAN
D16-23	PAON	Front passenger seat belt warning light (Passenger airbag ON/OFF indicator)
D16-25	E1	Ground
D16-26	E2	Ground
D16-27	-SR	Front airbag sensor RH
D16-28	-SL	Front airbag sensor LH
D16-29	+SR	Front airbag sensor RH
D16-30	+SL	Front airbag sensor LH
J8-1	PD-	Front seat outer belt assembly LH (Driver side pretensioner squib)
J8-2	PD+	Front seat outer belt assembly LH (Driver side pretensioner squib)
J8-3	ED	Shield
J8-6	ICD-	Curtain shield airbag assembly LH (Driver side curtain shield squib)
J8-7	ICD+	Curtain shield airbag assembly LH (Driver side curtain shield squib)
J8-8	BBD+	Side airbag sensor LH
J8-9	SFD+	Front seat side airbag assembly LH (Side squib LH)
J8-10	SFD-	Front seat side airbag assembly LH (Side squib LH)
J8-11	DBE+	Front seat inner belt assembly LH
J8-12	DBE-	Front seat inner belt assembly LH
J8-13	DSP-	Seat position sensor
J8-14	DSP+	Seat position sensor
J8-15	BBD-	Side airbag sensor LH
J9-4	PP+	Front seat outer belt assembly RH (Front passenger side pretensioner squib RH)
J9-5	PP-	Front seat outer belt assembly RH (Front passenger side pretensioner squib RH)
J9-6	SFP-	Front seat side airbag assembly RH (Side squib RH)
J9-7	SFP+	Front seat side airbag assembly RH (Side squib RH)

Terminal No.	Terminal Symbol	Destination
J9-8	BBP+	Side airbag sensor RH
J9-9	ICP+	Curtain shield airbag assembly RH (Curtain shield squib RH)
J9-10	ICP-	Curtain shield airbag assembly RH (Curtain shield squib RH)
J9-11	BBP-	Side airbag sensor RH
J9-12	FSP+	Occupant Classification ECU
J9-13	FSP-	Occupant Classification ECU

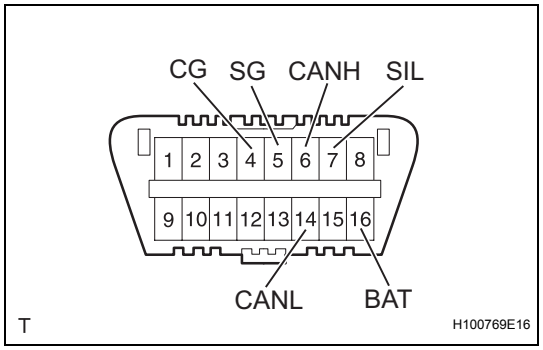

DIAGNOSIS SYSTEM

1. CHECK DLC3

(a) The ECU uses ISO 15765-4 for communication. The terminal arrangement of the DLC3 complies with SAE J1962 and matches the ISO 15765-4 format.

Symbols (Terminal No.)	Terminal Description	Condition	Specified Condition
SIL (7) - SG (5)	Bus "+" line	During transmission	Pulse generation
CG (4) - Body ground	Chassis ground	Always	Below 1 Ω
SG (5) - Body ground	Signal ground	Always	Below 1 Ω
BAT (16) - Body ground	Battery positive	Always	11 to 14 V
CANH (6) - CANL (14)	CAN bus line	Ignition switch OFF*	54 to 69 Ω
CANH (6) - CG (4)	HIGH-level CAN bus line	Ignition switch OFF*	200 Ω or higher
CANL (14) - CG (4)	LOW-level CAN bus line	Ignition switch OFF*	200 Ω or higher
CANH (6) - BAT (16)	HIGH-level CAN bus line	Ignition switch OFF*	6 kΩ or higher
CANL (14) - BAT (16)	LOW-level CAN bus line	Ignition switch OFF*	6 kΩ or higher

NOTICE:

***: Before measuring the resistance, leave the vehicle as is for at least 1 minute and do not operate the ignition switch, any other switches or the doors.**

If the result is not as specified, the DLC3 may have a malfunction. Repair or replace the harness and connector.

HINT:

Connect the cable of the intelligent tester to the CAN VIM, connect the CAN VIM to the DLC3, turn the ignition switch ON and attempt to use the tester. If the display indicates that a communication error has occurred, there is a problem either with the vehicle or with the tester.

- If communication is normal when the tester is connected to another vehicle, inspect the DLC3 of the original vehicle.
- If communication is still not possible when the tester is connected to another vehicle, the problem is probably in the tester itself. Consult the Service Department listed in the tester's instruction manual.

RS

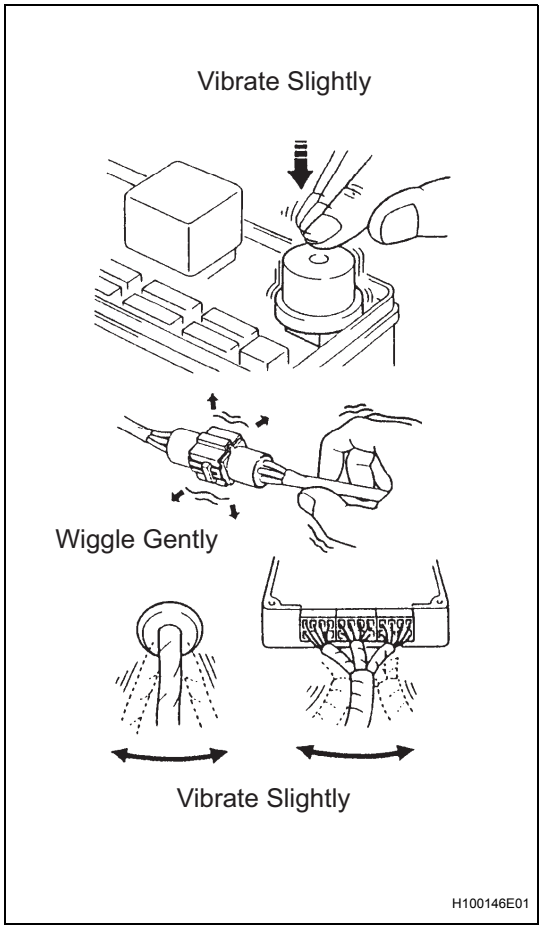

2. SYMPTOM SIMULATION

HINT:

The most difficult case in troubleshooting is when no symptoms occur. In such cases, a thorough customer problem analysis must be carried out. Then the same or similar conditions and environment in which the problem occurred in the customer's vehicle should be simulated. No matter how experienced or skilled a technician may be, if he proceeds to troubleshoot without confirming the problem symptoms, he will likely overlook something important and make a wrong guess at some points in the repair operation.

This leads to a standstill in troubleshooting.

(a) Simulation method: When vibration seems to be the major cause

HINT:

Perform this method only during the primary check period (for approximately 6 seconds after the ignition switch is turned to the on position).

(1) Use your finger to slightly vibrate the part of the sensor considered to be the problem cause, and check whether the malfunction recurs.

HINT:

Wiggling the relays too strongly may result in open relays.

(2) Gently wiggle the connector.

(3) Slightly shake the wire harness vertically and horizontally.

The connector joint and fulcrum of the vibration are the major areas to be checked thoroughly.

3. FUNCTION OF SRS WARNING LIGHT

(a) Primary check

(1) Turn the ignition switch to the lock position. Wait for at least 2 seconds, then turn the ignition switch to the on position. The SRS warning light comes on for approximately 6 seconds and the SRS airbag system diagnosis (including the seat belt pretensioner) is performed.

HINT:

If any malfunctions are detected during the primary check, the SRS warning light remains on even after the primary check period has elapsed.

(b) Constant check

(1) After the primary check, the center airbag sensor assembly constantly monitors the SRS airbag system for trouble.

HINT:

If any malfunctions are detected during the constant check, the center airbag sensor assembly functions as follows:

- The SRS warning light comes on.

- The SRS warning light goes off, and then comes on again. This blinking pattern indicates a source voltage drop. The SRS warning light goes off 10 seconds after the source voltage returns to normal.

(c) Review

(1) When the airbag system is normal:
The SRS warning light comes on only during the primary check period (for approximately 6 seconds after the ignition switch is turned to the on position).

(2) When the airbag system malfunctions:
- The SRS warning light blinks after the primary check period has elapsed.
- The SRS warning light goes off after the primary check, but comes on again during the constant check.
- The SRS warning light remains off even after the ignition switch is turned from lock to on. However, if malfunctions such as an open circuit have occurred in the wire harness between the meter and ECU, the warning light comes on 10 seconds after the ignition switch is turned on.

HINT:
The center airbag sensor assembly keeps the SRS warning light on if any malfunctions have been detected in the airbag system.

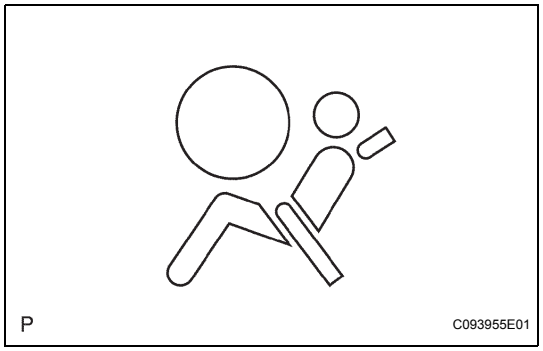

4. SRS WARNING LIGHT CHECK

(a) Turn the ignition switch to the on position, and check that the SRS warning light comes on for approximately 6 seconds (primary check).

(b) Check that the SRS warning light goes off approximately 6 seconds after the ignition switch is turned to the on position (constant check).
HINT:
When any of the following symptoms occur, refer to the Problem Symptoms Table (See page RS-29).
- The SRS warning light comes on occasionally, after the primary check period has elapsed.
- Even when the SRS warning light comes on, no DTCs are set.
- Even when the ignition switch is turned from the lock to on position, the SRS warning light remains off.

5. ACTIVATION PREVENTION MECHANISM

(a) FUNCTION OF ACTIVATION PREVENTION MECHANISM

(1) An activation prevention mechanism is built into the connector (on the center airbag sensor assembly side) of the airbag system squib circuit to prevent accidental airbag activation.

(2) This mechanism closes the circuit when the connector is disconnected by bringing the short spring into contact with the terminals and shutting off external electricity to prevent accidental airbag activation.

(b) RELEASE METHOD OF ACTIVATION PREVENTION MECHANISM

(1) To release the activation prevention mechanism, insert a piece of paper with the same thickness as the male terminal (approximately 0.5 mm [0.020 in.]) between the terminals and the short spring to break the connection.

(2) Refer to the illustrations on the next 3 pages concerning connectors to utilize the activation prevention mechanism and its release method.

CAUTION:

Never release the activation prevention mechanism on the squib connector even when inspecting with the squib disconnected.

NOTICE:

- **Do not release the activation prevention mechanism unless specifically directed by the troubleshooting procedure.**
- **To prevent the terminal and the short spring from being damaged, always use a piece of paper that is the same thickness as the male terminal.**

RS

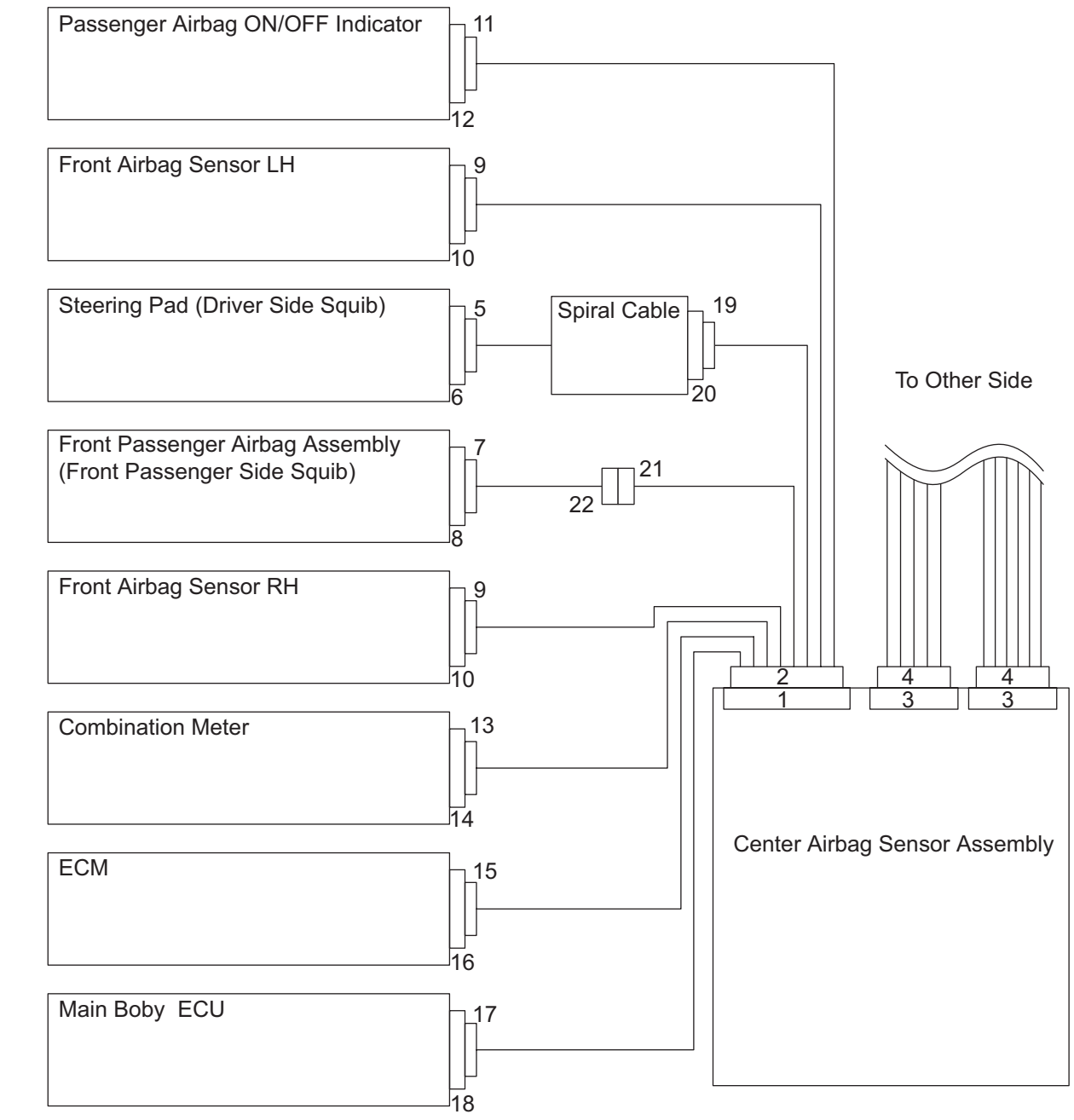
Passenger Airbag ON/OFF Indicator
11
12
Front Airbag Sensor LH
9
10
Steering Pad (Driver Side Squib)
5
6
Spiral Cable
19
20
To Other Side
Front Passenger Airbag Assembly
(Front Passenger Side Squib)
7
8
21
22
Front Airbag Sensor RH
9
10
2
1
4
3
4
3
Combination Meter
13
14
Center Airbag Sensor Assembly
ECM
15
16
Main Boby ECU
17
18
Y
H100937E02

RS

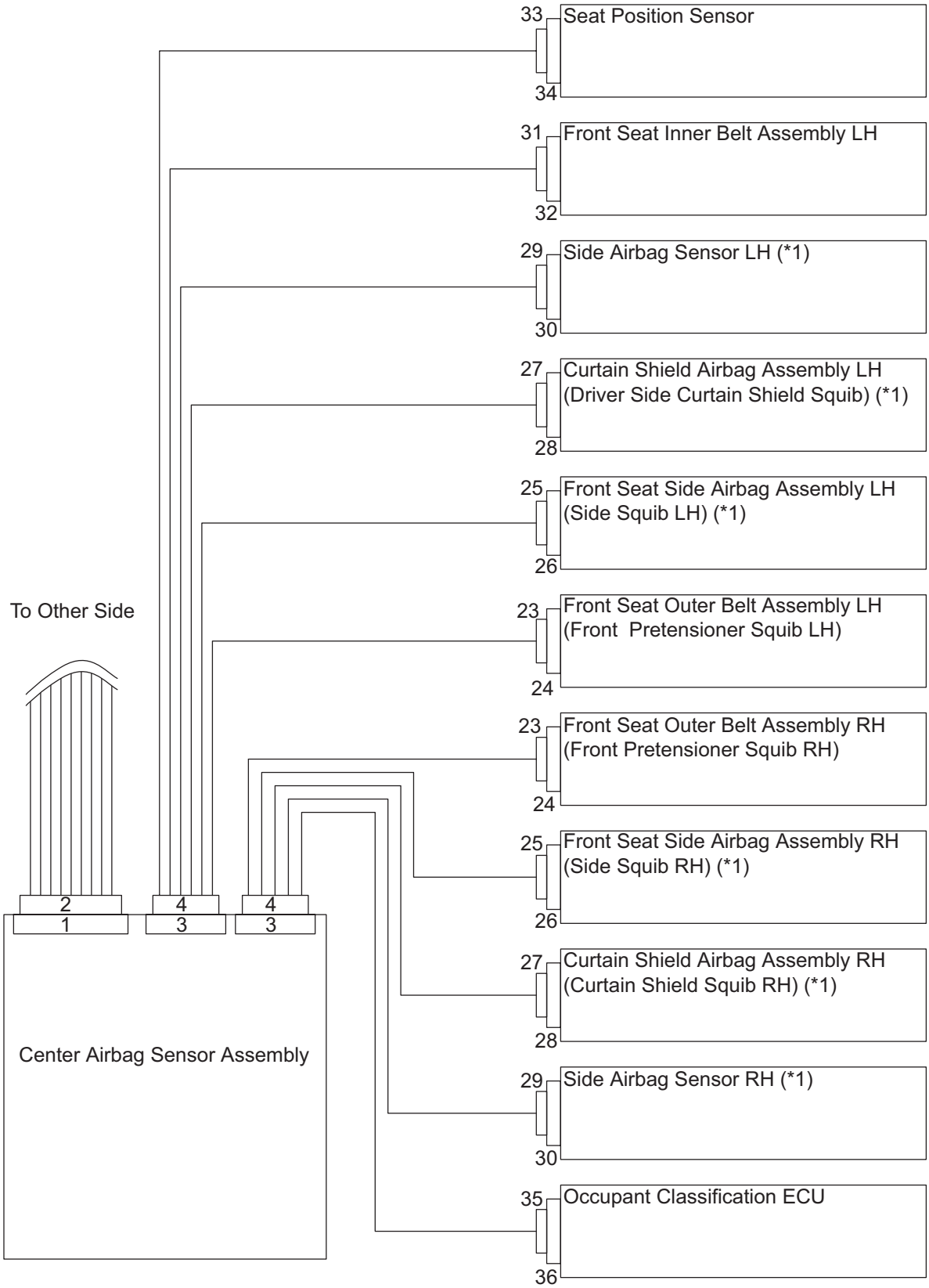

*1: w/ Side Airbag Assembly and Curtain Shield Airbag Assembly

Y

H100938E02

RS

Center Airbag Sensor Assembly Connector

Connector 2

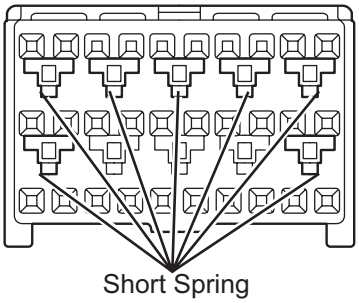

Connector 4

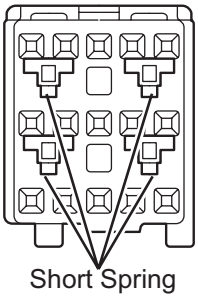

Connector 4

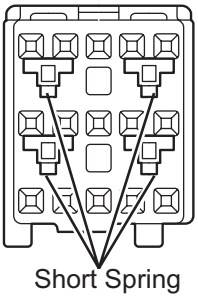

Before Release

After Release

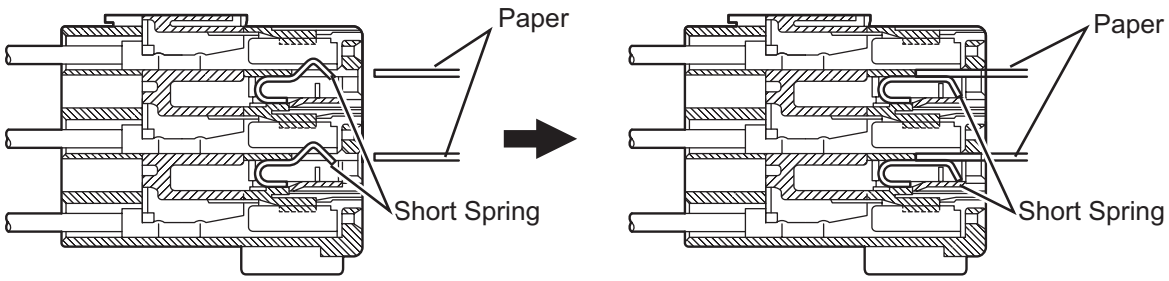

Connector 20

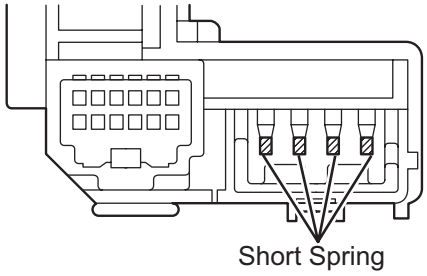

Before Release

After Release

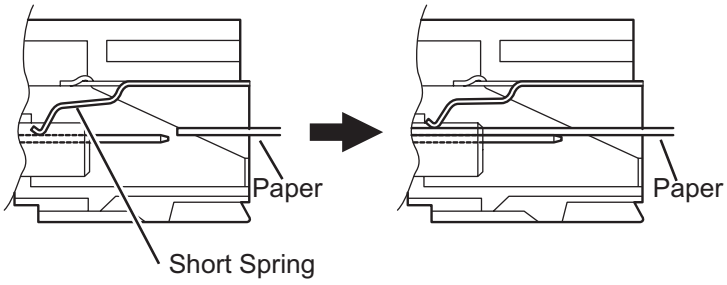

Connector 22

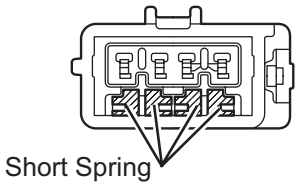

Before Release

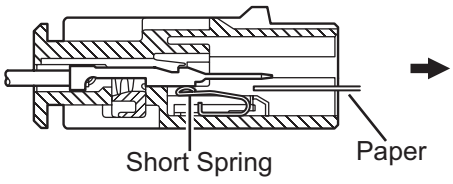

After Release

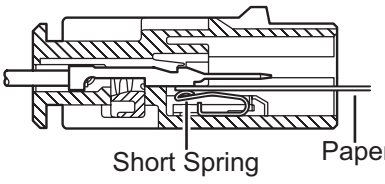

Y

C135764E01

RS

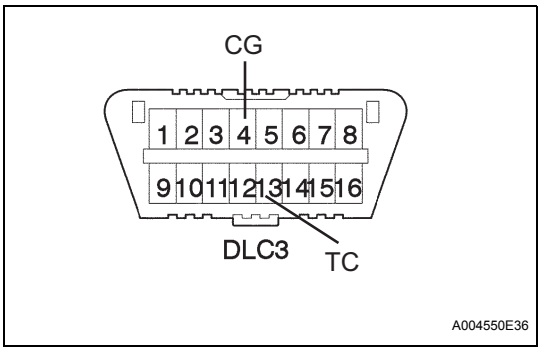

DTC CHECK / CLEAR

1. DTC CHECK (USING SST CHECK WIRE)

(a) Check for DTCs (Present DTC).

(1) Turn the ignition switch on, and wait for approximately 60 seconds.

(2) Using SST, connect terminals TC and CG of the DLC3.

SST 09843-18040

NOTICE:

Connect the terminals to the correct positions to avoid a malfunction.

(b) Check for DTCs (Past DTC).

(1) Using SST, connect terminals TC and CG of the DLC3.

SST 09843-18040

NOTICE:

Connect the terminals to the correct positions to avoid a malfunction.

(2) Turn the ignition switch on, and wait for approximately 60 seconds.

(c) Read the DTCs.

(1) Read the blinking patterns of the DTCs. As examples, the blinking patterns for the normal system code and DTCs 11 and 31 are shown in the illustration on the left.

- Normal system code indication (w/o past DTC)
  The light blinks twice per second.
- Normal system code indication (w/ past DTC)
  When the past DTC is stored in the center airbag sensor assembly, the light blinks once per second.
- DTC indication
  The first blinking pattern indicates the first digit DTC. The second blinking pattern occurs after a 1.5-second pause.

If there are two or more DTCs, there is a 2.5-second pause between each DTC. After all DTCs are shown, there is a 4.0-second pause, and they are all repeated.

HINT:

- If 2 or more malfunctions are found, the indication begins with the lowest numbered DTC.
- If DTCs are indicated without connecting the terminals, proceed to the "TC and CG Terminal Circuit" on page (See page RS-205).

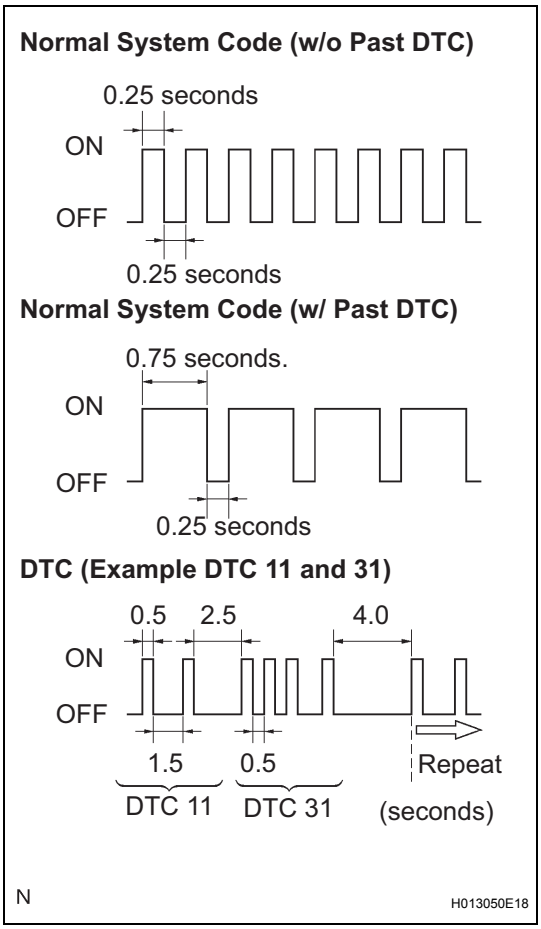

2. DTC CLEAR (USING SST CHECK WIRE)

(a) Clear the DTCs.

(1) When the ignition switch is turned off (turned to the lock position), the DTCs are cleared.
HINT:
Depending on the DTCs, the DTCs may not all be cleared by turning off the ignition switch. In this case, proceed to the next operation.

(2) Using SST, connect terminals TC and CG of the DLC3, and then turn the ignition switch on.
SST 09843-18040

(3) Disconnect terminal TC of the DLC3 within 3 to 10 seconds after the DTCs are output, and check that the SRS warning light comes on after 3 seconds.

(4) Within 2 to 4 seconds of the SRS warning light coming on, connect terminals TC and CG of the DLC3.

(5) The SRS warning light goes off within 2 to 4 seconds of connecting terminals TC and CG of the DLC3. Then, disconnect terminal TC within 2 to 4 seconds of the SRS warning light going off.

(6) The SRS warning light comes on again within 2 to 4 seconds of disconnecting terminal TC. Then, reconnect terminals TC and CG within 2 to 4 seconds of the SRS warning light coming on.

(7) Check that the SRS warning light goes off within 2 to 4 seconds of connecting terminals TC and CG of the DLC3. Also check that the normal system code is output within 1 second of the SRS warning light going off.
If DTCs are not cleared, repeat these procedure until the DTCs are cleared.

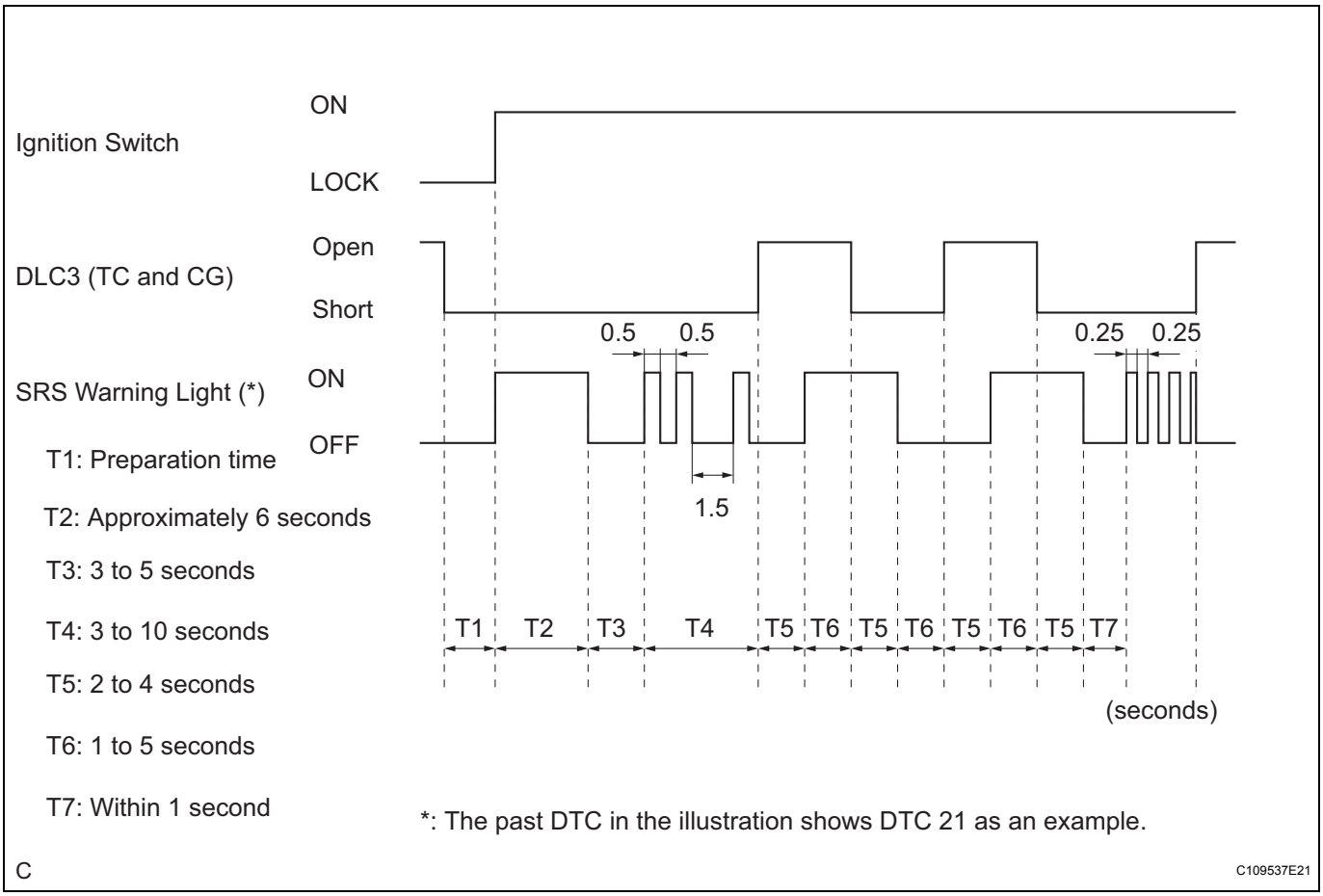

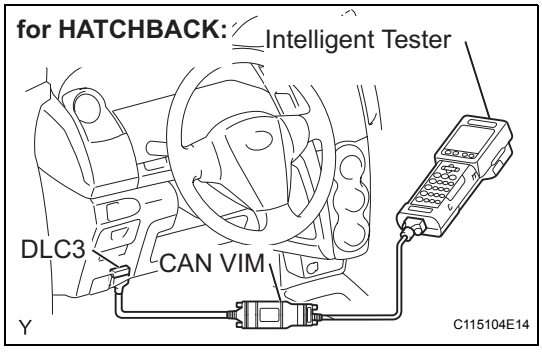

3. DTC CHECK

(a) Check for DTCs.

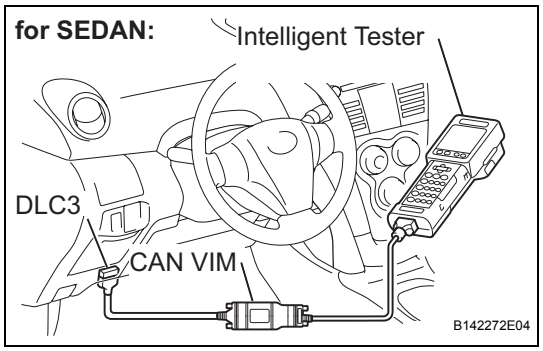

(1) Connect the intelligent tester to the DLC3.
(2) Turn the ignition switch on.
(3) Check the DTCs by following the prompts on the tester screen.
HINT:
Refer to the intelligent tester operator's manual for further details.

(b) Clear DTCs.
(1) Connect the intelligent tester to the DLC3.
(2) Turn the ignition switch on.
(3) Clear the DTCs by following the prompts on the tester screen.
HINT:
Refer to the intelligent tester operator's manual for further details.

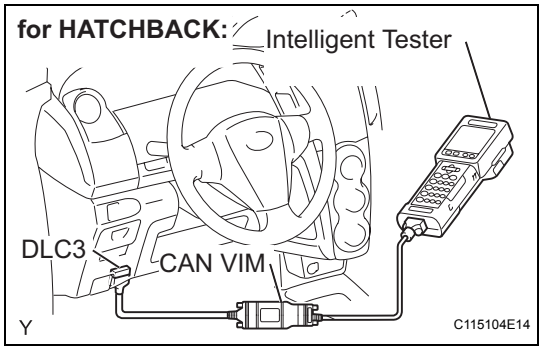

CHECK MODE PROCEDURE

1. CHECK MODE (SIGNAL CHECK): DTC CHECK

(a) Connect the intelligent tester to the DLC3.

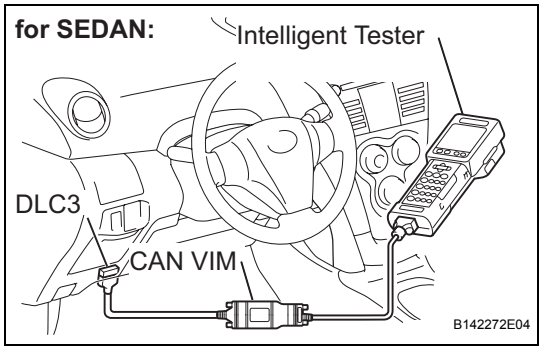

(b) Turn the ignition switch on.
(c) Select the SIGNAL CHECK, and proceed checking with the intelligent tester.
NOTICE:
Select the SIGNAL CHECK from the DTC CHECK screen displayed on the intelligent tester to clear the output DTCs (both present and past).
HINT:
- DTCs can be detected more sensitively in check mode than in normal diagnosis mode.
- Perform the check mode inspection when a malfunction in each squib circuit is suspected even after the normal system code is output through the normal diagnosis mode inspection.

RS

DATA LIST / ACTIVE TEST

HINT:
By accessing the DATA LIST displayed on the intelligent tester, you can perform functions such as reading the values of switches and sensors without removing any parts. Reading the DATA LIST is the first step of troubleshooting and is one method shortening diagnostic time.

1. DATA LIST FOR CENTER AIRBAG SENSOR ASSEMBLY

(a) Connect the intelligent tester to the DLC3.
(b) Turn the ignition switch on and turn the tester on.
(c) Following the display on the tester screen, select the DATA LIST.
(d) Check the condition by referring to the table below.

Item	Measure Item/ Range (Display)	Normal Condition	Diagnostic Note
D SEAT POSITION	Seat position (Driver side)/ FORWARD: Seat position forward BKWARD: Seat position backward FAIL: Failure detected	FORWARD/BKWARD	-
PASSENGER CLASS	Front passenger classification/ NG: Data not determined OFF: Vacant CHILD: Child (Less than 36 kg [79.37 lb]) seated AF05: Adult (36 to 54 kg [79.37 to 119.05 lb]) seated AM50: Adult (More than 54 kg [119.05 lb]) seated FAIL: Failure detected	NG/OFF/CHILD/AF05/AM50/ FAIL	-
D BUCKLE SW	Buckle switch (Driver side)/ UNSET: Seat belt not fastened SET: Seat belt fastened NG: Data not determined	UNSET/SET	-
P BUCKLE SW	Buckle switch (Front passenger side)/ UNSET: Seat belt not fastened SET: Seat belt fastened NG: Data not determined	UNSET/SET	-
DISPLAY TYPE	Display type identification information/ LR: Display indicated by LH/RH DP: Display indicated by Driver/ Passenger	DP	-
PAST CODES	Number of past DTCs/ Min.: 0, Max.: 255	0	-

DIAGNOSTIC TROUBLE CODE CHART

If a DTC is displayed during the DTC check, check the circuit listed for the DTC in the table below (refer to the appropriate page listed for that circuit).

HINT:

- When the SRS warning light remains on and the normal system code is output, a decrease in the source voltage is likely to occur. This malfunction is not stored in the memory of the center airbag sensor assembly. If the power source voltage returns to normal, the SRS warning light will automatically go off.
- When 2 or more DTCs are indicated, the DTC with the lowest number appears first.
- If a DTC is not listed in the DTC chart, the center airbag sensor may have malfunctioned.
- In the case of any malfunctions concerning open circuits, shorts to ground, or shorts to B+ due to squibs, other DTCs may not be set. In this case, repair the malfunction currently indicated and then perform malfunction diagnosis again.
- Marks in the check mode column:
  -: DTC dose not correspond to check mode.
  ○: DTC corresponds to check mode.
- When DTC B1650/32 is set as a result of troubleshooting the Supplemental Restraint System (SRS), perform troubleshooting for the occupant classification system.

DTC No.	Detection Item	Trouble Area	Check Mode	See page
B1000/31	Center Airbag Sensor Assembly Malfunction	1. Center airbag sensor assembly	-	RS-49
B1610/13	Front Airbag Sensor RH Circuit Malfunction	1. Instrument panel wire 2. Engine room main wire 3. Front airbag sensor RH 4. Center airbag sensor assembly	-	RS-50
B1615/14	Front Airbag Sensor LH Circuit Malfunction	1. Instrument panel wire 2. Engine room main wire 3. Front airbag sensor LH 4. Center airbag sensor assembly	-	RS-59
B1620/21	Driver Side - Side Airbag Sensor Circuit Malfunction	1. Floor wire 2. Side airbag sensor LH 3. Center airbag sensor assembly	-	RS-68
B1625/22	Front Passenger Side - Side Airbag Sensor Circuit Malfunction	1. Floor wire 2. Side airbag sensor RH 3. Center airbag sensor assembly	-	RS-76
B1630/23	Driver Side Rear Airbag Sensor Circuit Malfunction	1. Floor wire 2. Rear airbag sensor LH 3. Center airbag sensor assembly	-	RS-84

RS

DTC No.	Detection Item	Trouble Area	Check Mode	See page
B1635/24	Front Passenger Side Rear Airbag Sensor Circuit Malfunction	1. Floor wire 2. Rear airbag sensor RH 3. Center airbag sensor assembly	-	RS-90
B1650/32	Occupant Classification System Malfunction	1. Floor wire 2. Occupant classification system 3. Center airbag sensor assembly	-	RS-96
B1653/35	Seat Position Airbag Sensor Circuit Malfunction	1. Floor wire 2. Front seat inner belt assembly LH 3. Seat position airbag sensor 4. Center airbag sensor assembly	-	RS-103
B1655/37	Driver Side Seat Belt Buckle Switch Circuit Malfunction	1. Floor wire 2. Front seat inner belt assembly LH 3. Center airbag sensor assembly	-	RS-113
B1660/43	Passenger Airbag ON / OFF Indicator Circuit Malfunction	1. Instrument panel wire 2. Front passenger seat belt warning light (Passenger airbag ON/OFF indicator 3. Center airbag sensor assembly	-	RS-119
B1662/45	Indicator Light Circuit Malfunction	1. Instrument panel wire 2. Combination meter 3. Center airbag sensor assembly	-	RS-133
B1800/51	Short in Driver Side Squib Circuit	1. Instrument panel wire 2. Spiral cable 3. Steering pad (Driver side squib) 4. Center airbag sensor assembly	○	RS-138
B1801/51	Open in Driver Side Squib Circuit	1. Instrument panel wire 2. Spiral cable 3. Steering pad (Driver side squib) 4. Center airbag sensor assembly	○	RS-138
B1802/51	Short to GND in Driver Side Squib Circuit	1. Instrument panel wire 2. Spiral cable 3. Steering pad (Driver side squib) 4. Center airbag sensor assembly	○	RS-138
B1803/51	Short to B+ in Driver Side Squib Circuit	1. Instrument panel wire 2. Spiral cable 3. Steering pad (Driver side squib) 4. Center airbag sensor assembly	○	RS-138

DTC No.	Detection Item	Trouble Area	Check Mode	See page
B1805/52	Short in Front Passenger Side Squib Circuit	1. Instrument panel wire 2. Instrument panel wire assembly 3. Front passenger airbag assembly (Front passenger side squib) 4. Center airbag sensor assembly	○	RS-145
B1806/52	Open in Front Passenger Side Squib Circuit	1. Instrument panel wire 2. Instrument panel wire assembly 3. Front passenger airbag assembly (Front passenger side squib)	○	RS-145
B1807/52	Short to GND in Front Passenger Side Squib Circuit	1. Instrument panel wire 2. Instrument panel wire assembly 3. Front passenger airbag assembly (Front passenger side squib) 4. Center airbag sensor assembly	○	RS-145
B1808/52	Short to B+ in Front Passenger Side Squib Circuit	1. Instrument panel wire 2. Instrument panel wire assembly 3. Front passenger airbag assembly (Front passenger side squib) 4. Center airbag sensor assembly	○	RS-145
B1810/53	Short in Driver Side Squib 2nd Step Circuit	1. Instrument panel wire 2. Spiral cable 3. Steering pad (Driver side squib 2nd step) 4. Center airbag sensor assembly	○	RS-152
B1811/53	Open in Driver Side Squib 2nd Step Circuit	1. Instrument panel wire 2. Spiral cable 3. Steering pad (Driver side squib 2nd step) 4. Center airbag sensor assembly	○	RS-152
B1812/53	Short to GND in Driver Side Squib 2nd Step Circuit	1. Instrument panel wire 2. Spiral cable 3. Steering pad (Driver side squib 2nd step) 4. Center airbag sensor assembly	○	RS-152
B1813/53	Short to B+ in Driver Side Squib 2nd Step Circuit	1. Instrument panel wire 2. Spiral cable 3. Steering pad (Driver side squib 2nd step) 4. Center airbag sensor assembly	○	RS-152

RS

DTC No.	Detection Item	Trouble Area	Check Mode	See page
B1815/54	Short in Front Passenger Side Squib 2nd Step Circuit	1. Instrument panel wire 2. Instrument panel wire assembly 3. Front passenger airbag assembly (Front passenger side squib 2nd step) 4. Center airbag sensor assembly	○	RS-159
B1816/54	Open in Front Passenger Side Squib 2nd Step Circuit	1. Instrument panel wire 2. Instrument panel wire assembly 3. Front passenger airbag assembly (Front passenger side squib 2nd step) 4. Center airbag sensor assembly	○	RS-159
B1817/54	Short to GND in Front Passenger Side Squib 2nd Step Circuit	1. Instrument panel wire 2. Instrument panel wire assembly 3. Front passenger airbag assembly (Front passenger side squib 2nd step) 4. Center airbag sensor assembly	○	RS-159
B1818/54	Short to B+ in Front Passenger Side Squib 2nd Step Circuit	1. Instrument panel wire 2. Instrument panel wire assembly 3. Front passenger airbag assembly (Front passenger side squib 2nd step) 4. Center airbag sensor assembly	○	RS-159
B1820/55	Short in Driver Side - Side Squib Circuit	1. Floor wire 2. Front seat airbag assembly LH (Driver side-side squib) 3. Center airbag sensor assembly	○	RS-166
B1821/55	Open in Driver Side - Side Squib Circuit	1. Floor wire 2. Front seat airbag assembly LH (Driver side-side squib) 3. Center airbag sensor assembly	○	RS-166
B1822/55	Short to GND in Driver Side - Side Squib Circuit	1. Floor wire 2. Front seat airbag assembly LH (Driver side-side squib) 3. Center airbag sensor assembly	○	RS-166
B1823/55	Short to B+ in Driver Side - Side Squib Circuit	1. Floor wire 2. Front seat airbag assembly LH (Driver side-side squib) 3. Center airbag sensor assembly	○	RS-166

DTC No.	Detection Item	Trouble Area	Check Mode	See page
B1825/56	Short in Front Passenger Side - Side Squib Circuit	1. Floor wire 2. Front seat airbag assembly RH (Front passenger side-side squib) 3. Center airbag sensor assembly	○	RS-171
B1826/56	Open in Front Passenger Side - Side Squib Circuit	1. Floor wire 2. Front seat airbag assembly RH (Front passenger side-side squib) 3. Center airbag sensor assembly	○	RS-171
B1827/56	Short to GND in Front Passenger Side - Side Squib Circuit	1. Floor wire 2. Front seat airbag assembly RH (Front passenger side-side squib) 3. Center airbag sensor assembly	○	RS-171
B1828/56	Short to B+ in Front Passenger Side - Side Squib Circuit	1. Floor wire 2. Front seat airbag assembly RH (Front passenger side-side squib) 3. Center airbag sensor assembly	○	RS-171
B1830/57	Short in Driver Side Curtain Shield Squib Circuit	1. Floor wire 2. Curtain shield airbag assembly LH (Driver side curtain shield squib) 3. Center airbag sensor assembly	○	RS-176
B1831/57	Open in Driver Side Curtain Shield Squib Circuit	1. Floor wire 2. Curtain shield airbag assembly LH (Driver side curtain shield squib) 3. Center airbag sensor assembly	○	RS-176
B1832/57	Short to GND in Driver Side Curtain Shield Squib Circuit	1. Floor wire 2. Curtain shield airbag assembly LH (Driver side curtain shield squib) 3. Center airbag sensor assembly	○	RS-176
B1833/57	Short to B+ in Driver Side Curtain Shield Squib Circuit	1. Floor wire 2. Curtain shield airbag assembly LH (Driver side curtain shield squib) 3. Center airbag sensor assembly	○	RS-176
B1835/58	Short in Front Passenger Side Curtain Shield Squib Circuit	1. Floor wire 2. Curtain shield airbag assembly RH (Front passenger side curtain shield squib) 3. Center airbag sensor assembly	○	RS-181

RS

DTC No.	Detection Item	Trouble Area	Check Mode	See page
B1836/58	Open in Front Passenger Side Curtain Shield Squib Circuit	1. Floor wire 2. Curtain shield airbag assembly RH (Front passenger side curtain shield squib) 3. Center airbag sensor assembly	○	RS-181
B1837/58	Short to GND in Front Passenger Side Curtain Shield Squib Circuit	1. Floor wire 2. Curtain shield airbag assembly RH (Front passenger side curtain shield squib) 3. Center airbag sensor assembly	○	RS-181
B1838/58	Short to B+ in Front Passenger Side Curtain Shield Squib Circuit	1. Floor wire 2. Curtain shield airbag assembly RH (Front passenger side curtain shield squib) 3. Center airbag sensor assembly	○	RS-181
B1900/73	Short in Driver Side Front Pretensioner Squib Circuit	1. Floor wire 2. Front seat outer belt assembly LH (Driver side front pretensioner squib) 3. Center airbag sensor assembly	○	RS-186
B1901/73	Open in Driver Side Front Pretensioner Squib Circuit	1. Floor wire 2. Front seat outer belt assembly LH (Driver side front pretensioner squib) 3. Center airbag sensor assembly	○	RS-186
B1902/73	Short to GND in Driver Side Front Pretensioner Squib Circuit	1. Floor wire 2. Front seat outer belt assembly LH (Driver side front pretensioner squib) 3. Center airbag sensor assembly	○	RS-186
B1903/73	Short to B+ in Driver Side Front Pretensioner Squib Circuit	1. Floor wire 2. Front seat outer belt assembly LH (Driver side front pretensioner squib) 3. Center airbag sensor assembly	○	RS-186
B1905/74	Short in Front Passenger Side Front Pretensioner Squib Circuit	1. Floor wire 2. Front seat outer belt assembly RH (Front passenger side front pretensioner squib) 3. Center airbag sensor assembly	○	RS-191
B1906/74	Open in Front Passenger Side Front Pretensioner Squib Circuit	1. Floor wire 2. Front seat outer belt assembly RH (Front passenger side front pretensioner squib) 3. Center airbag sensor assembly	○	RS-191

DTC No.	Detection Item	Trouble Area	Check Mode	See page
B1907/74	Short to GND in Front Passenger Side Front Pretensioner Squib Circuit	1. Floor wire 2. Front seat outer belt assembly RH (Front passenger side front pretensioner squib) 3. Center airbag sensor assembly	○	RS-191
B1908/74	Short to B+ in Front Passenger Side Front Pretensioner Squib Circuit	1. Floor wire 2. Front seat outer belt assembly RH (Front passenger side front pretensioner squib) 3. Center airbag sensor assembly	○	RS-191

DTC	B1000/31	Center Airbag Sensor Assembly Malfunction

DESCRIPTION

The center airbag sensor assembly consists of parts including the airbag sensor, the safing sensor, the drive circuit, the diagnosis circuit, and the ignition control.

When the center airbag sensor assembly receives signals from the airbag sensor, it determines whether or not the SRS should be activated.

DTC B1000/31 is set when a malfunction is detected in the center airbag sensor assembly.

DTC No.	DTC Detecting Condition	Trouble Area
B1000/31	• Center airbag sensor assembly malfunction	• Center airbag sensor assembly

HINT:

When any other DTCs are set simultaneously with B1000/31, repair the malfunctions indicated by those DTCs first.

INSPECTION PROCEDURE

1	CHECK CENTER AIRBAG SENSOR ASSEMBLY

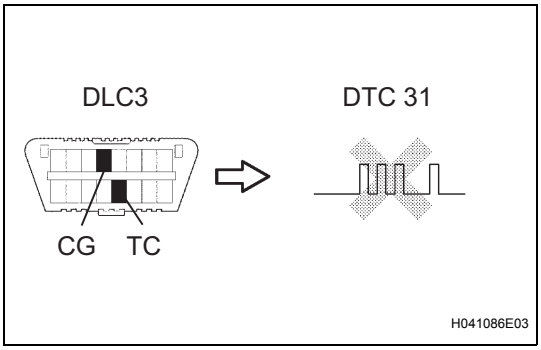

(a) Turn the ignition switch to the lock position.
(b) Disconnect the negative (-) terminal cable from the battery, and wait for at least 90 seconds.
(c) Connect the negative (-) terminal cable to the battery, and wait for at least 2 seconds.
(d) Turn the ignition switch to the on position, and wait for at least 60 seconds.
(e) Clear any DTCs stored in the memory (See page RS-38).
(f) Turn the ignition switch to the lock position.
(g) Turn the ignition switch to the on position, and wait for at least 60 seconds.
(h) Check for DTCs (See page RS-38).

OK:

DTC B1000/31 is not output.

NG → **REPLACE CENTER AIRBAG SENSOR ASSEMBLY**

OK

USE SIMULATION METHOD TO CHECK

DTC	B1610/13	Front Airbag Sensor RH Circuit Malfunction

DESCRIPTION

The front airbag sensor RH consists of part including the diagnostic circuit and the frontal deceleration sensor.

When the center airbag sensor assembly receives signals from the frontal deceleration sensor, it determines whether or not the SRS should be activated.

DTC B1610/13 is set when a malfunction is detected in the front airbag sensor RH circuit.

DTC No.	DTC Detecting Condition	Trouble Area
B1610/13	• Center airbag sensor assembly detects line short circuit signal, open circuit signal, short circuit to ground signal or short circuit to B+ signal in front airbag sensor RH circuit for 2 seconds. • Front airbag sensor RH malfunction • Center airbag sensor assembly malfunction	• Instrument panel wire • Engine room main wire • Front airbag sensor RH • Center airbag sensor assembly

WIRING DIAGRAM

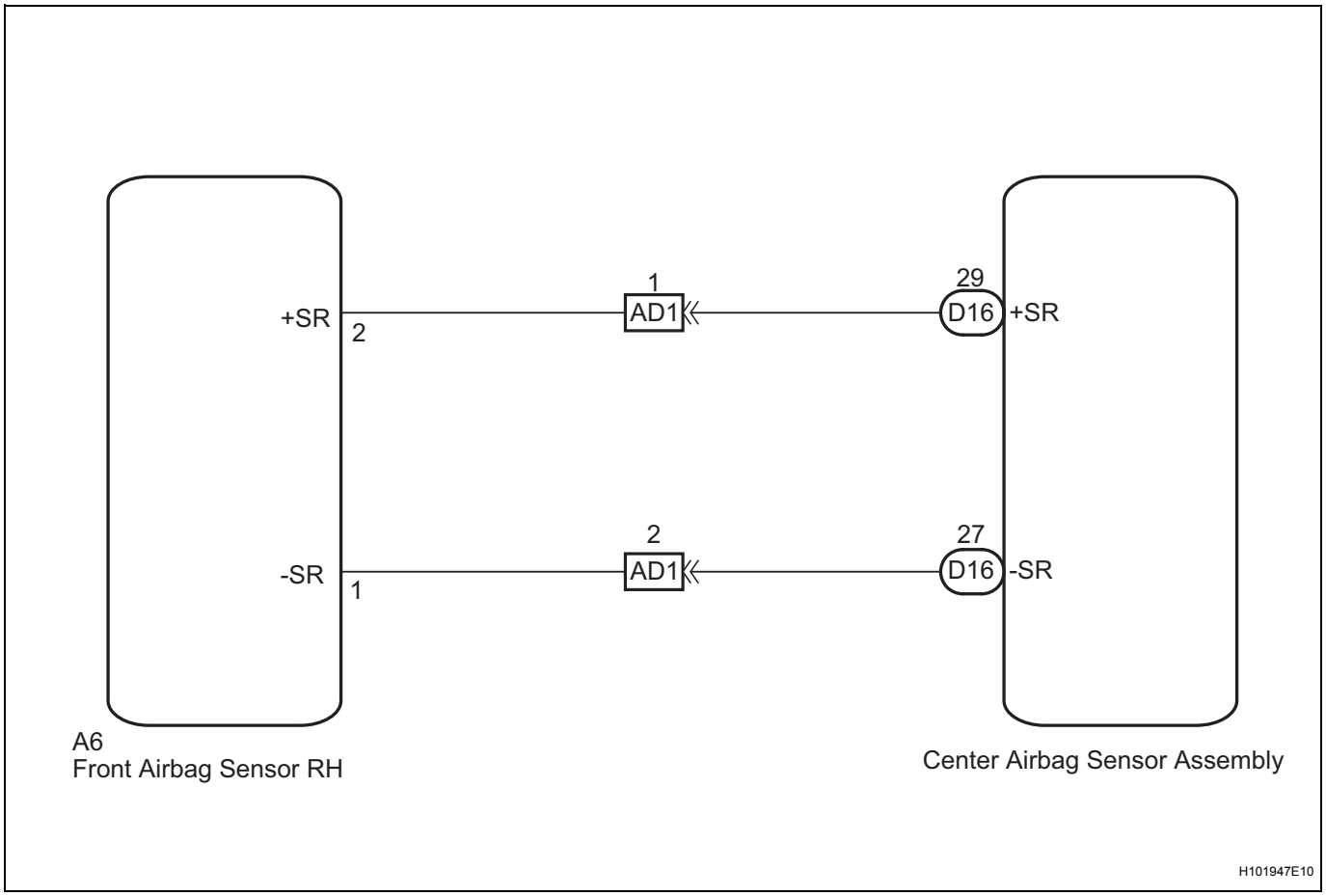

INSPECTION PROCEDURE

NOTICE:

In order to prevent unexpected airbag deployment, disconnect the following connectors before inspecting parts such as wire harnesses, if the application of tester probes to the center airbag sensor assembly connector is necessary.

1. Turn the ignition switch to the lock position.
2. Disconnect the negative (-) terminal cable from the battery, and wait for at least 90 seconds.
3. Disconnect the connector from the center airbag sensor assembly.

4. Disconnect the connectors from the steering pad.
5. Disconnect the connectors from the front passenger airbag assembly.
6. Disconnect the connector from the front seat outer belt assembly LH.
7. Disconnect the connector from the front seat outer belt assembly RH.
   HINT:
   Skip the following steps if side and curtain shield airbags are not fitted.
8. Disconnect the connector from the front seat side airbag assembly LH.
9. Disconnect the connector from the front seat side airbag assembly RH.
10. Disconnect the connector from the curtain shield airbag assembly LH.
11. Disconnect the connector from the curtain shield airbag assembly RH.

RS

1	CHECK DTC

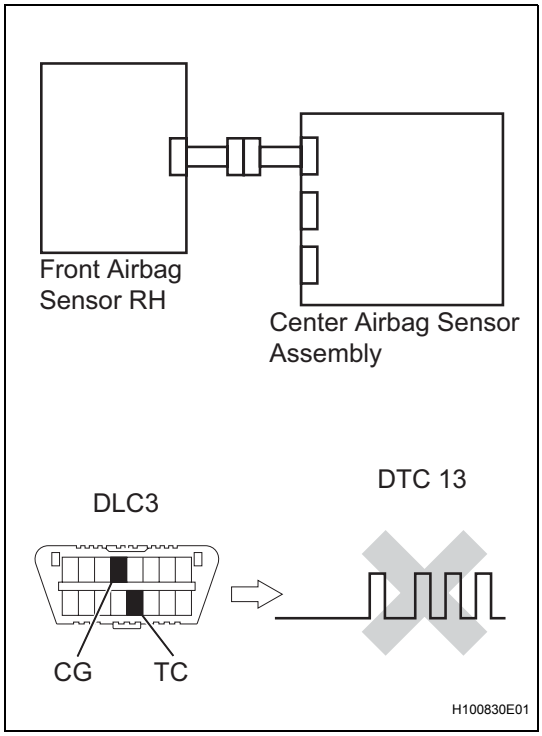

(a) Turn the ignition switch on, and wait for at least 60 seconds.
(b) Clear the DTCs stored in the memory (See page RS-38).
(c) Turn the ignition switch off.
(d) Turn the ignition switch on, and wait for at least 60 seconds.
(e) Check the DTCs (See page RS-38).
OK:
DTC B1610/13 is not output.
HINT:
DTCs other than DTC B1610/13 may be output at this time, but they are not related to this check.

OK → **USE SIMULATION METHOD TO CHECK**

NG

2	CHECK CONNECTION OF CONNECTORS

(a) Turn the ignition switch off.
(b) Disconnect the negative (-) terminal cable from the battery, and wait for at least 90 seconds.
(c) Check that the connectors are properly connected to the center airbag sensor assembly and the front airbag sensor RH.
OK:
The connectors are properly connected.

NG → **CONNECT CONNECTORS**

OK

3 CHECK FRONT AIRBAG SENSOR RH CIRCUIT (FOR OPEN)

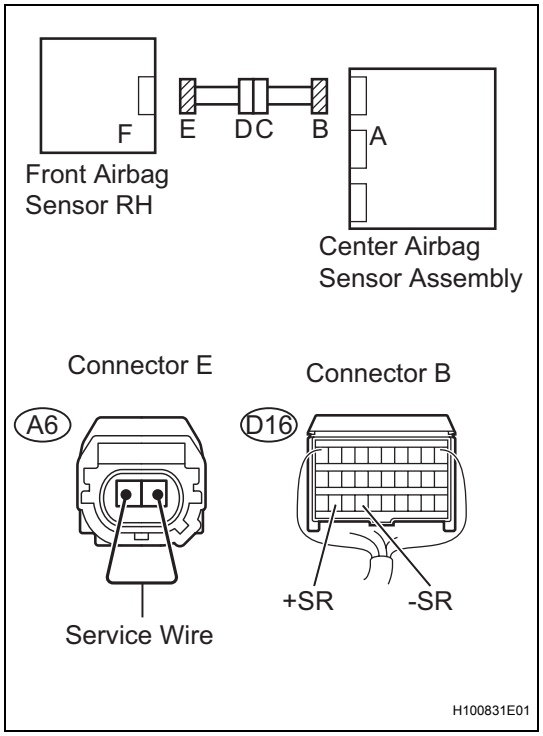

(a) Disconnect the connectors from the center airbag sensor assembly and the front airbag sensor RH.
(b) Using a service wire, connect A6-1 and A6-2 of connector E.
NOTICE:
Do not forcibly insert the service wire into the terminals of the connector when connecting.
(c) Measure the resistance.
Standard resistance

Tester Connection	Condition	Specified Condition
D16-29 (+SR) - D16-27 (-SR)	Always	Below 1 Ω

NG → **Go to step 8**

OK

4 CHECK FRONT AIRBAG SENSOR RH CIRCUIT (FOR SHORT)

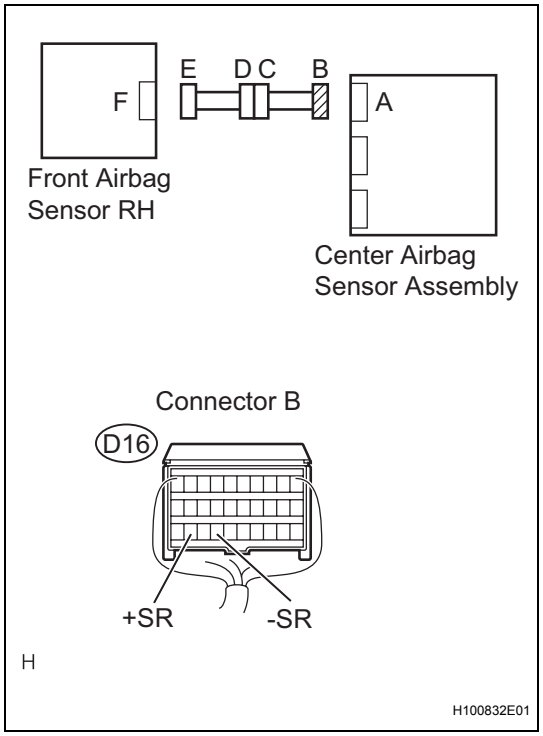

(a) Disconnect the service wire from connector E.
(b) Measure the resistance.
Standard resistance

Tester Connection	Condition	Specified Condition
D16-29 (+SR) - D16-27 (-SR)	Always	1 MΩ or higher

NG → **Go to step 9**

OK

RS

5 CHECK FRONT AIRBAG SENSOR RH CIRCUIT (TO B+)

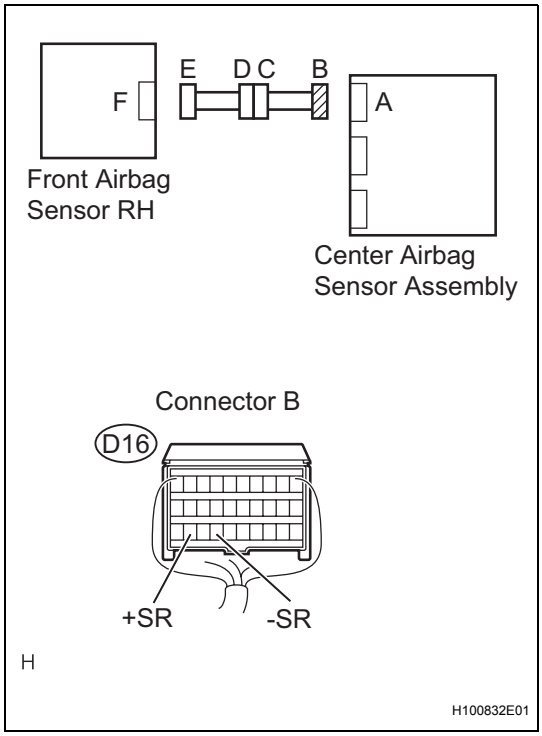

(a) Connect the negative (-) terminal cable to the battery, and wait for at least 2 seconds.
(b) Turn the ignition switch on.
(c) Measure the voltage.

Standard voltage

Tester Connection	Condition	Specified Condition
D16-29 (+SR) - Body ground	Ignition switch on	Below 1 V
D16-27 (-SR) - Body ground	Ignition switch on	Below 1 V

NG → **Go to step 10**

OK

6 CHECK FRONT AIRBAG SENSOR RH CIRCUIT (TO GROUND)

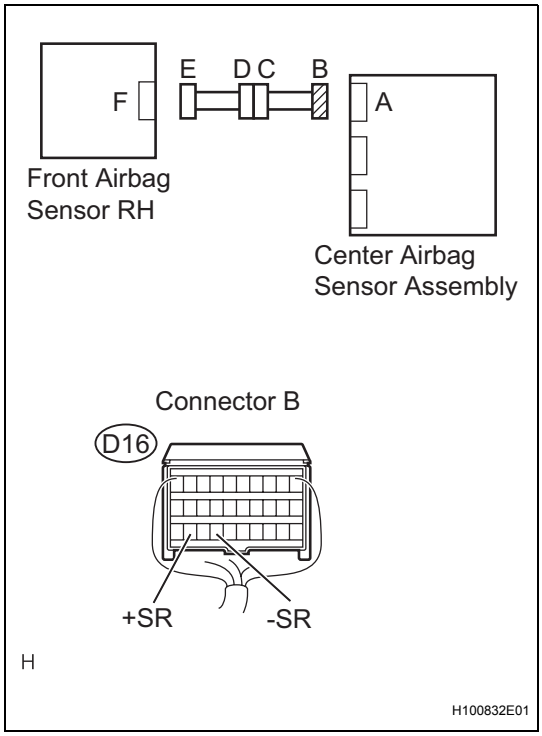

(a) Turn the ignition switch off.
(b) Disconnect the negative (-) terminal cable from the battery, and wait for at least 90 seconds.
(c) Measure the resistance.

Standard resistance

Tester Connection	Condition	Specified Condition
D16-29 (+SR) - Body ground	Always	1 MΩ or higher
D16-27 (-SR) - Body ground	Always	1 MΩ or higher

NG → **Go to step 11**

OK

7	CHECK FRONT AIRBAG SENSOR RH

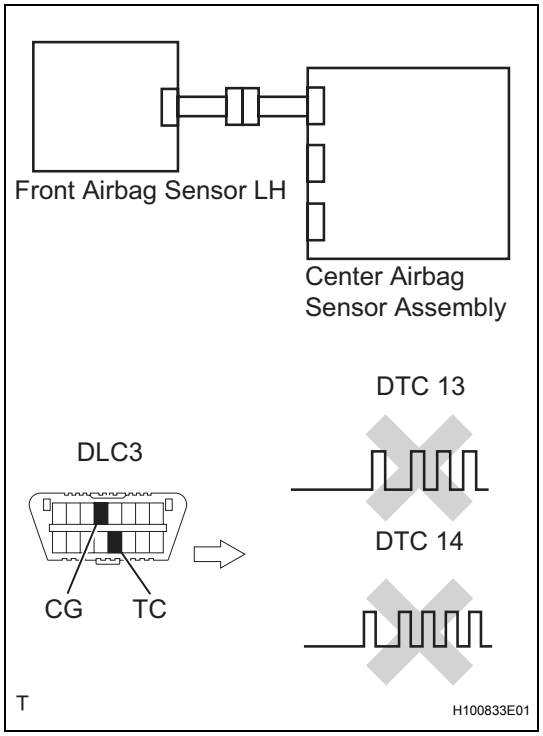

(a) Connect the connectors to the center airbag sensor assembly.
(b) Interchange the front airbag sensor LH with RH and connect the connectors to them.
(c) Connect the negative (-) terminal cable to the battery, and wait for at least 2 seconds.
(d) Turn the ignition switch on, and wait for at least 60 seconds.
(e) Clear the DTCs stored in the memory (See page RS-38).
(f) Turn the ignition switch off.
(g) Turn the ignition switch on, and wait for at least 60 seconds.
(h) Check the DTCs (See page RS-38).

Result

Result	Proceed to
DTC B1610/13 is output.	A
DTC B1615/14 is output.	B
DTC B1610/13 and B1615/14 are not output.	C

HINT:
DTCs other than DTC B1610/13 and B1615/14 may be output at this time, but they are not related to this check.

A → **REPLACE CENTER AIRBAG SENSOR ASSEMBLY**

B → **REPLACE FRONT AIRBAG SENSOR RH**

C

USE SIMULATION METHOD TO CHECK

RS

8	CHECK ENGINE ROOM MAIN WIRE (FOR OPEN)

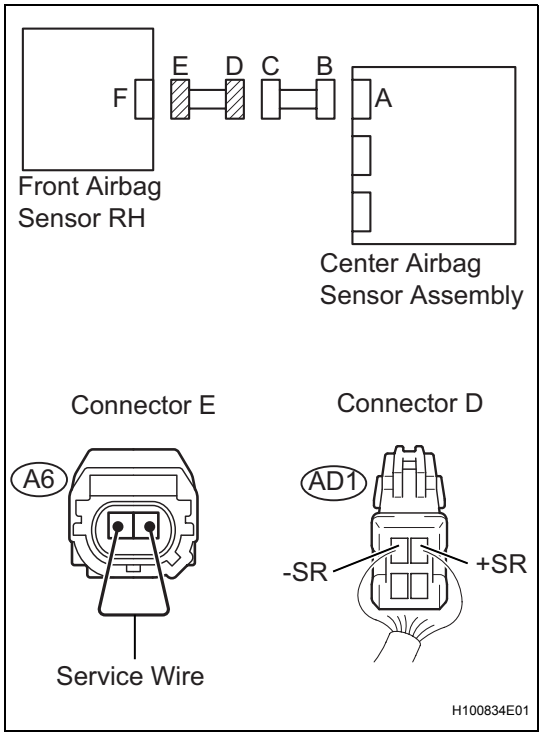

(a) Disconnect the engine room main wire connector from the instrument panel wire.
HINT:
The service wire has already been inserted into connector E.

(b) Measure the resistance.
Standard resistance

Tester Connection	Condition	Specified Condition
AD1-1 (+SR) - AD1-2 (-SR)	Always	Below 1 Ω

NG → **REPAIR OR REPLACE ENGINE ROOM MAIN WIRE**

OK

REPAIR OR REPLACE INSTRUMENT PANEL WIRE

9	CHECK ENGINE ROOM MAIN WIRE (FOR SHORT)

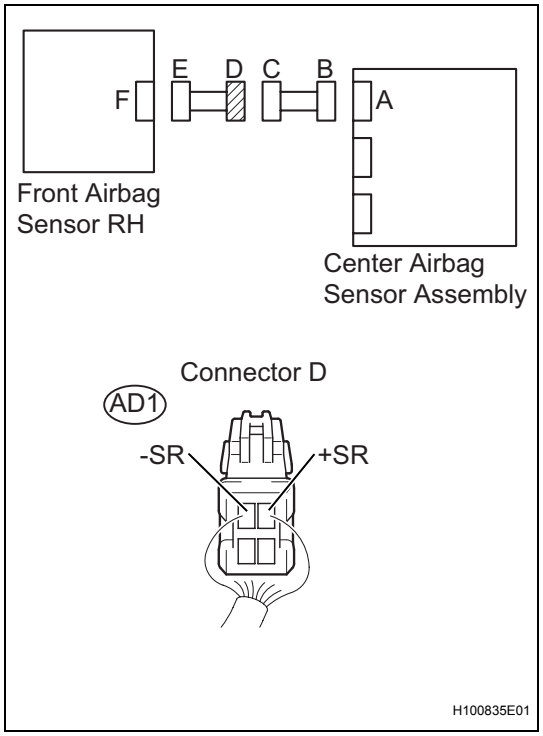

(a) Disconnect the service wire from connector E.
(b) Measure the resistance.
Standard resistance

Tester Connection	Condition	Specified Condition
AD1-1 (+SR) - AD1-2 (-SR)	Always	1 MΩ or higher

NG → **REPAIR OR REPLACE ENGINE ROOM MAIN WIRE**

OK

REPAIR OR REPLACE INSTRUMENT PANEL WIRE

RS

10	CHECK ENGINE ROOM MAIN WIRE (TO B+)

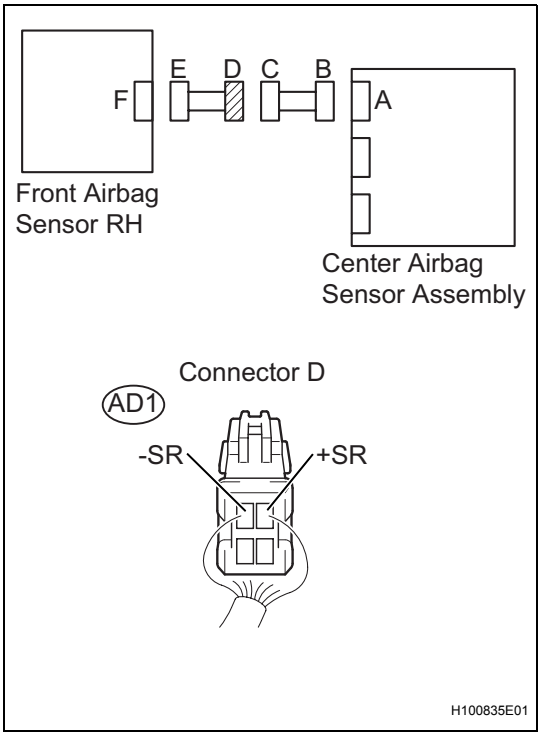

(a) Turn the ignition switch to the lock position.
(b) Disconnect the negative (-) terminal cable from the battery, and wait for at least 90 seconds.
(c) Disconnect the engine room main wire connector from the instrument panel wire.
(d) Connect the negative (-) terminal cable to the battery, and wait for at least 2 seconds.
(e) Turn the ignition switch on.
(f) Measure the voltage.

Standard voltage

Tester Connection	Condition	Specified Condition
AD1-1 (+SR) - Body ground	Ignition switch on	Below 1 V
AD1-2 (-SR) - Body ground	Ignition switch on	Below 1 V

NG → **REPAIR OR REPLACE ENGINE ROOM MAIN WIRE**

OK

REPAIR OR REPLACE INSTRUMENT PANEL WIRE

11	CHECK ENGINE ROOM MAIN WIRE (TO GROUND)

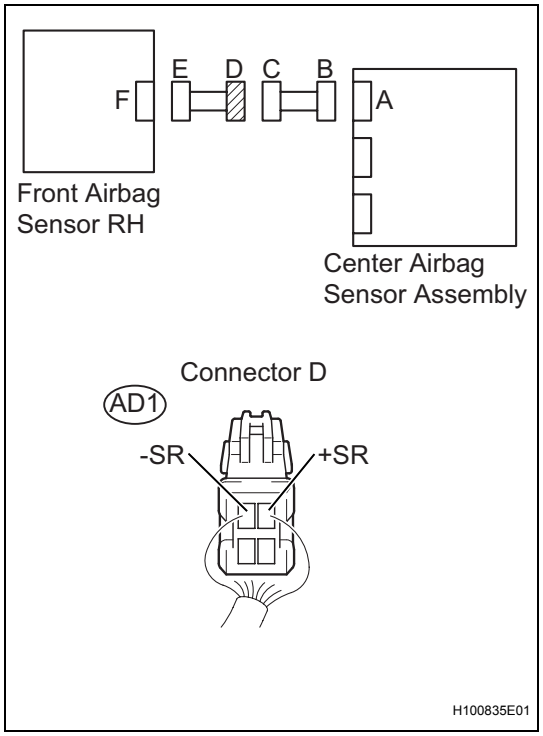

(a) Disconnect the engine room main wire connector from the instrument panel wire.
(b) Measure the resistance.
Standard resistance

Tester Connection	Condition	Specified Condition
AD1-1 (+SR) - Body ground	Always	1 MΩ or higher
AD1-2 (-SR) - Body ground	Always	1 MΩ or higher

NG → **REPAIR OR REPLACE ENGINE ROOM MAIN WIRE**

OK

REPAIR OR REPLACE INSTRUMENT PANEL WIRE

RS

INSTALLATION

CAUTION:
Some of these service operations affect the SRS airbag system. Read the precautionary notices concerning the SRS airbag system before servicing.
NOTICE:
Always use "Torx" socket wrench E10 when installing the rear seat.
HINT:
The procedure described below is for the RH side. Use the same procedure for both the RH and LH sides, unless otherwise specified.

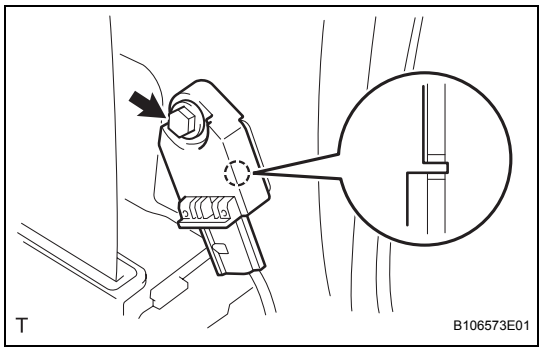

1. **INSTALL SIDE AIRBAG SENSOR**
   (a) Confirm that the ignition switch is turned to OFF.
   (b) Confirm that the negative battery terminal is detached.
   CAUTION:
   - **Confirm that the negative battery terminal is disconnected before performing the operation. Even an impact to only the airbag sensor will cause the airbag to deploy.**

   (c) Insert the hook into the body hole and install the airbag sensor with the bolt.
   Torque: 9.0 N*m (90 kgf*cm, 80 in.*lbf)
   NOTICE:
   - **Do not use a side airbag sensor that has been dropped.**
   - **Do not subject the side airbag sensor to any impact or force.**

   (d) Confirm that there is no looseness by shaking the side airbag sensor.

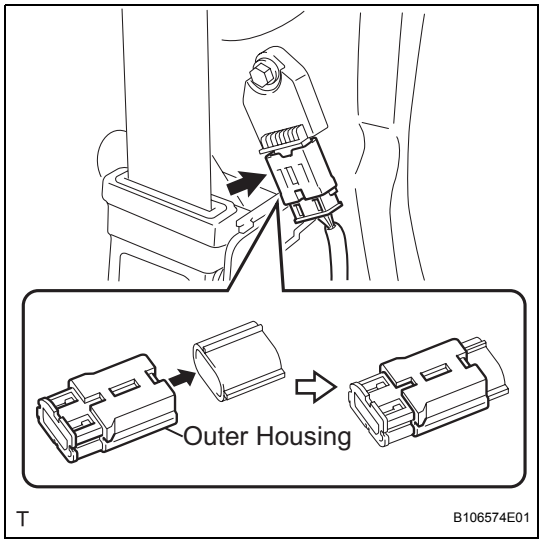

   (e) Connect the airbag connector.
2. **INSTALL FRONT QUARTER TRIM PANEL ASSEMBLY RH (See page IR-118)**
3. **INSTALL FRONT DOOR OPENING TRIM WEATHERSTRIP RH (See page IR-119)**
4. **INSTALL FRONT DOOR SCUFF PLATE RH (See page IR-119)**
5. **INSTALL REAR SEAT ASSEMBLY LH (for 60/40 Split Seat Type) (See page SE-84)**
6. **INSTALL REAR SEAT ASSEMBLY RH (for 60/40 Split Seat Type) (See page SE-102)**
7. **INSTALL NO. 2 REAR SEAT LEG COVER (for 60/40 Split Seat Type) (See page SE-85)**
8. **INSTALL NO. 1 REAR SEAT LEG COVER (for 60/40 Split Seat Type) (See page IR-119)**
9. **INSTALL REAR SEATBACK ASSEMBLY (for Hold Down Seat Type) (See page SE-122)**

10. **INSTALL REAR SEAT CUSHION COVER PAD SUB-ASSEMBLY (for Hold Down Seat Type) (See page SE-123)**
11. **INSTALL DECK FLOOR BOX RH (See page IR-83)**
12. **INSTALL DECK FLOOR BOX LH (See page IR-83)**
13. **INSTALL DECK BOARD SUB-ASSEMBLY (See page IR-83)**
14. **INSTALL PACKAGE TRAY TRIM PANEL ASSEMBLY (See page IR-83)**
15. **CONNECT CABLE TO NEGATIVE BATTERY TERMINAL**
    Torque: 5.4 N*m (55 kgf*cm, 48 in.*lbf)
16. **INSPECT SRS WARNING LIGHT**
    (See page RS-31)

REAR AIRBAG SENSOR (for Sedan)

COMPONENTS

RS

for 60/40 Split Seat Type:

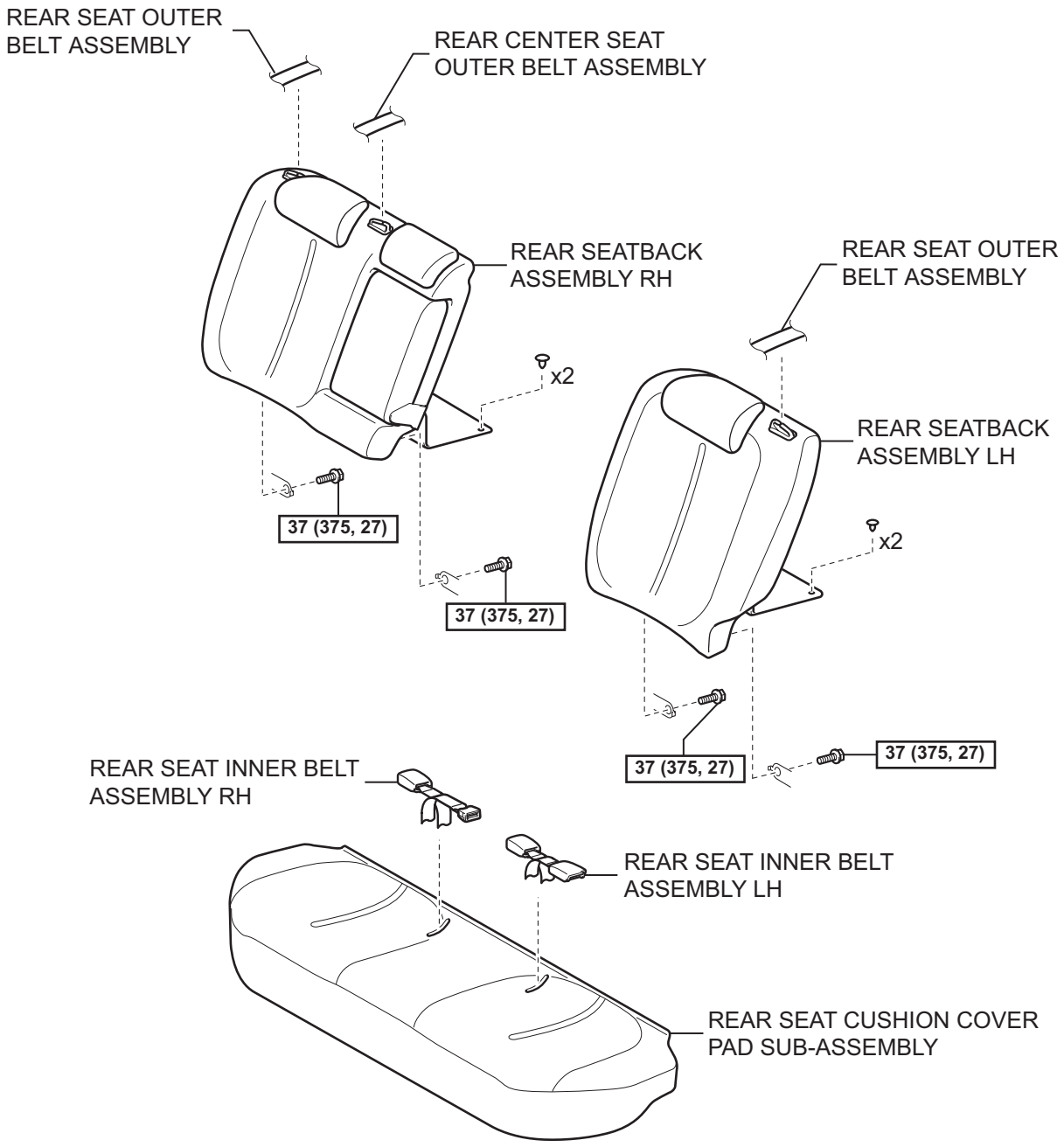

N*m (kgf*cm, ft*lbf) : Specified torque

T

C143561E01

for Fixed Seat Type:

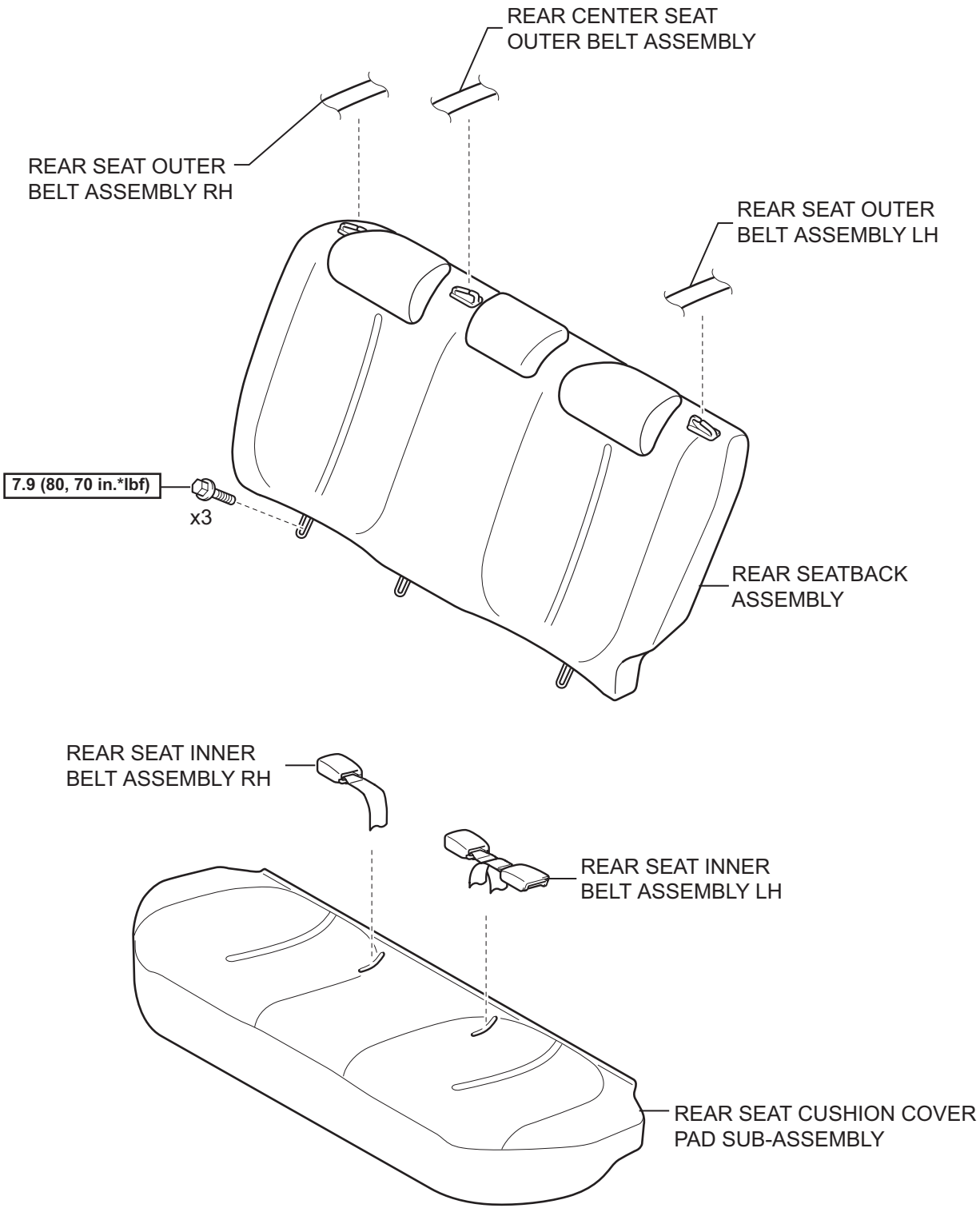

N*m (kgf*cm, ft*lbf) : Specified torque

T

C143562E01

RS

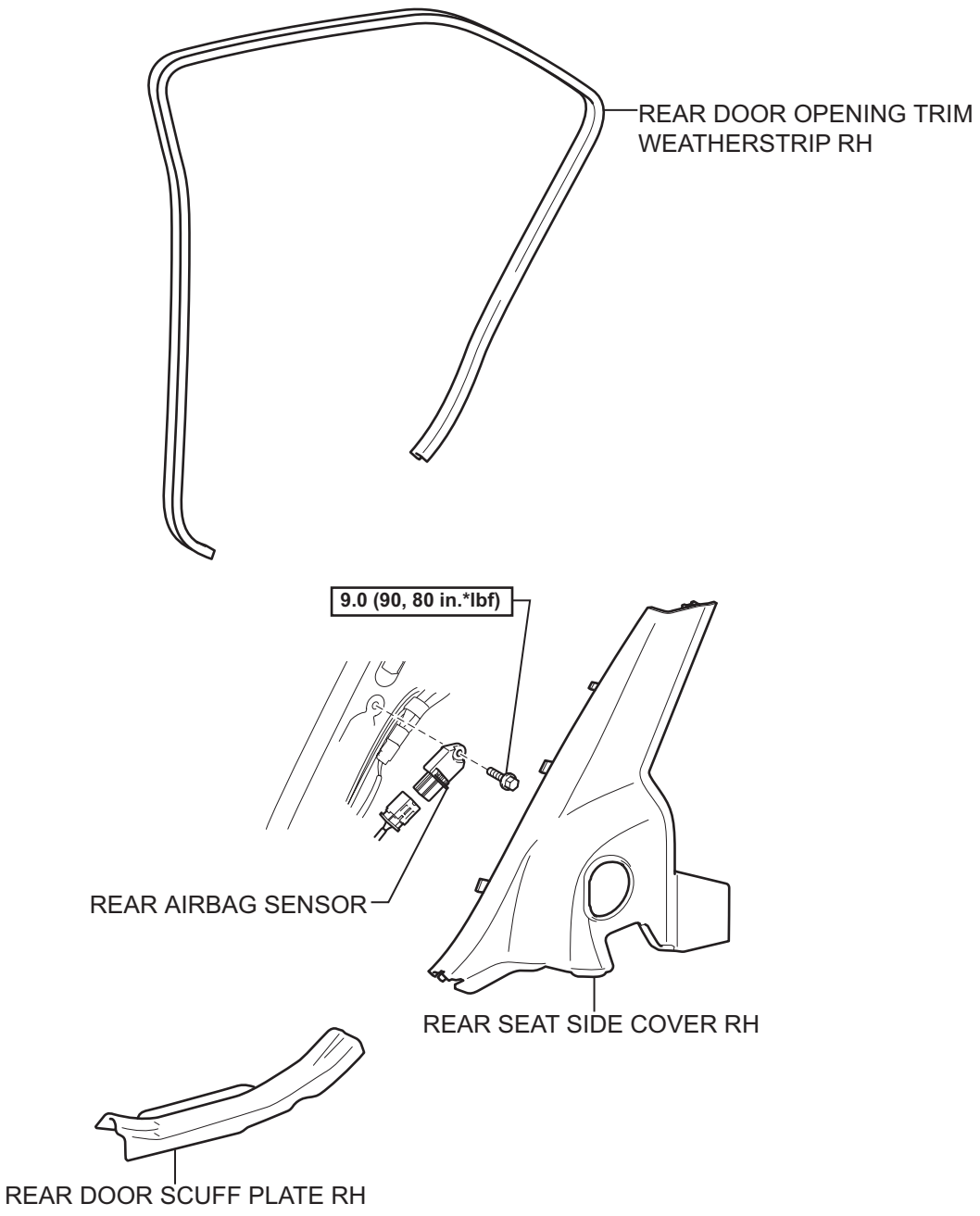

N*m (kgf*cm, ft*lbf) : Specified torque

B135704E01

ON-VEHICLE INSPECTION

1. **INSPECT REAR AIRBAG SENSOR ASSEMBLY (for Vehicle not Involved in Collision)**
   (a) Perform a diagnostic system check (See page RS-38).

2. **INSPECT REAR AIRBAG SENSOR ASSEMBLY (for Vehicle Involved in Collision and Airbag not Deployed)**
   CAUTION:
   For rear airbag sensor removal and installation procedures, see pages RS-467 and RS-468, and be sure to carefully follow the correct procedure.
   (a) Perform a diagnostic system check (See page RS-38).
   (b) When the center pillar of the vehicle or its periphery is damaged, check whether there is any damage to the rear airbag sensor. If there are any defects, such as those mentioned below, replace the rear airbag sensor with a new one:
   - Any cracks, dents or chips in the case.
   - Any cracks or other damage to the connector.
   - Peeling of the label or damage to the serial number.

3. **INSPECT REAR AIRBAG SENSOR ASSEMBLY (for Vehicle Involved in Collision)**
   CAUTION:
   For rear airbag sensor removal and installation procedures, see pages RS-467 and IR-107, and carefully follow the correct procedure.
   (a) Replace the rear airbag sensor.

RS

RS

REMOVAL

CAUTION:
Some of these service operations affect the SRS airbag system. Read the precautionary notices concerning the SRS airbag system before servicing (See page RS-1).

HINT:
The procedure described below is for the RH side. Use the same procedure for both the RH and LH sides, unless otherwise specified.

1. **DISCONNECT CABLE FROM NEGATIVE BATTERY TERMINAL**
2. **REMOVE REAR SEAT CUSHION COVER PAD SUB-ASSEMBLY (See page IR-13)**
3. **REMOVE REAR SEATBACK ASSEMBLY RH (for 60/40 Split Seat Type) (See page SE-57)**
4. **REMOVE REAR SEATBACK ASSEMBLY LH (for 60/40 Split Seat Type) (See page SE-71)**
5. **REMOVE REAR SEATBACK ASSEMBLY (for Fixed Seat Type) (See page SE-106)**
6. **REMOVE LUGGAGE COMPARTMENT FLOOR MAT (for 60/40 Split Seat Type) (See page ED-133)**
7. **REMOVE SPARE WHEEL COVER ASSEMBLY (for 60/40 Split Seat Type) (See page ED-133)**
8. **REMOVE LUGGAGE COMPARTMENT TRIM INNER PAD (for 60/40 Split Seat Type) (See page ED-134)**
9. **REMOVE REAR DOOR SCUFF PLATE RH (See page IR-15)**
10. **REMOVE REAR DOOR OPENING TRIM WEATHERSTRIP RH (See page IR-15)**
11. **REMOVE REAR SEAT SIDE COVER RH (See page IR-16)**
12. **REMOVE REAR AIRBAG SENSOR**
    CAUTION:
    Confirm that the negative battery terminal is disconnected before performing the operation. Even an impact to only the airbag sensor will cause the airbag to deploy.

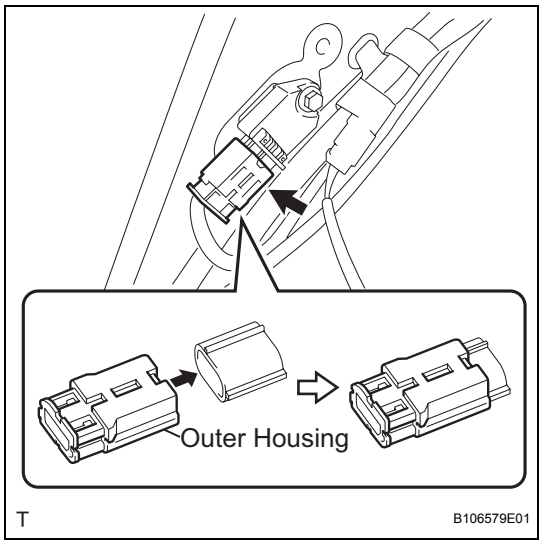

(a) Slide the outer housing and detach the airbag connector.

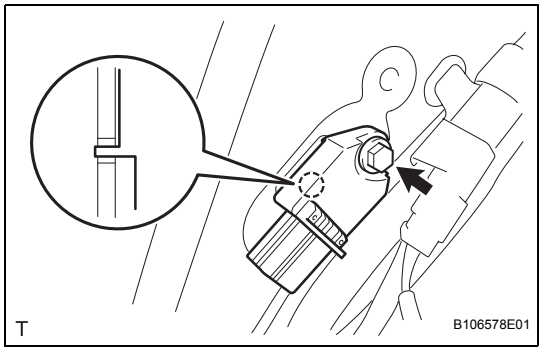

(b) Disengage the bolt and hook and remove the airbag sensor.

RS

INSTALLATION

CAUTION:
Some of these service operations affect the SRS airbag system. Read the precautionary notices concerning the SRS airbag system before servicing (See page RS-1).
NOTICE:
Always use "Torx" socket wrench E10 when removing the rear seat.
HINT:
The procedure described below is for the RH side. Use the same procedure for both the LH and RH sides, unless otherwise specified.

1. **INSTALL REAR AIRBAG SENSOR**
   (a) Confirm that the ignition switch is turned to off.
   (b) Confirm that the negative battery terminal is detached.
   CAUTION:
   Confirm that the negative battery terminal is disconnected before performing the operation. Even an impact to only the airbag sensor will cause the airbag to deploy.

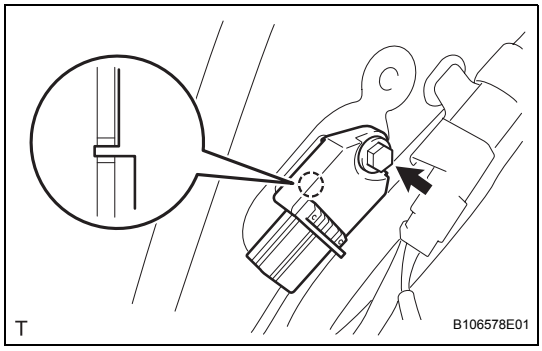

   (c) Insert the hook into the body hole and install the airbag sensor with the bolt.
   Torque: 9.0 N*m (90 kgf*cm, 80 in.*lbf)
   NOTICE:
   - **Do not use a rear airbag sensor that has been dropped.**
   - **Do not subject the rear airbag sensor to any impact or force.**
   (d) Confirm that there is no looseness by shaking the rear airbag sensor.

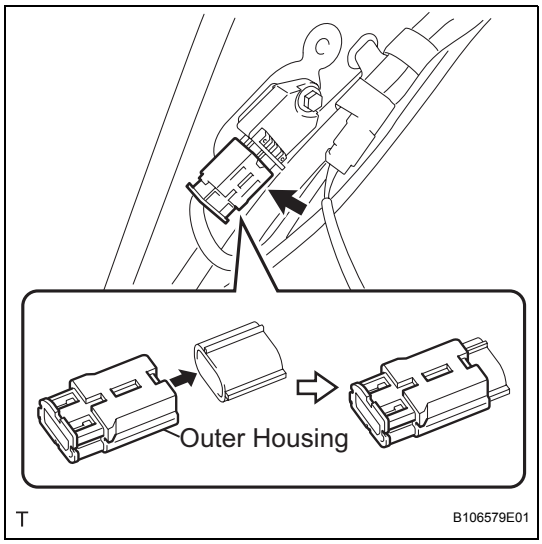

   (e) Connect the airbag connector.
2. **INSTALL REAR SEAT SIDE COVER RH (See page IR-33)**
3. **INSTALL REAR DOOR OPENING TRIM WEATHERSTRIP RH (See page IR-33)**
4. **INSTALL REAR DOOR SCUFF PLATE RH (See page IR-34)**
5. **INSTALL LUGGAGE COMPARTMENT TRIM INNER PAD (for 60/40 Split Seat Type) (See page ED-136)**
6. **INSTALL SPARE WHEEL COVER ASSEMBLY (for 60/40 Split Seat Type) (See page ED-137)**
7. **INSTALL LUGGAGE COMPARTMENT FLOOR MAT (for 60/40 Split Seat Type) (See page ED-137)**
8. **INSTALL REAR SEATBACK ASSEMBLY RH (for 60/40 Split Seat Type) (See page SE-65)**
9. **INSTALL REAR SEATBACK ASSEMBLY LH (for 60/40 Split Seat Type) (See page SE-52)**

10. **INSTALL REAR SEATBACK ASSEMBLY (for Fixed Seat Type) (See page SE-108)**
11. **INSTALL REAR SEAT CUSHION COVER PAD SUB-ASSEMBLY (See page IR-36)**
12. **CONNECT CABLE TO NEGATIVE BATTERY TERMINAL**
    Torque: 5.4 N*m (55 kgf*cm, 48 in.*lbf)
13. **INSPECT SRS WARNING LIGHT**
    (See page RS-31)

REAR AIRBAG SENSOR (for 5 Door)

COMPONENTS

RS

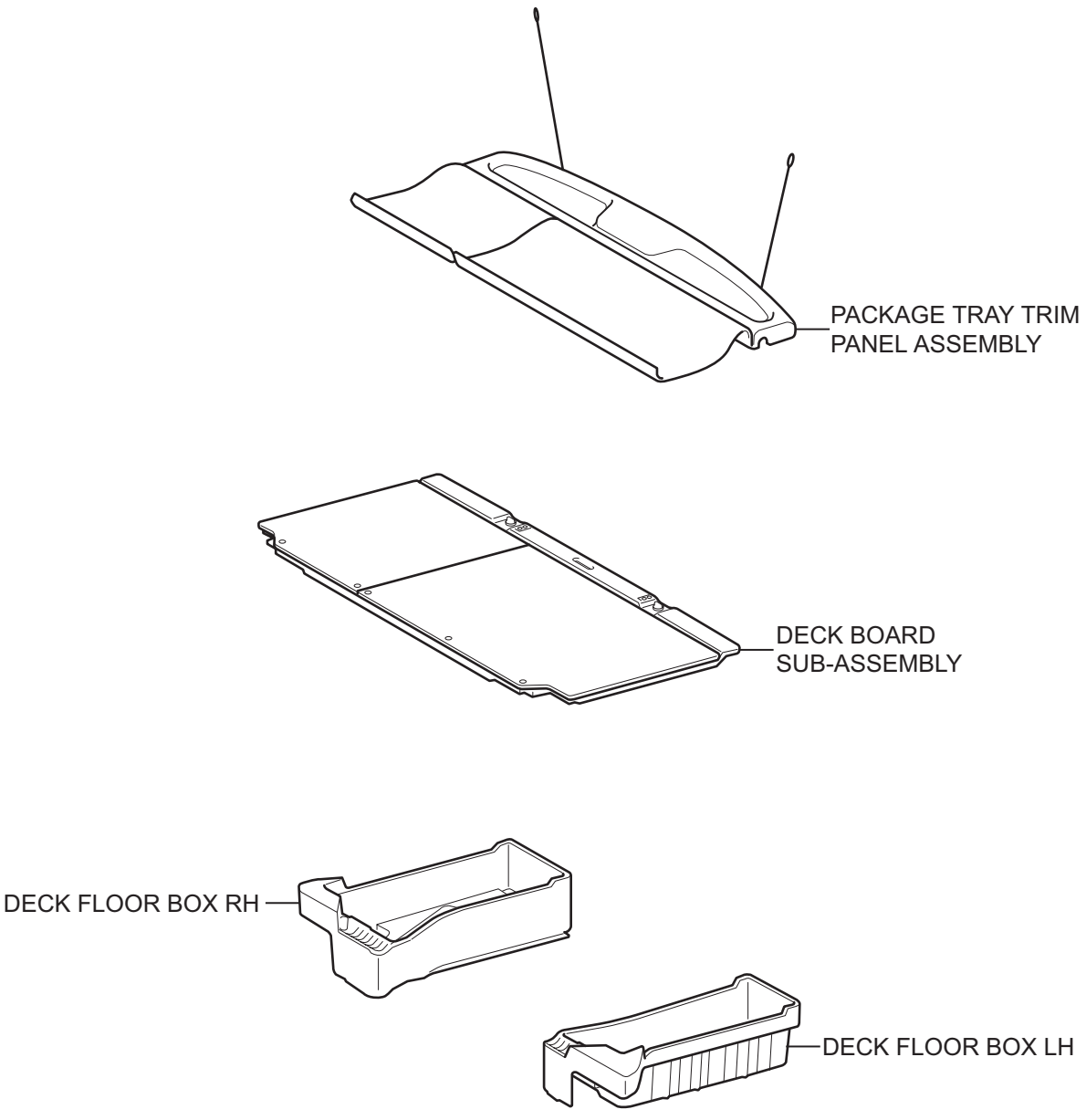

T

B114273E01

RS

for 60/40 Split Seat Type:

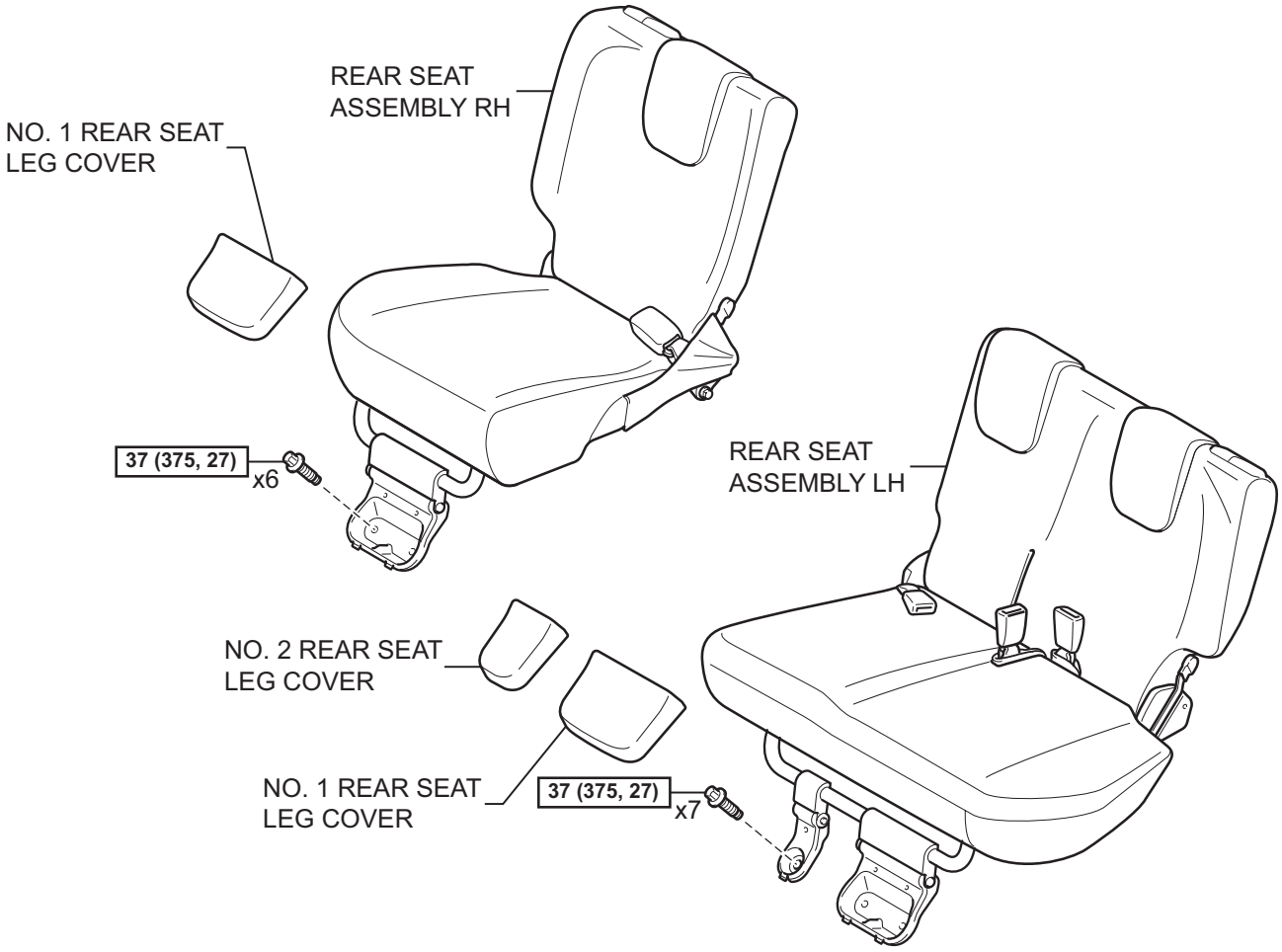

for Hold Down Seat Type:

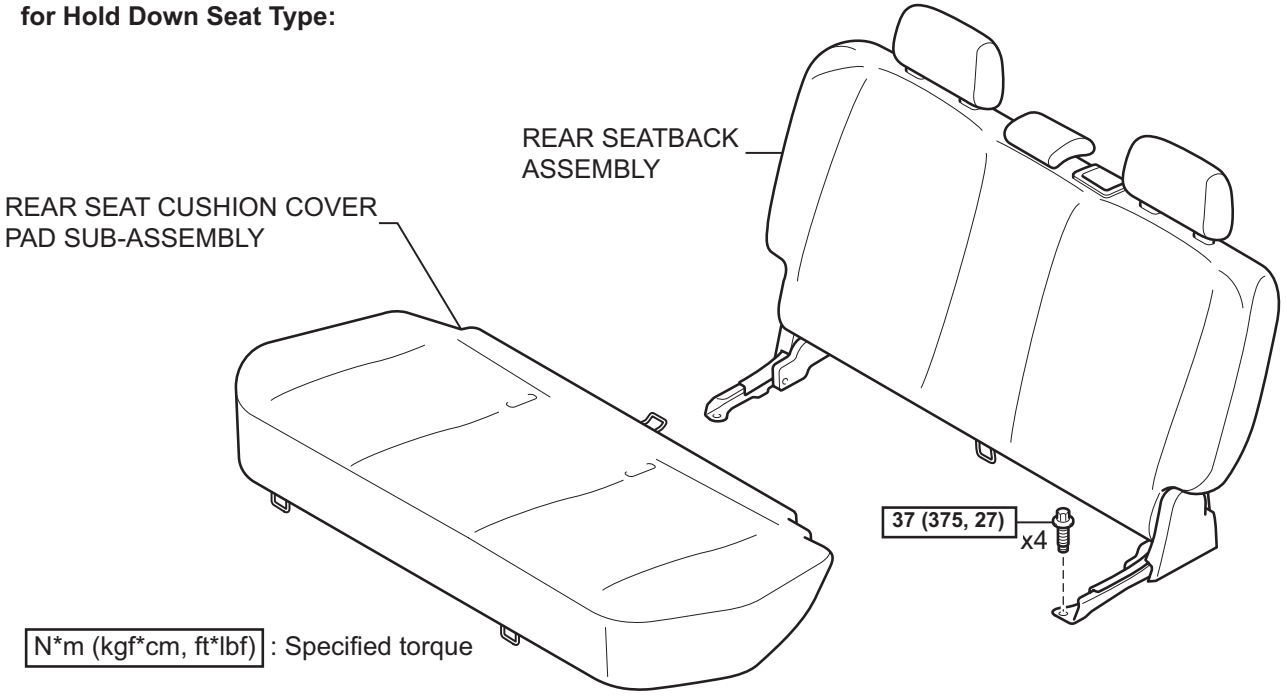

T

B121713E03

RS

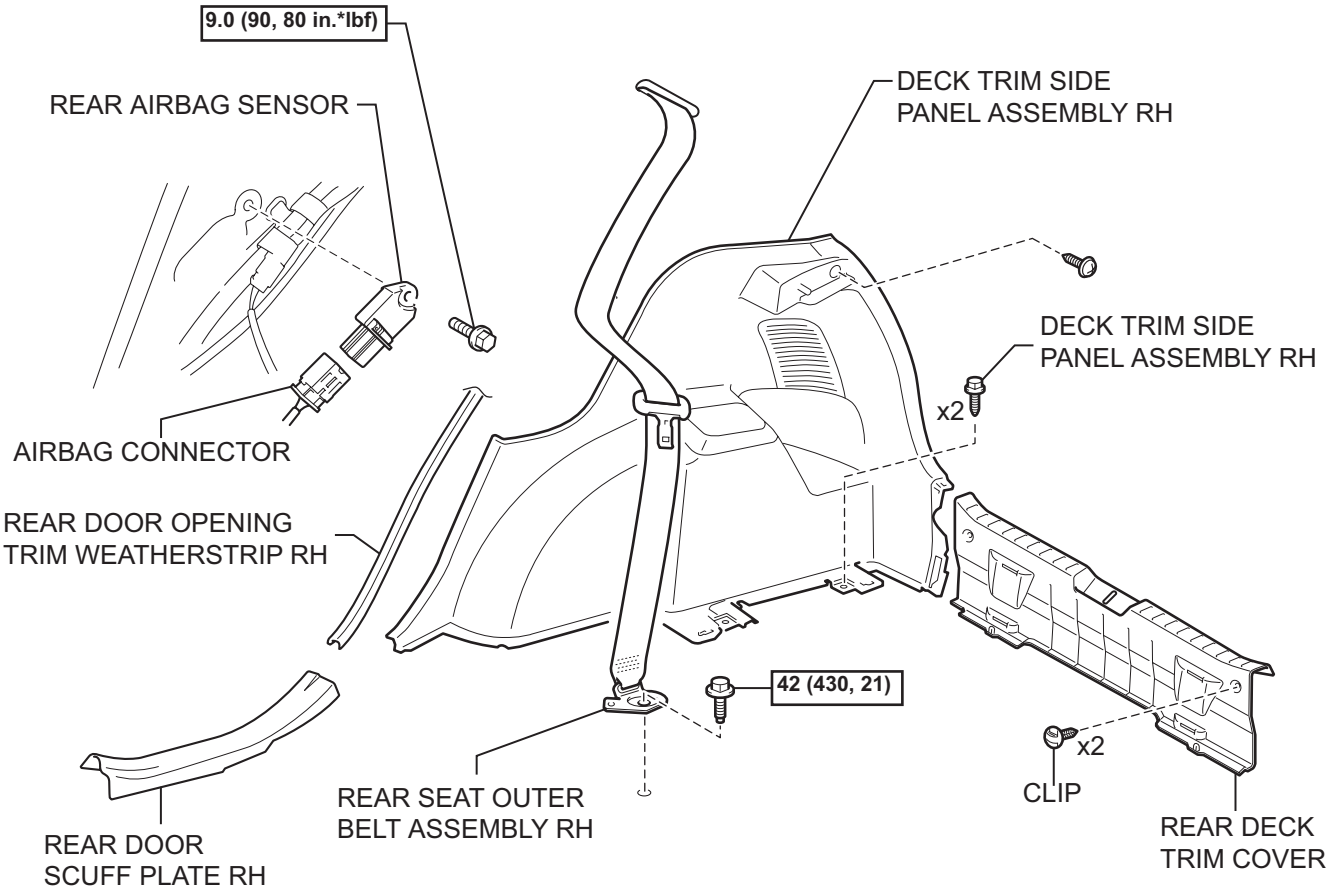

N*m (kgf*cm, ft*lbf) : Specified torque

C121156E01

ON-VEHICLE INSPECTION

1. **INSPECT REAR AIRBAG SENSOR ASSEMBLY (for Vehicle not Involved in Collision)**
   (a) Perform a diagnostic system check (See page RS-38).

2. **INSPECT REAR AIRBAG SENSOR ASSEMBLY (for Vehicle Involved in Collision and Airbag not Deployed)**
   CAUTION:
   For rear airbag sensor removal and installation procedures, see pages RS-473 and RS-475, and carefully follow the correct procedure.
   (a) Perform a diagnostic system check (See page RS-38).
   (b) When the center pillar of the vehicle or its periphery is damaged, check whether there is any damage to the rear airbag sensor. If there are any defects, such as those mentioned below, replace the rear airbag sensor with a new one:
   - Any cracks, dents or chips in the case.
   - Any cracks or other damage to the connector.
   - Peeling of the label or damage to the serial number.

3. **INSPECT REAR AIRBAG SENSOR ASSEMBLY (for Vehicle Involved in Collision)**
   CAUTION:
   For rear airbag sensor removal and installation procedures, see pages RS-473 and RS-475, and carefully follow the correct procedure.
   (a) Replace the rear airbag sensor.

RS

REMOVAL

CAUTION:
Some of the these service operations affect the SRS airbag system. Read the precautionary notices concerning the SRS airbag system before servicing (See page RS-1).
NOTICE:
Always use "Torx" socket wrench E10 when installing the rear seat.
HINT:
The procedure described below is for the RH side. Use the same procedure for both the RH and LH sides, unless otherwise specified.

1. **DISCONNECT CABLE FROM NEGATIVE BATTERY TERMINAL**
2. **REMOVE PACKAGE TRAY TRIM PANEL ASSEMBLY (See page IR-48)**
3. **REMOVE DECK BOARD SUB-ASSEMBLY (See page IR-48)**
4. **REMOVE DECK FLOOR BOX RH (See page IR-48)**
5. **REMOVE DECK FLOOR BOX LH (See page IR-48)**
6. **REMOVE NO. 1 REAR SEAT LEG COVER (for 60/40 Split Seat Type) (See page IR-48)**
7. **REMOVE NO. 2 REAR SEAT LEG COVER (for 60/40 Split Seat Type) (See page SE-70)**
8. **REMOVE REAR SEAT ASSEMBLY RH (for 60/40 Split Seat Type) (See page SE-89)**
9. **REMOVE REAR SEAT ASSEMBLY LH (for 60/40 Split Seat Type) (See page SE-71)**
10. **REMOVE REAR SEAT CUSHION COVER PAD SUB-ASSEMBLY (for Hold Down Seat Type) (See page SE-114)**
11. **REMOVE REAR SEATBACK ASSEMBLY (for Hold Down Seat Type) (See page SE-115)**
12. **REMOVE REAR DECK TRIM COVER (See page IR-49)**
13. **REMOVE REAR DOOR OPENING TRIM WEATHERSTRIP RH**
    (a) Remove the rear opening trim weatherstrip to the extent necessary to remove the deck trim side panel.
14. **REMOVE REAR SEAT OUTER BELT ASSEMBLY RH (See page IR-55)**

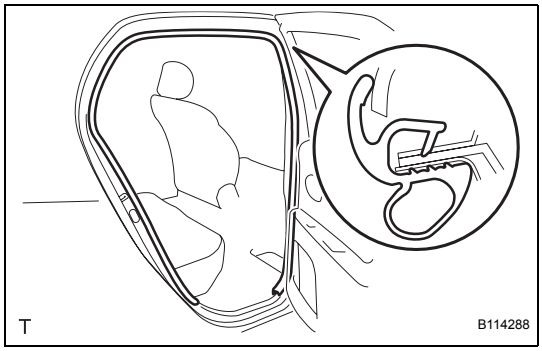

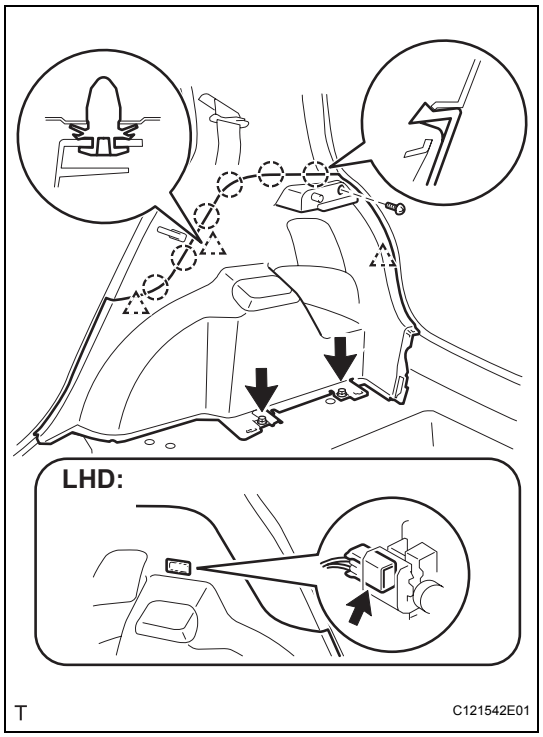

15. REMOVE DECK TRIM SIDE PANEL ASSEMBLY RH

(a) Remove the 3 screws.

(b) Disengage the 3 clips and the 6 claws and remove the deck trim side panel.

HINT:

When removing the deck trim side panel assembly LH, disconnect the room light connector and remove the deck trim side panel.

16. REMOVE REAR AIRBAG SENSOR

CAUTION:

Confirm that the negative battery terminal is disconnected before performing the operation. Even an impact to only the airbag sensor will cause the airbag to deploy.

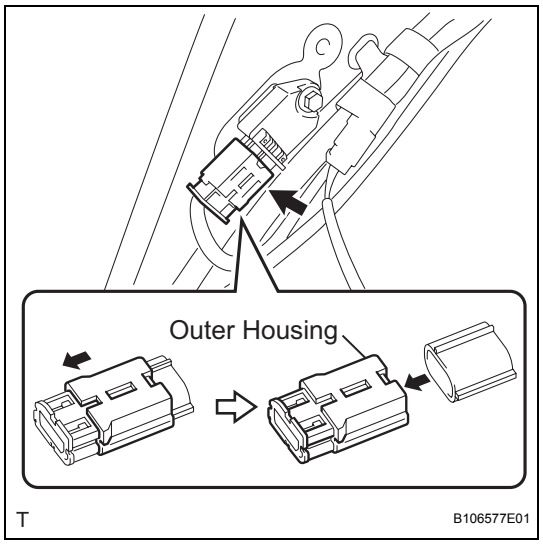

(a) Slide the outer housing and detach the airbag connector.

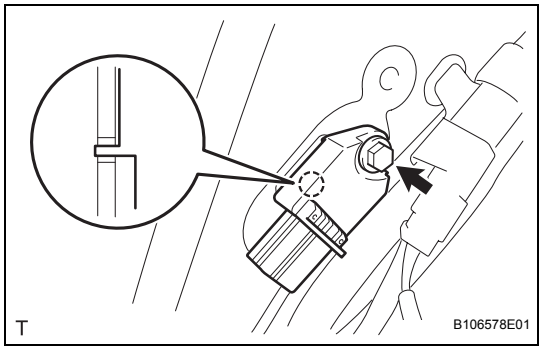

(b) Disengage the bolt and hook and remove the airbag sensor.

RS

INSTALLATION

CAUTION:
Some of these service operations affect the SRS airbag system. Read the precautionary notices concerning the SRS airbag system before servicing.
NOTICE:
Always use "Torx" socket wrench E10 when installing the rear seat.
HINT:
The procedure described below is for the RH side. Use the same procedure for both the LH and RH sides, unless otherwise specified.

1. INSTALL REAR AIRBAG SENSOR

(a) Confirm that the ignition switch is turned to OFF.
(b) Confirm that the negative battery terminal is detached.
CAUTION:
- **Confirm that the negative battery terminal is disconnected before performing the operation. Even an impact to only the airbag sensor will cause the airbag to deploy.**

(c) Insert the hook into the body hole and install the airbag sensor with the bolt.
Torque: 9.0 N*m (90 kgf*cm, 80 in.*lbf)
NOTICE:
- **Do not use a rear airbag sensor that has been dropped.**
- **Do not subject the rear airbag sensor to any impact or force.**

(d) Confirm that there is no looseness by shaking the rear airbag sensor.

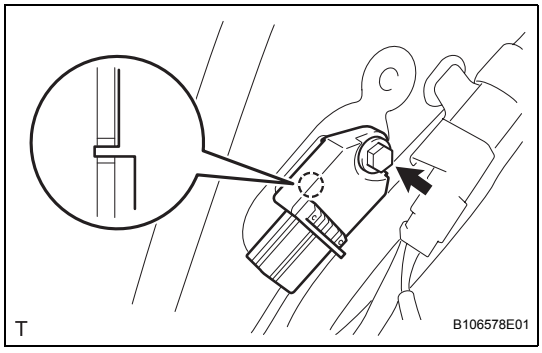

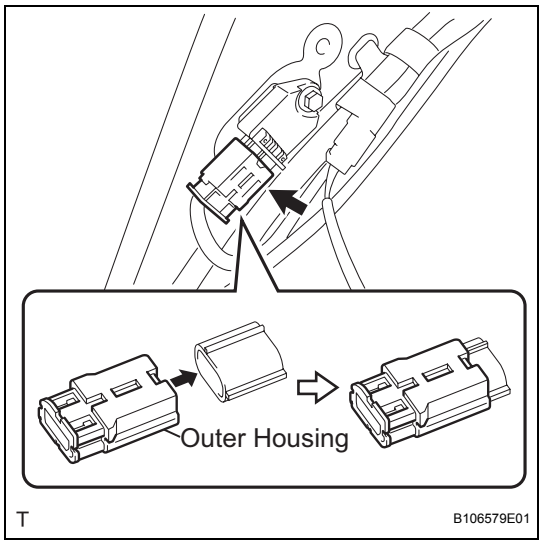

(e) Connect the airbag connector.

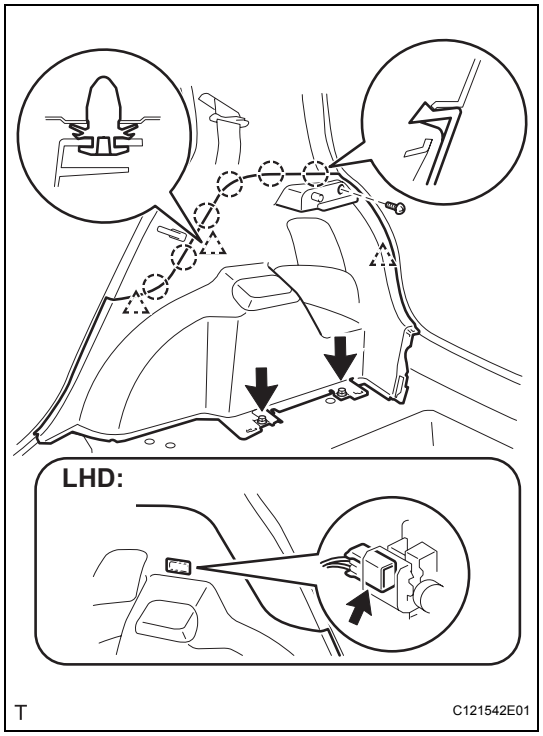

2. **INSTALL DECK TRIM SIDE PANEL ASSEMBLY RH**
   (a) Engage the 3 clips and the 6 claws and install the deck trim side panel.
   (b) Tighten the 3 screws.
   HINT:
   When installing the rear seat outer belt assembly RH, connect the room light connector and install the deck trim side panel assembly RH.

3. **INSTALL REAR SEAT OUTER BELT ASSEMBLY RH (See page IR-31)**

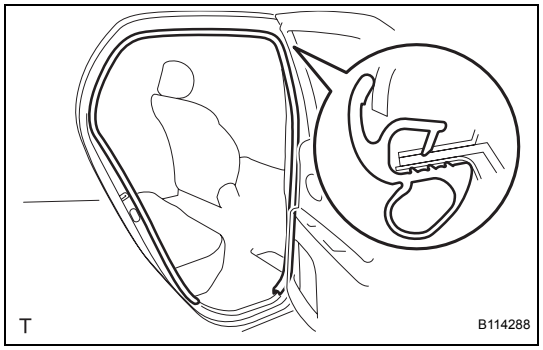

4. **INSTALL REAR DOOR OPENING TRIM WEATHERSTRIP RH**
   (a) Install the rear door opening trim weatherstrip.

5. **INSTALL REAR DOOR SCUFF PLATE RH (See page IR-80)**

6. **INSTALL REAR DECK TRIM COVER (See page IR-82)**

7. **INSTALL REAR SEAT ASSEMBLY LH (for 60/40 Split Seat Type) (See page SE-84)**

8. **INSTALL REAR SEAT ASSEMBLY RH (for 60/40 Split Seat Type) (See page SE-102)**

9. **INSTALL NO. 2 REAR SEAT LEG COVER (for 60/40 Split Seat Type) (See page SE-85)**

10. **INSTALL NO. 1 REAR SEAT LEG COVER (for 60/40 Split Seat Type) (See page IR-82)**
11. **INSTALL REAR SEATBACK ASSEMBLY (for Hold Down Seat Type) (See page SE-122)**
12. **INSTALL REAR SEAT CUSHION COVER PAD SUB-ASSEMBLY (for Hold Down Seat Type) (See page SE-123)**
13. **INSTALL DECK FLOOR BOX RH (See page IR-83)**
14. **INSTALL DECK FLOOR BOX LH (See page IR-83)**
15. **INSTALL DECK BOARD SUB-ASSEMBLY (See page IR-83)**
16. **INSTALL PACKAGE TRAY TRIM PANEL ASSEMBLY (See page IR-83)**
17. **CONNECT CABLE TO NEGATIVE BATTERY TERMINAL**
    Torque: 5.4 N*m (55 kgf*cm, 48 in.*lbf)
18. **INSPECT SRS WARNING LIGHT**
    (See page RS-31)

REAR AIRBAG SENSOR (for 3 Door)

COMPONENTS

RS

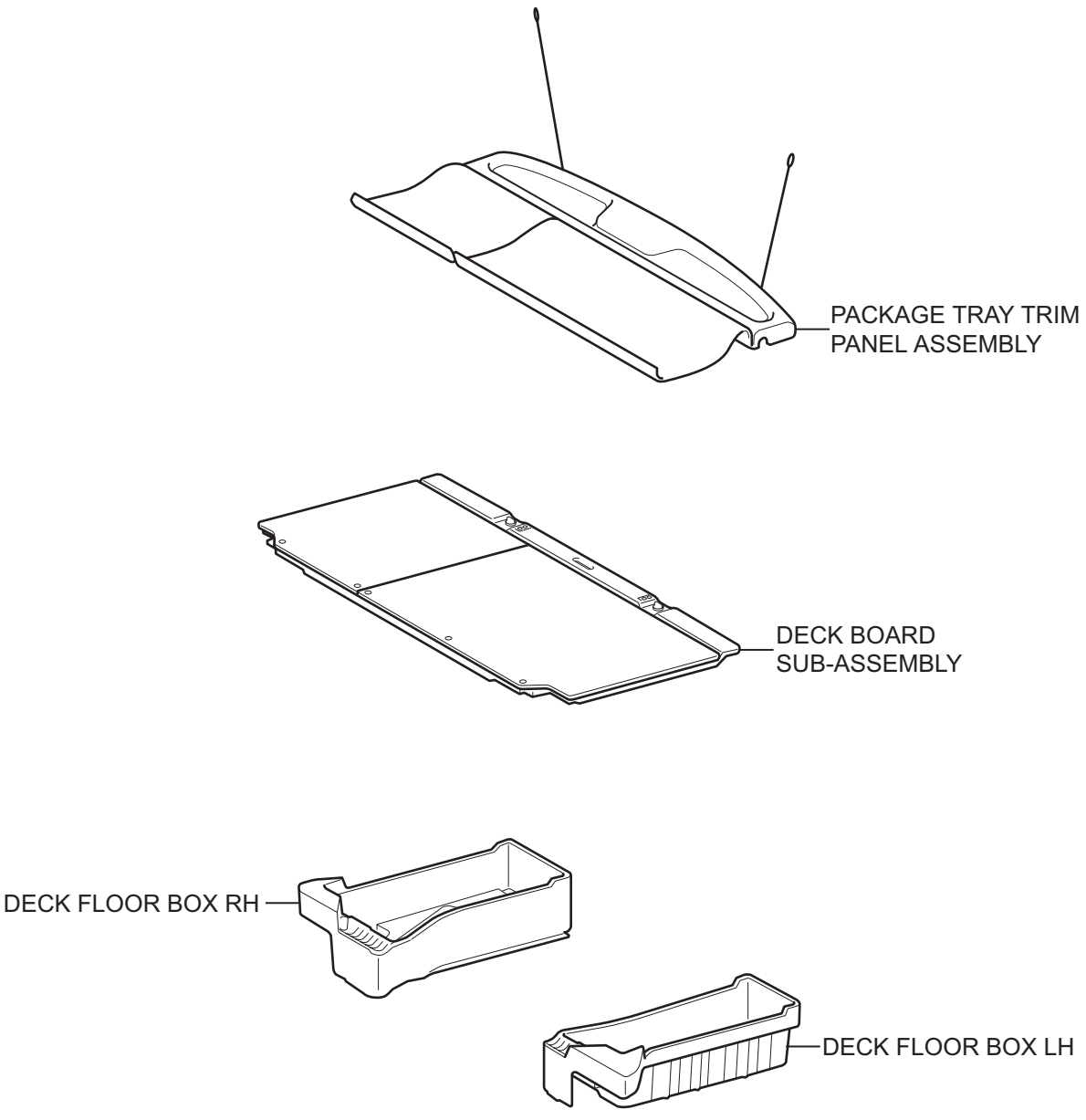

T

B114273E01

RS

for 60/40 Split Seat Type:

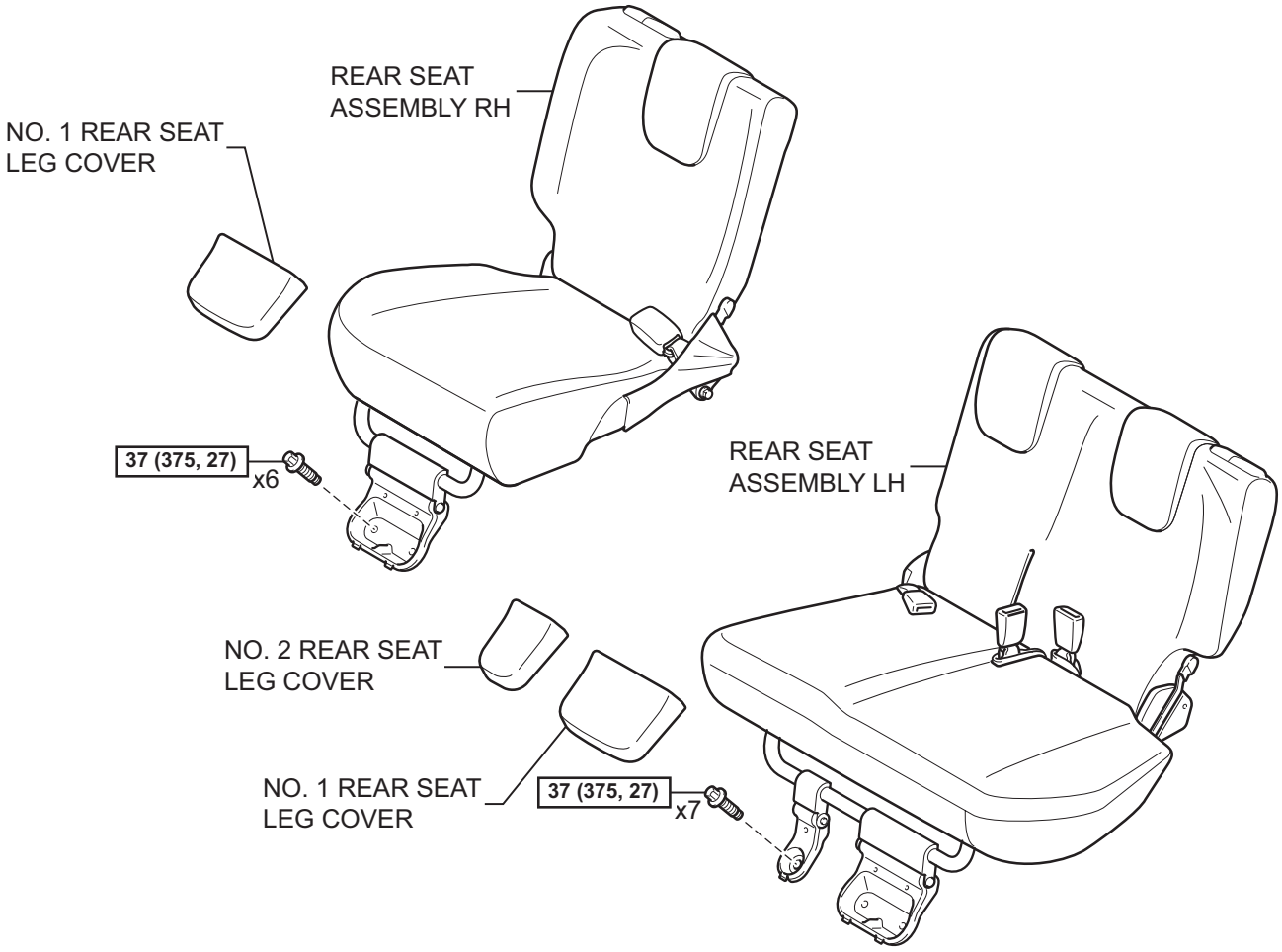

for Hold Down Seat Type:

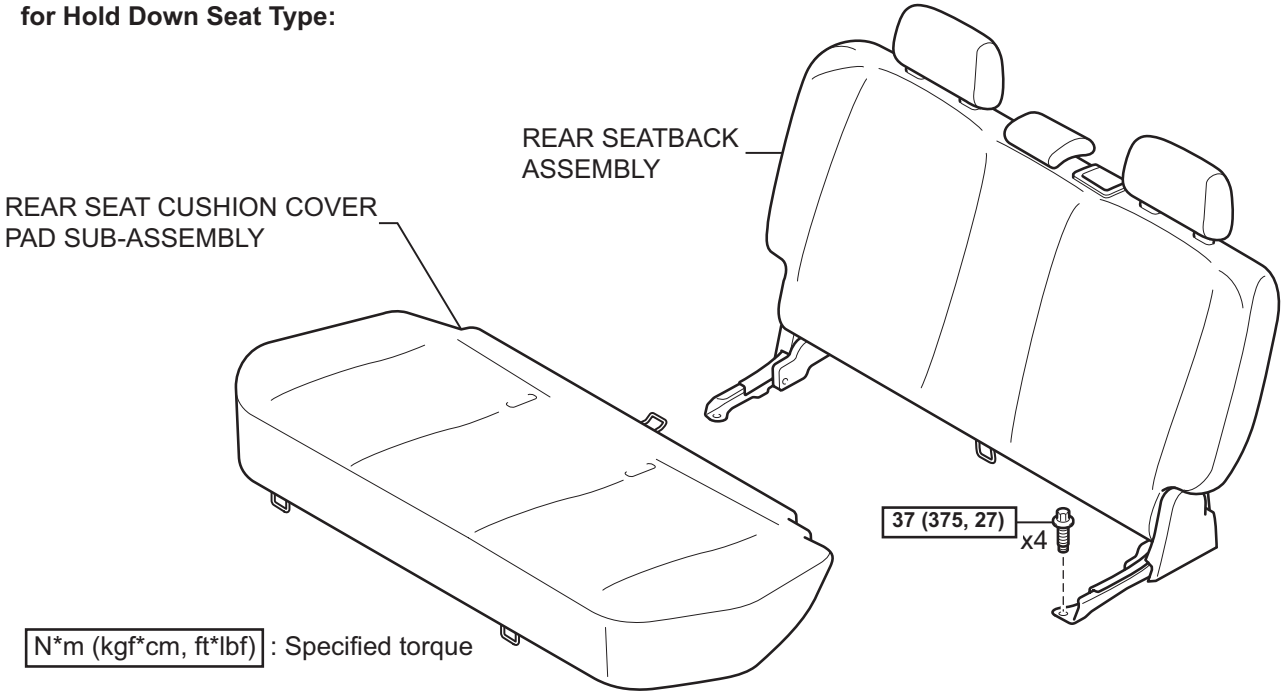

T

B121713E03

RS

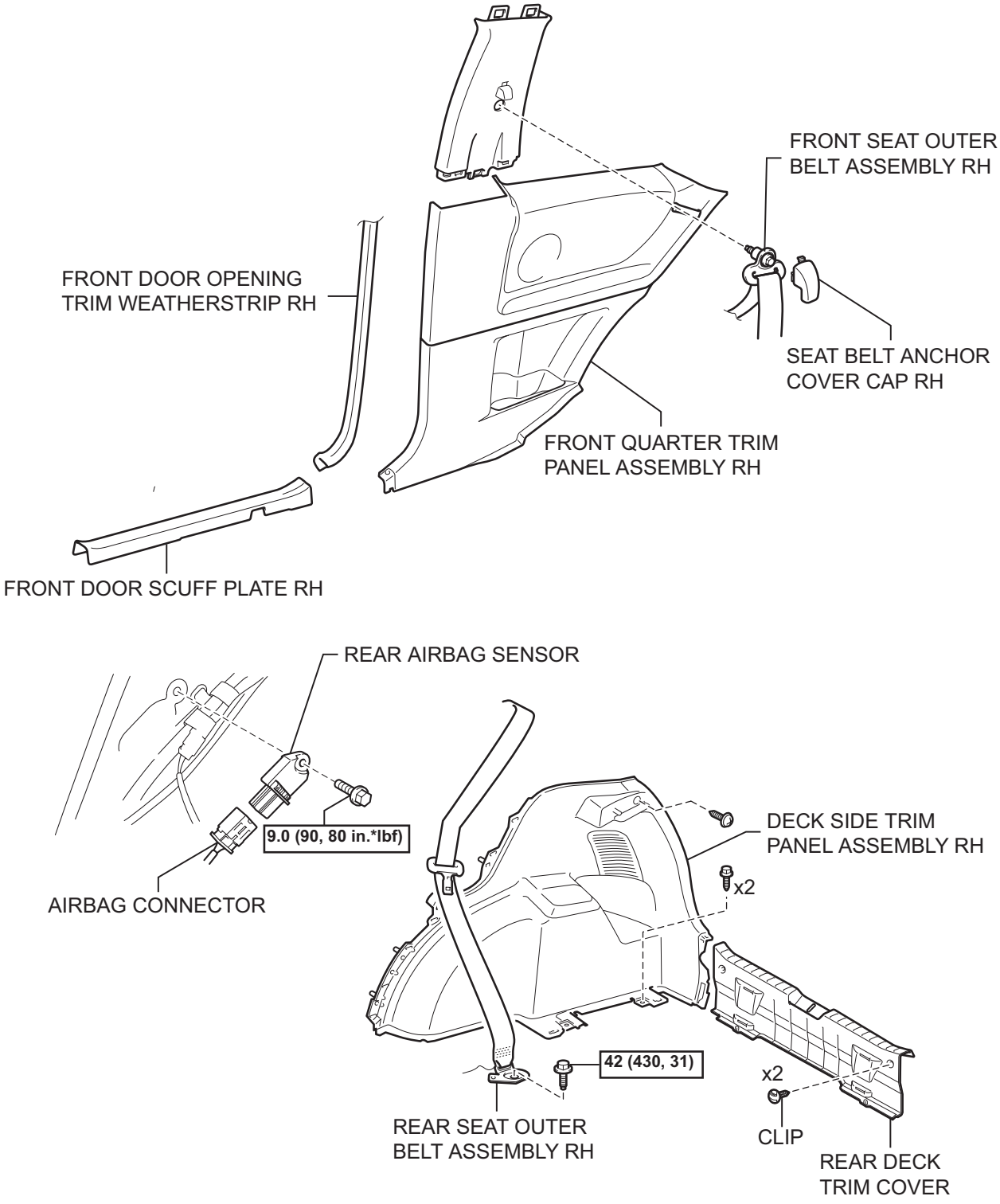

T

C121545E01

ON-VEHICLE INSPECTION

1. **INSPECT REAR AIRBAG SENSOR ASSEMBLY (for Vehicle not Involved in Collision)**
   (a) Perform a diagnostic system check (See page RS-38).

2. **INSPECT REAR AIRBAG SENSOR ASSEMBLY (for Vehicle Involved in Collision and Airbag not Deployed)**
   CAUTION:
   For rear airbag sensor removal and installation procedures, see pages RS-481 and RS-483, and carefully follow the correct procedure.
   (a) Perform a diagnostic system check (See page RS-38).
   (b) When the center pillar of the vehicle or its periphery is damaged, check whether there is any damage to the rear airbag sensor. If there are any defects, such as those mentioned below, replace the rear airbag sensor with a new one:
   - Any cracks, dents or chips in the case.
   - Any cracks or other damage to the connector.
   - Peeling of the label or damage to the serial number.

3. **INSPECT REAR AIRBAG SENSOR ASSEMBLY (for Vehicle Involved in Collision)**
   CAUTION:
   For rear airbag sensor removal and installation procedures, see pages RS-481 and RS-483, and carefully follow the correct procedure.
   (a) Replace the rear airbag sensor.

RS

REMOVAL

CAUTION:
Some of the these service operations affect the SRS airbag system. Read the precautionary notices concerning the SRS airbag system before servicing (See page RS-1).
NOTICE:
Always use "Torx" socket wrench E10 when installing the rear seat.
HINT:
The procedure described below is for the RH side. Use the same procedure for both the RH and LH sides, unless otherwise specified.

1. **DISCONNECT CABLE FROM NEGATIVE BATTERY TERMINAL**
2. **REMOVE PACKAGE TRAY TRIM PANEL ASSEMBLY (See page IR-48)**
3. **REMOVE DECK BOARD SUB-ASSEMBLY (See page IR-48)**
4. **REMOVE DECK FLOOR BOX RH (See page IR-48)**
5. **REMOVE DECK FLOOR BOX LH (See page IR-48)**
6. **REMOVE NO. 1 REAR SEAT LEG COVER (for 60/40 Split Seat Type) (See page IR-96)**
7. **REMOVE NO. 2 REAR SEAT LEG COVER (for 60/40 Split Seat Type) (See page SE-70)**
8. **REMOVE REAR SEAT ASSEMBLY RH (for Slide Reclining Hold Down Seat Type) (See page SE-89)**
9. **REMOVE REAR SEAT ASSEMBLY LH (for Slide Reclining Hold Down Seat Type) (See page SE-71)**
10. **REMOVE REAR SEAT CUSHION COVER PAD SUB-ASSEMBLY (for Hold Down Seat Type) (See page SE-114)**
11. **REMOVE REAR SEATBACK ASSEMBLY (for Hold Down Seat Type) (See page SE-115)**
12. **REMOVE FRONT DOOR SCUFF PLATE RH (See page IR-97)**
13. **REMOVE FRONT DOOR OPENING TRIM WEATHERSTRIP RH**
    (a) Remove the rear opening trim weatherstrip to the extent necessary to remove the quarter trim panel assembly front.
14. **REMOVE FRONT QUARTER TRIM PANEL ASSEMBLY RH (See page IR-97)**
15. **REMOVE REAR DECK TRIM COVER (See page IR-49)**
16. **REMOVE REAR SEAT OUTER BELT ASSEMBLY RH (See page IR-98)**

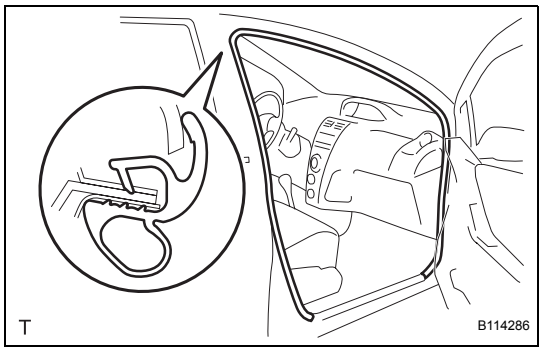

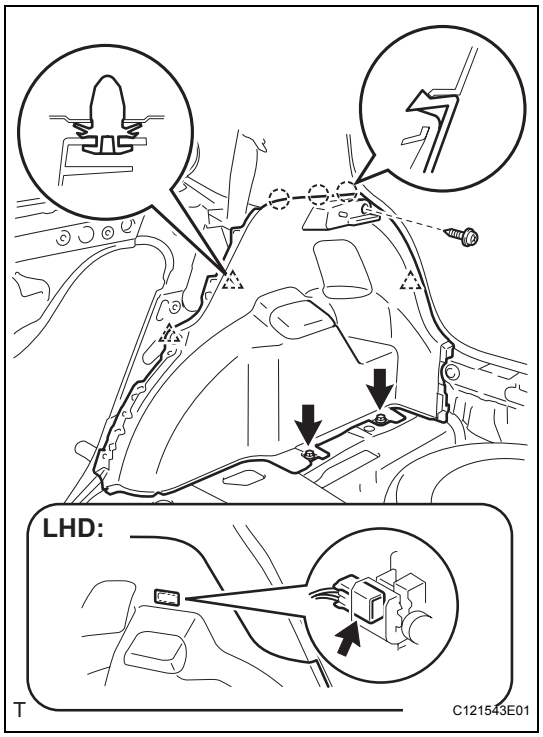

17. REMOVE DECK SIDE TRIM PANEL ASSEMBLY RH

(a) Remove the 3 screws.

(b) Disengage the 3 clips and the 3 claws and remove the deck side trim panel.

HINT:

When removing the deck side trim panel assembly LH, disconnect the room light connector and remove the deck side trim panel .

18. REMOVE REAR AIRBAG SENSOR

CAUTION:

Confirm that the negative battery terminal is disconnected before performing the operation. Even an impact to only the airbag sensor will cause the airbag to deploy.

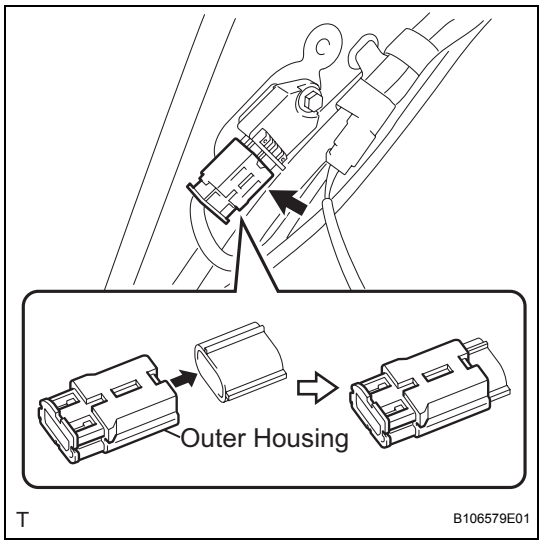

(a) Slide the outer housing and detach the airbag connector.

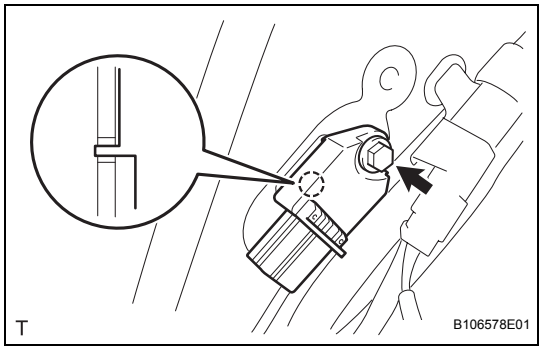

(b) Remove the bolt, disengage the hook and remove the airbag sensor.

RS

RS

INSTALLATION

CAUTION:
Some of these service operations affect the SRS airbag system. Read the precautionary notices concerning the SRS airbag system before servicing.
NOTICE:
Always use "Torx" socket wrench E10 when installing the rear seat.
HINT:
The procedure described below is for the RH side. Use the same procedure for both the LH and RH sides, unless otherwise specified.

1. INSTALL REAR AIRBAG SENSOR

(a) Confirm that the ignition switch is turned to OFF.

(b) Confirm that the negative battery terminal is detached.
CAUTION:
- **Confirm that the negative battery terminal is disconnected before performing the operation. Even an impact to only the airbag sensor will cause the airbag to deploy.**

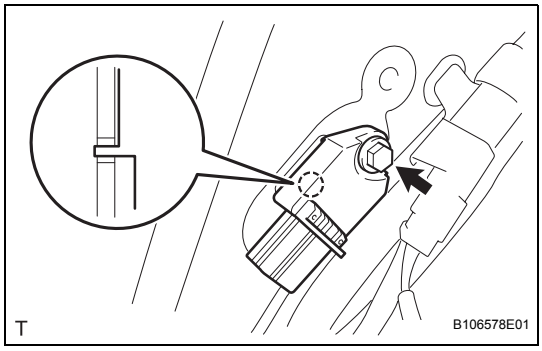

(c) Insert the hook into the body hole and install the airbag sensor with the bolt.
Torque: 9.0 N*m (90 kgf*cm, 80 in.*lbf)
NOTICE:
- **Do not use a rear airbag sensor that has been dropped.**
- **Do not subject the rear airbag sensor to any impact or force.**

(d) Confirm that there is no looseness by shaking the rear airbag sensor.

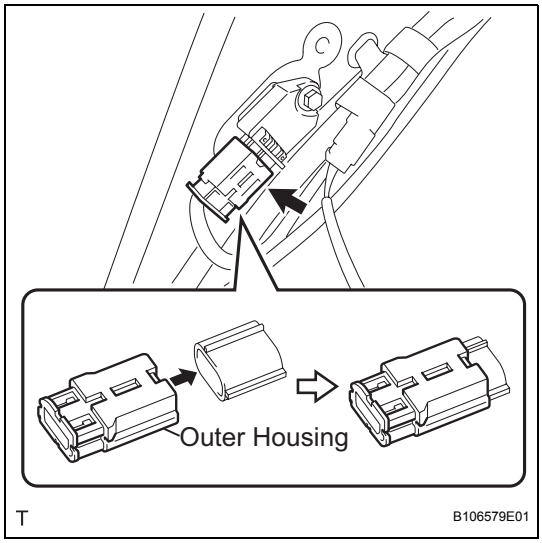

(e) Connect the airbag connector.

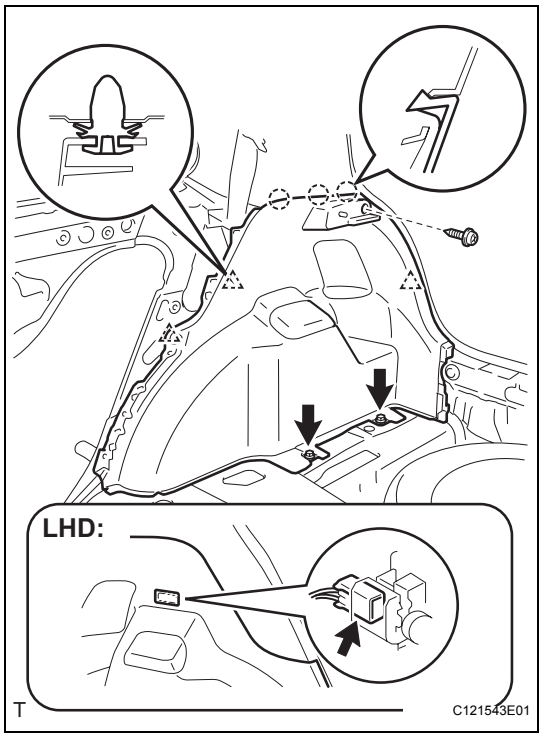

2. **INSTALL DECK SIDE TRIM PANEL ASSEMBLY RH**
   (a) Engage the 3 clips and the 3 claws and install the deck trim side panel.
   (b) Tighten the 3 screws.
   HINT:
   When installing the deck side trim panel assembly LH, connect the room light connector and install the deck side trim panel.
3. **INSTALL REAR SEAT OUTER BELT ASSEMBLY RH (See page IR-118)**
4. **INSTALL REAR DECK TRIM COVER (See page IR-82)**
5. **INSTALL FRONT QUARTER TRIM PANEL ASSEMBLY RH (See page IR-118)**

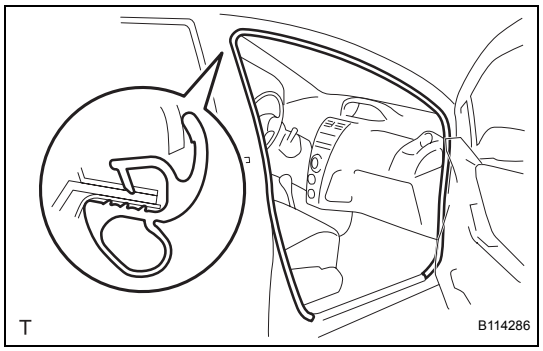

6. **INSTALL FRONT DOOR OPENING TRIM WEATHERSTRIP RH**
   (a) Install the rear door opening trim weatherstrip.
7. **INSTALL FRONT DOOR SCUFF PLATE RH (See page IR-119)**
8. **INSTALL REAR SEAT ASSEMBLY LH (for 60/40 Split Seat Type) (See page SE-84)**
9. **INSTALL REAR SEAT ASSEMBLY RH (for 60/40 Split Seat Type) (See page SE-102)**
10. **INSTALL NO. 2 REAR SEAT LEG COVER (for 60/40 Split Seat Type) (See page SE-85)**
11. **INSTALL NO. 1 REAR SEAT LEG COVER (for 60/40 Split Seat Type) (See page IR-119)**
12. **INSTALL REAR SEATBACK ASSEMBLY (for Hold Down Seat Type) (See page SE-122)**
13. **INSTALL REAR SEAT CUSHION COVER PAD SUB-ASSEMBLY (for Hold Down Seat Type) (See page SE-123)**
14. **INSTALL DECK FLOOR BOX RH (See page IR-83)**
15. **INSTALL DECK FLOOR BOX LH (See page IR-83)**
16. **INSTALL DECK BOARD SUB-ASSEMBLY (See page IR-83)**
17. **INSTALL PACKAGE TRAY TRIM PANEL ASSEMBLY (See page IR-83)**
18. **CONNECT CABLE TO NEGATIVE BATTERY TERMINAL**
    Torque: 5.4 N*m (55 kgf*cm, 48 in.*lbf)

RS

19. INSPECT SRS WARNING LIGHT
(See page RS-31)

SEAT POSITION SENSOR

COMPONENTS

for Hatchback:

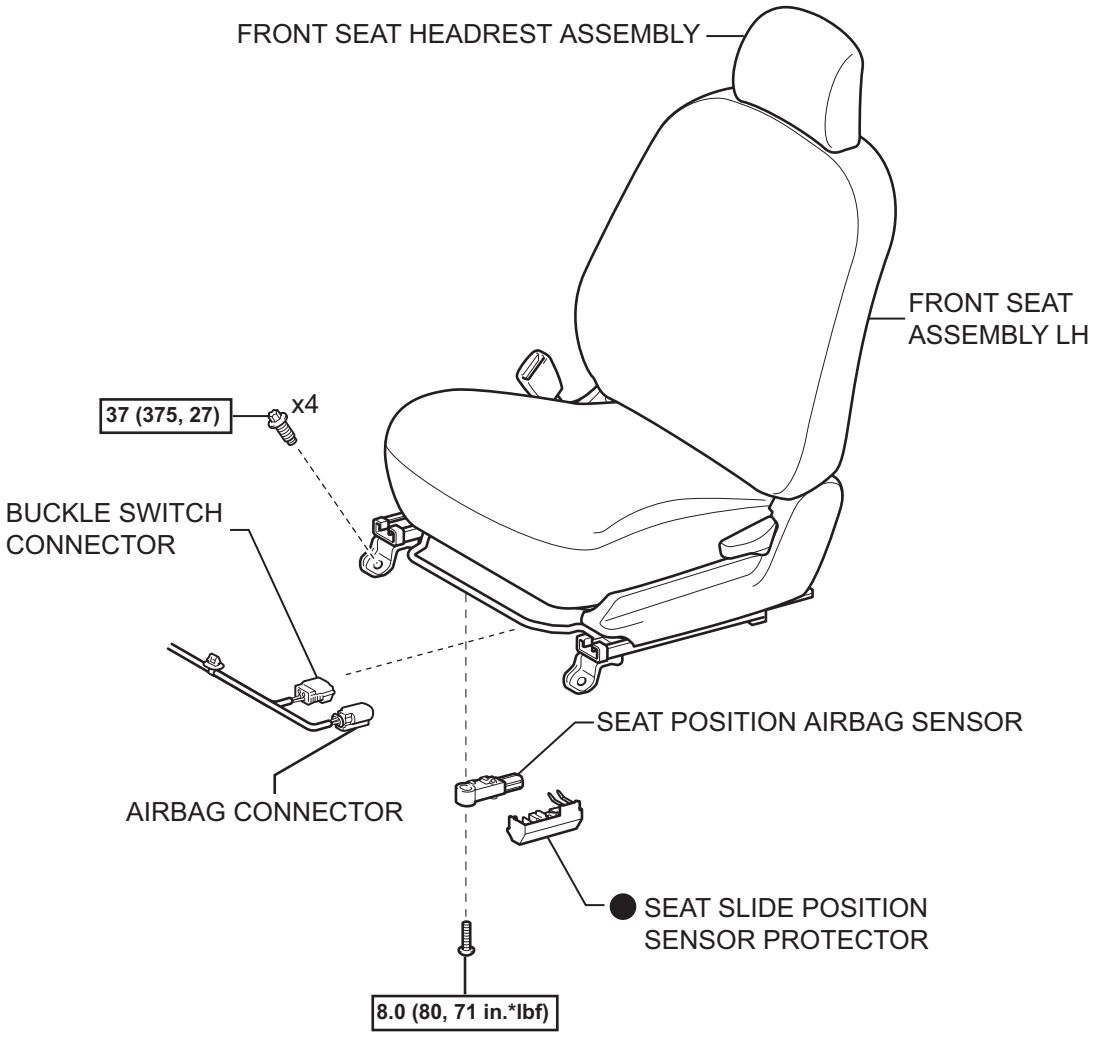

N*m (kgf*cm, ft.*lbf) : Specified torque ● Non-reusable part

T

C119865E01

for Sedan:

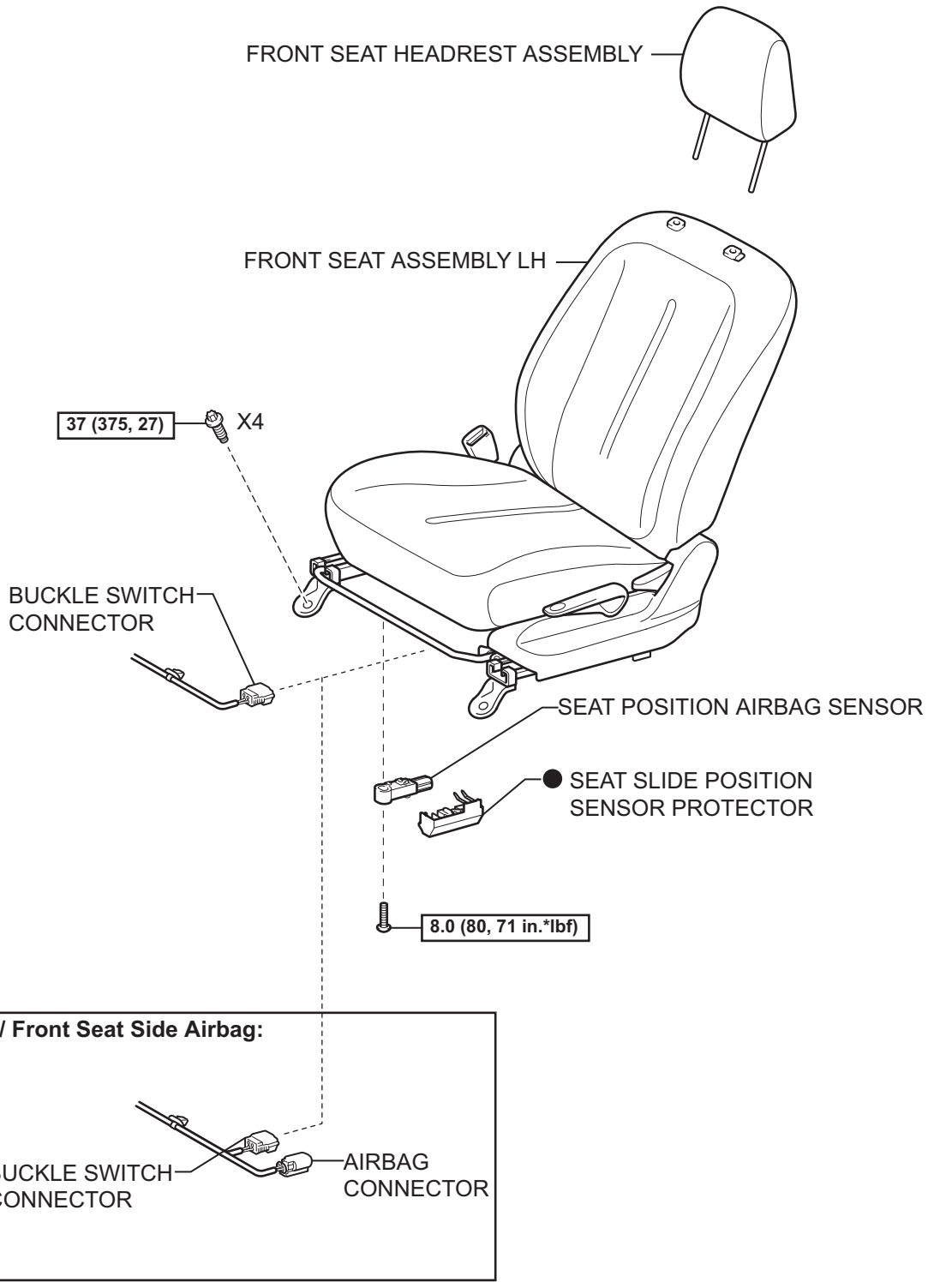

N*m (kgf*cm, ft*lbf) : Specified torque ● Non-reusable part

T

C143432E01

DTC	B1615/14	Front Airbag Sensor LH Circuit Malfunction

DESCRIPTION

The front airbag sensor LH consists of parts including the diagnostic circuit and the frontal deceleration sensor.

RS

When the center airbag sensor assembly receives signals from the frontal deceleration sensor, it determines whether or not the SRS should be activated.

DTC B1615/14 is set when a malfunction is detected in the front airbag sensor LH circuit.

DTC No.	DTC Detecting Condition	Trouble Area
B1615/14	• Center airbag sensor assembly detects line short circuit signal, open circuit signal, short circuit to ground signal or short circuit to B+ signal in front airbag sensor LH circuit for 2 seconds. • Front airbag sensor LH malfunction • Center airbag sensor assembly malfunction	• Instrument panel wire • Engine room main wire • Front airbag sensor LH • Center airbag sensor assembly

WIRING DIAGRAM

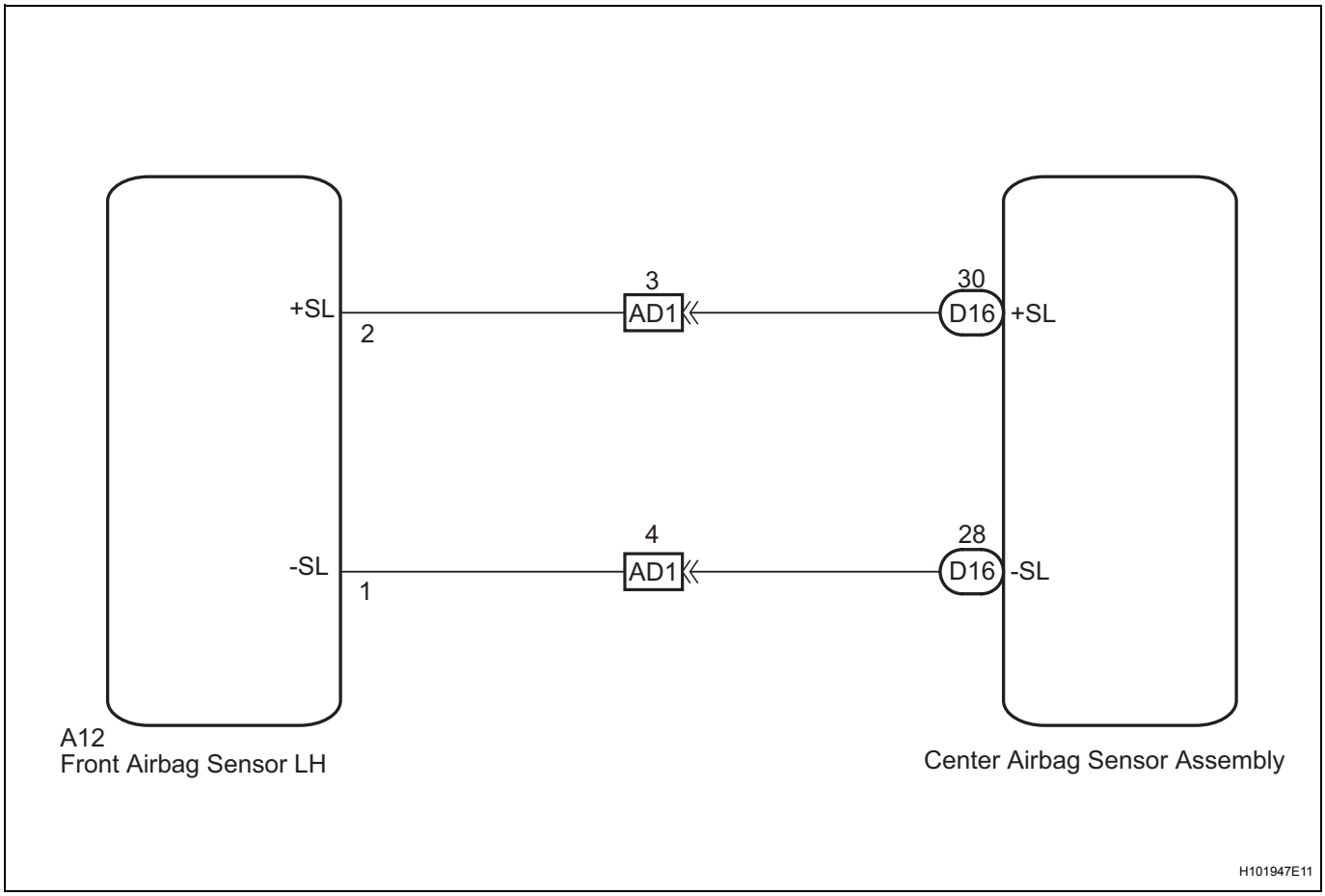

INSPECTION PROCEDURE

NOTICE:

In order to prevent unexpected airbag deployment, disconnect the following connectors before inspecting parts such as wire harnesses, if the application of tester probes to the center airbag sensor assembly connector is necessary.

1. Turn the ignition switch to the lock position.
2. Disconnect the negative (-) terminal cable from the battery, and wait for at least 90 seconds.
3. Disconnect the connector from the center airbag sensor assembly.

4. Disconnect the connectors from the steering pad.
5. Disconnect the connectors from the front passenger airbag assembly.
6. Disconnect the connector from the front seat outer belt assembly LH.
7. Disconnect the connector from the front seat outer belt assembly RH.
   HINT:
   Skip the following steps if side and curtain shield airbags are not fitted.
8. Disconnect the connector from the front seat side airbag assembly LH.
9. Disconnect the connector from the front seat side airbag assembly RH.
10. Disconnect the connector from the curtain shield airbag assembly LH.
11. Disconnect the connector from the curtain shield airbag assembly RH.

RS

1	CHECK DTC

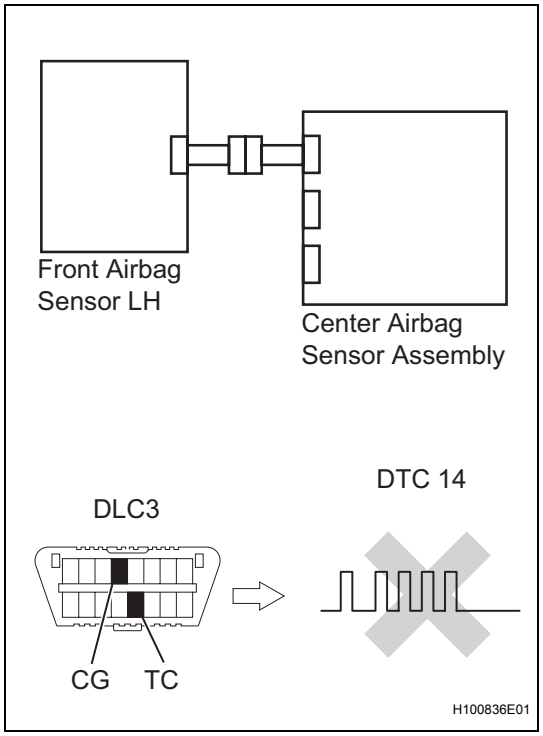

(a) Turn the ignition switch on, and wait for at least 60 seconds.
(b) Clear the DTCs stored in the memory (See page RS-38).
(c) Turn the ignition switch off.
(d) Turn the ignition switch on, and wait for at least 60 seconds.
(e) Check the DTCs (See page RS-38).
OK:
DTC B1615/14 is not output.
HINT:
DTCs other than DTC B1615/14 may be output at this time, but they are not related to this check.

OK → **USE SIMULATION METHOD TO CHECK**

NG

2	CHECK CONNECTION OF CONNECTORS

(a) Turn the ignition switch off.
(b) Disconnect the negative (-) terminal cable from the battery, and wait for at least 90 seconds.
(c) Check that the connectors are properly connected to the center airbag sensor assembly and the front airbag sensor LH.
OK:
The connectors are properly connected.

NG → **CONNECT CONNECTORS**

OK

RS

3	CHECK FRONT AIRBAG SENSOR LH CIRCUIT (FOR OPEN)

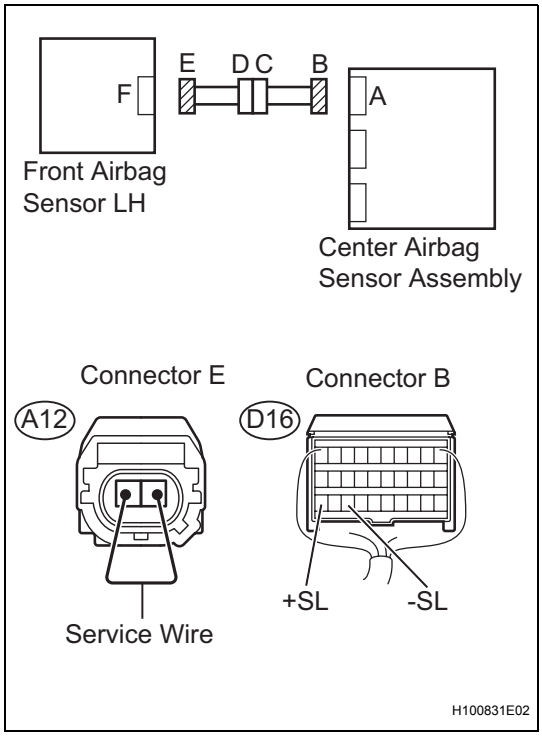

(a) Disconnect the connectors from the center airbag sensor assembly and the front airbag sensor LH.
(b) Using a service wire, connect A12-1 and A12-2 of connector E.
NOTICE:
Do not forcibly insert the service wire into the terminals of the connector when connecting.
(c) Measure the resistance.
Standard resistance

Tester Connection	Condition	Specified Condition
D16-30 (+SL) - D16-28 (-SL)	Always	Below 1 Ω

NG → **Go to step 8**

OK

4	CHECK FRONT AIRBAG SENSOR LH CIRCUIT (FOR SHORT)

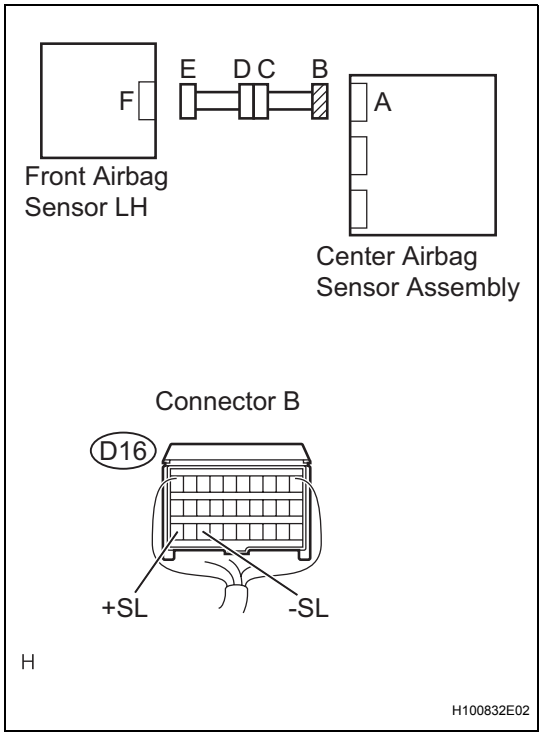

(a) Disconnect the service wire from connector E.
(b) Measure the resistance.
Standard resistance

Tester Connection	Condition	Specified Condition
D16-30 (+SL) - D16-28 (-SL)	Always	1 MΩ or higher

NG → **Go to step 9**

OK

5 CHECK FRONT AIRBAG SENSOR LH CIRCUIT (TO B+)

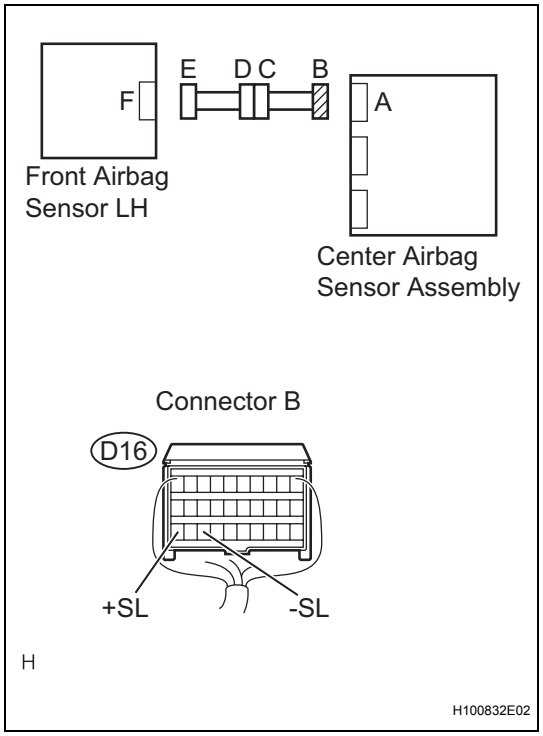

(a) Connect the negative (-) terminal cable to the battery, and wait for at least 2 seconds.
(b) Turn the ignition switch on.
(c) Measure the voltage.
Standard voltage

Tester Connection	Condition	Specified Condition
D16-30 (+SL) - Body ground	Ignition switch on	Below 1 V
D16-28 (-SL) - Body ground	Ignition switch on	Below 1 V

NG → **Go to step 10**

OK

6 CHECK FRONT AIRBAG SENSOR LH CIRCUIT (TO GROUND)

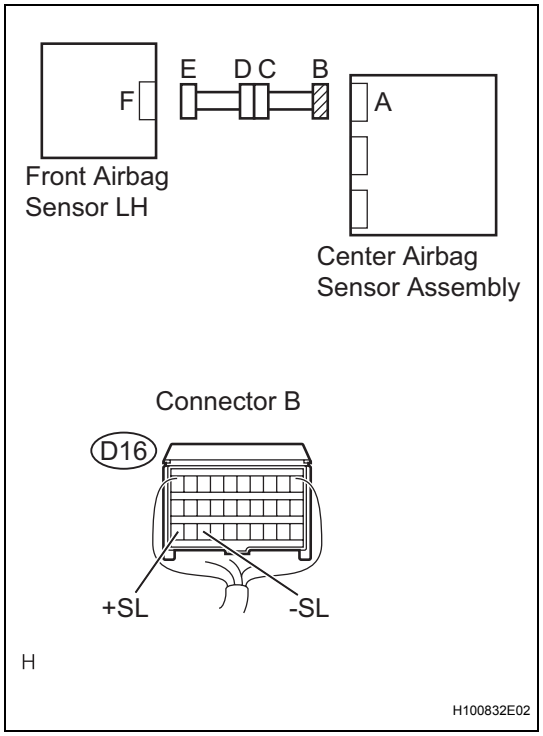

(a) Turn the ignition switch off.
(b) Disconnect the negative (-) terminal cable from the battery, and wait for at least 90 seconds.
(c) Measure the resistance.
Standard resistance

Tester Connection	Condition	Specified Condition
D16-30 (+SL) - Body ground	Always	1 MΩ or higher
D16-28 (-SL) - Body ground	Always	1 MΩ or higher

NG → **Go to step 11**

OK

7	CHECK FRONT AIRBAG SENSOR LH

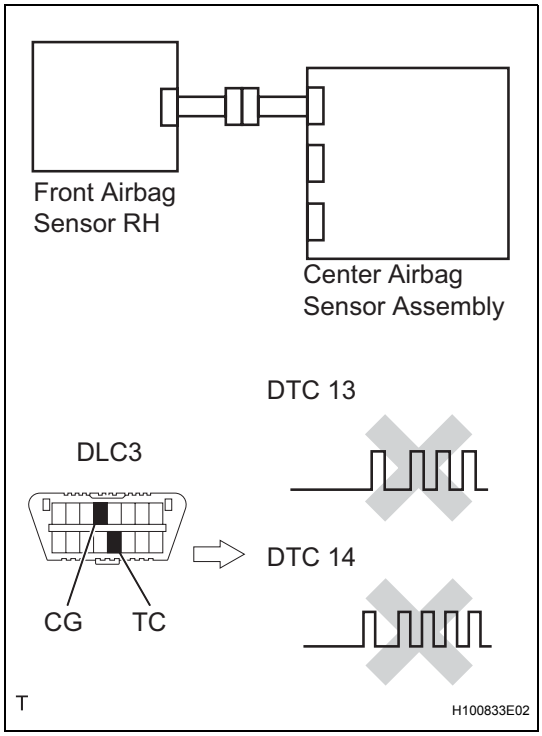

(a) Connect the connectors to the center airbag sensor assembly.
(b) Interchange the front airbag sensor LH with RH and connect the connectors to them.
(c) Connect the negative (-) terminal cable to the battery, and wait for at least 2 seconds.
(d) Turn the ignition switch on, and wait for at least 60 seconds.
(e) Clear the DTCs stored in the memory (See page RS-38).
(f) Turn the ignition switch off.
(g) Turn the ignition switch on, and wait for at least 60 seconds.
(h) Check the DTCs (See page RS-38).

Result

Result	Proceed to
DTC B1615/14 is output.	A
DTC B1610/13 is output.	B
DTC B1610/13 and B1615/14 are not output.	C

HINT:
DTCs other than DTC B1610/13 and B1615/14 may be output at this time, but they are not related to this check.

A → **REPLACE CENTER AIRBAG SENSOR ASSEMBLY**

B → **REPLACE FRONT AIRBAG SENSOR LH**

C

USE SIMULATION METHOD TO CHECK

8	CHECK ENGINE ROOM MAIN WIRE (FOR OPEN)

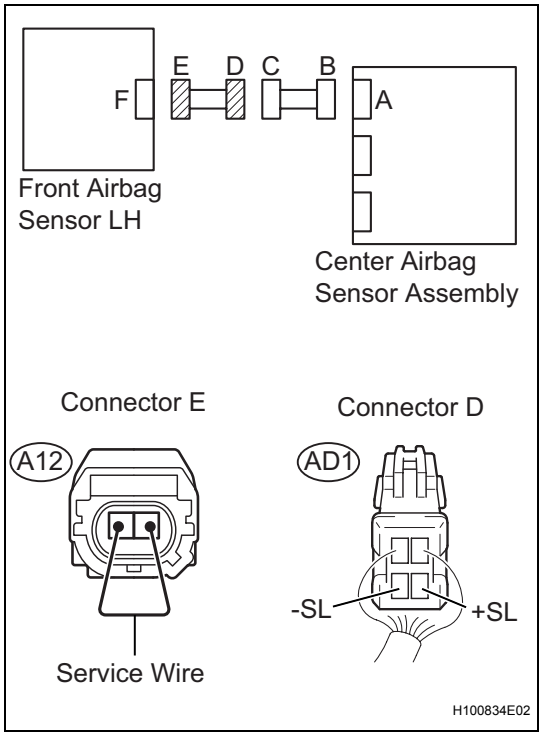

(a) Disconnect the engine room main wire connector from the instrument panel wire.
HINT:
The service wire has already been inserted into connector E.

(b) Measure the resistance.
Standard resistance

Tester Connection	Condition	Specified Condition
AD1-3 (+SL) - AD1-4 (-SL)	Always	Below 1 Ω

NG → **REPAIR OR REPLACE ENGINE ROOM MAIN WIRE**

OK

REPAIR OR REPLACE INSTRUMENT PANEL WIRE

RS

9	CHECK ENGINE ROOM MAIN WIRE (FOR SHORT)

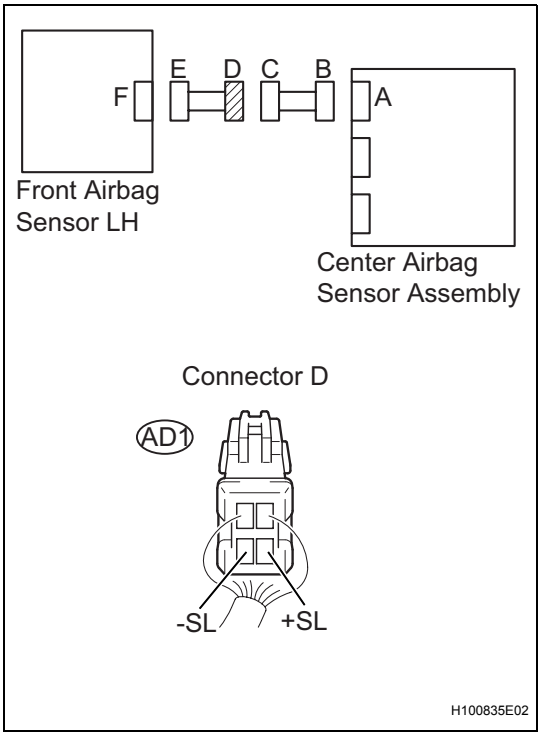

(a) Disconnect the service wire from connector E.
(b) Measure the resistance.
Standard resistance

Tester Connection	Condition	Specified Condition
AD1-3 (+SL) - AD1-4 (-SL)	Always	1 MΩ or higher

NG → **REPAIR OR REPLACE ENGINE ROOM MAIN WIRE**

OK

REPAIR OR REPLACE INSTRUMENT PANEL WIRE

10	CHECK ENGINE ROOM MAIN WIRE (TO B+)

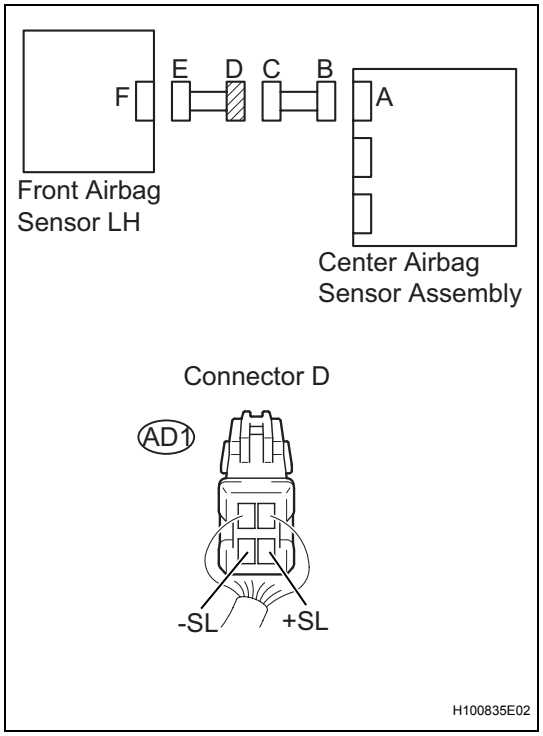

(a) Turn the ignition switch to the lock position.
(b) Disconnect the negative(-) terminal cable from the battery, and wait for at least 90 seconds.
(c) Disconnect the engine room main wire connector from the instrument panel wire.
(d) Connect the negative (-) terminal cable to the battery, and wait for at least 2 seconds.
(e) Turn the ignition switch on.
(f) Measure the voltage.

Standard voltage

Tester Connection	Condition	Specified Condition
AD1-3 (+SL) - Body ground	Ignition switch on	Below 1 V
AD1-4 (-SL) - Body ground	Ignition switch on	Below 1 V

NG → **REPAIR OR REPLACE ENGINE ROOM MAIN WIRE**

OK

REPAIR OR REPLACE INSTRUMENT PANEL WIRE

RS

11	CHECK ENGINE ROOM MAIN WIRE (TO GROUND)

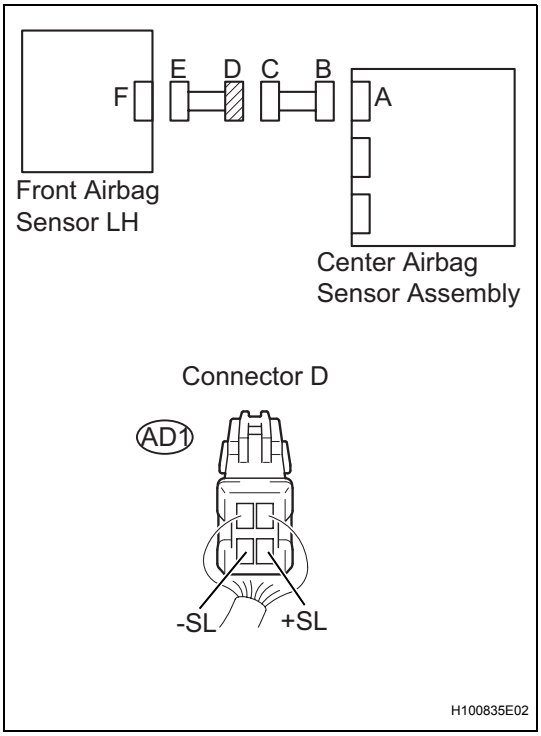

(a) Disconnect the engine room main wire connector from the instrument panel wire.
(b) Measure the resistance.
Standard resistance

Tester Connection	Condition	Specified Condition
AD1-3 (+SL) - Body ground	Always	1 MΩ or higher
AD1-4 (-SL) - Body ground	Always	1 MΩ or higher

NG → **REPAIR OR REPLACE ENGINE ROOM MAIN WIRE**

OK

REPAIR OR REPLACE INSTRUMENT PANEL WIRE

SEAT POSITION SENSOR

COMPONENTS

for Hatchback:

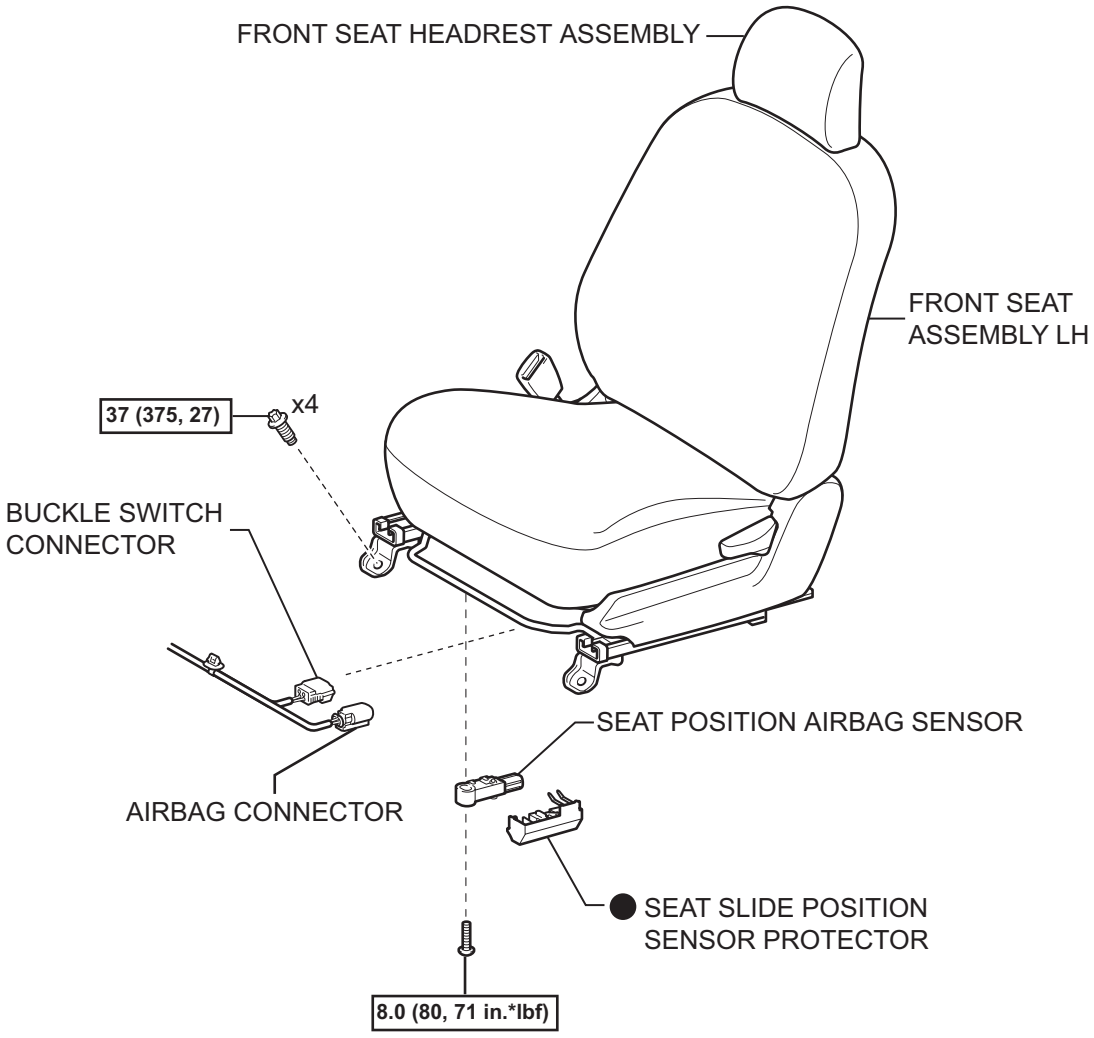

N*m (kgf*cm, ft.*lbf) : Specified torque ● Non-reusable part

T

C119865E01

for Sedan:

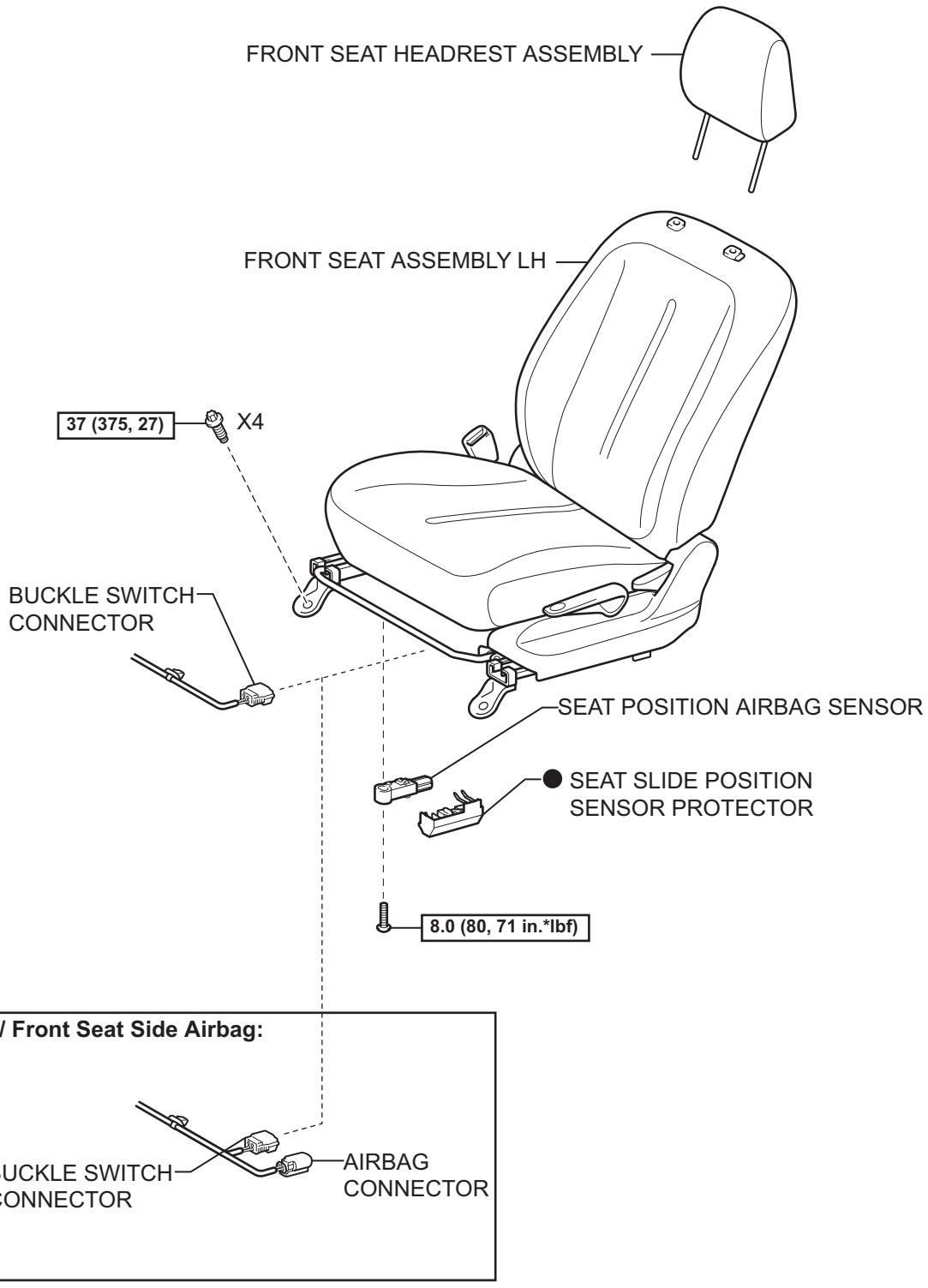

N*m (kgf*cm, ft*lbf) : Specified torque ● Non-reusable part

T

C143432E01

ON-VEHICLE INSPECTION

1. **INSPECT SEAT POSITION SENSOR (for Vehicle not Involved in Collision)**
   (a) Perform a diagnostic system check (See page RS-38).

2. **INSPECT SEAT POSITION SENSOR (for Vehicle Involved in Collision)**
   (a) Perform a diagnostic system check (See page RS-38).
   (b) Even if the airbag was not deployed, check whether there is any damage to the seat position sensor. If there are any defects such as those mentioned below, replace the seat position sensor with a new one:
   - Cracks, dents or chips on the sensor housing.
   - Cracks or other damage to the connector.

   CAUTION:
   Follow the correct removal and installation procedures.

REMOVAL

CAUTION:
Some of these service operations affect the SRS airbag system. Read the precautionary notices concerning the SRS airbag system before servicing.
NOTICE:
Always use "Torx" socket wrench E10 when removing the front seat.
HINT:
Installation is in the reverse order of removal.

1. **DISCONNECT CABLE FROM NEGATIVE BATTERY TERMINAL**
2. **REMOVE FRONT SEAT HEADREST ASSEMBLY (for Sedan) (See page SE-5)**
3. **REMOVE FRONT SEAT HEADREST ASSEMBLY (for Hatchback) (See page SE-28)**
4. **REMOVE FRONT SEAT ASSEMBLY LH (for Sedan) (See page SE-5)**
5. **REMOVE FRONT SEAT ASSEMBLY LH (for Hatchback) (See page SE-28)**
6. **REMOVE SEAT SLIDE POSITION SENSOR PROTECTOR**
   (a) Remove the seat slide position sensor protector from the seat position airbag sensor.

RS

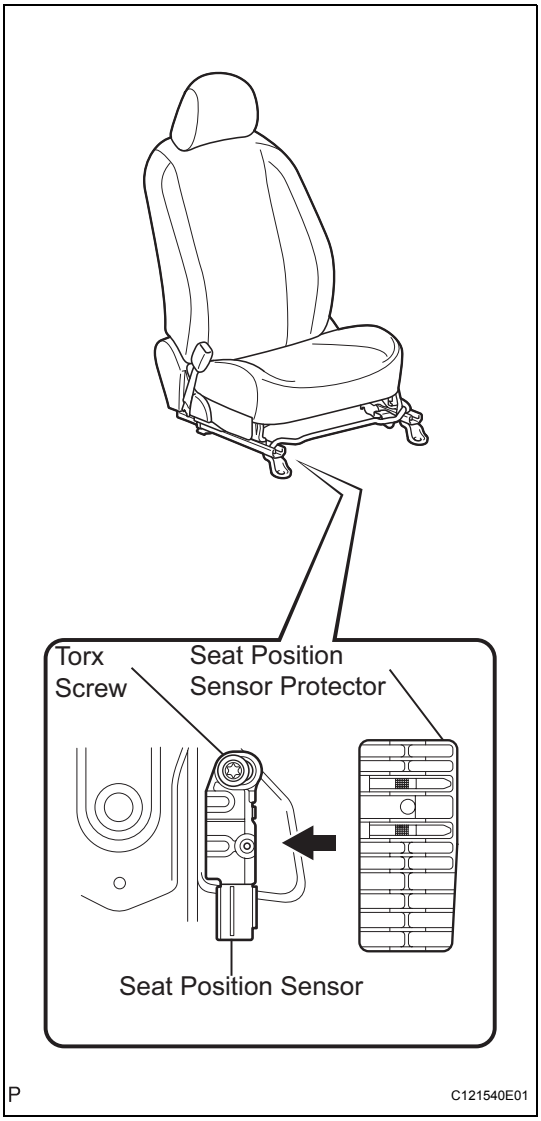

7. REMOVE SEAT POSITION AIRBAG SENSOR

(a) Disconnect the connector from the seat position airbag sensor.

(b) Using "Torx" socket wrench T30, remove the torx screw and the seat position airbag sensor.

INSTALLATION

CAUTION:
Some of these service operations affect the SRS airbag system. Read the precautionary notices concerning the SRS airbag system before servicing.
NOTICE:
Always use "Torx" socket wrench E10 when removing the front seat.

1. INSTALL SEAT POSITION AIRBAG SENSOR

(a) Check that the ignition switch is turned to OFF.

(b) Check that the battery negative (-) terminal is disconnected.
CAUTION:
After removing the terminal, wait for at least 90 seconds before starting the operation.

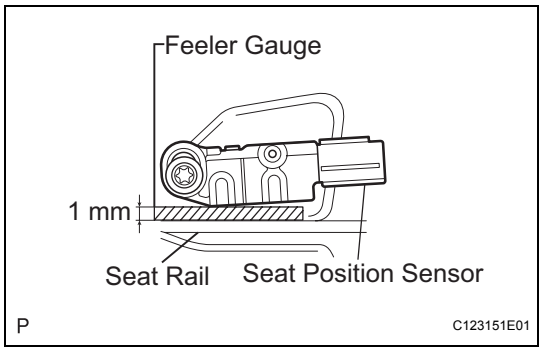

(c) Using an 1 mm (0.039 in.) feeler gauge, install the seat position airbag sensor.
NOTICE:
- **If the seat position airbag sensor has been dropped, or there are any cracks, dents or other defects in the case, bracket or connector, replace the seat position airbag sensor with a new one.**
- **When installing the seat position airbag sensor, make sure that the SRS wiring does not interfere with other parts and is not pinched between other parts.**

HINT:
Maintain a clearance between the seat position airbag sensor and the seat rail within 0.6 mm (0.023 in.) to 2 mm (0.079 in.).

(d) Using "Torx" socket wrench, tighten the torx screw to install the seat position airbag sensor.
Torque: 8.0 N*m (82 kgf*cm, 71 in.*lbf)

(e) Make sure that a clearance between the seat position airbag sensor and the seat rail is within 0.6 mm (0.023 in.) to 2 mm (0.079 in.).

(f) Connect the connector to the seat position airbag sensor.

(g) Check that there is no looseness in the installation parts of the seat position airbag sensor.

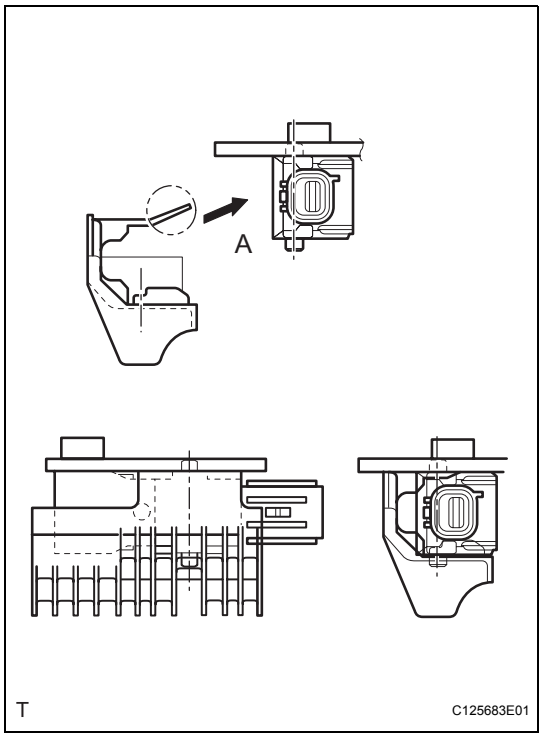

2. **INSTALL SEAT SLIDE POSITION SENSOR PROTECTOR**
   (a) Engage the pin and install a new seat position sensor protector.
   NOTICE:
   Do not damage portion A, shown in the illustration, when installing the seat position sensor protector.
3. **REMOVE FRONT SEAT ASSEMBLY LH (for Sedan) (See page SE-20)**
4. **INSTALL FRONT SEAT ASSEMBLY LH (for Hatchback) (See page SE-42)**
5. **INSTALL FRONT SEAT HEADREST ASSEMBLY (for Sedan) (See page SE-21)**
6. **INSTALL FRONT SEAT HEADREST ASSEMBLY (for Hatchback) (See page SE-43)**
7. **CONNECT CABLE TO NEGATIVE BATTERY TERMINAL**
   Torque: 5.4 N*m (54 kgf*cm, 48 in.*lbf)
8. **INSPECT SRS WARNING LIGHT**
   (See page RS-31)

OCCUPANT CLASSIFICATION ECU

COMPONENTS

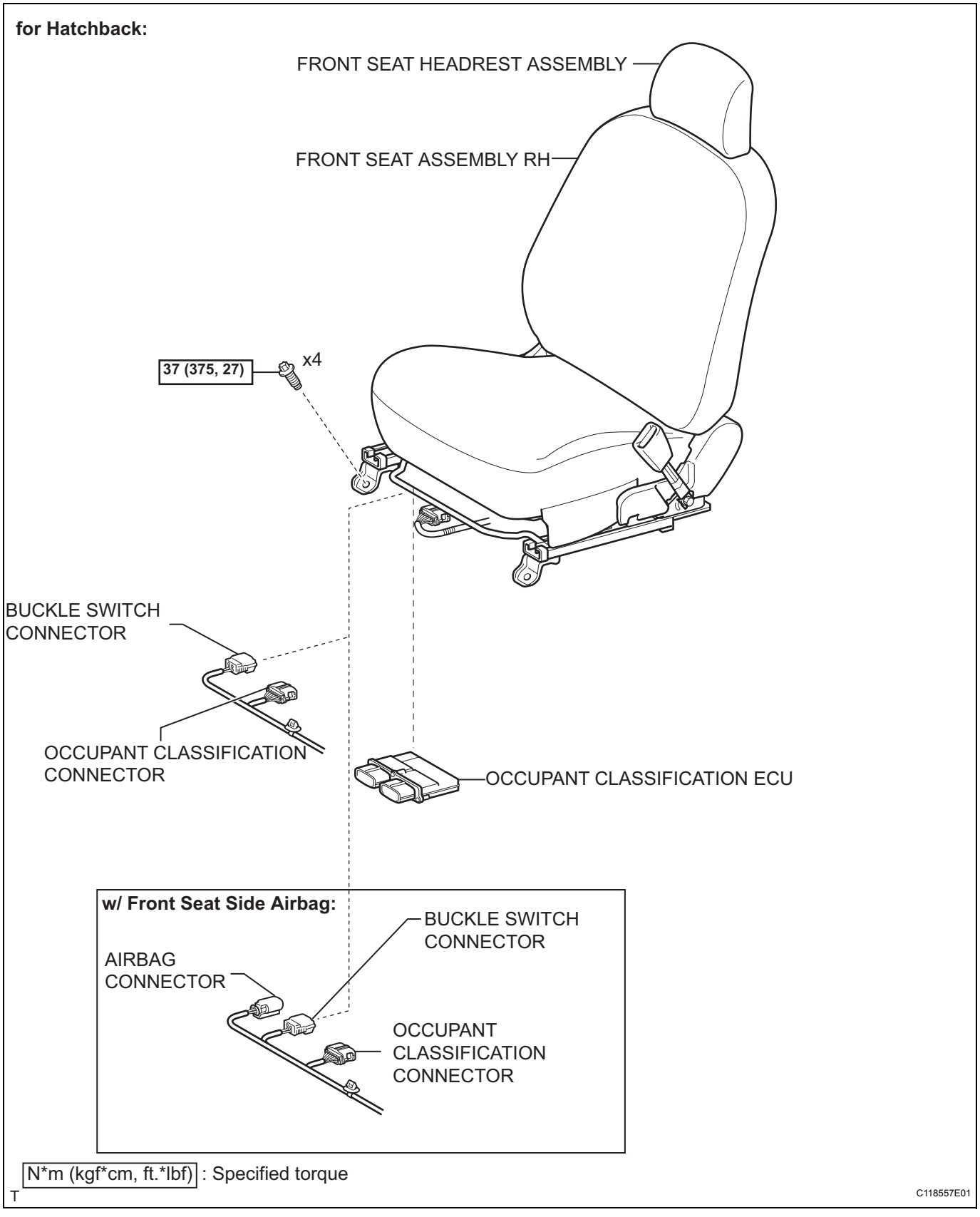

RS

for Sedan:

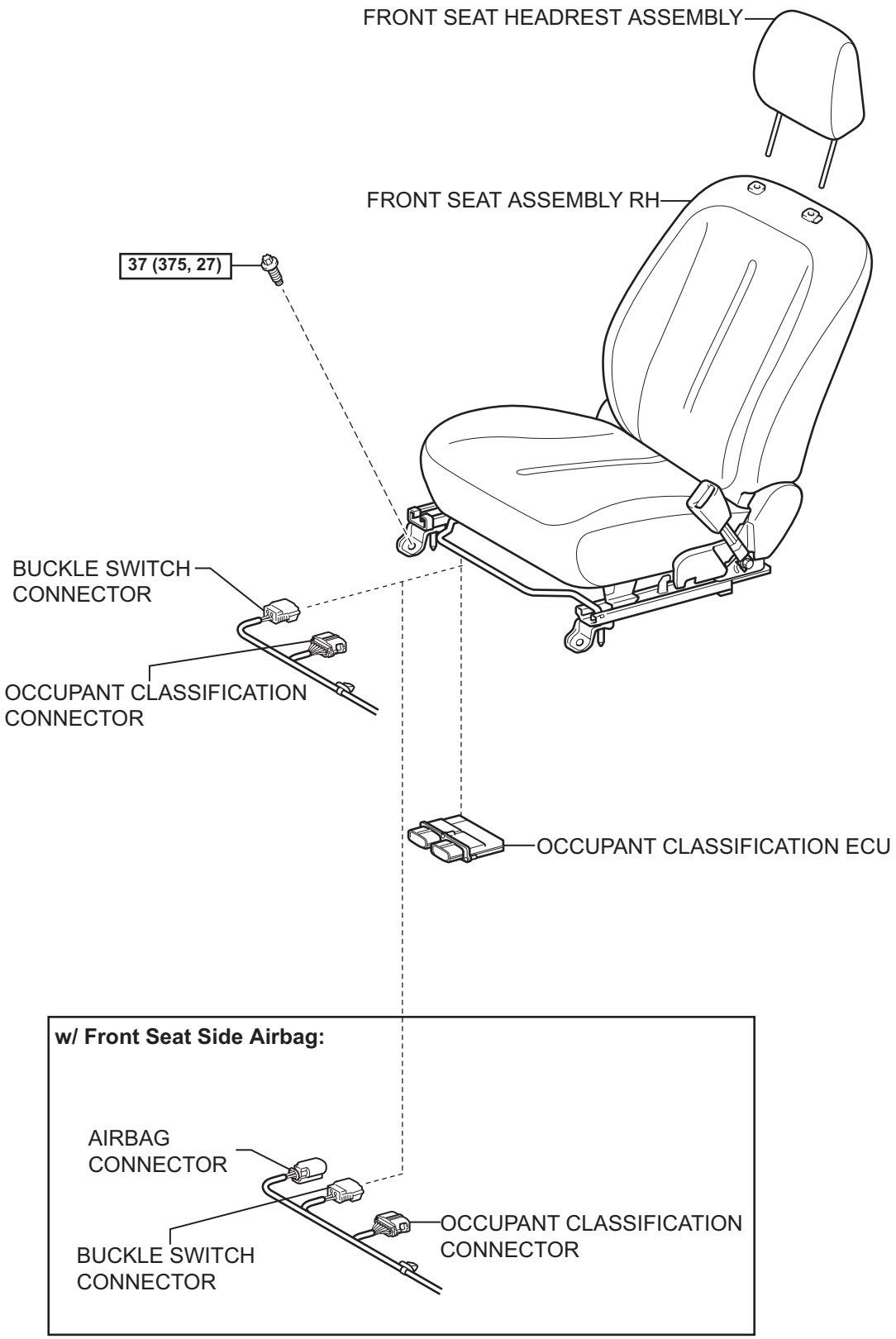

N*m (kgf*cm, ft*lbf) : Specified torque

T

C143431E01

ON-VEHICLE INSPECTION

1. **INSPECT OCCUPANT CLASSIFICATION ECU (for Vehicle not Involved in Collision)**
   (a) Perform a diagnostic system check (See page RS-38).

2. **REMOVE OCCUPANT CLASSIFICATION ECU (for Vehicle Involved in Collision)**
   (a) Perform a diagnostic system check (See page RS-38).
   (b) Even if the airbag was not deployed, check if there is any damage to the occupant classification ECU. If there are any defects as those mentioned below, replace the occupant classification ECU with a new one:
   - Cracks, dents or chips in the case.
   - Cracks or other damage to the connector.

   CAUTION:
   Follow the correct removal and installation procedures.

RS

REMOVAL

CAUTION:
Some of these service operations affect the SRS airbag system. Read the precautionary notices concerning the SRS airbag system before servicing.
NOTICE:
Installation is in the reverse order of removal.

1. **DISCONNECT CABLE FROM NEGATIVE BATTERY TERMINAL**
2. **REMOVE FRONT SEAT HEADREST ASSEMBLY (for Sedan) (See page SE-5)**
3. **REMOVE FRONT SEAT HEADREST ASSEMBLY (for Hatchback) (See page SE-28)**
4. **REMOVE FRONT SEAT ASSEMBLY RH (for Sedan) (See page SE-5)**
5. **REMOVE FRONT SEAT ASSEMBLY RH (for Hatchback) (See page SE-28)**
6. **REMOVE OCCUPANT CLASSIFICATION ECU**
   (a) Disconnect the connectors from the occupant classification ECU.
   (b) Using a screwdriver, remove the occupant classification ECU.

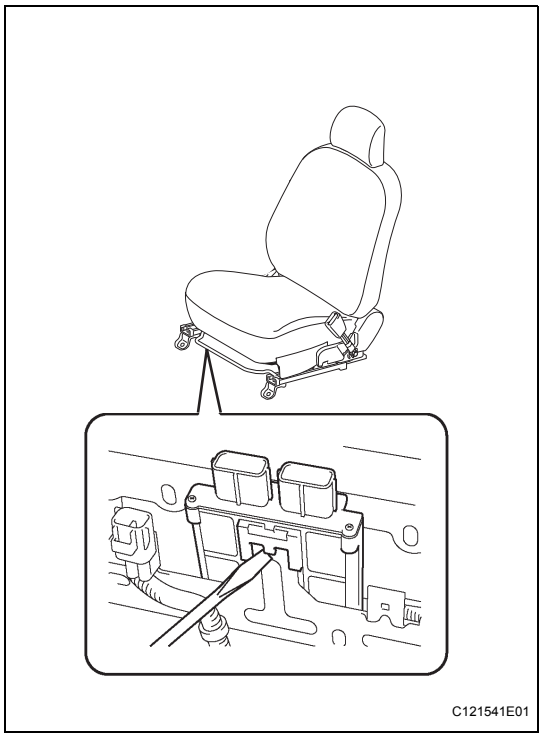
C121541E01

INSTALLATION

CAUTION:
Some of these service operations affect the SRS airbag system. Read the precautionary notices concerning the SRS airbag system before servicing.
NOTICE:
Always use "Torx" socket wrench E10 when installing the front seat.

1. **INSTALL OCCUPANT CLASSIFICATION ECU**
   (a) Check that the ignition switch is turned OFF.
   (b) Check that the negative (-) battery terminal is disconnected.
   CAUTION:
   After removing the terminal, wait for at least 90 seconds before starting the operation.
   (c) Install the occupant classification ECU.
   (d) Connect the connectors to the occupant classification ECU.
   NOTICE:
   - **If the occupant classification ECU has been dropped, or there are any cracks, dents or other defects in the case, bracket or connector, replace it with a new one.**
   - **When installing the occupant classification ECU, make sure that the SRS wiring does not interfere with other parts and that it is not pinched between other parts.**
2. **INSTALL FRONT SEAT ASSEMBLY RH (for Sedan) (See page SE-20)**
3. **INSTALL FRONT SEAT ASSEMBLY RH (for Hatchback) (See page SE-42)**
4. **INSTALL FRONT SEAT HEADREST ASSEMBLY (for Sedan) (See page SE-21)**
5. **INSTALL FRONT SEAT HEADREST ASSEMBLY (for Hatchback) (See page SE-43)**
6. **CONNECT CABLE TO NEGATIVE BATTERY TERMINAL**
   Torque: 5.4 N*m (55 kgf*cm, 48 in.*lbf)
7. **PERFORM OCCUPANT CLASSIFICATION ECU INITIALIZATION**
   (See page RS-215)
8. **INSPECT SRS WARNING LIGHT**
   (See page RS-31)

DTC	B1620/21	Driver Side - Side Airbag Sensor Circuit Malfunction

DESCRIPTION

The side airbag sensor LH consists of parts including the diagnostic circuit and the lateral deceleration sensor.

When the center airbag sensor assembly receives signals from the lateral deceleration sensor, it determines whether or not the SRS should be activated.

DTC B1620/21 is set when a malfunction is detected in the side airbag sensor LH circuit.

DTC No.	DTC Detecting Condition	Trouble Area
B1620/21	• Center airbag sensor assembly detects open circuit signal in side airbag sensor LH circuit for 2 seconds. • Side airbag sensor LH malfunction • Center airbag sensor assembly malfunction	• Floor wire • Side airbag sensor LH • Center airbag sensor assembly

WIRING DIAGRAM

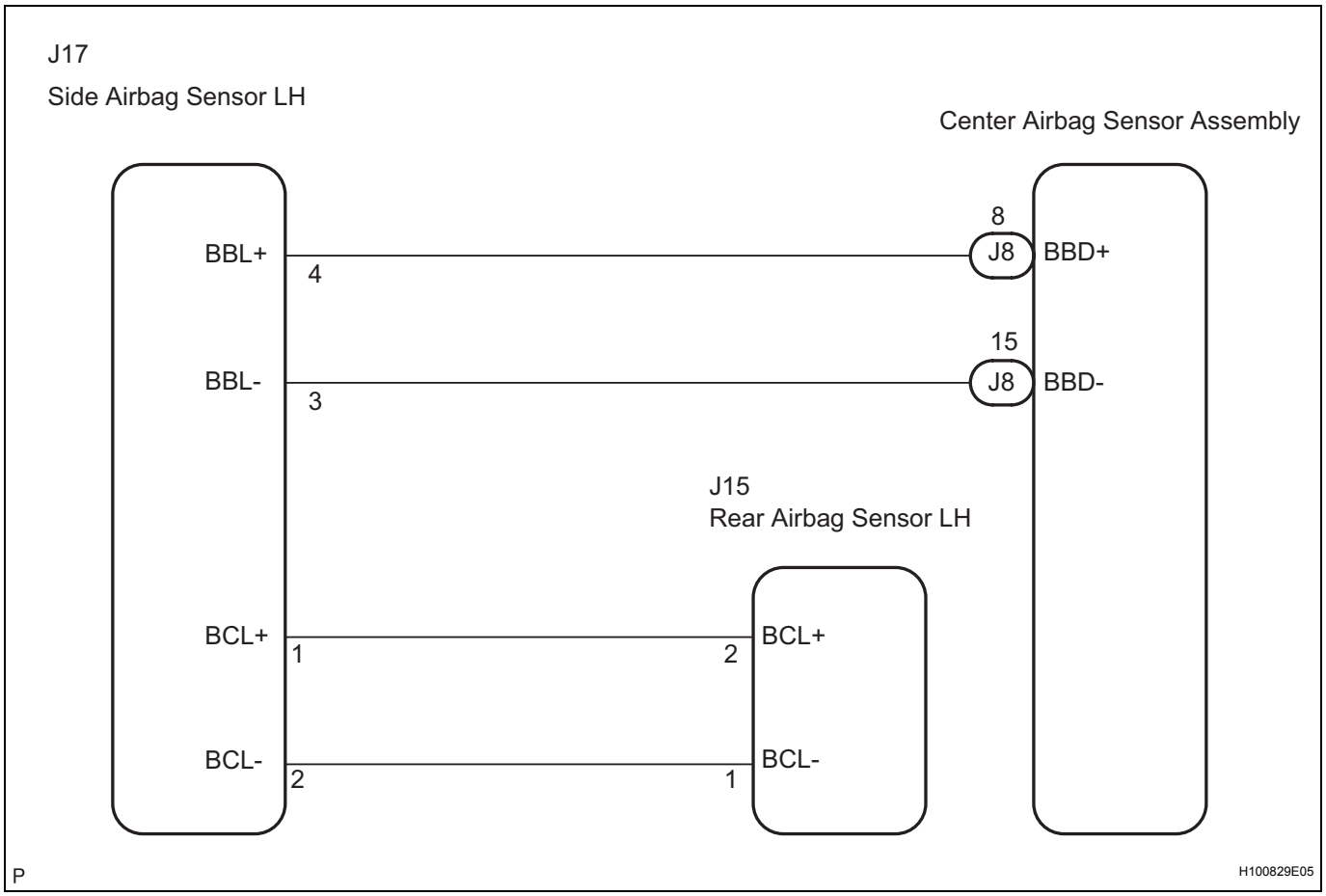

INSPECTION PROCEDURE

NOTICE:

In order to prevent unexpected airbag deployment, disconnect the following connectors before inspecting parts such as wire harnesses, if the application of tester probes to the center airbag sensor assembly connector is necessary.

1. Turn the ignition switch to the lock position.
2. Disconnect the negative (-) terminal cable from the battery, and wait for at least 90 seconds.

3. Disconnect the connector from the center airbag sensor assembly.
4. Disconnect the connectors from the steering pad.
5. Disconnect the connectors from the front passenger airbag assembly.
6. Disconnect the connector from the front seat outer belt assembly LH.
7. Disconnect the connector from the front seat outer belt assembly RH.

HINT:

Skip the following steps if side and curtain shield airbags are not fitted.

8. Disconnect the connector from the front seat side airbag assembly LH.
9. Disconnect the connector from the front seat side airbag assembly RH.
10. Disconnect the connector from the curtain shield airbag assembly LH.
11. Disconnect the connector from the curtain shield airbag assembly RH.

1 CHECK DTC

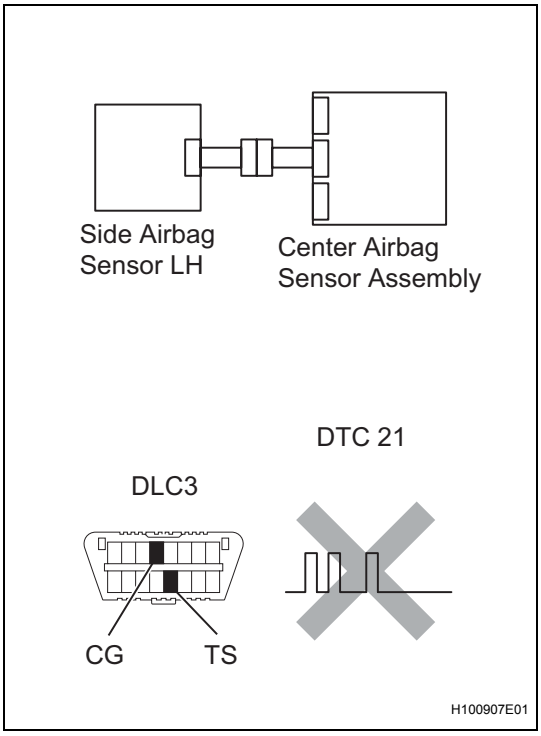

(a) Turn the ignition switch on, and wait for at least 60 seconds.
(b) Clear the DTCs stored in the memory (See page RS-38).
(c) Turn the ignition switch off.
(d) Turn the ignition switch on, and wait for at least 60 seconds.
(e) Check the DTCs (See page RS-38).

OK:

DTC B1620/21 is not output.

HINT:

DTCs other than DTC B1620/21 may be output at this time, but they are not related to this check.

OK → **USE SIMULATION METHOD TO CHECK**

NG

2 CHECK CONNECTION OF CONNECTORS

(a) Turn the ignition switch off.
(b) Disconnect the negative (-) terminal cable from the battery, and wait for at least 90 seconds.
(c) Check that the connectors are properly connected to the center airbag sensor assembly, rear airbag sensor LH and the side airbag sensor LH.

OK:

The connectors are properly connected.

NG → **CONNECT CONNECTORS**

OK

3 CHECK FLOOR WIRE (FOR OPEN)

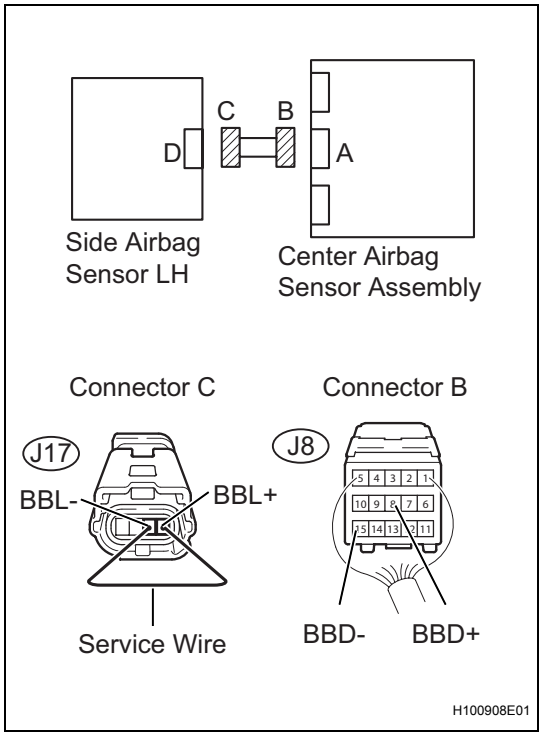

(a) Disconnect the connectors from the center airbag sensor assembly and the side airbag sensor LH.
(b) Using a service wire, connect J17-4 (BBL+) and J17-3 (BBL-) of connector C.
NOTICE:
Do not forcibly insert the service wire into the terminals of the connector when connecting.
(c) Measure the resistance.
Standard resistance

Tester Connection	Condition	Specified Condition
J8-8 (BBD+) - J8-15 (BBD-)	Always	Below 1 Ω

NG → **REPAIR OR REPLACE FLOOR WIRE**

OK

4 CHECK FLOOR WIRE (FOR SHORT)

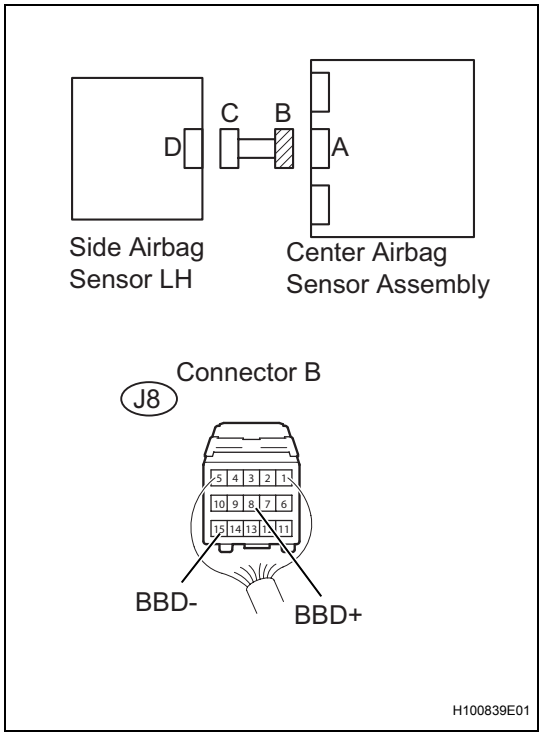

(a) Disconnect the service wire from connector C.
(b) Measure the resistance.
Standard resistance

Tester Connection	Condition	Specified Condition
J8-8 (BBD+) - J8-15 (BBD-)	Always	1 MΩ or Higher

NG → **REPAIR OR REPLACE FLOOR WIRE**

OK

RS

5	CHECK FLOOR WIRE (TO B+)

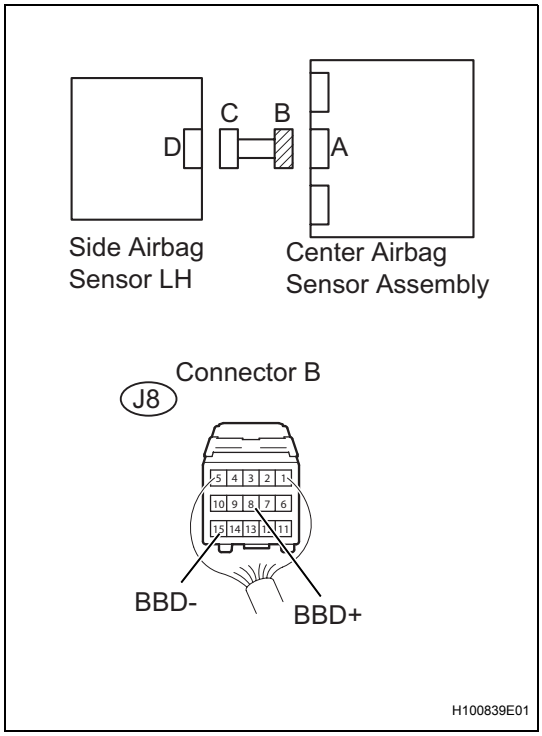

(a) Connect the negative (-) terminal cable to the battery, and wait for at least 2 seconds.
(b) Turn the ignition switch to the on position.
(c) Measure the voltage.
Standard voltage

Tester Connection	Condition	Specified Condition
J8-8 (BBD+) - Body ground	Ignition switch on	Below 1 V
J8-15 (BBD-) - Body ground	Ignition switch on	Below 1 V

NG → **REPAIR OR REPLACE FLOOR WIRE**

OK

6	CHECK FLOOR WIRE (TO GROUND)

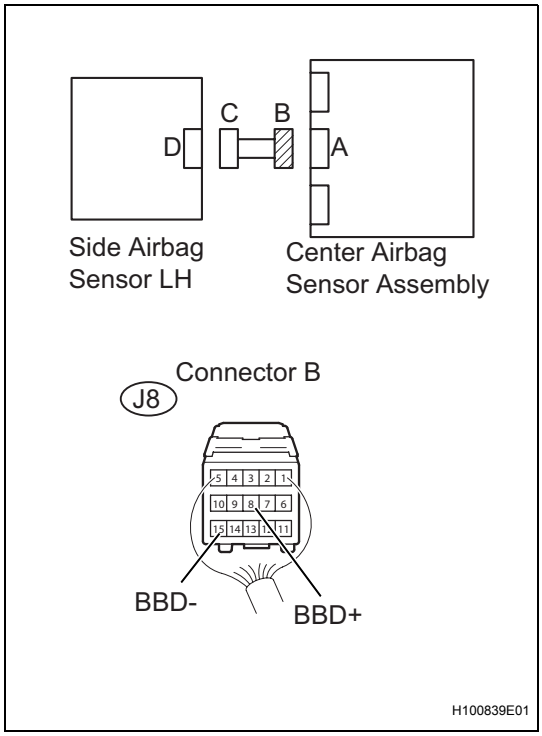

(a) Turn the ignition switch to the lock position.
(b) Disconnect the negative (-) terminal cable from the battery, and wait for at least 90 seconds.
(c) Measure the resistance.
Standard resistance

Tester Connection	Condition	Specified Condition
J8-8 (BBD+) - Body ground	Always	1 MΩ or Higher
J8-15 (BBD-) - Body ground	Always	1 MΩ or Higher

NG → **REPAIR OR REPLACE FLOOR WIRE**

OK

7	CHECK SIDE AIRBAG SENSOR LH

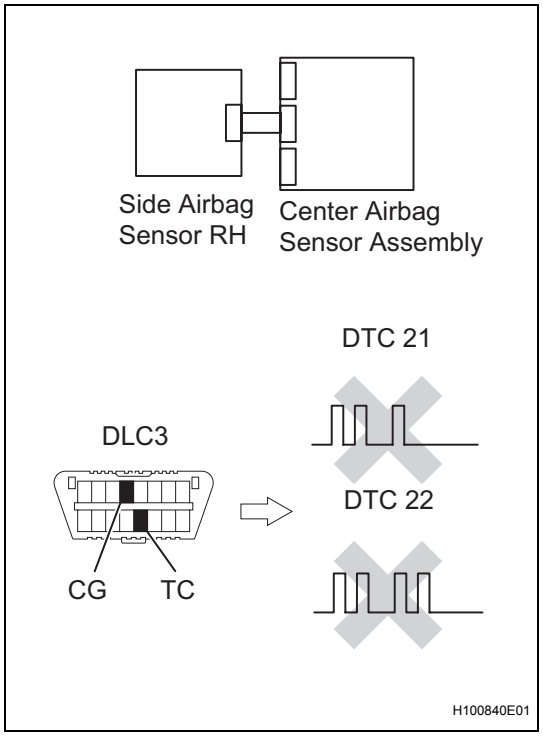

(a) Connect the connectors to the center airbag sensor assembly.
(b) Interchange the side airbag sensor RH with the side airbag sensor LH and connect the connectors to them.
(c) Connect the negative (-) terminal cable to the battery, and wait for at least 2 seconds.
(d) Turn the ignition switch to the on position, and wait for at least 60 seconds.
(e) Clear the DTCs stored in the memory (See page RS-38).
(f) Turn the ignition switch to the lock position.
(g) Turn the ignition switch to the on position, and wait for at least 60 seconds.
(h) Check for DTCs (See page RS-38).

Result

Result	Proceed to
DTC B1620/21 is output.	A
DTC B1625/22 is output.	B
Neither DTC B1620/21 nor B1625/22 is output.	C

A	Go to step 8
B	REPLACE SIDE AIRBAG SENSOR LH

C

USE SIMULATION METHOD TO CHECK

RS

8	CHECK FLOOR WIRE (FOR OPEN)

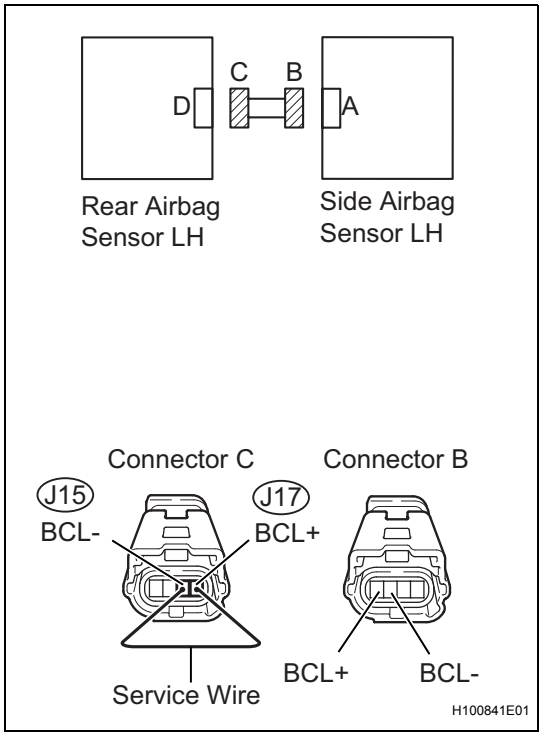

(a) Disconnect the connectors from the side airbag sensor LH and the rear airbag sensor LH.
(b) Using a service wire, connect J15-1 (BCL-) and J15-2 (BCL+) of connector C.
NOTICE:
Do not forcibly insert the service wire into the terminals of the connector when connecting.
(c) Measure the resistance.
Standard resistance

Tester Connection	Condition	Specified Condition
J17-1 (BCL+) - J17-2 (BCL-)	Always	Below 1 Ω

NG → **REPAIR OR REPLACE FLOOR WIRE**

OK

9	CHECK FLOOR WIRE (FOR SHORT)

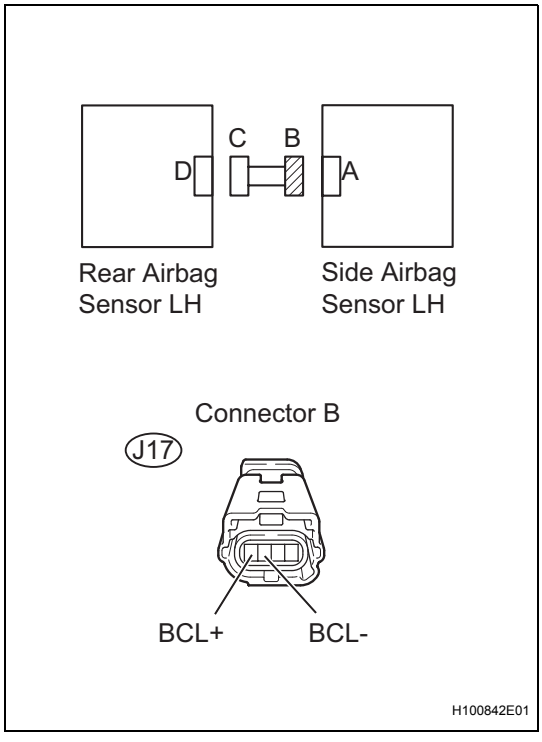

(a) Disconnect the service wire from connector C.
(b) Measure the resistance.
Standard resistance

Tester Connection	Condition	Specified Condition
J17-1 (BCL+) - J17-2 (BCL-)	Always	1 MΩ or Higher

NG → **REPAIR OR REPLACE FLOOR WIRE**

OK

10 CHECK FLOOR WIRE (TO B+)

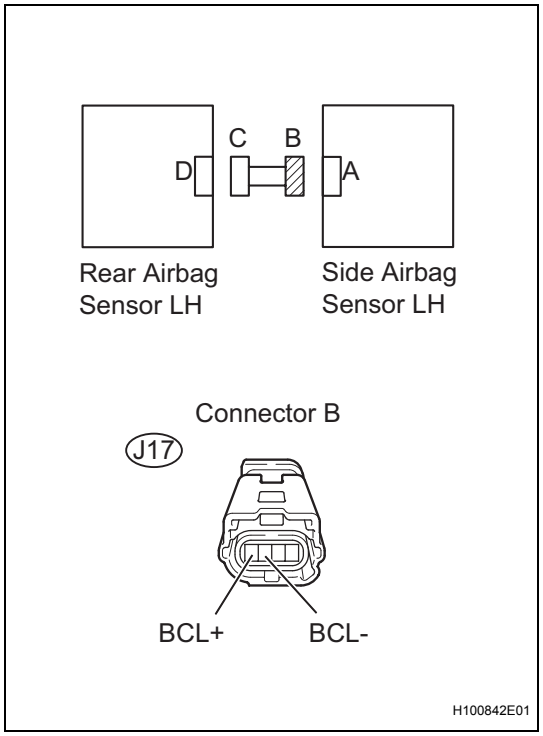

(a) Connect the negative (-) terminal cable to the battery, and wait for at least 2 seconds.
(b) Turn the ignition switch to the on position.
(c) Measure the voltage.
Standard voltage

Tester Connection	Condition	Specified Condition
J17-1 (BCL+) - Body ground	Ignition switch on	Below 1 V
J17-2 (BCL-) - Body ground	Ignition switch on	Below 1 V

NG → **REPAIR OR REPLACE FLOOR WIRE**

OK

11 CHECK FLOOR WIRE (TO GROUND)

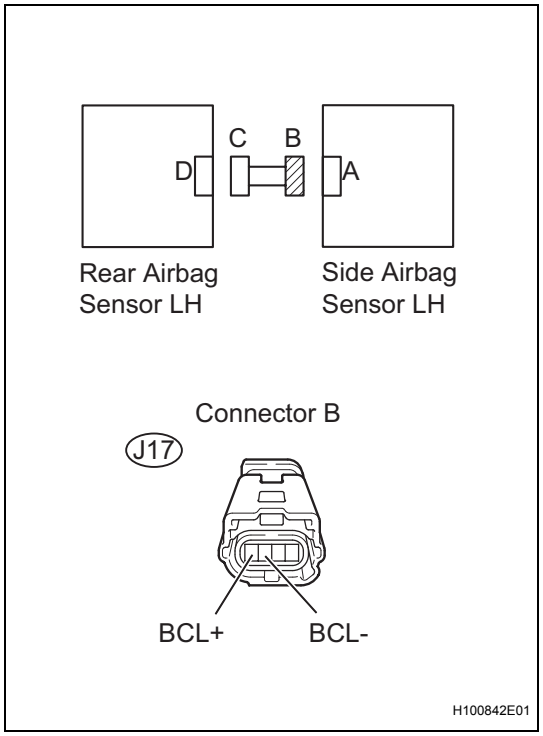

(a) Turn the ignition switch to the lock position.
(b) Disconnect the negative (-) terminal cable from the battery, and wait for at least 90 seconds.
(c) Measure the resistance.
Standard resistance

Tester Connection	Condition	Specified Condition
J17-1 (BCL+) - Body ground	Always	1 MΩ or Higher
J17-2 (BCL-) - Body ground	Always	1 MΩ or Higher

NG → **REPAIR OR REPLACE FLOOR WIRE**

OK

RS

12	CHECK REAR AIRBAG SENSOR LH

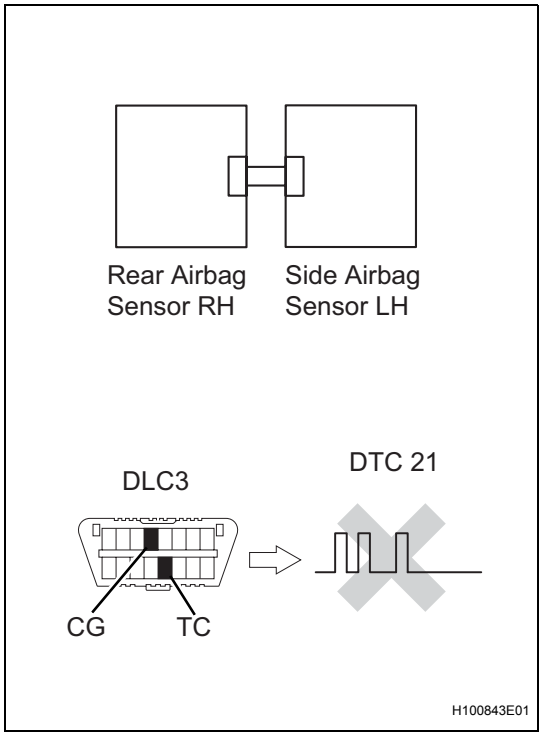

(a) Connect the connectors to the center airbag sensor assembly.
(b) Interchange the airbag sensor rear LH with the airbag sensor rear RH and connect the connectors to them.
(c) Connect the negative (-) terminal cable to the battery, and wait for at least 2 seconds.
(d) Turn the ignition switch to the on position, and wait for at least 60 seconds.
(e) Clear the DTCs stored in the memory (See page RS-38).
(f) Turn the ignition switch to the lock position.
(g) Turn the ignition switch to the on position, and wait for at least 60 seconds.
(h) Check for DTCs (See page RS-38).

Result

Result	Proceed to
DTC B1620/21 is output.	A
DTC B1625/22 is output.	B
Neither DTC B1620/21 nor B1625/22 is output.	C

HINT:
DTCs other than B1620/21 and B1625/22 may be output at this time, but they are not related to this check.

A → **REPLACE CENTER AIRBAG SENSOR ASSEMBLY**

B → **REPLACE REAR AIRBAG SENSOR LH**

C

USE SIMULATION METHOD TO CHECK

DTC	B1625/22	Front Passenger Side - Side Airbag Sensor Circuit Malfunction

DESCRIPTION

The side airbag sensor RH consists of parts including the diagnostic circuit and the lateral deceleration sensor.

When the center airbag sensor assembly receives signals from the lateral deceleration sensor, it determines whether or not the SRS should be activated.

DTC B1625/22 is set when a malfunction is detected in the side airbag sensor RH circuit.

DTC No.	DTC Detecting Condition	Trouble Area
B1625/22	• Center airbag sensor assembly detects open circuit signal in side airbag sensor RH circuit for 2 seconds. • Side airbag sensor RH malfunction • Center airbag sensor assembly malfunction	• Floor wire • Side airbag sensor RH • Center airbag sensor assembly

WIRING DIAGRAM

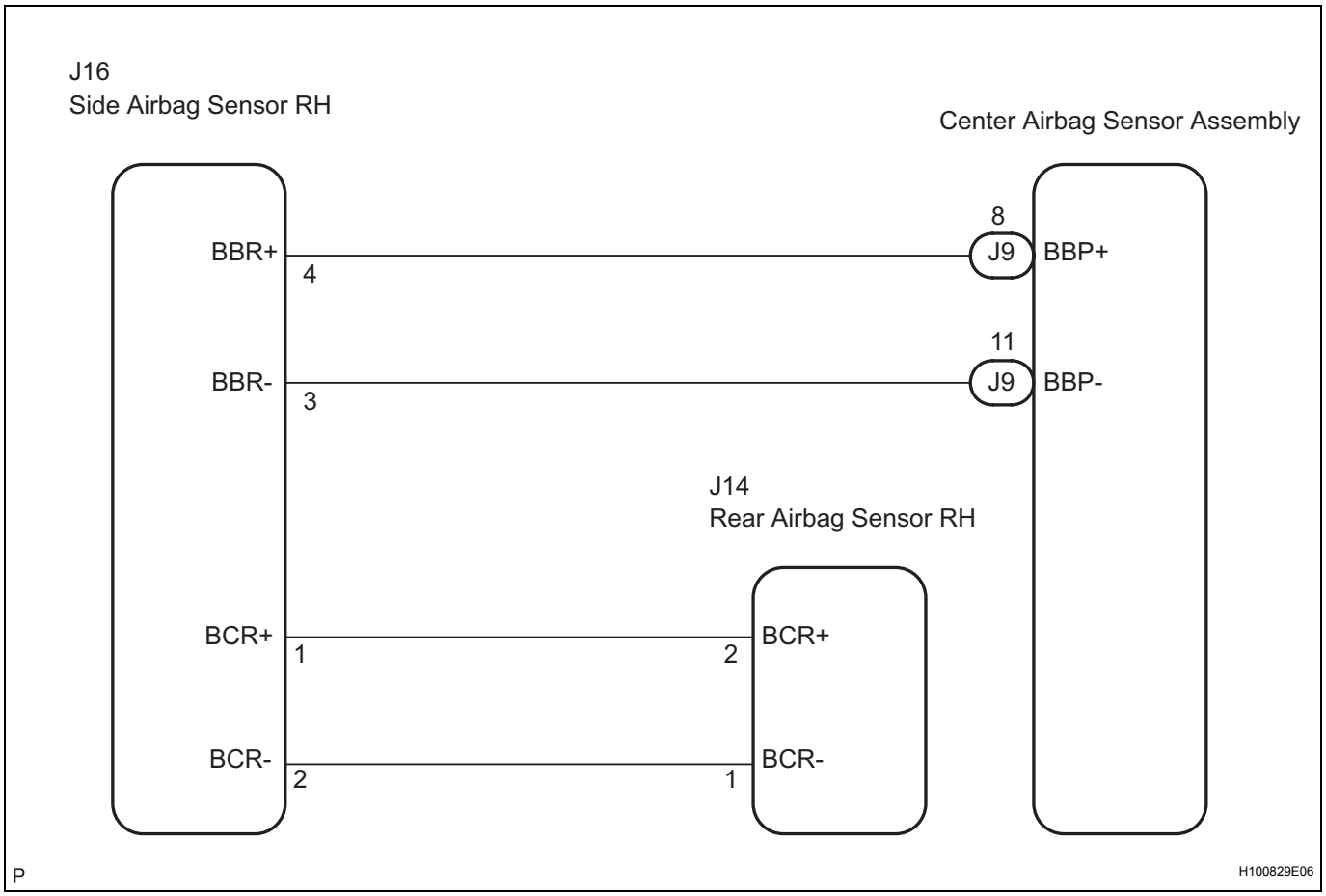

INSPECTION PROCEDURE

NOTICE:

In order to prevent unexpected airbag deployment, disconnect the following connectors before inspecting parts such as wire harnesses, if the application of tester probes to the center airbag sensor assembly connector is necessary.

1. Turn the ignition switch to the lock position.
2. Disconnect the negative (-) terminal cable from the battery, and wait for at least 90 seconds.

3. Disconnect the connector from the center airbag sensor assembly.
4. Disconnect the connectors from the steering pad.
5. Disconnect the connectors from the front passenger airbag assembly.
6. Disconnect the connector from the front seat outer belt assembly LH.
7. Disconnect the connector from the front seat outer belt assembly RH.

HINT:

Skip the following steps if side and curtain shield airbags are not fitted.

8. Disconnect the connector from the front seat side airbag assembly LH.
9. Disconnect the connector from the front seat side airbag assembly RH.
10. Disconnect the connector from the curtain shield airbag assembly LH.
11. Disconnect the connector from the curtain shield airbag assembly RH.

1	CHECK DTC

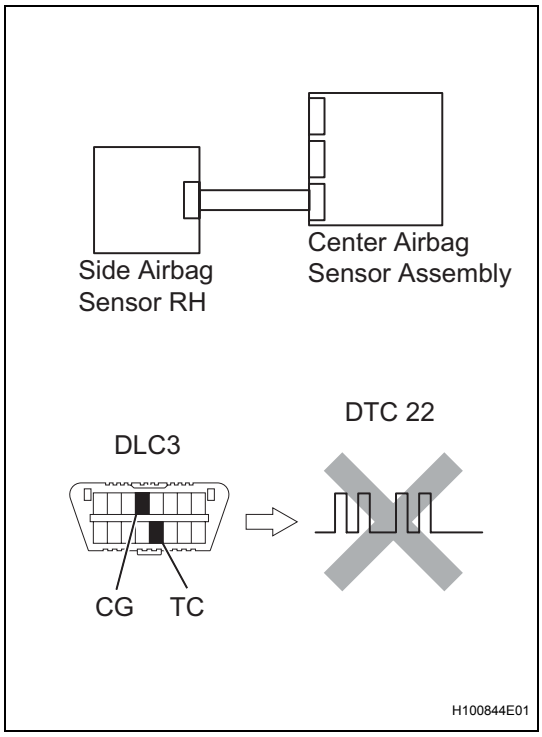

(a) Turn the ignition switch on, and wait for at least 60 seconds.
(b) Clear the DTCs stored in the memory (See page RS-38).
(c) Turn the ignition switch off.
(d) Turn the ignition switch on, and wait for at least 60 seconds.
(e) Check the DTCs (See page RS-38).

OK:

DTC B1625/22 is not output.

HINT:

DTCs other than DTC B1625/22 may be output at this time, but they are not related to this check.

OK → **USE SIMULATION METHOD TO CHECK**

NG

2	CHECK CONNECTION OF CONNECTORS

(a) Turn the ignition switch off.
(b) Disconnect the negative (-) terminal cable from the battery, and wait for at least 90 seconds.
(c) Check that the connectors are properly connected to the center airbag sensor, rear airbag sensor RH and the side airbag sensor RH.

OK:

The connectors are properly connected.

NG → **CONNECT CONNECTORS**

OK

3 CHECK FLOOR WIRE (FOR OPEN)

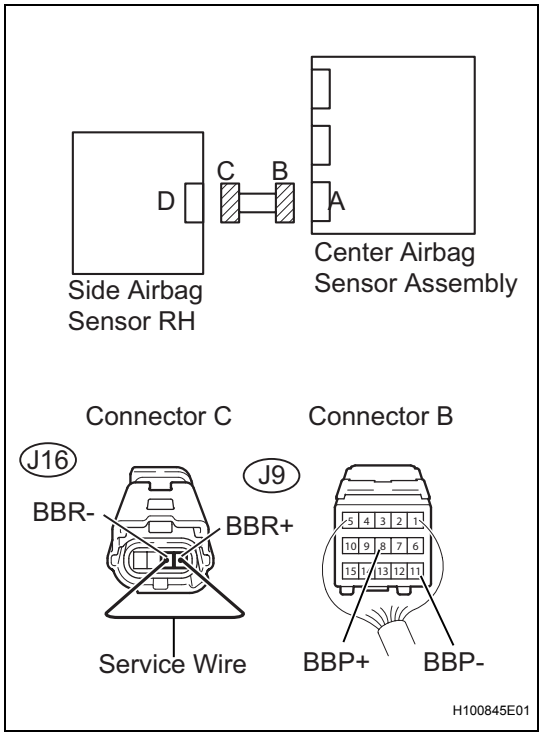

(a) Disconnect the connectors from the center airbag sensor assembly and the side airbag sensor RH.
(b) Using a service wire, connect J16-4 (BBR+) and J16-3 (BBR-) of connector C.
NOTICE:
Do not forcibly insert the service wire into the terminals of the connector when connecting.
(c) Measure the resistance.
Standard resistance

Tester Connection	Condition	Specified Condition
J9-8 (BBP+) - J9-11 (BBP-)	Always	Below 1 Ω

NG → **REPAIR OR REPLACE FLOOR WIRE**

OK

4 CHECK FLOOR WIRE (FOR SHORT)

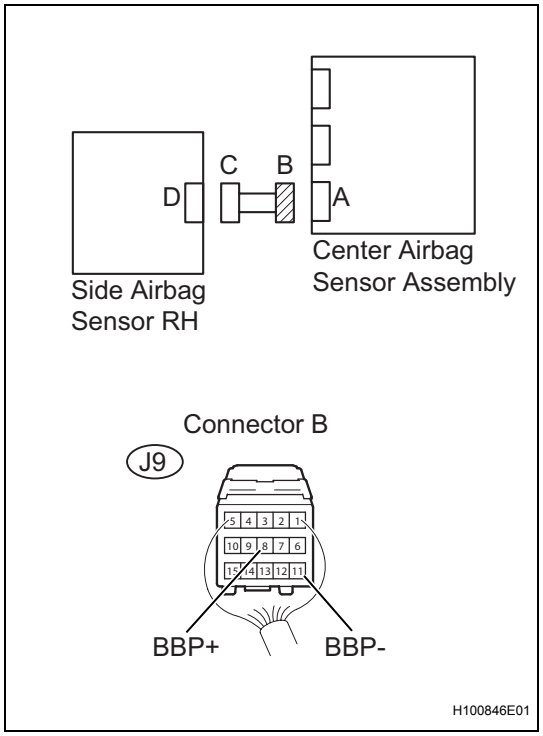

(a) Disconnect the service wire from connector C.
(b) Measure the resistance.
Standard resistance

Tester Connection	Condition	Specified Condition
J9-8 (BBP+) - J9-11 (BBP-)	Always	1 MΩ or Higher

NG → **REPAIR OR REPLACE FLOOR WIRE**

OK

RS

5	CHECK FLOOR WIRE (TO B+)

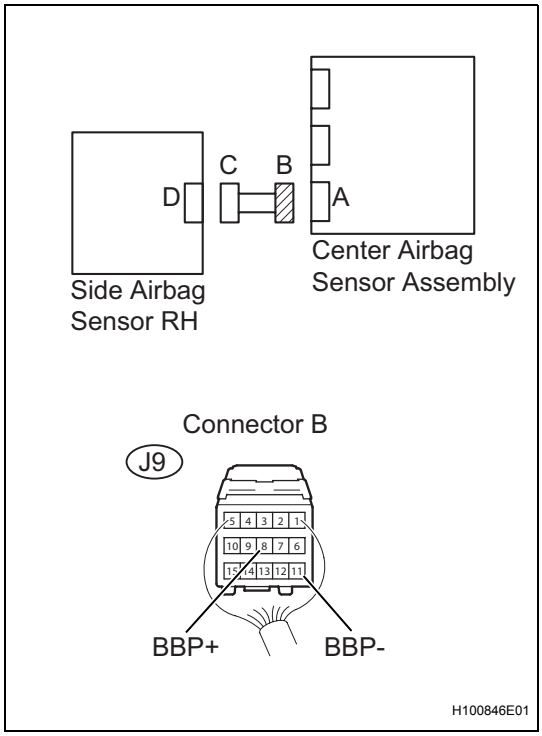

(a) Connect the negative (-) terminal cable to the battery, and wait for at least 2 seconds.
(b) Turn the ignition switch to the on position.
(c) Measure the voltage.

Standard voltage

Tester Connection	Condition	Specified Condition
J9-8 (BBP+) - Body ground	Ignition switch on	Below 1 V
J9-11 (BBP-) - Body ground	Ignition switch on	Below 1 V

NG → REPAIR OR REPLACE FLOOR WIRE

OK

6	CHECK FLOOR WIRE (TO GROUND)

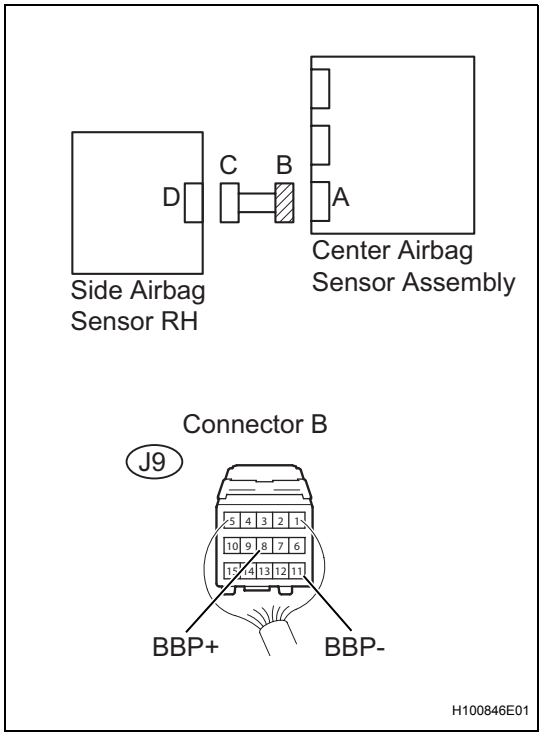

(a) Turn the ignition switch to the lock position.
(b) Disconnect the negative (-) terminal cable from the battery, and wait for at least 90 seconds.
(c) Measure the resistance.

Standard resistance

Tester Connection	Condition	Specified Condition
J9-8 (BBP+) - Body ground	Always	1 MΩ or Higher
J9-11 (BBP-) - Body ground	Always	1 MΩ or Higher

NG → REPAIR OR REPLACE FLOOR WIRE

OK

7	CHECK SIDE AIRBAG SENSOR RH

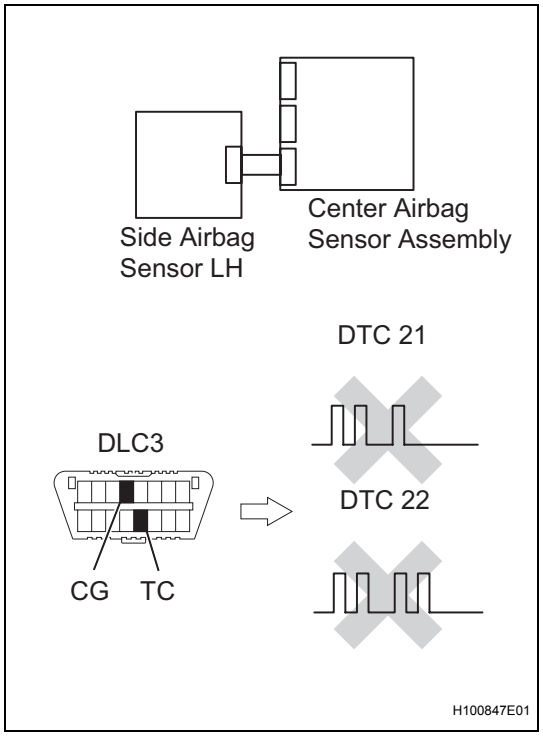

(a) Connect the connectors to the center airbag sensor assembly.
(b) Interchange the side airbag sensor RH with the side airbag sensor LH and connect the connectors to them.
(c) Connect the negative (-) terminal cable to the battery, and wait for at least 2 seconds.
(d) Turn the ignition switch to the on position, and wait for at least 60 seconds.
(e) Clear the DTCs stored in the memory (See page RS-38).
(f) Turn the ignition switch to the lock position.
(g) Turn the ignition switch to the on position, and wait for at least 60 seconds.
(h) Check for DTCs (See page RS-38).

Result

Result	Proceed to
DTC B1625/22 is output.	A
DTC B1620/21 is output.	B
Neither DTC B1620/21 nor B1625/22 is output.	C

A	Go to step 8
B	REPLACE SIDE AIRBAG SENSOR RH

C

USE SIMULATION METHOD TO CHECK

RS

8 CHECK FLOOR WIRE (FOR OPEN)

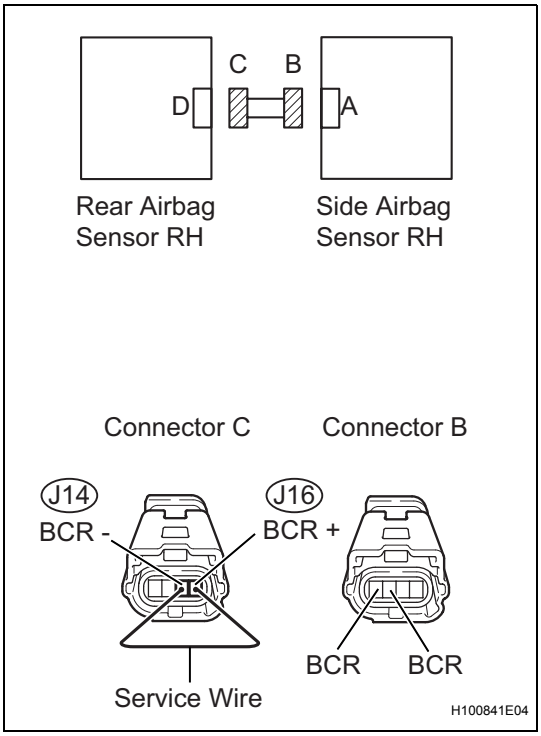

(a) Disconnect the connectors from the side airbag sensor RH and the rear airbag sensor RH.
(b) Using a service wire, connect J14-1 (BCR-) and J14-2 (BCR+) of connector C.
NOTICE:
Do not forcibly insert the service wire into the terminals of the connector when connecting.
(c) Measure the resistance.
Standard resistance

Tester Connection	Condition	Specified Condition
J16-1 (BCR+) - J16-2 (BCR-)	Always	Below 1 Ω

NG → **REPAIR OR REPLACE FLOOR WIRE**

OK

9 CHECK FLOOR WIRE (FOR SHORT)

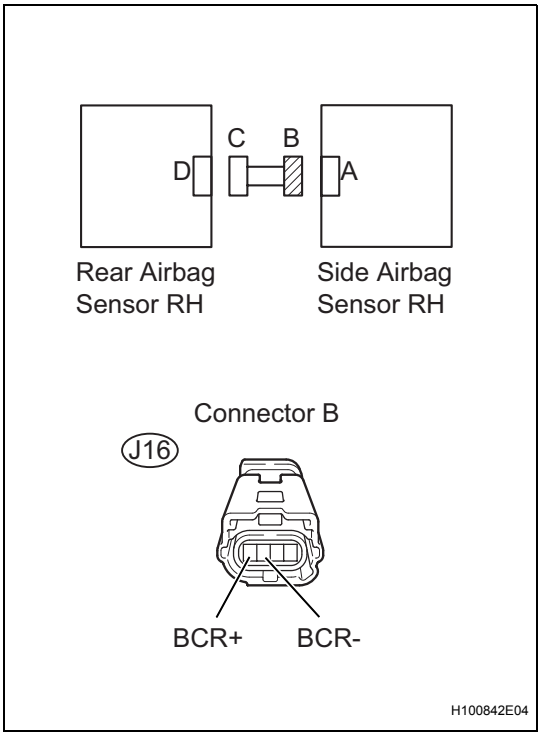

(a) Disconnect the service wire from connector C.
(b) Measure the resistance.
Standard resistance

Tester Connection	Condition	Specified Condition
J16-1 (BCR+) - J16-2 (BCR-)	Always	1 MΩ or Higher

NG → **REPAIR OR REPLACE FLOOR WIRE**

OK

10 CHECK FLOOR WIRE (TO B+)

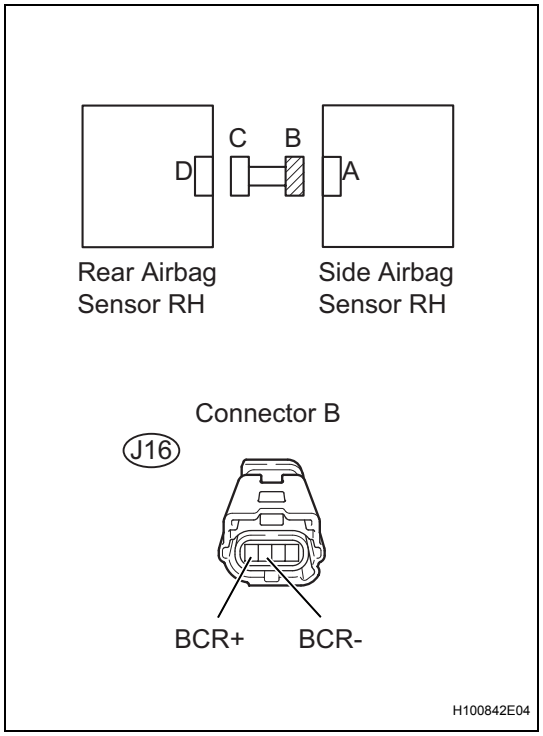

(a) Connect the negative (-) terminal cable to the battery, and wait for at least 2 seconds.
(b) Turn the ignition switch to the on position.
(c) Measure the voltage.
Standard voltage

Tester Connection	Condition	Specified Condition
J16-1 (BCR+) - Body ground	Ignition switch on	Below 1 V
J16-2 (BCR-) - Body ground	Ignition switch on	Below 1 V

NG → **REPAIR OR REPLACE FLOOR WIRE**

OK

11 CHECK FLOOR WIRE (TO GROUND)

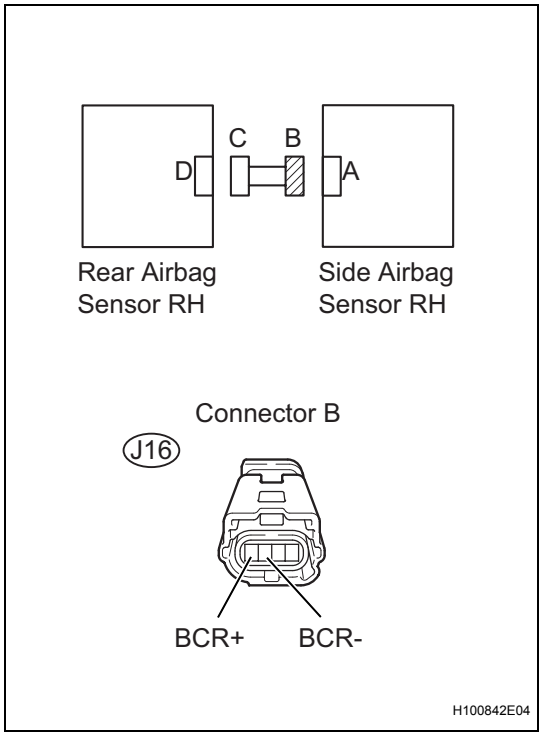

(a) Turn the ignition switch to the lock position.
(b) Disconnect the negative (-) terminal cable from the battery, and wait for at least 90 seconds.
(c) Measure the resistance.
Standard resistance

Tester Connection	Condition	Specified Condition
J16-1 (BCR+) - Body ground	Always	1 MΩ or Higher
J16-2 (BCR-) - Body ground	Always	1 MΩ or Higher

NG → **REPAIR OR REPLACE FLOOR WIRE**

OK

12	CHECK REAR AIRBAG SENSOR RH

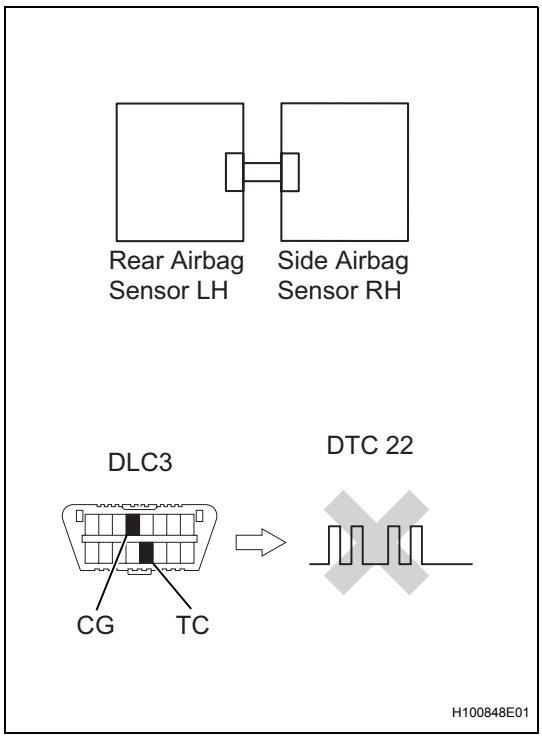

(a) Connect the connectors to the center airbag sensor assembly.
(b) Interchange the side airbag sensor LH with the side airbag sensor RH and connect the connectors to them.
(c) Connect the negative (-) terminal cable to the battery, and wait for at least 2 seconds.
(d) Turn the ignition switch to the on position, and wait for at least 60 seconds.
(e) Clear the DTCs stored in the memory (See page RS-38).
(f) Turn the ignition switch to the lock position.
(g) Turn the ignition switch to the on position, and wait for at least 60 seconds.
(h) Check for DTCs (See page RS-38).

Result

Result	Proceed to
DTC B1625/22 is output.	A
DTC B1620/21 is output.	B
Neither DTC B1620/21 nor B1625/22 is output.	C

HINT:
DTCs other than B1620/21 and B1625/22 may be output at this time, but they are not related to this check.

A → **REPLACE CENTER AIRBAG SENSOR ASSEMBLY**

B → **REPLACE REAR AIRBAG SENSOR RH**

C

USE SIMULATION METHOD TO CHECK

DTC	B1630/23	Driver Side Rear Airbag Sensor Circuit Malfunction

DESCRIPTION

The rear airbag sensor LH consists of parts including the diagnostic circuit and the lateral deceleration sensor.

When the center airbag sensor assembly receives signals from the lateral deceleration sensor, it determines whether or not the SRS should be activated.

DTC B1630/23 is recorded when a malfunction is detected in the rear airbag sensor LH circuit.

DTC No.	DTC Detecting Condition	Trouble Area
B1630/23	• Center airbag sensor assembly detects line short circuit signal, open circuit signal, short circuit to ground signal or short circuit to B+ signal in rear airbag sensor LH circuit for 2 seconds. • Rear airbag sensor LH malfunction • Center airbag sensor assembly malfunction	• Floor wire • Rear airbag sensor LH • Center airbag sensor assembly

WIRING DIAGRAM

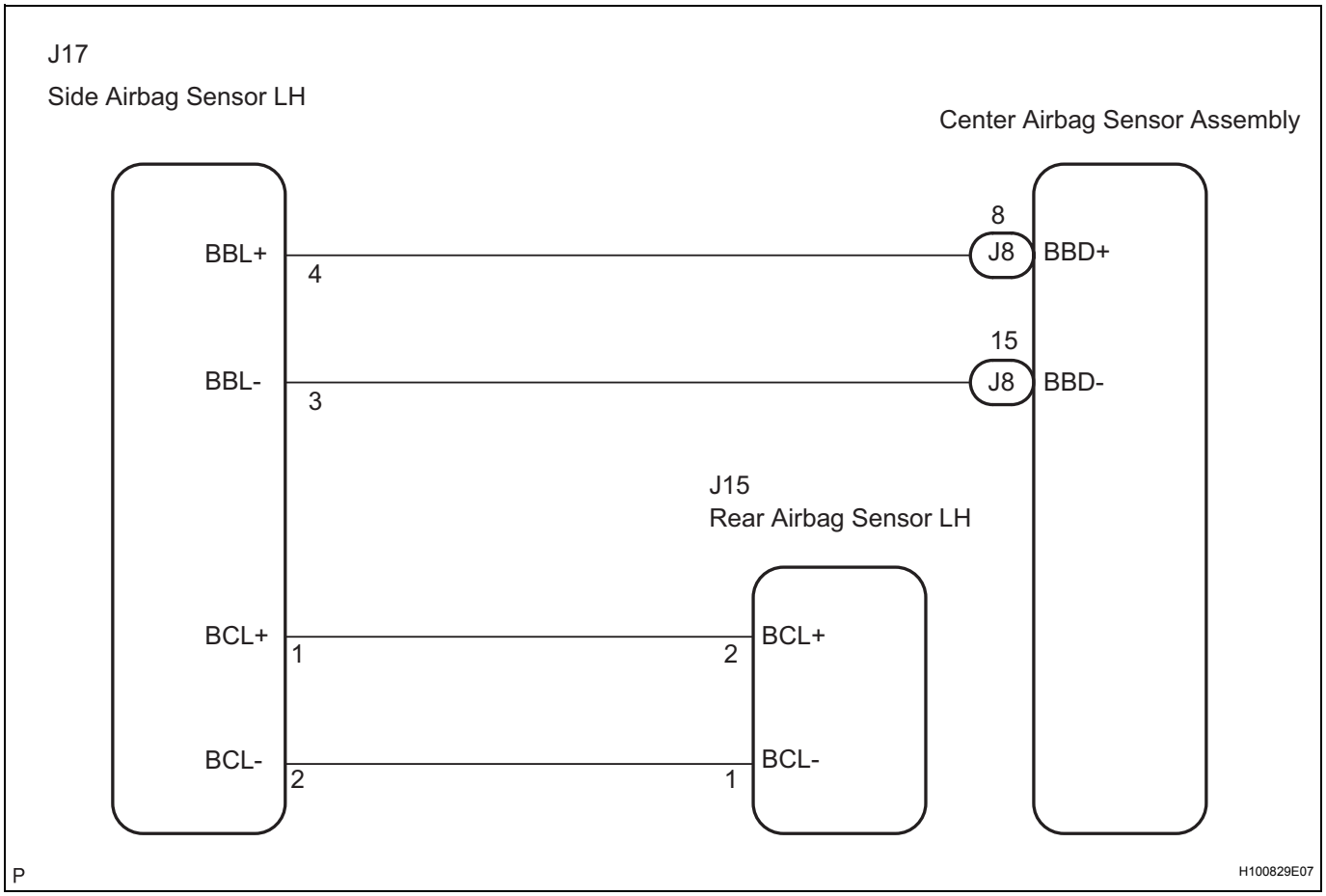

INSPECTION PROCEDURE

1	CHECK DTC

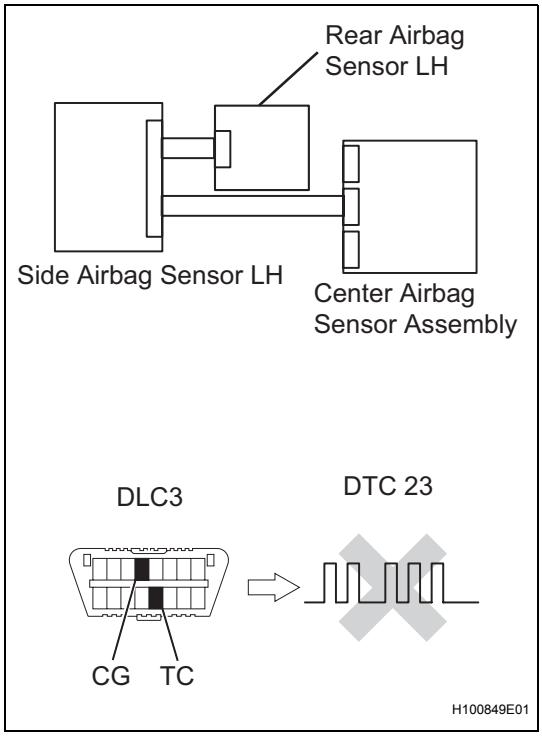

(a) Turn the ignition switch on, and wait for at least 60 seconds.
(b) Clear the DTCs stored in the memory (See page RS-38).
(c) Turn the ignition switch off.
(d) Turn the ignition switch on, and wait for at least 60 seconds.
(e) Check the DTCs (See page RS-38).

OK:

DTC B1630/23 is not output.

HINT:

DTCs other than DTC B1630/23 may be output at this time, but they are not related to this check.

OK → **USE SIMULATION METHOD TO CHECK**

NG

2	CHECK CONNECTION OF CONNECTORS

(a) Turn the ignition switch off.
(b) Disconnect the negative (-) terminal cable from the battery, and wait for at least 90 seconds.
(c) Check that the connectors are properly connected to the center airbag sensor assembly and the rear airbag sensor LH.

OK:

The connectors are properly connected.

NG → **CONNECT CONNECTORS**

OK

3 CHECK FLOOR WIRE (FOR OPEN)

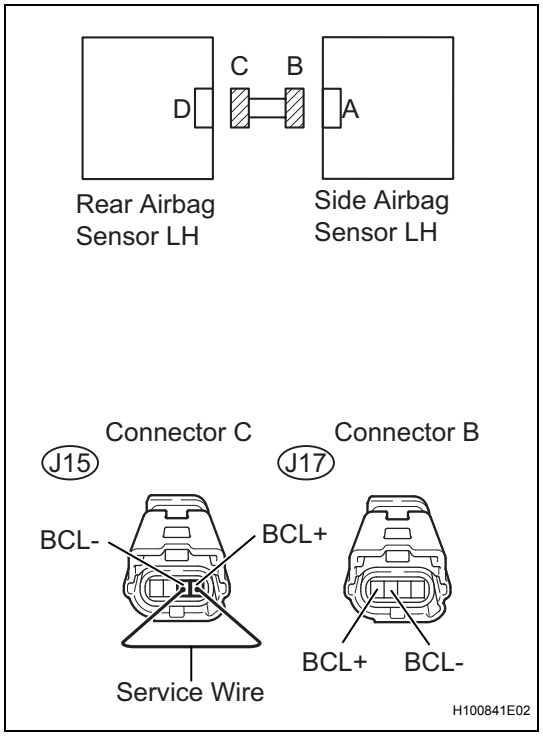

(a) Disconnect the connectors from the side airbag sensor LH and the rear airbag sensor LH.
(b) Using a service wire, connect J15-2 (BCL+) and J15-1 (BCL-) of connector C.
NOTICE:
Do not forcibly insert the service wire into the terminals of the connector when connecting.
(c) Measure the resistance.
Standard resistance

Tester Connection	Condition	Specified Condition
J17-1 (BCL+) - J17-2 (BCL-)	Always	Below 1 Ω

NG → **REPAIR OR REPLACE FLOOR WIRE**

OK

4 CHECK FLOOR WIRE (FOR SHORT)

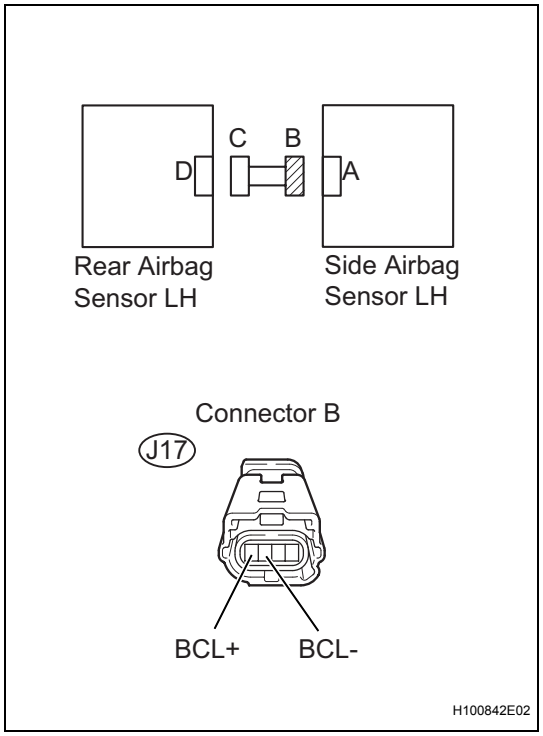

(a) Disconnect the service wire from connector C.
(b) Measure the resistance.
Standard resistance

Tester Connection	Condition	Specified Condition
J17-1 (BCL+) - J17-2 (BCL-)	Always	1 MΩ or higher

NG → **REPAIR OR REPLACE FLOOR WIRE**

OK

RS

5 CHECK FLOOR WIRE (TO B+)

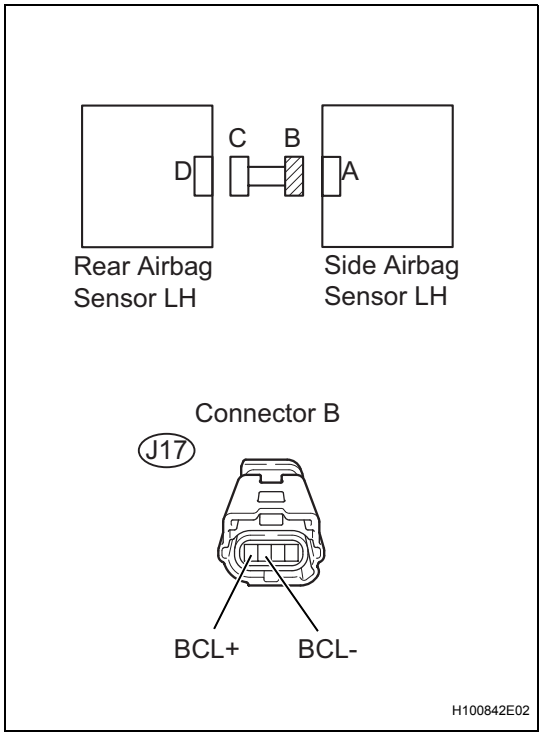

(a) Connect the negative (-) terminal cable to the battery, and wait for at least 2 seconds.
(b) Turn the ignition switch on.
(c) Measure the voltage.
Standard voltage

Tester Connection	Condition	Specified Condition
J17-1 (BCL+) - Body ground	Ignition switch on	Below 1 V
J17-2 (BCL-) - Body ground	Ignition switch on	Below 1 V

NG → **REPAIR OR REPLACE FLOOR WIRE**

OK

6 CHECK FLOOR WIRE (TO GROUND)

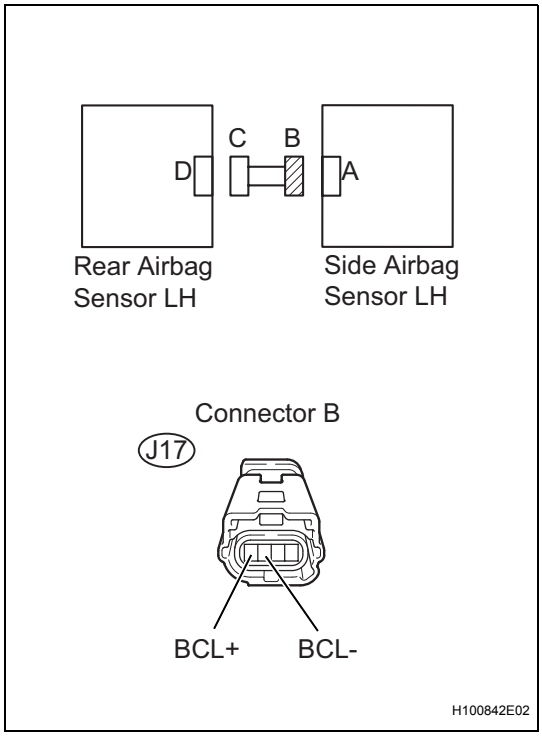

(a) Turn the ignition switch off.
(b) Disconnect the negative (-) terminal cable from the battery, and wait for at least 90 seconds.
(c) Measure the resistance.
Standard resistance

Tester Connection	Condition	Specified Condition
J17-1 (BCL+) - Body ground	Always	1 MΩ or higher
J17-2 (BCL-) - Body ground	Always	1 MΩ or higher

NG → **REPAIR OR REPLACE FLOOR WIRE**

OK

7	CHECK REAR AIRBAG SENSOR LH

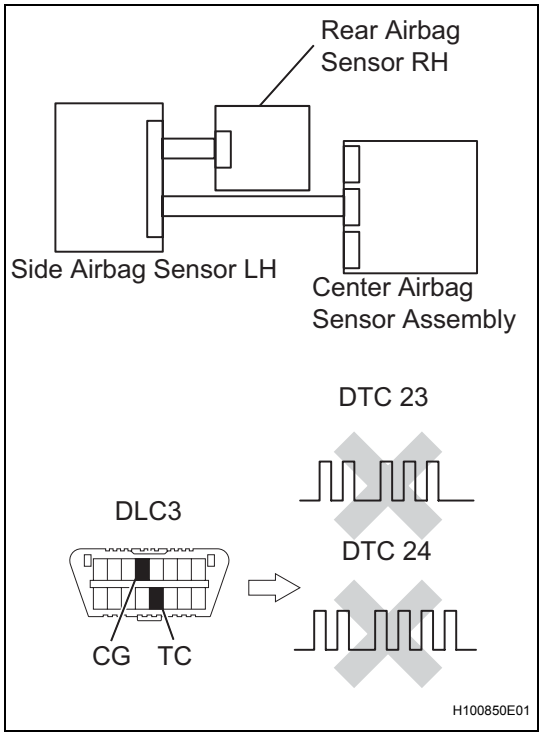

(a) Connect the connectors to the center airbag sensor assembly.
(b) Interchange the rear airbag sensor LH with the rear airbag sensor RH and connect the connectors to them.
(c) Connect the negative (-) terminal cable to the battery, and wait for at least 2 seconds.
(d) Turn the ignition switch on (IG), and wait for at least 60 seconds.
(e) Clear the DTCs stored in the memory (See page RS-38).
(f) Turn the ignition switch off.
(g) Turn the ignition switch on, and wait for at least 60 seconds.
(h) Check the DTCs (See page RS-38).

Result

Result	Proceed to
DTC B1630/23 is output.	A
DTC B1635/24 is output.	B
DTC B1630/23 and B1635/24 are not output.	C

HINT:
DTCs other than DTC B1630/23 and B1635/24 may be output at this time, but they are not related to this check.

A	Go to step 8
B	REPLACE REAR AIRBAG SENSOR LH

C

USE SIMULATION METHOD TO CHECK

RS

8	CHECK SIDE AIRBAG SENSOR LH

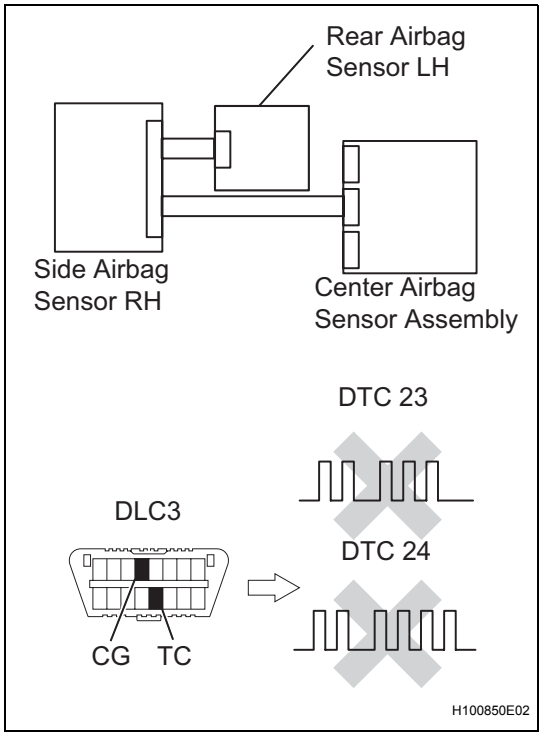

(a) Turn the ignition switch to the lock position.
(b) Disconnect the negative (-) terminal cable from the battery, and wait for at least 90 seconds.
(c) Return the airbag sensor rear LH and RH to their original positions and connect the connectors to them.
(d) Interchange the side airbag sensor LH with the side airbag sensor RH and connect the connectors to them.
(e) Connect the negative (-) terminal cable to the battery, and wait for at least 2 seconds.
(f) Turn the ignition switch to the on position, and wait for at least 60 seconds.
(g) Clear the DTCs stored in the memory (See page RS-38).
(h) Turn the ignition switch to the lock position.
(i) Turn the ignition switch to the on position, and wait for at least 60 seconds.
(j) Check for DTCs (See page RS-38).

Result

Result	Proceed to
DTC B1630/23 is output.	A
DTC B1635/24 is output.	B
Neither DTC B1630/23 nor B1635/24 is output.	C

HINT:
DTCs other than B1630/23 and B1635/24 may be output at this time, but they are not related to this check.

A	REPLACE CENTER AIRBAG SENSOR ASSEMBLY
B	REPLACE SIDE AIRBAG SENSOR RH

C

USE SIMULATION METHOD TO CHECK

DTC	B1635/24	Front Passenger Side Rear Airbag Sensor Circuit Malfunction

DESCRIPTION

The rear airbag sensor RH consists of parts including the diagnostic circuit and the lateral deceleration sensor.

When the center airbag sensor assembly receives signals from the lateral deceleration sensor, it determines whether or not the SRS should be activated.

DTC B1635/24 is recorded when a malfunction is detected in the rear airbag sensor RH circuit.

DTC No.	DTC Detecting Condition	Trouble Area
B1635/24	• Center airbag sensor assembly detects line short circuit signal, open circuit signal, short circuit to ground signal or short circuit to B+ signal in rear airbag sensor RH circuit for 2 seconds. • Rear airbag sensor RH malfunction • Center airbag sensor assembly malfunction	• Floor wire • Rear airbag sensor RH • Center airbag sensor assembly

WIRING DIAGRAM

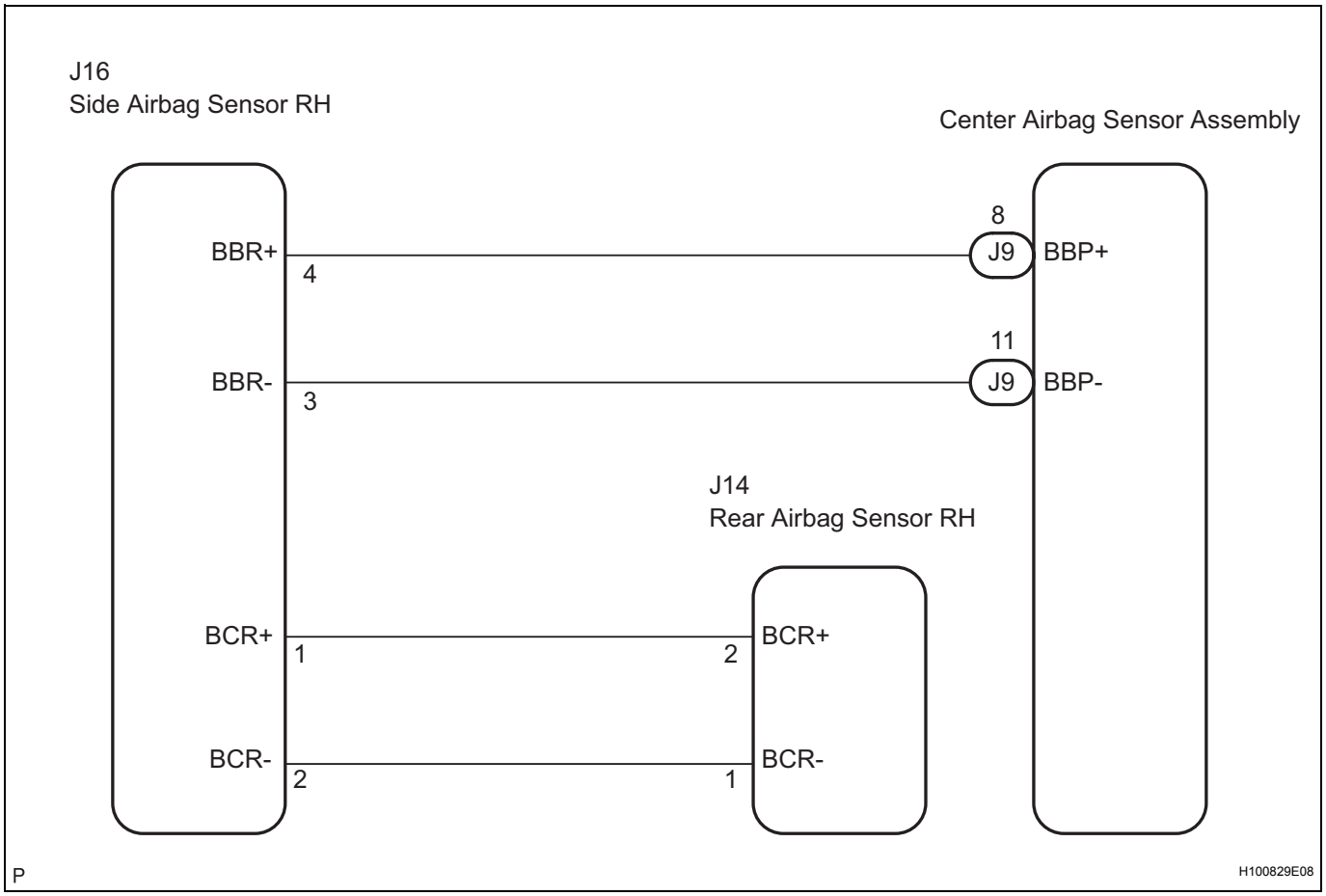

INSPECTION PROCEDURE

1	CHECK DTC

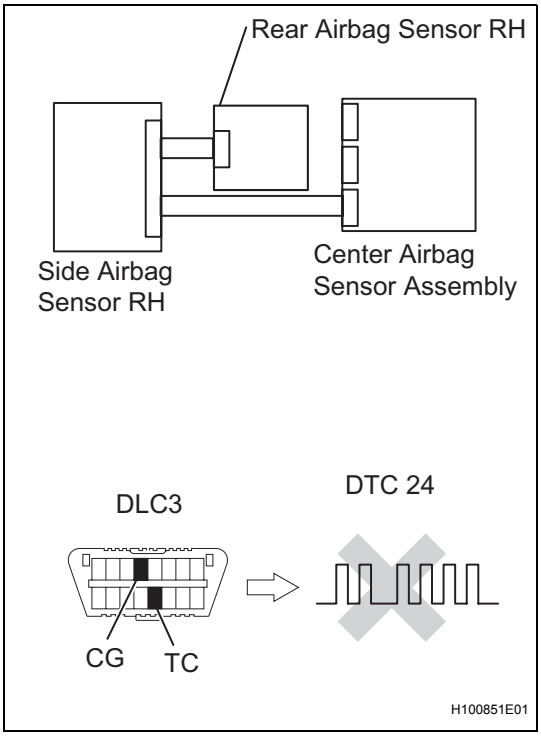

(a) Turn the ignition switch on, and wait for at least 60 seconds.
(b) Clear the DTCs stored in the memory (See page RS-38).
(c) Turn the ignition switch off.
(d) Turn the ignition switch on, and wait for at least 60 seconds.
(e) Check the DTCs (See page RS-38).

OK:

DTC B1635/24 is not output.

HINT:
DTCs other than DTC B1635/24 may be output at this time, but they are not related to this check.

OK → **USE SIMULATION METHOD TO CHECK**

NG

2	CHECK CONNECTION OF CONNECTORS

(a) Turn the ignition switch off.
(b) Disconnect the negative (-) terminal cable from the battery, and wait for at least 90 seconds.
(c) Check that the connectors are properly connected to the center airbag sensor assembly and the rear airbag sensor RH.

OK:

The connectors are properly connected.

NG → **CONNECT CONNECTORS**

OK

3 CHECK FLOOR WIRE (FOR OPEN)

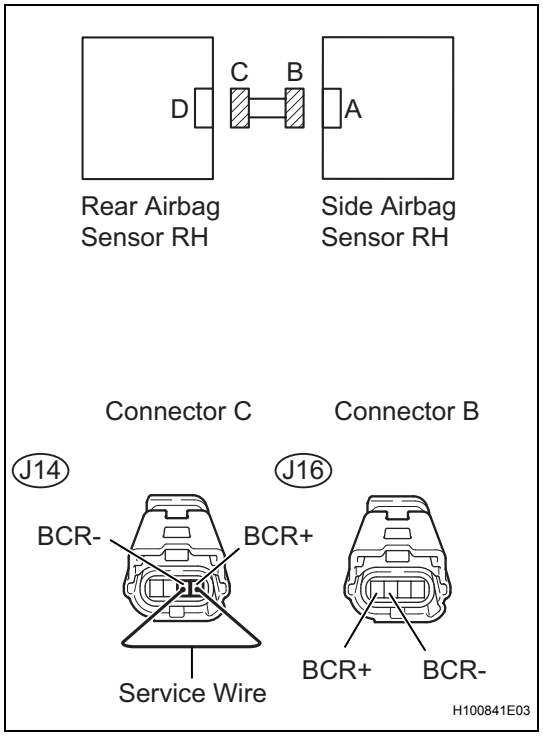

(a) Disconnect the connectors from the side airbag sensor RH and the rear airbag sensor RH.
(b) Using a service wire, connect J14-2 (BCR+) and J14-1 (BCR-) of connector C.
NOTICE:
Do not forcibly insert a service wire into the terminals of the connector when connecting.
(c) Measure the resistance.
Standard resistance

Tester Connection	Condition	Specified Condition
J16-1 (BCR+) - J16-2 (BCR-)	Always	Below 1 Ω

NG → **REPAIR OR REPLACE FLOOR WIRE**

OK

4 CHECK FLOOR WIRE (FOR SHORT)

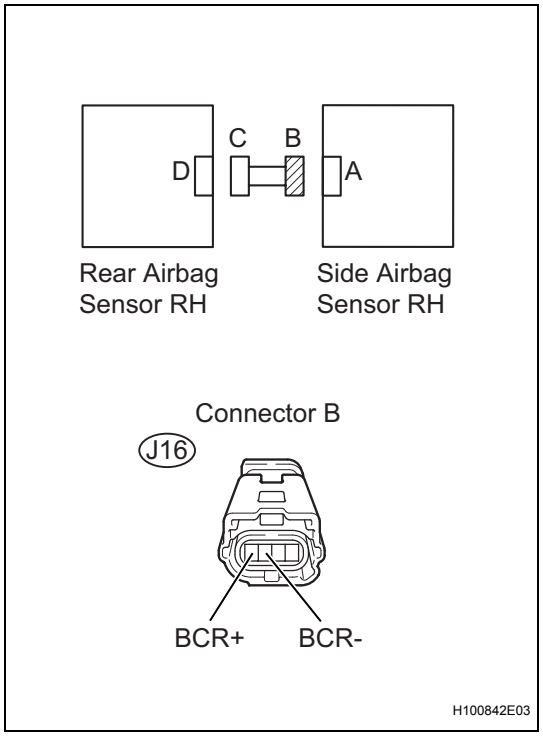

(a) Disconnect the service wire from connector C.
(b) Measure the resistance.
Standard resistance

Tester Connection	Condition	Specified Condition
J16-1 (BCR+) - J16-2 (BCR-)	Always	1 MΩ or higher

NG → **REPAIR OR REPLACE FLOOR WIRE**

OK

RS

5 CHECK FLOOR WIRE (TO B+)

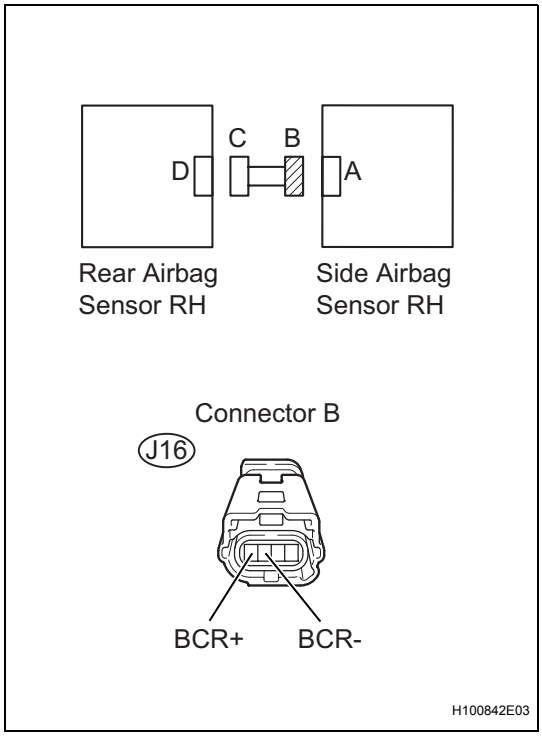

(a) Connect the negative (-) terminal cable to the battery, and wait for at least 2 seconds.
(b) Turn the ignition switch on.
(c) Measure the voltage.
Standard voltage

Tester Connection	Condition	Specified Condition
J16-1 (BCR+) - Body ground	Ignition switch on	Below 1 V
J16-2 (BCR-) - Body ground	Ignition switch on	Below 1 V

NG → **REPAIR OR REPLACE FLOOR WIRE**

OK

6 CHECK FLOOR WIRE (TO GROUND)

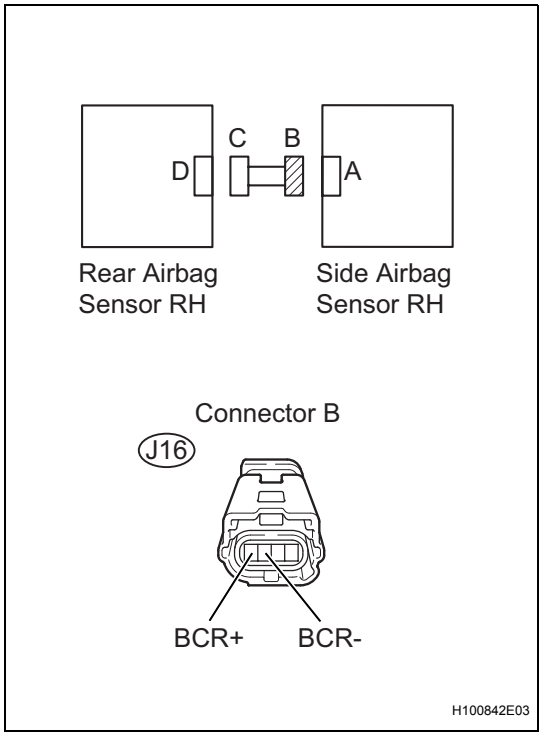

(a) Turn the ignition switch off.
(b) Disconnect the negative (-) terminal cable from the battery, and wait for at least 90 seconds.
(c) Measure the resistance.
Standard resistance

Tester Connection	Condition	Specified Condition
J16-1 (BCR+) - Body ground	Always	1 MΩ or higher
J16-2 (BCR-) - Body ground	Always	1 MΩ or higher

NG → **REPAIR OR REPLACE FLOOR WIRE**

OK

7	CHECK REAR AIRBAG SENSOR RH

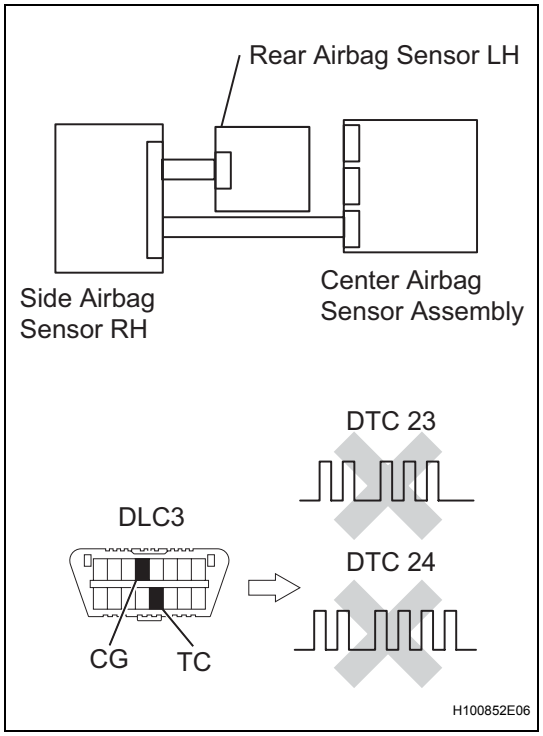

(a) Connect the connectors to the center airbag sensor assembly.
(b) Interchange the rear airbag sensor LH with the rear airbag sensor RH and connect the connectors to them.
(c) Connect the negative (-) terminal cable to the battery, and wait for at least 2 seconds.
(d) Turn the ignition switch on, and wait for at least 60 seconds.
(e) Clear the DTCs stored in the memory (See page RS-38).
(f) Turn the ignition switch off.
(g) Turn the ignition switch on, and wait for at least 60 seconds.
(h) Check the DTCs (See page RS-38).

Result

Result	Proceed to
DTC B1635/24 is output.	A
DTC B1630/23 is output.	B
DTC B1630/23 and B1635/24 are not output.	C

A	Go to step 8
B	REPLACE REAR AIRBAG SENSOR RH

C

USE SIMULATION METHOD TO CHECK

8	CHECK SIDE AIRBAG SENSOR RH

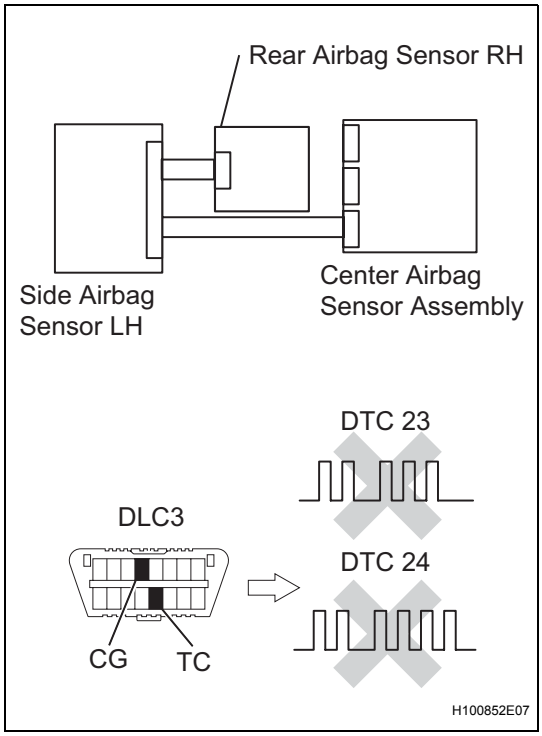

(a) Turn the ignition switch to the lock position.
(b) Disconnect the negative (-) terminal cable from the battery, and wait for at least 90 seconds.
(c) Return the airbag sensor rear LH and airbag sensor rear RH to their original positions and connect the connectors to them.
(d) Interchange the side airbag sensor RH with the side airbag sensor LH and connect the connectors to them.
(e) Connect the negative (-) terminal cable to the battery, and wait for at least 2 seconds.
(f) Turn the ignition switch to the on position, and wait for at least 60 seconds.
(g) Clear the DTCs stored in the memory (See page RS-38).
(h) Turn the ignition switch to the lock position.
(i) Turn the ignition switch to the on position, and wait for at least 60 seconds.
(j) Check for DTCs (See page RS-38).

Result

Result	Proceed to
DTC B1635/24 is output.	A
DTC B1630/23 is output.	B
Neither DTC B1630/23 nor B1635/24 is output.	C

A	REPLACE CENTER AIRBAG SENSOR ASSEMBLY
B	REPLACE SIDE AIRBAG SENSOR RH
C	

USE SIMULATION METHOD TO CHECK

DTC	B1650/32	Occupant Classification System Malfunction

DESCRIPTION

The occupant classification system circuit consists of the center airbag sensor assembly and the occupant classification system.

When the center airbag sensor assembly receives signals from the occupant classification ECU, it determines whether or not the front passenger airbag, front seat side airbag assembly RH and seat belt pretensioner RH should be operated.

DTC B1650/32 is set when a malfunction is detected in the occupant classification system circuit.

DTC No.	DTC Detecting Conditions	Trouble Areas
B1650/32	• Occupant classification system malfunction • Center airbag sensor assembly detects line short circuit signal, open circuit signal, short circuit to ground signal or short circuit to B+ signal in occupant classification system circuit for 2 seconds • Center airbag sensor assembly malfunction	• Floor wire • Occupant classification system • Center airbag sensor assembly

WIRING DIAGRAM

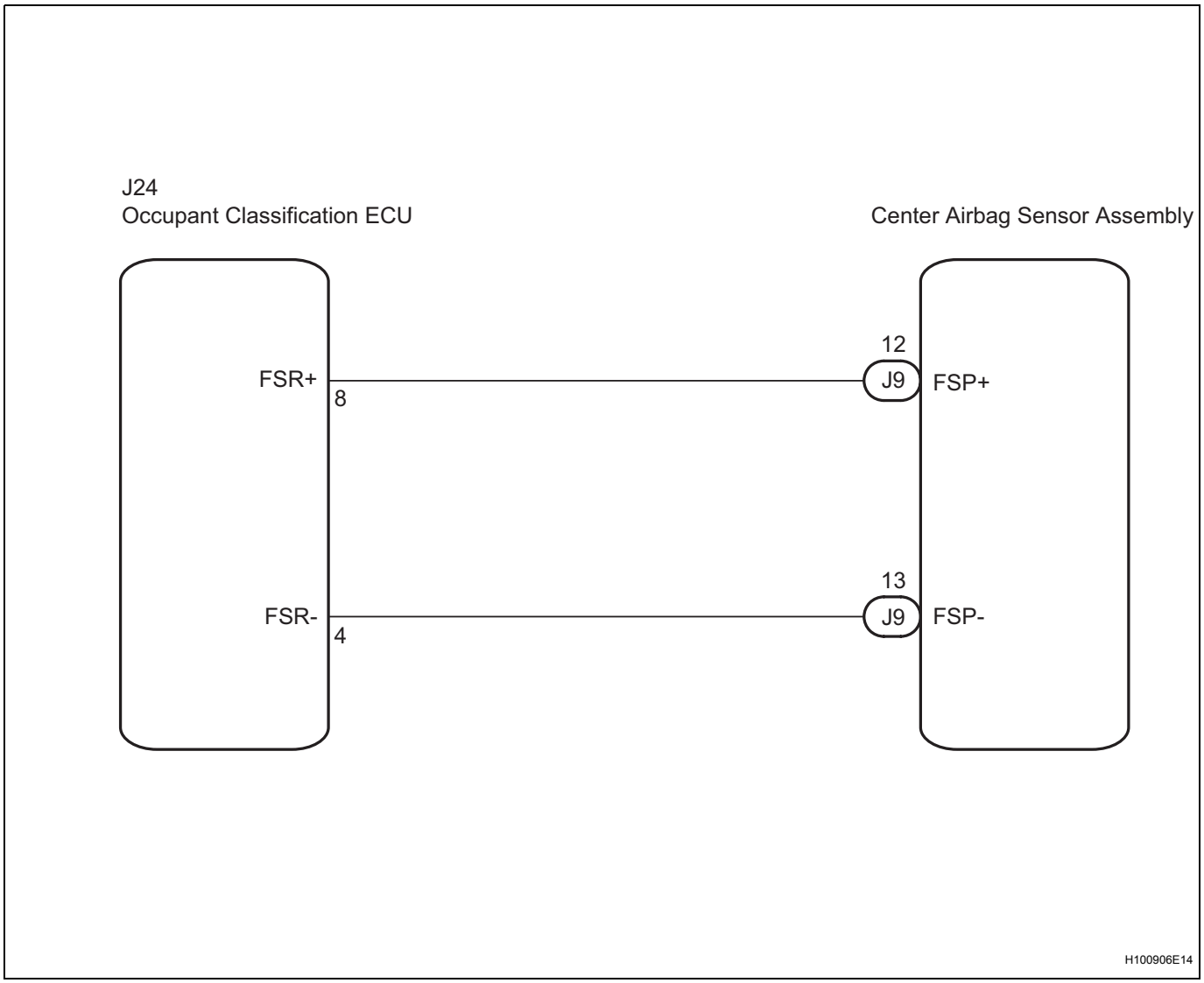

INSPECTION PROCEDURE

NOTICE:

In order to prevent unexpected airbag deployment, disconnect the following connectors before inspecting parts such as wire harnesses, if the application of tester probes to the center airbag sensor assembly connector is necessary.

RS

1. Turn the ignition switch to the lock position.
2. Disconnect the negative (-) terminal cable from the battery, and wait for at least 90 seconds.
3. Disconnect the connector from the center airbag sensor assembly.
4. Disconnect the connectors from the steering pad.
5. Disconnect the connectors from the front passenger airbag assembly.
6. Disconnect the connector from the front seat outer belt assembly LH.
7. Disconnect the connector from the front seat outer belt assembly RH.
   HINT:
   Skip the following steps if side and curtain shield airbags are not fitted.
8. Disconnect the connector from the front seat side airbag assembly LH.
9. Disconnect the connector from the front seat side airbag assembly RH.
10. Disconnect the connector from the curtain shield airbag assembly LH.
11. Disconnect the connector from the curtain shield airbag assembly RH.

1	CHECK DTC (CENTER AIRBAG SENSOR ASSEMBLY)

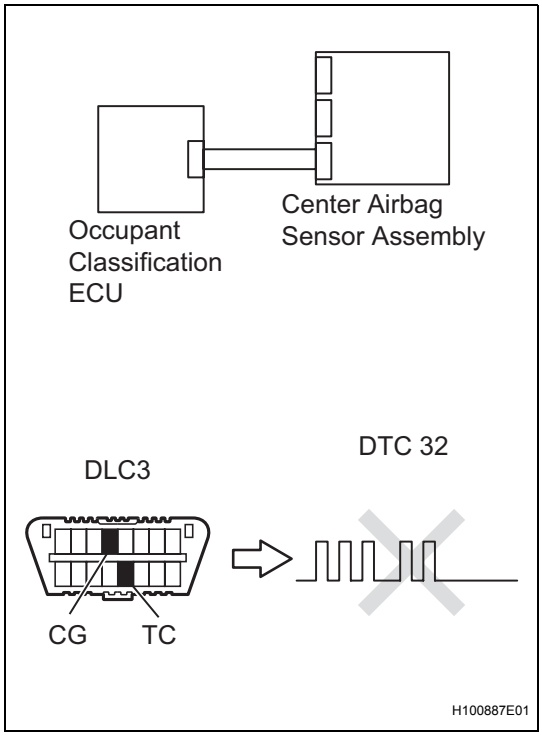

(a) Turn the ignition switch to the on position, and wait for at least 60 seconds.
(b) Clear the DTCs stored in the memory (See page RS-38).
(c) Turn the ignition switch to the lock position.
(d) Turn the ignition switch to the on position, and wait for at least 60 seconds.
(e) Check for DTCs (See page RS-38).
OK:
DTC B1650/32 is not output.
HINT:
DTCs other than B1650/32 may be output at this time, but they are not related to this check.

OK → **USE SIMULATION METHOD TO CHECK**

NG

2	CHECK DTC (OCCUPANT CLASSIFICATION ECU)

(a) Turn the ignition switch to the on position, and wait for at least 10 seconds.
(b) Using the intelligent tester, check for DTCs of the occupant classification ECU (See page RS-223).
OK:
DTC is not output.

NG → GO TO DTC CHART

OK

3 CHECK CONNECTION OF CONNECTORS

RS

(a) Turn the ignition switch to the lock position.
(b) Disconnect the negative (-) terminal cable from the battery, and wait for at least 90 seconds.
(c) Check that the connectors are properly connected to the center airbag sensor assembly and the occupant classification ECU.
OK:
The connectors are properly connected.

NG → CONNECT CONNECTORS

OK

4 CHECK FLOOR WIRE (FOR OPEN)

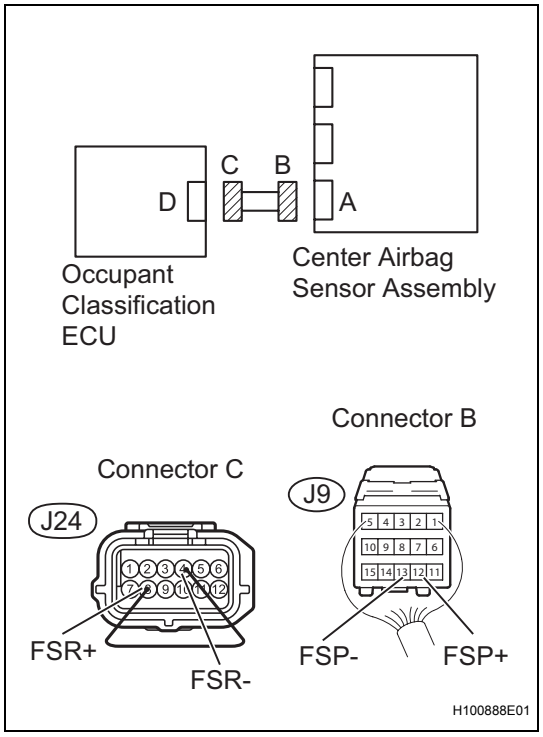

(a) Disconnect the connectors from the center airbag sensor assembly and the occupant classification ECU.
(b) Using a service wire, connect J24-8 (FSR+) and J24-4 (FSR-) of connector C.
NOTICE:
Do not forcibly insert the service wire into the terminals of the connector when connecting.
(c) Measure the resistance.
Standard resistance

Tester Connection	Condition	Specified Condition
J9-12 (FSP+) - J9-13 (FSP-)	Always	Below 1 Ω

NG → REPAIR OR REPLACE FLOOR WIRE

OK

RS

5 CHECK FLOOR WIRE (FOR SHORT)

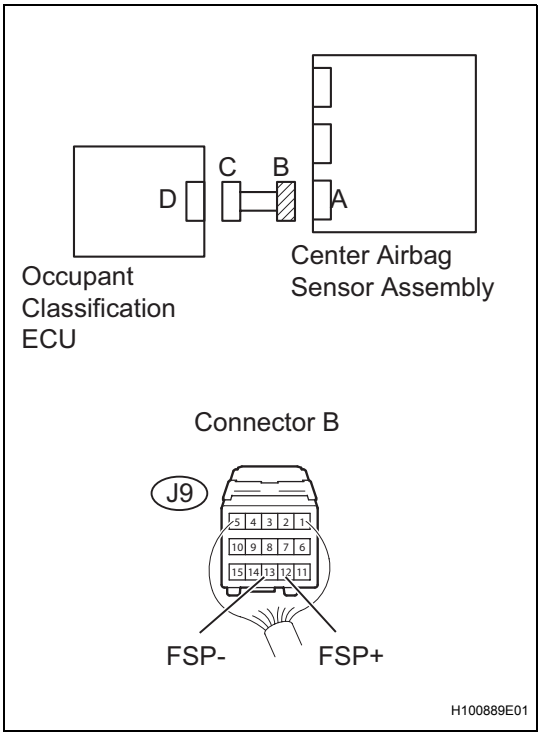

(a) Disconnect the service wire from connector C.
(b) Measure the resistance.
Standard resistance

Tester Connection	Condition	Specified Condition
J9-12 (FSP+) - J9-13 (FSP-)	Always	1 MΩ or Higher

NG → REPAIR OR REPLACE FLOOR WIRE

OK

6 CHECK FLOOR WIRE (TO B+)

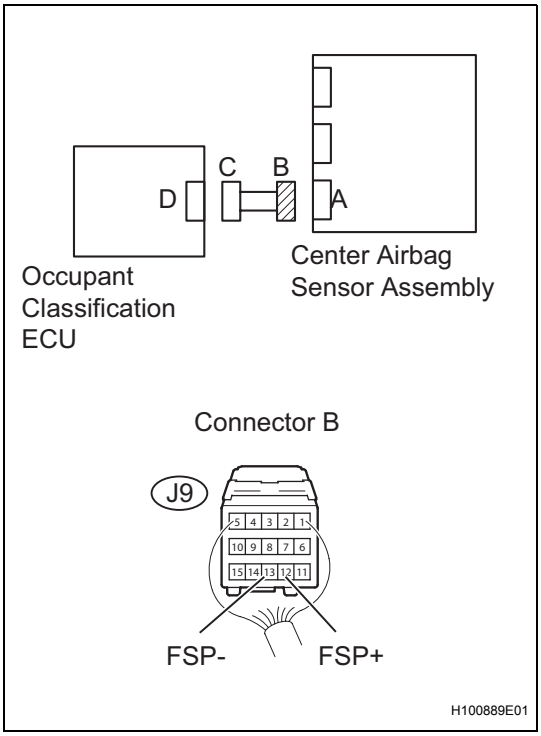

(a) Connect the negative (-) terminal cable to the battery, and wait for at least 2 seconds.
(b) Turn the ignition switch to the on position.
(c) Measure the voltage.
Standard voltage

Tester Connection	Condition	Specified Condition
J9-12 (FSP+) - Body ground	Ignition switch on	Below 1 V
J9-13 (FSP-) - Body ground	Ignition switch on	Below 1 V

NG → REPAIR OR REPLACE FLOOR WIRE

OK

7 CHECK FLOOR WIRE (TO GROUND)

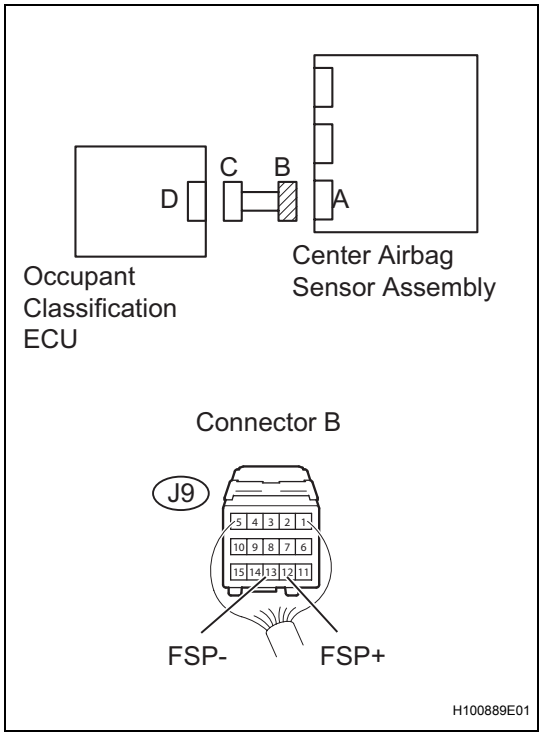

(a) Turn the ignition switch to the lock position.
(b) Disconnect the negative (-) terminal cable from the battery, and wait for at least 90 seconds.
(c) Measure the resistance.

Standard resistance

Tester Connection	Condition	Specified Condition
J9-12 (FSP+) - Body ground	Always	1 MΩ or Higher
J9-13 (FSP-) - Body ground	Always	1 MΩ or Higher

NG → **REPAIR OR REPLACE FLOOR WIRE**

OK

8 CHECK CENTER AIRBAG SENSOR ASSEMBLY

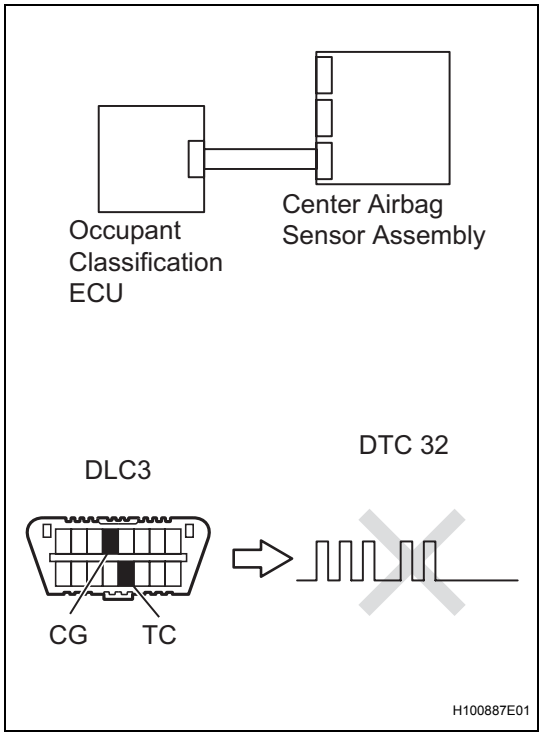

(a) Turn the ignition switch to the lock position.
(b) Disconnect the negative (-) terminal cable from the battery, and wait for at least 90 seconds.
(c) Replace the center airbag sensor assembly.
for Hatchback: (See page RS-437)
for Sedan: (See page RS-433)
HINT:
Perform the inspection using parts from a normal vehicle when possible.
(d) Connect the connectors to the center airbag sensor assembly.
(e) Connect the negative (-) terminal cable to the battery, and wait for at least 2 seconds.
(f) Turn the ignition switch to the on position, and wait for at least 60 seconds.
(g) Clear the DTCs stored in the memory (See page RS-38).
(h) Turn the ignition switch to the lock position.
(i) Turn the ignition switch to the on position, and wait for at least 60 seconds.
(j) Check for DTCs (See page RS-38).

OK:

DTC B1650/32 is not output.

HINT:
DTCs other than B1650/32 may be output at this time, but they are not related to this check.

OK → USE SIMULATION METHOD TO CHECK

NG

RS

9	REPLACE OCCUPANT CLASSIFICATION ECU

(a) Turn the ignition switch to the lock position.
(b) Disconnect the negative (-) terminal cable from the battery, and wait for at least 90 seconds.
(c) Replace the occupant classification ECU (See page RS-493).

NEXT

10	PERFORM ZERO POINT CALIBRATION

(a) Connect the negative (-) terminal cable to the battery.
(b) Connect the intelligent tester to the DLC3.
(c) Turn the ignition switch to the on position.
(d) Using the intelligent tester, perform the zero point calibration (See page RS-215).
OK:
COMPLETED is displayed on the tester.

NEXT

11	PERFORM SENSITIVITY CHECK

(a) Using the intelligent tester, perform the sensitivity check (See page RS-215).
(1) Confirm that nothing is placed on the passenger seat.
(2) Confirm that the first sensor reading is within the standard range.
Standard range:
-3.2 to 3.2 kg (-7 to 7 lb)
(3) Place a 30 kg (66.14 lb) weight (e.g. a lead mass) onto the front passenger seat.
(4) Confirm that the sensitivity is within the standard range.
Standard range:
27 to 33 kg (59.52 to 72.75 lb)
HINT:
When performing the sensitivity check, use a solid metal weight (the check result may not be accurate if a liquid weight is used).

NEXT

END

DTC	B1653/35	Seat Position Airbag Sensor Circuit Malfunction

DESCRIPTION

RS

The seat position sensor circuit consists of the center airbag sensor assembly and the seat position sensor.

DTC B1653/35 is recorded when a malfunction is detected in the seat position sensor circuit.

DTC No.	DTC Detecting Condition	Trouble Area
B1653/35	• Center airbag sensor assembly detects line short circuit signal, open circuit signal, short circuit to ground signal or short circuit to B+ signal in seat position sensor circuit for 2 seconds. • Seat position sensor malfunction • Center airbag sensor assembly malfunction	• Floor wire • Front seat inner belt assembly • Seat position sensor • Center airbag sensor assembly

WIRING DIAGRAM

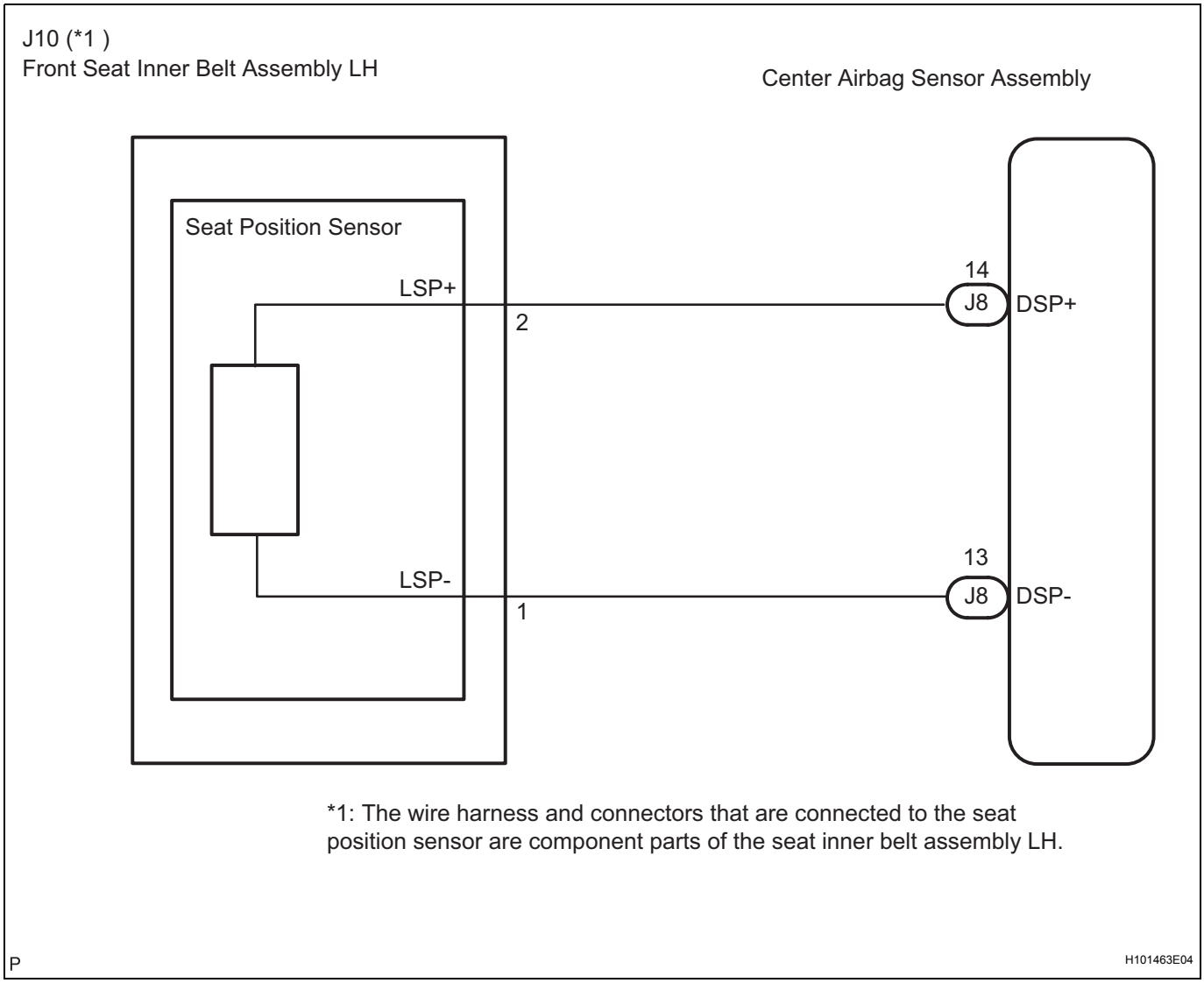

INSPECTION PROCEDURE

NOTICE:

In order to prevent unexpected airbag deployment, disconnect the following connectors before inspecting parts such as wire harnesses, if the application of tester probes to the center airbag sensor assembly connector is necessary.

1. Turn the ignition switch to the lock position.
2. Disconnect the negative (-) terminal cable from the battery, and wait for at least 90 seconds.
3. Disconnect the connector from the center airbag sensor assembly.
4. Disconnect the connectors from the steering pad.
5. Disconnect the connectors from the front passenger airbag assembly.
6. Disconnect the connector from the front seat outer belt assembly LH
7. Disconnect the connector from the front seat outer belt assembly RH.

   HINT:

   Skip the following steps if side and curtain shield airbags are not fitted.
8. Disconnect the connector from the front seat side airbag assembly LH.
9. Disconnect the connector from the front seat side airbag assembly RH.
10. Disconnect the connector from the curtain shield airbag assembly LH.
11. Disconnect the connector from the curtain shield airbag assembly RH.

RS

1	CHECK DTC

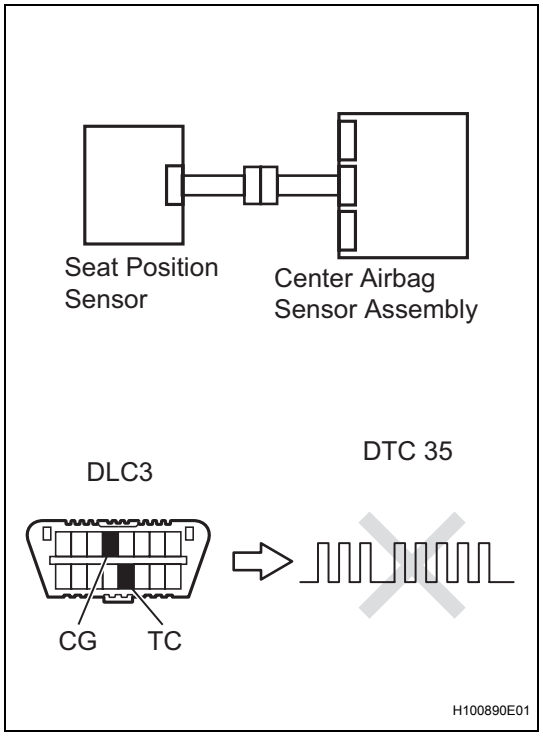

(a) Turn the ignition switch on, and wait for at least 60 seconds.
(b) Clear the DTCs stored in the memory (See page RS-38).
(c) Turn the ignition switch off.
(d) Turn the ignition switch on, and wait for at least 60 seconds.
(e) Check the DTCs (See page RS-38).

OK:

DTC B1653/35 is not output.

HINT:

DTCs other than DTC B1653/35 may be output at this time, but they are not related to this check.

OK → **USE SIMULATION METHOD TO CHECK**

NG

2	CHECK CONNECTION OF CONNECTORS

(a) Turn the ignition switch off.
(b) Disconnect the negative (-) terminal cable from the battery, and wait for at least 90 seconds.
(c) Check that the connectors are properly connected to the center airbag sensor assembly and the seat position sensor.

OK:
The connectors are properly connected.

NG → **CONNECT CONNECTORS**

OK

RS

3	CHECK SEAT POSITION SENSOR CIRCUIT (FOR OPEN)

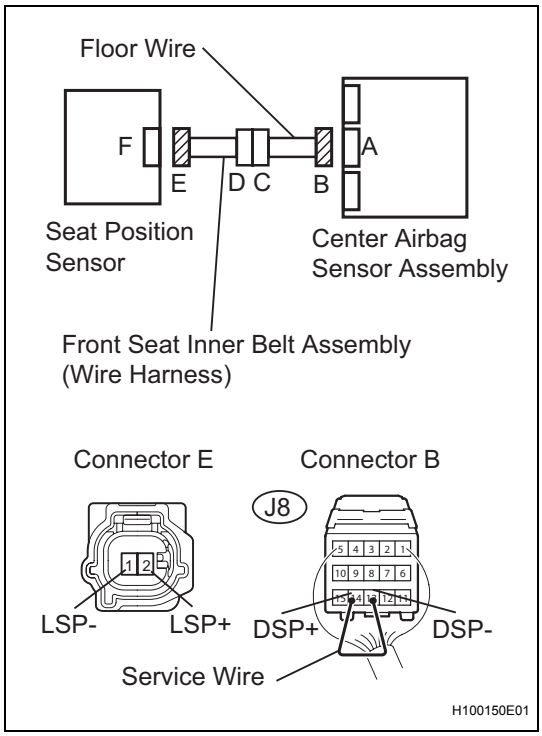

(a) Disconnect the connectors from the center airbag sensor assembly and the seat position sensor.
(b) Using a service wire, connect J8-14 (DSP+) and J8-13 (DSP-) of connector B.
NOTICE:
Do not forcibly insert the service wire into the terminals of the connector when connecting.
(c) Measure the resistance.
Standard resistance

Tester Connection	Condition	Specified Condition
2 (LSP+) - 1 (LSP-)	Always	Below 1 Ω

NG → **Go to step 10**

OK

4 CHECK SEAT POSITION SENSOR CIRCUIT (FOR SHORT)

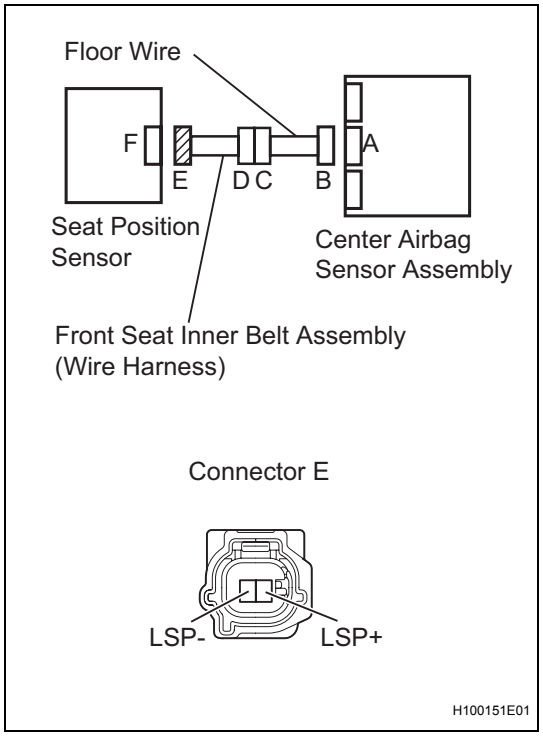

(a) Disconnect the service wire from connector B.
(b) Measure the resistance.
Standard resistance

Tester Connection	Condition	Specified Condition
2 (LSP+) - 1 (LSP-)	Always	1 MΩ or higher

NG → **Go to step 11**

OK

5 CHECK SEAT POSITION SENSOR CIRCUIT (TO B+)

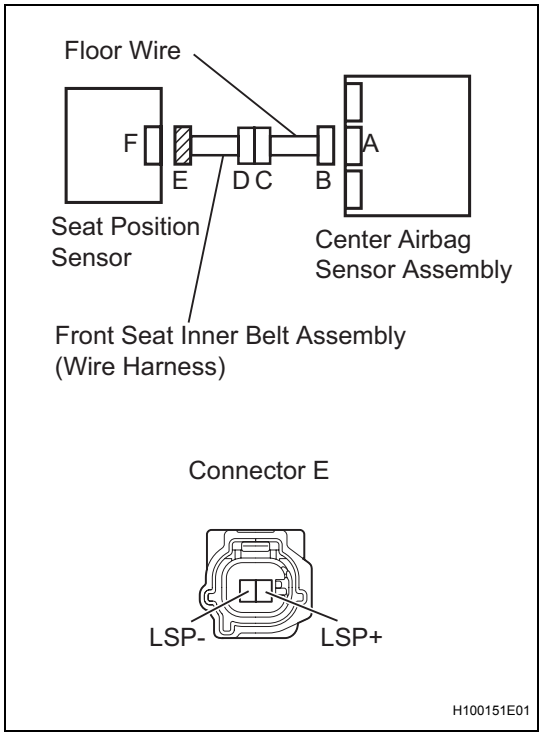

(a) Connect the negative (-) terminal cable to the battery, and wait for at least 2 seconds.
(b) Turn the ignition switch on.
(c) Measure the voltage.
Standard voltage

Tester Connection	Condition	Specified Condition
2 (LSP+) - Body ground	Ignition switch on	Below 1 V
1 (LSP-) - Body ground	Ignition switch on	Below 1 V

NG → **Go to step 12**

OK

RS

6 CHECK SEAT POSITION SENSOR CIRCUIT (TO GROUND)

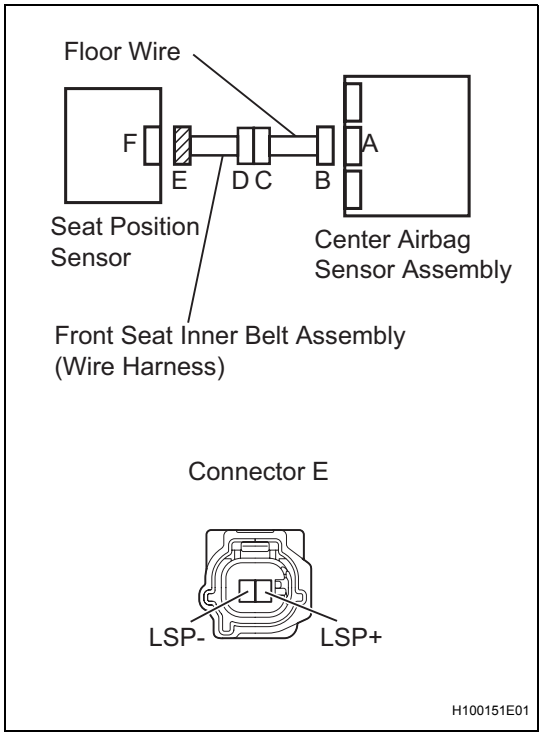

(a) Turn the ignition switch off.
(b) Disconnect the negative (-) terminal cable from the battery, and wait for at least 90 seconds.
(c) Measure the voltage.
Standard resistance

Tester Connection	Condition	Specified Condition
2 (LSP+) - Body ground	Always	1 MΩ or Higher
1 (LSP-) - Body ground	Always	1 MΩ or Higher

NG → **Go to step 13**

OK

7 CHECK SEAT POSITION SENSOR

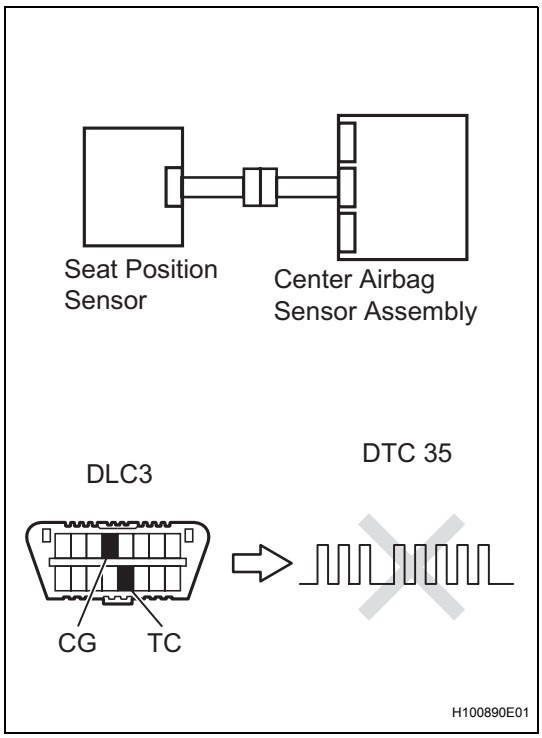

(a) Connect the connectors to the center airbag sensor assembly and the seat position sensor.
(b) Connect the negative (-) terminal cable to the battery, and wait for at least 2 seconds.
(c) Turn the ignition switch on, and wait for at least 60 seconds.
(d) Clear the DTCs stored in the memory (See page RS-38).
(e) Turn the ignition switch off.
(f) Turn the ignition switch on, and wait for at least 60 seconds.
(g) Check the DTCs (See page RS-38).
OK:
DTC B1653/35 is not output.
HINT:
DTCs other than DTC B1653/35 may be output at this time, but they are not related to this check.

OK → **USE SIMULATION METHOD TO CHECK**

NG

8	REPLACE SEAT POSITION SENSOR

(a) Turn the ignition switch off.
(b) Disconnect the negative (-) terminal cable from the battery, and wait for at least 90 seconds.
(c) Replace the seat position sensor (See page RS-488).
HINT:
Perform the inspection using parts from a normal vehicle if possible.

NEXT

9	CHECK CENTER AIRBAG SENSOR ASSEMBLY

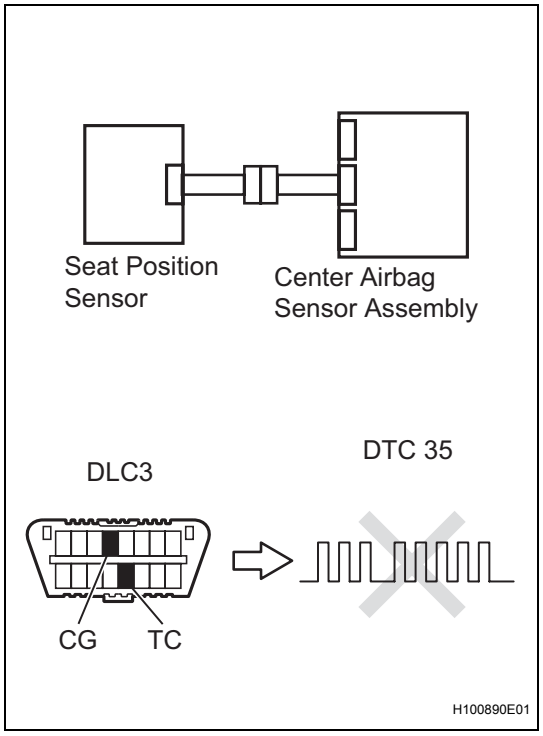

(a) Connect the negative (-) terminal cable to the battery, and wait for at least 2 seconds.
(b) Turn the ignition switch on, and wait for at least 60 seconds.
(c) Clear the DTCs stored in the memory (See page RS-38).
(d) Turn the ignition switch off.
(e) Turn the ignition switch on, and wait for at least 60 seconds.
(f) Check the DTCs (See page RS-38).
OK:
DTC B1653/35 is not output.
HINT:
DTCs other than DTC B1653/35 may be output at this time, but they are not related to this check.

NG → **REPLACE CENTER AIRBAG SENSOR ASSEMBLY**

OK

END

10	CHECK FLOOR WIRE (FOR OPEN)

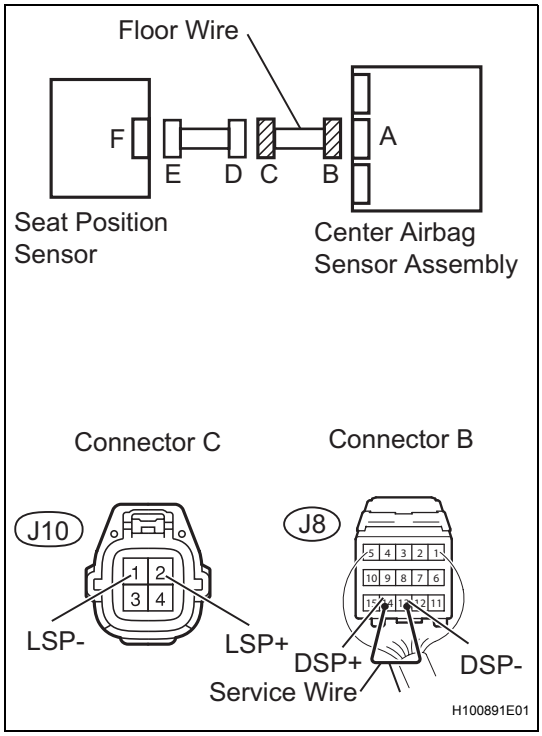

(a) Disconnect the connectors from the center airbag sensor assembly and the seat position sensor.
(b) Using a service wire, connect J8-14 (DSP+) and J8-13 (DSP-) of connector B.
NOTICE:
Do not forcibly insert the service wire into the terminals of the connector when connecting.
(c) Measure the resistance.
Standard resistance

Tester Connection	Condition	Specified Condition
J10-2 (LSP+) - J10-1 (LSP-)	Always	Below 1 Ω

NG → **REPAIR OR REPLACE FLOOR WIRE**

OK

REPLACE FRONT SEAT INNER BELT ASSEMBLY LH

11	CHECK FLOOR WIRE (FOR SHORT)

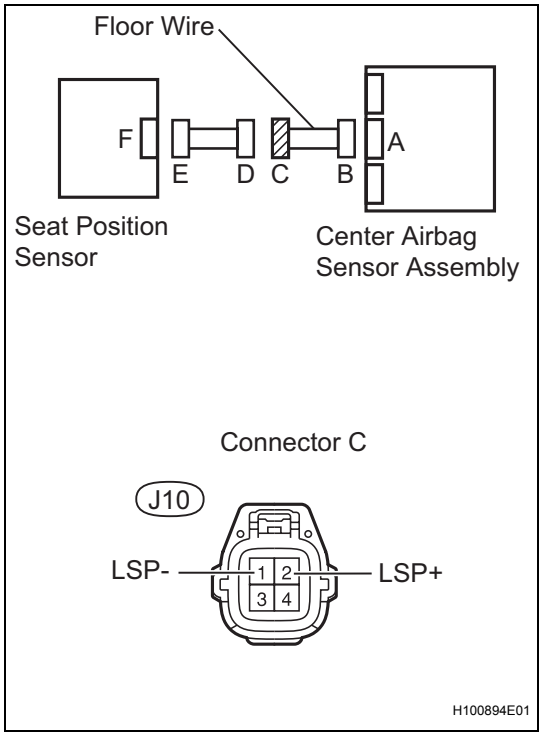

(a) Disconnect the service wire from connector B.
(b) Measure the resistance.

Standard resistance

Tester Connection	Condition	Specified Condition
J10-2 (LSP+) - J10-1 (LSP-)	Always	1 MΩ or higher

NG → **REPAIR OR REPLACE FLOOR WIRE**

OK

REPLACE FRONT SEAT INNER BELT ASSEMBLY LH

RS

12	CHECK FLOOR WIRE (TO B+)

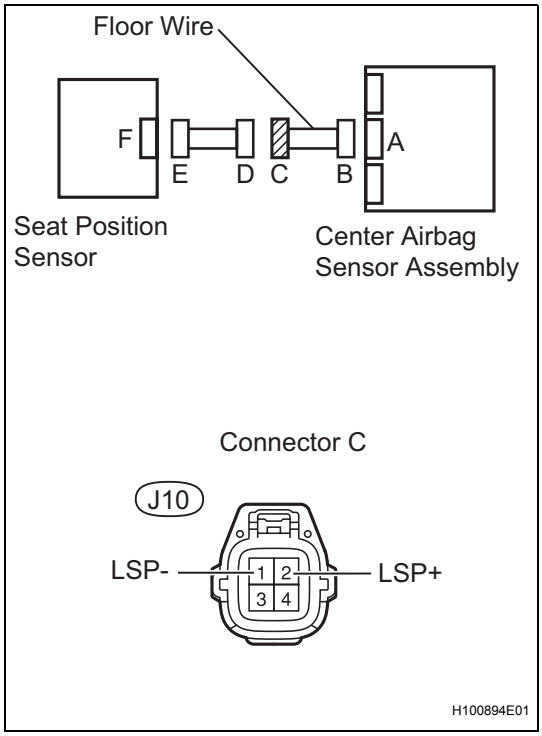

(a) Connect the negative (-) terminal cable to the battery, and wait for at least 2 seconds.
(b) Turn the ignition switch on.
(c) Measure the voltage.

Standard voltage

Tester Connection	Condition	Specified Condition
J10-2 (LSP+) - Body ground	Ignition switch on	Below 1 V
J10-1 (LSP-) - Body ground	Ignition switch on	Below 1 V

NG → **REPAIR OR REPLACE FLOOR WIRE**

OK

REPLACE FRONT SEAT INNER BELT ASSEMBLY LH

13	CHECK FLOOR WIRE (TO GROUND)

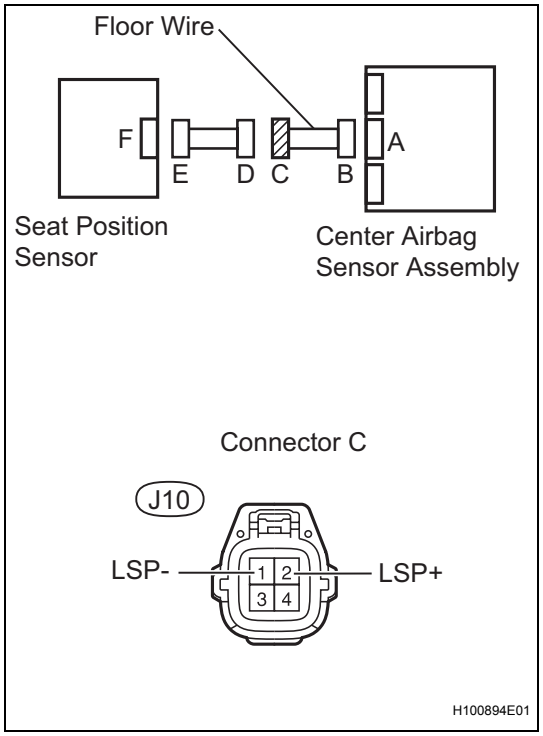

(a) Turn the ignition switch off.
(b) Disconnect the negative (-) terminal cable from the battery, and wait for at least 90 seconds.
(c) Measure the resistance.

Standard resistance

Tester Connection	Condition	Specified Condition
J10-2 (LSP+) - Body ground	Always	1 MΩ or higher
J10-1 (LSP-) - Body ground	Always	1 MΩ or higher

NG → **REPAIR OR REPLACE FLOOR WIRE**

OK

REPLACE FRONT SEAT INNER BELT ASSEMBLY LH

RS

DTC	B1655/37	Driver Side Seat Belt Buckle Switch Circuit Malfunction

DESCRIPTION

RS

The driver side seat belt buckle switch circuit consists of the center airbag sensor assembly and the front seat inner belt assembly LH.

DTC B1655/37 is recorded when a malfunction is detected in the driver side seat belt buckle switch circuit.

DTC No.	DTC Detecting Condition	Trouble Area
B1655/37	• Center airbag sensor assembly detects line short circuit signal, open circuit signal, short circuit to ground signal or short circuit to B+ signal in driver side seat belt buckle switch circuit for 2 seconds. • Front seat inner belt assembly LH malfunction • Center airbag sensor assembly malfunction	• Floor wire • Front seat inner belt assembly LH • Center airbag sensor assembly

WIRING DIAGRAM

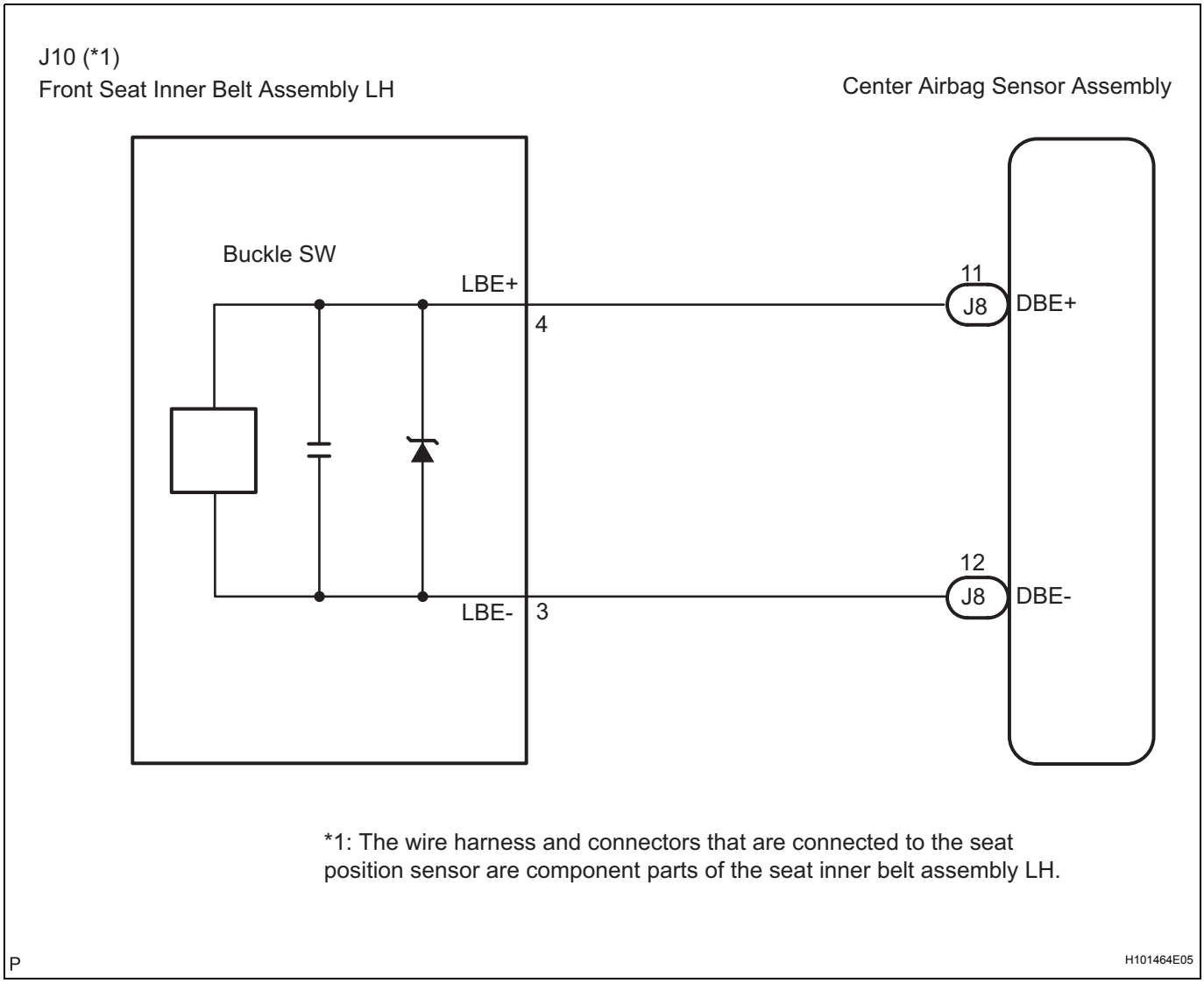

INSPECTION PROCEDURE

NOTICE:

In order to prevent unexpected airbag deployment, disconnect the following connectors before inspecting parts such as wire harnesses, if the application of tester probes to the center airbag sensor assembly connector is necessary.

1. Turn the ignition switch to the lock position.
2. Disconnect the negative (-) terminal cable from the battery, and wait for at least 90 seconds.
3. Disconnect the connector from the center airbag sensor assembly.
4. Disconnect the connectors from the steering pad.
5. Disconnect the connectors from the front passenger airbag assembly.
6. Disconnect the connector from the front seat outer belt assembly LH.
7. Disconnect the connector from the front seat outer belt assembly RH.
   HINT:
   Skip the following steps if side and curtain shield airbags are not fitted.
8. Disconnect the connector from the front seat side airbag assembly LH.
9. Disconnect the connector from the front seat side airbag assembly RH.
10. Disconnect the connector from the curtain shield airbag assembly LH.
11. Disconnect the connector from the curtain shield airbag assembly RH.

1	CHECK DTC

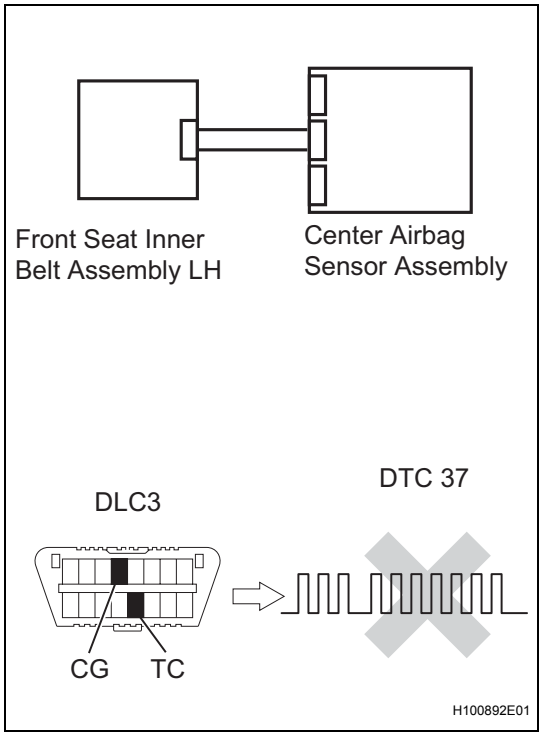

(a) Turn the ignition switch on, and wait for at least 60 seconds.
(b) Clear the DTCs stored in the memory (See page RS-38).
(c) Turn the ignition switch off.
(d) Turn the ignition switch on, and wait for at least 60 seconds.
(e) Check the DTCs (See page RS-38).
OK:
DTC B1655/37 is not output.
HINT:
DTCs other than DTC B1655/37 may be output at this time, but they are not related to this check.

OK → **USE SIMULATION METHOD TO CHECK**

NG

2	CHECK CONNECTION OF CONNECTORS

(a) Turn the ignition switch off.
(b) Disconnect the negative (-) terminal cable from the battery, and wait for at least 90 seconds.
(c) Check that the connectors are properly connected to the center airbag sensor assembly and the front seat inner belt assembly LH.

OK:
The connectors are properly connected.

NG → **CONNECT CONNECTORS**

OK

RS

3	CHECK FLOOR WIRE (FOR OPEN)

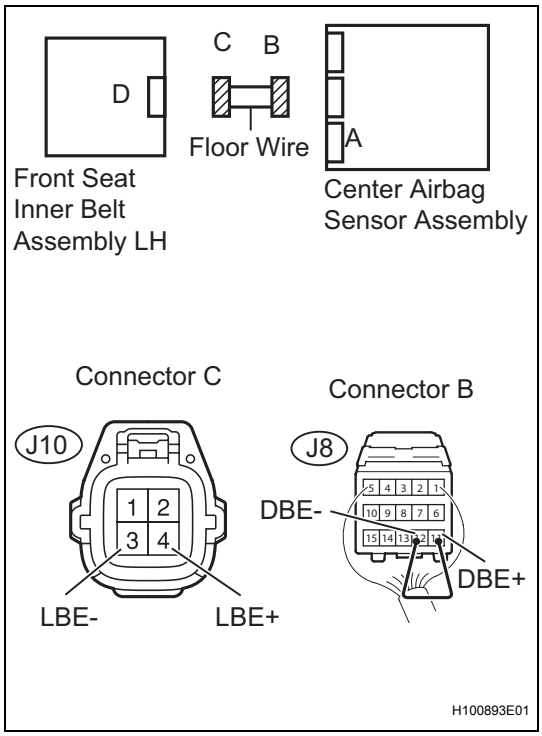

(a) Disconnect the connectors from the center airbag sensor assembly and the front seat inner belt assembly LH.
(b) Using a service wire, connect J8-11 (DBE+) and J8-12 (DBE-) of connector B.
NOTICE:
Do not forcibly insert the service wire into the terminals of the connector when connecting.
(c) Measure the resistance.
Standard resistance

Tester Connection	Condition	Specified Condition
J10-4 (LBE+) - J10-3 (LBE-)	Always	Below 1 Ω

NG → **REPAIR OR REPLACE FLOOR WIRE**

OK

4 CHECK FLOOR WIRE (FOR GROUND)

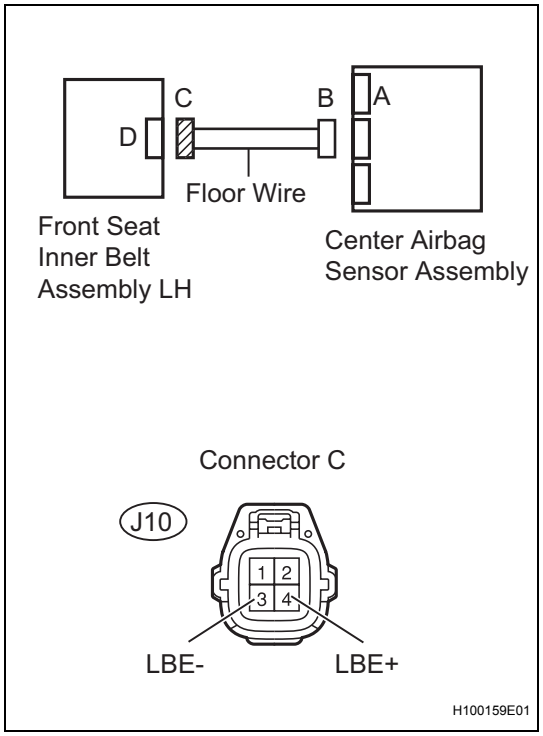

(a) Disconnect the service wire from connector B.
(b) Measure the resistance.
Standard resistance

Tester Connection	Condition	Specified Condition
J10-4 (LBE+) - J10-3 (LBE-)	Always	1 MΩ or higher

NG → **REPAIR OR REPLACE FLOOR WIRE**

OK

5 CHECK FLOOR WIRE (TO B+)

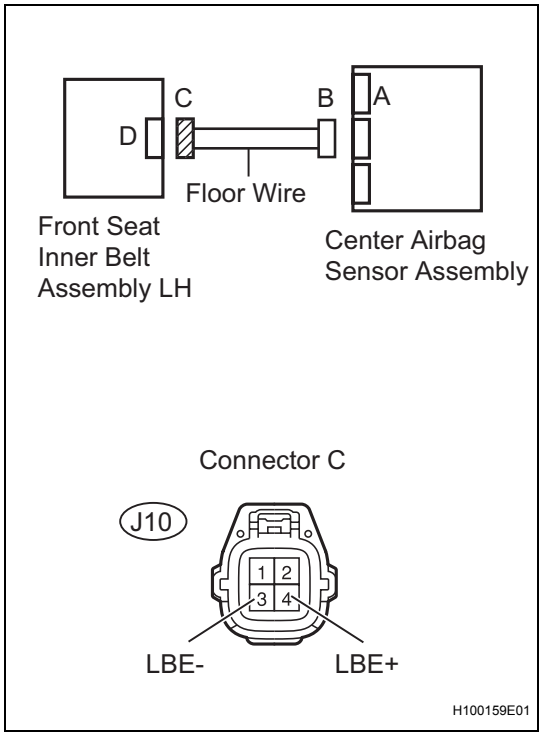

(a) Connect the negative (-) terminal cable to the battery, and wait for at least 2 seconds.
(b) Turn the ignition switch on.
(c) Measure the voltage.
Standard voltage

Tester Connection	Condition	Specified Condition
J10-4 (LBE+) - Body ground	ignition switch on	Below 1 V
J10-3 (LBE-) - Body ground	ignition switch on	Below 1 V

NG → **REPAIR OR REPLACE FLOOR WIRE**

OK

RS

6 CHECK FLOOR WIRE (TO GROUND)

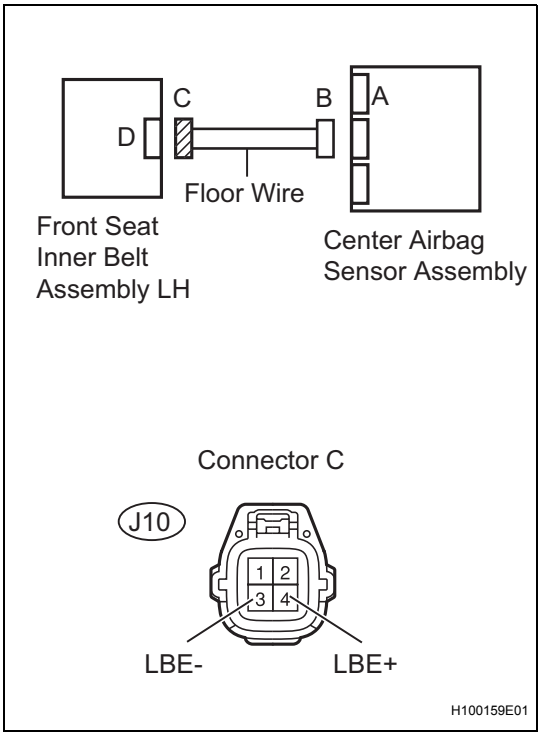

(a) Turn the ignition switch off.
(b) Disconnect the negative (-) terminal cable from the battery, and wait for at least 90 seconds.
(c) Measure the resistance.

Standard resistance

Tester Connection	Condition	Specified Condition
J10-4 (LBE+) - Body ground	Always	1 MΩ or higher
J10-3 (LBE-) - Body ground	Always	1 MΩ or higher

NG → **REPAIR OR REPLACE FLOOR WIRE**

OK

7 CHECK FRONT SEAT INNER BELT ASSEMBLY LH

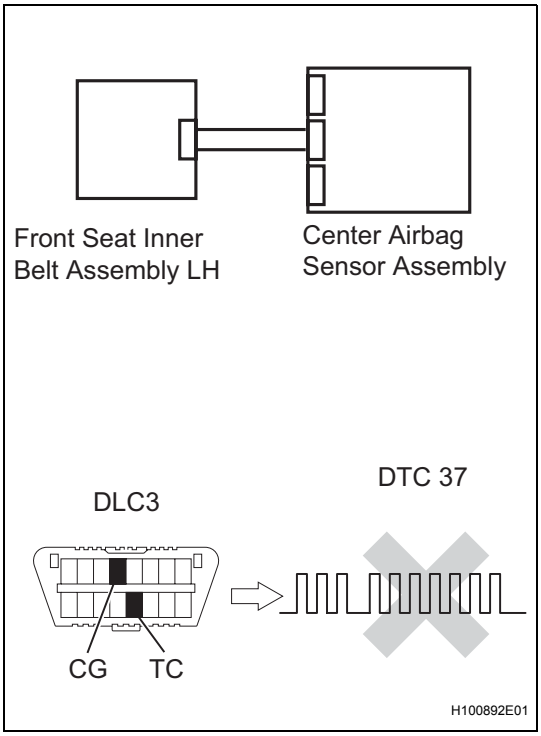

(a) Connect the connector to the center airbag sensor assembly and the front seat inner belt assembly LH.
(b) Connect the negative (-) terminal cable to the battery, and wait for at least 2 seconds.
(c) Turn the ignition switch on, and wait for at least 60 seconds.
(d) Clear the DTCs stored in the memory (See page RS-38).
(e) Turn the ignition switch off.
(f) Turn the ignition switch on, and wait for at least 60 seconds.
(g) Check the DTCs (See page RS-38).

OK:

DTC B1655/37 is not output.

HINT:
DTCs other than DTC B1655/37 may be output at this time, but they are not related to this check.

OK → **USE SIMULATION METHOD TO CHECK**

NG

8	REPLACE FRONT SEAT INNER BELT ASSEMBLY LH

(a) Turn the ignition switch off.
(b) Disconnect the negative (-) terminal cable from the battery, and wait for at least 90 seconds.
(c) Replace the front seat inner belt assembly LH.
for Hatchback: (See page SB-39)
for Sedan: (See page SB-33)
HINT:
Perform the inspection using parts from a normal vehicle if possible.

NEXT

9	CHECK CENTER AIRBAG SENSOR ASSEMBLY

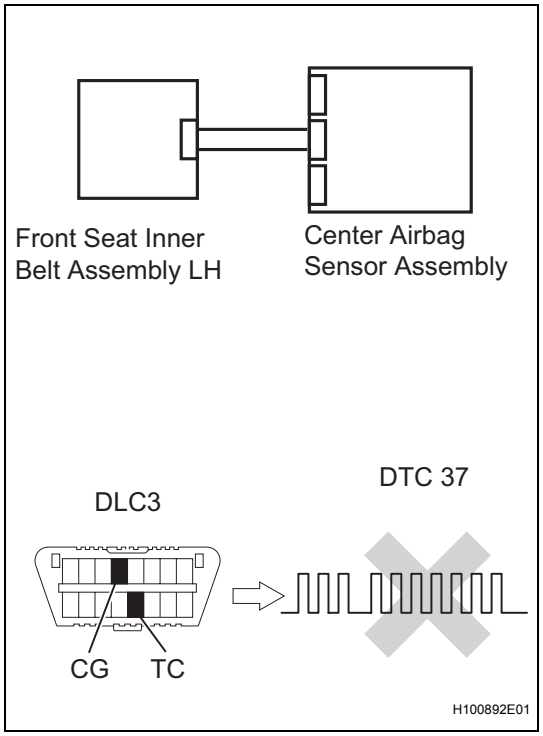

(a) Connect the negative (-) terminal cable to the battery, and wait for at least 2 seconds.
(b) Turn the ignition switch on, and wait for at least 60 seconds.
(c) Clear the DTCs stored in the memory (See page RS-38).
(d) Turn the ignition switch off.
(e) Turn the ignition switch on, and wait for at least 60 seconds.
(f) Check the DTCs (See page RS-38).
OK:
DTC B1655/37 is not output.
HINT:
DTCs other than DTC B1655/37 may be output at this time, but they are not related to this check.

NG → **REPLACE CENTER AIRBAG SENSOR ASSEMBLY**

OK

END

DTC	B1660/43	Passenger Airbag ON / OFF Indicator Circuit Malfunction

DESCRIPTION

The passenger airbag ON/OFF indicator circuit consists of the center airbag sensor assembly and the front passenger seat belt warning light.
This circuit indicates the operation condition of the front passenger airbag assembly, the front passenger side front seat side airbag assembly and passenger side seat belt pretensioner.
DTC B1660/43 is set when a malfunction is detected in the passenger airbag ON/OFF indicator circuit.

DTC No.	DTC Detecting Conditions	Trouble Areas
B1660/43	• Center airbag sensor assembly detects line short circuit signal, open circuit signal, short circuit to ground signal or short circuit to B+ signal in passenger airbag ON/OFF indicator circuit for 2 seconds • Front passenger seat belt warning light malfunction • Center airbag sensor assembly malfunction	• Instrument panel wire • Front passenger seat belt warning light (Passenger airbag ON/OFF Indicator) • Center airbag sensor assembly

WIRING DIAGRAM

HATCHBACK:

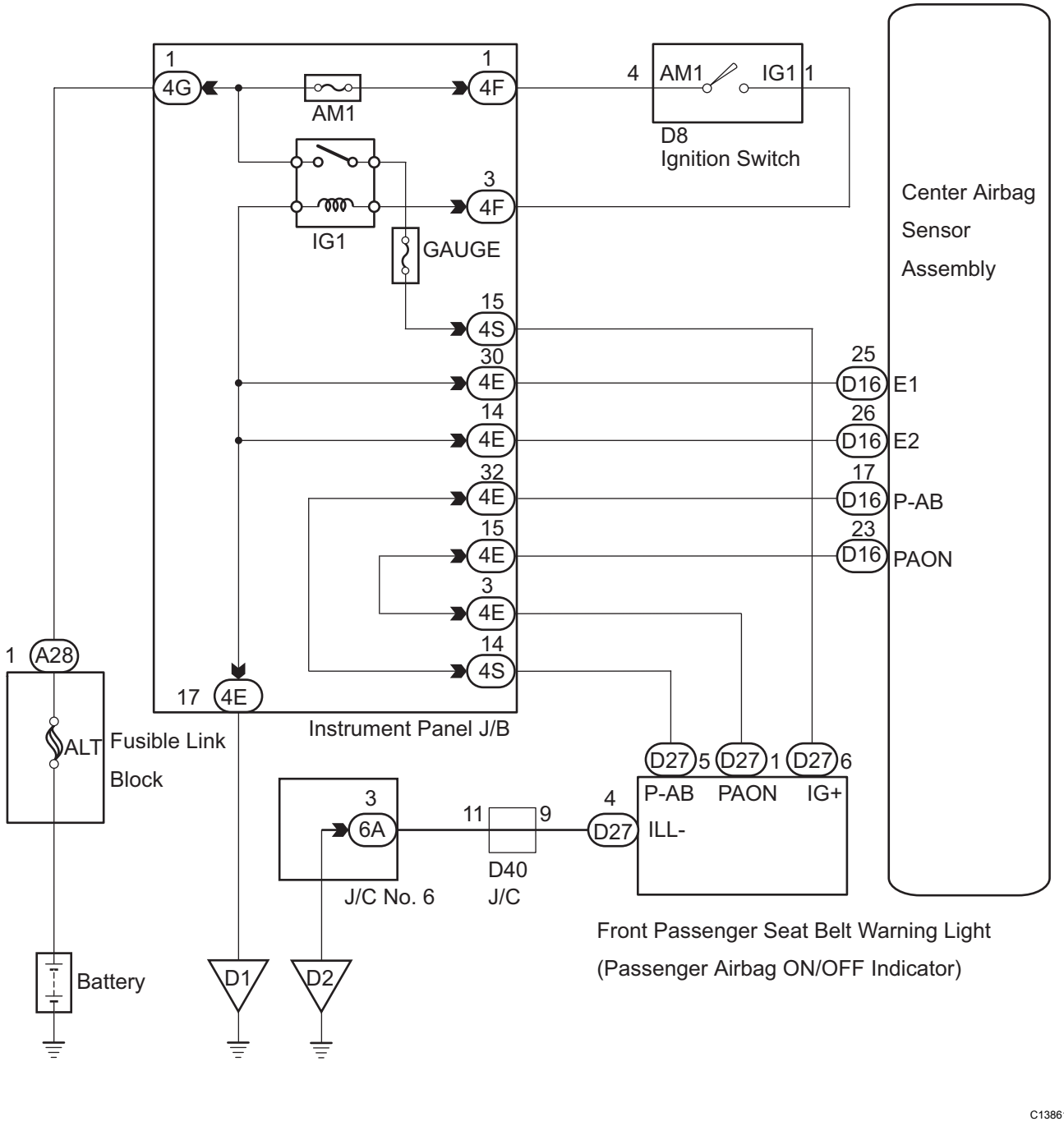

RS

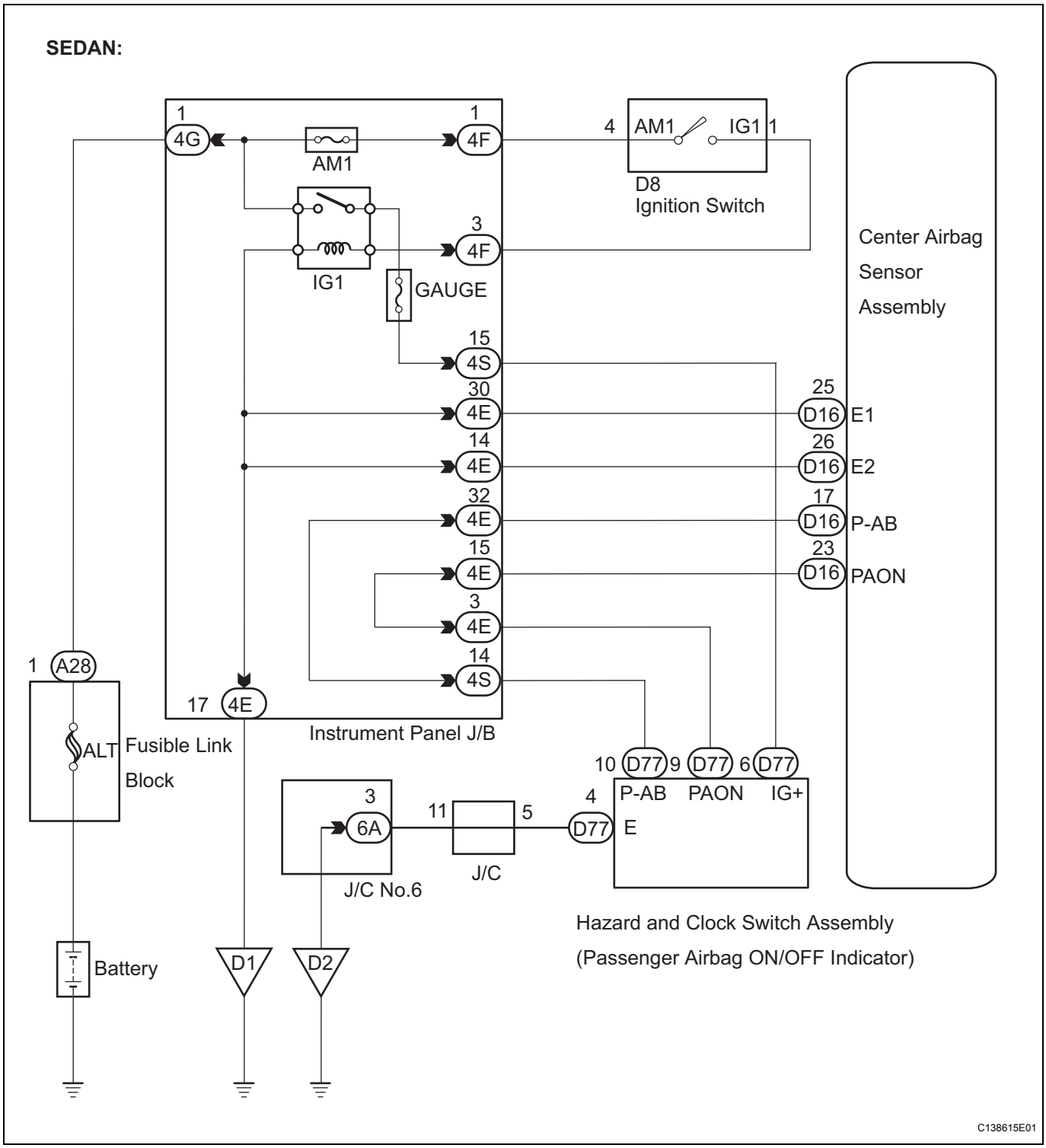

INSPECTION PROCEDURE

NOTICE:

In order to prevent unexpected airbag deployment, disconnect the following connectors before inspecting parts such as wire harnesses, if the application of tester probes to the center airbag sensor assembly connector is necessary.

1. Turn the ignition switch to the lock position.
2. Disconnect the negative (-) terminal cable from the battery, and wait for at least 90 seconds.
3. Disconnect the connector from the center airbag sensor assembly.
4. Disconnect the connectors from the steering pad.

5. Disconnect the connectors from the front passenger airbag assembly.
6. Disconnect the connector from the front seat outer belt assembly LH.
7. Disconnect the connector from the front seat outer belt assembly RH.
   HINT:
   Skip the following steps if side and curtain shield airbags are not fitted.
8. Disconnect the connector from the front seat side airbag assembly LH.
9. Disconnect the connector from the front seat side airbag assembly RH.
10. Disconnect the connector from the curtain shield airbag assembly LH.
11. Disconnect the connector from the curtain shield airbag assembly RH.

1	CHECK PASSENGER AIRBAG ON/OFF INDICATOR OPERATION

(a) Turn the ignition switch to the on position.
(b) Check the passenger airbag ON/OFF indicator operation.
HINT:
Refer to the normal condition of the passenger airbag ON/OFF indicator (See page RS-31).

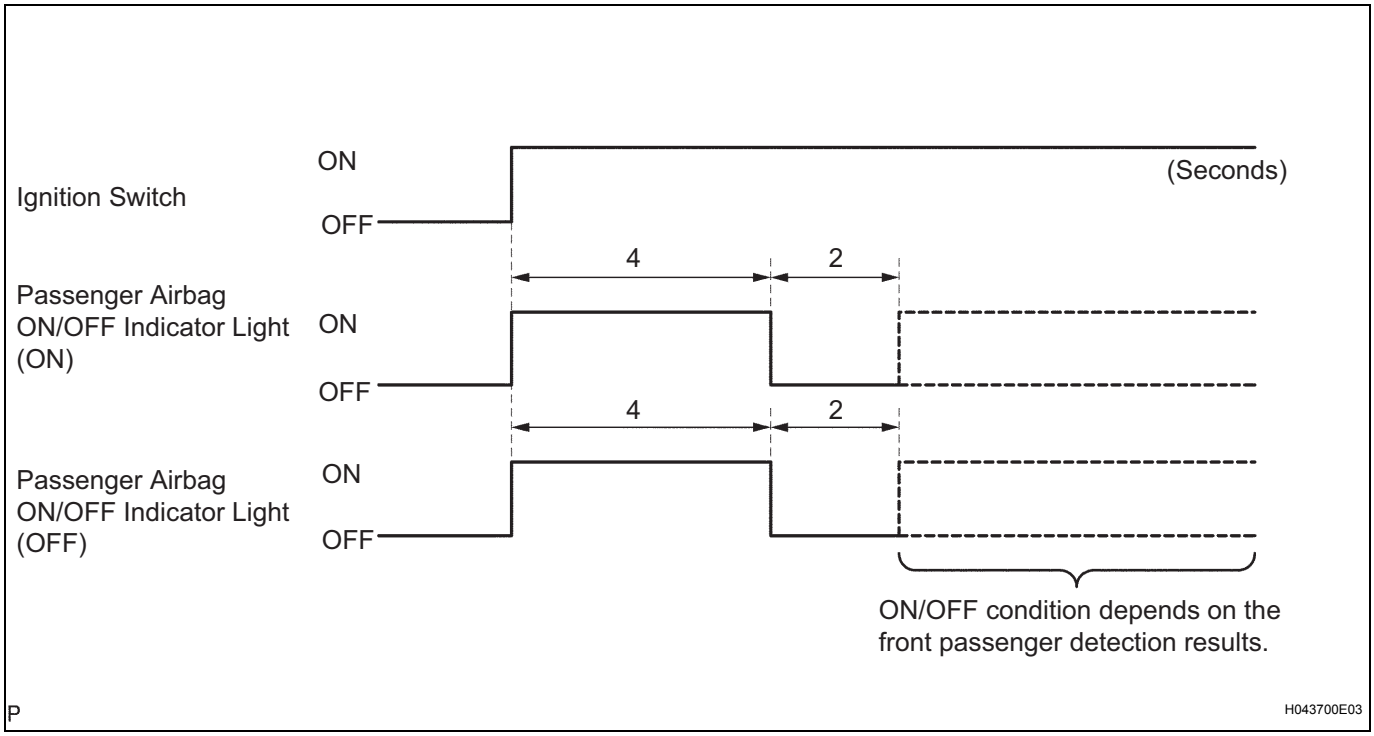

Result

ON/OFF Indicator Illumination	Proceed To
Always ON	A
OFF	B

B → Go to step 8

A

2	CHECK CONNECTION OF CONNECTORS

(a) Turn the ignition switch off.

(b) Disconnect the negative (-) terminal cable from the battery, and wait for at least 90 seconds.
(c) Check that the connectors are properly connected to the center airbag sensor assembly and the front passenger seat belt warning light.
OK:
The connectors are properly connected.

RS

NG	CONNECT CONNECTORS

OK

3	CHECK FRONT PASSENGER SEAT BELT WARNING LIGHT

HATCHBACK:



SEDAN:



C135760E01

(a) Turn the ignition switch off.
(b) Disconnect the negative (-) terminal cable from the battery, and wait for at least 90 seconds.
(c) Disconnect the connector from the center airbag sensor assembly.
(d) Connect the negative (-) terminal cable to the battery, and wait for at least 2 seconds.
(e) Turn the ignition switch to the on position.
(f) Check the passenger airbag ON/OFF indicator operation.
OK:
Neither ON nor OFF passenger airbag ON/OFF indicator comes on.

OK	Go to step 14

NG

4	CHECK INSTRUMENT PANEL WIRE (FOR OPEN)

(a) Turn the ignition switch off.
(b) Disconnect the negative (-) terminal cable from the battery, and wait for at least 90 seconds.

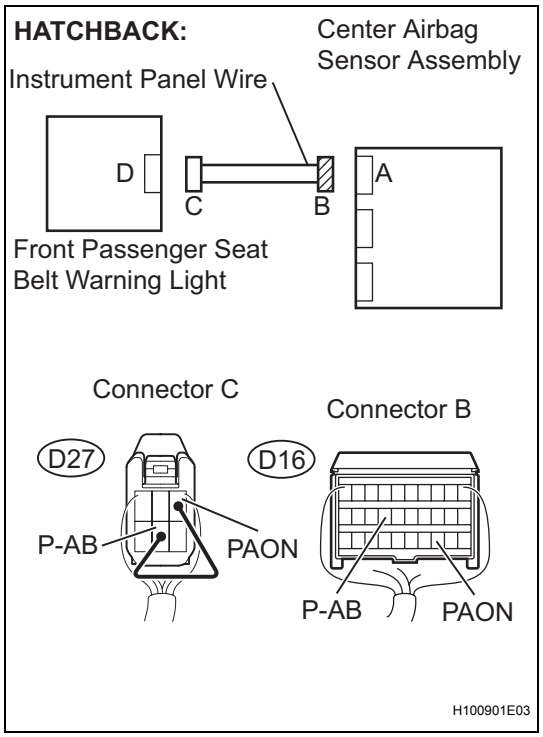

(c) For hatchback models:
(1) Disconnect the connector from the front passenger seat belt warning light.
(2) Using a service wire, connect D27-1 (PAON) and D27-5 (P-AB) of connector C.
NOTICE:
Do not forcibly insert the service wire into the terminals of the connector when connecting.
(3) Measure the resistance.
Standard resistance

Tester Connection	Condition	Specified Condition
D16-23 (PAON) - D16-17 (P-AB)	Always	Below 1 Ω

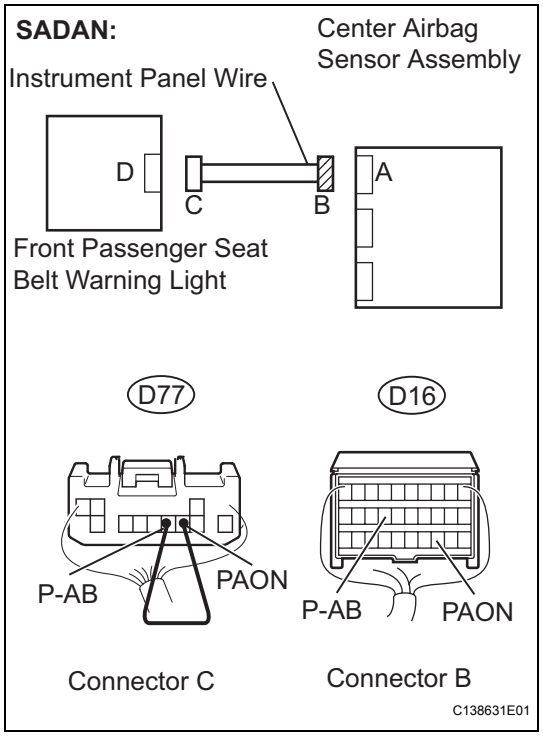

(d) For sedan models:
(1) Disconnect the connector from the front passenger seat belt warning light.
(2) Using a service wire, connect D77-9 (PAON) and D77-10 (P-AB) of connector C.
NOTICE:
Do not forcibly insert the service wire into the terminals of the connector when connecting.
(3) Measure the resistance.
Standard resistance

Tester Connection	Condition	Specified Condition
D16-23 (PAON) - D16-17 (P-AB)	Always	Below 1 Ω

NG → **REPAIR OR REPLACE INSTRUMENT PANEL WIRE**

OK

RS

5	CHECK INSTRUMENT PANEL WIRE (FOR SHORT)

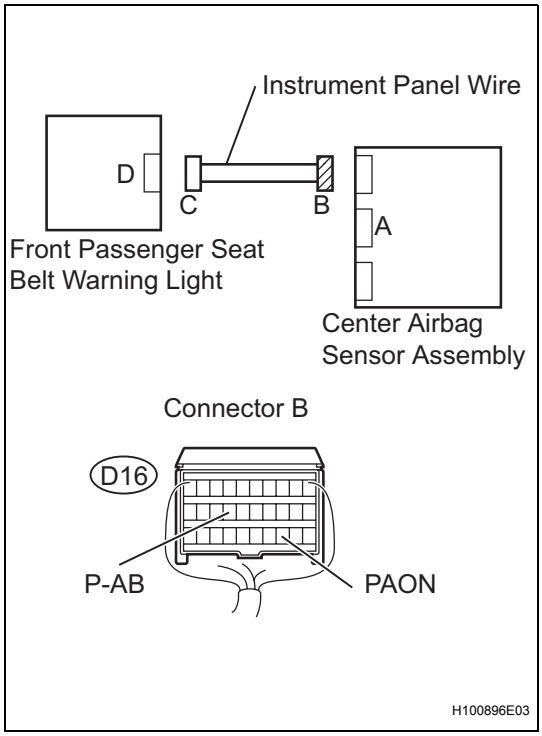

(a) Disconnect the service wire from connector C.
(b) Measure the resistance.
Standard resistance

Tester Connection	Condition	Specified Condition
D16-17 (P-AB) - D16-23 (PAON)	Always	1 MΩ or Higher

NG → **REPAIR OR REPLACE INSTRUMENT PANEL WIRE**

OK

6	CHECK INSTRUMENT PANEL WIRE (TO B+)

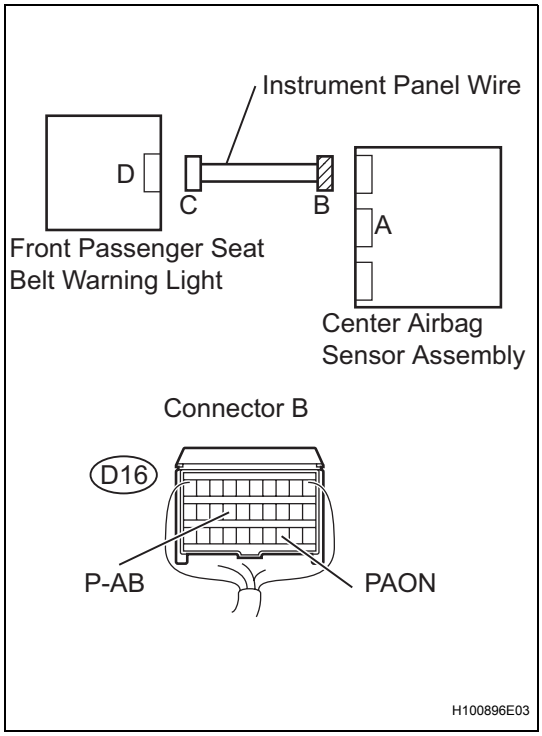

(a) Connect the negative (-) terminal cable to the battery, and wait for at least 2 seconds.
(b) Turn the ignition switch to the on position.
(c) Measure the voltage.
Standard voltage

Tester Connection	Condition	Specified Condition
D16-23 (PAON) - Body ground	Ignition switch on	Below 1 V
D16-17 (P-AB) -Body ground	Ignition switch on	Below 1 V

NG → **REPAIR OR REPLACE INSTRUMENT PANEL WIRE**

OK

7	CHECK INSTRUMENT PANEL WIRE (TO GROUND)

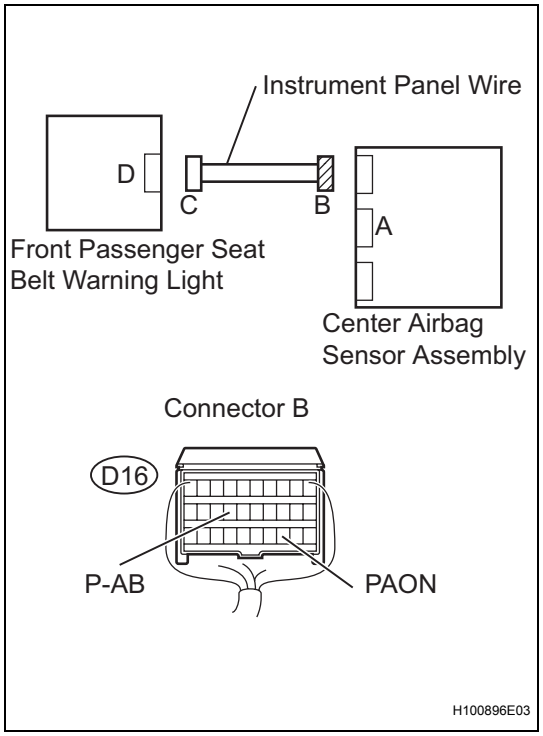

(a) Turn the ignition switch off.
(b) Disconnect the negative (-) terminal cable from the battery, and wait for at least 90 seconds.
(c) Measure the resistance.

Standard resistance

Tester Connection	Condition	Specified Condition
D16-17 (P-AB) -Body ground	Always	1 MΩ or Higher
D16-23 (PAON) -Body ground	Always	1 MΩ or Higher

NG → **REPAIR OR REPLACE INSTRUMENT PANEL WIRE**

OK

REPLACE FRONT PASSENGER SEAT BELT WARNING LIGHT

8	CHECK CONNECTION OF CONNECTORS

(a) Turn the ignition switch off.
(b) Disconnect the negative (-) terminal cable from the battery, and wait for at least 90 seconds.
(c) Check that the connectors are properly connected to the center airbag sensor assembly and the front passenger seat belt warning light.

OK:

The connectors are properly connected.

NG → **CONNECT CONNECTORS**

OK

9	CHECK INSTRUMENT PANEL WIRE (FOR OPEN)

(a) Turn the ignition switch off.
(b) Disconnect the negative (-) terminal cable from the battery, and wait for at least 90 seconds.

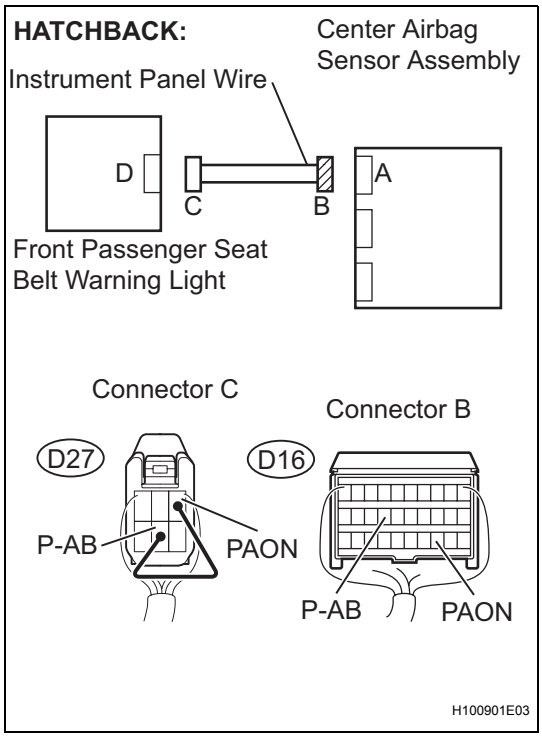

(c) For hatchback models:
(1) Disconnect the connector from the front passenger seat belt warning light.
(2) Using a service wire, connect D27-1 (PAON) and D27-5 (P-AB) of connector C.
NOTICE:
Do not forcibly insert the service wire into the terminals of the connector when connecting.
(3) Measure the resistance.
Standard resistance

Tester Connection	Condition	Specified Condition
D16-23 (PAON) - D16-17 (P-AB)	Always	Below 1 Ω

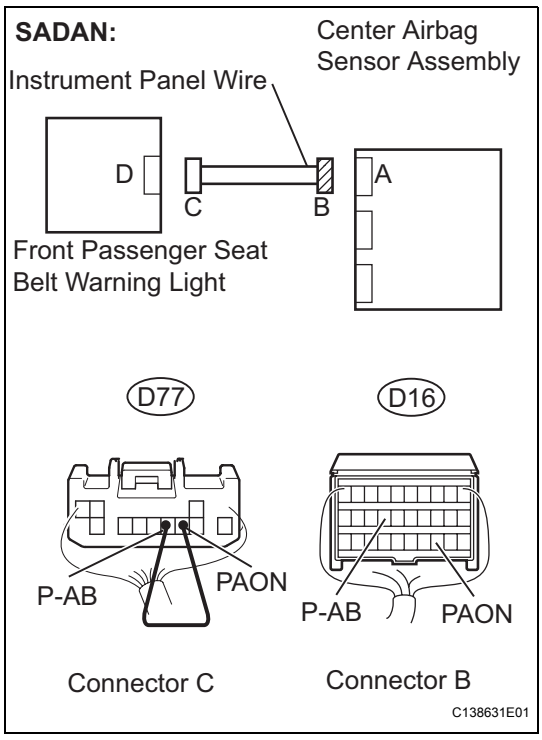

(d) For sedan models:
(1) Disconnect the connector from the front passenger seat belt warning light.
(2) Using a service wire, connect D77-9 (PAON) and D77-10 (P-AB) of connector C.
NOTICE:
Do not forcibly insert the service wire into the terminals of the connector when connecting.
(3) Measure the resistance.
Standard resistance

Tester Connection	Condition	Specified Condition
D16-23 (PAON) - D16-17 (P-AB)	Always	Below 1 Ω

NG → **REPAIR OR REPLACE INSTRUMENT PANEL WIRE**

OK

RS

10 CHECK INSTRUMENT PANEL WIRE (FOR SHROT)

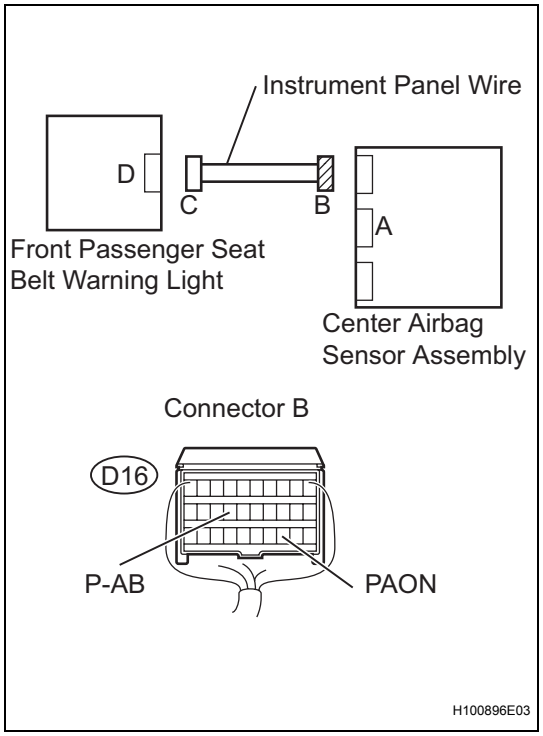

(a) Disconnect the service wire from connector B.
(b) Measure the resistance.
Standard resistance

Tester Connection	Condition	Specified Condition
D16-17 (P-AB) - D16-23 (PAON)	Always	1 MΩ or Higher

NG → **REPAIR OR REPLACE INSTRUMENT PANEL WIRE**

OK

11 CHECK INSTRUMENT PANEL WIRE (TO B+)

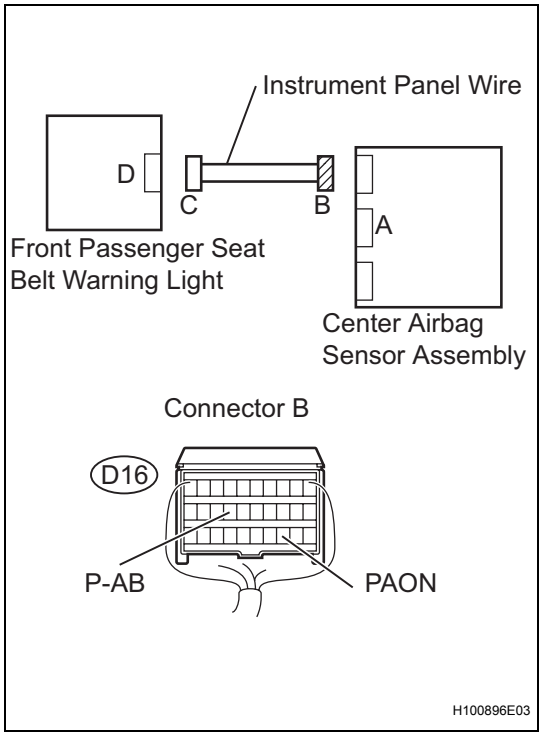

(a) Connect the negative (-) terminal cable to the battery, and wait for at least 2 seconds.
(b) Turn the ignition switch to the on position.
(c) Measure the voltage.
Standard voltage

Tester Connection	Condition	Specified Condition
D16-23 (PAON) - Body ground	Ignition switch on	Below 1 V
D16-17 (P-AB) - Body ground	Ignition switch on	Below 1 V

NG → **REPAIR OR REPLACE INSTRUMENT PANEL WIRE**

OK

12	CHECK INSTRUMENT PANEL WIRE (TO GROUND)

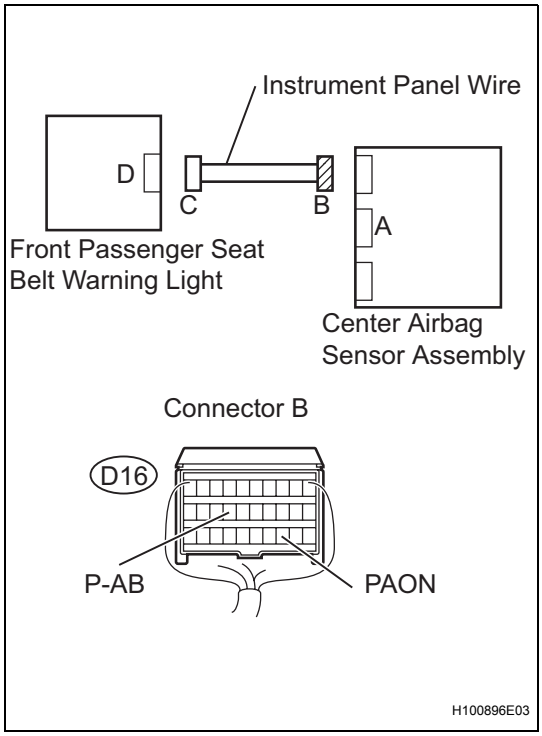

(a) Turn the ignition switch off.
(b) Disconnect the negative (-) terminal cable from the battery, and wait for at least 90 seconds.
(c) Measure the resistance.
Standard resistance

Tester Connection	Condition	Specified Condition
D16-17 (P-AB) - Body ground	Always	1 MΩ or Higher
D16-23 (PAON) - Body ground	Always	1 MΩ or Higher

NG → **REPAIR OR REPLACE INSTRUMENT PANEL WIRE**

OK

13	CHECK WIRE HARNESS (POWER SOURCE)

(a) Connect the negative (-) terminal cable to the battery, and wait for at least 2 seconds.
(b) Turn the ignition switch to the on position.

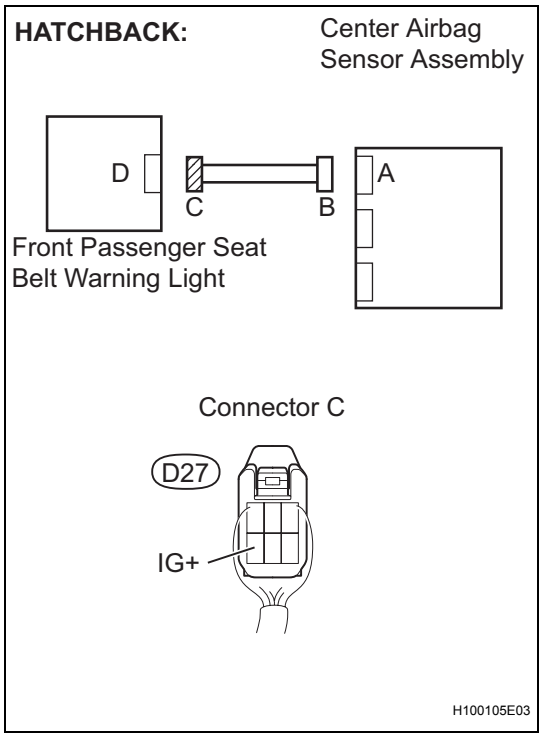

(c) Measure the voltage.

(1) For hatchback models:

Standard voltage (for HATCHBACK)

Tester Connection	Condition	Specified Condition
D27-6 (IG+) - Body ground	Ignition switch on	11 to 14 V

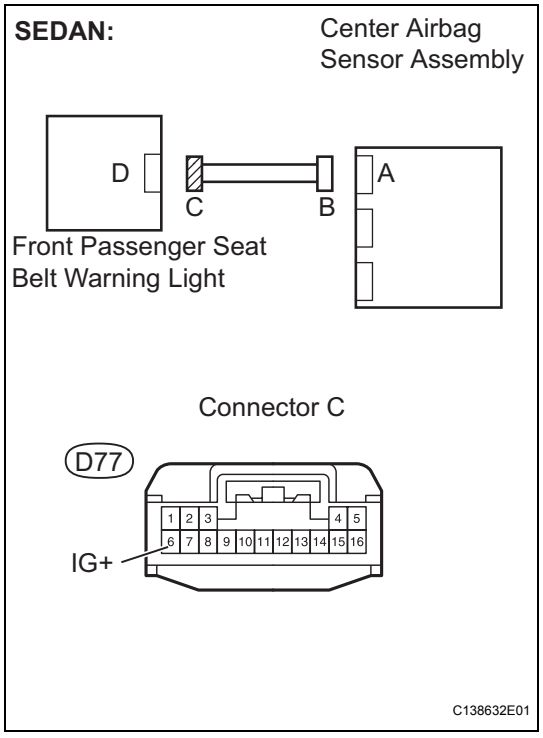

(2) For sedan models:

Standard voltage (for SEDAN)

Tester Connection	Condition	Specified Condition
D77-6 (IG+) - Body ground	Ignition switch on	11 to 14 V

NG → **REPAIR OR REPLACE POWER SOURCE CIRCUIT**

OK

14	CHECK FRONT PASSENGER SEAT BELT WARNING LIGHT

(a) Turn the ignition switch off.

HATCHBACK:

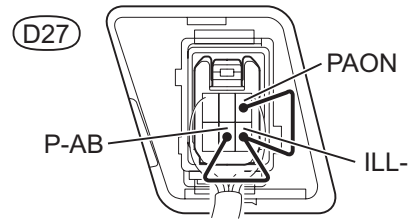

Front Passenger Seat Belt Warning Light

Y H100935E02

SEDAN:

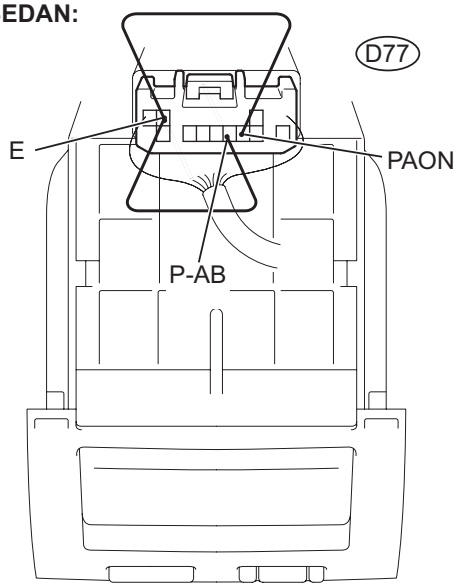

Front Passenger Seat Belt Warning Light

P C135761E01

OK

(b) For hatchback models:
  (1) Using a service wire, connect D27-1 (PAON) and D27-4 (ILL-) of the front passenger seat belt warning light connector.
  (2) Using a service wire, connect D27-5 (P-AB) and D27-4 (ILL-) of the front passenger seat belt warning light connector.

(c) For sedan models:
  (1) Using a service wire, connect D77-9 (PAON) and D77-4 (E) of the front passenger seat belt warning light connector.
  (2) Using a service wire, connect D77-10 (P-AB) and D77-4 (E) of the front passenger seat belt warning light connector.

(d) Turn the ignition switch to the on position.

(e) Check the passenger airbag ON/OFF indicator operation.

OK:

Passenger airbag ON/OFF indicator comes on

NG → **REPLACE FRONT PASSENGER SEAT BELT WARNING LIGHT**

15	CHECK CENTER AIRBAG SENSOR ASSEMBLY

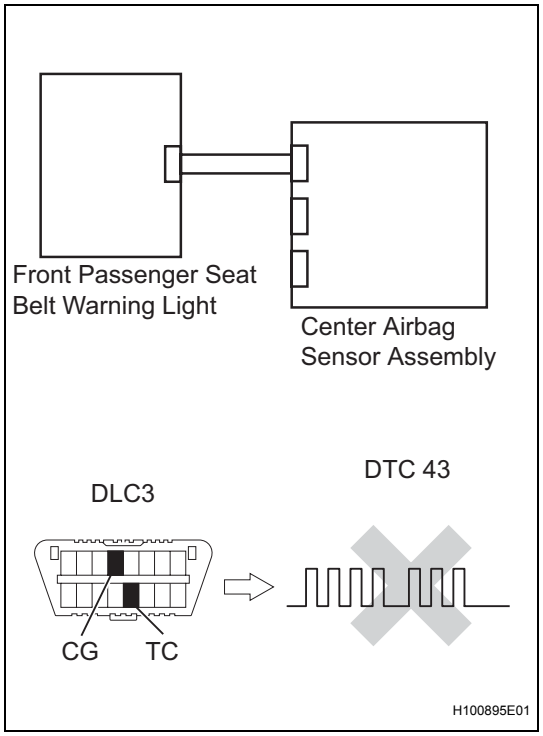

(a) Turn the ignition switch off.
(b) Disconnect the negative (-) terminal cable from the battery, and wait for at least 90 seconds.
(c) Connect the connector to the center airbag sensor assembly.
(d) Connect the connector to the front passenger seat belt warning light.
(e) Connect the negative (-) terminal cable to the battery, and wait for at least 2 seconds.
(f) Turn the ignition switch to the on position, and wait for at least 60 seconds.
(g) Clear the DTCs stored in the memory (See page RS-38).
(h) Turn the ignition switch to the lock position.
(i) Turn the ignition switch to the on position, and wait for at least 60 seconds.
(j) Check for DTCs (See page RS-38).

OK:

DTC B1660/43 is not output.

HINT:

DTCs other than B1660/43 may be output at this time, but they are not related to this check.

NG → **REPLACE CENTER AIRBAG SENSOR ASSEMBLY**

OK

USE SIMULATION METHOD TO CHECK

RS

DTC	B1662/45	Indicator Light Circuit Malfunction

DESCRIPTION

The indicator light circuit consists of the center airbag sensor assembly and the combination meter. DTC B1662/45 is set when a malfunction is detected in the indicator light circuit.

DTC No.	DTC Detecting Conditions	Trouble Areas
B1662/45	• Center airbag sensor assembly detects line short circuit signal, open circuit signal, short circuit to ground signal or short circuit to B+ signal in indicator light circuit for 2 seconds • Indicator light circuit malfunction • Center airbag sensor assembly malfunction	• Combination meter • Center airbag sensor assembly • Instrument panel wire

WIRING DIAGRAM

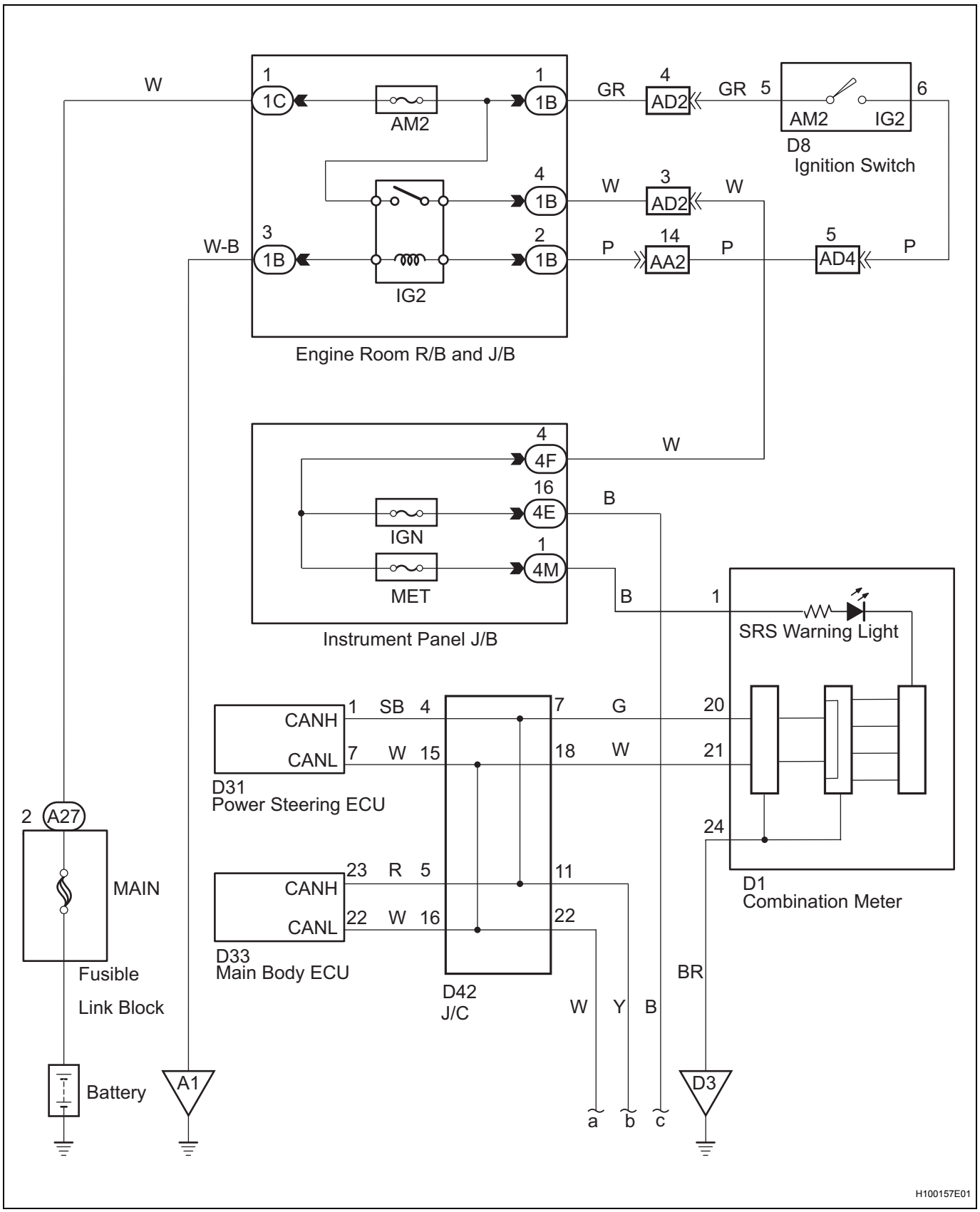

RS

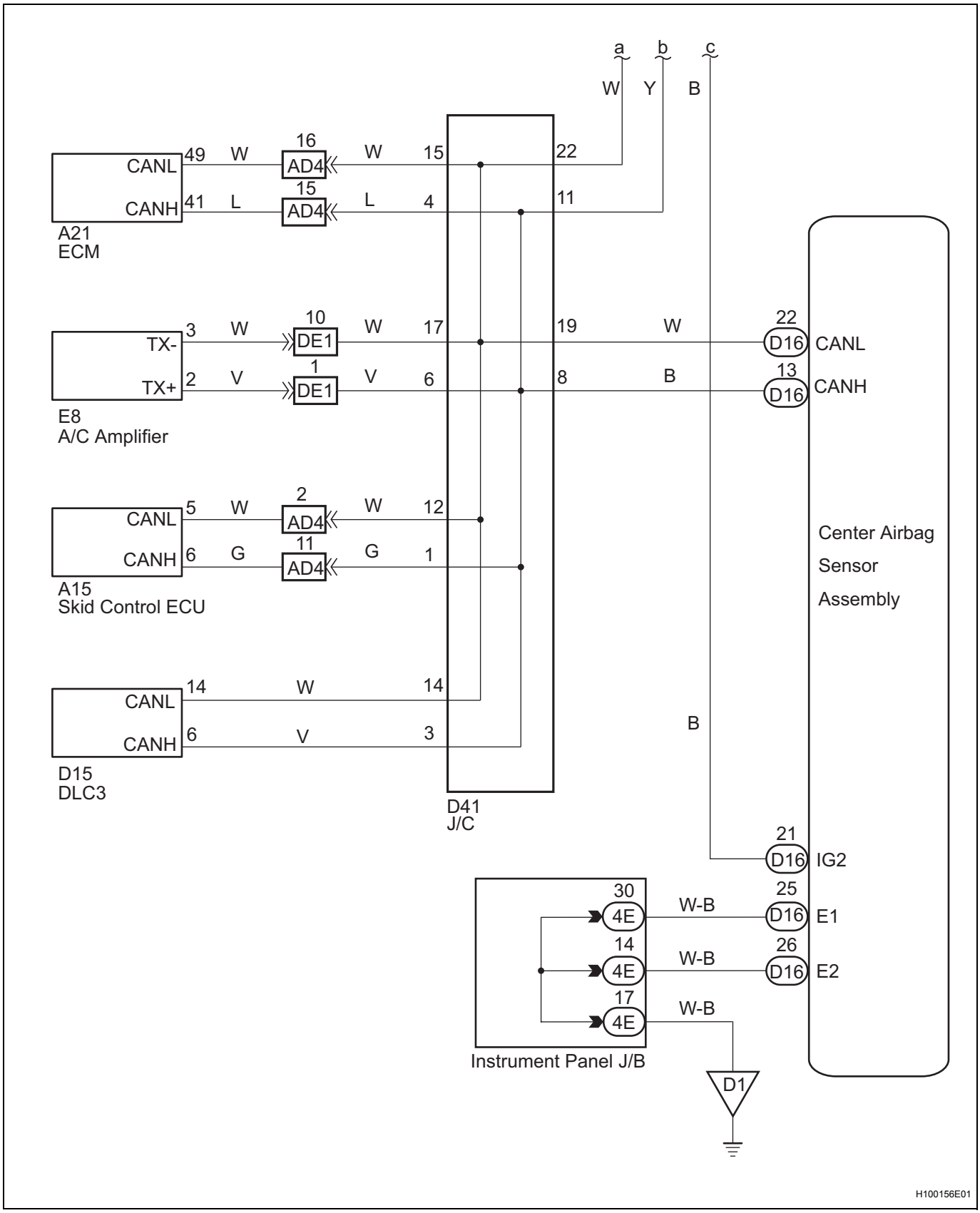
a
b
c
W
Y
B
A21
ECM
CANL
CANH
49
41
W
L
16
15
AD4
AD4
W
L
15
4
22
11
E8
A/C Amplifier
TX-
TX+
3
2
W
V
10
1
DE1
DE1
W
V
17
6
19
8
W
B
22
13
D16
D16
CANL
CANH
A15
Skid Control ECU
CANL
CANH
5
6
W
G
2
11
AD4
AD4
W
G
12
1
Center Airbag
Sensor
Assembly
D15
DLC3
CANL
CANH
14
6
W
V
14
3
B
D41
J/C
21
D16
IG2
30
14
17
4E
4E
4E
W-B
W-B
W-B
25
26
D16
D16
E1
E2
Instrument Panel J/B
D1
H100156E01

INSPECTION PROCEDURE

NOTICE:

In order to prevent unexpected airbag deployment, disconnect the following connectors before inspecting parts such as wire harnesses, if the application of tester probes to the center airbag sensor assembly connector is necessary.

1. Turn the ignition switch to the lock position.
2. Disconnect the negative (-) terminal cable from the battery, and wait for at least 90 seconds.
3. Disconnect the connector from the center airbag sensor assembly.
4. Disconnect the connectors from the steering pad.
5. Disconnect the connectors from the front passenger airbag assembly.
6. Disconnect the connector from the front seat outer belt assembly LH.
7. Disconnect the connector from the front seat outer belt assembly RH.

   HINT:

   Skip the following steps if side and curtain shield airbags are not fitted.
8. Disconnect the connector from the front seat side airbag assembly LH.
9. Disconnect the connector from the front seat side airbag assembly RH.
10. Disconnect the connector from the curtain shield airbag assembly LH.
11. Disconnect the connector from the curtain shield airbag assembly RH.

1	CHECK DTC (AIRBAG SYSTEM)

(a) Turn the ignition switch to the on position.
(b) Clear the DTCs stored in the memory (See page RS-38).
(c) Turn the ignition switch to the lock position.
(d) Turn the ignition switch to the on position and wait for at least 60 seconds.
(e) Check the DTCs (See page RS-38).

OK:

DTC B1662/45 is not output.

HINT:

DTCs other than B1662/45 may be output at this time, but they are not related to this check.

OK → **USE SIMULATION METHOD TO CHECK**

NG

2	CHECK DTC (CAN COMMUNICATION SYSTEM)

(a) Turn the ignition switch to the on position.
(b) Check the DTCs (See page CA-22).

OK:

DTC is not output.

NG → **CHECK CAN COMMUNICATION SYSTEM**

OK

3	CHECK CONNECTION OF CONNECTORS

(a) Turn the ignition switch off.
(b) Disconnect the negative (-) terminal cable from the battery, and wait for at least 90 seconds.

(c) Check that the connectors are properly connected to the center airbag sensor assembly and the combination meter.
OK:
The connectors are properly connected.

RS

NG → **CONNECT CONNECTORS**

OK

4	CHECK CENTER AIRBAG SENSOR ASSEMBLY

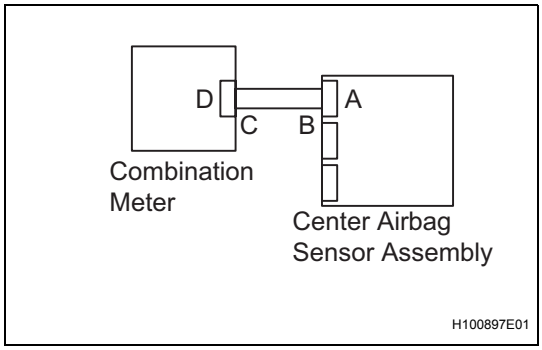

(a) Turn the ignition switch off.
(b) Disconnect the negative (-) terminal cable from the battery, and wait for at least 90 seconds.
(c) Replace the center airbag sensor assembly.
for Hatchback: (See page RS-437)
for Sedan: (See page RS-433)
HINT:
Perform the inspection using parts from a normal vehicle when possible.
(d) Connect the connectors to the center airbag sensor assembly and the combination meter.
(e) Connect the negative (-) terminal cable to the battery, and wait for at least 2 seconds.
(f) Turn the ignition switch to the on position, and wait for at least 60 seconds.
(g) Clear the DTCs stored in the memory (See page RS-38).
(h) Turn the ignition switch to the lock position.
(i) Turn the ignition switch to the on position, and wait for at least 60 seconds.
(j) Check for DTCs (See page RS-38).
OK:
DTC B1662/45 is not output.
HINT:
DTCs other than B1662/45 may be output at this time, but they are not related to this check.

NG → **GO TO METER / GAUGE SYSTEM**

OK

END

DTC	B1800/51	Short in Driver Side Squib Circuit

DTC	B1801/51	Open in Driver Side Squib Circuit

DTC	B1802/51	Short to GND in Driver Side Squib Circuit

DTC	B1803/51	Short to B+ in Driver Side Squib Circuit

DESCRIPTION

The driver side squib circuit consists of the center airbag sensor assembly, the spiral cable and the steering pad.

The circuit signals the SRS to deploy when deployment conditions are met.

These DTCs are recorded when a malfunction is detected in the driver side squib circuit.

DTC No.	DTC Detecting Condition	Trouble Area
B1800/51	• Center airbag sensor assembly detects line short circuit signal in driver side squib circuit 5 times during primary check. • Driver side squib malfunction • Spiral cable malfunction • Center airbag sensor assembly malfunction	• Instrument panel wire • Spiral cable • Steering pad (Driver side squib) • Center airbag sensor assembly
B1801/51	• Center airbag sensor assembly detects open circuit signal in driver side squib circuit for 2 seconds. • Driver side squib malfunction • Spiral cable malfunction • Center airbag sensor assembly malfunction	• Instrument panel wire • Spiral cable • Steering pad (Driver side squib) • Center airbag sensor assembly
B1802/51	• Center airbag sensor assembly detects short circuit to ground signal in driver side squib circuit for 0.5 seconds. • Driver side squib malfunction • Spiral cable malfunction • Center airbag sensor assembly malfunction	• Instrument panel wire • Spiral cable • Steering pad (Driver side squib) • Center airbag sensor assembly
B1803/51	• Center airbag sensor assembly detects short circuit to B+ signal in driver side squib circuit for 0.5 seconds. • Driver side squib malfunction • Spiral cable malfunction • Center airbag sensor assembly malfunction	• Instrument panel wire • Spiral cable • Steering pad (Driver side squib) • Center airbag sensor assembly

WIRING DIAGRAM

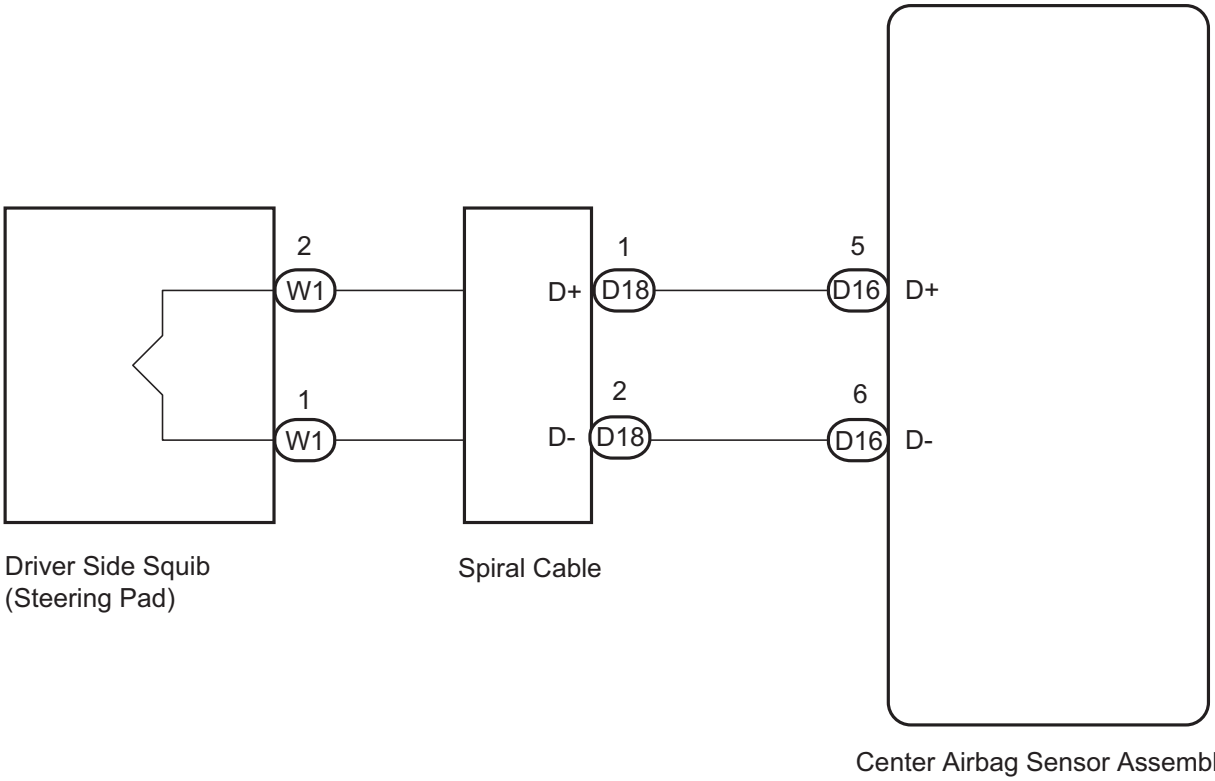

INSPECTION PROCEDURE

HINT:

- Perform the simulation method by selecting CHECK MODE (signal check) with the intelligent tester (See page RS-41).
- After selecting CHECK MODE (signal check), perform the simulation method by wiggling each connector of the airbag system or driving the vehicle on a city or rough road (See page RS-31).

1	**CHECK STEERING PAD (DRIVER SIDE SQUIB)**

SST 09843-18060

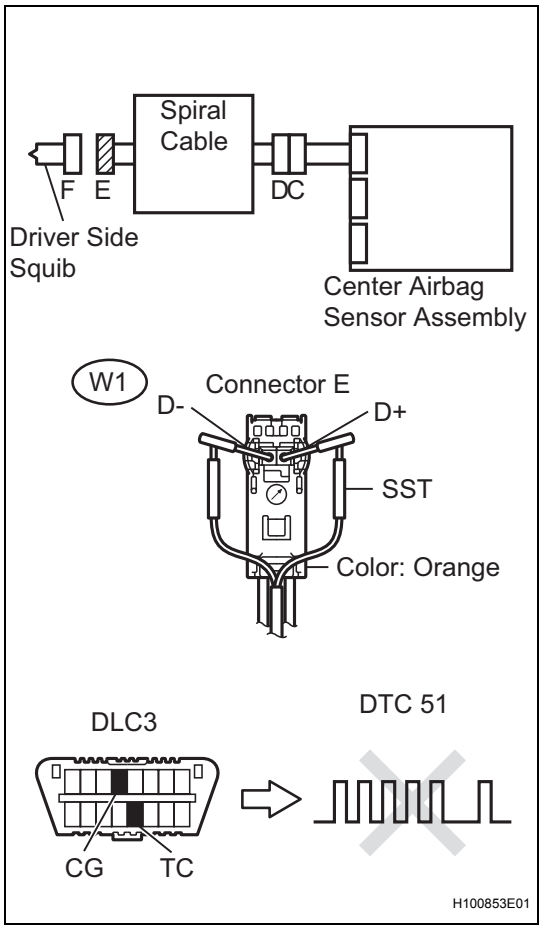

(a) Turn the ignition switch off.
(b) Disconnect the negative (-) terminal cable from the battery, and wait for at least 90 seconds.
(c) Disconnect the connectors from the steering pad.
(d) Connect the white wire side of SST (resistance 2.1 Ω) to connector E (orange connector).
CAUTION:
Never connect a tester to the steering pad (driver side squib) for measurement, as this may lead to a serious injury due to airbag deployment.
NOTICE:
- **Do not forcibly insert the SST into the terminals of the connector when connecting.**
- **Insert the SST straight into the terminals of the connector.**

(e) Connect the negative (-) terminal cable to the battery, and wait for at least 2 seconds.
(f) Turn the ignition switch on, and wait for at least 60 seconds.
(g) Clear the DTCs stored in the memory (See page RS-38).
(h) Turn the ignition switch off.
(i) Turn the ignition switch on, and wait for at least 60 seconds.
(j) Check the DTCs (See page RS-38).
OK:
DTC B1800, B1801, B1802, B1803 and 51 are not output.
HINT:
DTCs other than DTC B1800, B1801, B1802, B1803 and 51 may be output at this time, but they are not related to this check.

OK	**REPLACE STEERING PAD**

NG

2	**CHECK CONNECTOR**

(a) Turn the ignition switch off.
(b) Disconnect the negative (-) terminal cable from the battery, and wait for at least 90 seconds.
(c) Disconnect the SST from connector E.
(d) Check that the spiral cable connectors (on the steering pad side) are not damaged.
OK:
The lock button is not disengaged, and the claw of the lock is not deformed or damaged.

NG	**REPLACE SPIRAL CABLE**

OK

3	CHECK DRIVER SIDE SQUIB CIRCUIT

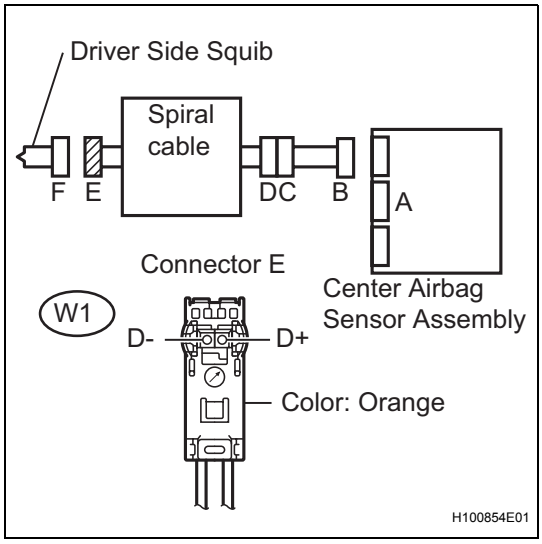

(a) Disconnect the connectors from the center airbag sensor assembly and steering pad.

(b) Check for short to B+ in the circuit.
  (1) Connect the negative (-) terminal cable to the battery, and wait for at least 2 seconds.
  (2) Turn the ignition switch on
  (3) Measure the voltage.
  Standard voltage

Tester Connection	Condition	Specified Condition
W1-1 (D+) - Body ground	Ignition switch on	Below 1 V
W1-2 (D-) - Body ground	Ignition switch on	Below 1 V

(c) Check for open in the circuit.
  (1) Turn the ignition switch off.
  (2) Disconnect the negative (-) terminal cable from the battery, and wait for at least 90 seconds.
  (3) Measure the resistance.
  Standard resistance

Tester Connection	Condition	Specified Condition
W1-1 (D+) - W1-2 (D-)	Always	Below 1 Ω

(d) Check for short to ground in the circuit.
  (1) Measure the resistance.
  Standard resistance

Tester Connection	Condition	Specified Condition
W1-1 (D+) - Body ground	Always	1 MΩ or higher
W1-2 (D-) - Body ground	Always	1 MΩ or higher

(e) Check for short in the circuit.
  (1) Release the activation prevention mechanism built into connector B (See page RS-31).
  (2) Measure the resistance.
  Standard resistance

Tester Connection	Condition	Specified Condition
W1-1 (D+) - W1-2 (D-)	Always	1 MΩ or higher

NG → **Go to step 5**

OK

4 CHECK CENTER AIRBAG SENSOR ASSEMBLY

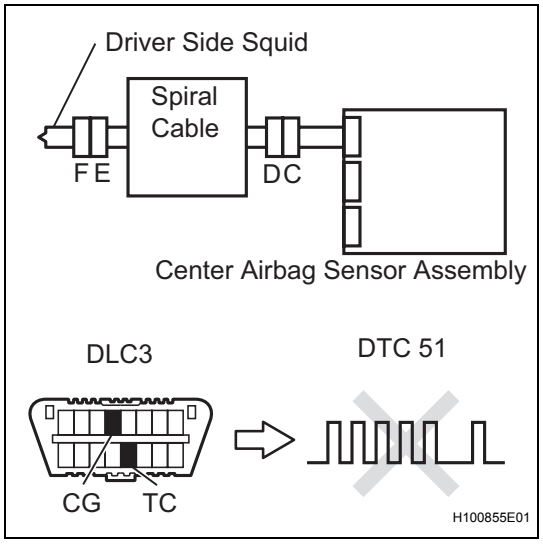

(a) Connect the connectors to the steering pad and the center airbag sensor assembly.
(b) Connect the negative (-) terminal cable to the battery, and wait for at least 2 seconds.
(c) Turn the ignition switch on, and wait for at least 60 seconds.
(d) Clear the DTCs stored in the memory (See page RS-38).
(e) Turn the ignition switch off.
(f) Turn the ignition switch on, and wait for at least 60 seconds.
(g) Check the DTCs (See page RS-38).

OK:

DTC B1800, B1801, B1802, B1803 and 51 are not output.

HINT:

DTCs other than DTC B1800, B1801, B1802, B1803 and 51 may be output at this time, but they are not related to this check.

NG → **REPLACE CENTER AIRBAG SENSOR ASSEMBLY**

OK

USE SIMULATION METHOD TO CHECK

5 CHECK INSTRUMENT PANEL WIRE

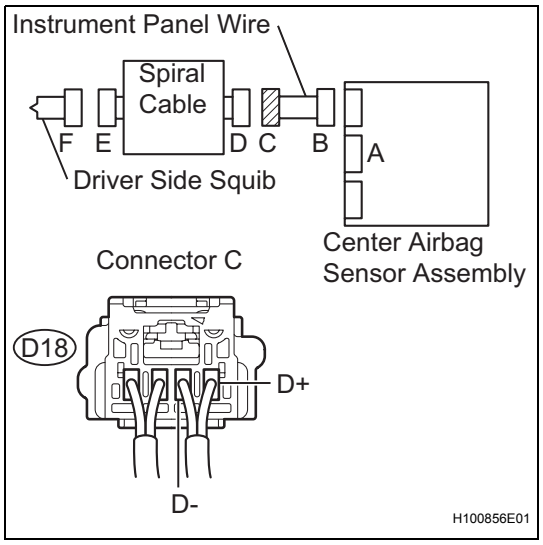

(a) Restore the released activation prevention mechanism of connector B to the original condition.
(b) Disconnect the instrument panel wire connector from the spiral cable.
(c) Check for short to B+ in the circuit.
  (1) Connect the negative (-) terminal cable to the battery, and wait for at least 2 seconds.
  (2) Turn the ignition switch on.
  (3) Measure the voltage.

Standard voltage

Tester Connection	Condition	Specified Condition
D18-1 (D+) - Body ground	Ignition switch on	Below 1 V
D18-2 (D-) - Body ground	Ignition switch on	Below 1 V

(d) Check for open in the circuit.
  (1) Turn the ignition switch off.
  (2) Disconnect the negative (-) terminal cable from the battery, and wait for at least 90 seconds.
  (3) Measure the resistance.

Standard resistance

Tester Connection	Condition	Specified Condition
D18-1 (D+) - D18-2 (D-)	Always	Below 1 Ω

(e) Check for short to ground in the circuit.
(1) Measure the resistance.
Standard resistance

Tester Connection	Condition	Specified Condition
D18-1 (D+) - Body ground	Always	1 MΩ or higher
D18-2 (D-) - Body ground	Always	1 MΩ or higher

(f) Check for short in the circuit.
(1) Release the activation prevention mechanism built into connector B (See page RS-31).
(2) Measure the resistance.
Standard resistance

Tester Connection	Condition	Specified Condition
D18-1 (D+) - D18-2 (D-)	Always	1 MΩ or higher

NG → **REPAIR OR REPLACE INSTRUMENT PANEL WIRE**

OK

6 CHECK SPIRAL CABLE

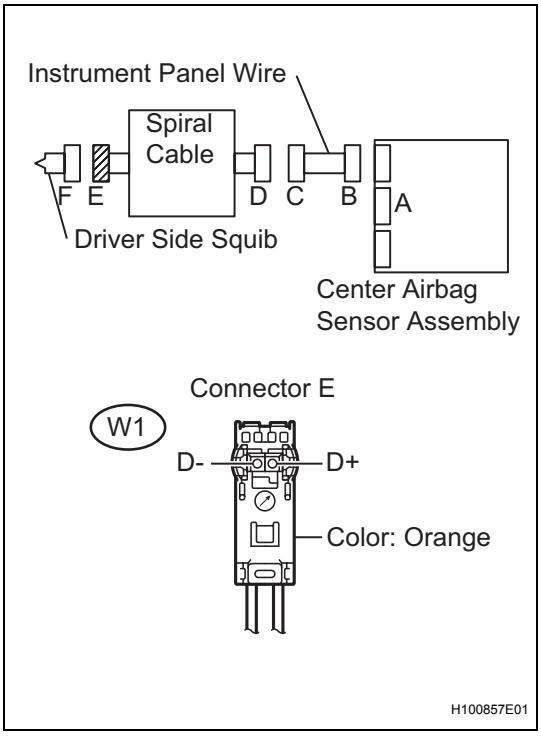

(a) Check for short to B+ in the circuit.
(1) Connect the negative (-) terminal cable to the battery, and wait for at least 2 seconds.
(2) Turn the ignition switch on.
(3) Measure the voltage.
Standard voltage

Tester Connection	Condition	Specified Condition
W1-1 (D+) - Body ground	Ignition switch on	Below 1 V
W1-2 (D-) - Body ground	Ignition switch on	Below 1 V

(b) Check for open in the circuit.
(1) Turn the ignition switch off.
(2) Disconnect the negative (-) terminal cable from the battery, and wait for at least 90 seconds.
(3) Measure the resistance.
Standard resistance

Tester Connection	Condition	Specified Condition
W1-1 (D+) - W1-2 (D-)	Always	Below 1 Ω

(c) Check for short to ground in the circuit.
(1) Measure the resistance.
Standard resistance

Tester Connection	Condition	Specified Condition
W1-1 (D+) - Body ground	Always	1 MΩ or higher

Tester Connection	Condition	Specified Condition
W1-2 (D-) - Body ground	Always	1 MΩ or higher

(d) Check for short in the circuit.
(1) Release the activation prevention mechanism built into connector D (See page RS-31).
(2) Measure the resistance.
Standard resistance

Tester Connection	Condition	Specified Condition
W1-1 (D+) - W1-2 (D-)	Always	1 MΩ or higher

NG → **REPLACE SPIRAL CABLE**

OK

USE SIMULATION METHOD TO CHECK

DTC	B1805/52	Short in Front Passenger Side Squib Circuit

DTC	B1806/52	Open in Front Passenger Side Squib Circuit

RS

DTC	B1807/52	Short to GND in Front Passenger Side Squib Circuit

DTC	B1808/52	Short to B+ in Front Passenger Side Squib Circuit

DESCRIPTION

The front passenger side squib circuit consists of the center airbag sensor assembly and the front passenger airbag assembly.
The circuit signals the SRS to deploy when deployment conditions are met.
These DTCs are recorded when a malfunction is detected in the front passenger side squib circuit.

DTC No.	DTC Detection Condition	Trouble Area
B1805/52	• Center airbag sensor assembly detects line short circuit signal in front passenger side squib circuit 5 times during primary check. • Front passenger side squib malfunction • Center airbag sensor assembly malfunction	• Instrument panel wire • Instrument panel wire assembly • Front passenger airbag assembly (Front passenger side squib) • Center airbag sensor assembly
B1806/52	• Center airbag sensor assembly detects open circuit signal in front passenger side squib circuit for 2 seconds. • Front passenger side squib malfunction • Center airbag sensor assembly malfunction	• Instrument panel wire • Instrument panel wire assembly • Front passenger airbag assembly (Front passenger side squib) • Center airbag sensor assembly
B1807/52	• Center airbag sensor assembly detects short circuit to ground signal in front passenger side squib circuit for 0.5 seconds. • Front passenger side squib malfunction • Center airbag sensor assembly malfunction	• Instrument panel wire • Instrument panel wire assembly • Front passenger airbag assembly (Front passenger side squib) • Center airbag sensor assembly
B1808/52	• Center airbag sensor assembly detects short circuit to B+ signal in front passenger side squib circuit for 0.5 seconds. • Front passenger side squib malfunction • Center airbag sensor assembly malfunction	• Instrument panel wire • Instrument panel wire assembly • Front passenger airbag assembly (Front passenger side squib) • Center airbag sensor assembly

WIRING DIAGRAM

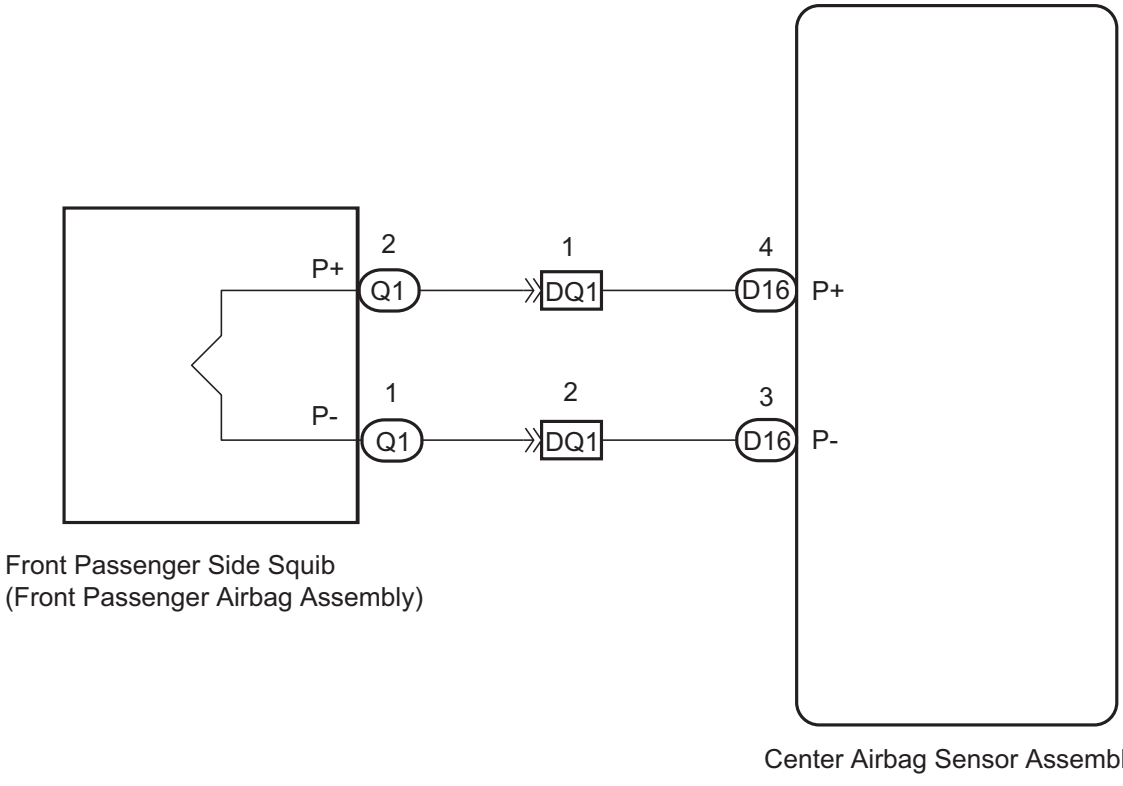

INSPECTION PROCEDURE

HINT:

- Perform the simulation method by selecting CHECK MODE (signal check) with the intelligent tester (See page RS-41).
- After selecting CHECK MODE (signal check), perform the simulation method by wiggling each connector of the airbag system or driving the vehicle on a city or rough road (See page RS-31).

1	**CHECK FRONT PASSENGER AIRBAG (FRONT PASSENGER SIDE SQUIB)**

SST 09843-18060

RS

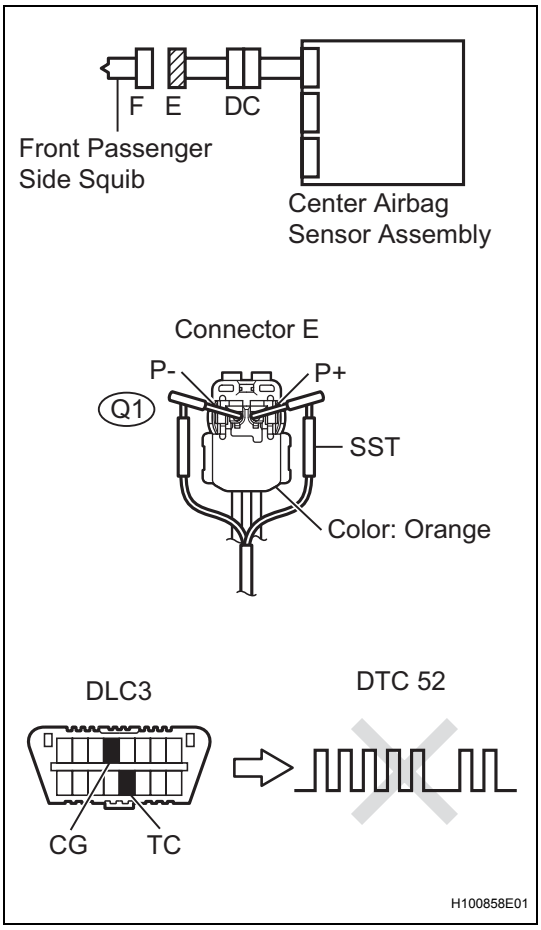

(a) Turn the ignition switch off.
(b) Disconnect the negative (-) terminal cable from the battery, and wait for at least 90 seconds.
(c) Disconnect the connectors from the front passenger airbag assembly.
(d) Connect the white wire side of SST (resistance 2.1 Ω) to connector E (orange connector).
CAUTION:
Never connect a tester to the front passenger airbag assembly (front passenger side squib) for measurement, as this may lead to a serious injury due to airbag deployment.
NOTICE:
- **Do not forcibly insert the SST into the terminals of the connector when connecting.**
- **Insert the SST straight into the terminals of the connector.**

(e) Connect the negative (-) terminal cable to the battery, and wait for at least 2 seconds.
(f) Turn the ignition switch on, and wait for at least 60 seconds.
(g) Clear the DTCs stored in the memory (See page RS-38).
(h) Turn the ignition switch off.
(i) Turn the ignition switch on, and wait for at least 60 seconds.
(j) Check the DTCs (See page RS-38).
OK:
DTC B1805, B1806, B1807, B1808 and 52 are not output.
HINT:
DTCs other than DTC B1805, B1806, B1807, B1808 and 52 may be output at this time, but they are not related to this check.

OK	**REPLACE FRONT PASSENGER AIRBAG**

NG

2	**CHECK CONNECTOR**

(a) Turn the ignition switch off.
(b) Disconnect the negative (-) terminal cable from the battery, and wait for at least 90 seconds.
(c) Disconnect the SST from connector E.
(d) Check that the instrument panel wire assembly connectors (on the front passenger airbag side) are not damaged.
OK:
The lock button is not disengaged, and the claw of the lock is not deformed or damaged.

NG	**REPAIR OR REPLACE INSTRUMENT PANEL WIRE ASSEMBLY**

OK

3	CHECK FRONT PASSENGER SIDE SQUIB CIRCUIT

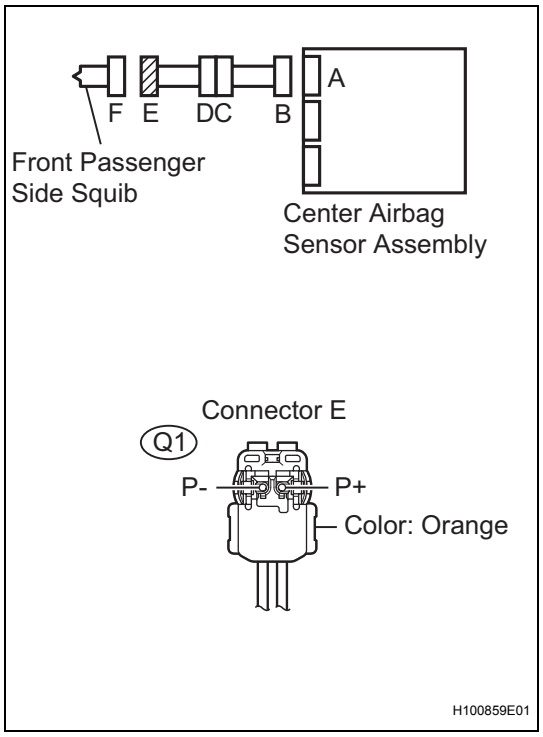

(a) Disconnect the connectors from the center airbag sensor assembly and front passenger airbag assembly.

(b) Check for short to B+ in the circuit.
  (1) Connect the negative (-) terminal cable to the battery, and wait for at least 2 seconds.
  (2) Turn the ignition switch on.
  (3) Measure the voltage.
  Standard voltage

Tester Connection	Condition	Specified Condition
Q1-2 (P+) - Body ground	Ignition switch on	Below 1 V
Q1-1 (P-) - Body ground	Ignition switch on	Below 1 V

(c) Check for open in the circuit.
  (1) Turn the ignition switch off.
  (2) Disconnect the negative (-) terminal cable from the battery, and wait for at least 90 seconds.
  (3) Measure the resistance.
  Standard resistance

Tester Connection	Condition	Specified Condition
Q1-2 (P+) - Q1-1 (P-)	Always	Below 1 Ω

(d) Check for short to ground in the circuit.
  (1) Measure the resistance.
  Standard resistance

Tester Connection	Condition	Specified Condition
Q1-2 (P+) - Body ground	Always	1 MΩ or higher
Q1-1 (P-) - Body ground	Always	1 MΩ or higher

(e) Check for short in the circuit.
  (1) Release the activation prevention mechanism built into connector B (See page RS-31).
  (2) Measure the resistance.
  Standard resistance

Tester Connection	Condition	Specified Condition
Q1-2 (P+) - Q1-1 (P-)	Always	1 MΩ or higher

NG → **Go to step 5**

OK

RS

4	CHECK CENTER AIRBAG SENSOR ASSEMBLY

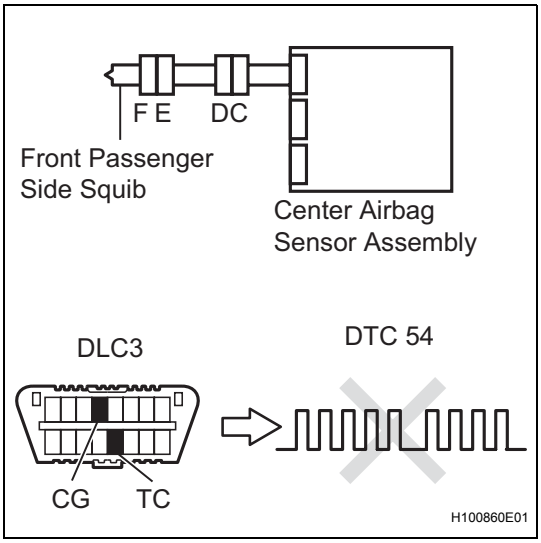

(a) Connect the connectors to the front passenger airbag assembly and the center airbag sensor assembly.
(b) Connect the negative (-) terminal cable to the battery, and wait for at least 2 seconds.
(c) Turn the ignition switch on, and wait for at least 60 seconds.
(d) Clear the DTCs stored in the memory (See page RS-38).
(e) Turn the ignition switch off.
(f) Turn the ignition switch on, and wait for at least 60 seconds.
(g) Check the DTCs (See page RS-38).

OK:

DTC B1805, B1806, B1807, B1808 and 52 are not output.

HINT:

DTCs other than DTC B1805, B1806, B1807, B1808 and 52 may be output at this time, but they are not related to this check.

NG → **REPLACE CENTER AIRBAG SENSOR ASSEMBLY**

OK

USE SIMULATION METHOD TO CHECK

5	CHECK INSTRUMENT PANEL WIRE

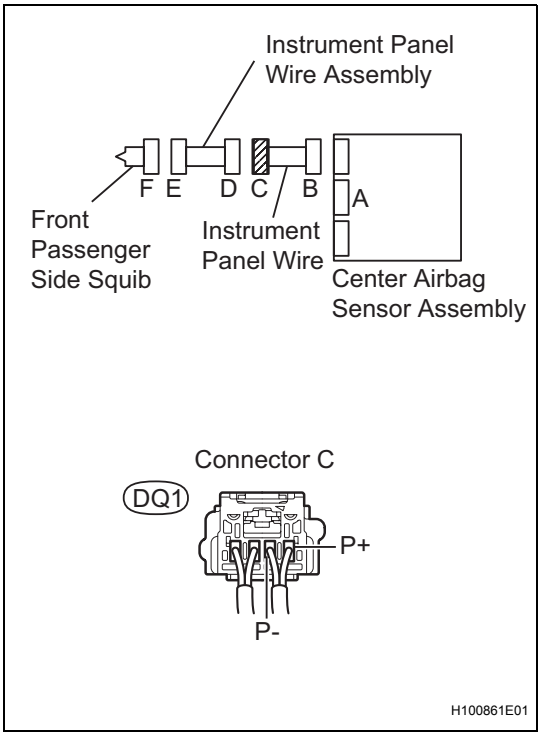

(a) Restore the released activation prevention mechanism of connector B to the original condition.
(b) Disconnect the instrument panel wire connector from the instrument panel wire assembly.
(c) Check for short to B+ in the circuit.
  (1) Connect the negative (-) terminal cable to the battery, and wait for at least 2 seconds.
  (2) Turn the ignition switch on.
  (3) Measure the voltage.

Standard voltage

Tester Connection	Condition	Specified Condition
DQ1-1 (P+) - Body ground	Ignition switch on	Below 1 V
DQ1-2 (P-) - Body ground	Ignition switch on	Below 1 V

(d) Check for open in the circuit.
  (1) Turn the ignition switch off.
  (2) Disconnect the negative (-) terminal cable from the battery, and wait for at least 90 seconds.
  (3) Measure the resistance.

Standard resistance

Tester Connection	Condition	Specified Condition
DQ1-1 (P+) - DQ1-2 (P-)	Always	Below 1 Ω

(e) Check for short to ground in the circuit.
(1) Measure the resistance.
Standard resistance

Tester Connection	Condition	Specified Condition
DQ1-1 (P+) - Body ground	Always	1 MΩ or higher
DQ1-2 (P-) - Body ground	Always	1 MΩ or higher

(f) Check for short in the circuit.
(1) Release the activation prevention mechanism built into connector B (See page RS-31).
(2) Measure the resistance.
Standard resistance

Tester Connection	Condition	Specified Condition
DQ1-1 (P+) - DQ1-2 (P-)	Always	1 MΩ or higher

NG → **REPAIR OR REPLACE INSTRUMENT PANEL WIRE**

OK

6 CHECK INSTRUMENT PANEL WIRE ASSEMBLY

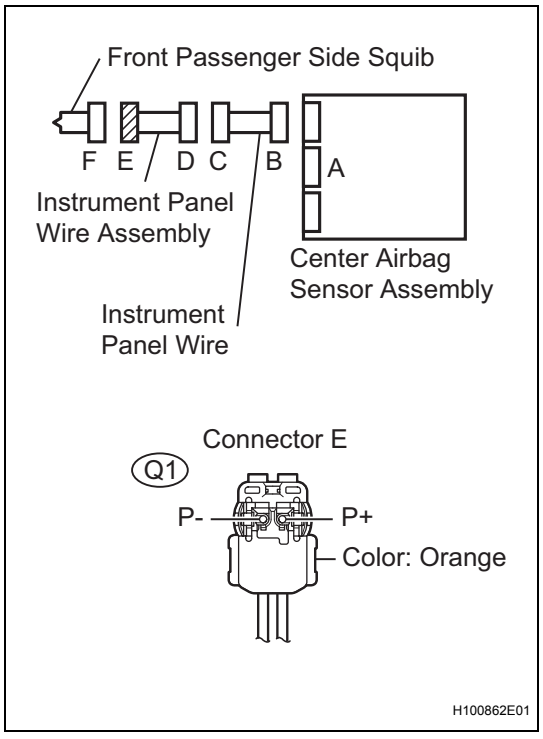

(a) Check for short to B+ in the circuit.
(1) Connect the negative (-) terminal cable to the battery, and wait for at least 2 seconds.
(2) Turn the ignition switch on.
(3) Measure the voltage.
Standard voltage

Tester Connection	Condition	Specified Condition
Q1-2 (P+) - Body ground	Ignition switch on	Below 1 V
Q1-1 (P-) - Body ground	Ignition switch on	Below 1 V

(b) Check for open in the circuit.
(1) Turn the ignition switch off.
(2) Disconnect the negative (-) terminal cable from the battery, and wait for at least 90 seconds.
(3) Measure the resistance.
Standard resistance

Tester Connection	Condition	Specified Condition
Q1-2 (P+) - Q1-1 (P-)	Always	Below 1 Ω

(c) Check for short to ground in the circuit.
(1) Measure the resistance.
Standard resistance

Tester Connection	Condition	Specified Condition
Q1-2 (P+) - Body ground	Always	1 MΩ or higher
Q1-1 (P-) - Body ground	Always	1 MΩ or higher

(d) Check for short in the circuit.
(1) Release the activation prevention mechanism built into connector D (See page RS-31).
(2) Measure the resistance.
Standard resistance

Tester Connection	Condition	Specified Condition
Q1-2 (P+) - Q1-1 (P-)	Always	1 MΩ or higher

NG → **REPAIR OR REPLACE INSTRUMENT PANEL WIRE ASSEMBLY**

OK

USE SIMULATION METHOD TO CHECK

DTC	B1810/53	Short in Driver Side Squib 2nd Step Circuit

DTC	B1811/53	Open in Driver Side Squib 2nd Step Circuit

DTC	B1812/53	Short to GND in Driver Side Squib 2nd Step Circuit

RS

DTC	B1813/53	Short to B+ in Driver Side Squib 2nd Step Circuit

DESCRIPTION

The driver side squib 2nd step circuit consists of the center airbag sensor assembly, the spiral cable and the steering pad.
The circuit signals the SRS to deploy when deployment conditions are met.
These DTCs are recorded when a malfunction is detected in the driver side squib 2nd step circuit.

DTC No.	DTC Detecting Condition	Trouble Area
B1810/53	• Center airbag sensor assembly detects line short circuit signal in driver side squib 2nd step circuit 5 times during primary check. • Driver side squib 2nd step malfunction • Spiral cable malfunction • Center airbag sensor assembly malfunction	• Instrument panel wire • Spiral cable • Steering pad (Driver side squib 2nd step) • Center airbag sensor assembly
B1811/53	• Center airbag sensor assembly detects open circuit signal in driver side squib 2nd step circuit for 2 seconds. • Driver side squib 2nd step malfunction • Spiral cable malfunction • Center airbag sensor assembly malfunction	• Instrument panel wire • Spiral cable • Steering pad (Driver side squib 2nd step) • Center airbag sensor assembly
B1812/53	• Center airbag sensor assembly detects short circuit to ground signal in driver side 2nd step circuit for 0.5 seconds. • Driver side squib 2nd step malfunction • Spiral cable malfunction • Center airbag sensor assembly malfunction	• Instrument panel wire • Spiral cable • Steering pad (Driver side squib 2nd step) • Center airbag sensor assembly
B1813/53	• Center airbag sensor assembly detects short circuit to B+ signal in driver side squib 2nd step circuit for 0.5 seconds. • Driver side squib 2nd step malfunction • Spiral cable malfunction • Center airbag sensor assembly malfunction	• Instrument panel wire • Spiral cable • Steering pad (Driver side squib 2nd step) • Center airbag sensor assembly

WIRING DIAGRAM

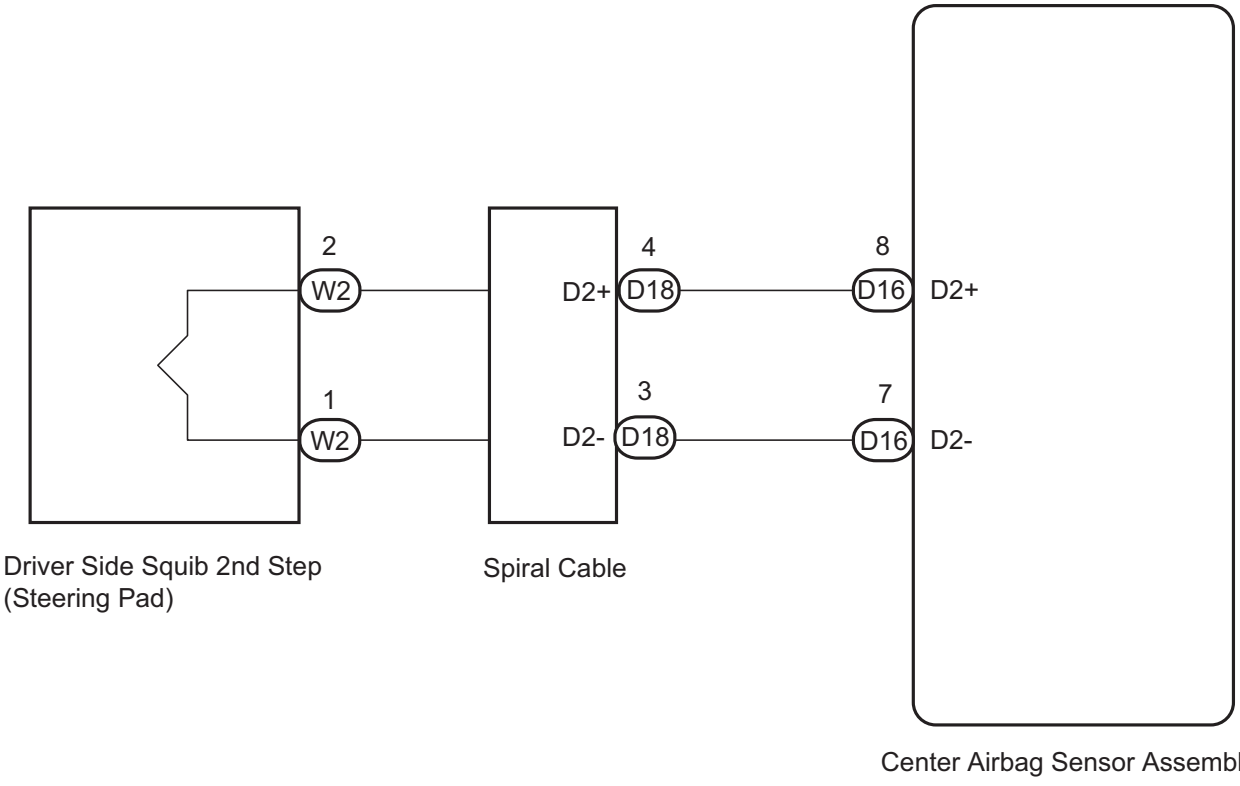

INSPECTION PROCEDURE

HINT:

- Perform the simulation method by selecting CHECK MODE (signal check) with the intelligent tester (See page RS-41).
- After selecting CHECK MODE (signal check), perform the simulation method by wiggling each connector of the airbag system or driving the vehicle on a city or rough road (See page RS-31).

1	**CHECK STEERING PAD (DRIVER SIDE SQUIB 2ND STEP)**

SST 09843-18060

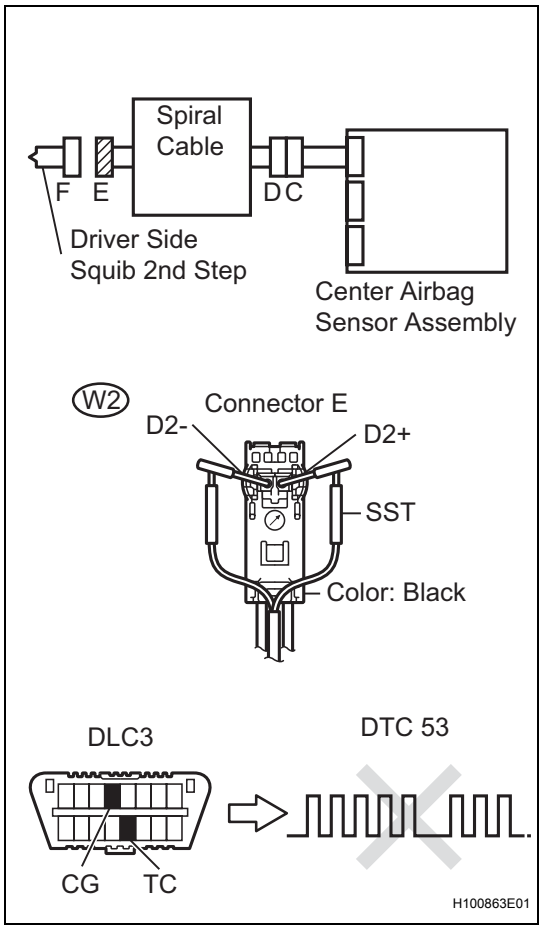

(a) Turn the ignition switch off.
(b) Disconnect the negative (-) terminal cable from the battery, and wait for at least 90 seconds.
(c) Disconnect the connectors from the steering pad.
(d) Connect the white wire side of SST (resistance 2.1 Ω) to connector E (black connector).
CAUTION:
Never connect a tester to the steering pad (driver side squib 2nd step) for measurement, as this may lead to a serious injury due to airbag deployment.
NOTICE:
- **Do not forcibly insert the SST into the terminals of the connector when connecting.**
- **Insert the SST straight into the terminals of the connector.**

(e) Connect the negative (-) terminal cable to the battery, and wait for at least 2 seconds.
(f) Turn the ignition switch on, and wait for at least 60 seconds.
(g) Clear the DTCs stored in the memory (See page RS-38).
(h) Turn the ignition switch off.
(i) Turn the ignition switch on, and wait for at least 60 seconds.
(j) Check the DTCs (See page RS-38).
OK:
DTC B1810, B1811, B1812, B1813 and 53 are not output.
HINT:
DTCs other than DTC B1810, B1811, B1812, B1813, and 53 may be output at this time, but they are not related to this check.

OK	**REPLACE STEERING PAD**

NG

2	**CHECK CONNECTOR**

(a) Turn the ignition switch off.
(b) Disconnect the negative (-) terminal cable from the battery, and wait for at least 90 seconds.
(c) Disconnect the SST from connector E.
(d) Check that the spiral cable connectors (on the steering pad side) are not damaged.
OK:
The lock button is not disengaged, and the claw of the lock is not deformed or damaged.

NG	**REPLACE SPIRAL CABLE**

OK

3	CHECK DRIVER SIDE SQUIB 2ND STEP CIRCUIT

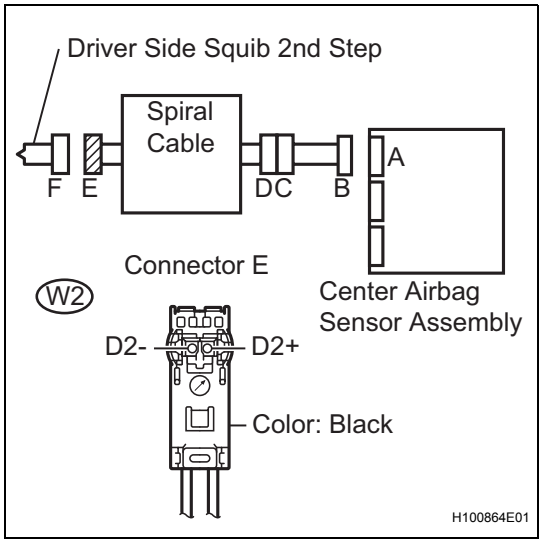

(a) Disconnect the connectors from the center airbag sensor assembly and steering pad.

(b) Check for short to B+ in the circuit.
  (1) Connect the negative (-) terminal cable to the battery, and wait for at least 2 seconds.
  (2) Turn the ignition switch on.
  (3) Measure the voltage.
  Standard voltage

Tester Connection	Condition	Specified Condition
W2-1 (D2+) - Body ground	Ignition switch on	Below 1 V
W2-2 (D2-) - Body ground	Ignition switch on	Below 1 V

(c) Check for open in the circuit.
  (1) Turn the ignition switch off.
  (2) Disconnect the negative (-) terminal cable from the battery, and wait for at least 90 seconds.
  (3) Measure the resistance.
  Standard resistance

Tester Connection	Condition	Specified Condition
W2-1 (D2+) - W2-2 (D2-)	Always	Below 1 Ω

(d) Check for short to ground in the circuit.
  (1) Measure the resistance.
  Standard resistance

Tester Connection	Condition	Specified Condition
W2-1 (D2+) - Body ground	Always	1 MΩ or higher
W2-2 (D2-) - Body ground	Always	1 MΩ or higher

(e) Check for short in the circuit.
  (1) Release the activation prevention mechanism built into connector B (See page RS-31).
  (2) Measure the resistance.
  Standard resistance

Tester Connection	Condition	Specified Condition
W2-1 (D2+) - W2-2 (D2-)	Always	1 MΩ or higher

NG → CHECK INSTRUMENT PANEL WIRE

OK

4	CHECK CENTER AIRBAG SENSOR ASSEMBLY

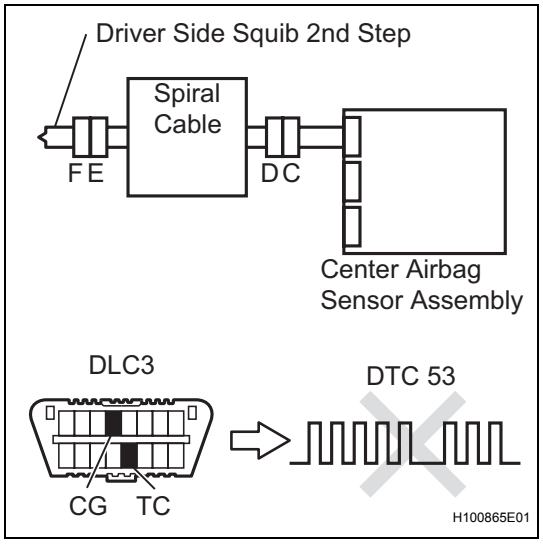

(a) Connect the connectors to the steering pad and the center airbag sensor assembly.
(b) Connect the negative (-) terminal cable to the battery, and wait for at least 2 seconds.
(c) Turn the ignition switch on, and wait for at least 60 seconds.
(d) Clear the DTCs stored in the memory (See page RS-38).
(e) Turn the ignition switch off.
(f) Turn the ignition switch on, and wait for at least 60 seconds.
(g) Check the DTCs (See page RS-38).

OK:

DTC B1810, B1811, B1812, B1813 and 53 are not output.

HINT:

DTCs other than DTC B1810, B1811, B1812, B1813 and 53 may be output at this time, but they are not related to this check.

NG → **REPLACE CENTER AIRBAG SENSOR ASSEMBLY**

OK

USE SIMULATION METHOD TO CHECK

5	CHECK INSTRUMENT PANEL WIRE

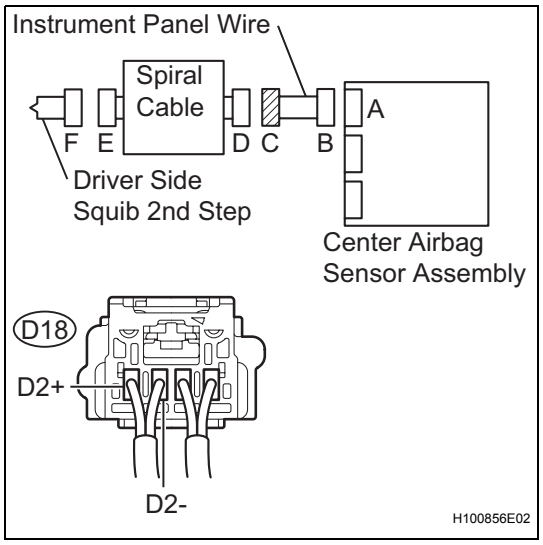

(a) Check for short to B+ in the circuit.
  (1) Restore the released activation prevention mechanism of connector B to the original condition.
  (2) Disconnect the instrument panel wire connector from the spiral cable.
  (3) Connect the negative (-) terminal cable to the battery, and wait for at least 2 seconds.
  (4) Turn the ignition switch on.
  (5) Measure the voltage.

Standard voltage

Tester Connection	Condition	Specified Condition
D18-4 (D2+) - Body ground	Ignition switch on	Below 1 V
D18-3 (D2-) - Body ground	Ignition switch on	Below 1 V

(b) Check for open in the circuit.
  (1) Turn the ignition switch off.
  (2) Disconnect the negative (-) terminal cable from the battery, and wait for at least 90 seconds.
  (3) Measure the resistance.

Standard resistance

Tester Connection	Condition	Specified Condition
D18-4 (D2+) - D18-3 (D2-)	Always	Below 1 Ω

(c) Check for short to ground in the circuit.
(1) Measure the resistance.
Standard resistance

Tester Connection	Condition	Specified Condition
D18-4 (D2+) - Body ground	Always	1 MΩ or higher
D18-3 (D2-) - Body ground	Always	1 MΩ or higher

(d) Check for short in the circuit.
(1) Release the activation prevention mechanism built into connector B (See page RS-31).
(2) Measure the resistance.
Standard resistance

Tester Connection	Condition	Specified Condition
D18-4 (D2+) - D18-3 (D2-)	Always	1 MΩ or higher

NG → **REPAIR OR REPLACE INSTRUMENT PANEL WIRE ASSEMBLY**

OK

6 CHECK SPIRAL CABLE

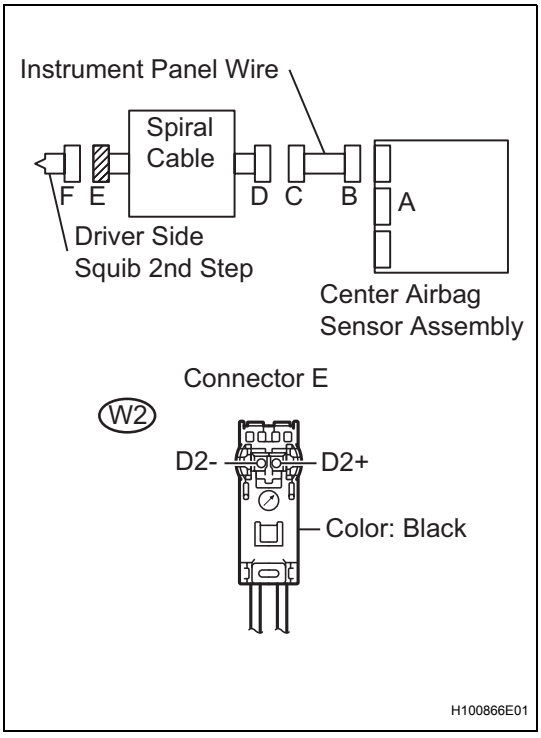

(a) Check for short to B+ in the circuit.
(1) Connect the negative (-) terminal cable from the battery, and wait for at least 2 seconds.
(2) Turn the ignition switch on.
(3) Measure the voltage.
Standard voltage

Tester Connection	Condition	Specified Condition
W2-1 (D2+) - Body ground	Ignition switch on	Below 1 V
W2-2 (D2-) - Body ground	Ignition switch on	Below 1 V

(b) Check for open in the circuit.
(1) Turn the ignition switch off.
(2) Disconnect the negative (-) terminal cable from the battery, and wait for at least 90 seconds.
(3) Measure the resistance.
Standard resistance

Tester Connection	Condition	Specified Condition
W2-1 (D2+) - W2-2 (D2-)	Always	Below 1 Ω

(c) Check for short to ground in the circuit.
(1) Measure the resistance.
Standard resistance

Tester Connection	Condition	Specified Condition
W2-1 (D2+) - Body ground	Always	1 MΩ or higher
W2-2 (D2-) - Body ground	Always	1 MΩ or higher

(d) Check for short in the circuit.
(1) Release the activation prevention mechanism built into connector D (See page RS-31).
(2) Measure the resistance.
Standard resistance

Tester Connection	Condition	Specified Condition
W2-1 (D2+) - W2-2 (D2-)	Always	1 MΩ or higher

RS

NG → **REPLACE SPIRAL CABLE**

OK

USE SIMULATION METHOD TO CHECK

DTC	B1815/54	Short in Front Passenger Side Squib 2nd Step Circuit

DTC	B1816/54	Open in Front Passenger Side Squib 2nd Step Circuit

DTC	B1817/54	Short to GND in Front Passenger Side Squib 2nd Step Circuit

DTC	B1818/54	Short to B+ in Front Passenger Side Squib 2nd Step Circuit

DESCRIPTION

The front passenger side squib 2nd step circuit consists of the center airbag sensor assembly and the front passenger airbag assembly.

The circuit signals the SRS to deploy when deployment conditions are met.

These DTCs are recorded when a malfunction is detected in the front passenger side squib 2nd step circuit.

DTC No.	DTC Detecting Condition	Trouble Area
B1815/54	• Center airbag sensor assembly detects line short circuit signal in front passenger side squib 2nd step circuit 5 times during primary check. • Front passenger side squib 2nd step malfunction • Center airbag sensor assembly malfunction	• Instrument panel wire • Instrument panel wire assembly • Front passenger airbag assembly (Front passenger side squib 2nd step) • Center airbag sensor assembly
B1816/54	• Center airbag sensor assembly detects open circuit signal in front passenger side squib 2nd step circuit for 2 seconds. • Front passenger side squib 2nd step malfunction • Center airbag sensor assembly malfunction	• Instrument panel wire • Instrument panel wire assembly • Front passenger airbag assembly (Front passenger side squib 2nd step) • Center airbag sensor assembly
B1817/54	• Center airbag sensor assembly detects short circuit to ground signal in front passenger side squib 2nd step circuit for 0.5 seconds. • Front passenger side squib 2nd step malfunction • Center airbag sensor assembly malfunction	• Instrument panel wire • Instrument panel wire assembly • Front passenger airbag assembly (Front passenger side squib 2nd step) • Center airbag sensor assembly
B1818/54	• Center airbag sensor assembly detects short circuit to B+ signal in front passenger side squib 2nd step circuit for 0.5 seconds. • Front passenger side squib 2nd step malfunction • Center airbag sensor assembly malfunction	• Instrument panel wire • Instrument panel wire assembly • Front passenger airbag assembly (Front passenger side squib 2nd step) • Center airbag sensor assembly

WIRING DIAGRAM

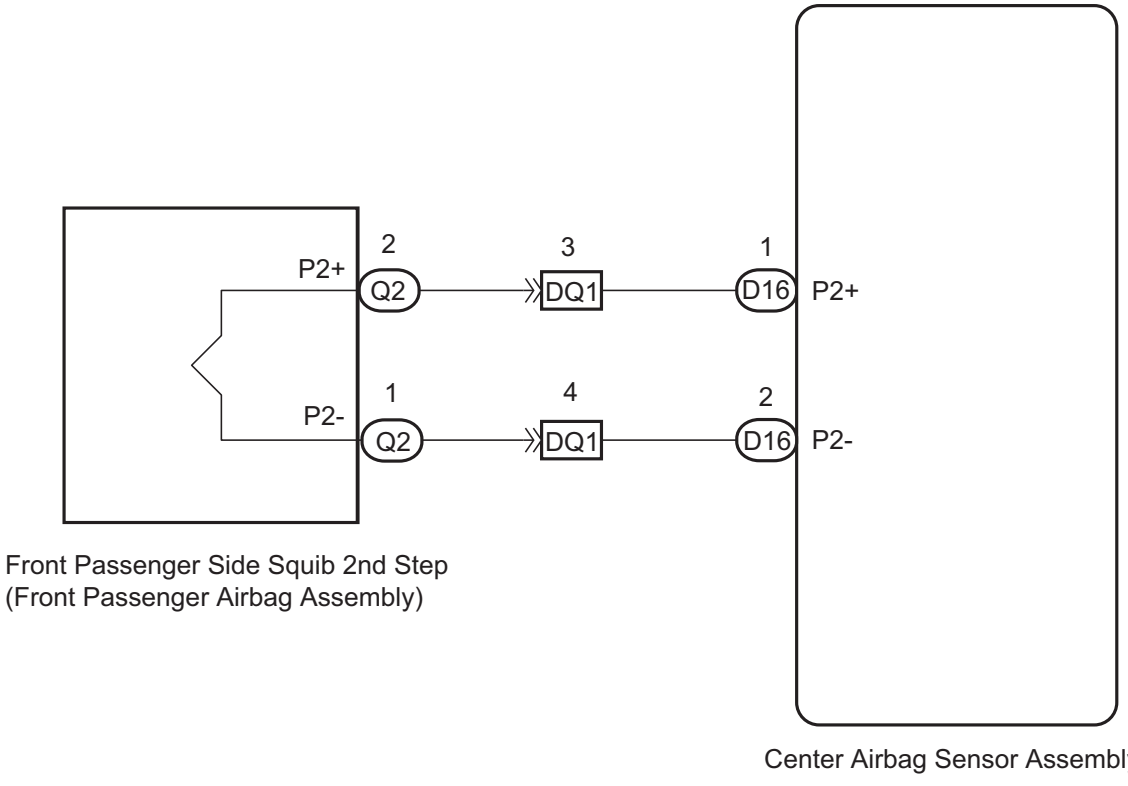

INSPECTION PROCEDURE

HINT:

- Perform the simulation method by selecting CHECK MODE (signal check) with the intelligent tester (See page RS-41).
- After selecting CHECK MODE (signal check), perform the simulation method by wiggling each connector of the airbag system or driving the vehicle on a city or rough road (See page RS-31).

1	**CHECK FRONT PASSENGER AIRBAG (FRONT PASSENGER SIDE SQUIB 2ND STEP)**

SST 09843-18060

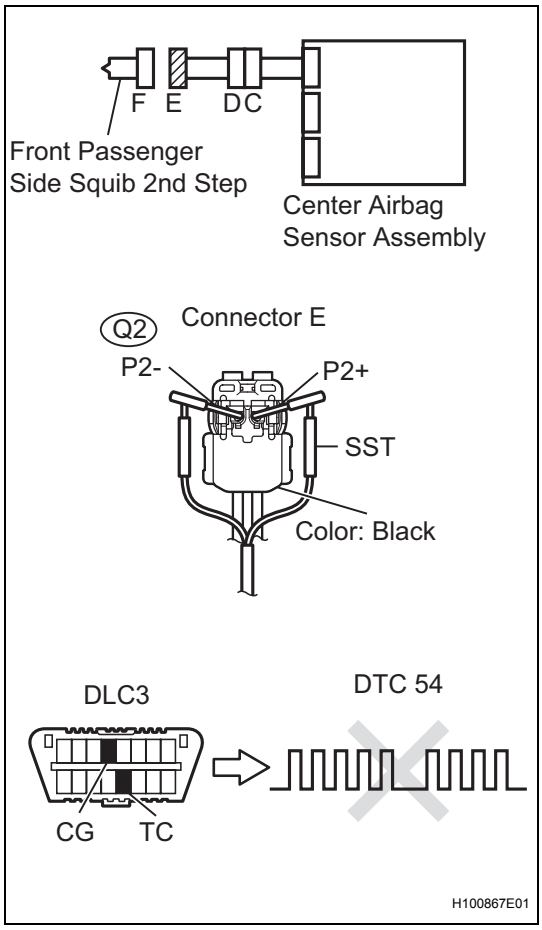

(a) Turn the ignition switch off.
(b) Disconnect the negative (-) terminal cable from the battery, and wait for at least 90 seconds.
(c) Disconnect the connectors from the front passenger airbag assembly.
(d) Connect the white wire side of SST (resistance 2.1 Ω) to connector E (black connector).
CAUTION:
Never connect a tester to the front passenger airbag assembly (front passenger side squib 2nd step) for measurement, as this may lead to a serious injury due to airbag deployment.
NOTICE:
- **Do not forcibly insert the SST into the terminals of the connector when connecting.**
- **Insert the SST straight into the terminals of the connector.**

(e) Connect the negative (-) terminal cable to the battery, and wait for at least 2 seconds.
(f) Turn the ignition switch on, and wait for at least 60 seconds.
(g) Clear the DTCs stored in the memory (See page RS-38).
(h) Turn the ignition switch off.
(i) Turn the ignition switch on, and wait for at least 60 seconds.
(j) Check the DTCs (See page RS-38).
OK:
DTC B1815, B1816, B1817, B1818 and 54 are not output.
HINT:
DTCs other than DTC B1815, B1816, B1817, B1818 and 54 may be output at this time, but they are not related to this check.

OK	**REPLACE FRONT PASSENGER AIRBAG**

NG

2	**CHECK CONNECTOR**

(a) Turn the ignition switch off.
(b) Disconnect the negative (-) terminal cable from the battery, and wait for at least 90 seconds.
(c) Disconnect the SST from connector E.
(d) Check that the instrument panel wire assembly connectors (on the front passenger airbag side) are not damaged.
OK:
The lock button is not disengaged, and the claw of the lock is not damaged or deformed.

NG	**REPAIR OR REPLACE INSTRUMENT PANEL WIRE ASSEMBLY**

OK

3	CHECK FRONT PASSENGER SIDE SQUIB 2ND STEP CIRCUIT

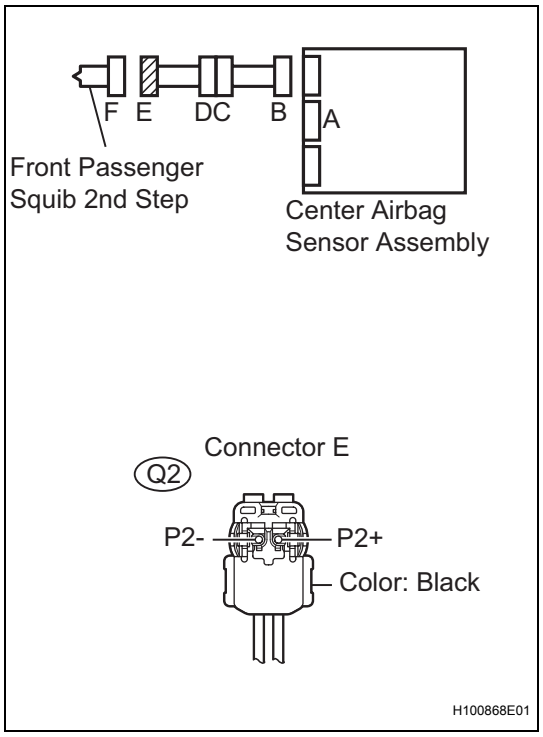

(a) Disconnect the connectors from the center airbag sensor assembly.

(b) Check for short to B+ in the circuit.
  (1) Connect the negative (-) terminal cable to the battery, and wait for at least 2 seconds.
  (2) Turn the ignition switch on.
  (3) Measure the voltage.
  Standard voltage

Tester Connection	Condition	Specified Condition
Q2-2 (P2+) - Body ground	Ignition switch on	Below 1 V
Q2-1 (P2-) - Body ground	Ignition switch on	Below 1 V

(c) Check for open in the circuit.
  (1) Turn the ignition switch off.
  (2) Disconnect the negative (-) terminal cable from the battery, and wait for at least 90 seconds.
  (3) Measure the resistance.
  Standard resistance

Tester Connection	Condition	Specified Condition
Q2-2 (P2+) - Q2-1 (P2-)	Always	Below 1 Ω

(d) Check for short to ground in the circuit.
  (1) Measure the resistance.
  Standard resistance

Tester Connection	Condition	Specified Condition
Q2-2 (P2+) - Body ground	Always	1 MΩ or higher
Q2-1 (P2-) - Body ground	Always	1 MΩ or higher

(e) Check for short in the circuit.
  (1) Release the activation prevention mechanism built into connector B (See page RS-31).
  (2) Measure the resistance.
  Standard resistance

Tester Connection	Condition	Specified Condition
Q2-2 (P2+) - Q2-1 (P2-)	Always	1 MΩ or higher

NG → Go to step 5

OK

RS

4	CHECK CENTER AIRBAG SENSOR ASSEMBLY

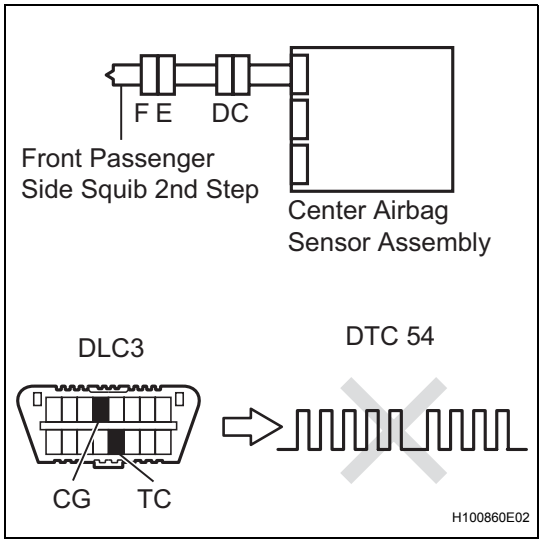

(a) Connect the connectors to the front passenger airbag assembly and the center airbag sensor assembly.
(b) Connect the negative (-) terminal cable to the battery, and wait for at least 2 seconds.
(c) Turn the ignition switch on, and wait for at least 60 seconds.
(d) Clear the DTCs stored in the memory (See page RS-38).
(e) Turn the ignition switch off.
(f) Turn the ignition switch on, and wait for at least 60 seconds.
(g) Check the DTCs (See page RS-38).

OK:

DTC B1815, B1816, B1817, B1818 and 54 are not output.

HINT:

DTCs other than DTC B1815, B1816, B1817, B1818 and 54 may be output at this time, but they are not related to this check.

NG → **REPLACE CENTER AIRBAG SENSOR ASSEMBLY**

OK

USE SIMULATION METHOD TO CHECK

5	CHECK INSTRUMENT PANEL WIRE

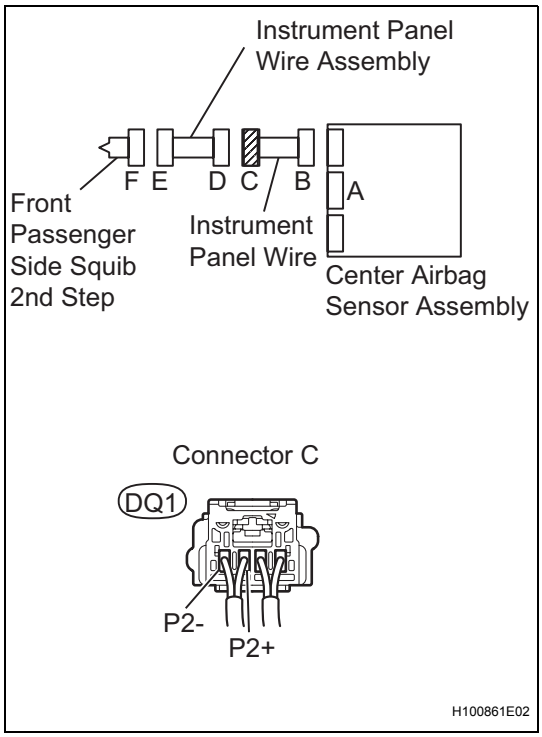

(a) Check for short to B+ in the circuit.
  (1) Restore the released activation prevention mechanism of connector B to the original condition.
  (2) Disconnect the instrument panel wire connector from the instrument panel wire assembly.
  (3) Connect the negative (-) terminal cable to the battery, and wait for at least 2 seconds.
  (4) Turn the ignition switch on.
  (5) Measure the voltage.

Standard voltage

Tester Connection	Condition	Specified Condition
DQ1-3 (P2+) - Body ground	Ignition switch on	Below 1 V
DQ1-4 (P2-) - Body ground	Ignition switch on	Below 1 V

(b) Check for open in the circuit.
  (1) Turn the ignition switch off.
  (2) Disconnect the negative (-) terminal cable from the battery, and wait for at least 90 seconds.
  (3) Measure the resistance.

Standard resistance

Tester Connection	Condition	Specified Condition
DQ1-3 (P2+) - DQ1-4 (P2-)	Always	Below 1 Ω

(c) Check for short to ground in the circuit.
(1) Measure the resistance.
Standard resistance

Tester Connection	Condition	Specified Condition
DQ1-3 (P2+) - Body ground	Always	1 MΩ or higher
DQ1-4 (P2-) - Body ground	Always	1 MΩ or higher

(d) Check for short in the circuit.
(1) Release the activation prevention mechanism built into connector B (See page RS-31).
(2) Measure the resistance.
Standard resistance

Tester Connection	Condition	Specified Condition
DQ1-3 (P2+) - DQ1-4 (P2-)	Always	1 MΩ or higher

NG → **REPAIR OR REPLACE INSTRUMENT PANEL WIRE**

OK

6 CHECK INSTRUMENT PANEL WIRE ASSEMBLY

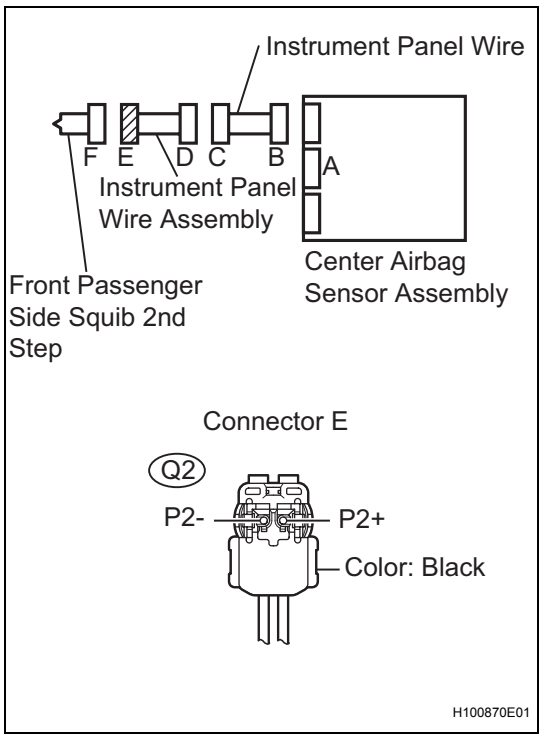

(a) Check for short to B+ in the circuit.
(1) Connect the negative (-) terminal cable to the battery, and wait for at least 2 seconds.
(2) Turn the ignition switch on.
(3) Measure the voltage.
Standard voltage

Tester Connection	Condition	Specified Condition
Q2-2 (P2+) - Body ground	Ignition switch on	Below 1 V
Q2-1 (P2-) - Body ground	Ignition switch on	Below 1 V

(b) Check for open in the circuit.
(1) Turn the ignition switch off.
(2) Disconnect the negative (-) terminal cable from the battery, and wait for at least 90 seconds.
(3) Measure the resistance.
Standard resistance

Tester Connection	Condition	Specified Condition
Q2-2 (P2+) - Q2-1 (P2-)	Always	Below 1 Ω

(c) Check for short to ground in the circuit.
(1) Measure the resistance.

RS

Standard resistance

Tester Connection	Condition	Specified Condition
Q2-2 (P2+) - Body ground	Always	1 MΩ or higher
Q2-1 (P2-) - Body ground	Always	1 MΩ or higher

(d) Check for short in the circuit.
  (1) Release the activation prevention mechanism built into connector D (See page RS-31).
  (2) Measure the resistance.
  Standard resistance

Tester Connection	Condition	Specified Condition
Q2-2 (P2+) - Q2-1 (P2-)	Always	1 MΩ or higher

NG → **REPAIR OR REPLACE INSTRUMENT PANEL WIRE ASSEMBLY**

OK

USE SIMULATION METHOD TO CHECK

DTC	B1820/55	Short in Front Driver Side - Side Squib Circuit

DTC	B1821/55	Open in Front Driver Side - Side Squib Circuit

DTC	B1822/55	Short to GND in Front Driver Side - Side Squib Circuit

DTC	B1823/55	Short to B+ in Front Driver Side - Side Squib Circuit

DESCRIPTION

The driver side - side squib circuit consists of the center airbag sensor assembly and the front seat side airbag assembly LH.
This circuit signals the SRS to deploy when deployment conditions are met.
These DTCs are recorded when a malfunction is detected in the driver side - side squib circuit.

DTC No.	DTC Detection Condition	Trouble Area
B1820/55	• Center airbag sensor assembly detects line short circuit signal in driver side - side squib circuit 5 times during primary check. • Driver side - side squib malfunction • Center airbag sensor assembly malfunction	• Floor wire • Front seat side airbag assembly LH (Driver side - side squib) • Center airbag sensor assembly
B1821/55	• Center airbag sensor assembly detects open circuit signal in driver side - side squib circuit for 2 seconds. • Driver side - side squib malfunction • Center airbag sensor assembly malfunction	• Floor wire • Front seat side airbag assembly LH (Driver side - side squib) • Center airbag sensor assembly
B1822/55	• Center airbag sensor assembly detects short circuit to ground signal in driver side - side squib circuit for 0.5 seconds. • Driver side - side squib malfunction • Center airbag sensor assembly malfunction	• Floor wire • Front seat side airbag assembly LH (Driver side - side squib) • Center airbag sensor assembly
B1823/55	• Center airbag sensor assembly detects short circuit to B+ signal in driver side - side squib circuit for 0.5 seconds. • Driver side - side squib malfunction • Center airbag sensor assembly malfunction	• Floor wire • Front seat side airbag assembly LH (Driver side - side squib) • Center airbag sensor assembly

WIRING DIAGRAM

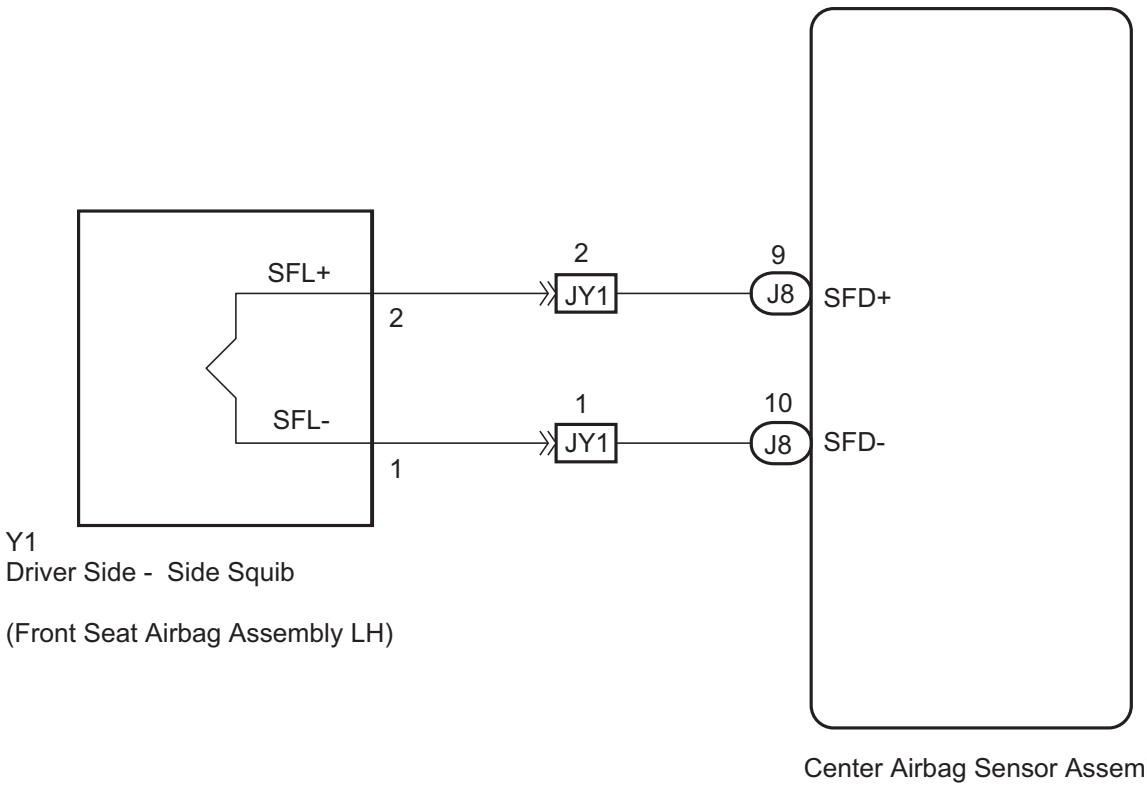

INSPECTION PROCEDURE

HINT:

- Perform the simulation method by selecting CHECK MODE (signal check) with the intelligent tester (See page RS-41).
- After selecting CHECK MODE (signal check), perform the simulation method by wiggling each connector of the airbag system or driving the vehicle on a city or rough road (See page RS-31).

1	CHECK FRONT SEAT SIDE AIRBAG ASSEMBLY LH (DRIVER SIDE - SIDE SQUIB)

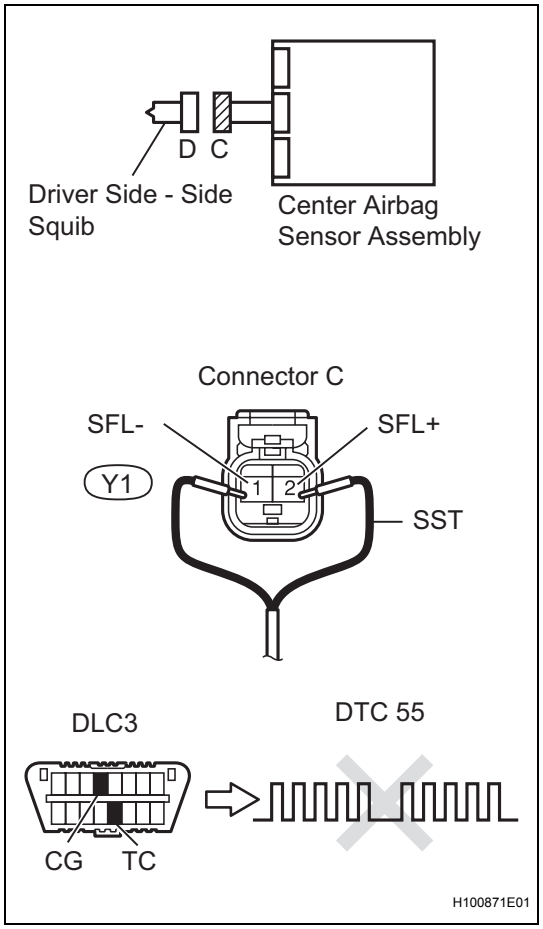

SST 09843-18060

(a) Turn the ignition switch off.
(b) Disconnect the negative (-) terminal cable from the battery, and wait for at least 90 seconds.
(c) Disconnect the connector from the front seat side airbag assembly LH.
(d) Connect the black wire side of SST (resistance 2.1 Ω) to connector C.
CAUTION:
Never connect a tester to the front seat side airbag assembly LH (driver side - side squib) for measurement, as this may lead to a serious injury due to airbag deployment.
NOTICE:
- **Do not forcibly insert the SST into the terminals of the connector when connecting.**
- **Insert the SST straight into the terminals of the connector.**

(e) Connect the negative (-) terminal cable to the battery, and wait for at least 2 seconds.
(f) Turn the ignition switch on, and wait for at least 60 seconds.
(g) Clear the DTCs stored in the memory (See page RS-38).
(h) Turn the ignition switch off.
(i) Turn the ignition switch on, and wait for at least 60 seconds.
(j) Check the DTCs (See page RS-38).
OK:
DTC B1820, B1821, B1822, B1823 and 55 are not output.
HINT:
DTCs other than DTC B1820, B1821, B1822, B1823 and 55 may be output at this time, but they are not related to this check.

OK → **REPLACE FRONT SEAT ASSEMBLY LH**

NG

2	CHECK CONNECTOR

(a) Turn the ignition switch off.
(b) Disconnect the negative (-) terminal cable from the battery, and wait for at least 90 seconds.
(c) Disconnect the SST from connector C.
(d) Check that the floor wire connectors (on the front seat side airbag assembly LH side) are not damaged.
OK:
The lock button is not disengaged, and the claw of the lock is not deformed or damaged.

NG → REPAIR OR REPLACE FLOOR WIRE

OK

RS

3	CHECK FLOOR WIRE (DRIVER SIDE - SIDE SQUIB CIRCUIT)

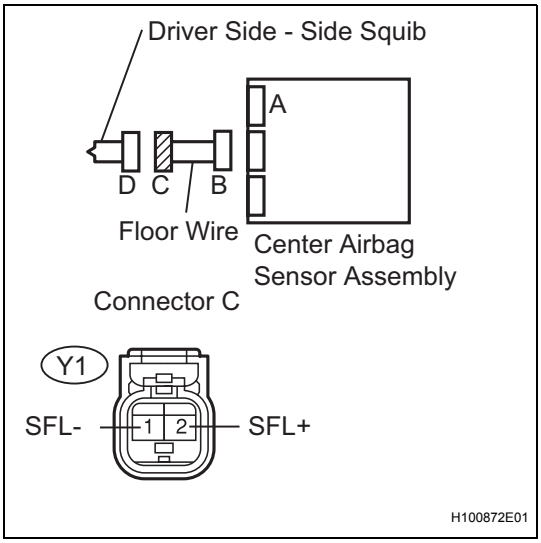

(a) Turn the ignition switch off.
(b) Disconnect the negative (-) terminal cable from the battery, and wait for at least 90 seconds.
(c) Disconnect the SST from connector C.
(d) Disconnect the connectors from the center airbag sensor assembly.
(e) Check for short to B+ in the circuit.
  (1) Connect the negative (-) terminal cable to the battery, and wait for at least 2 seconds.
  (2) Turn the ignition switch on.
  (3) Measure the voltage.
  Standard voltage

Tester Connection	Condition	Specified Condition
Y1-1 (SFL-) - Body ground	Ignition switch on	Below 1 V
Y1-2 (SFL+) - Body ground	Ignition switch on	Below 1 V

(f) Check for open in the circuit.
  (1) Turn the ignition switch off.
  (2) Disconnect the negative (-) terminal cable from the battery, and wait for at least 90 seconds.
  (3) Measure the resistance.
  Standard resistance

Tester Connection	Condition	Specified Condition
Y1-1 (SFL-) - Y1-2 (SFL+)	Always	Below 1 Ω

(g) Check for short to ground in the circuit.
  (1) Measure the resistance.
  Standard resistance

Tester Connection	Condition	Specified Condition
Y1-1 (SFL-) - Body ground	Always	1 MΩ or higher
Y1-2 (SFL+) Body ground	Always	1 MΩ or higher

(h) Check for short in the circuit.
  (1) Release the activation prevention mechanism built into connector B (See page RS-31).
  (2) Measure the resistance.
  Standard resistance

Tester Connection	Condition	Specified Condition
Y1-1 (SFL-) - Y1-2 (SFL+)	Always	1 MΩ or higher

NG → REPAIR OR REPLACE FLOOR WIRE

OK

4	CHECK CENTER AIRBAG SENSOR ASSEMBLY

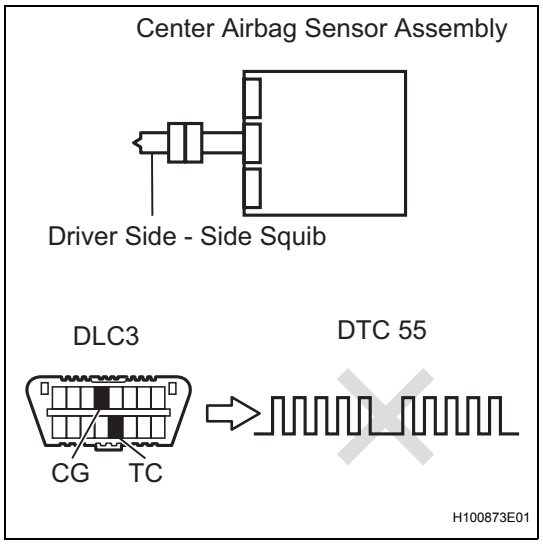

(a) Connect the connectors to the front seat side airbag assembly LH and the center airbag sensor assembly.
(b) Connect the negative (-) terminal cable to the battery, and wait for at least 2 seconds.
(c) Turn the ignition switch on, and wait for at least 60 seconds.
(d) Clear the DTCs stored in the memory (See page RS-38).
(e) Turn the ignition switch off.
(f) Turn the ignition switch on, and wait for at least 60 seconds.
(g) Check the DTCs (See page RS-38).

OK:

DTC B1820, B1821, B1822, B1823 and 55 are not output.

HINT:

DTCs other than DTC B1820, B1821, B1822, B1823 and 55 may be output at this time, but they are not related to this check.

NG → **REPLACE CENTER AIRBAG SENSOR ASSEMBLY**

OK

USE SIMULATION METHOD TO CHECK

DTC	B1825/56	Short in Front Passenger Side - Side Squib Circuit

DTC	B1826/56	Open in Front Passenger Side - Side Squib Circuit

DTC	B1827/56	Short to GND in Front Passenger Side - Side Squib Circuit

DTC	B1828/56	Short to B+ in Front Passenger Side - Side Squib Circuit

DESCRIPTION

The front passenger side - side squib circuit consists of the center airbag sensor assembly and the front seat side airbag assembly RH.

The circuit signals the SRS to deploy when deployment conditions are met.

These DTCs are recorded when a malfunction is detected in the front passenger side - side squib circuit.

DTC No.	DTC Detection Condition	Trouble Area
B1825/56	• Center airbag sensor assembly detects line short circuit signal in front passenger side - side squib circuit 5 times during primary check. • Front passenger side - side squib malfunction • Center airbag sensor assembly malfunction	• Floor wire • Front seat side airbag assembly RH (Front passenger side - side squib) • Center airbag sensor assembly
B1826/56	• Center airbag sensor assembly detects open circuit signal in front passenger side - side squib circuit for 2 seconds. • Front passenger side - side squib malfunction • Center airbag sensor assembly malfunction	• Floor wire • Front seat side airbag assembly RH (Front passenger side - side squib) • Center airbag sensor assembly
B1827/56	• Center airbag sensor assembly detects short circuit to ground signal in front passenger side - side squib circuit for 0.5 seconds. • Front passenger side - side squib malfunction • Center airbag sensor assembly malfunction	• Floor wire • Front seat side airbag assembly RH (Front passenger side - side squib) • Center airbag sensor assembly
B1828/56	• Center airbag sensor assembly detects short circuit to B+ signal in front passenger side - side squib circuit for 0.5 seconds. • Front passenger side - side squib malfunction • Center airbag sensor assembly malfunction	• Floor wire • Front seat side airbag assembly RH (Front passenger side - side squib) • Center airbag sensor assembly

WIRING DIAGRAM

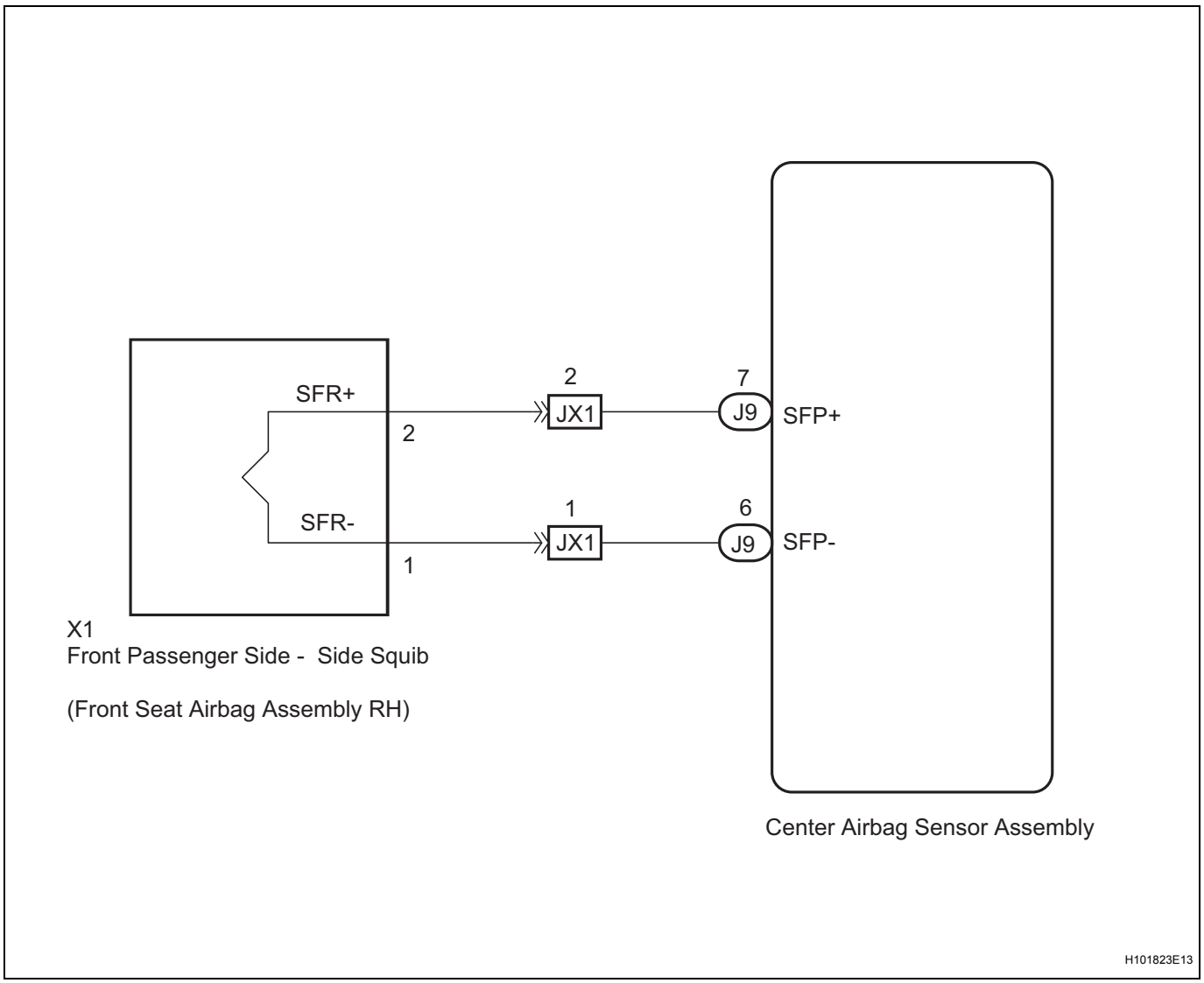

INSPECTION PROCEDURE

HINT:

- Perform the simulation method by selecting CHECK MODE (signal check) with the intelligent tester (See page RS-41).
- After selecting CHECK MODE (signal check), perform the simulation method by wiggling each connector of the airbag system or driving the vehicle on a city or rough road (See page RS-31).

1	**CHECK FRONT SEAT SIDE AIRBAG ASSEMBLY RH (FRONT PASSENGER SIDE - SIDE SQUIB)**

SST 09843-18060

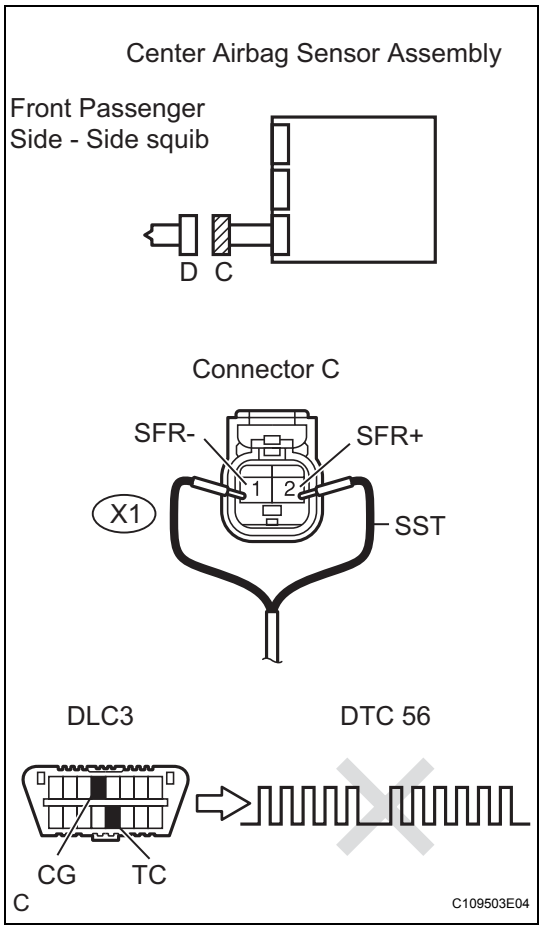

(a) Turn the ignition switch off.
(b) Disconnect the negative (-) terminal cable from the battery, and wait for at least 90 seconds.
(c) Disconnect the connector from the front seat side airbag assembly RH.
(d) Connect the black wire side of SST (resistance 2.1 Ω) to connector C.
CAUTION:
Never connect a tester to the front seat side airbag assembly RH (front passenger side - side squib) for measurement, as this may lead to a serious injury due to airbag deployment.
NOTICE:
- **Do not forcibly insert the SST into the terminals of the connector when connecting.**
- **Insert the SST straight into the terminals of the connector.**

(e) Connect the negative (-) terminal cable to the battery, and wait for at least 2 seconds.
(f) Turn the ignition switch on, and wait for at least 60 seconds.
(g) Clear the DTCs stored in the memory (See page RS-38).
(h) Turn the ignition switch off.
(i) Turn the ignition switch on, and wait for at least 60 seconds.
(j) Check the DTCs (See page RS-38).
OK:
DTC B1825, B1826, B1827, B1828 and 56 are not output.
HINT:
DTCs other than DTC B1825, B1826, B1827, B1828 and 56 may be output at this time, but they are not related to this check.

OK	**REPLACE FRONT SEAT ASSEMBLY RH**

NG

2	**CHECK CONNECTOR**

(a) Turn the ignition switch off.
(b) Disconnect the negative (-) terminal cable from the battery, and wait for at least 90 seconds.
(c) Disconnect the SST from connector C.
(d) Check that the floor wire connectors (on the front seat side airbag assembly RH side) are not damaged.
OK:
The lock button is not disengaged, and the claw of the lock is not deformed or damaged.

NG	**REPAIR OR REPLACE FLOOR WIRE**

OK

3	CHECK FLOOR WIRE (FRONT PASSENGER SIDE - SIDE SQUIB CIRCUIT)

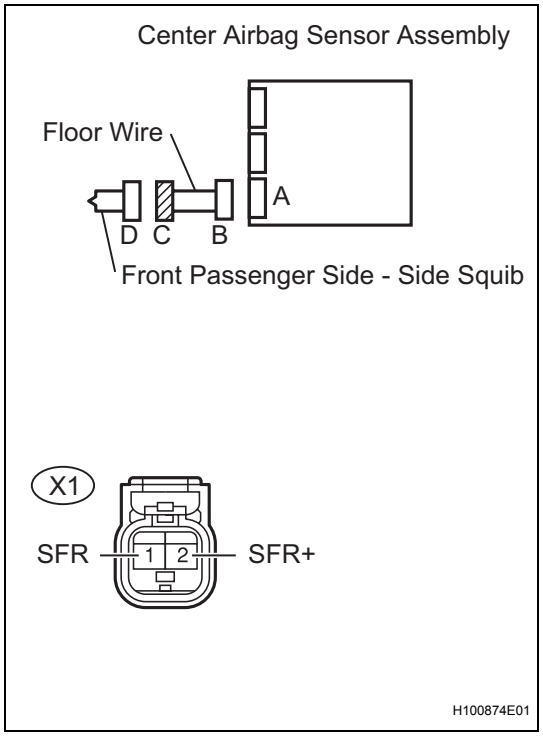

(a) Turn the ignition switch off.
(b) Disconnect the negative (-) terminal cable from the battery, and wait for at least 90 seconds.
(c) Disconnect the SST from connector C.
(d) Disconnect the connectors from the center airbag sensor assembly.
(e) Check for short to B+ in the circuit.
  (1) Connect the negative (-) terminal cable to the battery, and wait for at least 2 seconds.
  (2) Turn the ignition switch on.
  (3) Measure the voltage.
  Standard voltage

Tester Connection	Condition	Specified Condition
X1-1 (SFR-) - Body ground	Ignition switch on	Below 1 V
X1-2 (SFR+) - Body ground	Ignition switch on	Below 1 V

(f) Check for open in the circuit.
  (1) Turn the ignition switch off.
  (2) Disconnect the negative (-) terminal cable from the battery, and wait for at least 90 seconds.
  (3) Measure the resistance.
  Standard resistance

Tester Connection	Condition	Specified Condition
X1-1 (SFR-) - X1-2 (SFR+)	Always	Below 1 Ω

(g) Check for short to ground in the circuit.
  (1) Measure the resistance.
  Standard resistance

Tester Connection	Condition	Specified Condition
X1-1 (SFR-) - Body ground	Always	1 MΩ or higher
X1-2 (SFR+) Body ground	Always	1 MΩ or higher

(h) Check for short in the circuit.
  (1) Release the activation prevention mechanism built into connector B (See page RS-31).
  (2) Measure the resistance.
  Standard resistance

Tester Connection	Condition	Specified Condition
X1-1 (SFR-) - X1-2 (SFR+)	Always	1 MΩ or higher

NG → REPAIR OR REPLACE FLOOR WIRE

OK

4	CHECK CENTER AIRBAG SENSOR ASSEMBLY

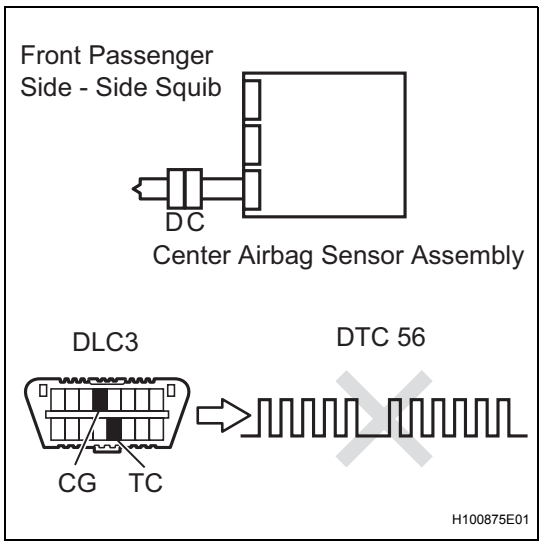

(a) Connect the connectors to the front seat side airbag assembly RH and the center airbag sensor assembly.
(b) Connect the negative (-) terminal cable to the battery, and wait for at least 2 seconds.
(c) Turn the ignition switch on, and wait for at least 60 seconds.
(d) Clear the DTCs stored in the memory (See page RS-38).
(e) Turn the ignition switch off.
(f) Turn the ignition switch on, and wait for at least 60 seconds.
(g) Check the DTCs (See page RS-38).

OK:

DTC B1825, B1826, B1827, B1828 and 56 are not output.

HINT:

DTCs other than DTC B1825, B1826, B1827, B1828 and 56 may be output at this time, but they are not related to this check.

NG → **REPLACE CENTER AIRBAG SENSOR ASSEMBLY**

OK

USE SIMULATION METHOD TO CHECK

DTC	B1830/57	Short in Driver Side Curtain Shield Squib Circuit

DTC	B1831/57	Open in Driver Side Curtain Shield Squib Circuit

DTC	B1832/57	Short to GND in Driver Side Curtain Shield Squib Circuit

DTC	B1833/57	Short to B+ in Driver Side Curtain Shield Squib Circuit

DESCRIPTION

The driver side curtain shield squib circuit consists of the center airbag sensor assembly and the curtain shield airbag assembly LH.

The circuit signals the SRS to deploy when deployment conditions are met.

These DTCs are recorded when a malfunction is detected in the driver side curtain shield squib circuit.

DTC No.	DTC Detection Condition	Trouble Area
B1830/57	• Center airbag sensor assembly detects line short circuit signal in driver side curtain shield squib circuit 5 times during primary check. • Driver side curtain shield squib malfunction • Center airbag sensor assembly malfunction	• Floor wire • Curtain shield airbag assembly LH (Driver side curtain shield squib) • Center airbag sensor assembly
B1831/57	• Center airbag sensor assembly detects open circuit signal in driver side curtain shield squib circuit for 2 seconds. • Driver side curtain shield squib malfunction • Center airbag sensor assembly malfunction	• Floor wire • Curtain shield airbag assembly LH (Driver side curtain shield squib) • Center airbag sensor assembly
B1832/57	• Center airbag sensor assembly detects short circuit to ground signal in driver side curtain shield squib circuit for 0.5 seconds. • Driver side curtain shield squib malfunction • Center airbag sensor assembly malfunction	• Floor wire • Curtain shield airbag assembly LH (Driver side curtain shield squib) • Center airbag sensor assembly
B1833/57	• Center airbag sensor assembly detects short circuit to B+ signal in driver side curtain shield squib circuit for 0.5 seconds. • Driver side curtain shield squib malfunction • Center airbag sensor assembly malfunction	• Floor wire • Curtain shield airbag assembly LH (Driver side curtain shield squib) • Center airbag sensor assembly

WIRING DIAGRAM

RS

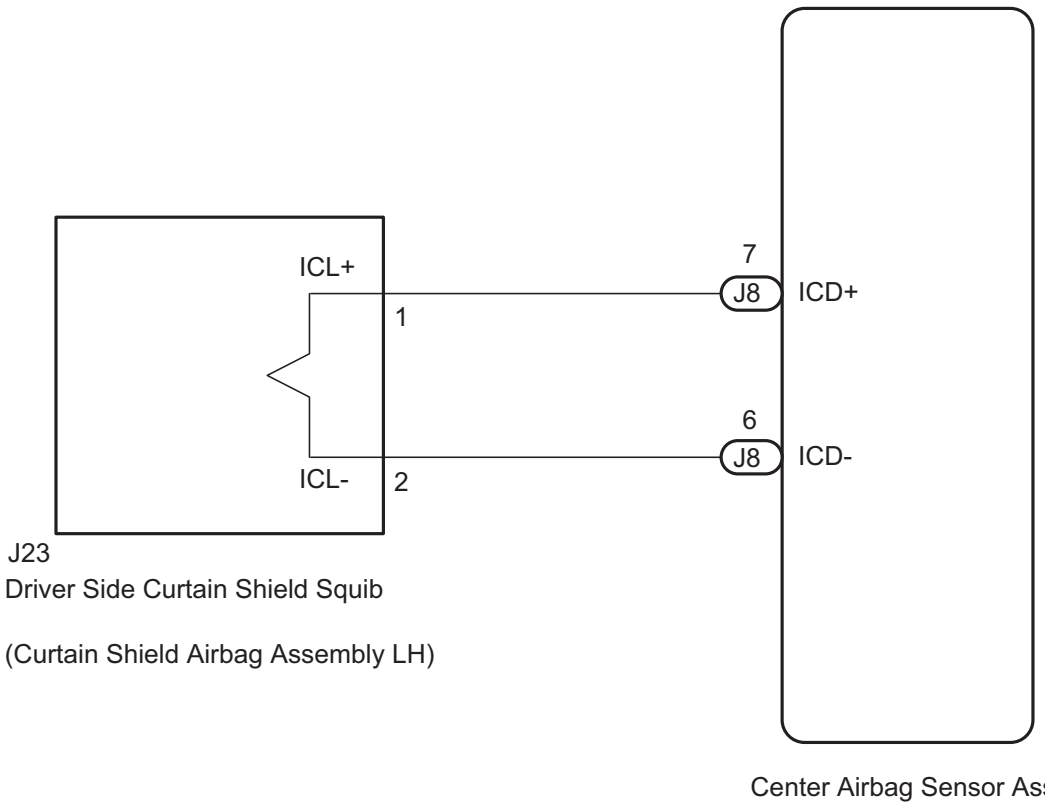

INSPECTION PROCEDURE

HINT:

- Perform the simulation method by selecting CHECK MODE (signal check) with the intelligent tester (See page RS-41).
- After selecting CHECK MODE (signal check), perform the simulation method by wiggling each connector of the airbag system or driving the vehicle on a city or rough road (See page RS-31).

1	CHECK CURTAIN SHIELD AIRBAG ASSEMBLY LH (DRIVER SIDE CURTAIN SHIELD SQUIB)

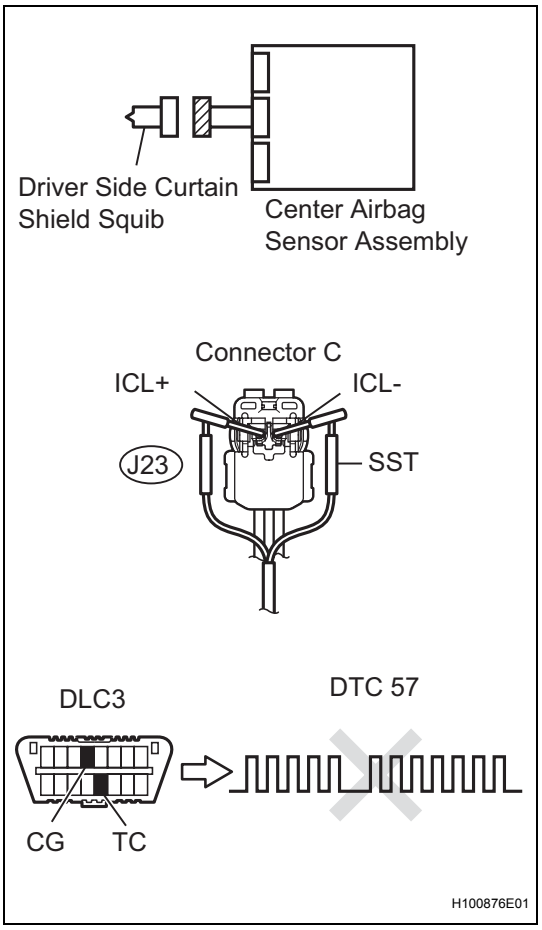

SST 09843-18060

(a) Turn the ignition switch off.
(b) Disconnect the negative (-) terminal cable from the battery, and wait for at least 90 seconds.
(c) Disconnect the connectors from the curtain shield airbag assembly LH.
(d) Connect the white wire side of SST (resistance 2.1 Ω) to connector C.
CAUTION:
Never connect a tester to the curtain shield airbag assembly LH (driver side curtain shield squib) for measurement, as this may lead to a serious injury due to airbag deployment.
NOTICE:
- **Do not forcibly insert the SST into the terminals of the connector when connecting.**
- **Insert the SST straight into the terminals of the connector.**

(e) Connect the negative (-) terminal cable to the battery, and wait for at least 2 seconds.
(f) Turn the ignition switch on, and wait for at least 60 seconds.
(g) Clear the DTCs stored in the memory (See page RS-38).
(h) Turn the ignition switch off.
(i) Turn the ignition switch on, and wait for at least 60 seconds.
(j) Check the DTCs (See page RS-38).
OK:
DTC B1830, B1831, B1832, B1833 and 57 are not output.
HINT:
DTCs other than DTC B1830, B1831, B1832, B1833 and 57 may be output at this time, but they are not related to this check.

OK → **REPLACE CURTAIN SHIELD AIRBAG ASSEMBLY LH**

NG

2	CHECK CONNECTOR

(a) Turn the ignition switch off.
(b) Disconnect the negative (-) terminal cable from the battery, and wait for at least 90 seconds.
(c) Disconnect the SST from connector C.
(d) Check that the floor wire connectors (on the curtain shield airbag assembly LH side) are not damaged.

OK:
The lock button is not disengaged, and the claw of the lock is not deformed or damaged.

NG → **REPAIR OR REPLACE FLOOR WIRE**

RS

OK

3 CHECK FLOOR WIRE (DRIVER SIDE CURTAIN SHIELD SQUIB CIRCUIT)

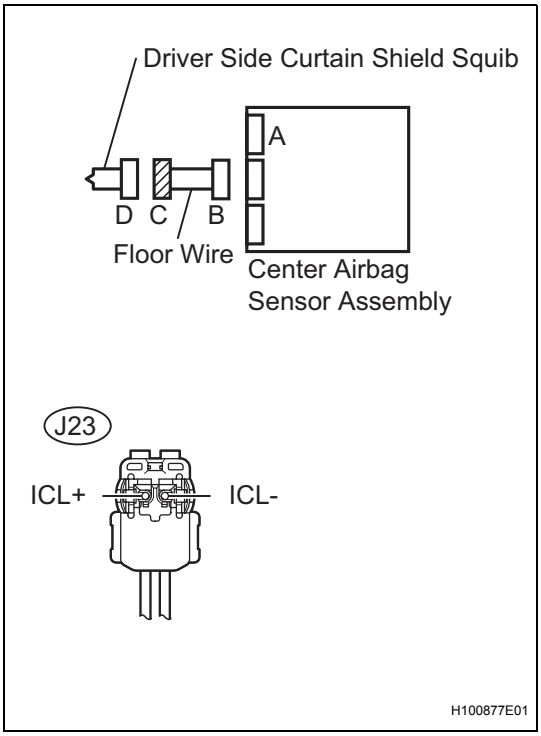

(a) Disconnect the connectors from the center airbag sensor assembly.
(b) Check for short to B+ in the circuit.
  (1) Connect the negative (-) terminal cable to the battery, and wait for at least 2 seconds.
  (2) Turn the ignition switch on.
  (3) Measure the voltage.
  Standard voltage

Tester Connection	Condition	Specified Condition
J23-1 (ICL+) - Body ground	Ignition switch on	Below 1 V
J23-2 (ICL-) - Body ground	Ignition switch on	Below 1 V

(c) Check for open in the circuit.
  (1) Turn the ignition switch off.
  (2) Disconnect the negative (-) terminal cable from the battery, and wait for at least 90 seconds.
  (3) Measure the resistance.
  Standard resistance

Tester Connection	Condition	Specified Condition
J23-1 (ICL+) - J23-2 (ICL-)	Always	Below 1 Ω

(d) Check for short to ground in the circuit.
  (1) Measure the resistance.
  Standard resistance

Tester Connection	Condition	Specified Condition
J23-1 (ICL+) - Body ground	Always	1 MΩ or higher
J23-2 (ICL-) Body ground	Always	1 MΩ or higher

(e) Check for short in the circuit.
  (1) Release the activation prevention mechanism built into connector B (See page RS-31).
  (2) Measure the resistance.
  Standard resistance

Tester Connection	Condition	Specified Condition
J23-1 (ICL+) - J23-2 (ICL-)	Always	1 MΩ or higher

NG → **REPAIR OR REPLACE FLOOR WIRE**

OK

4	CHECK CENTER AIRBAG SENSOR ASSEMBLY

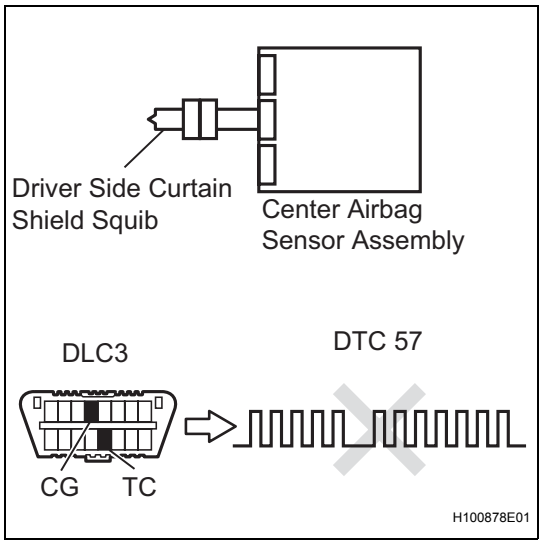

(a) Connect the connectors to the curtain shield airbag assembly LH and the center airbag sensor assembly.
(b) Connect the negative (-) terminal cable to the battery, and wait for at least 2 seconds.
(c) Turn the ignition switch on, and wait for at least 60 seconds.
(d) Clear the DTCs stored in the memory (See page RS-38).
(e) Turn the ignition switch off.
(f) Turn the ignition switch on, and wait for at least 60 seconds.
(g) Check the DTCs (See page RS-38).

OK:

DTC B1830, B1831, B1832, B1833 and 57 are not output.

HINT:

DTCs other than DTC B1830, B1831, B1832, B1833 and 57 may be output at this time, but they are not related to this check.

NG → **REPLACE CENTER AIRBAG SENSOR ASSEMBLY**

OK

USE SIMULATION METHOD TO CHECK

DTC	B1835/58	Short in Front Passenger Side Curtain Shield Squib Circuit

DTC	B1836/58	Open in Front Passenger Side Curtain Shield Squib Circuit

DTC	B1837/58	Short to GND in Front Passenger Side Curtain Shield Squib Circuit

DTC	B1838/58	Short to B+ in Front Passenger Side Curtain Shield Squib Circuit

DESCRIPTION

The front passenger side curtain shield squib circuit consists of the center airbag sensor assembly and the curtain shield airbag assembly RH.
The circuit signals the SRS to deploy when deployment conditions are met.
These DTCs are recorded when a malfunction is detected in the front passenger side curtain shield squib circuit.

DTC No.	DTC Detection Condition	Trouble Area
B1835/58	• Center airbag sensor assembly detects line short circuit signal in front passenger side curtain shield squib circuit 5 times during primary check. • Front passenger side curtain shield squib malfunction • Center airbag sensor assembly malfunction	• Floor wire • Curtain shield airbag assembly RH (Front passenger side curtain shield squib) • Center airbag sensor assembly
B1836/58	• Center airbag sensor assembly detects open circuit signal in front passenger side curtain shield squib circuit for 2 seconds. • Front passenger side curtain shield squib malfunction • Center airbag sensor assembly malfunction	• Floor wire • Curtain shield airbag assembly RH (Front passenger side curtain shield squib) • Center airbag sensor assembly
B1837/58	• Center airbag sensor assembly detects short circuit to ground signal in front passenger side curtain shield squib circuit for 0.5 seconds. • Front passenger side curtain shield squib malfunction • Center airbag sensor assembly malfunction	• Floor wire • Curtain shield airbag assembly RH (Front passenger side curtain shield squib) • Center airbag sensor assembly
B1838/58	• Center airbag sensor assembly detects short circuit to B+ signal in front passenger side curtain shield squib circuit for 0.5 seconds. • Front passenger side curtain shield squib malfunction • Center airbag sensor assembly malfunction	• Floor wire • Curtain shield airbag assembly RH (Front passenger side curtain shield squib) • Center airbag sensor assembly

WIRING DIAGRAM

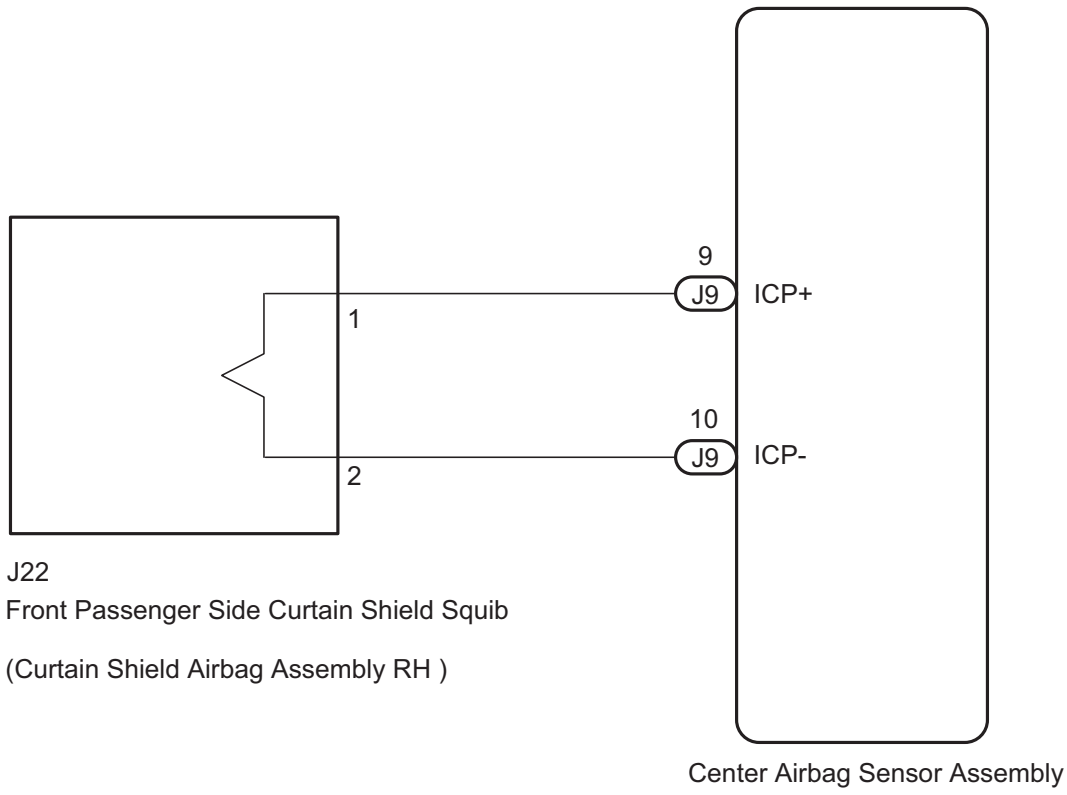

INSPECTION PROCEDURE

HINT:

- Perform the simulation method by selecting CHECK MODE (signal check) with the intelligent tester (See page RS-41).
- After selecting CHECK MODE (signal check), perform the simulation method by wiggling each connector of the airbag system or driving the vehicle on a city or rough road (See page RS-31).

1	CHECK CURTAIN SHIELD AIRBAG ASSEMBLY RH (FRONT PASSENGER SIDE CURTAIN SHIELD SQUIB)

RS

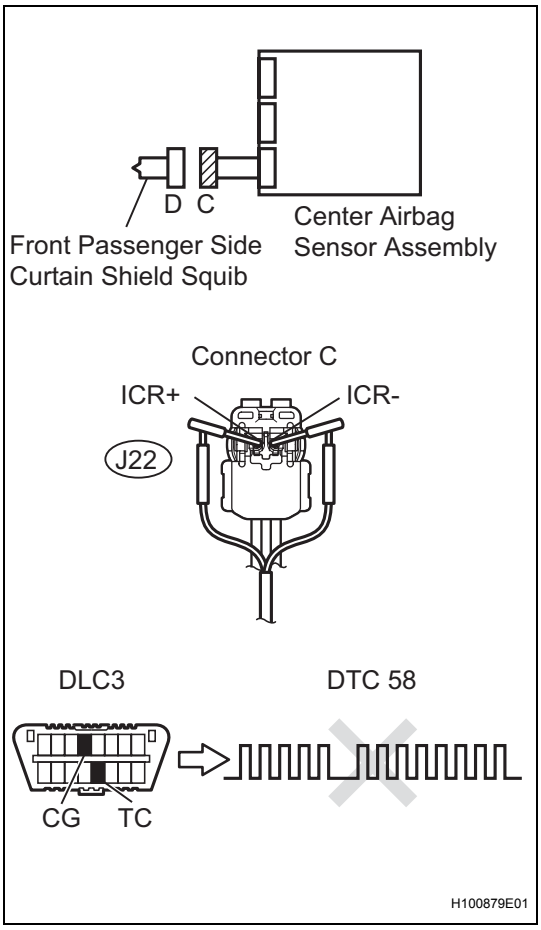

SST 09843-18060

(a) Turn the ignition switch off.
(b) Disconnect the negative (-) terminal cable from the battery, and wait for at least 90 seconds.
(c) Disconnect the connector from the curtain shield airbag assembly RH.
(d) Connect the white wire side of SST (resistance 2.1 Ω) to connector C.
CAUTION:
Never connect a tester to the curtain shield airbag assembly RH (front passenger side curtain shield squib) for measurement, as this may lead to a serious injury due to airbag deployment.
NOTICE:
- **Do not forcibly insert the SST into the terminals of the connector when connecting.**
- **Insert the SST straight into the terminals of the connector.**

(e) Connect the negative (-) terminal cable to the battery, and wait for at least 2 seconds.
(f) Turn the ignition switch on, and wait for at least 60 seconds.
(g) Clear the DTCs stored in the memory (See page RS-38).
(h) Turn the ignition switch off.
(i) Turn the ignition switch on, and wait for at least 60 seconds.
(j) Check the DTCs (See page RS-38).
OK:
DTC B1835, B1836, B1837, B1838 and 58 are not output.
HINT:
DTCs other than DTC B1835, B1836, B1837, B1838 and 58 may be output at this time, but they are not related to this check.

OK → **REPLACE CURTAIN SHIELD AIRBAG ASSEMBLY RH**

NG

2	CHECK CONNECTOR

(a) Turn the ignition switch off.
(b) Disconnect the negative (-) terminal cable from the battery, and wait for at least 90 seconds.
(c) Disconnect the SST from connector C.
(d) Check that the floor wire connector (on the curtain shield assembly RH side) is not damaged.

OK:
The lock button is not disengaged, and the claw of the lock is not deformed or damaged.

NG → **REPAIR OR REPLACE FLOOR WIRE**

OK

RS

3 CHECK FLOOR WIRE (FRONT PASSENGER SIDE CURTAIN SHIELD SQUIB CIRCUIT)

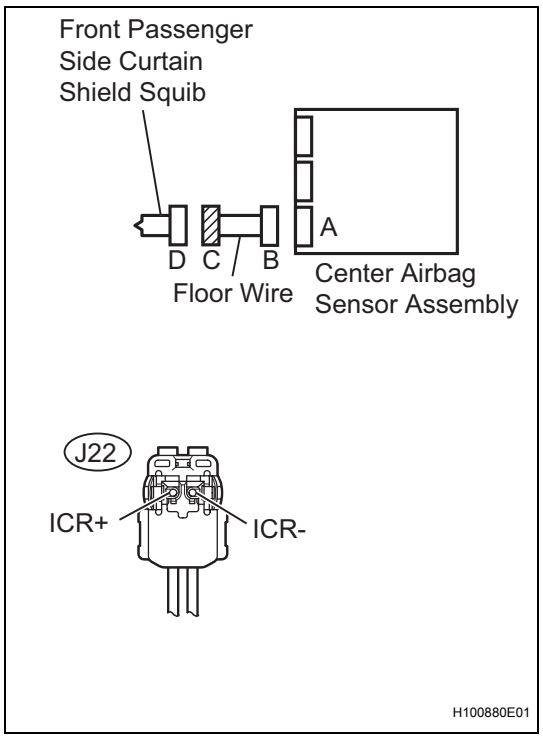

(a) Disconnect the connectors from the center airbag sensor assembly.
(b) Check for short to B+ in the circuit.
  (1) Connect the negative (-) terminal cable to the battery, and wait for at least 2 seconds.
  (2) Turn the ignition switch on.
  (3) Measure the voltage.
  Standard voltage

Tester Connection	Condition	Specified Condition
J22-1 (ICR+) - Body ground	Ignition switch on	Below 1 V
J22-2 (ICR-) - Body ground	Ignition switch on	Below 1 V

(c) Check for open in the circuit.
  (1) Turn the ignition switch off.
  (2) Disconnect the negative (-) terminal cable from the battery, and wait for at least 90 seconds.
  (3) Measure the resistance.
  Standard resistance

Tester Connection	Condition	Specified Condition
J22-1 (ICR+) - J22-2 (ICR-)	Always	Below 1 Ω

(d) Check for short to ground in the circuit.
  (1) Measure the resistance.
  Standard resistance

Tester Connection	Condition	Specified Condition
J22-1 (ICR+) - Body ground	Always	1 MΩ or higher
J22-2 (ICR-) Body ground	Always	1 MΩ or higher

(e) Check for short in the circuit.
  (1) Release the activation prevention mechanism built into connector B (See page RS-31).
  (2) Measure the resistance.
  Standard resistance

Tester Connection	Condition	Specified Condition
J22-1 (ICR+) - J22-2 (ICR-)	Always	1 MΩ or higher

NG → **REPAIR OR REPLACE FLOOR WIRE**

OK

4	CHECK CENTER AIRBAG SENSOR ASSEMBLY

RS

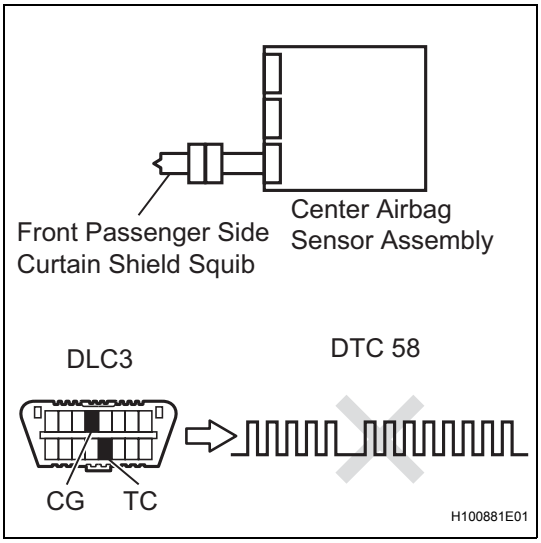

(a) Connect the connectors to the curtain shield airbag assembly RH and the center airbag sensor assembly.
(b) Connect the negative (-) terminal cable to the battery, and wait for at least 2 seconds.
(c) Turn the ignition switch on, and wait for at least 60 seconds.
(d) Clear the DTCs stored in the memory (See page RS-38).
(e) Turn the ignition switch off.
(f) Turn the ignition switch on, and wait for at least 60 seconds.
(g) Check the DTCs (See page RS-38).

OK:

DTC B1835, B1836, B1837, B1838 and 58 are not output.

HINT:

DTCs other than DTC B1835, B1836, B1837, B1838 and 58 may be output at this time, but they are not related to this check.

NG → **REPLACE CENTER AIRBAG SENSOR ASSEMBLY**

OK

USE SIMULATION METHOD TO CHECK

DTC	B1900/73	Short in Front Driver Side Pretensioner Squib Circuit

DTC	B1901/73	Open in Front Driver Side Pretensioner Squib Circuit

DTC	B1902/73	Short to GND in Front Driver Side Pretensioner Squib Circuit

DTC	B1903/73	Short to B+ in Front Driver Side Pretensioner Squib Circuit

DESCRIPTION

The driver side front pretensioner squib circuit consists of the center airbag sensor assembly and the front seat outer belt assembly LH.

This circuit signals the SRS to deploy when deployment conditions are met.

These DTCs are recorded when a malfunction is detected in the driver side front pretensioner squib circuit.

DTC No.	DTC Detection Condition	Trouble Area
B1900/73	• Center airbag sensor assembly detects line short circuit signal in driver side front pretensioner squib circuit 5 times during primary check. • Driver side front pretensioner squib malfunction • Center airbag sensor assembly malfunction	• Floor wire • Front seat outer belt assembly LH (Driver side front pretensioner squib) • Center airbag sensor assembly
B1901/73	• Center airbag sensor assembly detects open circuit signal in driver side front pretensioner squib circuit for 2 seconds. • Driver side front pretensioner squib malfunction • Center airbag sensor assembly malfunction	• Floor wire • Front seat outer belt assembly LH (Driver side front pretensioner squib) • Center airbag sensor assembly
B1902/73	• Center airbag sensor assembly detects short circuit to ground signal in driver side front pretensioner squib circuit for 0.5 seconds. • Driver side front pretensioner squib malfunction • Center airbag sensor assembly malfunction	• Floor wire • Front seat outer belt assembly LH (Driver side front pretensioner squib) • Center airbag sensor assembly
B1903/73	• Center airbag sensor assembly detects short circuit to B+ signal in driver side front pretensioner squib circuit for 0.5 seconds. • Driver side front pretensioner squib malfunction • Center airbag sensor assembly malfunction	• Floor wire • Front seat outer belt assembly LH (Driver side front pretensioner squib) • Center airbag sensor assembly

WIRING DIAGRAM

RS

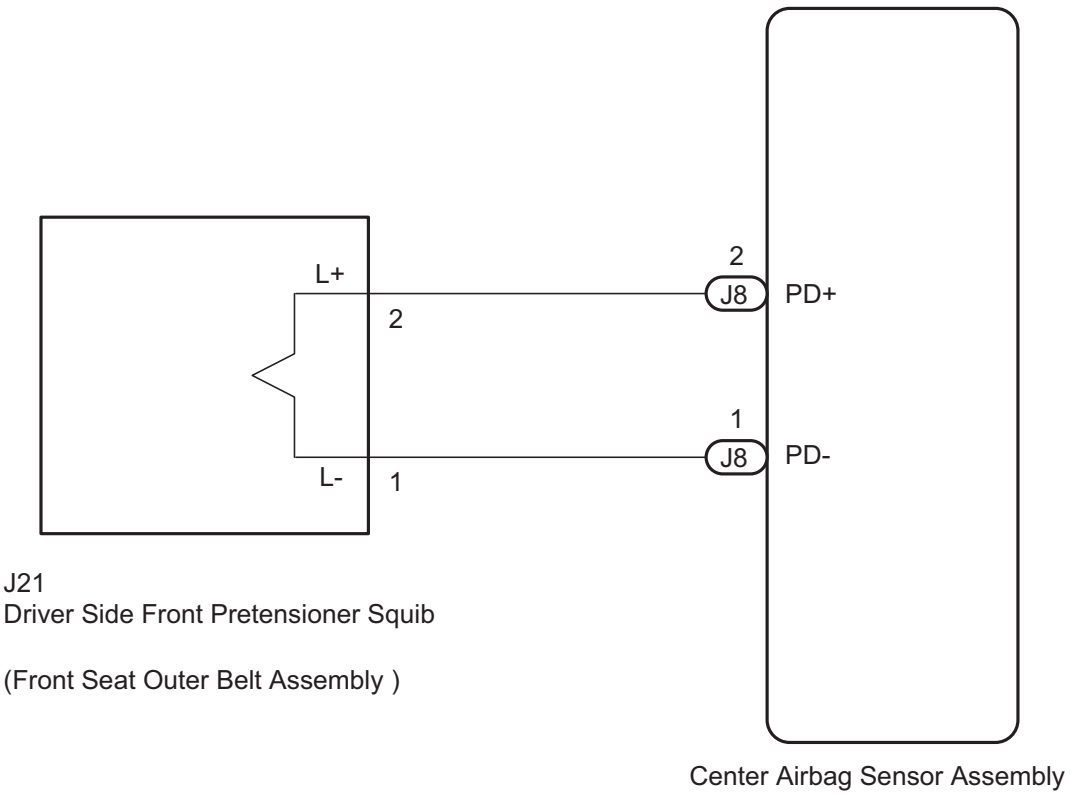

INSPECTION PROCEDURE

HINT:

- Perform the simulation method by selecting CHECK MODE (signal check) with the intelligent tester (See page RS-41).
- After selecting CHECK MODE (signal check), perform the simulation method by wiggling each connector of the airbag system or driving the vehicle on a city or rough road (See page RS-31).

1	CHECK FRONT SEAT OUTER BELT ASSEMBLY LH (DRIVER SIDE FRONT PRETENSIONER SQUIB)

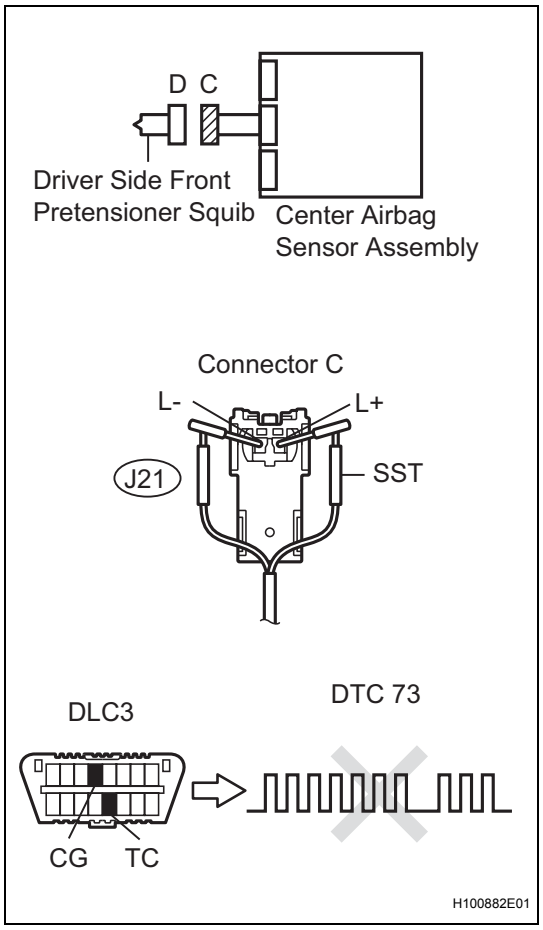

SST 09843-18060

(a) Turn the ignition switch off.
(b) Disconnect the negative (-) terminal cable from the battery, and wait for at least 90 seconds.
(c) Disconnect the connectors from the front seat outer belt assembly LH.
(d) Connect the white wire side of SST (resistance 2.1 Ω) to connector C.
CAUTION:
Never connect a tester to the front seat outer belt assembly LH (driver side front pretensioner squib) for measurement, as this may lead to a serious injury due to airbag deployment.
NOTICE:
- **Do not forcibly insert the SST into the terminals of the connector when connecting.**
- **Insert the SST straight into the terminals of the connector.**

(e) Connect the negative (-) terminal cable to the battery, and wait for at least 2 seconds.
(f) Turn the ignition switch on, and wait for at least 60 seconds.
(g) Clear the DTCs stored in the memory (See page RS-38).
(h) Turn the ignition switch off.
(i) Turn the ignition switch on, and wait for at least 60 seconds.
(j) Check the DTCs (See page RS-38).
OK:
DTC B1900, B1901, B1902, B1903 and 73 are not output.
HINT:
DTCs other than DTC B1900, B1901, B1902, B1903 and 73 may be output at this time, but they are not related to this check.

OK → **REPLACE FRONT SEAT OUTER BELT ASSEMBLY LH**

NG

2	CHECK CONNECTOR

(a) Turn the ignition switch off.
(b) Disconnect the negative (-) terminal cable from the battery, and wait for at least 90 seconds.
(c) Disconnect the SST from connector C.
(d) Check that the floor wire connector (on the front seat outer belt assembly LH side) is not damaged.

OK:
The lock button is not disengaged, and the claw of the lock is not deformed or damaged.

NG → **REPAIR OR REPLACE FLOOR WIRE**

RS

OK

3 CHECK FLOOR WIRE (DRIVER SIDE FRONT PRETENSIONER SQUIB CIRCUIT)

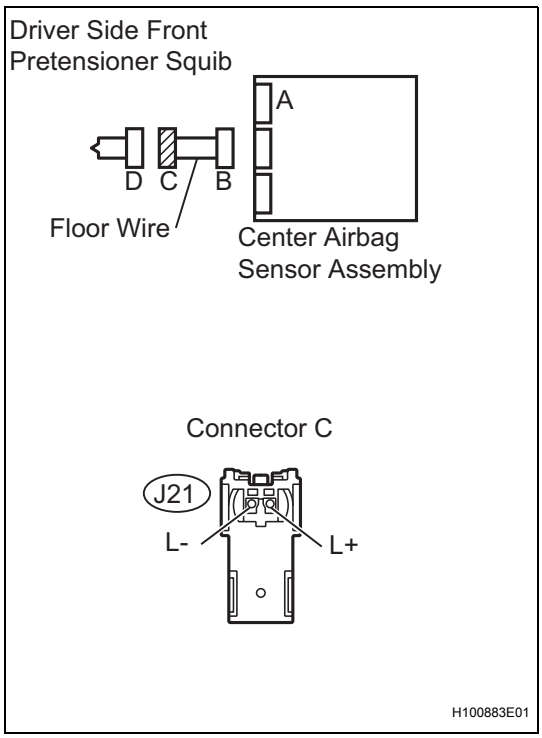

(a) Disconnect the connectors from the center airbag sensor assembly.

(b) Check for short to B+ in the circuit.
  (1) Connect the negative (-) terminal cable to the battery, and wait for at least 2 seconds.
  (2) Turn the ignition switch on.
  (3) Measure the voltage.
  Standard voltage

Tester Connection	Condition	Specified Condition
J21-1 (L-) - Body ground	Ignition switch on	Below 1 V
J21-2 (L+) - Body ground	Ignition switch on	Below 1 V

(c) Check for open in the circuit.
  (1) Turn the ignition switch off.
  (2) Disconnect the negative (-) terminal cable from the battery, and wait for at least 90 seconds.
  (3) Measure the resistance.
  Standard resistance

Tester Connection	Condition	Specified Condition
J21-1 (L-) - J21-2 (L+)	Always	Below 1 Ω

(d) Check for short to ground in the circuit.
  (1) Measure the resistance.
  Standard resistance

Tester Connection	Condition	Specified Condition
J21-1 (L-) - Body ground	Always	1 MΩ or higher
J21-2 (L+) - Body ground	Always	1 MΩ or higher

(e) Check for short in the circuit.
  (1) Release the activation prevention mechanism built into connector B (See page RS-31).
  (2) Measure the resistance.
  Standard resistance

Tester Connection	Condition	Specified Condition
J21-1 (L-) - J21-2 (L+)	Always	1 MΩ or higher

NG → **REPAIR OR REPLACE FLOOR WIRE**

OK

4	CHECK CENTER AIRBAG SENSOR ASSEMBLY

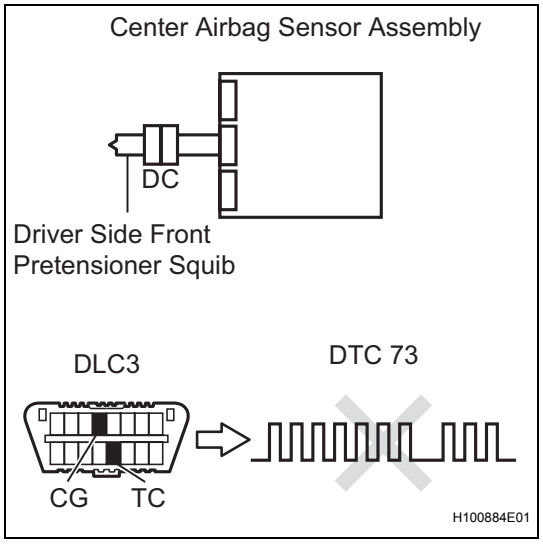

(a) Connect the connectors to the front seat outer belt assembly LH and the center airbag sensor assembly.
(b) Connect the negative (-) terminal cable to the battery, and wait for at least 2 seconds.
(c) Turn the ignition switch on, and wait for at least 60 seconds.
(d) Clear the DTCs stored in the memory (See page RS-38).
(e) Turn the ignition switch off.
(f) Turn the ignition switch on, and wait for at least 60 seconds.
(g) Check the DTCs (See page RS-38).

OK:

DTC B1900, B1901, B1902, B1903 and 73 are not output.

HINT:

DTCs other than DTC B1900, B1901, B1902, B1903 and 73 may be output at this time, but they are not related to this check.

NG → **REPLACE CENTER AIRBAG SENSOR ASSEMBLY**

OK

USE SIMULATION METHOD TO CHECK

DTC	B1905/74	Short in Front Passenger Side Pretensioner Squib Circuit

DTC	B1906/74	Open in Front Passenger Side Pretensioner Squib Circuit

DTC	B1907/74	Short to GND in Front Passenger Side Pretensioner Squib Circuit

DTC	B1908/74	Short to B+ in Front Passenger Side Front Pretensioner Squib Circuit

DESCRIPTION

The front passenger side front pretensioner squib circuit consists of the center airbag sensor assembly and the front seat outer belt assembly RH.
This circuit signals the SRS to deploy when deployment conditions are met.
These DTCs are recorded when a malfunction is detected in the front passenger side front pretensioner squib circuit.

DTC No.	DTC Detection Condition	Trouble Area
B1905/74	• Center airbag sensor assembly detects line short circuit signal in front passenger side front pretensioner squib circuit 5 times during primary check. • Front passenger side front pretensioner squib malfunction • Center airbag sensor assembly malfunction	• Floor wire • Front seat outer belt assembly RH (Front passenger side front pretensioner squib) • Center airbag sensor assembly
B1906/74	• Center airbag sensor assembly detects open circuit signal in front passenger side front pretensioner squib circuit for 2 seconds. • Front passenger side front pretensioner squib malfunction • Center airbag sensor assembly malfunction	• Floor wire • Front seat outer belt assembly RH (Front passenger side front pretensioner squib) • Center airbag sensor assembly
B1907/74	• Center airbag sensor assembly detects short circuit to ground signal in front passenger side front pretensioner squib circuit for 0.5 seconds. • Front passenger side front pretensioner squib malfunction • Center airbag sensor assembly malfunction	• Floor wire • Front seat outer belt assembly RH (Front passenger side front pretensioner squib) • Center airbag sensor assembly
B1908/74	• Center airbag sensor assembly detects short circuit to B+ signal in front passenger side front pretensioner squib circuit for 0.5 seconds. • Front passenger side front pretensioner squib malfunction • Center airbag sensor assembly malfunction	• Floor wire • Front seat outer belt assembly RH (Front passenger side front pretensioner squib) • Center airbag sensor assembly

WIRING DIAGRAM

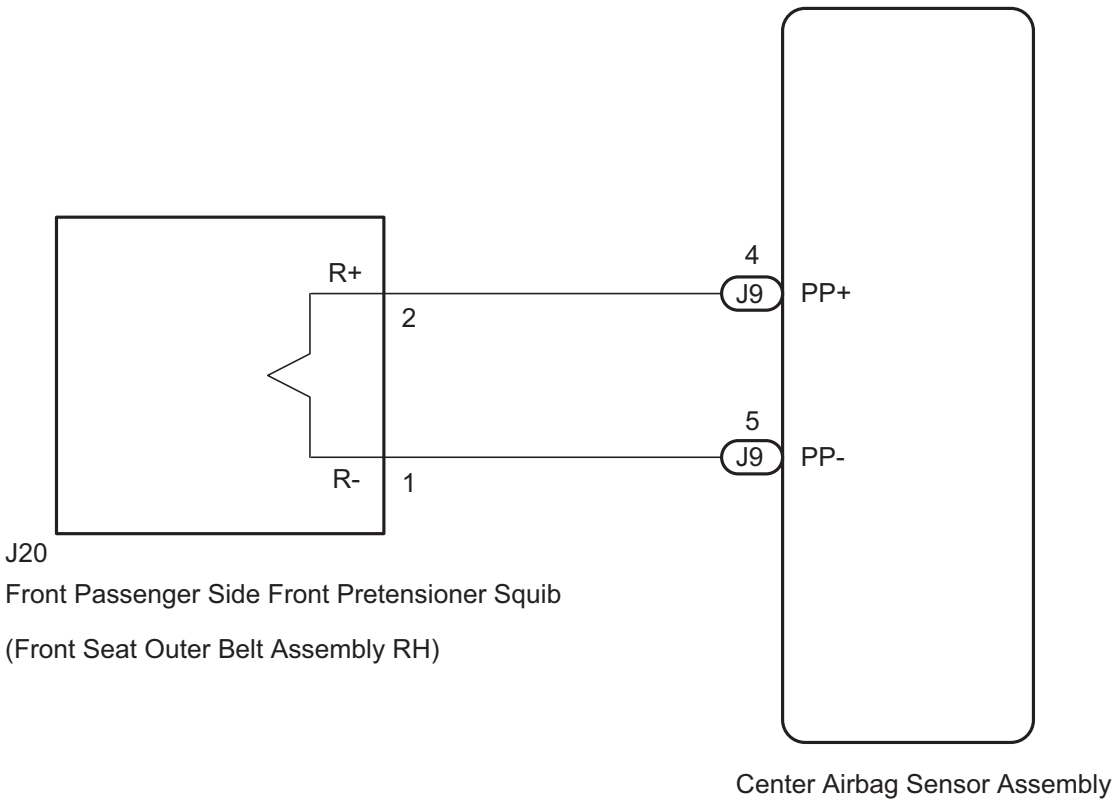

INSPECTION PROCEDURE

HINT:

- Perform the simulation method by selecting CHECK MODE (signal check) with the intelligent tester (See page RS-41).
- After selecting CHECK MODE (signal check), perform the simulation method by wiggling each connector of the airbag system or driving the vehicle on a city or rough road (See page RS-31).

1	CHECK FRONT SEAT OUTER BELT ASSEMBLY RH (FRONT PASSENGER SIDE FRONT PRETENSIONER SQUIB)

RS

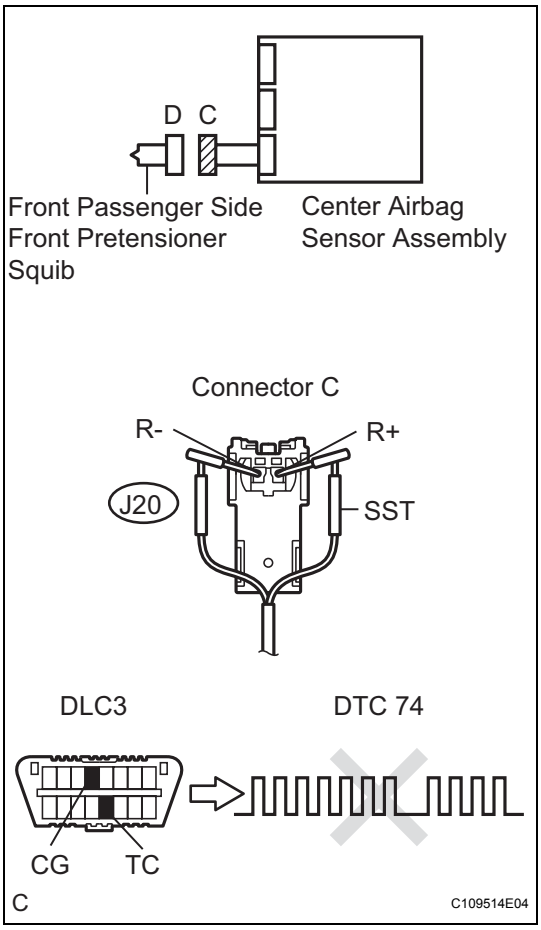

SST 09843-18060

(a) Turn the ignition switch off.
(b) Disconnect the negative (-) terminal cable from the battery, and wait for at least 90 seconds.
(c) Disconnect the connectors from the front seat outer belt assembly RH.
(d) Connect the white wire side of SST (resistance 2.1 Ω) to connector C.
CAUTION:
Never connect a tester to the front seat outer belt assembly RH (front passenger side front pretensioner squib) for measurement, as this may lead to a serious injury due to airbag deployment.
NOTICE:
- **Do not forcibly insert the SST into the terminals of the connector when connecting.**
- **Insert the SST straight into the terminals of the connector.**

(e) Connect the negative (-) terminal cable to the battery, and wait for at least 2 seconds.
(f) Turn the ignition switch on, and wait for at least 60 seconds.
(g) Clear the DTCs stored in the memory (See page RS-38).
(h) Turn the ignition switch off.
(i) Turn the ignition switch on, and wait for at least 60 seconds.
(j) Check the DTCs (See page RS-38).
OK:
DTC B1905, B1906, B1907, B1908 and 74 are not output.
HINT:
DTCs other than DTC B1905, B1906, B1907, B1908 and 74 may be output at this time, but they are not related to this check.

OK → **REPLACE FRONT SEAT OUTER BELT ASSEMBLY RH**

NG

2	CHECK CONNECTOR

(a) Turn the ignition switch off.
(b) Disconnect the negative (-) terminal cable from the battery, and wait for at least 90 seconds.
(c) Disconnect the SST from connector C.
(d) Check that the floor wire connector (on the front seat outer belt assembly RH side) is not damaged.

OK:
The lock button is not disengaged, and the claw of the lock is not deformed or damaged.

NG → **REPAIR OR REPLACE FLOOR WIRE**

OK

RS

3	CHECK FLOOR WIRE (FRONT PASSENGER SIDE FRONT PRETENSIONER SQUIB CIRCUIT)

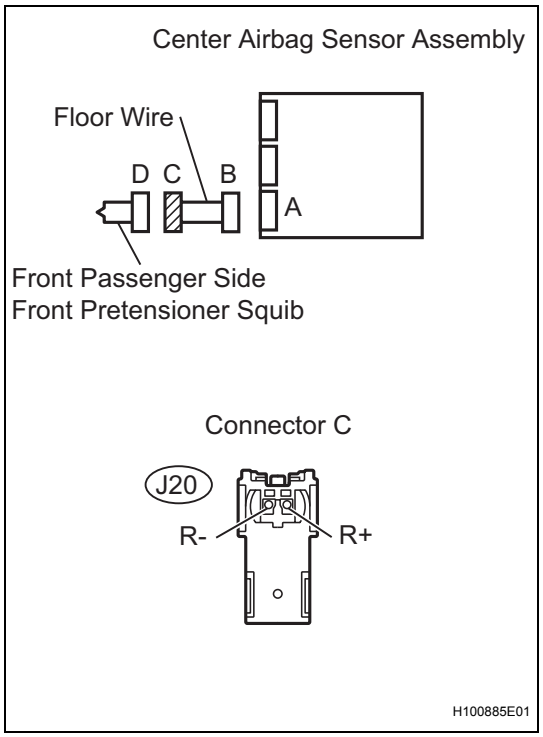

(a) Disconnect the connectors from the center airbag sensor assembly.
(b) Check for short to B+ in the circuit.
  (1) Connect the negative (-) terminal cable to the battery, and wait for at least 2 seconds.
  (2) Turn the ignition switch on.
  (3) Measure the voltage.
  Standard voltage

Tester Connection	Condition	Specified Condition
J20-1 (R-) - Body ground	Ignition switch on	Below 1 V
J20-2 (R+) - Body ground	Ignition switch on	Below 1 V

(c) Check for open in the circuit.
  (1) Turn the ignition switch off.
  (2) Disconnect the negative (-) terminal cable from the battery, and wait for at least 90 seconds.
  (3) Measure the resistance.
  Standard resistance

Tester Connection	Condition	Specified Condition
J20-1 (R-) - J20-2 (R+)	Always	Below 1 Ω

(d) Check for short to ground in the circuit.
  (1) Measure the resistance.
  Standard resistance

Tester Connection	Condition	Specified Condition
J20-1 (R-) - Body ground	Always	1 MΩ or higher
J20-2 (R+) - Body ground	Always	1 MΩ or higher

(e) Check for short in the circuit.
  (1) Release the activation prevention mechanism built into connector B (See page RS-31).
  (2) Measure the resistance.
  Standard resistance

Tester Connection	Condition	Specified Condition
J20-1 (R-) - J20-2 (R+)	Always	1 MΩ or higher

NG → **REPAIR OR REPLACE FLOOR WIRE**

OK

4	CHECK CENTER AIRBAG SENSOR ASSEMBLY

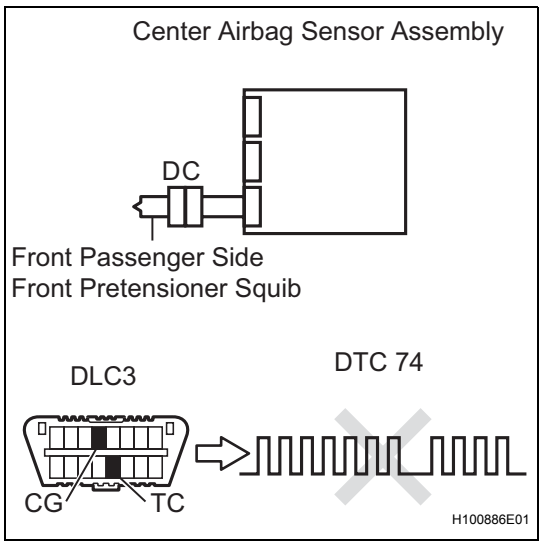

(a) Connect the connectors to the front seat outer belt assembly RH and the center airbag sensor assembly.
(b) Connect the negative (-) terminal cable to the battery, and wait for at least 2 seconds.
(c) Turn the ignition switch on, and wait for at least 60 seconds.
(d) Clear the DTCs stored in the memory (See page RS-38).
(e) Turn the ignition switch off.
(f) Turn the ignition switch on, and wait for at least 60 seconds.
(g) Check the DTCs (See page RS-38).

OK:

DTC B1905, B1906, B1907, B1908 and 74 are not output.

HINT:

DTCs other than DTC B1905, B1906, B1907, B1908 and 74 may be output at this time, but they are not related to this check.

NG → **REPLACE CENTER AIRBAG SENSOR ASSEMBLY**

OK

USE SIMULATION METHOD TO CHECK

SRS Warning Light Remains ON

DESCRIPTION

The SRS warning light is located on the combination meter.
When the SRS condition is normal, the SRS warning light illuminates for approximately 6 seconds after the ignition switch is turned from off to on, and then goes off automatically.
If there is a malfunction in the SRS, the SRS warning light illuminates or blinks to inform the driver of the problem. When terminals TC and CG of the DLC3 are connected, the SRS warning light blinks to indicate DTCs.
The center airbag sensor assembly is equipped with a voltage-increase circuit (DC-DC converter) in case the source voltage decreases. When the battery voltage decreases, the voltage-increase circuit (DC-DC converter) boosts the SRS voltage up to the normal level.
Malfunctions relating to battery voltage decreases cause the SRS warning light to illuminate, however, no DTCs are recorded in the center airbag sensor assembly. The SRS warning light goes off automatically when the source voltage returns to normal.
Signals to illuminate the SRS warning light are transmitted from the center airbag sensor assembly to the combination meter through the CAN communication system.

RS

WIRING DIAGRAM

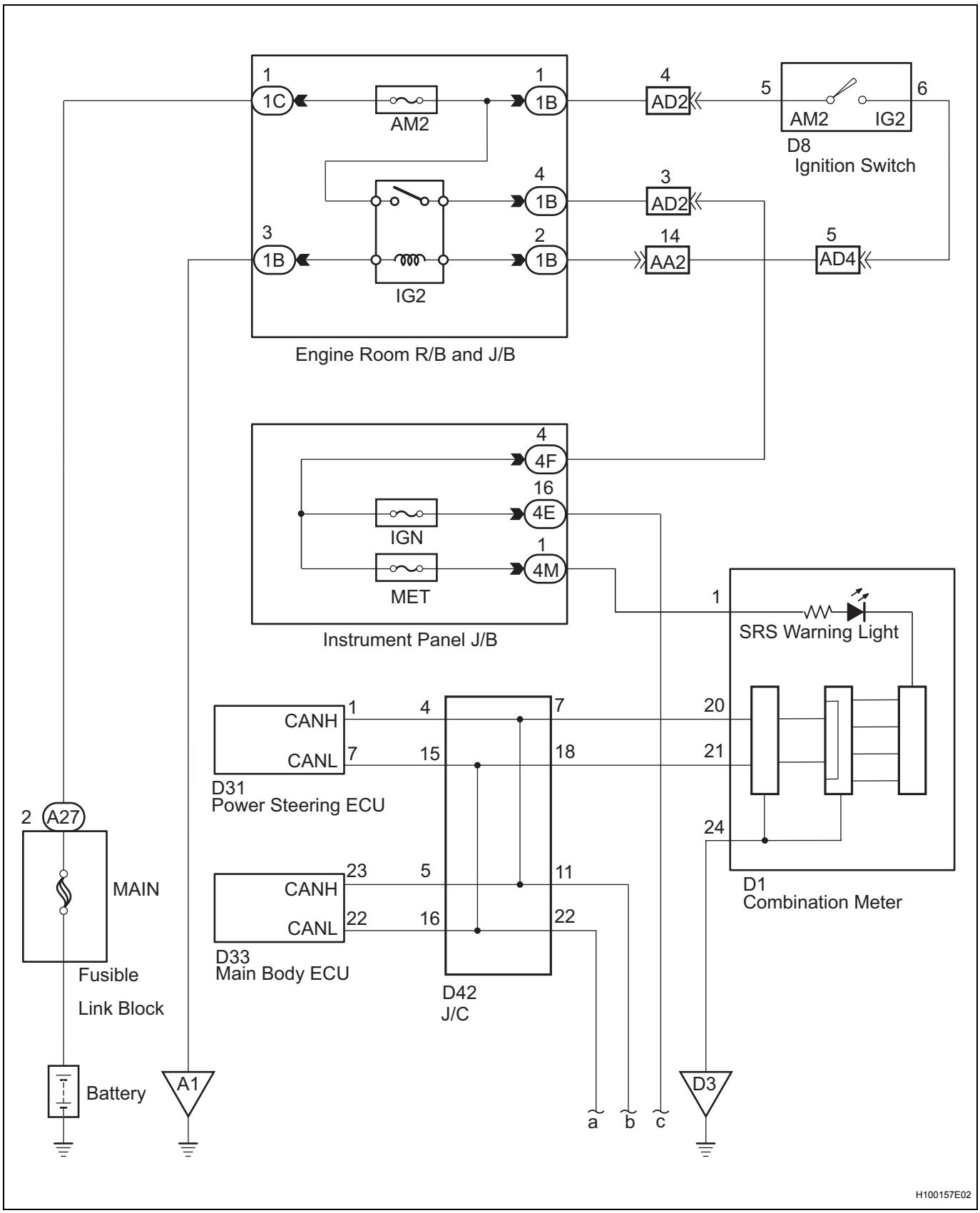

RS

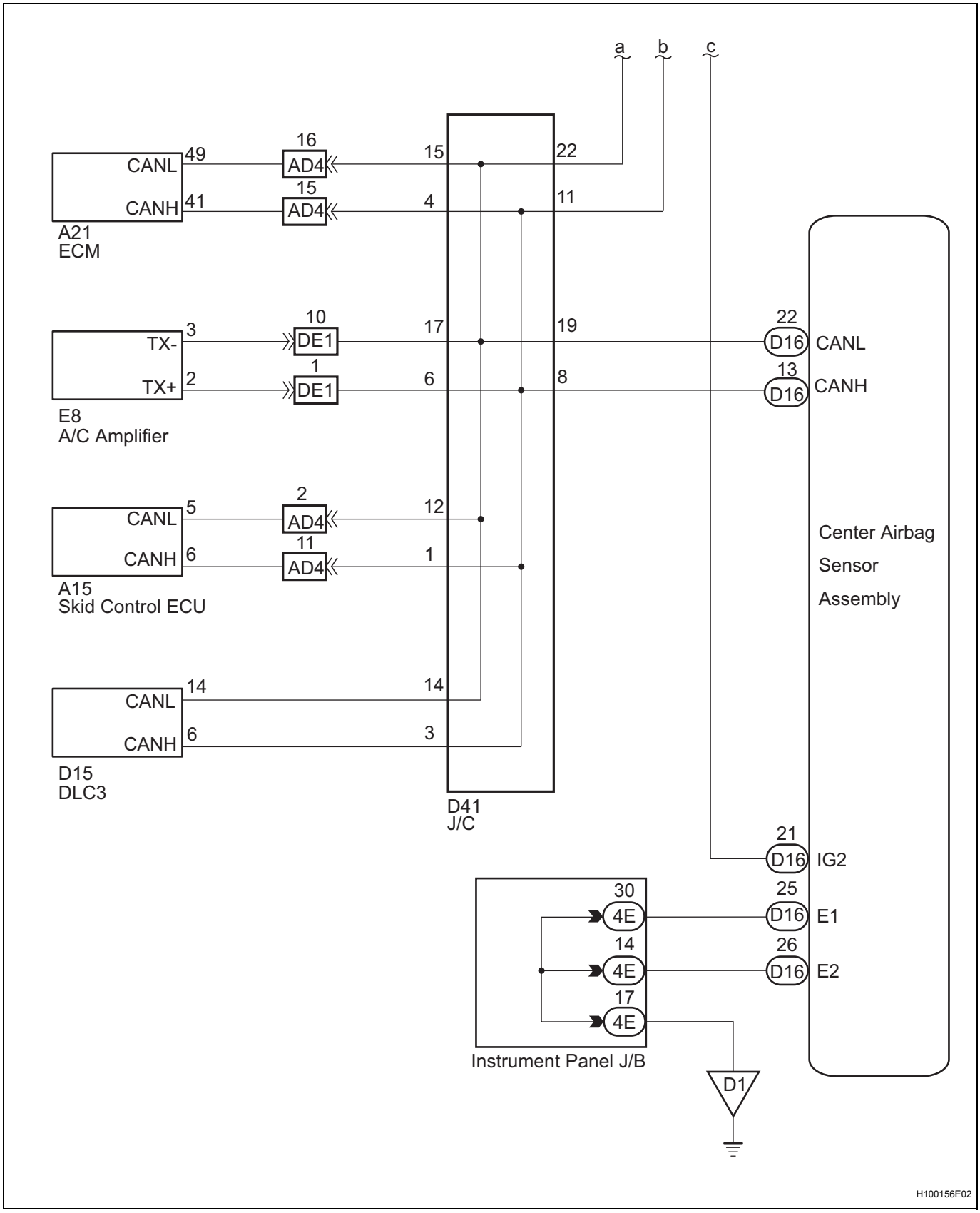
a
b
c
CANL
CANH
49
41
16
AD4
15
AD4
15
22
4
11
A21
ECM
TX-
TX+
3
2
10
DE1
1
DE1
17
6
19
8
22
D16
CANL
13
D16
CANH
E8
A/C Amplifier
CANL
CANH
5
6
2
AD4
11
AD4
12
1
Center Airbag
Sensor
Assembly
A15
Skid Control ECU
CANL
CANH
14
6
14
3
D15
DLC3
D41
J/C
21
D16
IG2
30
4E
14
4E
17
4E
25
D16
E1
26
D16
E2
Instrument Panel J/B
D1
H100156E02

INSPECTION PROCEDURE

NOTICE:

In order to prevent unexpected airbag deployment, disconnect the following connectors before inspecting parts such as wire harnesses, if the application of tester probes to the center airbag sensor assembly connector is necessary.

RS

1. Turn the ignition switch to the lock position.
2. Disconnect the negative (-) terminal cable from the battery, and wait for at least 90 seconds.
3. Disconnect the connector from the center airbag sensor assembly.
4. Disconnect the connectors from the steering pad.
5. Disconnect the connectors from the front passenger airbag assembly.
6. Disconnect the connector from the front seat outer belt assembly LH.
7. Disconnect the connector from the front seat outer belt assembly RH.
   HINT:
   Skip the following steps if side and curtain shield airbags are not fitted.
8. Disconnect the connector from the front seat side airbag assembly LH.
9. Disconnect the connector from the front seat side airbag assembly RH.
10. Disconnect the connector from the curtain shield airbag assembly LH.
11. Disconnect the connector from the curtain shield airbag assembly RH.

1	CHECK DTC (CAN COMMUNICATION SYSTEM)

(a) Turn the ignition switch to the on position.
(b) Check the DTCs (See page CA-22).
OK:
DTC is not output.

NG → **CHECK CAN COMMUNICATION SYSTEM**

OK

2	CHECK BATTERY

(a) Measure the voltage of the battery.
Standard voltage:
11 to 14 V

NG → **CHECK AND REPLACE BATTERY OR CHARGING SYSTEM**

OK

3	CHECK CONNECTION OF CONNECTORS

(a) Turn the ignition switch off.
(b) Disconnect the negative (-) terminal cable from the battery, and wait for at least 90 seconds.
(c) Check that the connectors are properly connected to the center airbag sensor assembly and combination meter.
OK:
The connectors are properly connected.

NG → **CONNECT CONNECTORS**

OK

4	CHECK HARNESS AND CONNECTOR (SOURCE VOLTAGE OF CENTER AIRBAG SENSOR ASSEMBLY)

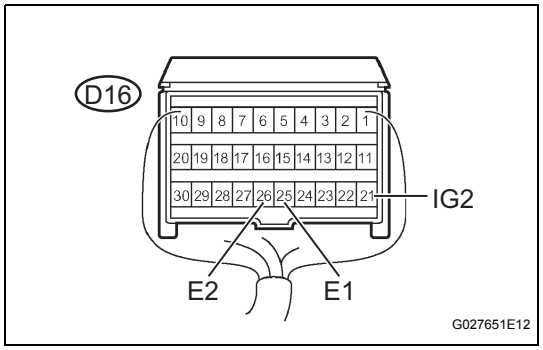

(a) Disconnect the connectors from the center airbag sensor assembly.
(b) Connect the negative (-) terminal cable to the battery, and wait for at least 2 seconds.
(c) Turn the ignition switch on.
(d) Operate all components of the electrical system (defogger, wipers, headlights, heater blower, etc.).
(e) Measure the voltage.

Standard voltage

Tester Connection	Condition	Specified Condition
D16-21 (IG2) - Body ground	Ignition switch on	11 to 14 V

(f) Turn the ignition switch off.
(g) Measure the resistance.

Standard resistance

Tester Connection	Condition	Specified Condition
D16-25 (E1) - Body ground	Always	Below 1 Ω
D16-26 (E2) - Body ground	Always	Below 1 Ω

NG → REPAIR OR REPLACE HARNESS OR CONNECTOR

OK

RS

5	CHECK HARNESS AND CONNECTOR (SOURCE VOLTAGE OF COMBINATION METER)

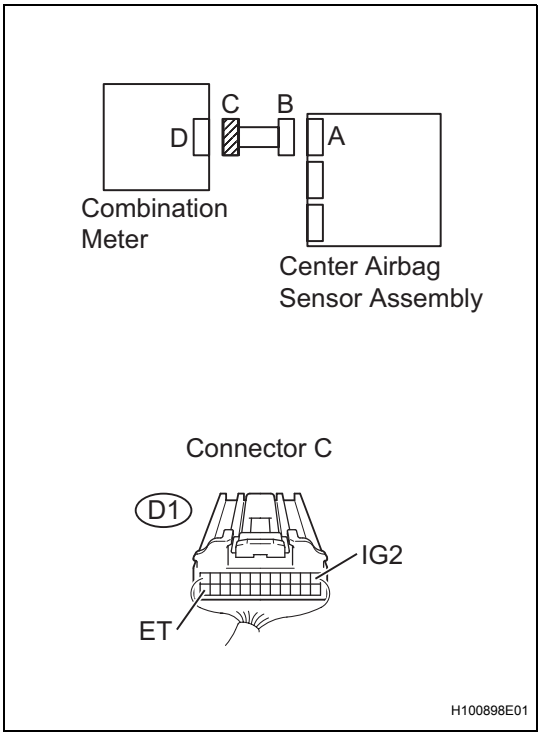

(a) Disconnect the negative (-) terminal cable from the battery, and wait for at least 90 seconds.
(b) Disconnect the connector from the combination meter.
(c) Connect the negative (-) terminal cable to the battery, and wait for at least 2 seconds.
(d) Turn the ignition switch on.
Measure the voltage.
Standard voltage

Tester Connection	Condition	Specified Condition
D1-1 (IG2) - Body ground	Ignition switch on	11 to 14 V

(e) Turn the ignition switch off.
(f) Measure the resistance.
Standard resistance

Tester Connection	Condition	Specified Condition
D1-24 (ET) - Body ground	Always	Below 1 Ω

NG → **REPAIR OR REPLACE HARNESS OR CONNECTOR**

OK

6	CHECK SRS WARNING LIGHT

(a) Turn the ignition switch off.
(b) Disconnect the negative (-) terminal cable from the battery, and wait for at least 90 seconds.
(c) Connect the connector to the combination meter.
(d) Connect the negative (-) terminal cable to the battery, and wait for at least 2 seconds.
(e) Turn the ignition switch on.
(f) Check the SRS warning light condition.
OK:
The SRS warning light goes off after the primary check period and comes on again after approximately 10 seconds.
HINT:
The primary check period lasts for approximately 6 seconds after the ignition switch is turned on.

NG → **GO TO COMBINATION METER SYSTEM**

OK

REPLACE CENTER AIRBAG SENSOR ASSEMBLY

SRS Warning Light does not Come ON

DESCRIPTION

See page RS-196.

WIRING DIAGRAM

See page RS-197.

INSPECTION PROCEDURE

1	CHECK BATTERY

(a) Measure the voltage of the battery.
Standard voltage:
11 to 14 V

NG → **CHECK AND REPLACE BATTERY OR CHARGING SYSTEM**

OK

2	CHECK CONNECTION OF CONNECTORS

(a) Turn the ignition switch off.
(b) Disconnect the negative (-) terminal cable from the battery, and wait for at least 90 seconds.
(c) Check that the connectors are properly connected to the center airbag sensor assembly and the combination meter.
OK:
The connectors are properly connected.

NG → **CONNECT CONNECTORS**

OK

3	CHECK HARNESS AND CONNECTOR (SOURCE VOLTAGE OF COMBINATION METER)

RS

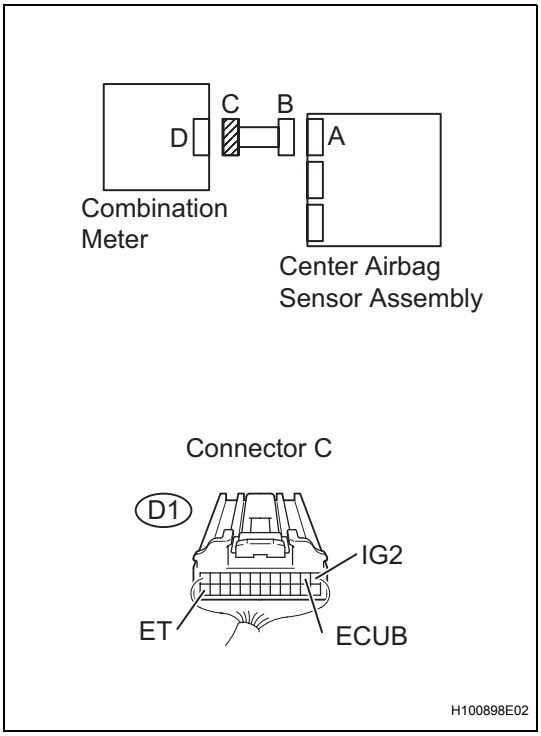

(a) Turn the ignition switch off.
(b) Disconnect the negative (-) terminal cable from the battery, and wait for at least 90 seconds.
(c) Disconnect the connectors from the combination meter and center airbag sensor assembly.
(d) Connect the negative (-) terminal cable to the battery, and wait for at least 2 seconds.
(e) Turn the ignition switch on.
(f) Measure the voltage.

Standard voltage

Tester Connection	Condition	Specified Condition
D1-1 (IG2) - Body ground	Ignition switch on	11 to 14 V
D1-2 (ECUB) - Body ground	Always	11 to 14 V

(g) Turn the ignition switch off.
(h) Measure the resistance.

Standard resistance

Tester Connection	Condition	Specified Condition
D1-24 (ET) - Body ground	Always	Below 1 Ω

NG → **REPAIR OR REPLACE HARNESS OR CONNECTOR**

OK

4	CHECK SRS WARNING LIGHT

(a) Turn the ignition switch off.
(b) Disconnect the negative (-) terminal cable from the battery, and wait for at least 90 seconds.
(c) Connect the connector to the combination meter.
(d) Connect the negative (-) terminal cable to the battery, and wait for at least 2 seconds.
(e) Turn the ignition switch on.
(f) Check the SRS warning light condition.

OK:

The SRS warning light goes off after the primary check period and comes on again after approximately 10 seconds.

HINT:

The primary check period lasts for approximately 6 seconds after the ignition switch is turned on.

NG → **GO TO COMBINATION METER SYSTEM**

OK

REPLACE CENTER AIRBAG SENSOR ASSEMBLY

TC and CG Terminal Circuit

DESCRIPTION

DTC output mode is set by connecting terminals TC and CG of the DLC3.
The DTCs are displayed by blinking the SRS warning light.
HINT:

- Make sure that DTCs which relate to the CAN communication system are not output. If any of these DTCs are output, check the CAN communication system (See page CA-22).
- When a warning light keeps blinking, a short to ground in the wiring of terminal TC of the DLC3 or an internal ground short in an ECU is suspected.
- The DTC output mode signal is transmitted through the CAN to each ECU including the center airbag sensor assembly. Thus when no systems enter DTC output mode, the ECM may have a malfunction.

WIRING DIAGRAM

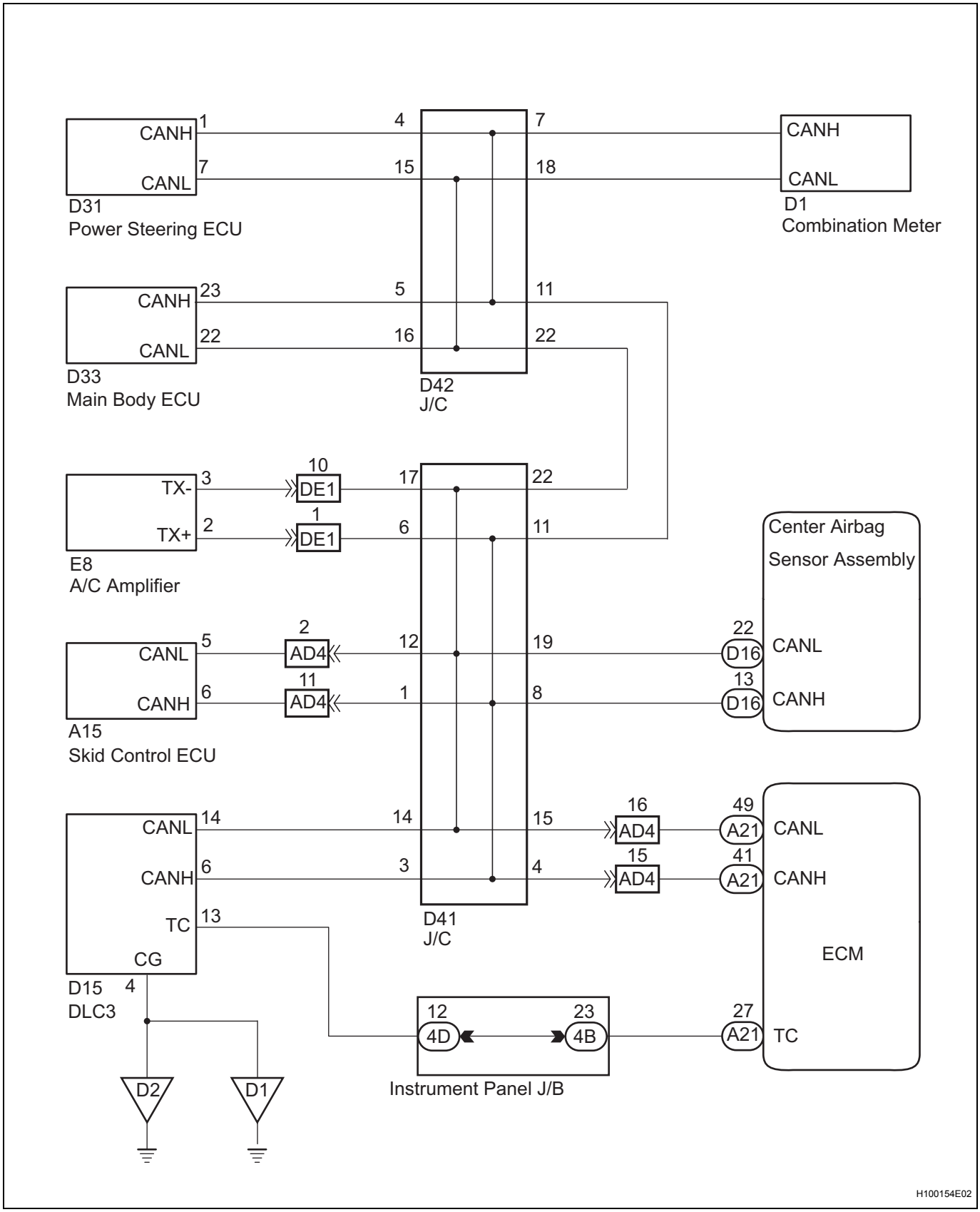

INSPECTION PROCEDURE

1 CHECK HARNESS AND CONNECTOR (DLC3 - ECM)

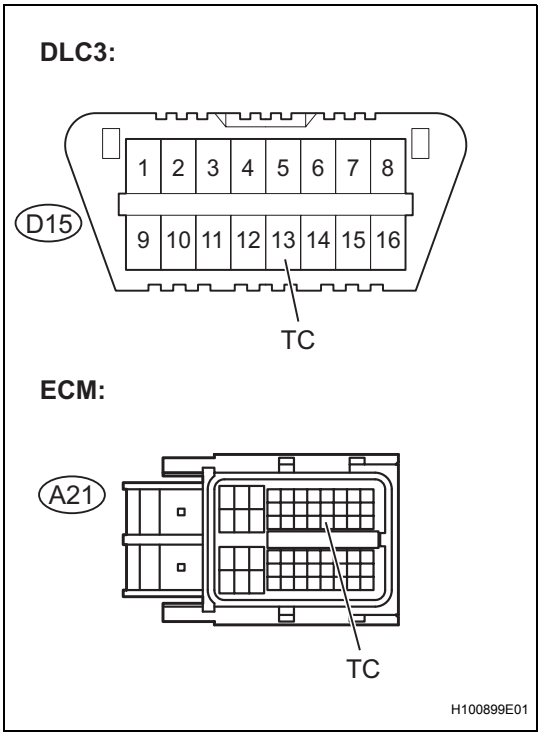

(a) Turn the ignition switch off.
(b) Disconnect the connector from the ECM.
(c) Measure the resistance.
Standard resistance

Tester Connection	Condition	Specified Condition
D15-13 (TC) - A21-27 (TC)	Always	Below 1 Ω

NG → **REPAIR OR REPLACE HARNESS OR CONNECTOR (TC OF DLC3 - TC OF ECM)**

OK

2 CHECK HARNESS AND CONNECTOR (CG OF DLC3 - BODY GROUND)

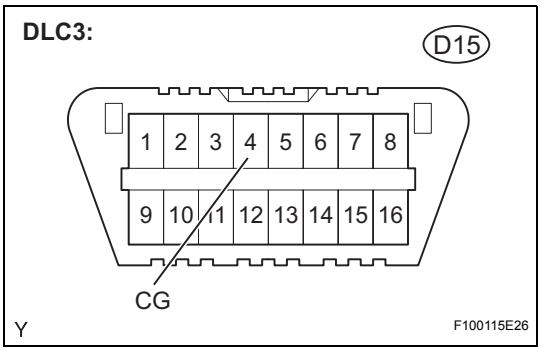

(a) Measure the resistance.
Standard resistance

Tester Connection	Condition	Specified Condition
D15-4 (CG) - Body ground	Always	Below 1 Ω

NG → **REPAIR OR REPLACE HARNESS OR CONNECTOR (CG OF DLC3 - BODY GROUND)**

OK

3	CHECK HARNESS AND CONNECTOR (TC OF ECM)

ECM:

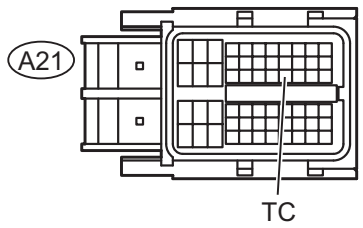

(a) Measure the resistance.
Standard resistance

Tester Connection	Condition	Specified Condition
A21-27 (TC) - Body ground	Always	1 MΩ or higher

RS

NG → **REPAIR OR REPLACE HARNESS OR CONNECTOR**

OK

4	REPLACE ECM

(a) Replace the ECM.
(b) Check for DTCs of the ECM (See page ES-34).
Result

Result	Proceed to
Normal system code is output	A
DTC is output	B
DTC output mode is set (except center airbag sensor assembly)	C

A → **END**

B → **GO TO INSPECTION PROCEDURE OF DTC OUTPUT**

C

REPLACE CENTER AIRBAG SENSOR ASSEMBLY

OCCUPANT CLASSIFICATION SYSTEM

PRECAUTION

1. INSPECTION PROCEDURE FOR VEHICLE INVOLVED IN ACCIDENT

(a) Perform the zero point calibration and sensitivity check if any of the following conditions apply.
- The occupant classification ECU is replaced.
- Accessories (seatback tray and seat cover, etc.) are installed.
- The front passenger seat is removed from the vehicle.
- The passenger airbag ON/OFF indicator (OFF) comes on when the front passenger seat is not occupied.
- The vehicle is brought to the workshop for repair due to an accident or a collision.

NOTICE:
When an accident vehicle is brought into the workshop for repair, check the flatness of the floor where the front passenger seat is mounted. If the flatness is not within +- 3.0 mm (0.118 in.), adjust it to the specified range.

PARTS LOCATION

HATCHBACK:

RS

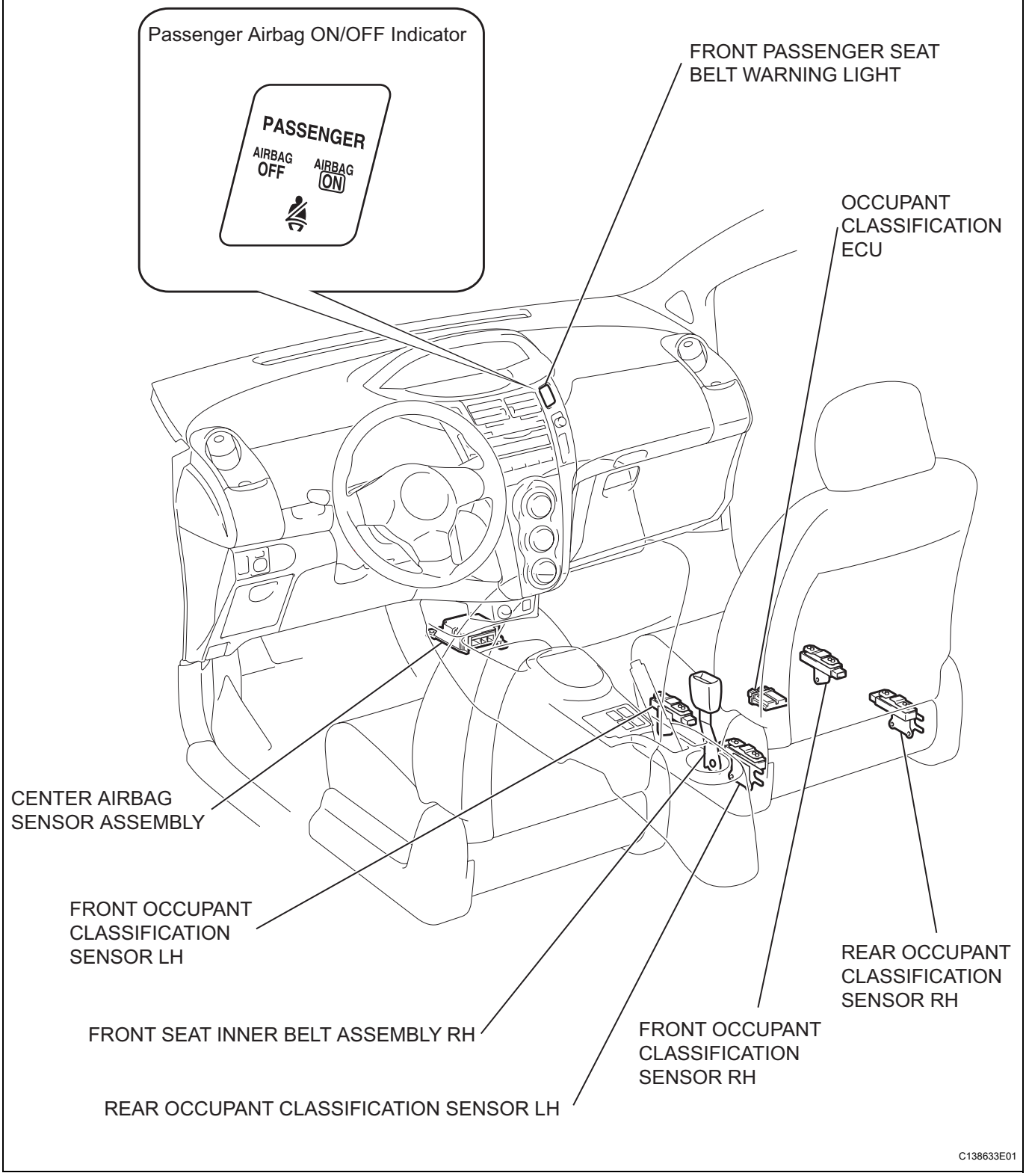

RS

SEDAN:

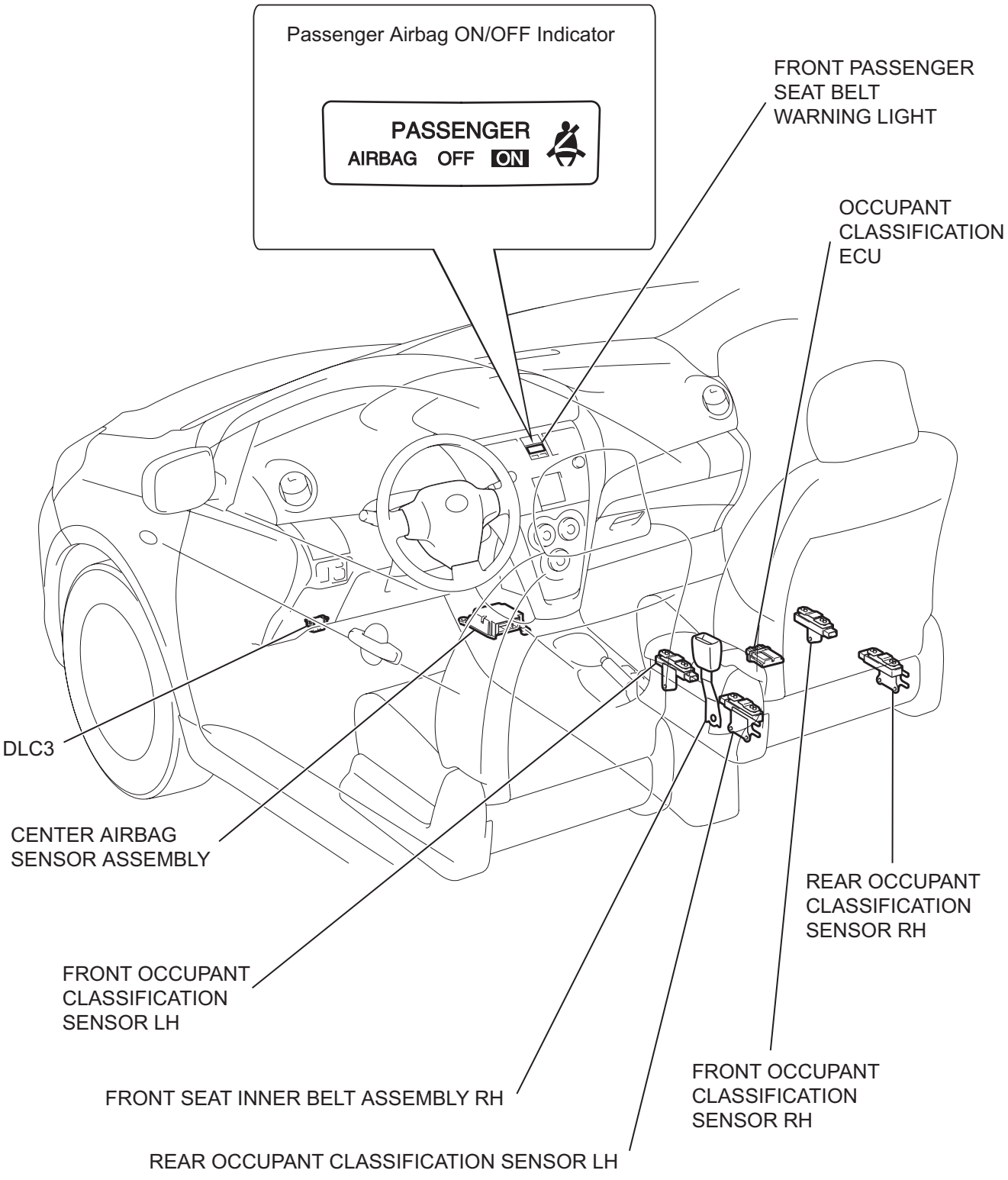
Passenger Airbag ON/OFF Indicator
PASSENGER
AIRBAG OFF ON
FRONT PASSENGER SEAT BELT WARNING LIGHT
OCCUPANT CLASSIFICATION ECU
DLC3
CENTER AIRBAG SENSOR ASSEMBLY
REAR OCCUPANT CLASSIFICATION SENSOR RH
FRONT OCCUPANT CLASSIFICATION SENSOR LH
FRONT SEAT INNER BELT ASSEMBLY RH
FRONT OCCUPANT CLASSIFICATION SENSOR RH
REAR OCCUPANT CLASSIFICATION SENSOR LH
C135762E01

SYSTEM DIAGRAM

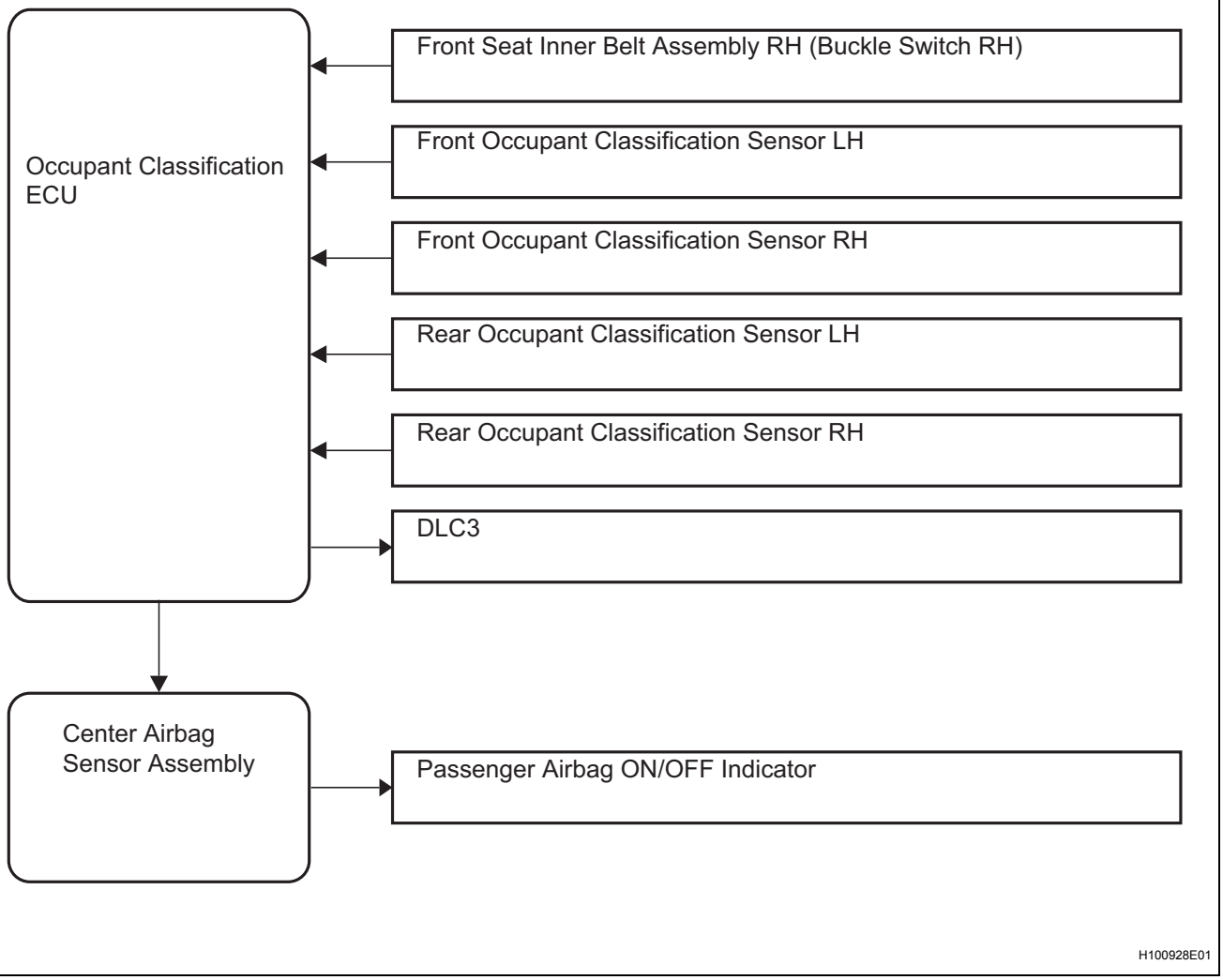

SYSTEM DESCRIPTION

1. GENERAL

(a) The front passenger occupant classification system judges whether the front passenger seat is occupied by an adult or child (with child seat) or is unoccupied, in accordance with the load that is applied to the front passenger seat and whether the seat belt is buckled. Thus, when appropriate, it restricts the deployment of the front passenger airbag, front passenger side airbag, and the front passenger seat belt pretensioner. In addition, the system informs the driver of the result of the judgment through the use of the airbag ON/ OFF indicator.

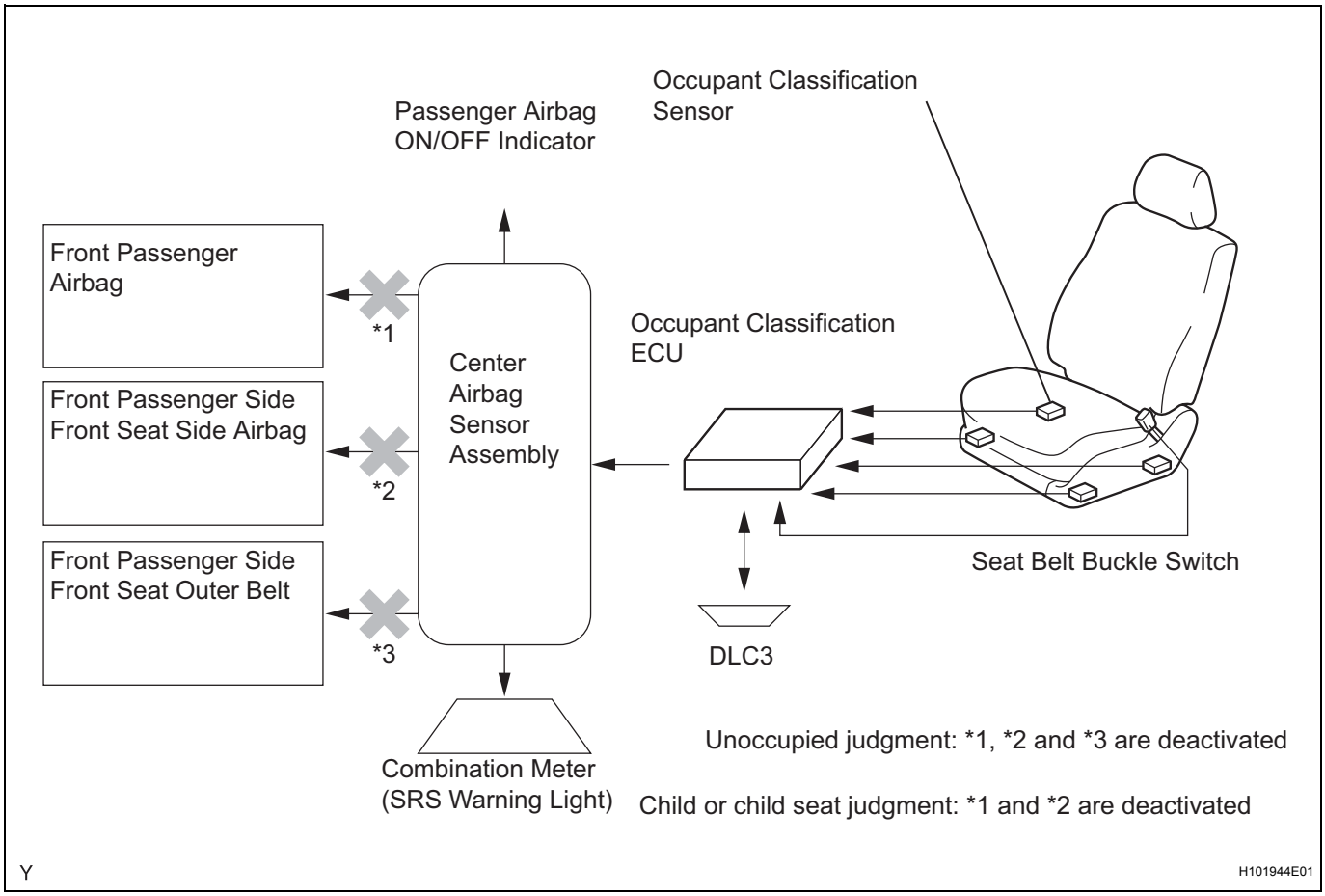

2. MAIN COMPONENTS

Component	Description
Occupant Classification Sensor	Outputs voltages to occupant classification ECU in accordance with load applied to sensor
Occupant Classification ECU	Constantly monitors weight of front passenger seat load, and judges occupancy condition in accordance with signals from occupant classification sensors and seat belt buckle switch
Airbag ON/OFF Indicator	Airbag ON indicator illuminates when front passenger and front passenger side airbags activated. Airbag OFF indicator illuminates when front passenger and front passenger side airbags deactivated.
Seat Belt Buckle Switch	Detects whether seat belt fastened and outputs appropriate signals to occupant classification ECU

HOW TO PROCEED WITH TROUBLESHOOTING

RS

1	VEHICLE BROUGHT TO WORKSHOP

NEXT

2	CUSTOMER PROBLEM ANALYSIS (See page IN-26)

NEXT

3	PASSENGER AIRBAG ON/OFF INDICATOR CHECK (See page RS-220)

NEXT

4	DTCs CHECK (Present and Past DTCs) (See page RS-223)

(a) Check for DTCs.

Result

Result	Proceed to
DTC is output.	A
DTC is not output.	B

B → GO TO PROBLEM SYMPTOMS TABLE

A

5	DTCs CHART (See page RS-226)

NEXT

6	CIRCUIT INSPECTION

NEXT

7	REPAIR OR REPLACEMENT

NEXT

8	DTC CLEARANCE (Present and Past DTCs) (See page RS-223)

(a) Clear the DTCs.

NEXT

9	DTC CHECK (Present and Past DTCs) (See page RS-223)

(a) Check for DTCs.

Result

Result	Proceed to
DTC is not output.	A
DTC is output.	B

B → Go to step 5

A

10	SYMPTOM SIMULATION (See page RS-220)

(a) Check the passenger airbag ON/OFF indicator condition.

Result

Result	Proceed to
Passenger airbag ON/OFF indicator is operating normally.	A
Passenger airbag ON/OFF indicator (OFF) and SRS warning light come on.	B

B → Go to step 5

A

11	CONFIRMATION TEST

NEXT

END

INITIALIZATION

1. ZERO POINT CALIBRATION

NOTICE:

Make sure that the front passenger seat is not occupied before performing the operation.

HINT:

Perform the zero point calibration and sensitivity check if any of the following conditions apply.

- The occupant classification ECU is replaced.
- Accessories (seatback tray and seat cover, etc.) are installed.
- The front passenger seat is removed from the vehicle.
- The passenger airbag ON/OFF indicator (OFF) comes on when the front passenger seat is not occupied.
- The vehicle is brought to the workshop for repair due to an accident or a collision.

(a) Zero point calibration and sensitivity check procedures

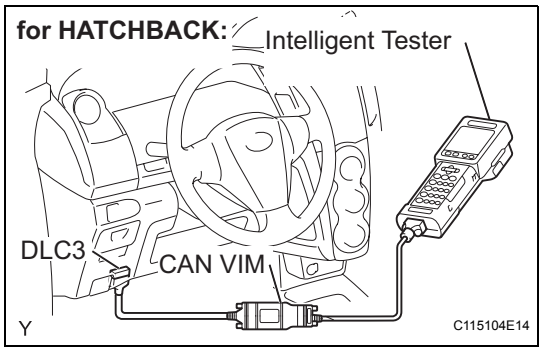

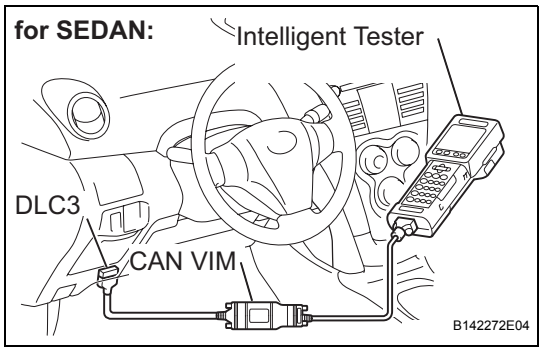

HINT:

Make sure that the zero point calibration has finished normally, and then perform the sensitivity check.

(1) Adjust the seat position in accordance with the table below.

Adjustment Item	Position
Slide Direction	Rearmost position
Reclining Angle	Upright position
Headrest Height	Lowest position
Lifter Height	Lowest position

(2) Connect the intelligent tester to the DLC3.

(3) Turn the ignition switch to the ON position.

(4) Perform the zero point calibration by following the prompts on the tester screen.
Refer to the following screen flow.

ZERO POINT CALIBRATION PROCEDURE

1:DIAGNOSIS - 1: OBD/MOBD - MODEL YEAR - MODEL SELECTION - 9: OCCUPANT DETECT

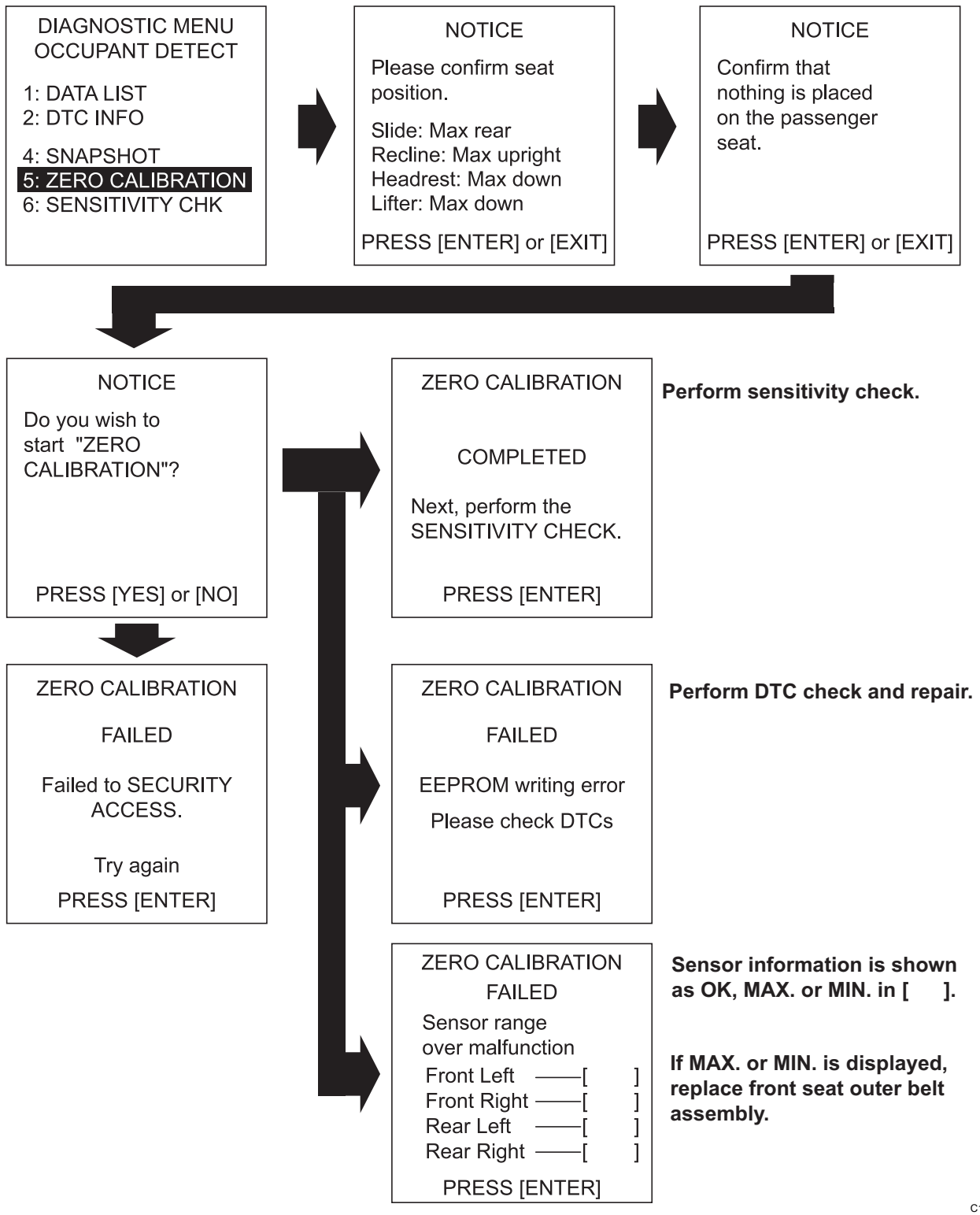

HINT:
Refer to the intelligent tester operator's manual for further details.
OK:
COMPLETED is displayed.

(5) Perform the sensitivity check by following the prompts on the tester screen.
(6) Confirm that the beginning sensor reading is within the standard range.
Standard range:
-3.2 to 3.2 kg (-7 to 7 lb)
(7) Place a 30 kg (66.14 lb) weight (e.g. a lead mass) onto the front passenger seat.
(8) Confirm that the sensitivity is within the standard range.

SENSITIVITY CHECK PROCEDURE

1: DIAGNOSIS → 1: OBD/MOBD → MODEL YEAR → MODEL SELECTION → 9: OCCUPANT DETECT

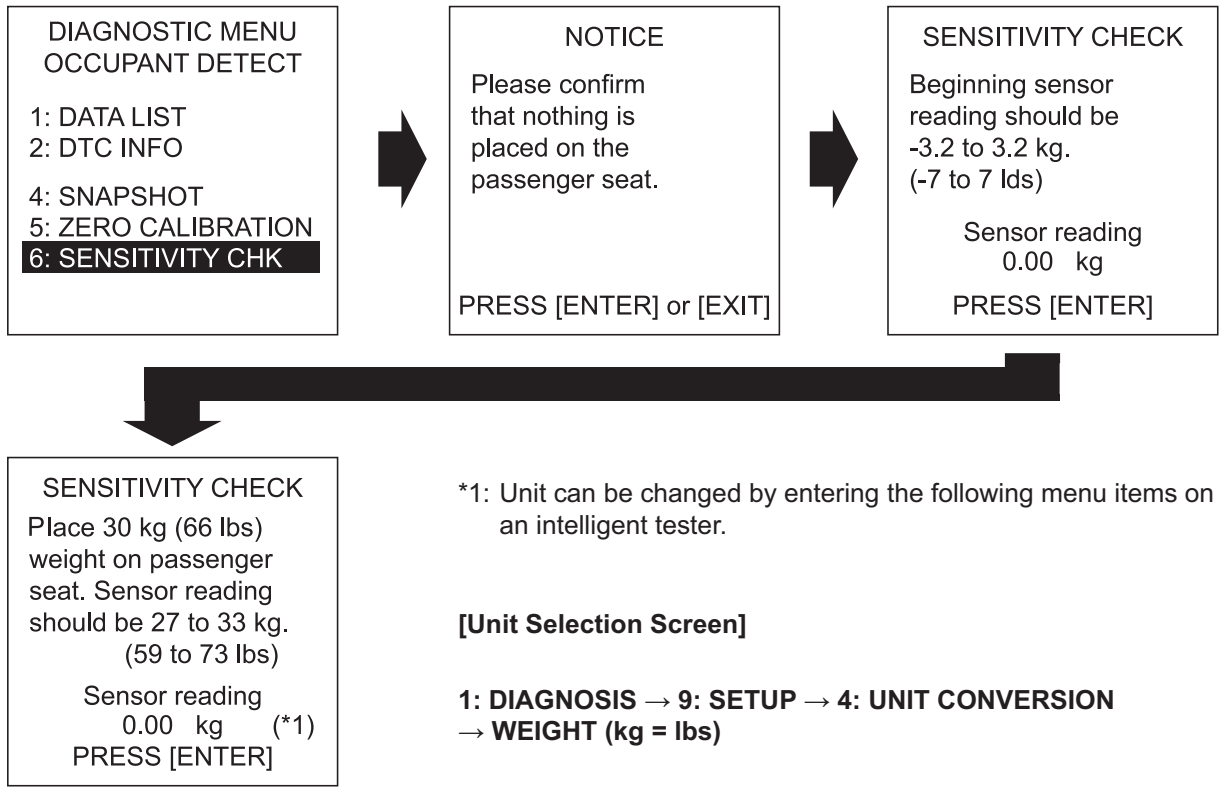

Standard range:
27 to 33 kg (59.52 to 72.75 lb)
HINT:
- When performing the sensitivity check, use a solid metal weight (the check result may not be accurate if a liquid weight is used).

- If the sensitivity deviates from the standard range, retighten the bolts of the front passenger seat taking care not to deform the seat rail. After performing this procedure, if the sensitivity is not within the standard range, replace the front seat assembly RH.
- If the zero point calibration has not finished normally, replace the front seat assembly RH.

PROBLEM SYMPTOMS TABLE

HINT:
Proceed to the troubleshooting for each circuit in the table below.

Symptom	Suspected area	See page
The front passenger seat condition differs from the indication by the passenger airbag ON/OFF indicator (DTC is not output).	Trouble in Passenger Airbag ON/OFF Indicator	RS-301

TERMINALS OF ECU

1. OCCUPANT CLASSIFICATION ECU

OCCUPANT CLASSIFICATION ECU:

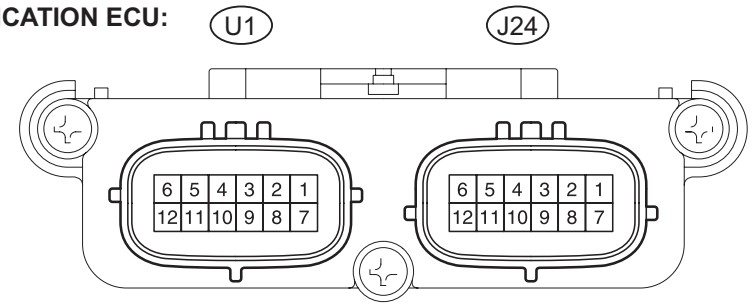

Symbols (Terminal No.)	Wiring Color	Terminal Description	Condition	Specification
+B (J24-1) - GND (J24-3)	V - W-B	Power source (ECU-B Fuse)	Always	11 to 14 V
DIA (J24-2) - GND (J24-3)	G - W-B	Diagnosis (DLC3)	Ignition switch on	Pulse generation
GND (J24-3) - Body ground	W-B - Body ground	Ground	Always	Below 1 Ω
FSR- (J24-4) - GND (J24-3)	Y - W-B	Center airbag sensor assembly communication line (-)	Always	Below 1 Ω
BGND (J24-5) - GND (J24-3)	P - W-B	Passenger side buckle switch ground line	Always	Below 1 Ω
IG (J24-7) - GND (J24-3)	O - W-B	Power source (IG2 Fuse)	Ignition switch on	11 to 14 V
FSR+ (J24-8) - FSR- (J24-4)	GR - Y	Center airbag sensor assembly communication line	Ignition switch on	Pulse generation
BSW (J24-9) - BGND (J24-5)	O - P	Passenger side buckle switch line	Buckle switch ON Buckle switch OFF	Pulse generation
SGD1 (U1-1) - GND (J24-3)	G - W-B	Occupant classification sensor front LH ground line	Always	Below 1 Ω
SGD2 (U1-2) - GND (J24-3)	O - W-B	Occupant classification sensor front RH ground line	Always	Below 1 Ω
SGD3 (U1-3) - GND (J24-3)	W - W-B	Occupant classification sensor rear LH ground line	Always	Below 1 Ω
SGD4 (U1-4) - GND (J24-3)	BR - W-B	Occupant classification sensor rear RH ground line	Always	Below 1 Ω
SVC1 (U1-11) - SGD1 (U1-1)	R - G	Occupant classification sensor front LH power supply line	Ignition switch on, load is applied to occupant classification sensor front LH	4.5 to 5.1 V
SVC2 (U1-12) - SGD2 (U1-2)	W - O	Occupant classification sensor front RH power supply line	Ignition switch on, load is applied to occupant classification sensor front RH	4.5 to 5.1 V
SVC3 (U1-5) - SGD3 (U1-3)	GR - W	Occupant classification sensor rear LH power supply line	Ignition switch on, load is applied to occupant classification sensor rear LH	4.5 to 5.1 V
SVC4 (U1-6) - SGD4 (U1-4)	V - BR	Occupant classification sensor rear RH power supply line	Ignition switch on, load is applied to occupant classification sensor rear RH	4.5 to 5.1 V

Symbols (Terminal No.)	Wiring Color	Terminal Description	Condition	Specification
SIG1 (U1-7) - SGD1 (U1-1)	SB - G	Occupant classification sensor front LH signal line	Ignition switch on, load is applied to occupant classification sensor front LH	0.2 to 4.7 V
SIG2 (U1-8) - SGD2 (U1-2)	L - O	Occupant classification sensor front RH signal line	Ignition switch on, load is applied to occupant classification sensor front RH	0.2 to 4.7 V
SIG3 (U1-9) - SGD3 (U1-3)	Y - W	Occupant classification sensor rear LH signal line	Ignition switch on, load is applied to occupant classification sensor rear LH	0.2 to 4.7 V
SIG4 (U1-10) - SGD4 (U1-4)	R - BR	Occupant classification sensor rear RH signal line	Ignition switch on, load is applied to occupant classification sensor rear RH	0.2 to 4.7 V

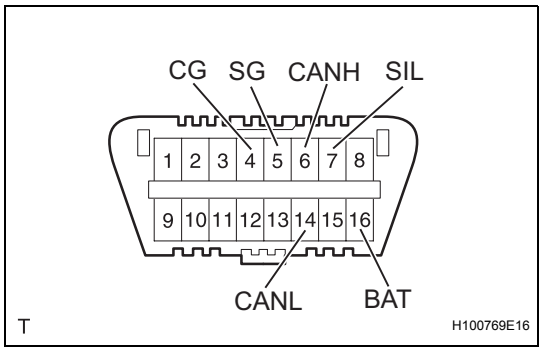

DIAGNOSIS SYSTEM

1. CHECK DLC3

(a) The ECU uses ISO 15765-4 for communication. The terminal arrangement of the DLC3 complies with SAE J1962 and matches the ISO 15765-4 format.

Symbols (Terminal No.)	Terminal Description	Condition	Specified Condition
SIL (7) - SG (5)	Bus "+" line	During transmission	Pulse generation
CG (4) - Body ground	Chassis ground	Always	Below 1 Ω
SG (5) - Body ground	Signal ground	Always	Below 1 Ω
BAT (16) - Body ground	Battery positive	Always	11 to 14 V
CANH (6) - CANL (14)	CAN bus line	Ignition switch OFF*	54 to 69 Ω
CANH (6) - CG (4)	HIGH-level CAN bus line	Ignition switch OFF*	200 Ω or higher
CANL (14) - CG (4)	LOW-level CAN bus line	Ignition switch OFF*	200 Ω or higher
CANH (6) - BAT (16)	HIGH-level CAN bus line	Ignition switch OFF*	6 kΩ or higher
CANL (14) - BAT (16)	LOW-level CAN bus line	Ignition switch OFF*	6 kΩ or higher

NOTICE:

***: Before measuring the resistance, leave the vehicle as is for at least 1 minute and do not operate the ignition switch, any other switches or the doors.**

If the result is not as specified, the DLC3 may have a malfunction. Repair or replace the harness and connector.

HINT:

Connect the cable of the intelligent tester to the CAN VIM, connect the CAN VIM to the DLC3, turn the ignition switch ON and attempt to use the tester. If the display indicates that a communication error has occurred, there is a problem either with the vehicle or with the tester.

- If communication is normal when the tester is connected to another vehicle, inspect the DLC3 of the original vehicle.
- If communication is still not possible when the tester is connected to another vehicle, the problem may be in the tester itself. Consult the Service Department listed in the tester's instruction manual.

2. SYMPTOM SIMULATION

HINT:

The most difficult case in troubleshooting is when no symptoms occur. In such cases, a thorough customer problem analysis must be carried out. Then the same or similar conditions and environment in which the problem occurred in the customer's vehicle should be simulated. Regardless of the technician's experience or skill, if troubleshooting proceeds without confirmation of the problem symptoms, something important is likely to be overlooked and incorrect guesses may be made at some points in the repair operation.

This leads to a standstill in troubleshooting.

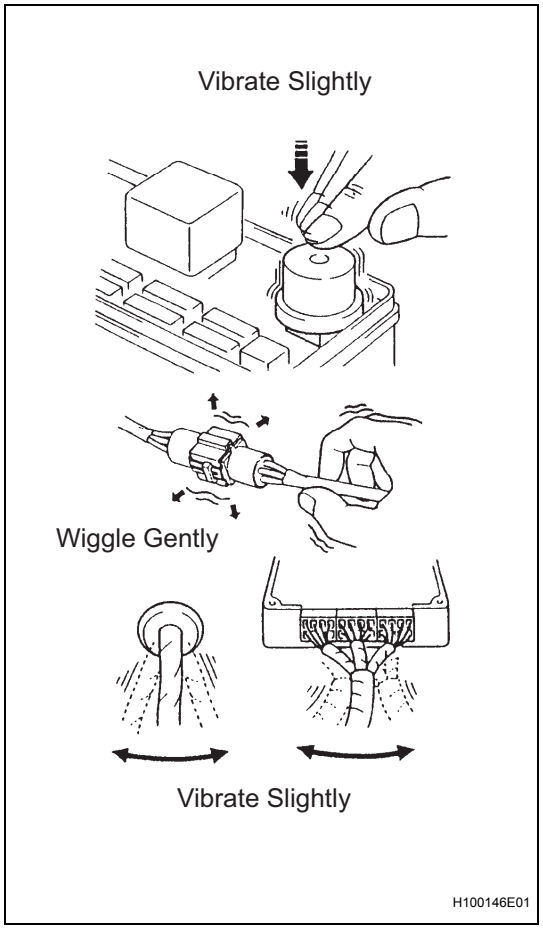

(a) Vibration method: When vibration seems to be the major cause.

HINT:

Perform the simulation method only during the primary check period (for approximately 6 seconds after the ignition switch is turned to the on position).

(1) Slightly vibrate the part of the sensor considered to be the cause of the problem with your fingers and check whether the malfunction occurs.

HINT:

Shaking the relays too strongly may result in open relays.

(2) Slightly shake the connector vertically and horizontally.

(3) Slightly shake the wire harness vertically and horizontally.

The connector joint and fulcrum of the vibration are the major areas to be checked thoroughly.

(b) Simulation method for DTC B1795: Turn the ignition switch from the lock to the on position, hold for 10 seconds, and then back to the lock position again 50 times in a row.

HINT:

DTC B1795 is output if the occupant classification ECU receives the ignition switch lock-on-lock signal 50 times in a row when a malfunction occurs in the power circuit for the occupant classification system.

3. FUNCTION OF PASSENGER AIRBAG ON/OFF INDICATOR

(a) Initial check

(1) Turn the ignition switch to the on position.

(2) The passenger airbag ON/OFF indicator (ON and OFF) comes on for approximately 4 seconds, then goes off for approximately 2 seconds.
(3) Approximately 6 seconds after the ignition switch is turned to the on position, the passenger airbag ON/OFF indicator will be ON/OFF depending on the conditions listed below.

RS

Condition	ON Indicator	OFF Indicator
Vacant	OFF	OFF
Adult is seated	ON	OFF
Child is seated	OFF	ON
Child restraint system is set	OFF	ON
Front passenger occupant classification system failure	OFF	ON

HINT:
- The passenger airbag ON/OFF indicator operates based on the timing chart below in order to check the indicator light circuit.

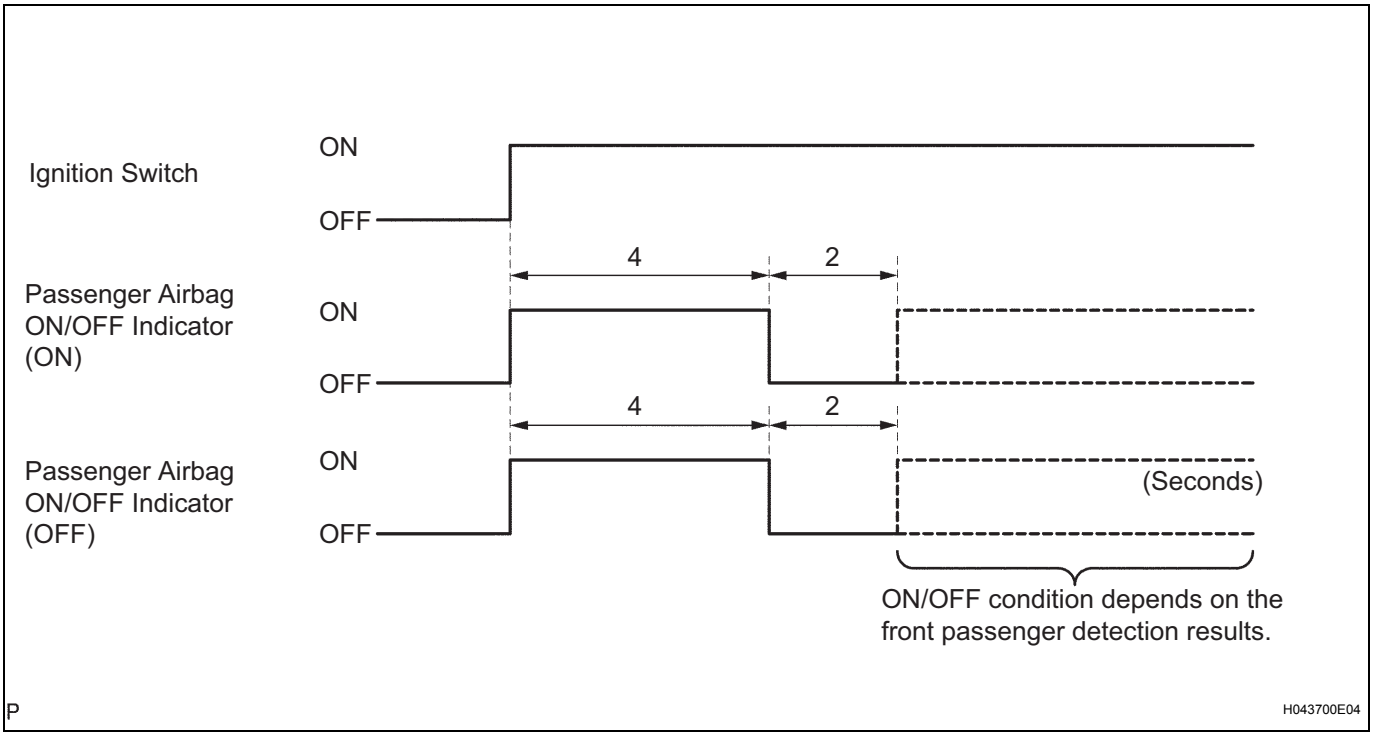

- When the occupant classification system has trouble, both the SRS warning light and the passenger airbag ON/OFF indicator (OFF) come on. In this case, check the DTCs in the airbag system first.

HATCHBACK:



SEDAN:



C135760E01

4. PASSENGER AIRBAG ON/OFF INDICATOR CHECK

(a) Turn the ignition switch to the on position.

(b) Check that the passenger airbag ON/OFF indicator (ON and OFF) comes on for approximately 4 seconds, then goes off for approximately 2 seconds.
HINT:
Refer to the table in the previous step regarding the passenger airbag ON/OFF indicator when approximately 6 seconds have elapsed after the ignition switch is turned to the on position.

RS

DTC CHECK / CLEAR

1. DTC CHECK

HINT:

- When DTC B1650/23 is detected as a result of troubleshooting for the airbag system, troubleshoot the occupant classification system.
- Use the intelligent tester to read and clear DTCs, otherwise the DTCs cannot be read and cleared.

(a) Check for DTCs.

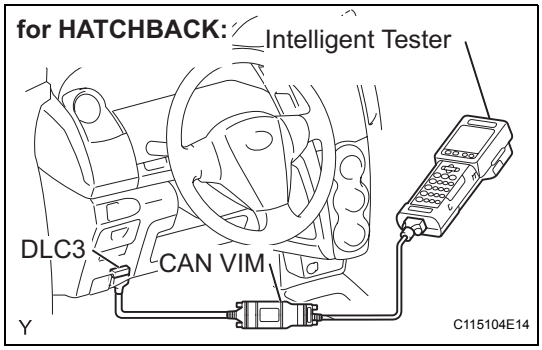

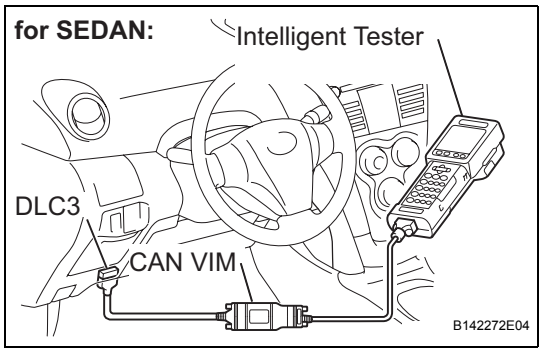

(1) Connect the intelligent tester to the DLC3.
(2) Turn the ignition switch to the on position.
(3) Check for DTCs by following the prompts on the tester screen.
HINT:
Refer to the intelligent tester operator's manual for further details.

(b) Clear the DTCs.
(1) Connect the intelligent tester to the DLC3.
(2) Turn the ignition switch to the on position.
(3) Clear the DTCs by following the prompts on the tester screen.
HINT:
Refer to the intelligent tester operator's manual for further details.

DATA LIST / ACTIVE TEST

HINT:
By accessing the DATA LIST displayed by the intelligent tester, you can check values of switches and sensors without removing any parts. Reading the DATA LIST as the first step of troubleshooting is one method to shorten diagnostic time.

RS

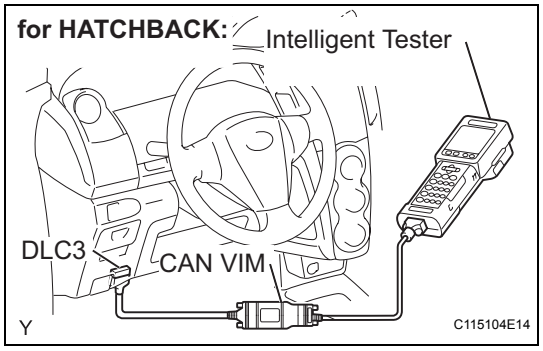

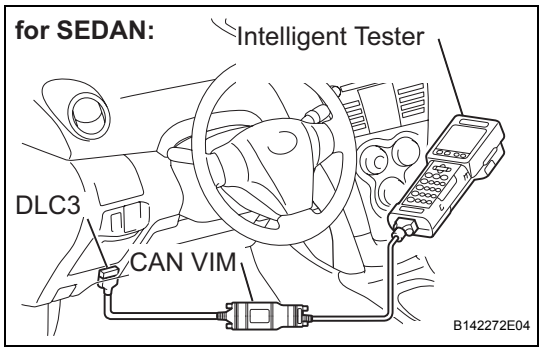

1. DATA LIST FOR OCCUPANT CLASSIFICATION ECU

(a) Connect the intelligent tester to the DLC3.

(b) Turn the ignition switch to the on position.

(c) Following the display on the tester screen, read the DATA LIST.

Item	Measurement Item/ Range (Display)	Normal Condition	Diagnostic Note
IG SW	Ignition switch condition/ ON: Ignition switch ON OFF: Ignition switch OFF	ON/OFF	-
P BUCKLE SW	Buckle switch (Front passenger side)/ UNSET: Front passenger side seat belt is unfastened SET: Front passenger side seat belt is fastened NG: Front passenger side seat belt is malfunctioning	UNSET/SET	-
Front passenger CLASS	Front passenger classification/ AF05: Adult (36 to 54 kg (79.37 to 119.05 lb)) is seated AM50: Adult (more than 54 kg (119.05 lb)) is seated CHILD: Child (less than 36 kg (79.37 lb)) is seated CRS: Child restraint system and front passenger side buckle switch ON, then 7 to 36 kg (15.43 to 79.37 lb) is set OFF: Vacant	AF05/AM50/CHILD/CRS/OFF	-
SENS RANGE INF	Sensor range information/ OK: Sensor value is within range NG: Sensor value is outside range	OK	-

Item	Measurement Item/ Range (Display)	Normal Condition	Diagnostic Note
FL SENS RANGE	Front left sensor range information/ OK: Sensor range is -17 to 27 kg (-37.48 to 59.52 lb) Min.: Less than -17 kg (-37.48 lb) Max.: More than 27 kg (59.52 lb)	OK	-
FR SENS RANGE	Front right sensor range information/ OK: Sensor range is -17 to 27 kg (-37.48 to 59.52 lb) Min.: Less than -17 kg (-37.48 lb) Max.: More than 27 kg (59.52 lb)	OK	-
RL SENS RANGE	Rear left sensor range information/ OK: Sensor range is -17 to 37 kg (-37.48 to 81.57 lb) Min.: Less than -17 kg (-37.48 lb) Max.: More than 37 kg (81.57 lb)	OK	-
RR SENS RANGE	Rear right sensor range information/ OK: Sensor range is -17 to 37 kg (-37.48 to 81.57 lb) Min.: Less than -17 kg (-37.48 lb) Max.: More than 37 kg (81.57 lb)	OK	-
FL SENS VOL	Front left sensor voltage/ Min.: 0 V Max.: 19.8 V	0 to 4.7 V	-
FR SENS VOL	Front right sensor voltage/ Min.: 0 V Max.: 19.8 V	0 to 4.7 V	-
RL SENS VOL	Rear left sensor voltage/ Min.: 0 V Max.: 19.8 V	0 to 4.7 V	-
RR SENS VOL	Rear right sensor voltage/ Min.: 0 V Max.: 19.8 V	0 to 4.7 V	-
FL SENS WEIGHT	Front left sensor weight information/ Min.: -17 kg (-37.48 lb) Max.: 27 kg (59.52 lb)	-17 to 27 kg (-37.48 to 59.52 lb)	-
FR SENS WEIGHT	Front right sensor weight information/ Min.: -17 kg (-37.48 lb) Max.: 27 kg (59.52 lb)	-17 to 27 kg (-37.48 to 59.52 lb)	-
RL SENS WEIGHT	Rear left sensor weight information/ Min.: -17 kg (-37.48 lb) Max.: 37 kg (81.57 lb)	-17 to 37 kg (-37.48 to 81.57 lb)	-
RR SENS WEIGHT	Rear right sensor weight information/ Min.: -17 kg (-37.48 lb) Max.: 37 kg (81.57 lb)	-17 to 37 kg (-37.48 to 81.57 lb)	-
TOTAL WEIGHT	Total weight information/ Min.: -68 kg (-149.91 lb) Max.: 128 kg (282.19 lb)	-68 to 128 kg (-149.91 to 282.19 lb)	-
#PRESENT CODES	Number of present DTCs Min.: 0, Max.: 255	0	-
#PAST CODES	Number of past DTCs Min.: 0, Max.: 255	0	-

DIAGNOSTIC TROUBLE CODE CHART

If a trouble code is displayed during the DTC check, check the circuit listed for the code in the table below (proceed to the page listed for that circuit).

Occupant Classification ECU

DTC No.	Detection Item	Trouble Area	See page
B1771	Passenger Side Buckle Switch Circuit Malfunction	1. Floor wire 2. Front seat inner belt assembly (Buckle switch RH) 3. Occupant classification ECU	RS-228
B1780	Front Occupant Classification Sensor LH Circuit Malfunction	1. Front seat wire RH 2. Front seat assembly RH (Front occupant classification sensor LH) 3. Occupant classification ECU	RS-234
B1781	Front Occupant Classification Sensor RH Circuit Malfunction	1. Front seat wire RH 2. Front seat assembly RH (Front occupant classification sensor RH) 3. Occupant classification ECU	RS-241
B1782	Rear Occupant Classification Sensor LH Circuit Malfunction	1. Front seat wire RH 2. Front seat assembly RH (Rear occupant classification sensor LH) 3. Occupant classification ECU	RS-248
B1783	Rear Occupant Classification Sensor RH Circuit Malfunction	1. Front seat wire RH 2. Front seat assembly RH (Rear occupant classification sensor RH) 3. Occupant classification ECU	RS-255
B1785	Front Occupant Classification Sensor LH Collision Detection	1. Front seat assembly RH (Front occupant classification sensor LH) 2. Occupant classification ECU	RS-262
B1786	Front Occupant Classification Sensor RH Collision Detection	1. Front seat assembly RH (Front occupant classification sensor RH) 2. Occupant classification ECU	RS-266
B1787	Rear Occupant Classification Sensor LH Collision Detection	1. Front seat assembly RH (Rear occupant classification sensor LH) 2. Occupant classification ECU	RS-270
B1788	Rear Occupant Classification Sensor RH Collision Detection	1. Front seat assembly RH (Rear occupant classification sensor RH) 2. Occupant classification ECU	RS-274
B1790	Center Airbag Sensor Assembly Communication Circuit Malfunction	1. Floor wire 2. Occupant classification ECU 3. Center airbag sensor assembly	RS-278
B1793	Occupant Classification Sensor Power Supply Circuit Malfunction	1. Front seat wire RH 2. Front seat assembly RH (Occupant classification sensors) 3. Occupant classification ECU	RS-284
B1794	Open in Occupant Classification ECU Battery Positive Line	1. Wire harness 2. Occupant classification ECU	RS-292
B1795	Occupant Classification ECU Malfunction	1. Occupant classification ECU	RS-297
B1796	Sleep Operation Failure of Occupant Classification ECU	1. Occupant classification ECU	RS-299

DTC	B1771	Passenger Side Buckle Switch Circuit Malfunction

DESCRIPTION

RS

The passenger side buckle switch circuit consists of the occupant classification ECU and the front seat inner belt assembly RH.

DTC B1771 is recorded when a malfunction is detected in the passenger side buckle switch circuit.

Troubleshoot DTC B1771 first when DTCs B1771 and B1795 are output simultaneously.

DTC No.	DTC Detecting Condition	Trouble Area
B1771	• Occupant classification ECU detects line short circuit signal, open circuit signal, short circuit to ground signal or short circuit to B+ signal in passenger side buckle switch circuit for 2 seconds • Passenger side buckle switch malfunction • Occupant classification ECU malfunction	• Floor wire • Front seat inner belt assembly RH (Buckle switch RH) • Occupant classification ECU

WIRING DIAGRAM

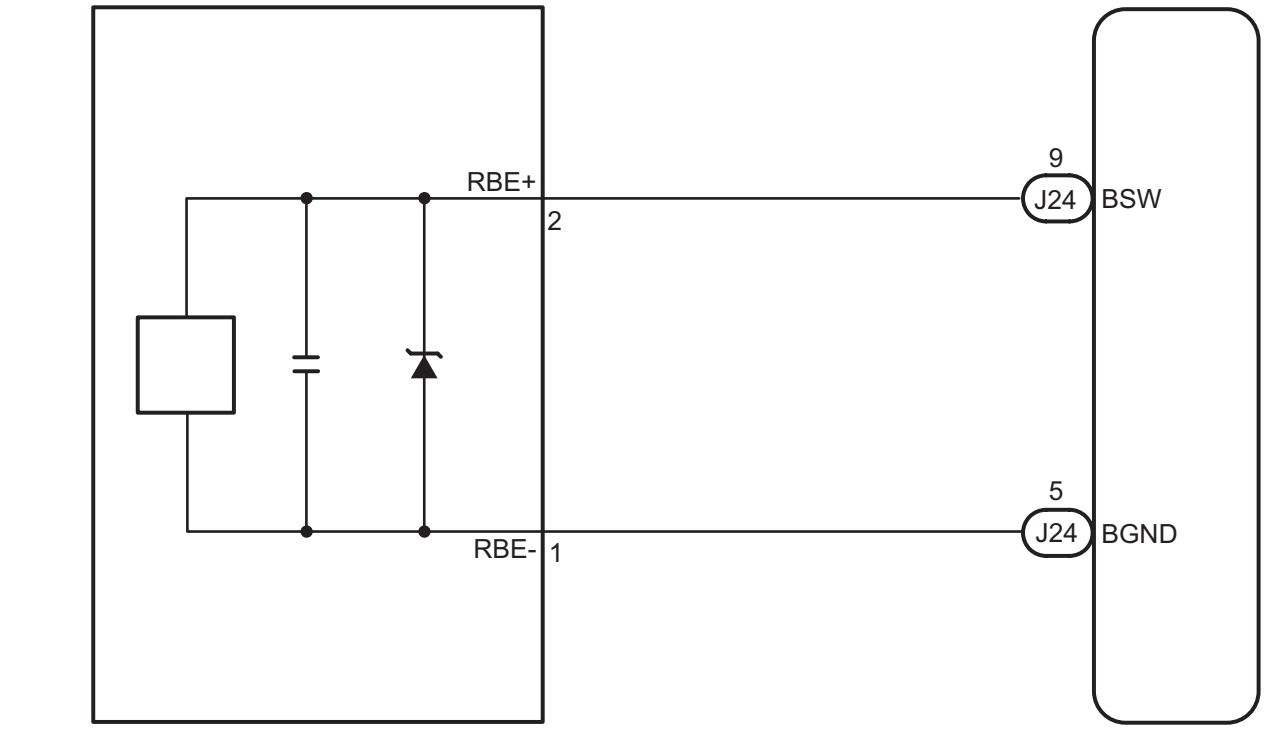

INSPECTION PROCEDURE

HINT:

- If troubleshooting (wire harness inspection) is difficult to perform, remove the front passenger seat installation bolts to see the under surface of the seat cushion.
- In the above case, hold the seat so that it does not tip over. Holding the seat for a long period of time may cause a problem, such as seat rail deformation. Hold the seat up only for as long as necessary.

1	CHECK DTC

(a) Turn the ignition switch to the on position.
(b) Clear the DTCs stored in the memory (See page RS-223).
HINT:
First clear DTCs stored in the occupant classification ECU and then in the center airbag sensor assembly.
(c) Turn the ignition switch to the lock position.
(d) Turn the ignition switch to the on position.
(e) Check the DTCs (See page RS-223).
OK:
DTC B1771 is not output.
HINT:
Codes other than DTC B1771 may be output at this time, but they are not related to this check.

OK → **USE SIMULATION METHOD TO CHECK**

NG

2	CHECK CONNECTION OF CONNECTORS

(a) Turn the ignition switch to the lock position.
(b) Disconnect the negative (-) terminal cable from the battery, and wait for at least 90 seconds.
(c) Check that the connectors are properly connected to the occupant classification ECU and the front seat inner belt assembly RH.
OK:
The connectors are properly connected.

NG → **CONNECT CONNECTORS**

OK

RS

3	CHECK FLOOR WIRE (TO B+)

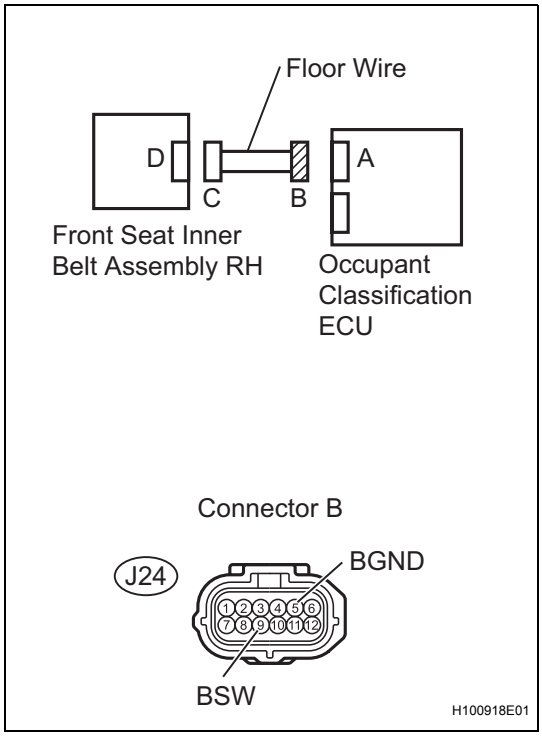

(a) Disconnect the connectors from the occupant classification ECU and the front seat inner belt assembly RH.
(b) Connect the negative (-) terminal cable to the battery.
(c) Turn the ignition switch to the on position.
(d) Measure the voltage.

Standard voltage

Tester connection	Condition	Specified condition
J24-9 (BSW) - Body ground	Ignition switch on	Below 1 V
J24-5 (BGND) - Body ground	Ignition switch on	Below 1 V

NG → **REPAIR OR REPLACE FLOOR WIRE**

OK

4	CHECK FLOOR WIRE (FOR OPEN)

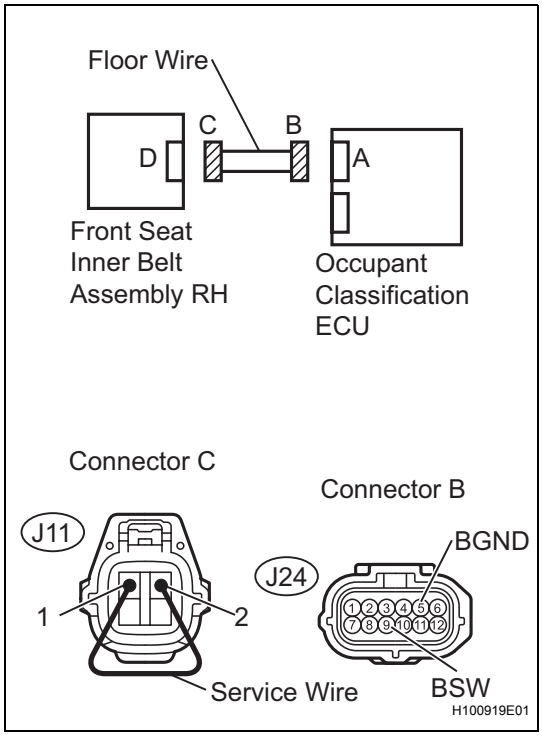

(a) Turn the ignition switch to the lock position.
(b) Disconnect the negative (-) terminal cable from the battery, and wait for at least 90 seconds.
(c) Using a service wire, connect J11-2 and J11-1 of connector C.

NOTICE:
Do not forcibly insert the service wire into the terminals of the connector when connecting.

(d) Measure the resistance.

Standard resistance

Tester connection	Condition	Specified condition
J24-9 (BSW) - J24-5 (BGND)	Always	Below 1 Ω

NG → **REPAIR OR REPLACE FLOOR WIRE**

OK

5 CHECK FLOOR WIRE (FOR SHORT)

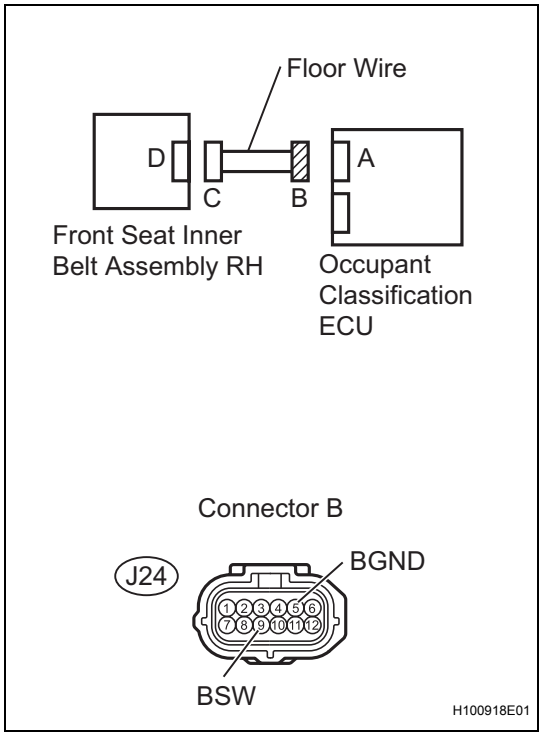

(a) Disconnect the service wire from connector C.
(b) Measure the resistance.
Standard resistance

Tester connection	Condition	Specified condition
J24-9 (BSW) - J24-5 (BGND)	Always	1 MΩ or higher

NG → **REPAIR OR REPLACE FLOOR WIRE**

OK

6 CHECK FLOOR WIRE (TO GROUND)

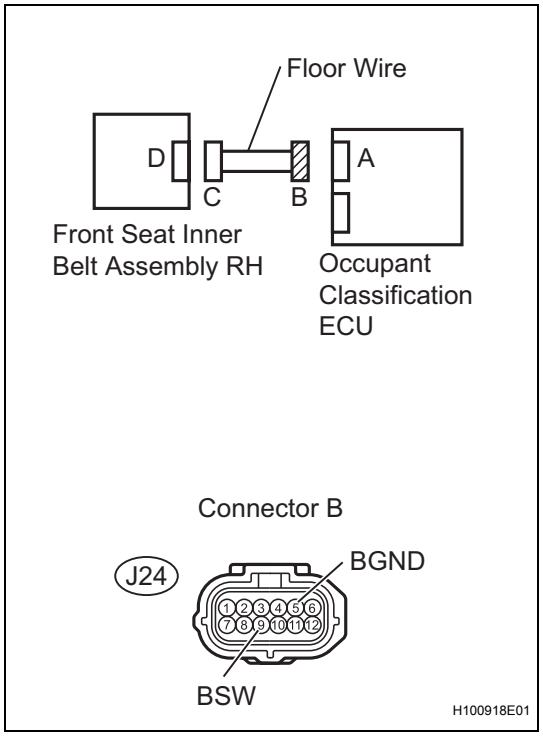

(a) Measure the resistance.
Standard resistance

Tester connection	Condition	Specified condition
J24-9 (BSW) - Body ground	Always	1 MΩ or higher
J24-5 (BGND) - Body ground	Always	1 MΩ or higher

NG → **REPAIR OR REPLACE FLOOR WIRE**

OK

7	CHECK DTC

(a) Connect the connectors to the occupant classification ECU and the front seat inner belt assembly RH.
(b) Connect the negative (-) terminal cable to the battery.
(c) Turn the ignition switch to the on position.
(d) Clear the DTCs stored in the memory (See page RS-223).
HINT:
First clear DTCs stored in the occupant classification ECU and then in the center airbag sensor assembly.
(e) Turn the ignition switch to the lock position.
(f) Turn the ignition switch to the on position.
(g) Check the DTCs (See page RS-223).
OK:
DTC B1771 is not output.
HINT:
Codes other than DTC B1771 may be output at this time, but they are not related to this check.

OK → **USE SIMULATION METHOD TO CHECK**

NG

8	REPLACE FRONT SEAT INNER BELT ASSEMBLY RH

(a) Turn the ignition switch to the lock position.
(b) Disconnect the negative (-) terminal cable from the battery, and wait for at least 90 seconds.
(c) Replace the front seat inner belt assembly RH.
for Hatchback: (See page SB-39)
for Sedan: (See page SB-33)
HINT:
Perform the inspection using parts from a normal vehicle if possible.
(d) Connect the negative (-) terminal cable to the battery.
(e) Turn the ignition switch to the on position.
(f) Clear the DTCs stored in the memory (See page RS-223).
HINT:
First clear DTCs stored in the occupant classification ECU and then in the center airbag sensor assembly.
(g) Turn the ignition switch to the lock position.
(h) Turn the ignition switch to the on position.
(i) Check the DTCs (See page RS-223).
OK:
DTC B1771 is not output.
HINT:
Codes other than DTC B1771 may be output at this time, but they are not related to this check.

OK → **END**

NG

9	REPLACE OCCUPANT CLASSIFICATION ECU

(a) Turn the ignition switch to the lock position.
(b) Disconnect the negative (-) terminal cable from the battery, and wait for at least 90 seconds.
(c) Replace the occupant classification ECU (See page RS-493).

NEXT

10	PERFORM ZERO POINT CALIBRATION

(a) Connect the negative (-) terminal cable to the battery.
(b) Connect the intelligent tester to the DLC3.
(c) Turn the ignition switch to the on position.
(d) Using the intelligent tester, perform the zero point calibration (See page RS-215).
OK:
COMPLETED is displayed on the tester.

NEXT

11	PERFORM SENSITIVITY CHECK

(a) Using the intelligent tester, perform the sensitivity check (See page RS-215).
(1) Confirm that nothing is placed on the passenger seat.
(2) Confirm that the beginning sensor reading is within the standard range.
Standard range:
-3.2 to 3.2 kg (-7 to 7 lb)
(3) Place a 30 kg (66.14 lb) weight (e.g. a lead mass) onto the front passenger seat.
(4) Confirm that the sensitivity is within the standard range.
Standard range:
27 to 33 kg (59.52 to 72.75 lb)
HINT:
When performing the sensitivity check, use a solid metal weight (the check result may not be accurate if a liquid weight is used).

NEXT

END

DTC	B1780	Front Occupant Classification Sensor LH Circuit Malfunction

DESCRIPTION

RS

The front occupant classification sensor LH circuit consists of the occupant classification ECU and the front occupant classification sensor LH.

DTC B1780 is recorded when a malfunction is detected in the front occupant classification sensor LH circuit.

DTC No.	DTC Detecting Condition	Trouble Area
B1780	• Occupant classification ECU detects line short circuit signal, open circuit signal, short circuit to ground signal or short circuit to B+ signal in front occupant classification sensor LH circuit for 2 seconds • Front occupant classification sensor LH malfunction • Occupant classification ECU malfunction	• Front seat wire RH • Front seat assembly RH (Front occupant classification sensor LH) • Occupant classification ECU

WIRING DIAGRAM

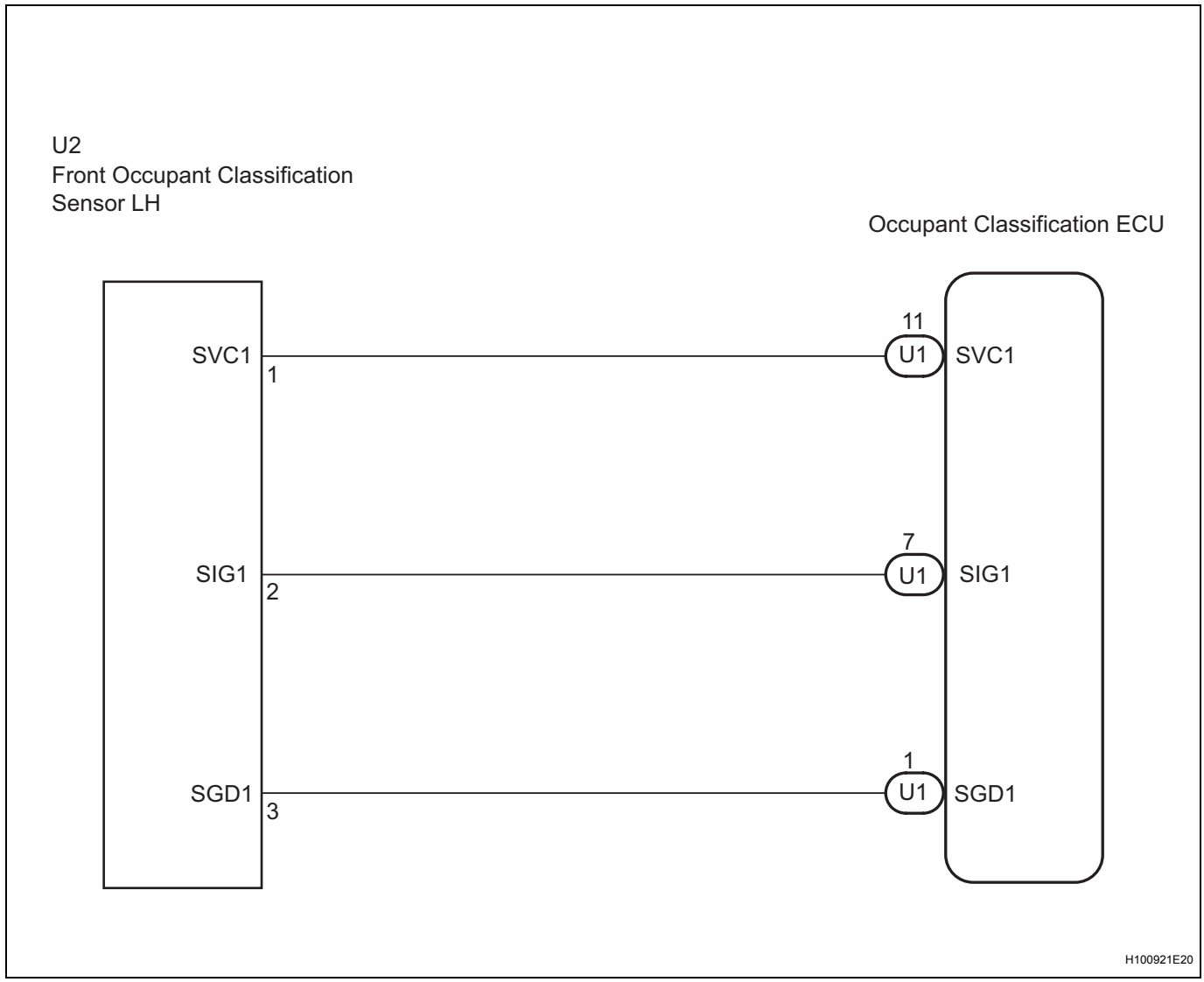

INSPECTION PROCEDURE

HINT:

- If troubleshooting (wire harness inspection) is difficult to perform, remove the front passenger seat installation bolts to see the under surface of the seat cushion.
- In the above case, hold the seat so that it does not tip over. Holding the seat for a long period of time may cause a problem, such as seat rail deformation. Hold the seat up only for as long as necessary.

RS

1	CHECK DTC

(a) Turn the ignition switch to the on position.
(b) Clear the DTCs stored in the memory (See page RS-223).
HINT:
First clear DTCs stored in the occupant classification ECU and then in the center airbag sensor assembly.
(c) Turn the ignition switch to the lock position.
(d) Turn the ignition switch to the on position.
(e) Check the DTCs (See page RS-223).
OK:
DTC B1780 is not output.
HINT:
Codes other than DTC B1780 may be output at this time, but they are not related to this check.

OK → **USE SIMULATION METHOD TO CHECK**

NG

2	CHECK CONNECTION OF CONNECTORS

(a) Turn the ignition switch to the lock position.
(b) Disconnect the negative (-) terminal cable from the battery, and wait for at least 90 seconds.
(c) Check that the connectors are properly connected to the occupant classification ECU and the front occupant classification sensor LH.
OK:
The connectors are properly connected.

NG → **CONNECT CONNECTORS**

OK

RS

3 CHECK FRONT SEAT WIRE RH (TO B+)

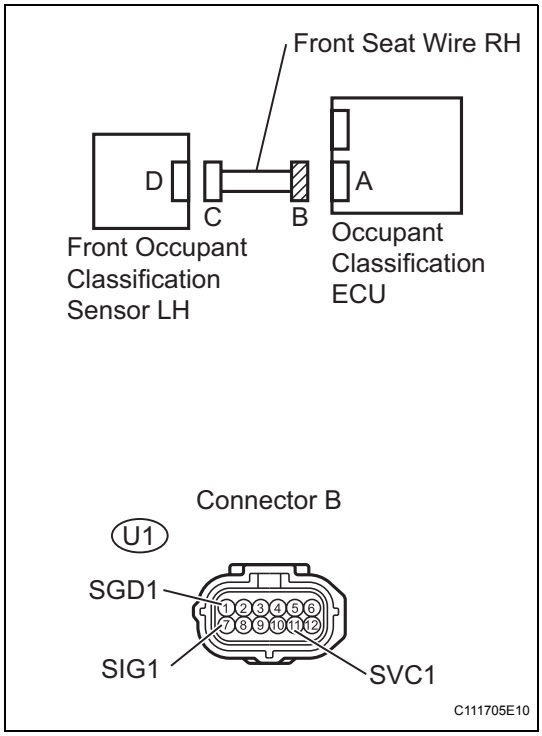

(a) Disconnect the connectors from the occupant classification ECU and the front occupant classification sensor LH.
(b) Connect the negative (-) terminal cable to the battery.
(c) Turn the ignition switch to the on position.
(d) Measure the voltage.

Standard voltage

Tester connection	Condition	Specified condition
U1-1 (SGD1) - Body ground	Ignition switch on	Below 1 V
U1-7 (SIG1) - Body ground	Ignition switch on	Below 1 V
U1-11 (SVC1) - Body ground	Ignition switch on	Below 1 V

NG → **REPAIR OR REPLACE FRONT SEAT WIRE RH**

OK

4 CHECK FRONT SEAT WIRE RH (FOR OPEN)

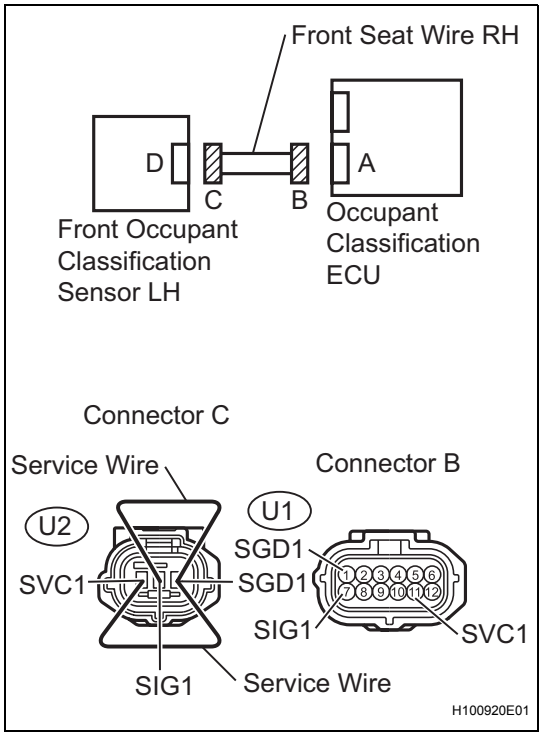

(a) Turn the ignition switch to the lock position.
(b) Disconnect the negative (-) terminal cable from the battery, and wait for at least 90 seconds.
(c) Using a service wire, connect U2-1 (SVC1) and U2-3 (SGD1), and connect U2-2 (SIG1) and U2-3 (SGD1) of connector C.

NOTICE:
Do not forcibly insert the service wire into the terminals of the connector when connecting.

(d) Measure the resistance.

Standard resistance

Tester connection	Condition	Specified condition
U1-7 (SIG1) - U1-1 (SGD1)	Always	Below 1 Ω
U1-11 (SVC1) - U1-1 (SGD1)	Always	Below 1 Ω

NG → **REPAIR OR REPLACE FRONT SEAT WIRE RH**

OK

5 CHECK FRONT SEAT WIRE RH (FOR SHORT)

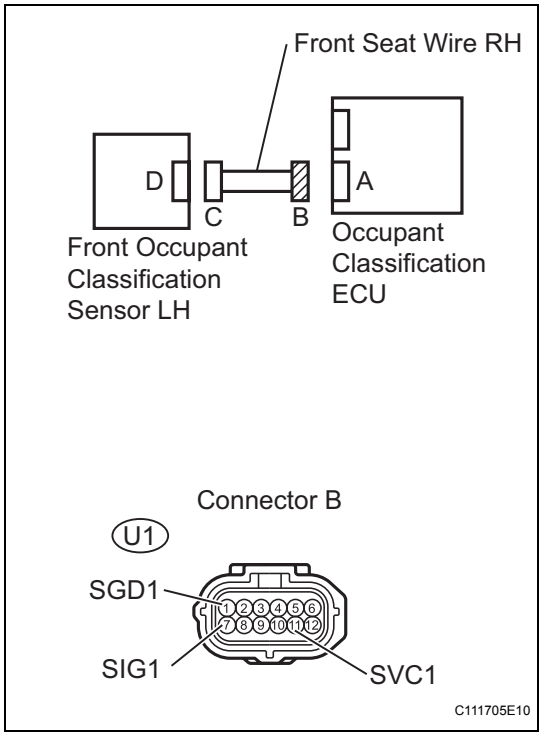

(a) Disconnect the service wire from connector C.
(b) Measure the resistance.
Standard resistance

Tester connection	Condition	Specified condition
U1-7 (SIG1) - U1-1 (SGD1)	Always	1 MΩ or higher
U1-11 (SVC1) - U1-1 (SGD1)	Always	1 MΩ or higher
U1-7 (SIG1) - U1-11 (SVC1)	Always	1 MΩ or higher

NG → **REPAIR OR REPLACE FRONT SEAT WIRE RH**

OK

6 CHECK FRONT SEAT WIRE RH (TO GROUND)

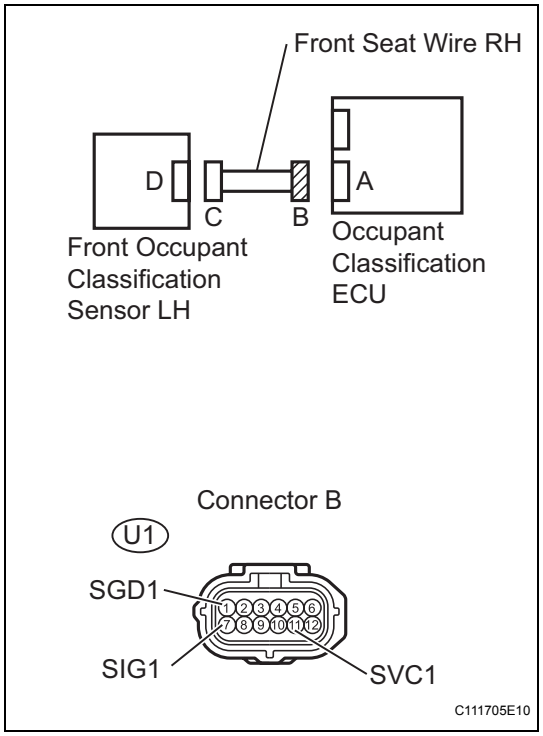

(a) Measure the resistance.
Standard resistance

Tester connection	Condition	Specified condition
U1-1 (SGD1) - Body ground	Always	1 MΩ or higher
U1-7 (SIG1) - Body ground	Always	1 MΩ or higher
U1-11 (SVC1) - Body ground	Always	1 MΩ or higher

NG → **REPAIR OR REPLACE FRONT SEAT WIRE RH**

OK

RS

7	CHECK DTC

(a) Connect the connectors to the occupant classification ECU and the front occupant classification sensor LH.
(b) Connect the negative (-) terminal cable to the battery.
(c) Turn the ignition switch to the on position.
(d) Clear the DTCs stored in the memory (See page RS-223).
HINT:
First clear DTCs stored in the occupant classification ECU and then in the center airbag sensor assembly.
(e) Turn the ignition switch to the lock position.
(f) Turn the ignition switch to the on position.
(g) Check the DTCs (See page RS-223).
OK:
DTC B1780 is not output.
HINT:
Codes other than DTC B1780 may be output at this time, but they are not related to this check.

OK	USE SIMULATION METHOD TO CHECK

NG

8	REPLACE OCCUPANT CLASSIFICATION ECU

(a) Turn the ignition switch to the lock position.
(b) Disconnect the negative (-) terminal cable from the battery, and wait for at least 90 seconds.
(c) Replace the occupant classification ECU (See page RS-493).
HINT:
Perform the inspection using parts from a normal vehicle if possible.

NEXT

9	PERFORM ZERO POINT CALIBRATION

(a) Connect the negative (-) terminal cable to the battery.
(b) Connect the intelligent tester to the DLC3.
(c) Turn the ignition switch to the on position.
(d) Using the intelligent tester, perform the zero point calibration (See page RS-215).
OK:
COMPLETED is displayed.

NG	Go to step 12

OK

10	PERFORM SENSITIVITY CHECK

(a) Using the intelligent tester, perform the sensitivity check (See page RS-215).
  (1) Confirm that nothing is placed on the passenger seat.
  (2) Confirm that the beginning sensor reading is within the standard range.
  Standard range:
  -3.2 to 3.2 kg (-7 to 7 lb)
  (3) Place a 30 kg (66.14 lb) weight (e.g. a lead mass) onto the front passenger seat.
  (4) Confirm that the sensitivity is within the standard range.
  Standard range:
  27 to 33 kg (59.52 to 72.75 lb)
  HINT:
  When performing the sensitivity check, use a solid metal weight (the check result may not be accurate if a liquid weight is used).

NG → **Go to step 12**

OK

11	CHECK DTC

(a) Connect the negative (-) terminal cable to the battery.
(b) Turn the ignition switch to the on position.
(c) Clear the DTCs stored in the memory (See page RS-223).
  HINT:
  First clear DTCs stored in the occupant classification ECU and then in the center airbag sensor assembly.
(d) Turn the ignition switch to the lock position.
(e) Turn the ignition switch to the on position.
(f) Check the DTCs (See page RS-223).
  OK:
  DTC B1780 is not output.
  HINT:
  Codes other than DTC B1780 may be output at this time, but they are not related to this check.

OK → **END**

NG

12	REPLACE FRONT SEAT ASSEMBLY RH

(a) Turn the ignition switch to the lock position.
(b) Disconnect the negative (-) terminal cable from the battery, and wait for at least 90 seconds.
(c) Replace the front seat assembly RH.

for Hatchback: (See page SE-28)
for Sedan: (See page SE-5)

NEXT

RS

13	PERFORM ZERO POINT CALIBRATION

(a) Connect the negative (-) terminal cable to the battery.
(b) Connect the intelligent tester to the DLC3.
(c) Turn the ignition switch to the on position.
(d) Using the intelligent tester, perform the zero point calibration (See page RS-215).
OK:
COMPLETED is displayed.

NEXT

14	PERFORM SENSITIVITY CHECK

(a) Using the intelligent tester, perform the sensitivity check (See page RS-215).
(1) Confirm that nothing is placed on the passenger seat.
(2) Confirm that the beginning sensor reading is within the standard range.
Standard range:
-3.2 to 3.2 kg (-7 to 7 lb)
(3) Place a 30 kg (66.14 lb) weight (e.g. a lead mass) onto the front passenger seat.
(4) Confirm that the sensitivity is within the standard range.
Standard range:
27 to 33 kg (59.52 to 72.75 lb)
HINT:
When performing the sensitivity check, use a solid metal weight (the check result may not be accurate if a liquid weight is used).

NEXT

END

DTC	B1781	Front Occupant Classification Sensor RH Circuit Malfunction

DESCRIPTION

The front occupant classification sensor RH circuit consists of the occupant classification ECU and the front occupant classification sensor RH.

DTC B1781 is recorded when a malfunction is detected in the front occupant classification sensor RH circuit.

DTC No.	DTC Detecting Condition	Trouble Area
B1781	• Occupant classification ECU detects line short circuit signal, open circuit signal, short circuit to ground signal or short circuit to B+ signal in front occupant classification sensor RH circuit for 2 seconds • Front occupant classification sensor RH malfunction • Occupant classification ECU malfunction	• Front seat wire RH • Front seat assembly RH (Front occupant classification sensor RH) • Occupant classification ECU

WIRING DIAGRAM

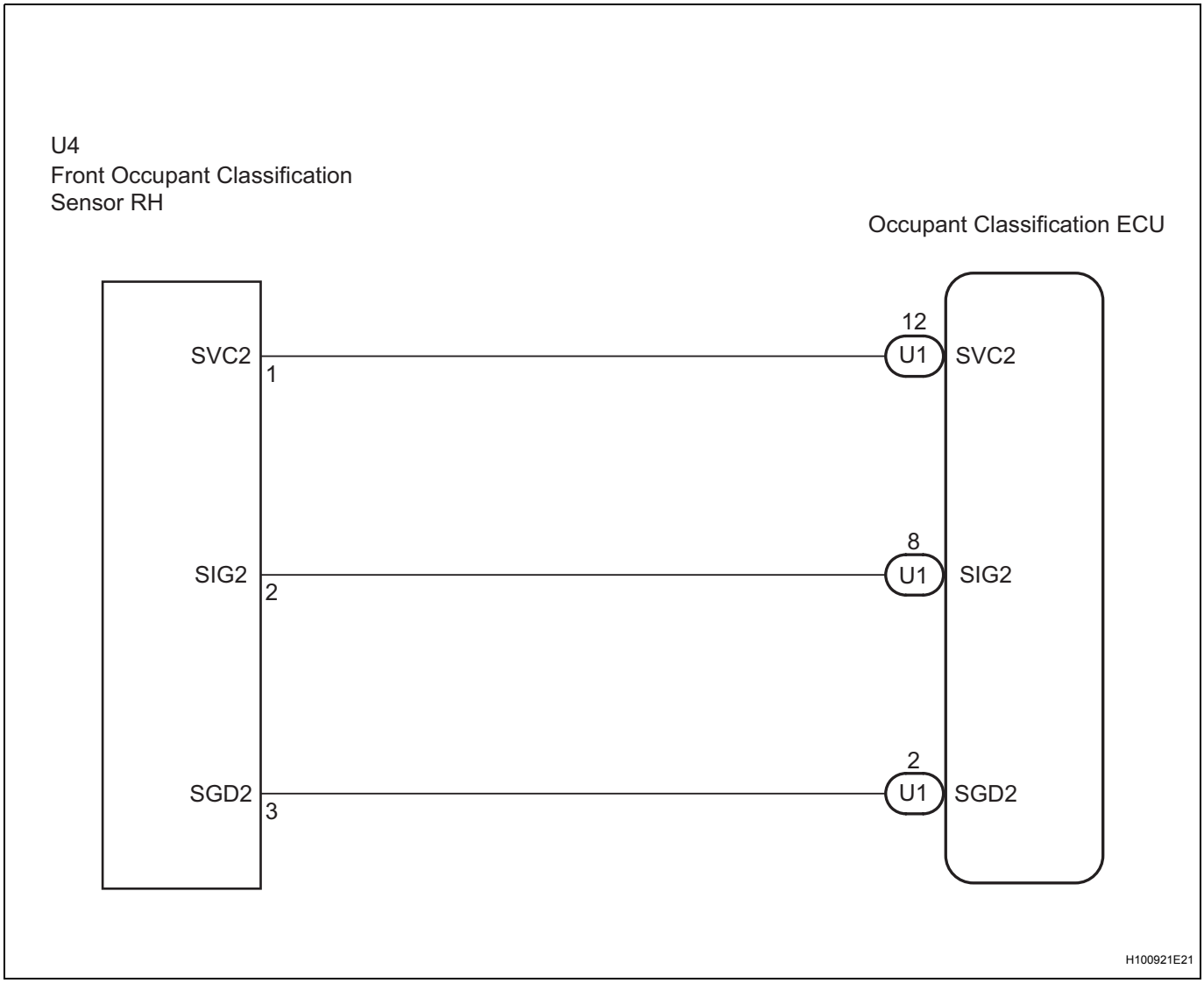

INSPECTION PROCEDURE

HINT:

- If troubleshooting (wire harness inspection) is difficult to perform, remove the front passenger seat installation bolts to see the under surface of the seat cushion.
- In the above case, hold the seat so that it does not tip over. Holding the seat for a long period of time may cause a problem, such as seat rail deformation. Hold the seat up only for as long as necessary.

RS

1	CHECK DTC

(a) Turn the ignition switch to the on position.
(b) Clear the DTCs stored in the memory (See page RS-223).
HINT:
First clear DTCs stored in the occupant classification ECU and then in the center airbag sensor assembly.
(c) Turn the ignition switch to the lock position.
(d) Turn the ignition switch to the on position.
(e) Check the DTCs (See page RS-223).
OK:
DTC B1781 is not output.
HINT:
Codes other than DTC B1781 may be output at this time, but they are not related to this check.

OK → **USE SIMULATION METHOD TO CHECK**

NG

2	CHECK CONNECTION OF CONNECTORS

(a) Turn the ignition switch to the lock position.
(b) Disconnect the negative (-) terminal cable from the battery, and wait for at least 90 seconds.
(c) Check that the connectors are properly connected to the occupant classification ECU and the front occupant classification sensor RH.
OK:
The connectors are properly connected.

NG → **CONNECT CONNECTORS**

OK

3 CHECK FRONT SEAT WIRE RH (TO B+)

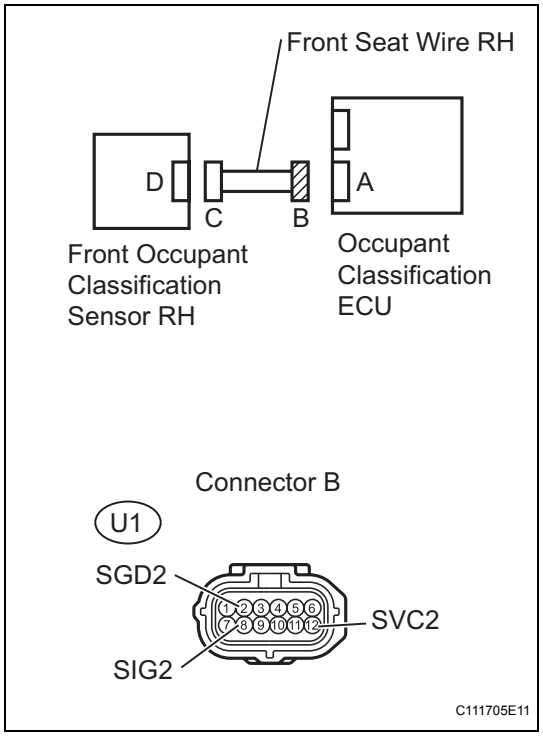

(a) Disconnect the connectors from the occupant classification ECU and the front occupant classification sensor RH.
(b) Connect the negative (-) terminal cable to the battery.
(c) Turn the ignition switch to the on position.
(d) Measure the voltage.

Standard voltage

Tester connection	Condition	Specified condition
U1-2 (SGD2) - Body ground	Ignition switch on	Below 1 V
U1-8 (SIG2) - Body ground	Ignition switch on	Below 1 V
U1-12 (SVC2) - Body ground	Ignition switch on	Below 1 V

NG → **REPAIR OR REPLACE FRONT SEAT WIRE RH**

OK

4 CHECK FRONT SEAT WIRE RH (FOR OPEN)

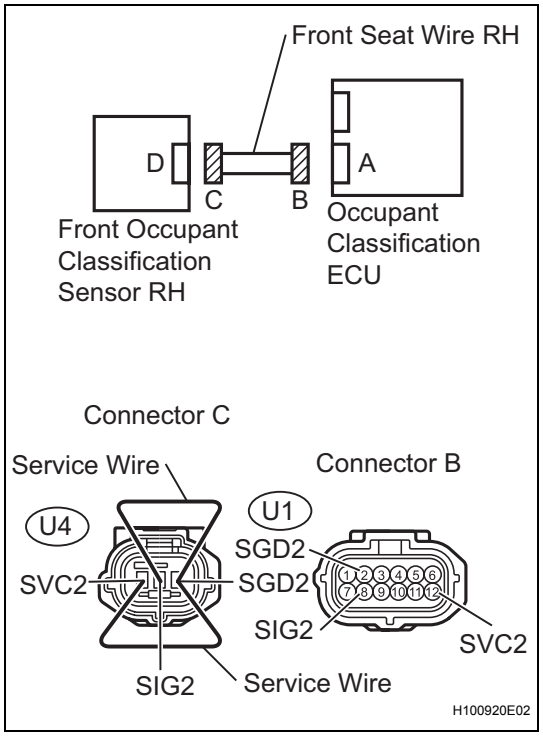

(a) Turn the ignition switch to the lock position.
(b) Disconnect the negative (-) terminal cable from the battery, and wait for at least 90 seconds.
(c) Using a service wire, connect U4-1 (SVC2) and U4-3 (SGD2), and connect U4-2 (SIG2) and U4-3 (SGD2) of connector C.

NOTICE:
Do not forcibly insert the service wire into the terminals of the connector when connecting.

(d) Measure the resistance.

Standard resistance

Tester connection	Condition	Specified condition
U1-8 (SIG2) - U1-2 (SGD2)	Always	Below 1 Ω
U1-12 (SVC2) - U1-2 (SGD2)	Always	Below 1 Ω

NG → **REPAIR OR REPLACE FRONT SEAT WIRE RH**

OK

RS

5 CHECK FRONT SEAT WIRE RH (FOR SHORT)

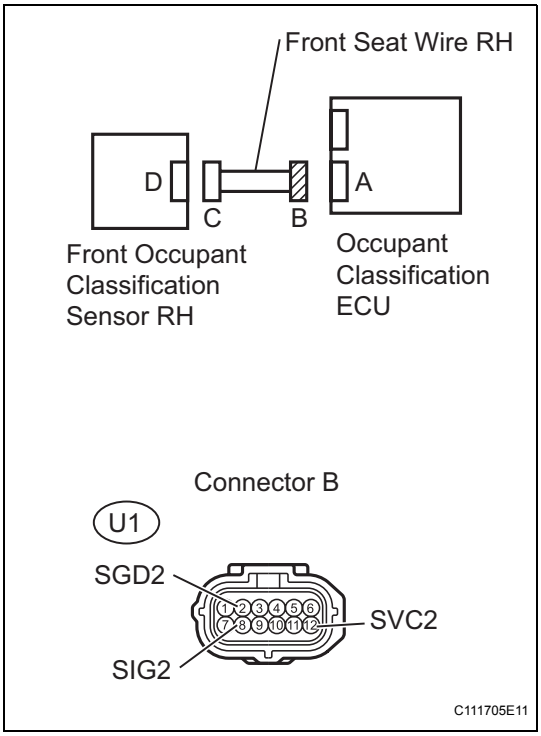

(a) Disconnect the service wire from connector C.
(b) Measure the resistance.
Standard resistance

Tester connection	Condition	Specified condition
U1-8 (SIG2) - U1-2 (SGD2)	Always	1 MΩ or higher
U1-12 (SVC2) - U1-2 (SGD2)	Always	1 MΩ or higher
U1-8 (SIG2) - U1-12 (SVC2)	Always	1 MΩ or higher

NG → **REPAIR OR REPLACE FRONT SEAT WIRE RH**

OK

6 CHECK FRONT SEAT WIRE RH (TO GROUND)

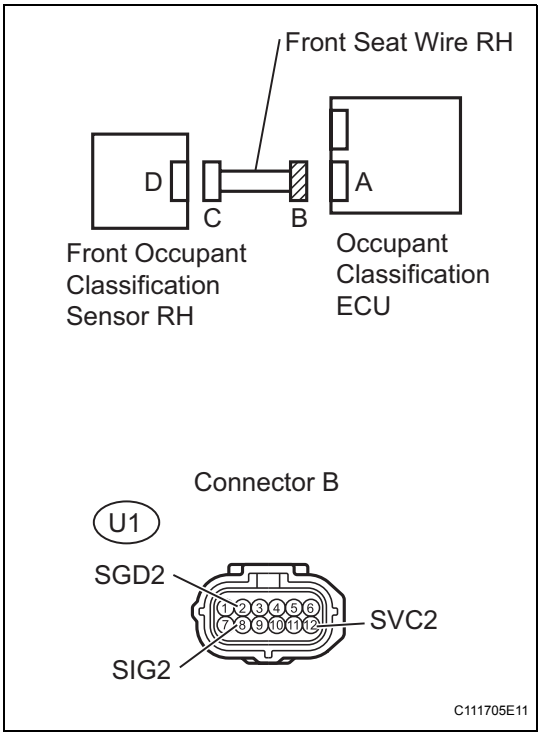

(a) Measure the resistance.
Standard resistance

Tester connection	Condition	Specified condition
U1-2 (SGD2) - Body ground	Always	1 MΩ or higher
U1-8 (SIG2) - Body ground	Always	1 MΩ or higher
U1-12 (SVC2) - Body ground	Always	1 MΩ or higher

NG → **REPAIR OR REPLACE FRONT SEAT WIRE RH**

OK

7	CHECK DTC

(a) Connect the connectors to the occupant classification ECU and the front occupant classification sensor RH.
(b) Connect the negative (-) terminal cable to the battery.
(c) Turn the ignition switch to the on position.
(d) Clear the DTCs stored in the memory (See page RS-223).
HINT:
First clear DTCs stored in the occupant classification ECU and then in the center airbag sensor assembly.
(e) Turn the ignition switch to the lock position.
(f) Turn the ignition switch to the on position.
(g) Check the DTCs (See page RS-223).
OK:
DTC B1781 is not output.
HINT:
Codes other than DTC B1781 may be output at this time, but they are not related to this check.

OK	USE SIMULATION METHOD TO CHECK

NG

8	REPLACE OCCUPANT CLASSIFICATION ECU

(a) Turn the ignition switch to the lock position.
(b) Disconnect the negative (-) terminal cable from the battery, and wait for at least 90 seconds.
(c) Replace the occupant classification ECU (See page RS-493).
HINT:
Perform the inspection using parts from a normal vehicle if possible.

NEXT

9	PERFORM ZERO POINT CALIBRATION

(a) Connect the negative (-) terminal cable to the battery.
(b) Connect the intelligent tester to the DLC3.
(c) Turn the ignition switch to the on position.
(d) Using the intelligent tester, perform the zero point calibration (See page RS-215).
OK:
COMPLETED is displayed.

NG	Go to step 12

OK

10	PERFORM SENSITIVITY CHECK

(a) Using the intelligent tester, perform the sensitivity check (See page RS-215).
   (1) Confirm that nothing is placed on the passenger seat.
   (2) Confirm that the beginning sensor reading is within the standard range.
   Standard range:
   -3.2 to 3.2 kg (-7 to 7 lb)
   (3) Place a 30 kg (66.14 lb) weight (e.g. a lead mass) onto the front passenger seat.
   (4) Confirm that the sensitivity is within the standard range.
   Standard range:
   27 to 33 kg (59.52 to 72.75 lb)
   HINT:
   When performing the sensitivity check, use a solid metal weight (the check result may not be accurate if a liquid weight is used).

NG → **Go to step 12**

OK

11	CHECK DTC

(a) Connect the negative (-) terminal cable to the battery.
(b) Turn the ignition switch to the on position.
(c) Clear the DTCs stored in the memory (See page RS-223).
   HINT:
   First clear DTCs stored in the occupant classification ECU and then in the center airbag sensor assembly.
(d) Turn the ignition switch to the lock position.
(e) Turn the ignition switch to the on position.
(f) Check the DTCs (See page RS-223).
   OK:
   DTC B1781 is not output.
   HINT:
   Codes other than DTC B1781 may be output at this time, but they are not related to this check.

OK → **END**

NG

12	REPLACE FRONT SEAT ASSEMBLY RH

(a) Turn the ignition switch to the lock position.
(b) Disconnect the negative (-) terminal cable from the battery, and wait for at least 90 seconds.
(c) Replace the front seat assembly RH.

for Hatchback: (See page SE-28)
for Sedan: (See page SE-5)

NEXT

13	PERFORM ZERO POINT CALIBRATION

RS

(a) Connect the negative (-) terminal cable to the battery.
(b) Connect the intelligent tester to the DLC3.
(c) Turn the ignition switch to the on position.
(d) Using the intelligent tester, perform the zero point calibration (See page RS-215).
OK:
COMPLETED is displayed.

NEXT

14	PERFORM SENSITIVITY CHECK

(a) Using the intelligent tester, perform the sensitivity check (See page RS-215).
(1) Confirm that nothing is placed on the passenger seat.
(2) Confirm that the beginning sensor reading is within the standard range.
Standard range:
-3.2 to 3.2 kg (-7 to 7 lb)
(3) Place a 30 kg (66.14 lb) weight (e.g. a lead mass) onto the front passenger seat.
(4) Confirm that the sensitivity is within the standard range.
Standard range:
27 to 33 kg (59.52 to 72.75 lb)
HINT:
When performing the sensitivity check, use a solid metal weight (the check result may not be accurate if a liquid weight is used).

NEXT

END

DTC	B1782	Rear Occupant Classification Sensor LH Circuit Malfunction

DESCRIPTION

RS

The rear occupant classification sensor LH circuit consists of the occupant classification ECU and the rear occupant classification sensor LH.

DTC B1782 is recorded when a malfunction is detected in the rear occupant classification sensor LH circuit.

DTC No.	DTC Detecting Condition	Trouble Area
B1782	• Occupant classification ECU detects line short circuit signal, open circuit signal, short circuit to ground signal or short circuit to B+ signal in rear occupant classification sensor LH circuit for 2 seconds • Rear occupant classification sensor LH malfunction • Occupant classification ECU malfunction	• Front seat wire RH • Front seat assembly RH (Rear occupant classification sensor LH) • Occupant classification ECU

WIRING DIAGRAM

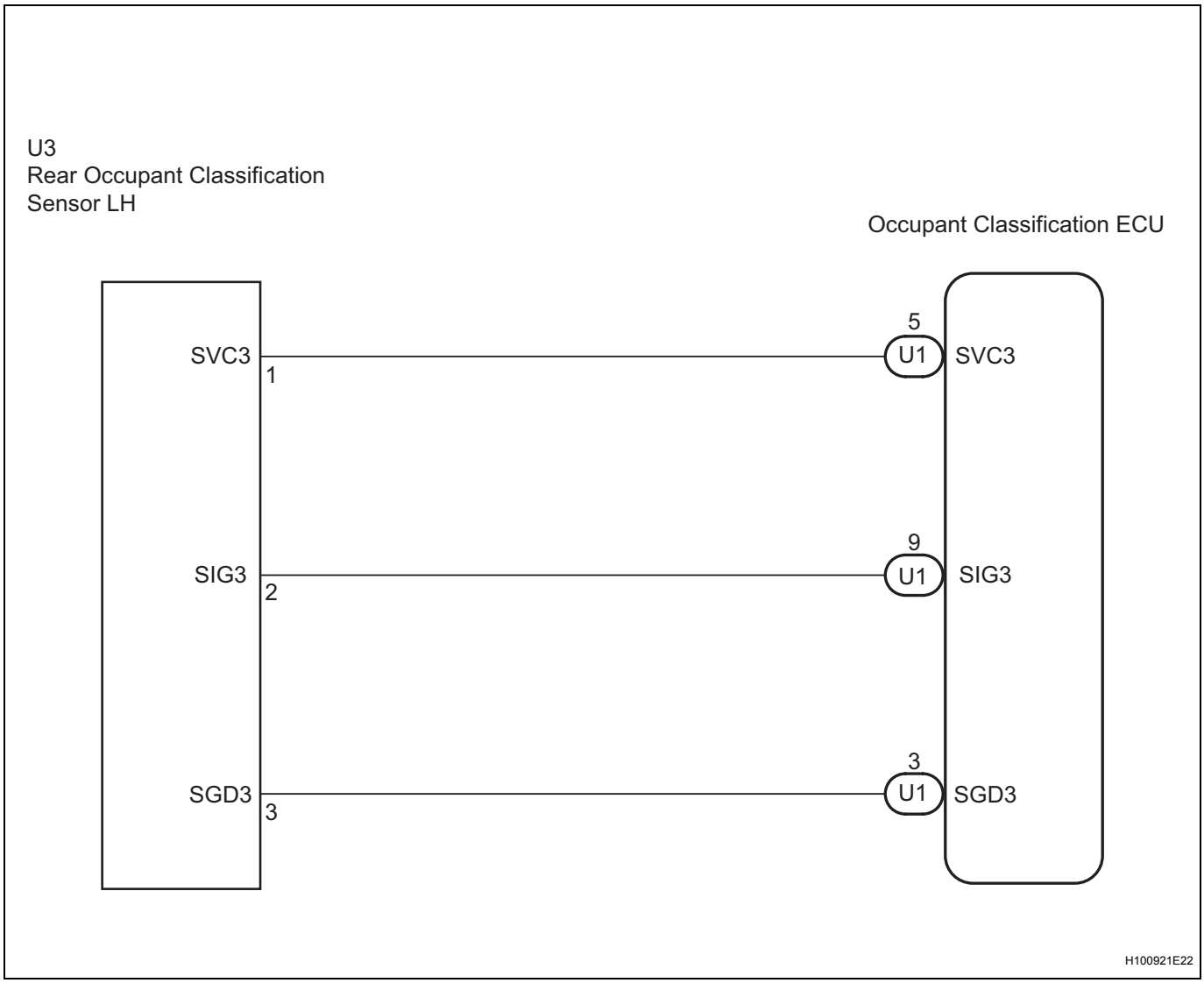

INSPECTION PROCEDURE

HINT:

- If troubleshooting (wire harness inspection) is difficult to perform, remove the front passenger seat installation bolts to see the under surface of the seat cushion.
- In the above case, hold the seat so that it does not tip over. Holding the seat for a long period of time may cause a problem, such as seat rail deformation. Hold the seat up only for as long as necessary.

RS

1	CHECK DTC

(a) Turn the ignition switch to the on position.
(b) Clear the DTCs stored in the memory (See page RS-223).
HINT:
First clear DTCs stored in the occupant classification ECU and then in the center airbag sensor assembly.
(c) Turn the ignition switch to the lock position.
(d) Turn the ignition switch to the on position.
(e) Check the DTCs (See page RS-223).
OK:
DTC B1782 is not output.
HINT:
Codes other than DTC B1782 may be output at this time, but they are not related to this check.

OK → **USE SIMULATION METHOD TO CHECK**

NG

2	CHECK CONNECTION OF CONNECTORS

(a) Turn the ignition switch to the lock position.
(b) Disconnect the negative (-) terminal cable from the battery, and wait for at least 90 seconds.
(c) Check that the connectors are properly connected to the occupant classification ECU and the rear occupant classification sensor LH.
OK:
The connectors are properly connected.

NG → **CONNECT CONNECTORS**

OK

RS

3	CHECK FRONT SEAT WIRE RH (TO B+)

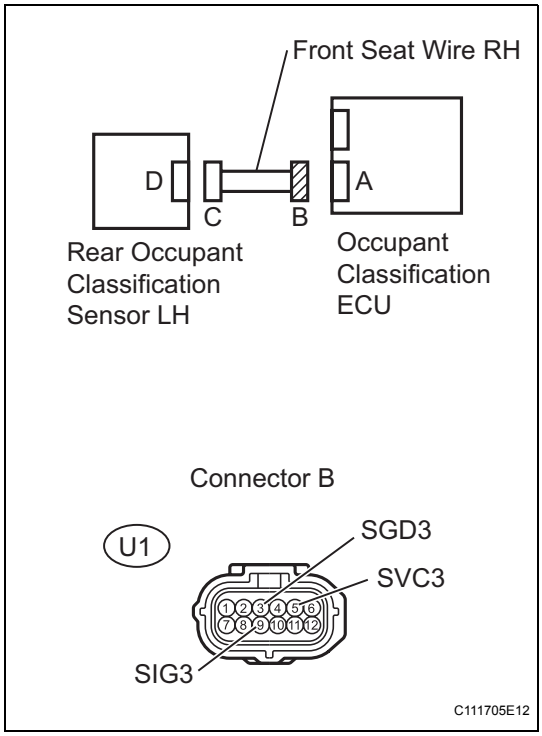

(a) Disconnect the connectors from the occupant classification ECU and the rear occupant classification sensor LH.
(b) Connect the negative (-) terminal cable to the battery.
(c) Turn the ignition switch to the on position.
(d) Measure the voltage.
Standard voltage

Tester connection	Condition	Specified condition
U1-3 (SGD3) - Body ground	Ignition switch on	Below 1 V
U1-5 (SVC3) - Body ground	Ignition switch on	Below 1 V
U1-9 (SIG3) - Body ground	Ignition switch on	Below 1 V

NG → **REPAIR OR REPLACE FRONT SEAT WIRE RH**

OK

4	CHECK FRONT SEAT WIRE RH (FOR OPEN)

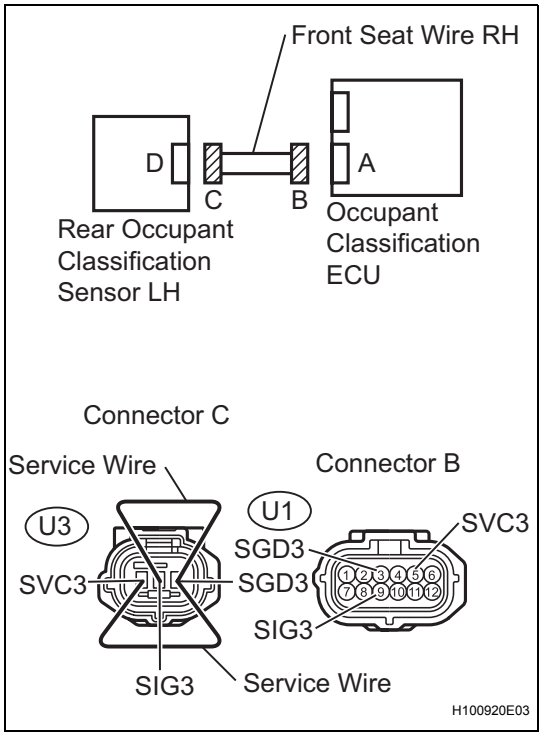

(a) Turn the ignition switch to the lock position.
(b) Disconnect the negative (-) terminal cable from the battery, and wait for at least 90 seconds.
(c) Using a service wire, connect U3-1 (SVC3) and U3-3 (SGD3), and connect U3-2 (SIG3) and U3-3 (SGD3) of connector C.
NOTICE:
Do not forcibly insert the service wire into the terminals of the connector when connecting.
(d) Measure the resistance.
Standard resistance

Tester connection	Condition	Specified condition
U1-5 (SVC3) - U1-3 (SGD3)	Always	Below 1 Ω
U1-9 (SIG3) - U1-3 (SGD3)	Always	Below 1 Ω

NG → **REPAIR OR REPLACE FRONT SEAT WIRE RH**

OK

5 CHECK FRONT SEAT WIRE RH (FOR SHORT)

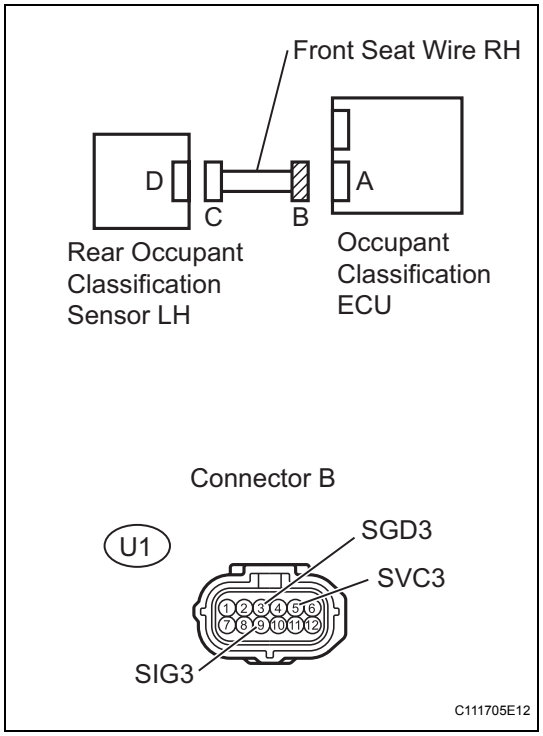

(a) Disconnect the service wire from connector C.
(b) Measure the resistance.
Standard resistance

Tester connection	Condition	Specified condition
U1-5 (SVC3) - U1-3 (SGD3)	Always	1 MΩ or higher
U1-9 (SIG3) - U1-3 (SGD3)	Always	1 MΩ or higher
U1-5 (SVC3) - U1-9 (SIG3)	Always	1 MΩ or higher

NG → **REPAIR OR REPLACE FRONT SEAT WIRE RH**

OK

6 CHECK FRONT SEAT WIRE RH (TO GROUND)

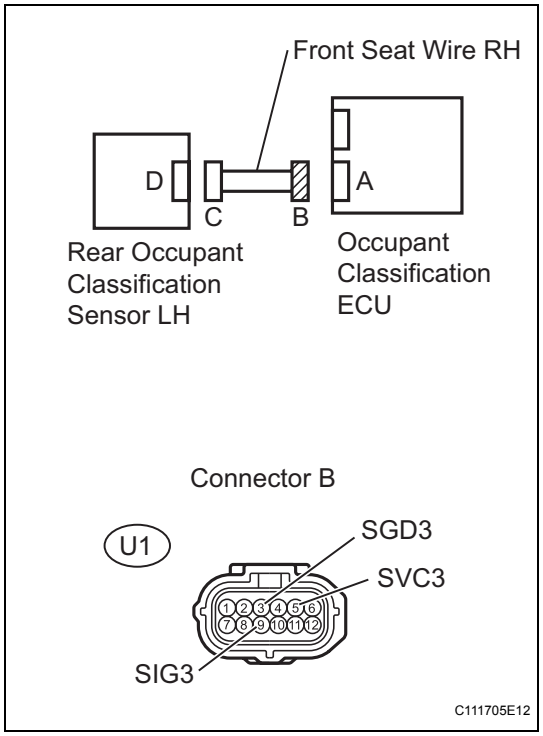

(a) Measure the resistance.
Standard resistance

Tester connection	Condition	Specified condition
U1-3 (SGD3) - Body ground	Always	1 MΩ or higher
U1-5 (SVC3) - Body ground	Always	1 MΩ or higher
U1-9 (SIG3) - Body ground	Always	1 MΩ or higher

NG → **REPAIR OR REPLACE FRONT SEAT WIRE RH**

OK

RS

7	CHECK DTC

(a) Connect the connectors to the occupant classification ECU and the rear occupant classification sensor LH.
(b) Connect the negative (-) terminal cable to the battery.
(c) Turn the ignition switch to the on position.
(d) Clear the DTCs stored in the memory (See page RS-223).
HINT:
First clear DTCs stored in the occupant classification ECU and then in the center airbag sensor assembly.
(e) Turn the ignition switch to the lock position.
(f) Turn the ignition switch to the on position.
(g) Check the DTCs (See page RS-223).
OK:
DTC B1782 is not output.
HINT:
Codes other than DTC B1782 may be output at this time, but they are not related to this check.

OK	USE SIMULATION METHOD TO CHECK

NG

8	REPLACE OCCUPANT CLASSIFICATION ECU

(a) Turn the ignition switch to the lock position.
(b) Disconnect the negative (-) terminal cable from the battery, and wait for at least 90 seconds.
(c) Replace the occupant classification ECU (See page RS-493).
HINT:
Perform the inspection using parts from a normal vehicle if possible.

NEXT

9	PERFORM ZERO POINT CALIBRATION

(a) Connect the negative (-) terminal cable to the battery.
(b) Connect the intelligent tester to the DLC3.
(c) Turn the ignition switch to the on position.
(d) Using the intelligent tester, perform the zero point calibration (See page RS-215).
OK:
COMPLETED is displayed.

NG	Go to step 12

OK

10	PERFORM SENSITIVITY CHECK

(a) Using the intelligent tester, perform the sensitivity check (See page RS-215).
  (1) Confirm that nothing is placed on the passenger seat.
  (2) Confirm that the beginning sensor reading is within the standard range.
  Standard range:
  -3.2 to 3.2 kg (-7 to 7 lb)
  (3) Place a 30 kg (66.14 lb) weight (e.g. a lead mass) onto the front passenger seat.
  (4) Confirm that the sensitivity is within the standard range.
  Standard range:
  27 to 33 kg (59.52 to 72.75 lb)
  HINT:
  When performing the sensitivity check, use a solid metal weight (the check result may not be accurate if a liquid weight is used).

NG → **Go to step 12**

OK

11	CHECK DTC

(a) Connect the negative (-) terminal cable to the battery.
(b) Turn the ignition switch to the on position.
(c) Clear the DTCs stored in the memory (See page RS-223).
  HINT:
  First clear DTCs stored in the occupant classification ECU and then in the center airbag sensor assembly.
(d) Turn the ignition switch to the lock position.
(e) Turn the ignition switch to the on position.
(f) Check the DTCs (See page RS-223).
  OK:
  DTC B1782 is not output.
  HINT:
  Codes other than DTC B1782 may be output at this time, but they are not related to this check.

OK → **END**

NG

12	REPLACE FRONT SEAT ASSEMBLY RH

(a) Turn the ignition switch to the lock position.
(b) Disconnect the negative (-) terminal cable from the battery, and wait for at least 90 seconds.
(c) Replace the front seat assembly RH.

for Hatchback: (See page SE-28)
for Sedan: (See page SE-5)

NEXT

RS

13	PERFORM ZERO POINT CALIBRATION

(a) Connect the negative (-) terminal cable to the battery.
(b) Connect the intelligent tester to the DLC3.
(c) Turn the ignition switch to the on position.
(d) Using the intelligent tester, perform the zero point calibration (See page RS-215).
OK:
COMPLETED is displayed.

NEXT

14	PERFORM SENSITIVITY CHECK

(a) Using the intelligent tester, perform the sensitivity check (See page RS-215).
(1) Confirm that nothing is placed on the passenger seat.
(2) Confirm that the beginning sensor reading is within the standard range.
Standard range:
-3.2 to 3.2 kg (-7 to 7 lb)
(3) Place a 30 kg (66.14 lb) weight (e.g. a lead mass) onto the front passenger seat.
(4) Confirm that the sensitivity is within the standard range.
Standard range:
27 to 33 kg (59.52 to 72.75 lb)
HINT:
When performing the sensitivity check, use a solid metal weight (the check result may not be accurate if a liquid weight is used).

NEXT

END

DTC	B1783	Rear Occupant Classification Sensor RH Circuit Malfunction

DESCRIPTION

The rear occupant classification sensor RH circuit consists of the occupant classification ECU and the rear occupant classification sensor RH.

DTC B1783 is recorded when a malfunction is detected in the rear occupant classification sensor RH circuit.

DTC No.	DTC Detecting Condition	Trouble Area
B1783	• Occupant classification ECU detects line short circuit signal, open circuit signal, short circuit to ground signal or short circuit to B+ signal in rear occupant classification sensor RH circuit for 2 seconds • Rear occupant classification sensor RH malfunction • Occupant classification ECU malfunction	• Front seat wire RH • Front seat assembly RH (Rear occupant classification sensor RH) • Occupant classification ECU

WIRING DIAGRAM

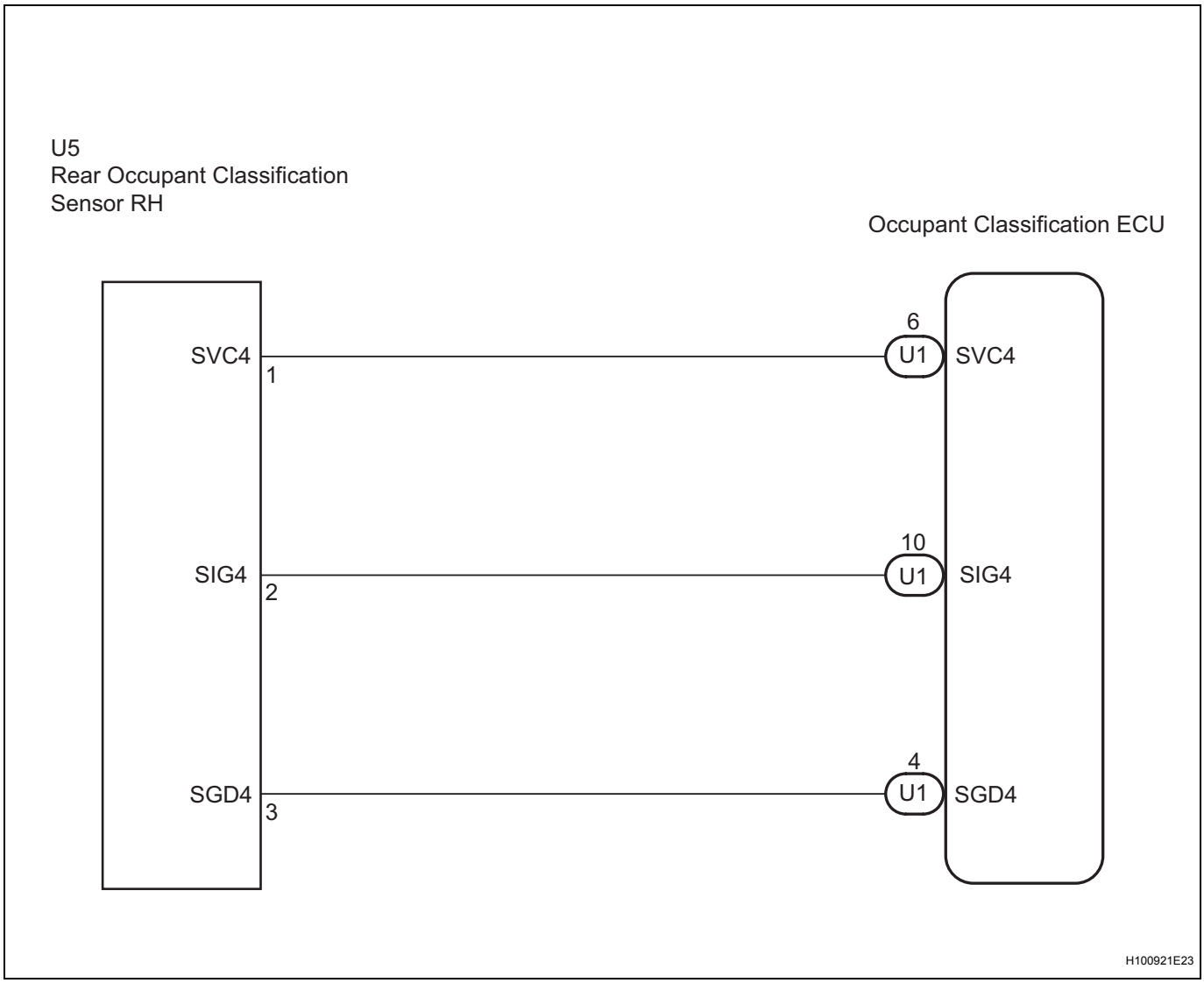

INSPECTION PROCEDURE

HINT:

- If troubleshooting (wire harness inspection) is difficult to perform, remove the front passenger seat installation bolts to see the under surface of the seat cushion.
- In the above case, hold the seat so that it does not tip over. Holding the seat for a long period of time may cause a problem, such as seat rail deformation. Hold the seat up only for as long as necessary.

RS

1	CHECK DTC

(a) Turn the ignition switch to the on position.
(b) Clear the DTCs stored in the memory (See page RS-223).
HINT:
First clear DTCs stored in the occupant classification ECU and then in the center airbag sensor assembly.
(c) Turn the ignition switch to the lock position.
(d) Turn the ignition switch to the on position.
(e) Check the DTCs (See page RS-223).
OK:
DTC B1783 is not output.
HINT:
Codes other than DTC B1783 may be output at this time, but they are not related to this check.

OK → **USE SIMULATION METHOD TO CHECK**

NG

2	CHECK CONNECTION OF CONNECTORS

(a) Turn the ignition switch to the lock position.
(b) Disconnect the negative (-) terminal cable from the battery, and wait for at least 90 seconds.
(c) Check that the connectors are properly connected to the occupant classification ECU and the rear occupant classification sensor RH.
OK:
The connectors are properly connected.

NG → **CONNECT CONNECTORS**

OK

RS

3 CHECK FRONT SEAT WIRE RH (TO B+)

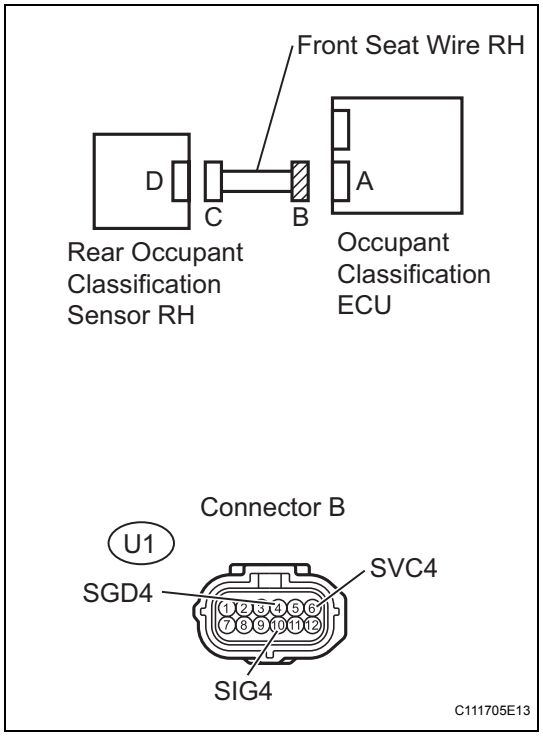

(a) Disconnect the connectors from the occupant classification ECU and the rear occupant classification sensor RH.
(b) Connect the negative (-) terminal cable to the battery.
(c) Turn the ignition switch to the on position.
(d) Measure the voltage.

Standard voltage

Tester connection	Condition	Specified condition
U1-4 (SGD4) - Body ground	Ignition switch on	Below 1 V
U1-6 (SVC4) - Body ground	Ignition switch on	Below 1 V
U1-10 (SIG4) - Body ground	Ignition switch on	Below 1 V

NG → **REPAIR OR REPLACE FRONT SEAT WIRE RH**

OK

4 CHECK FRONT SEAT WIRE RH (FOR OPEN)

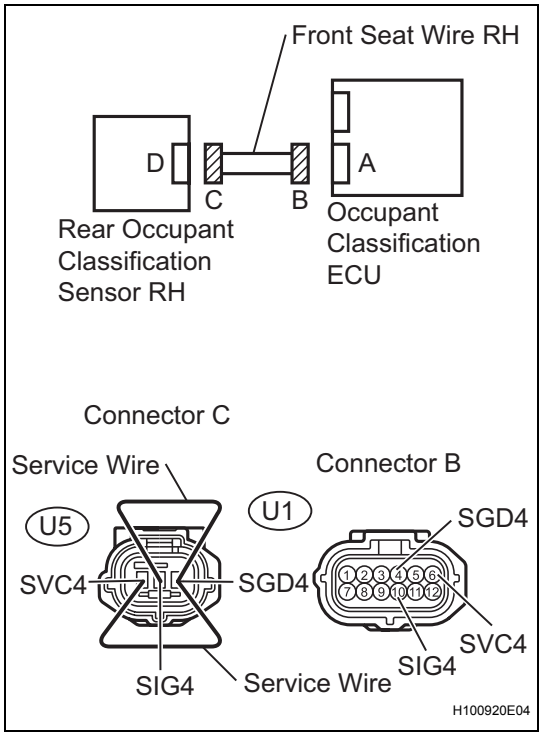

(a) Turn the ignition switch to the lock position.
(b) Disconnect the negative (-) terminal cable from the battery, and wait for at least 90 seconds.
(c) Using a service wire, connect U5-1 (SVC4) and U5-3 (SGD4), and connect U5-2 (SIG4) and U5-3 (SGD4) of connector C.

NOTICE:
Do not forcibly insert the service wire into the terminals of the connector when connecting.

(d) Measure the resistance.

Standard resistance

Tester connection	Condition	Specified condition
U1-6 (SVC4) - U1-4 (SGD4)	Always	Below 1 Ω
U1-10 (SIG4) - U1-4 (SGD4)	Always	Below 1 Ω

NG → **REPAIR OR REPLACE FRONT SEAT WIRE RH**

OK

RS

5 CHECK FRONT SEAT WIRE RH (FOR SHORT)

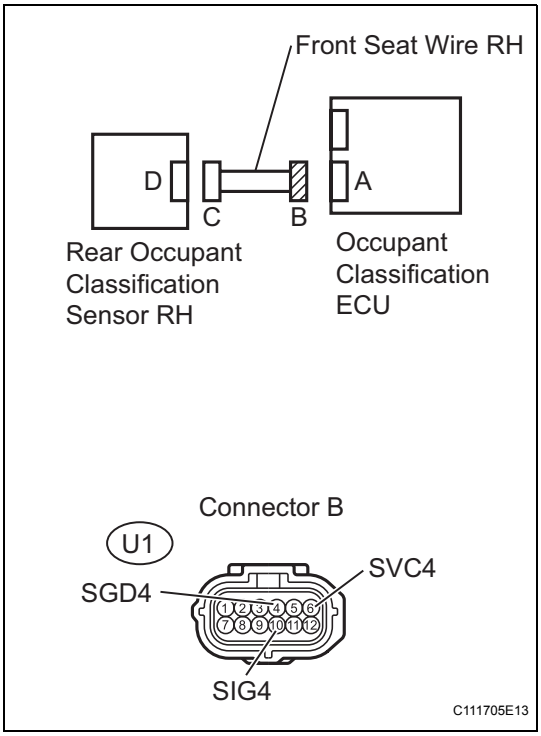

(a) Disconnect the service wire from connector C.
(b) Measure the resistance.
Standard resistance

Tester connection	Condition	Specified condition
U1-6 (SVC4) - U1-4 (SGD4)	Always	1 MΩ or higher
U1-10 (SIG4) - U1-4 (SGD4)	Always	1 MΩ or higher
U1-6 (SVC4) - U1-10 (SIG4)	Always	1 MΩ or higher

NG → **REPAIR OR REPLACE FRONT SEAT WIRE RH**

OK

6 CHECK FRONT SEAT WIRE RH (TO GROUND)

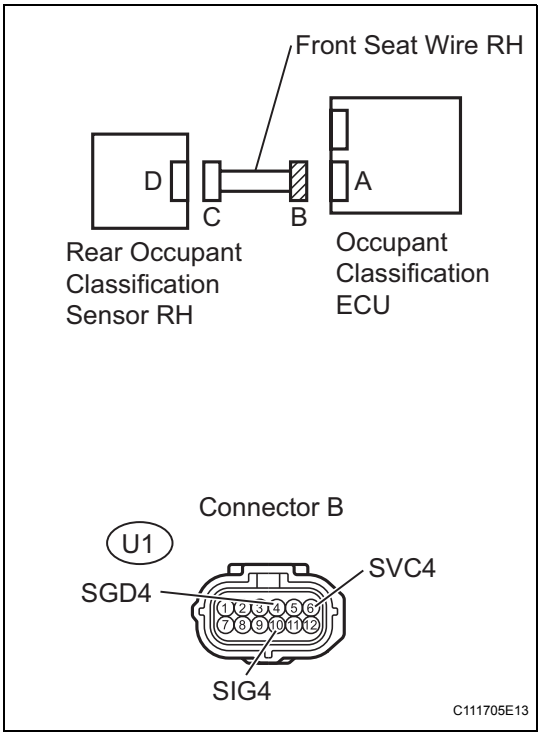

(a) Measure the resistance.
Standard resistance

Tester connection	Condition	Specified condition
U1-4 (SGD4) - Body ground	Always	1 MΩ or higher
U1-6 (SVC4) - Body ground	Always	1 MΩ or higher
U1-10 (SIG4) - Body ground	Always	1 MΩ or higher

NG → **REPAIR OR REPLACE FRONT SEAT WIRE RH**

OK

7	CHECK DTC

(a) Connect the connectors to the occupant classification ECU and the rear occupant classification sensor RH.
(b) Connect the negative (-) terminal cable to the battery.
(c) Turn the ignition switch to the on position.
(d) Clear the DTCs stored in the memory (See page RS-223).
HINT:
First clear DTCs stored in the occupant classification ECU and then in the center airbag sensor assembly.
(e) Turn the ignition switch to the lock position.
(f) Turn the ignition switch to the on position.
(g) Check the DTCs (See page RS-223).
OK:
DTC B1783 is not output.
HINT:
Codes other than DTC B1783 may be output at this time, but they are not related to this check.

OK	USE SIMULATION METHOD TO CHECK

NG

8	REPLACE OCCUPANT CLASSIFICATION ECU

(a) Turn the ignition switch to the lock position.
(b) Disconnect the negative (-) terminal cable from the battery, and wait for at least 90 seconds.
(c) Replace the occupant classification ECU (See page RS-493).
HINT:
Perform the inspection using parts from a normal vehicle if possible.

NEXT

9	PERFORM ZERO POINT CALIBRATION

(a) Connect the negative (-) terminal cable to the battery.
(b) Connect the intelligent tester to the DLC3.
(c) Turn the ignition switch to the on position.
(d) Using the intelligent tester, perform the zero point calibration (See page RS-215).
OK:
COMPLETED is displayed.

NG	Go to step 12

OK

10	PERFORM SENSITIVITY CHECK

(a) Using the intelligent tester, perform the sensitivity check (See page RS-215).
   (1) Confirm that nothing is placed on the passenger seat.
   (2) Confirm that the beginning sensor reading is within the standard range.
   Standard range:
   -3.2 to 3.2 kg (-7 to 7 lb)
   (3) Place a 30 kg (66.14 lb) weight (e.g. a lead mass) onto the front passenger seat.
   (4) Confirm that the sensitivity is within the standard range.
   Standard range:
   27 to 33 kg (59.52 to 72.75 lb)
   HINT:
   When performing the sensitivity check, use a solid metal weight (the check result may not be accurate if a liquid weight is used).

NG → **Go to step 12**

OK

11	CHECK DTC

(a) Connect the negative (-) terminal cable to the battery.
(b) Turn the ignition switch to the on position.
(c) Clear the DTCs stored in the memory (See page RS-223).
   HINT:
   First clear DTCs stored in the occupant classification ECU and then in the center airbag sensor assembly.
(d) Turn the ignition switch to the lock position.
(e) Turn the ignition switch to the on position.
(f) Check the DTCs (See page RS-223).
   OK:
   DTC B1783 is not output.
   HINT:
   Codes other than DTC B1783 may be output at this time, but they are not related to this check.

OK → **END**

NG

12	REPLACE FRONT SEAT ASSEMBLY RH

(a) Turn the ignition switch to the lock position.
(b) Disconnect the negative (-) terminal cable from the battery, and wait for at least 90 seconds.
(c) Replace the front seat assembly RH.

for Hatchback: (See page SE-28)
for Sedan: (See page SE-5)

NEXT

13	PERFORM ZERO POINT CALIBRATION

(a) Connect the negative (-) terminal cable to the battery.
(b) Connect the intelligent tester to the DLC3.
(c) Turn the ignition switch to the on position.
(d) Using the intelligent tester, perform the zero point calibration (See page RS-215).
OK:
COMPLETED is displayed.

NEXT

14	PERFORM SENSITIVITY CHECK

(a) Using the intelligent tester, perform the sensitivity check (See page RS-215).
(1) Confirm that nothing is placed on the passenger seat.
(2) Confirm that the beginning sensor reading is within the standard range.
Standard range:
-3.2 to 3.2 kg (-7 to 7 lb)
(3) Place a 30 kg (66.14 lb) weight (e.g. a lead mass) onto the front passenger seat.
(4) Confirm that the sensitivity is within the standard range.
Standard range:
27 to 33 kg (59.52 to 72.75 lb)
HINT:
When performing the sensitivity check, use a solid metal weight (the check result may not be accurate if a liquid weight is used).

NEXT

END

DTC	B1785	Front Occupant Classification Sensor LH Collision Detection

DESCRIPTION

RS

DTC B1785 is output when the occupant classification ECU receives a collision detection signal sent by the front occupant classification sensor LH when an accident occurs.
DTC B1785 is also output when the front seat assembly RH is subjected to a strong impact, even if an actual accident does not occur.
However, when the front occupant classification sensor LH outputs a collision detection signal, even if the vehicle is not in a collision, DTC B1785 can be cleared by performing the zero point calibration and sensitivity check.
Therefore, when DTC B1785 is output, first perform the zero point calibration and sensitivity check.

DTC No.	DTC Detecting Condition	Trouble Area
B1785	• Front seat assembly RH malfunction • Occupant classification ECU malfunction • Front occupant classification sensor LH detects large load	• Occupant classification ECU • Front seat assembly RH (Front occupant classification sensor LH)

WIRING DIAGRAM

See page RS-234.

INSPECTION PROCEDURE

1	PERFORM ZERO POINT CALIBRATION

(a) Connect the intelligent tester to the DLC3.
(b) Turn the ignition switch to the on position.
(c) Using the intelligent tester, perform the zero point calibration (See page RS-215).
OK:
COMPLETED is displayed.

NG → **Go to step 4**

OK

2	PERFORM SENSITIVITY CHECK

(a) Using the intelligent tester, perform the sensitivity check (See page RS-215).
(1) Confirm that nothing is placed on the passenger seat.
(2) Confirm that the beginning sensor reading is within the standard range.
Standard range:
-3.2 to 3.2 kg (-7 to 7 lb)
(3) Place a 30 kg (66.14 lb) weight (e.g. a lead mass) onto the front passenger seat.
(4) Confirm that the sensitivity is within the standard range.
Standard range:
27 to 33 kg (59.52 to 72.75 lb)

HINT:
When performing the sensitivity check, use a solid metal weight (the check result may not be accurate if a liquid weight is used).

NG → **Go to step 4**

OK

3	CHECK DTC

(a) Turn the ignition switch to the on position.
(b) Clear the DTCs stored in the memory (See page RS-223).
HINT:
First clear DTCs stored in the occupant classification ECU and then in the center airbag sensor assembly.
(c) Turn the ignition switch to the lock position.
(d) Turn the ignition switch to the on position.
(e) Check the DTCs (See page RS-223).
OK:
DTC B1785 is not output.
HINT:
Codes other than DTC B1785 may be output at this time, but they are not related to this check.

OK → **USE SIMULATION METHOD TO CHECK**

NG

4	REPLACE FRONT SEAT ASSEMBLY RH

(a) Turn the ignition switch to the lock position.
(b) Disconnect the negative (-) terminal cable from the battery, and wait for at least 90 seconds.
(c) Replace the front seat assembly RH.
for Hatchback: (See page SE-28)
for Sedan: (See page SE-5)
HINT:
Perform the inspection using parts from a normal vehicle if possible.

NEXT

5	PERFORM ZERO POINT CALIBRATION

(a) Connect the negative (-) terminal cable to the battery.
(b) Connect the intelligent tester to the DLC3.
(c) Turn the ignition switch to the on position.
(d) Using the intelligent tester, perform the zero point calibration (See page RS-215).
OK:
COMPLETED is displayed.

NG → Go to step 8

OK

RS

6	PERFORM SENSITIVITY CHECK

(a) Using the intelligent tester, perform the sensitivity check (See page RS-215).
  (1) Confirm that nothing is placed on the passenger seat.
  (2) Confirm that the beginning sensor reading is within the standard range.
  Standard range:
  -3.2 to 3.2 kg (-7 to 7 lb)
  (3) Place a 30 kg (66.14 lb) weight (e.g. a lead mass) onto the front passenger seat.
  (4) Confirm that the sensitivity is within the standard range.
  Standard range:
  27 to 33 kg (59.52 to 72.75 lb)
  HINT:
  When performing the sensitivity check, use a solid metal weight (the check result may not be accurate if a liquid weight is used).

NG → Go to step 8

OK

7	CHECK DTC

(a) Turn the ignition switch to the on position.
(b) Clear the DTCs stored in the memory (See page RS-223).
  HINT:
  First clear DTCs stored in the occupant classification ECU and then in the center airbag sensor assembly.
(c) Turn the ignition switch to the lock position.
(d) Turn the ignition switch to the on position.
(e) Check the DTCs (See page RS-223).
  OK:
  DTC B1785 is not output.
  HINT:
  Codes other than DTC B1785 may be output at this time, but they are not related to this check.

OK → USE SIMULATION METHOD TO CHECK

NG

8	REPLACE OCCUPANT CLASSIFICATION ECU

(a) Turn the ignition switch to the lock position.

(b) Disconnect the negative (-) terminal cable from the battery, and wait for at least 90 seconds.
(c) Replace the occupant classification ECU (See page RS-493).

NEXT

RS

9	PERFORM ZERO POINT CALIBRATION

(a) Connect the negative (-) terminal cable to the battery.
(b) Connect the intelligent tester to the DLC3.
(c) Turn the ignition switch to the on position.
(d) Using the intelligent tester, perform the zero point calibration (See page RS-215).
OK:
COMPLETED is displayed.

NEXT

10	PERFORM SENSITIVITY CHECK

(a) Using the intelligent tester, perform the sensitivity check (See page RS-215).
(1) Confirm that nothing is placed on the passenger seat.
(2) Confirm that the beginning sensor reading is within the standard range.
Standard range:
-3.2 to 3.2 kg (-7 to 7 lb)
(3) Place a 30 kg (66.14 lb) weight (e.g. a lead mass) onto the front passenger seat.
(4) Confirm that the sensitivity is within the standard range.
Standard range:
27 to 33 kg (59.52 to 72.75 lb)
HINT:
When performing the sensitivity check, use a solid metal weight (the check result may not be accurate if a liquid weight is used).

NEXT

END

DTC	B1786	Front Occupant Classification Sensor RH Collision Detection

DESCRIPTION

RS

DTC B1786 is output when the occupant classification ECU receives a collision detection signal sent by the front occupant classification sensor RH when an accident occurs.
DTC B1786 is also output when the front seat assembly RH is subjected to a strong impact, even if an actual accident does not occur.
However, when the front occupant classification sensor RH outputs a collision detection signal, even if the vehicle is not in a collision, DTC B1786 can be cleared by performing the zero point calibration and sensitivity check.
Therefore, when DTC B1786 is output, first perform the zero point calibration and sensitivity check.

DTC No.	DTC Detection Condition	Trouble Area
B1786	• Front seat assembly RH malfunction • Occupant classification ECU malfunction • Front occupant classification sensor RH detects large load	• Occupant classification ECU • Front seat assembly RH (Front occupant classification sensor RH)

WIRING DIAGRAM

See page RS-241.

INSPECTION PROCEDURE

1	PERFORM ZERO POINT CALIBRATION

(a) Connect the intelligent tester to the DLC3.
(b) Turn the ignition switch to the on position.
(c) Using the intelligent tester, perform the zero point calibration (See page RS-215).
OK:
COMPLETED is displayed.

NG → **Go to step 4**

OK

2	PERFORM SENSITIVITY CHECK

(a) Using the intelligent tester, perform the sensitivity check (See page RS-215).
(1) Confirm that nothing is placed on the passenger seat.
(2) Confirm that the beginning sensor reading is within the standard range.
Standard range:
-3.2 to 3.2 kg (-7 to 7 lb)
(3) Place a 30 kg (66.14 lb) weight (e.g. a lead mass) onto the front passenger seat.
(4) Confirm that the sensitivity is within the standard range.
Standard range:
27 to 33 kg (59.52 to 72.75 lb)

HINT:
When performing the sensitivity check, use a solid metal weight (the check result may not be accurate if a liquid weight is used).

NG → Go to step 4

OK

3	CHECK DTC

(a) Turn the ignition switch to the on position.
(b) Clear the DTCs stored in the memory (See page RS-223).
HINT:
First clear DTCs stored in the occupant classification ECU and then in the center airbag sensor assembly.
(c) Turn the ignition switch to the lock position.
(d) Turn the ignition switch to the on position.
(e) Check the DTCs (See page RS-223).
OK:
DTC B1786 is not output.
HINT:
Codes other than DTC B1786 may be output at this time, but they are not related to this check.

OK → USE SIMULATION METHOD TO CHECK

NG

4	REPLACE FRONT SEAT ASSEMBLY RH

(a) Turn the ignition switch to the lock position.
(b) Disconnect the negative (-) terminal cable from the battery, and wait for at least 90 seconds.
(c) Replace the front seat assembly RH.
for Hatchback: (See page SE-28)
for Sedan: (See page SE-5)
HINT:
Perform the inspection using parts from a normal vehicle if possible.

NEXT

5	PERFORM ZERO POINT CALIBRATION

(a) Connect the negative (-) terminal cable to the battery.
(b) Connect the intelligent tester to the DLC3.
(c) Turn the ignition switch to the on position.
(d) Using the intelligent tester, perform the zero point calibration (See page RS-215).
OK:
COMPLETED is displayed.

NG → Go to step 8

OK

RS

6	PERFORM SENSITIVITY CHECK

(a) Using the intelligent tester, perform the sensitivity check (See page RS-215).
  (1) Confirm that nothing is placed on the passenger seat.
  (2) Confirm that the beginning sensor reading is within the standard range.
  Standard range:
  -3.2 to 3.2 kg (-7 to 7 lb)
  (3) Place a 30 kg (66.14 lb) weight (e.g. a lead mass) onto the front passenger seat.
  (4) Confirm that the sensitivity is within the standard range.
  Standard range:
  27 to 33 kg (59.52 to 72.75 lb)
  HINT:
  When performing the sensitivity check, use a solid metal weight (the check result may not be accurate if a liquid weight is used).

NG → Go to step 8

OK

7	CHECK DTC

(a) Turn the ignition switch to the on position.
(b) Clear the DTCs stored in the memory (See page RS-223).
  HINT:
  First clear DTCs stored in the occupant classification ECU and then in the center airbag sensor assembly.
(c) Turn the ignition switch to the lock position.
(d) Turn the ignition switch to the on position.
(e) Check the DTCs (See page RS-223).
  OK:
  DTC B1786 is not output.
  HINT:
  Codes other than DTC B1786 may be output at this time, but they are not related to this check.

OK → USE SIMULATION METHOD TO CHECK

NG

8	REPLACE OCCUPANT CLASSIFICATION ECU

(a) Turn the ignition switch to the lock position.

(b) Disconnect the negative (-) terminal cable from the battery, and wait for at least 90 seconds.
(c) Replace the occupant classification ECU (See page RS-493).

NEXT

RS

9	PERFORM ZERO POINT CALIBRATION

(a) Connect the negative (-) terminal cable to the battery.
(b) Connect the intelligent tester to the DLC3.
(c) Turn the ignition switch to the on position.
(d) Using the intelligent tester, perform the zero point calibration (See page RS-215).
OK:
COMPLETED is displayed.

NEXT

10	PERFORM SENSITIVITY CHECK

(a) Using the intelligent tester, perform the sensitivity check (See page RS-223).
(1) Confirm that nothing is placed on the passenger seat.
(2) Confirm that the beginning sensor reading is within the standard range.
Standard range:
-3.2 to 3.2 kg (-7 to 7 lb)
(3) Place a 30 kg (66.14 lb) weight (e.g. a lead mass) onto the front passenger seat.
(4) Confirm that the sensitivity is within the standard range.
Standard range:
27 to 33 kg (59.52 to 72.75 lb)
HINT:
When performing the sensitivity check, use a solid metal weight (the check result may not be accurate if a liquid weight is used).

NEXT

END

DTC	B1787	Rear Occupant Classification Sensor LH Collision Detection

DESCRIPTION

RS

DTC B1787 is output when the occupant classification ECU receives a collision detection signal sent by the rear occupant classification sensor LH when an accident occurs.
DTC B1787 is also output when the front seat assembly RH is subjected to a strong impact, even if an actual accident does not occur.
However, when the rear occupant classification sensor LH outputs a collision detection signal, even if the vehicle is not in a collision, DTC B1787 can be cleared by performing the zero point calibration and sensitivity check.
Therefore, when DTC B1787 is output, first perform the zero point calibration and sensitivity check.

DTC No.	DTC Detecting Condition	Trouble Area
B1787	• Front seat assembly RH malfunction • Occupant classification ECU malfunction • Rear occupant classification sensor LH detects large load	• Occupant classification ECU • Front seat assembly RH (Rear occupant classification sensor LH)

WIRING DIAGRAM

See page RS-248.

INSPECTION PROCEDURE

1	PERFORM ZERO POINT CALIBRATION

(a) Connect the intelligent tester to the DLC3.
(b) Turn the ignition switch to the on position.
(c) Using the intelligent tester, perform the zero point calibration (See page RS-215).
OK:
COMPLETED is displayed.

NG → **Go to step 4**

OK

2	PERFORM SENSITIVITY CHECK

(a) Using the intelligent tester, perform the sensitivity check (See page RS-215).
(1) Confirm that nothing is placed on the passenger seat.
(2) Confirm that the beginning sensor reading is within the standard range.
Standard range:
-3.2 to 3.2 kg (-7 to 7 lb)
(3) Place a 30 kg (66.14 lb) weight (e.g. a lead mass) onto the front passenger seat.
(4) Confirm that the sensitivity is within the standard range.
Standard range:
27 to 33 kg (59.52 to 72.75 lb)

HINT:
When performing the sensitivity check, use a solid metal weight (the check result may not be accurate if a liquid weight is used).

NG → **Go to step 4**

OK

3	CHECK DTC

(a) Turn the ignition switch to the on position.
(b) Clear the DTCs stored in the memory (See page RS-223).
HINT:
First clear DTCs stored in the occupant classification ECU and then in the center airbag sensor assembly.
(c) Turn the ignition switch to the lock position.
(d) Turn the ignition switch to the on position.
(e) Check the DTCs (See page RS-223).
OK:
DTC B1787 is not output.
HINT:
Codes other than DTC B1787 may be output at this time, but they are not related to this check.

OK → **USE SIMULATION METHOD TO CHECK**

NG

4	REPLACE FRONT SEAT ASSEMBLY RH

(a) Turn the ignition switch to the lock position.
(b) Disconnect the negative (-) terminal cable from the battery, and wait for at least 90 seconds.
(c) Replace the front seat assembly RH.
for Hatchback: (See page SE-28)
for Sedan: (See page SE-5)
HINT:
Perform the inspection using parts from a normal vehicle if possible.

NEXT

5	PERFORM ZERO POINT CALIBRATION

(a) Connect the negative (-) terminal cable to the battery.
(b) Connect the intelligent tester to the DLC3.
(c) Turn the ignition switch to the on position.
(d) Using the intelligent tester, perform the zero point calibration (See page RS-215).
OK:
COMPLETED is displayed.

NG → Go to step 8

OK

RS

6	PERFORM SENSITIVITY CHECK

(a) Using the intelligent tester, perform the sensitivity check (See page RS-215).
  (1) Confirm that nothing is placed on the passenger seat.
  (2) Confirm that the beginning sensor reading is within the standard range.
  Standard range:
  -3.2 to 3.2 kg (-7 to 7 lb)
  (3) Place a 30 kg (66.14 lb) weight (e.g. a lead mass) onto the front passenger seat.
  (4) Confirm that the sensitivity is within the standard range.
  Standard range:
  27 to 33 kg (59.52 to 72.75 lb)
  HINT:
  When performing the sensitivity check, use a solid metal weight (the check result may not be accurate if a liquid weight is used).

NG → Go to step 8

OK

7	CHECK DTC

(a) Turn the ignition switch to the on position.
(b) Clear the DTCs stored in the memory (See page RS-223).
  HINT:
  First clear DTCs stored in the occupant classification ECU and then in the center airbag sensor assembly.
(c) Turn the ignition switch to the lock position.
(d) Turn the ignition switch to the on position.
(e) Check the DTCs (See page RS-223).
  OK:
  DTC B1787 is not output.
  HINT:
  Codes other than DTC B1787 may be output at this time, but they are not related to this check.

OK → USE SIMULATION METHOD TO CHECK

NG

8	REPLACE OCCUPANT CLASSIFICATION ECU

(a) Turn the ignition switch to the lock position.

(b) Disconnect the negative (-) terminal cable from the battery, and wait for at least 90 seconds.
(c) Replace the occupant classification ECU (See page RS-493).

NEXT

RS

9	PERFORM ZERO POINT CALIBRATION

(a) Connect the negative (-) terminal cable to the battery.
(b) Connect the intelligent tester to the DLC3.
(c) Turn the ignition switch to the on position.
(d) Using the intelligent tester, perform the zero point calibration (See page RS-215).
OK:
COMPLETED is displayed.

NEXT

10	PERFORM SENSITIVITY CHECK

(a) Using the intelligent tester, perform the sensitivity check (See page RS-215).
(1) Confirm that nothing is placed on the passenger seat.
(2) Confirm that the beginning sensor reading is within the standard range.
Standard range:
-3.2 to 3.2 kg (-7 to 7 lb)
(3) Place a 30 kg (66.14 lb) weight (e.g. a lead mass) onto the front passenger seat.
(4) Confirm that the sensitivity is within the standard range.
Standard range:
27 to 33 kg (59.52 to 72.75 lb)
HINT:
When performing the sensitivity check, use a solid metal weight (the check result may not be accurate if a liquid weight is used).

NEXT

END

DTC	B1788	Rear Occupant Classification Sensor RH Collision Detection

DESCRIPTION

RS

DTC B1788 is output when the occupant classification ECU receives a collision detection signal sent by the rear occupant classification sensor RH when an accident occurs.
DTC B1788 is also output when the front seat assembly RH is subjected to a strong impact, even if an actual accident does not occur.
However, when the rear occupant classification sensor RH outputs a collision detection signal, even if the vehicle is not in a collision, DTC B1788 can be cleared by performing the zero point calibration and sensitivity check.
Therefore, when DTC B1788 is output, first perform the zero point calibration and sensitivity check.

DTC No.	DTC Detection Condition	Trouble Area
B1788	• Front seat assembly RH malfunction • Occupant classification ECU malfunction • Rear occupant classification sensor RH detects large load	• Occupant classification ECU • Front seat assembly RH (Rear occupant classification sensor RH)

WIRING DIAGRAM

See page RS-255.

INSPECTION PROCEDURE

1	PERFORM ZERO POINT CALIBRATION

(a) Connect the intelligent tester to the DLC3.
(b) Turn the ignition switch to the on position.
(c) Using the intelligent tester, perform the zero point calibration (See page RS-215).
OK:
COMPLETED is displayed.

NG → **Go to step 4**

OK

2	PERFORM SENSITIVITY CHECK

(a) Using the intelligent tester, perform the sensitivity check (See page RS-215).
(1) Confirm that nothing is placed on the passenger seat.
(2) Confirm that the beginning sensor reading is within the standard range.
Standard range:
-3.2 to 3.2 kg (-7 to 7 lb)
(3) Place a 30 kg (66.14 lb) weight (e.g. a lead mass) onto the front passenger seat.
(4) Confirm that the sensitivity is within the standard range.
Standard range:
27 to 33 kg (59.52 to 72.75 lb)

HINT:
When performing the sensitivity check, use a solid metal weight (the check result may not be accurate if a liquid weight is used).

NG → **Go to step 4**

OK

3	CHECK DTC

(a) Turn the ignition switch to the on position.
(b) Clear the DTCs stored in the memory (See page RS-223).
HINT:
First clear DTCs stored in the occupant classification ECU and then in the center airbag sensor assembly.
(c) Turn the ignition switch to the lock position.
(d) Turn the ignition switch to the on position.
(e) Check the DTCs (See page RS-223).
OK:
DTC B1788 is not output.
HINT:
Codes other than DTC B1788 may be output at this time, but they are not related to this check.

OK → **USE SIMULATION METHOD TO CHECK**

NG

4	REPLACE FRONT SEAT ASSEMBLY RH

(a) Turn the ignition switch to the lock position.
(b) Disconnect the negative (-) terminal cable from the battery, and wait for at least 90 seconds.
(c) Replace the front seat assembly RH.
for Hatchback: (See page SE-28)
for Sedan: (See page SE-5)
HINT:
Perform the inspection using parts from a normal vehicle if possible.

NEXT

5	PERFORM ZERO POINT CALIBRATION

(a) Connect the negative (-) terminal cable to the battery.
(b) Connect the intelligent tester to the DLC3.
(c) Turn the ignition switch to the on position.
(d) Using the intelligent tester, perform the zero point calibration (See page RS-215).
OK:
COMPLETED is displayed.

NG → Go to step 8

OK

RS

6	PERFORM SENSITIVITY CHECK

(a) Using the intelligent tester, perform the sensitivity check (See page RS-215).
  (1) Confirm that nothing is placed on the passenger seat.
  (2) Confirm that the beginning sensor reading is within the standard range.
  Standard range:
  -3.2 to 3.2 kg (-7 to 7 lb)
  (3) Place a 30 kg (66.14 lb) weight (e.g. a lead mass) onto the front passenger seat.
  (4) Confirm that the sensitivity is within the standard range.
  Standard range:
  27 to 33 kg (59.52 to 72.75 lb)
  HINT:
  When performing the sensitivity check, use a solid metal weight (the check result may not be accurate if a liquid weight is used).

NG → Go to step 8

OK

7	CHECK DTC

(a) Turn the ignition switch to the on position.
(b) Clear the DTCs stored in the memory (See page RS-223).
  HINT:
  First clear DTCs stored in the occupant classification ECU and then in the center airbag sensor assembly.
(c) Turn the ignition switch to the lock position.
(d) Turn the ignition switch to the on position.
(e) Check the DTCs (See page RS-223).
  OK:
  DTC B1788 is not output.
  HINT:
  Codes other than DTC B1788 may be output at this time, but they are not related to this check.

OK → USE SIMULATION METHOD TO CHECK

NG

8	REPLACE OCCUPANT CLASSIFICATION ECU

(a) Turn the ignition switch to the lock position.

(b) Disconnect the negative (-) terminal cable from the battery, and wait for at least 90 seconds.
(c) Replace the occupant classification ECU (See page RS-493).

NEXT

RS

9	PERFORM ZERO POINT CALIBRATION

(a) Connect the negative (-) terminal cable to the battery.
(b) Connect the intelligent tester to the DLC3.
(c) Turn the ignition switch to the on position.
(d) Using the intelligent tester, perform the zero point calibration (See page RS-215).
OK:
COMPLETED is displayed.

NEXT

10	PERFORM SENSITIVITY CHECK

(a) Using the intelligent tester, perform the sensitivity check (See page RS-215).
(1) Confirm that nothing is placed on the passenger seat.
(2) Confirm that the beginning sensor reading is within the standard range.
Standard range:
-3.2 to 3.2 kg (-7 to 7 lb)
(3) Place a 30 kg (66.14 lb) weight (e.g. a lead mass) onto the front passenger seat.
(4) Confirm that the sensitivity is within the standard range.
Standard range:
27 to 33 kg (59.52 to 72.75 lb)
HINT:
When performing the sensitivity check, use a solid metal weight (the check result may not be accurate if a liquid weight is used).

NEXT

END

DTC	B1790	Center Airbag Sensor Assembly Communication Circuit Malfunction

DESCRIPTION

RS

The center airbag sensor assembly communication circuit consists of the occupant classification ECU and the center airbag sensor assembly.

DTC B1790 is recorded when a malfunction is detected in the center airbag sensor assembly communication circuit.

DTC No.	DTC Detecting Condition	Trouble Area
B1790	• Occupant classification ECU detects line short circuit signal, open circuit signal, short circuit to ground signal or short circuit to B+ signal in center airbag sensor assembly communication circuit for 2 seconds • Center airbag sensor assembly malfunction • Occupant classification ECU malfunction	• Floor wire • Occupant classification ECU • Center airbag sensor assembly

WIRING DIAGRAM

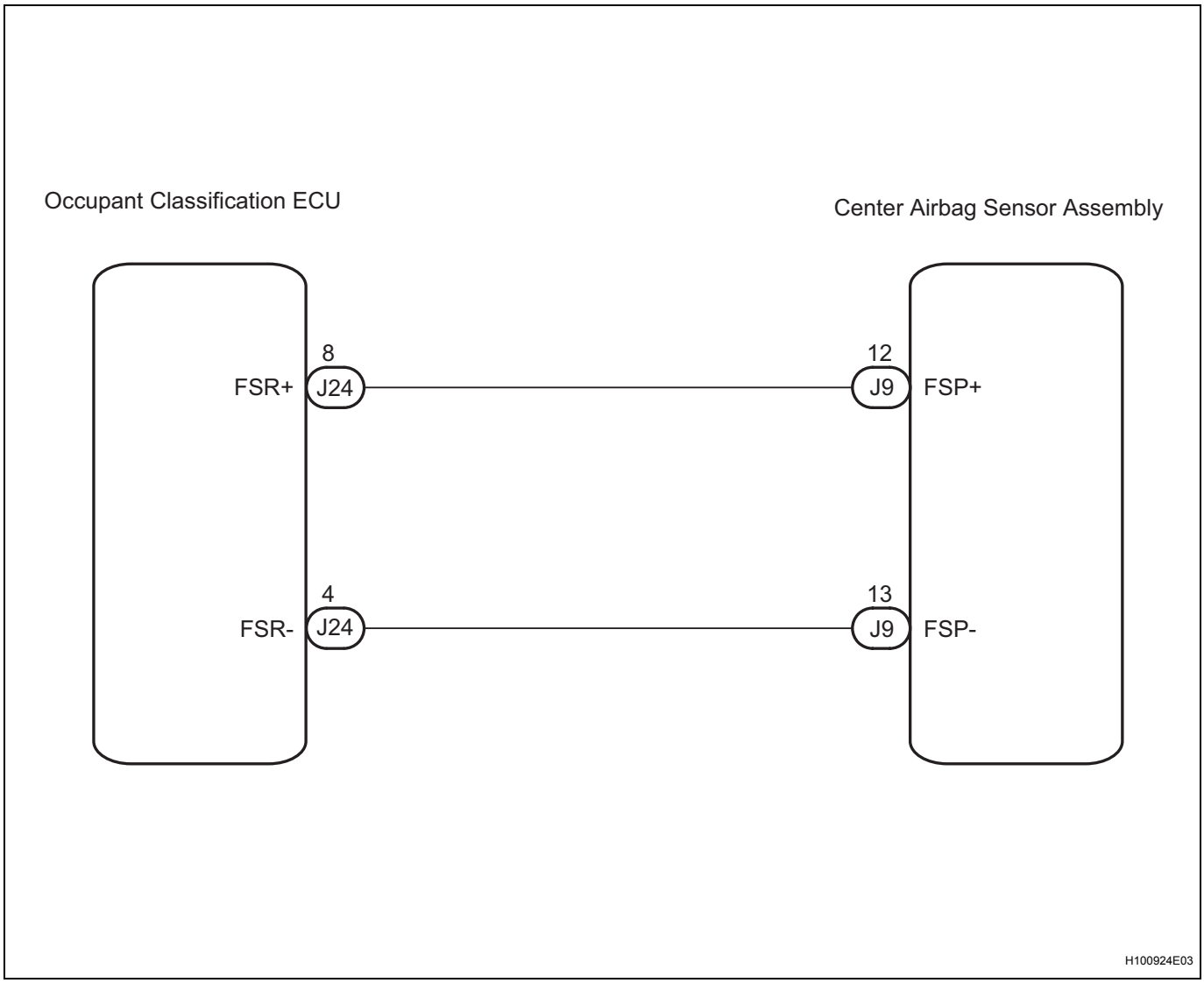

INSPECTION PROCEDURE

HINT:

- If troubleshooting (wire harness inspection) is difficult to perform, remove the front passenger seat installation bolts to see the under surface of the seat cushion.
- In the above case, hold the seat so that it does not tip over. Holding the seat for a long period of time may cause a problem, such as seat rail deformation. Hold the seat up only for as long as necessary.

RS

1	CHECK DTC

(a) Turn the ignition switch to the on position.
(b) Clear the DTCs stored in the memory (See page RS-223).
HINT:
First clear DTCs stored in the occupant classification ECU and then in the center airbag sensor assembly.
(c) Turn the ignition switch to the lock position.
(d) Turn the ignition switch to the on position.
(e) Check the DTCs (See page RS-223).
OK:
DTC B1790 is not output.
HINT:
Codes other than DTC B1790 may be output at this time, but they are not related to this check.

OK → **USE SIMULATION METHOD TO CHECK**

NG

2	CHECK CONNECTION OF CONNECTORS

(a) Turn the ignition switch to the lock position.
(b) Disconnect the negative (-) terminal cable from the battery, and wait for at least 90 seconds.
(c) Check that the connectors are properly connected to the occupant classification ECU and the center airbag sensor assembly.
OK:
The connectors are properly connected.

NG → **CONNECT CONNECTORS**

OK

RS

3	CHECK FLOOR WIRE (TO B+)

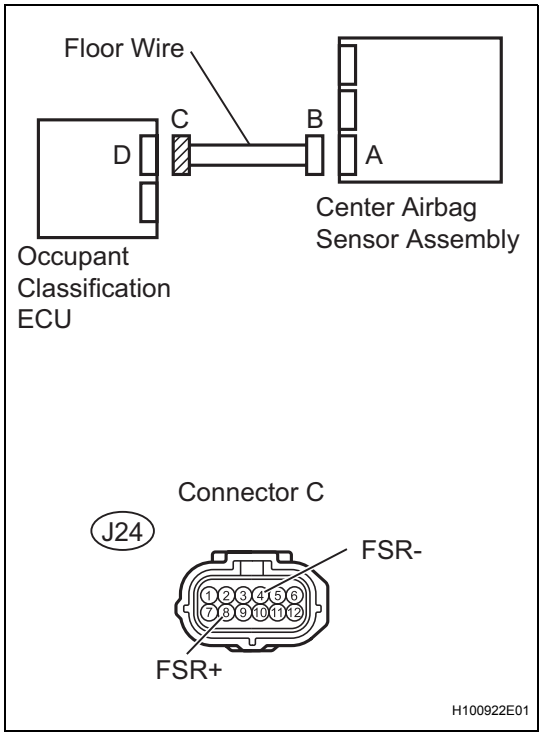

(a) Disconnect the connectors from the occupant classification ECU and the center airbag sensor assembly.
(b) Connect the negative (-) terminal cable to the battery.
(c) Turn the ignition switch to the on position.
(d) Measure the voltage.

Standard voltage

Tester connection	Condition	Specified condition
J24-8 (FSR+) - Body ground	Ignition switch on	Below 1 V
J24-4 (FSR-) - Body ground	Ignition switch on	Below 1 V

NG → **REPAIR OR REPLACE FLOOR WIRE**

OK

4	CHECK FLOOR WIRE (FOR OPEN)

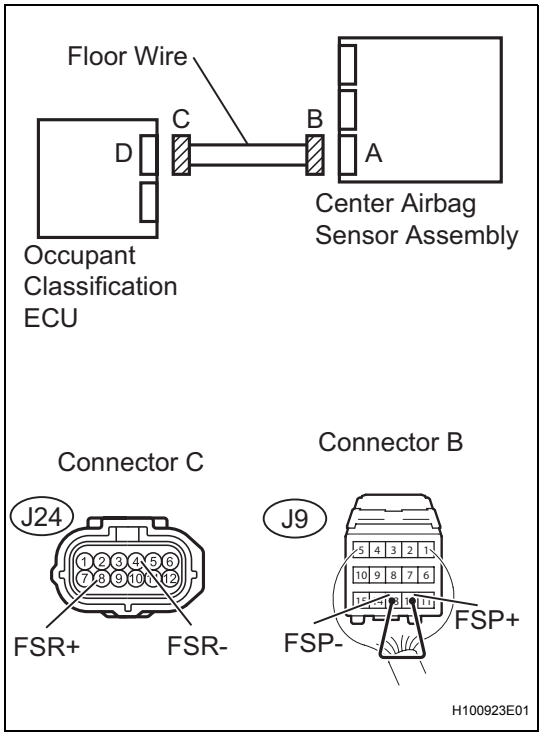

(a) Turn the ignition switch to the lock position.
(b) Disconnect the negative (-) terminal cable from the battery, and wait for at least 90 seconds.
(c) Using a service wire, connect J9-12 (FSP+) and J9-13 (FSP-) of connector B.

NOTICE:
Do not forcibly insert the service wire into the terminals of the connector when connecting.

(d) Measure the resistance.

Standard resistance

Tester connection	Condition	Specified condition
J24-8 (FSR+) - J24-4 (FSR-)	Always	Below 1 Ω

NG → **REPAIR OR REPLACE FLOOR WIRE**

OK

5 CHECK FLOOR WIRE (FOR SHORT)

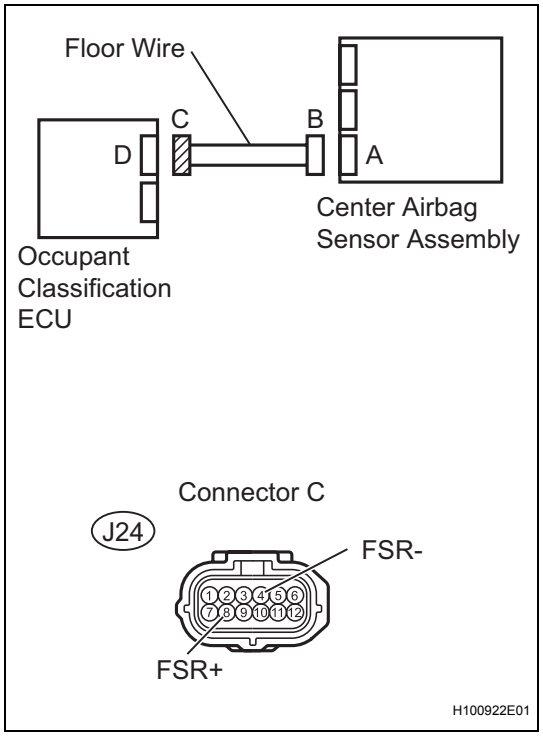

(a) Disconnect the service wire from connector B.
(b) Measure the resistance.
Standard resistance

Tester connection	Condition	Specified condition
J24-8 (FSR+) - J24-4 (FSR-)	Always	1 MΩ or higher

NG → **REPAIR OR REPLACE FLOOR WIRE**

OK

6 CHECK FLOOR WIRE (TO GROUND)

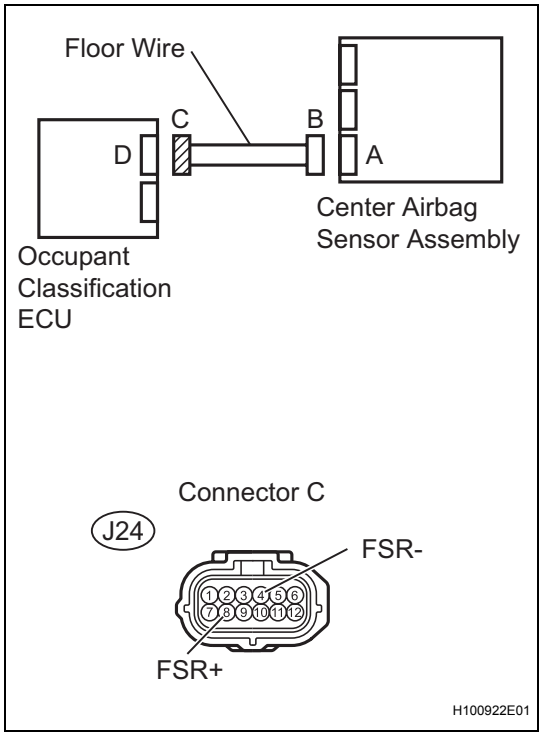

(a) Measure the resistance.
Standard resistance

Tester connection	Condition	Specified condition
J24-8 (FSR+) - Body ground	Always	1 MΩ or higher
J24-4 (FSR-) - Body ground	Always	1 MΩ or higher

NG → **REPAIR OR REPLACE FLOOR WIRE**

OK

RS

7	CHECK DTC

(a) Connect the connectors to the occupant classification ECU and the center airbag sensor assembly.
(b) Connect the negative (-) terminal cable to the battery.
(c) Turn the ignition switch to the on position.
(d) Clear the DTCs stored in the memory (See page RS-223).
HINT:
First clear DTCs stored in the occupant classification ECU and then in the center airbag sensor assembly.
(e) Turn the ignition switch to the lock position.
(f) Turn the ignition switch to the on position.
(g) Check the DTCs (See page RS-223).
OK:
DTC B1790 is not output.
HINT:
Codes other than DTC B1790 may be output at this time, but they are not related to this check.

OK → **USE SIMULATION METHOD TO CHECK**

NG

8	REPLACE OCCUPANT CLASSIFICATION ECU

(a) Turn the ignition switch to the lock position.
(b) Disconnect the negative (-) terminal cable from the battery, and wait for at least 90 seconds.
(c) Replace the occupant classification ECU (See page RS-493).
HINT:
Perform the inspection using parts from a normal vehicle if possible.

NEXT

9	PERFORM ZERO POINT CALIBRATION

(a) Connect the negative (-) terminal cable to the battery.
(b) Connect the intelligent tester to the DLC3.
(c) Turn the ignition switch to the on position.
(d) Using the intelligent tester, perform the zero point calibration (See page RS-215).
OK:
COMPLETED is displayed.

NEXT

10	PERFORM SENSITIVITY CHECK

(a) Using the intelligent tester, perform the sensitivity check (See page RS-215).
  (1) Confirm that nothing is placed on the passenger seat.
  (2) Confirm that the beginning sensor reading is within the standard range.
  Standard range:
  -3.2 to 3.2 kg (-7 to 7 lb)
  (3) Place a 30 kg (66.14 lb) weight (e.g. a lead mass) onto the front passenger seat.
  (4) Confirm that the sensitivity is within the standard range.
  Standard range:
  27 to 33 kg (59.52 to 72.75 lb)
  HINT:
  When performing the sensitivity check, use a solid metal weight (the check result may not be accurate if a liquid weight is used).

NEXT

11	CHECK DTC

(a) Turn the ignition switch to the on position.
(b) Clear the DTCs stored in the memory (See page RS-223).
  HINT:
  First clear DTCs stored in the occupant classification ECU and then in the center airbag sensor assembly.
(c) Turn the ignition switch to the lock position.
(d) Turn the ignition switch to the on position.
(e) Check the DTCs (See page RS-223).
  OK:
  DTC B1790 is not output.
  HINT:
  Codes other than DTC B1790 may be output at this time, but they are not related to this check.

NG → **REPLACE CENTER AIRBAG SENSOR ASSEMBLY**

OK

END

DTC	B1793	Occupant Classification Sensor Power Supply Circuit Malfunction

DESCRIPTION

The occupant classification sensor power supply circuit consists of the occupant classification ECU and the occupant classification sensors.

DTC B1793 is recorded when a malfunction is detected in the occupant classification sensor power supply circuit.

DTC No.	DTC Detecting Condition	Trouble Area
B1793	• Occupant classification ECU detects line short circuit signal, open circuit signal, short circuit to ground signal or short circuit to B+ signal in occupant classification sensor power supply circuit for 2 seconds • Occupant classification ECU malfunction	• Front seat wire RH • Front seat assembly RH (Occupant classification sensors) • Occupant classification ECU

WIRING DIAGRAM

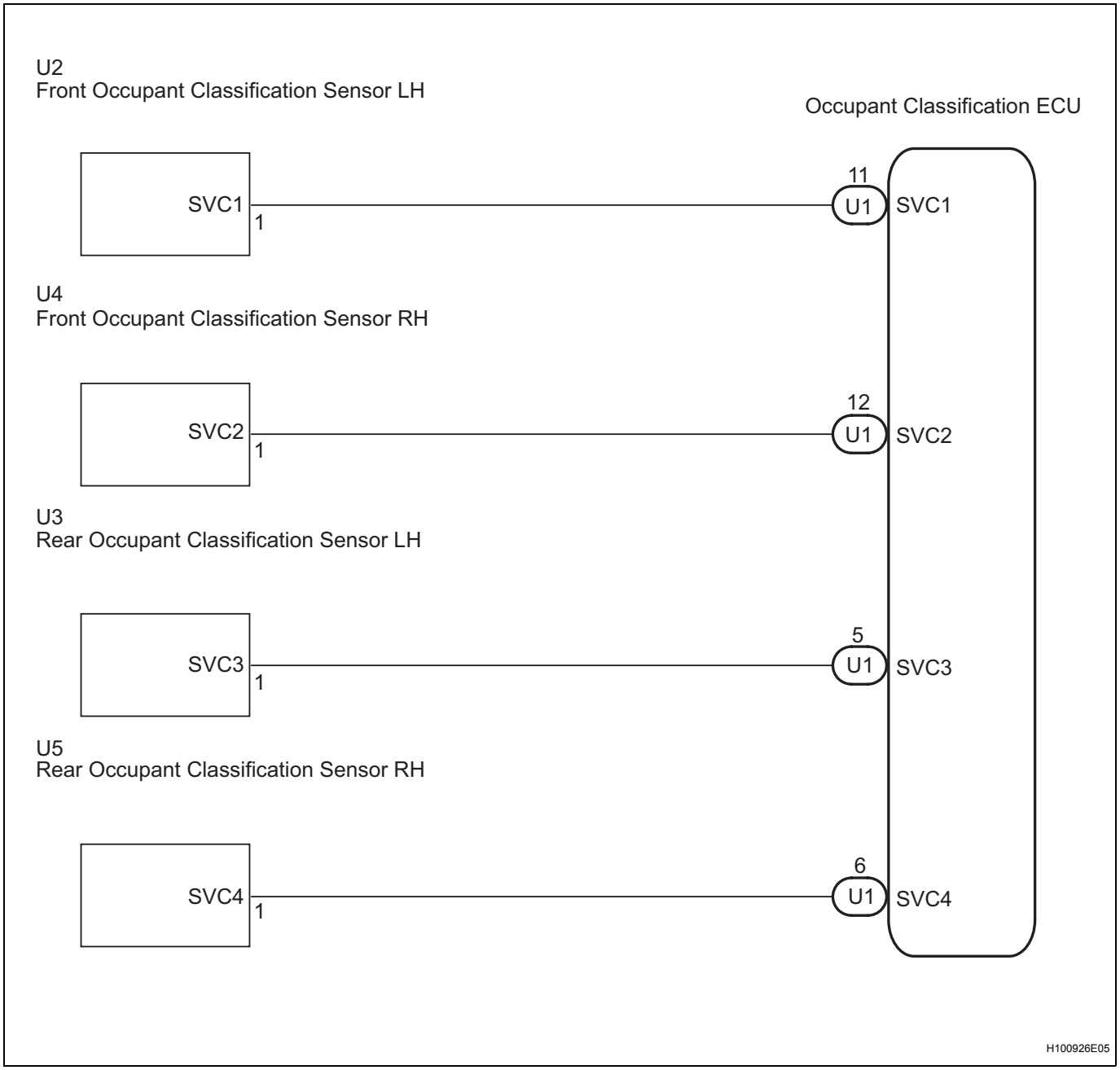

INSPECTION PROCEDURE

HINT:

- If troubleshooting (wire harness inspection) is difficult to perform, remove the front passenger seat installation bolts to see the under surface of the seat cushion.
- In the above case, hold the seat so that it does not tip over. Holding the seat for a long period of time may cause a problem, such as seat rail deformation. Hold the seat up only for as long as necessary.

1	**CHECK DTC**

(a) Turn the ignition switch to the on position.
(b) Clear the DTCs stored in the memory (See page RS-223).

HINT:
First clear DTCs stored in the occupant classification ECU and then in the center airbag sensor assembly.

(c) Turn the ignition switch to the lock position.
(d) Turn the ignition switch to the on position.
(e) Check the DTCs (See page RS-223).
OK:
DTC B1793 is not output.
HINT:
Codes other than DTC B1793 may be output at this time, but they are not related to this check.

OK	**USE SIMULATION METHOD TO CHECK**

NG

2	**CHECK CONNECTION OF CONNECTORS**

(a) Turn the ignition switch to the lock position.
(b) Disconnect the negative (-) terminal cable from the battery, and wait for at least 90 seconds.
(c) Check that the connectors are properly connected to the occupant classification ECU and the occupant classification sensors.
OK:
The connectors are properly connected.

NG	**CONNECT CONNECTORS**

OK

3	**CHECK FRONT SEAT WIRE RH (TO B+)**

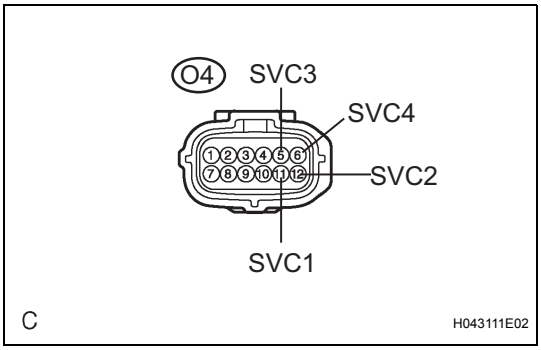

(a) Disconnect the connectors from the occupant classification ECU and the 4 occupant classification sensors.
(b) Connect the negative (-) terminal cable to the battery.
(c) Turn the ignition switch to the on position.
(d) Measure the voltage.
Standard voltage

Tester connection	Condition	Specified condition
O4-11 (SVC1) - Body ground	Ignition switch on	Below 1 V
O4-12 (SVC2) - Body ground	Ignition switch on	Below 1 V
O4-5 (SVC3) - Body ground	Ignition switch on	Below 1 V
O4-6 (SVC4) - Body ground	Ignition switch on	Below 1 V

NG	**REPAIR OR REPLACE FRONT SEAT WIRE RH**

OK

4	CHECK FRONT SEAT WIRE RH (TO GROUND)

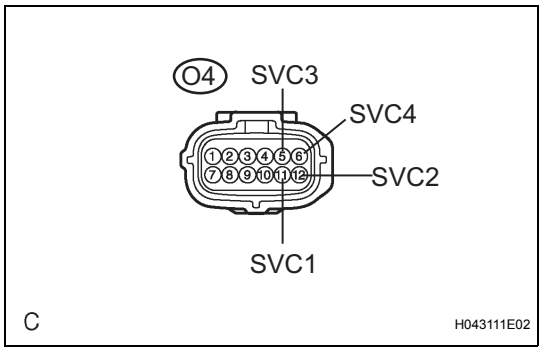

(a) Turn the ignition switch to the lock position.
(b) Disconnect the negative (-) terminal cable from the battery, and wait for at least 90 seconds.
(c) Measure the resistance.

Standard resistance

Tester connection	Condition	Specified condition
O4-11 (SVC1) - Body ground	Always	1 MΩ or higher
O4-12 (SVC2) - Body ground	Always	1 MΩ or higher
O4-5 (SVC3) - Body ground	Always	1 MΩ or higher
O4-6 (SVC4) - Body ground	Always	1 MΩ or higher

NG → REPAIR OR REPLACE FRONT SEAT WIRE RH

OK

RS

RS

5 CHECK FRONT SEAT WIRE RH (FOR OPEN)

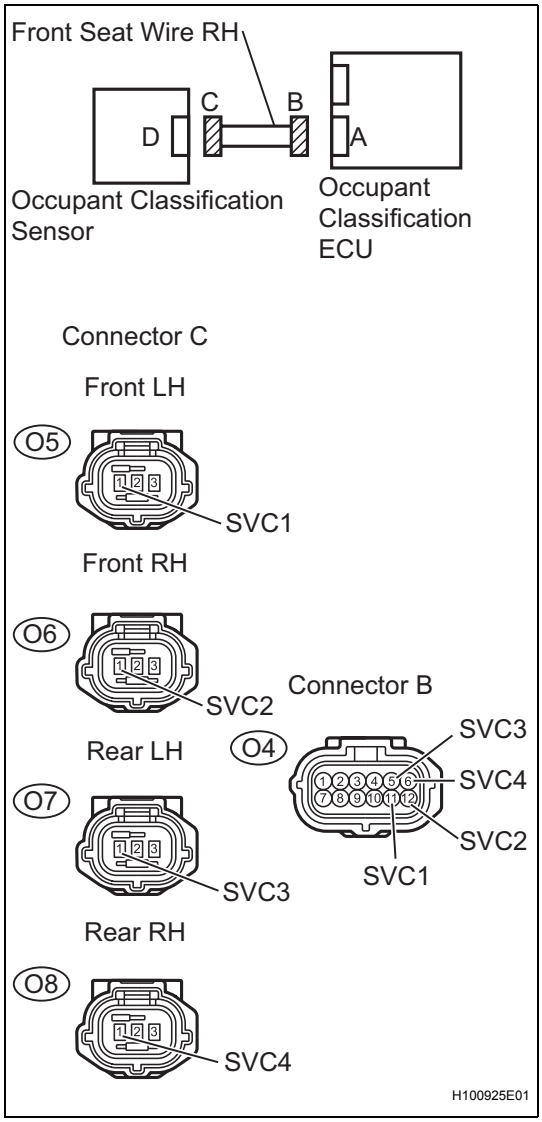

(a) Measure the resistance.
Standard resistance

Tester connection	Condition	Specified condition
O4-11 (SVC1) - O5-1 (SVC1)	Always	Below 1 Ω
O4-12 (SVC2) - O6-1 (SVC2)	Always	Below 1 Ω
O4-5 (SVC3) - O7-1 (SVC3)	Always	Below 1 Ω
O4-6 (SVC4) - O8- 1 (SVC4)	Always	Below 1 Ω

NG → **REPAIR OR REPLACE FRONT SEAT WIRE RH**

OK

6 CHECK FRONT SEAT WIRE RH (FOR SHORT)

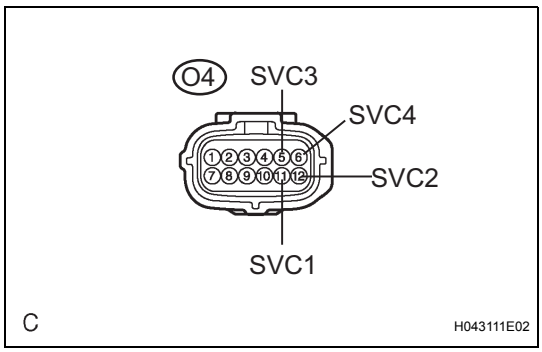

(a) Measure the resistance.
Standard resistance

Tester connection	Condition	Specified condition
O4-5 (SVC3) - O4-6 (SVC4)	Always	1 MΩ or higher
O4-6 (SVC4) - O4-11 (SVC1)	Always	1 MΩ or higher
O4-11 (SVC1) - O4-12 (SVC2)	Always	1 MΩ or higher
O4-12 (SVC2) - O4-5 (SVC3)	Always	1 MΩ or higher
O4-12 (SVC2) - O4-6 (SVC4)	Always	1 MΩ or higher

Tester connection	Condition	Specified condition
O4-11 (SVC1) - O4-5 (SVC3)	Always	1 MΩ or higher

NG → REPAIR OR REPLACE FRONT SEAT WIRE RH

OK

7 CHECK DTC

(a) Connect the connectors to the occupant classification ECU and the 4 occupant classification sensors.
(b) Connect the negative (-) terminal cable to the battery.
(c) Turn the ignition switch to the on position.
(d) Clear the DTCs stored in the memory (See page RS-223).
HINT:
First clear DTCs stored in the occupant classification ECU and then in the center airbag sensor assembly.
(e) Turn the ignition switch to the lock position.
(f) Turn the ignition switch to the on position.
(g) Check the DTCs (See page RS-223).
OK:
DTC B1793 is not output.
HINT:
Codes other than DTC B1793 may be output at this time, but they are not related to this check.

OK → USE SIMULATION METHOD TO CHECK

NG

8 REPLACE OCCUPANT CLASSIFICATION ECU

(a) Turn the ignition switch to the lock position.
(b) Disconnect the negative (-) terminal cable from the battery, and wait for at least 90 seconds.
(c) Replace the occupant classification ECU (See page RS-493).
HINT:
Perform the inspection using parts from a normal vehicle if possible.

NEXT

9 PERFORM ZERO POINT CALIBRATION

(a) Connect the negative (-) terminal cable to the battery.
(b) Connect the intelligent tester to the DLC3.
(c) Turn the ignition switch to the on position.
(d) Using the intelligent tester, perform the zero point calibration (See page RS-215).

OK:
COMPLETED is displayed.

NG → **Go to step 12**

OK

RS

10	PERFORM SENSITIVITY CHECK

(a) Using the intelligent tester, perform the sensitivity check (See page RS-215).
(1) Confirm that nothing is placed on the passenger seat.
(2) Confirm that the beginning sensor reading is within the standard range.
Standard range:
-3.2 to 3.2 kg (-7 to 7 lb)
(3) Place a 30 kg (66.14 lb) weight (e.g. a lead mass) onto the front passenger seat.
(4) Confirm that the sensitivity is within the standard range.
Standard range:
27 to 33 kg (59.52 to 72.75 lb)
HINT:
When performing the sensitivity check, use a solid metal weight (the check result may not be accurate if a liquid weight is used).

NG → **Go to step 12**

OK

11	CHECK DTC

(a) Connect the negative (-) terminal cable to the battery.
(b) Turn the ignition switch to the on position.
(c) Clear the DTCs stored in the memory (See page RS-223).
HINT:
First clear DTCs stored in the occupant classification ECU and then in the center airbag sensor assembly.
(d) Turn the ignition switch to the lock position.
(e) Turn the ignition switch to the on position.
(f) Check the DTCs (See page RS-223).
OK:
DTC B1793 is not output.
HINT:
Codes other than DTC B1793 may be output at this time, but they are not related to this check.

OK → **END**

NG

12	REPLACE FRONT SEAT ASSEMBLY RH

(a) Turn the ignition switch to the lock position.
(b) Disconnect the negative (-) terminal cable from the battery, and wait for at least 90 seconds.
(c) Replace the front seat assembly RH.
for Hatchback: (See page SE-28)
for Sedan: (See page SE-5)

NEXT

13	PERFORM ZERO POINT CALIBRATION

(a) Connect the negative (-) terminal cable to the battery.
(b) Connect the intelligent tester to the DLC3.
(c) Turn the ignition switch to the on position.
(d) Using the intelligent tester, perform the zero point calibration (See page RS-215).
OK:
COMPLETED is displayed.

NEXT

14	PERFORM SENSITIVITY CHECK

(a) Using the intelligent tester, perform the sensitivity check (See page RS-223).
(1) Confirm that nothing is placed on the passenger seat.
(2) Confirm that the beginning sensor reading is within the standard range.
Standard range:
-3.2 to 3.2 kg (-7 to 7 lb)
(3) Place a 30 kg (66.14 lb) weight (e.g. a lead mass) onto the front passenger seat.
(4) Confirm that the sensitivity is within the standard range.
Standard range:
27 to 33 kg (59.52 to 72.75 lb)
HINT:
When performing the sensitivity check, use a solid metal weight (the check result may not be accurate if a liquid weight is used).

NEXT

END

DTC	B1794	Open in Occupant Classification ECU Battery Positive Line

DESCRIPTION

DTC B1794 is set when a malfunction is detected in the occupant classification ECU battery positive line.

DTC No.	DTC Detecting Conditions	Trouble Areas
B1794	• Occupant classification ECU circuit malfunction • Occupant classification ECU malfunction • Occupant classification ECU detects short circuit to ground signal in passenger side buckle switch circuit for 2 seconds	• Wire harness • Occupant classification ECU

WIRING DIAGRAM

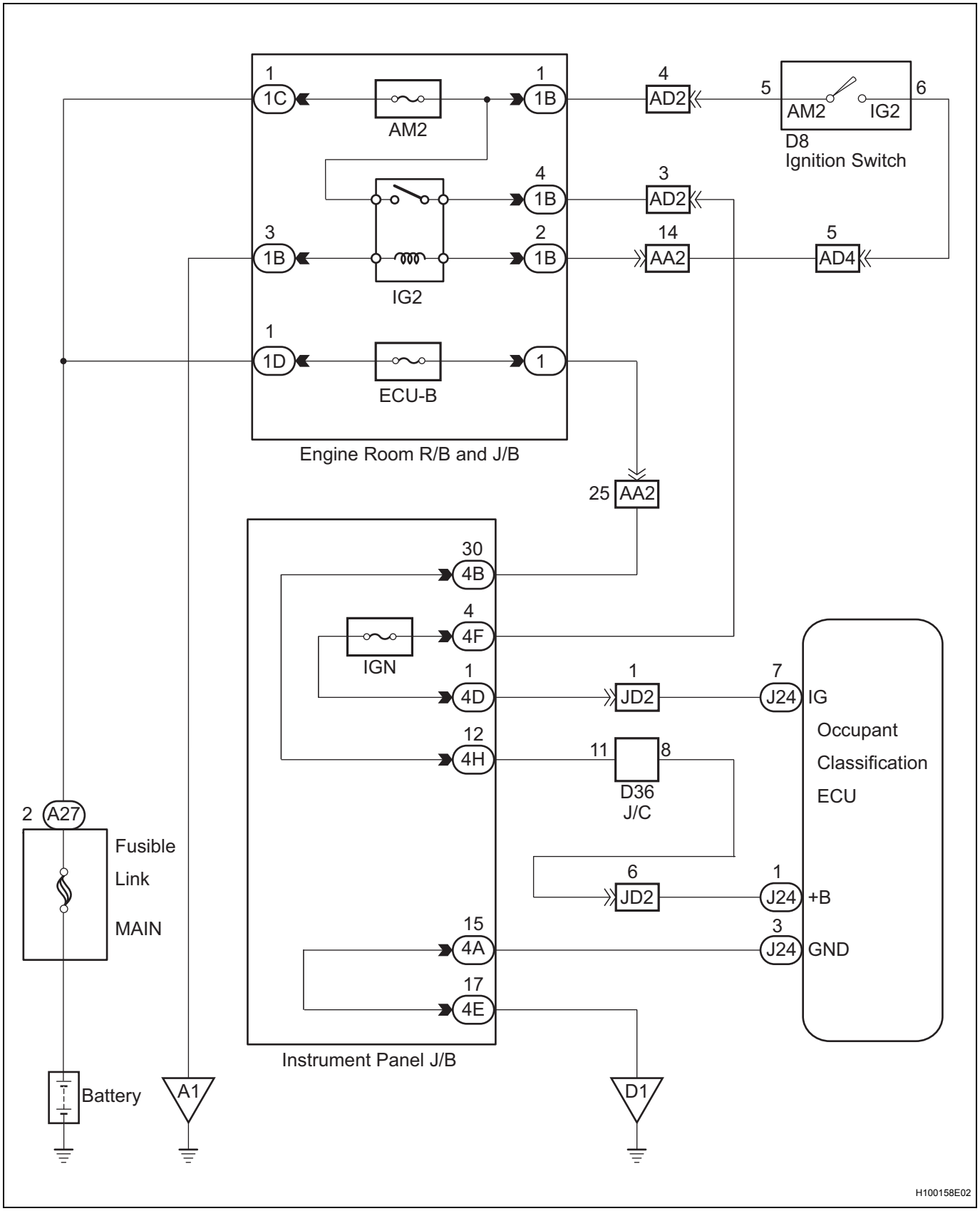

INSPECTION PROCEDURE

RS

1	CHECK DTC

(a) Turn the ignition switch to the on position.
(b) Clear the DTCs stored in the memory (See page RS-223).
HINT:
First clear DTCs stored in the occupant classification ECU and then in the center airbag sensor assembly.
(c) Turn the ignition switch to the lock position, and wait for at least 10 seconds.
(d) Turn the ignition switch to the on position.
(e) Check the DTCs (See page RS-223).
OK:
DTC B1794 is not output.
HINT:
DTCs other than B1794 may be output at this time, but they are not related to this check.

OK → **USE SIMULATION METHOD TO CHECK**

NG

2	CHECK CONNECTION OF CONNECTORS

(a) Turn the ignition switch to the lock position.
(b) Disconnect the negative (-) terminal cable from the battery, and wait for at least 90 seconds.
(c) Check that the connectors are properly connected to the occupant classification ECU.
OK:
The connectors are properly connected.

NG → **CONNECT CONNECTORS**

OK

3	CHECK WIRE HARNESS (SOURCE VOLTAGE)

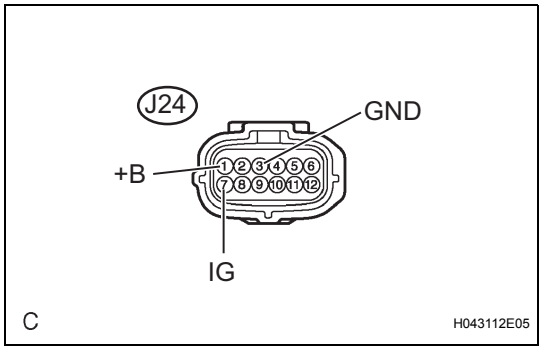

(a) Turn the ignition switch to the lock position.
(b) Disconnect the negative (-) terminal cable from the battery, and wait for at least 90 seconds.
(c) Disconnect the J24 connector from the occupant classification ECU.
(d) Connect the negative (-) terminal cable to the battery.
(e) Turn the ignition switch to the on position.
(f) Measure the voltage.
Standard voltage

Tester Connection	Condition	Specified Condition
J24-1 (+B) - Body ground	Ignition switch on	11 to 14 V

Tester Connection	Condition	Specified Condition
J24-7 (IG) - Body ground	Ignition switch on	11 to 14 V

(g) Measure the resistance.
Standard resistance

Tester Connection	Condition	Specified Condition
J24-3 (GND) - Body ground	Always	Below 1 Ω

RS

NG → **REPAIR OR REPLACE HARNESS OR CONNECTOR (BATTERY - OCCUPANT CLASSIFICATION ECU)**

OK

4	CHECK DTC

(a) Turn the ignition switch to the lock position.
(b) Disconnect the negative (-) terminal cable from the battery, and wait for at least 90 seconds.
(c) Connect the connectors to the occupant classification ECU.
(d) Connect the negative (-) terminal cable to the battery.
(e) Turn the ignition switch to the on position.
(f) Clear any DTCs stored in the memory (See page RS-223).
HINT:
First clear DTCs stored in the occupant classification ECU and then in the center airbag sensor assembly.
(g) Turn the ignition switch to the lock position, and wait for at least 10 seconds.
(h) Turn the ignition switch to the on position.
(i) Using the intelligent tester, check for DTCs of the occupant classification ECU (See page RS-223).
OK:
DTC B1794 is not output.
HINT:
DTCs other than B1794 may be output at this time, but they are not related to this check.

OK → **USE SIMULATION METHOD TO CHECK**

NG

5	REPLACE OCCUPANT CLASSIFICATION ECU

(a) Turn the ignition switch to the lock position.
(b) Disconnect the negative (-) terminal cable from the battery, and wait for at least 90 seconds.
(c) Replace the occupant classification ECU (See page RS-493).

HINT:
Perform the inspection using parts from a normal vehicle when possible.

NEXT

RS

6	PERFORM ZERO POINT CALIBRATION

(a) Connect the negative (-) terminal cable to the battery.
(b) Connect the intelligent tester to the DLC3.
(c) Turn the ignition switch to the on position.
(d) Using the intelligent tester, perform the zero point calibration (See page RS-215).
OK:
COMPLETED is displayed on the tester.

NEXT

7	PERFORM SENSITIVITY CHECK

(a) Using the intelligent tester, perform the sensitivity check (See page RS-215).
(1) Confirm that nothing is placed on the passenger seat.
(2) Confirm that the beginning sensor reading is within the standard range.
Standard range:
-3.2 to 3.2 kg (-7 to 7 lb)
(3) Place a 30 kg (66.14 lb) weight (e.g. a lead mass) onto the front passenger seat.
(4) Confirm that the sensitivity is within the standard range.
Standard range:
27 to 33 kg (59.52 to 72.75 lb)
HINT:
When performing the sensitivity check, use a solid metal weight (the check result may not be accurate if a liquid weight is used).

NEXT

END

DTC	B1795	Occupant Classification ECU Malfunction

DESCRIPTION

DTC B1795 is recorded when a malfunction is detected in the occupant classification ECU.

DTC No.	DTC Detecting Condition	Trouble Area
B1795	• Occupant classification ECU malfunction	• Occupant classification ECU

RS

INSPECTION PROCEDURE

1	CHECK DTC

(a) Turn the ignition switch to the on position.
(b) Clear the DTCs stored in the memory (See page RS-223).
HINT:
First clear DTCs stored in the occupant classification ECU and then in the center airbag sensor assembly.
(c) Turn the ignition switch to the lock position and wait for at least 10 seconds.
(d) Turn the ignition switch to the on position.
(e) Check the DTCs (See page RS-223).
OK:
DTC B1795 is not output.
HINT:
Codes other than DTC B1795 may be output at this time, but they are not related to this check.

OK → **USE SIMULATION METHOD TO CHECK**

NG

2	REPLACE OCCUPANT CLASSIFICATION ECU

(a) Turn the ignition switch to the lock position.
(b) Disconnect the negative (-) terminal cable from the battery, and wait for at least 90 seconds.
(c) Replace the occupant classification ECU (See page RS-493).
HINT:
Perform the inspection using parts from a normal vehicle if possible.

NEXT

3	PERFORM ZERO POINT CALIBRATION

(a) Connect the negative (-) terminal cable to the battery.
(b) Connect the intelligent tester to the DLC3.
(c) Turn the ignition switch to the on position.
(d) Using the intelligent tester, perform the zero point calibration (See page RS-215).

OK:
COMPLETED is displayed.

NEXT

RS

4	PERFORM SENSITIVITY CHECK

(a) Using the intelligent tester, perform the sensitivity check (See page RS-215).
(1) Confirm that nothing is placed on the passenger seat.
(2) Confirm that the beginning sensor reading is within the standard range.
Standard range:
-3.2 to 3.2 kg (-7 to 7 lb)
(3) Place a 30 kg (66.14 lb) weight (e.g. a lead mass) onto the front passenger seat.
(4) Confirm that the sensitivity is within the standard range.
Standard range:
27 to 33 kg (59.52 to 72.75 lb)
HINT:
When performing the sensitivity check, use a solid metal weight (the check result may not be accurate if a liquid weight is used).

NEXT

END

DTC	B1796	Sleep Operation Failure of Occupant Classification ECU

DESCRIPTION

During sleep mode, the occupant classification ECU reads the condition of each sensor while the ignition switch is off.
In this mode, if the occupant classification ECU detects an internal malfunction, DTC B1796 is output.

DTC No.	DTC Detecting Condition	Trouble Area
B1796	• Occupant classification ECU malfunction	• Occupant classification ECU

INSPECTION PROCEDURE

1 CHECK DTC

(a) Turn the ignition switch to the on position.
(b) Clear the DTCs stored in the memory (See page RS-223).
HINT:
First clear DTCs stored in the occupant classification ECU and then in the center airbag sensor assembly.
(c) Turn the ignition switch to the lock position, and wait for at least 2 seconds.
(d) Turn the ignition switch to the on position.
(e) Check the DTCs (See page RS-223).
OK:
DTC B1796 is not output.
HINT:
Codes other than DTC B1796 may be output at this time, but they are not related to this check.

OK → **USE SIMULATION METHOD TO CHECK**

NG

2 REPLACE OCCUPANT CLASSIFICATION ECU

(a) Turn the ignition switch to the lock position.
(b) Disconnect the negative (-) terminal cable from the battery, and wait for at least 90 seconds.
(c) Replace the occupant classification ECU (See page RS-493).
HINT:
Perform the inspection using parts from a normal vehicle if possible.

NEXT

3 PERFORM ZERO POINT CALIBRATION

(a) Connect the negative (-) terminal cable to the battery.
(b) Connect the intelligent tester to the DLC3.

(c) Turn the ignition switch to the on position.
(d) Using the intelligent tester, perform the zero point calibration (See page RS-215).
OK:
COMPLETED is displayed.

RS

NEXT

4	PERFORM SENSITIVITY CHECK

(a) Using the intelligent tester, perform the sensitivity check (See page RS-215).
(1) Confirm that nothing is placed on the passenger seat.
(2) Confirm that the beginning sensor reading is within the standard range.
Standard range:
-3.2 to 3.2 kg (-7 to 7 lb)
(3) Place a 30 kg (66.14 lb) weight (e.g. a lead mass) onto the front passenger seat.
(4) Confirm that the sensitivity is within the standard range.
Standard range:
27 to 33 kg (59.52 to 72.75 lb)
HINT:
When performing the sensitivity check, use a solid metal weight (the check result may not be accurate if a liquid weight is used).

NEXT

END

Trouble in Passenger Airbag ON / OFF Indicator

DESCRIPTION

The occupant classification system detects the front passenger seat condition and then indicates whether the front passenger airbag is activated or not through the passenger airbag ON/OFF indicator illumination. The passenger airbag ON/OFF indicator illumination changes depending on the front passenger seat condition as shown in the table below.

Front passenger seat condition	ON Indicator	OFF Indicator
Vacant	OFF	OFF
Adult is seated	ON	OFF
Child is seated	OFF	ON
Child restraint system is set	OFF	ON
Front passenger occupant classification system failure	OFF	ON

RS

WIRING DIAGRAM

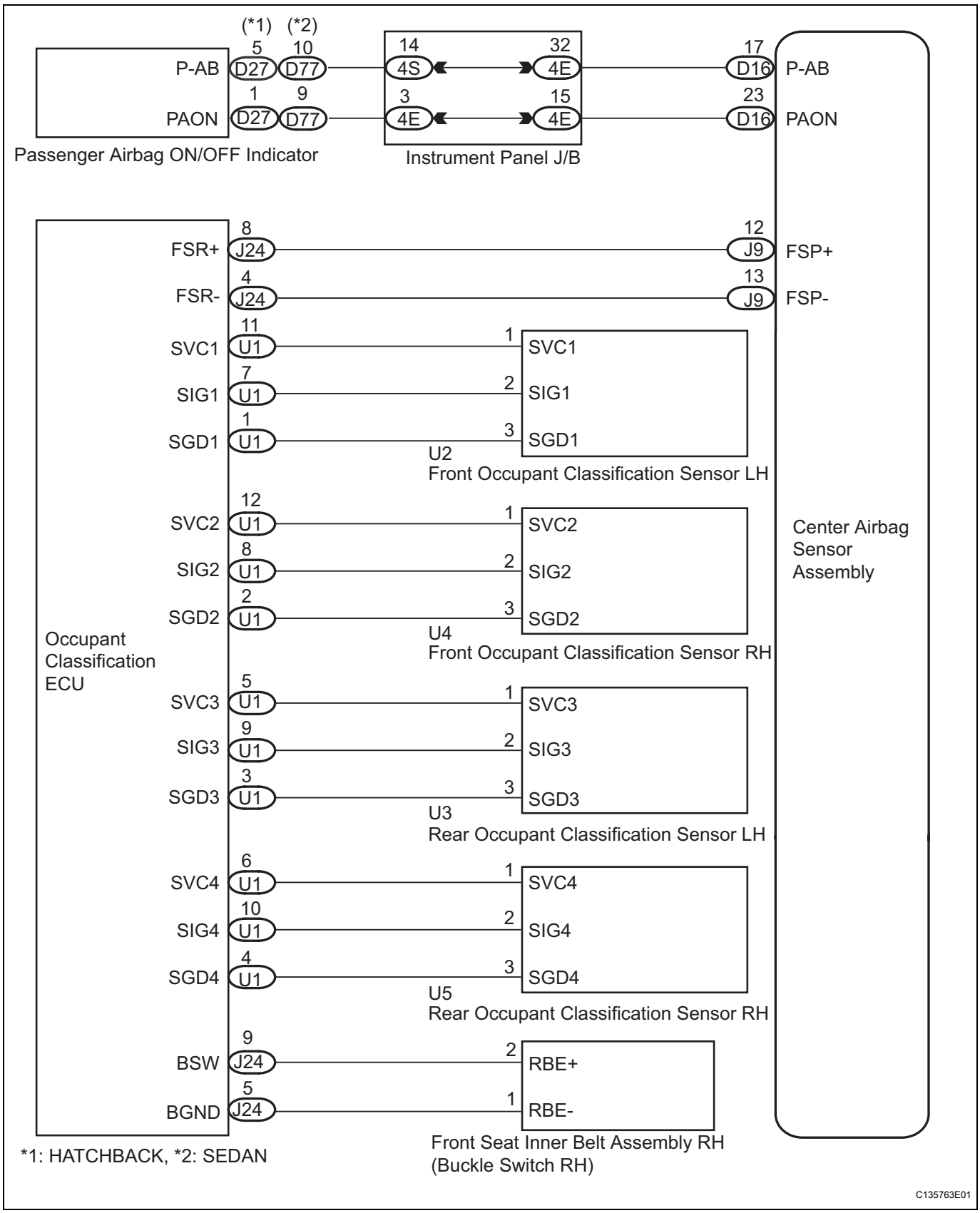

INSPECTION PROCEDURE

1	CHECK SRS WARNING LIGHT

(a) Turn the ignition switch to the on position, and check the SRS warning light condition.
OK:
The SRS warning light does not come on.

NG → **Go to step 9**

OK

2	CHECK PASSENGER AIRBAG ON/OFF INDICATOR CONDITION

(a) Turn the ignition switch to the on position.
(b) Check if the passenger airbag ON/OFF indicator correctly indicates the front passenger seat condition.

OK

Front passenger seat condition	ON Indicator	OFF Indicator
Vacant	OFF	OFF
Adult is seated	ON	OFF
Child is seated	OFF	ON
Child restraint system is set	OFF	ON
Front passenger occupant classification system failure	OFF	ON

OK → **END**

NG

3	PERFORM ZERO POINT CALIBRATION

(a) Turn the ignition switch to the lock position.
(b) Connect the intelligent tester to the DLC3.
(c) Turn the ignition switch to the on position.
(d) Using the intelligent tester, perform the zero point calibration (See page RS-215).
OK:
COMPLETE is displayed.

NG → **Go to step 5**

OK

4	PERFORM SENSITIVITY CHECK

(a) Using the intelligent tester, perform the sensitivity check (See page RS-215).
(1) Confirm that nothing is placed on the passenger seat.

(2) Confirm that the beginning sensor reading is within the standard range.
Standard range:
-3.2 to 3.2 kg (-7 to 7 lb)

(3) Place a 30 kg (66.14 lb) weight (e.g. a lead mass) onto the front passenger seat.

(4) Confirm that the sensitivity is within the standard range.
Standard range:
27 to 33 kg (59.52 to 72.75 lb)
HINT:
When performing the sensitivity check, use a solid metal weight (the check result may not be accurate if a liquid weight is used).

NG → **Go to step 5**

OK

END

5	RETIGHTEN FRONT SEAT ASSEMBLY RH BOLT

(a) Turn the ignition switch to the lock position.
(b) Loosen the 4 installation bolts of the front seat assembly RH.
(c) Tighten the 4 installation bolts of the front seat assembly RH to the specified torque.
Torque: 37 N*m (375 kgf*cm, 27 ft.*lbf)

NG → **Go to step 8**

OK

6	PERFORM ZERO POINT CALIBRATION

(a) Connect the intelligent tester to the DLC3.
(b) Turn the ignition switch to the on position.
(c) Using the intelligent tester, perform the zero point calibration (See page RS-215).
OK:
COMPLETE is displayed.

NG → **Go to step 8**

OK

7	PERFORM SENSITIVITY CHECK

(a) Using the intelligent tester, perform the sensitivity check (See page RS-215).
(1) Confirm that nothing is placed on the passenger seat.

(2) Confirm that the beginning sensor reading is within the standard range.
Standard range:
-3.2 to 3.2 kg (-7 to 7 lb)
(3) Place a 30 kg (66.14 lb) weight (e.g. a lead mass) onto the front passenger seat.
(4) Confirm that the sensitivity is within the standard range.
Standard range:
27 to 33 kg (59.52 to 72.75 lb)
HINT:
When performing the sensitivity check, use a solid metal weight (the check result may not be accurate if a liquid weight is used).

RS

NG → **Go to step 8**

OK

8	CHECK CONNECTORS

(a) Turn the ignition switch to the lock position.
(b) Disconnect the negative (-) terminal cable from the battery, and wait for at least 90 seconds.
(c) Check that the connectors are properly connected to the occupant classification ECU and the 4 occupant classification sensors.
OK:
The connectors are connected.
(d) Disconnect the connectors from the occupant classification ECU and the 4 occupant classification sensors.
(e) Check that the connectors are not damaged or deformed.
OK:
The connectors are normal.

NG → **REPAIR OR REPLACE WIRE HARNESS AND CONNECTOR**

OK

9	CHECK DTC

(a) Connect the connectors to the occupant classification ECU and the 4 occupant classification sensors.
(b) Connect the negative (-) terminal cable to the battery.
(c) Turn the ignition switch to the on position, and wait for at least 60 seconds.
(d) Turn the ignition switch to the lock position.
(e) Clear the DTCs stored in the memory (See page RS-223).
(f) Turn the ignition switch to the on position, and wait for at least 60 seconds.

(g) Check the DTCs (See page RS-223).
OK:
DTC is not output.

NG → **REPLACE CENTER AIRBAG SENSOR ASSEMBLY**

RS

OK

10	REPLACE OCCUPANT CLASSIFICATION ECU

(a) Turn the ignition switch to the lock position.
(b) Disconnect the negative (-) terminal cable from the battery, and wait for at least 90 seconds.
(c) Replace the occupant classification ECU (See page RS-493).
HINT:
Perform the inspection using parts from a normal vehicle if possible.

NEXT

11	PERFORM ZERO POINT CALIBRATION

(a) Connect the negative (-) terminal cable to the battery.
(b) Connect the intelligent tester to the DLC3.
(c) Turn the ignition switch to the on position.
(d) Using the intelligent tester, perform the zero point calibration (See page RS-215).
OK:
COMPLETE is displayed.

NEXT

12	PERFORM SENSITIVITY CHECK

(a) Using the intelligent tester, perform the sensitivity check (See page RS-215).
(1) Confirm that nothing is placed on the passenger seat.
(2) Confirm that the beginning sensor reading is within the standard range.
Standard range:
-3.2 to 3.2 kg (-7 to 7 lb)
(3) Place a 30 kg (66.14 lb) weight (e.g. a lead mass) onto the front passenger seat.
(4) Confirm that the sensitivity is within the standard range.
Standard range:
27 to 33 kg (59.52 to 72.75 lb)
HINT:
When performing the sensitivity check, use a solid metal weight (the check result may not be accurate if a liquid weight is used).

NEXT

END

STEERING PAD

COMPONENTS

RS

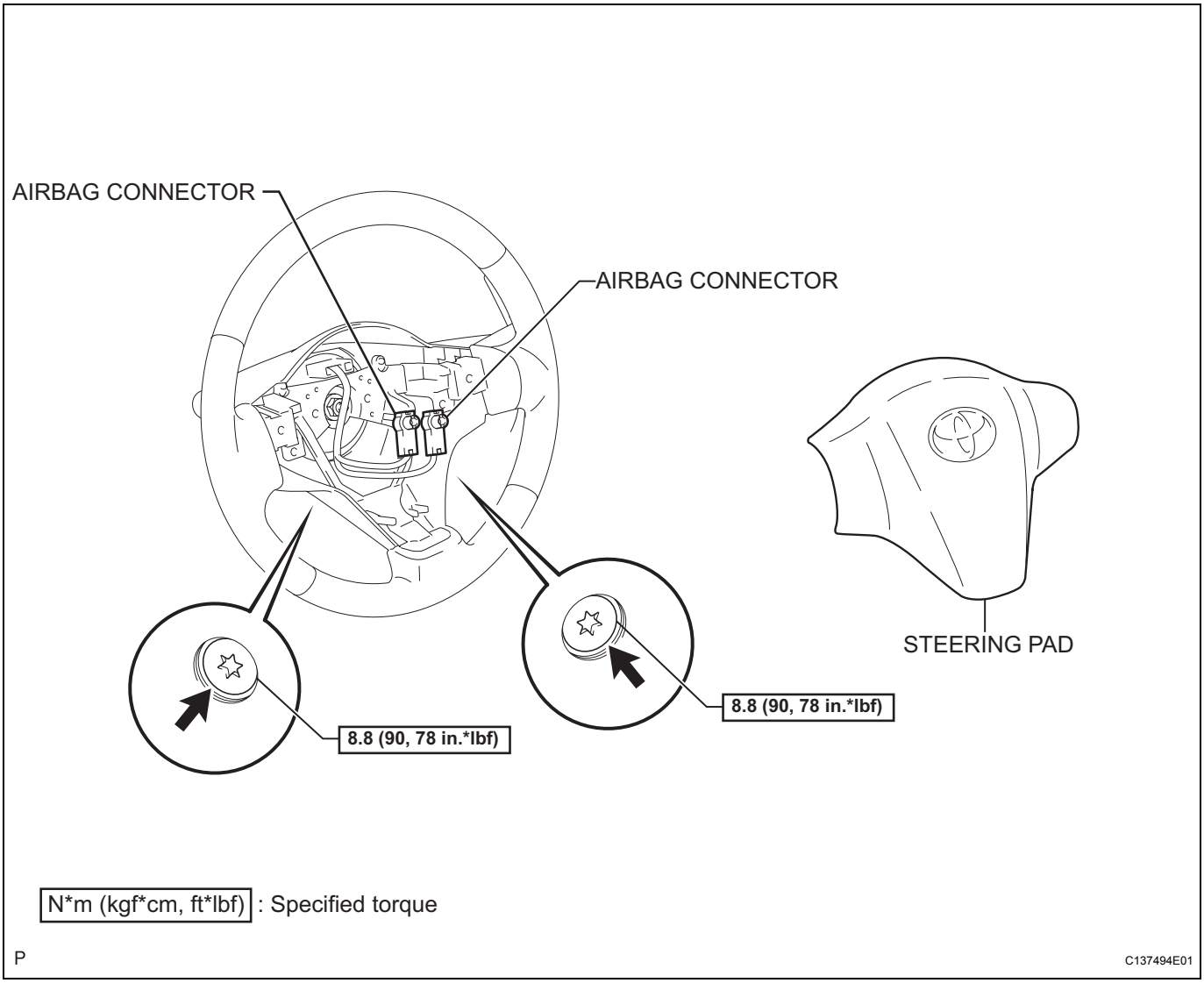

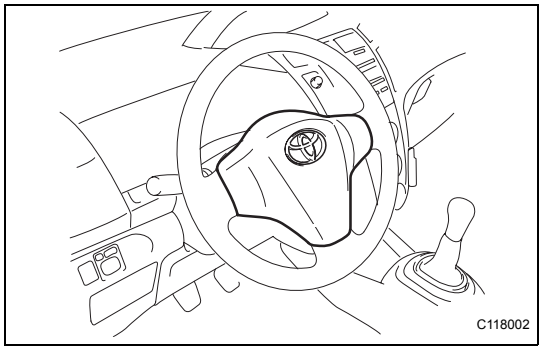

ON-VEHICLE INSPECTION

1. **INSPECT STEERING PAD (for Vehicle not Involved in Collision)**
   (a) Perform a diagnostic system check (See page RS-38).
   (b) With the steering pad installed on the vehicle, perform a visual check. If there are any defects, such as those mentioned below, replace the steering pad with a new one:
   Any cuts, minute cracks or marked discoloration on the steering pad top surface or in the grooved portion.

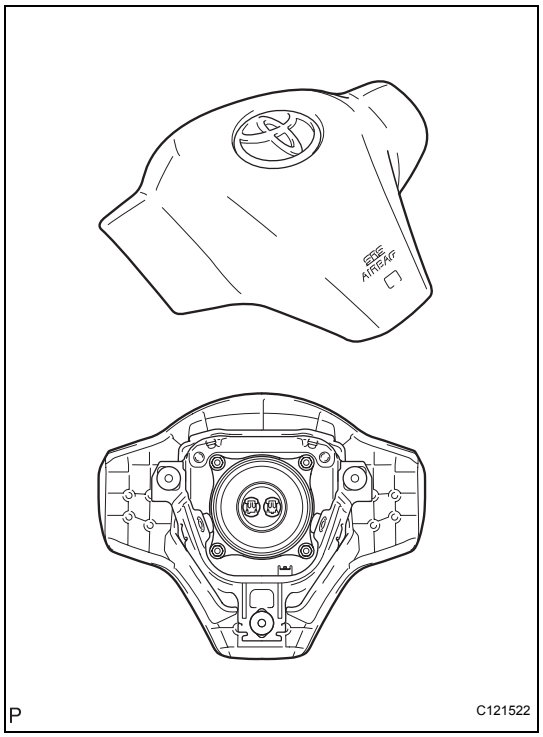

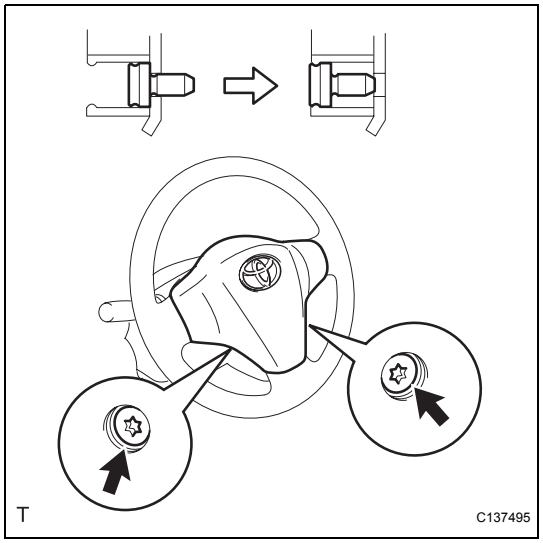

2. INSPECT STEERING PAD (for Vehicle Involved in Collision and Airbag not Deployed)

CAUTION:

For steering pad removal and installation procedures, see pages RS-309 and RS-310, and carefully follow the correct procedure.

(a) Perform a diagnostic system check (See page RS-38).

(b) With the steering pad removed from the vehicle, perform a visual check. If there are any defects, such as those mentioned below, replace the steering pad or steering wheel with a new one:

- Any cuts, minute cracks or marked discoloration on the steering pad top surface or in the grooved portion.
- Any cracks or other damage to the connectors.
- Deformation of the steering wheel.
- Deformation of the horn button contact plate of the steering pad.

- There should be no interference between the steering pad and steering wheel, and the clearance should be uniform all the way around when a new steering pad is installed on the steering wheel.

RS

RS

REMOVAL

CAUTION:
Some of these service operations affect the SRS airbag system. Read the precautionary notices concerning the SRS airbag system before servicing (See page RS-1).

1. DISCONNECT CABLE FROM NEGATIVE BATTERY TERMINAL

2. REMOVE STEERING PAD

(a) Using "Torx" socket wrench T30, loosen the 2 bolts completely.
(b) Pull the steering pad toward you.

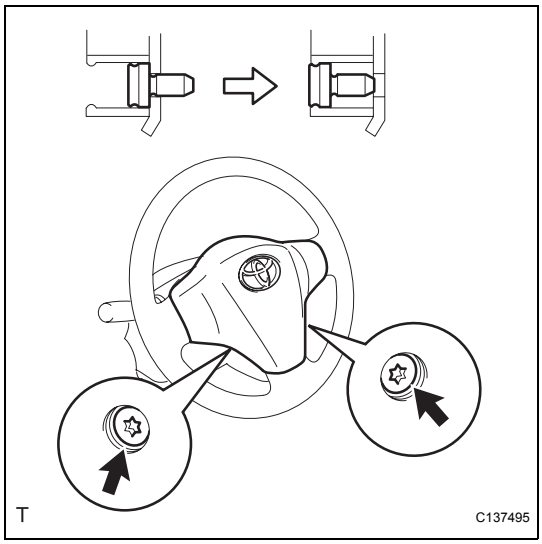

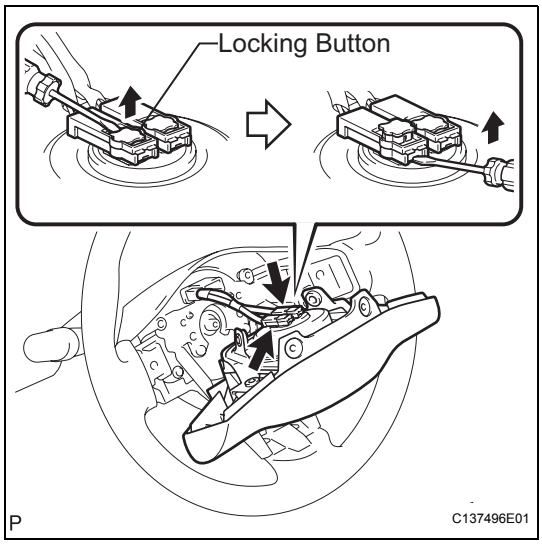

(c) Using a thin-bladed screwdriver, release the locking button.
(d) Using a thin-bladed screwdriver, disconnect the 2 connectors.
(e) Detach the horn terminal.

INSTALLATION

CAUTION:
Some of these service operations affect the SRS airbag system. Read the precautionary notices concerning the SRS airbag system before servicing (See page RS-1).

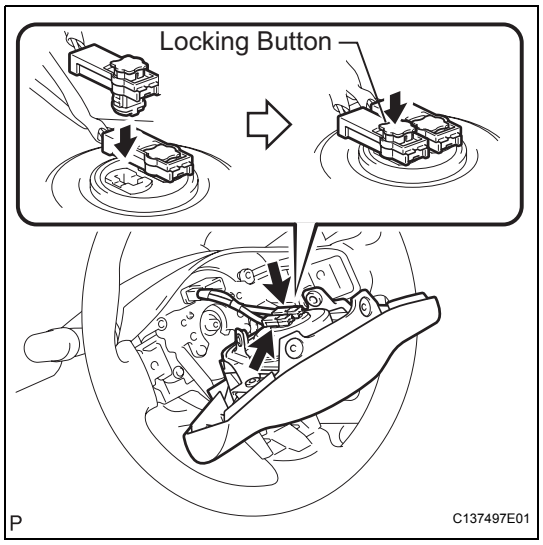

1. **INSTALL STEERING PAD**
   NOTICE:
   Do not use a steering pad that has been dropped.
   (a) Confirm that the ignition switch is turned to OFF.
   (b) Confirm that the negative battery terminal is detached.
   CAUTION:
   Do not begin the operation for at least 90 seconds after the negative battery terminal is detached.
   (c) Connect the horn terminal.
   (d) Connect the airbag connector.
   NOTICE:
   - **Match the color of the airbag connector with that of the steering pad assembly, and install the airbag connector.**
   - **Securely lock the locking button.**

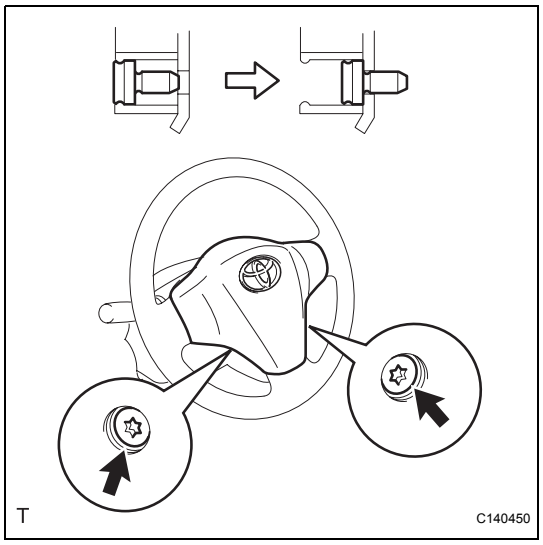

   (e) Install the steering pad.
   (f) Using "Torx" socked wrench T30, tighten the 2 bolts.
   Torque: 8.8 N*m (90 kgf*cm, 78 in.*lbf)
   NOTICE:
   Tighten the 2 bolts while holding the steering pad to prevent it moving upward.

2. **CONNECT CABLE TO NEGATIVE BATTERY TERMINAL**
   Torque: 5.4 N*m (55 kgf*cm, 48 in.*lbf)

3. **INSPECT SRS WARNING LIGHT**
   (See page RS-31)

RS

DISPOSAL

HINT:
When scrapping a vehicle equipped with the SRS or disposing of a steering pad, deploy the airbag first in accordance with the procedure described below. If any abnormality occurs with the airbag deployment, contact the SERVICE DEPT. of the DISTRIBUTOR.

CAUTION:

- **Never dispose of a steering pad that has an undeployed airbag.**
- **The airbag emits an exploding sound when it is deployed, so perform the operation outdoors, and where it will not create a nuisance to nearby residents.**
- **When deploying the airbag, always use the specified SST (SRS Airbag Deployment Tool). Perform the operation in a place away from electrical noise.**
- **When deploying the airbag, perform the operation at least 10 m (33 ft) away from the steering pad.**
- **The steering pad becomes extremely hot when the airbag is deployed, so do not touch it for at least 30 minutes after deployment.**
- **Use gloves and safety glasses when handling a steering pad with a deployed airbag.**
- **Do not apply water, etc. to a steering pad with a deployed airbag.**
- **Always wash your hands with water after completing the operation.**

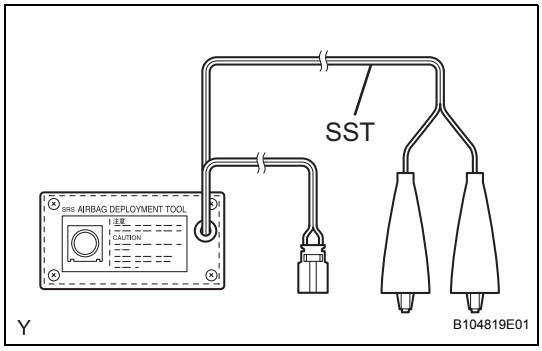

1. DISPOSE OF STEERING PAD (WHEN INSTALLED IN VEHICLE)

HINT:
Prepare a battery as the power source to deploy the airbag.

(a) Check the function of SST.
SST 09082-00700
CAUTION:
Always use the specified SST (SRS Airbag Deployment Tool) when deploying the airbag.

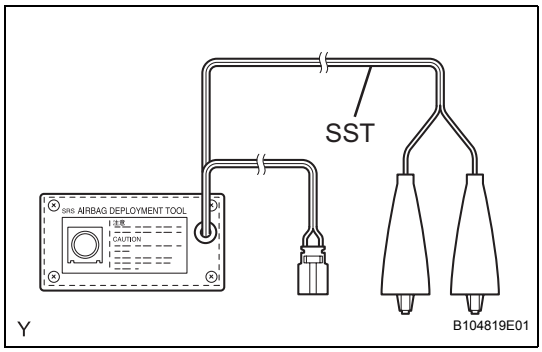

(1) Connect the red clip of SST to the positive battery terminal and the black clip of SST to the negative battery terminal.

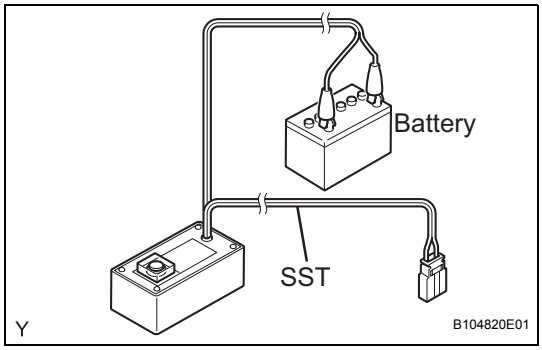

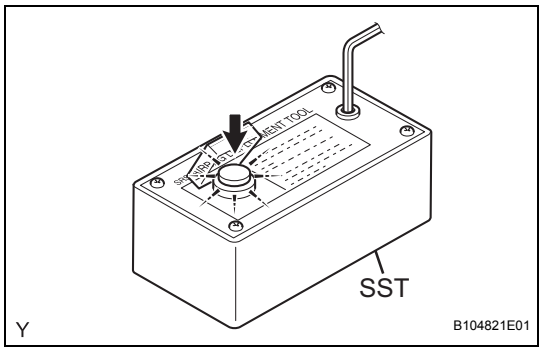

(2) Press the SST activation switch, and check that the LED of the SST activation switch illuminates.
CAUTION:
- **Do not connect the SST connector (yellow colored one) to the airbag.**
- **If the LED illuminates when the activation switch is not being pressed, SST may be malfunctioning. Do not use SST.**

(3) Disconnect SST from the battery.

(b) Disconnect the cable from the negative battery terminal.

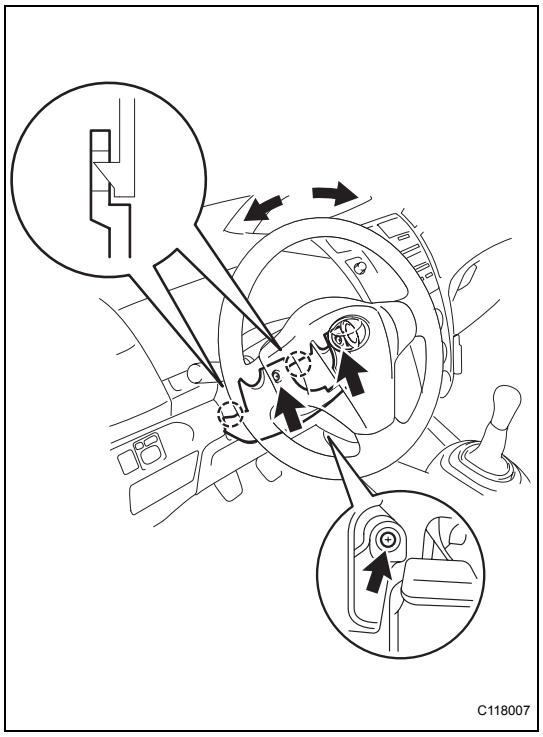

(c) Remove the steering column cover.
(1) Turn the steering wheel 90 degrees in both directions and remove the 2 screws.
(2) Remove the screw from the lower portion of the steering cover lower.
(3) Remove the steering column cover lower.

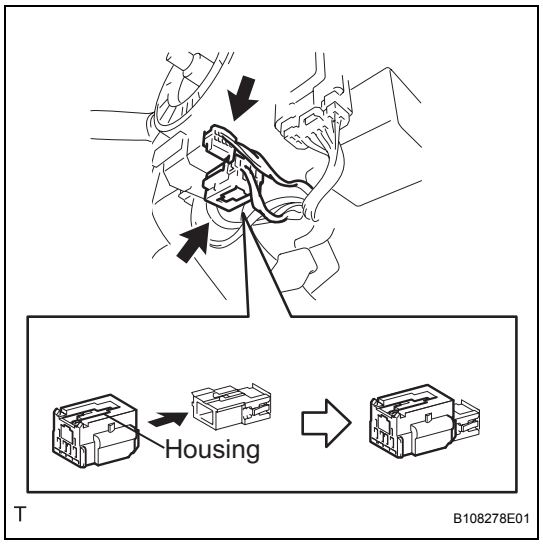

(d) Connect SST.
CAUTION:
Check that there is no slack in the steering wheel and steering pad.
(1) Disconnect the airbag connector, as shown in the illustration.
NOTICE:
Do not damage the airbag wire harness when handling the airbag connector.

RS

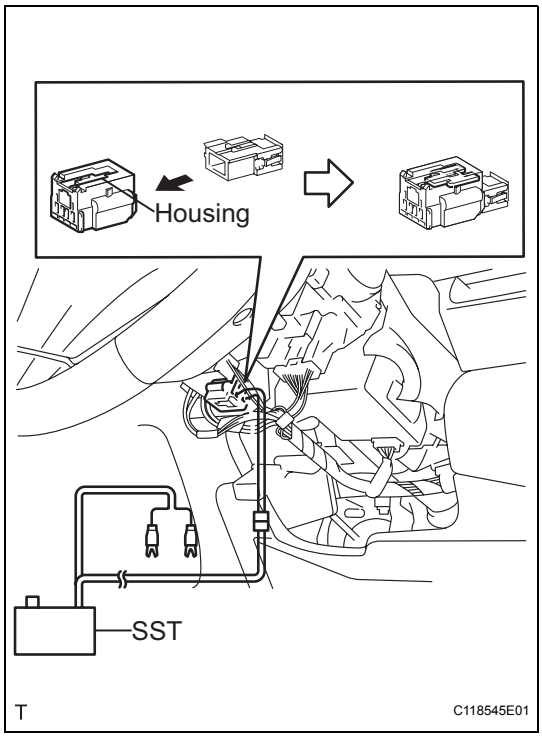

(2) Connect SST.
SST 09082-00700, 09082-00780
NOTICE:
Do not lock the secondary lock of the twin lock to avoid damaging the SST connector and wire harness.

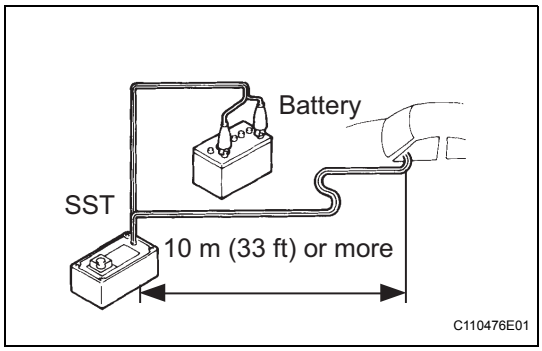

(3) Move SST to at least 10 m (33 ft) away from the vehicle front side window.
(4) Maintaining enough clearance for the SST wire harness in the front side window, close all doors and windows of the vehicle.
NOTICE:
Do not damage SST wire harness.
(5) Connect the red clip of SST to the positive battery terminal and the black clip of SST to the negative battery terminal.

(e) Deploy the airbag.
(1) Check that no one is inside the vehicle or within a 10 m (33 ft) radius of the vehicle.
(2) Press the SST activation switch and deploy the airbag.
CAUTION:
- **Make sure that no one is near the vehicle when deploying the airbag.**
- **The steering pad becomes extremely hot when the airbag is deployed, so do not touch it for at least 30 minutes after deployment.**
- **Use gloves and safety glasses when handling a steering pad with a deployed airbag.**
- **Always wash your hands with water after completing the operation.**
- **Do not apply water, etc. to a steering pad with a deployed airbag.**

HINT:
The airbag is deployed as the LED of the SST activation switch illuminates.

2. DISPOSE OF STEERING PAD (WHEN NOT INSTALLED IN VEHICLE)

NOTICE:

- **Never use the customer's vehicle to deploy the airbag when disposing of the steering pad.**
- **Follow the procedure detailed below when deploying the airbag.**

HINT:

Prepare a battery as the power source to deploy the airbag.

(a) Check the function of SST.

SST 09082-00700

CAUTION:

Always use the specified SST (SRS Airbag Deployment Tool) when deploying the airbag.

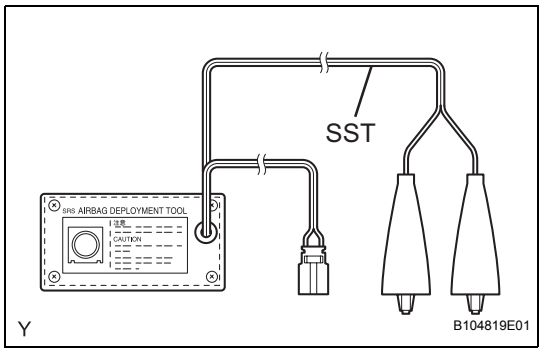

(1) Connect the red clip of SST to the positive battery terminal and the black clip of SST to the negative battery terminal.

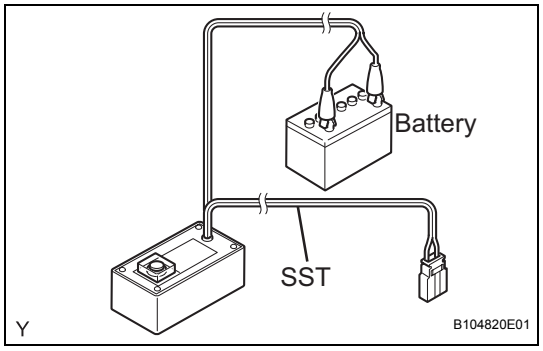

(2) Press the SST activation switch, and check that the LED of the SST activation switch illuminates.

CAUTION:

- **Do not connect the SST connector (yellow colored one) to the airbag.**
- **If the LED illuminates when the activation switch is not being pressed, SST may be malfunctioning. Do not use SST.**

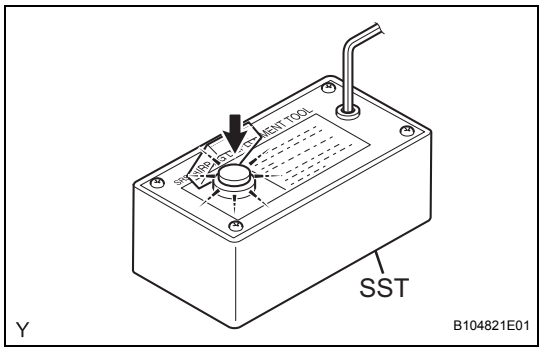

(3) Disconnect SST from the battery.

(b) Disconnect the cable from the negative battery terminal.

(c) Remove the steering pad (See page RS-309).

CAUTION:

- **When removing the steering pad, work must be started at least 90 seconds after the power switch is turned off and the cable is disconnected from the negative battery terminal.**
- **When storing the steering pad, keep the upper surface of the airbag deployment side facing upward.**

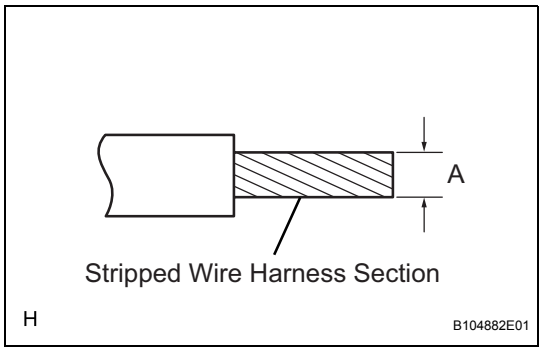

(d) Using a service-purpose wire harness for the vehicle, tie the steering pad to the disc wheel.

Stripped wire harness section:

Area	Measurement
A	1.25 mm^2 or more (0.0019 $in.^2$ or more)

CAUTION:

Do not use wire harness that is too thin or any other object to tie the steering pad because it may snap due to the shock when the airbag is deployed. Always use a wire harness for vehicle use with a cross section of at least 1.25 mm^2 (0.0019 $in.^2$).

HINT:

To calculate the area of the stripped wire harness cross section:

Area = 3.14 x $(Diameter)^2$ divided by 4

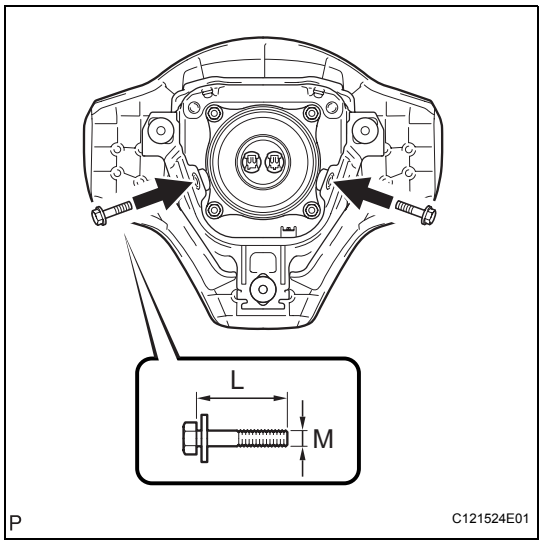

(1) Install the 2 bolts with washers into the 2 bolt holes in the steering pad.

Bolt size:

Area	Specification
L	35.0 mm (1.378 in.)
M	6.0 mm (0.236 in.)
Pitch	1.0 mm (0.039 in.)

NOTICE:

- **Tighten the bolts by hand until they become difficult to turn.**
- **Do not tighten the bolts excessively.**

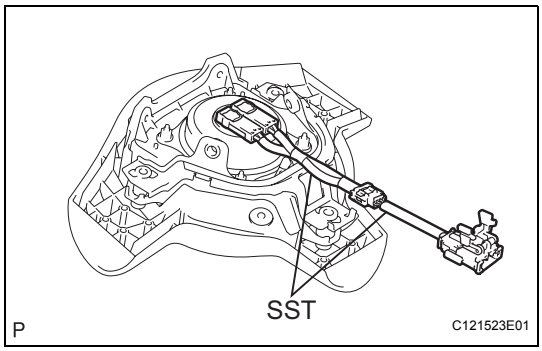

(2) After connecting SST, connect it to the horn button.

SST 09082-00802 (09082-10801, 09082-30801)

NOTICE:

Do not lock the secondary lock of the twin lock to avoid damaging the SST connector and wire harness.

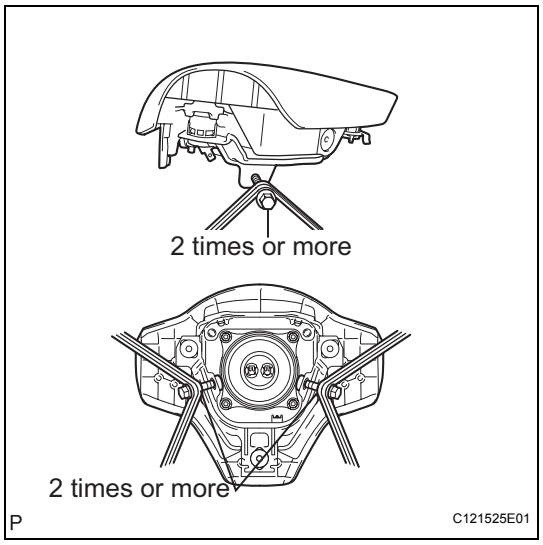

(3) Using 3 wire harnesses, wind the wire harnesses at least 2 times each around the bolts installed on the left and right sides of the steering pad.

CAUTION:

- **Tightly wind the wire harnesses around the bolts so that there is no slack.**
- **Make sure that the wire harnesses are tight. If there is any slack in the wire harnesses, the steering pad may become loose due to the shock when the airbag is deployed.**

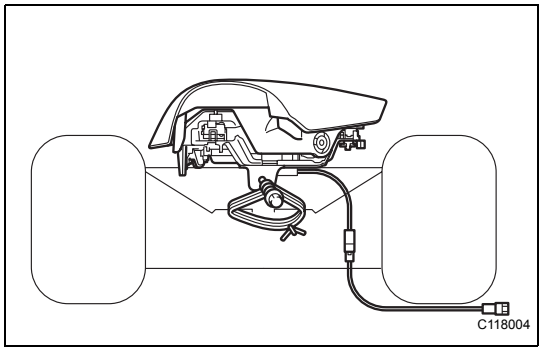

(4) Face the airbag deployment side of the steering pad upward. Using wire harnesses, separately tie the left and right sides of the steering pad to the disc wheel through the hub nut holes. Position the SST connector so that it hangs downward through the hub hole in the disc wheel.

CAUTION:

- **Make sure that the wire harnesses are tight. If there is any slack in the wire harnesses, the steering pad may become loose due to the shock when the airbag is deployed.**
- **Always tie the steering pad with the airbag deployment side facing upward. It is highly dangerous if the steering pad is tied with the airbag deployment side facing downward as the wire harnesses will be cut by the shock caused by the airbag deployment and the steering pad will be thrown into the air.**

NOTICE:

The disc wheel will be marked by the airbag deployment, so use a waste disc wheel.

RS

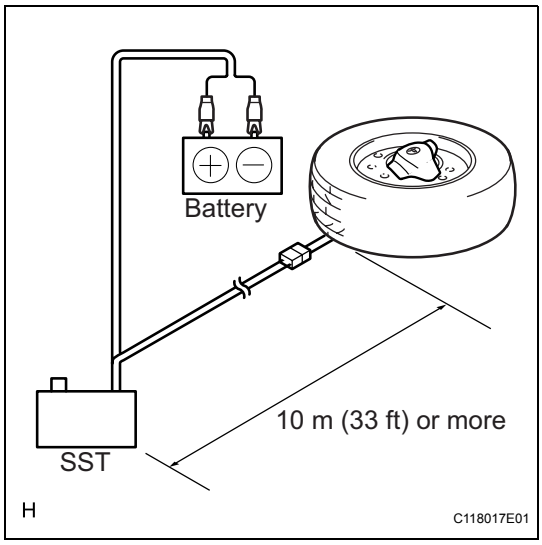

(e) Connect SST.
SST 09082-00700
CAUTION:
Place the disc wheel on a level ground.
(1) Connect the SST connector.
NOTICE:
Do not lock the secondary lock of the twin lock to avoid damaging the SST connector and wire harness. Also, secure some slack for the SST wire harness inside the disc wheel.
(2) Move SST to at least 10 m (33 ft) away from the steering pad tied to the disc wheel.

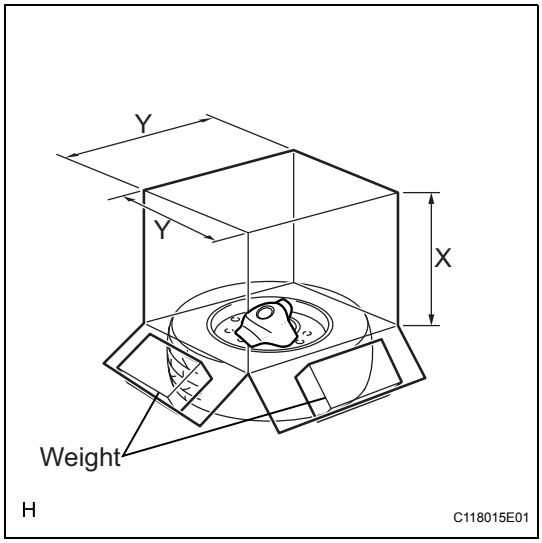

(f) Cover the steering pad with a cardboard box or tires.
(1) Covering method using a cardboard box:
Cover the steering pad with the cardboard box and place weights of at least 190 N (19 kg, 43 lb) on the cardboard box in 4 places.
Cardboard box size:

Area	Measurement
X	460 mm (18.11 in.)
Y	650 mm (25.59 in.)

NOTICE:
- **When dimension Y of the cardboard box exceeds the diameter of the disc wheel and tire to which the steering pad is tied, X should be the following size.**
X = 460 mm (18.11 in.) + width of tire
- **If a cardboard box which is smaller than the specified size is used, the cardboard box will be broken by the shock from the airbag deployment.**

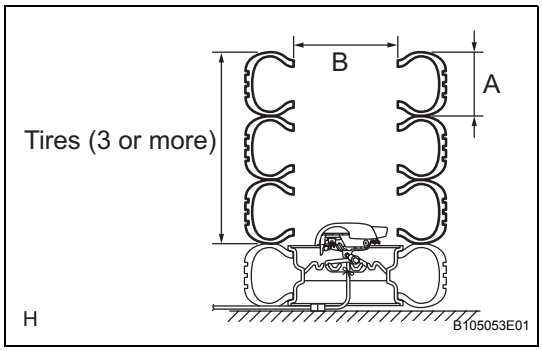

(2) Covering method using tires:
Place at least 3 tires without disc wheels on top of the tire with a disc wheel to which the steering pad is tied.
Tire size:

Area	Measurement
A	185 mm (7.28 in.)
B	360 mm (14.17 in.)

CAUTION:
Do not use tires with disc wheels.
NOTICE:
- **The tires may be marked by the airbag deployment, so use waste tires.**
- **Do not place the SST connector under the tire because it could be damaged.**

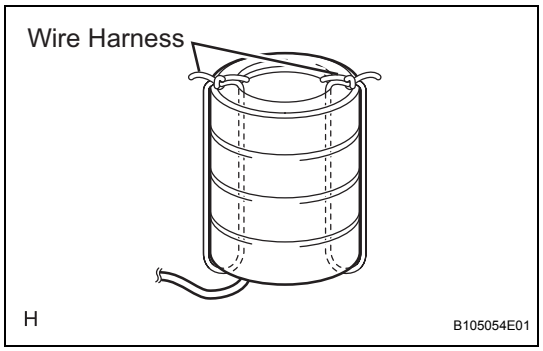

(3) Tie the tires together with 2 wire harnesses.
CAUTION:
Make sure that the wire harnesses are tight. It is highly dangerous when a loose wire harness results in the tires coming free due to the shock when the airbag is deployed.

RS

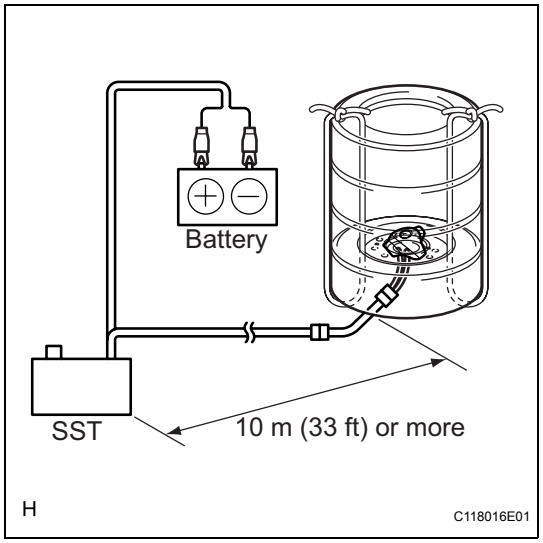

(g) Deploy the airbag.
(1) Connect the red clip of SST to the positive battery terminal and the black clip of SST to the negative battery terminal.
(2) Check that no one is within a 10 m (33 ft) radius of the disc wheel to which the steering pad is tied.
(3) Press the SST activation switch and deploy the airbag.
CAUTION:
Make sure that no one is near the tires when deploying the airbag.
HINT:
The airbag is deployed as the LED of the SST activation switch illuminates.

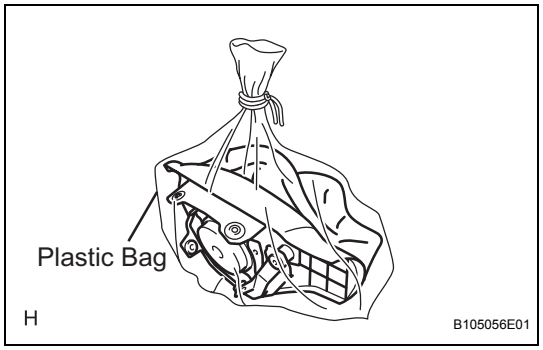

(h) Dispose of the steering pad.
CAUTION:
- **The steering pad becomes extremely hot when the airbag is deployed, so do not touch it for at least 30 minutes after deployment.**
- **Use gloves and safety glasses when handling a steering pad with a deployed airbag.**
- **Do not apply water, etc. to a horn button with a deployed airbag.**
- **Always wash your hands with water after completing the operation.**

(1) Remove the steering pad from the disc wheel.
(2) Place the steering pad in a plastic bag, tie it tightly and dispose of it in the same way as other general parts.

SPIRAL CABLE

COMPONENTS

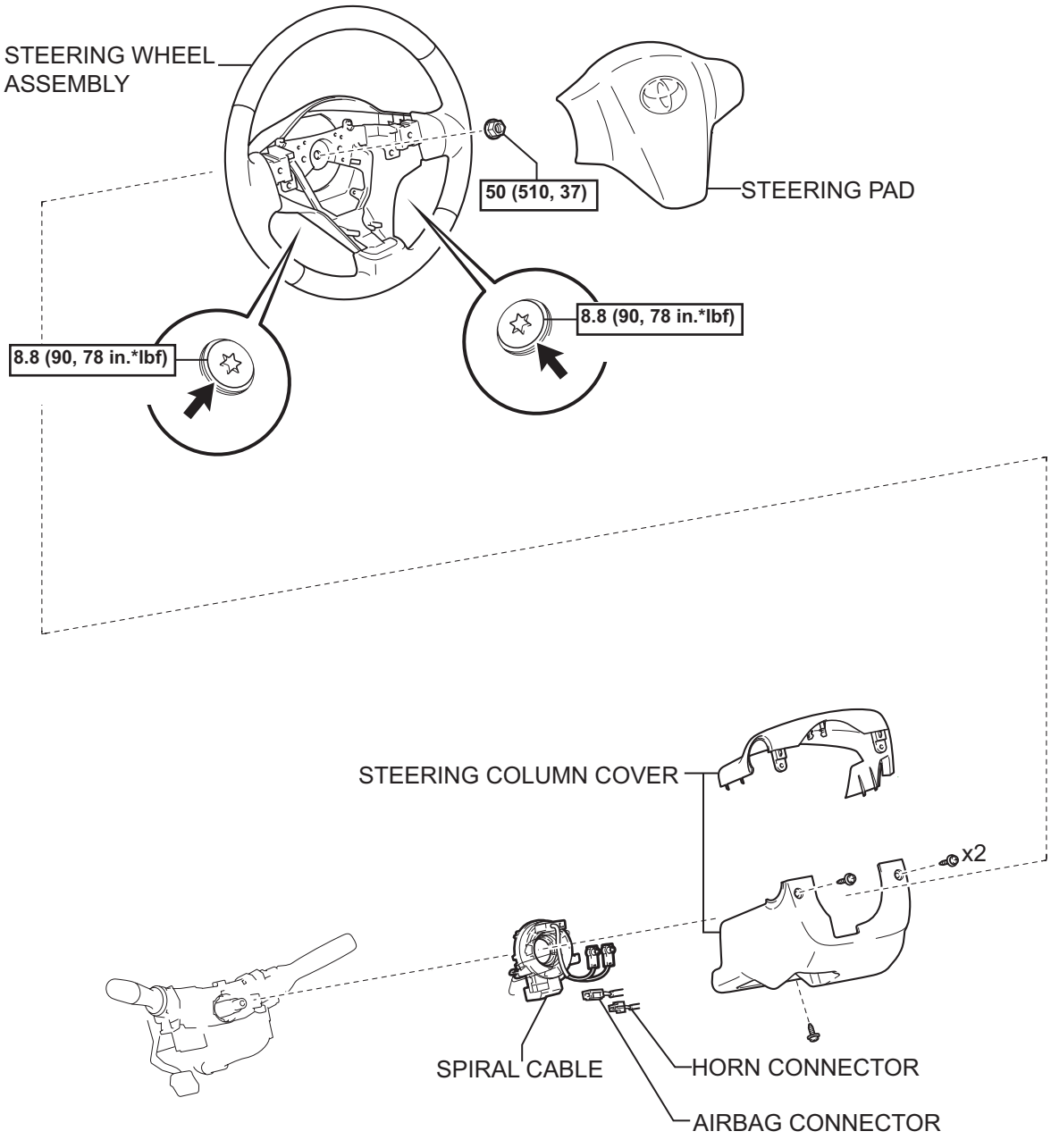

N*m (kgf*cm, ft.*lbf) : Specified torque

P

C139118E01

RS

REMOVAL

CAUTION:
Some of these service operations affect the SRS airbag system. Read the precautionary notices concerning the SRS airbag system before servicing (See page RS-1).

1. DISCONNECT CABLE FROM NEGATIVE BATTERY TERMINAL

2. REMOVE STEERING PAD

(a) Using "Torx" socket wrench T30, loosen the 2 bolts completely.
(b) Pull the steering pad toward you.

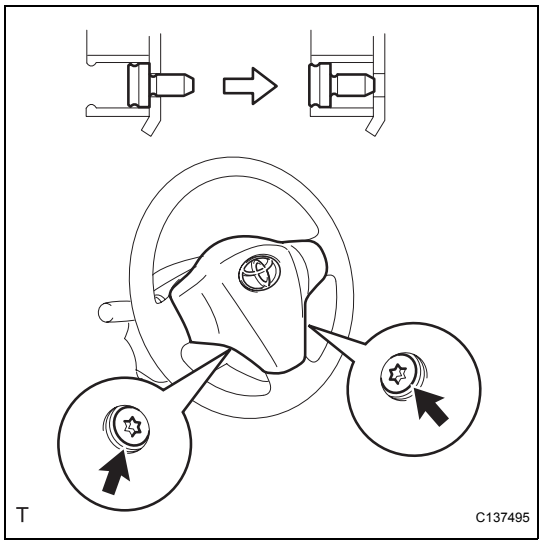

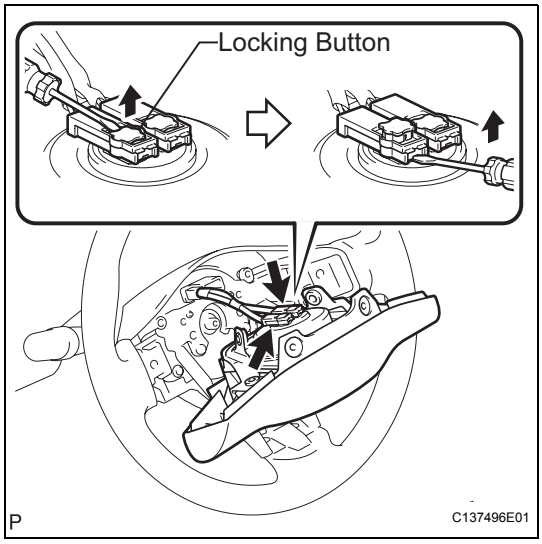

(c) Using a thin-bladed screwdriver, release the locking button.
(d) Using a thin-bladed screwdriver, disconnect the 2 airbag connectors.
(e) Detach the horn connector.

3. REMOVE STEERING WHEEL ASSEMBLY (See page SR-30)

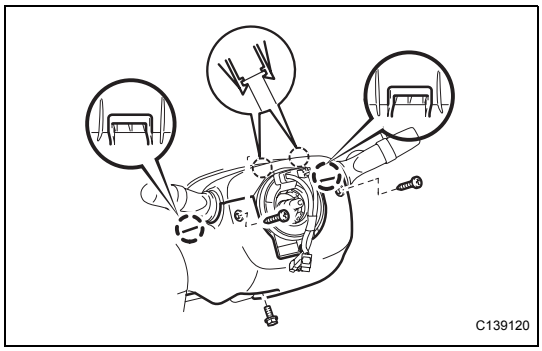

4. REMOVE STEERING COLUMN COVER

(a) Remove the 3 screws.
(b) Disengage the 2 claws and remove the steering column cover (lower).
(c) Disengage the 2 claws and remove the steering column cover (upper).

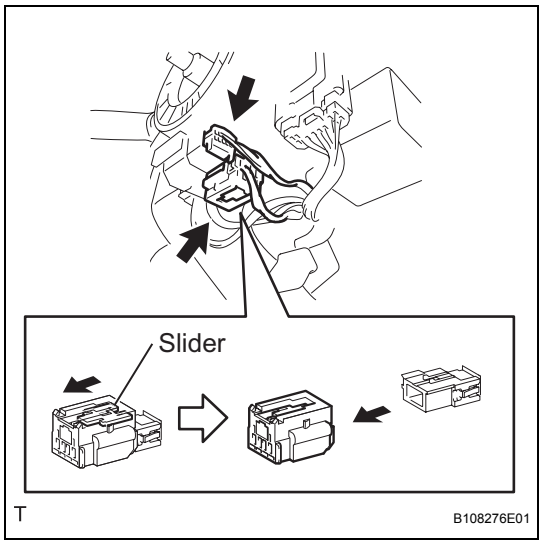

5. REMOVE SPIRAL CABLE

(a) Detach the horn connector.

(b) Slide the slider and detach the airbag connector.

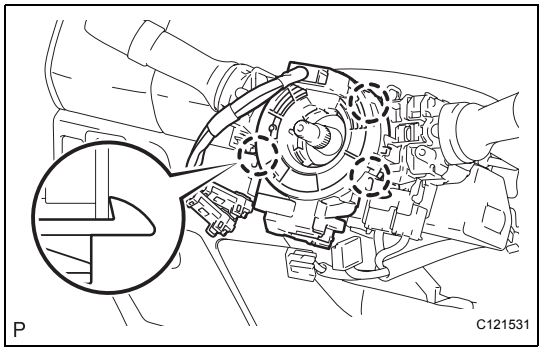

(c) Disengage the 3 claws and remove the spiral cable.

INSPECTION

1. INSPECT SPIRAL CABLE

(a) Check the spiral cable.

(1) Using an ohmmeter, measure the resistance between the terminals.

SST 09082-00030

1. Set the spiral cable in the center, and measure the resistance in each position where the spiral cable is turned 2.5 times clockwise and counterclockwise.
2. Turn the spiral cable 2.5 times clockwise from its original position and measure the resistance while turning it 5 times counterclockwise.

Standard resistance

Tester Connection	Specified Condition
A1(D-) - D2(D-)	Below 1 Ω
A2(D+) - D1(D+)	Below 1 Ω
B1(D2-) - D3(D2-)	Below 1 Ω
A2(D2+) - D4(D2+)	Below 1 Ω

NOTICE:

To avoid breakage of the spiral cable, do not turn the spiral cable more than necessary. If the result is not as specified, replace the spiral cable.

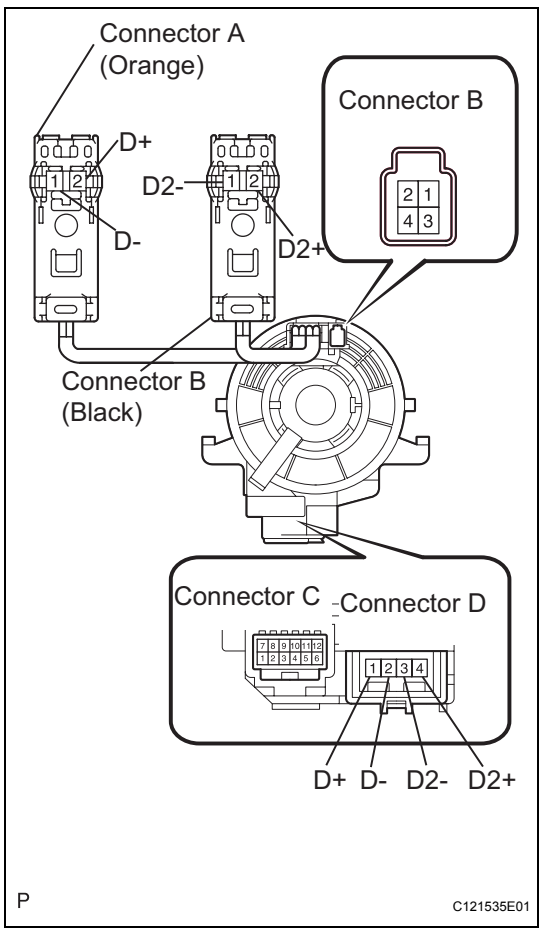

RS

INSTALLATION

CAUTION:
Some of these service operations affect the SRS airbag system. Read the precautionary notices concerning the SRS airbag system before servicing (See page RS-1).

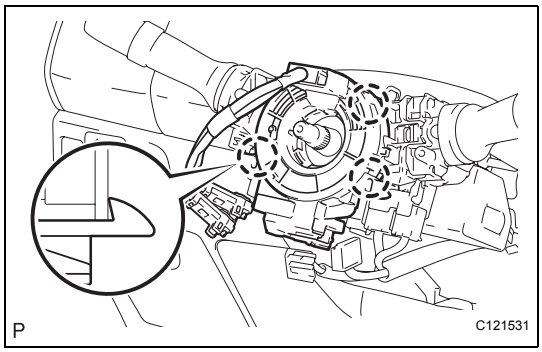

1. INSTALL SPIRAL CABLE

(a) Check that the ignition switch is turned to OFF.
(b) Confirm that the negative battery terminal is detached.
CAUTION:
Do not begin the operation for at least 90 seconds after the negative battery terminal is detached.
(c) Confirm that the front tires face straight forward.
(d) Confirm that the turn signal switch is in the neutral position.
NOTICE:
Perform the operation when the turn signal switch is in the neutral position. Otherwise, the pin of the turn signal will break.
(e) Engage the 3 claws and install the spiral cable.
NOTICE:
Pull the lock pin out before installing the steering wheel, when replacing the spiral cable with a new one.

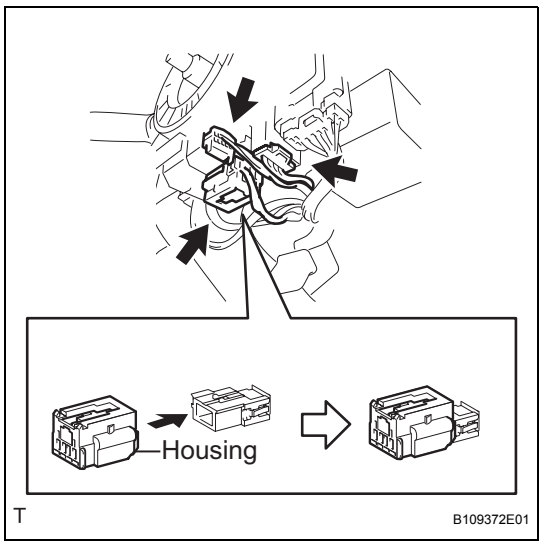

(f) Connect the airbag connector.
(g) Connect the horn connector.

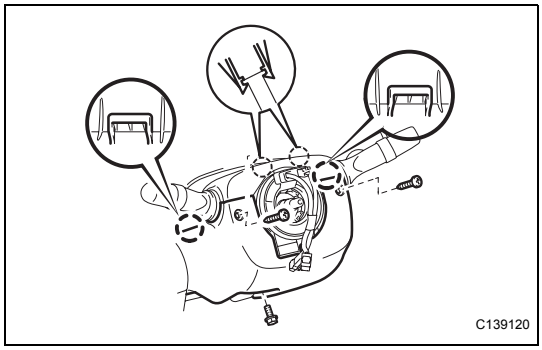

2. INSTALL STEERING COLUMN COVER

(a) Engage the 2 claws and install the steering column cover (upper).
(b) Engage the 2 claws and install the steering column cover (lower).
(c) Tighten the 3 screws.

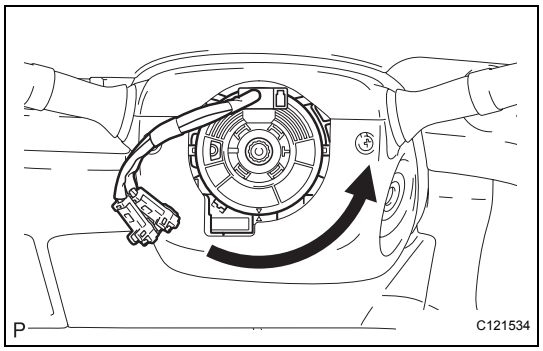

3. ADJUST SPIRAL CABLE

(a) Center the spiral cable.

(1) Turn the spiral cable counterclockwise until it locks.

HINT:

The spiral cable turns a maximum of approximately 5 times.

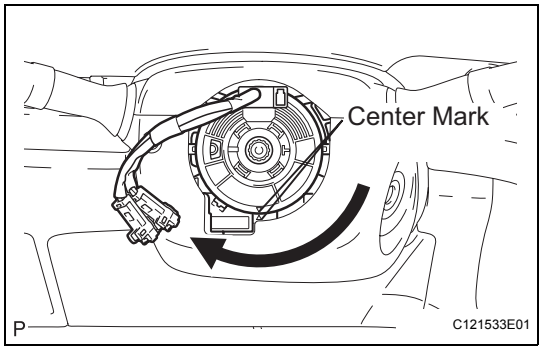

(2) Turn the spiral cable 2.5 times clockwise from its locked position and align the center marks.

4. INSTALL STEERING WHEEL ASSEMBLY (See page SR-41)

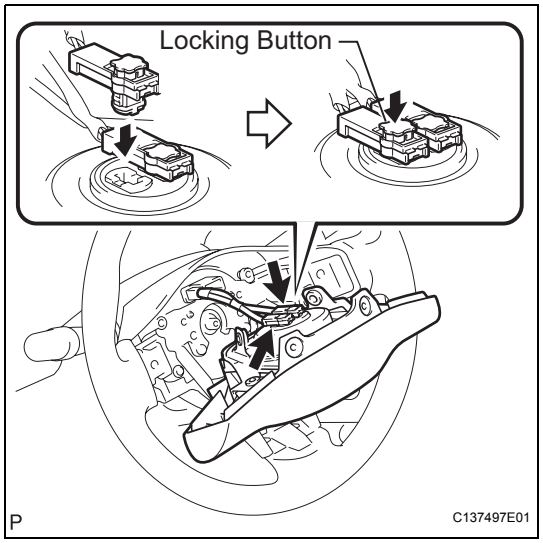

5. INSTALL STEERING PAD

(a) Connect the horn connector.

(b) Connect the airbag connector.

NOTICE:

- **Align the color of the airbag connector with that of the steering pad assembly, and install the airbag connector.**
- **Securely lock the locking button.**

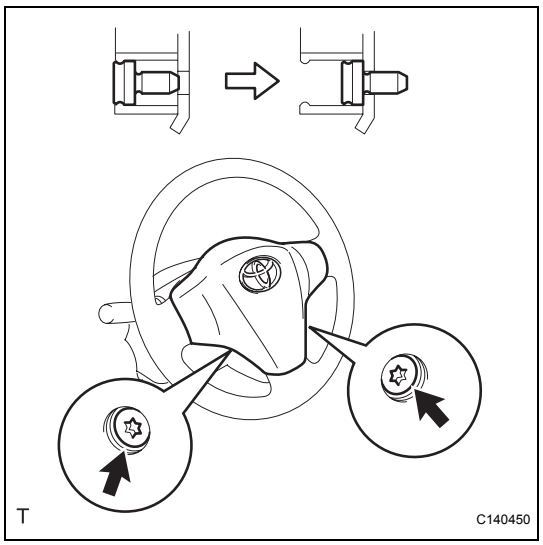

(c) Install the steering pad.

(d) Using "Torx" socket wrench T30, tighten the 2 bolts.

Torque: 8.8 N*m (90 kgf*cm, 78 in.*lbf)

6. CONNECT CABLE TO NEGATIVE BATTERY TERMINAL

Torque: 5.4 N*m (55 kgf*cm, 48 in.*lbf)

7. INSPECT SRS WARNING LIGHT

(See page RS-31)

FRONT PASSENGER AIRBAG ASSEMBLY (for Sedan)

COMPONENTS

RS

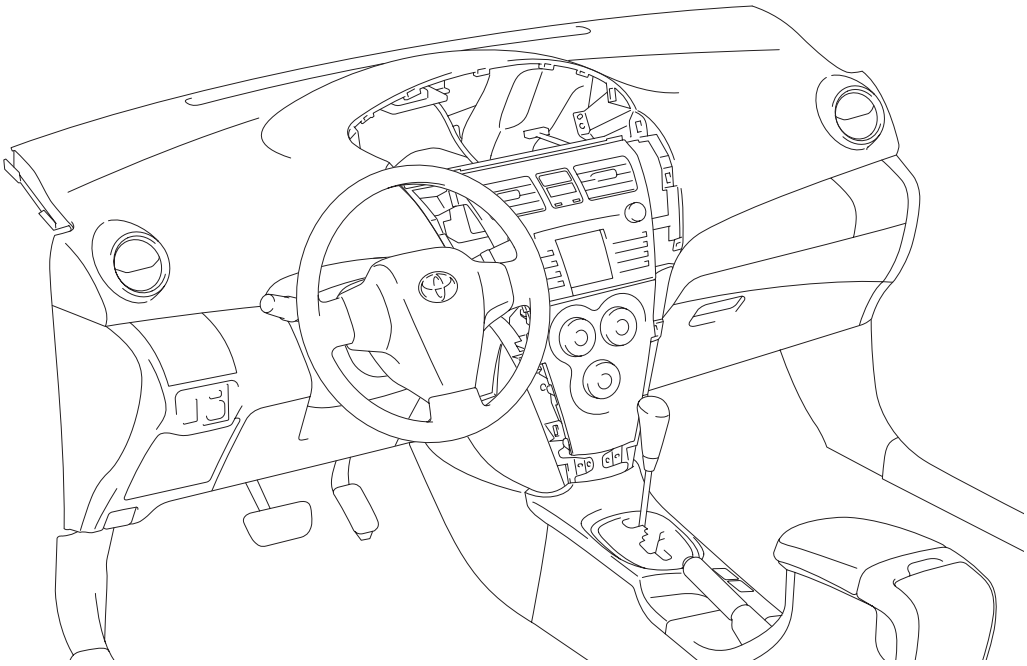

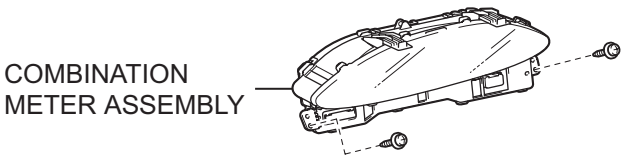



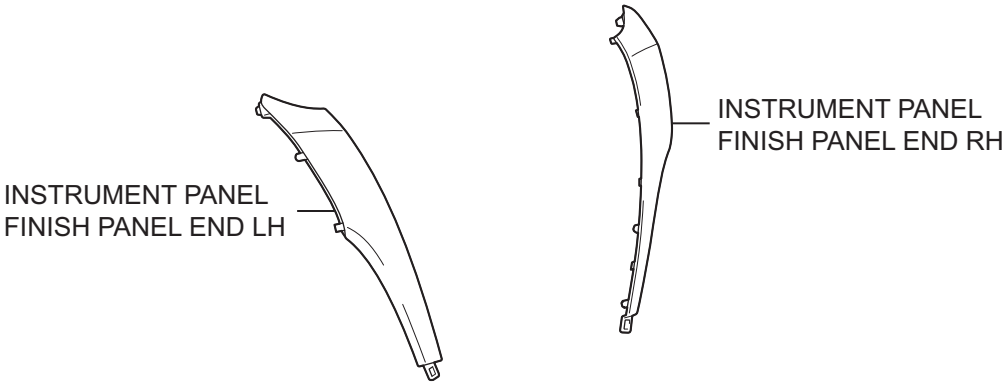

P

E116817E01

w/ Curtain Shield Airbag:

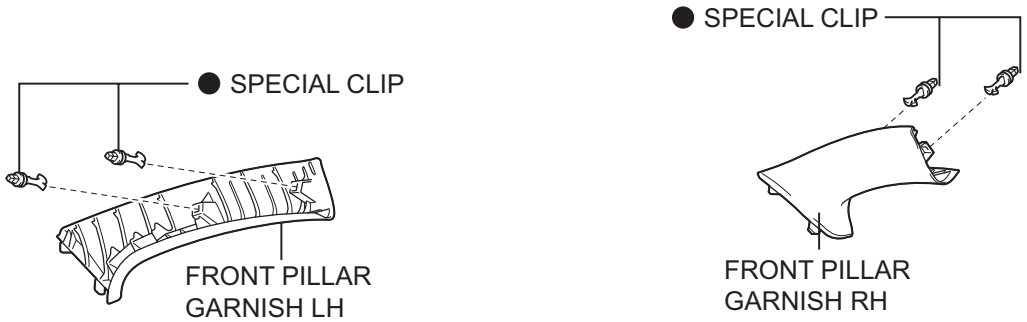

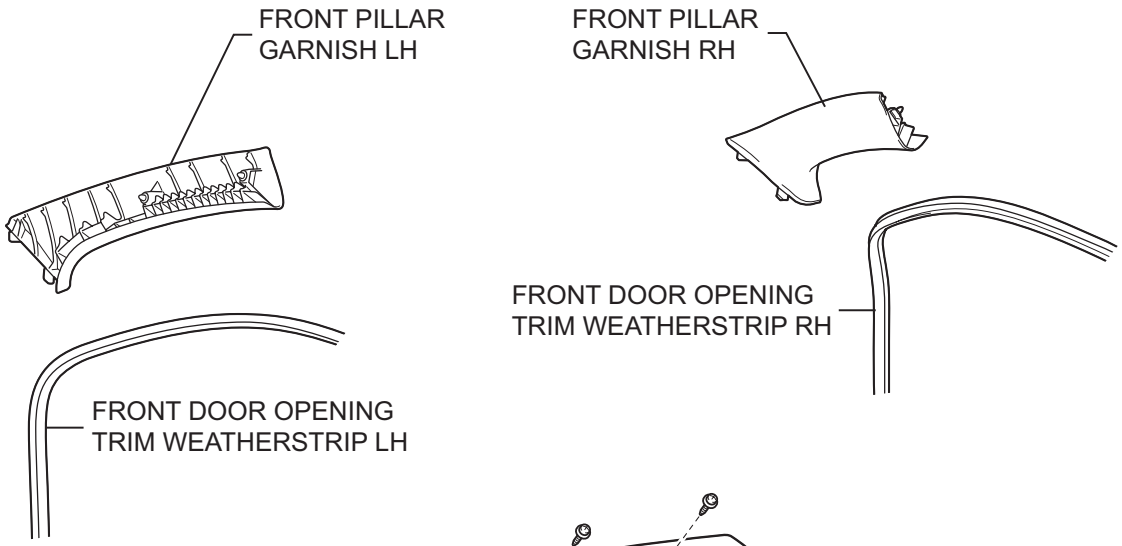

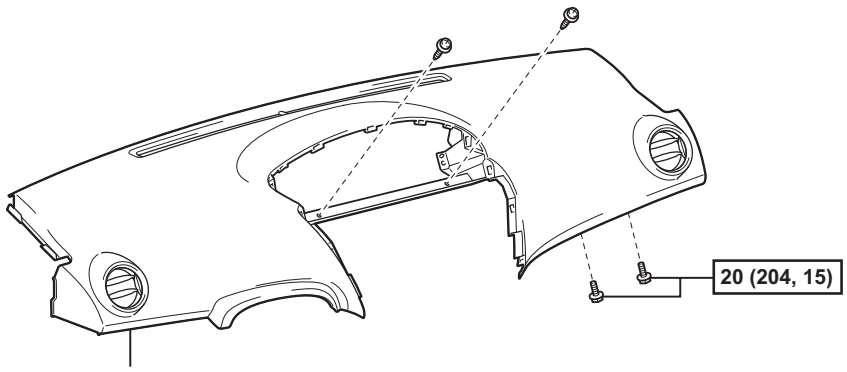

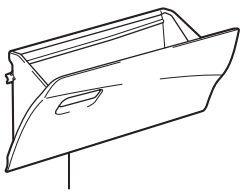

N*m (kgf*cm, ft*lbf) : Specified torque

● Non-reusable part

P

B132310E05

RS

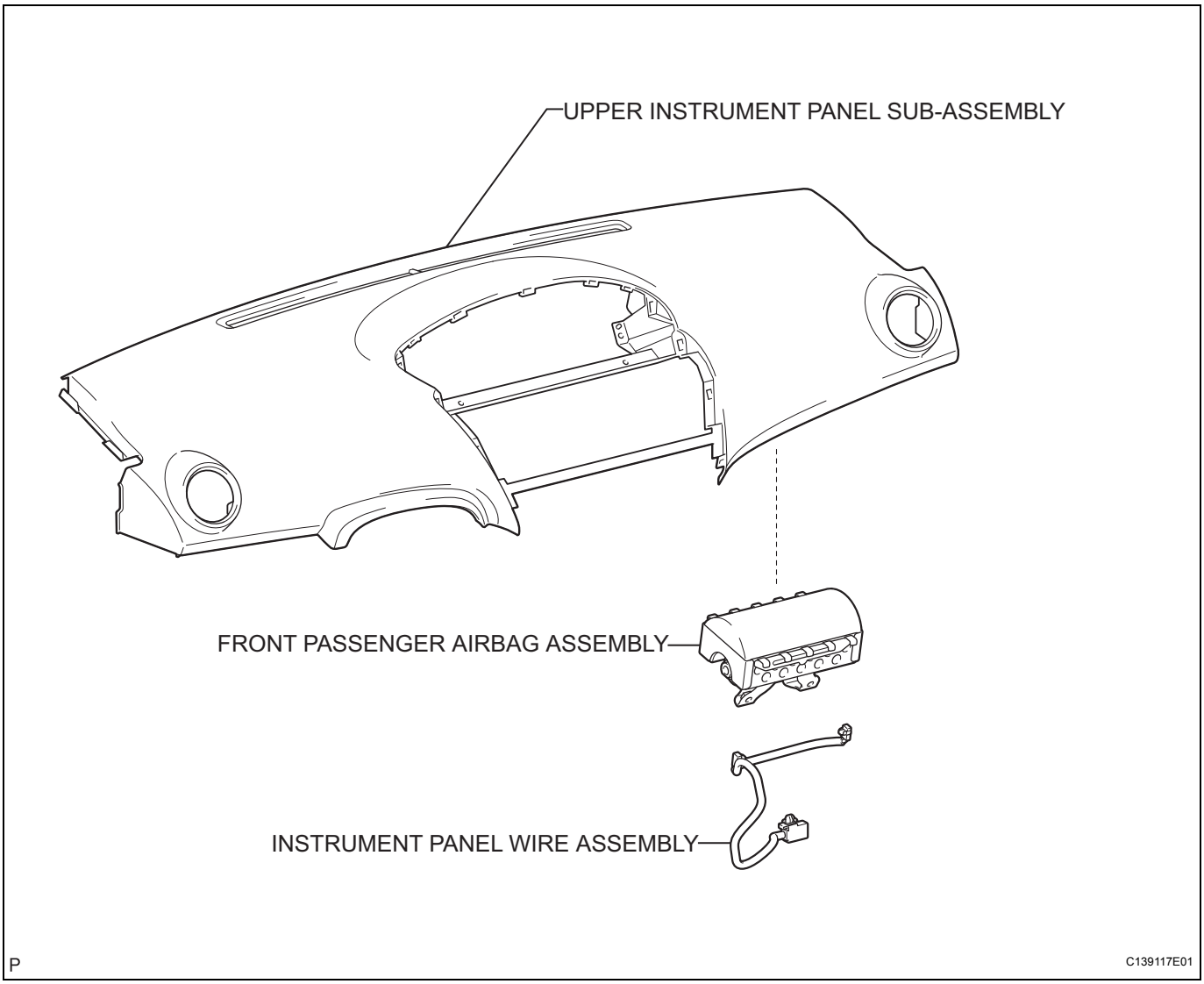

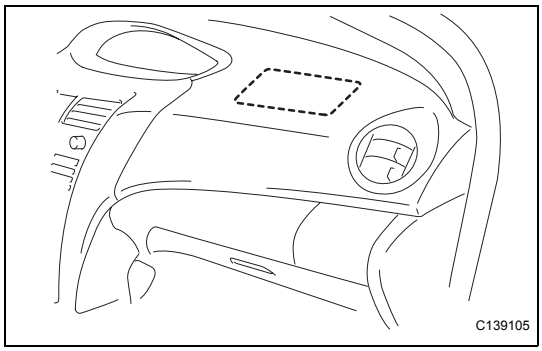

ON-VEHICLE INSPECTION

1. **INSPECT FRONT PASSENGER AIRBAG ASSEMBLY (for Vehicle not Involved in Collision)**
   (a) Perform a diagnostic system check (See page RS-38).
   (b) With the front passenger airbag installed on the vehicle, perform a visual check. If there are any defects, such as those mentioned below, replace the instrument panel with a new one:
   Any cuts, minute cracks or marked discoloration on the instrument panel around the front passenger airbag.

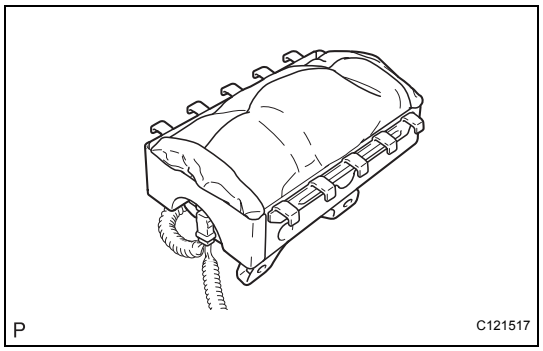

2. INSPECT FRONT PASSENGER AIRBAG ASSEMBLY (for Vehicle Involved in Collision and Airbag not Deployed)

CAUTION:

For front passenger airbag removal and installation procedures, see pages RS-327 and ,RS-328 and carefully follow the correct procedure.

(a) Perform a diagnostic system check (See page RS-38).

(b) With the front passenger airbag removed from the vehicle, perform a visual check. If there are any defects, such as those mentioned below, replace the front passenger airbag, instrument panel or instrument panel reinforcement with new ones:

- Any cuts, minute cracks or marked discoloration on the front passenger airbag.
- Any cracks or other damage to the connector.
- Deformation or cracks on the instrument panel or instrument panel reinforcement.

RS

REMOVAL

CAUTION:
Some of these service operations affect the SRS airbag system. Read the precautionary notices concerning the SRS airbag system before servicing (See page RS-1).

1. **DISCONNECT CABLE FROM NEGATIVE BATTERY TERMINAL**
   (a) Wait for at least 90 seconds after disconnecting the cable to prevent the airbag from working.
2. **REMOVE INSTRUMENT PANEL FINISH PANEL LOWER CENTER (See page ME-138)**
3. **REMOVE INSTRUMENT PANEL FINISH PANEL END LH (See page ME-138)**
4. **REMOVE INSTRUMENT PANEL FINISH PANEL END RH (See page ME-138)**
5. **REMOVE INSTRUMENT CLUSTER FINISH PANEL (See page ME-139)**
6. **REMOVE COMBINATION METER ASSEMBLY (See page ME-139)**
7. **SEPARATE FRONT DOOR OPENING TRIM WEATHERSTRIP RH (See page IP-5)**
8. **SEPARATE FRONT DOOR OPENING TRIM WEATHERSTRIP LH (See page IP-5)**
9. **REMOVE FRONT PILLAR GARNISH RH (See page IR-18)**
10. **REMOVE FRONT PILLAR GARNISH LH (See page IR-19)**
11. **REMOVE GLOVE COMPARTMENT DOOR ASSEMBLY (See page IP-6)**
12. **REMOVE UPPER INSTRUMENT PANEL SUB-ASSEMBLY (See page IP-6)**
13. **REMOVE FRONT PASSENGER AIRBAG ASSEMBLY**
    (a) Remove the wire harness from the 2 claws of the instrument panel.
    (b) Disengage the 10 hooks and remove the instrument panel passenger airbag.

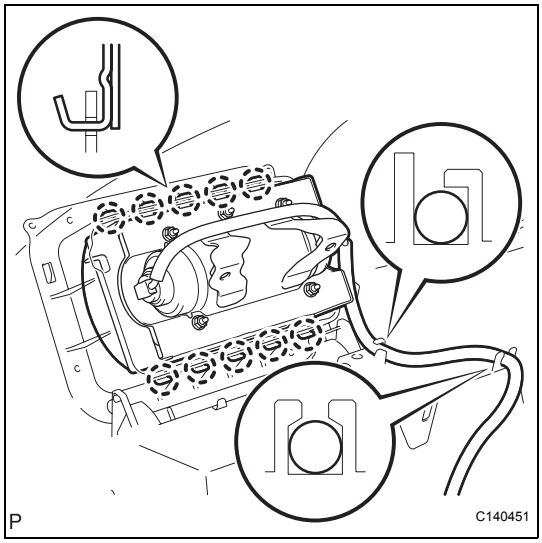

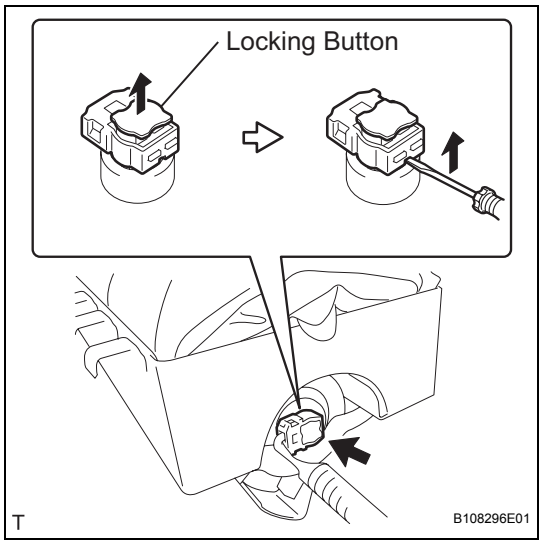

14. REMOVE INSTRUMENT PANEL WIRE ASSEMBLY

(a) Using a thin-bladed screwdriver, release the locking button.

(b) Using a thin-bladed screwdriver, disconnect the 2 airbag connectors and remove the instrument panel wire.

RS

INSTALLATION

CAUTION:
Some of these service operations affect the SRS airbag system. Read the precautionary notices concerning the SRS airbag system before servicing (See page RS-1).

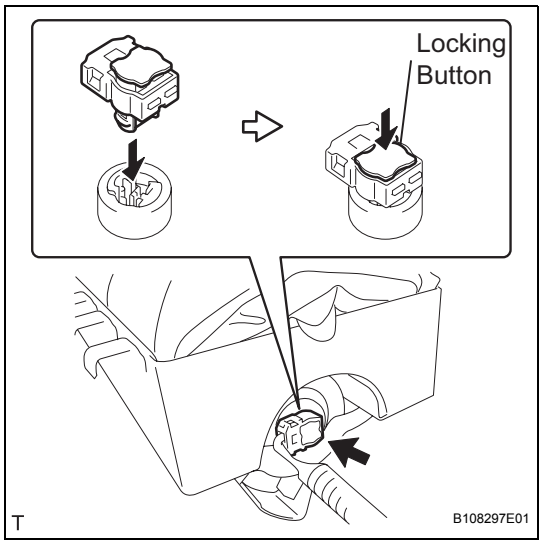

1. **REMOVE INSTRUMENT PANEL WIRE ASSEMBLY**
   (a) Connect the 2 airbag connectors to install the instrument panel wire.
   NOTICE:
   Lock the locking button securely.

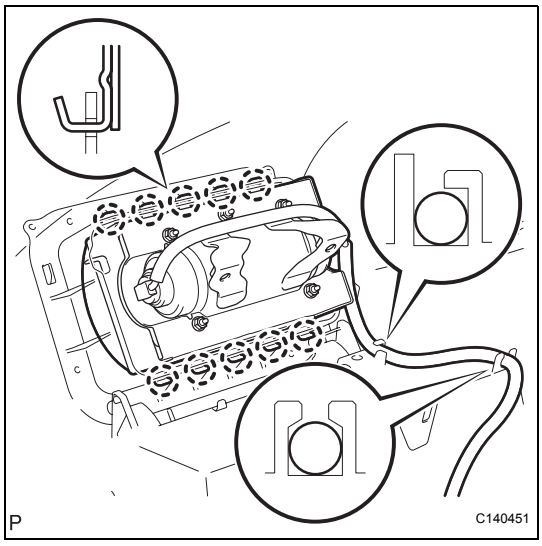

2. **INSTALL FRONT PASSENGER AIRBAG ASSEMBLY (w/ Front Passenger Airbag)**
   (a) Engage the 10 hooks so that the connector side faces the outside of the vehicle, and install the instrument panel passenger airbag.
   (b) Install the wire harness onto the 2 claws of the instrument panel.
3. **INSTALL UPPER INSTRUMENT PANEL SUB-ASSEMBLY (See page IP-11)**
4. **INSTALL GLOVE COMPARTMENT DOOR ASSEMBLY (See page IP-13)**
5. **INSTALL FRONT PILLAR GARNISH RH (See page IR-29)**
6. **INSTALL FRONT PILLAR GARNISH LH (See page IR-30)**
7. **INSTALL FRONT DOOR OPENING TRIM WEATHERSTRIP RH (See page IP-14)**
8. **INSTALL FRONT DOOR OPENING TRIM WEATHERSTRIP LH (See page IP-14)**
9. **INSTALL COMBINATION METER ASSEMBLY (See page ME-140)**
10. **INSTALL INSTRUMENT CLUSTER FINISH PANEL (See page ME-140)**
11. **INSTALL INSTRUMENT PANEL FINISH PANEL END RH (See page ME-141)**
12. **INSTALL INSTRUMENT PANEL FINISH PANEL END LH (See page ME-141)**

13. **INSTALL INSTRUMENT PANEL FINISH PANEL LOWER CENTER (See page ME-142)**

14. **CONNECT CABLE TO NEGATIVE BATTERY TERMINAL**
Torque: 5.4 N*m (55 kgf*cm, 48 in.*lbf)

15. **CHECK SRS WARNING LIGHT**
(See page RS-31)

RS

DISPOSAL

HINT:
When scrapping a vehicle equipped with the SRS or disposing of an instrument panel passenger airbag, deploy the airbag first in accordance with the procedure described below. If any abnormality occurs with the airbag deployment, contact the SERVICE DEPT. of the DISTRIBUTOR.

CAUTION:

- **Never dispose of a front passenger airbag that has an undeployed airbag.**
- **The airbag emits an exploding sound when it is deployed, so perform the operation outdoors and where it will not create a nuisance to nearby residents.**
- **When deploying the airbag, always use the specified SST (SRS Airbag Deployment Tool). Perform the operation in a place away from electrical noise.**
- **When deploying the airbag, perform the operation at least 10 m (33 ft) away from the front passenger airbag.**
- **The front passenger airbag becomes extremely hot when the airbag is deployed, so do not touch it for at least 30 minutes after deployment.**
- **Use gloves and safety glasses when handling a front passenger airbag which has been deployed.**
- **Do not apply water, etc. to a front passenger airbag which has been deployed.**
- **Always wash your hands with water after completing the operation.**

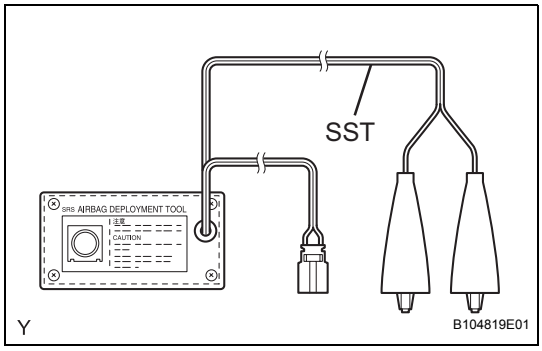

1. DISPOSE OF FRONT PASSENGER AIRBAG ASSEMBLY (WHEN INSTALLED IN VEHICLE)

HINT:
Prepare a battery as the power source to deploy the airbag.

(a) Check the function of SST.
SST 09082-00700
CAUTION:
Always use the specified SST (SRS Airbag Deployment Tool) when deploying the airbag.

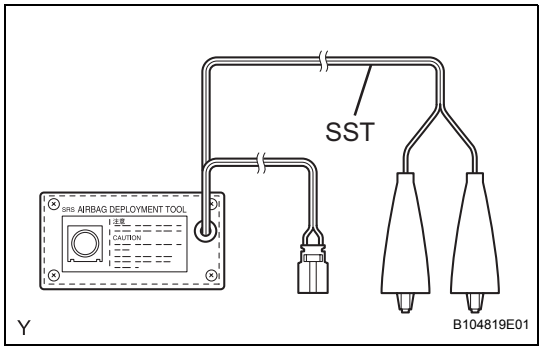

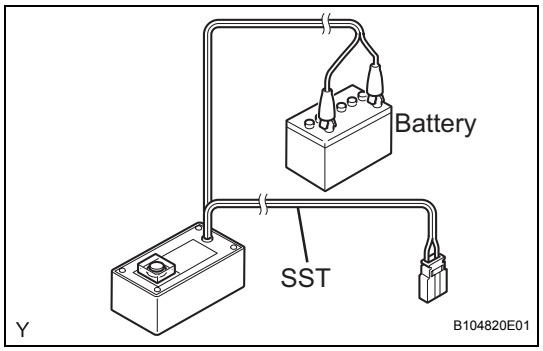

(1) Connect the red clip of SST to the positive battery terminal and the black clip of SST to the negative battery terminal.
(2) Press the SST activation switch, and check that the LED of the SST activation switch illuminates.
CAUTION:
- **Do not connect the SST connector (yellow colored one) to the airbag.**
- **If the LED illuminates when the activation switch is not being pressed, SST may be malfunctioning. Do not use SST.**

(3) Disconnect SST from the battery.

(b) Disconnect the cable from the negative battery terminal.

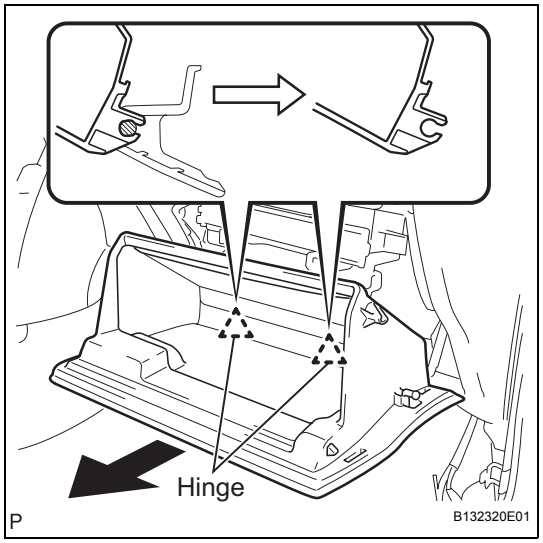

(c) Disengage the 2 claws and open the cover.

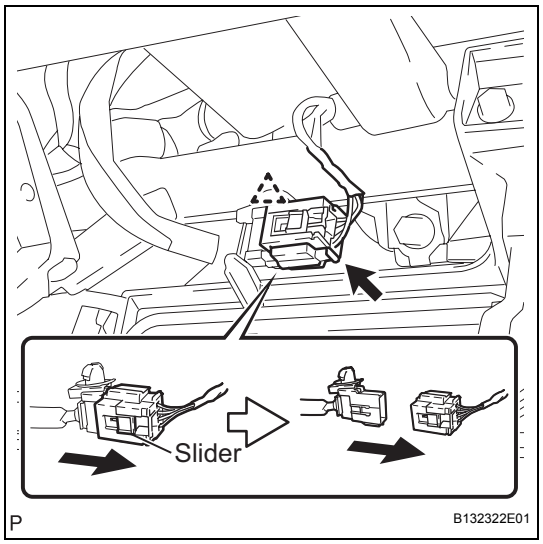

(d) Disconnect the airbag connector, as shown in the illustration.
NOTICE:
Do not damage the airbag wire harness when handling the airbag connector.

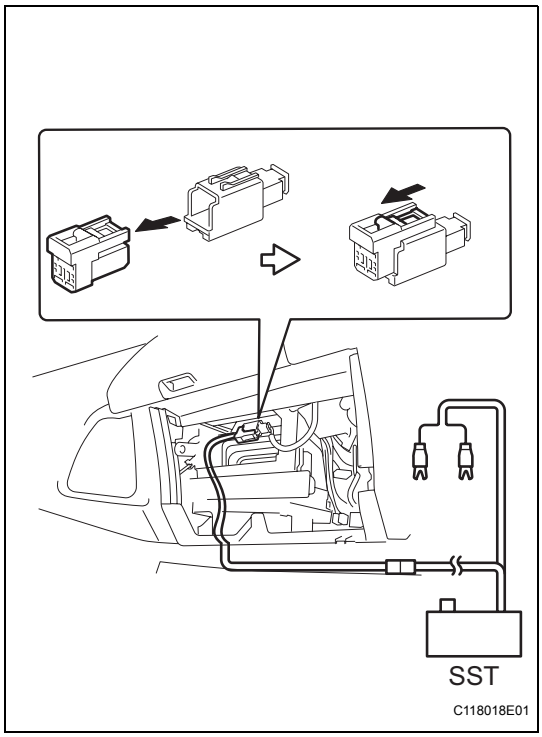

(e) Connect SST.

(1) Connect the SST connector to the front passenger airbag.

SST 09082-00700, 09082-00780

NOTICE:

Do not lock the secondary lock of the twin lock to avoid damaging the SST connector and wire harness.

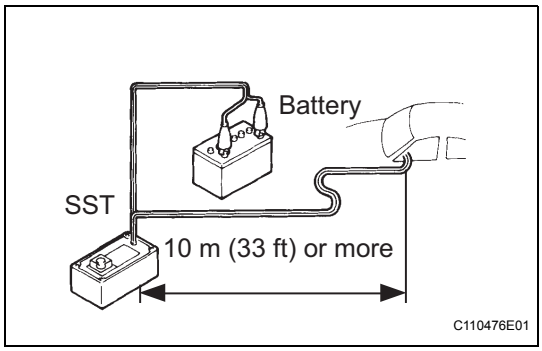

(2) Move SST to at least 10 m (33 ft) away from the vehicle.

(3) Close all doors and windows of the vehicle.

NOTICE:

Do not damage the SST wire harness.

(4) Connect the red clip of SST to the positive battery terminal and the black clip of SST to the negative battery terminal.

(f) Deploy the airbag.

(1) Check that no one is inside the vehicle or within a 10 m (33 ft) radius of the vehicle.

(2) Press the SST activation switch and deploy the airbag.

CAUTION:

- **Make sure that no one is near the vehicle when deploying the airbag.**
- **The front passenger airbag becomes extremely hot when the airbag is deployed, so do not touch it for at least 30 minutes after deployment.**
- **Use gloves and safety glasses when handling a front passenger airbag which has been deployed.**
- **Do not apply water, etc. to a front passenger airbag which has been deployed.**
- **Always wash your hands with water after completing the operation.**

HINT:

The airbag is deployed as the LED of the SST activation switch illuminates.

2. DISPOSE OF FRONT PASSENGER AIRBAG ASSEMBLY (WHEN NOT INSTALLED IN VEHICLE)

NOTICE:

- **Never use the customer's vehicle to deploy the airbag when disposing of the front passenger airbag.**
- **Follow the procedure detailed below when deploying the airbag.**

HINT:

Prepare a battery as the power source to deploy the airbag.

(a) Check the function of SST.

SST 09082-00700

CAUTION:

Always use the specified SST (SRS Airbag Deployment Tool) when deploying the airbag.

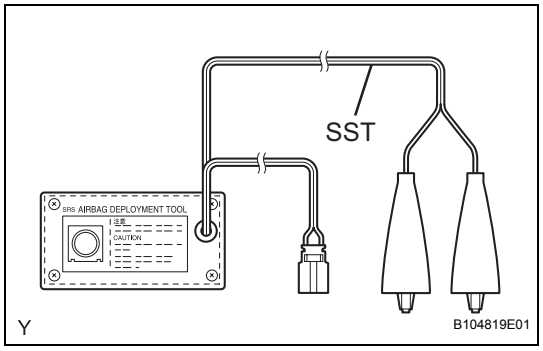

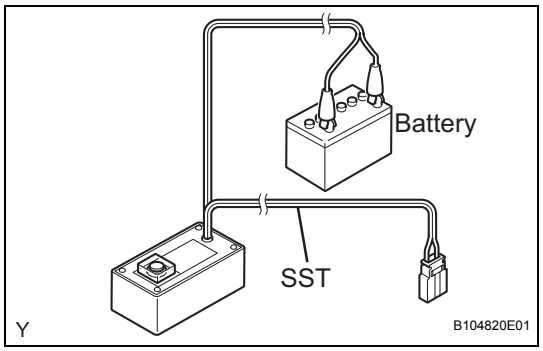

(1) Connect the red clip of SST to the positive battery terminal and the black clip of SST to the negative battery terminal.

(2) Press the SST activation switch, and check that the LED of the SST activation switch illuminates.

CAUTION:

- **Do not connect the SST connector (yellow colored one) to the airbag.**
- **If the LED illuminates when the activation switch is not being pressed, SST may be malfunctioning. Do not use SST.**

(3) Disconnect SST from the battery.

(b) Remove the front passenger airbag (see page RS-327).

CAUTION:

- **When removing the front passenger airbag, work must be started at least 90 seconds after the ignition switch is turned to OFF and the cable is disconnected from the negative battery terminal.**
- **When storing the front passenger airbag, keep the upper surface of the airbag deployment side facing upward.**

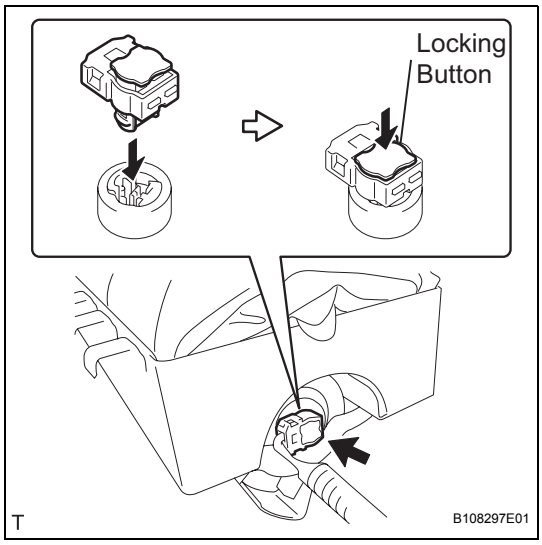

(c) Connect SST.
SST 09082-00802 (09082-10801, 09082-30801)
NOTICE:
Do not lock the secondary lock of the twin lock to avoid damaging the SST connector and wire harness.

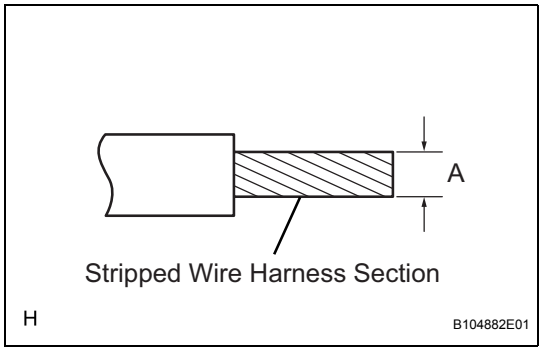

(d) Using a service-purpose wire harness for the vehicle, tie the front passenger airbag to the tire.
Stripped wire harness section:

Area	Measurement
A	1.25 mm^2 or more (0.0019 $in.^2$ or more)

CAUTION:
Do not use wire harness that is too thin or any other object to tie the front passenger airbag because it may snap due to the shock when the airbag is deployed. Always use a wire harness for vehicle use with a cross section of at least 1.25 mm^2 (0.0019 $in.^2$).
HINT:
To calculate the area of the stripped wire harness cross section:
Area = 3.14 x $(Diameter)^2$ divided by 4

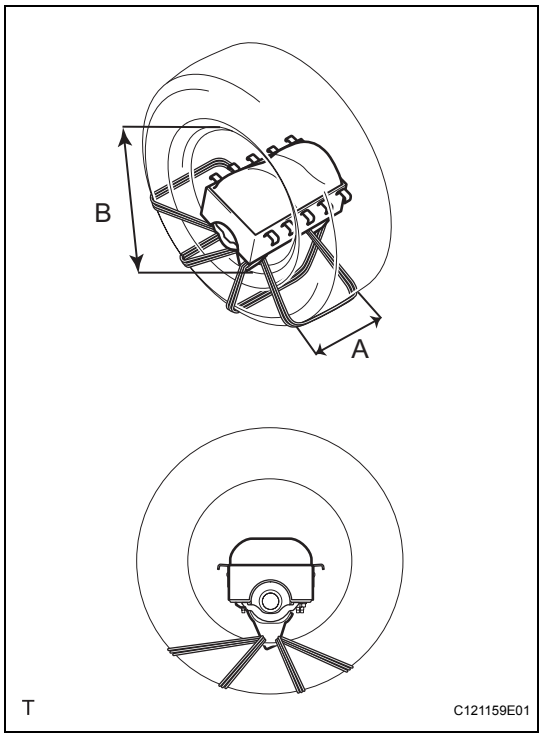

(1) Position the front passenger airbag inside the tire, as shown in the illustration.

Tire size:

Area	Measurement
A	185 mm (7.28 in.)
B	360 mm (14.17 in.)

CAUTION:

- **Make sure that the wire harnesses are tight. If there is any slack in the wire harnesses, the front passenger airbag may become loose due to the shock when the airbag is deployed.**
- **Always tie the front passenger airbag with the airbag deployment side facing inside the tire.**

NOTICE:

The tire will be marked by the airbag deployment, so use a waste tire.

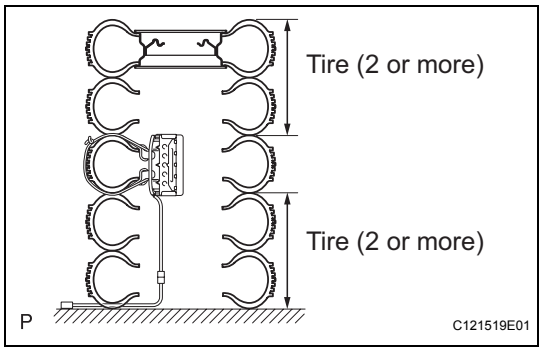

(e) Place the tires.

(1) Place at least 2 tires under the tire to which the front passenger airbag is tied.

(2) Place at least 2 tires over the tire to which the front passenger airbag is tied. The disc wheel should be installed onto the top tire.

NOTICE:

Do not place the SST connector under the tire because it could be damaged.

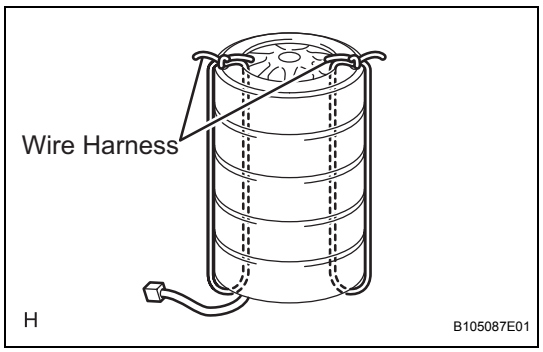

(3) Tie the tires together with 2 wire harnesses.

CAUTION:

Make sure that the wire harnesses are tight. It is highly dangerous when a loose wire harness results in the tires coming free due to the shock when the airbag is deployed.

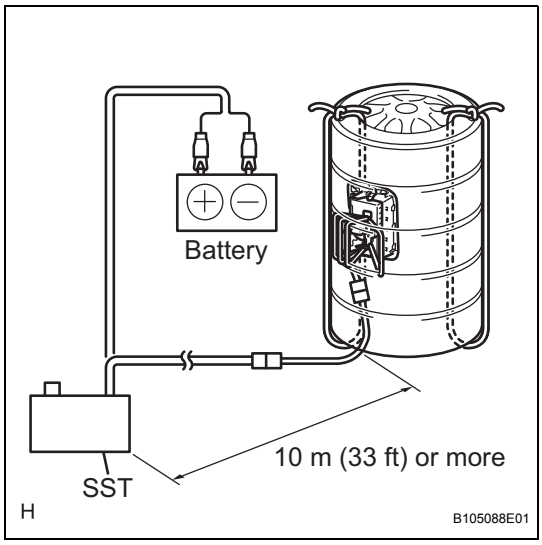

(f) Connect SST.
SST 09082-00700
NOTICE:
Do not lock the secondary lock of the twin lock to avoid damaging the SST connector and wire harness. Also, secure some slack for SST wire harness inside the tire.

(g) Deploy the airbag.
(1) Connect the red clip of SST to the positive battery terminal and the black clip of SST to the negative battery terminal.
(2) Check that no one is within a 10 m (33 ft) radius of the tire to which the front passenger airbag is tied.
(3) Press the SST activation switch and deploy the airbag.
CAUTION:
Make sure that no one is near the tires when deploying the airbag.
HINT:
The airbag is deployed as the LED of the SST activation switch illuminates.

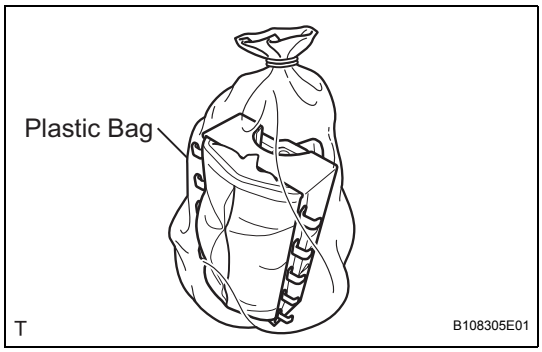

(h) Dispose of the front passenger airbag.
CAUTION:
- **The front passenger airbag becomes extremely hot when the airbag is deployed, so do not touch it for at least 30 minutes after deployment.**
- **Use gloves and safety glasses when handling a front passenger airbag which has been deployed.**
- **Do not apply water, etc. to a front passenger airbag which has been deployed.**
- **Always wash your hands with water after completing the operation.**

(1) Remove the front passenger airbag from the tire.
(2) Place the front passenger airbag in a plastic bag, tie it tightly and dispose of it in the same way as other general parts.

FRONT PASSENGER AIRBAG ASSEMBLY (for Hatchback)

COMPONENTS

RS

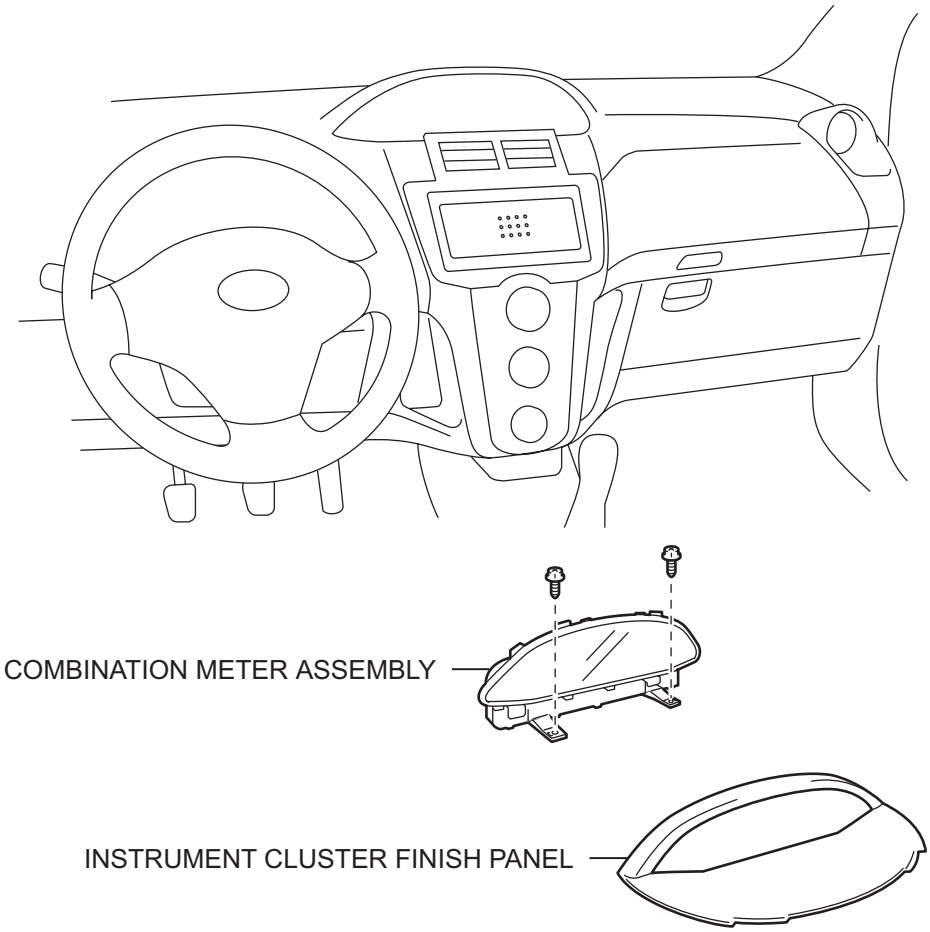

E107796E02

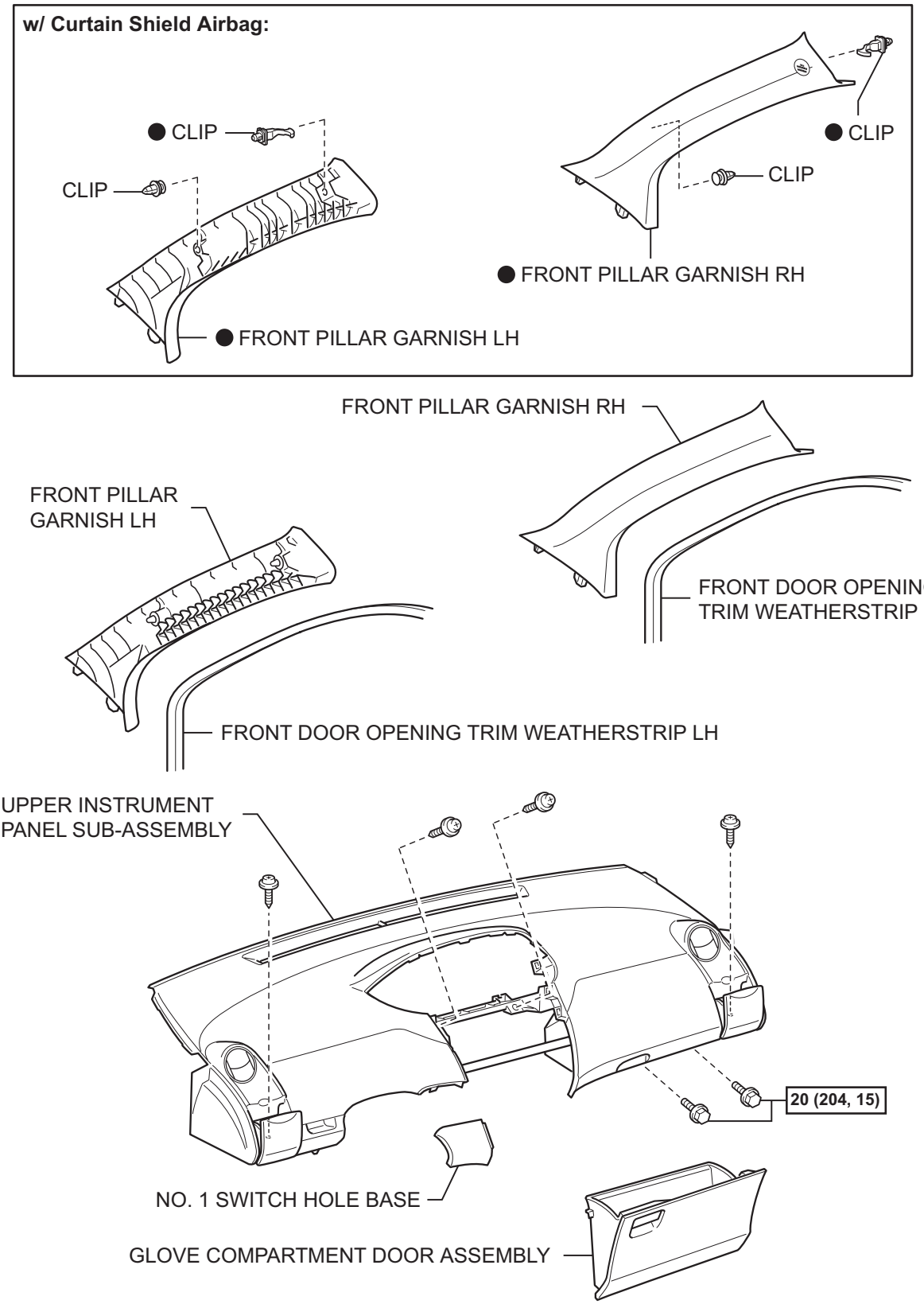

N*m (kgf*cm, ft.*lbf) : Specified torque

● Non-reusable part

0

B108209E03

RS

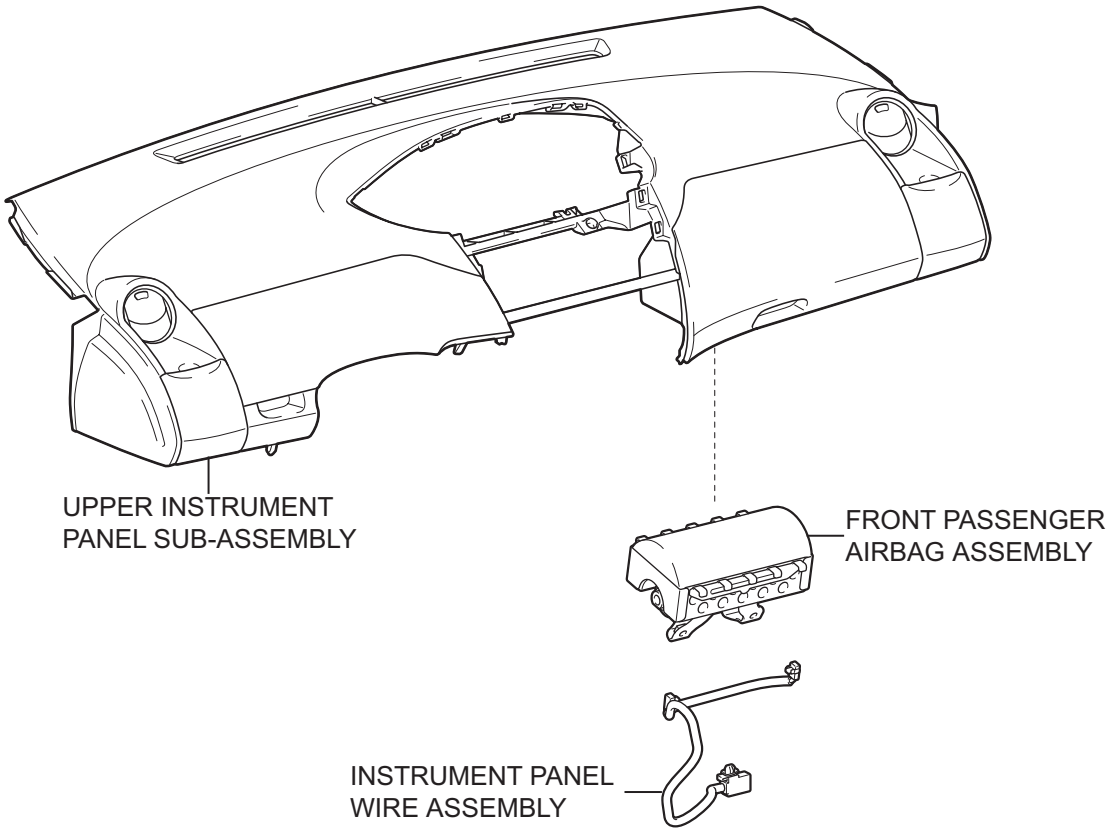

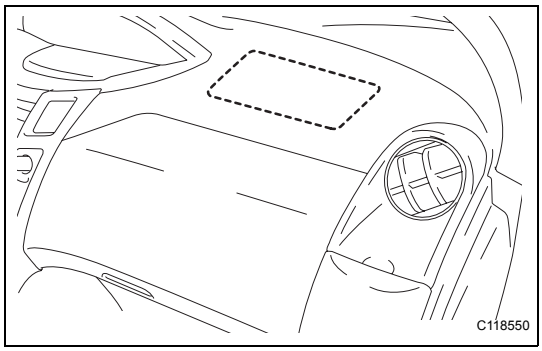

ON-VEHICLE INSPECTION

1. **INSPECT FRONT PASSENGER AIRBAG ASSEMBLY (for Vehicle not Involved in Collision)**
   (a) Perform a diagnostic system check (See page RS-38).
   (b) With the front passenger airbag installed on the vehicle, perform a visual check. If there are any defects, such as those mentioned below, replace the instrument panel with a new one:
   Any cuts, minute cracks or marked discoloration on the instrument panel around the front passenger airbag.

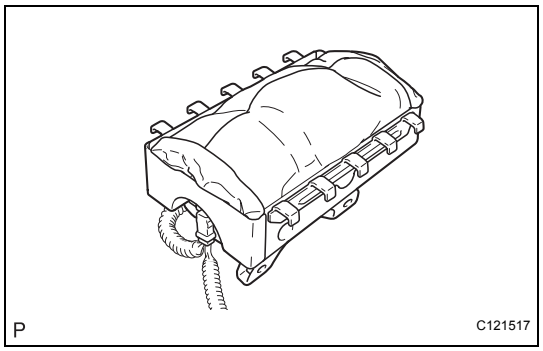

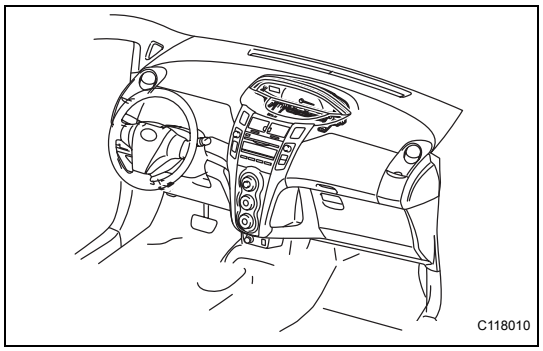

2. INSPECT FRONT PASSENGER AIRBAG ASSEMBLY (for Vehicle Involved in Collision and Airbag not Deployed)

CAUTION:

For front passenger airbag removal and installation procedures, see pages RS-339 and RS-340, and carefully follow the correct procedure.

(a) Perform a diagnostic system check (See page RS-38).

(b) With the front passenger airbag removed from the vehicle, perform a visual check. If there are any defects, such as those mentioned below, replace the front passenger airbag, instrument panel or instrument panel reinforcement with new ones:

- Any cuts, minute cracks or marked discoloration on the front passenger airbag.
- Any cracks or other damage to the connector.
- Deformation or cracks on the instrument panel or instrument panel reinforcement.

RS

REMOVAL

CAUTION:
Some of these service operations affect the SRS airbag system. Read the precautionary notices concerning the SRS airbag system before servicing (See page RS-1).

1. **DISCONNECT CABLE FROM NEGATIVE BATTERY TERMINAL**
2. **REMOVE INSTRUMENT PANEL FINISH PANEL END LH (See page ME-145)**
3. **REMOVE INSTRUMENT PANEL FINISH PANEL END RH (See page ME-145)**
4. **REMOVE INSTRUMENT CLUSTER FINISH PANEL (See page ME-145)**
5. **REMOVE COMBINATION METER ASSEMBLY (See page ME-146)**
6. **REMOVE FRONT DOOR OPENING TRIM WEATHERSTRIP RH (See page IR-50)**
7. **REMOVE FRONT DOOR OPENING TRIM WEATHERSTRIP LH (See page IR-50)**
8. **REMOVE FRONT PILLAR GARNISH RH (See page IR-58)**
9. **REMOVE FRONT PILLAR GARNISH LH (See page IR-59)**
10. **REMOVE NO. 1 SWITCH HOLE BASE (See page IP-20)**
11. **REMOVE GLOVE COMPARTMENT DOOR ASSEMBLY (See page IP-20)**
12. **REMOVE UPPER INSTRUMENT PANEL SUB-ASSEMBLY (See page IP-21)**
13. **REMOVE FRONT PASSENGER AIRBAG ASSEMBLY**
    (a) Remove the wire harness from the 2 claws of the instrument panel.
    (b) Disengage the 10 hooks and remove the instrument panel passenger airbag.

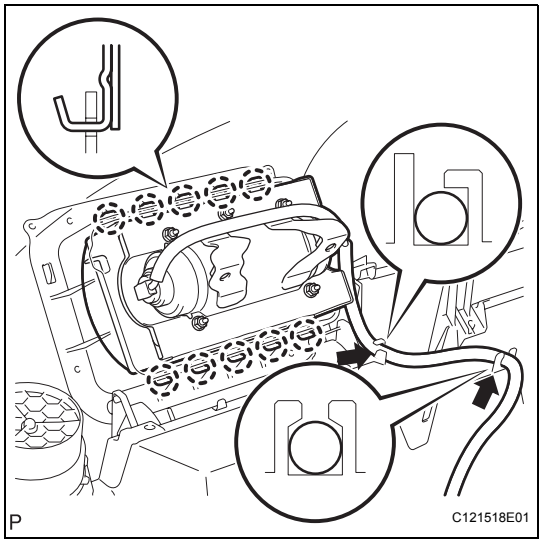

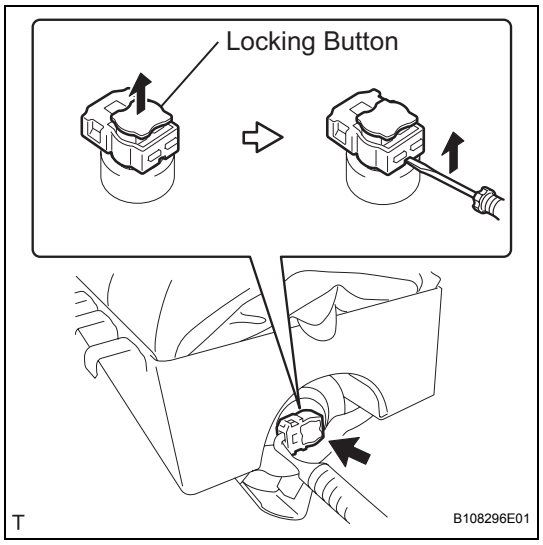

14. REMOVE INSTRUMENT PANEL WIRE ASSEMBLY

(a) Using a thin-bladed screwdriver, release the locking button.

(b) Using a thin-bladed screwdriver, disconnect the 2 airbag connectors and remove the instrument panel wire assembly.

RS

INSTALLATION

CAUTION:
Some of these service operations affect the SRS airbag system. Read the precautionary notices concerning the SRS airbag system before servicing (See page RS-1).

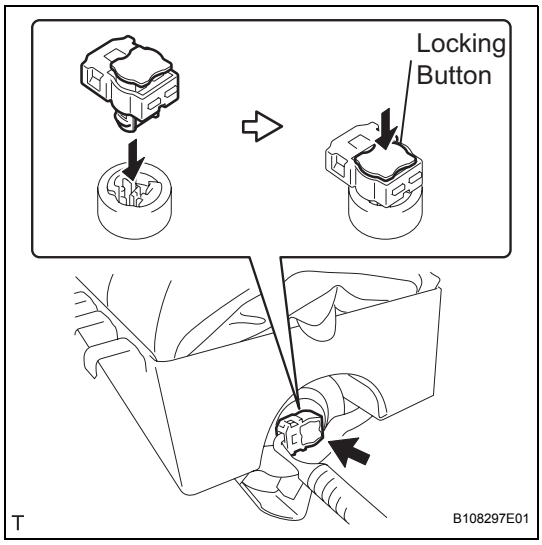

1. **INSTALL INSTRUMENT PANEL WIRE ASSEMBLY**
   (a) Connect the airbag connector to install the instrument panel wire.
   NOTICE:
   - **Match the color of the connector of the instrument panel wire assembly with that of the connector of the front passenger assembly and install the airbag connector.**
   - **Lock the locking button securely.**

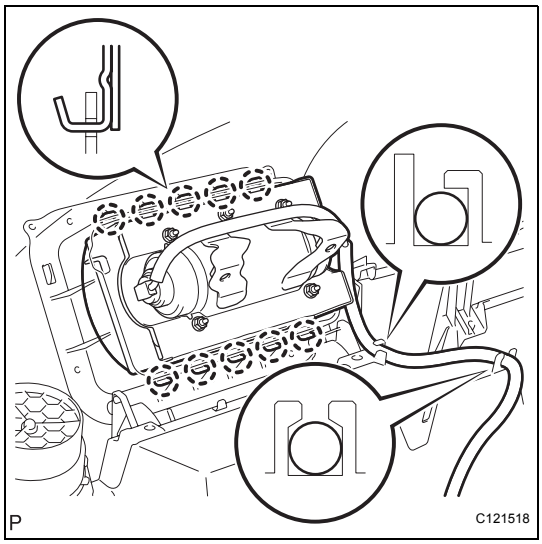

2. **INSTALL FRONT PASSENGER AIRBAG ASSEMBLY**
   (a) Engage the 10 hooks so that the connector side faces the outside of the vehicle, and install the instrument panel passenger airbag.
   (b) Install the wire harness onto the 2 claws of the instrument panel.
3. **INSTALL UPPER INSTRUMENT PANEL SUB-ASSEMBLY (See page IP-29)**
4. **INSTALL FRONT PILLAR GARNISH RH (See page IR-71)**
5. **INSTALL FRONT PILLAR GARNISH LH (See page ME-149)**
6. **INSTALL FRONT DOOR OPENING TRIM WEATHERSTRIP RH (See page IR-81)**
7. **INSTALL FRONT DOOR OPENING TRIM WEATHERSTRIP LH (See page IR-81)**
8. **INSTALL GLOVE COMPARTMENT DOOR ASSEMBLY (See page IP-32)**
9. **INSTALL NO. 1 SWITCH HOLE BASE (See page IP-32)**
10. **INSTALL COMBINATION METER ASSEMBLY (See page ME-148)**
11. **INSTALL INSTRUMENT CLUSTER FINISH PANEL (See page ME-148)**
12. **INSTALL INSTRUMENT PANEL FINISH PANEL END RH (See page ME-149)**

13. **INSTALL INSTRUMENT PANEL FINISH PANEL END LH (See page ME-149)**

14. **CONNECT CABLE TO NEGATIVE BATTERY TERMINAL**
Torque: 5.4 N*m (55 kgf*cm, 48 in.*lbf)

15. **INSPECT SRS WARNING LIGHT**
(See page RS-31)

RS

DISPOSAL

HINT:
When scrapping a vehicle equipped with the SRS or disposing of an instrument panel passenger airbag, deploy the airbag first in accordance with the procedure described below. If any abnormality occurs with the airbag deployment, contact the SERVICE DEPT. of the DISTRIBUTOR.

CAUTION:

- **Never dispose of a front passenger airbag that has an undeployed airbag.**
- **The airbag emits an exploding sound when it is deployed, so perform the operation outdoors and where it will not create a nuisance to nearby residents.**
- **When deploying the airbag, always use the specified SST (SRS Airbag Deployment Tool). Perform the operation in a place away from electrical noise.**
- **When deploying the airbag, perform the operation at least 10 m (33 ft) away from the front passenger airbag.**
- **The front passenger airbag becomes extremely hot when the airbag is deployed, so do not touch it for at least 30 minutes after deployment.**
- **Use gloves and safety glasses when handling a front passenger airbag which has been deployed.**
- **Do not apply water, etc. to a front passenger airbag which has been deployed.**
- **Always wash your hands with water after completing the operation.**

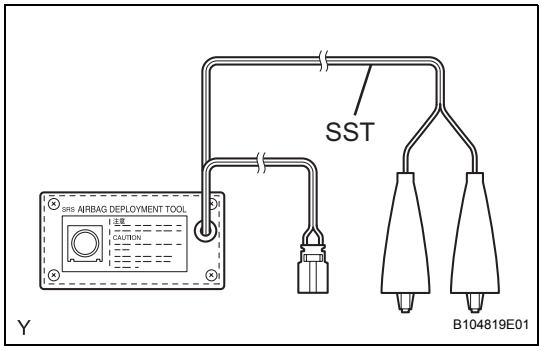

1. DISPOSE OF FRONT PASSENGER AIRBAG ASSEMBLY (WHEN INSTALLED IN VEHICLE)

HINT:
Prepare a battery as the power source to deploy the airbag.

(a) Check the function of SST.
SST 09082-00700
CAUTION:
Always use the specified SST (SRS Airbag Deployment Tool) when deploying the airbag.

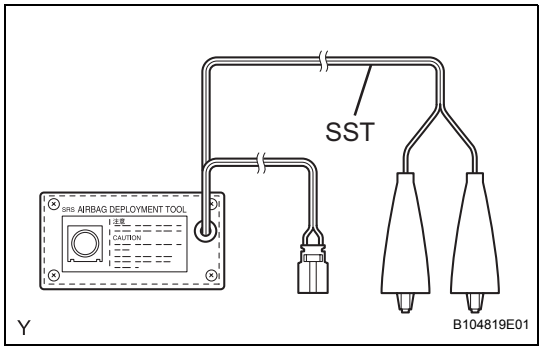

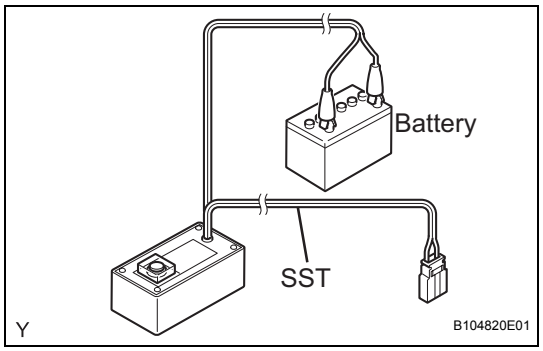

(1) Connect the red clip of SST to the positive battery terminal and the black clip of SST to the negative battery terminal.
(2) Press the SST activation switch, and check that the LED of the SST activation switch illuminates.
CAUTION:
- **Do not connect the SST connector (yellow colored one) to the airbag.**
- **If the LED illuminates when the activation switch is not being pressed, SST may be malfunctioning. Do not use SST.**

(3) Disconnect SST from the battery.

(b) Disconnect the cable from the negative battery terminal.

(c) Disengage the 2 claws and open the cover.

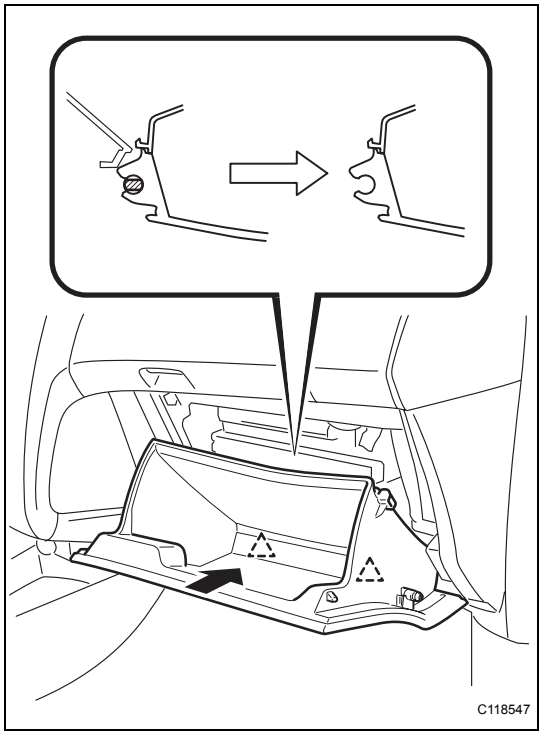

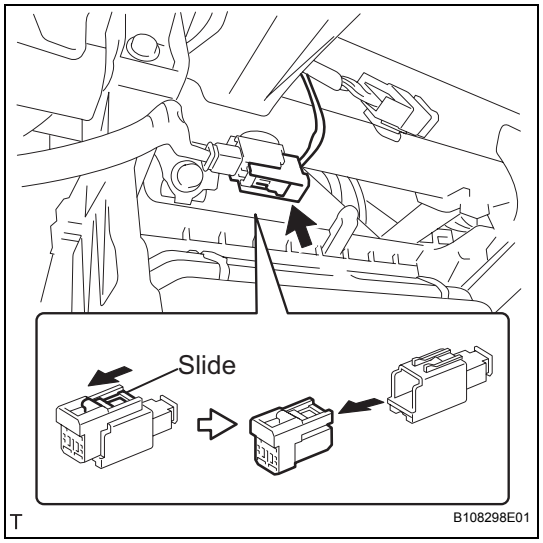

(d) Disconnect the airbag connector, as shown in the illustration.
NOTICE:
Do not damage the airbag wire harness when handling the airbag connector.

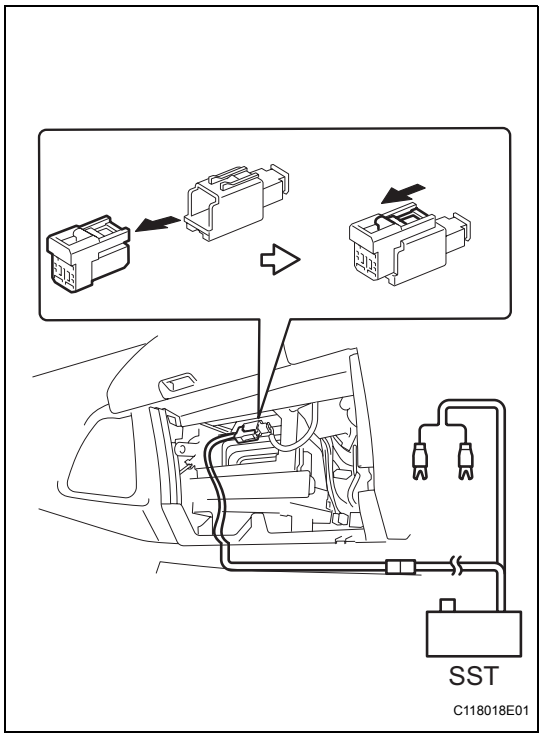

(e) Connect SST.

(1) Connect the SST connector to the front passenger airbag.

SST 09082-00700, 09082-00780

NOTICE:

Do not lock the secondary lock of the twin lock to avoid damaging the SST connector and wire harness.

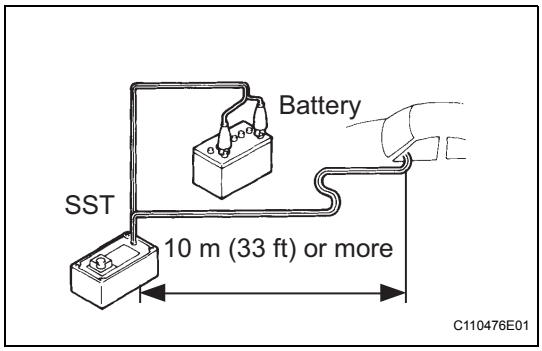

(2) Move SST to at least 10 m (33 ft) away from the vehicle.

(3) Close all doors and windows of the vehicle.

NOTICE:

Do not damage the SST wire harness.

(4) Connect the red clip of SST to the positive battery terminal and the black clip of SST to the negative battery terminal.

(f) Deploy the airbag.

(1) Check that no one is inside the vehicle or within a 10 m (33 ft) radius of the vehicle.

(2) Press the SST activation switch and deploy the airbag.

CAUTION:

- **Make sure that no one is near the vehicle when deploying the airbag.**
- **The front passenger airbag becomes extremely hot when the airbag is deployed, so do not touch it for at least 30 minutes after deployment.**
- **Use gloves and safety glasses when handling a front passenger airbag which has been deployed.**
- **Do not apply water, etc. to a front passenger airbag which has been deployed.**
- **Always wash your hands with water after completing the operation.**

HINT:

The airbag is deployed as the LED of the SST activation switch illuminates.

2. DISPOSE OF FRONT PASSENGER AIRBAG ASSEMBLY (WHEN NOT INSTALLED IN VEHICLE)

NOTICE:

- **Never use the customer's vehicle to deploy the airbag when disposing of the front passenger airbag.**
- **Follow the procedure detailed below when deploying the airbag.**

HINT:

Prepare a battery as the power source to deploy the airbag.

(a) Check the function of SST.

SST 09082-00700

CAUTION:

Always use the specified SST (SRS Airbag Deployment Tool) when deploying the airbag.

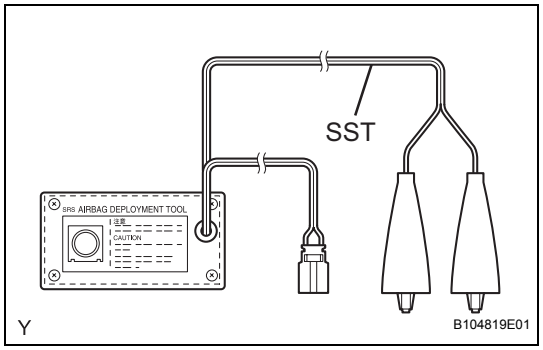

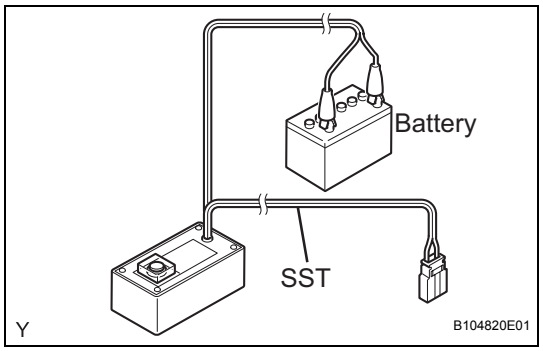

(1) Connect the red clip of SST to the positive battery terminal and the black clip of SST to the negative battery terminal.

(2) Press the SST activation switch, and check that the LED of the SST activation switch illuminates.

CAUTION:

- **Do not connect the SST connector (yellow colored one) to the airbag.**
- **If the LED illuminates when the activation switch is not being pressed, SST may be malfunctioning. Do not use SST.**

(3) Disconnect SST from the battery.

(b) Remove the front passenger airbag (see page RS-339).

CAUTION:

- **When removing the front passenger airbag, work must be started at least 90 seconds after the ignition switch is turned to OFF and the cable is disconnected from the negative battery terminal.**
- **When storing the front passenger airbag, keep the upper surface of the airbag deployment side facing upward.**

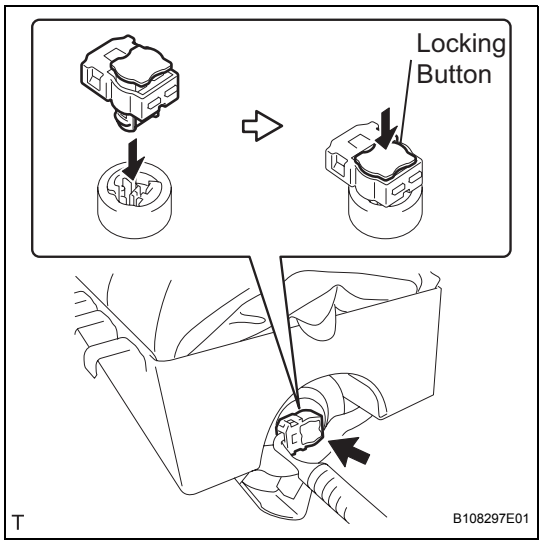

(c) Connect SST.
SST 09082-00802 (09082-10801, 09082-30801)
NOTICE:
Do not lock the secondary lock of the twin lock to avoid damaging the SST connector and wire harness.

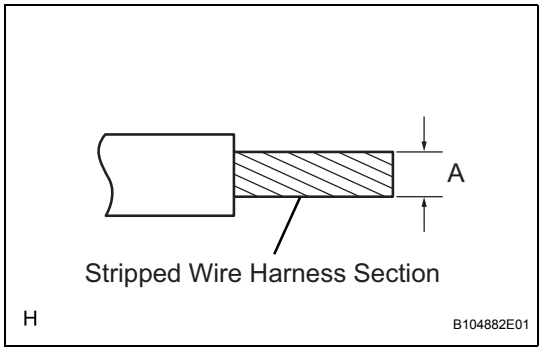

(d) Using a service-purpose wire harness for the vehicle, tie the front passenger airbag to the tire.
Stripped wire harness section:

Area	Measurement
A	1.25 mm^2 or more (0.0019 $in.^2$ or more)

CAUTION:
Do not use wire harness that is too thin or any other object to tie the front passenger airbag because it may snap due to the shock when the airbag is deployed. Always use a wire harness for vehicle use with a cross section of at least 1.25 mm^2 (0.0019 $in.^2$).
HINT:
To calculate the area of the stripped wire harness cross section:
Area = 3.14 x $(Diameter)^2$ divided by 4

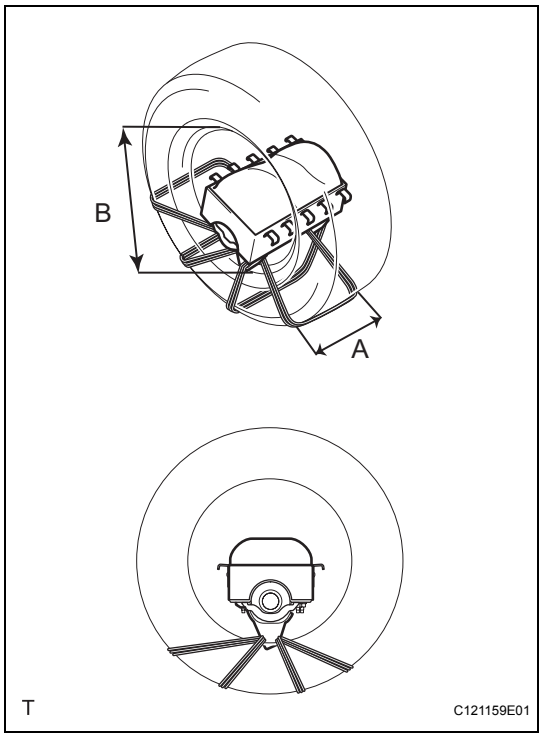

(1) Position the front passenger airbag inside the tire, as shown in the illustration.

Tire size:

Area	Measurement
A	185 mm (7.28 in.)
B	360 mm (14.17 in.)

CAUTION:

- **Make sure that the wire harnesses are tight. If there is any slack in the wire harnesses, the front passenger airbag may become loose due to the shock when the airbag is deployed.**
- **Always tie the front passenger airbag with the airbag deployment side facing inside the tire.**

NOTICE:

The tire will be marked by the airbag deployment, so use a waste tire.

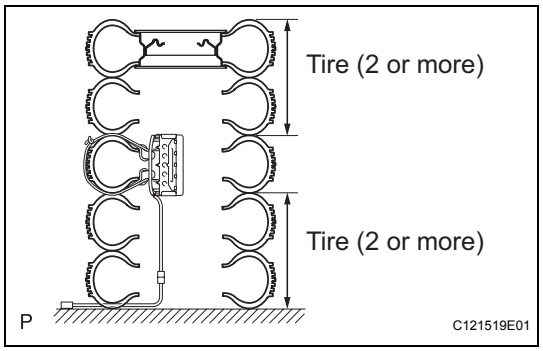

(e) Place the tires.

(1) Place at least 2 tires under the tire to which the front passenger airbag is tied.

(2) Place at least 2 tires over the tire to which the front passenger airbag is tied. The disc wheel should be installed onto the top tire.

NOTICE:

Do not place the SST connector under the tire because it could be damaged.

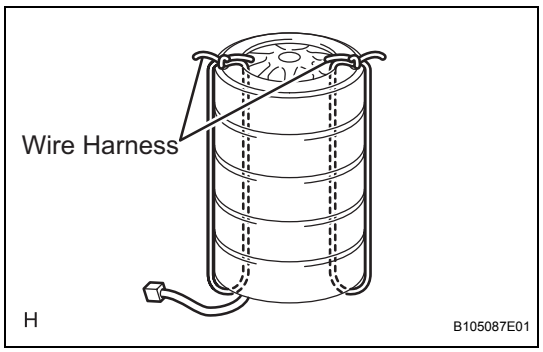

(3) Tie the tires together with 2 wire harnesses.

CAUTION:

Make sure that the wire harnesses are tight. It is highly dangerous when a loose wire harness results in the tires coming free due to the shock when the airbag is deployed.

RS

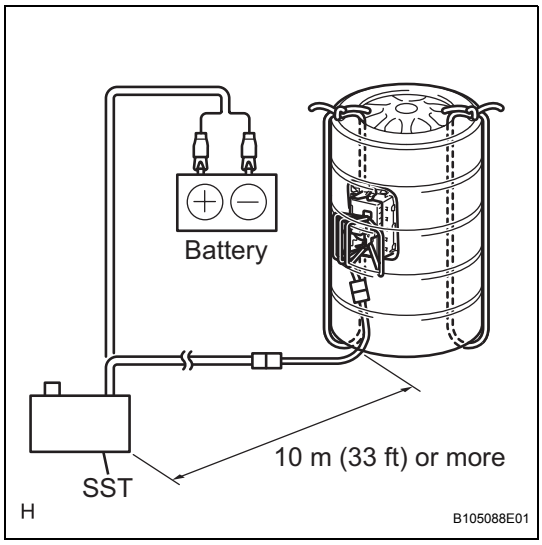

(f) Connect SST.
SST 09082-00700
NOTICE:
Do not lock the secondary lock of the twin lock to avoid damaging the SST connector and wire harness. Also, secure some slack for SST wire harness inside the tire.

(g) Deploy the airbag.
(1) Connect the red clip of SST to the positive battery terminal and the black clip of SST to the negative battery terminal.
(2) Check that no one is within a 10 m (33 ft) radius of the tire to which the front passenger airbag is tied.
(3) Press the SST activation switch and deploy the airbag.
CAUTION:
Make sure that no one is near the tires when deploying the airbag.
HINT:
The airbag is deployed as the LED of the SST activation switch illuminates.

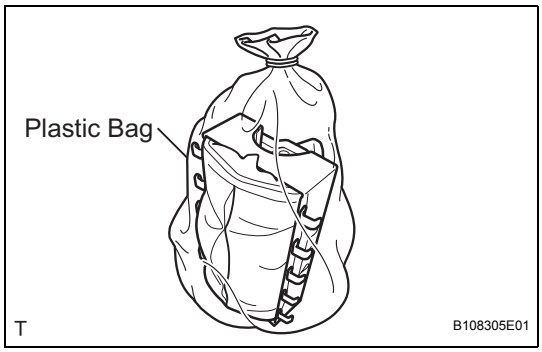

(h) Dispose of the front passenger airbag.
CAUTION:
- **The front passenger airbag becomes extremely hot when the airbag is deployed, so do not touch it for at least 30 minutes after deployment.**
- **Use gloves and safety glasses when handling a front passenger airbag which has been deployed.**
- **Do not apply water, etc. to a front passenger airbag which has been deployed.**
- **Always wash your hands with water after completing the operation.**

(1) Remove the front passenger airbag from the tire.
(2) Place the front passenger airbag in a plastic bag, tie it tightly and dispose of it in the same way as other general parts.

CURTAIN SHIELD AIRBAG ASSEMBLY (for Sedan)

COMPONENTS

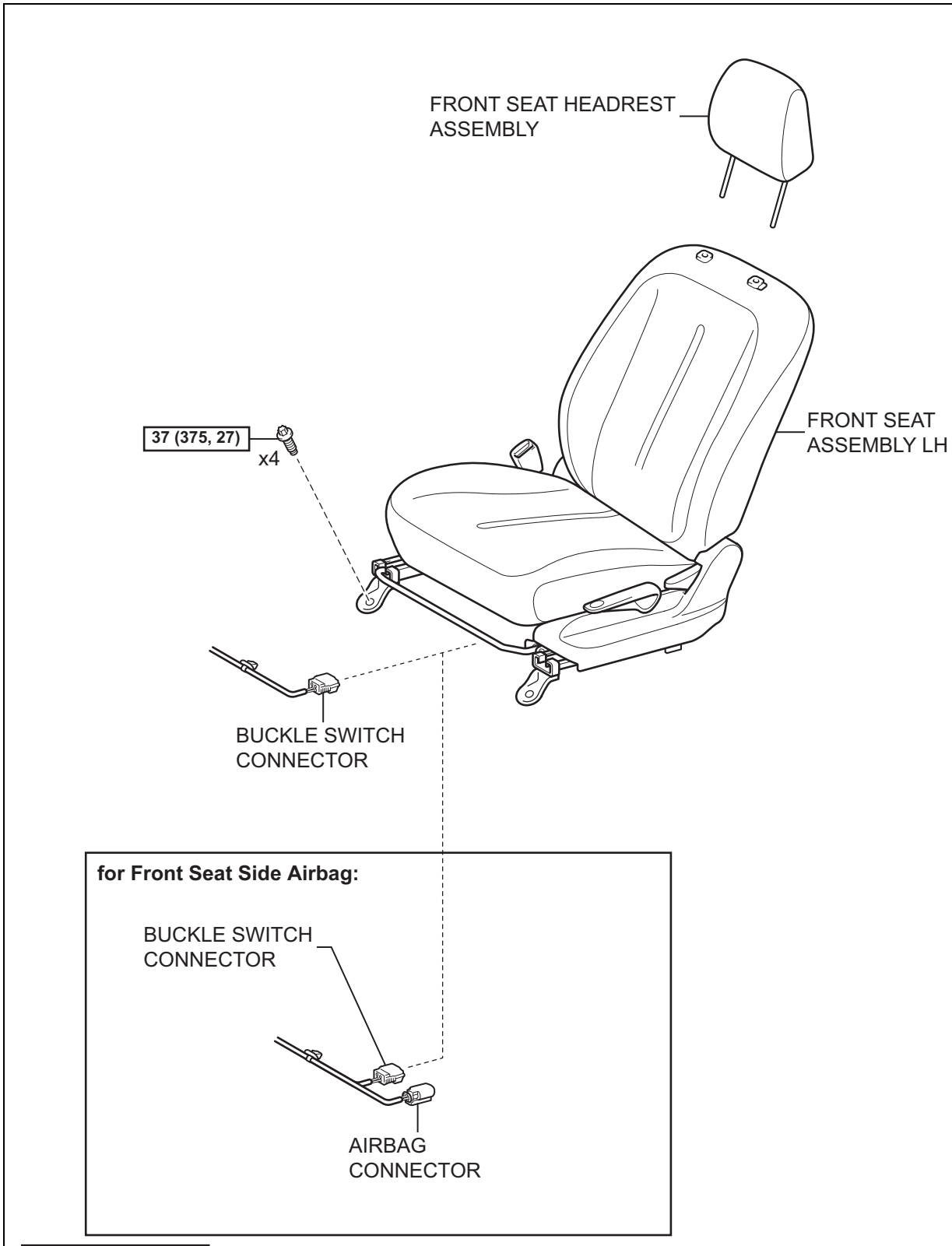

N*m (kgf*cm, ft*lbf) : Specified torque

T

B138550E02

RS

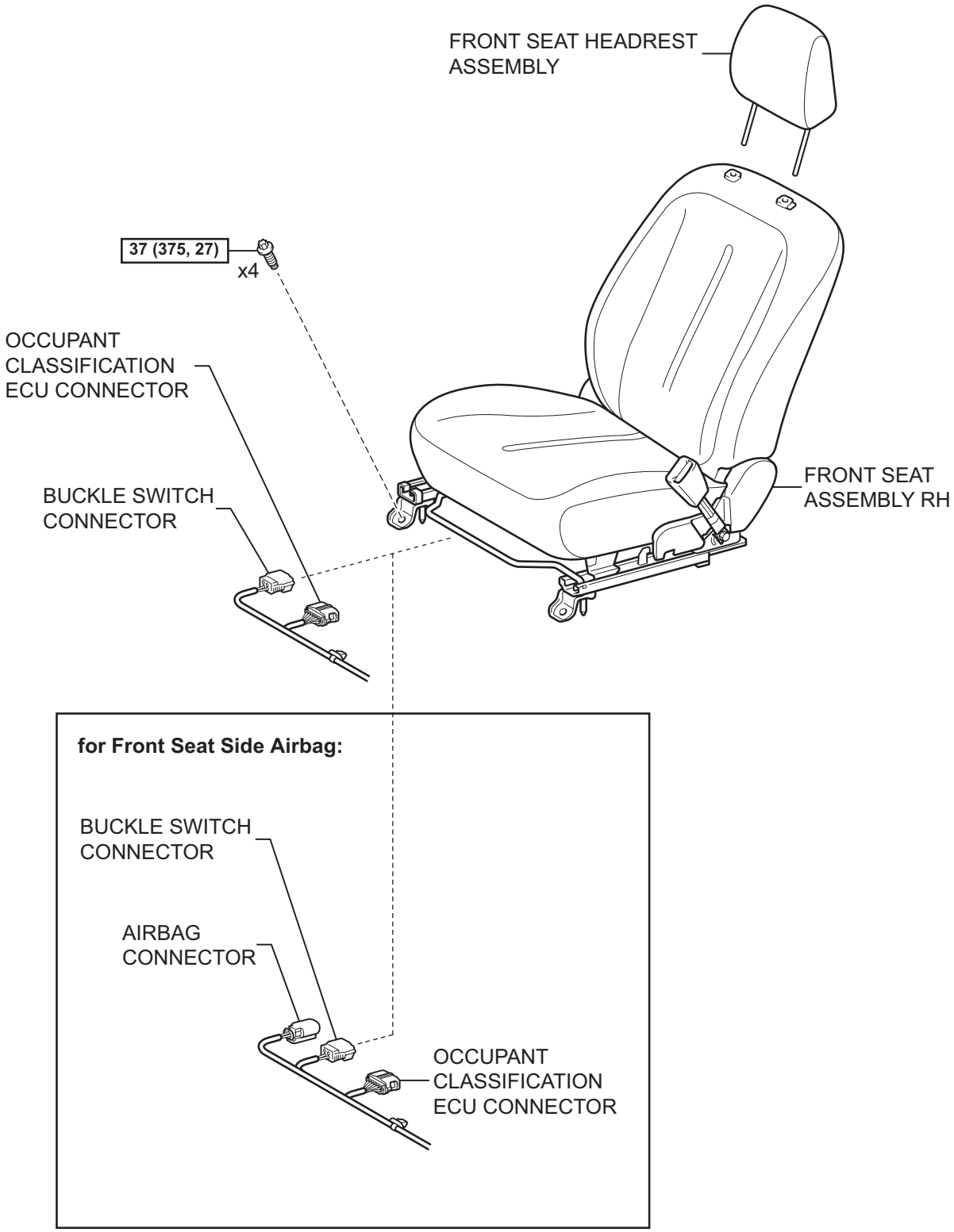

N*m (kgf*cm, ft*lbf) : Specified torque

T

B138551E01

for 60/40 Split Seat Type:

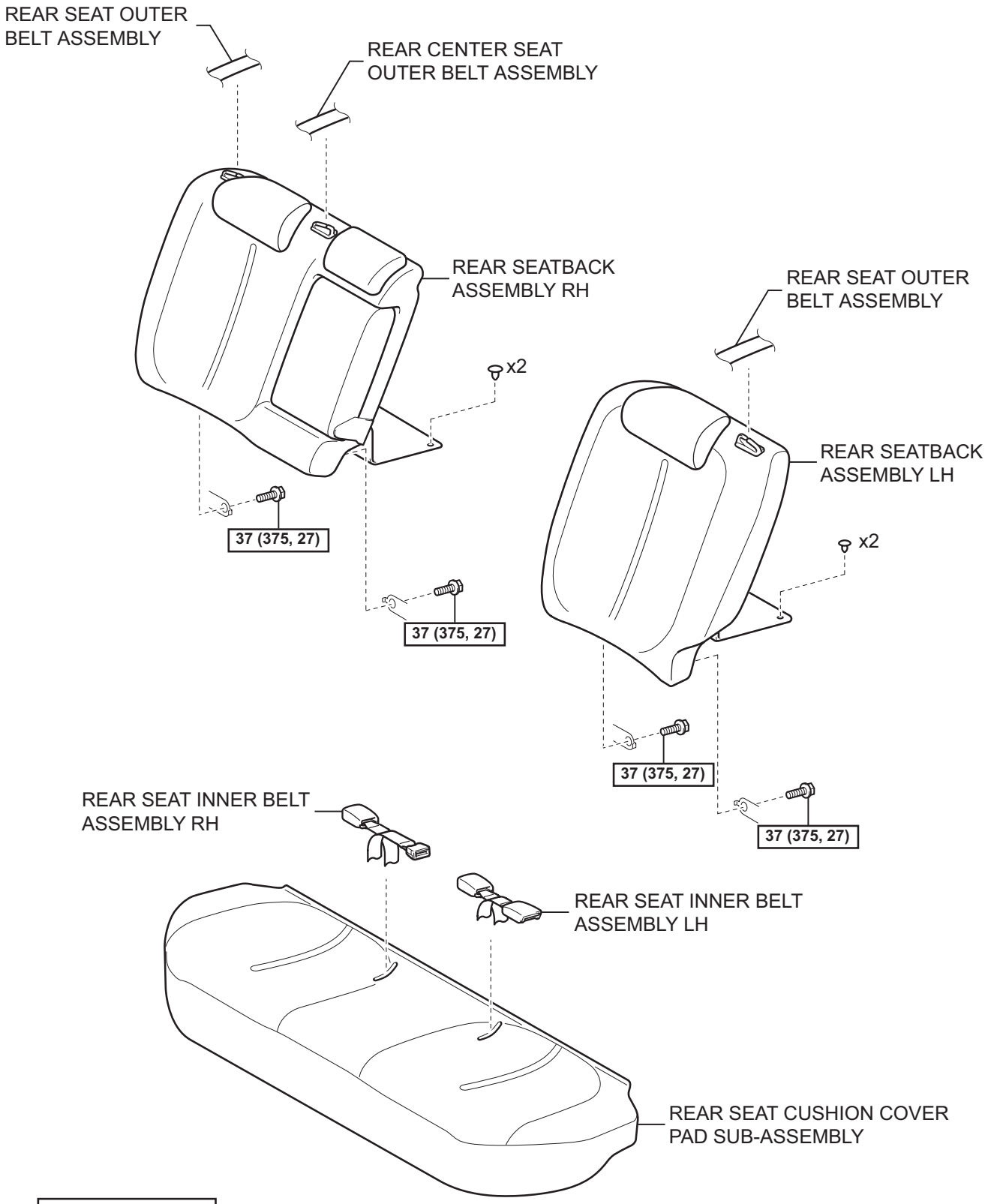

N*m (kgf*cm, ft*lbf) : Specified torque

T

B138442E02

for Fixed Seat Type:

RS

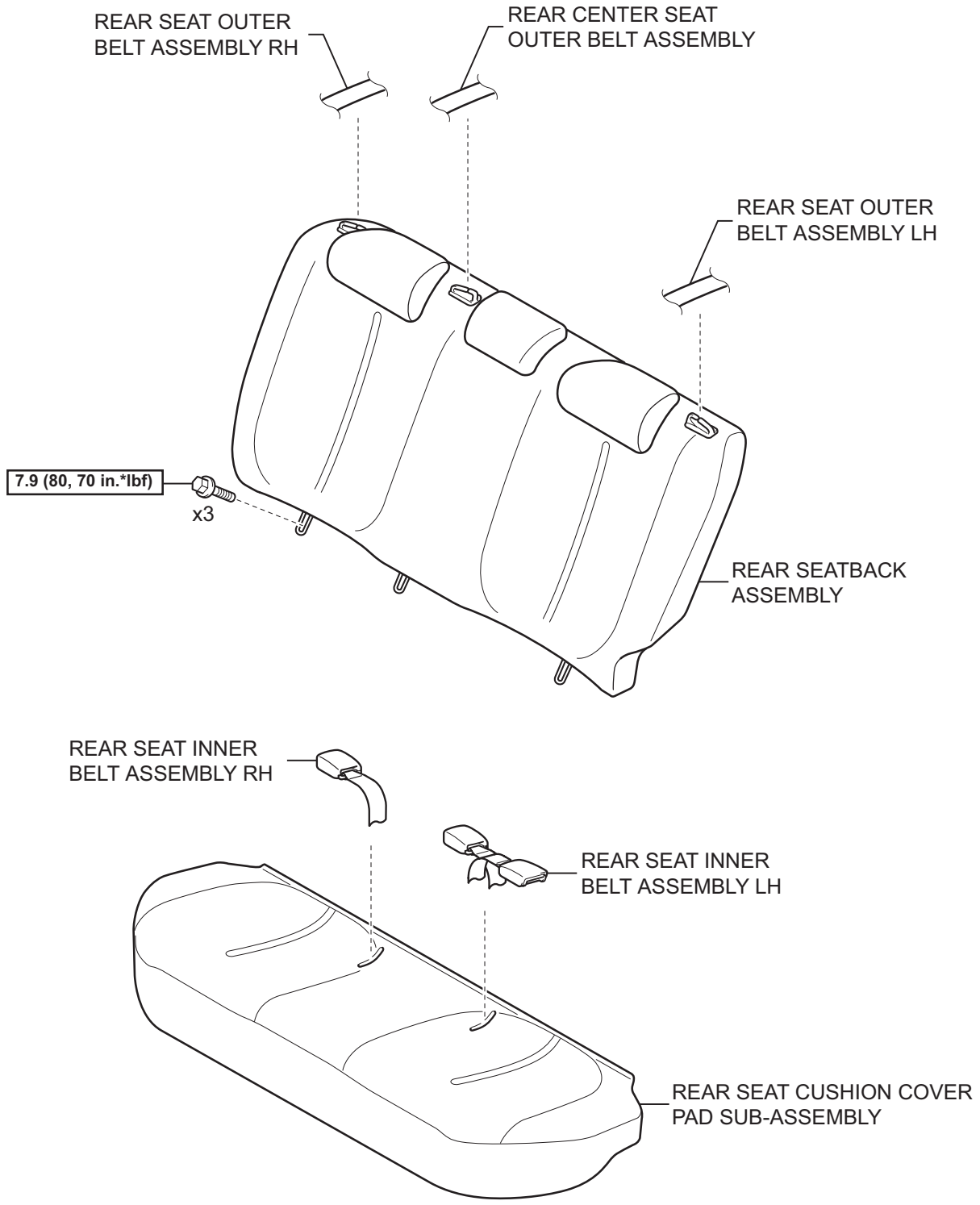

N*m (kgf*cm, ft*lbf) : Specified torque

T

B138611E01

for 60/40 Split Seat Type:

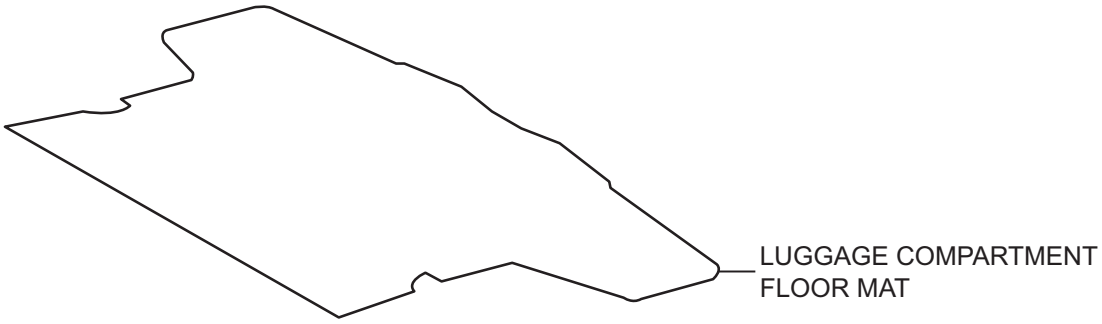

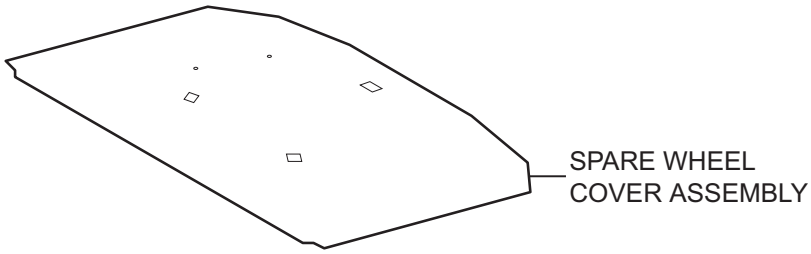

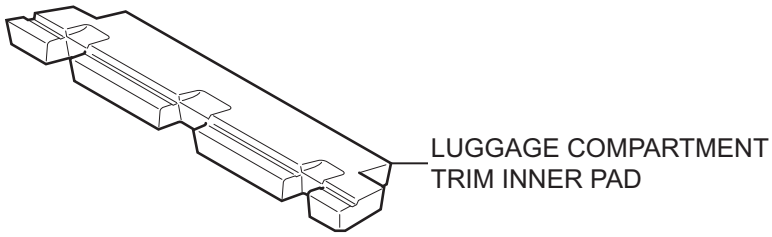

for Grand Tire:

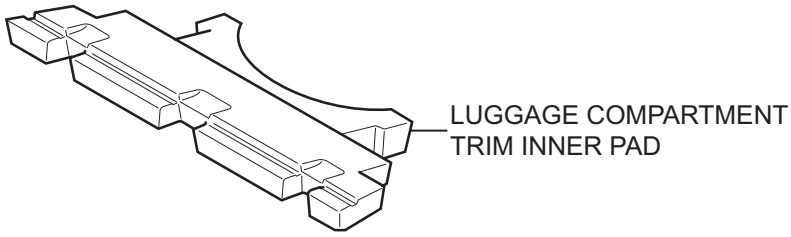

T

B138565E01

RS

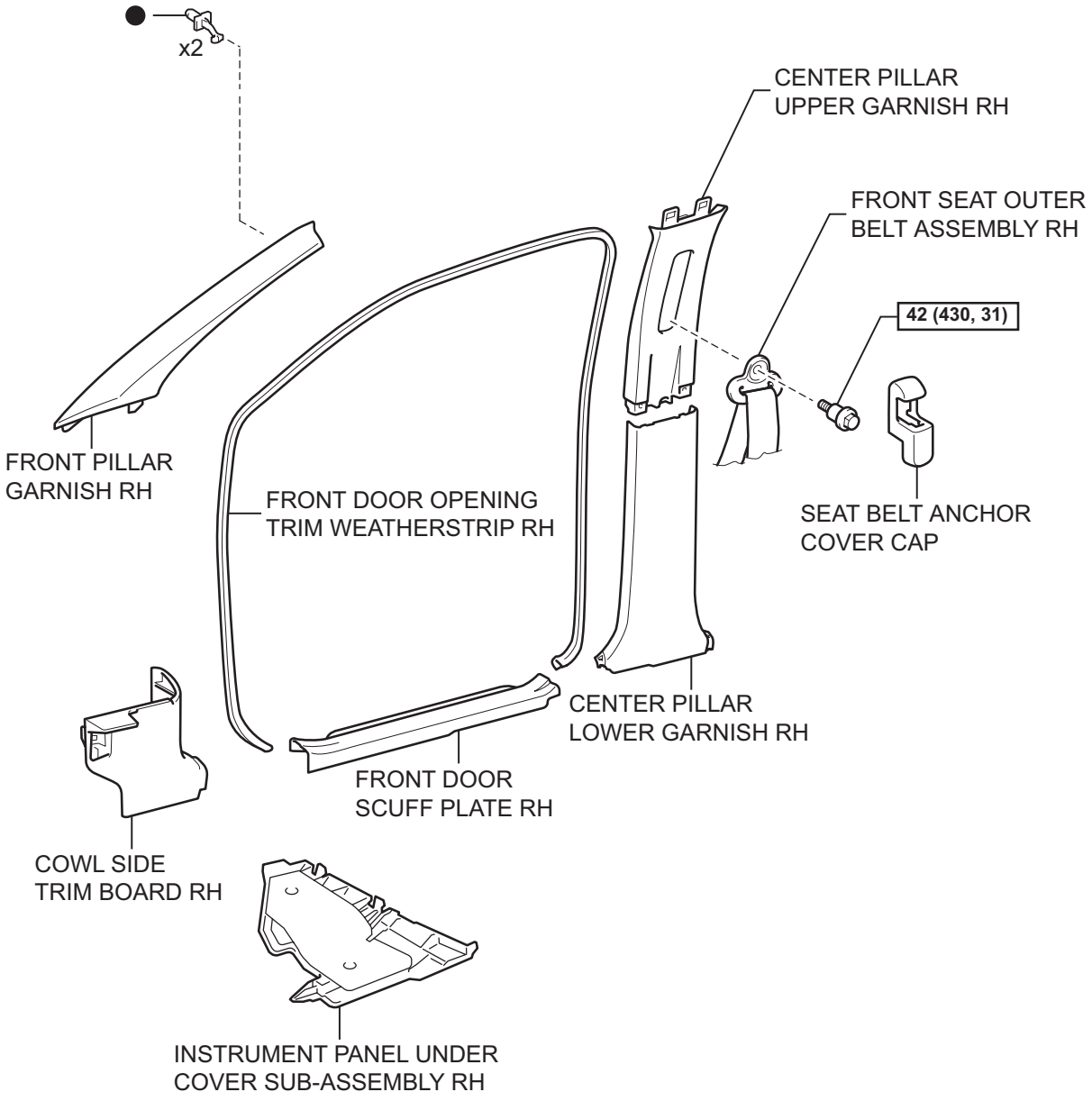

N*m (kgf*cm, ft*lbf) : Specified torque

● Non-reusable part

T

B138593E03

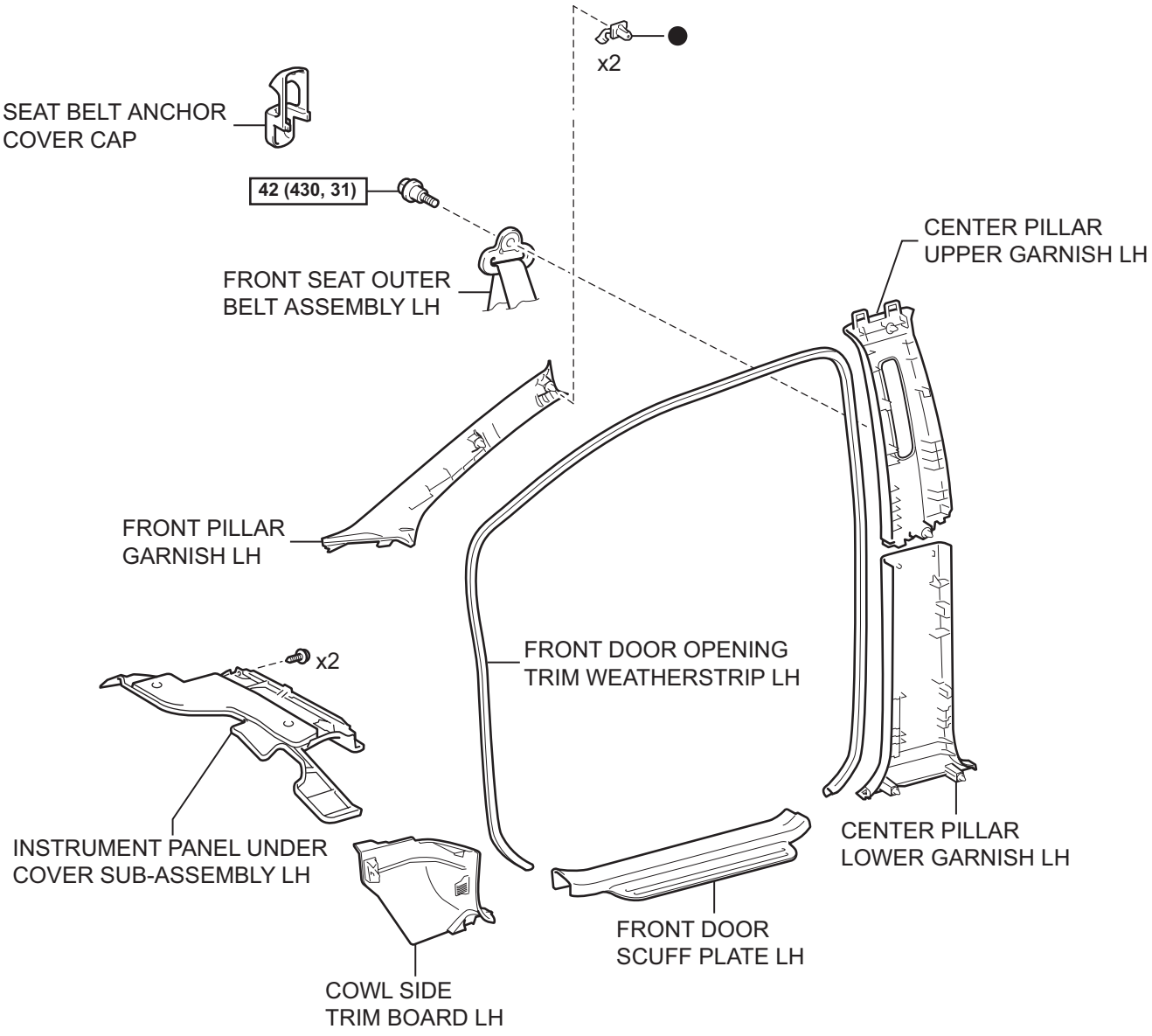

N*m (kgf*cm, ft*lbf) : Specified torque

● Non-reusable part

T

B138594E02

RS

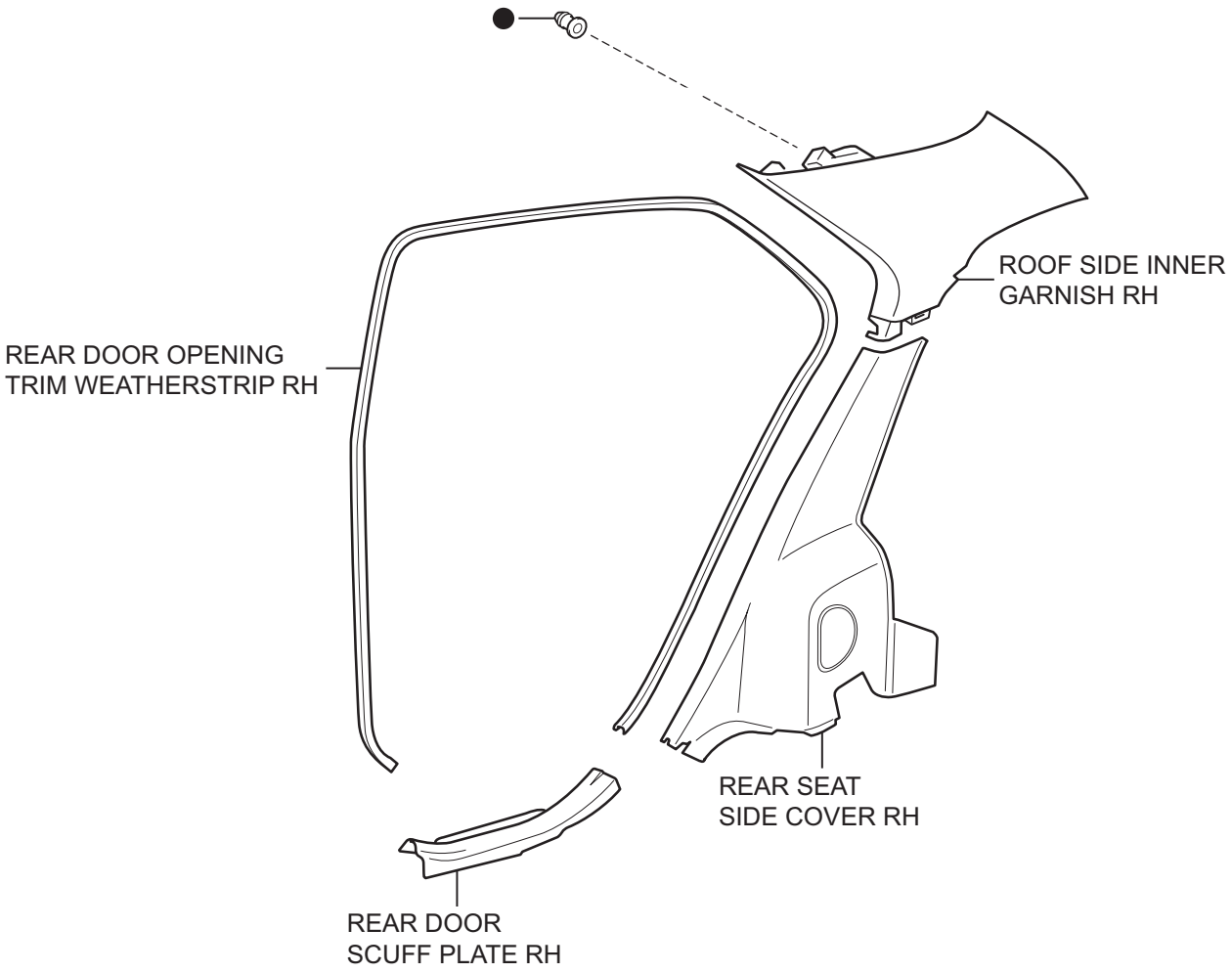

● Non-reusable part

T

B134769E04

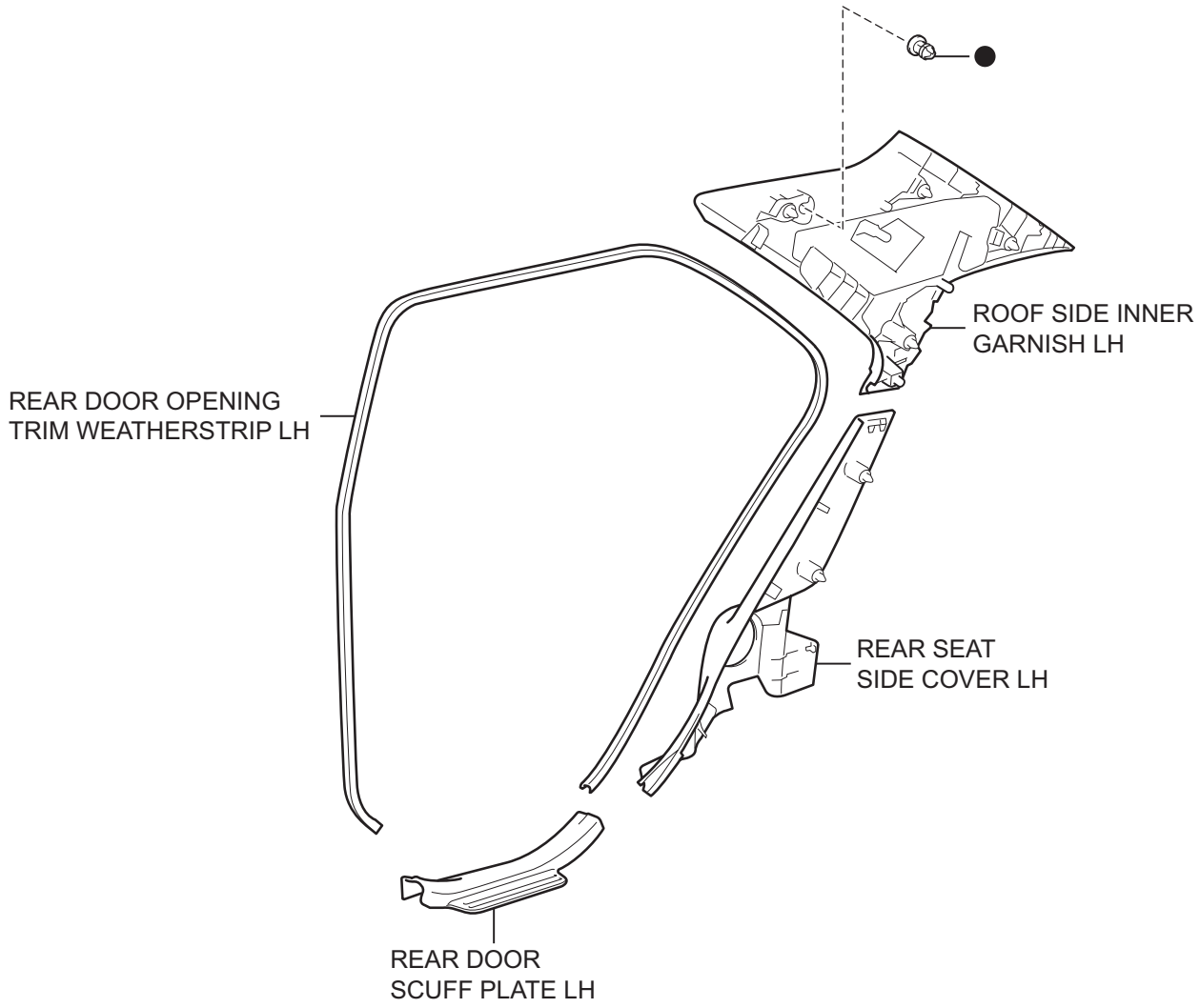

● Non-reusable part

T

B134770E03

RS

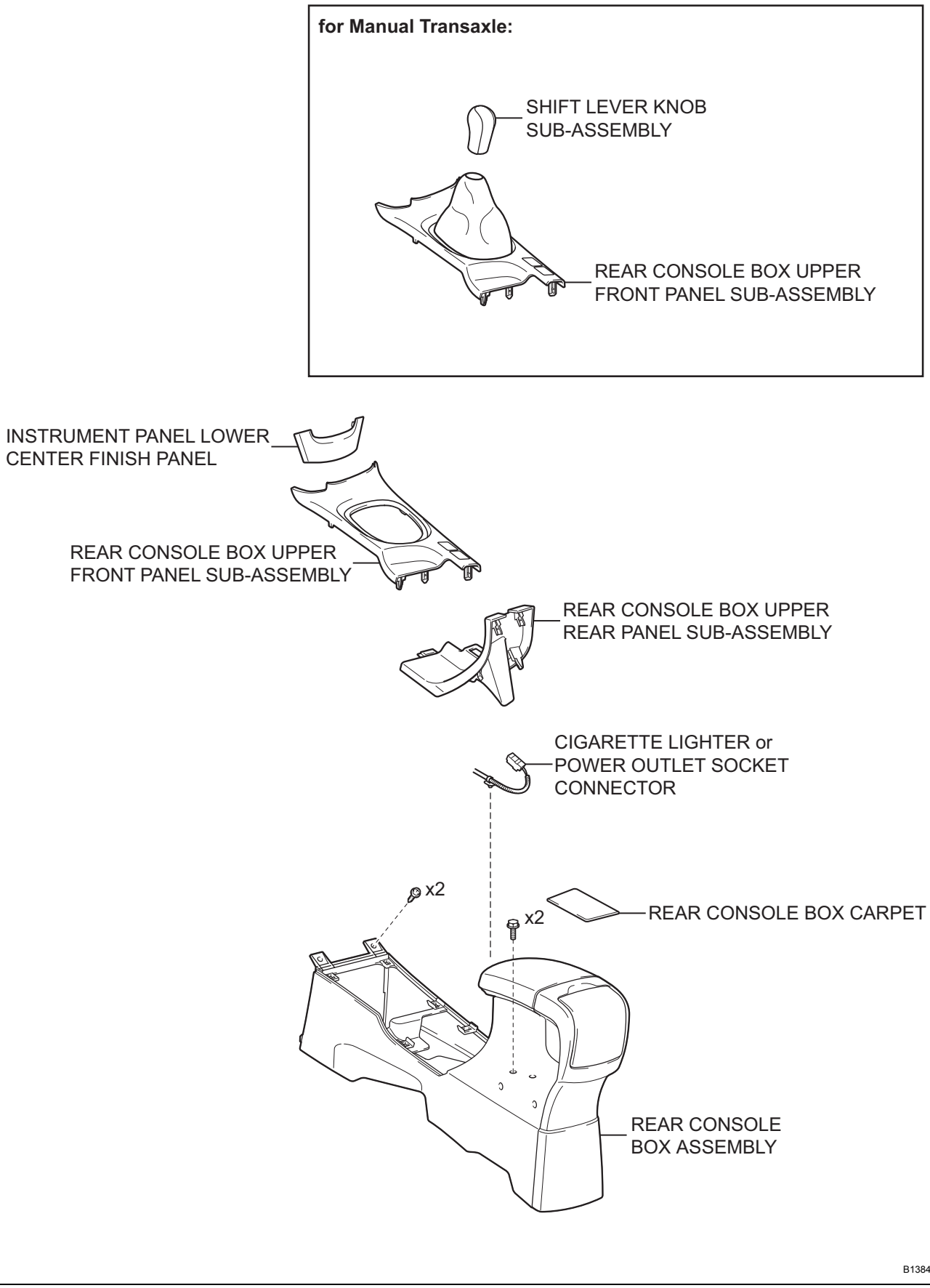

T

B138443E01

RS

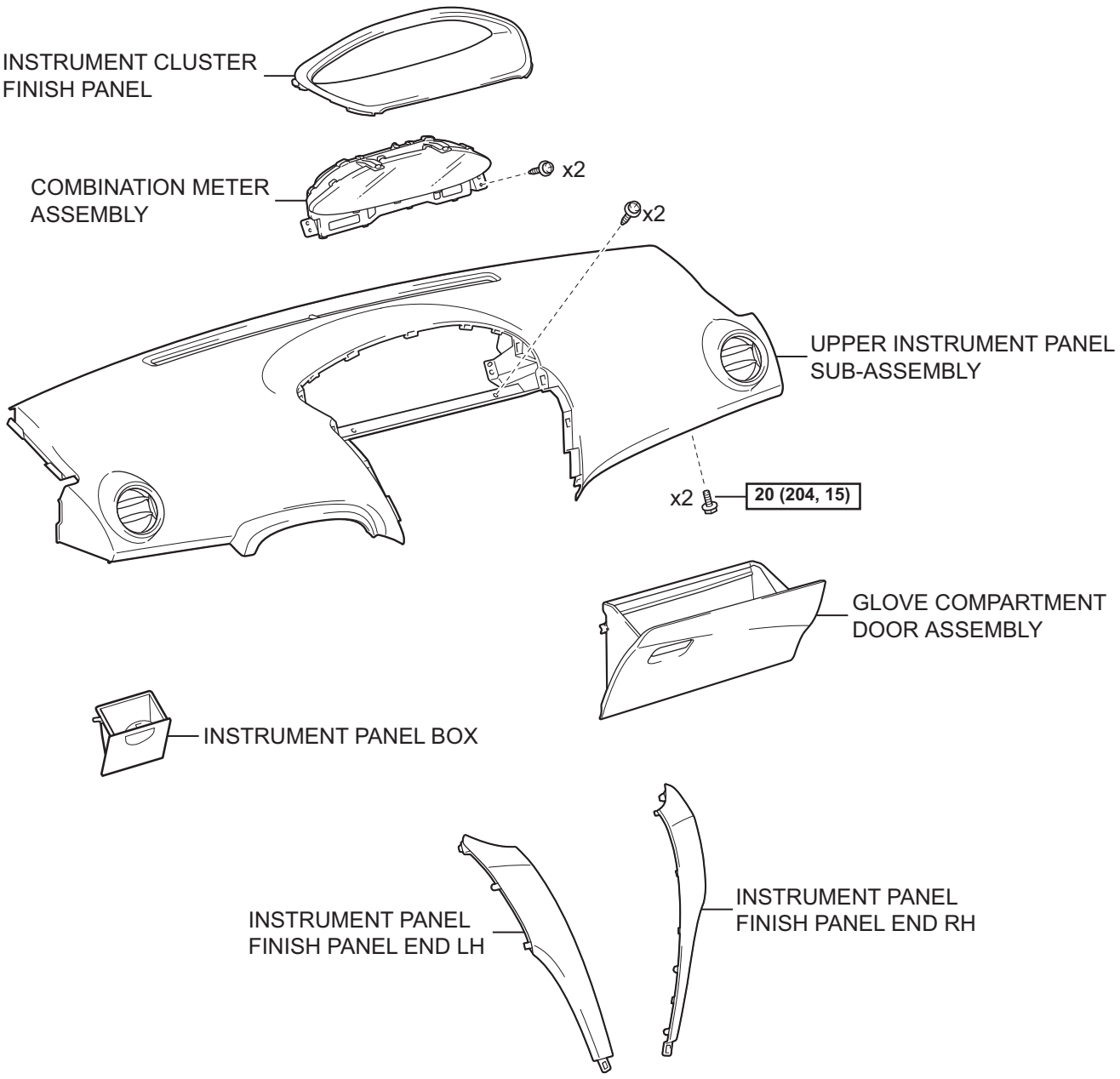

N*m (kgf*cm, ft*lbf) : Specified torque

P

B138444E02

RS

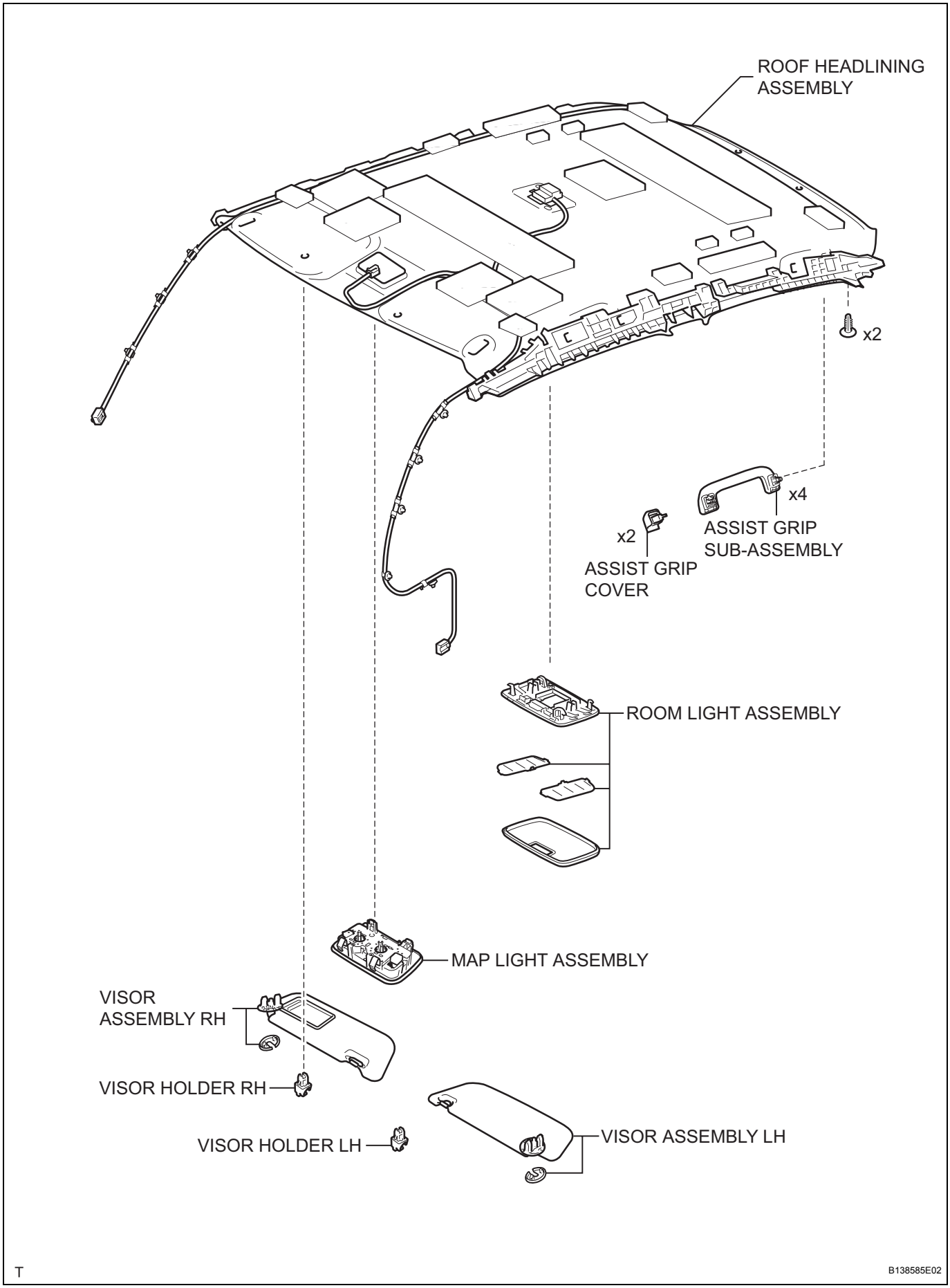
ROOF HEADLINING ASSEMBLY
x2
x4
ASSIST GRIP SUB-ASSEMBLY
x2
ASSIST GRIP COVER
ROOM LIGHT ASSEMBLY
MAP LIGHT ASSEMBLY
VISOR ASSEMBLY RH
VISOR HOLDER RH
VISOR HOLDER LH
VISOR ASSEMBLY LH
T
B138585E02

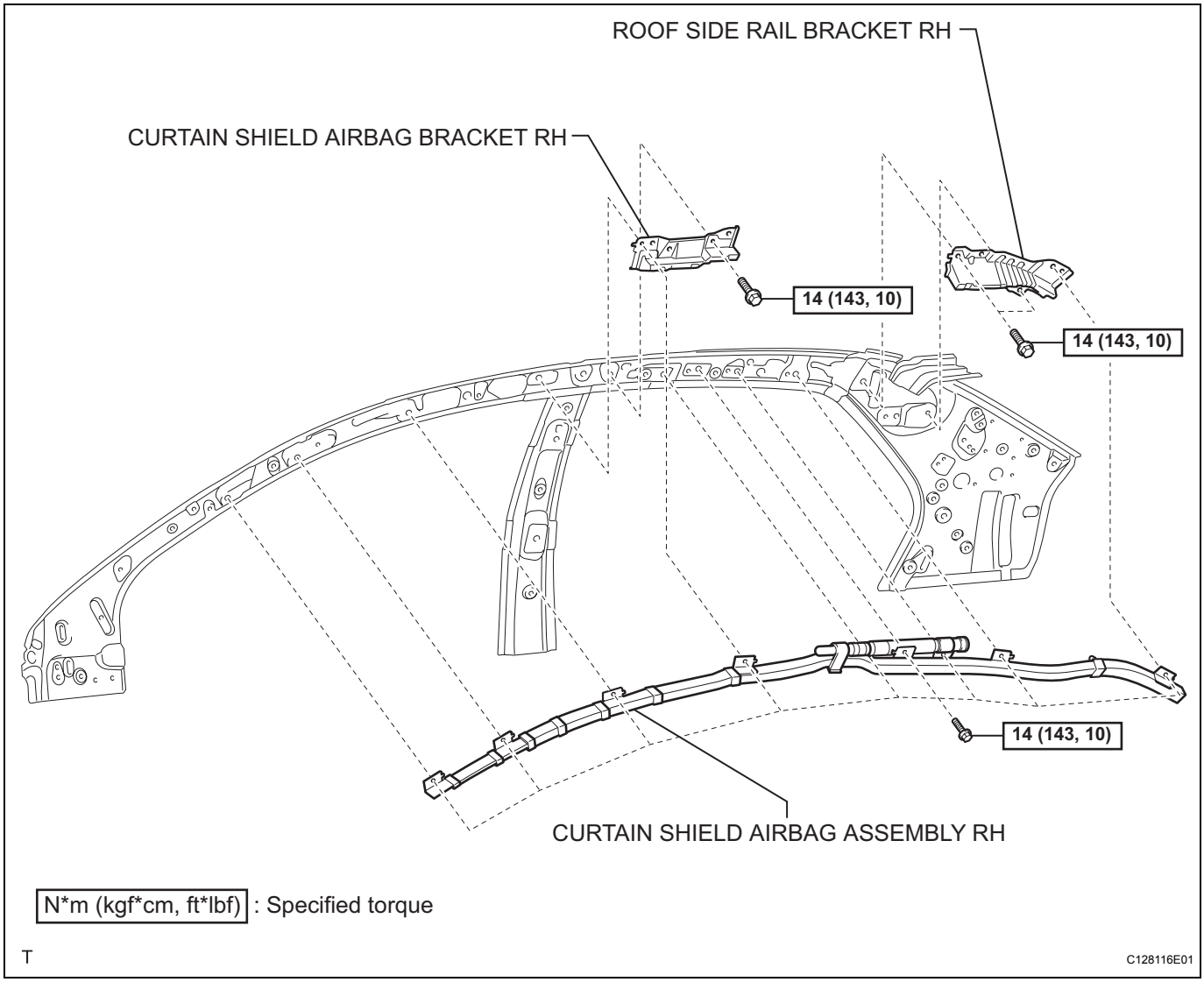

N*m (kgf*cm, ft*lbf) : Specified torque

T

C128116E01

RS

ON-VEHICLE INSPECTION

1. **INSPECT CURTAIN SHIELD AIRBAG ASSEMBLY (for Vehicle not Involved in Collision)**
   (a) Perform a diagnostic system check (See page RS-38).
   (b) With the curtain shield airbag installed on the vehicle, perform a visual check. If there are any defects, such as those mentioned below, replace the front pillar garnish or roof headlining with a new one:
   Any cuts, minute cracks or marked discoloration on the front pillar garnish and roof headlining around the curtain shield airbag.

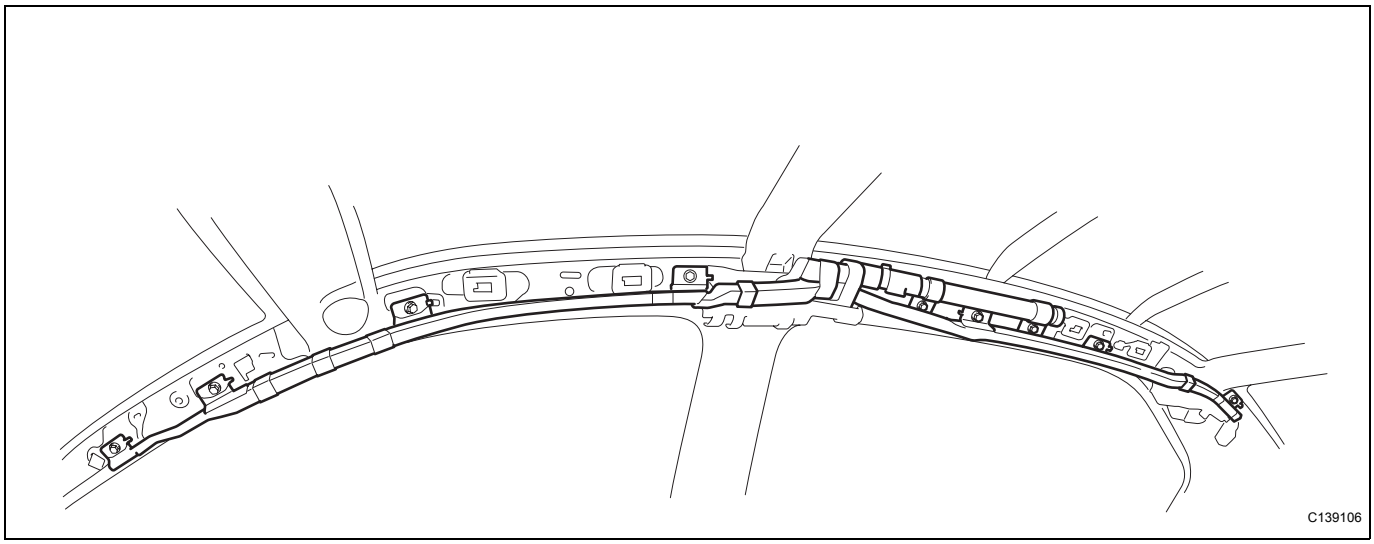

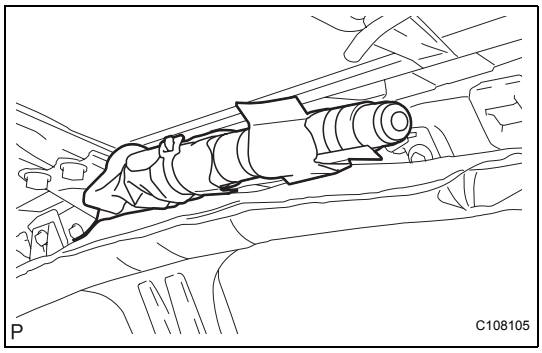

2. **INSPECT CURTAIN SHIELD AIRBAG ASSEMBLY (for Vehicle Involved in Collision and Airbag not Deployed)**
   CAUTION:
   For curtain shield airbag removal and installation procedures, see pages RS-362 and ,RS-366 and carefully follow the correct procedure.
   (a) Perform a diagnostic system check (See page RS-38).
   (b) With the curtain shield airbag removed from the vehicle, as mentioned below, replace the curtain shield airbag with a new one:
   - Any cuts, minute cracks or marked discoloration on the curtain shield airbag.
   - Any cracks or other damage to the connector.

REMOVAL

CAUTION:
Some of these service operations affect the SRS airbag system. Read the precautionary notices concerning the SRS airbag system before servicing (See page RS-1).
HINT:
The procedure described below is for the RH side. Use the same procedure for both the RH and LH sides, unless otherwise specified.

1. **DISCONNECT BATTERY NEGATIVE TERMINAL**
2. **REMOVE FRONT SEAT HEADREST ASSEMBLY (See page IR-13)**
3. **REMOVE FRONT SEAT ASSEMBLY LH (See page SE-5)**
4. **REMOVE FRONT SEAT ASSEMBLY RH (See page IR-13)**
5. **REMOVE REAR SEAT CUSHION COVER PAD SUB-ASSEMBLY (See page IR-13)**
6. **REMOVE REAR SEATBACK ASSEMBLY (for Fixed Seat Type) (See page SE-106)**
7. **REMOVE REAR SEATBACK ASSEMBLY LH (for 60/40 Split Seat Type) (See page SE-46)**
8. **REMOVE REAR SEATBACK ASSEMBLY RH (for 60/40 Split Seat Type) (See page SE-57)**
9. **REMOVE LUGGAGE COMPARTMENT FLOOR MAT (for 60/40 Split Seat Type) (See page ED-133)**
10. **REMOVE SPARE WHEEL COVER ASSEMBLY (for 60/40 Split Seat Type) (See page ED-133)**
11. **REMOVE LUGGAGE COMPARTMENT TRIM INNER PAD (for 60/40 Split Seat Type) (See page ED-134)**
12. **REMOVE FRONT DOOR SCUFF PLATE RH (See page IR-14)**
13. **REMOVE FRONT DOOR SCUFF PLATE LH (See page IR-14)**
14. **REMOVE INSTRUMENT PANEL UNDER COVER SUB-ASSEMBLY RH (See page IR-14)**
15. **REMOVE INSTRUMENT PANEL UNDER COVER SUB-ASSEMBLY LH (See page IR-14)**
16. **REMOVE COWL SIDE TRIM BOARD RH (See page IR-15)**
17. **REMOVE COWL SIDE TRIM BOARD LH (See page IR-15)**
18. **REMOVE FRONT DOOR OPENING TRIM WEATHERSTRIP RH (See page IR-15)**

19. **REMOVE FRONT DOOR OPENING TRIM WEATHERSTRIP LH (See page IR-15)**
20. **REMOVE REAR DOOR SCUFF PLATE RH (See page IR-15)**
21. **REMOVE REAR DOOR SCUFF PLATE LH (See page IR-15)**
22. **REMOVE REAR DOOR OPENING TRIM WEATHERSTRIP RH (See page IR-15)**
23. **REMOVE REAR DOOR OPENING TRIM WEATHERSTRIP LH (See page IR-15)**
24. **REMOVE REAR SEAT SIDE COVER RH (See page IR-16)**
25. **REMOVE REAR SEAT SIDE COVER LH (See page IR-16)**
26. **REMOVE ROOF SIDE INNER GARNISH RH (See page IR-16)**
27. **REMOVE ROOF SIDE INNER GARNISH LH (See page IR-16)**
28. **REMOVE CENTER PILLAR LOWER GARNISH RH (See page IR-16)**
29. **REMOVE CENTER PILLAR LOWER GARNISH LH (See page IR-16)**
30. **REMOVE SEAT BELT ANCHOR COVER CAP (See page IR-17)**
31. **REMOVE FRONT SEAT OUTER BELT ASSEMBLY RH (See page IR-17)**
32. **REMOVE FRONT SEAT OUTER BELT ASSEMBLY LH (See page IR-17)**
33. **REMOVE CENTER PILLAR UPPER GARNISH RH (See page IR-17)**
34. **REMOVE CENTER PILLAR UPPER GARNISH LH (See page IR-17)**
35. **REMOVE FRONT PILLAR GARNISH RH (See page IR-18)**
36. **REMOVE FRONT PILLAR GARNISH LH (See page IR-19)**
37. **REMOVE INSTRUMENT PANEL LOWER CENTER FINISH PANEL (See page ME-138)**
38. **REMOVE SHIFT LEVER KNOB SUB-ASSEMBLY (for Manual Transaxle) (See page IP-84)**
39. **REMOVE REAR CONSOLE BOX UPPER FRONT PANEL SUB-ASSEMBLY (See page IP-84)**
40. **REMOVE REAR CONSOLE BOX UPPER REAR PANEL SUB-ASSEMBLY (See page IP-84)**

41. **REMOVE REAR CONSOLE BOX CARPET (See page IP-85)**
42. **REMOVE REAR CONSOLE BOX ASSEMBLY (See page IP-85)**
43. **REMOVE INSTRUMENT PANEL FINISH PANEL END RH (See page ME-138)**
44. **REMOVE INSTRUMENT PANEL FINISH PANEL END LH (See page ME-138)**
45. **REMOVE INSTRUMENT CLUSTER FINISH PANEL (See page ME-139)**
46. **REMOVE COMBINATION METER ASSEMBLY (See page ME-139)**
47. **REMOVE GLOVE COMPARTMENT DOOR ASSEMBLY (See page IP-6)**
48. **REMOVE UPPER INSTRUMENT PANEL SUB-ASSEMBLY (See page IP-6)**
49. **REMOVE INSTRUMENT PANEL BOX (See page IP-45)**
50. **REMOVE ASSIST GRIP COVER (See page IR-21)**
51. **REMOVE ASSIST GRIP SUB-ASSEMBLY (See page IR-21)**
52. **REMOVE VISOR ASSEMBLY RH (See page IR-21)**
53. **REMOVE VISOR ASSEMBLY LH (See page IR-22)**
54. **REMOVE VISOR HOLDER RH (See page IR-22)**
55. **REMOVE VISOR HOLDER LH (See page IR-22)**
56. **REMOVE ROOM LIGHT ASSEMBLY (See page IR-22)**
57. **REMOVE MAP LIGHT ASSEMBLY (See page IR-23)**
58. **REMOVE ROOF HEADLINING ASSEMBLY (See page IR-24)**
59. **REMOVE CURTAIN SHIELD AIRBAG ASSEMBLY RH**
    (a) Using a thin-bladed screwdriver, release the locking button.
    (b) Using a thin-bladed screwdriver, detach the airbag connector.

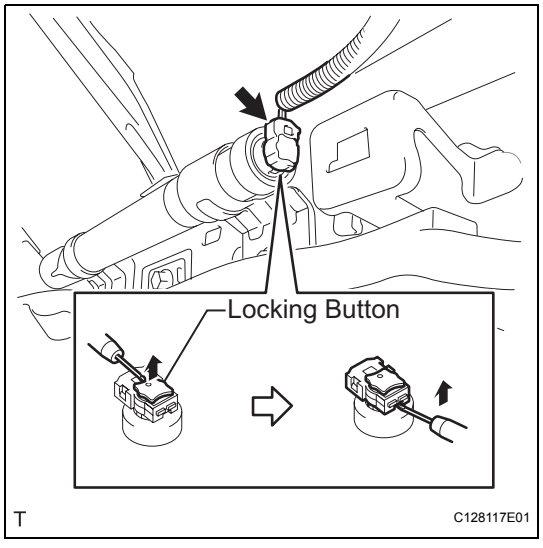

(c) Remove the 9 bolts, disengage the 3 hooks and remove the curtain shield airbag.

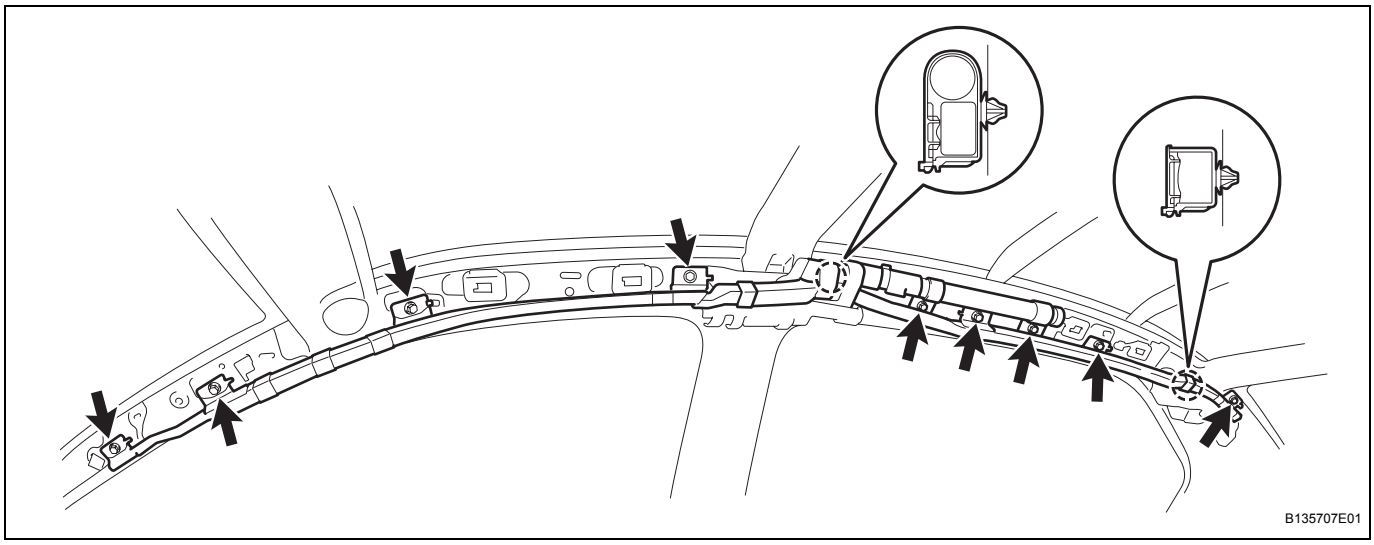

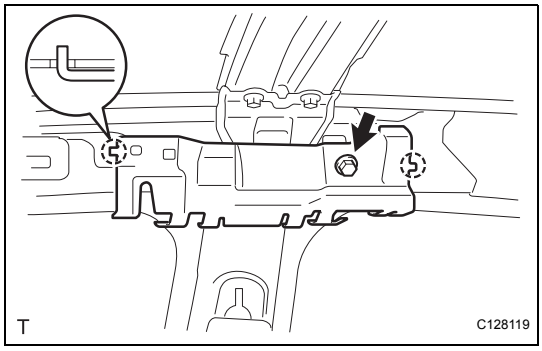

60. REMOVE CURTAIN SHIELD AIRBAG BRACKET RH

(a) Remove the bolt, disengage the 2 hooks and remove the curtain shield airbag bracket.

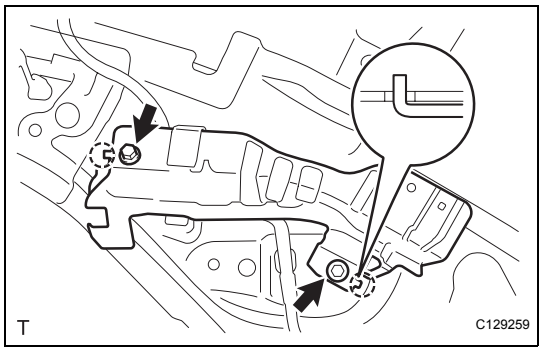

61. REMOVE ROOF SIDE RAIL BRACKET RH

(a) Remove the 2 bolts, disengage the 2 hooks and remove the roof side rail bracket.

INSTALLATION

CAUTION:
Some of these service operations affect the SRS airbag system. Read the precautionary notices concerning the SRS airbag system before servicing (See page RS-1).
HINT:
The procedure described below is for the RH side. Use the same procedure for both the RH and LH sides, unless otherwise specified.

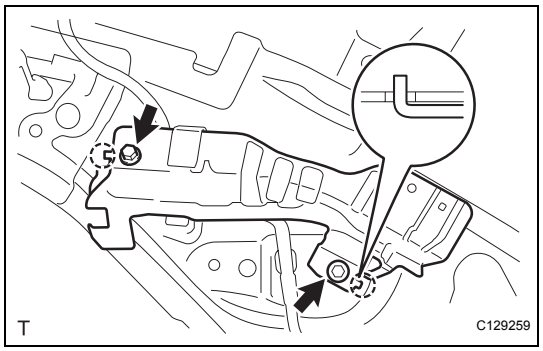

1. **INSTALL ROOF SIDE RAIL BRACKET RH**
   (a) Insert the 2 hooks into the body holes and install the roof side rail bracket and tighten 2 the bolts.
   Torque: 14 N*m (143 kgf*cm, 10 ft.*lbf)

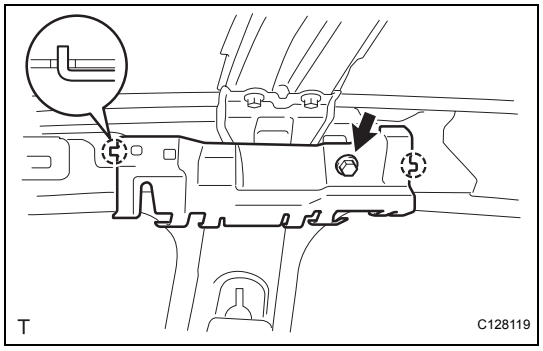

2. **INSTALL CURTAIN SHIELD AIRBAG BRACKET RH**
   (a) Insert the 2 hooks into the body holes and install the curtain shield back bracket and tighten 1 the bolt.
   Torque: 14 N*m (143 kgf*cm, 10 ft.*lbf)

3. **INSTALL CURTAIN SHIELD AIRBAG ASSEMBLY RH**
   (a) Insert the 3 hooks into the body holes and install the curtain shield back bracket and tighten 9 the bolts.
   Torque: 14 N*m (143 kgf*cm, 10 ft.*lbf)

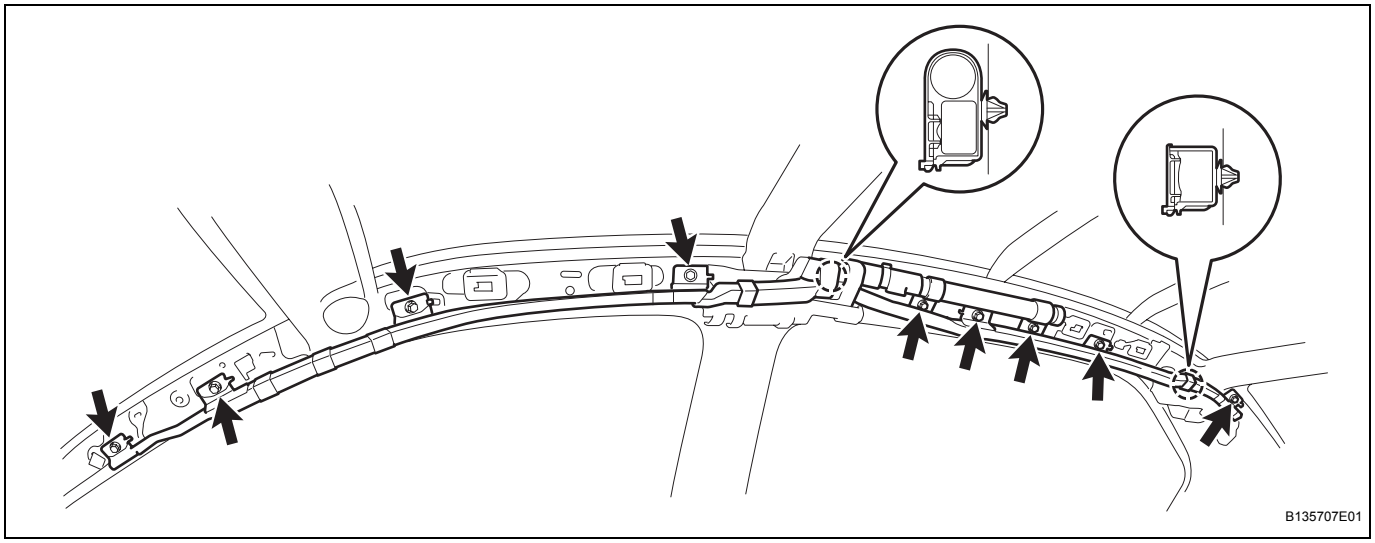

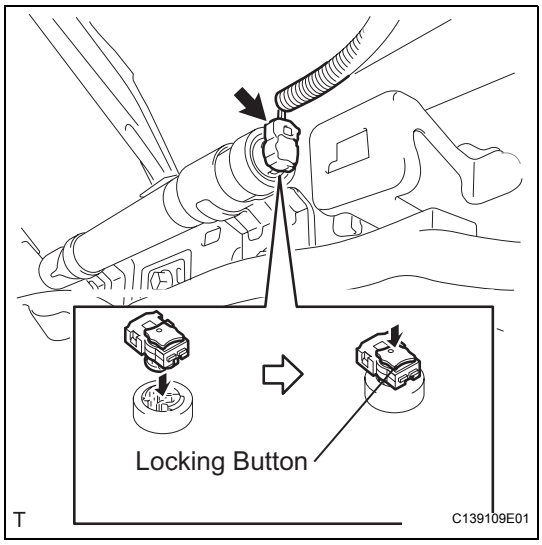

(b) Connect the airbag connector.
NOTICE:
Lock the locking button securely.

4. **INSTALL ROOF HEADLINING ASSEMBLY (See page IR-25)**
5. **INSTALL MAP LIGHT ASSEMBLY (See page IR-26)**
6. **INSTALL ROOM LIGHT ASSEMBLY (See page IR-27)**
7. **INSTALL VISOR HOLDER RH (See page IR-28)**
8. **INSTALL VISOR HOLDER LH (See page IR-28)**
9. **INSTALL VISOR ASSEMBLY RH (See page IR-28)**
10. **INSTALL VISOR ASSEMBLY LH (See page IR-28)**
11. **INSTALL ASSIST GRIP COVER (See page IR-29)**
12. **INSTALL INSTRUMENT PANEL BOX (See page IP-53)**
13. **INSTALL UPPER INSTRUMENT PANEL SUB-ASSEMBLY (See page IP-11)**
14. **INSTALL GLOVE COMPARTMENT DOOR ASSEMBLY (See page IP-13)**
15. **INSTALL COMBINATION METER ASSEMBLY (See page ME-140)**
16. **INSTALL INSTRUMENT CLUSTER FINISH PANEL (See page ME-140)**
17. **INSTALL INSTRUMENT PANEL FINISH PANEL END RH (See page ME-141)**
18. **INSTALL INSTRUMENT PANEL FINISH PANEL END LH (See page ME-141)**
19. **INSTALL REAR CONSOLE BOX ASSEMBLY (See page IP-88)**
20. **INSTALL REAR CONSOLE BOX CARPET (See page IP-88)**
21. **INSTALL REAR CONSOLE BOX UPPER REAR PANEL SUB-ASSEMBLY (See page IP-89)**
22. **INSTALL REAR CONSOLE BOX UPPER FRONT PANEL SUB-ASSEMBLY (See page IP-89)**
23. **INSTALL SHIFT LEVER KNOB SUB-ASSEMBLY (for Manual Transaxle) (See page IP-89)**
24. **INSTALL INSTRUMENT PANEL LOWER CENTER FINISH PANEL (See page ME-142)**
25. **INSTALL FRONT PILLAR GARNISH RH (See page IR-29)**
26. **INSTALL FRONT PILLAR GARNISH LH (See page IR-30)**
27. **INSTALL CENTER PILLAR UPPER GARNISH RH (See page IR-31)**

28. **INSTALL CENTER PILLAR UPPER GARNISH LH (See page IR-31)**
29. **INSTALL FRONT SEAT OUTER BELT ASSEMBLY RH (See page IR-31)**
30. **INSTALL FRONT SEAT OUTER BELT ASSEMBLY LH (See page IR-31)**
31. **INSTALL SEAT BELT ANCHOR COVER CAP (See page IR-32)**
32. **INSTALL CENTER PILLAR LOWER GARNISH RH (See page IR-32)**
33. **INSTALL CENTER PILLAR LOWER GARNISH LH (See page IR-32)**
34. **INSTALL ROOF SIDE INNER GARNISH RH (See page IR-32)**
35. **INSTALL ROOF SIDE INNER GARNISH LH (See page IR-33)**
36. **INSTALL REAR SEAT SIDE COVER RH (See page IR-33)**
37. **INSTALL REAR SEAT SIDE COVER LH (See page IR-33)**
38. **INSTALL REAR DOOR OPENING TRIM WEATHERSTRIP RH (See page IR-33)**
39. **INSTALL REAR DOOR OPENING TRIM WEATHERSTRIP LH (See page IR-33)**
40. **INSTALL REAR DOOR SCUFF PLATE RH (See page IR-34)**
41. **INSTALL REAR DOOR SCUFF PLATE LH (See page IR-34)**
42. **INSTALL FRONT DOOR OPENING TRIM WEATHERSTRIP RH (See page IR-34)**
43. **INSTALL FRONT DOOR OPENING TRIM WEATHERSTRIP LH (See page IR-34)**
44. **INSTALL COWL SIDE TRIM BOARD RH (See page IR-34)**
45. **INSTALL COWL SIDE TRIM BOARD LH (See page IR-34)**
46. **INSTALL INSTRUMENT PANEL UNDER COVER SUB-ASSEMBLY RH (See page IR-35)**
47. **INSTALL INSTRUMENT PANEL UNDER COVER SUB-ASSEMBLY LH (See page IR-35)**
48. **INSTALL FRONT DOOR SCUFF PLATE RH (See page IR-35)**
49. **INSTALL FRONT DOOR SCUFF PLATE LH (See page IR-35)**

50. **INSTALL LUGGAGE COMPARTMENT TRIM INNER PAD (for 60/40 Split Seat Type) (See page ED-136)**
51. **INSTALL SPARE WHEEL COVER ASSEMBLY (for 60/40 Split Seat Type) (See page ED-137)**
52. **INSTALL LUGGAGE COMPARTMENT FLOOR MAT (for 60/40 Split Seat Type) (See page ED-137)**
53. **INSTALL REAR SEATBACK ASSEMBLY (for Fixed Seat Type) (See page SE-108)**
54. **INSTALL REAR SEATBACK ASSEMBLY LH (for 60/40 Split Seat Type) (See page SE-52)**
55. **INSTALL REAR SEATBACK ASSEMBLY RH (for 60/40 Split Seat Type) (See page SE-65)**
56. **INSTALL REAR SEAT CUSHION COVER PAD SUB-ASSEMBLY (See page IR-36)**
57. **INSTALL FRONT SEAT ASSEMBLY LH (See page SE-20)**
58. **INSTALL FRONT SEAT ASSEMBLY RH (See page IR-36)**
59. **INSTALL FRONT SEAT HEADREST ASSEMBLY (See page IR-36)**
60. **CONNECT CABLE TO NEGATIVE BATTERY TERMINAL**
    Torque: 5.4 N*m (55 kgf*cm, 48 in.*lbf)
61. **INSPECT SRS WARNING LIGHT**
    (See page RS-31)

DISPOSAL

HINT:

- Disposal procedure for the RH side is the same as that for the LH side.
- The procedures described below are for the RH side.
- When scrapping a vehicle equipped with the SRS or disposing of a curtain shield airbag, deploy the airbag first in accordance with the procedure described below. If any abnormality occurs with the airbag deployment, contact the SERVICE DEPT. of the DISTRIBUTOR.

CAUTION:

- **Never dispose of a curtain shield airbag that has an undeployed airbag.**
- **The airbag emits an exploding sound when it is deployed, so perform the operation outdoors and where it will not create a nuisance to nearby residents.**
- **When deploying the airbag, always use the specified SST (SRS Airbag Deployment Tool). Perform the operation in a place away from electrical noise.**
- **When deploying the airbag, perform the operation at least 10 m (33 ft) away from the curtain shield airbag.**
- **The curtain shield airbag becomes extremely hot when the airbag is deployed, so do not touch it for at least 30 minutes after deployment.**
- **Use gloves and safety glasses when handling a curtain shield airbag which has been deployed.**
- **Do not apply water, etc. to a curtain shield airbag which has been deployed.**
- **Always wash your hands with water after completing the operation.**

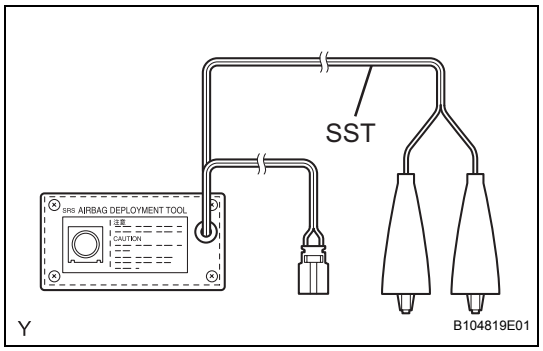

1. DISPOSE OF CURTAIN SHIELD AIRBAG ASSEMBLY (WHEN INSTALLED IN VEHICLE)

HINT:

Prepare a battery as the power source to deploy the airbag.

(a) Check the function of SST.

SST 09082-00700

CAUTION:

Always use the specified SST (SRS Airbag Deployment Tool) when deploying the airbag.

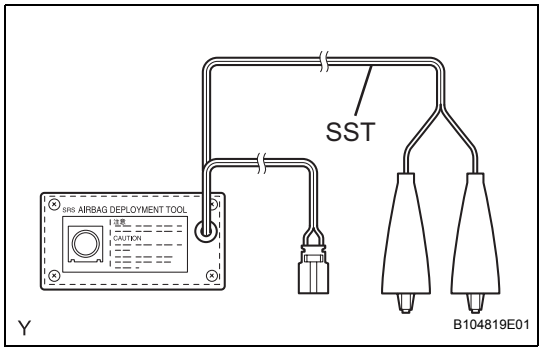

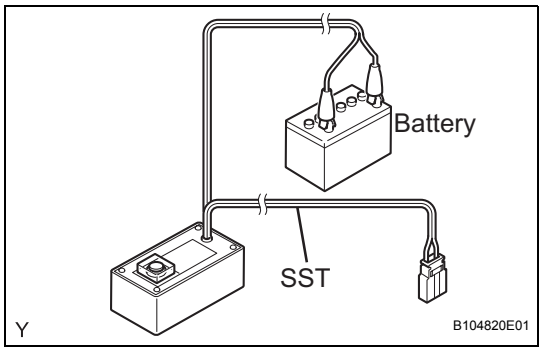

(1) Connect the red clip of SST to the positive battery terminal and the black clip of SST to the negative battery terminal.

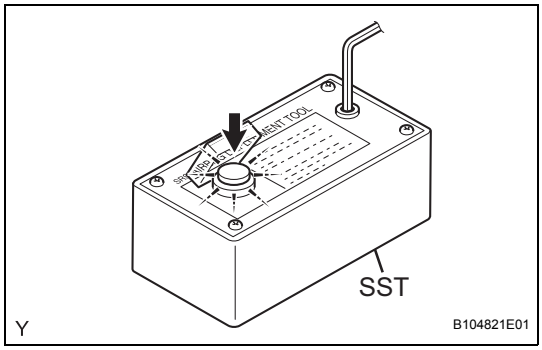

(2) Press the SST activation switch, and check that the LED of the SST activation switch illuminates.
CAUTION:
- **Do not connect the SST connector (yellow colored one) to the airbag.**
- **If the LED illuminates when the activation switch is not pressed, SST may be malfunctioning. Do not use SST.**

(3) Disconnect SST from the battery.

(b) Disconnect the cable from the negative battery terminal.

(c) Remove the roof headlining (See page IR-13).

(d) Disconnect the airbag connector, as shown in the illustration.
NOTICE:
Do not damage the airbag wire harness when handling the airbag connector.

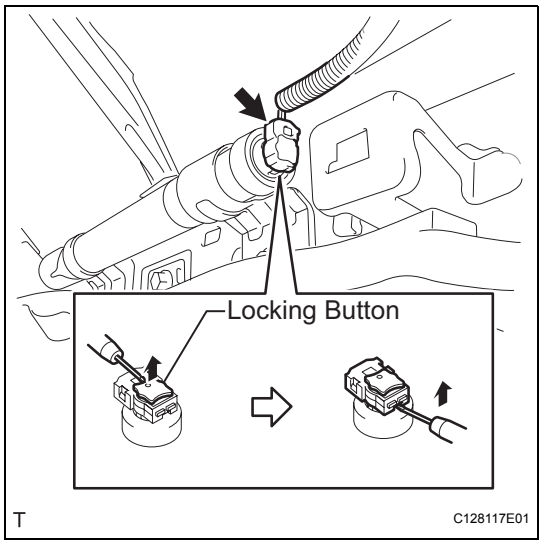

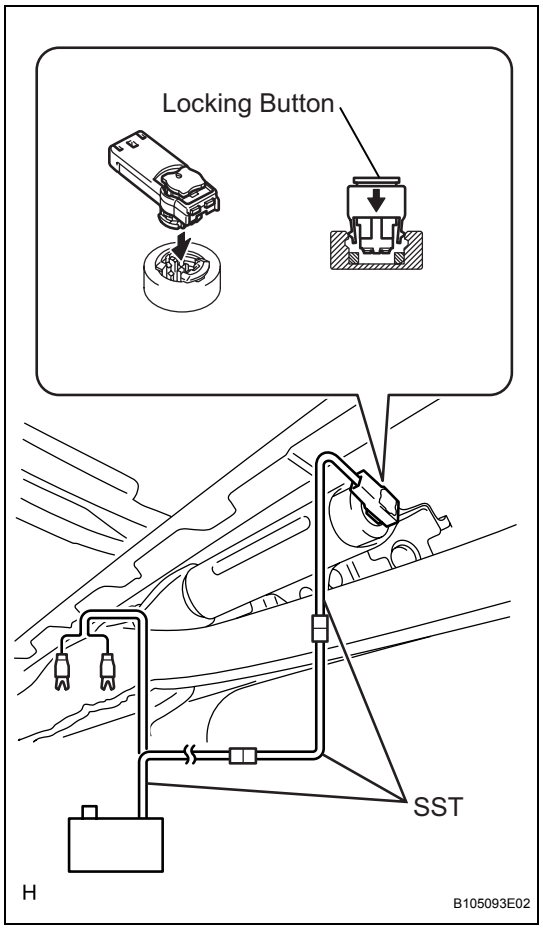

(e) Connect SST.
SST 09082-00700, 09082-00802 (09082-10801, 09082-20801)
(1) After connecting SST, connect it to the curtain shield airbag.
NOTICE:
Do not lock the secondary lock of the twin lock to avoid damaging the SST connector and wire harness.

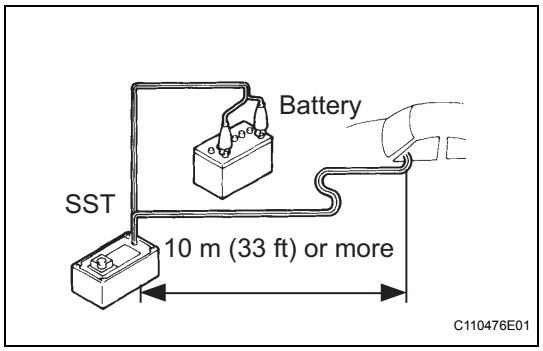

(2) Move SST to at least 10 m (33 ft) away from the vehicle.
(3) Close all doors and windows of the vehicle.
NOTICE:
Do not damage the SST wire harness.
(4) Connect the red clip of SST to the positive battery terminal and the black clip of SST to the negative battery terminal.

(f) Deploy the airbag.
(1) Check that no one is inside the vehicle or within a 10 m (33 ft) radius of the vehicle.
(2) Press the SST activation switch and deploy the airbag.
CAUTION:
- **When deploying the airbag, make sure that no one is near the vehicle.**
- **The curtain shield airbag becomes extremely hot when the airbag is deployed, so do not touch it for at least 30 minutes after deployment.**
- **Use gloves and safety glasses when handling a curtain shield airbag which has been deployed.**
- **Do not apply water, etc. to a curtain shield airbag which has been deployed.**
- **Always wash your hands with water after completing the operation.**

RS

HINT:
The airbag is deployed as the LED of the SST activation switch illuminates.

2. DISPOSE OF CURTAIN SHIELD AIRBAG ASSEMBLY (WHEN NOT INSTALLED IN VEHICLE)

NOTICE:

- **Never use the customer's vehicle to deploy the airbag when only disposing of the curtain shield airbag.**
- **Follow the procedure detailed below when deploying the airbag.**

HINT:
Prepare a battery as the power source to deploy the airbag.

(a) Check the function of SST.
SST 09082-00700
CAUTION:
Always use the specified SST (SRS Airbag Deployment Tool) when deploying the airbag.

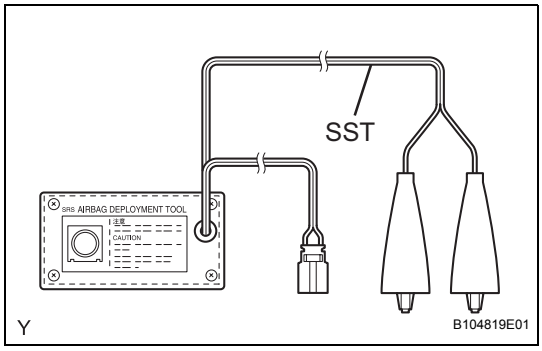

(1) Connect the red clip of SST to the positive battery terminal and the black clip of SST to the negative battery terminal.

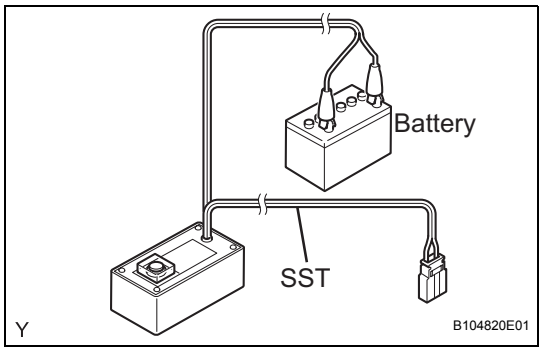

(2) Press the SST activation switch, and check that the LED of the SST activation switch illuminates.
CAUTION:
- **Do not connect the SST connector (yellow colored one) to the airbag.**
- **If the LED illuminates when the activation switch is not pressed, SST may be malfunctioning. Do not use SST.**

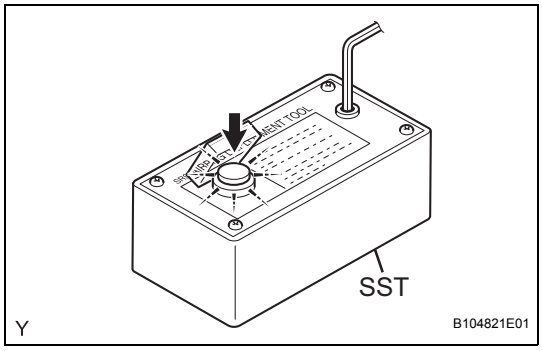

(3) Disconnect SST from the battery.

(b) Remove the curtain shield airbag (See page RS-362).

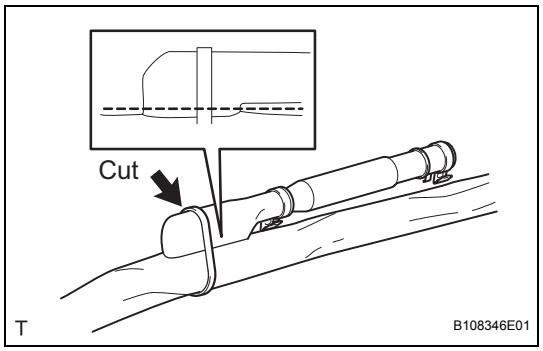

(c) Cut off the deployment section of the curtain shield airbag.

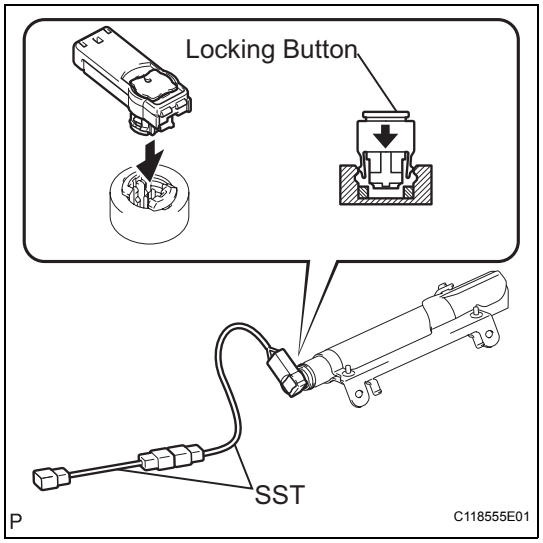

(d) Connect SST.
SST 09082-00802 (09082-10801, 09082-20801)
(1) After connecting SST, connect it to the curtain shield airbag.
NOTICE:
Do not lock the secondary lock of the twin lock to avoid damaging the SST connector and wire harness.

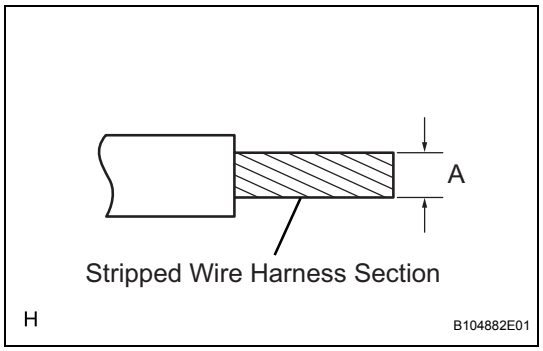

(e) Using a service-purpose wire harness for the vehicle, tie the curtain shield airbag to the tire.
Stripped wire harness section:

Area	Measurement
A	1.25 mm^2 or more (0.0019 $in.^2$ or more)

CAUTION:
Do not use wire harness is too thin or any other object to tie the curtain shield airbag because it may snap due to the shock when the airbag is deployed. Always use a wire harness for vehicle use with a cross sectionof at least 1.25 mm^2 (0.0019 in^2).
HINT:
To calculate the area of the stripped wire harness cross section:
Area = 3.14 x $(Diameter)^2$ divided by 4

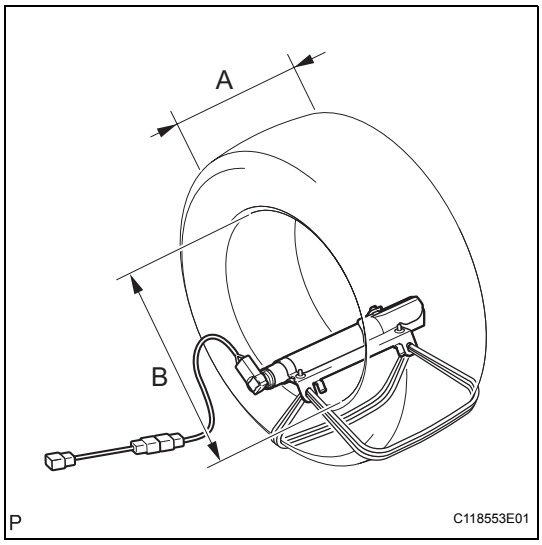

(1) Position the curtain shield airbag inside the tire, as shown in the illustration.

Tire size:

Area	Measurement
A	185 mm (7.28 in.)
B	360 mm (14.17 in.)

CAUTION:
Make sure that the wire harnesses are tight. If there is any slack in the wire harness, the curtain shield airbag may become loose due to the shock when the airbag is deployed.
NOTICE:
The tire will be marked by the airbag deployment, so use a waste tire.

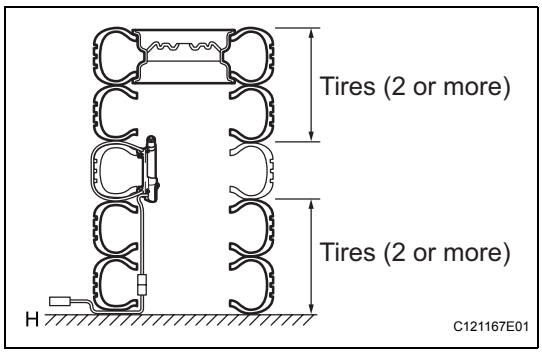

(f) Place the tires.

CAUTION:
Do not place the curtain shield airbag with the deployment direction facing toward the ground.

(1) Place at least 2 tires under the tire to which the curtain shield airbag is tied.

(2) Place at least 2 tires over the tire to which the curtain shield airbag is tied. The disc wheel should be installed onto the top tire.

NOTICE:
Do not place the SST connector under the tire because it could be damaged.

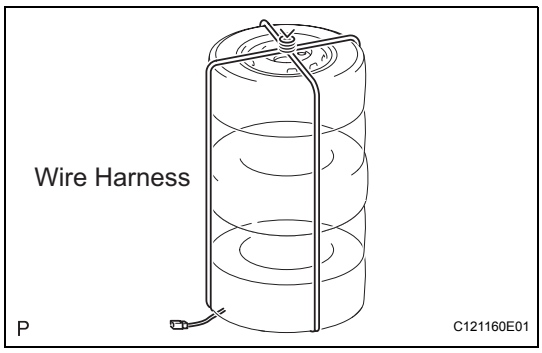

(3) Tie the tires together with 2 wire harnesses.

CAUTION:
Make sure that the wire harnesses are tight. It is highly dangerous when a loose wire harness results in the tires coming free due to the shock when the airbag is deployed.

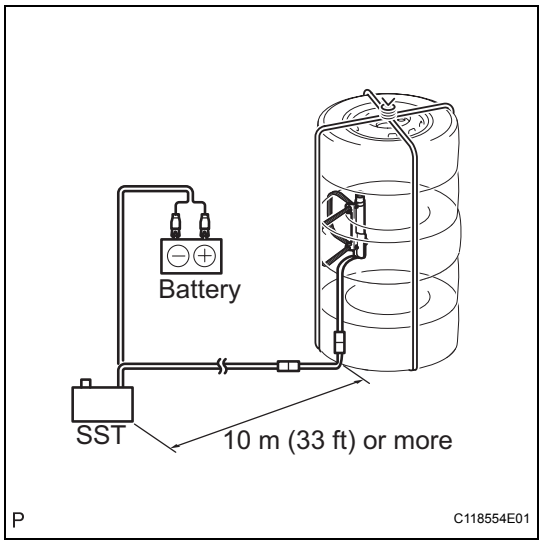

(g) Connect SST.
SST 09082-00700
NOTICE:
To avoid damaging the SST connector and wire harness, do not lock the secondary lock of the twin lock. Also, secure some slack for the SST wire harness inside the tire.

(h) Deploy the airbag.
(1) Connect the red clip of SST to the positive battery terminal and the black clip of SST to the negative battery terminal.
(2) Check that no one is within a 10 m (33 ft) radius of the tire to which the curtain shield airbag is tied.
(3) Press the SST activation switch and deploy the airbag.
CAUTION:
Make sure that no one is near the tire when deploying the airbag.
HINT:
The airbag is deployed as the LED of the SST activation switch illuminates.

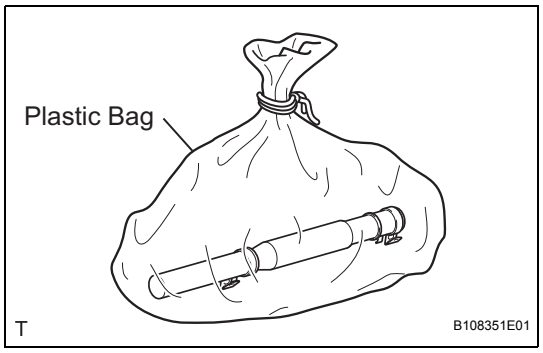

(i) Dispose of the curtain shield airbag.
CAUTION:
- **The curtain shield airbag becomes extremely hot when the airbag is deployed, so do not touch it for at least 30 minutes after deployment.**
- **Use gloves and safety glasses when handling a curtain shield airbag which has been deployed.**
- **Always wash your hands with water after completing the operation.**
- **Do not apply water, etc. to a curtain shield airbag which has been deployed.**

(1) Remove the curtain shield airbag from the tire.
(2) Place the curtain shield airbag in a plastic bag, tie it tightly and dispose of it in the same way as other general parts.

RS

CURTAIN SHIELD AIRBAG ASSEMBLY (for 5 Door)

COMPONENTS

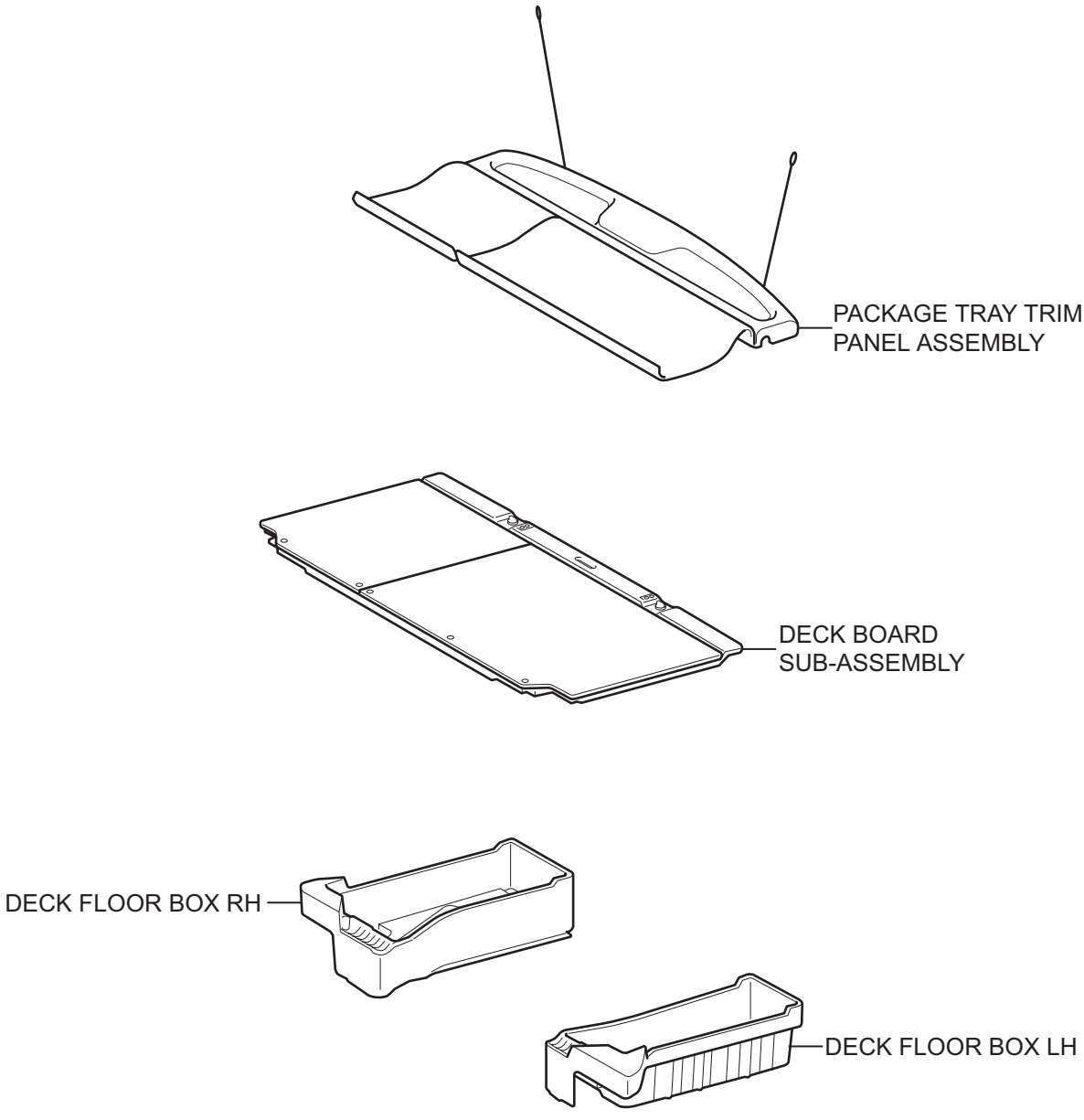

T

B114273E01

RS

for 60/40 Split Seat Type:

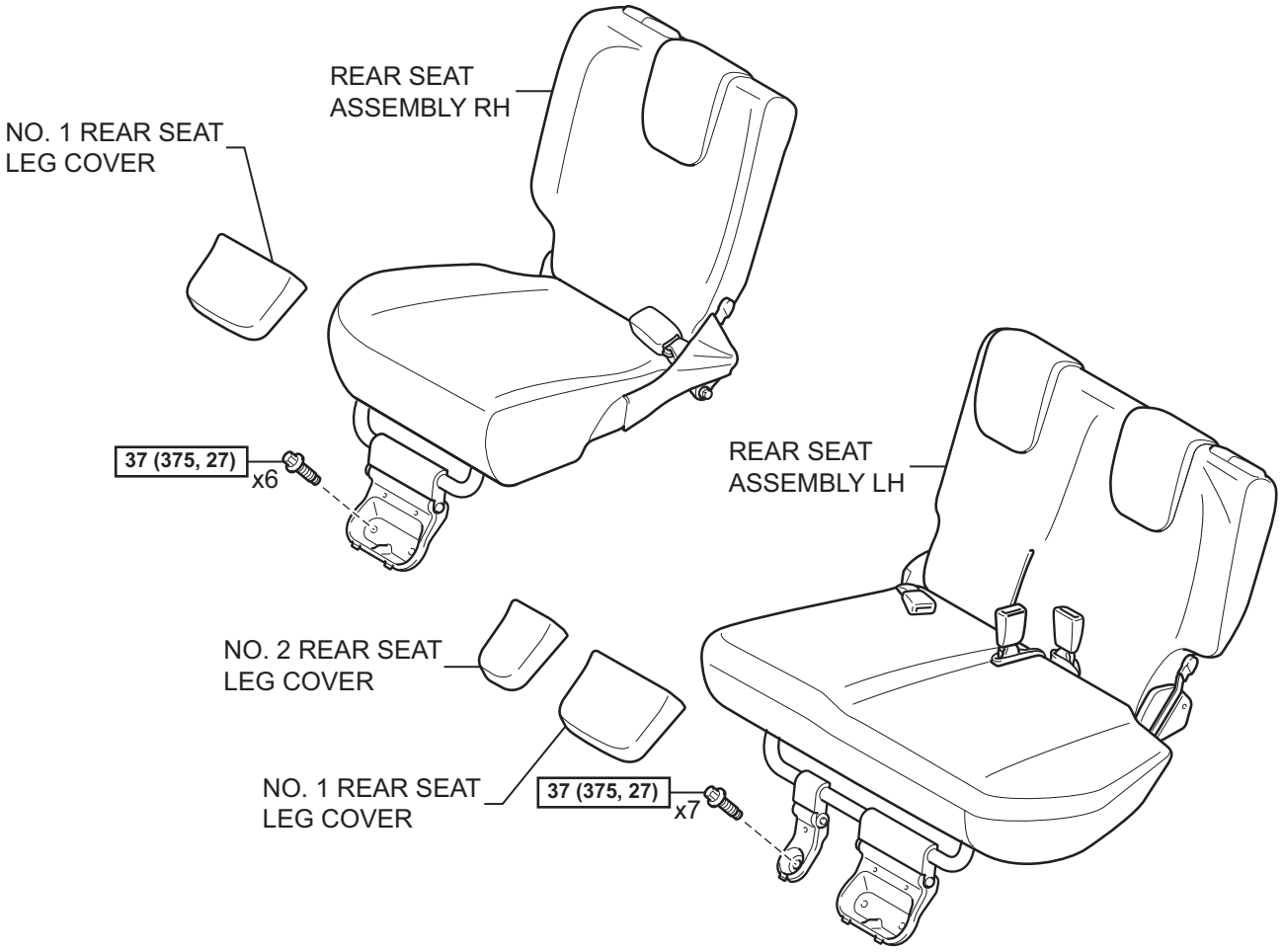

for Hold Down Seat Type:

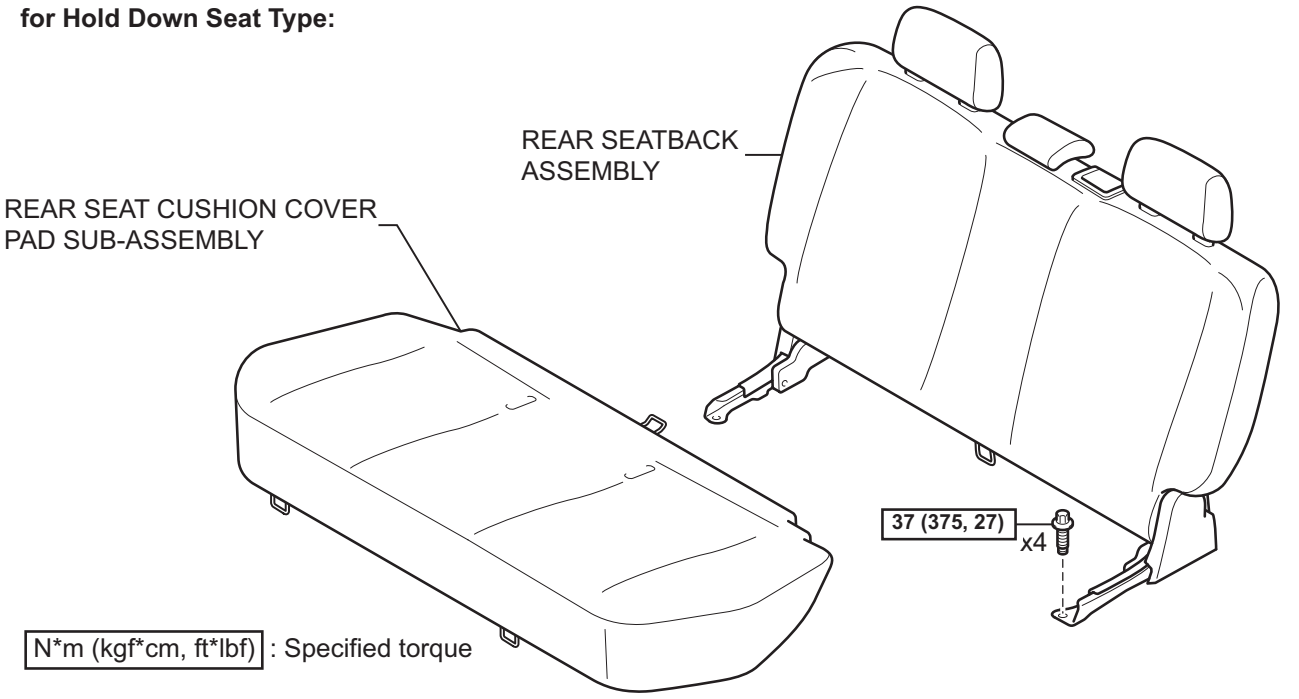

T

B121713E03

RS

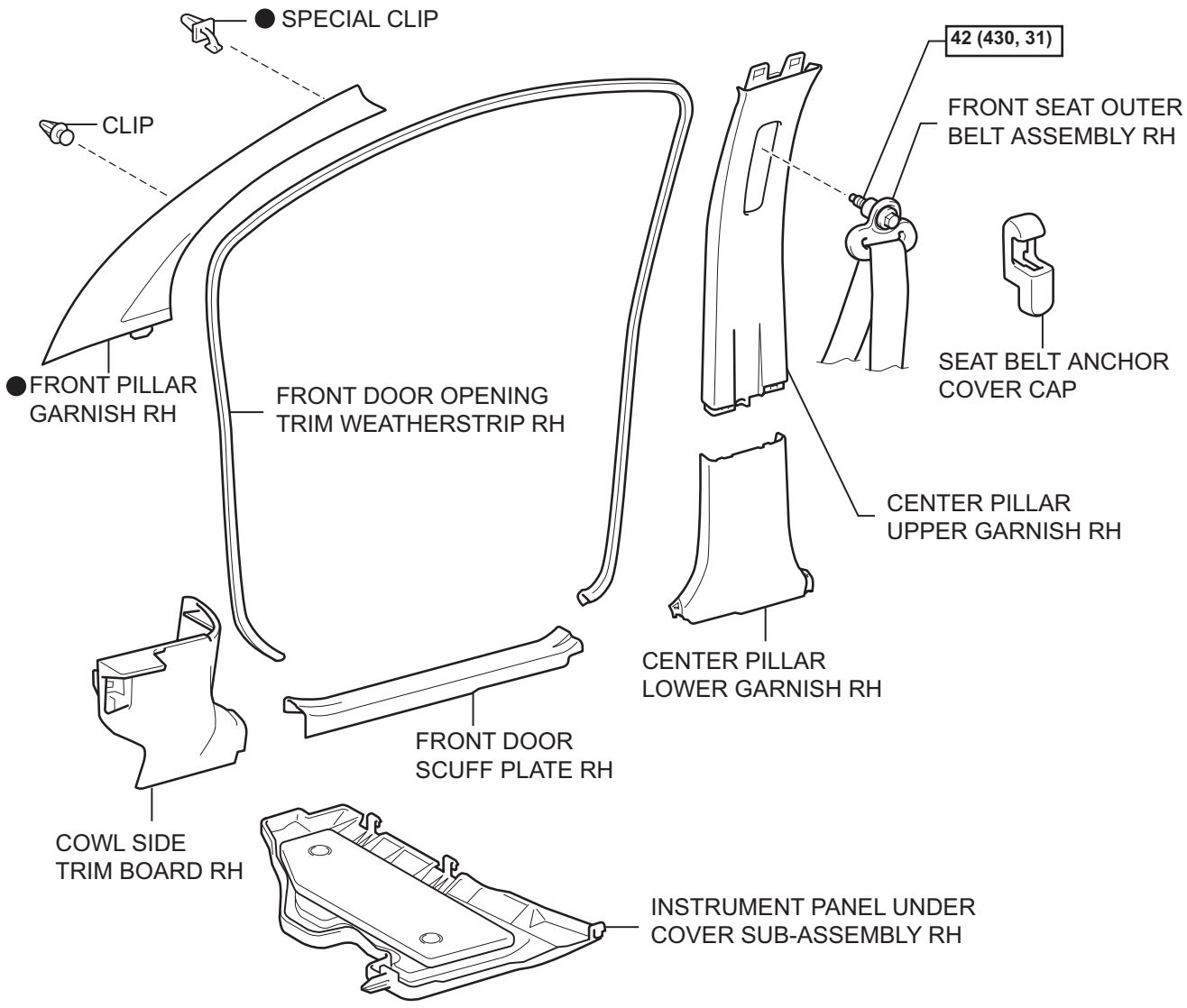

N*m (kgf*cm, ft*lbf) : Specified torque

● Non-reusable part

T

C123144E01

RS

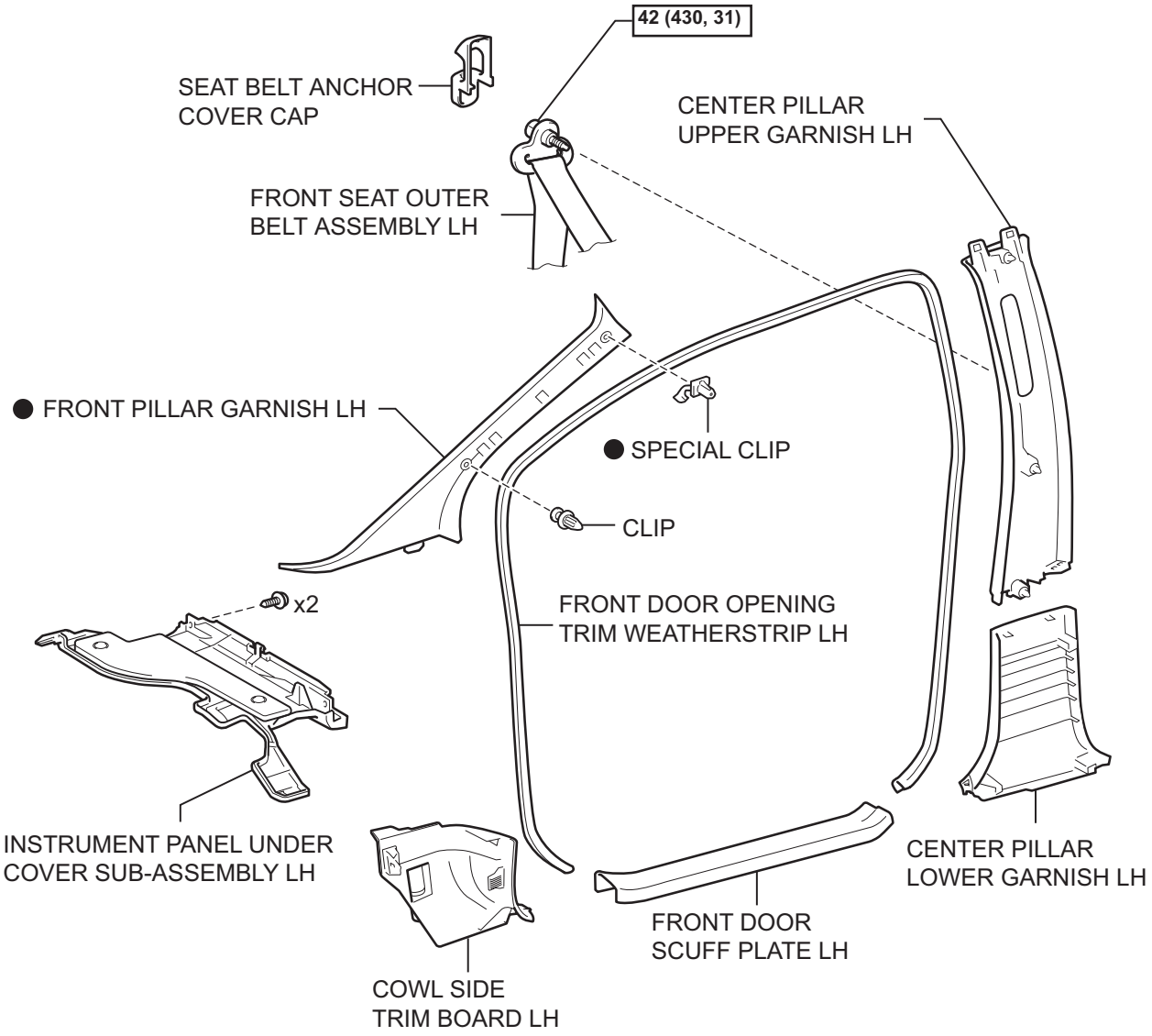

N*m (kgf*cm, ft*lbf) : Specified torque

● Non-reusable part

T

C123143E01

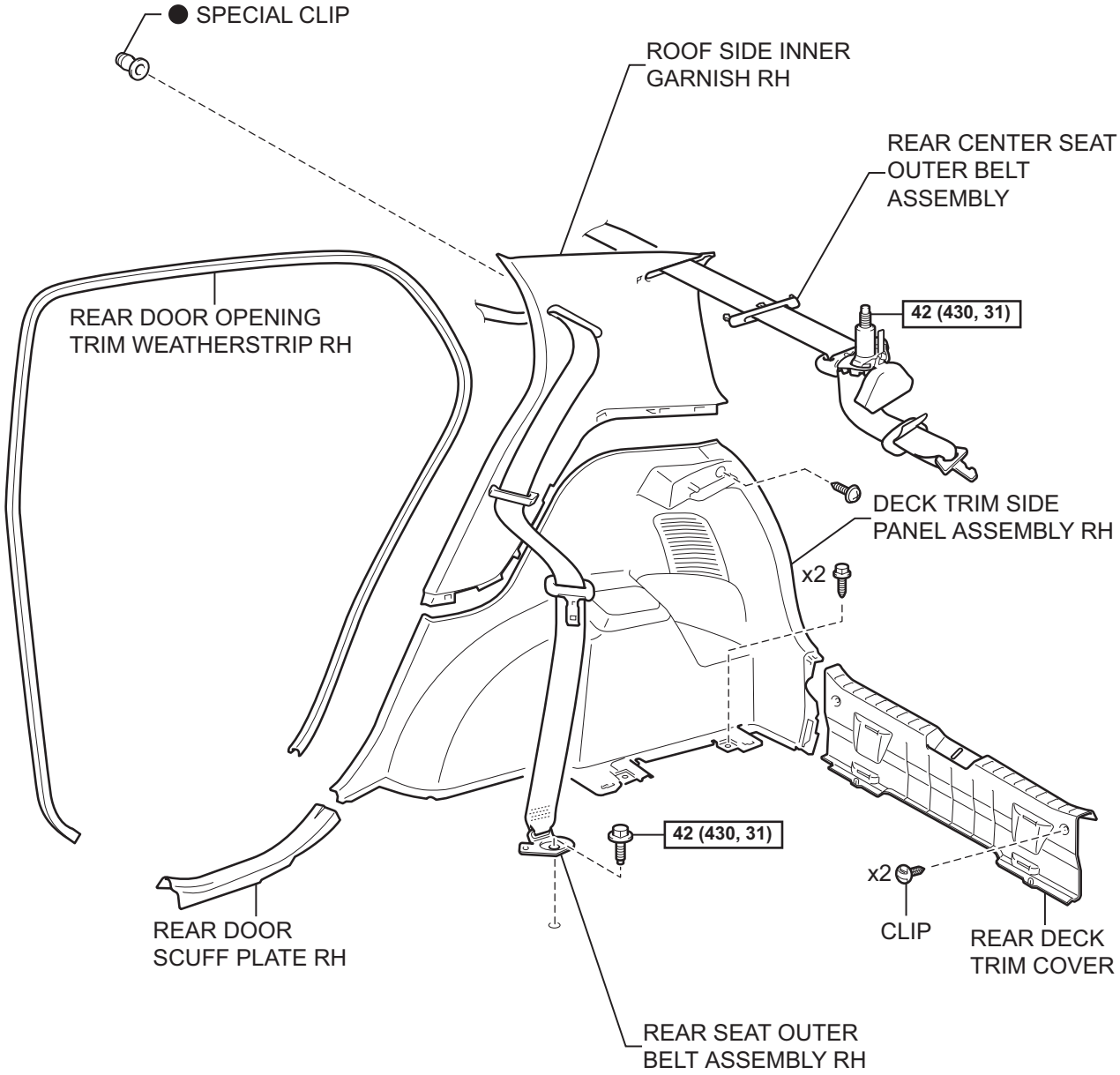

N*m (kgf*cm, ft*lbf) : Specified torque

● Non-reusable part

T

B114274E06

RS

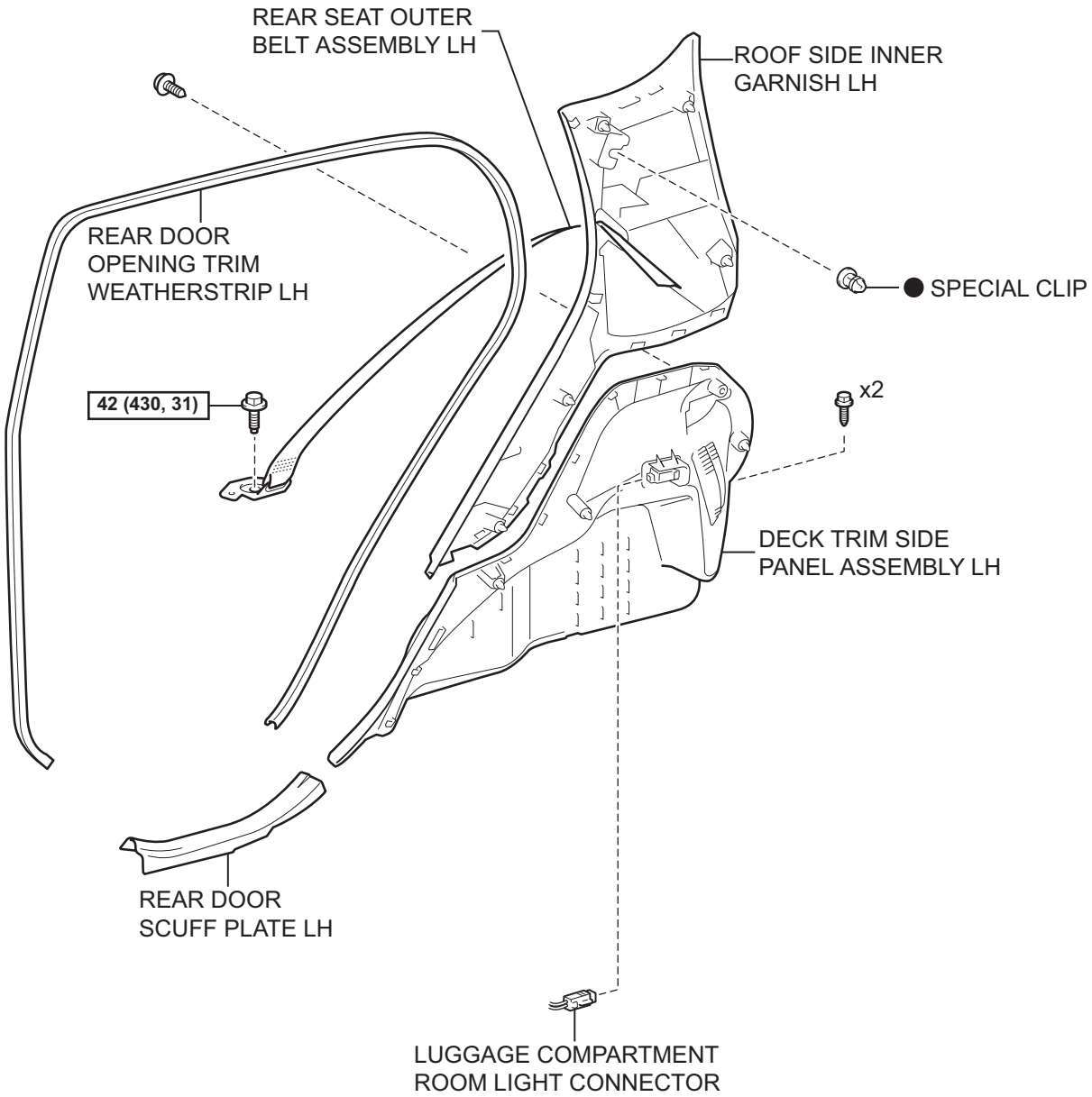

N*m (kgf*cm, ft*lbf) : Specified torque

● Non-reusable part

T

B114275E09

RS

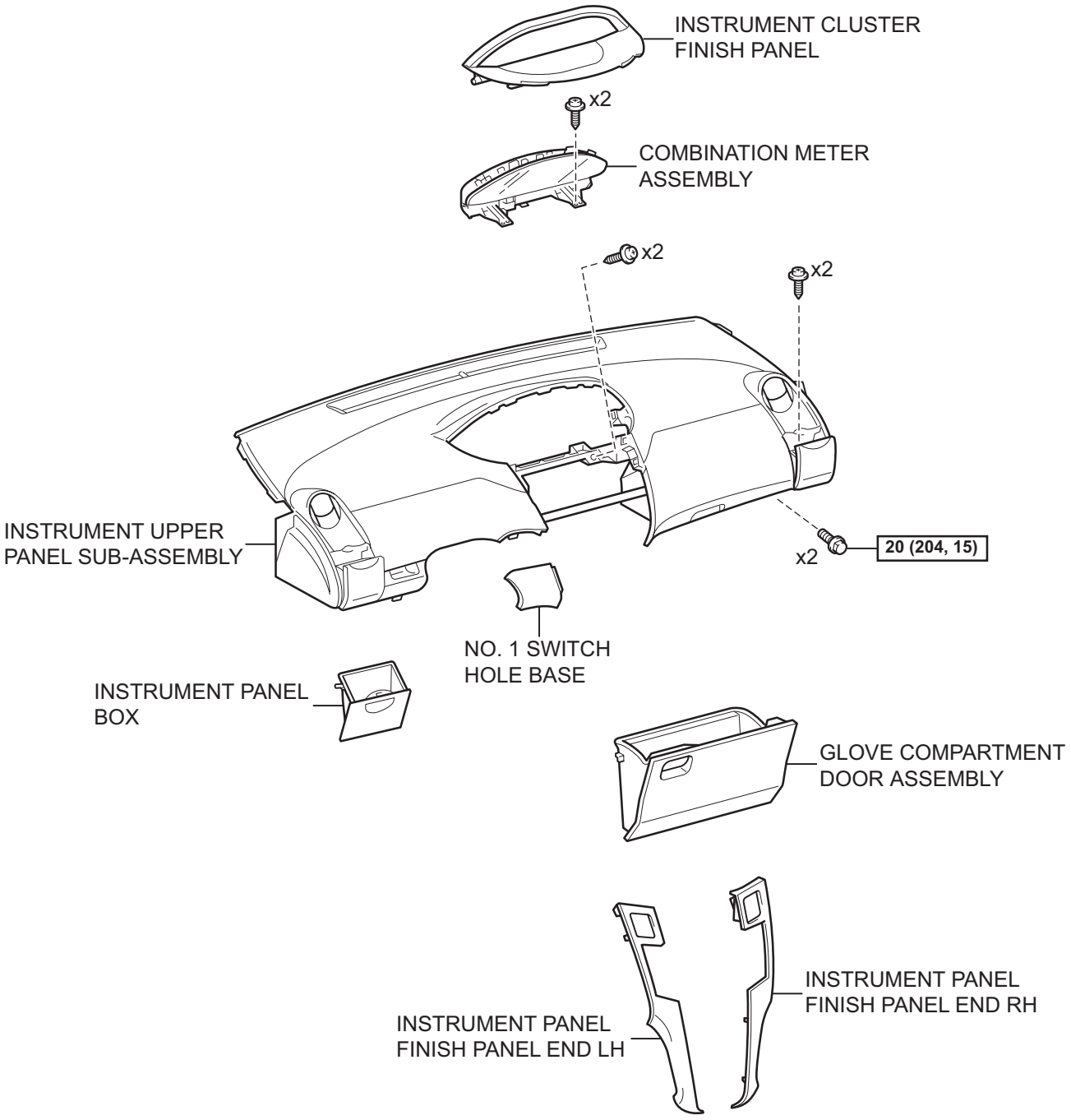

N*m (kgf*cm, ft*lbf) : Specified torque

T

B117770E01

RS

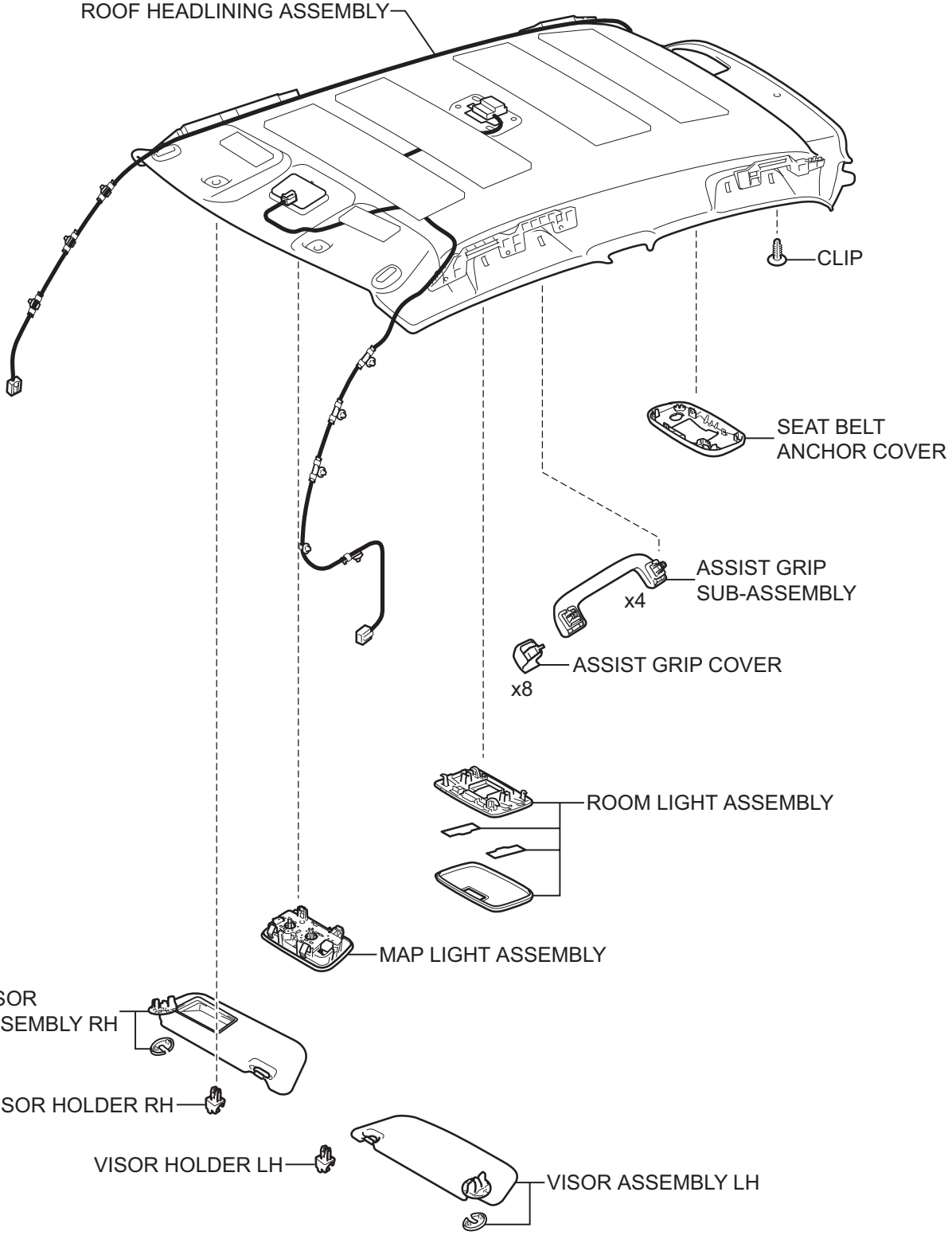

T

B114279E06

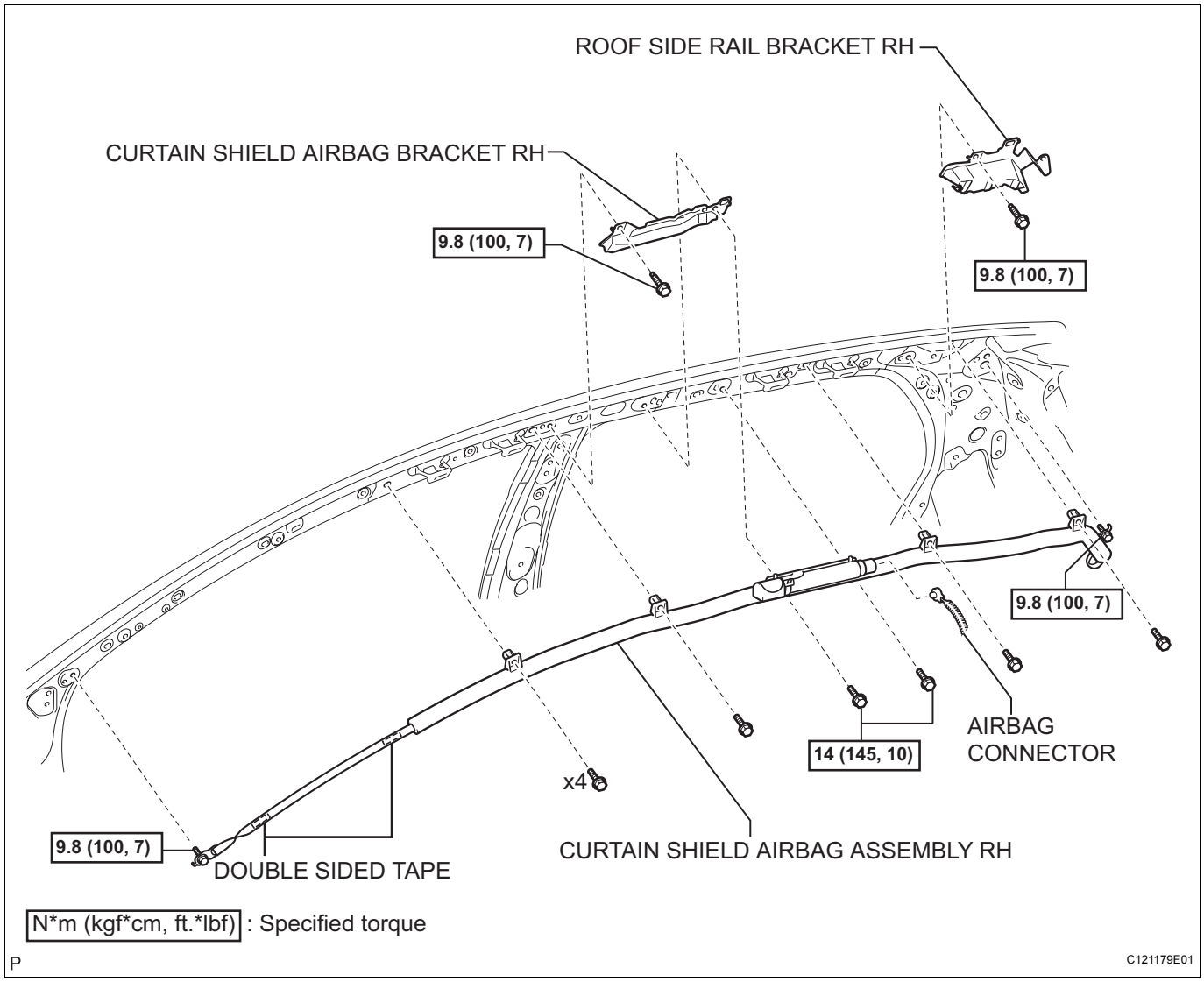
ROOF SIDE RAIL BRACKET RH
CURTAIN SHIELD AIRBAG BRACKET RH
9.8 (100, 7)
9.8 (100, 7)
9.8 (100, 7)
14 (145, 10)
AIRBAG CONNECTOR
x4
9.8 (100, 7)
DOUBLE SIDED TAPE
CURTAIN SHIELD AIRBAG ASSEMBLY RH
N*m (kgf*cm, ft.*lbf) : Specified torque
P
C121179E01

ON-VEHICLE INSPECTION

1. **INSPECT CURTAIN SHIELD AIRBAG ASSEMBLY (for Vehicle not Involved in Collision)**
   (a) Perform a diagnostic system check (See page RS-38).
   (b) With the curtain shield airbag installed on the vehicle, perform a visual check. If there are any defects, such as those mentioned below, replace the front pillar garnish or roof headlining with a new one:
   Any cuts, minute cracks or marked discoloration on the front pillar garnish and roof headlining around the curtain shield airbag.

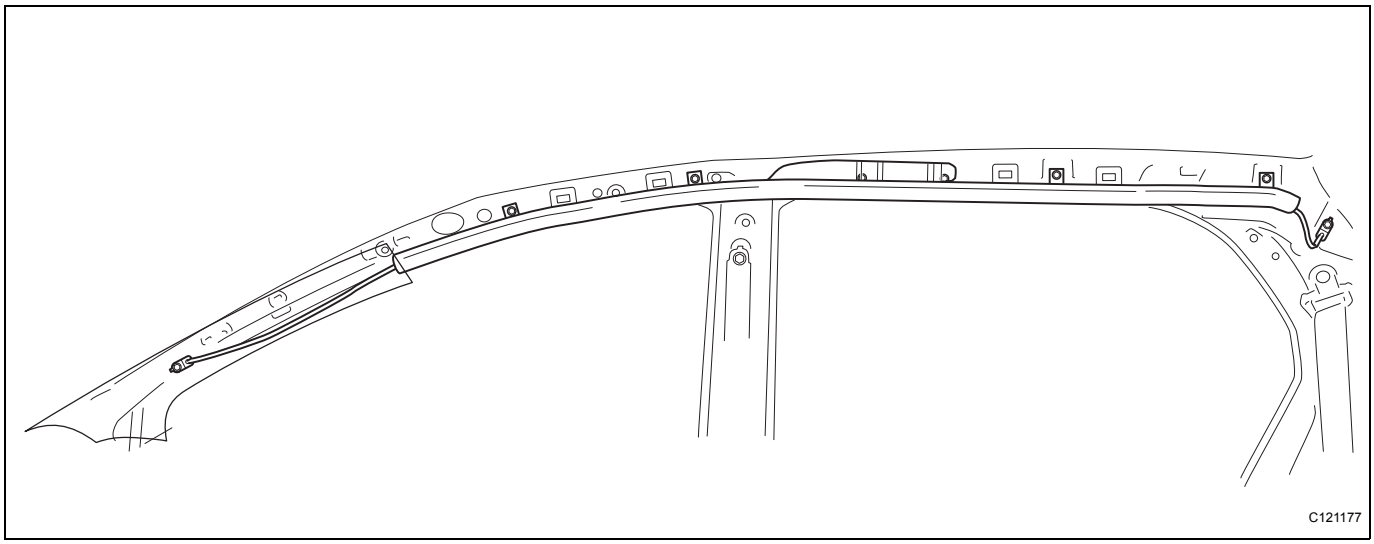

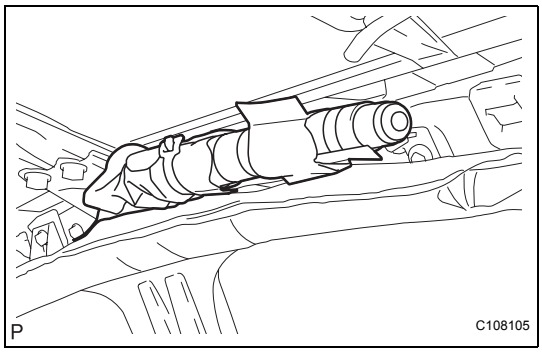

2. **INSPECT CURTAIN SHIELD AIRBAG ASSEMBLY (for Vehicle Involved in Collision and Airbag not Deployed)**
   CAUTION:
   For curtain shield airbag removal and installation procedures, see pages RS-386 and RS-390, and carefully follow the correct procedure.
   (a) Perform a diagnostic system check (See page RS-38).
   (b) With the curtain shield airbag removed from the vehicle, as mentioned below, replace the curtain shield airbag with a new one:
   - Any cuts, minute cracks or marked discoloration on the curtain shield airbag.
   - Any cracks or other damage to the connector.

REMOVAL

CAUTION:
Some of these service operations affect the SRS airbag system. Read the precautionary notices concerning the SRS airbag system before servicing (See page RS-1).
NOTICE:
Always use "Torx" socket wrench E10 when removing the rear seat.
HINT:
The procedure described below is for the LH side. Use the same procedure for both the RH and LH sides, unless otherwise specified.

1. **DISCONNECT CABLE FROM NEGATIVE BATTERY TERMINAL**
2. **REMOVE PACKAGE TRAY TRIM PANEL ASSEMBLY (See page IR-48)**
3. **REMOVE DECK BOARD SUB-ASSEMBLY (See page IR-48)**
4. **REMOVE DECK FLOOR BOX RH (See page IR-48)**
5. **REMOVE DECK FLOOR BOX LH (See page IR-48)**
6. **REMOVE NO. 1 REAR SEAT LEG COVER (for 60/40 Split Seat Type) (See page IR-48)**
7. **REMOVE NO. 2 REAR SEAT LEG COVER (for 60/40 Split Seat Type) (See page SE-85)**
8. **REMOVE REAR SEAT ASSEMBLY RH (for 60/40 Split Seat Type) (See page SE-89)**
9. **REMOVE REAR SEAT ASSEMBLY LH (for 60/40 Split Seat Type) (See page SE-71)**
10. **REMOVE REAR SEAT CUSHION COVER PAD SUB-ASSEMBLY (for Bench Seat Type) (See page SE-114)**
11. **REMOVE REAR SEATBACK ASSEMBLY (for Bench Seat Type) (See page SE-115)**
12. **REMOVE REAR DECK TRIM COVER (See page IR-49)**
13. **REMOVE FRONT DOOR SCUFF PLATE RH (See page IR-49)**
14. **REMOVE FRONT DOOR SCUFF PLATE LH**
    HINT:
    Use the same procedure as for the RH side.
15. **REMOVE INSTRUMENT PANEL UNDER COVER SUB-ASSEMBLY RH (See page IR-50)**
16. **REMOVE INSTRUMENT PANEL UNDER COVER SUB-ASSEMBLY LH (See page IR-50)**
17. **REMOVE COWL SIDE TRIM BOARD RH (See page IR-50)**
18. **REMOVE COWL SIDE TRIM BOARD LH (See page IR-50)**

19. **REMOVE FRONT DOOR OPENING TRIM WEATHERSTRIP RH (See page IR-50)**
20. **REMOVE FRONT DOOR OPENING TRIM WEATHERSTRIP LH (See page IR-50)**
21. **REMOVE REAR DOOR SCUFF PLATE RH (See page IR-51)**
22. **REMOVE REAR DOOR SCUFF PLATE LH**
    HINT:
    Use the same procedure as for the RH side.
23. **REMOVE REAR DOOR OPENING TRIM WEATHERSTRIP RH (See page IR-51)**
24. **REMOVE REAR DOOR OPENING TRIM WEATHERSTRIP LH**
    HINT:
    Use the same procedure as for the RH side.
25. **REMOVE REAR SEAT OUTER BELT ASSEMBLY RH (See page IR-51)**
26. **REMOVE REAR SEAT OUTER BELT ASSEMBLY LH**
    HINT:
    Use the same procedure as for the RH side.
27. **REMOVE DECK TRIM SIDE PANEL ASSEMBLY RH (See page IR-52)**
28. **REMOVE DECK TRIM SIDE PANEL ASSEMBLY LH (See page IR-52)**
29. **REMOVE REAR CENTER SEAT OUTER BELT ASSEMBLY (See page IR-52)**
30. **REMOVE ROOF SIDE INNER GARNISH RH (See page IR-53)**
31. **REMOVE ROOF SIDE INNER GARNISH LH (See page IR-54)**
32. **REMOVE SEAT BELT ANCHOR COVER CAP (See page IR-54)**
33. **INSTALL FRONT SEAT OUTER BELT ASSEMBLY RH (See page IR-51)**
34. **REMOVE FRONT SEAT OUTER BELT ASSEMBLY LH (See page IR-55)**
35. **REMOVE CENTER PILLAR LOWER GARNISH RH (See page IR-55)**
36. **REMOVE CENTER PILLAR LOWER GARNISH LH**
    HINT:
    Use the same procedure as for the RH side.
37. **REMOVE CENTER PILLAR UPPER GARNISH RH (See page IR-55)**
38. **REMOVE CENTER PILLAR UPPER GARNISH LH**
    HINT:
    Use the same procedure as for the RH side.

39. **REMOVE SEAT BELT ANCHOR COVER (See page SB-159)**
40. **REMOVE ASSIST GRIP SUB-ASSEMBLY (See page IR-56)**
41. **REMOVE VISOR ASSEMBLY RH (See page IR-56)**
42. **REMOVE VISOR ASSEMBLY LH**
    HINT:
    Use the same procedure as for the RH side.
43. **REMOVE VISOR HOLDER RH (See page IR-56)**
44. **REMOVE VISOR HOLDER LH**
    HINT:
    Use the same procedure as for the RH side.
45. **REMOVE ROOM LIGHT ASSEMBLY (See page IR-57)**
46. **REMOVE MAP LIGHT ASSEMBLY (See page IR-58)**
47. **REMOVE FRONT PILLAR GARNISH RH (See page IR-58)**
48. **REMOVE FRONT PILLAR GARNISH LH (See page IR-59)**
49. **REMOVE INSTRUMENT PANEL FINISH PANEL END LH (See page ME-145)**
50. **REMOVE INSTRUMENT PANEL FINISH PANEL END RH (See page ME-145)**
51. **REMOVE INSTRUMENT CLUSTER FINISH PANEL (See page ME-145)**
52. **REMOVE COMBINATION METER ASSEMBLY (See page ME-146)**
53. **REMOVE GLOVE COMPARTMENT DOOR ASSEMBLY (See page IP-20)**
54. **REMOVE NO. 1 SWITCH HOLE BASE (See page IP-20)**
55. **REMOVE INSTRUMENT UPPER PANEL SUB-ASSEMBLY (See page IP-21)**
56. **REMOVE INSTRUMENT PANEL BOX (See page IP-70)**
57. **REMOVE ROOF HEADLINING ASSEMBLY (See page IR-61)**

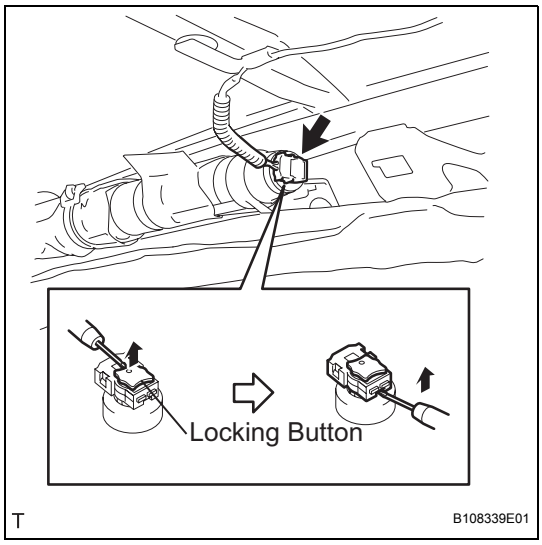

58. REMOVE CURTAIN SHIELD AIRBAG ASSEMBLY RH

(a) Using a thin-bladed screwdriver, release the locking button.
(b) Using a thin-bladed screwdriver, detach the airbag connector.
(c) Loosen the 2 bolts.
(d) Disengage the 2 hooks.
(e) Remove the 2 bolts and 4 screws.

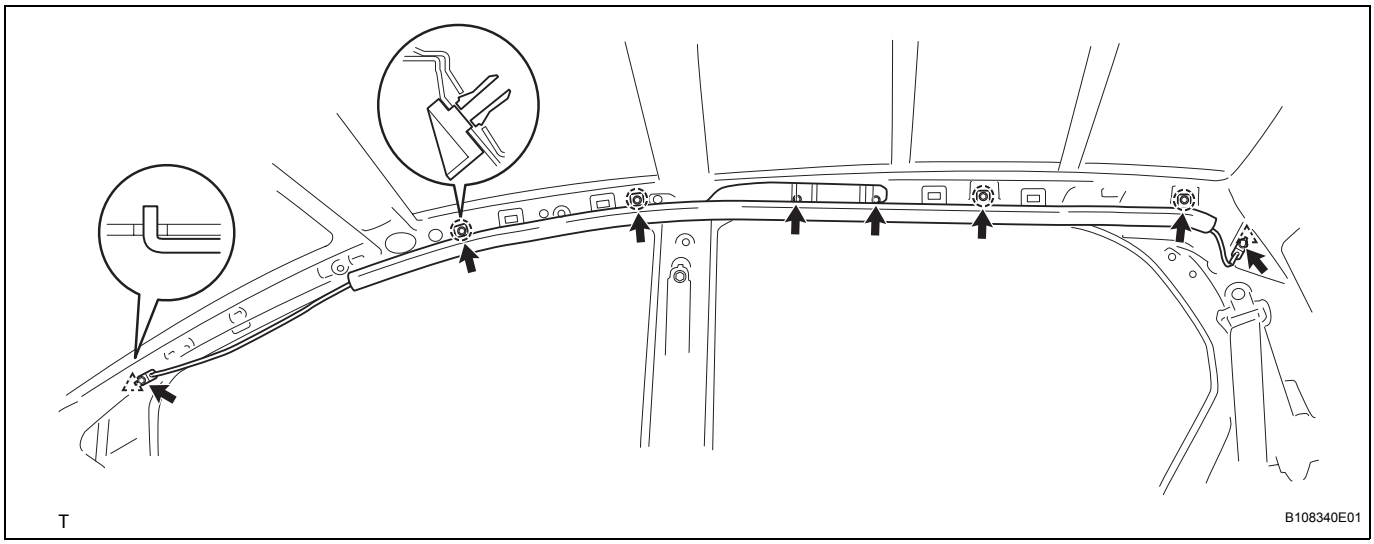

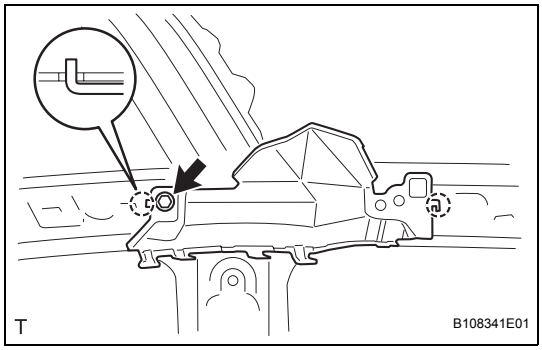

59. REMOVE CURTAIN SHIELD AIRBAG BRACKET RH

(a) Using a screwdriver, disengage the 2 hooks and remove the curtain shield airbag bracket.

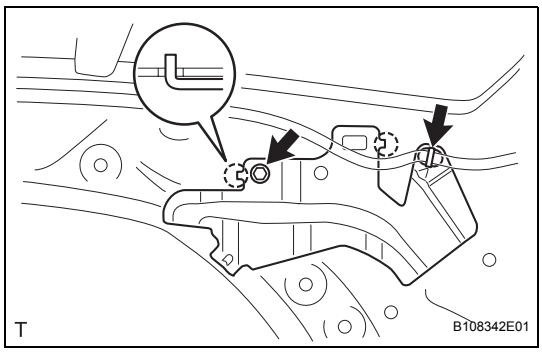

60. REMOVE ROOF SIDE RAIL BRACKET RH

(a) Remove the wire harness clamp.
(b) Remove the bolt, disengage the 2 hooks and remove the roof side rail bracket.

INSTALLATION

CAUTION:
Some of these service operations affect the SRS airbag system. Read the precautionary notices concerning the SRS airbag system before servicing (See page RS-1).
NOTICE:
Always use "Torx" socket wrench E10 when installing the rear seat.
HINT:
The procedure described below is for the RH side. Use the same procedure for both the RH and LH sides, unless otherwise specified.

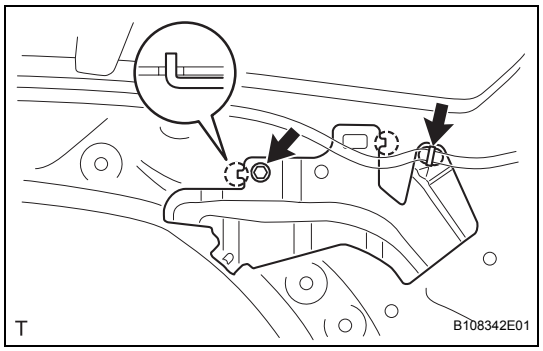

1. **INSTALL ROOF SIDE RAIL BRACKET RH**
   (a) Insert the 2 hooks into the body holes and install the roof side rail bracket.
   Torque: 9.8 N*m (100 kgf*cm, 7 ft.*lbf)
   (b) Install the wire harness clamp.

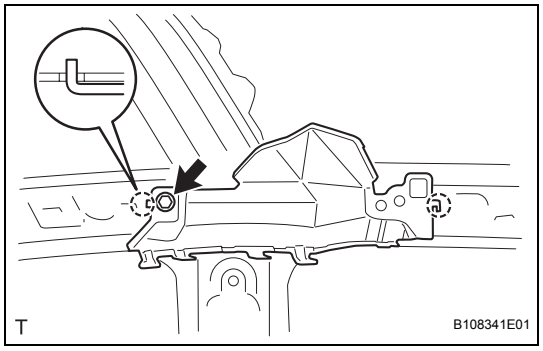

2. **INSTALL CURTAIN SHIELD AIRBAG BRACKET RH**
   (a) Insert the 2 hooks into the body holes and install the curtain shield back bracket.
   Torque: 9.8 N*m (100 kgf*cm, 7 ft.*lbf)

3. **INSTALL CURTAIN SHIELD AIRBAG ASSEMBLY RH**
   (a) Tighten the 2 bolts A.
   Torque: 14 N*m (145 kgf*cm, 10 ft.*lbf)
   (b) Tighten the 4 screws B.

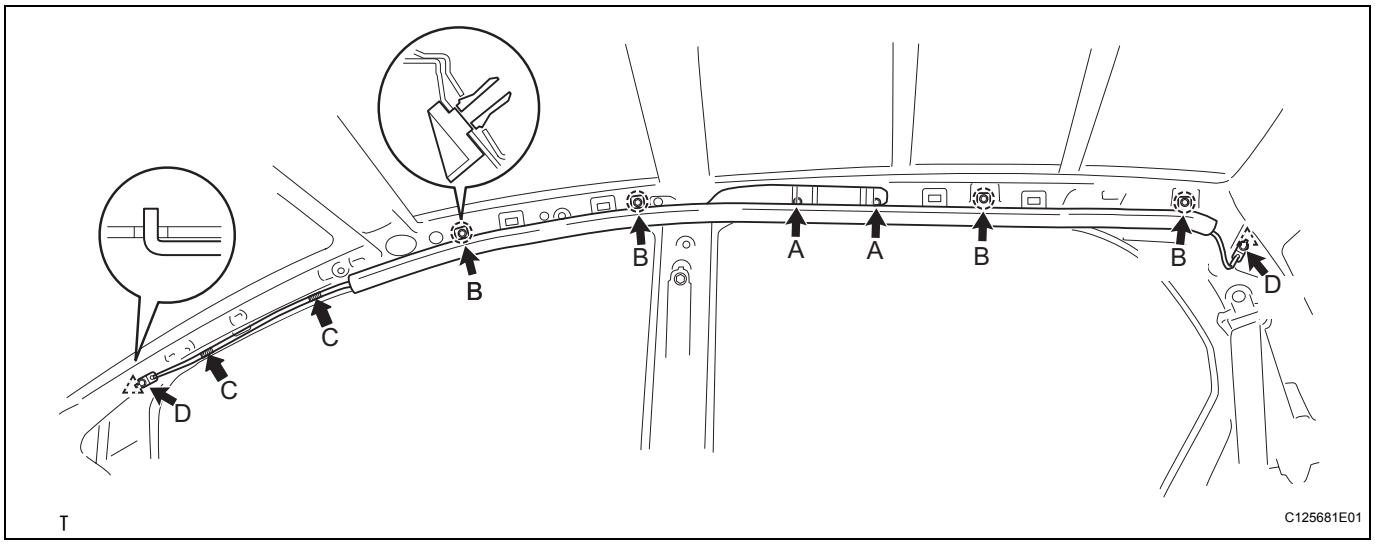

RS

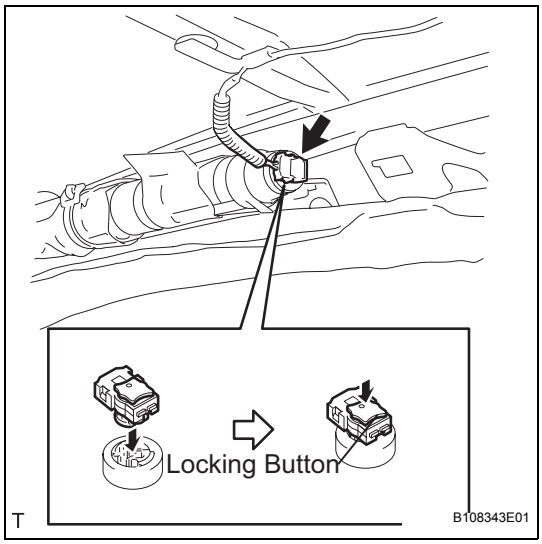

(c) Install the front strap.
NOTICE:
Attach double sided tape to the indicated area, with the strap pulled downward. When installing the strap, make sure that the front pillar garnish installation holes are not hidden by the strap of the curtain shield airbag.

(d) Tighten the 2 bolts D.
Torque: 9.8 N*m (100 kgf*cm, 7 ft.*lbf)

(e) Connect the airbag connector.
NOTICE:
Securely lock the locking button.

4. **INSTALL ROOF HEADLINING ASSEMBLY (See page IR-69)**
5. **INSTALL INSTRUMENT PANEL BOX (See page IP-78)**
6. **INSTALL INSTRUMENT UPPER PANEL SUB-ASSEMBLY (See page IP-29)**
7. **INSTALL NO. 1 SWITCH HOLE BASE (See page IP-32)**
8. **INSTALL GLOVE COMPARTMENT DOOR ASSEMBLY (See page IP-32)**
9. **INSTALL COMBINATION METER ASSEMBLY (See page ME-148)**
10. **INSTALL INSTRUMENT CLUSTER FINISH PANEL (See page ME-148)**
11. **INSTALL INSTRUMENT PANEL FINISH PANEL END RH (See page ME-149)**
12. **INSTALL INSTRUMENT PANEL FINISH PANEL END LH (See page ME-149)**
13. **INSTALL FRONT PILLAR GARNISH RH (See page IR-71)**
14. **INSTALL FRONT PILLAR GARNISH LH (See page IR-72)**
15. **INSTALL MAP LIGHT ASSEMBLY (See page IR-73)**
16. **INSTALL ROOM LIGHT ASSEMBLY (See page IR-74)**
17. **INSTALL VISOR HOLDER RH (See page IR-75)**
18. **INSTALL VISOR HOLDER LH (See page IR-75)**
19. **INSTALL VISOR ASSEMBLY RH (See page IR-75)**
20. **INSTALL VISOR ASSEMBLY LH (See page IR-75)**
21. **INSTALL ASSIST GRIP SUB-ASSEMBLY (See page IR-75)**
22. **INSTALL SEAT BELT ANCHOR COVER (See page IR-75)**
23. **INSTALL CENTER PILLAR UPPER GARNISH RH (See page IR-76)**

24. **INSTALL CENTER PILLAR UPPER GARNISH LH (See page IR-76)**
25. **INSTALL CENTER PILLAR LOWER GARNISH RH (See page IR-76)**
26. **INSTALL CENTER PILLAR LOWER GARNISH LH (See page IR-76)**
27. **INSTALL FRONT SEAT OUTER BELT ASSEMBLY RH (See page IR-76)**
28. **INSTALL FRONT SEAT OUTER BELT ASSEMBLY LH (See page IR-76)**
29. **INSTALL SEAT BELT ANCHOR COVER CAP (See page IR-76)**
30. **INSTALL ROOF SIDE INNER GARNISH RH (See page IR-77)**
31. **INSTALL ROOF SIDE INNER GARNISH LH (See page IR-77)**
32. **INSTALL REAR CENTER SEAT OUTER BELT ASSEMBLY (See page IR-78)**
33. **INSTALL DECK TRIM SIDE PANEL ASSEMBLY RH (See page IR-79)**
34. **INSTALL DECK TRIM SIDE PANEL ASSEMBLY LH (See page IR-79)**
35. **INSTALL REAR SEAT OUTER BELT ASSEMBLY RH (See page IR-76)**
36. **INSTALL REAR SEAT OUTER BELT ASSEMBLY LH (See page IR-80)**
37. **INSTALL REAR DOOR OPENING TRIM WEATHERSTRIP RH (See page IR-80)**
38. **INSTALL REAR DOOR OPENING TRIM WEATHERSTRIP LH (See page IR-80)**
39. **INSTALL REAR DOOR SCUFF PLATE RH (See page IR-80)**
40. **INSTALL REAR DOOR SCUFF PLATE LH (See page IR-80)**
41. **INSTALL FRONT DOOR OPENING TRIM WEATHERSTRIP RH (See page IR-81)**
42. **INSTALL FRONT DOOR OPENING TRIM WEATHERSTRIP LH (See page IR-81)**
43. **INSTALL COWL SIDE TRIM BOARD RH (See page IR-81)**
44. **INSTALL COWL SIDE TRIM BOARD LH (See page IR-81)**
45. **INSTALL INSTRUMENT PANEL UNDER COVER SUB-ASSEMBLY RH (See page IR-81)**

46. **INSTALL INSTRUMENT PANEL UNDER COVER SUB-ASSEMBLY LH (See page IR-82)**
47. **INSTALL FRONT DOOR SCUFF PLATE RH (See page IR-82)**
48. **INSTALL FRONT DOOR SCUFF PLATE LH (See page IR-82)**
49. **INSTALL REAR DECK TRIM COVER (See page IR-82)**
50. **INSTALL REAR SEAT ASSEMBLY LH (for 60/40 Split Seat Type) (See page SE-84)**
51. **INSTALL REAR SEAT ASSEMBLY RH (for 60/40 Split Seat Type) (See page SE-102)**
52. **INSTALL NO. 2 REAR SEAT LEG COVER (for 60/40 Split Seat Type) (See page SE-85)**
53. **INSTALL NO. 1 REAR SEAT LEG COVER (for 60/40 Split Seat Type) (See page SE-85)**
54. **INSTALL REAR SEATBACK ASSEMBLY (for Bench Seat Type) (See page SE-122)**
55. **INSTALL REAR SEAT CUSHION COVER PAD SUB-ASSEMBLY (for Bench Seat Type) (See page SE-123)**
56. **INSTALL DECK FLOOR BOX RH (See page IR-83)**
57. **INSTALL DECK FLOOR BOX LH (See page IR-83)**
58. **INSTALL DECK BOARD SUB-ASSEMBLY (See page IR-83)**
59. **INSTALL PACKAGE TRAY TRIM PANEL ASSEMBLY (See page IR-83)**
60. **CONNECT CABLE TO NEGATIVE BATTERY TERMINAL**
    Torque: 5.4 N*m (55 kgf*cm, 48 in.*lbf)
61. **INSPECT SRS WARNING LIGHT**
    (See page RS-31)

DISPOSAL

HINT:

- Disposal procedure for the RH side is the same as that for the LH side.
- The procedure described below are for the RH side.
- When scrapping a vehicle equipped with the SRS or disposing of a curtain shield airbag, deploy the airbag first in accordance with the procedure described below. If any abnormality occurs with the airbag deployment, contact the SERVICE DEPT. of the DISTRIBUTOR.

CAUTION:

- **Never dispose of a curtain shield airbag that has an undeployed airbag.**
- **The airbag emits an exploding sound when it is deployed, so perform the operation outdoors and where it will not create a nuisance to nearby residents.**
- **When deploying the airbag, always use the specified SST (SRS Airbag Deployment Tool). Perform the operation in a place away from electrical noise.**
- **When deploying the airbag, perform the operation at least 10 m (33 ft) away from the curtain shield airbag.**
- **The curtain shield airbag becomes extremely hot when the airbag is deployed, so do not touch it for at least 30 minutes after deployment.**
- **Use gloves and safety glasses when handling a curtain shield airbag which has been deployed.**
- **Do not apply water, etc. to a curtain shield airbag which has been deployed.**
- **Always wash your hands with water after completing the operation.**

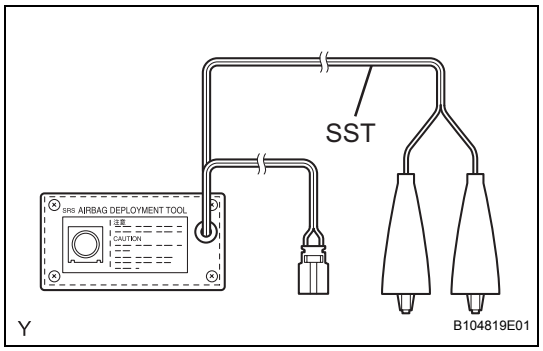

1. DISPOSE OF CURTAIN SHIELD AIRBAG ASSEMBLY (WHEN INSTALLED IN VEHICLE)

HINT:

Prepare a battery as the power source to deploy the airbag.

(a) Check the function of SST.

SST 09082-00700

CAUTION:

Always use the specified SST (SRS Airbag Deployment Tool) when deploying the airbag.

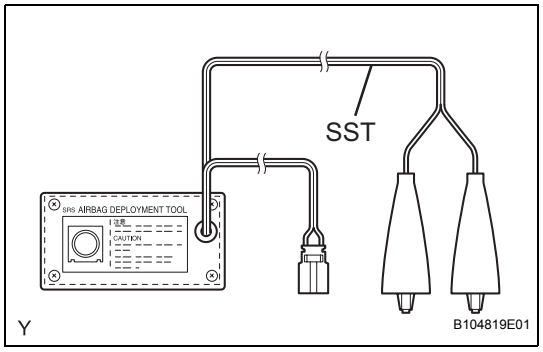

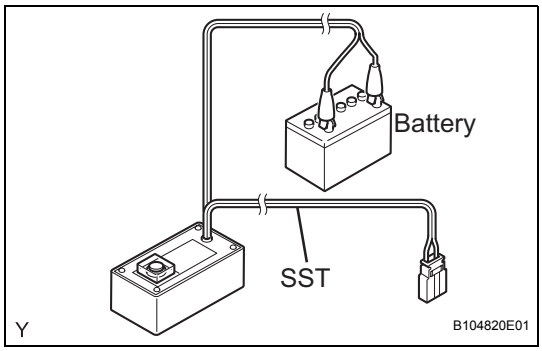

(1) Connect the red clip of SST to the positive battery terminal and the black clip of SST to the negative battery terminal.

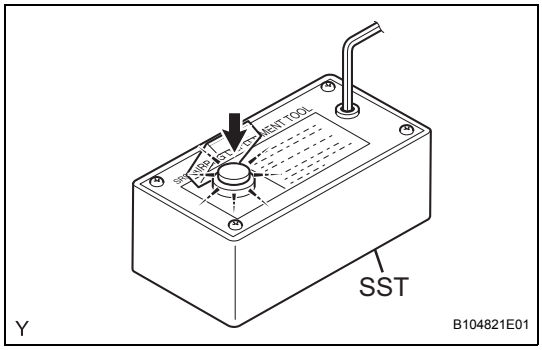

(2) Press the SST activation switch, and check that the LED of the SST activation switch illuminates.
CAUTION:
- **Do not connect the SST connector (yellow colored one) to the airbag.**
- **If the LED illuminates when the activation switch is not pressed, SST may be malfunctioning. Do not use SST.**

(3) Disconnect SST from the battery.

(b) Disconnect the cable from the negative battery terminal.

(c) Remove the roof headlining (See page RS-386).

(d) Disconnect the airbag connector, as shown in the illustration.
NOTICE:
Do not damage the airbag wire harness when handling the airbag connector.

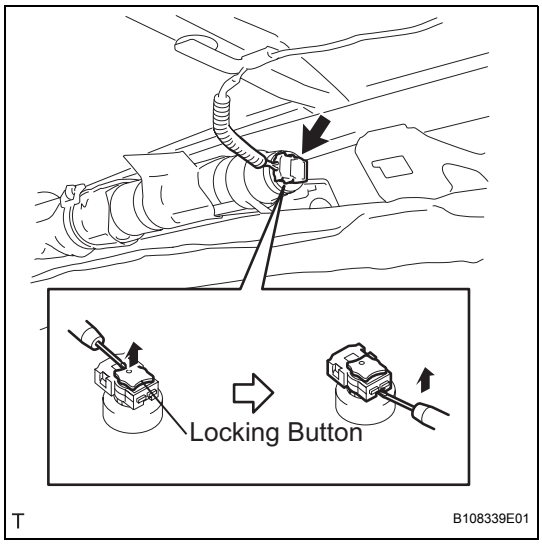

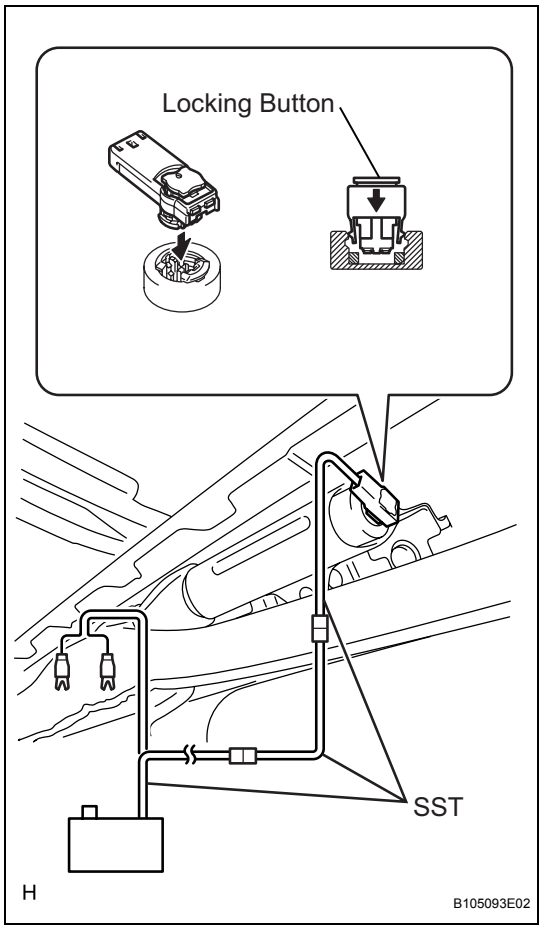

(e) Connect SST.

SST 09082-00700, 09082-00802 (09082-10801, 09082-20801)

(1) After connecting SST, connect it to the curtain shield airbag.

NOTICE:

Do not lock the secondary lock of the twin lock to avoid damaging the SST connector and wire harness.

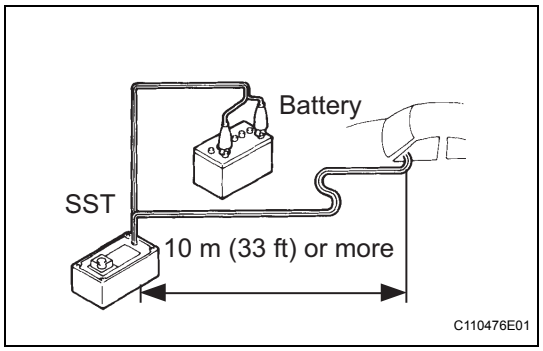

(2) Move SST to at least 10 m (33 ft) away from the vehicle.

(3) Close all doors and windows of the vehicle.

NOTICE:

Do not damage the SST wire harness.

(4) Connect the red clip of SST to the positive battery terminal and the black clip of SST to the negative battery terminal.

(f) Deploy the airbag.

(1) Check that no one is inside the vehicle or within a 10 m (33 ft) radius of the vehicle.

(2) Press the SST activation switch and deploy the airbag.

CAUTION:

- **When deploying the airbag, make sure that no one is near the vehicle.**
- **The curtain shield airbag becomes extremely hot when the airbag is deployed, so do not touch it for at least 30 minutes after deployment.**
- **Use gloves and safety glasses when handling a curtain shield airbag which has been deployed.**
- **Do not apply water, etc. to a curtain shield airbag which has been deployed.**
- **Always wash your hands with water after completing the operation.**

HINT:
The airbag is deployed as the LED of the SST activation switch illuminates.

2. DISPOSE OF CURTAIN SHIELD AIRBAG ASSEMBLY (WHEN NOT INSTALLED IN VEHICLE)

NOTICE:

- **Never use the customer's vehicle to deploy the airbag when only disposing of the curtain shield airbag.**
- **Follow the procedure detailed below when deploying the airbag.**

HINT:
Prepare a battery as the power source to deploy the airbag.

(a) Check the function of SST.
SST 09082-00700
CAUTION:
Always use the specified SST (SRS Airbag Deployment Tool) when deploying the airbag.

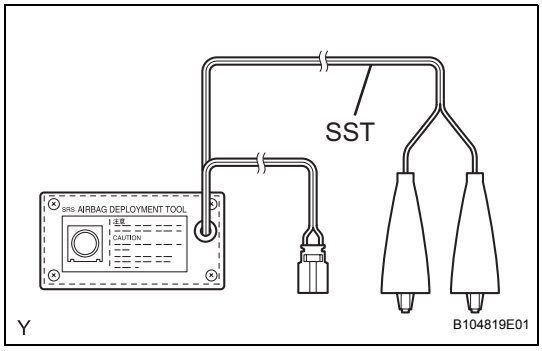

(1) Connect the red clip of SST to the positive battery terminal and the black clip of SST to the negative battery terminal.

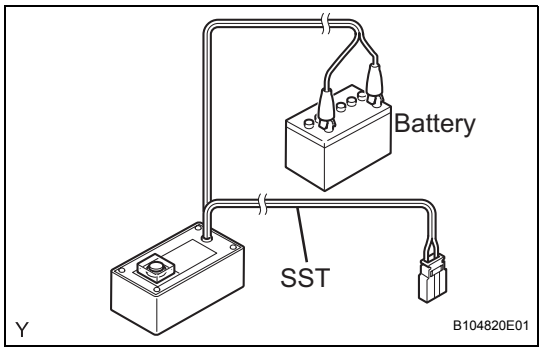

(2) Press the SST activation switch, and check that the LED of the SST activation switch illuminates.
CAUTION:
- **Do not connect the SST connector (yellow colored one) to the airbag.**
- **If the LED illuminates when the activation switch is not pressed, SST may be malfunctioning. Do not use SST.**

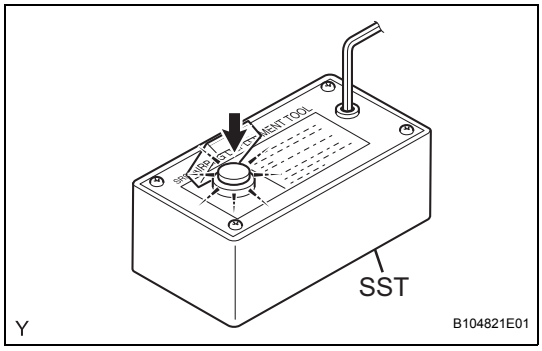

(3) Disconnect SST from the battery.

(b) Remove the curtain shield airbag (See page RS-386).

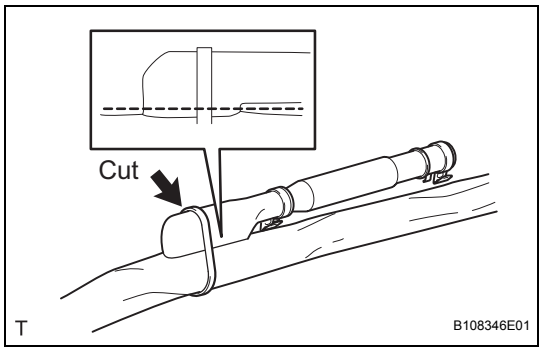

(c) Cut off the deployment section of the curtain shield airbag.

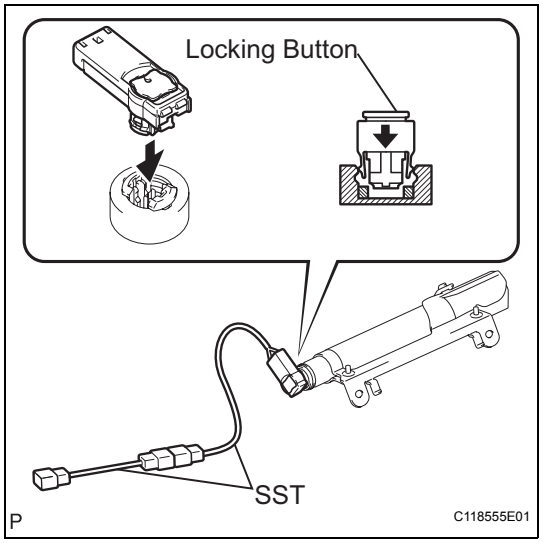

(d) Connect SST.
SST 09082-00802 (09082-10801, 09082-20801)
(1) After connecting SST, connect it to the curtain shield airbag.
NOTICE:
Do not lock the secondary lock of the twin lock to avoid damaging the SST connector and wire harness.

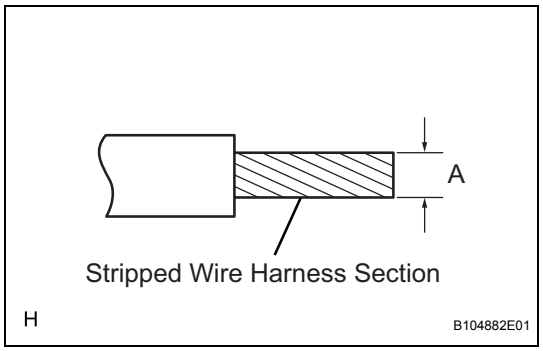

(e) Using a service-purpose wire harness for the vehicle, tie the curtain shield airbag to the tire.
Stripped wire harness section:

Area	Measurement
A	1.25 mm^2 or more (0.0019 $in.^2$ or more)

CAUTION:
Do not use wire harness that is too thin or any other object to tie the curtain shield airbag because it may snap due to the shock when the airbag is deployed. Always use a wire harness for vehicle use with a cross section of at least 1.25 mm^2 (0.0019 in^2).
HINT:
To calculate the area of the stripped wire harness cross section:
Area = 3.14 x $(Diameter)^2$ divided by 4

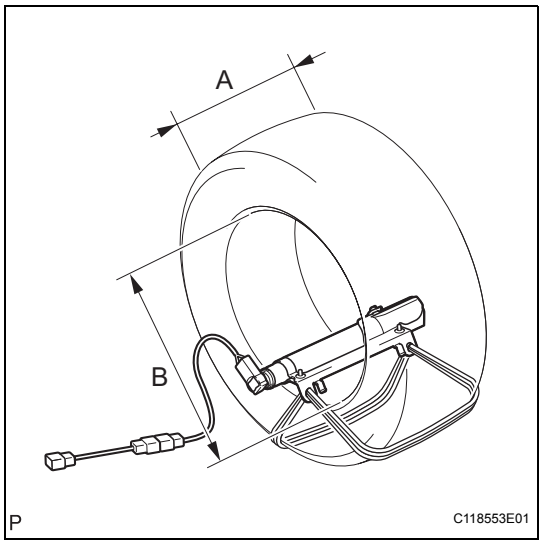

(1) Position the curtain shield airbag inside the tire, as shown in the illustration.

Tire size:

Area	Measurement
A	185 mm (7.28 in.)
B	360 mm (14.17 in.)

CAUTION:
Make sure that the wire harnesses are tight. If there is any slack in the wire harnesses, the curtain shield airbag may become loose due to the shock when the airbag is deployed.
NOTICE:
The tire will be marked by the airbag deployment, so use a waste tire.

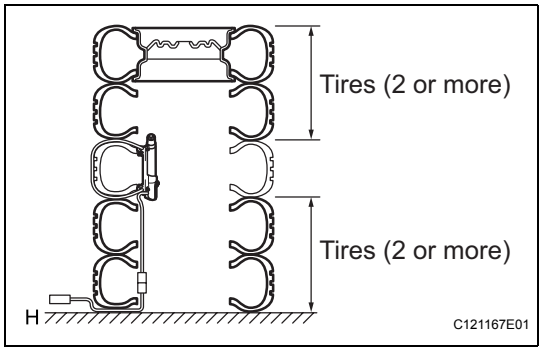

(f) Place the tires.

CAUTION:
Do not place the curtain shield airbag with the deployment direction facing toward the ground.

(1) Place at least 2 tires under the tire to which the curtain shield airbag is tied.
(2) Place at least 2 tires over the tire to which the curtain shield airbag is tied. The disc wheel should be installed onto the top tire.

NOTICE:
Do not place the SST connector under the tire because it could be damaged.

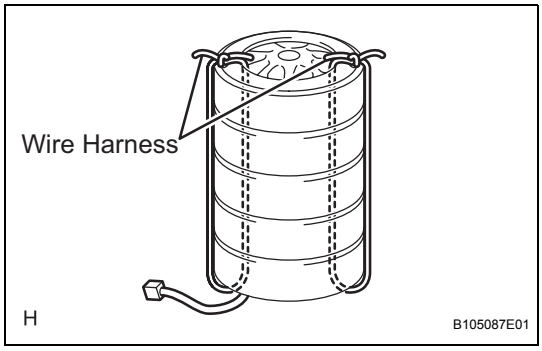

(3) Tie the tires together with 2 wire harnesses.

CAUTION:
Make sure that the wire harnesses are tight. It is highly dangerous when a loose wire harness results in the tires coming free due to the shock when the airbag is deployed.

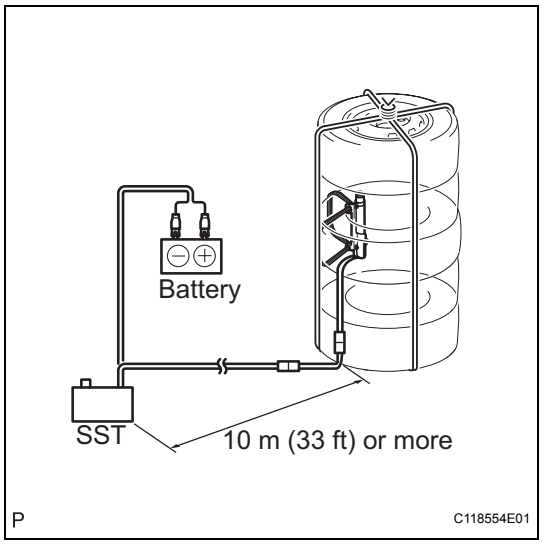

(g) Connect SST.
SST 09082-00700
NOTICE:
To avoid damaging the SST connector and wire harness, do not lock the secondary lock of the twin lock. Also, secure some slack for the SST wire harness inside the tire.

(h) Deploy the airbag.
(1) Connect the red clip of SST to the positive battery terminal and the black clip of SST to the negative battery terminal.
(2) Check that no one is within a 10 m (33 ft) radius of the tire to which the curtain shield airbag is tied.
(3) Press the SST activation switch and deploy the airbag.
CAUTION:
Make sure that no one is near the tire when deploying the airbag.
HINT:
The airbag is deployed as the LED of the SST activation switch illuminates.

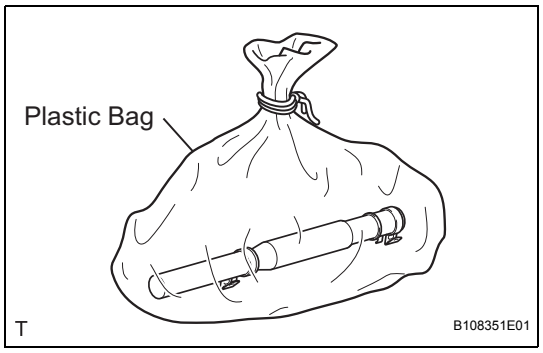

(i) Dispose of the curtain shield airbag.
CAUTION:
- **The curtain shield airbag becomes extremely hot when the airbag is deployed, so do not touch it for at least 30 minutes after deployment.**
- **Use gloves and safety glasses when handling a curtain shield airbag which has been deployed.**
- **Always wash your hands with water after completing the operation.**
- **Do not apply water, etc. to a curtain shield airbag which has been deployed.**

(1) Remove the curtain shield airbag from the tire.
(2) Place the curtain shield airbag in a plastic bag, tie it tightly and dispose of it in the same way as other general parts.

RS

CURTAIN SHIELD AIRBAG ASSEMBLY (for 3 Door)

COMPONENTS

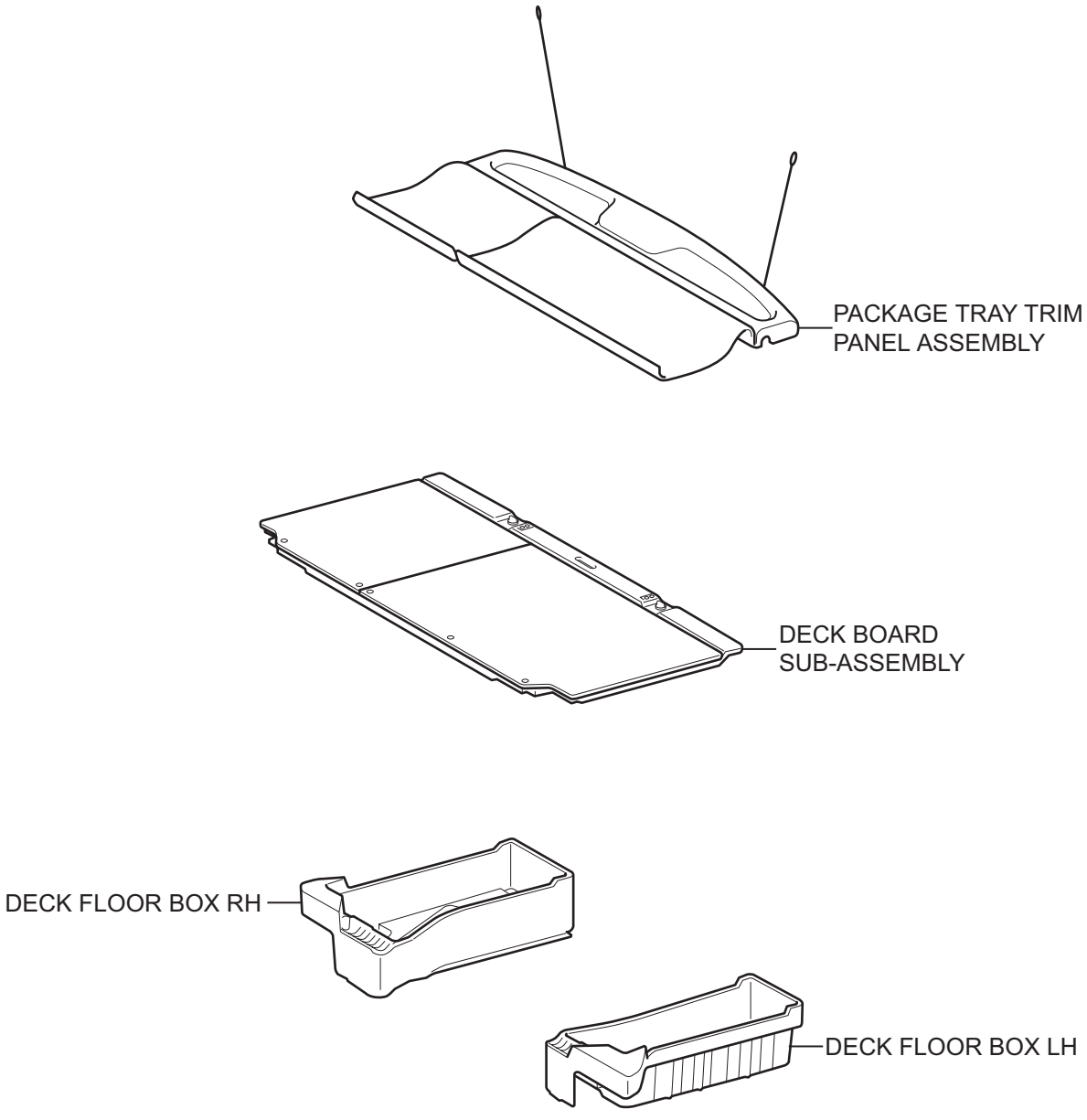

T

B114273E01

RS

for 60/40 Split Seat Type:

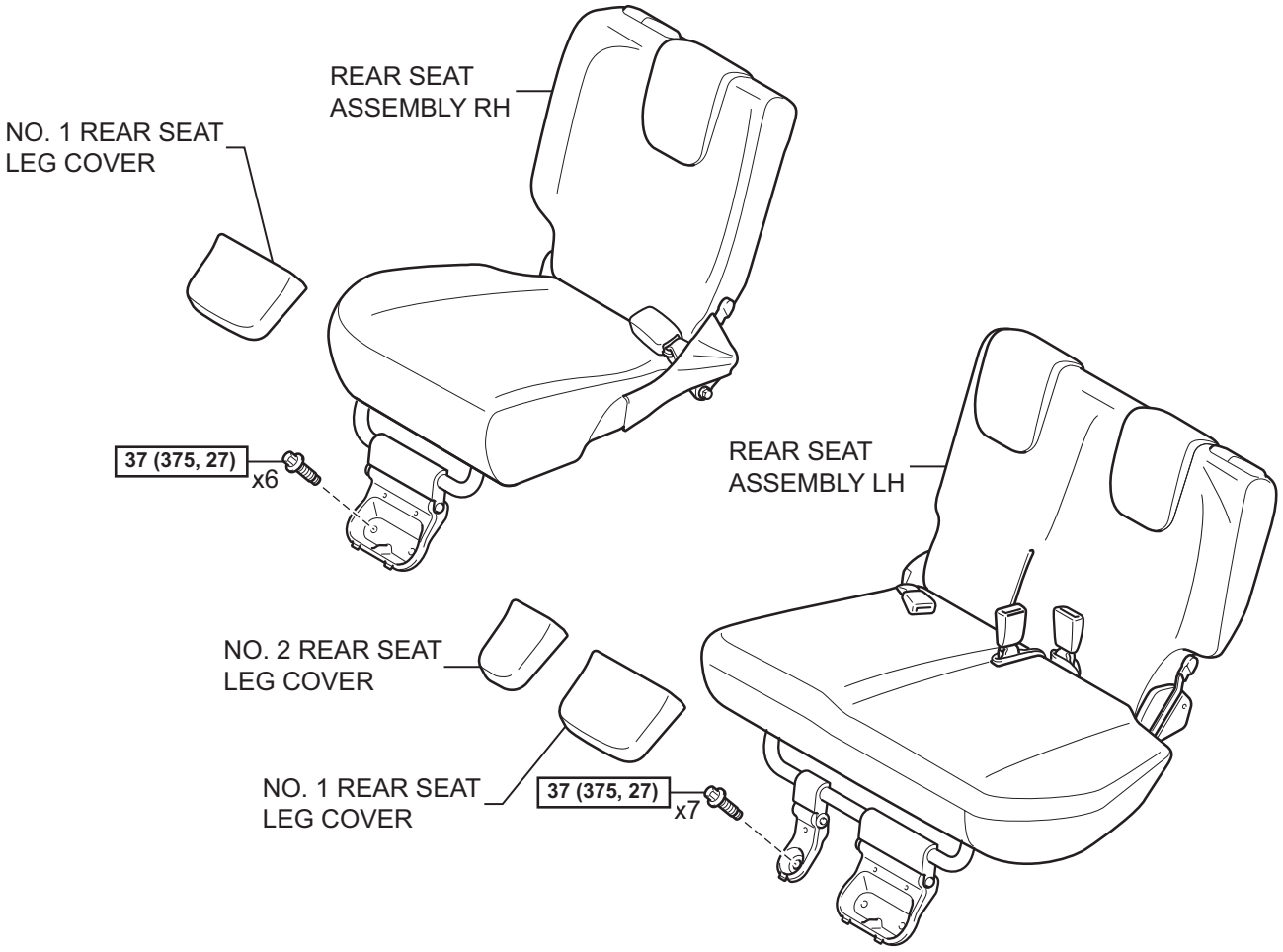

for Hold Down Seat Type:

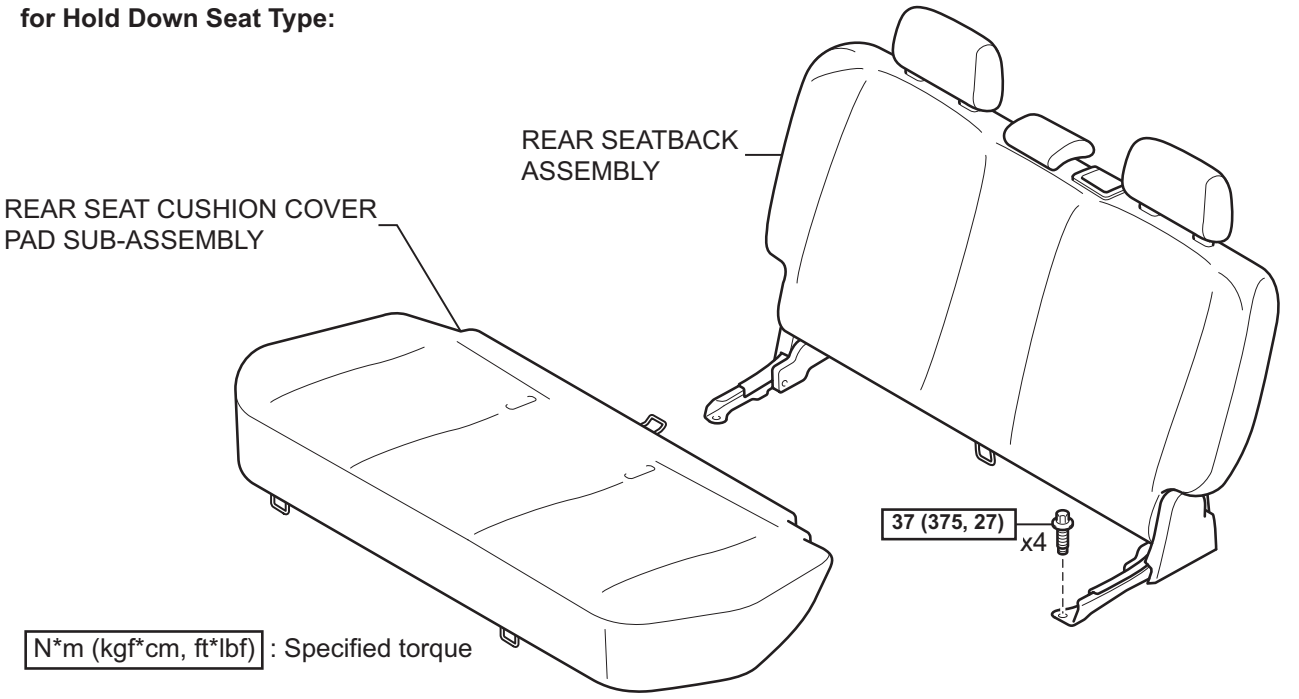

T

B121713E03

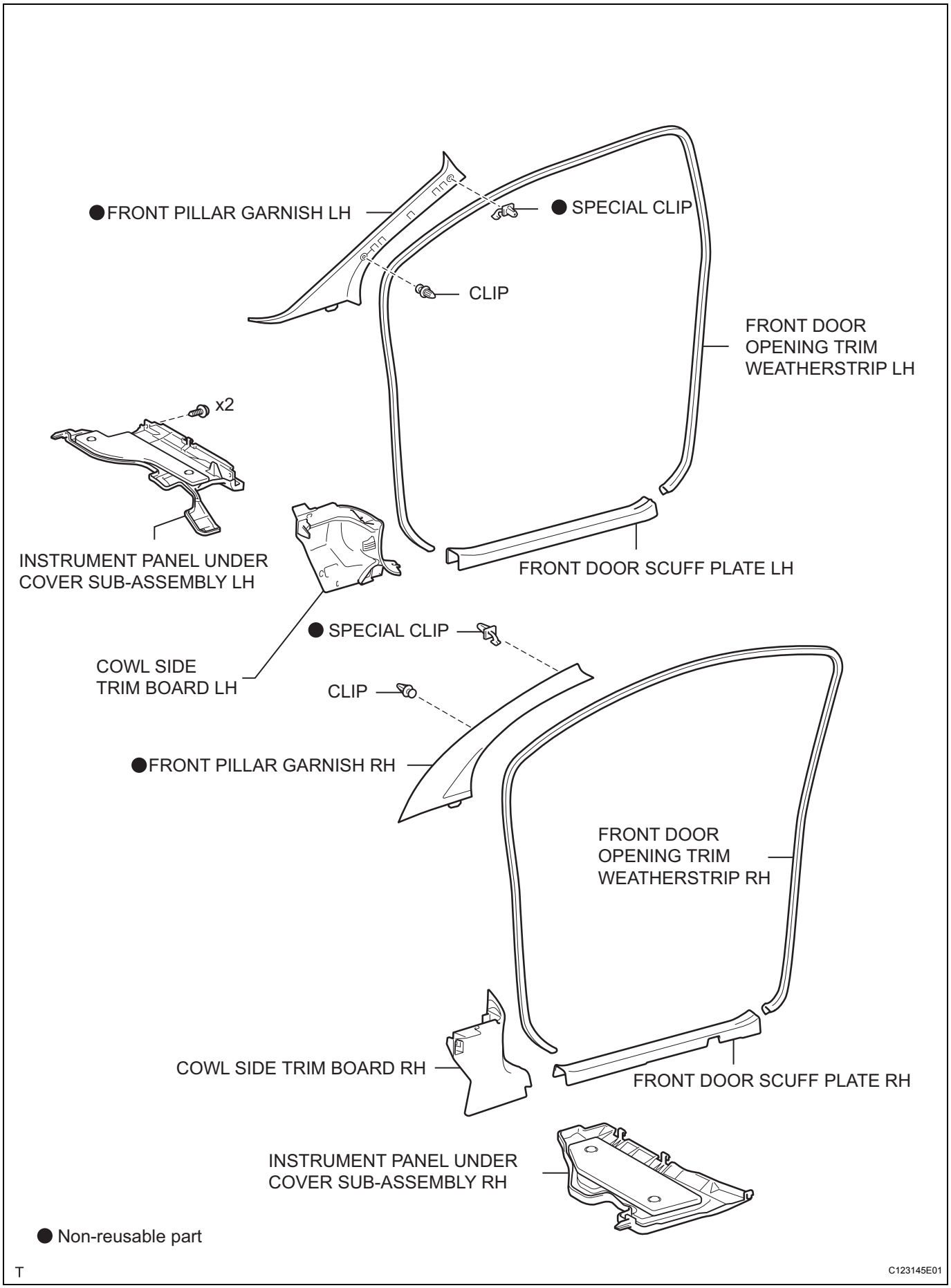
● FRONT PILLAR GARNISH LH
● SPECIAL CLIP
CLIP
FRONT DOOR OPENING TRIM WEATHERSTRIP LH
x2
INSTRUMENT PANEL UNDER COVER SUB-ASSEMBLY LH
FRONT DOOR SCUFF PLATE LH
● SPECIAL CLIP
COWL SIDE TRIM BOARD LH
CLIP
● FRONT PILLAR GARNISH RH
FRONT DOOR OPENING TRIM WEATHERSTRIP RH
COWL SIDE TRIM BOARD RH
FRONT DOOR SCUFF PLATE RH
INSTRUMENT PANEL UNDER COVER SUB-ASSEMBLY RH
● Non-reusable part
T
C123145E01

RS

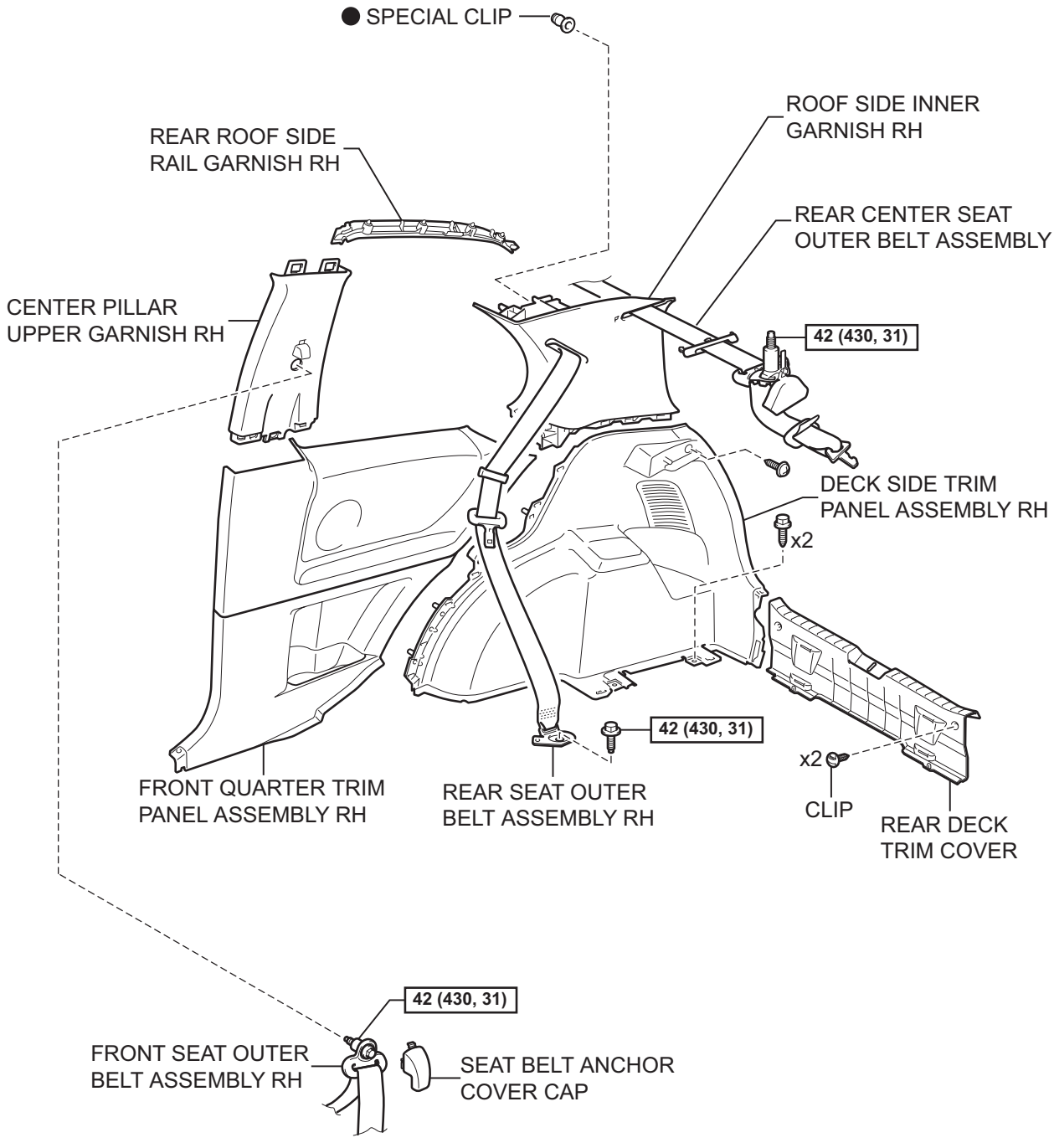

N*m (kgf*cm, ft*lbf) : Specified torque

● Non-reusable part

T

B117699E05

RS

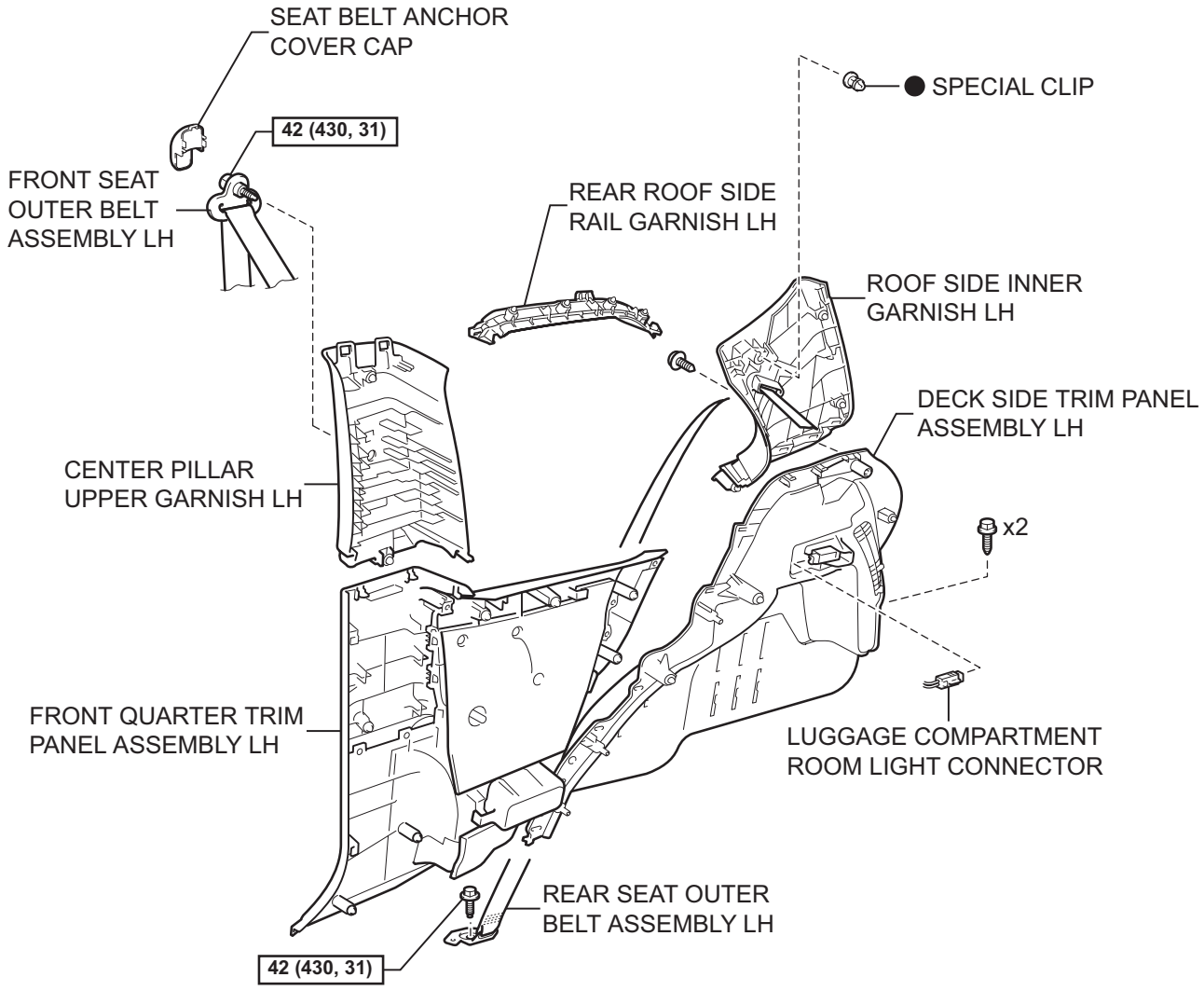

N*m (kgf*cm, ft*lbf) : Specified torque

● Non-reusable part

T

B117700E06

RS

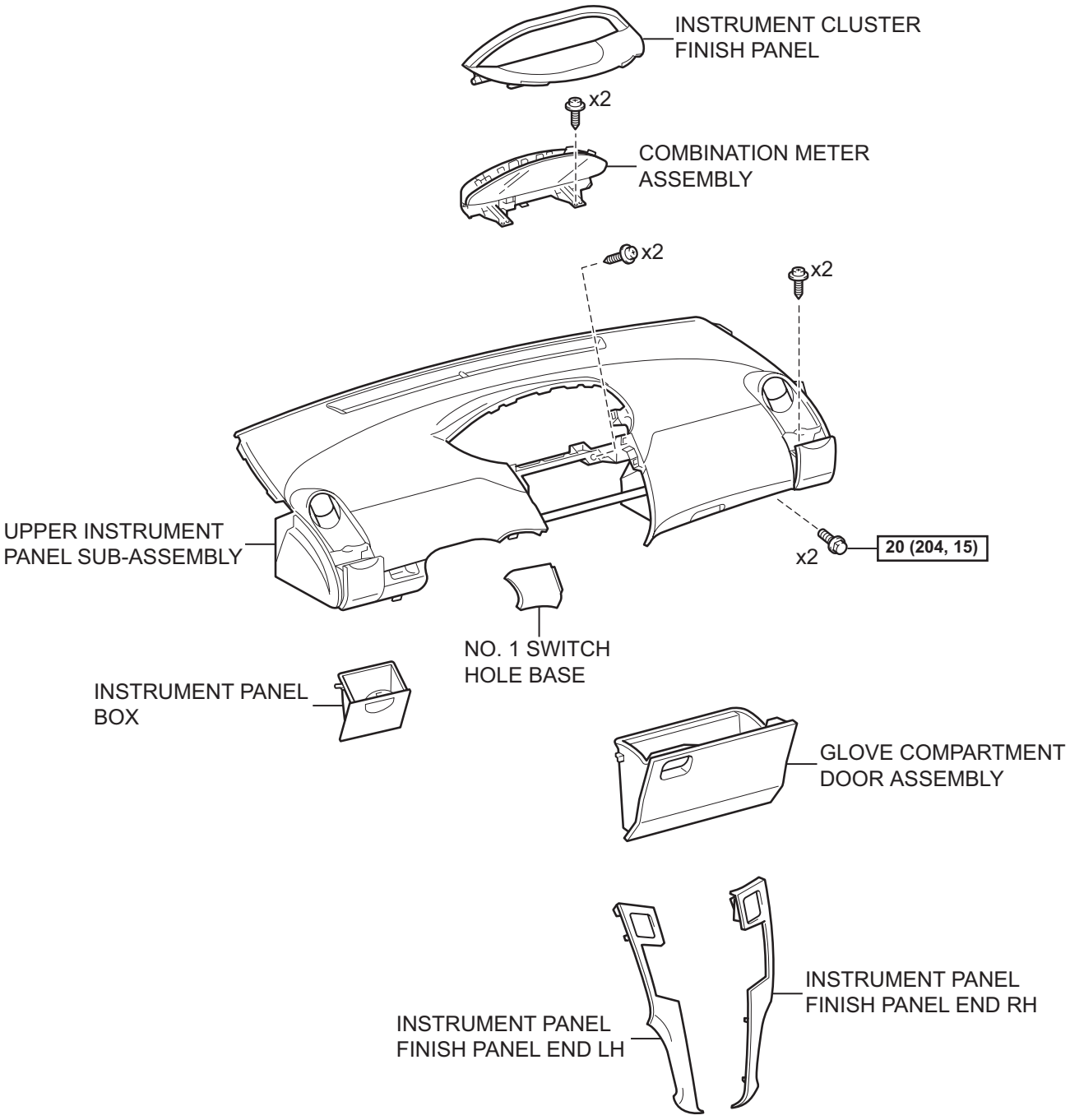

N*m (kgf*cm, ft*lbf) : Specified torque

T

B117770E02

RS

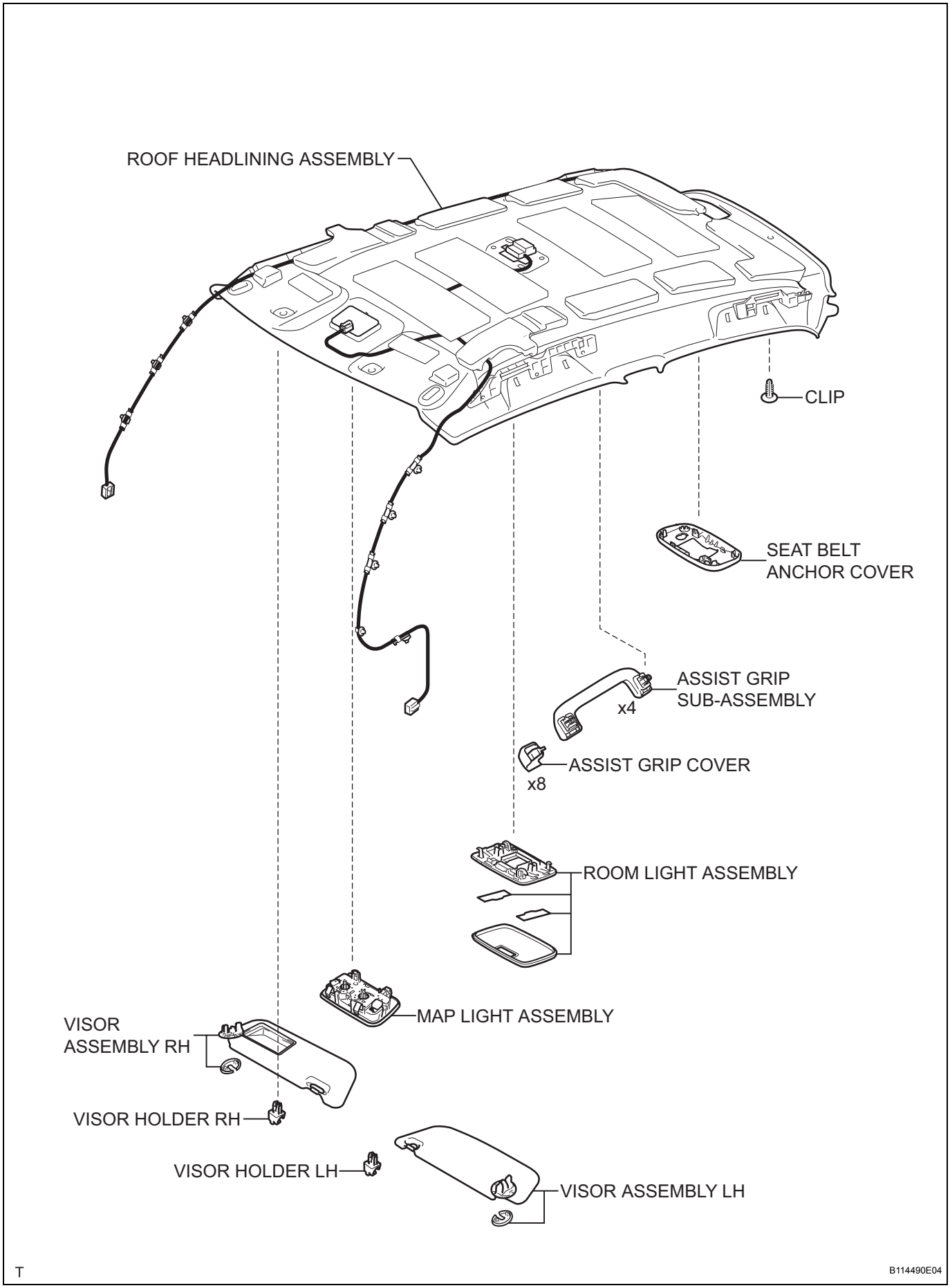
ROOF HEADLINING ASSEMBLY
CLIP
SEAT BELT ANCHOR COVER
ASSIST GRIP SUB-ASSEMBLY
x4
ASSIST GRIP COVER
x8
ROOM LIGHT ASSEMBLY
MAP LIGHT ASSEMBLY
VISOR ASSEMBLY RH
VISOR HOLDER RH
VISOR HOLDER LH
VISOR ASSEMBLY LH
T
B114490E04

RS

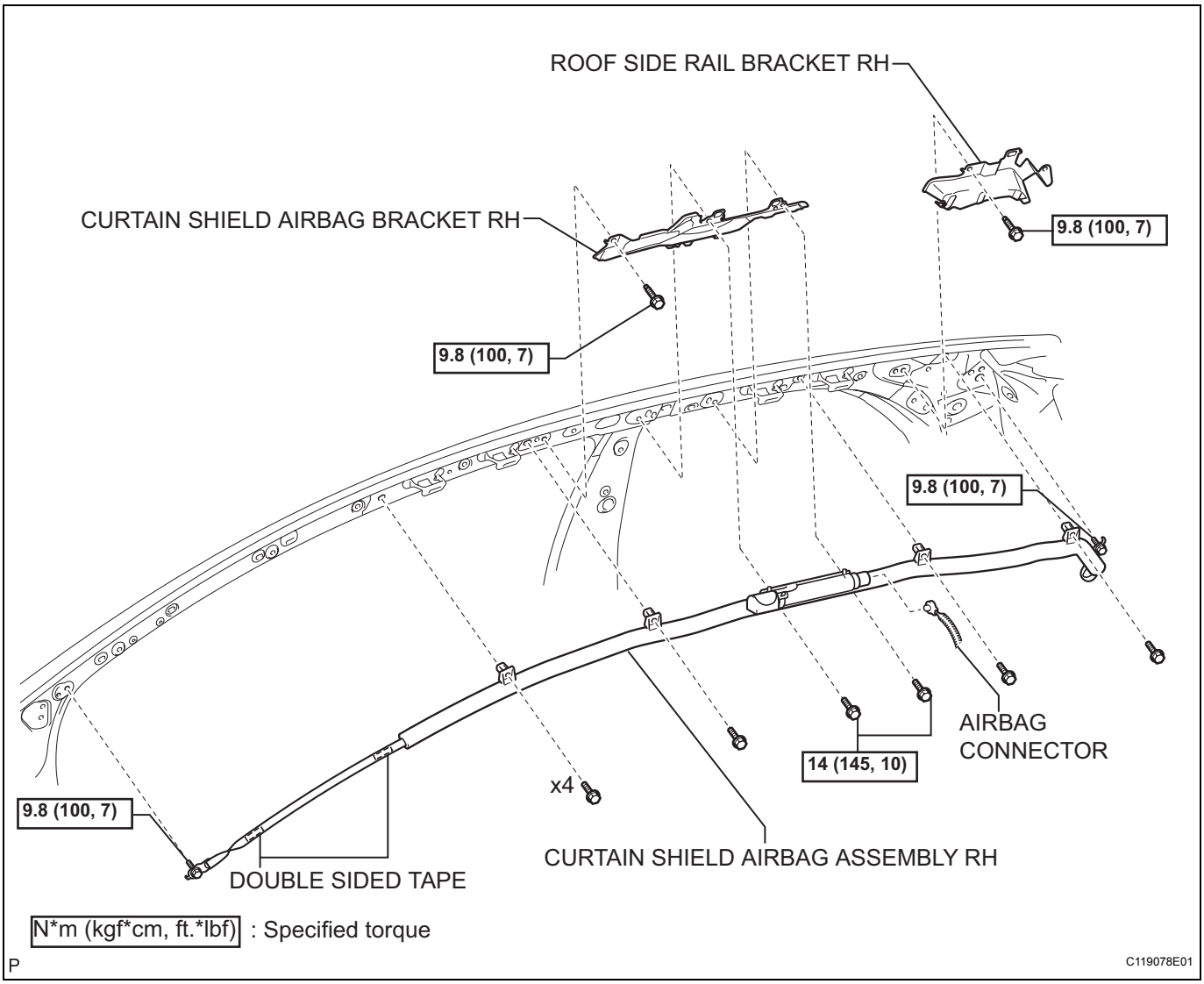
ROOF SIDE RAIL BRACKET RH
CURTAIN SHIELD AIRBAG BRACKET RH
9.8 (100, 7)
9.8 (100, 7)
9.8 (100, 7)
AIRBAG CONNECTOR
14 (145, 10)
x4
9.8 (100, 7)
CURTAIN SHIELD AIRBAG ASSEMBLY RH
DOUBLE SIDED TAPE
N*m (kgf*cm, ft.*lbf) : Specified torque
P
C119078E01

ON-VEHICLE INSPECTION

1. INSPECT CURTAIN SHIELD AIRBAG ASSEMBLY (for Vehicle not Involved in Collision)

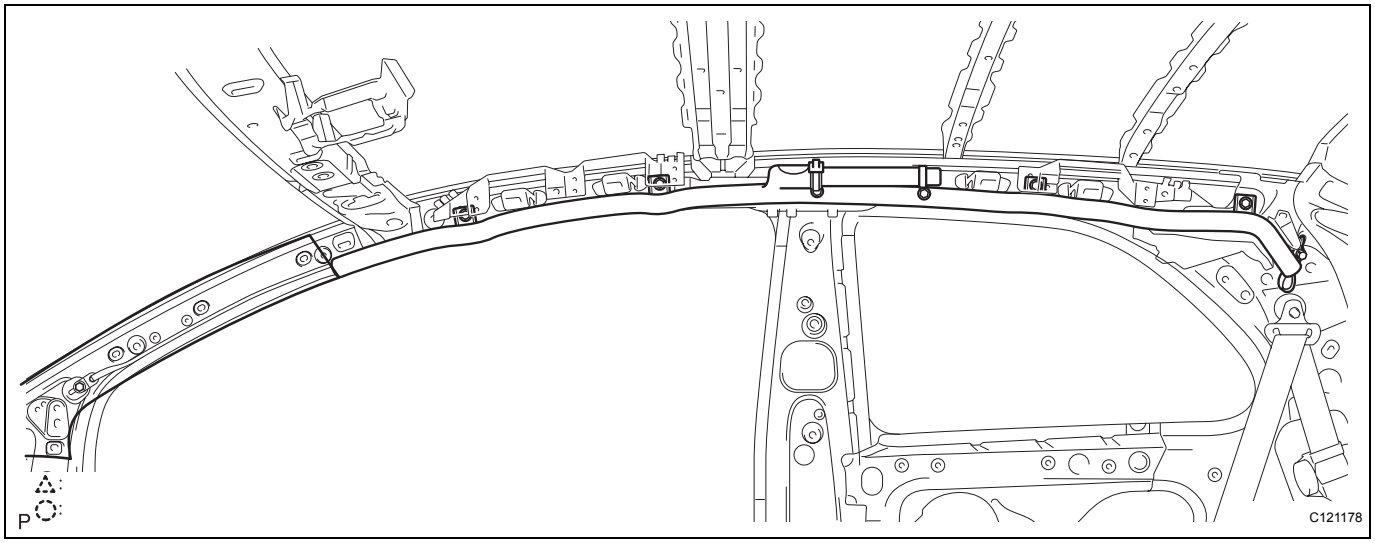

(a) Perform a diagnostic system check (See page RS-38).

(b) With the curtain shield airbag installed on the vehicle, perform a visual check. If there are any defects, such as those mentioned below, replace the front pillar garnish or roof headlining with a new one:
Any cuts, minute cracks or marked discoloration on the front pillar garnish and roof headlining around the curtain shield airbag.

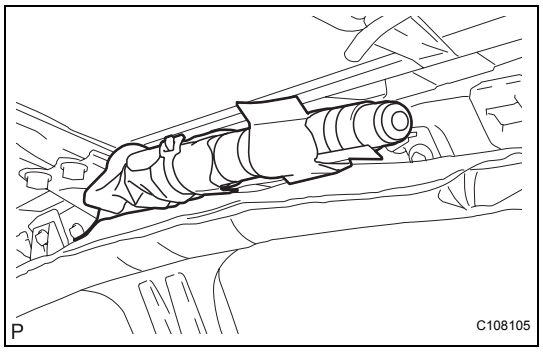

2. INSPECT CURTAIN SHIELD AIRBAG ASSEMBLY (for Vehicle Involved in Collision and Airbag not Deployed)

CAUTION:
For curtain shield airbag removal and installation procedures, see pages RS-409 and RS-413, and carefully follow the correct procedure.

(a) Perform a diagnostic system check (See page RS-38).

(b) With the curtain shield airbag removed from the vehicle, perform a visual check. If there are any defects, such as those mentioned below, replace the curtain shield airbag with a new one:
- Any cuts, minute cracks or marked discoloration on the curtain shield airbag.
- Any cracks or other damage to the connector.

RS

REMOVAL

CAUTION:
Some of these service operations affect the SRS airbag system. Read the precautionary notices concerning the SRS airbag system before servicing (See page RS-1).
NOTICE:
Always use "Torx" socket wrench E10 when removing the rear seat.
HINT:
The procedure described below is for the RH side. Use the same procedure for both the RH and LH sides, unless otherwise specified.

1. **DISCONNECT CABLE FROM NEGATIVE BATTERY TERMINAL**
2. **REMOVE PACKAGE TRAY TRIM PANEL ASSEMBLY (See page IR-48)**
3. **REMOVE DECK BOARD SUB-ASSEMBLY (See page IR-48)**
4. **REMOVE DECK FLOOR BOX RH (See page IR-48)**
5. **REMOVE DECK FLOOR BOX LH (See page IR-48)**
6. **REMOVE NO. 1 REAR SEAT LEG COVER (for 60/40 Split Seat Type) (See page IR-96)**
7. **REMOVE NO. 2 REAR SEAT LEG COVER (for 60/40 Split Seat Type) (See page SE-70)**
8. **REMOVE REAR SEAT ASSEMBLY RH (for 60/40 Split Seat Type) (See page SE-89)**
9. **REMOVE REAR SEAT ASSEMBLY LH (for 60/40 Split Seat Type) (See page SE-71)**
10. **REMOVE REAR SEAT CUSHION COVER PAD SUB-ASSEMBLY (for Hold Down Seat Type) (See page SE-114)**
11. **REMOVE REAR SEATBACK ASSEMBLY (for Hold Down Seat Type) (See page SE-115)**
12. **REMOVE FRONT DOOR SCUFF PLATE RH (See page IR-97)**
13. **REMOVE FRONT DOOR SCUFF PLATE LH (See page IR-97)**
14. **REMOVE INSTRUMENT PANEL UNDER COVER SUB-ASSEMBLY RH (See page IR-50)**
15. **REMOVE INSTRUMENT PANEL UNDER COVER SUB-ASSEMBLY LH (See page IR-50)**
16. **REMOVE COWL SIDE TRIM BOARD RH (See page IR-50)**
17. **REMOVE COWL SIDE TRIM BOARD LH (See page IR-50)**

18. REMOVE FRONT DOOR OPENING TRIM WEATHERSTRIP RH (See page IR-97)
19. REMOVE FRONT DOOR OPENING TRIM WEATHERSTRIP LH (See page IR-97)
20. REMOVE FRONT QUARTER TRIM PANEL ASSEMBLY RH (See page IR-97)
21. REMOVE FRONT QUARTER TRIM PANEL ASSEMBLY LH (See page IR-97)
22. REMOVE REAR DECK TRIM COVER (See page IR-49)
23. REMOVE REAR SEAT OUTER BELT ASSEMBLY RH (See page IR-98)
24. REMOVE REAR SEAT OUTER BELT ASSEMBLY LH (See page IR-98)
25. REMOVE DECK SIDE TRIM PANEL ASSEMBLY RH (See page IR-98)
26. REMOVE DECK SIDE TRIM PANEL ASSEMBLY LH (See page IR-98)
27. REMOVE SEAT BELT ANCHOR COVER CAP (See page IR-99)
28. REMOVE FRONT SEAT OUTER BELT ASSEMBLY RH (See page IR-99)
29. REMOVE FRONT SEAT OUTER BELT ASSEMBLY LH (See page IR-99)
30. REMOVE CENTER PILLAR UPPER GARNISH RH (See page IR-99)
31. REMOVE CENTER PILLAR UPPER GARNISH LH (See page IR-99)
32. REMOVE REAR CENTER SEAT OUTER BELT ASSEMBLY (See page IR-52)
33. REMOVE ROOF SIDE INNER GARNISH RH (See page IR-99)
34. REMOVE ROOF SIDE INNER GARNISH LH (See page IR-100)
35. REMOVE REAR ROOF SIDE RAIL GARNISH RH (See page IR-100)
36. REMOVE REAR ROOF SIDE RAIL GARNISH LH (See page IR-100)
37. REMOVE SEAT BELT ANCHOR COVER (See page SB-159)
38. REMOVE ASSIST GRIP COVER (See page IR-55)
39. REMOVE ASSIST GRIP SUB-ASSEMBLY (See page IR-56)
40. REMOVE VISOR ASSEMBLY RH (See page IR-56)
41. REMOVE VISOR ASSEMBLY LH (See page IR-56)

RS

42. **REMOVE VISOR HOLDER RH (See page IR-56)**
43. **REMOVE VISOR HOLDER LH (See page IR-56)**
44. **REMOVE ROOM LIGHT ASSEMBLY (See page IR-57)**
45. **REMOVE MAP LIGHT ASSEMBLY (See page IR-58)**
46. **REMOVE FRONT PILLAR GARNISH RH (See page IR-58)**
47. **REMOVE FRONT PILLAR GARNISH LH (See page IR-59)**
48. **REMOVE INSTRUMENT PANEL FINISH PANEL END LH (See page ME-145)**
49. **REMOVE INSTRUMENT PANEL FINISH PANEL END RH (See page ME-145)**
50. **REMOVE INSTRUMENT CLUSTER FINISH PANEL (See page ME-145)**
51. **REMOVE COMBINATION METER ASSEMBLY (See page ME-146)**
52. **REMOVE GLOVE COMPARTMENT DOOR ASSEMBLY (See page IP-20)**
53. **REMOVE NO. 1 SWITCH HOLE BASE (See page IP-20)**
54. **REMOVE UPPER INSTRUMENT PANEL SUB-ASSEMBLY (See page IP-21)**
55. **REMOVE INSTRUMENT PANEL BOX (See page IP-70)**
56. **REMOVE ROOF HEADLINING ASSEMBLY (See page IR-101)**
57. **REMOVE CURTAIN SHIELD AIRBAG ASSEMBLY RH**
    (a) Using a thin-bladed screwdriver, release the locking button.
    (b) Using a thin-bladed screwdriver, detach the airbag connector.
    (c) Loosen the 2 bolts.
    (d) Disengage the 2 hooks.
    (e) Remove the 2 bolts and 4 screws.

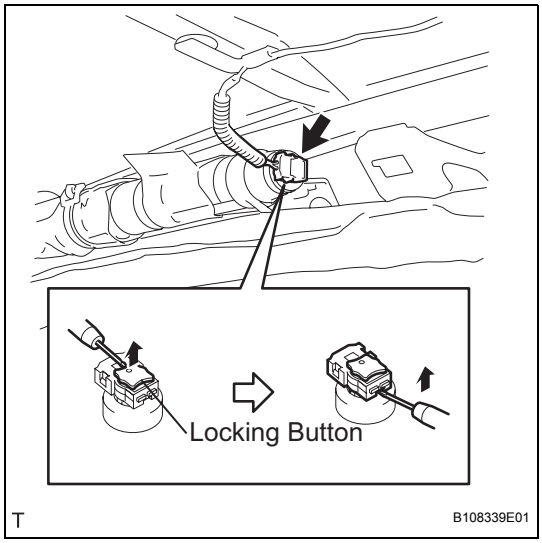

(f) Using a screwdriver, disengage the 4 clips and remove the curtain airbag.

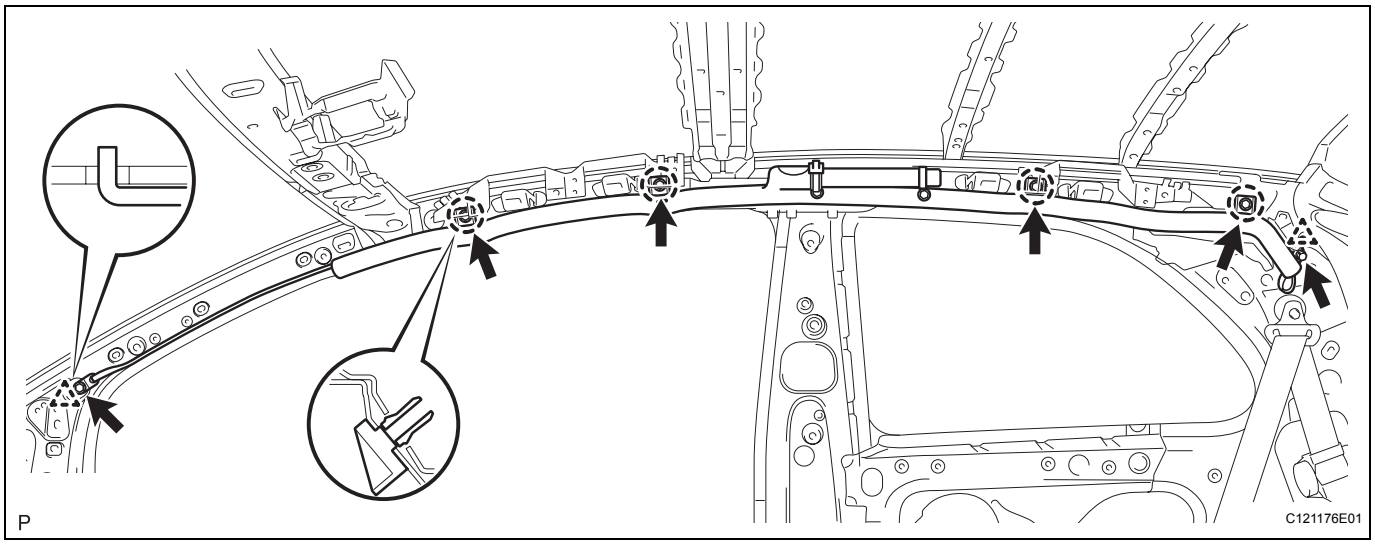

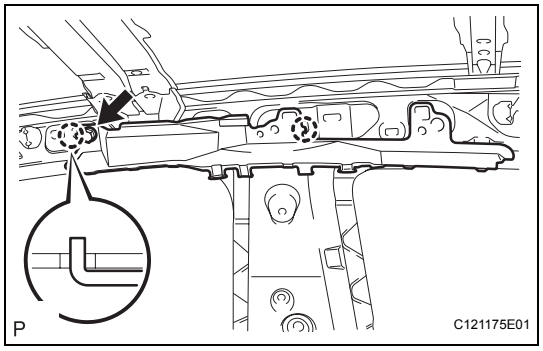

58. REMOVE CURTAIN SHIELD AIRBAG BRACKET RH

(a) Remove the bolt, disengage the 2 hooks and remove the curtain shield airbag bracket.

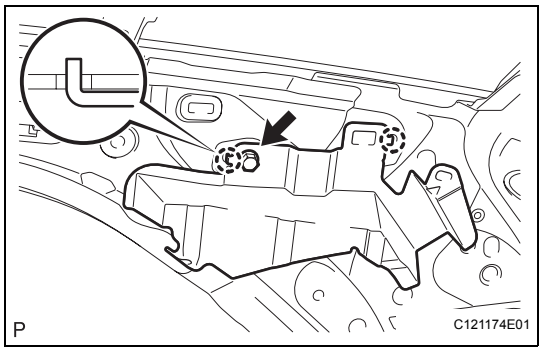

59. REMOVE ROOF SIDE RAIL BRACKET RH

(a) Remove the wire harness clamp.

(b) Remove the bolt, disengage the 2 hooks and remove the roof side rail bracket.

RS

INSTALLATION

CAUTION:
Some of these service operations affect the SRS airbag system. Read the precautionary notices concerning the SRS airbag system before servicing (See page RS-1).
NOTICE:
Always use "Torx" socket wrench E10 when installing the rear seat.
HINT:
The procedure described below is for the RH side. Use the same procedure for both the RH and LH sides, unless otherwise specified.

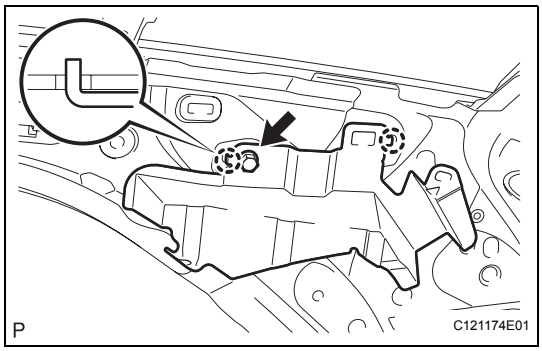

1. INSTALL ROOF SIDE RAIL BRACKET RH
(a) Insert the 2 hooks into the body holes and install the roof side rail bracket.
Torque: 9.8 N*m (100 kgf*cm, 7 ft.*lbf)
(b) Install the wire harness clamp.

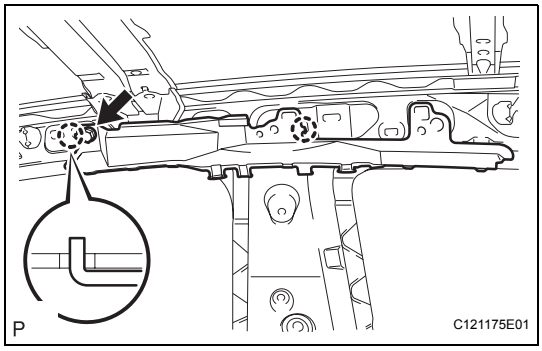

2. INSTALL CURTAIN SHIELD AIRBAG BRACKET RH
(a) Insert the 2 hooks into the body holes and install the curtain shield airbag bracket.
Torque: 9.8 N*m (100 kgf*cm, 7 ft.*lbf)

3. INSTALL CURTAIN SHIELD AIRBAG ASSEMBLY RH
(a) Tighten the 2 bolts A.
Torque: 14 N*m (145 kgf*cm, 10 ft.*lbf)
(b) Tighten the 4 screws B.
(c) Install front strap C.
NOTICE:
Attach double sided tape to the indicated area, with the strap pulled downward. When installing the strap, make sure that the front pillar garnish installation holes are not hidden by the strap of the curtain shield airbag.

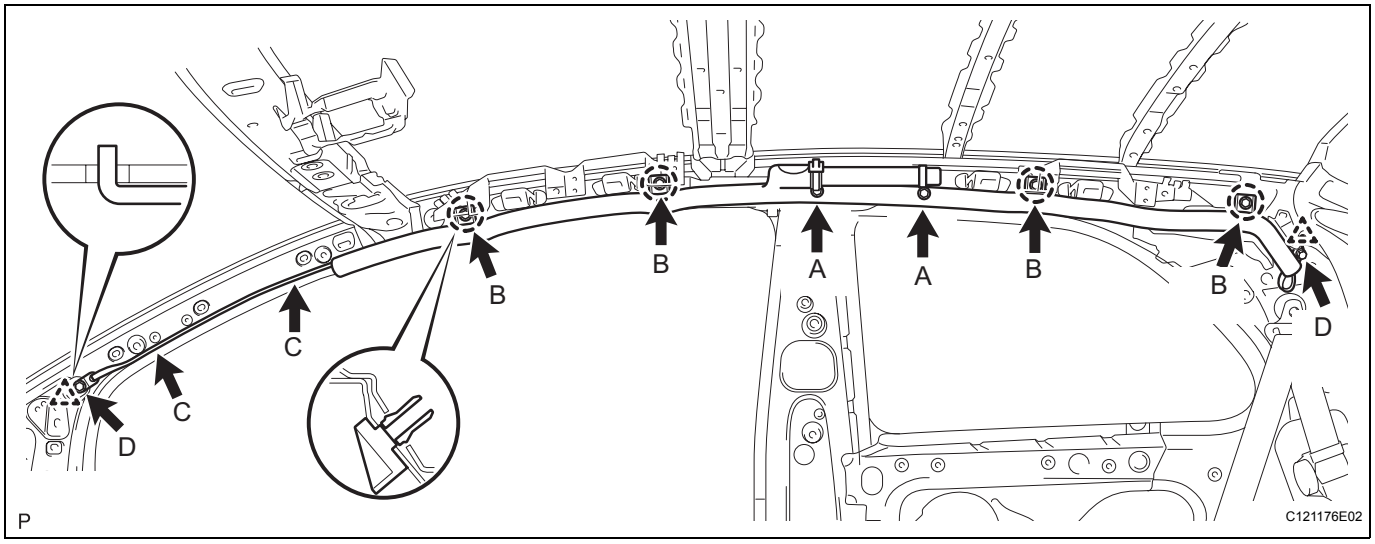

(d) Tighten the 2 bolts D.
Torque: 9.8 N*m (100 kgf*cm, 7 ft.*lbf)

(e) Connect the airbag connector.
NOTICE:
Lock the locking button securely.

4. **INSTALL ROOF HEADLINING ASSEMBLY (See page IR-113)**
5. **INSTALL INSTRUMENT PANEL BOX (See page IP-78)**
6. **INSTALL UPPER INSTRUMENT PANEL SUB-ASSEMBLY (See page IP-29)**
7. **INSTALL NO. 1 SWITCH HOLE BASE (See page IP-32)**
8. **INSTALL GLOVE COMPARTMENT DOOR ASSEMBLY (See page IP-32)**
9. **INSTALL COMBINATION METER ASSEMBLY (See page ME-148)**
10. **INSTALL INSTRUMENT CLUSTER FINISH PANEL (See page ME-148)**
11. **INSTALL INSTRUMENT PANEL FINISH PANEL END RH (See page ME-149)**
12. **INSTALL INSTRUMENT PANEL FINISH PANEL END LH (See page ME-149)**
13. **INSTALL FRONT PILLAR GARNISH RH (See page IR-71)**
14. **INSTALL FRONT PILLAR GARNISH LH (See page IR-72)**
15. **INSTALL MAP LIGHT ASSEMBLY (See page IR-73)**
16. **INSTALL ROOM LIGHT ASSEMBLY (See page IR-74)**
17. **INSTALL VISOR HOLDER RH (See page IR-75)**
18. **INSTALL VISOR HOLDER LH (See page IR-75)**
19. **INSTALL VISOR ASSEMBLY RH (See page IR-75)**

20. **INSTALL VISOR ASSEMBLY LH (See page IR-75)**
21. **INSTALL ASSIST GRIP SUB-ASSEMBLY (See page IR-75)**
22. **INSTALL SEAT BELT ANCHOR COVER (See page IR-75)**
23. **INSTALL REAR ROOF SIDE RAIL GARNISH RH (See page IR-115)**
24. **INSTALL REAR ROOF SIDE RAIL GARNISH LH (See page IR-115)**
25. **INSTALL ROOF SIDE INNER GARNISH RH (See page IR-115)**
26. **INSTALL ROOF SIDE INNER GARNISH LH (See page IR-116)**
27. **INSTALL REAR CENTER SEAT OUTER BELT ASSEMBLY (See page IR-78)**
28. **INSTALL CENTER PILLAR UPPER GARNISH RH (See page IR-116)**
29. **INSTALL CENTER PILLAR UPPER GARNISH LH (See page IR-116)**
30. **INSTALL FRONT SEAT OUTER BELT ASSEMBLY RH (See page IR-117)**
31. **INSTALL FRONT SEAT OUTER BELT ASSEMBLY LH (See page IR-117)**
32. **INSTALL SEAT BELT ANCHOR COVER CAP (See page IR-117)**
33. **INSTALL DECK SIDE TRIM PANEL ASSEMBLY RH (See page IR-117)**
34. **INSTALL DECK SIDE TRIM PANEL ASSEMBLY LH (See page IR-118)**
35. **INSTALL REAR SEAT OUTER BELT ASSEMBLY RH (See page IR-118)**
36. **INSTALL REAR SEAT OUTER BELT ASSEMBLY LH (See page IR-118)**
37. **INSTALL REAR DECK TRIM COVER (See page IR-82)**
38. **INSTALL FRONT QUARTER TRIM PANEL ASSEMBLY RH (See page IR-118)**
39. **INSTALL FRONT QUARTER TRIM PANEL ASSEMBLY LH (See page IR-119)**
40. **INSTALL FRONT DOOR OPENING TRIM WEATHERSTRIP RH (See page IR-119)**
41. **INSTALL FRONT DOOR OPENING TRIM WEATHERSTRIP LH (See page IR-119)**
42. **INSTALL COWL SIDE TRIM BOARD RH (See page IR-81)**

43. **INSTALL COWL SIDE TRIM BOARD LH (See page IR-81)**
44. **INSTALL INSTRUMENT PANEL UNDER COVER SUB-ASSEMBLY RH (See page IR-81)**
45. **INSTALL INSTRUMENT PANEL UNDER COVER SUB-ASSEMBLY LH (See page IR-82)**
46. **INSTALL FRONT DOOR SCUFF PLATE RH (See page IR-119)**
47. **INSTALL FRONT DOOR SCUFF PLATE LH (See page IR-119)**
48. **INSTALL REAR SEAT ASSEMBLY LH (for 60/40 Split Seat Type) (See page SE-84)**
49. **INSTALL REAR SEAT ASSEMBLY RH (for 60/40 Split Seat Type) (See page SE-102)**
50. **INSTALL NO. 2 REAR SEAT LEG COVER (for 60/40 Split Seat Type) (See page SE-85)**
51. **INSTALL NO. 1 REAR SEAT LEG COVER (for 60/40 Split Seat Type) (See page SE-85)**
52. **INSTALL REAR SEAT CUSHION COVER PAD SUB-ASSEMBLY (for Hold Down Seat Type) (See page SE-123)**
53. **INSTALL REAR SEATBACK ASSEMBLY (for Hold Down Seat Type) (See page SE-122)**
54. **INSTALL DECK FLOOR BOX RH (See page IR-83)**
55. **INSTALL DECK FLOOR BOX LH (See page IR-83)**
56. **INSTALL DECK BOARD SUB-ASSEMBLY (See page IR-83)**
57. **INSTALL PACKAGE TRAY TRIM PANEL ASSEMBLY (See page IR-83)**
58. **CONNECT CABLE TO NEGATIVE BATTERY TERMINAL**
    Torque: 5.4 N*m (55 kgf*cm, 48 in.*lbf)
59. **INSPECT SRS WARNING LIGHT**
    (See page RS-31)

RS

RS

DISPOSAL

HINT:

- Disposal procedure for the RH side is the same as that for the LH side.
- The procedure described below is for the RH side.
- When scrapping a vehicle equipped with the SRS or disposing of a curtain shield airbag, deploy the airbag first, in accordance with the procedure described below. If any abnormality occurs with the airbag deployment, contact the SERVICE DEPT. of the DISTRIBUTOR.

CAUTION:

- **Never dispose of a curtain shield airbag that has an undeployed airbag.**
- **The airbag emits an exploding sound when it is deployed, so perform the operation outdoors and where it will not create a nuisance to nearby residents.**
- **When deploying the airbag, always use the specified SST (SRS Airbag Deployment Tool). Perform the operation in a place away from electrical noise.**
- **When deploying the airbag, perform the operation at least 10 m (33 ft) away from the curtain shield airbag.**
- **The curtain shield airbag becomes extremely hot when the airbag is deployed, so do not touch it for at least 30 minutes after deployment.**
- **Use gloves and safety glasses when handling a curtain shield airbag which has been deployed.**
- **Do not apply water, etc. to a curtain shield airbag which has been deployed.**
- **Always wash your hands with water after completing the operation.**

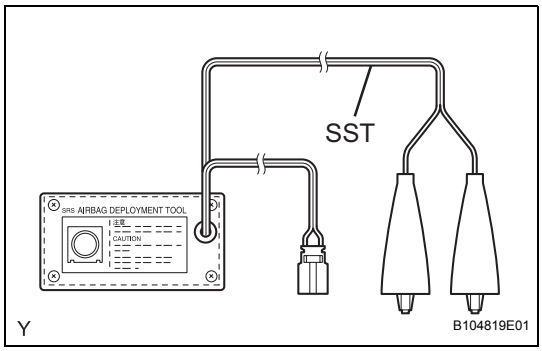

1. DISPOSE OF CURTAIN SHIELD AIRBAG ASSEMBLY (WHEN INSTALLED IN VEHICLE)

HINT:

Prepare a battery as the power source to deploy the airbag.

(a) Check the function of SST.

SST 09082-00700

CAUTION:

Always use the specified SST (SRS Airbag Deployment Tool) when deploying the airbag.

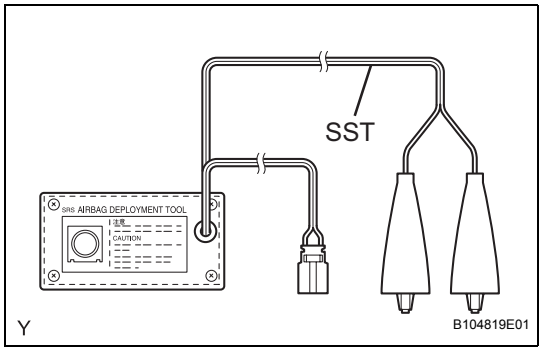

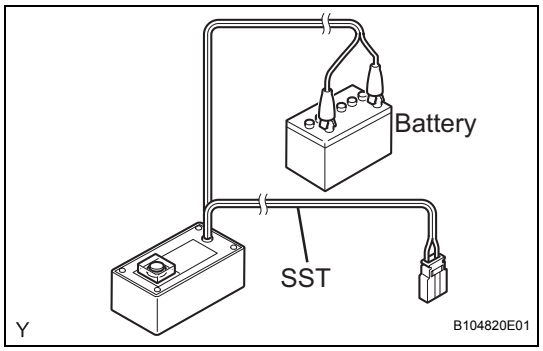

(1) Connect the red clip of SST to the positive battery terminal and the black clip of SST to the negative battery terminal.

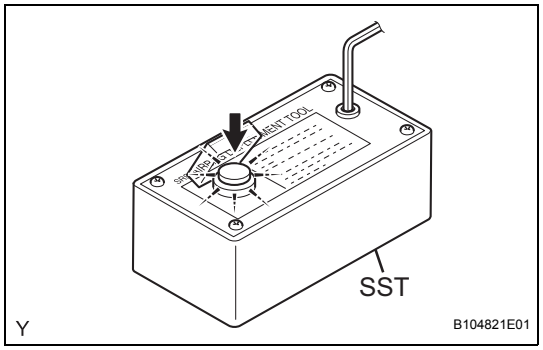

(2) Press the SST activation switch, and check that the LED of the SST activation switch illuminates.
NOTICE:
- **Do not connect the SST connector (yellow colored one) to the airbag.**
- **If the LED illuminates when the activation switch is not pressed, SST may be malfunctioning. Do not use SST.**

(3) Disconnect SST from the battery.

(b) Disconnect the cable from the negative battery terminal.

(c) Remove the roof headlining (See page IR-96).

(d) Disconnect the airbag connector, as shown in the illustration.
NOTICE:
Do not damage the airbag wire harness when handling the airbag connector.

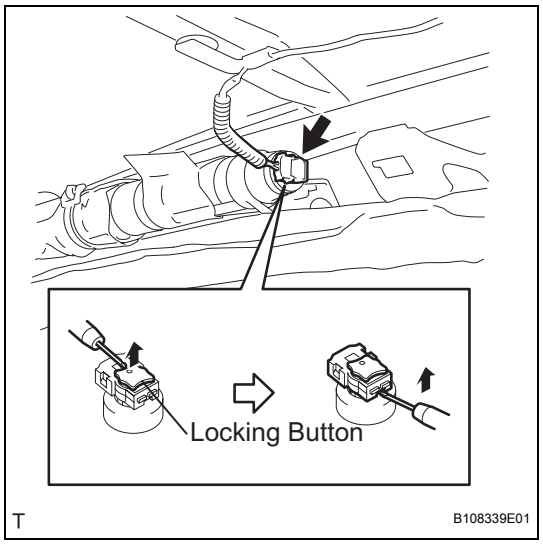

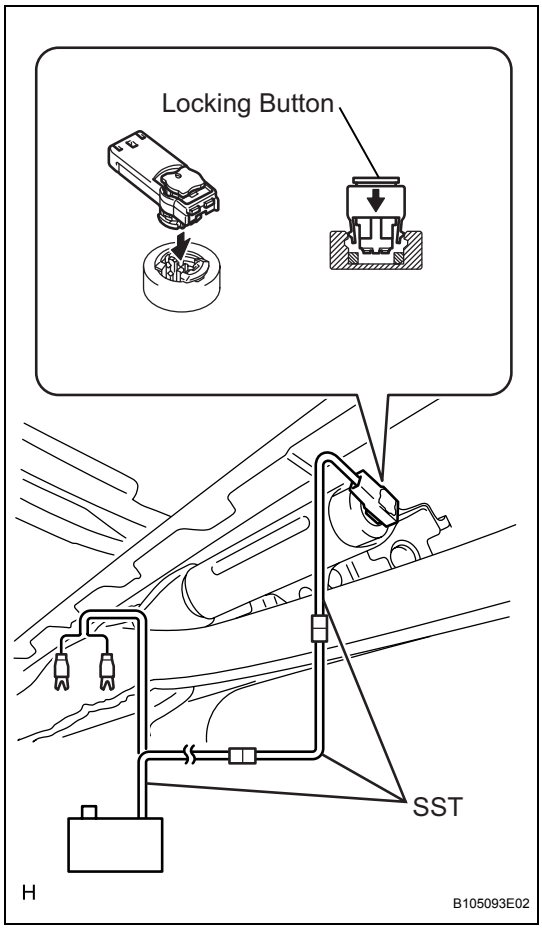

(e) Connect SST.

SST 09082-00700, 09082-00802 (09082-10801, 09082-20801)

(1) After connecting SST, connect it to the curtain shield airbag.

NOTICE:

Do not lock the secondary lock of the twin lock to avoid damaging the SST connector and wire harness.

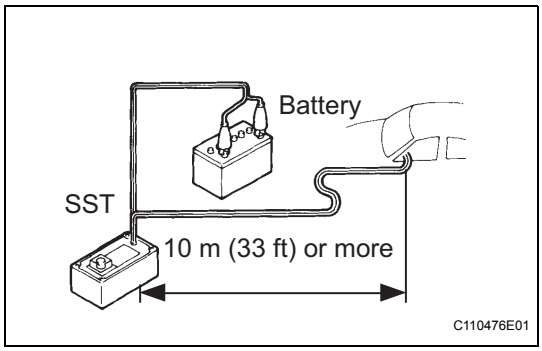

(2) Move SST to at least 10 m (33 ft) away from the vehicle.

(3) Close all doors and windows of the vehicle.

NOTICE:

Do not damage the SST wire harness.

(4) Connect the red clip of SST to the positive battery terminal and the black clip of SST to the negative battery terminal.

(f) Deploy the airbag.

(1) Check that no one is inside the vehicle or within a 10 m (33 ft) radius of the vehicle.

(2) Press the SST activation switch and deploy the airbag.

CAUTION:

- **When deploying the airbag, make sure that no one is near the vehicle.**
- **The curtain shield airbag becomes extremely hot when the airbag is deployed, so do not touch it for at least 30 minutes after deployment.**
- **Use gloves and safety glasses when handling a curtain shield airbag which has been deployed.**
- **Do not apply water, etc. to a curtain shield airbag which has been deployed.**
- **Always wash your hands with water after completing the operation.**

HINT:
The airbag is deployed as the LED of the SST activation switch illuminates.

2. DISPOSE OF CURTAIN SHIELD AIRBAG ASSEMBLY (WHEN NOT INSTALLED IN VEHICLE)

NOTICE:

- **Never use the customer's vehicle to deploy the airbag when disposing of a curtain shield airbag.**
- **Follow the procedure detailed below when deploying the airbag.**

HINT:
Prepare a battery as the power source to deploy the airbag.

(a) Check the function of SST.
SST 09082-00700
CAUTION:
Always use the specified SST (SRS Airbag Deployment Tool) when deploying the airbag.

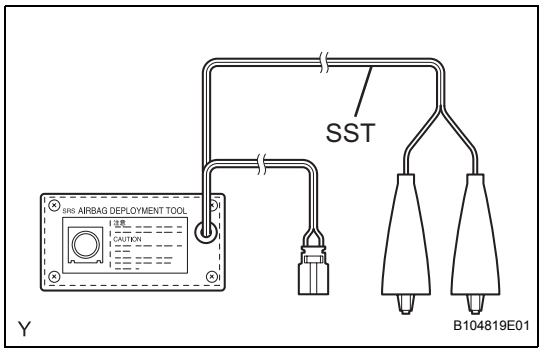

(1) Connect the red clip of SST to the positive battery terminal and the black clip of SST to the negative battery terminal.

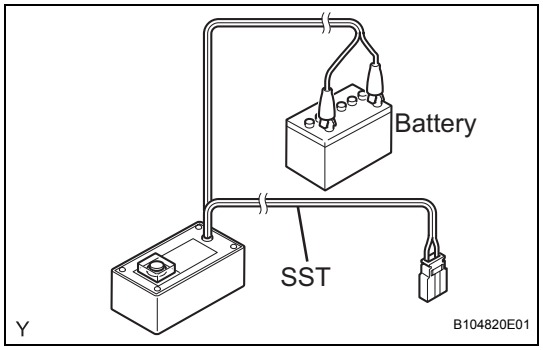

(2) Press the SST activation switch, and check that the LED of the SST activation switch illuminates.
NOTICE:

- **Do not connect the SST connector (yellow colored one) to the airbag.**
- **If the LED illuminates when the activation switch is not pressed, SST may be malfunctioning. Do not use SST.**

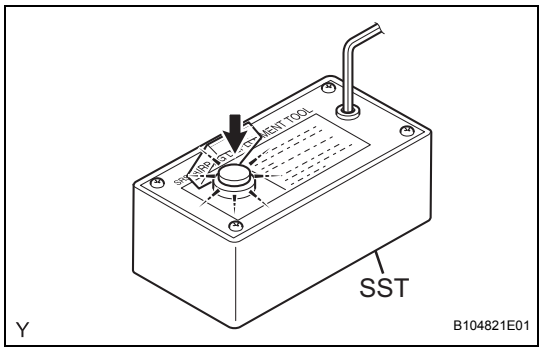

(3) Disconnect SST from the battery.

(b) Remove the curtain shield airbag (see page RS-409).

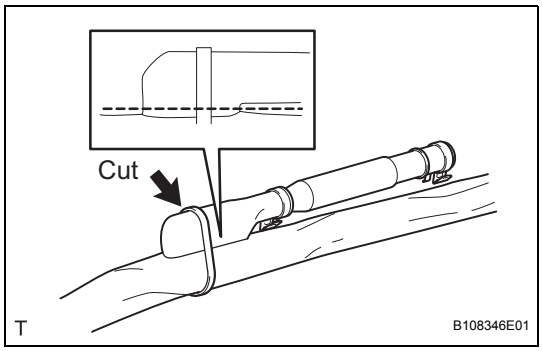

(c) Cut off the deployment section of the curtain shield airbag.

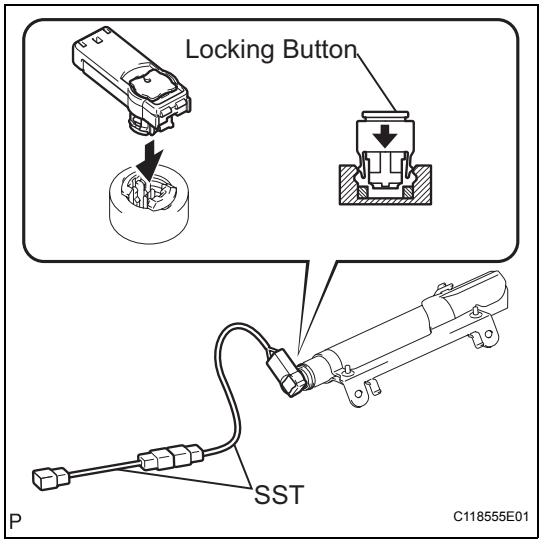

(d) Connect SST.
SST 09082-00802 (09082-10801, 09082-20801)
(1) After connecting SST, connect it to the curtain shield airbag.
NOTICE:
Do not lock the secondary lock of the twin lock to avoid damaging the SST connector and wire harness.

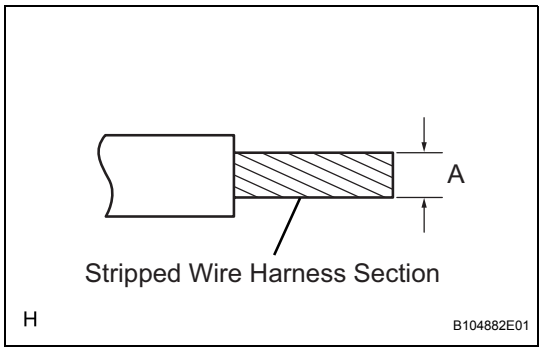

(e) Using a service-purpose wire harness for the vehicle, tie the curtain shield airbag to the tire.
Stripped wire harness section:

Area	Measurement
A	1.25 mm^2 or more (0.0019 $in.^2$ or more)

CAUTION:
Do not use wire harness that is too thin or any other object to tie the curtain shield airbag because it may snap due to the shock when the airbag is deployed. Always use a wire harness for vehicle use with a cross section of at least 1.25 mm^2 (0.0019 $in.^2$).
HINT:
To calculate the area of the stripped wire harness cross section:
Area = 3.14 x $(Diameter)^2$ divided by 4

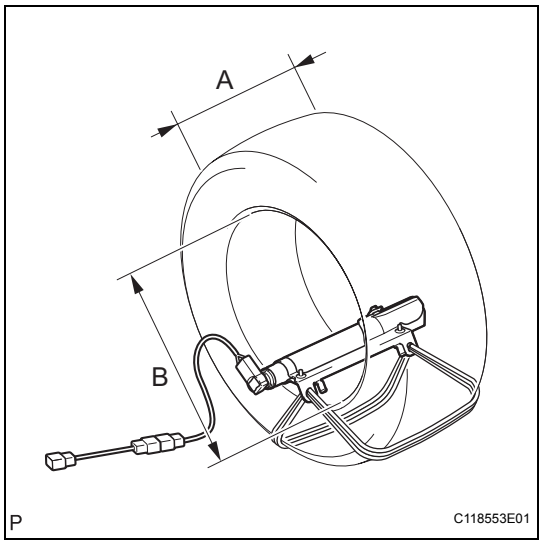

(1) Position the curtain shield airbag inside the tire, as shown in the illustration.

Tire size:

Area	Measurement
A	185 mm (7.28 in.)
B	360 mm (14.17 in.)

CAUTION:
Make sure that the wire harnesses are tight. If there is any slack in the wire harnesses, the curtain shield airbag may become loose due to the shock when the airbag is deployed.
NOTICE:
The tire will be marked by the airgbag deployment, so use a waste tire.

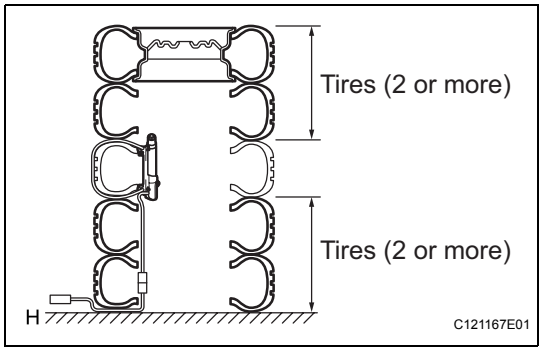

(f) Place the tires.

CAUTION:
Do not place the curtain shield airbag with the deployment direction facing toward the ground.

(1) Place at least 2 tires under the tire to which the curtain shield airbag is tied.
(2) Place at least 2 tires over the tire to which the curtain shield airbag is tied. The disc wheel should be installed on the top tire.

NOTICE:
Do not place the SST connector under the tire because it could be damaged.

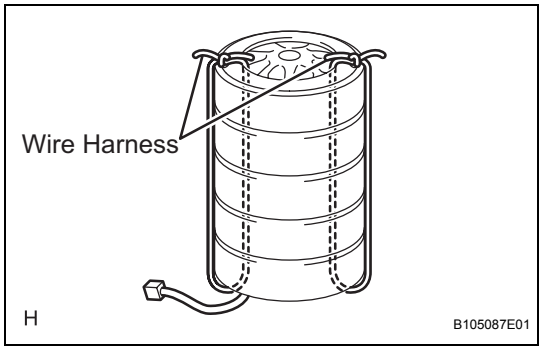

(3) Tie the tires together with 2 wire harnesses.

CAUTION:
Make sure that the wire harnesses are tight. It is highly dangerous when a loose wire harness results in the tires coming free due to the shock when the airbag is deployed.

RS

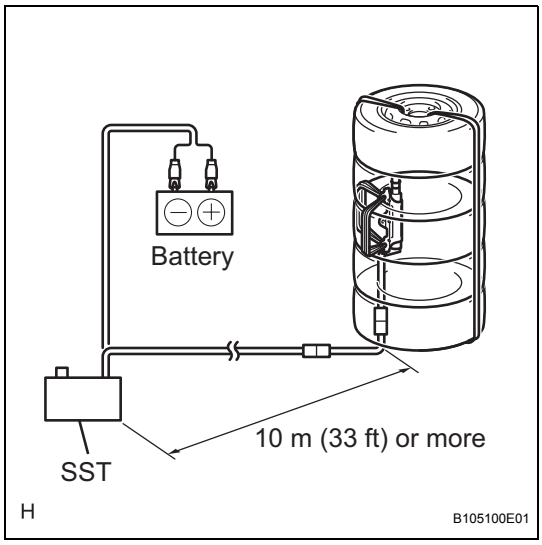

(g) Connect SST.
SST 09082-00700
NOTICE:
Do not lock the secondary lock of the twin lock to avoid damaging the SST connector and wire harness. Also, secure some slack for the SST wire harness inside the tire.

(h) Deploy the airbag.
(1) Connect the red clip of SST to the positive battery terminal and the black clip of SST to the negative battery terminal.
(2) Check that no one is within a 10 m (33 ft) radius of the tire to which the curtain shield airbag is tied.
(3) Press the SST activation switch and deploy the airbag.
CAUTION:
Make sure that no one is near the tire when deploying the airbag.
HINT:
The airbag is deployed as the LED of the SST activation switch illuminates.

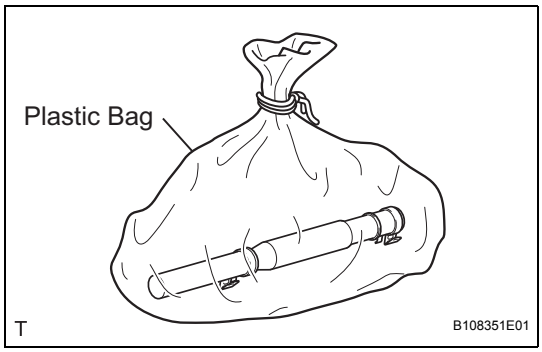

(i) Dispose of the curtain shield airbag.
CAUTION:
- **The curtain shield airbag becomes extremely hot when the airbag is deployed, so do not touch it for at least 30 minutes after deployment.**
- **Use gloves and safety glasses when handling a curtain shield airbag which has been deployed.**
- **Always wash your hands with water after completing the operation.**
- **Do not apply water, etc. to a curtain shield airbag which has been deployed.**

(1) Remove the curtain shield airbag from the tire.
(2) Place the curtain shield airbag in a plastic bag, tie it tightly and dispose of it in the same way as other general parts.

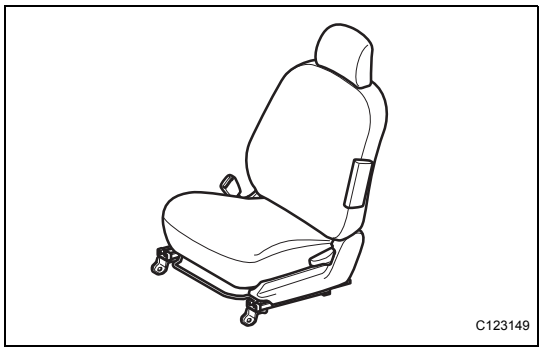

FRONT SEAT SIDE AIRBAG ASSEMBLY

ON-VEHICLE INSPECTION

1. **INSPECT FRONT SEAT SIDE AIRBAG ASSEMBLY (for Vehicle not Involved in Collision)**
   (a) Perform a diagnostic system check (See page RS-38).
   (b) With the front seat side airbag installed on the vehicle, perform a visual check. If there are any defects, such as those mentioned below, replace the front seat side airbag with a new one:
   Any cuts, minute cracks or marked discoloration on the front seat airbag.

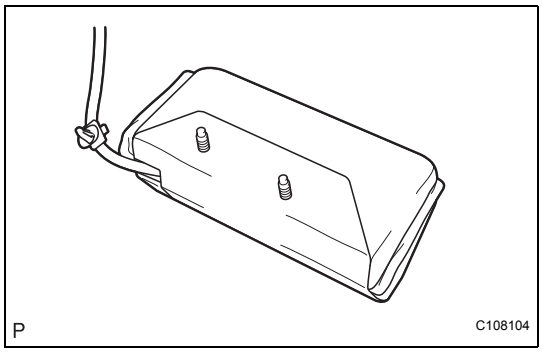

2. **INSPECT FRONT SEAT SIDE AIRBAG ASSEMBLY (for Vehicle Involved in Collision and Airbag not Deployed)**
   (a) Perform a diagnostic system check (See page RS-38).
   (b) With the front seat side airbag removed from the vehicle, perform a visual check. If there are any defects, such as those mentioned below, replace the front seat side airbag with a new one:
   - Any cuts, minute cracks or marked discoloration on the front seat airbag.
   - Any cracks or other damage to the wire harness or connector.

DISPOSAL

HINT:

- Disposal procedure for the RH side is the same as that for the LH side.
- The procedure described below is for the LH side.
- When scrapping a vehicle equipped with the SRS or disposing of the front seat side airbag, deploy the airbag first in accordance with the procedure described below. If any abnormality occurs with the airbag deployment, contact the SERVICE DEPT. of the DISTRIBUTOR.

CAUTION:

- **Never dispose of a front seat side airbag that has an undeployed airbag.**
- **The airbag emits an exploding sound when it is deployed, so perform the operation outdoors and where it will not create a nuisance to nearby residents.**
- **When deploying the airbag, always use the specified SST (SRS Airbag Deployment Tool). Perform the operation in a place away from electrical noise.**
- **When deploying the airbag, perform the operation at least 10 m (33 ft) away from the airbag.**
- **The front seat side airbag becomes extremely hot when the airbag is deployed, so do not touch it for at least 30 minutes after deployment.**
- **Use gloves and safety glasses when handling a front seat side airbag which has been deployed.**
- **Always wash your hands with water after completing the operation.**
- **Do not apply water, etc. to a front seat airbag which has been deployed.**

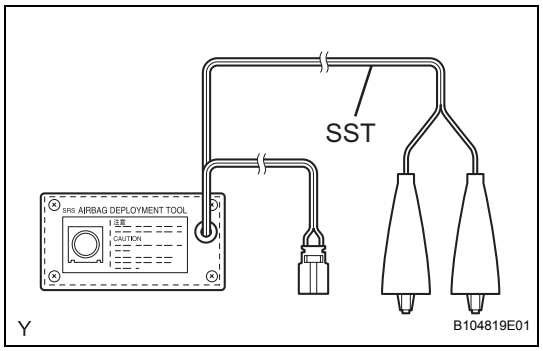

1. DISPOSE OF FRONT SEAT SIDE AIRBAG ASSEMBLY (WHEN INSTALLED IN VEHICLE)

HINT:

Prepare a battery as the power source to deploy the airbag.

(a) Check the function of SST.

SST 09082-00700

CAUTION:

Always use the specified SST (SRS Airbag Deployment Tool) when deploying the airbag.

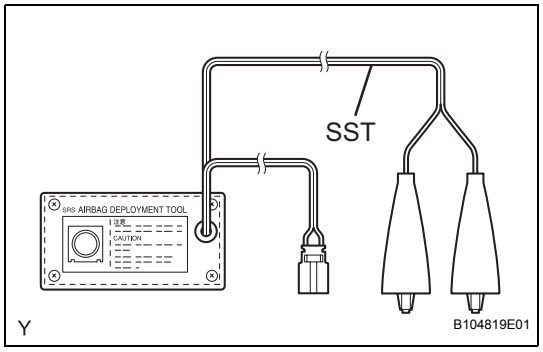

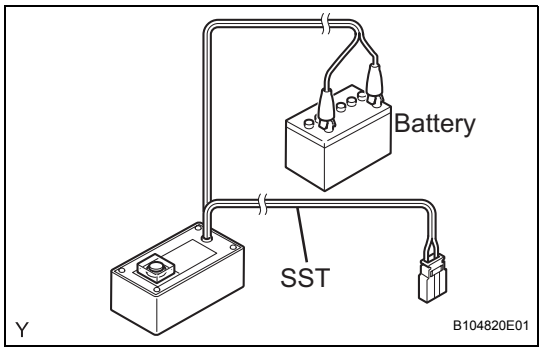

(1) Connect the red clip of SST to the positive battery terminal and the black clip of SST to the negative battery terminal.

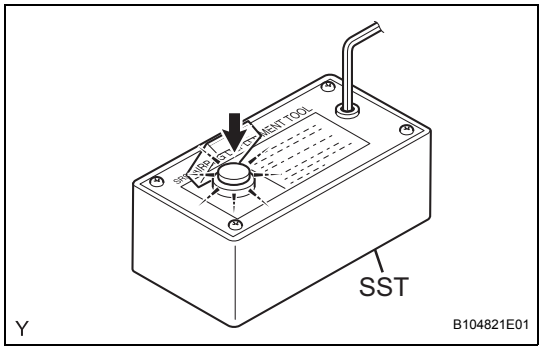

(2) Press the SST activation switch, and check that the LED of the SST activation switch illuminates.
CAUTION:
- **Do not connect the SST connector (yellow colored one) to the airbag.**
- **If the LED illuminates when the activation switch is not being pressed, SST may be malfunctioning. Do not to use SST.**

(3) Disconnect SST from the battery.

(b) Disconnect the cable from the negative battery terminal.

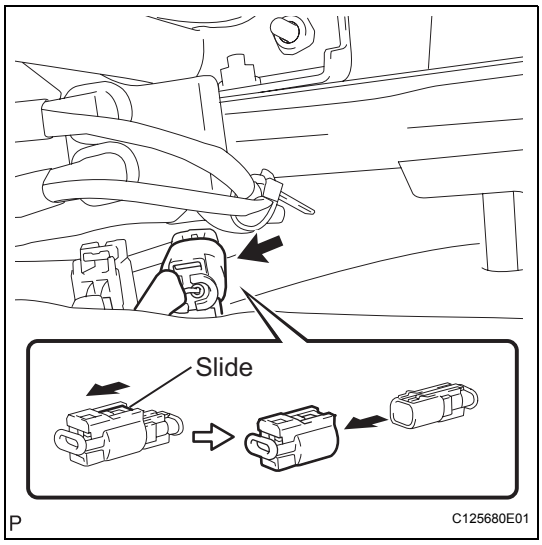

(c) Remove the connector clamp.

(d) Disconnect the airbag connector, as shown in the illustration.
NOTICE:
Do not damage the airbag wire harness when handling the airbag connector.

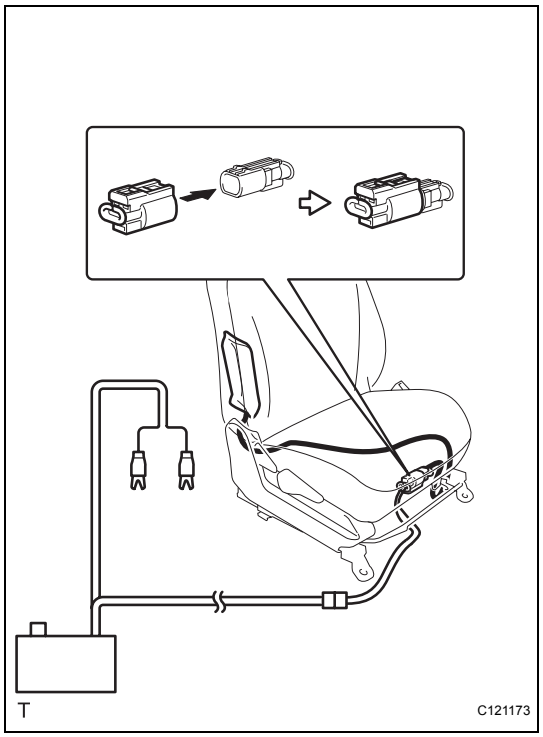

(e) Connect SST.
SST 09082-00700, 09082-00810
(1) Connect the SST connector to the front seat side airbag.
NOTICE:
Do not lock the secondary lock of the twin lock to avoid damaging SST connector and wire harness.

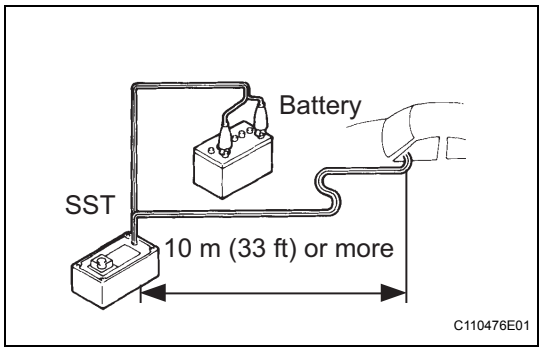

(2) Move SST to at least 10 m (33 ft) away from the vehicle.
(3) Close all doors and windows of the vehicle.
NOTICE:
Do not damage the SST wire harness.
(4) Connect the red clip of SST to the positive battery terminal and the black clip of SST to the negative battery terminal.

(f) Deploy the airbag.
(1) Check that no one is inside the vehicle or within a 10 m (33 ft) radius of the vehicle.
(2) Press the SST activation switch and deploy the airbag.
CAUTION:
- **Make sure that no one is near the vehicle when deploying the airbag.**
- **The front seat side airbag becomes extremely hot when the airbag is deployed, so do not touch it for at least 30 minutes after deployment.**
- **Use gloves and safety glasses when handling a front seat side airbag which has been deployed.**
- **Do not apply water, etc. to a front seat side airbag which has been deployed.**
- **Always wash your hands with water after completing the operation.**

HINT:
The airbag is deployed as the LED of the SST activation switch illuminations.

RS

2. DISPOSE OF FRONT SEAT SIDE AIRBAG ASSEMBLY (WHEN NOT INSTALLED IN VEHICLE)
SST 09082-00700, 09082-00760
NOTICE:
- **Never use the customer's vehicle to deploy the airbag when disposing of a front seat side airbag.**
- **Follow the procedure detailed below when deploying the airbag.**

HINT:
Prepare a battery as the power source to deploy the airbag.

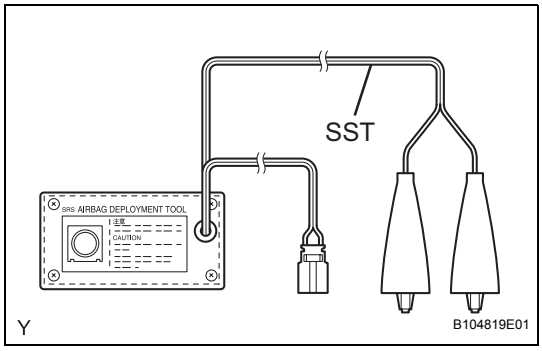

(a) Check the function of SST.
SST 09082-00700
CAUTION:
Always use the specified SST (SRS Airbag Deployment Tool) when deploying the airbag.

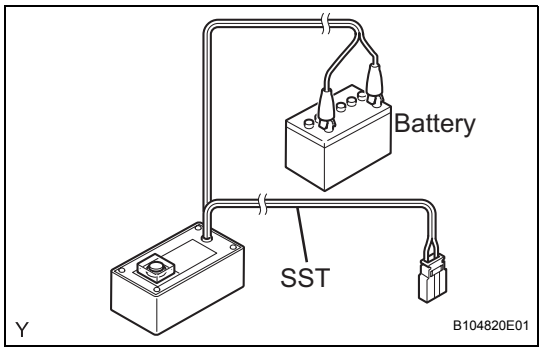

(1) Connect the red clip of SST to the positive battery terminal and the black clip of SST to the negative battery terminal.

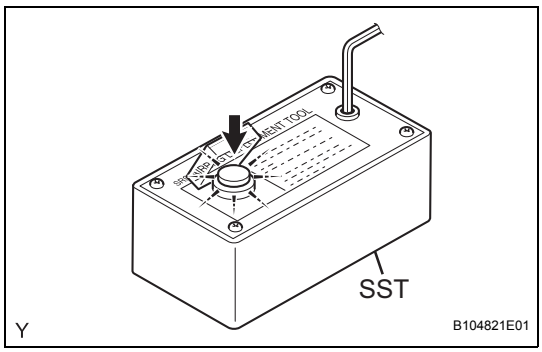

(2) Press the SST activation switch, and check that the LED of the SST activation switch illuminates.
CAUTION:
- **Do not connect the SST connector (yellow colored one) to the airbag.**
- **If the LED illuminates when the activation switch is not being pressed, SST may be malfunctioning. Do not use SST.**

(3) Disconnect SST from the battery.

(b) Remove the front seat side airbag (See page SE-29).

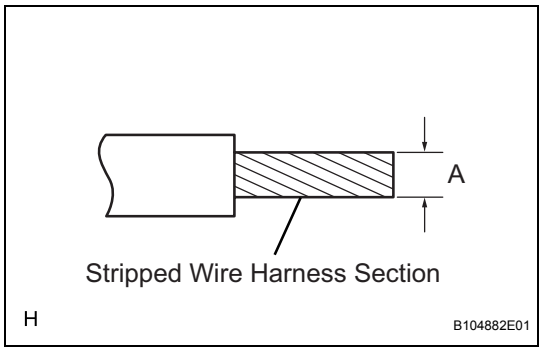

(c) Using a service-purpose wire harness for the vehicle, tie the front seat side airbag.
Stripped wire harness section:

Area	Measurement
A	1.25 mm^2 or more (0.0019 $in.^2$ or more)

HINT:
To calculate the area of the stripped wire harness cross section:
Area = 3.14 x $(Diameter)^2$ divided by 4
CAUTION:
Do not use wire harness that is too thin or any other object to tie the front seat side airbag because it may snap due to the shock when the airbag is deployed. Always use a wire harness for vehicle use with a cross section of at least 1.25 mm^2 (0.0019 in^2).

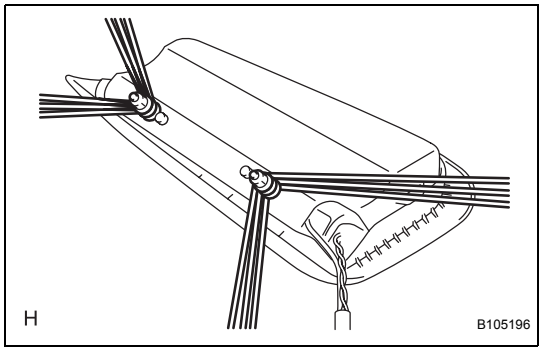

(1) Install the 2 nuts onto the front seat side airbag.
(2) Wind the wire harnesses around the stud bolts of the front seat side airbag, as shown in the illustration.

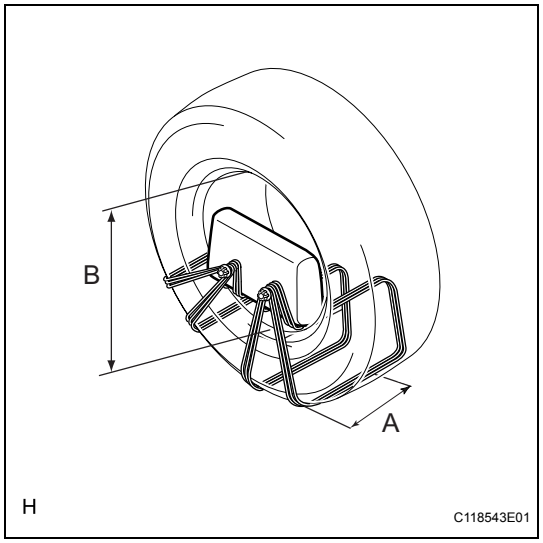

(3) Position the front seat side airbag inside the tire, as shown in the illustration.
Tire size:

Area	Measurement
A	185 mm (7.28 in.)
B	360 mm (14.17 in.)

CAUTION:
- **Make sure that the wire harnesses are tight. If there is any slack in the wire harnesses, the front seat side airbag may become loose due to the shock when the airbag is deployed.**
- **Always tie the front seat side airbag with the airbag deployment direction facing inside the tire.**

NOTICE:
The tire will be marked by the airbag deployment, so use a waste tire.

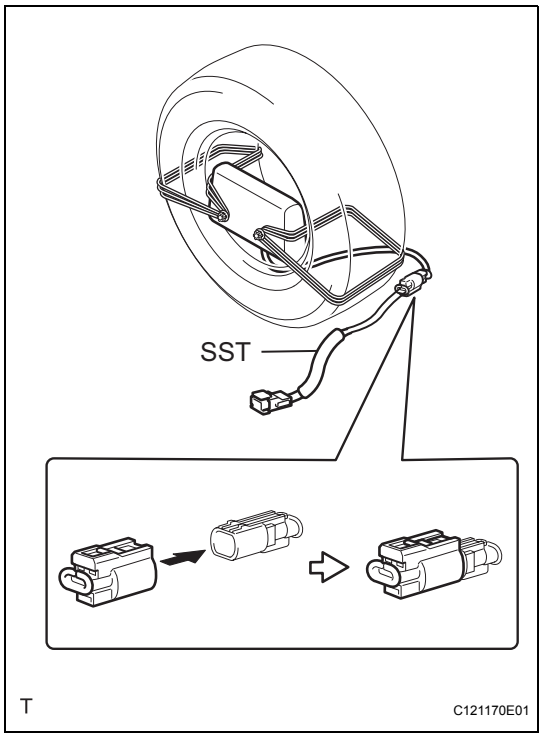

(d) Connect SST.
  (1) Connect the SST connector to the front seat side airbag connector.

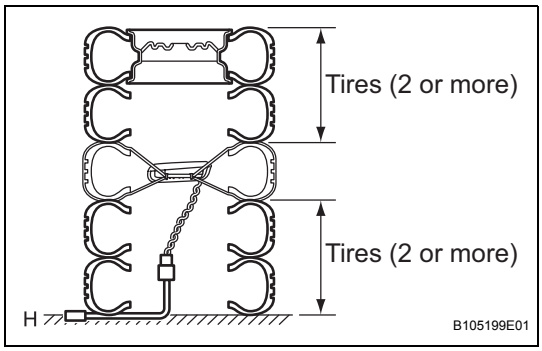

(e) Place the tires.
  (1) Place at least 2 tires under the tire to which the front seat side airbag is tied.
  (2) Place at least 2 tires over the tire to which the front seat side airbag is tied. The disc wheel should be installed onto the top tire.
  NOTICE:
  Do not place the SST connector under the tire because it could be damaged.

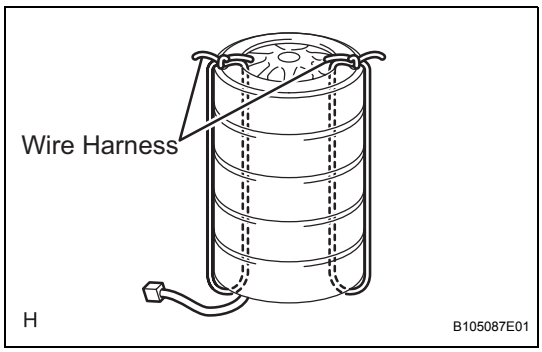

  (3) Tie the tires together with 2 wire harnesses.
  CAUTION:
  Make sure that the wire harnesses are tight. It is highly dangerous when a loose wire harness results in the tires coming free due to the shock when the airbag is deployed.

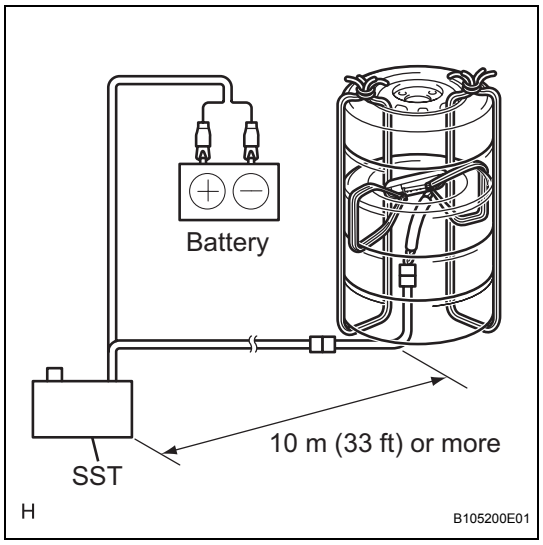

(f) Install SST.
  (1) Connect the SST connector.
  NOTICE:
  Do not lock the secondary lock of the twin lock to avoid damaging the SST connector and wire harness. Also, secure some slack for the SST wire harness inside the tire.

(g) Deploy the airbag.
  (1) Connect the red clip of SST to the positive battery terminal and the black clip of SST to the negative battery terminal.
  (2) Check that no one is within a 10 m (33 ft) radius of the tire to which the front seat side airbag is tied.
  (3) Press the SST activation switch and deploy the airbag.
  CAUTION:
  Make sure that no one is near the tires when deploying the airbag.
  HINT:
  The airbag is deployed as the LED of the SST activation switch illuminates.



(h) Dispose of the front seat side airbag.
  CAUTION:
  - **The front seat side airbag becomes extremely hot when the airbag is deployed, so do not touch it for at least 30 minutes after deployment.**
  - **Use gloves and safety glasses when handling a front seat side airbag which has been deployed.**
  - **Always wash your hands with water after completing the operation.**
  - **Do not apply water, etc. to a front seat side airbag which has been deployed.**
  (1) Remove the front seat side airbag from the tire.
  (2) Place the front seat side airbag in a plastic bag, tie it tightly and dispose of it in the same way as other general parts.

RS

CENTER AIRBAG SENSOR ASSEMBLY (for Sedan)

COMPONENTS

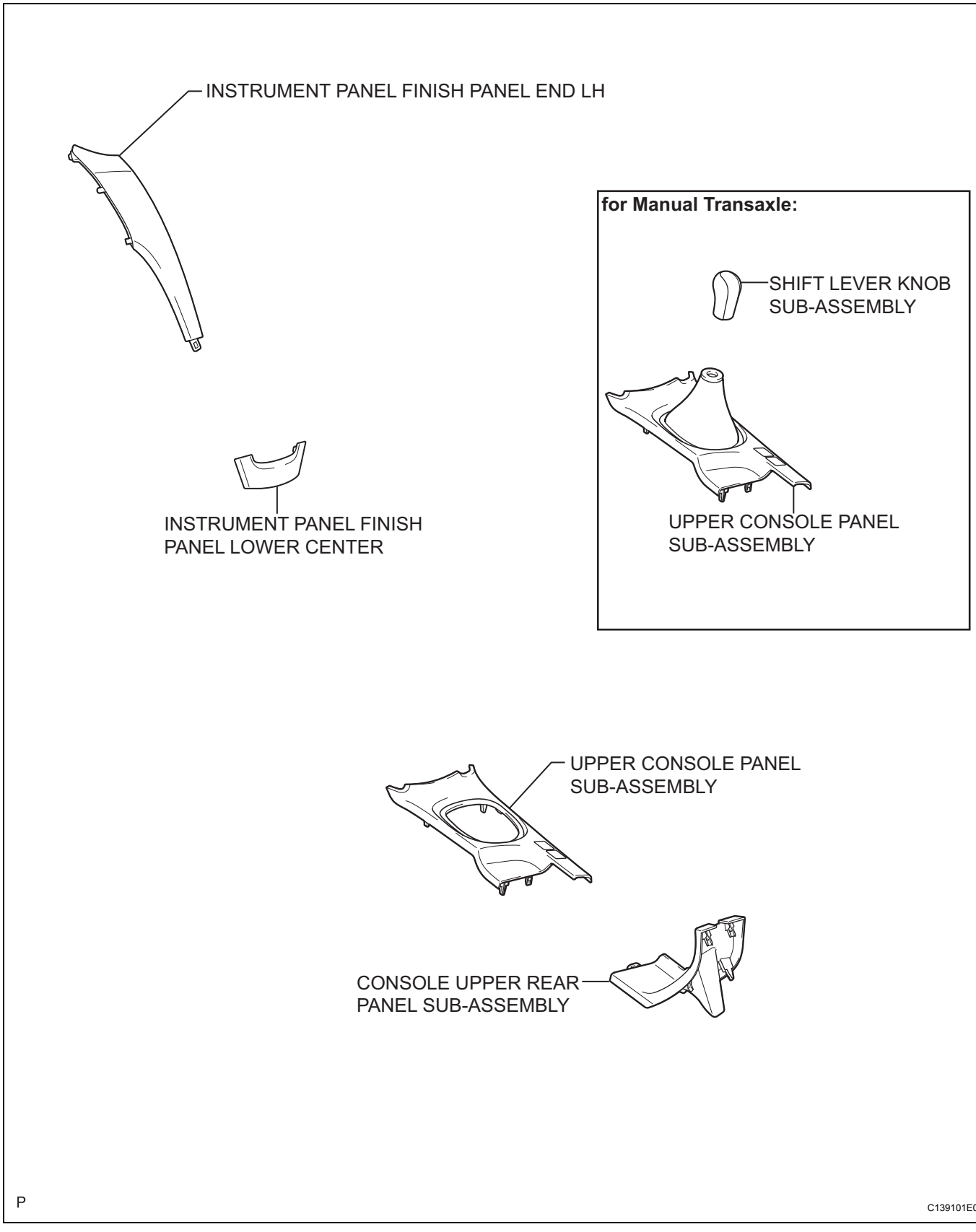

RS

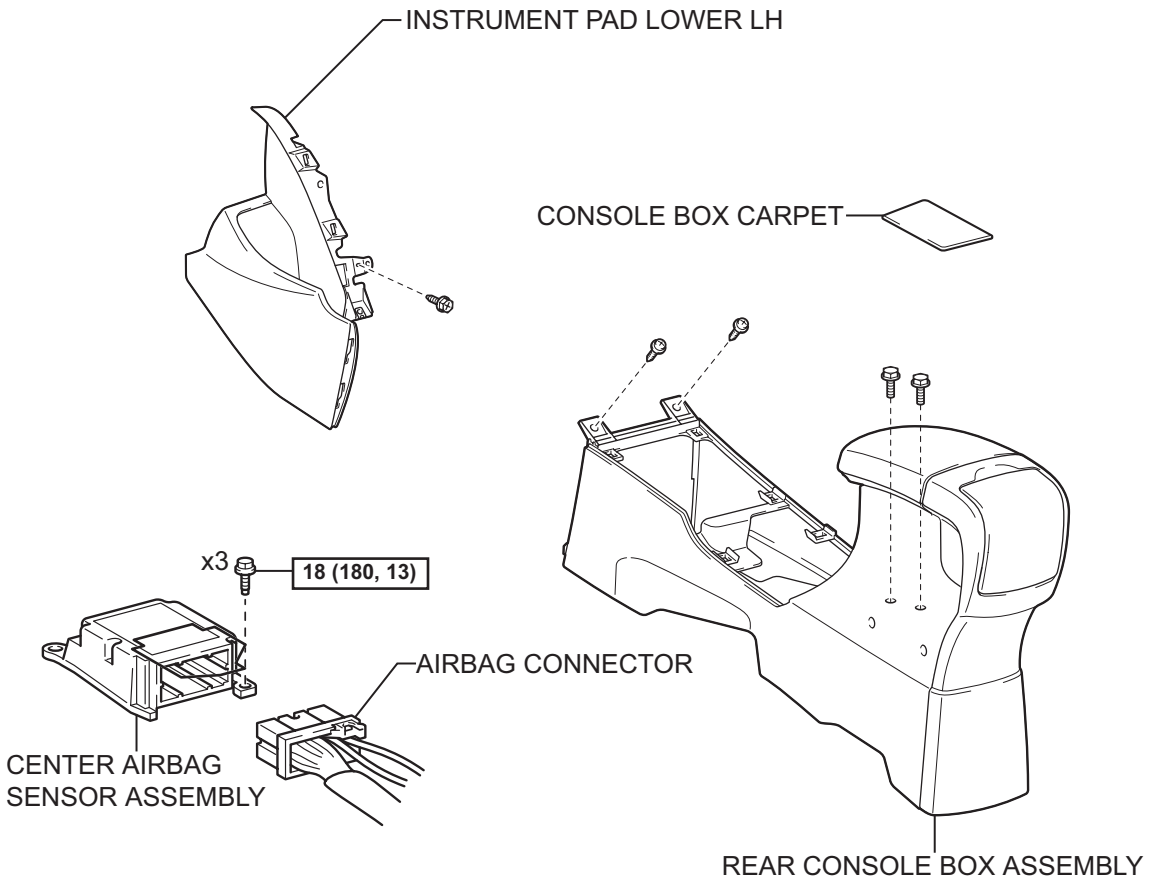

N*m (kgf*cm, ft*lbf) : Specified torque

P

C139102E01

ON-VEHICLE INSPECTION

1. **INSPECT CENTER AIRBAG SENSOR ASSEMBLY (for Vehicle not Involved in Collision)**
   (a) Perform a diagnostic system check (See page RS-38).

2. **INSPECT CENTER AIRBAG SENSOR ASSEMBLY (for Vehicle Involved in Collision and Airbag not Deployed)**
   (a) Perform a diagnostic system check (See page RS-38).

3. **INSPECT CENTER AIRBAG SENSOR ASSEMBLY (for Vehicle Involved in Collision)**
   CAUTION:
   For center airbag sensor assembly removal and installation procedure, see pages RS-433 and RS-434, and follow the correct procedure.
   (a) Replace the center airbag sensor assembly.

RS

REMOVAL

CAUTION:
Some of these service operations affect the SRS airbag system. Read the precautionary notices concerning the SRS airbag system before servicing (See page RS-1).

1. **REMOVE INSTRUMENT PANEL FINISH PANEL LOWER CENTER (See page ME-138)**
2. **REMOVE INSTRUMENT PANEL FINISH PANEL END LH (See page ME-138)**
3. **REMOVE SHIFT LEVER KNOB SUB-ASSEMBLY (for Manual Transaxle) (See page IP-84)**
4. **REMOVE UPPER CONSOLE PANEL SUB-ASSEMBLY (See page IP-84)**
5. **REMOVE CONSOLE UPPER REAR PANEL SUB-ASSEMBLY (See page IP-84)**
6. **REMOVE CONSOLE BOX CARPET (See page IP-85)**
7. **REMOVE REAR CONSOLE BOX ASSEMBLY (See page IP-85)**
8. **REMOVE INSTRUMENT PAD LOWER LH (See page IP-44)**
9. **REMOVE CENTER AIRBAG SENSOR ASSEMBLY**
   CAUTION:
   Confirm that the negative battery terminal is disconnected before performing the operation. Even an impact to only the airbag sensor will cause the airbag to deploy.
   (a) Pull the lever down and detach the connector holder.

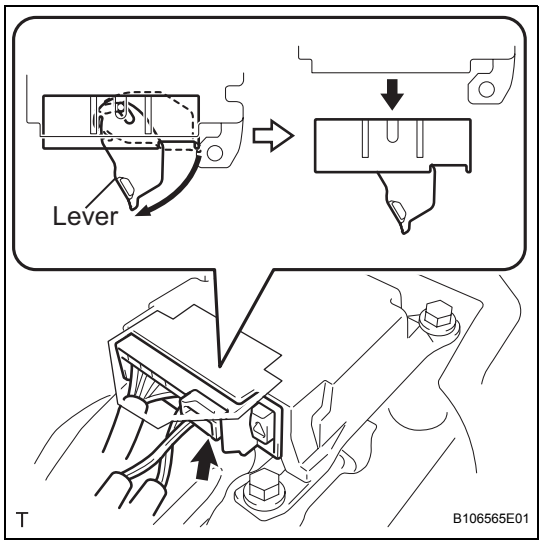

(b) Remove the 3 bolts and remove the airbag sensor.

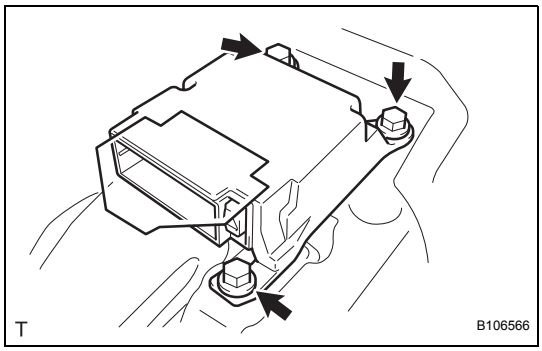

INSTALLATION

CAUTION:
Some of these service operations affect the SRS airbag system. Be sure to read the precautionary notices concerning the SRS airbag system before servicing (See page RS-1).

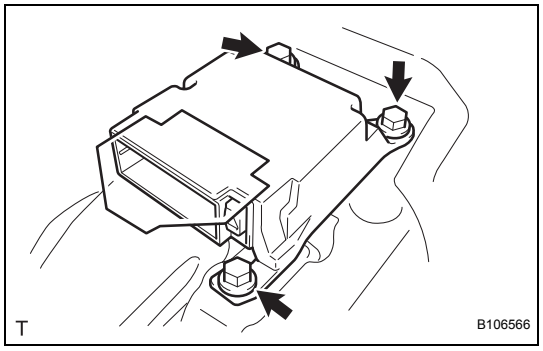

1. INSTALL CENTER AIRBAG SENSOR ASSEMBLY

(a) Confirm that the ignition switch is turned to off.

(b) Confirm that the negative battery terminal is detached.
CAUTION:
- **Confirm that the negative battery terminal is disconnected before performing the operation. Even an impact to only the airbag sensor will cause the airbag to deploy.**
- **Do not start the operation for at least 90 seconds after disconnecting the negative battery terminal.**

(c) Remove the 3 bolts and remove the airbag sensor.
Torque: 18 N*m (180 kgf*cm, 13 ft.*lbf)
NOTICE:
- **Do not use an airbag sensor that has been dropped.**
- **Do not subject the airbag sensor to any impact or force.**
- **Confirm that the carpet does not interfere with the installation plane.**

(d) Confirm that there is no looseness by shaking the front airbag sensor.

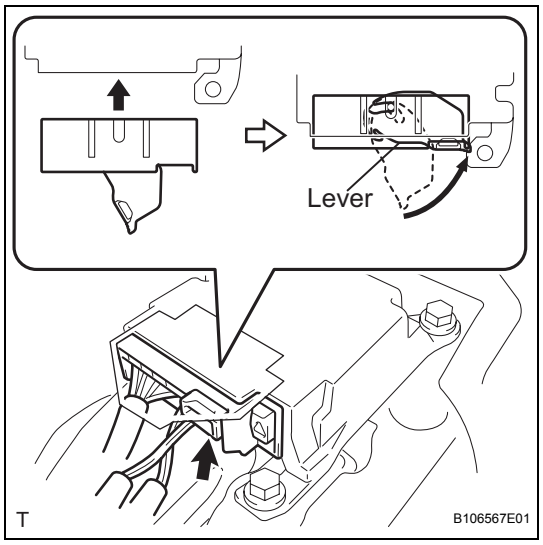

(e) Connect the connector holder to lock the lever.
NOTICE:
Confirm that the lever is locked.

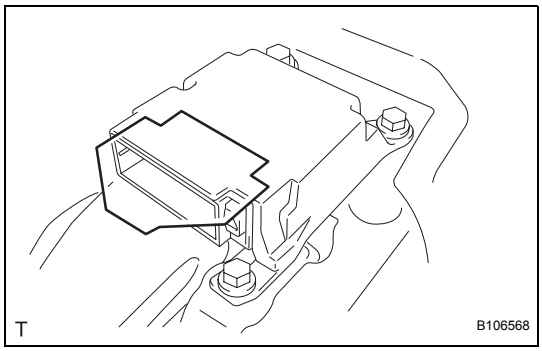

(f) Confirm that the drip-proof sheet has not been removed and does not cut into the connectors.

2. **INSTALL INSTRUMENT PAD LOWER LH (See page IP-55)**
3. **INSTALL REAR CONSOLE BOX ASSEMBLY (See page IP-88)**
4. **INSTALL CONSOLE BOX CARPET (See page IP-88)**
5. **INSTALL CONSOLE UPPER REAR PANEL SUB-ASSEMBLY (See page IP-89)**
6. **INSTALL UPPER CONSOLE PANEL SUB-ASSEMBLY (See page IP-89)**
7. **INSTALL SHIFT LEVER KNOB SUB-ASSEMBLY (for Manual Transaxle) (See page IP-89)**
8. **REMOVE INSTRUMENT PANEL FINISH PANEL END LH (See page ME-141)**
9. **INSTALL INSTRUMENT PANEL FINISH PANEL LOWER CENTER (See page ME-142)**
10. **CONNECT CABLE TO NEGATIVE BATTERY TERMINAL**
    Torque: 5.4 N*m (55 kgf*cm, 48 in.*lbf)
11. **INSPECT SRS WARNING LIGHT**
    (See page RS-31)

CENTER AIRBAG SENSOR ASSEMBLY (for Hatchback)

COMPONENTS

RS

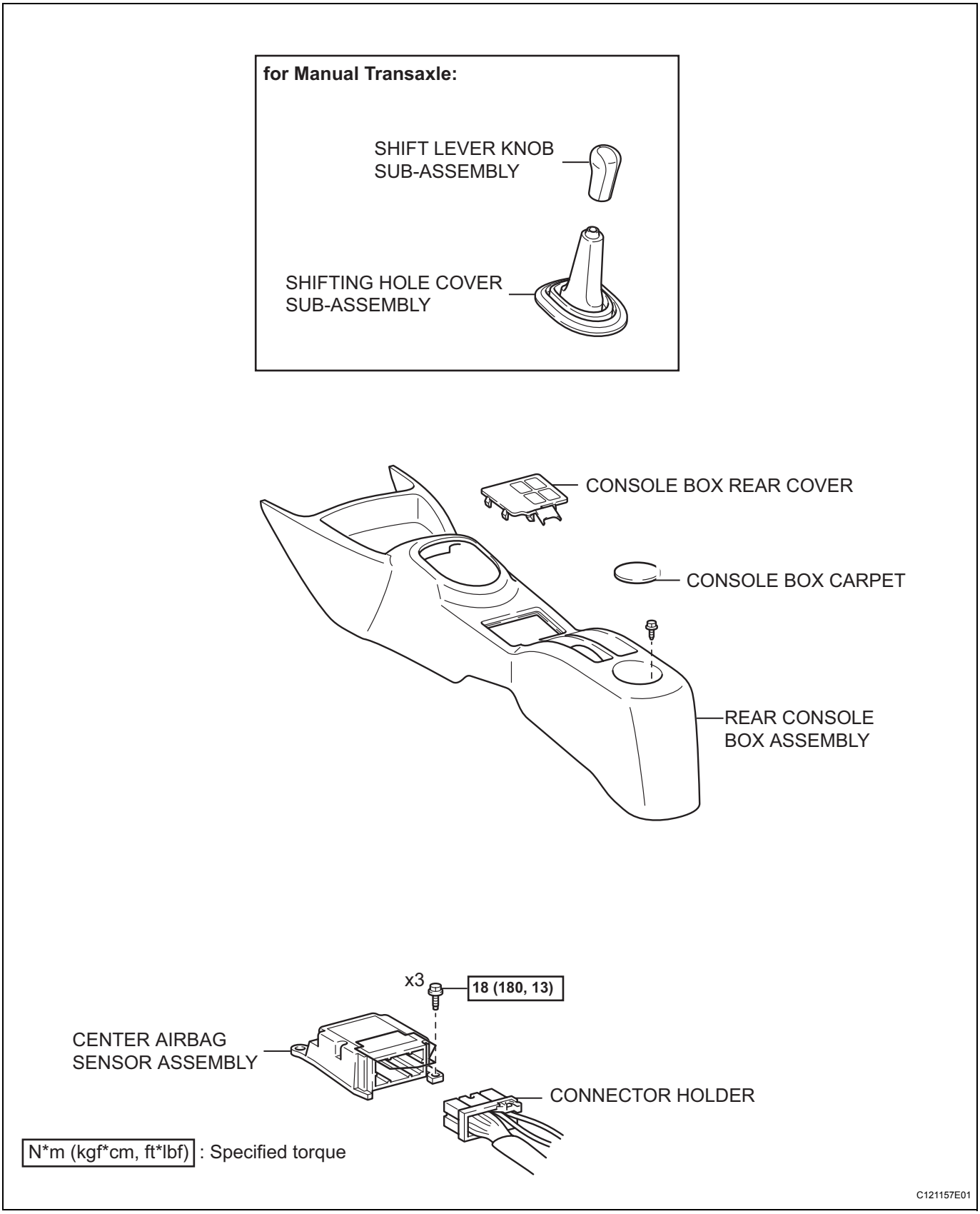

ON-VEHICLE INSPECTION

1. **INSPECT CENTER AIRBAG SENSOR ASSEMBLY (for Vehicle not Involved in Collision)**
   (a) Perform a diagnostic system check (See page RS-38).

2. **INSPECT CENTER AIRBAG SENSOR ASSEMBLY (for Vehicle Involved in Collision and Airbag not Deployed)**
   (a) Perform a diagnostic system check (See page RS-38).

3. **INSPECT CENTER AIRBAG SENSOR ASSEMBLY (for Vehicle Involved in Collision)**
   CAUTION:
   For center airbag sensor removal and installation procedures, see pages RS-437 and RS-438 , and follow the correct procedure.
   (a) Replace the center airbag sensor.

RS

REMOVAL

CAUTION:
Some of these service operations affect the SRS airbag system. Read the precautionary notices concerning the SRS airbag system before servicing (See page RS-1).

1. **DISCONNECT CABLE FROM NEGATIVE BATTERY TERMINAL**
2. **REMOVE SHIFT LEVER KNOB SUB-ASSEMBLY (for Manual Transaxle)**
3. **REMOVE SHIFTING HOLE COVER SUB-ASSEMBLY (for Manual Transaxle) (See page PB-6)**
4. **REMOVE CONSOLE BOX REAR COVER (See page PB-6)**
5. **REMOVE CONSOLE BOX CARPET (See page PB-7)**
6. **REMOVE REAR CONSOLE BOX ASSEMBLY (See page PB-8)**
7. **REMOVE CENTER AIRBAG SENSOR ASSEMBLY**
   CAUTION:
   Confirm that the negative battery terminal is disconnected before performing the operation. Even an impact to only the airbag sensor will cause the airbag to deploy.
   (a) Pull the lever down and detach the connector holder.

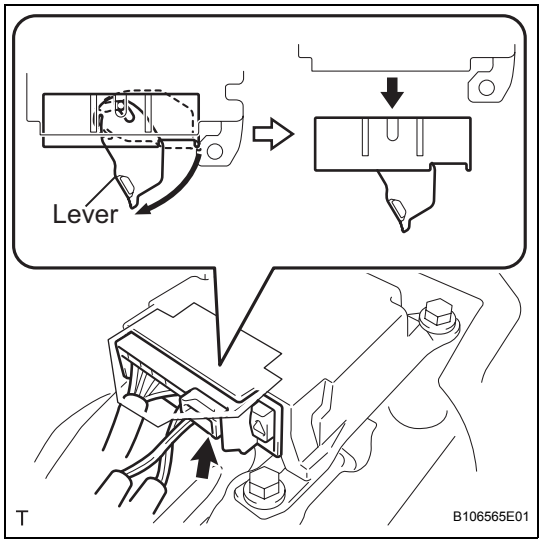

(b) Remove the 3 bolts and remove the airbag sensor.

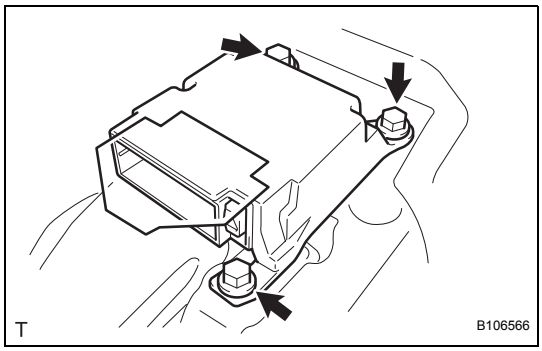

INSTALLATION

CAUTION:
Some of these service operations affect the SRS airbag system. Read the precautionary notices concerning the SRS airbag system before servicing (See page RS-1).

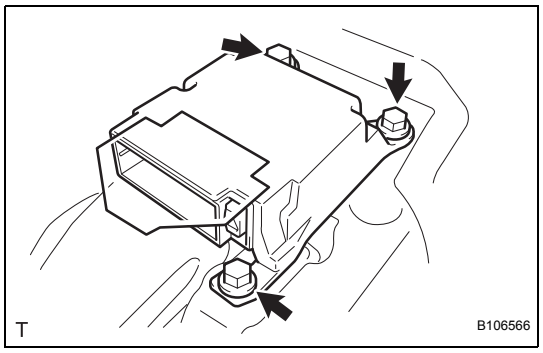

1. INSTALL CENTER AIRBAG SENSOR ASSEMBLY

(a) Confirm that the ignition switch is turned to OFF.

(b) Confirm that the negative battery terminal is detached.
CAUTION:
- **Confirm that the negative battery terminal is disconnected before performing the operation. Even an impact to only the airbag sensor will cause the airbag to deploy.**
- **Do not start the operation for at least 90 seconds after disconnecting the negative battery terminal.**

(c) Remove the 3 bolts and remove the airbag sensor.
Torque: 18 N*m (180 kgf*cm, 13 ft.*lbf)
NOTICE:
- **Do not use an airbag sensor that has been dropped.**
- **Do not subject the airbag sensor to any impact or force.**
- **Confirm that the carpet does not interfere with the installation plane.**

(d) Confirm that there is no looseness by shaking the front airbag sensor.

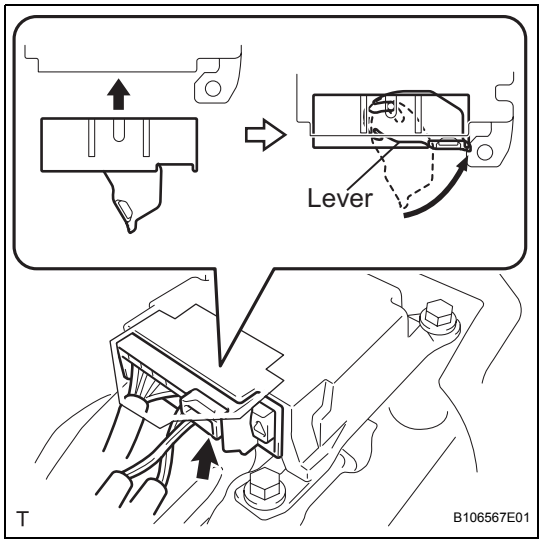

(e) Connect the connector holder to lock the lever.
NOTICE:
Confirm that the lever is locked.

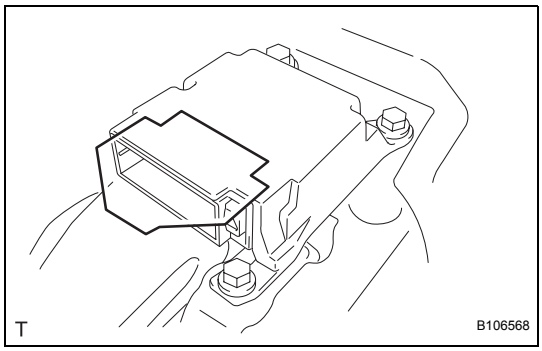

(f) Confirm that the drip-proof sheet has not been removed and does not cut into the connectors.

2. **INSTALL REAR CONSOLE BOX ASSEMBLY (See page PB-10)**
3. **INSTALL CONSOLE BOX CARPET (See page PB-11)**
4. **INSTALL CONSOLE BOX REAR COVER (See page PB-11)**
5. **INSTALL SHIFTING HOLE COVER SUB-ASSEMBLY (for Manual Transaxle) (See page PB-12)**
6. **INSTALL SHIFT LEVER KNOB SUB-ASSEMBLY (for Manual Transaxle)**
7. **CONNECT CABLE TO NEGATIVE BATTERY TERMINAL**
   Torque: 5.4 N*m (55 kgf*cm, 48 in.*lbf)
8. **INSPECT SRS WARNING LIGHT**
   (See page RS-31)

FRONT AIRBAG SENSOR (for Sedan)

COMPONENTS

RS

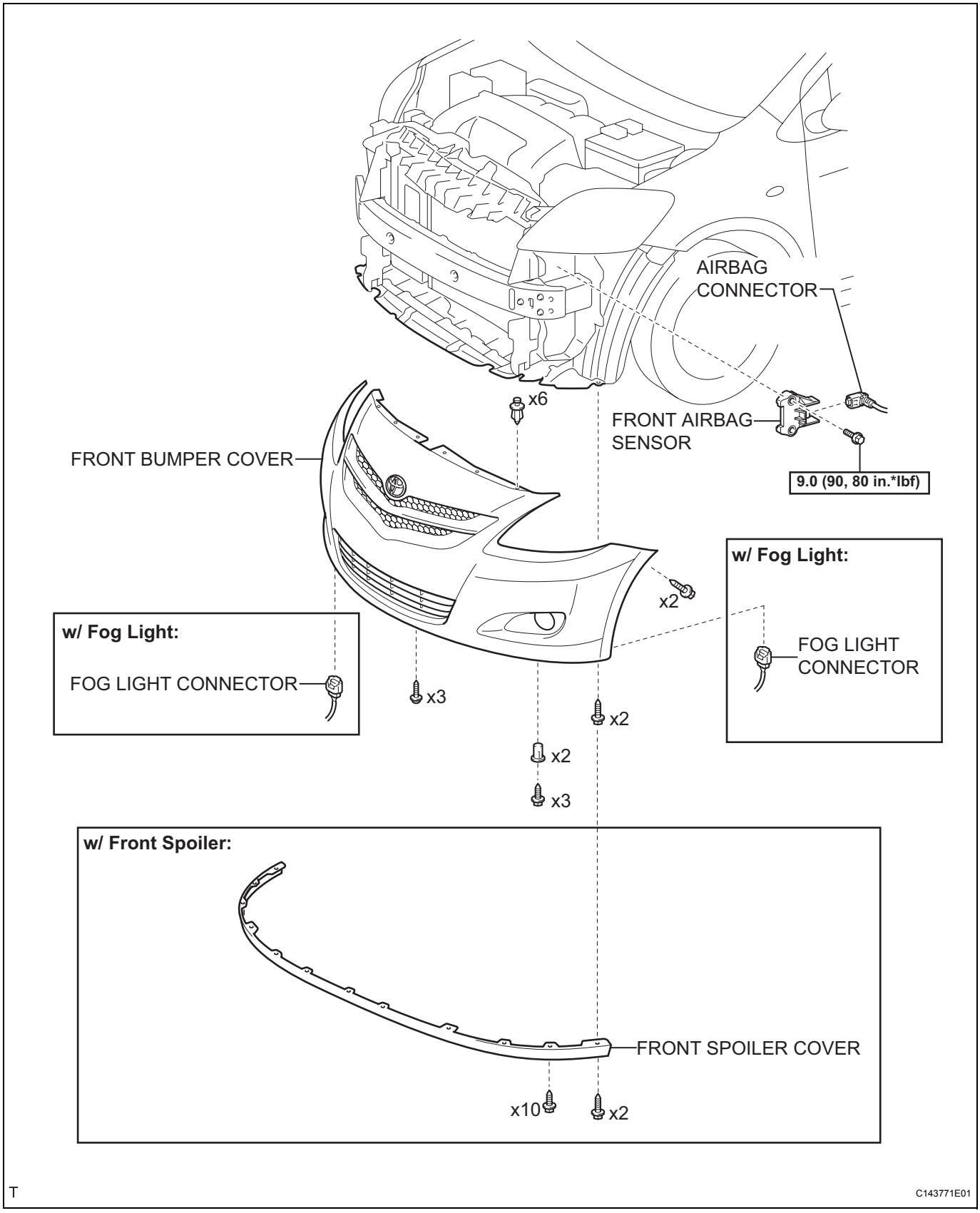

T

C143771E01

ON-VEHICLE INSPECTION

1. **INSPECT FRONT AIRBAG SENSOR (for Vehicle not Involved in Collision)**
   (a) Perform a diagnostic system check (See page RS-38).

2. **INSPECT FRONT AIRBAG SENSOR ASSEMBLY (for Vehicle Involved in Collision and Airbag not Deployed)**
   CAUTION:
   For front airbag sensor removal and installation procedures, see pages RS-441 and RS-442, and carefully follow the correct procedure.
   (a) Perform a diagnostic system check (See page RS-38).
   (b) When the center front bumper or its periphery is damaged, check whether there is any damage to the front airbag sensor. If there are any defects, such as those mentioned below, replace the front airbag sensor with a new one:
   - Any cracks, dents or chips in the case.
   - Any cracks or other damage to the connector.
   - Peeling of the label or damage to the serial number.

3. **INSPECT FRONT AIRBAG SENSOR ASSEMBLY (for Vehicle Involved in Collision)**
   CAUTION:
   For front airbag sensor removal and installation procedures, see pages RS-441 and RS-442, and carefully follow the correct procedure.
   (a) Replace the front airbag sensor.

RS

REMOVAL

CAUTION:
Some of these service operations affect the SRS airbag system. Read the precautionary notices concerning the SRS airbag system before servicing (See page RS-1).
HINT:
The procedure described below is for the LH side. Use the same procedure for both the RH and LH sides, unless otherwise specified.

1. **DISCONNECT CABLE FROM NEGATIVE BATTERY TERMINAL**
2. **REMOVE FRONT SPOILER COVER (w/ Front Spoiler) (See page ET-6)**
3. **REMOVE FRONT BUMPER COVER (See page ET-6)**
4. **REMOVE FRONT AIRBAG SENSOR**
   CAUTION:
   Confirm that the negative battery terminal is disconnected before performing the operation. Even an impact to only the airbag sensor will cause the airbag to deploy.
   (a) Remove the 2 bolts.
   (b) Disengage the 2 claws and remove the front airbag sensor.

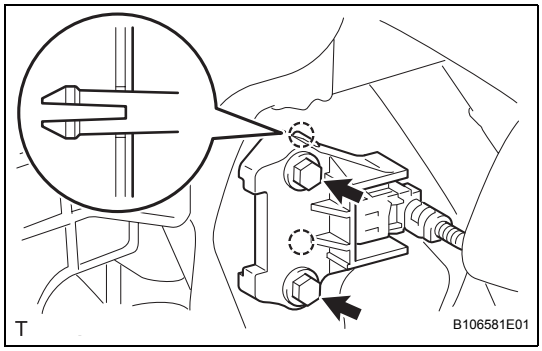

   (c) Disconnect the airbag connector.
   NOTICE:
   - **Do not disconnect the airbag connector by pulling the wire harness.**
   - **Release the lock without holding the upper side of CPA.**
   (1) While pushing the housing, slide only the CPA backward (from a provisionally locked state).
   (2) Detach the connector while pushing the housing in the provisionally locked state.
   NOTICE:
   - **Do not disconnect the airbag connector by pulling the wire harness.**
   - **Release the lock without holding the upper side of CPA.**

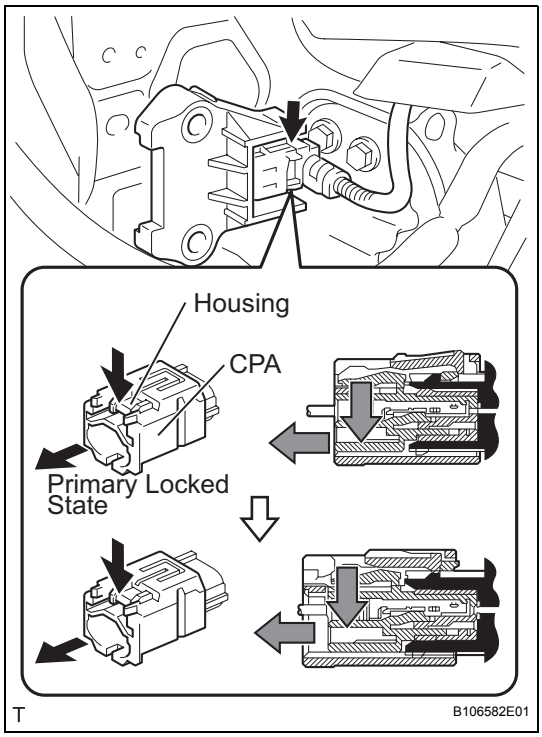

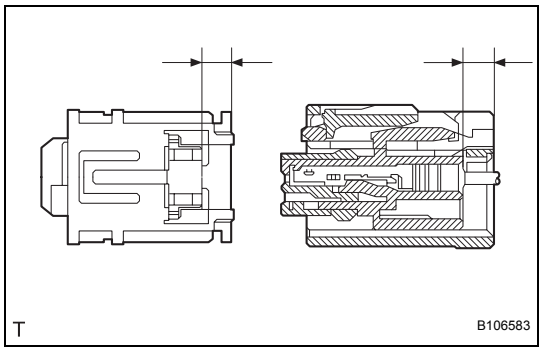

(3) After detaching the connector, confirm that the CPA protrudes beyond the rear of the housing.

RS

INSTALLATION

CAUTION:
Some of these service operations affect the SRS airbag system. Read the precautionary notices concerning the SRS airbag system before servicing (See page RS-1).

HINT:
The procedure described below is for the LH side. Use the same procedure for both the LH and RH sides, unless otherwise specified.

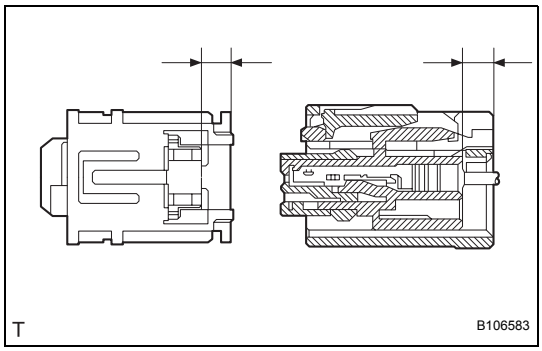

1. INSTALL FRONT AIRBAG SENSOR

NOTICE:
- **Do not use a front airbag sensor that has been dropped.**
- **Do not subject the front airbag sensor any impact or force.**

(a) Confirm that the ignition switch is turned to off.

(b) Confirm that the negative battery terminal is detached.

CAUTION:
- **Confirm that the negative battery terminal is disconnected before performing the operation. Even an impact to only the airbag sensor will cause the airbag to deploy.**
- **Do not start the operation for at least 90 seconds after disconnecting the negative battery terminal.**

(c) Connect the airbag connector.

(1) Check that the CPA is in the provisionally locked condition.

(2) Push the CPA until it makes a click sound.

NOTICE:
- **Engage the connector by pushing it straight.**
- **Hold the CPA when engaging the connector.**
- **Do not engage the CPA while pressing the CPA upper portion, otherwise, the half connection prevention mechanism will not function.**

(3) Confirm that the rear side of the housing and the CPA rear surface are tightly fitted together.

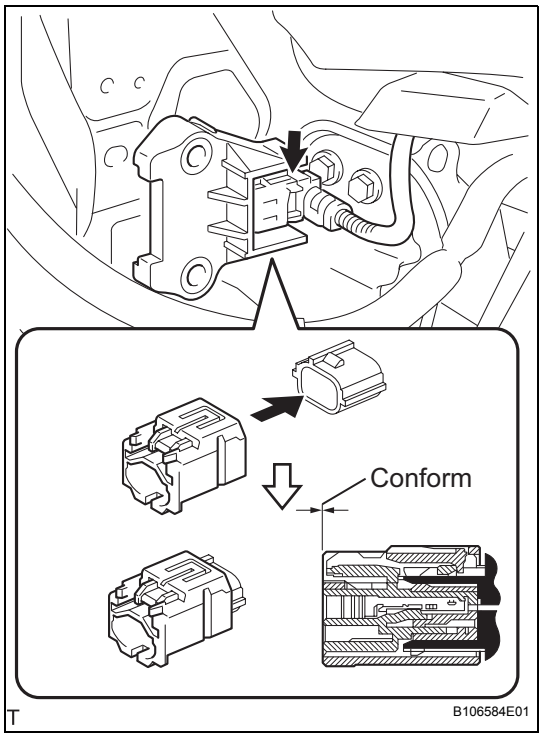

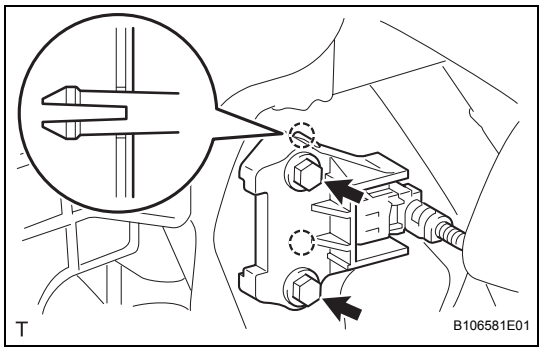

(d) Install the front airbag sensor with the 2 bolts.
Torque: 9.0 N*m (90 kgf*cm, 80 in.*lbf)

(e) Confirm that there is no looseness by shaking the front airbag sensor.

2. **INSTALL FRONT BUMPER COVER (See page ET-16)**

3. **INSTALL FRONT SPOILER COVER (w/ Front Spoiler) (See page ET-19)**

4. **CONNECT CABLE TO NEGATIVE BATTERY TERMINAL**
Torque: 5.4 N*m (55 kgf*cm, 48 in.*lbf)

5. **INSPECT SRS WARNING LIGHT**
(See page RS-31)

RS

FRONT AIRBAG SENSOR (for Hatchback)

COMPONENTS

RS

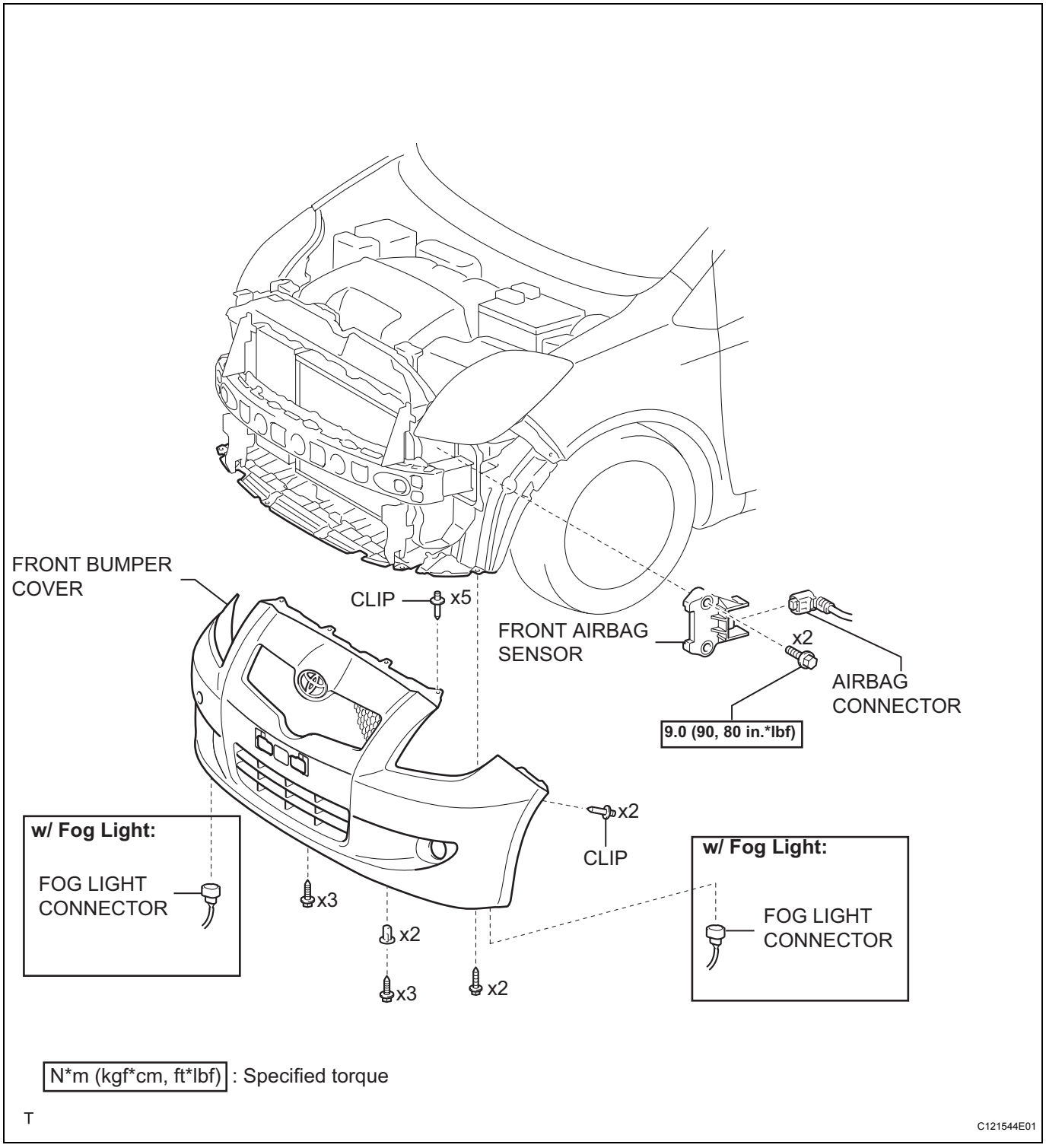

ON-VEHICLE INSPECTION

1. **INSPECT FRONT AIRBAG SENSOR (for Vehicle not Involved in Collision)**
   (a) Perform a diagnostic system check (See page RS-38).

2. **INSPECT FRONT AIRBAG SENSOR ASSEMBLY (for Vehicle Involved in Collision and Airbag not Deployed)**
   CAUTION:
   For front airbag sensor removal and installation procedures, see pages RS-446 and RS-447, and carefully follow the correct procedure.
   (a) Perform a diagnostic system check (See page RS-38).
   (b) When the center front bumper or its periphery is damaged, check whether there is any damage to the front airbag sensor. If there are any defects, such as those mentioned below, replace the front airbag sensor with a new one:
   - Any cracks, dents or chips in the case.
   - Any cracks or other damage to the connector.
   - Peeling of the label or damage to the serial number.

3. **INSPECT FRONT AIRBAG SENSOR ASSEMBLY (for Vehicle Involved in Collision)**
   CAUTION:
   For front airbag sensor removal and installation procedures, see pages RS-446 and RS-447, and carefully follow the correct procedure.
   (a) Replace the front airbag sensor.

REMOVAL

CAUTION:
Some of these service operations affect the SRS airbag system. Read the precautionary notices concerning the SRS airbag system before servicing (See page RS-1).
HINT:
The procedure described below is for the LH side. Use the same procedure for both the RH and LH sides, unless otherwise specified.

1. **DISCONNECT CABLE FROM NEGATIVE BATTERY TERMINAL**

2. **REMOVE FRONT BUMPER COVER (See page ET-24)**

3. **REMOVE FRONT AIRBAG SENSOR**
CAUTION:
Confirm that the negative battery terminal is disconnected before performing the operation. Even an impact to only the airbag sensor will cause the airbag to deploy.
(a) Remove the 2 bolts.
(b) Disengage the 2 claws and remove the front airbag sensor.

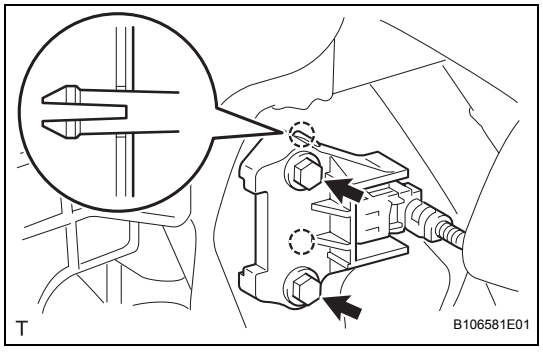

(c) Disconnect the airbag connector.
NOTICE:
- **Do not disconnect the airbag connector by pulling the wire harness.**
- **Release the lock without holding the upper side of CPA.**

(1) While pushing the housing, slide only the CPA backward (from its provisionally locked state).
(2) Detach the connector while pushing the housing in the provisionally locked state.

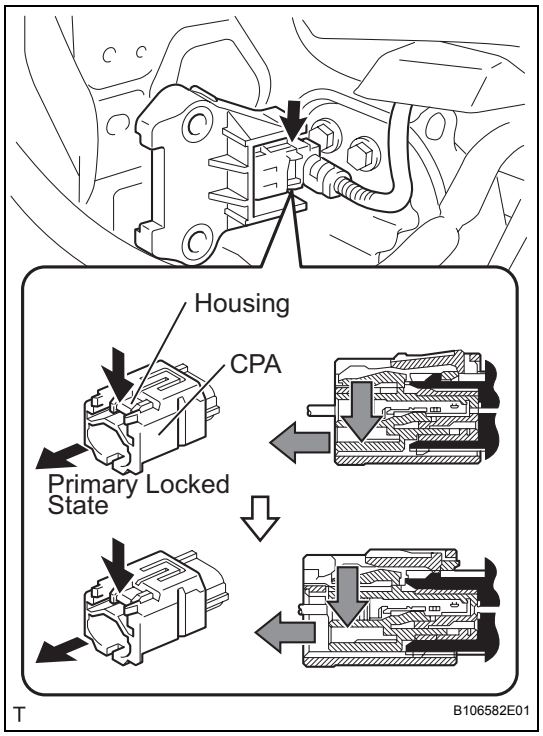

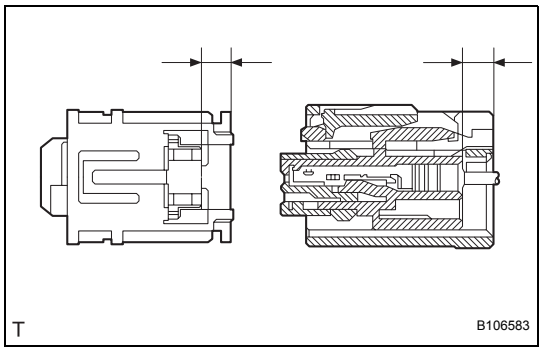

(3) After detaching the connector, confirm that the CPA protrudes beyond the rear of the housing.

INSTALLATION

CAUTION:
Some of these service operations affect the SRS airbag system. Read the precautionary notices concerning the SRS airbag system before servicing (See page RS-1).

HINT:
The procedure described below is for the LH side. Use the same procedure for both the LH and RH sides, unless otherwise specified.

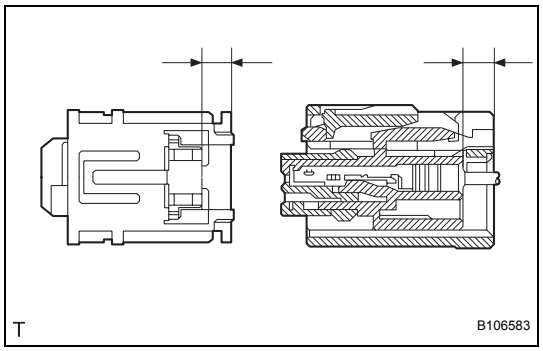

1. INSTALL FRONT AIRBAG SENSOR

NOTICE:
- **Do not use a front airbag sensor that has been dropped.**
- **Do not subject the front airbag sensor to any impact or force.**

(a) Confirm that the ignition switch is turned to OFF.

(b) Confirm that the negative battery terminal is detached.

CAUTION:
- **Confirm that the negative battery terminal is disconnected before performing the operation. Even an impact to only the airbag sensor will cause the airbag to deploy.**
- **Do not start the operation for at least 90 seconds after disconnecting the negative battery terminal.**

(c) Connect the airbag connector.

(1) Check that the CPA is in the provisionally locked state.

(2) Push the CPA until it makes a click sound.

NOTICE:
- **Engage the connector by pushing it straight.**
- **Hold the CPA when engaging the connector.**
- **Do not engage the CPA while pressing the CPA upper portion, otherwise, the half connection prevention mechanism will not function.**

(3) Confirm that the rear side of the housing and the CPA rear surface are tightly fitted together.

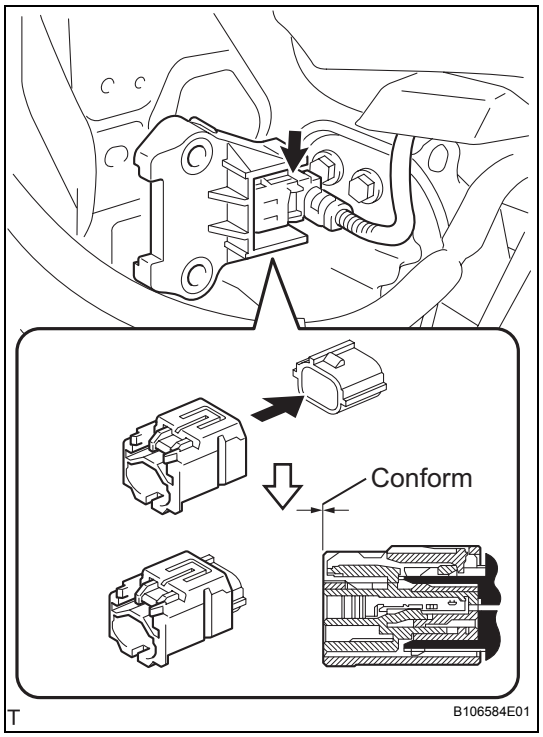

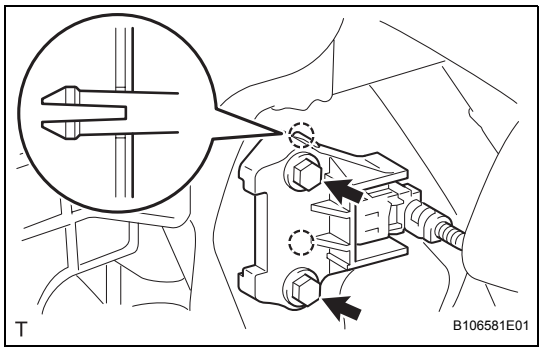

(d) Install the front airbag sensor with the 2 bolts.
Torque: 9.0 N*m (90 kgf*cm, 80 in.*lbf)

(e) Confirm that there is no looseness by shaking the front airbag sensor.

2. **INSTALL FRONT BUMPER COVER (See page ET-33)**

3. **CONNECT CABLE TO NEGATIVE BATTERY TERMINAL**
Torque: 5.4 N*m (55 kgf*cm, 48 in.*lbf)

4. **INSPECT SRS WARNING LIGHT**
(See page RS-31)

SIDE AIRBAG SENSOR (for Sedan)

COMPONENTS

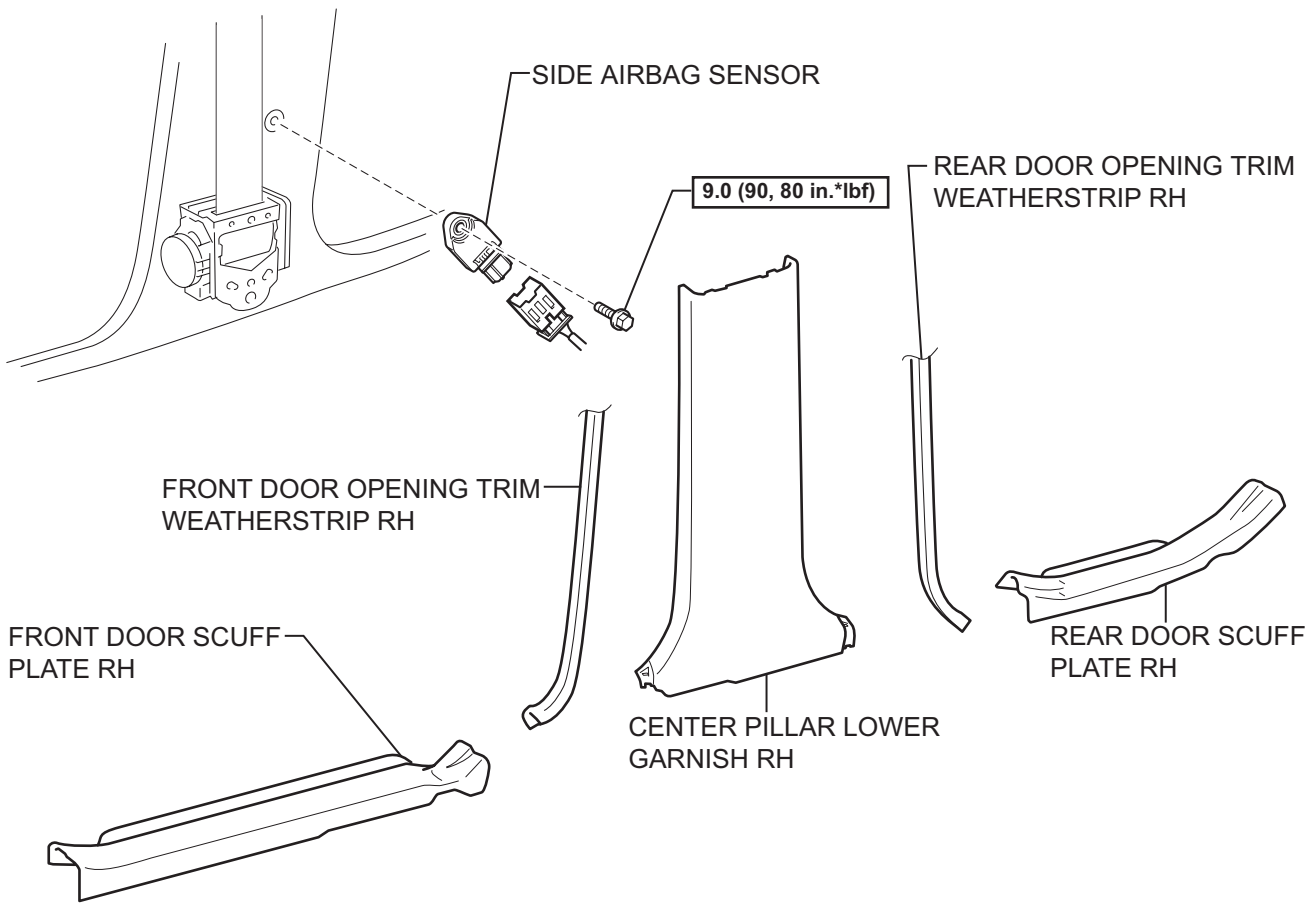

ON-VEHICLE INSPECTION

1. **INSPECT SIDE AIRBAG SENSOR ASSEMBLY (for Vehicle not Involved in Collision)**
   (a) Perform a diagnostic system check (See page RS-38).

2. **INSPECT SIDE AIRBAG SENSOR ASSEMBLY (for Vehicle Involved in Collision and Airbag not Deployed)**
   CAUTION:
   For side airbag sensor removal and installation procedures, see pages RS-450 and RS-451, and carefully follow the correct procedure.
   (a) Perform a diagnostic system check (See page RS-38).
   (b) When the center pillar of the vehicle or its periphery is damaged, check whether there is any damage to the side airbag sensor. If there are any defects, such as those mentioned below, replace the side airbag sensor with a new one:
   - Any cracks, dents or chips in the case.
   - Any cracks or other damage to the connector.
   - Peeling of the label or damage to the serial number.

3. **INSPECT SIDE AIRBAG SENSOR ASSEMBLY (for Vehicle Involved in Collision)**
   CAUTION:
   For side airbag sensor removal and installation procedures, see pages RS-450 and RS-451, and carefully follow the correct procedure.
   (a) Replace the side airbag sensor.

REMOVAL

CAUTION:
Some of these service operations affect the SRS airbag system. Read the precautionary notices concerning the SRS airbag system before servicing (See page RS-1).
HINT:
The procedure described below is for the RH side. Use the same procedure for both the RH and LH sides, unless otherwise specified.

1. **REMOVE FRONT DOOR SCUFF PLATE RH (See page IR-14)**
2. **REMOVE FRONT DOOR OPENING TRIM WEATHERSTRIP RH (See page IR-15)**
3. **REMOVE REAR DOOR SCUFF PLATE RH (See page IR-15)**
4. **REMOVE REAR DOOR OPENING TRIM WEATHERSTRIP RH (See page IR-15)**
5. **REMOVE CENTER PILLAR LOWER GARNISH RH (See page IR-16)**
6. **REMOVE SIDE AIRBAG SENSOR**
   CAUTION:
   Confirm that the negative battery terminal is disconnected before performing the operation. Even an impact to only the airbag sensor will cause the airbag to deploy.
   (a) Slide the outer housing and detach the airbag connector.

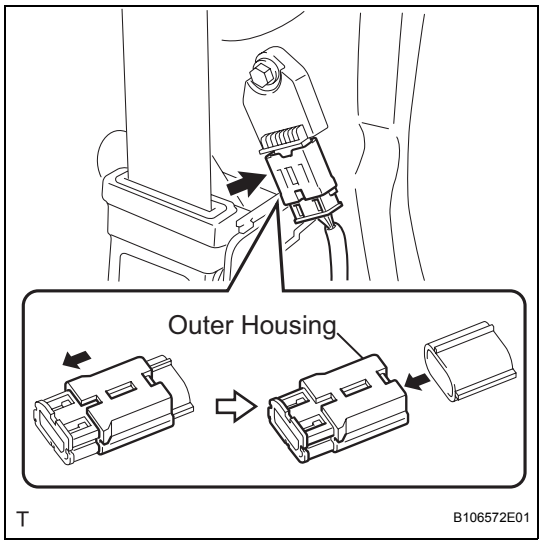

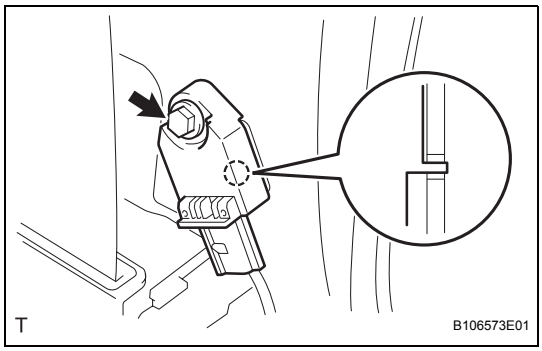

(b) Remove the bolt, disengage the hook and remove the side airbag sensor.

INSTALLATION

CAUTION:
Some of these service operations affect the SRS airbag system. Read the precautionary notices concerning the SRS airbag system before servicing (See page RS-1).
HINT:
The procedure described below is for the RH side. Use the same procedure for both the RH and LH sides, unless otherwise specified.

1. INSTALL SIDE AIRBAG SENSOR

(a) Confirm that the ignition switch is turned to off.

(b) Confirm that the negative battery terminal is detached.
CAUTION:
Confirm that the negative battery terminal is disconnected before performing the operation. Even an impact to only the airbag sensor will cause the airbag to deploy.

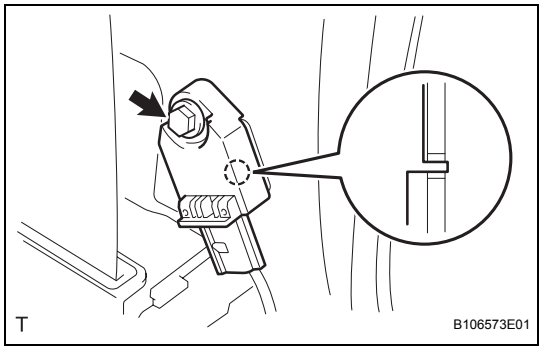

(c) Insert the hook into the body hole and install the airbag sensor with the bolt.
Torque: 9.0 N*m (90 kgf*cm, 80 in.*lbf)
NOTICE:
- **Do not use a side airbag sensor that has been dropped.**
- **Do not subject the side airbag sensor to any impact or force.**

(d) Confirm that there is no looseness by shaking the side airbag sensor.

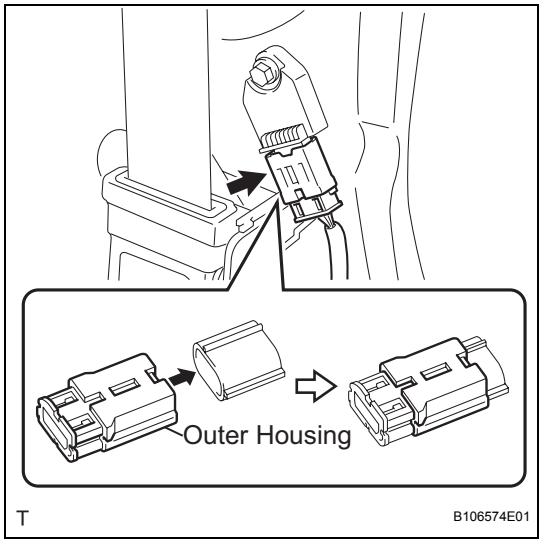

(e) Connect the airbag connector.

2. INSTALL CENTER PILLAR LOWER GARNISH RH (See page IR-32)

3. INSTALL REAR DOOR OPENING TRIM WEATHERSTRIP RH (See page IR-33)

4. INSTALL REAR DOOR SCUFF PLATE RH (See page IR-34)

5. INSTALL FRONT DOOR OPENING TRIM WEATHERSTRIP RH (See page IR-34)

6. INSTALL FRONT DOOR SCUFF PLATE RH (See page IR-34)

7. CONNECT CABLE TO NEGATIVE BATTERY TERMINAL
Torque: 5.4 N*m (55 kgf*cm, 48 in.*lbf)

8. INSPECT SRS WARNING LIGHT
(See page RS-31)

SIDE AIRBAG SENSOR (for 5 Door)

COMPONENTS

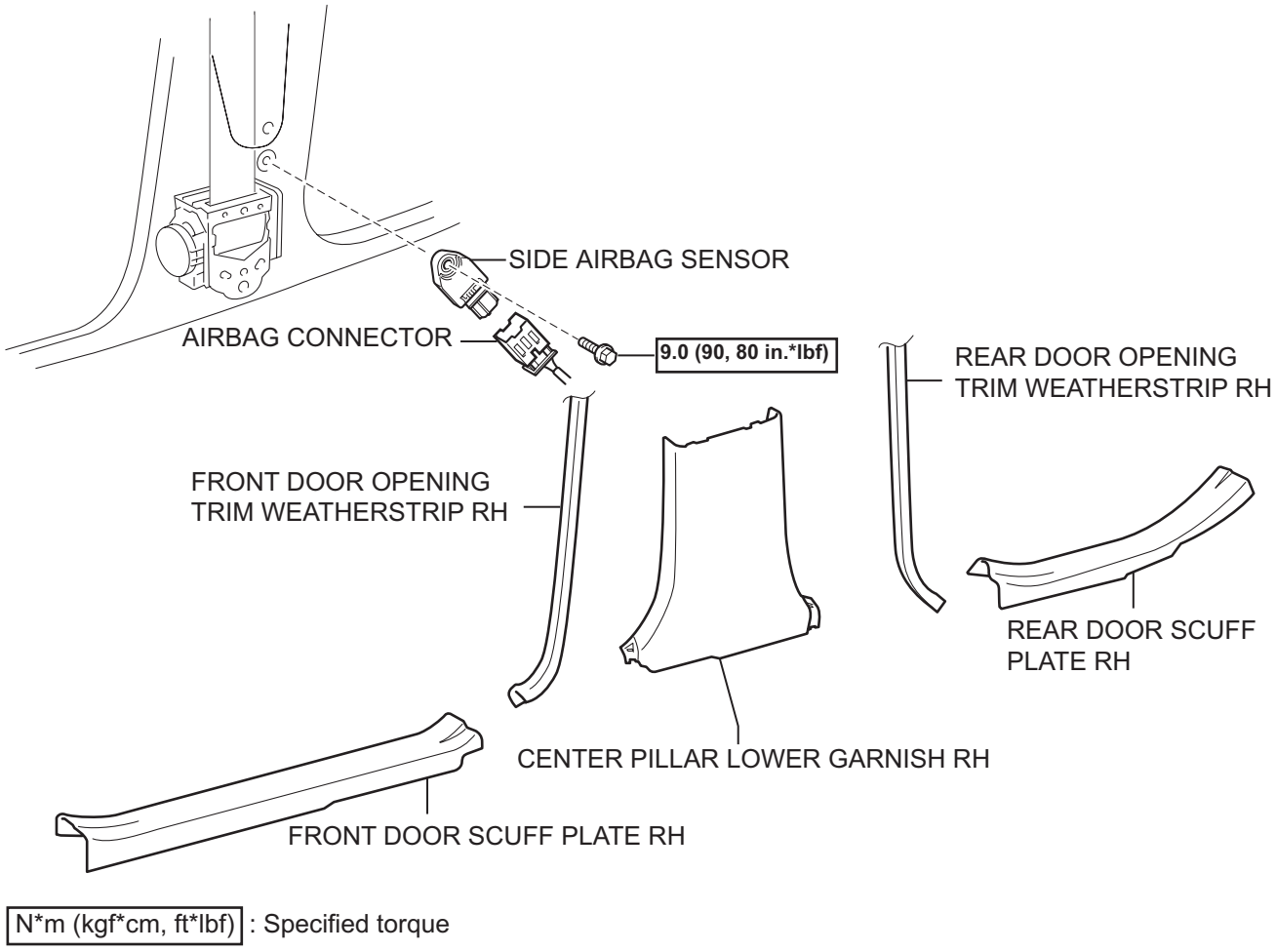

ON-VEHICLE INSPECTION

1. **INSPECT SIDE AIRBAG SENSOR ASSEMBLY (for Vehicle not Involved in Collision)**
   (a) Perform a diagnostic system check (See page RS-38).

2. **INSPECT SIDE AIRBAG SENSOR ASSEMBLY (for Vehicle Involved in Collision and Airbag not Deployed)**
   CAUTION:
   For side airbag sensor removal and installation procedures, see pages RS-454 and RS-455, and carefully follow the correct procedure.
   (a) Perform a diagnostic system check (See page RS-38).
   (b) When the center pillar of the vehicle or its periphery is damaged, check whether there is any damage to the side airbag sensor. If there are any defects, such as those mentioned below, replace the side airbag sensor with a new one:
   - Any cracks, dents or chips in the case.
   - Any cracks or other damage to the connector.
   - Peeling of the label or damage to the serial number.

3. **INSPECT SIDE AIRBAG SENSOR ASSEMBLY (for Vehicle Involved in Collision)**
   CAUTION:
   For side airbag sensor removal and installation procedures, see pages RS-454 and RS-455, and carefully follow the correct procedure.
   (a) Replace the side airbag sensor.

REMOVAL

CAUTION:
Some of the these service operations affect the SRS airbag system. Read the precautionary notices concerning the SRS airbag system before servicing (See page RS-1).

HINT:
The procedure described below is for the RH side. Use the same procedure for both the RH and LH sides, unless otherwise specified.

1. **DISCONNECT CABLE FROM NEGATIVE BATTERY TERMINAL**
2. **REMOVE FRONT DOOR SCUFF PLATE RH (See page IR-49)**
3. **REMOVE REAR DOOR SCUFF PLATE RH (See page IR-51)**
4. **REMOVE FRONT DOOR OPENING TRIM WEATHERSTRIP RH (See page IR-50)**
5. **REMOVE REAR DOOR OPENING TRIM WEATHERSTRIP RH (See page IR-51)**
6. **REMOVE CENTER PILLAR LOWER GARNISH RH (See page IR-55)**
7. **REMOVE SIDE AIRBAG SENSOR**
   CAUTION:
   Confirm that the negative battery terminal is disconnected before performing the operation. Even an impact to only the airbag sensor will cause the airbag to deploy.
   (a) Slide the outer housing and detach the airbag connector.

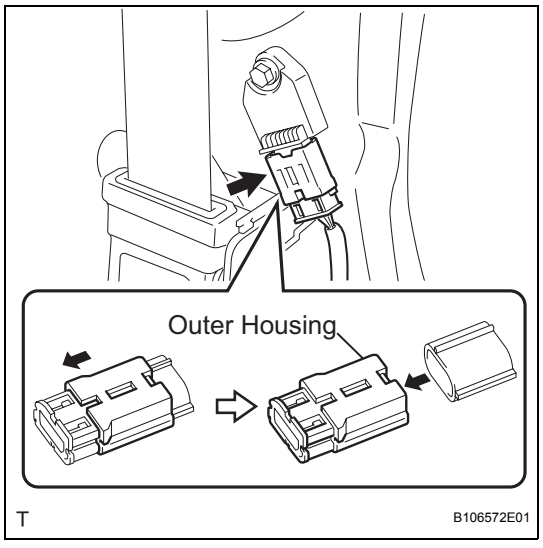

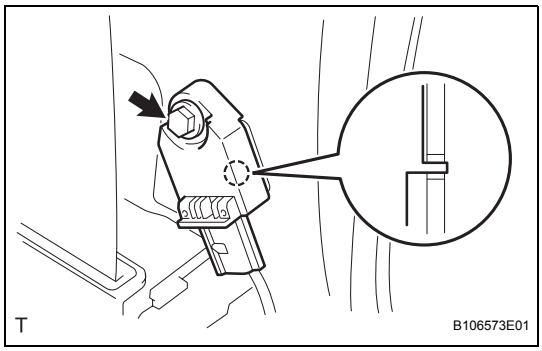

(b) Remove the bolt, disengage the hook and remove the side airbag sensor.

INSTALLATION

CAUTION:
Some of these service operations affect the SRS airbag system. Read the precautionary notices concerning the SRS airbag system before servicing.
HINT:
The procedure described below is for the RH side. Use the same procedure for both the RH and LH sides, unless otherwise specified.

1. INSTALL SIDE AIRBAG SENSOR

(a) Confirm that the ignition switch is turned to OFF.

(b) Confirm that the negative battery terminal is detached.
CAUTION:
- **Confirm that the negative battery terminal is disconnected before performing the operation. Even an impact to only the airbag sensor will cause the airbag to deploy.**

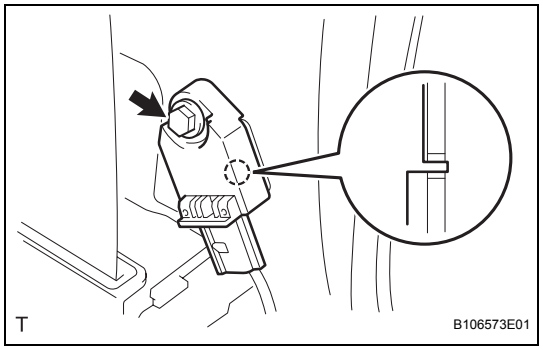

(c) Insert the hook into the body hole and install the airbag sensor with the bolt.
Torque: 9.0 N*m (90 kgf*cm, 80 ft.*lbf)
NOTICE:
- **Do not use a side airbag sensor that has been dropped.**
- **Do not subject the side airbag sensor to any impact or force.**

(d) Confirm that there is no looseness by shaking the side airbag sensor.

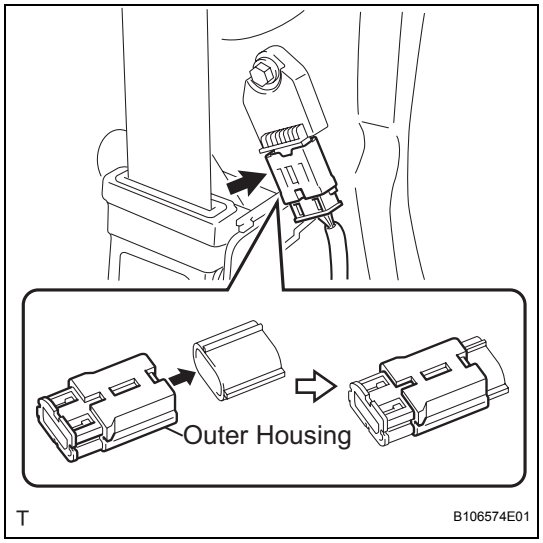

(e) Connect the airbag connector.

2. INSTALL CENTER PILLAR LOWER GARNISH RH (See page IR-76)

3. INSTALL REAR DOOR OPENING TRIM WEATHERSTRIP RH (See page IR-80)

4. INSTALL FRONT DOOR OPENING TRIM WEATHERSTRIP RH (See page IR-81)

5. INSTALL REAR DOOR SCUFF PLATE RH (See page IR-80)

6. INSTALL FRONT DOOR SCUFF PLATE RH (See page IR-82)

7. CONNECT CABLE TO NEGATIVE BATTERY TERMINAL
Torque: 5.4 N*m (55 kgf*cm, 48 in.*lbf)

8. INSPECT SRS WARNING LIGHT
(See page RS-31)

SIDE AIRBAG SENSOR (for 3 Door)

COMPONENTS

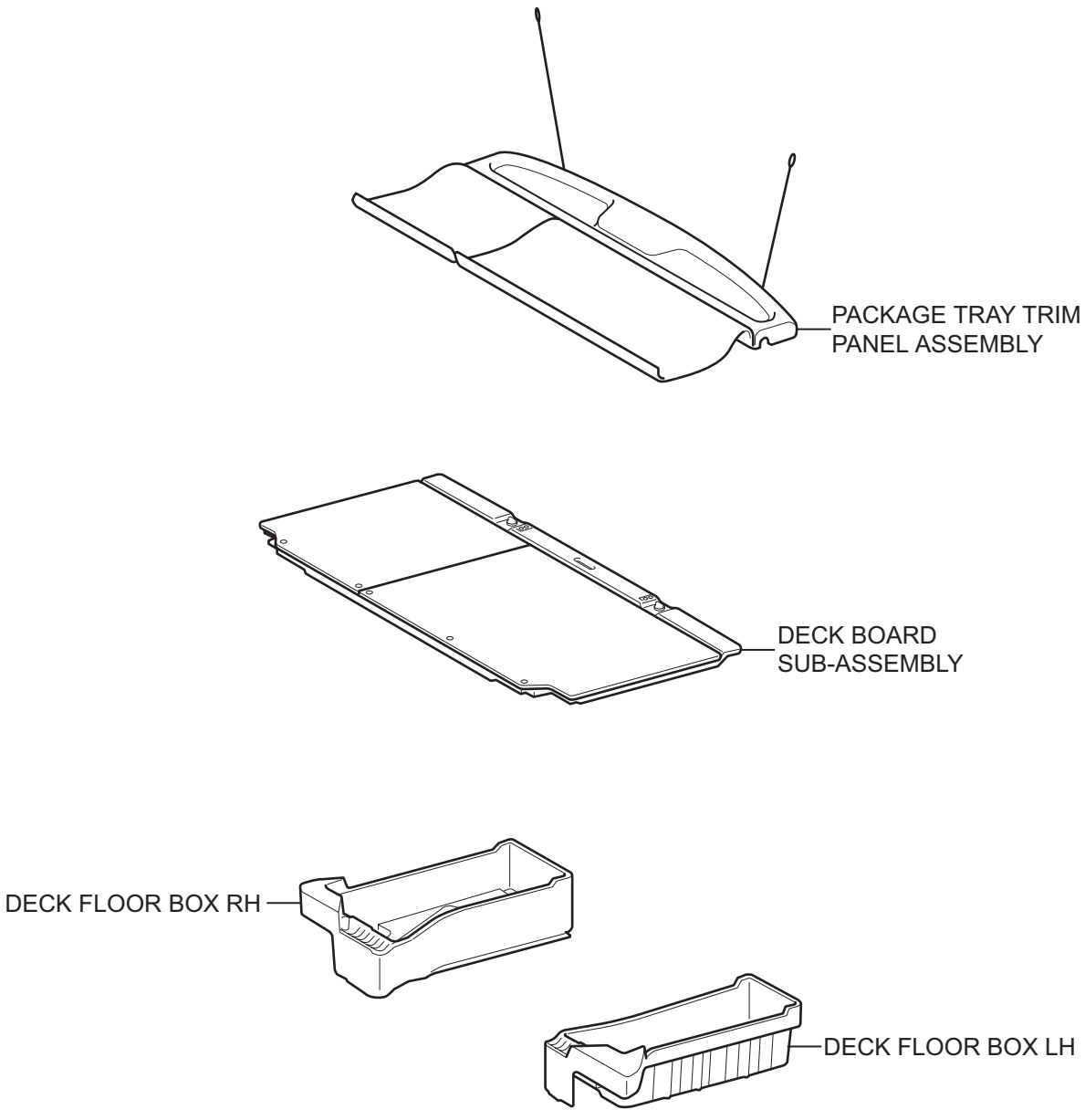

T

B114273E01

RS

for 60/40 Split Seat Type:

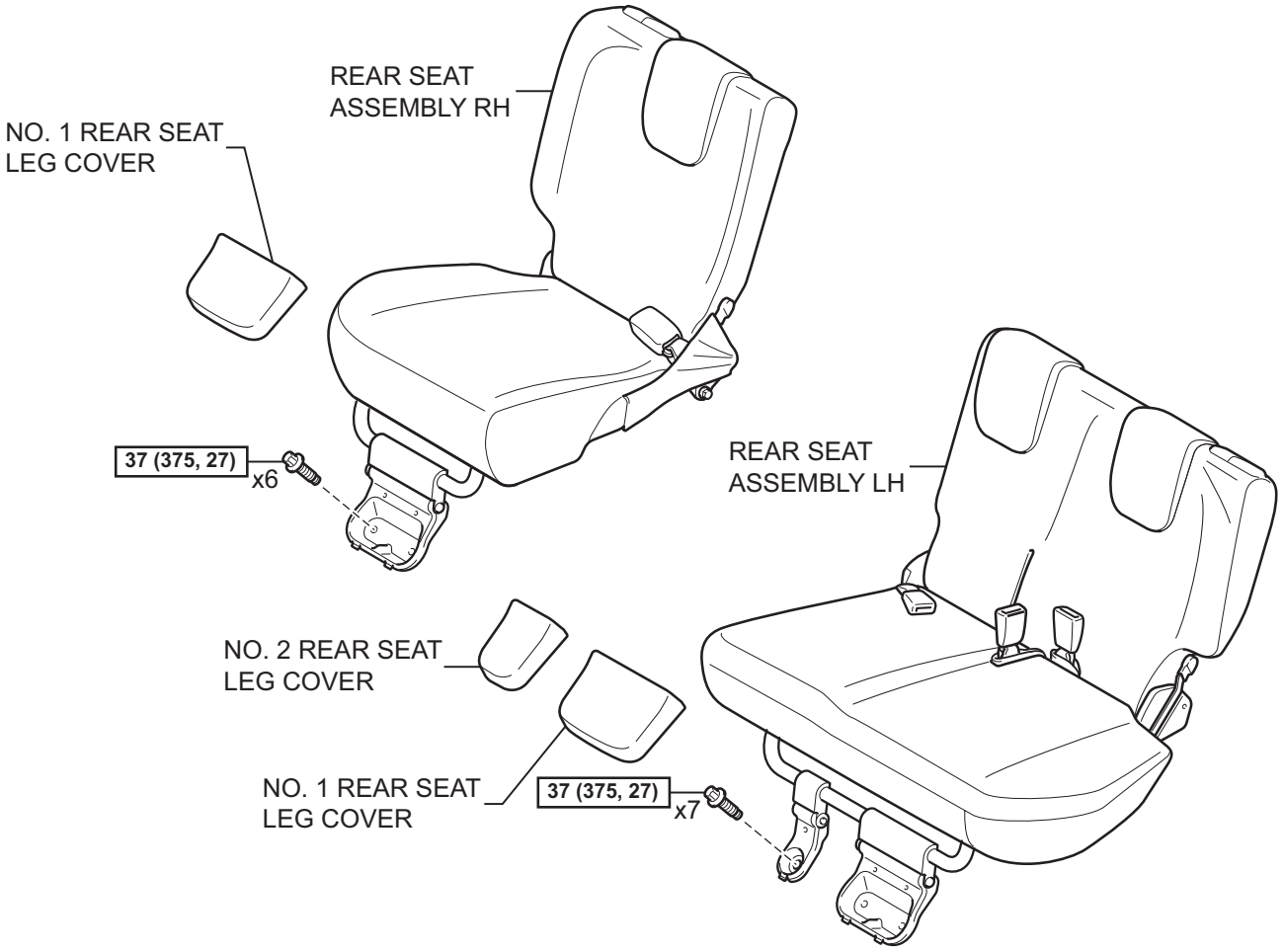

for Hold Down Seat Type:

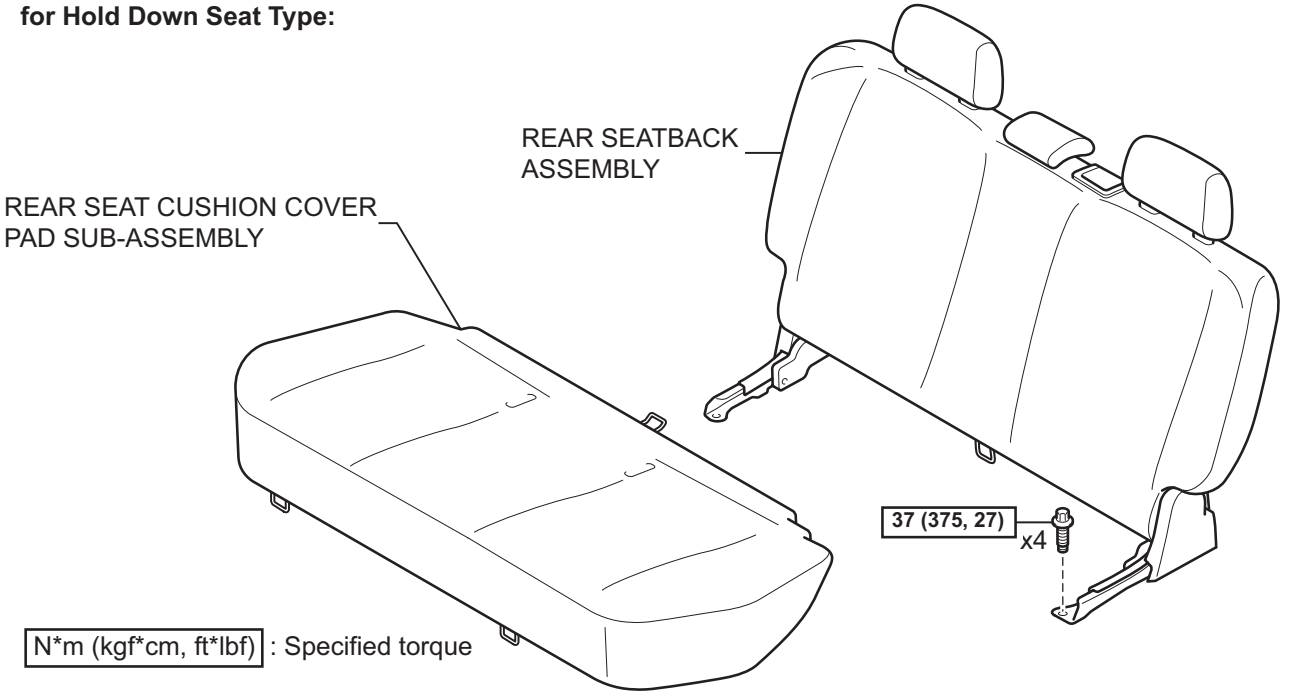

T

B121713E03

RS

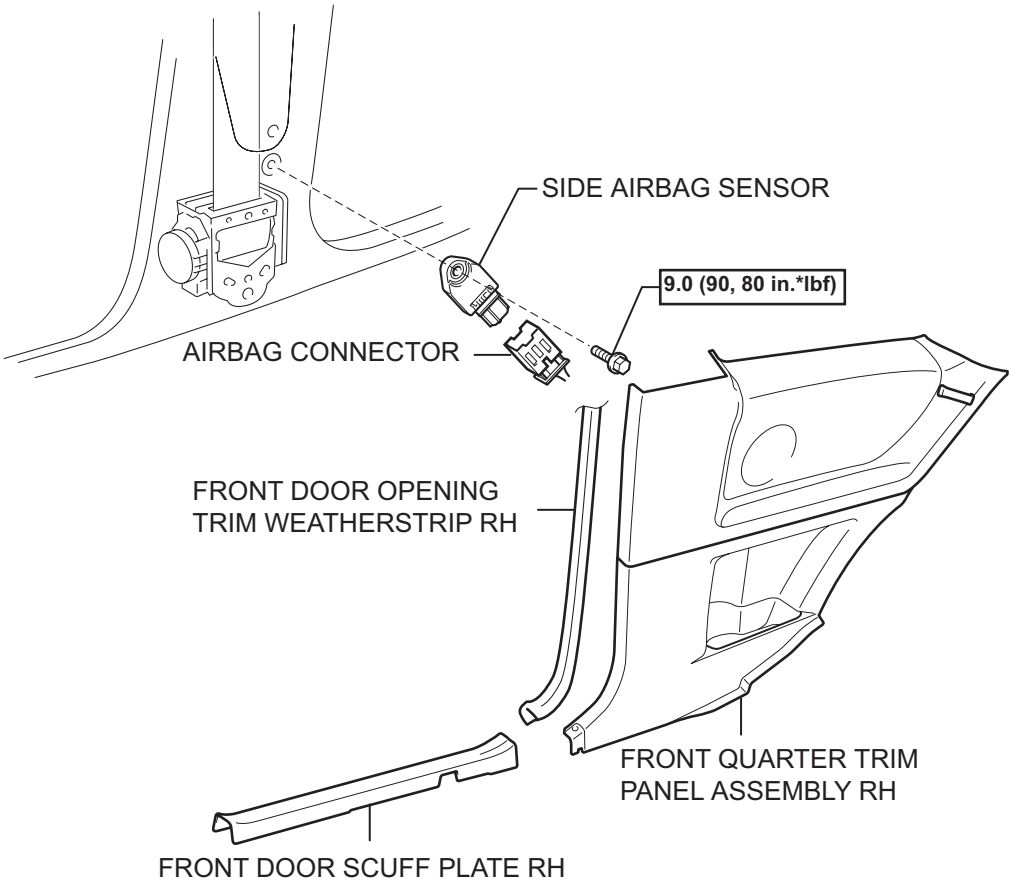

N*m (kgf*cm, ft*lbf) : Specified torque

C119849E01

ON-VEHICLE INSPECTION

1. **INSPECT SIDE AIRBAG SENSOR ASSEMBLY (for Vehicle not Involved in Collision)**
   (a) Perform a diagnostic system check (See page RS-38).

2. **INSPECT SIDE AIRBAG SENSOR ASSEMBLY (for Vehicle Involved in Collision and Airbag not Deployed)**
   CAUTION:
   For side airbag sensor removal and installation procedures, see pages RS-460 and RS-462, and carefully follow the correct procedure.
   (a) Perform a diagnostic system check (See page RS-38).
   (b) When the center pillar of the vehicle or its periphery is damaged, check whether there is any damage to the side airbag sensor. If there are any defects, such as those mentioned below, replace the side airbag sensor with a new one:
   - Any cracks, dents or chips in the case.
   - Any cracks or other damage to the connector.
   - Peeling of the label or damage to the serial number.

3. **INSPECT SIDE AIRBAG SENSOR ASSEMBLY (for Vehicle Involved in Collision)**
   CAUTION:
   For side airbag sensor removal and installation procedures, see pages RS-460 and RS-462, and carefully follow the correct procedure.
   (a) Replace the side airbag sensor.

REMOVAL

CAUTION:
Some of the these service operations affect the SRS airbag system. Read the precautionary notices concerning the SRS airbag system before servicing (See page RS-1).
NOTICE:
Always use "Torx" socket wrench E10 when removing the rear seat.
HINT:
The procedure described below is for the RH side. Use the same procedure for both the RH and LH sides, unless otherwise specified.

1. **DISCONNECT CABLE FROM NEGATIVE BATTERY TERMINAL**
2. **REMOVE PACKAGE TRAY TRIM PANEL ASSEMBLY (See page IR-48)**
3. **REMOVE DECK BOARD SUB-ASSEMBLY (See page IR-48)**
4. **REMOVE DECK FLOOR BOX RH (See page IR-48)**
5. **REMOVE DECK FLOOR BOX LH (See page IR-48)**
6. **REMOVE NO. 1 REAR SEAT LEG COVER (for 60/40 Split Seat Type) (See page IR-96)**
7. **REMOVE NO. 2 REAR SEAT LEG COVER (See page SE-70)**
8. **REMOVE REAR SEAT ASSEMBLY RH (for 60/40 Split Seat Type) (See page SE-89)**
9. **REMOVE REAR SEAT ASSEMBLY LH (for 60/40 Split Seat Type) (See page SE-71)**
10. **REMOVE REAR SEAT CUSHION COVER PAD SUB-ASSEMBLY (for Hold Down Seat Type) (See page SE-114)**
11. **REMOVE REAR SEATBACK ASSEMBLY (for Hold Down Seat Type) (See page SE-115)**
12. **REMOVE FRONT DOOR SCUFF PLATE RH (See page IR-97)**
13. **REMOVE FRONT DOOR OPENING TRIM WEATHERSTRIP RH (See page IR-97)**
14. **REMOVE FRONT QUARTER TRIM PANEL ASSEMBLY RH (See page IR-97)**
15. **REMOVE SIDE AIRBAG SENSOR**
    CAUTION:
    Confirm that the negative battery terminal is disconnected before performing the operation. Even an impact to only the airbag sensor will cause the airbag to deploy.

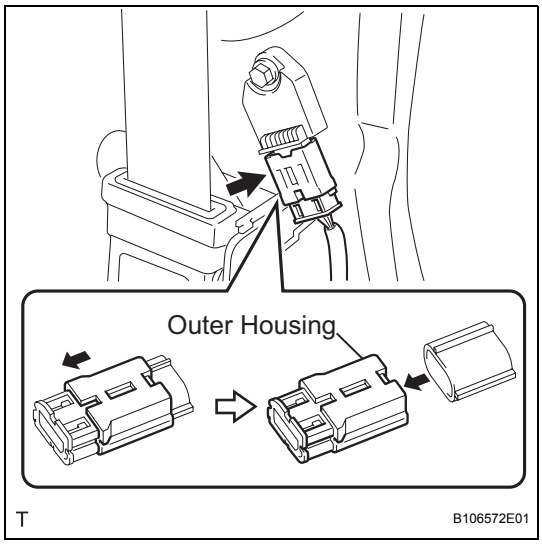

(a) Slide the outer housing and detach the airbag connector.

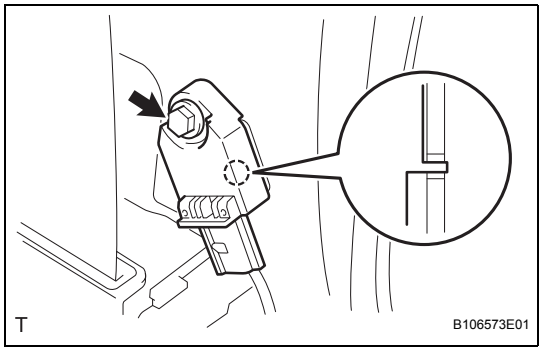

(b) Remove the bolt, disengage the hook and remove the side airbag sensor.

FRONT PASSENGER SEAT BELT WARNING LIGHT (for Sedan)

COMPONENTS

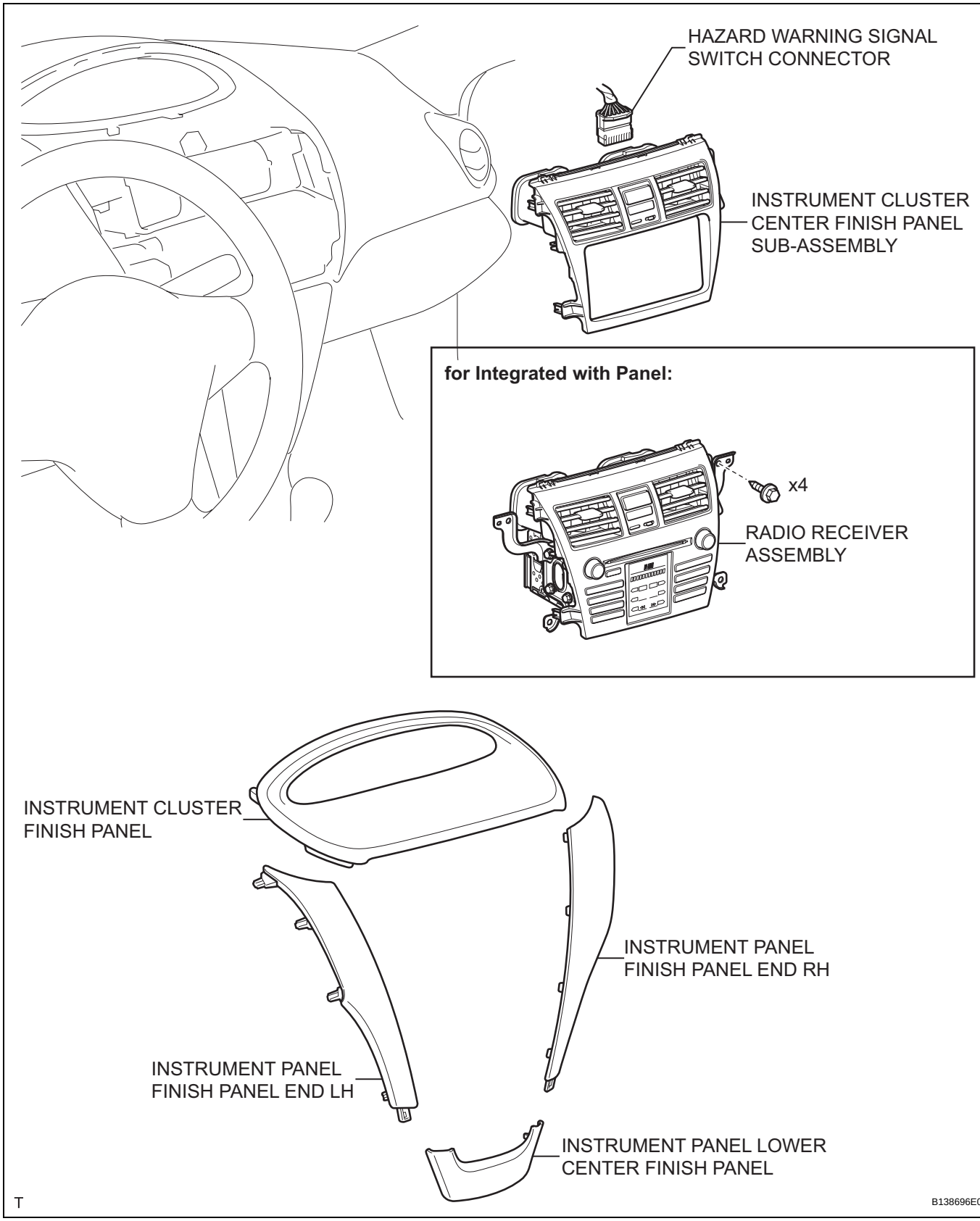

SB

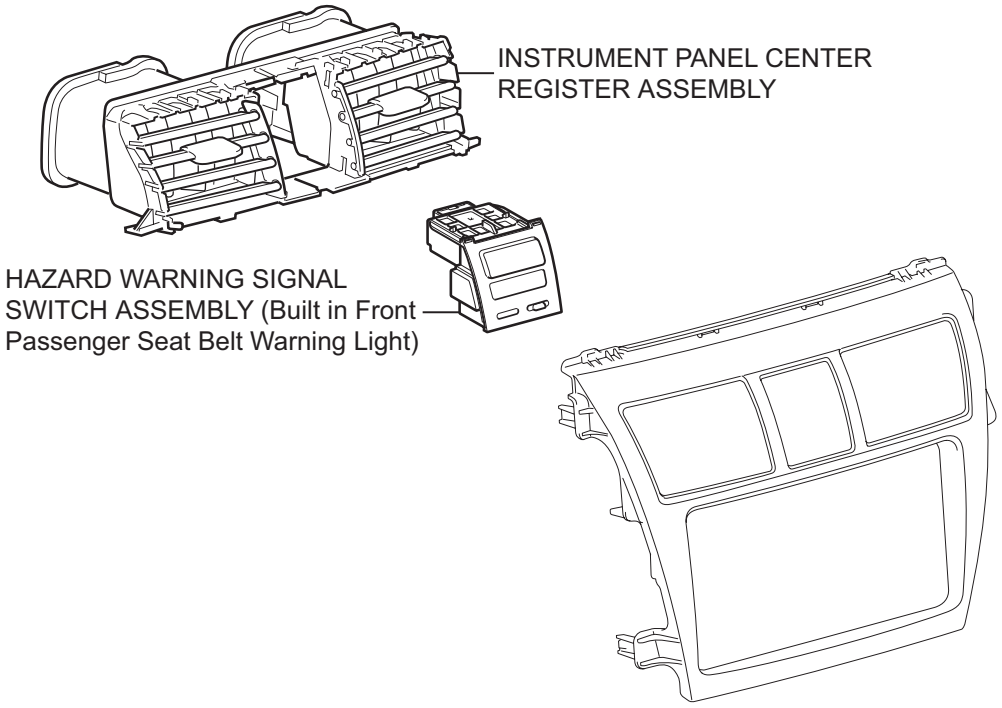

w/ Radio Receiver:

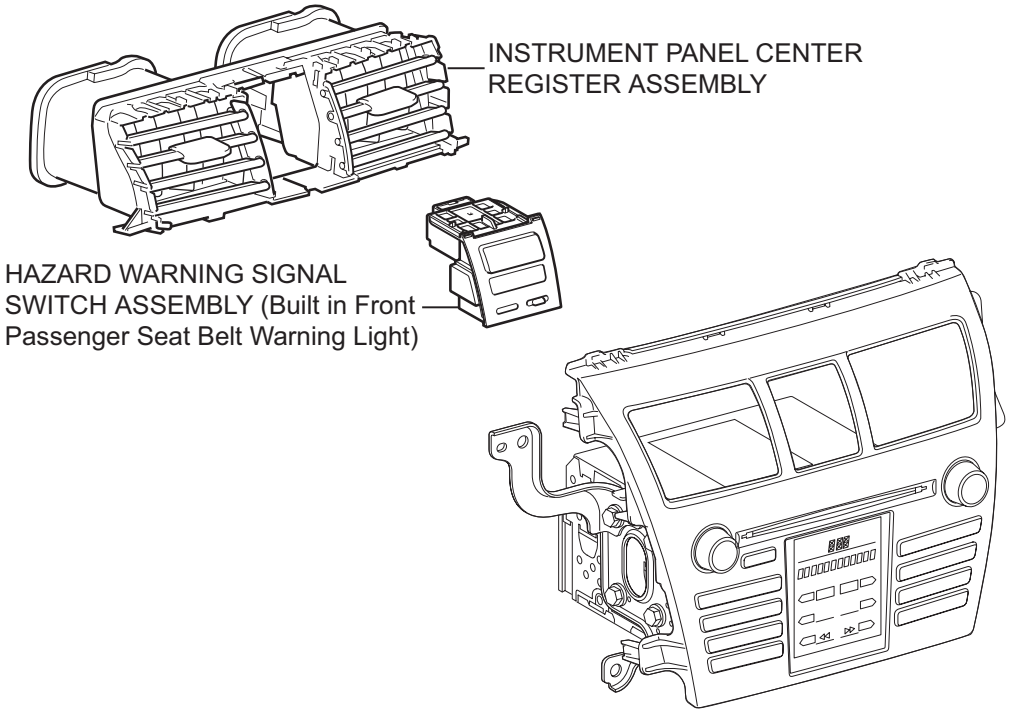

T

B138572E01

REMOVAL

1. **DISCONNECT CABLE FROM NEGATIVE BATTERY TERMINAL**
2. **REMOVE INSTRUMENT PANEL LOWER CENTER FINISH PANEL (See page ME-138)**
3. **REMOVE INSTRUMENT PANEL FINISH PANEL END RH (See page ME-138)**
4. **REMOVE INSTRUMENT PANEL FINISH PANEL END LH (See page ME-138)**
5. **REMOVE INSTRUMENT CLUSTER FINISH PANEL (See page ME-139)**
6. **REMOVE RADIO RECEIVER ASSEMBLY (for Integrated with Panel) (See page AV-38)**
7. **REMOVE INSTRUMENT CLUSTER CENTER FINISH PANEL SUB-ASSEMBLY (except Integrated with Panel) (See page IP-43)**
8. **REMOVE INSTRUMENT PANEL CENTER REGISTER ASSEMBLY (See page LI-166)**
9. **REMOVE HAZARD WARNING SIGNAL SWITCH ASSEMBLY (Built in Front Passenger Seat Belt Warning Light)**
   (a) Disengage the 3 claws and remove the hazard warning signal switch.

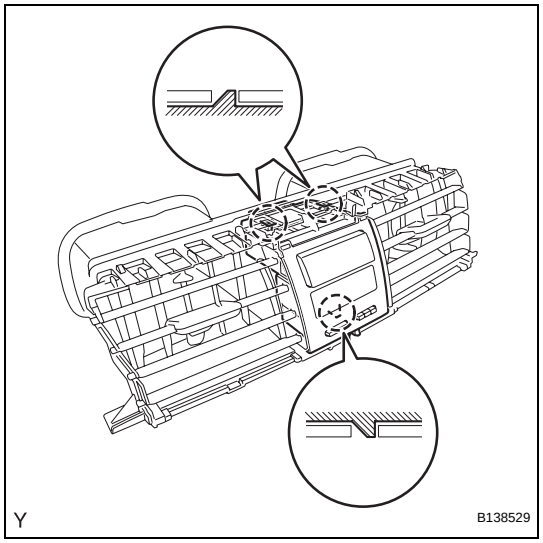

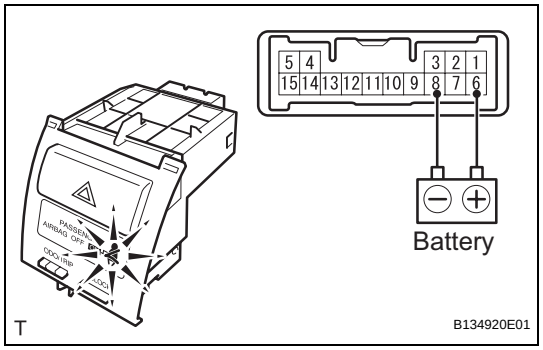

INSPECTION

1. **INSPECT HAZARD WARNING SIGNAL SWITCH ASSEMBLY (Built in Front Passenger Seat Belt Warning Light)**
   (a) Check the operation.
      (1) Apply battery voltage to the terminals and check that the indicator illuminates.
      Standard

Condition	Standard
Positive battery - Terminal 6 (IG+) Negative battery - Terminal 8 (PBEW)	Illuminates

If the result is not as specified, replace the hazard warning signal switch.

SB

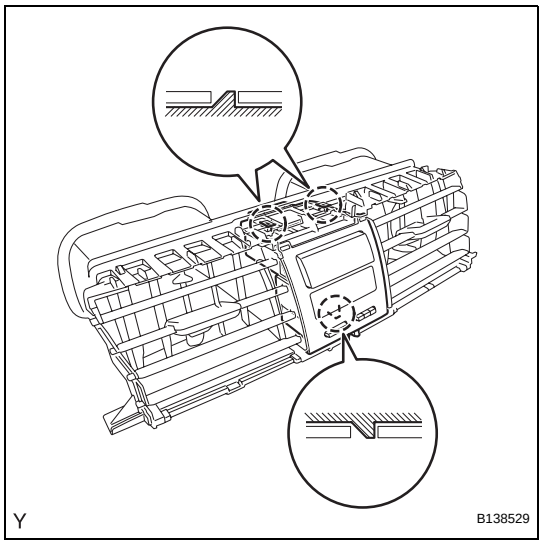

INSTALLATION

1. **INSTALL HAZARD WARNING SIGNAL SWITCH ASSEMBLY (Built in Front Passenger Seat Belt Warning Light)**
   (a) Engage the 3 claws and install the hazard warning signal switch.
2. **INSTALL INSTRUMENT PANEL CENTER REGISTER ASSEMBLY (See page LI-168)**
3. **INSTALL RADIO RECEIVER ASSEMBLY (for Integrated with Panel) (See page AV-40)**
4. **INSTALL INSTRUMENT CLUSTER CENTER FINISH PANEL SUB-ASSEMBLY (except Integrated with Panel) (See page IP-56)**
5. **INSTALL INSTRUMENT CLUSTER FINISH PANEL (See page ME-140)**
6. **INSTALL INSTRUMENT PANEL FINISH PANEL END RH (See page ME-141)**
7. **INSTALL INSTRUMENT PANEL FINISH PANEL END LH (See page ME-141)**
8. **INSTALL INSTRUMENT PANEL LOWER CENTER FINISH PANEL (See page ME-142)**
9. **CONNECT CABLE TO NEGATIVE BATTERY TERMINAL**
   Torque: 5.4 N*m (55 kgf*cm, 48 in.*lbf)

FRONT PASSENGER SEAT BELT WARNING LIGHT (for Hatchback)

COMPONENTS

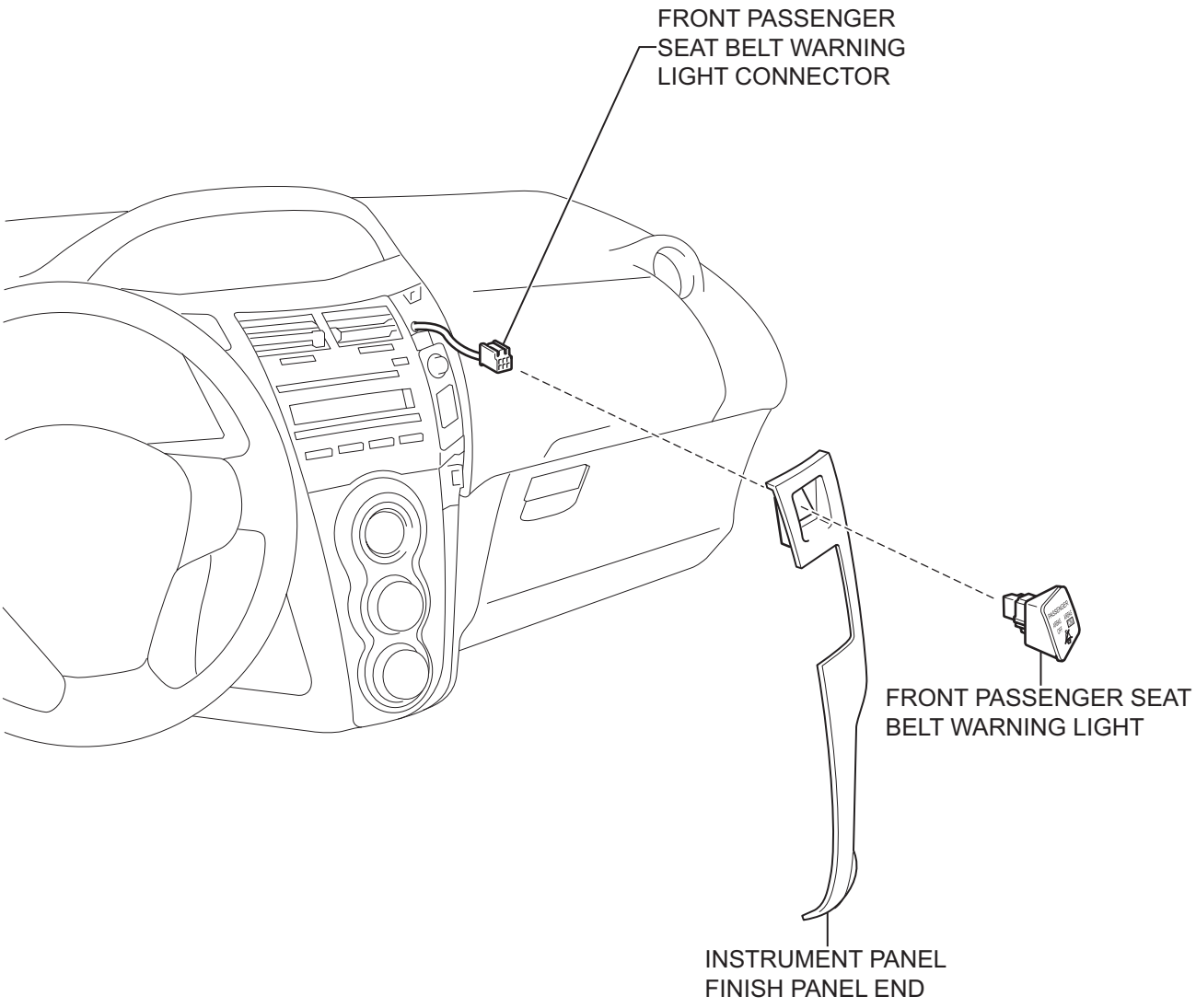

T

B117689E01

SB

REMOVAL

1. **DISCONNECT CABLE FROM NEGATIVE BATTERY TERMINAL**
2. **REMOVE INSTRUMENT PANEL FINISH PANEL END (See page ME-145)**
3. **REMOVE FRONT PASSENGER SEAT BELT WARNING LIGHT**
   (a) Disengage the 2 claws and remove the front passenger seat belt warning light.

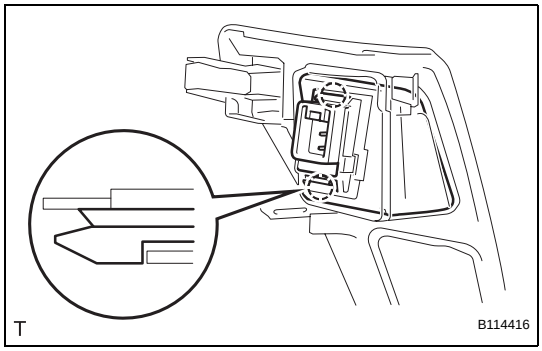

INSPECTION

1. **INSPECT FRONT PASSENGER SEAT BELT WARNING LIGHT**
   (a) Check the operation.
      (1) Apply battery voltage to the terminals and check that the indicator illuminates.
      Standard

Condition	Standard
Positive battery - Terminal 6 (IG+) Negative battery - Terminal 3 (PBELT)	Illuminates

If the result is not as specified, replace the front passenger seat belt warning light.

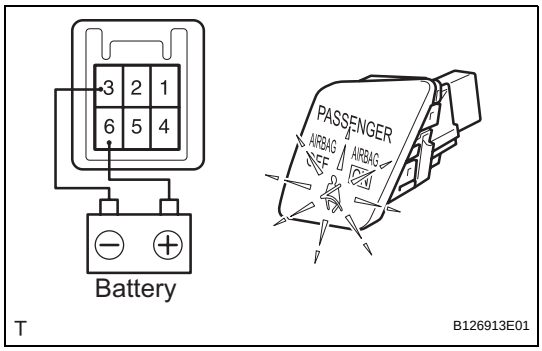

INSTALLATION

1. **INSTALL FRONT PASSENGER SEAT BELT WARNING LIGHT**
   (a) Engage the 2 claws and install the front passenger seat belt warning light.
2. **INSTALL INSTRUMENT PANEL FINISH PANEL END (See page ME-149)**
3. **CONNECT CABLE TO NEGATIVE BATTERY TERMINAL**
   Torque: 5.4 N*m (55 kgf*cm, 48 in.*lbf)

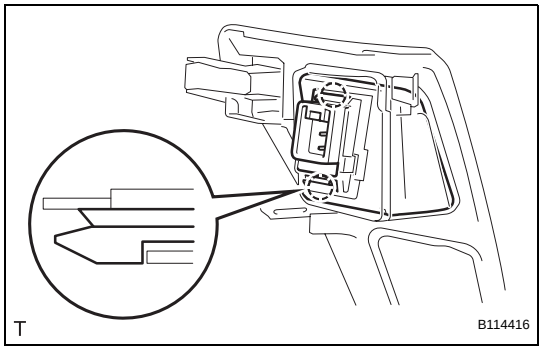

SEAT BELT WARNING SYSTEM

PARTS LOCATION

HATCHBACK:

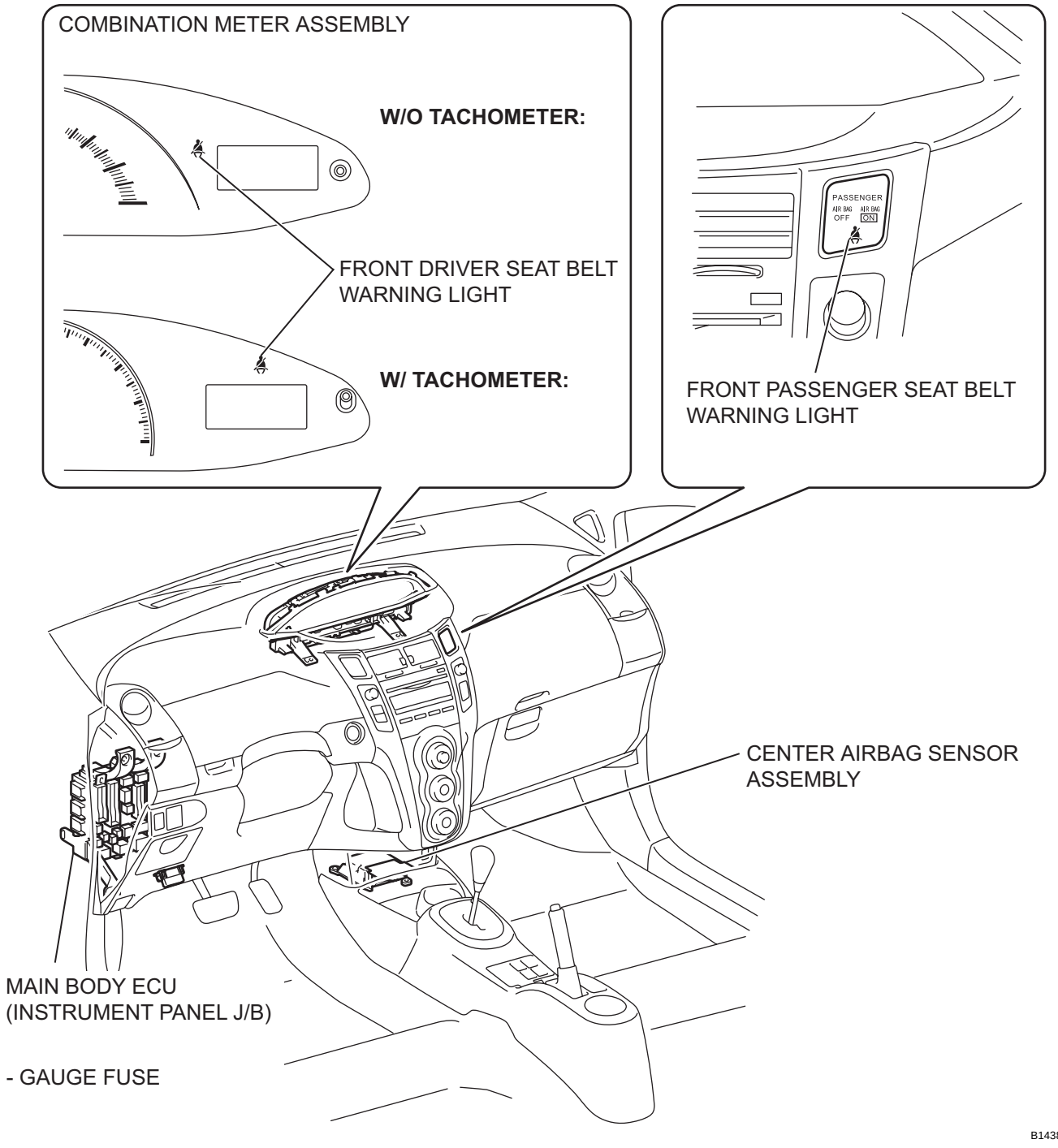

SB

SB

SEDAN:

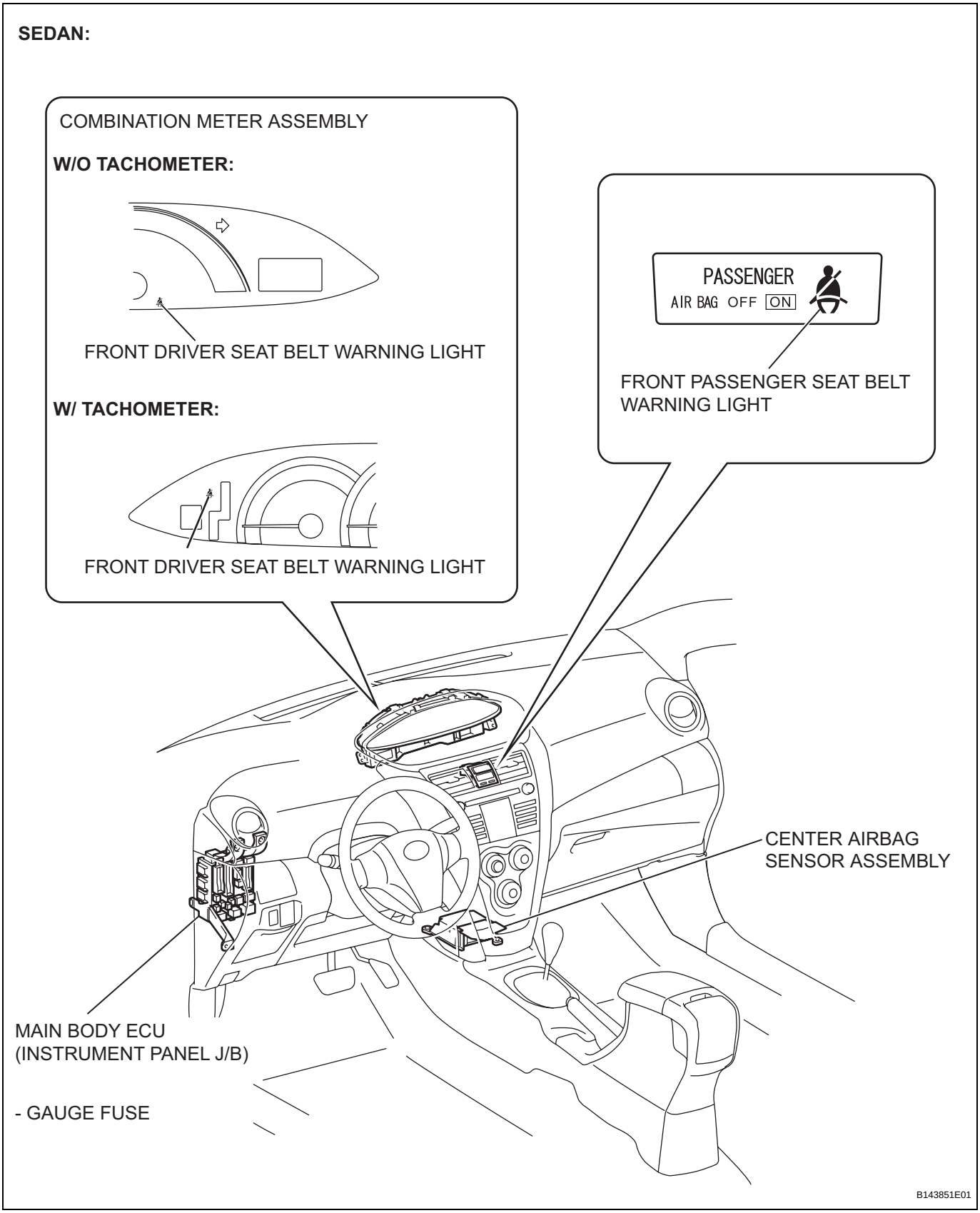
COMBINATION METER ASSEMBLY
W/O TACHOMETER:
FRONT DRIVER SEAT BELT WARNING LIGHT
W/ TACHOMETER:
FRONT DRIVER SEAT BELT WARNING LIGHT
PASSENGER
AIR BAG OFF ON
FRONT PASSENGER SEAT BELT WARNING LIGHT
CENTER AIRBAG SENSOR ASSEMBLY
MAIN BODY ECU (INSTRUMENT PANEL J/B)
- GAUGE FUSE
B143851E01

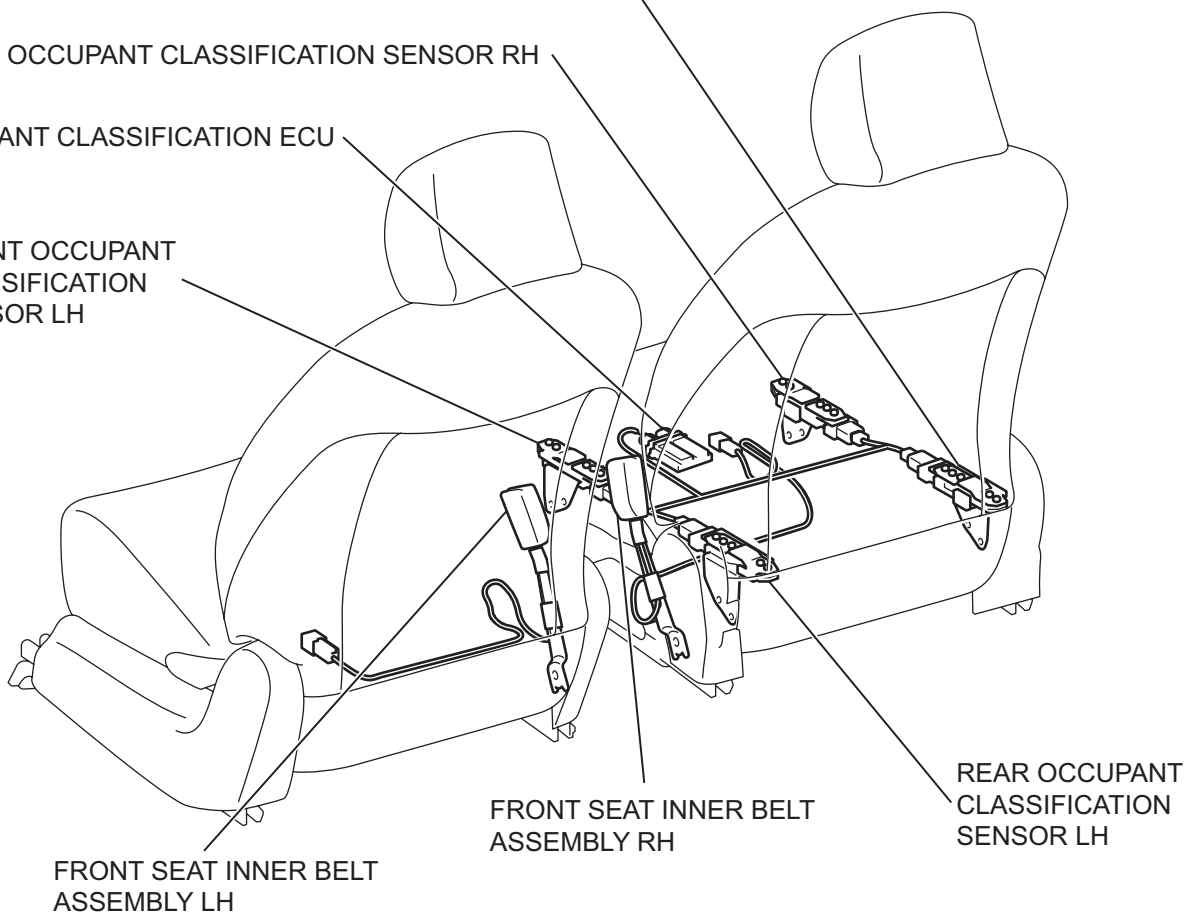
REAR OCCUPANT CLASSIFICATION SENSOR RH
FRONT OCCUPANT CLASSIFICATION SENSOR RH
OCCUPANT CLASSIFICATION ECU
FRONT OCCUPANT CLASSIFICATION SENSOR LH
FRONT SEAT INNER BELT ASSEMBLY LH
FRONT SEAT INNER BELT ASSEMBLY RH
REAR OCCUPANT CLASSIFICATION SENSOR LH
H
B118460E01

SYSTEM DIAGRAM

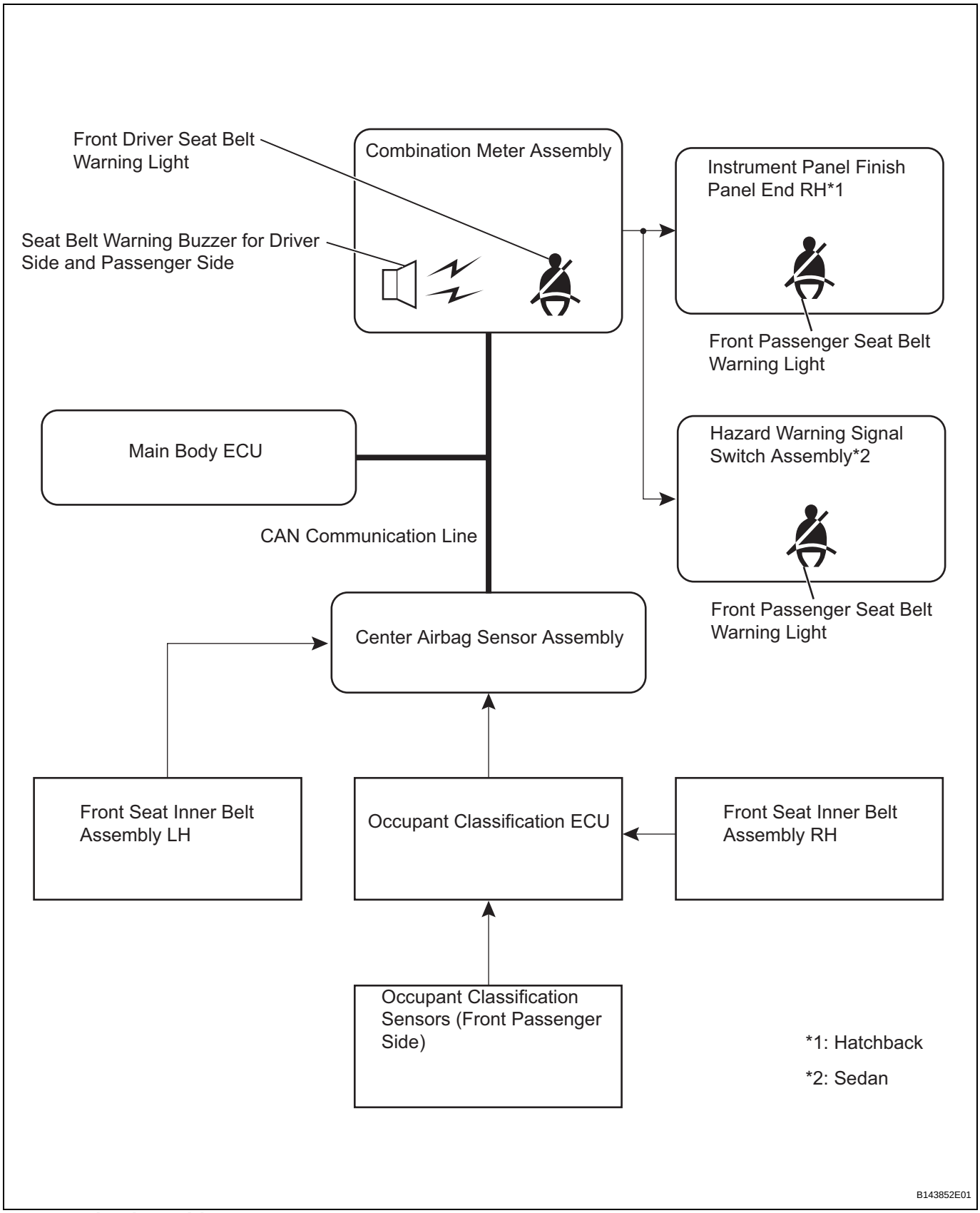

Communication table:

Sender	Receiver	Signal	Line
Center airbag sensor assembly	Main body ECU	Front seat inner belt switch signal (driver side)	CAN communication line

Sender	Receiver	Signal	Line
Center airbag sensor assembly	Main body ECU	Front seat inner belt switch signal (passenger side)	CAN communication line
Main body ECU	Combination meter assembly	Front seat inner belt switch signal (driver side)	CAN communication line
Main body ECU	Combination meter assembly	Front seat inner belt switch signal (passenger side)	CAN communication line

SYSTEM DESCRIPTION

1. SEAT BELT WARNING SYSTEM DESCRIPTION

If a seat belt is not fastened, this system flashes the seat belt warning light and sounds the seat belt warning buzzer as a reminder.

2. FUNCTIONS OF MAIN COMPONENTS

SB

Components	Function
Front Seat Inner Belt Assembly LH	Informs center airbag sensor assembly of front driver seat belt condition (fastened or unfastened)
Front Seat Inner Belt Assembly RH	Informs occupant classification ECU of front passenger seat belt condition (fastened or unfastened)
Occupant Classification ECU	Informs center airbag sensor assembly of front passenger seat condition (occupied or unoccupied) Informs center airbag sensor assembly of front passenger seat belt condition (fastened or unfastened)
Occupant Classification Sensor	Informs occupant classification ECU of front passenger seat condition (occupied or unoccupied)
Main Body ECU	Informs combination meter assembly of front driver and front passenger seat belt condition (fastened or unfastened) Informs combination meter assembly of front passenger seat condition (occupied or unoccupied)
Front Driver Seat Belt Warning Light	If front driver seat belt is unfastened and ignition switch is ON, combination meter assembly flashes seat belt warning light of combination meter assembly as reminder
Front Passenger Seat Belt Warning Light	Hatchback: When front passenger seat is occupied and ignition switch is ON, if passenger seat belt is unfastened, combination meter assembly flashes front passenger seat belt warning light of instrument panel finish panel end RH as reminder Sedan: When front passenger seat is occupied and ignition switch is ON, if passenger seat belt is unfastened, combination meter assembly flashes front passenger seat belt warning light of hazard warning signal switch assembly as reminder
Seat Belt Warning Buzzer for Front Driver Side and Front Passenger Side	If front driver or front passenger seat belt is unfastened and ignition switch is ON, combination meter assembly sounds buzzer as reminder

3. SYSTEM OPERATION

- When the ignition switch is ON, this system detects the condition of the seat belts based on signals from the front seat inner belt switches (for driver and front passenger seats) and the occupant classification sensor (front passenger side only).

HOW TO PROCEED WITH TROUBLESHOOTING

HINT:

- Use these procedures to troubleshoot the seat belt warning system.
- *: Use the intelligent tester.

SB

1	VEHICLE BROUGHT TO WORKSHOP

NEXT

2	INSPECT BATTERY VOLTAGE

Standard voltage:
11 to 14 V
If the voltage is below 11 V, recharge or replace the battery before proceeding.

NEXT

3	CHECK COMMUNICATION FUNCTION OF CAN COMMUNICATION SYSTEM*

(a) Use the intelligent tester to check if the CAN communication system is functioning normally.
Result:

Result	Proceed to
DTC is not output	A
DTC is output	B

B → GO TO CAN COMMUNICATION SYSTEM

A

4	PROBLEM SYMPTOMS TABLE

Result:

Result	Proceed to
Fault is not listed in problem symptoms table	A
Fault is listed in problem symptoms table	B

B → Go to step 6

A

5	OVERALL ANALYSIS AND TROUBLESHOOTING*

(a) DATA LIST / ACTIVE TEST (see page SB-20)

(b) TERMINALS OF ECU (see page SB-14)

NEXT

6	REPAIR OR REPLACE

NEXT

SB

7	CONFIRMATION TEST

NEXT

END

CUSTOMIZE PARAMETERS

HINT:
The following item can be customized.

Combination Meter Assembly

Display (Item)	Default	Function	Setting
SEAT BELT WARN	D/P ON	Changes seat belt warning buzzer setting	D/P ON / D ON / P ON / D/P OFF

NOTICE:

- **When the customer requests the modification of a function, first make sure that the function(s) can be customized.**
- **Record the current settings before customizing.**
- **When troubleshooting a function, first make sure that the function is not set to OFF.**

SB

PROBLEM SYMPTOMS TABLE

HINT:
Use the table below to help determine the causes of the problem symptom. The potential causes of the symptoms are listed in order of probability in the "Suspected Area" column of the table. Check each symptom by checking the suspected areas in the order they are listed. Replace parts as necessary.

Seat belt warning system

Symptom	Suspected area	See page
Front driver seat belt warning light does not operate	Front seat inner belt assembly LH (for Hatchback)	SB-40
	Front seat inner belt assembly LH (for Sedan)	SB-34
	Wire harness	SB-22
	Center airbag sensor assembly	SB-22
	Main body ECU	SB-22
	Combination meter assembly	SB-22
Front passenger seat belt warning light does not operate	Fuse	SB-24
	Front passenger seat belt warning light (for Hatchback)	SB-6
	Front passenger seat belt warning light (for Sedan)	SB-3
	Front seat inner belt assembly RH (for Hatchback)	SB-40
	Front seat inner belt assembly RH (for Sedan)	SB-34
	Occupant classification sensor	RS-226
	Wire harness	SB-24
	Occupant classification ECU	SB-24
	Center airbag sensor assembly	SB-24
	Main body ECU	SB-24
	Combination meter assembly	SB-24
Seat belt warning buzzer does not sound (Front driver and front passenger seat belt warning lights operate normally)	Combination meter assembly (for Hatchback)	ME-73
	Combination meter assembly (for Sedan)	ME-10

TERMINALS OF ECU

1. COMBINATION METER ASSEMBLY

Hatchback:

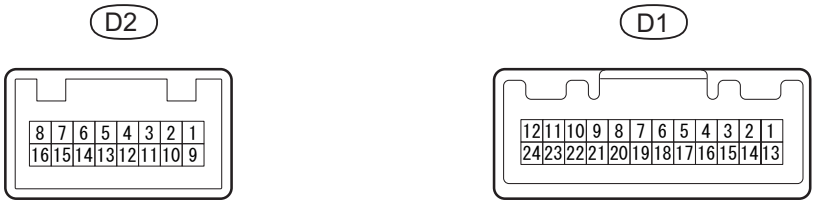

Sedan:



(a) Disconnect the D1 combination meter assembly connector.
(b) Measure the voltage and resistance of the wire harness side connector.

Standard

Symbols (Terminal No.)	Wiring Color	Terminal Description	Condition	Specified Condition
D1-1 - Body ground	B - Body ground	Ignition switch signal	Ignition switch OFF → ON	Below 1 V → 11 to 14 V
D1-2 - Body ground	L - Body ground	Battery	Always	11 to 14 V
D1-24 - Body ground	BR - Body ground	Ground	Always	Below 1 Ω

If the result is not as specified, there may be a malfunction in the wire harness.
(c) Reconnect the combination meter assembly connector.
(d) Measure the voltage of the wire harness side connector.

Standard voltage

Symbols (Terminal No.)	Wiring Color	Terminal Description	Condition	Specified Condition
D1-20 - Body ground	G - Body ground	CAN communication line	Ignition switch ON	Pulse generation (See waveform 1)
D1-21 - Body ground	W - Body ground	CAN communication line	Ignition switch ON	Pulse generation (See waveform 2)
D2-9*1 - Body ground	O - Body ground	Seat belt warning light signal (Front passenger side)	Ignition switch ON Front passenger seat is occupied and its seat belt is unfastened	Alternating between 11 to 14 V and below 1 V
D2-9*1 - Body ground	O - Body ground	Seat belt warning light signal (Front passenger side)	Ignition switch ON Front passenger seat is occupied and its seat belt is fastened	Below 1 V

Symbols (Terminal No.)	Wiring Color	Terminal Description	Condition	Specified Condition
D76-9*2 - Body ground	O - Body ground	Seat belt warning light signal (Front passenger side)	Ignition switch ON Front passenger seat is occupied and its seat belt is unfastened	Alternating between 11 to 14 V and below 1 V
D76-9*2 - Body ground	O - Body ground	Seat belt warning light signal (Front passenger side)	Ignition switch ON Front passenger seat is occupied and its seat belt is fastened	Below 1 V

SB

*1: Hatchback
*2: Sedan
If the result is not as specified, the combination meter may have a malfunction.

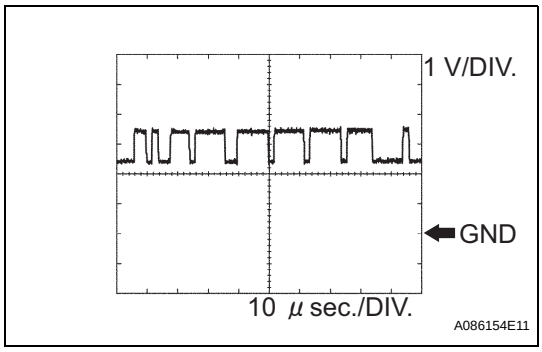

(e) Waveform 1 (Reference): Using an oscilloscope
CAN communication signal

Terminal Name	D1-21 (CANL) - D1-24 (ET)
Tester Range	1V/DIV, 10μs/DIV
Condition	Ignition switch ON

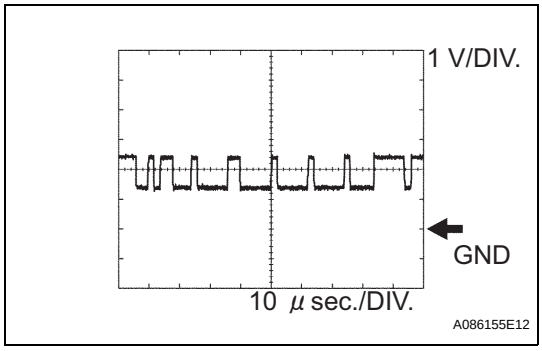

(f) Waveform 2 (Reference): Using an oscilloscope
CAN communication signal

Terminal Name	D1-21 (CANL) - D1-24 (ET)
Tester Range	1V/DIV, 10μs/DIV
Condition	Ignition switch ON

2. CENTER AIRBAG SENSOR ASSEMBLY

Center Airbag Sensor Assembly:

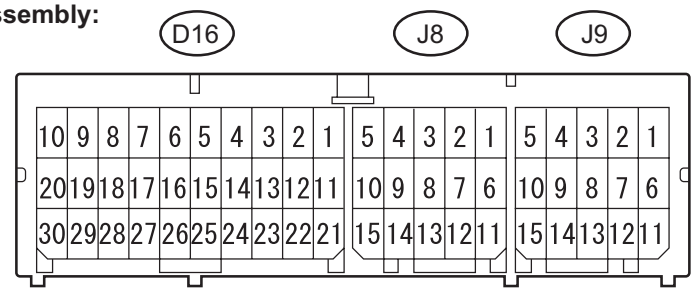

Terminal No.	Terminal Symbol	Destination
D16-13	CANH	CAN communication line
D16-21	IG2	IGN fuse
D16-22	CANL	CAN communication line
D16-25	E1	Ground
D16-26	E2	Ground
J8-11	DBE+	Front seat inner belt assembly LH
J8-12	DBE-	Front seat inner belt assembly LH
J9-12	FSP+	Occupant Classification ECU

Terminal No.	Terminal Symbol	Destination
J9-13	FSP-	Occupant Classification ECU

3. OCCUPANT CLASSIFICATION ECU

Occupant Classification ECU:

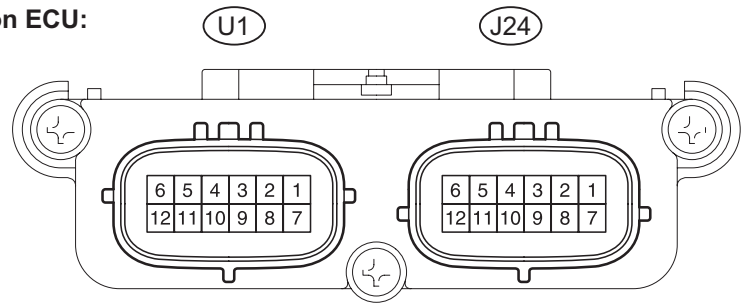

P H100909E04

(a) Disconnect the J24 occupant classification ECU connector.
(b) Measure the voltage and resistance of the wire harness side connector.

Symbols (Terminal No.)	Wiring Color	Terminal Description	Condition	Specified Condition
J24-7 (IG) - J24-3 (GND)	O - W-B	Power source (IG2 Fuse)	Ignition switch OFF	Below 1 V
J24-7 (IG) - J24-3 (GND)	O - W-B	Power source (IG2 Fuse)	Ignition switch ON	11 to 14 V
J24-1 (+B) - Body ground	V - Body ground	Power source (ECU-B Fuse)	Always	11 to 14 V
J24-3 (GND) - Body ground	W-B - Body ground	Ground	Always	Below 1 Ω

If the result is not as specified, there may be a malfunction in the wire harness.
(c) Reconnect the occupant classification ECU connector.
(d) Measure the voltage of the connector.

Symbols (Terminal No.)	Wiring Color	Terminal Description	Condition	Specified Condition
BSW (J24-9) - BGND (J24-5)	O - P	Passenger side buckle switch line	Buckle switch ON Buckle switch OFF	Pulse generation
FSR+ (J24-8) - FSR- (J24-4)	GR - Y	Center airbag sensor assembly communication line	Ignition switch ON	Pulse generation

If the result is not as specified, the combination meter may have a malfunction.

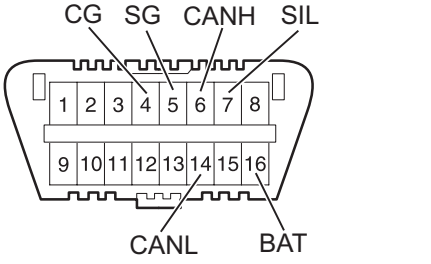

T H100769E16

DIAGNOSIS SYSTEM

1. CHECK DLC3

(a) The ECU uses ISO 15765-4 for communication. The terminal arrangement of the DLC3 complies with SAE J1962 and matches the ISO 15765-4 format.

Symbols (Terminal No.)	Terminal Description	Condition	Specified Condition
SIL (7) - SG (5)	Bus " +" line	During transmission	Pulse generation
CG (4) - Body ground	Chassis ground	Always	Below 1 Ω

Symbols (Terminal No.)	Terminal Description	Condition	Specified Condition
SG (5) - Body ground	Signal ground	Always	Below 1 Ω
BAT (16) - Body ground	Battery positive	Always	11 to 14 V
CANH (6) - CANL (14)	CAN bus line	Ignition switch OFF*	54 to 69 Ω
CANH (6) - CG (4)	HIGH-level CAN bus line	Ignition switch OFF*	200 Ω or higher
CANL (14) - CG (4)	LOW-level CAN bus line	Ignition switch OFF*	200 Ω or higher
CANH (6) - BAT (16)	HIGH-level CAN bus line	Ignition switch OFF*	6 kΩ or higher
CANL (14) - BAT (16)	LOW-level CAN bus line	Ignition switch OFF*	6 kΩ or higher

NOTICE:
***: Before measuring the resistance, leave the vehicle as is for at least 1 minute and do not operate the ignition switch, any other switches or the doors.**

If the result is not as specified, the DLC3 may have a malfunction. Repair or replace the harness and connector.

HINT:

Connect the cable of the intelligent tester to the CAN VIM, connect the CAN VIM to the DLC3, turn the ignition switch ON and attempt to use the tester. If the display indicates that a communication error has occurred, there is a problem either with the vehicle or with the tester.

- If communication is normal when the tester is connected to another vehicle, inspect the DLC3 of the original vehicle.
- If communication is still not possible when the tester is connected to another vehicle, the problem is probably in the tester itself. Consult the Service Department listed in the tester's instruction manual.

Hatchback:

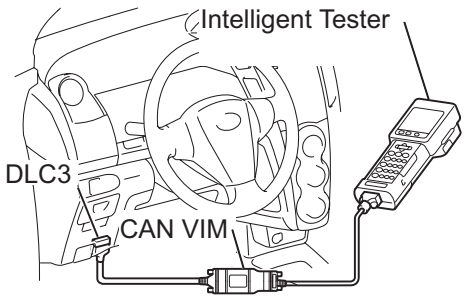

Sedan:

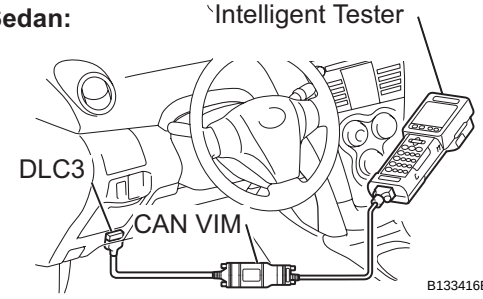

2. INSPECT BATTERY VOLTAGE

Standard voltage:

11 to 14 V

If the voltage is below 11 V, recharge or replace the battery before proceeding.

3. INSPECT FRONT DRIVER SEAT BELT WARNING LIGHT

(a) Turn the ignition switch ON.

(b) When the driver seat belt is not fastened, check that the combination meter assembly driver seat belt warning light blinks.

(c) When the seat belt is fastened, check that the combination meter assembly driver side seat belt warning light turns off.

4. INSPECT FRONT PASSENGER SEAT BELT WARNING LIGHT

(a) Turn the ignition switch ON.

(b) When the front passenger seat is occupied, but the seat belt is not fastened, check that the front passenger seat belt warning light on the instrument panel finish panel end RH*1 or hazard warning signal switch assembly*2 blinks.
*1: Hatchback
*2: Sedan

(c) When the front passenger seat belt is fastened, check that the front passenger seat belt warning light turns off.

5. INSPECT SEAT BELT WARNING BUZZER USING DRIVER SEAT BELT

(a) Turn the ignition switch ON.

(b) When the driver seat belt is not fastened within 1.8 seconds of the ignition switch being turned ON, check that the seat belt warning buzzer sounds at 1.2 second intervals for 6 seconds.

(c) When the driver seat belt is not fastened within 13.8 seconds of the ignition switch being turned ON and the vehicle speed reaches 12.4 mph (20 km/h) or more, check that the buzzer sounds at 1.2 second intervals for 9.6 seconds.

(d) After the buzzer has sounded for 9.6 seconds, check that the buzzer sounds at 0.4 second intervals for a further 20 seconds.

(e) When 29.6 seconds have elapsed since the buzzer started sounding in step (c) above, check that the buzzer stops sounding.

(f) After the buzzer has stopped sounding, turn the ignition switch OFF and then start the engine again. With the driver seat belt unfastened, drive the vehicle at 12.4 mph (20 km/h) or more. Check that the buzzer sounds.

(g) After the buzzer has stopped sounding, fasten the driver seat belt, drive the vehicle at 12.4 mph (20 km/h) or more, and then unfasten the seat belt. Check that the buzzer sounds.

(h) After the buzzer has stopped sounding, move the shift lever to R. Then move the shift lever to D (for A/T only). With the driver seat belt unfastened, drive the vehicle at 12.4 mph (20km/h) or more. Check that the buzzer sounds.

6. INSPECT SEAT BELT WARNING BUZZER USING FRONT PASSENGER SEAT BELT

HINT:
If the following inspection is conducted by one person, since the front passenger seat belt warning buzzer function uses signals from the occupant classification sensors, place an object with a weight of 36 kg (79.37 lb) or more on the front passenger seat.

(a) Turn the ignition switch ON.

(b) When the front passenger seat belt is not fastened within 1.8 seconds of the ignition switch being turned ON, check that the seat belt warning buzzer sounds at 1.2 second intervals for 6 seconds.

(c) When the front passenger seat belt is not fastened within 13.8 seconds of the ignition switch being turned ON and the vehicle speed reaches 12.4 mph (20 km/h) or more, check that the buzzer sounds at 1.2 second intervals for 9.6 seconds.

(d) After the buzzer has sounded for 9.6 seconds, check that the buzzer sounds at 0.4 second intervals for a further 20 seconds.

(e) When 29.6 seconds have elapsed since the buzzer started sounding in step (c) above, check that the buzzer stops sounding.

(f) After the buzzer has stopped sounding, turn the ignition switch OFF and then start the engine again. With the front passenger seat belt unfastened, drive the vehicle at 12.4 mph (20 km/h) or more. Check that the buzzer sounds.

(g) After the buzzer has stopped sounding, fasten the front passenger seat belt, drive the vehicle at 12.4 mph (20 km/h) or more, and then unfasten the front passenger seat belt. Check that the buzzer sounds.

(h) After the buzzer has stopped sounding, move the shift lever to R. Then move the shift lever to D. With the front passenger seat belt unfastened, drive the vehicle at 12.4 mph (20km/h) or more. Check that the buzzer sounds.

DATA LIST / ACTIVE TEST

1. READ DATA LIST

HINT:

By accessing the DATA LIST using the intelligent tester, values of the switches and sensors can be read without removing any parts. Reading the DATA LIST is the first step of troubleshooting and is one method of shortening labor time.

(a) Connect the intelligent tester with the CAN VIM to the DLC3.

(b) Turn the ignition switch ON and turn the tester ON.

(c) Enter the DATA LIST by following the prompts displayed on the tester screen.

Center Airbag Sensor Assembly

Item	Measurement Item/ Range (Display)	Normal Condition	Diagnostic Note
D BUCKLE SW	Buckle switch (Driver side)/ UNSET: Seat belt not fastened SET: Seat belt fastened NG: Data not determined	UNSET/SET	-
P BUCKLE SW	Buckle switch (Passenger side)/ UNSET: Seat belt not fastened SET: Seat belt fastened NG: Data not determined	UNSET/SET	-

Occupant Classification ECU

Item	Measurement Item/ Range (Display)	Normal Condition	Diagnostic Note
P BUCKLE SW	Buckle switch (Front passenger side)/ UNSET: Front passenger side seat belt is unfastened SET: Front passenger side seat belt is fastened NG: Front passenger side seat belt is malfunctioning	UNSET/SET	-
PASSENGER CLASS	Front passenger classification/ AF05: Adult (36 to 54 kg (79.37 to 119.05 lb)) is seated AM50: Adult more than 54 kg (119.05 lb) is seated CHILD: Child (less than 36 kg (79.37 lb)) is seated CRS: Child restraint system (less than 7 kg (15.43 lb)) and front passenger side buckle switch is ON, then 7 to 36 kg (15.43 to 79.37 lb) is set OFF: Vacant	AF05/AM50/CHILD/CRS/OFF	-

2. PERFORM ACTIVE TEST

HINT:

Performing the intelligent tester's ACTIVE TEST allows relays, VSV, actuators and other items to be operated without removing any parts. Performing the ACTIVE TEST early in troubleshooting is one way to save time. The DATA LIST can be displayed during the ACTIVE TEST.

(a) Connect the intelligent tester with the CAN VIM to the DLC3.

(b) Turn the ignition switch ON and turn the tester ON.
(c) Enter the ACTIVE TEST by following the prompts displayed on the tester screen.

Combination Meter Assembly:

Item	Test Details	Diagnostic Note
D-BELT REMIND	Front driver seat belt warning light / OFF or ON	-
P-BELT REMIND	Front passenger seat belt warning light / OFF or ON	-

Driver Side Seat Belt Warning Light does not Operate

DESCRIPTION

When the ignition switch is ON, the center airbag sensor assembly communicates the status of the front seat inner belt assembly LH to the main body ECU using the CAN communication line. The main body ECU receives signals from the center airbag sensor assembly and transmits them to the combination meter assembly. When the seat belt is unfastened, the combination meter assembly flashes the driver seat belt warning light in the combination meter assembly. When the seat belt is fastened, the combination meter assembly stops flashing the front driver seat belt warning light.

WIRING DIAGRAM

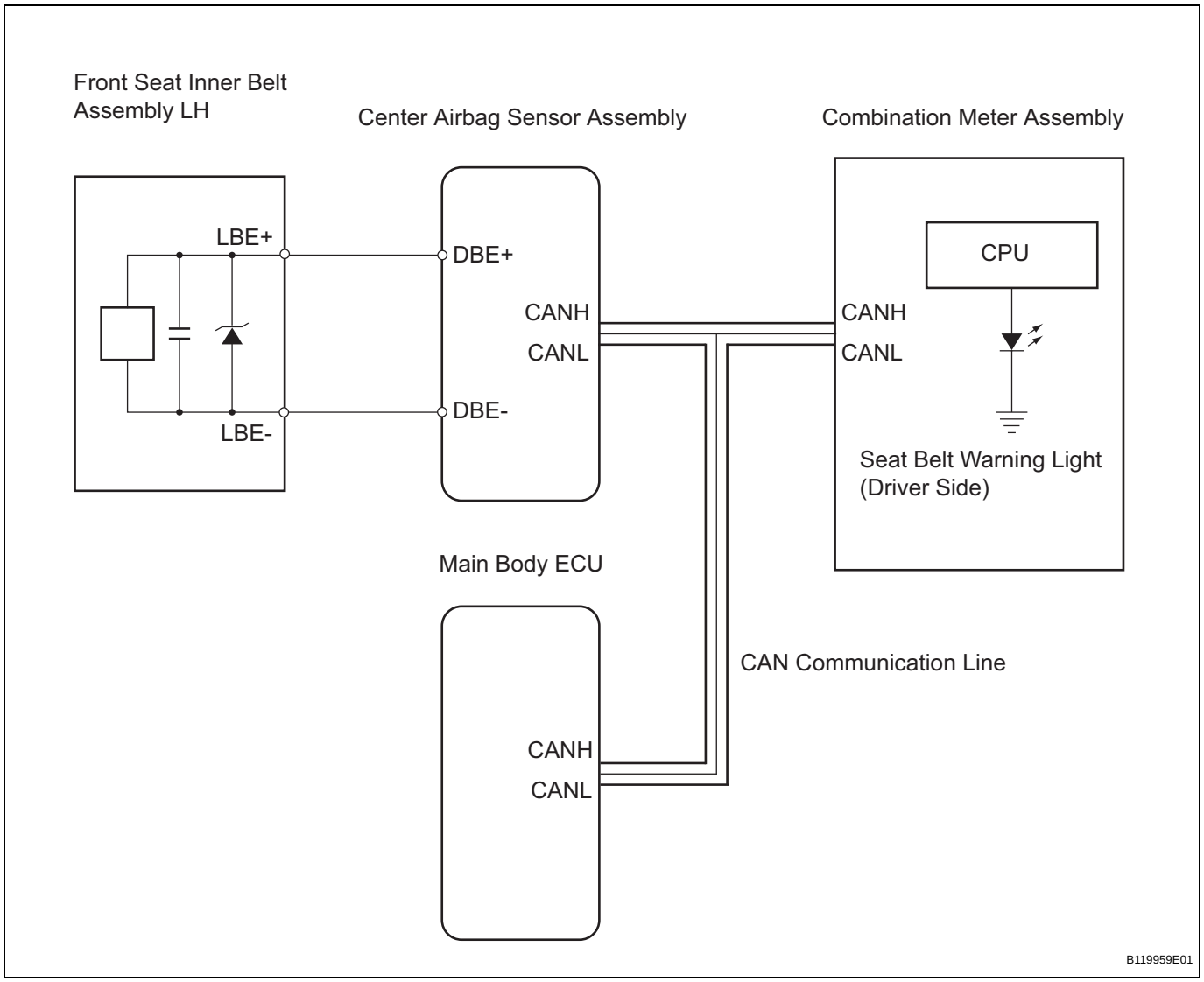

INSPECTION PROCEDURE

1	CHECK SUPPLEMENTAL RESTRAINT SYSTEM

(a) Connect the intelligent tester with the CAN VIM to the DLC3.
(b) Turn the ignition switch ON and turn the tester ON.

(c) Enter the following menus: DIAGNOSIS / SRS AIRBAG/ DTC INFO

Result

Result	Proceed to
No SRS DTCs are output	A
SRS DTCs are output	B

B → **GO TO SUPPLEMENTAL RESTRAINT SYSTEM**

A

2 **PERFORM ACTIVE TEST BY INTELLIGENT TESTER (D-BELT REMIND)**

(a) Connect the intelligent tester with the CAN VIM to the DLC3.
(b) Turn the ignition switch ON and turn the tester ON.
(c) Enter the following menus: DIAGNOSIS / METER / ACTIVE TEST

Combination Meter Assembly

Item	Test Details	Diagnostic Note
D-BELT REMIND	Front driver seat belt warning light / OFF or ON	-

OK:

Front driver seat belt warning light comes on.

OK → **REPLACE MAIN BODY ECU**

NG

REPLACE COMBINATION METER ASSEMBLY

Front Passenger Side Seat Belt Warning Light Malfunction

DESCRIPTION

When the ignition switch is ON and the front passenger seat is occupied, the center airbag sensor assembly communicates the status of the front seat inner belt assembly RH to the main body ECU using the CAN communication line. The main body ECU receives signals from the center airbag sensor assembly and transmits them to the combination meter assembly. When the seat belt is unfastened, the combination meter assembly flashes the front passenger seat belt warning light on the instrument panel finish panel end RH*1 or hazard warning signal switch assembly*2. When the seat belt is fastened, the combination meter assembly stops flashing the front passenger seat belt warning light on the instrument panel finish panel end RH*1 or hazard warning signal switch assembly*2.

HINT:

*1: Hatchback

*2: Sedan

SB

WIRING DIAGRAM

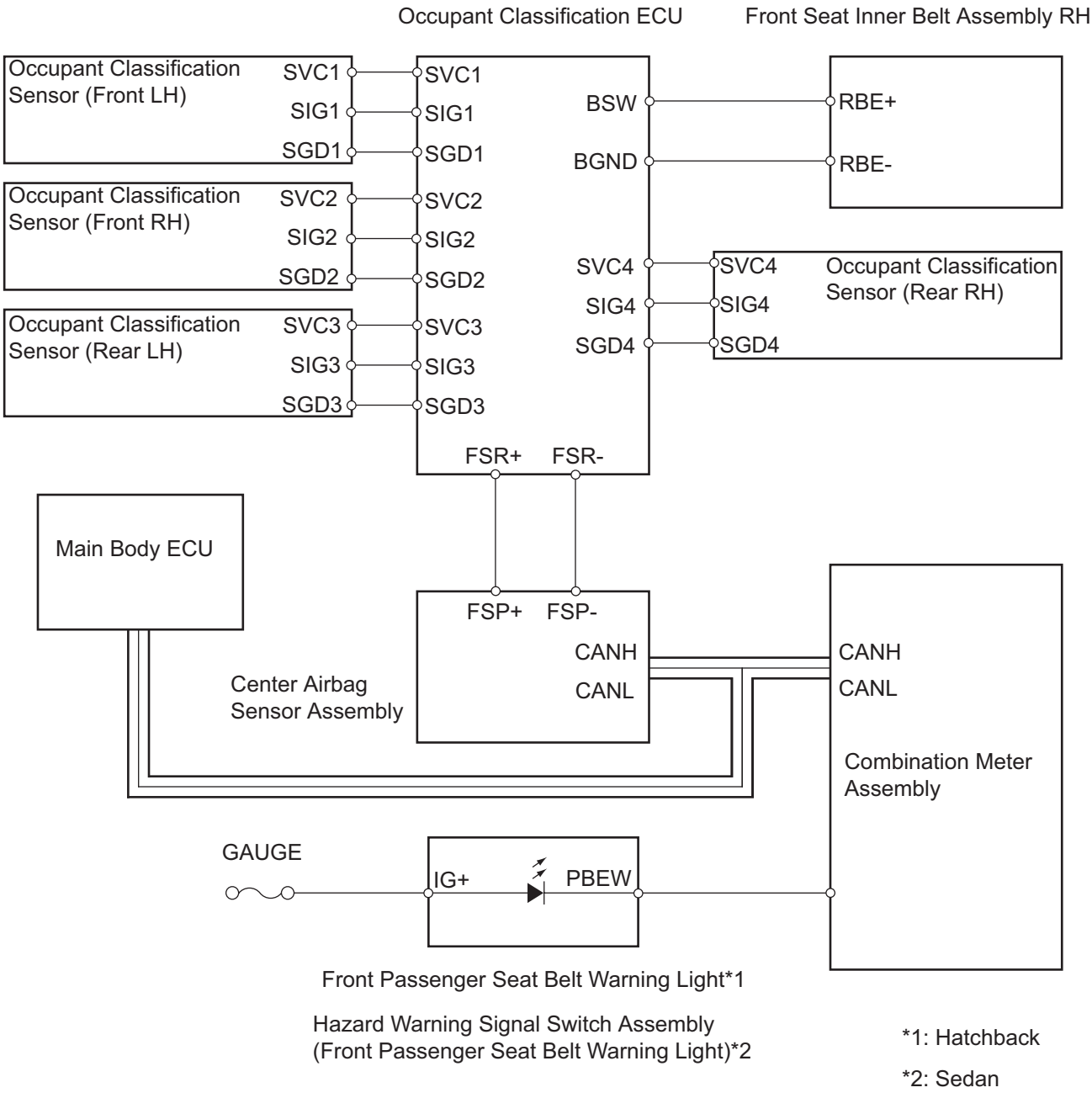

INSPECTION PROCEDURE

1	CHECK SUPPLEMENTAL RESTRAINT SYSTEM

(a) Connect the intelligent tester with the CAN VIM to the DLC3.
(b) Turn the ignition switch ON and turn the tester ON.

(c) Enter the following menus: DIAGNOSIS / SRS AIRBAG/ DTC INFO

Result

Result	Proceed to
No DTCs are output	A
DTCs are output	B

B → **GO TO SUPPLEMENTAL RESTRAINT SYSTEM**

A

2 CHECK OCCUPANT CLASSIFICATION SYSTEM

(a) Connect the intelligent tester with the CAN VIM to the DLC3.
(b) Turn the ignition switch ON and turn the tester ON.
(c) Enter the following menus: DIAGNOSIS / OCCUPANT DETECT / DTC INFO

Result

Result	Proceed to
No DTCs are output	A
DTCs are output	B

B → **GO TO OCCUPANT CLASSIFICATION SYSTEM**

A

3 READ VALUE OF INTELLIGENT TESTER (P BUCKLE SW)

(a) Connect the intelligent tester with the CAN VIM to the DLC3.
(b) Turn the ignition switch ON and turn the tester ON.
(c) Enter the following menus: DIAGNOSIS / SRS AIRBAG/ DATA LIST

Center Airbag Sensor Assembly

Item	Measurement Item / Display (Range)	Normal Condition	Diagnostic Note
P BUCKLE SW	Buckle switch (Front passenger side)/ UNSET: Front passenger side seat belt is unfastened SET: Front passenger side seat belt is fastened NG: Front passenger side seat belt is malfunctioning	UNSET/SET	-

OK:

Front seat inner belt assembly RH operates normally.

OK → **Go to step 7**

NG

4 CHECK FRONT SEAT INNER BELT ASSEMBLY RH

Component Side:

Front Seat Inner Belt Assembly RH

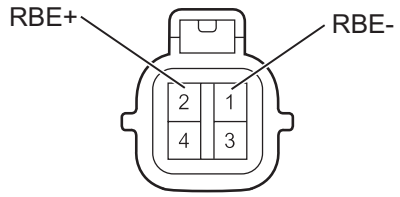

H

B118133E01

(a) Disconnect the J11 front seat inner belt assembly RH connector.
(b) Measure the resistance.
Standard resistance

Tester Connection	Condition	Specified Condition
1 (RBE-) - 2 (RBE+)	Tongue plate fastened	10 kΩ or higher
1 (RBE-) - 2 (RBE+)	Tongue plate unfastened	Below 1 Ω

(c) Reconnect the front seat inner belt assembly RH connector.

NG → **REPLACE FRONT SEAT INNER BELT ASSEMBLY RH**

OK

5 CHECK HARNESS AND CONNECTOR (ECU - FRONT SEAT INNER BELT ASSEMBLY RH)

Wire Harness Side:

Front Seat Inner Belt Assembly RH Connector

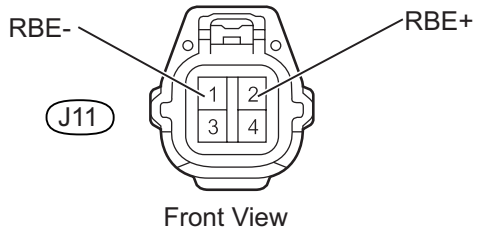

Front View

Occupant Classification ECU Connector

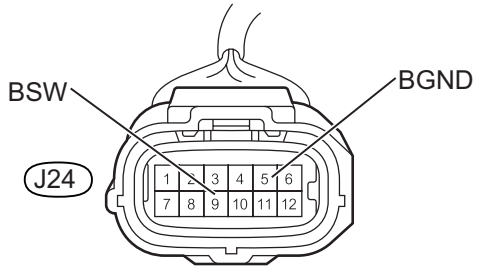

Front View

B148427E01

(a) Disconnect the J24 occupant classification ECU connector.
(b) Disconnect the J11 front seat inner belt assembly RH connector.
(c) Measure the resistance.
Standard resistance

Tester Connection	Specified Condition
J24-9 (BSW) - J11-2 (RBE+)	Below 1 Ω
J24-9 (BSW) or J11-2 (RBE+) - Body ground	10 kΩ or higher
J24-5 (BGND) - J11-1 (RBE-)	Below 1 Ω
J24-5 (BGND) or J11-1 (RBE-) - Body ground	10 kΩ or higher

(d) Reconnect the occupant classification ECU connector.
(e) Reconnect the front seat inner belt assembly connector.

NG → **REPAIR OR REPLACE HARNESS OR CONNECTOR**

OK

6	CHECK HARNESS AND CONNECTOR (CENTER AIRBAG SENSOR ASSEMBLY - OCCUPANT CLASSIFICATION ECU)

Wire Harness Side:

Center Airbag Sensor Assembly Connector

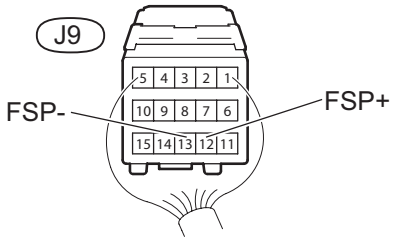

Occupant Classification ECU Connector

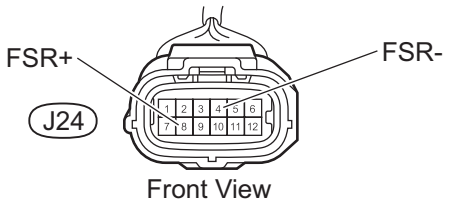

B148428E01

(a) Disconnect the J9 center airbag sensor assembly connector.
(b) Disconnect the J24 occupant classification ECU connector.
(c) Measure the resistance.
Standard resistance

Tester Connection	Specified Condition
J9-12 (FSP+) - J24-8 (FSR+)	Below 1 Ω
J9-12 (FSP+) or J24-8 (FSR+) - Body ground	10 kΩ or higher
J9-13 (FSP-) - J24-4 (FSR-)	Below 1 Ω
J9-13 (FSP-) or J24-4 (FSR-) - Body ground	10 kΩ or higher

(d) Reconnect the center airbag sensor assembly connector.
(e) Reconnect the occupant classification ECU connector.

NG → **REPAIR OR REPLACE HARNESS OR CONNECTOR**

OK

REPLACE OCCUPANT CLASSIFICATION ECU

7	PERFORM ACTIVE TEST BY INTELLIGENT TESTER (P-BELT REMIND)

(a) Connect the intelligent tester with the CAN VIM to the DLC3.
(b) Turn the ignition switch ON and turn the tester ON.
(c) Enter the following menus: DIAGNOSIS / METER / ACTIVE TEST

Combination Meter Assembly

Item	Test Details	Diagnostic Note
P-BELT REMIND	Front passenger seat belt warning light / OFF or ON	-

OK:
Front passenger seat belt warning light comes on.

NG → **REPLACE COMBINATION METER ASSEMBLY**

OK

SB

8	INSPECT FUSE (GAUGE)

(a) Remove the GAUGE fuse from the main body ECU.
(b) Measure the resistance.
Standard resistance:
Below 1 Ω
(c) Reinstall the GAUGE fuse.

NG → **REPLACE FUSE**

OK

9	INSPECT FRONT PASSENGER SEAT BELT WARNING LIGHT

Component Side:

Front Passenger Seat Belt Warning Light

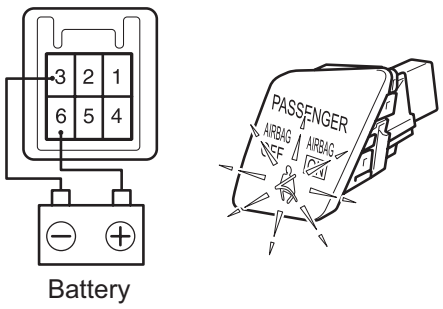

B128414E02

(a) Hatchback:
(1) Remove the front passenger seat belt warning light.
(2) Apply battery voltage to the terminals and check that the indicator illuminates.
Standard

Tester Connection	Specified Condition
Positive battery - Terminal 6 (IG+) Negative battery - Terminal 3 (PBEW)	Illuminates

(3) Reinstall the front passenger seat belt warning light.

Component Side:

Hazard Warning Signal Switch Assembly
(Front Passenger Seat Belt Warning Light)

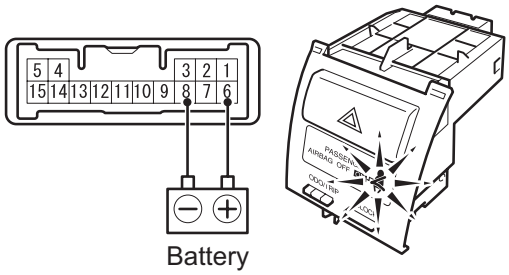

B143890E01

(b) Sedan:
(1) Remove the hazard warning signal switch assembly.
(2) Apply battery voltage to the terminals and check that the indicator illuminates.
Standard

Tester Connection	Specified Condition
Positive battery - Terminal 6 (IG+) Negative battery - Terminal 8 (PBEW)	Illuminates

(3) Reinstall the hazard warning signal switch assembly.

NG → **REPLACE FRONT PASSENGER SEAT BELT WARNING LIGHT**

OK

10	CHECK HARNESS AND CONNECTOR (FUSE - FRONT PASSENGER SEAT BELT WARNING LIGHT)

Wire Harness Side:

Main Body ECU Connector

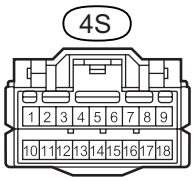

Front View

Front Passenger Seat Belt Warning Light Connector

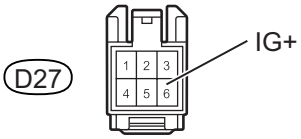

Front View

B143886E01

(a) Hatchback:
(1) Disconnect the D27 front passenger seat belt warning light connector.
(2) Disconnect the 4S main body ECU connector.
(3) Measure the resistance.
Standard resistance

Tester Connection	Specified Condition
4S-15 - D27-6 (IG+)	Below 1 Ω
4S-15 or D27-6 (IG+) - Body ground	10 kΩ or higher

(4) Reconnect the front passenger seat belt warning light connector.
(5) Reconnect the main body ECU connector.

Wire Harness Side:

Main Body ECU Connector

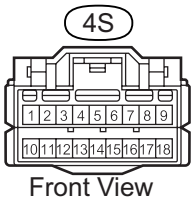

Front View

Hazard Warning Signal Switch Assembly Connector (Front Passenger Seat Belt Warning Light)

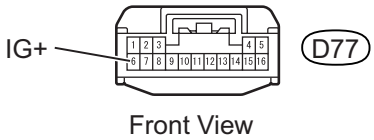

Front View

B143887E01

(b) Sedan:
(1) Disconnect the D77 hazard warning signal switch assembly connector.
(2) Disconnect the 4S main body ECU connector.
(3) Measure the resistance.
Standard resistance

Tester Connection	Specified Condition
4S-15 - D77-6 (IG+)	Below 1 Ω
4S-15 or D77-6 (IG+) - Body ground	10 kΩ or higher

(4) Reconnect the hazard warning signal switch assembly connector.
(5) Reconnect the main body ECU connector.

NG → **REPAIR OR REPLACE HARNESS OR CONNECTOR**

OK

11	**CHECK HARNESS AND CONNECTOR (SEAT BELT WARNING LIGHT - COMBINATION METER ASSEMBLY)**

Wire Harness Side:

Front Passenger Seat Belt Warning Light Connector

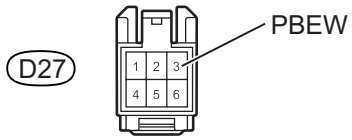

Front View

Combination Meter Assembly Connector

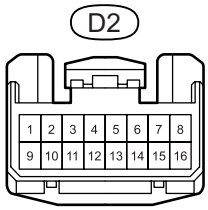

Front View

B147604E01

(a) Hatchback:
(1) Disconnect the D2 combination meter assembly connector.
(2) Disconnect the D27 front passenger seat belt warning light connector.
(3) Measure the resistance.
Standard resistance

Tester Connection	Specified Condition
D2-9 - D27-3 (PBEW)	Below 1 Ω
D2-9 or D27-3 (PBEW) - Body ground	10 kΩ or higher

(4) Reconnect the combination meter assembly connector.
(5) Reconnect the front passenger seat belt warning light connector.

Wire Harness Side:

Hazard Warning Signal Switch Assembly Connector (Front Passenger Seat Belt Warning Light)

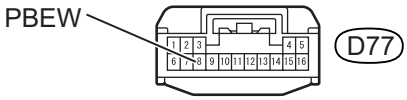

Front View

Combination Meter Assembly Connector

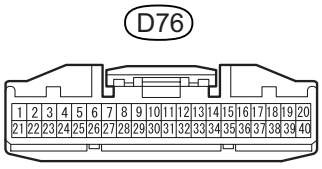

Front View

B147605E01

(b) Sedan:
(1) Disconnect the D76 combination meter assembly connector.
(2) Disconnect the D77 hazard warning signal switch assembly connector.
(3) Measure the resistance.
Standard resistance

Tester Connection	Specified Condition
D76-9 - D77-8 (PBEW)	Below 1 Ω
D76-9 or D77-8 (PBEW) - Body ground	10 kΩ or higher

(4) Reconnect the combination meter assembly connector.
(5) Reconnect the hazard warning signal switch assembly connector.

NG → **REPAIR OR REPLACE HARNESS OR CONNECTOR**

OK

REPLACE MAIN BODY ECU

FRONT SEAT INNER BELT ASSEMBLY (for Sedan)

COMPONENTS

SB

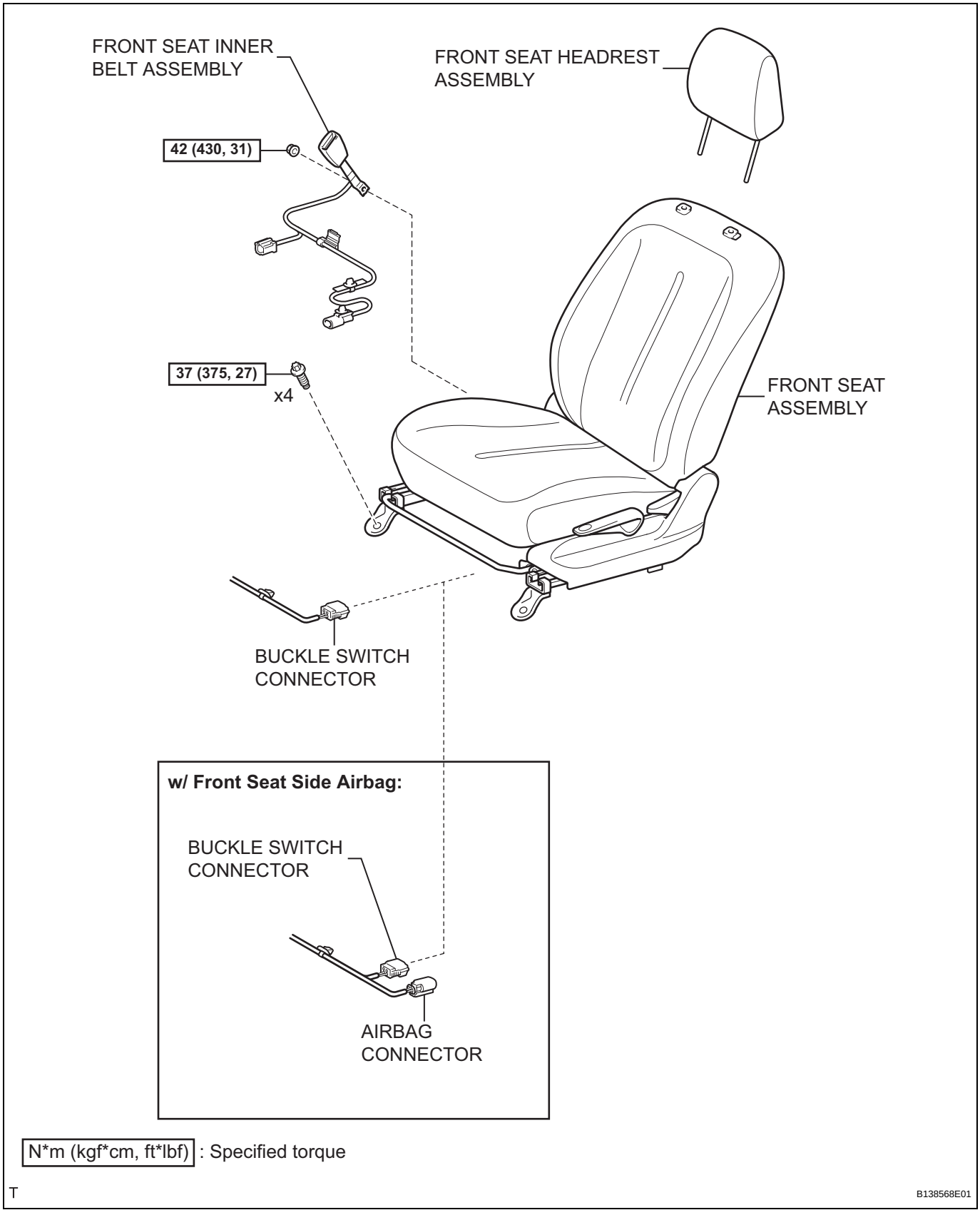

N*m (kgf*cm, ft*lbf) : Specified torque

T

B138568E01

REMOVAL

CAUTION:
Some of these service operations affect the SRS airbag system. Read the precautionary notices concerning the SRS airbag system before servicing (w/ Front Seat Side Airbag) (See page RS-1).
NOTICE:
Always use "Torx" socket wrench E10 when removing the front seat.
HINT:
The procedure described below is for the driver side. Use the same procedure for both the front passenger and driver sides, unless otherwise specified.

1. **DISCONNECT CABLE FROM NEGATIVE BATTERY TERMINAL**
   CAUTION:
   Wait for at least 90 seconds after disconnecting the cable to prevent the airbag from working (w/ Front Seat Side Airbag).
2. **REMOVE FRONT SEAT HEADREST ASSEMBLY (See page SE-5)**
3. **REMOVE FRONT SEAT ASSEMBLY (See page SE-5)**
4. **REMOVE FRONT SEAT INNER BELT ASSEMBLY**
   (a) for Driver Side:
      (1) Disconnect the seat position sensor connector.
      (2) Using a clip remover, remove the connector.
      (3) Using a clip remover, remove the clamp.
      (4) Remove the clamp.

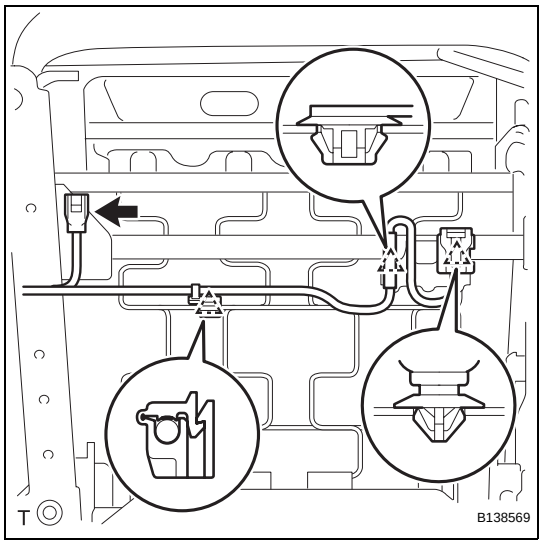

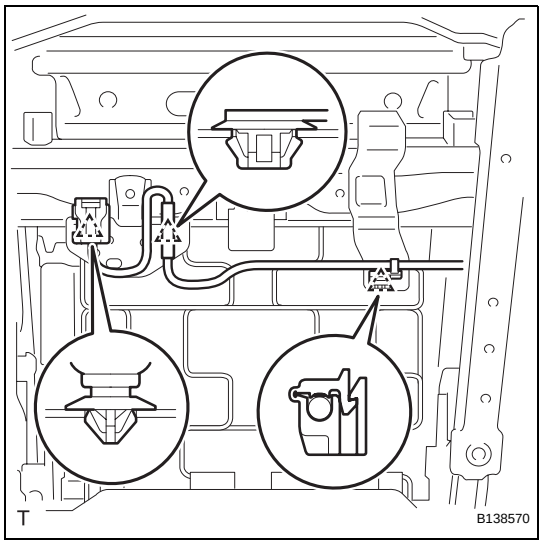

(b) for Front Passenger Seat:
  (1) Using a clip remover, remove the connector.
  (2) Using a clip remover, remove the clamp.
  (3) Remove the clamp.

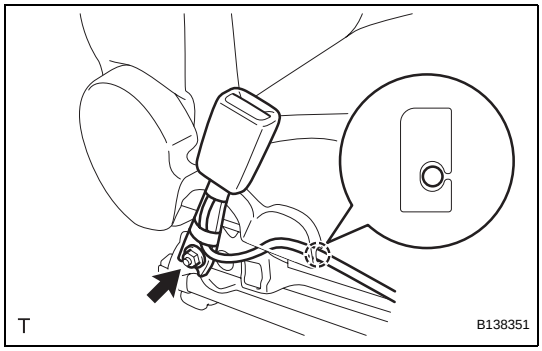

(c) Remove the wire harness from the claw of the front seat cushion inner shield.
(d) Remove the nut and the front seat inner belt.

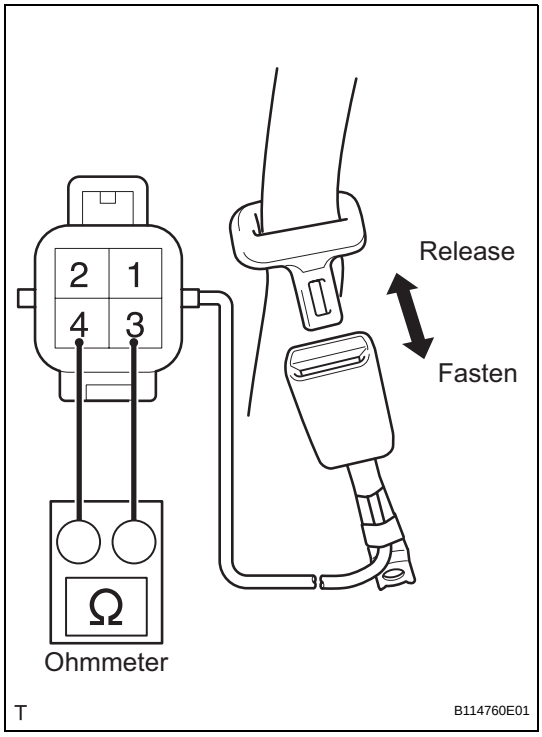

INSPECTION

1. INSPECT FRONT SEAT INNER BELT ASSEMBLY

(a) for Driver Side:
  (1) Check the resistance.
    1. Using an ohmmeter, measure the resistance between the terminals.

Standard resistance

Tester Connection	Condition	Specified Condition
3 - 4	Tongue plate fastened	10 kΩ or higher
	Tongue plate released	Below 1 Ω

If the result is not as specified, replace the front seat inner belt.

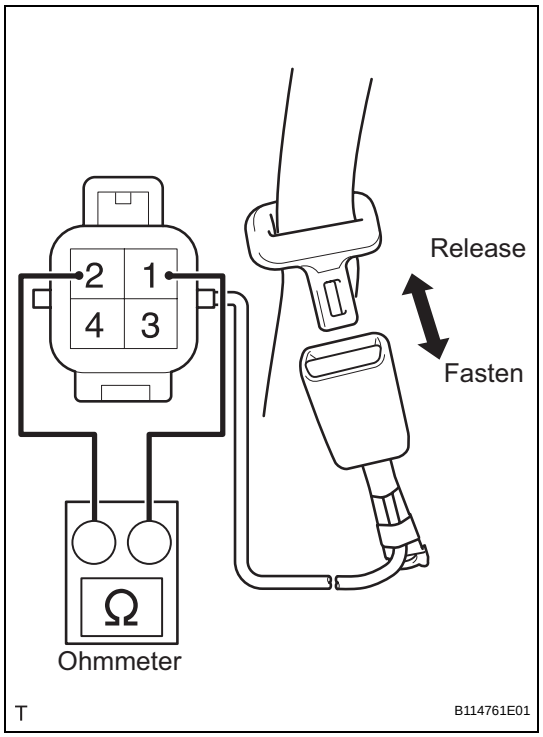

(b) for Front Passenger Side:

(1) Check the resistance.

1. Using an ohmmeter, measure the resistance between the terminals.

Standard resistance

Tester Connection	Condition	Specified Condition
1 - 2	Tongue plate fastened	10 kΩ or higher
	Tongue plate released	Below 1 Ω

If the result is not as specified, replace the front seat inner belt.

SB

SB

INSTALLATION

CAUTION:
Some of these service operations affect the SRS airbag system. Read the precautionary concerning the SRS airbag system before servicing (w/ Front Seat Side Airbag) (See page RS-1).
NOTICE:
Always use "Torx" socket wrench E10 when installing the front seat.
HINT:
The procedure described below is for the driver side. Use the same procedure for both the front passenger and drive sides, unless otherwise specified.

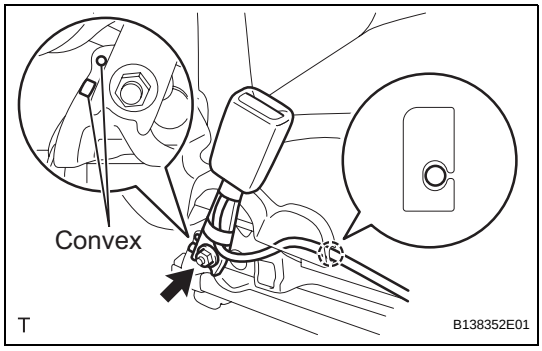

1. INSTALL FRONT SEAT INNER BELT ASSEMBLY

(a) Install the front seat inner belt with the nut.
Torque: 42 N*m (430 kgf*cm, 31 ft.*lbf)
NOTICE:
Do not place the front seat inner belt over the convex areas of the front seat adjuster frame.

(b) Install the wire harness into the claw of the front seat cushion inner shield.

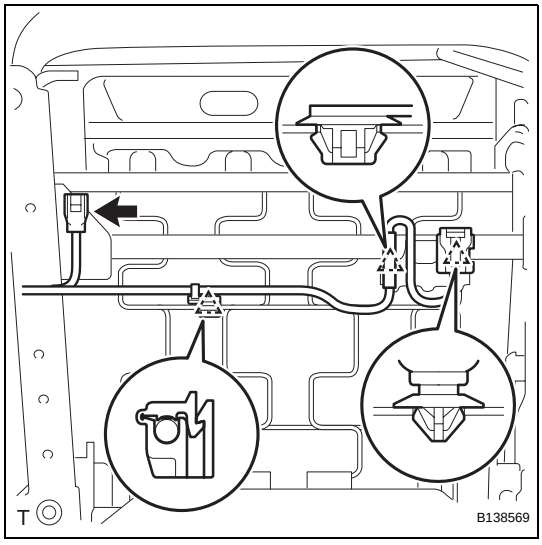

(c) for Driver Side:
(1) Install the 2 clamps.
(2) Install the connector.
(3) Connect the seat position sensor connector.

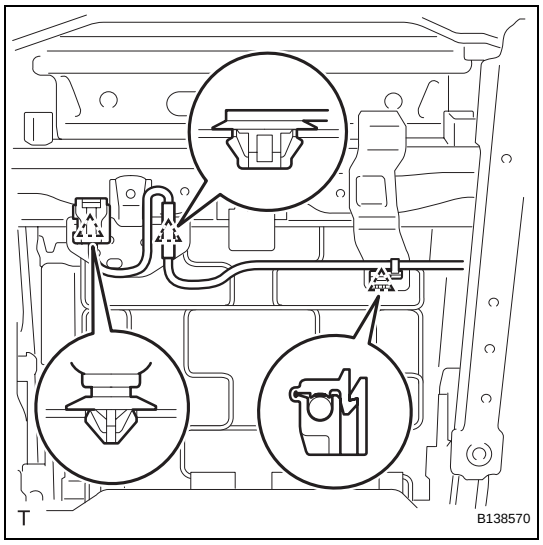

(d) for Front Passenger Side:
  (1) Install the 2 clamps.
  (2) Install the connector.

2. **INSTALL FRONT SEAT ASSEMBLY (See page SE-20)**

3. **INSTALL FRONT SEAT HEADREST ASSEMBLY (See page SE-21)**

4. **CONNECT CABLE TO NEGATIVE BATTERY TERMINAL**
   Torque: 5.4 N*m (55 kgf*cm, 48 in.*lbf)

5. **INSPECT SRS WARNING LIGHT (w/ Front Seat Side Airbag)**
   (See page RS-31)

SB

FRONT SEAT INNER BELT ASSEMBLY (for Hatchback)

COMPONENTS

for Driver Side:

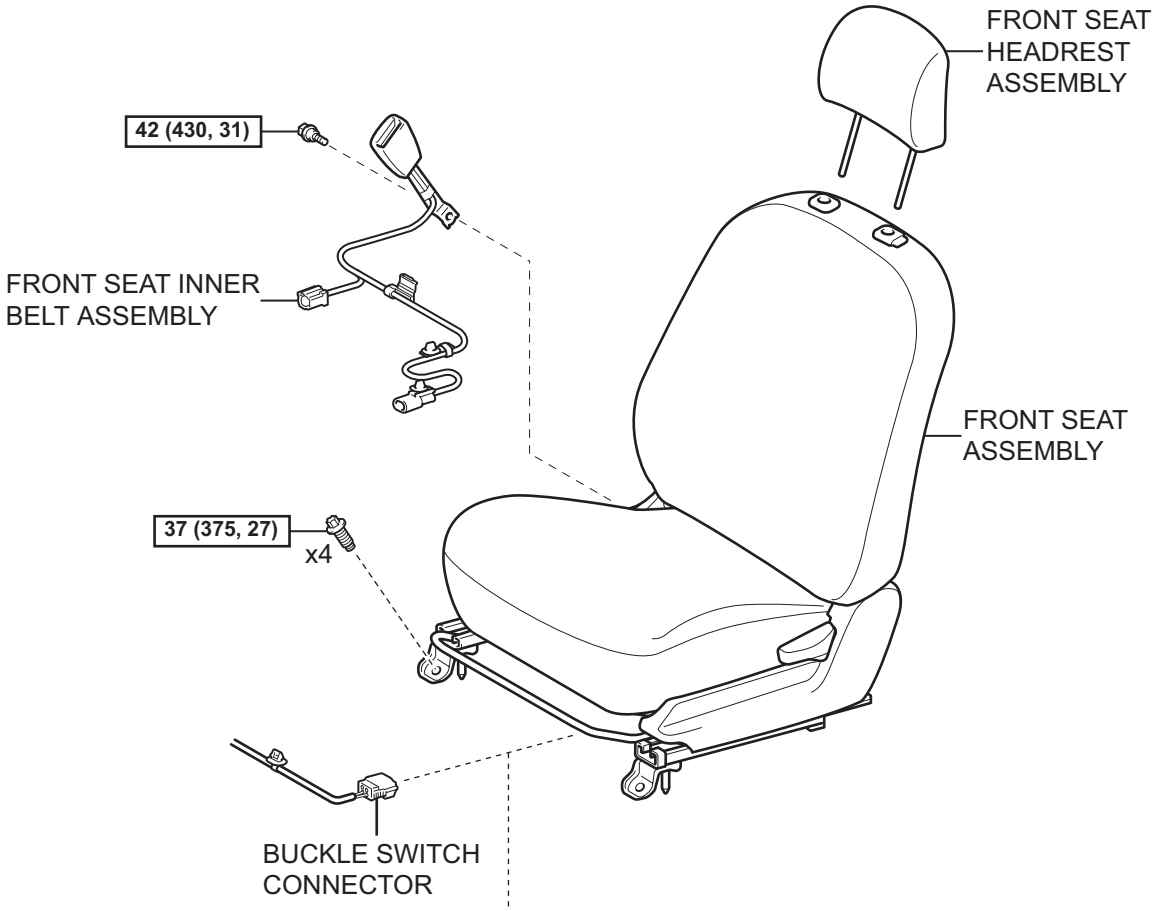

w/ Front Seat Side Airbag:

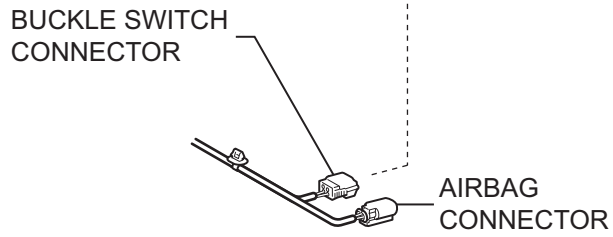

N*m (kgf*cm, ft*lbf) : Specified torque

T

B114721E01

SB

for Front Passenger Side:

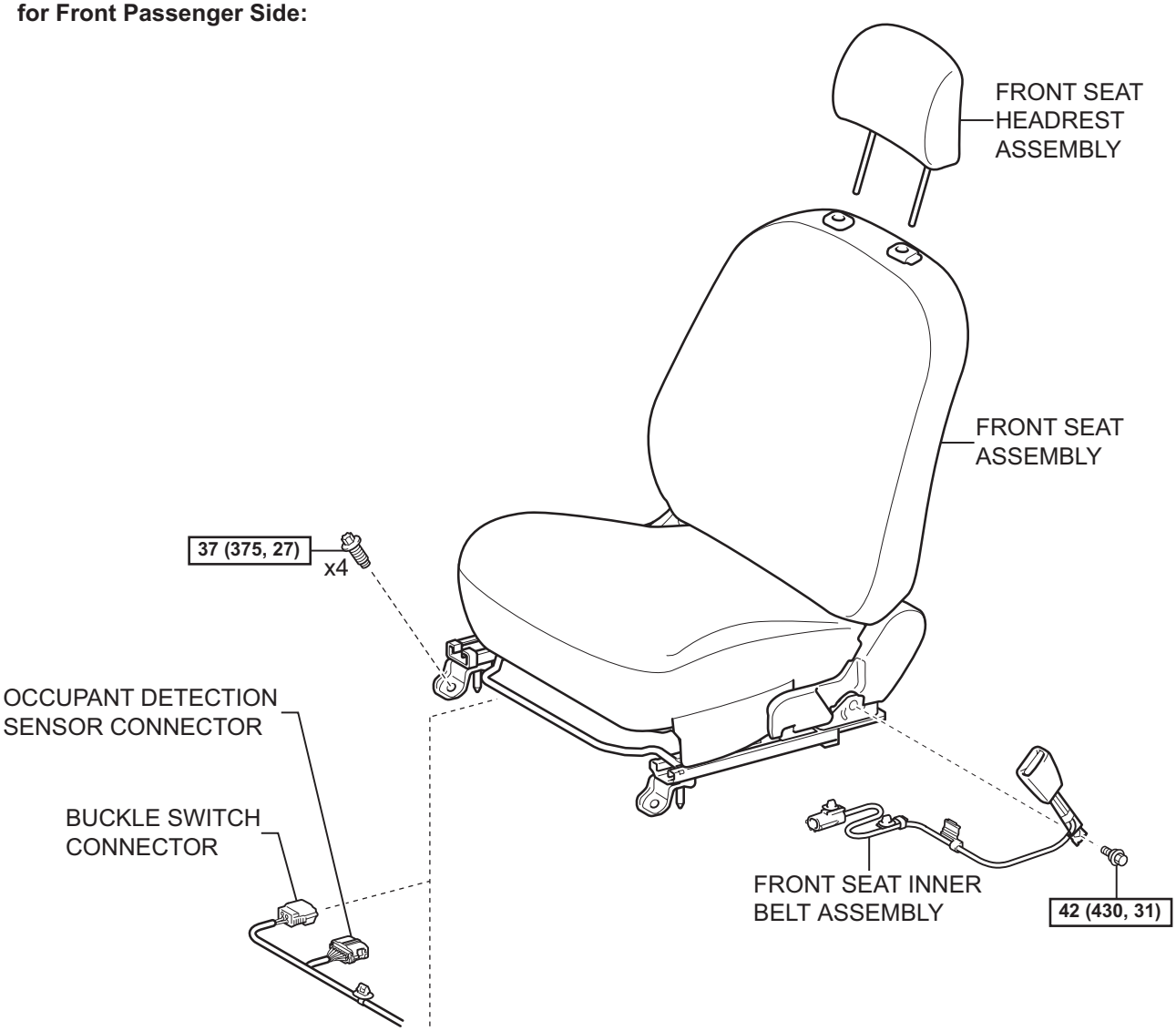

w/ Front Seat Side Airbag:

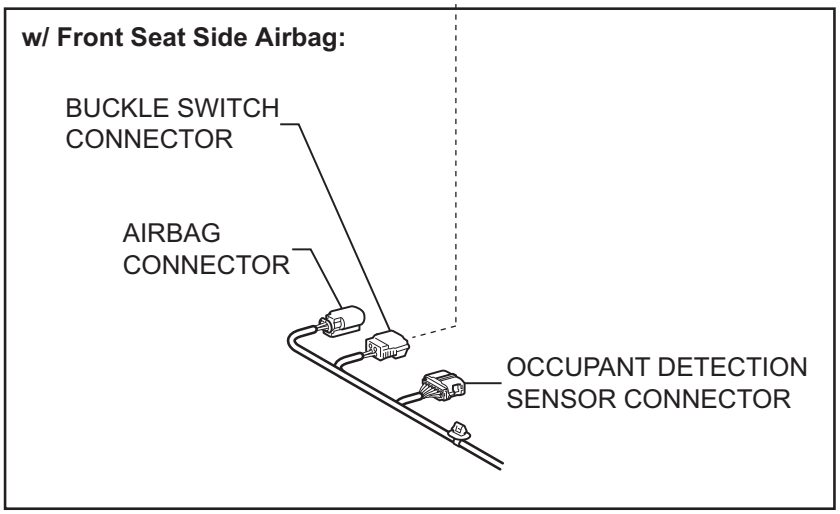

N*m (kgf*cm, ft*lbf) : Specified torque

T

B114722E01

REMOVAL

CAUTION:
Some of these service operations affect the SRS airbag system. Read the precautionary notices concerning the SRS airbag system before servicing (w/ Front Seat Side Airbag) (See pageRS-1).
NOTICE:
Always use "Torx" socket wrench E10 when removing the front seat.
HINT:
The procedure described below is for the driver side. Use the same procedure for both the driver and front passenger sides, unless otherwise specified.

1. **DISCONNECT CABLE FROM NEGATIVE BATTERY TERMINAL**
   CAUTION:
   Wait for at least 90 seconds after disconnecting the cable to prevent the airbag from working (w/ Front Seat Side Airbag).
2. **REMOVE FRONT SEAT HEADREST ASSEMBLY (See page SE-28)**
3. **REMOVE FRONT SEAT ASSEMBLY (See page SE-28)**
4. **REMOVE FRONT SEAT INNER BELT ASSEMBLY**
   (a) for Driver Side:
      (1) Disconnect the seat position sensor connector.
      (2) Remove the buckle switch connector.
      (3) Remove the 2 wiring harness clamps.

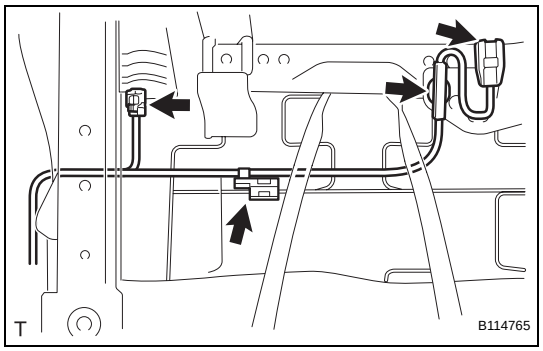

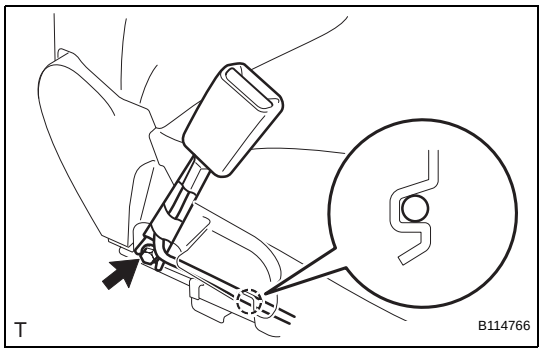

      (4) Remove the wire harness from the claw of the front seat cushion shield.
      (5) Remove the bolt and the front seat inner belt.

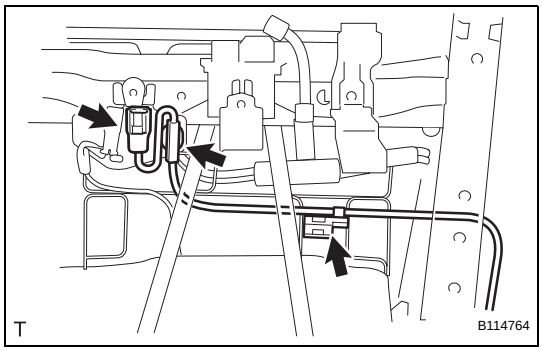

(b) for Front Passenger Side:
(1) Remove the buckle switch connector.
(2) Remove the 2 wiring harness clamps.

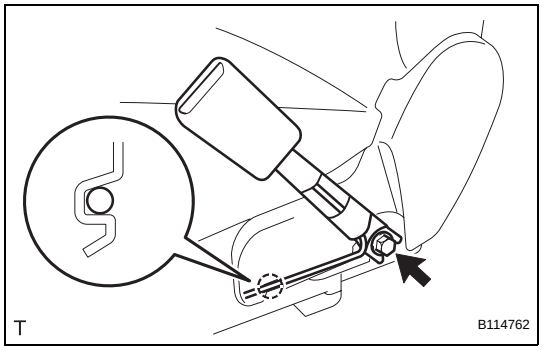

(3) Remove the wiring harness from the claw of the front seat cushion shield.
(4) Remove the bolt and the front seat inner belt.

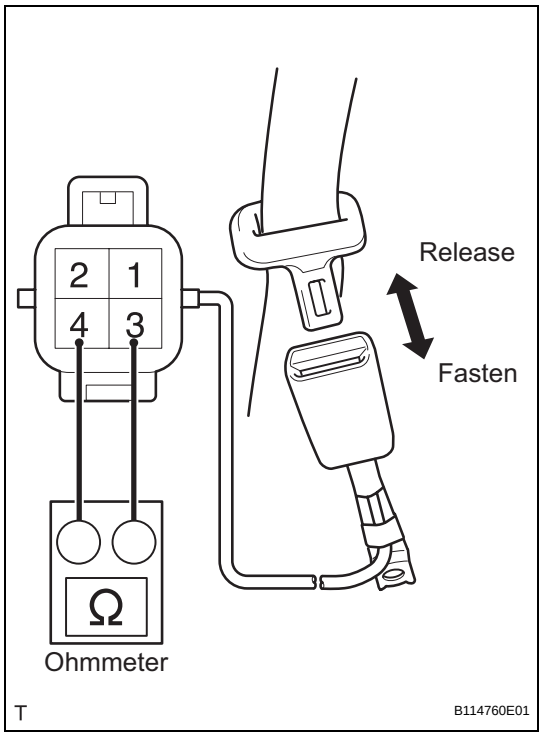

INSPECTION

1. INSPECT FRONT SEAT INNER BELT ASSEMBLY

(a) for Driver Side:
(1) Check the resistance.
1. Using an ohmmeter, measure the resistance between the terminals.

Standard resistance

Tester Connection	Condition	Specified Condition
3 - 4	Tongue plate fastened	10 kΩ or higher
	Tongue plate released	Below 1 Ω

If the result is not as specified, replace the front seat inner belt.

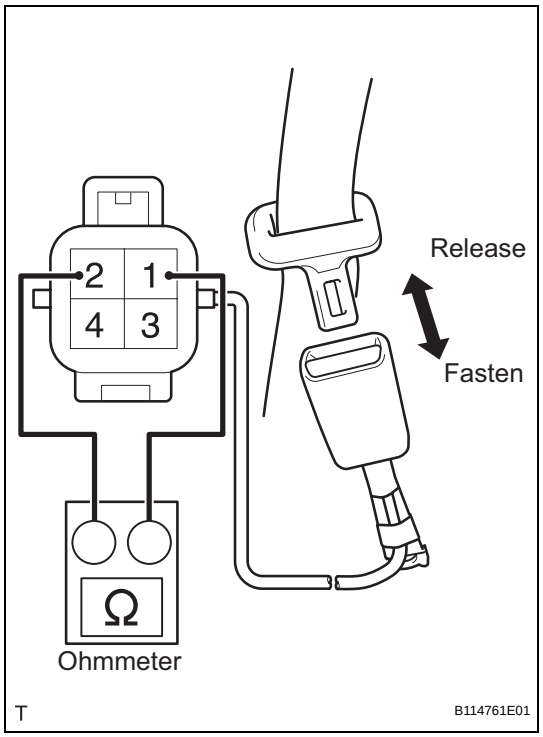

(b) for Front Passenger Side:

(1) Check the resistance.

1. Using an ohmmeter, measure the resistance between the terminals.

Standard resistance

Tester Connection	Condition	Specified Condition
1 - 2	Tongue plate fastened	10 kΩ or higher
	Tongue plate released	Below 1 Ω

If the result is not as specified, replace the front seat inner belt.

SB

SB

INSTALLATION

CAUTION:
Some of these service operations affect the SRS airbag system. Read the precautionary notices concerning the SRS airbag system before servicing (w/ Front Seat Side Airbag) (See pageRS-1).
NOTICE:
Always use "Torx" socket wrench E10 when installing the front seat.
HINT:
The procedure described below is for the driver side. Use the same procedure for both the driver and front passenger sides, unless otherwise specified.

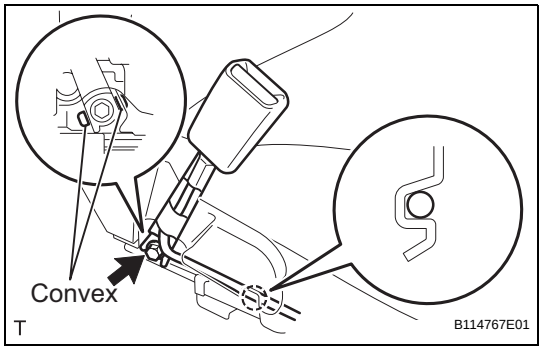

1. INSTALL FRONT SEAT INNER BELT ASSEMBLY

(a) for Driver Side:

(1) Install the front seat inner belt with the bolt.
Torque: 42 N*m (430 kgf*cm, 31 ft.*lbf)
NOTICE:
Do not place the front seat inner belt over the convex areas of the front seat adjuster frame.

(2) Install the wire harness into the claw of the front seat cushion shield.

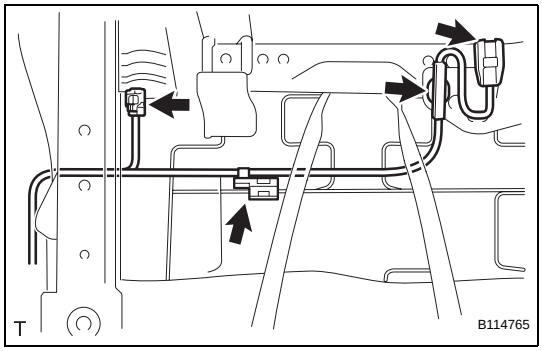

(3) Install the 2 wiring harness clamps.

(4) Install the buckle switch connector.

(5) Connect the seat position sensor connector.

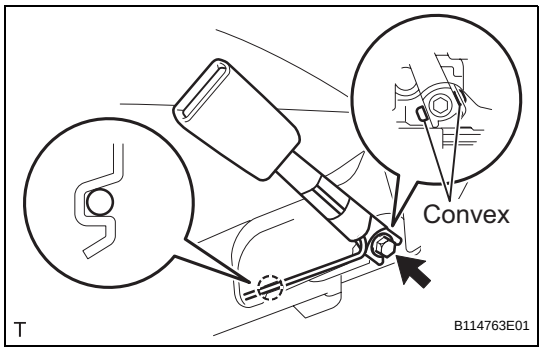

(b) for Front Passenger Side:

(1) Install the front seat inner belt with the bolt.
Torque: 42 N*m (430 kgf*cm, 31 ft.*lbf)
NOTICE:
Do not place the front seat inner belt over the convex areas of the front seat adjuster frame.

(2) Install the wiring harness onto the claw of the front seat cushion shield.

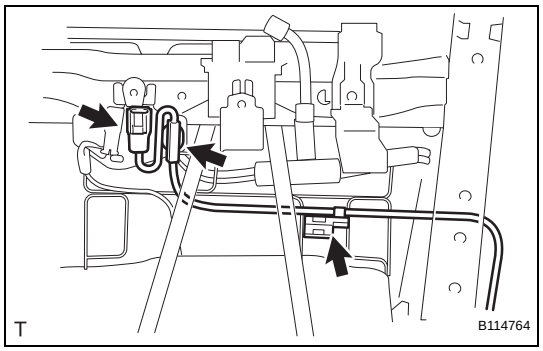

(3) Install the 2 wiring harness clamps.
(4) Install the buckle switch connector.

2. **INSTALL FRONT SEAT ASSEMBLY (See page SE-42)**
3. **INSTALL FRONT SEAT HEADREST ASSEMBLY (See page SE-43)**
4. **CONNECT CABLE TO NEGATIVE BATTERY TERMINAL**
   Torque: 5.4 N*m (55 kgf*cm, 48 in.*lbf)
5. **INSPECT SRS WARNING LIGHT (w/ Front Seat Side Airbag)**
   (See page RS-31)

SB

FRONT SEAT OUTER BELT ASSEMBLY (for Sedan)

COMPONENTS

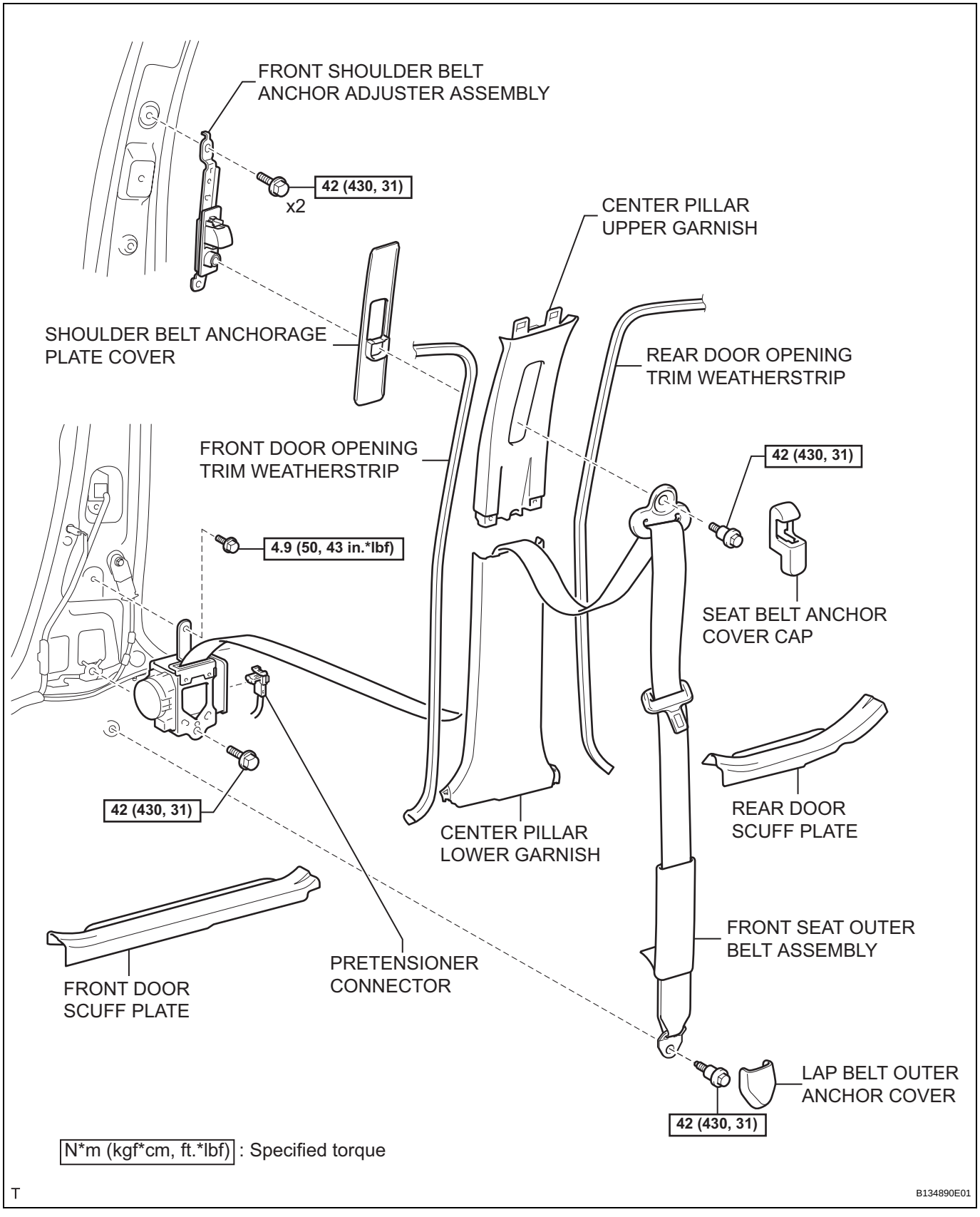

SB

REMOVAL

CAUTION:
Some of these service operations affect the SRS airbag system. Read the precautionary notices concerning the SRS airbag system before servicing (See page RS-1).
HINT:
The procedure described below is for the RH side. Use the same procedure for both the RH and LH sides, unless otherwise specified.

1. **DISCONNECT CABLE FROM NEGATIVE BATTERY TERMINAL**
   CAUTION:
   Wait for at least 90 seconds after disconnecting the cable to prevent the airbag from working.
2. **REMOVE FRONT DOOR SCUFF PLATE (See page IR-14)**
3. **REMOVE REAR DOOR SCUFF PLATE (See page IR-15)**
4. **REMOVE FRONT DOOR OPENING TRIM WEATHERSTRIP**
   (a) Remove the front door opening trim weatherstrip to the extent that the center pillar upper and lower garnishes can be removed.

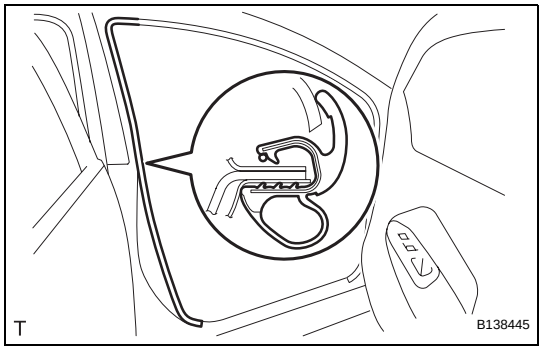

5. **REMOVE REAR DOOR OPENING TRIM WEATHERSTRIP**
   (a) Remove the rear door opening trim weatherstrip to the extent that the center pillar upper and lower garnishes can be removed.
6. **REMOVE CENTER PILLAR LOWER GARNISH (See page IR-16)**

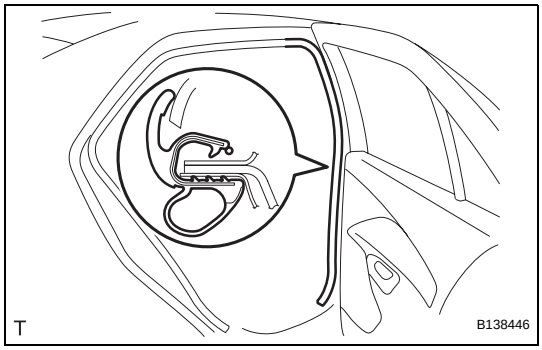

7. **REMOVE SEAT BELT ANCHOR COVER CAP**
   (a) Pull portion A, shown in the illustration, toward you, remove the 2 claws on the lower side followed by the claw on the upper side. Then remove the seat belt anchor cover cap.

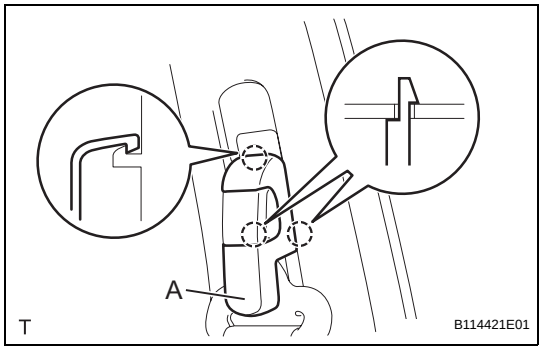

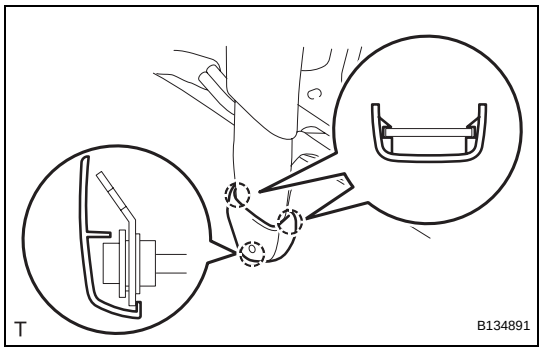

8. REMOVE LAP BELT OUTER ANCHOR COVER

(a) Disengage the 3 claws and remove the lap belt outer anchor cover.

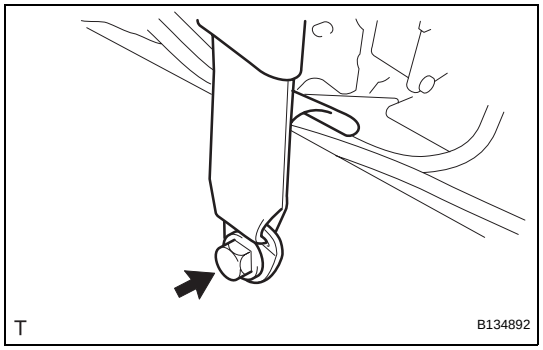

9. REMOVE FRONT SEAT OUTER BELT ASSEMBLY

(a) Remove the bolt and the anchor plate.

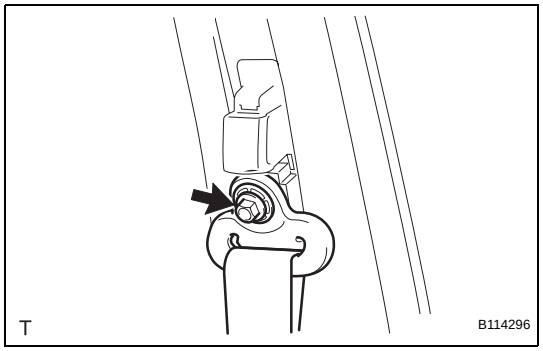

(b) Remove the bolt and the shoulder anchor.

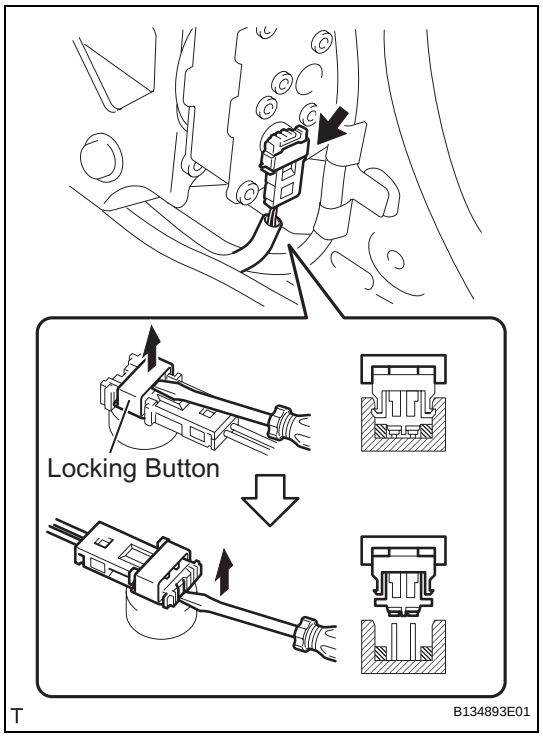

(c) Disconnect the pretensioner connector.
   (1) Using a screwdriver, release the locking button.
   (2) Using a screwdriver, disconnect the pretensioner connector.

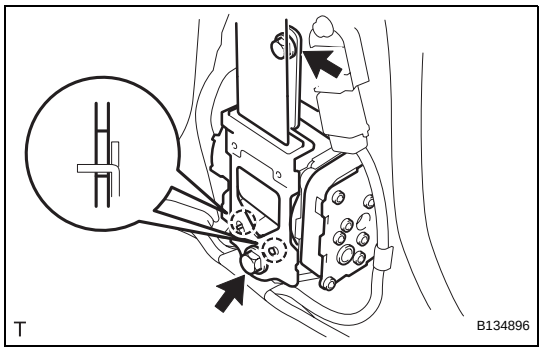

(d) Remove the 2 bolts, the 2 hooks and the retractor.

10. REMOVE CENTER PILLAR UPPER GARNISH (See page IR-17)

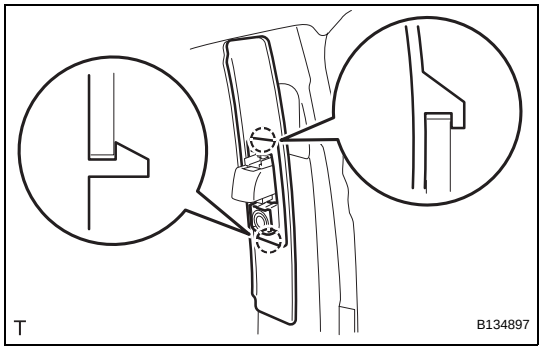

11. REMOVE SHOULDER BELT ANCHORAGE PLATE COVER

(a) Disengage the 2 claws and remove the shoulder belt anchorage plate cover.

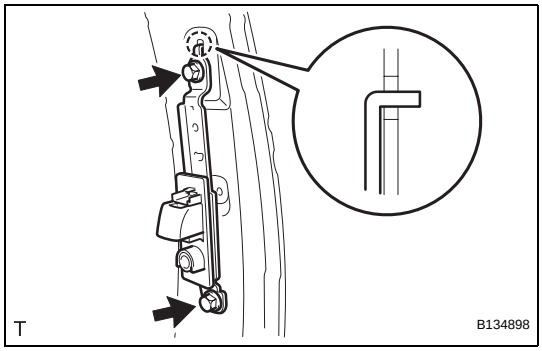

12. REMOVE FRONT SHOULDER BELT ANCHOR ADJUSTER ASSEMBLY

(a) Remove the 2 bolts, the hook and the front shoulder belt anchor adjuster.

INSTALLATION

CAUTION:
Some of these service operations affect the SRS airbag system. Read the precautionary notices concerning the SRS airbag system before servicing (See page RS-1).
HINT:
The procedure described below is for the RH side. Use the same procedure for both the RH and LH sides, unless otherwise specified.

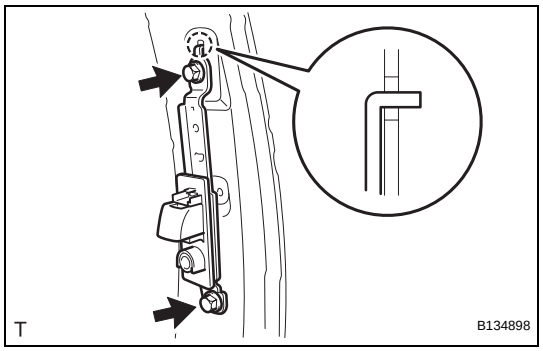

1. INSTALL FRONT SHOULDER BELT ANCHOR ADJUSTER ASSEMBLY

(a) Insert the hook into the body hole and install the shoulder belt anchor adjuster with the 2 bolts.
Torque: 42 N*m (430 kgf*cm, 31 ft.*lbf)

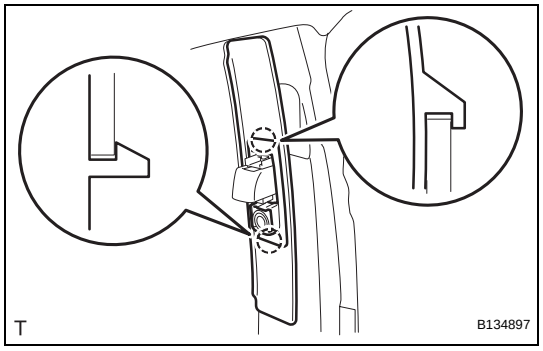

2. INSTALL SHOULDER BELT ANCHORAGE PLATE COVER

(a) Engage the 2 claws and install the shoulder belt anchorage plate cover.

3. INSTALL CENTER PILLAR UPPER GARNISH (See page IR-31)

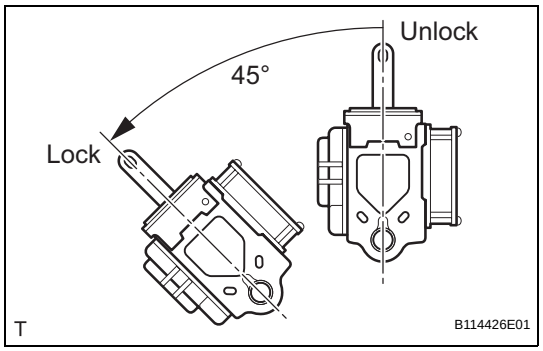

4. INSTALL FRONT SEAT OUTER BELT ASSEMBLY

(a) Check the angle of inclination required to lock the retractor.
(1) Gently incline the retractor from its initial position. Check that the belt does not lock when the retractor is inclined 15 ° or less in any direction. Also, check that the belt locks when the inclination of the retractor is 45 ° or more.
NOTICE:
Do not disassemble the retractor.
If the operation is not as specified, replace the front seat outer belt.

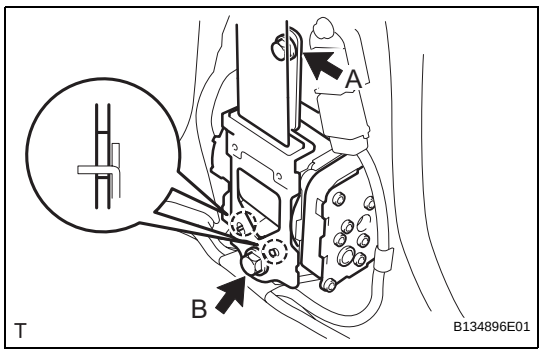

(b) Hook the lower stay of the retractor onto the 2 body hooks and provisionally install the retractor with the 2 bolts.
(c) Tighten bolt A and then bolt B.
Torque: 4.9 N*m (50 kgf*cm, 43 in.*lbf) for bolt A
42 N*m (430 kgf*cm, 31 ft.*lbf) for bolt B

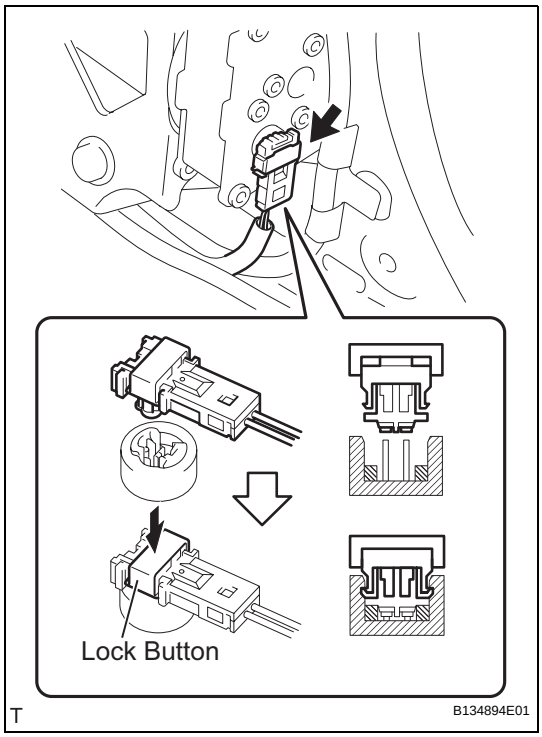

(d) Connect the pretensioner connector.
  (1) Connect the pretensioner connector.
  (2) Lock the locking button.
  NOTICE:
  Securely lock the locking button.

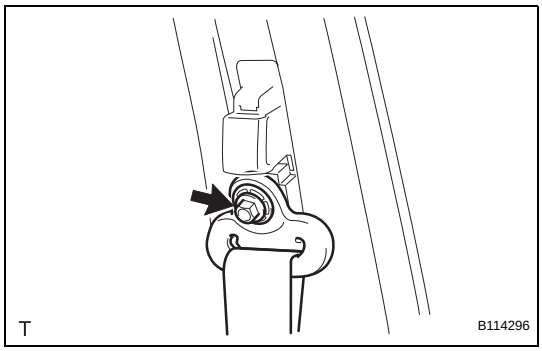

(e) Install the shoulder anchor with the bolt.
Torque: 42 N*m (430 kgf*cm, 31 ft.*lbf)

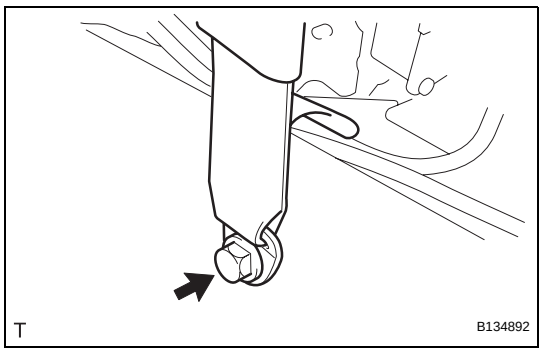

(f) Install the anchor plate with the bolt.
Torque: 42 N*m (430 kgf*cm, 31 ft.*lbf)

(g) Check that the ELR locks.
NOTICE:
- **The check should be performed with the front seat outer belt installed.**
- **Do not allow the anchor part of the front seat outer belt and the protruding parts of the floor panel to overlap.**

  (1) With the belt installed, check that the belt locks when it is pulled out quickly.
  If the operation is not as specified, replace the front seat outer belt.

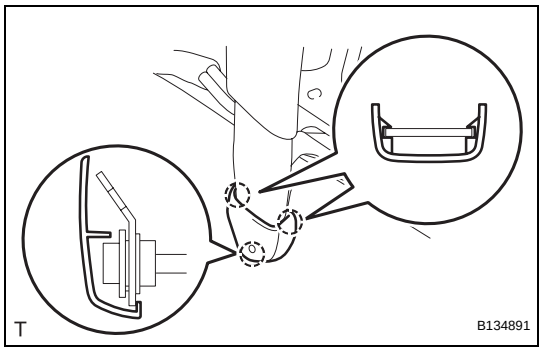

5. INSTALL LAP BELT OUTER ANCHOR COVER
(a) Engage the 3 claws and install the lap belt outer anchor cover.

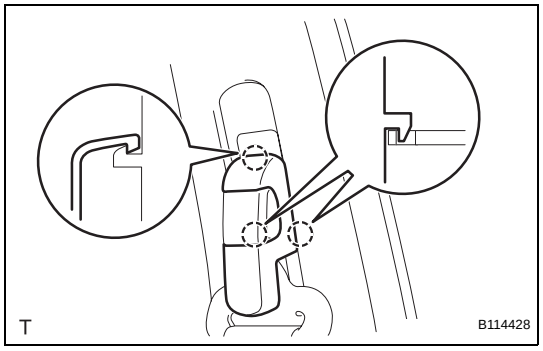

6. INSTALL SEAT BELT ANCHOR COVER CAP
(a) Engage the 3 claws and install the seat belt anchor cover cap.

7. INSTALL CENTER PILLAR LOWER GARNISH (See page IR-32)

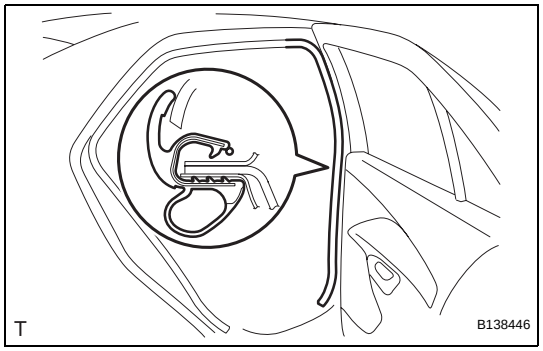

8. INSTALL REAR DOOR OPENING TRIM WEATHERSTRIP
(a) Install the rear door opening trim weatherstrip.

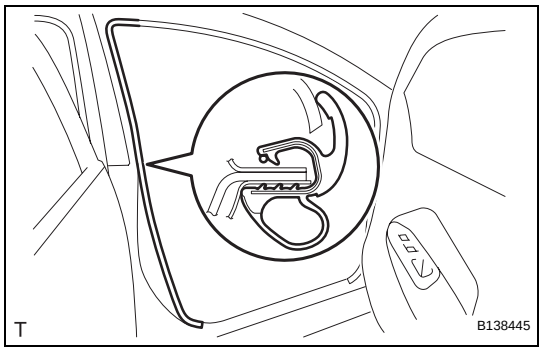

9. INSTALL FRONT DOOR OPENING TRIM WEATHERSTRIP
(a) Install the front door opening trim weatherstrip.

10. INSTALL REAR DOOR SCUFF PLATE (See page IR-34)

11. INSTALL FRONT DOOR SCUFF PLATE (See page IR-35)

12. CONNECT CABLE TO NEGATIVE BATTERY TERMINAL
Torque: 5.4 N*m (55 kgf*cm, 48 in.*lbf)

13. INSPECT SRS WARNING LIGHT
(See page RS-31)

SB

SB

DISPOSAL

CAUTION:

- **Never dispose of a front seat outer belt that has an inactivated pretensioner.**
- **The seat belt pretensioner produces a loud, exploding sound when it activates. Perform the operation outside and where it will not be a nuisance to persons nearby.**
- **When activating a front seat outer belt (with seat belt pretensioner), stand at least 10 m (33 ft) away from the front seat outer belt.**
- **Use gloves and safety glasses when handling a front seat outer belt with an activated pretensioner.**
- **Always wash your hands with water after completing the activation.**
- **Do not apply water to a front seat outer belt that has an activated pretensioner.**
- **When activating the seat belt pretensioner, always use the specified SST (SRS airbag deployment tool).**
- **Perform the operation in a place away from electrical interference.**

HINT:

The procedure described below is for the RH side. Use the same procedure for both the RH and LH sides, unless otherwise specified.

1. DISPOSE OF FRONT SEAT OUTER BELT ASSEMBLY (When Installed in Vehicle)

HINT:

Prepare a battery as the power source to activate the seat belt pretensioner.

(a) Check whether SST is functioning.

SST 09082-00700

CAUTION:

Always use the specified SST when activating the seat belt pretensioner.

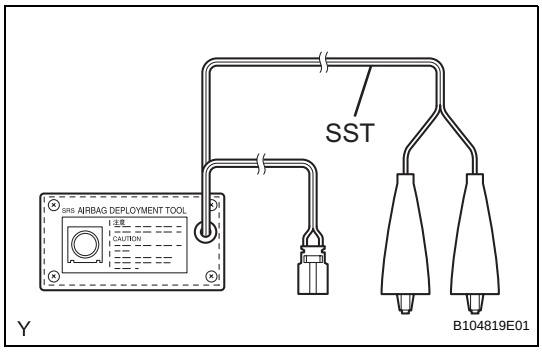

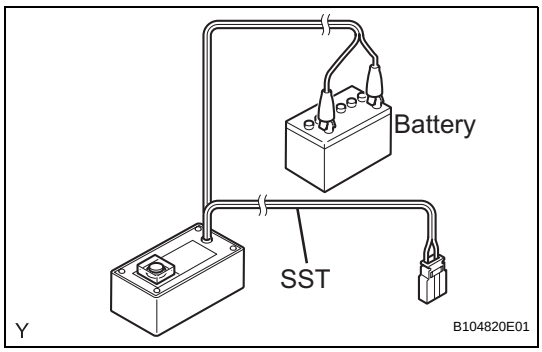

(1) Connect the SST red clip to the positive battery terminal and the black clip to the negative battery terminal.

HINT:

Do not connect the yellow connector. The yellow connector is for connections to the seat belt pretensioner.

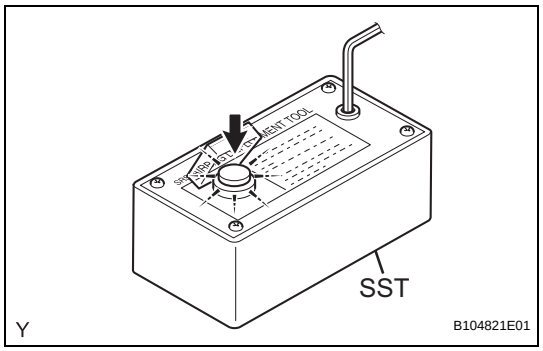

(2) Press the SST activation switch and check that the LED of the SST activation switch turns on.
CAUTION:
If the LED illuminates when the activation switch is not being pressed, SST may be malfunctioning. Do not use SST.

(b) Disconnect SST from the battery.

(c) Disconnect the pretensioner connector.

(1) Disconnect the cable from the negative battery terminal.

(2) Remove the front door scuff plate (See page IR-14).

(3) Remove the rear door scuff plate (See page IR-15).

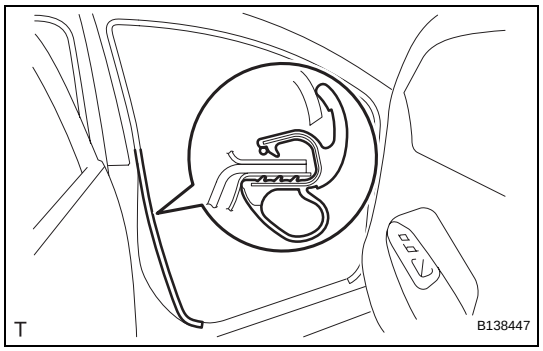

(4) Remove the front door opening trim weatherstrip.

1. Remove the front door opening trim weatherstrip to the extent that the center pillar lower garnish can be removed.

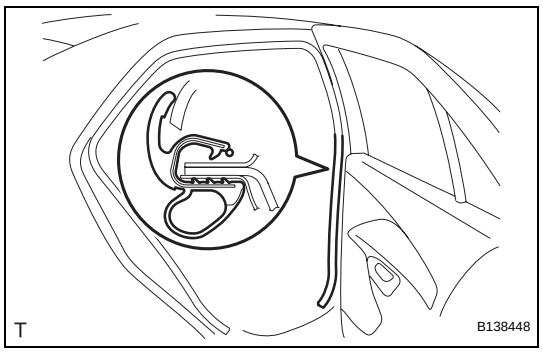

(5) Remove the rear door opening trim weatherstrip.

1. Remove the rear door opening trim weatherstrip to the extent that the center pillar lower garnish can be removed.

(6) Remove the center pillar lower garnish (See page IR-16).

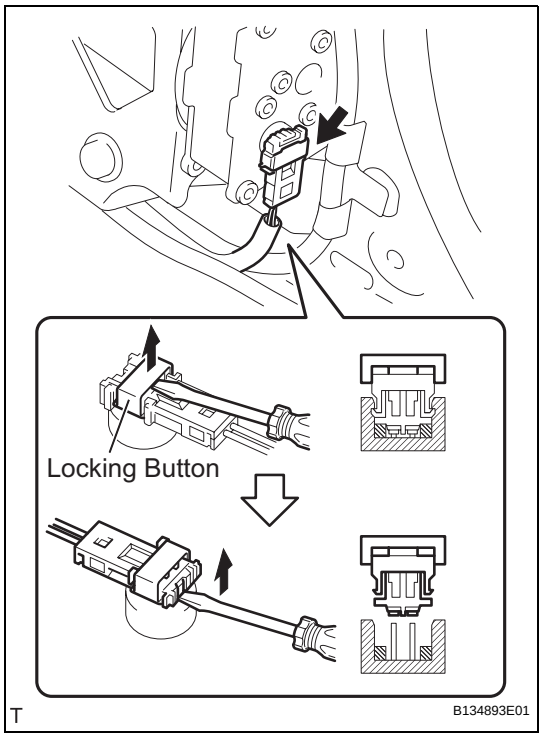

(7) Disconnect the pretensioner connector.
1. Using a screwdriver, release the locking button.
2. Using a screwdriver, disconnect the pretensioner connector.

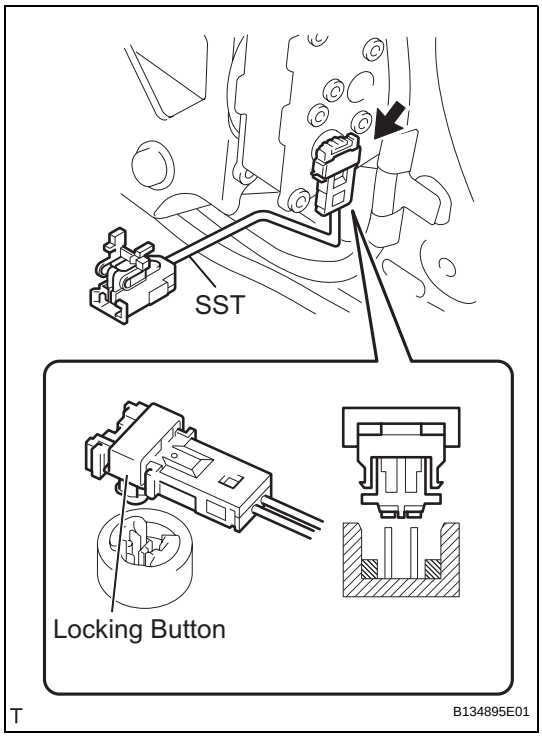

(d) Connect SST.
(1) Connect SST, then the yellow connector to the seat belt pretensioner.
SST 09082-00770
NOTICE:
Do not lock the secondary lock of the twin lock to avoid damaging the SST connector and wire harness.

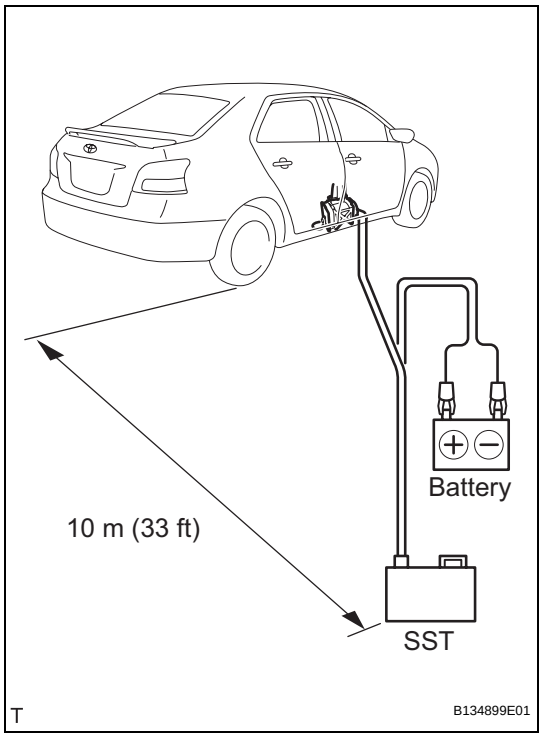

(2) Move SST at least 10 m (33 ft) away from the front of the vehicle.
SST 09082-00700

(3) Close the doors and windows of the vehicle.
NOTICE:
Take care not to damage the SST wire harness.
HINT:
Do not close the windows fully. Leave a gap for inserting the SST wire harness.

(4) Connect the SST red clip to the positive battery terminal and the black clip to the negative battery terminal.

(e) Activate the seat belt pretensioner.

(1) Confirm that no one is inside the vehicle or within 10 m (33 ft) of the vehicle.

(2) Press the SST activation switch and activate the seat belt pretensioner.
HINT:
The seat belt pretensioner operates simultaneously with the SST activation switch LED light.

(f) Disconnect SST.

(g) Dispose of the front seat outer belt (with the seat belt pretensioner).
HINT:
When scrapping a vehicle, activate the seat belt pretensioner, and then scrap the vehicle with the activated front seat outer belt still installed.
CAUTION:
- **Do not touch the front seat outer belt for at least 30 minutes after the seat belt pretensioner has been activated. It is very hot.**
- **Use gloves and safety glasses when handling a front seat outer belt with a pretensioner that has been activated.**
- **Always wash your hands with water after completing the operation.**
- **Do not apply water to a front seat outer belt that has an activated pretensioner.**

2. DISPOSE OF FRONT SEAT OUTER BELT ASSEMBLY (When not Installed in Vehicle)
HINT:
Prepare a battery as the power source to activate the seat belt pretensioner.
NOTICE:
- **When only disposing of the front seat outer belt (with the seat belt pretensioner), never use the customer's vehicle to activate the seat belt pretensioner.**
- **Be sure to follow the procedures described below when activating the seat belt pretensioner.**

(a) Remove the front seat outer belt (See page SB-44).

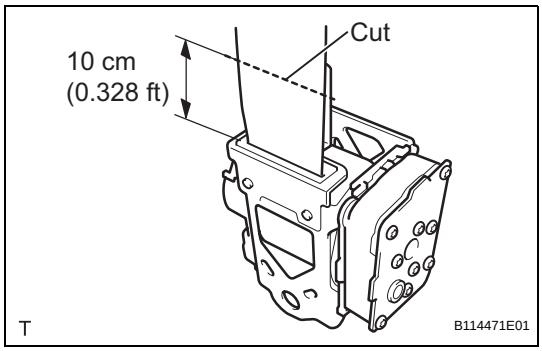

(b) Wind the seat belt with the retractor.

(c) When the seat belt is sufficiently wound, cut the seat belt approximately 10 cm (0.328 ft) from the retractor, as shown in the illustration.
HINT:
The retractor resistance increases in correlation with how much the seat belt is wound.

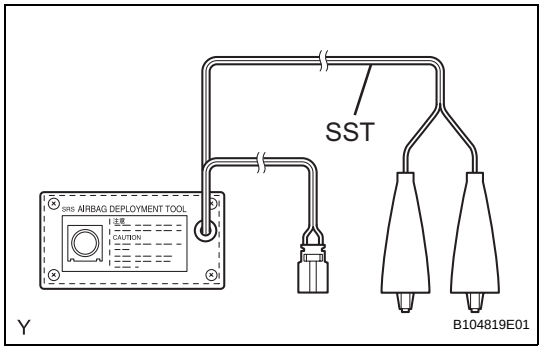

(d) Check whether SST is functioning.
SST 09082-00700
CAUTION:
Always use the specified SST when activating the seat belt pretensioner.

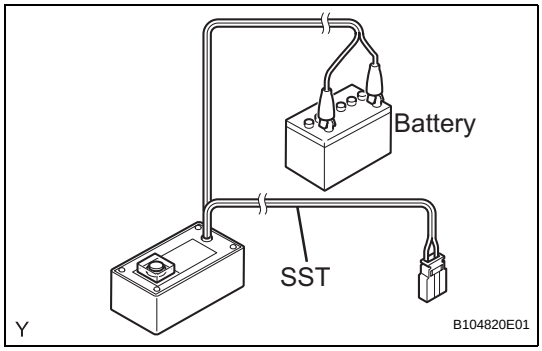

(1) Connect the SST red clip to the positive battery terminal and the black clip to the negative battery terminal.
HINT:
Do not connect the yellow connector. The yellow connector is for connections to the seat belt pretensioner.

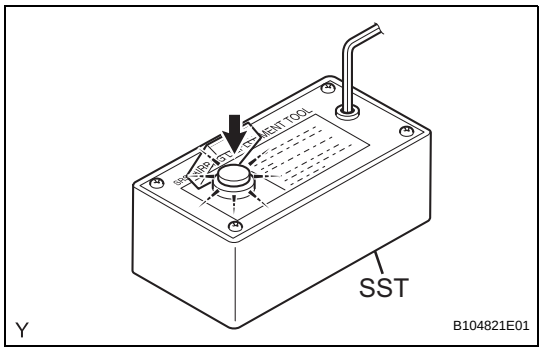

(2) Press the SST activation switch and check that the LED of the SST activation switch turns on.
CAUTION:
If the LED illuminates when the activation switch is not being pressed, SST may be malfunctioning. Do not use SST.

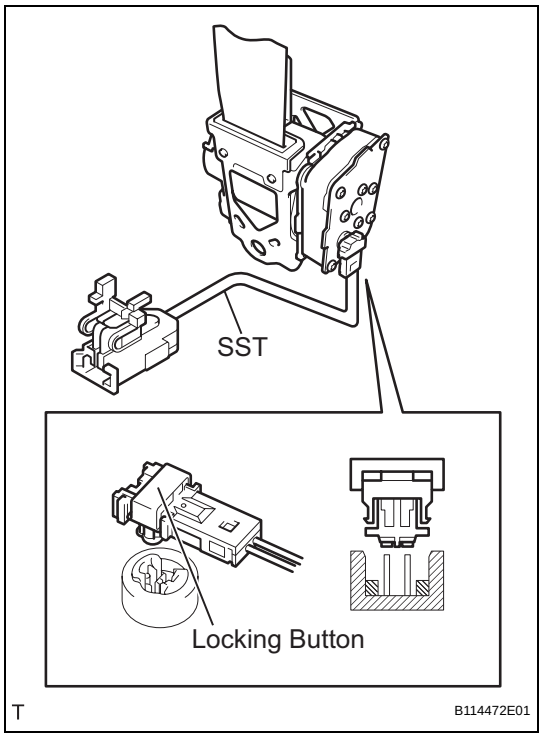

(e) Connect SST.

(1) Connect SST, then the yellow connector to the seat belt pretensioner.

SST 09082-00770

NOTICE:

Do not lock the secondary lock of the twin lock to avoid damaging the SST connector and wire harness.

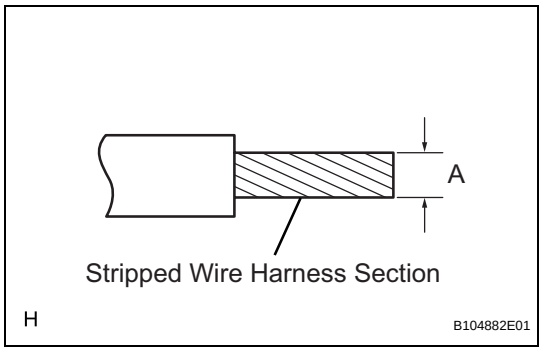

(2) Using a service-purpose wire harness for the vehicle, tie the seat belt pretensioner to the tire with a wheel attached.

Stripped wire harness section

Area	Measurement
A	1.25 mm^2 or more (0.0019 in^2 or more)

CAUTION:

- **Do not use wire harnesses that are too thin or any other object to tie the seat belt pretensioner because they may snap due to the shock when the pretensioner is deployed.**
- **Always use a wire harness for vehicle use, with a cross section of at least 1.25 mm^2 (0.0019 in^2).**

HINT:

To calculate the area of the stripped wire harness cross section:

Area = 3.14 x $(Diameter)^2$ divided by 4

SB

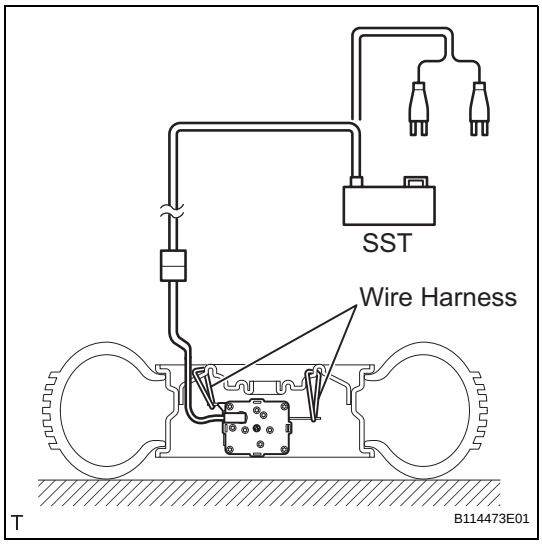

(3) Connect SST.
SST 09082-00700
NOTICE:
- **Do not lock the secondary lock of the twin lock to avoid damaging the SST connector and wire harness.**
- **Set up the front seat outer belt, as shown in the illustration.**

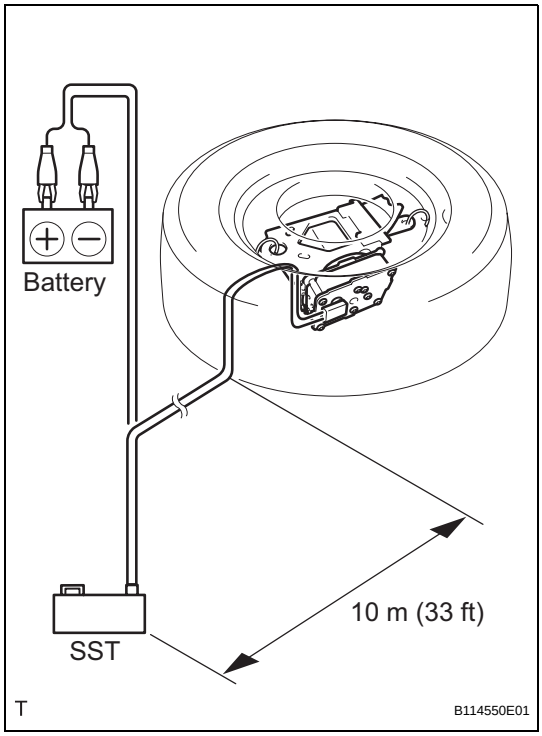

(4) Move SST at least 10 m (33 ft) away from the wheel.
NOTICE:
Take care not to damage the SST wire harness.

(f) Activate the seat belt pretensioner.
(1) Connect the SST red clip to the positive battery terminal and the black clip to the negative battery terminal.
(2) Check that no one is within 10 m (33 ft) of the wheel.
(3) Press the SST activation switch and activate the seat belt pretensioner.
HINT:
The seat belt pretensioner operates simultaneously with the SST activation switch LED light.

(g) Disconnect SST.

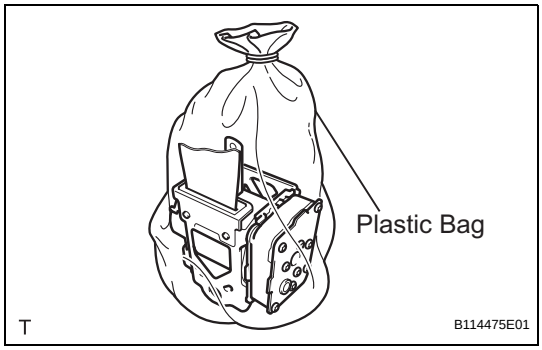

(h) Dispose of the front seat outer belt (with the seat belt pretensioner).
CAUTION:
- **Do not touch the front seat outer belt for at least 30 minutes after the seat belt pretensioner has been activated. It is very hot.**
- **Use gloves and safety glasses when handling an front seat outer belt with a pretensioner that has been activated.**
- **Always wash your hands with water after completing the operation.**
- **Do not apply water to a front seat outer belt that has an activated pretensioner.**

(1) Place the front seat outer belt in a plastic bag, tie the end tightly and dispose of it in the same way as other general parts.

FRONT SEAT OUTER BELT ASSEMBLY (for Hatchback 5 Door)

COMPONENTS

SB

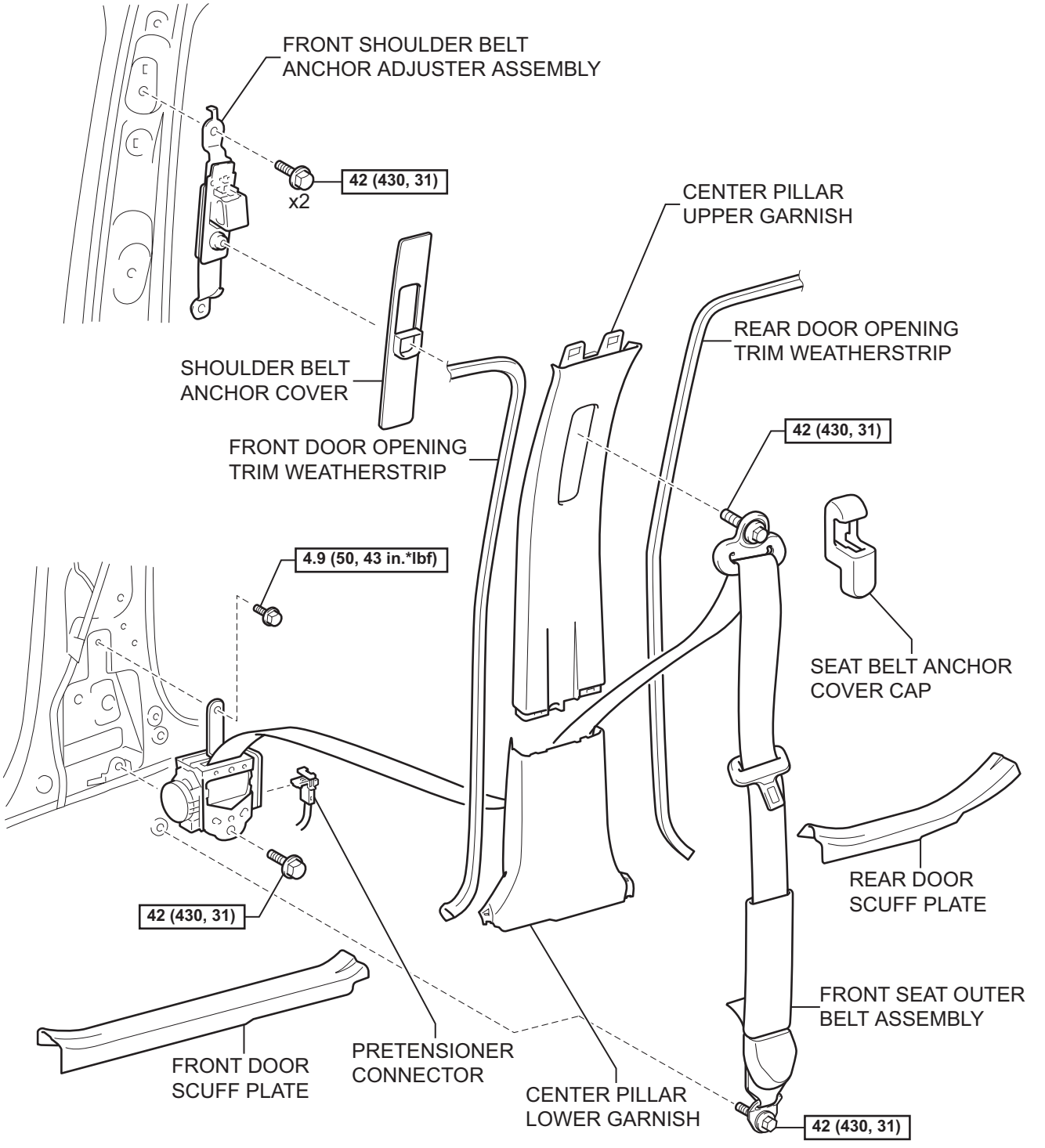

N*m (kgf*cm, ft*lbf) : Specified torque

T

B114418E01

REMOVAL

CAUTION:
Some of these service operations affect the SRS airbag system. Read the precautionary notices concerning the SRS airbag system before servicing (See page RS-1).
HINT:
The procedure described below is for the RH side. Use the same procedure for both the RH and LH sides, unless otherwise specified.

1. **DISCONNECT CABLE FROM NEGATIVE BATTERY TERMINAL**
   CAUTION:
   Wait for at least 90 seconds after disconnecting the cable to prevent the airbag from working.
2. **REMOVE FRONT DOOR SCUFF PLATE (See page IR-49)**
3. **REMOVE REAR DOOR SCUFF PLATE (See page IR-51)**
4. **REMOVE FRONT DOOR OPENING TRIM WEATHERSTRIP**
   (a) Remove the front door opening trim weatherstrip to the extent that the center pillar upper and lower garnishes can be removed.

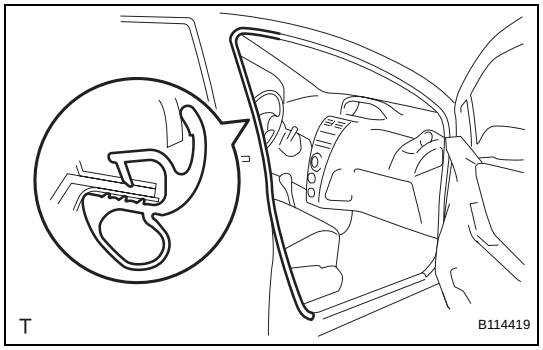

5. **REMOVE REAR DOOR OPENING TRIM WEATHERSTRIP**
   (a) Remove the rear door opening trim weatherstrip to the extent that the center pillar upper and lower garnishes can be removed.
6. **REMOVE CENTER PILLAR LOWER GARNISH (See page IR-55)**

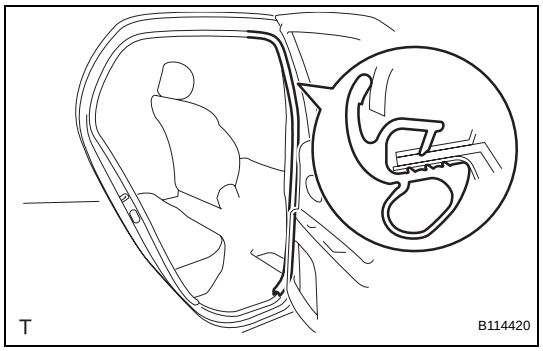

7. **REMOVE SEAT BELT ANCHOR COVER CAP**
   (a) Pull portion A, shown in the illustration, toward you, remove the 2 claws on the lower side followed by the claw on the upper side. Then remove the seat belt anchor cover cap.

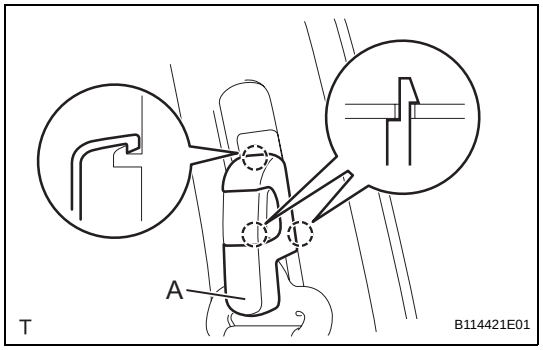

SB

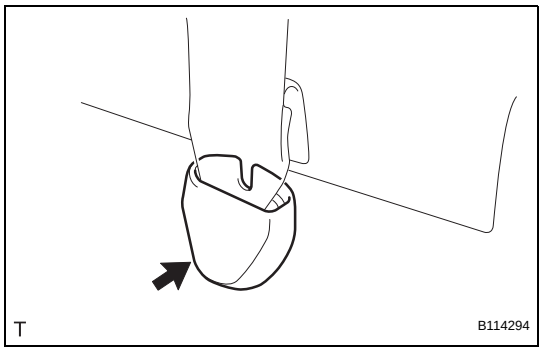

8. REMOVE FRONT SEAT OUTER BELT ASSEMBLY

(a) Remove the anchor plate cover.

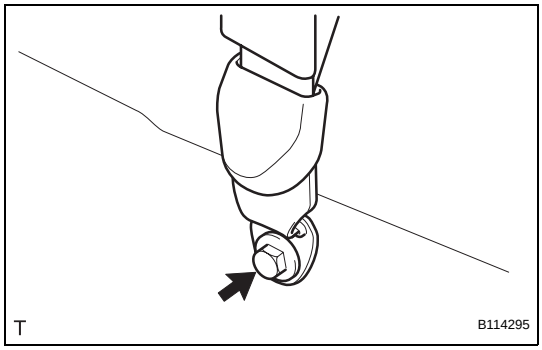

(b) Remove the bolt and the anchor plate.

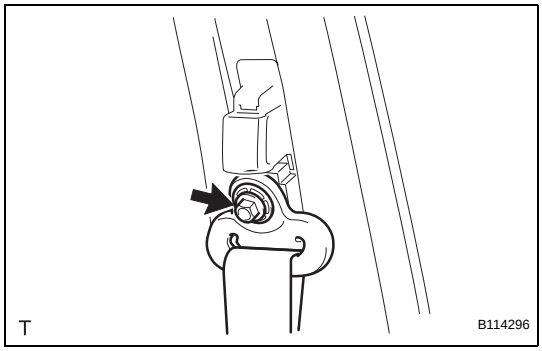

(c) Remove the bolt and the through anchor.

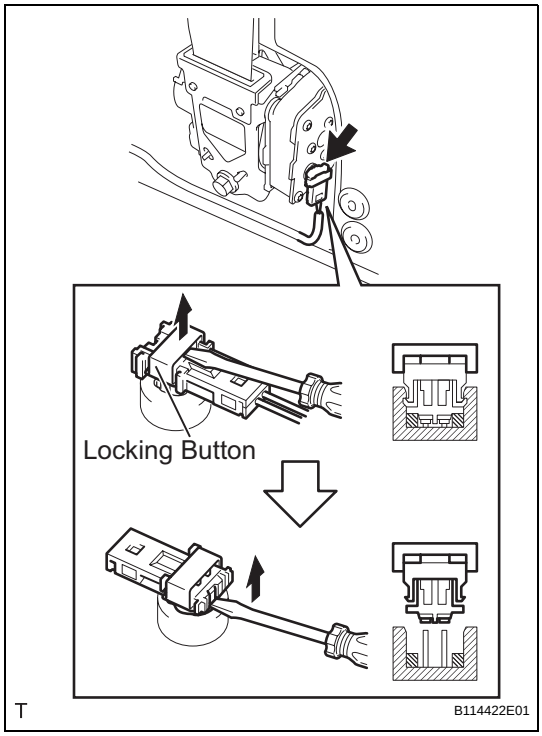

(d) Disconnect the pretensioner connector.
   (1) Using a screwdriver, release the locking button.
   (2) Using a screwdriver, disconnect the pretensioner connector.

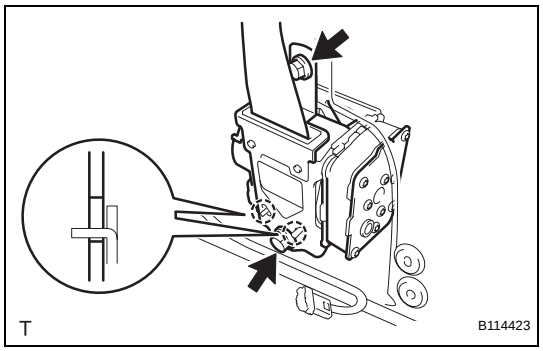

(e) Remove the 2 bolts, the 2 hooks and the retractor.

9. REMOVE CENTER PILLAR UPPER GARNISH (See page IR-55)

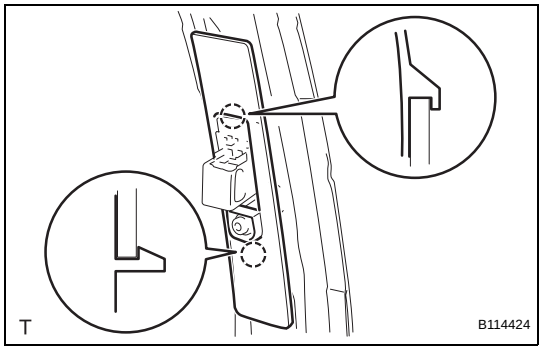

10. REMOVE SHOULDER BELT ANCHOR COVER

(a) Disengage the 2 claws and remove the shoulder belt anchor cover.

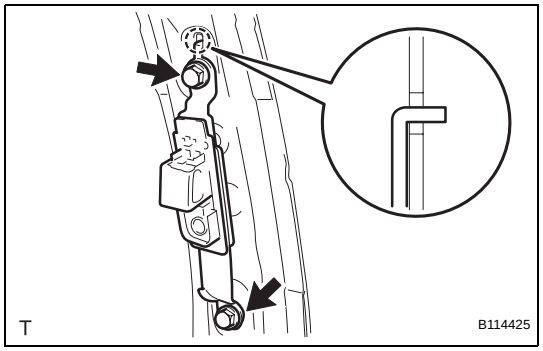

11. REMOVE FRONT SHOULDER BELT ANCHOR ADJUSTER ASSEMBLY

(a) Remove the 2 bolts, the hook and the front shoulder belt anchor adjuster.

SB

INSTALLATION

CAUTION:
Some of these service operations affect the SRS airbag system. Read the precautionary notices concerning the SRS airbag system before servicing (See page RS-1).
HINT:
The procedure described below is for the RH side. Use the same procedure for both the RH and LH sides, unless otherwise specified.

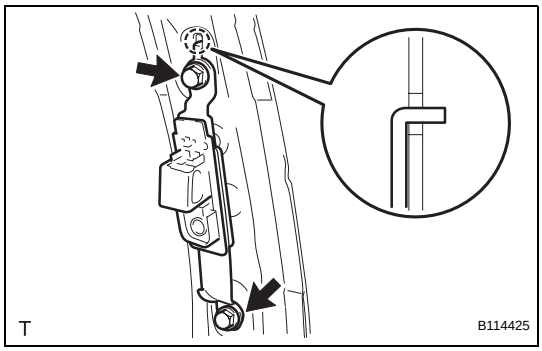

1. INSTALL FRONT SHOULDER BELT ANCHOR ADJUSTER ASSEMBLY
(a) Insert the hook into the body hole and install the shoulder belt anchor adjuster with the 2 bolts.
Torque: 42 N*m (430 kgf*cm, 31 ft.*lbf)

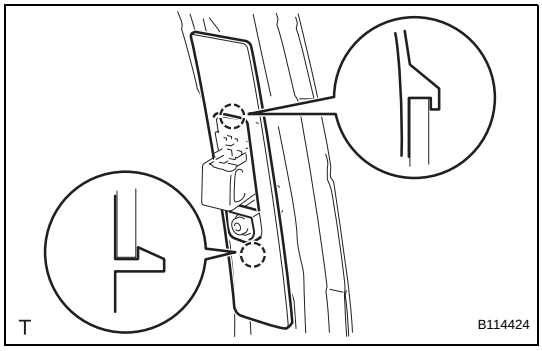

2. INSTALL SHOULDER BELT ANCHOR COVER
(a) Engage the 2 claws and install the shoulder belt anchor cover.

3. INSTALL CENTER PILLAR UPPER GARNISH (See page IR-76)

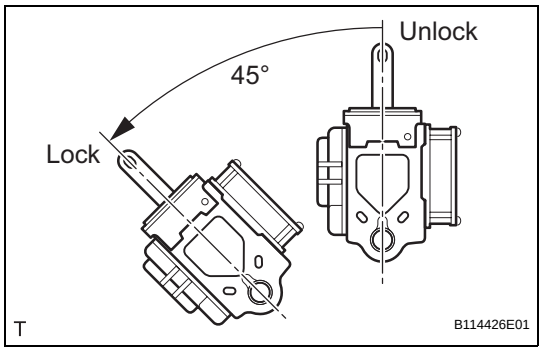

4. INSTALL FRONT SEAT OUTER BELT ASSEMBLY
(a) Check the angle of inclination required to lock the retractor.
(1) Gently incline the retractor from its initial position. Check that the belt does not lock when the retractor is inclined 15° or less in any direction. Also, check that the belt locks when the inclination of the retractor is 45° or more.
NOTICE:
Do not disassemble the retractor.
If the operation is not as specified, replace the front seat outer belt.

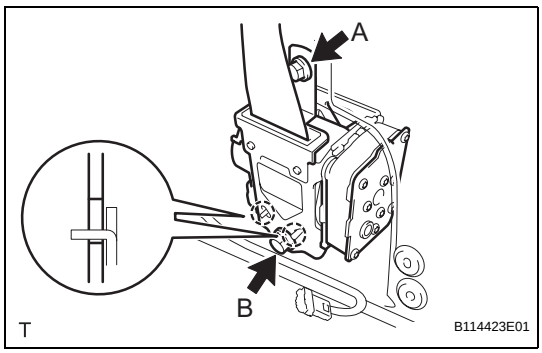

(b) Hook the lower stay of the retractor onto the 2 body hooks and provisionally install the retractor with the 2 bolts.
(c) Tighten bolt A and then bolt B.
Torque: 4.9 N*m (50 kgf*cm, 43 in.*lbf) for bolt A
42 N*m (430 kgf*cm, 31 ft.*lbf) for bolt B

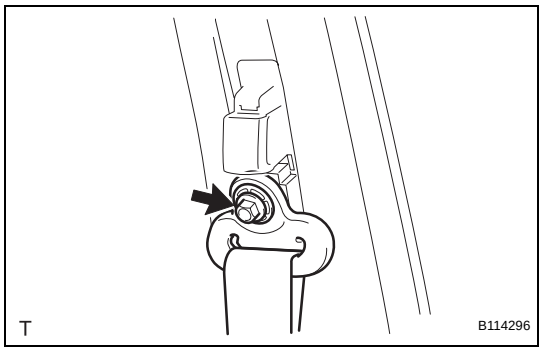

(d) Install the through anchor with the bolt.
Torque: 42 N*m (430 kgf*cm, 31 ft.*lbf)

(e) Check that the ELR locks.
NOTICE:
Perform the check with the front seat outer belt installed.
(1) With the belt installed, check that the belt locks when it is pulled out quickly.
If the operation is not as specified, replace the front seat outer belt.

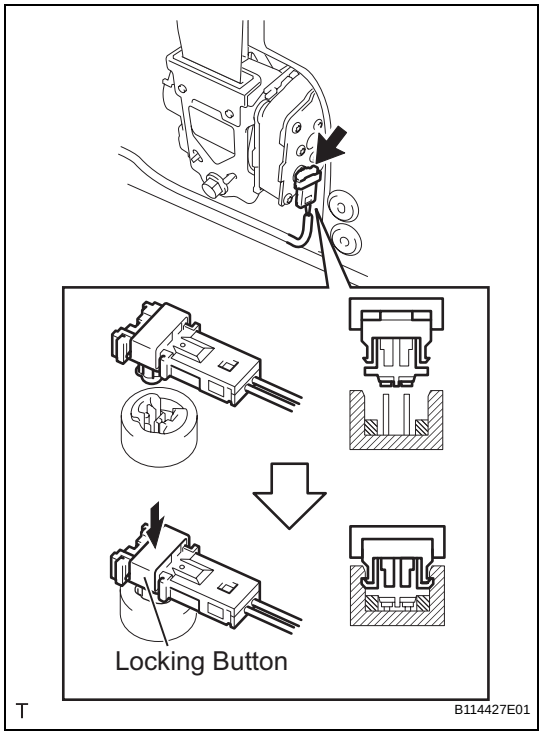

(f) Connect the pretensioner connector.
(1) Connect the pretensioner connector.
(2) Lock the locking button.
NOTICE:
Securely lock the locking button.

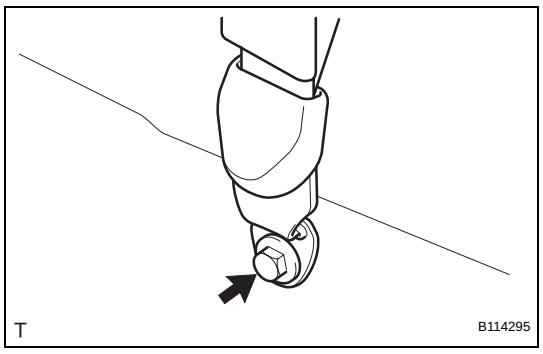

(g) Install the anchor plate with the bolt.
Torque: 42 N*m (430 kgf*cm, 31 ft.*lbf)

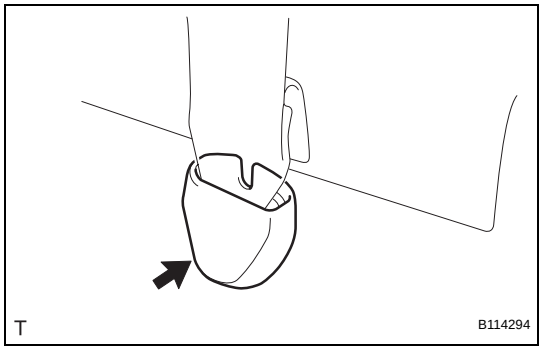

(h) Install the anchor plate cover.

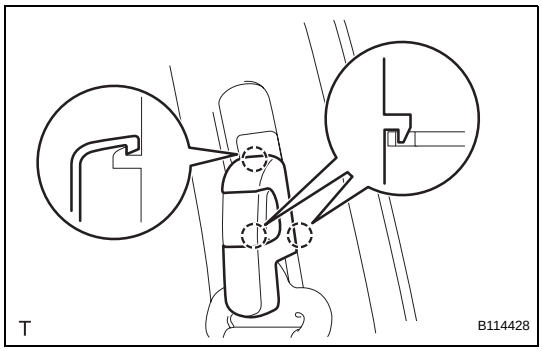

5. **INSTALL SEAT BELT ANCHOR COVER CAP**
   (a) Engage the 3 claws and install the seat belt anchor cover cap.

6. **INSTALL CENTER PILLAR LOWER GARNISH (See page IR-76)**

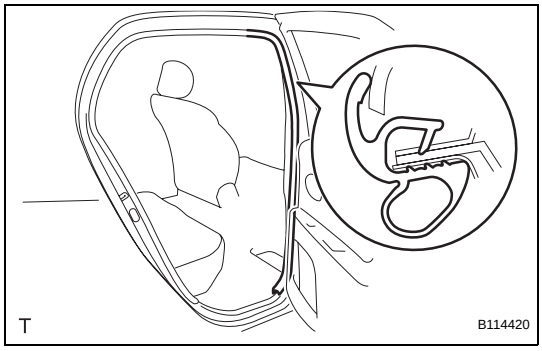

7. **INSTALL REAR DOOR OPENING TRIM WEATHERSTRIP**
   (a) Install the rear door opening trim weatherstrip.

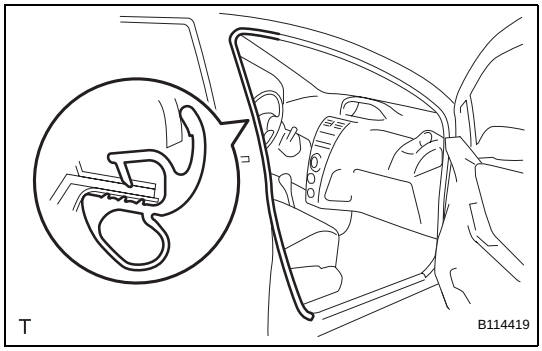

8. **INSTALL FRONT DOOR OPENING TRIM WEATHERSTRIP**
   (a) Install the front door opening trim weatherstrip.

9. **INSTALL REAR DOOR SCUFF PLATE (See page IR-80)**

10. **INSTALL FRONT DOOR SCUFF PLATE (See page IR-82)**

11. **CONNECT CABLE TO NEGATIVE BATTERY TERMINAL**
    Torque: 5.4 N*m (55 kgf*cm, 48 in.*lbf)

12. **INSPECT SRS WARNING LIGHT**
    (See page RS-31)

DISPOSAL

CAUTION:

- **Never dispose of a front seat outer belt that has an inactivated pretensioner.**
- **The seat belt pretensioner produces a loud, exploding sound when it activates. Perform the operation outside and where it will not be a nuisance to persons nearby.**
- **Stand at least 10 m (33 ft) away when activating a front seat outer belt (with seat belt pretensioner).**
- **Use gloves and safety glasses when handling a front seat outer belt with an activated pretensioner.**
- **Always wash your hands with water after completing an activation.**
- **Do not apply water to a front seat outer belt that has an activated pretensioner.**
- **Always use the specified SST (SRS airbag deployment tool) when activating the seat belt pretensioner.**
- **Perform the operation in a place away from electrical interference.**

HINT:

The procedure described below is for the RH side. Use the same procedure for the RH and LH sides, unless otherwise specified.

1. DISPOSE OF FRONT SEAT OUTER BELT ASSEMBLY (When Installed in Vehicle)

HINT:

Prepare a battery as the power source to activate the seat belt pretensioner.

(a) Check whether SST is functioning.

SST 09082-00700

CAUTION:

Always use the specified SST when activating the seat belt pretensioner.

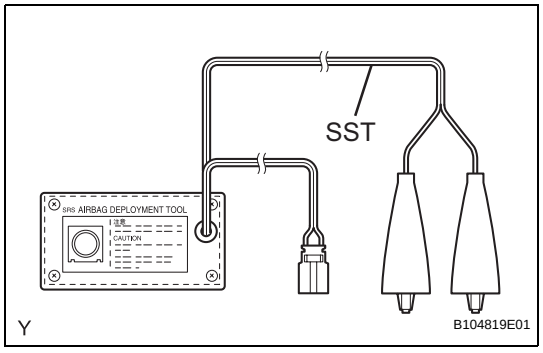

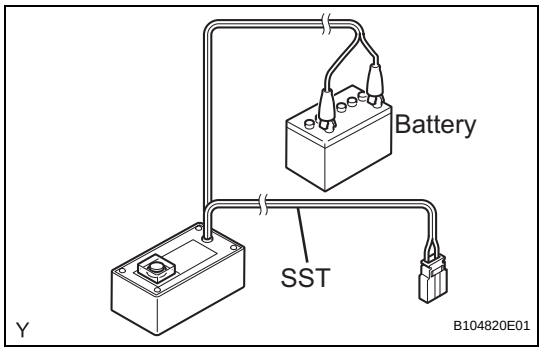

(1) Connect the SST red clip to the positive battery terminal and the black clip to the negative battery terminal.

HINT:

Do not connect the yellow connector. The yellow connector is for connections to the seat belt pretensioner.

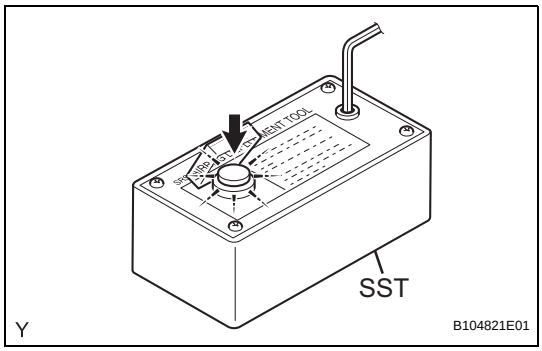

(2) Press the SST activation switch and check that the LED of the SST activation switch turns on.
CAUTION:
If the LED turns on when the activation switch is not being pressed, SST may be malfunctioning. Do not use SST.

(b) Disconnect SST from the battery.

(c) Disconnect the pretensioner connector.

(1) Disconnect the cable from negative battery terminal.

(2) Remove the front door scuff plate (See page IR-49).

(3) Remove the rear door scuff plate (See page IR-51).

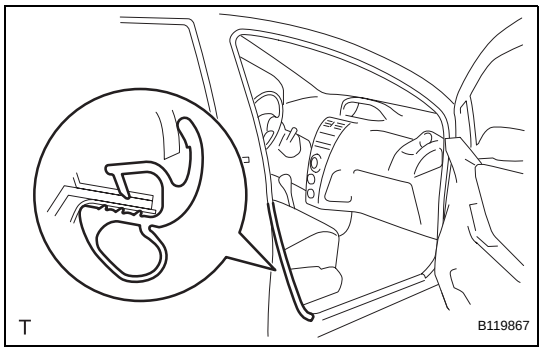

(4) Remove the front door opening trim weatherstrip.

1. Remove the front door opening trim weatherstrip to the extent that the center pillar lower garnish can be removed.

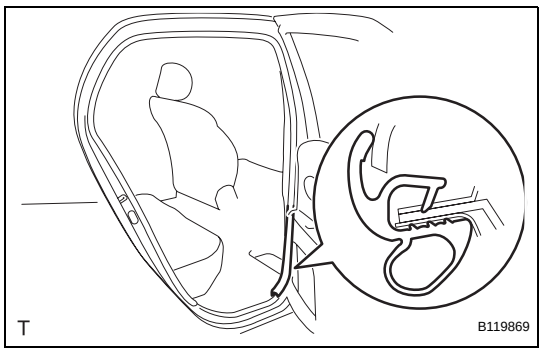

(5) Remove the rear door opening trim weatherstrip.

1. Remove the rear door opening trim weatherstrip to the extent that the center pillar lower garnish can be removed.

(6) Remove the center pillar lower garnish (See page IR-55).

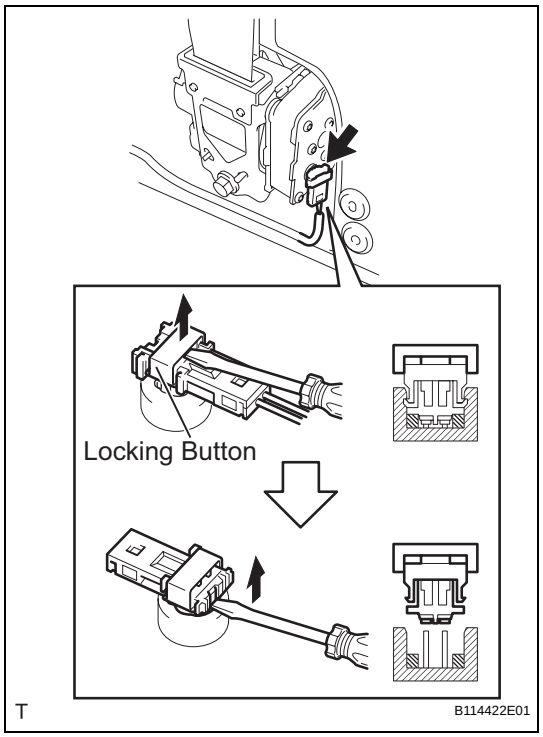

(7) Disconnect the pretensioner connector as shown in the illustration.

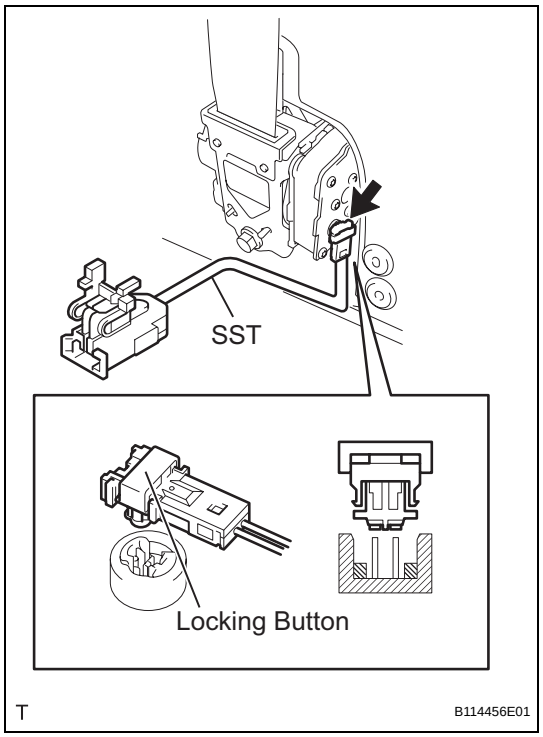

(d) Connect SST.

(1) Connect SST, then connect the yellow connector to the seat belt pretensioner.

SST 09082-00770

NOTICE:

Do not lock the secondary lock of the twin lock to avoid damaging the SST connector and wire harness

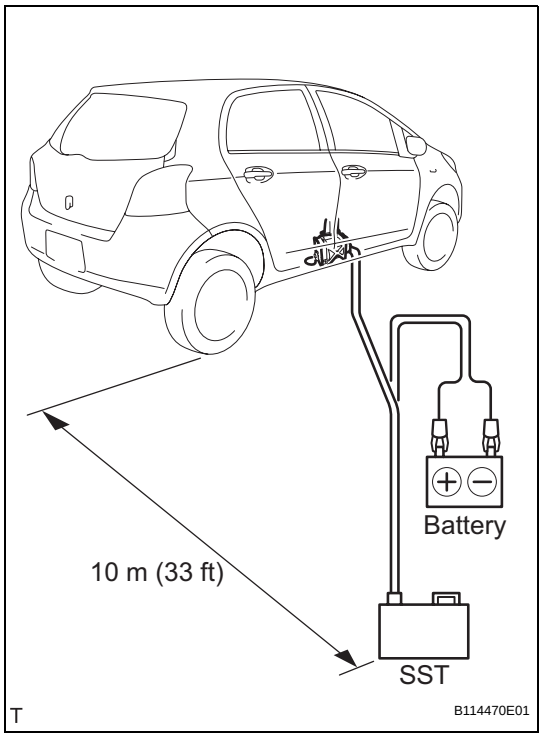

(2) Move SST at least 10 m (33 ft) away from the front of the vehicle.
SST 09082-00700

(3) Close the doors and windows of the vehicle.
HINT:
Do not close the windows fully. Leave a gap for inserting the SST wire harness.
NOTICE:
Do not damaging the SST wire harness.

(4) Connect the SST red clip to the positive battery terminal and the black clip to the negative battery terminal.

(e) Activate the seat belt pretensioner.

(1) Confirm that no one is inside the vehicle or within 10 m (33 ft) of the vehicle.

(2) Press the SST activation switch and activate the seat belt pretensioner.
HINT:
The seat belt pretensioner operates simultaneously with the SST activation switch LED light.

(f) Disconnect SST.

(g) Dispose of the front seat outer belt (with the seat belt pretensioner).
HINT:
When scrapping a vehicle, activate the seat belt pretensioner, and then scrap the vehicle with the activated front seat outer belt still installed.
CAUTION:
- **Do not touch the front seat outer belt for at least 30 minutes after the seat belt pretensioner has been activated. It is very hot.**
- **Use gloves and safety glasses when handling a front seat outer belt with a pretensioner that has been activated.**
- **Always wash your hands with water after completing the operation.**
- **Do not apply water to a front seat outer belt that has an activated pretensioner.**

2. DISPOSE OF FRONT SEAT OUTER BELT ASSEMBLY (When not Installed in Vehicle)
HINT:
Prepare a battery as the power source to activate the seat belt pretensioner.
NOTICE:
- **When only disposing of the front seat outer belt (with the seat belt pretensioner), never use the customer's vehicle to activate the seat belt pretensioner.**
- **Follow the procedure described below when activating the seat belt pretensioner.**

(a) Remove the front seat outer belt assembly (See page SB-59).

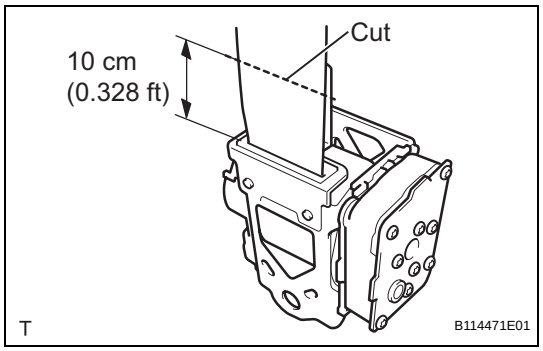

(b) Wind the seat belt with the retractor.
(c) When the seat belt is sufficiently wound, cut the seat belt approximately 10 cm (0.328 ft) from the retractor, as shown in the illustration.
HINT:
The retractor resistance increases in correlation with how much the seat belt is wound.

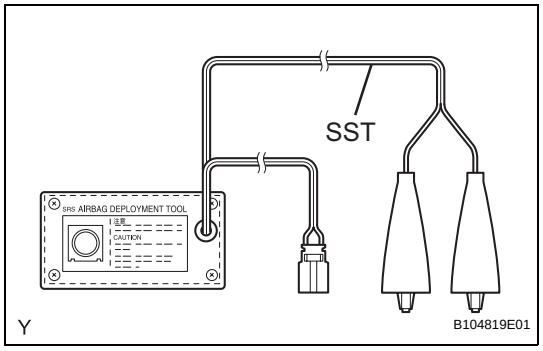

(d) Check whether SST is functioning.
SST 09082-00700
CAUTION:
Always use the specified SST when activating the seat belt pretensioner.

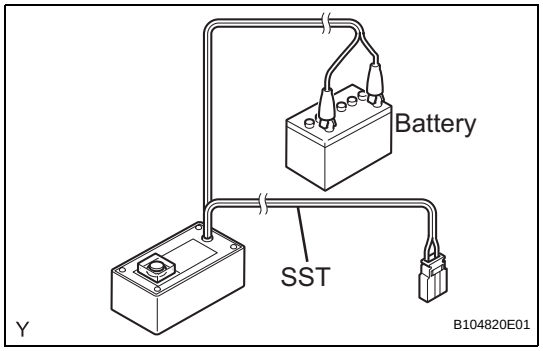

(1) Connect the SST red clip to the positive battery terminal and the black clip to the negative battery terminal.
HINT:
Do not connect the yellow connector. The yellow connector is for connections to the seat belt pretensioner.

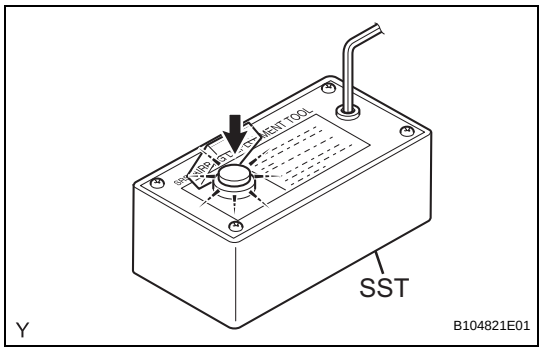

(2) Press the SST activation switch and check that the LED of the SST activation switch turns on.
CAUTION:
If the LED turns on when the activation switch is not being pressed, SST may be malfunctioning. Do not use SST.

SB

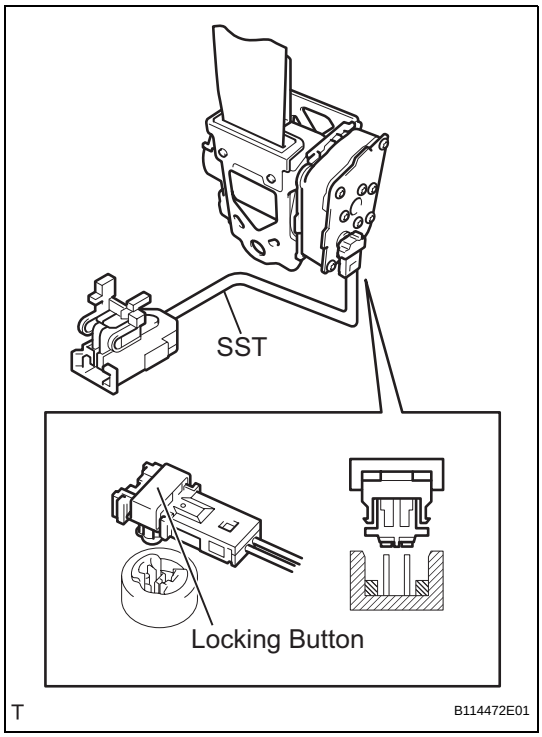

(e) Connect SST.

(1) Connect SST, then connect the yellow connector to the seat belt pretensioner.

SST 09082-00770

NOTICE:

Do not lock the secondary lock of the twin lock to avoid damaging the SST connector and wire harness.

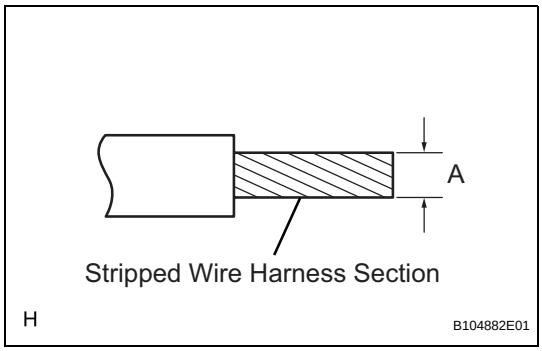

(2) Using a service-purpose wire harness for the vehicle, tie the seat belt pretensioner to the tire with a wheel attached.

Stripped wire harness section:

Area	Measurement
A	1.25 mm^2 or more (0.0019 in^2 or more)

CAUTION:

- **Do not use wire harnesses that are too thin or any other object to tie the seat belt pretensioner because they may snap due to the shock when the pretensioner is deployed.**
- **Always use a wire harness for vehicle use, with a cross section of at least 1.25 mm^2 (0.0019 in^2).**

HINT:

To calculate the area of the stripped wire harness cross section:

Area = 3.14 x $(Diameter)^2$ divided by 4

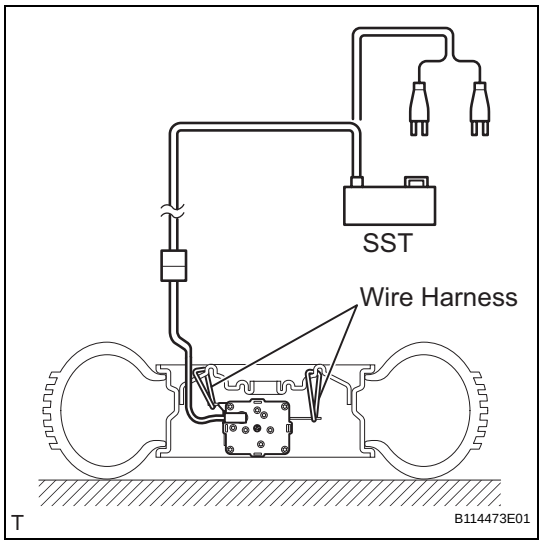

(3) Connect SST.
SST 09082-00700
NOTICE:
- **Do not lock the secondary lock of the twin lock to avoid damaging the SST connector and wire harness.**
- **Set up the front seat outer belt, as shown in the illustration.**

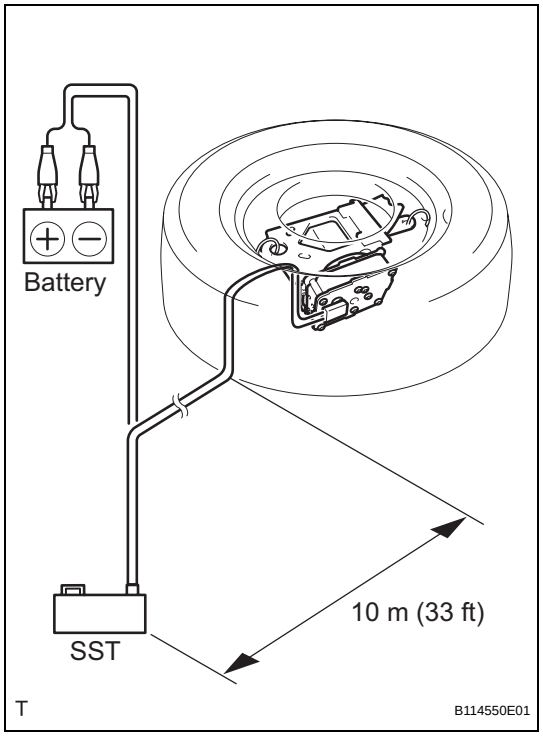

(4) Move SST at least 10 m (33 ft) away from the wheel.
NOTICE:
Do not damage the SST wire harness.

(f) Activate the seat belt pretensioner.
(1) Connect the SST red clip to the positive battery terminal and the black clip to the negative battery terminal.
(2) Check that no one is within 10 m (33 ft) of the wheel.
(3) Press the SST activation switch and activate the seat belt pretensioner.
HINT:
The seat belt pretensioner operates simultaneously with the SST activation switch LED light.

(g) Disconnect SST.

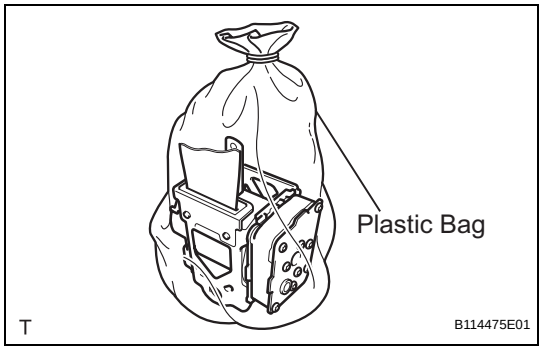

(h) Dispose of the front seat outer belt (with the seat belt pretensioner).
CAUTION:
- **Do not touch the front seat outer belt for at least 30 minutes after the seat belt pretensioner has been activated. It is very hot.**
- **Use gloves and safety glasses when handling a front seat outer belt with a pretensioner that has been activated.**
- **Always wash your hands with water after completing the operation.**
- **Do not apply water to a front seat outer belt that has an activated pretensioner.**

(1) Place the front seat outer belt in a plastic bag, tie the end tightly and dispose of it in the same way as other general parts.

FRONT SEAT OUTER BELT ASSEMBLY (for Hatchback 3 Door)

COMPONENTS

SB

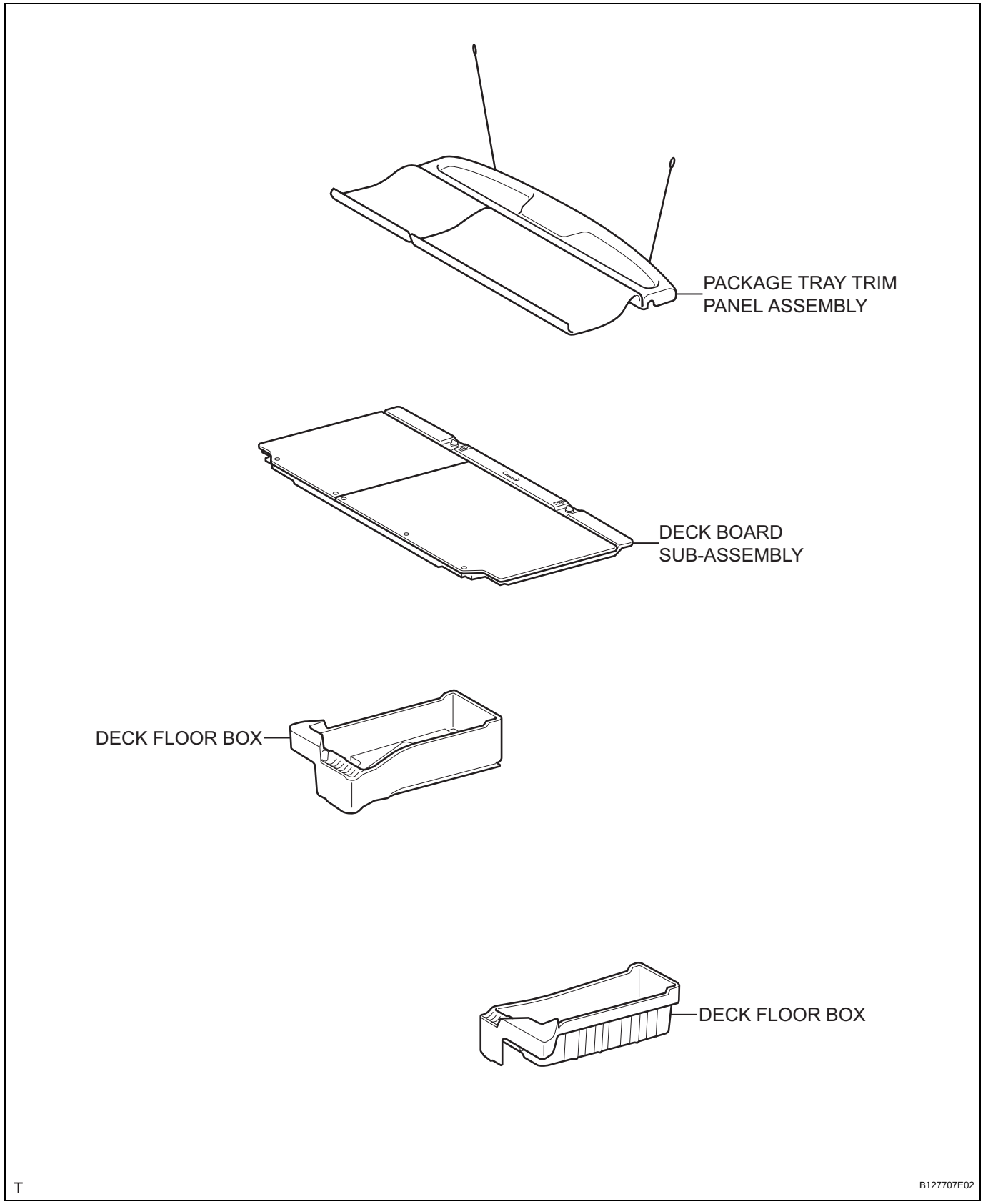

for 60/40 Split Seat Type:

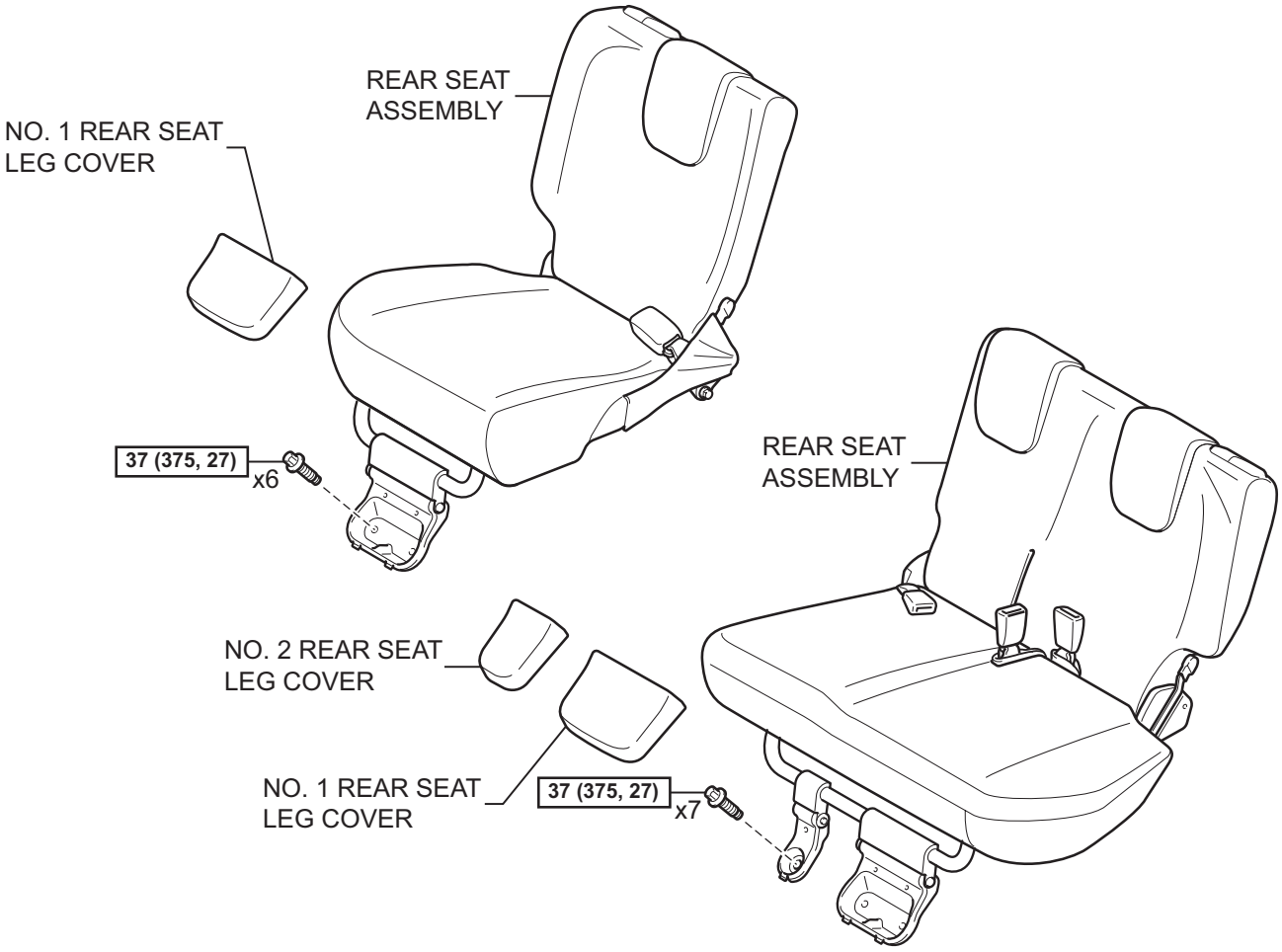

for Hold Down Seat Type:

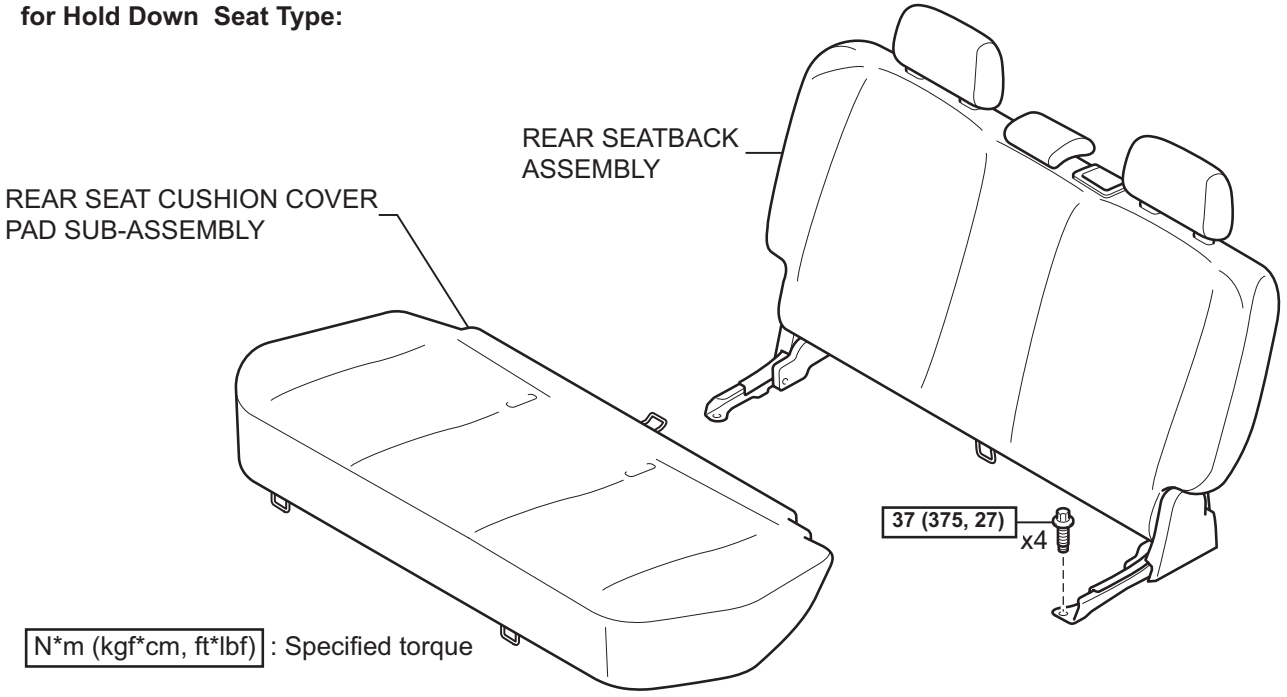

T

B121713E05

SB

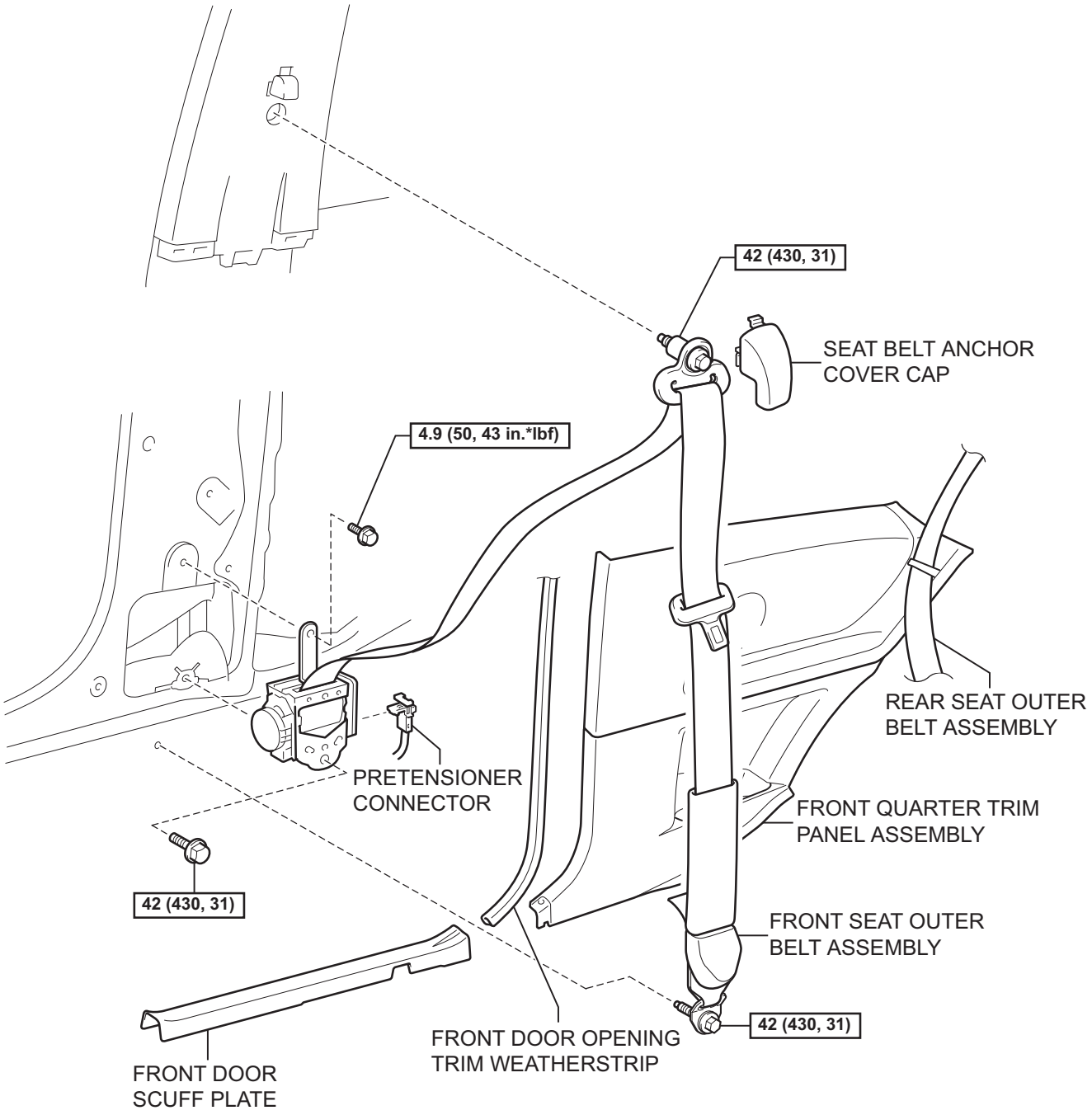

N*m (kgf*cm, ft*lbf) : Specified torque

T

B138697E01

REMOVAL

CAUTION:
Some of these service operations affect the SRS airbag system. Read the precautionary notices concerning the SRS airbag system before servicing (See page RS-1).
NOTICE:
Always use "Torx" socket wrench E10 when removing the rear seat.
HINT:
The procedure described below is for the RH side. Use the same procedure for both the RH and LH sides, unless otherwise specified.

1. **DISCONNECT CABLE FROM NEGATIVE BATTERY TERMINAL**
   CAUTION:
   Wait for at least 90 seconds after disconnecting the cable to prevent the airbag from working.
2. **REMOVE PACKAGE TRAY TRIM PANEL ASSEMBLY (See page IR-48)**
3. **REMOVE DECK BOARD SUB-ASSEMBLY (See page IR-48)**
4. **REMOVE DECK FLOOR BOX**
   (a) for RH Side:
   (1) Remove the deck floor box (See page IR-48).
   (b) for LH Side:
   HINT:
   Use the same procedure as for the RH side.
5. **REMOVE NO. 1 REAR SEAT LEG COVER (for 60/40 Split Seat Type)**
   (a) for RH Side:
   (1) Remove the No. 1 rear seat leg cover (See page SE-89).
   (b) for LH Side:
   (1) Remove the No. 1 rear seat leg cover (See page SE-70).
6. **REMOVE NO. 2 REAR SEAT LEG COVER (for 60/40 Split Seat Type LH Side) (See page SE-70)**
7. **REMOVE REAR SEAT ASSEMBLY (for 60/40 Split Seat Type)**
   (a) for RH Side:
   (1) Remove the rear seat assembly (See page SE-89).
   (b) for LH Side:
   (1) Remove the rear seat assembly (See page SE-71).
8. **REMOVE REAR SEAT CUSHION COVER PAD SUB-ASSEMBLY (for Hold Down Seat Type) (See page SE-114)**
9. **REMOVE REAR SEATBACK ASSEMBLY (for Hold Down Seat Type) (See page SE-115)**

SB

10. REMOVE FRONT DOOR SCUFF PLATE (See page IR-97)

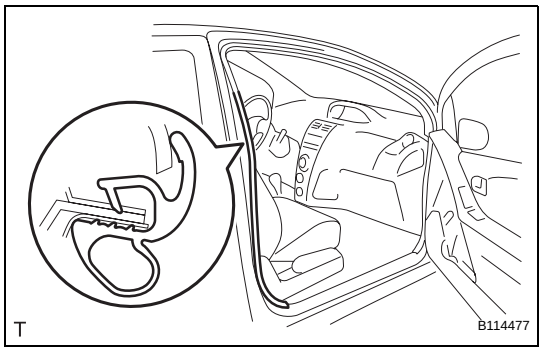

11. REMOVE FRONT DOOR OPENING TRIM WEATHERSTRIP

(a) Remove the front door opening trim weatherstrip to the extent that the front quarter trim panel can be removed.

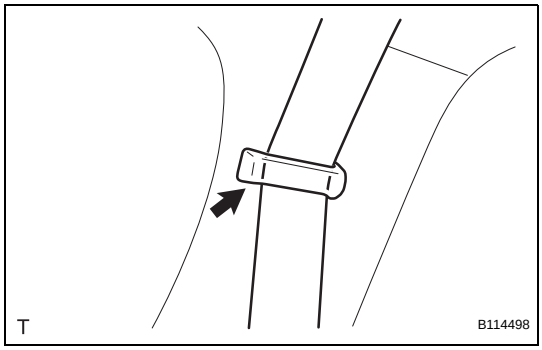

12. REMOVE REAR SEAT OUTER BELT ASSEMBLY

(a) Remove the belt.

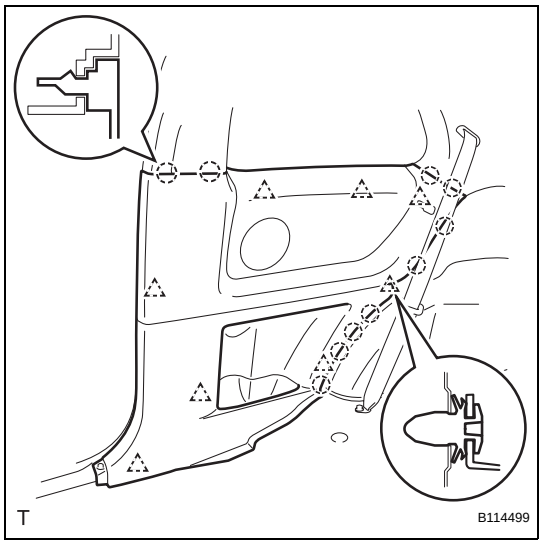

13. REMOVE FRONT QUARTER TRIM PANEL ASSEMBLY

(a) Disengage the 8 clips, the retainer and the 10 claws and remove the front quarter trim panel.

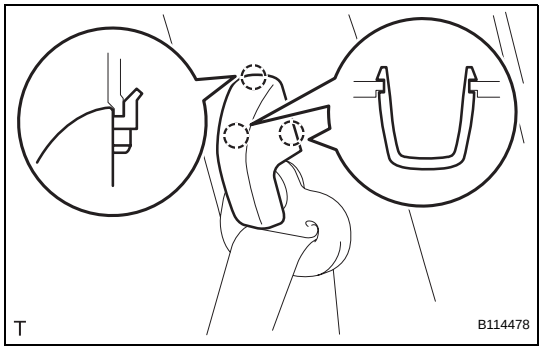

14. REMOVE SEAT BELT ANCHOR COVER CAP

(a) Disengage the 3 claws and remove the seat belt anchor cover cap.

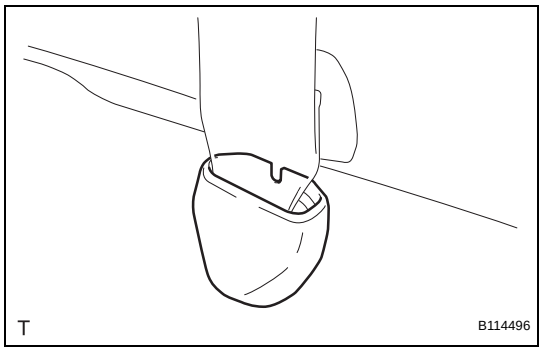

15. REMOVE FRONT SEAT OUTER BELT ASSEMBLY

(a) Remove the anchor plate cover.

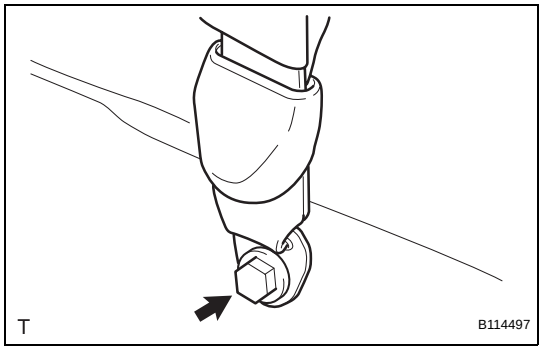

(b) Remove the bolt and the anchor plate.

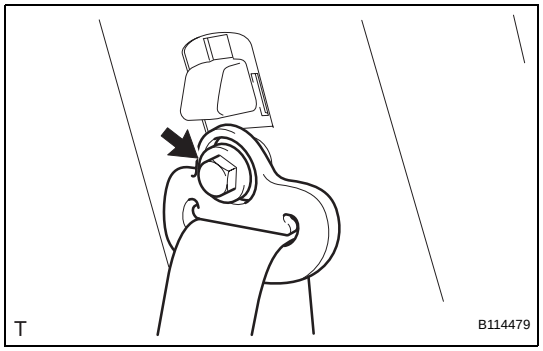

(c) Remove the bolt and the through anchor.

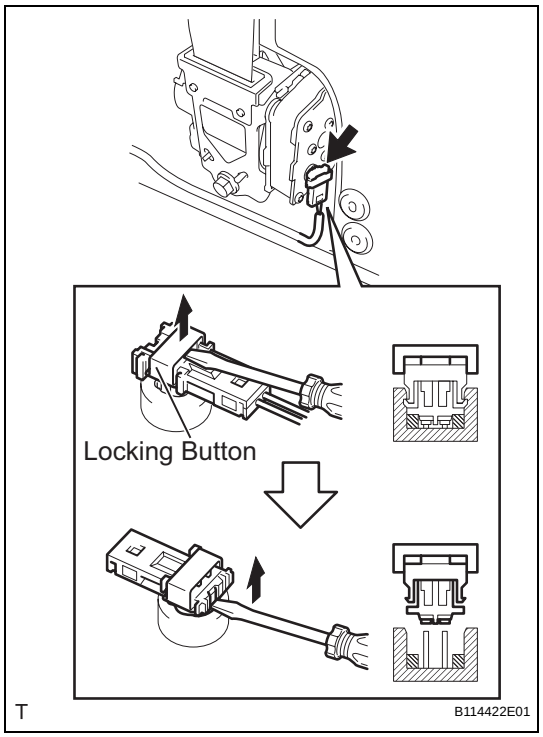

(d) Disconnect the pretensioner connector.
   (1) Using a screwdriver, release the locking button.
   (2) Using a screwdriver, disconnect the pretensioner connector.

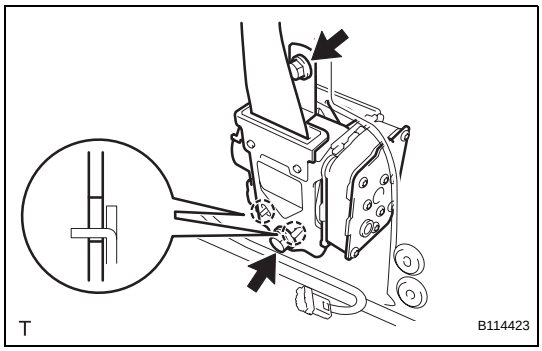

(e) Remove the 2 bolts, the 2 hooks and the retractor.

SB

INSTALLATION

CAUTION:
Some of these service operations affect the SRS airbag system. Read the precautionary notices concerning the SRS airbag system before servicing (See page RS-1).
NOTICE:
Always use "Torx" socket wrench E10 when installing the rear seat.
HINT:
The procedure described below is for the RH side. Use the same procedure for both the RH and LH sides, unless otherwise specified.

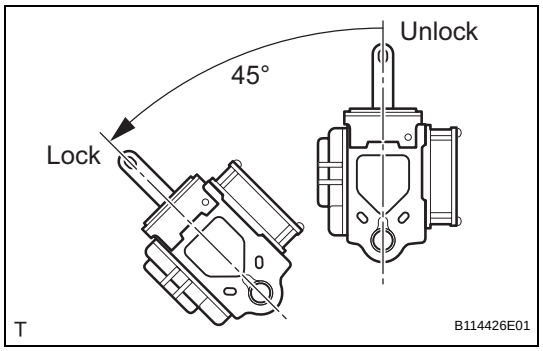

1. INSTALL FRONT SEAT OUTER BELT ASSEMBLY

(a) Check the angle of inclination required to lock the retractor.
  (1) Gently incline the retractor from its initial position. Check that the belt does not lock when the retractor is inclined 15° or less in any direction. Also, check that the belt locks when the inclination of the retractor is 45° or more.
  NOTICE:
  Do not disassemble the retractor.
  If the operation is not as specified, replace the front seat outer belt.

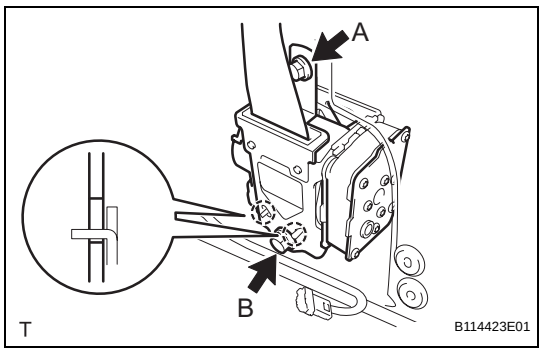

(b) Hook the lower stay of the retractor onto the 2 body hooks and provisionally install the retractor with the 2 bolts.
(c) Tighten bolt A and then bolt B.
Torque: 4.9 N*m (50 kgf*cm, 43 in.*lbf) for bolt A
42 N*m (430 kgf*cm, 31 ft.*lbf) for bolt B

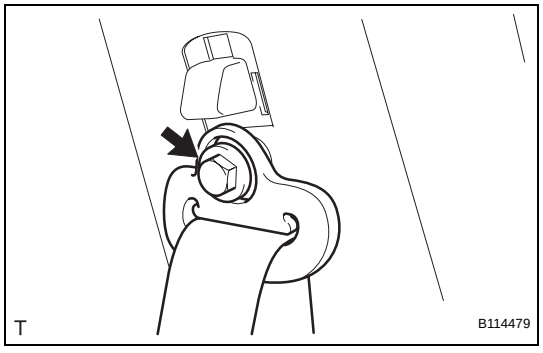

(d) Install the through anchor with the bolt.
Torque: 42 N*m (430 kgf*cm, 31 ft.*lbf)
(e) Check that the ELR locks.
NOTICE:
Perform the check with the front seat outer belt installed
  (1) With the belt installed, check that the belt locks when it is pulled out quickly.
  If the operation is not as specified, replace the front seat outer belt.

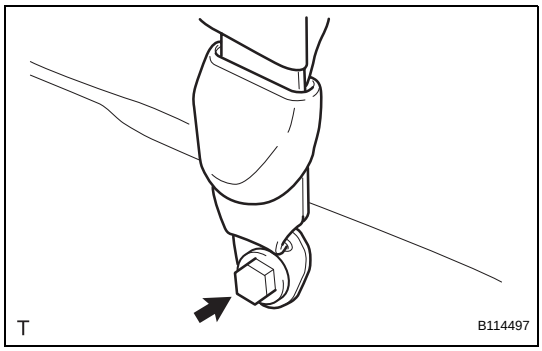

(f) Install the anchor plate with the bolt.
Torque: 42 N*m (430 kgf*cm, 31 ft.*lbf)

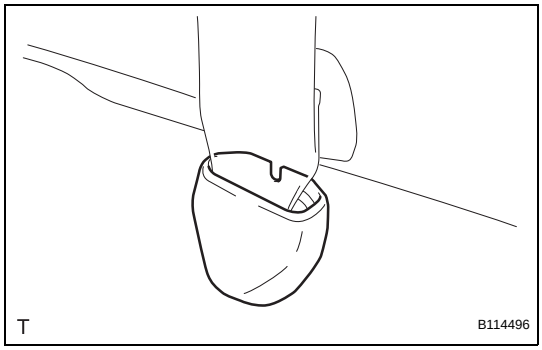

(g) Install the anchor plate cover.

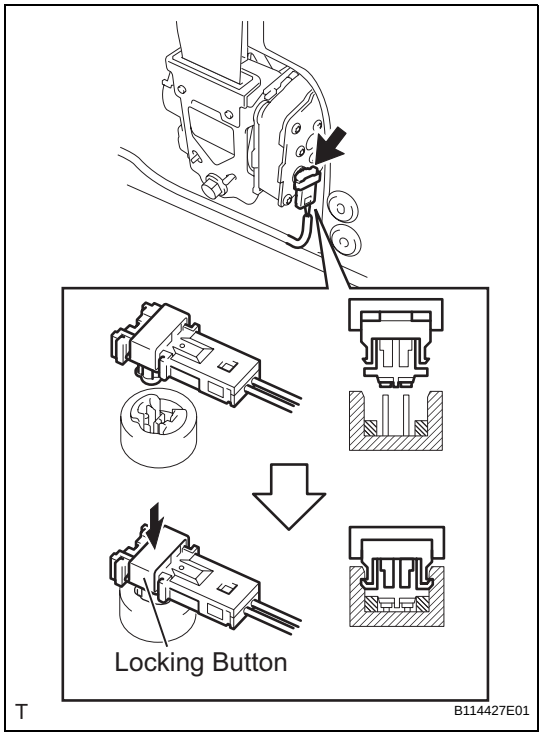

(h) Connect the pretensioner connector.
(1) Connect the pretensioner connector.
(2) Lock the locking button.
NOTICE:
Securely lock the locking button.

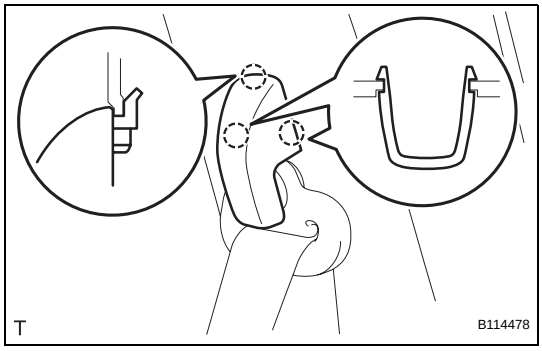

2. INSTALL SEAT BELT ANCHOR COVER CAP

(a) Engage the 3 claws and install the seat belt anchor cover cap.

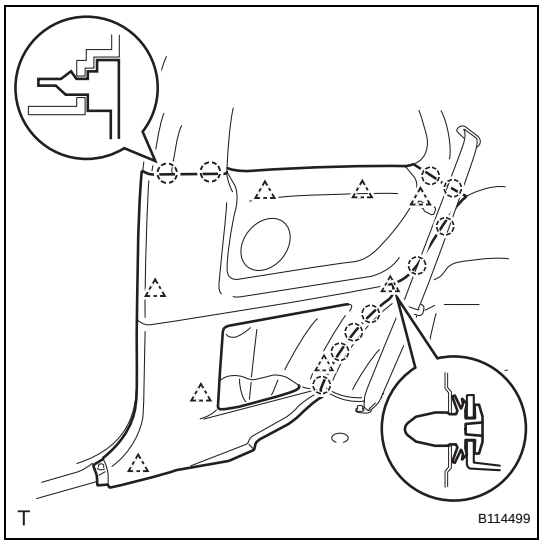

3. **INSTALL FRONT QUARTER TRIM PANEL ASSEMBLY**
   (a) Engage the 8 clips, the retainer and the 10 claws and install the front quarter trim panel.

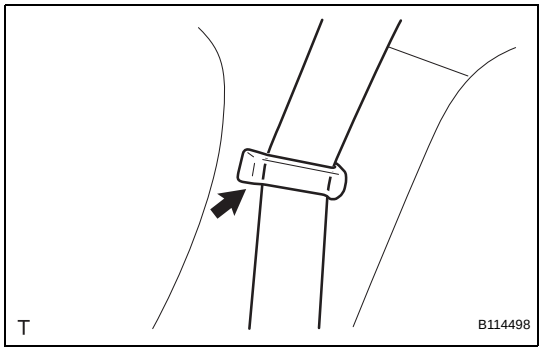

4. **INSTALL REAR SEAT OUTER BELT ASSEMBLY**
   (a) Install the belt.

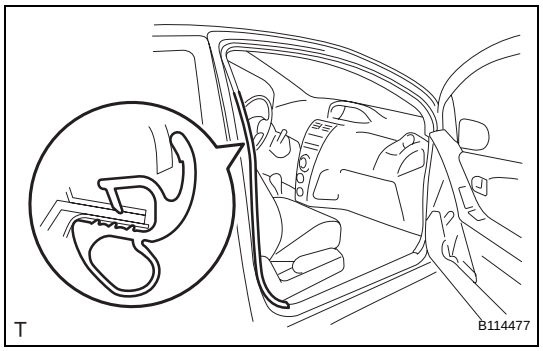

5. **INSTALL FRONT DOOR OPENING TRIM WEATHERSTRIP**
   (a) Install the front door opening trim weatherstrip.
6. **INSTALL FRONT DOOR SCUFF PLATE (See page IR-119)**
7. **INSTALL REAR SEAT ASSEMBLY (for 60/40 Split Seat Type)**
   (a) for RH Side:
      (1) Install the rear seat assembly (See page SE-102).
   (b) for LH Side:
      (1) Install the rear seat assembly (See page SE-84).
8. **INSTALL NO. 2 REAR SEAT LEG COVER (for 60/40 Split Seat Type LH Side) (See page SE-85)**
9. **INSTALL NO. 1 REAR SEAT LEG COVER (for 60/40 Split Seat Type)**
   (a) for RH Side:
      (1) Install the No. 1 rear seat leg cover (See page SE-89).
   (b) for LH Side:
      (1) Install the No. 1 rear seat leg cover (See page SE-85).
10. **INSTALL REAR SEATBACK ASSEMBLY (for Hold Down Seat Type) (See page SE-122)**

11. INSTALL REAR SEAT CUSHION COVER PAD SUB-ASSEMBLY (for Hold Down Seat Type) (See page SE-123)

12. INSTALL DECK FLOOR BOX

(a) for RH side:

(1) Install the deck floor box (See page IR-83).

(b) for LH Side:

HINT:

Use the same procedure as for the RH side.

13. INSTALL DECK BOARD SUB-ASSEMBLY (See page IR-83)

14. INSTALL PACKAGE TRAY TRIM PANEL ASSEMBLY (See page IR-83)

15. CONNECT CABLE TO NEGATIVE BATTERY TERMINAL

Torque: 5.4 N*m (55 kgf*cm, 48 in.*lbf)

16. INSPECT SRS WARNING LIGHT

(See page RS-31)

DISPOSAL

CAUTION:

- **Never dispose of a front seat outer belt that has an inactivated pretensioner.**
- **The seat belt pretensioner produces a loud, exploding sound when it activates. Perform the operation outside and where it will not be a nuisance to persons nearby.**
- **Stand at least 10 m (33 ft) away when activating a front seat outer belt (with seat belt pretensioner).**
- **Use gloves and safety glasses when handling a front seat outer belt with an activated pretensioner.**
- **Always wash your hands with water after completing an activation.**
- **Do not apply water to a front seat outer belt that has an activated pretensioner.**
- **Always use the specified SST (SRS airbag deployment tool) when activating the seat belt pretensioner.**
- **Perform the operation in a place away from electrical interference.**

NOTICE:

Always use "Torx" socket wrench E10 when removing the rear seat.

HINT:

The procedure described below is for the RH side. Use the same procedure for both the RH and LH sides, unless otherwise specified.

1. DISPOSE OF FRONT SEAT OUTER BELT ASSEMBLY (When Installed in Vehicle)

HINT:

Prepare a battery as the power source to activate the seat belt pretensioner.

(a) Check whether SST is functioning.

SST 09082-00700

CAUTION:

Always use the specified SST when activating the seat belt pretensioner.

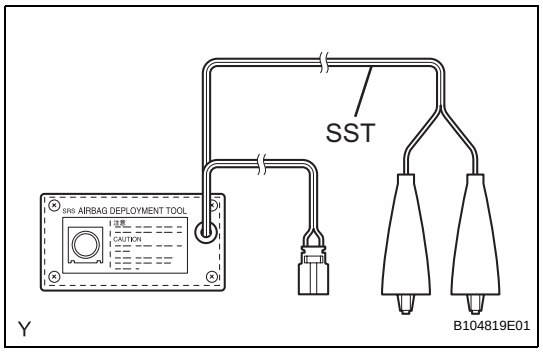

(1) Connect the SST red clip to the positive battery terminal and the black clip to the negative battery terminal.

HINT:

Do not connect the yellow connector. The yellow connector is for connections to the seat belt pretensioner.

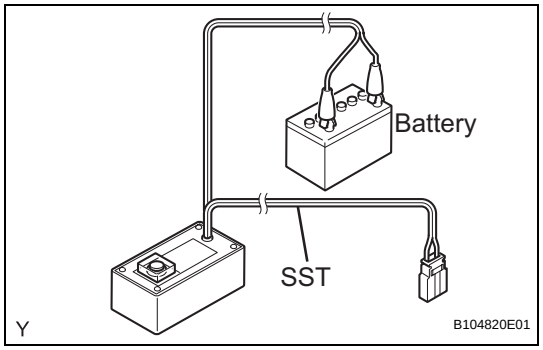

SB

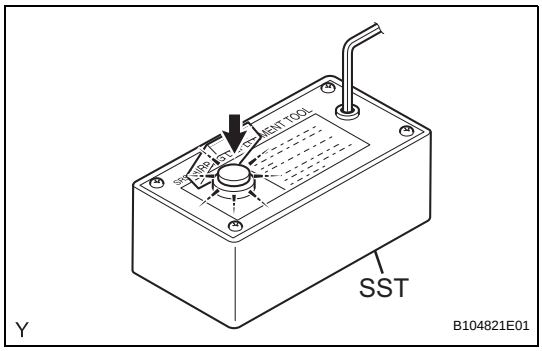

(2) Press the SST activation switch and check that the LED of the SST activation switch turns on.
CAUTION:
If the LED turns on when the activation switch is not being pressed, SST may be malfunctioning. Do not use SST.

(b) Disconnect SST from the battery.

(c) Disconnect the pretensioner connector.

(1) Disconnect the cable from the negative battery terminal.

(2) Remove the package tray trim panel assembly (See page IR-48).

(3) Remove the deck board sub-assembly (See page IR-48).

(4) Remove the deck floor box RH (See page IR-48).

(5) Remove the deck floor box LH (for 60/40 Split Seat Type and Bench Seat Type).
HINT:
Use the same procedure as for the RH side.

(6) Remove the rear seat No. 1 leg cover (for 60/40 Split Seat Type) (See page SB-75).

(7) Remove the rear seat No. 2 leg cover (for 60/40 Split Seat Type LH Side) (See page SE-70).

(8) Remove the rear seat assembly (for 60/40 Split Seat Type) (See page SB-75).

(9) Remove the rear seat cushion cover pad sub-assembly (for Bench Seat Type) (See page SE-114).

(10) Remove the rear seatback assembly (for Bench Seat Type) (See pageSE-115).

(11) Remove the front door scuff plate (See page IR-97).

(12) Remove the front door opening trim weatherstrip (See page SB-76).

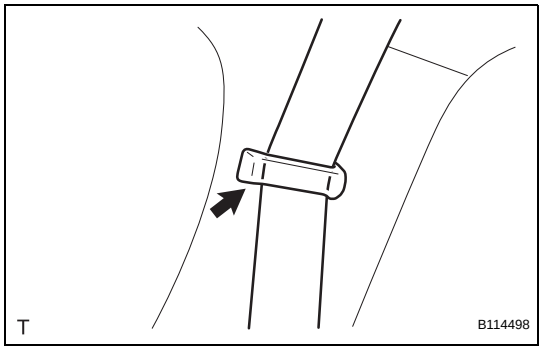

(13) Remove the rear seat outer belt assembly.
1. Remove the belt.

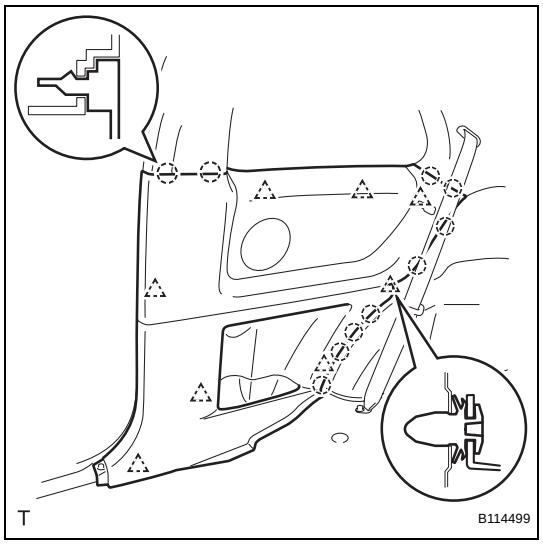

(14) Remove the front quarter trim panel assembly.
1. Disengage the 8 clips, the retainer and the 10 claws and remove the front quarter trim panel.

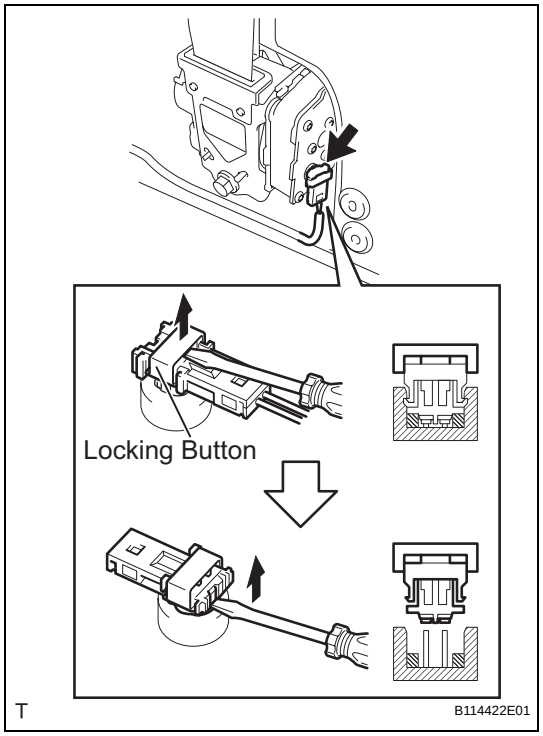

(15) Disconnect the pretensioner connector as shown in the illustration.

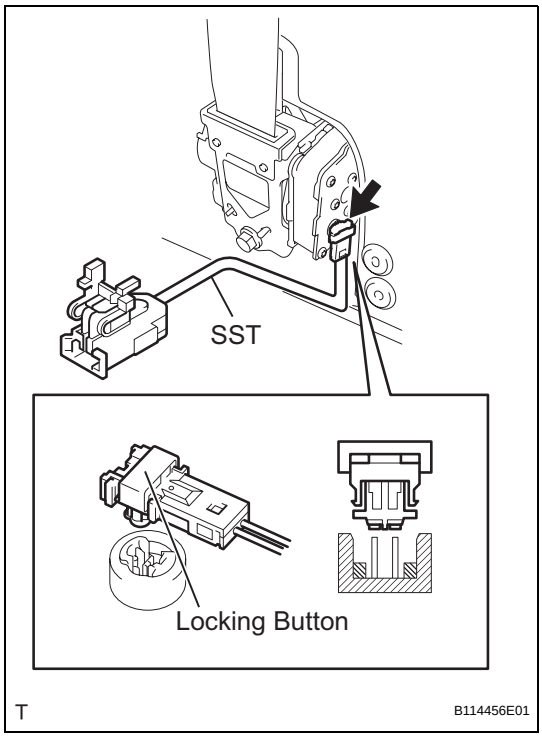

(d) Connect SST.
(1) Connect SST, then connect the yellow connector to the seat belt pretensioner.
SST 09082-00770
NOTICE:
Do not lock the secondary lock of the twin lock to avoid damaging the SST connector and wire harness.

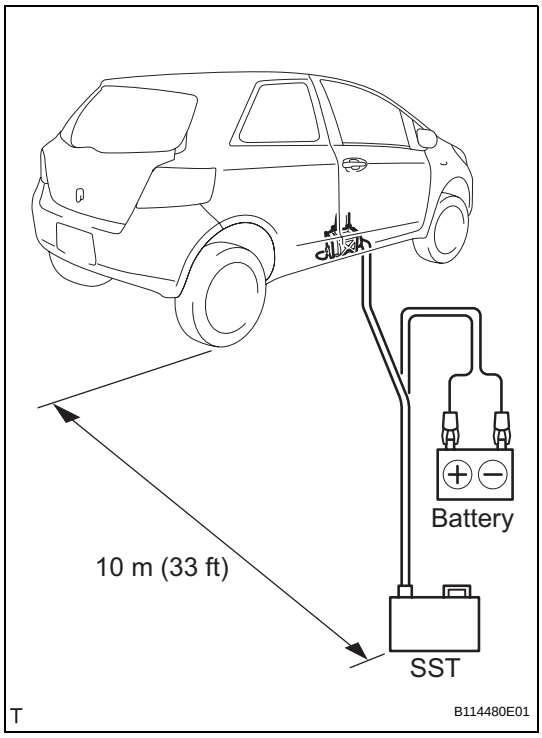

(2) Move the SST at least 10 m (33 ft) away from the front of the vehicle.
SST 09082-00700
(3) Close the doors and windows of the vehicle.
HINT:
Do not close the windows fully. Leave a gap for inserting the SST wire harness.
NOTICE:
Do not damage the SST wire harness.
(4) Connect the SST red clip to the positive battery terminal and the black clip to the negative battery terminal.

(e) Activate the seat belt pretensioner.
(1) Confirm that no one is inside the vehicle or within 10 m (33 ft) of the vehicle.
(2) Press the SST activation switch and activate the seat belt pretensioner.
HINT:
The seat belt pretensioner operates simultaneously with the SST activation switch LED light.

(f) Disconnect SST.

(g) Dispose of the front seat outer belt (with the seat belt pretensioner).
HINT:
When scrapping a vehicle, activate the seat belt pretensioner, and then scrap the vehicle with the activated front seat outer belt still installed.

CAUTION:

- **Do not touch the front seat outer belt for at least 30 minutes after the seat belt pretensioner has been activated. It is very hot.**
- **Use gloves and safety glasses when handling an front seat outer belt with a pretensioner that has been activated.**
- **Always wash your hands with water after completing the operation.**
- **Do not apply water to a front seat outer belt that has an activated pretensioner.**

2. DISPOSE OF FRONT SEAT OUTER BELT ASSEMBLY (When not Installed in Vehicle)

HINT:

Prepare a battery as the power source to activate the seat belt pretensioner.

NOTICE:

- **When only disposing of the front seat outer belt (with the seat belt pretensioner), never use the customer's vehicle to activate the seat belt pretensioner.**
- **Follow the procedure described below when activating the seat belt pretensioner.**

(a) Remove the front seat outer belt assembly (See page SB-75).

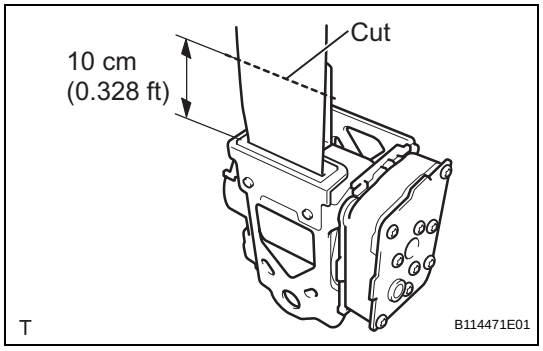

(b) Wind the seat belt with the retractor.

(c) When the seat belt is sufficiently wound, cut the seat belt approximately 10 cm (0.328 ft) from the retractor, as shown in the illustration.

HINT:

The retractor resistance increases in correlation with how much the seat belt is wound.

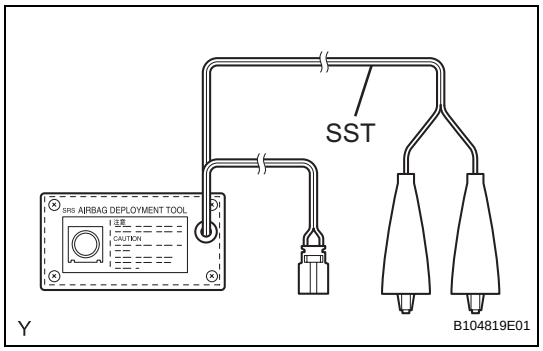

(d) Check whether SST is functioning.

SST 09082-00700

CAUTION:

Always use the specified SST when activating the seat belt pretensioner.

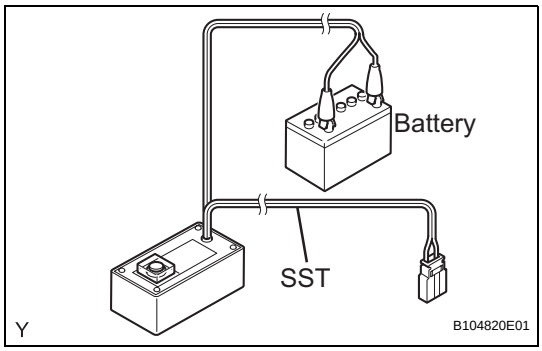

(1) Connect the SST red clip to the positive battery terminal and the black clip to the negative battery terminal.
HINT:
Do not connect the yellow connector. The yellow connector is for connections to the seat belt pretensioner.

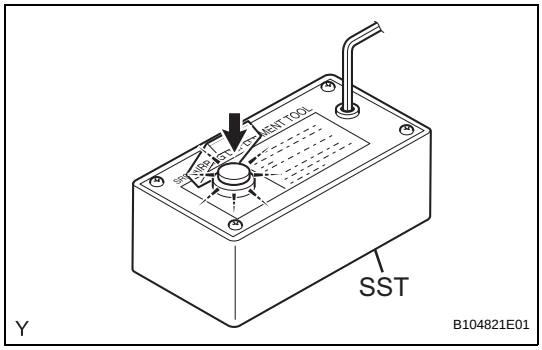

(2) Press the SST activation switch and check that the LED of the SST activation switch turns on.
CAUTION:
If the LED turns on when the activation switch is not being pressed, SST may be malfunctioning. Do not use SST.

(e) Connect SST.

(1) Connect SST, then connect the yellow connector to the seat belt pretensioner.
SST 09082-00770
NOTICE:
Do not lock the secondary lock of the twin lock to avoid damaging the SST connector and wire harness.

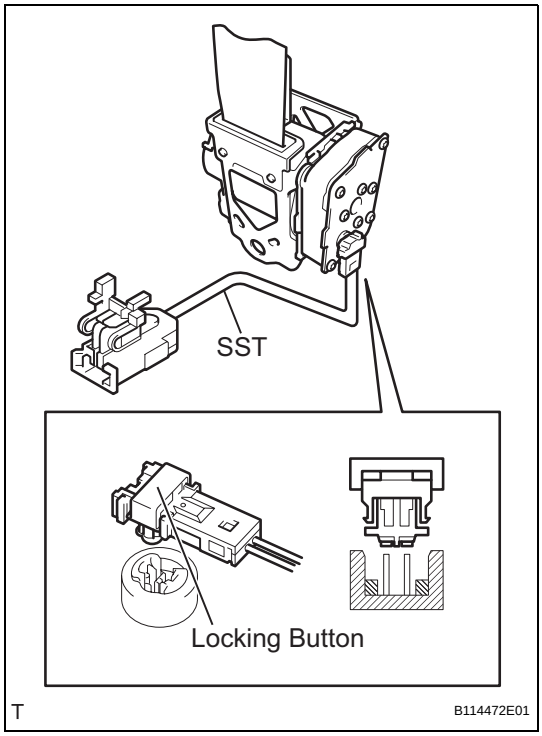

(2) Using a service-purpose wire harness for the vehicle, tie the seat belt pretensioner to the tire with a wheel attached.
Stripped wire harness section:

Area	Measurement
A	1.25 mm^2 or more (0.0019 in^2 or more)

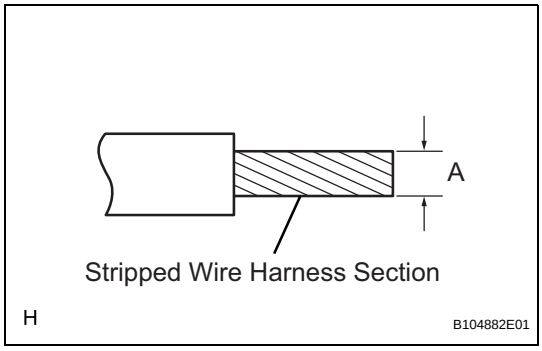

CAUTION:

- **Do not use wire harnesses that are too thin or any other object to tie the seat belt pretensioner because they may snap due to the shock when the pretensioner is deployed.**
- **Always use a wire harness for vehicle use, with a cross section of at least 1.25 mm^2 (0.0019 in^2).**

HINT:

To calculate the area of the stripped wire harness cross section:

Area = 3.14 x (Diameter)^2 divided by 4

(3) Connect SST.

SST 09082-00700

NOTICE:

- **Do not lock the secondary lock of the twin lock to avoid damaging the SST connector and wire harness.**
- **Set up the front seat outer belt as shown in the illustration.**

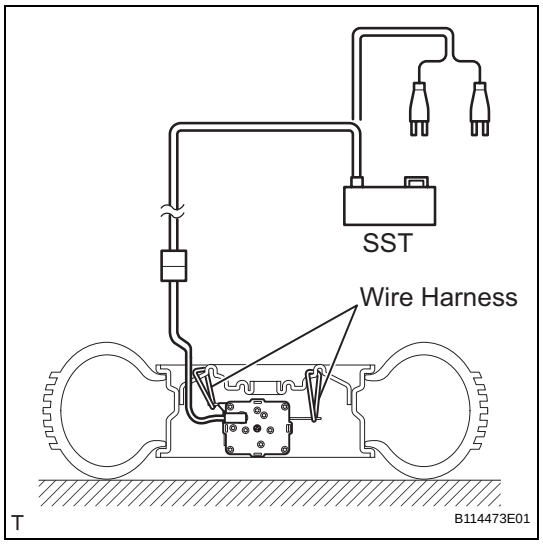

(4) Move SST at least 10 m (33 ft) away from the wheel.

NOTICE:

Do not damage the SST wire harness.

(f) Activate the seat belt pretensioner.

(1) Connect the SST red clip to the positive battery terminal and the black clip to the negative battery terminal.

(2) Check that no one is within 10 m (33 ft) of the wheel.

(3) Press the SST activation switch and activate the seat belt pretensioner.

HINT:

The seat belt pretensioner operates simultaneously with the SST activation switch LED light.

(g) Disconnect SST.

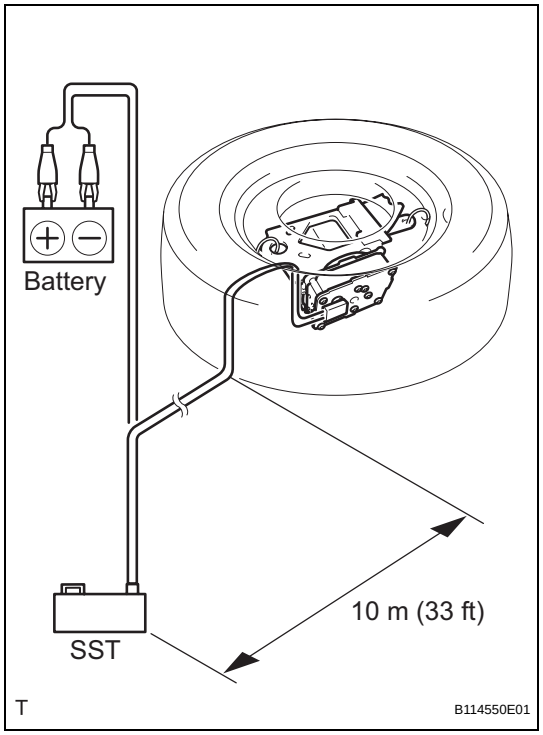

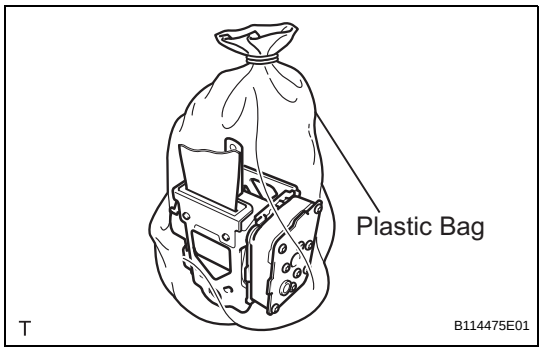

(h) Dispose of the front seat outer belt (with the seat belt pretensioner).

CAUTION:

- **Do not touch the front seat outer belt for at least 30 minutes after the seat belt pretensioner has been activated. It is very hot.**
- **Use gloves and safety glasses when handling a front seat outer belt with a pretensioner that has been activated.**
- **Always wash your hands with water after completing the operation.**
- **Do not apply water to a front seat outer belt that has an activated pretensioner.**

(1) Place the front seat outer belt in a plastic bag, tie the end tightly and dispose of it in the same way as other general parts.

REAR SEAT INNER BELT ASSEMBLY (for Sedan)

COMPONENTS

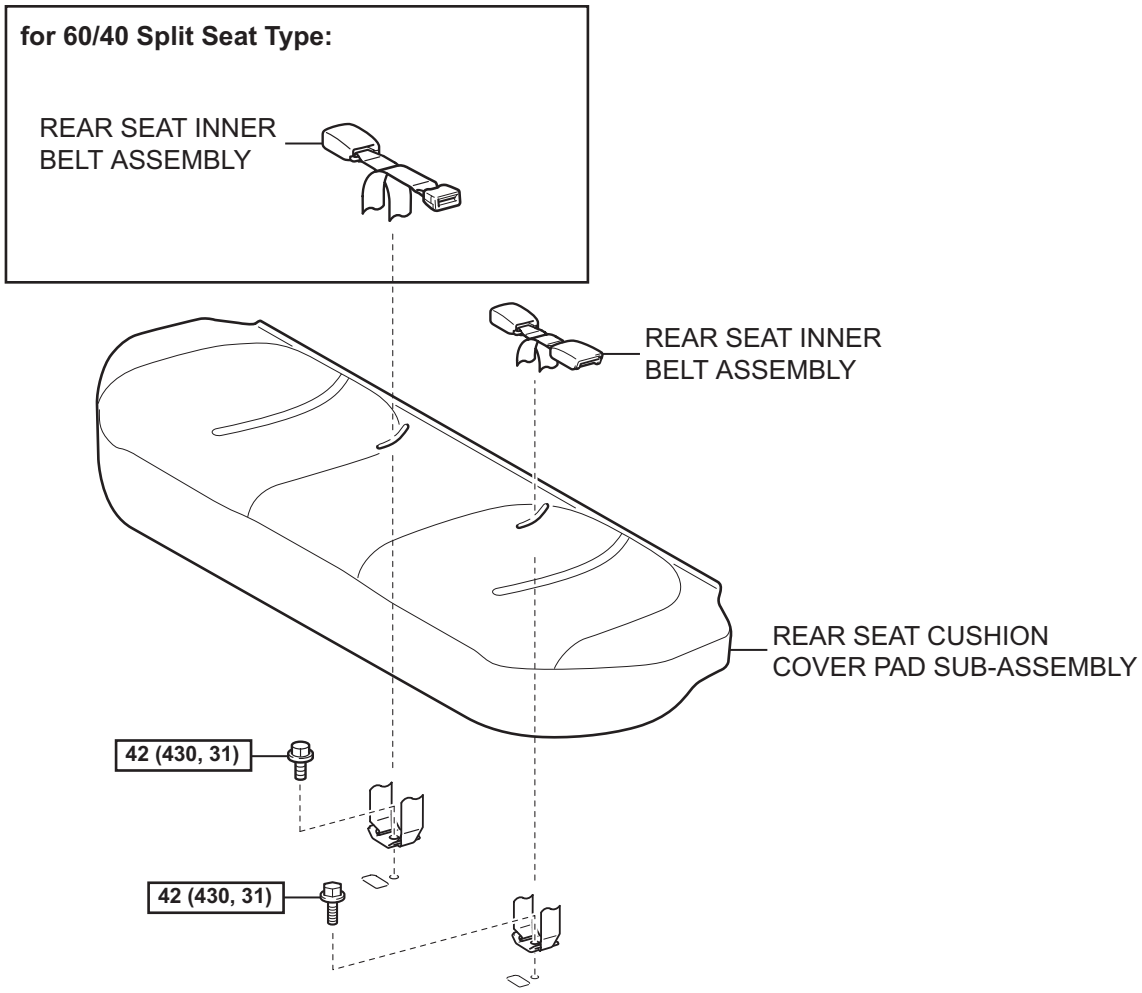

N*m (kgf*cm, ft*lbf) : Specified torque

T

B138566E01

SB

REMOVAL

1. REMOVE REAR SEAT CUSHION COVER PAD SUB-ASSEMBLY

(a) for 60/40 Split Seat Type:

(1) Remove the rear seat cushion cover pad (See page SE-46).

(b) for Fixed Seat Type:

(1) Remove the rear seat cushion cover pad (See page SE-106).

2. REMOVE REAR SEAT INNER BELT ASSEMBLY

(a) for RH Side (for 60/40 Split Seat Type):

(1) Remove the bolt and the rear seat inner belt.

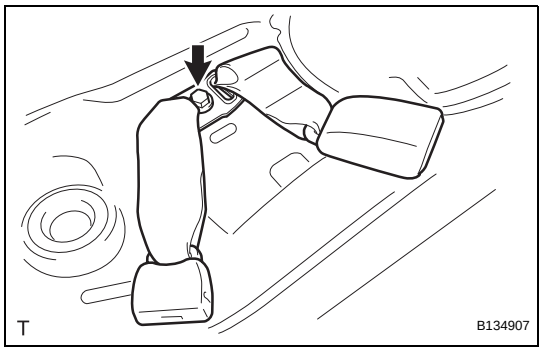

(b) LH Side:

(1) Remove the bolt and the rear seat inner belt.

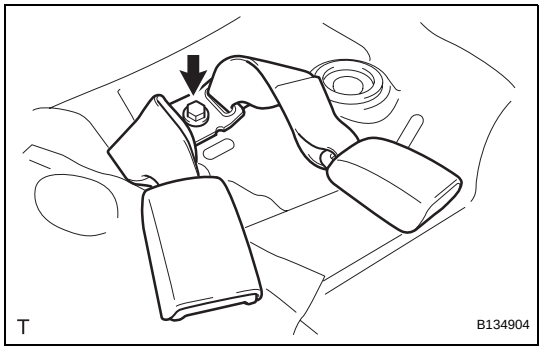

INSTALLATION

1. INSTALL REAR SEAT INNER BELT ASSEMBLY

(a) for RH Side (60/40 Split Seat Type):

(1) Install the rear seat inner belt with the bolt.
Torque: 42 N*m (430 kgf*cm, 31 ft.*lbf)
NOTICE:

- **Install the anchor plate with the arrow mark facing forward.**
- **Do not place the anchor plate over the locating mark area of the floor panel.**

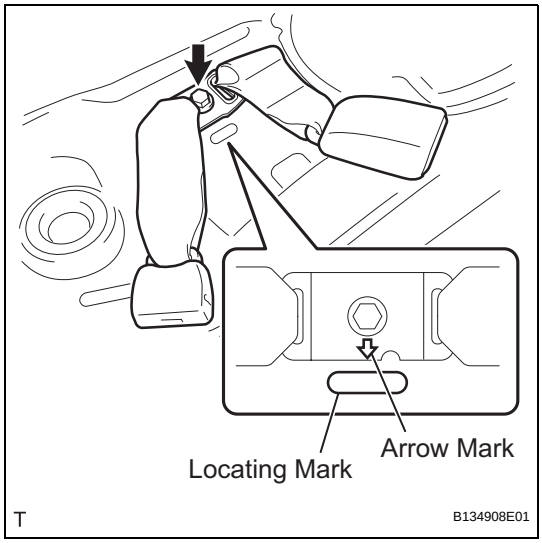

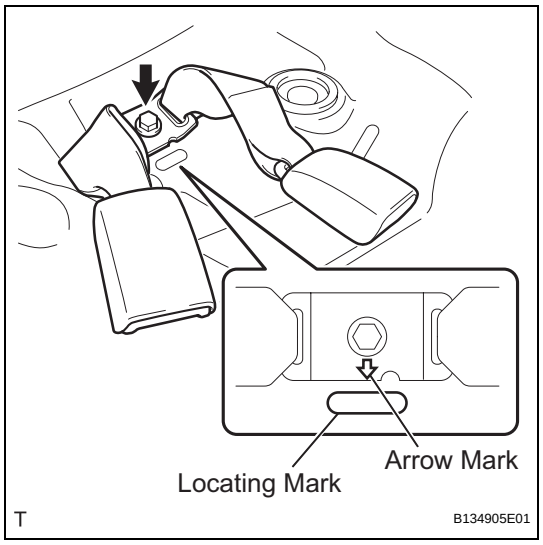

(b) for LH Side:
  (1) Install the rear seat inner belt with the bolt.
  Torque: 42 N*m (430 kgf*cm, 31 ft.*lbf)
  NOTICE:
  - **Install the anchor plate with the arrow mark facing forward.**
  - **Do not place the anchor plate over the locating mark area of the floor panel.**

2. INSTALL REAR SEAT CUSHION COVER PAD SUB-ASSEMBLY

(a) for 60/40 Split Seat Type:
  (1) Install the rear seat cushion cover pad (See page SE-53).

(b) for Fixed Seat Type:
  (1) Install the rear seat cushion cover pad (See page SE-109).

REAR SEAT INNER BELT ASSEMBLY (for Hatchback LH Side)

COMPONENTS

SB

for 60/40 Split Seat Type:

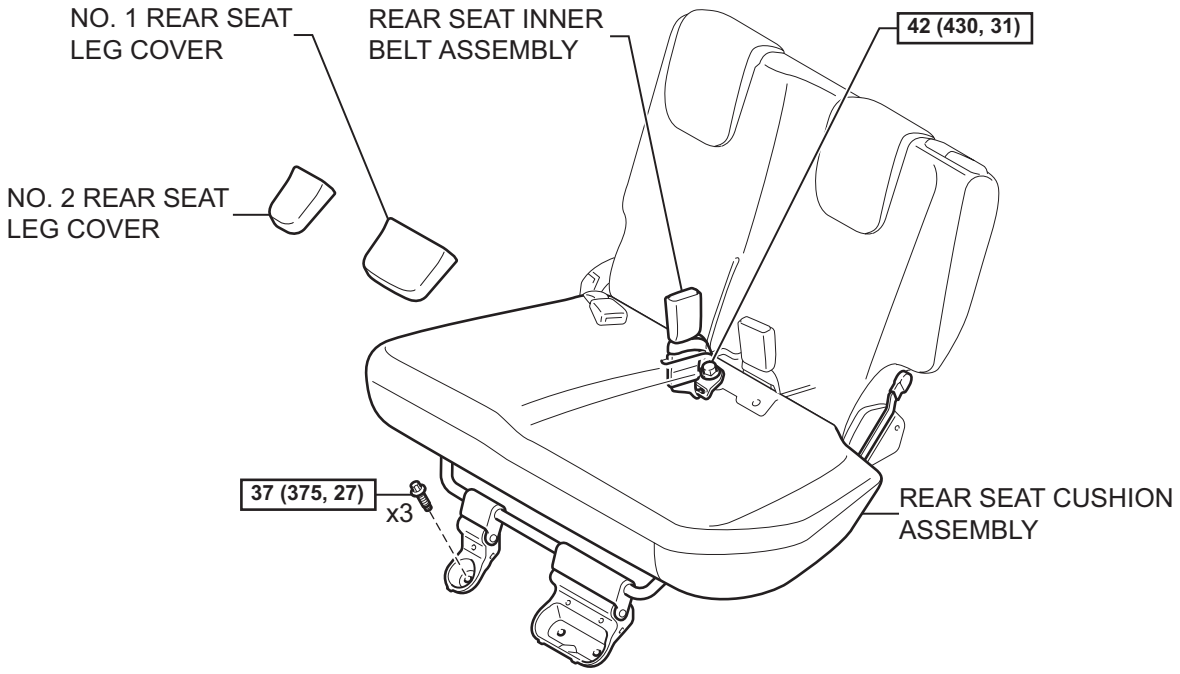

for Hold Down Seat Type:

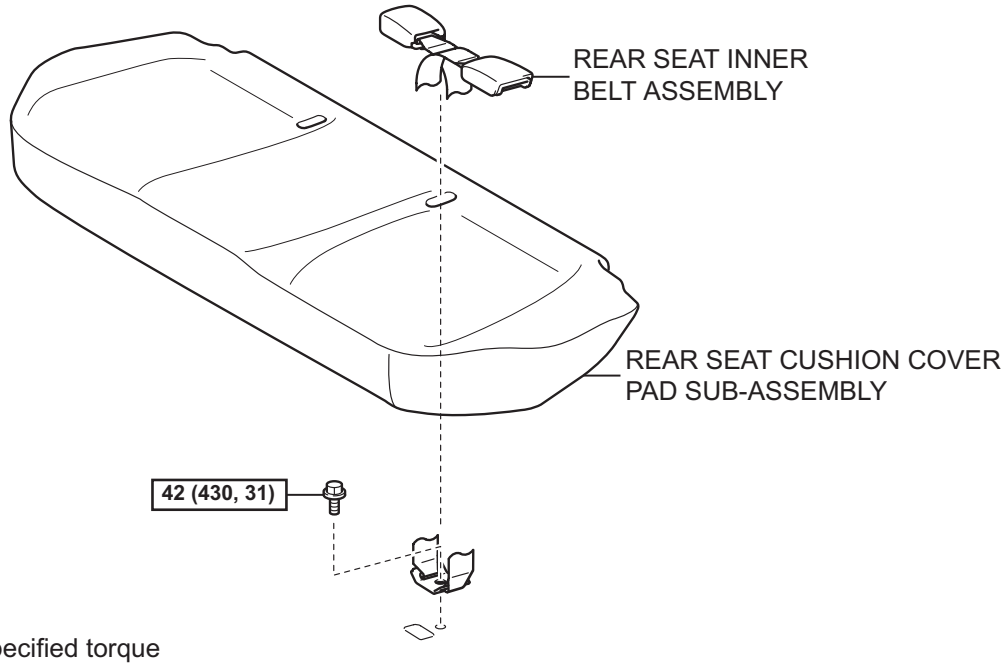

N*m (kgf*cm, ft*lbf) : Specified torque

T

B117789E02

REMOVAL

NOTICE:
Always use "Torx" socket wrench E10 when removing the rear seat.

1. **REMOVE NO. 1 REAR SEAT LEG COVER (for 60/40 Split Seat Type) (See page SE-71)**
2. **REMOVE NO. 2 REAR SEAT LEG COVER (for 60/40 Split Seat Type) (See page SE-70)**
3. **REMOVE REAR SEAT CUSHION COVER PAD SUB-ASSEMBLY (for Hold Down Seat Type) (See page SE-114)**
4. **REMOVE REAR SEAT INNER BELT ASSEMBLY**
   (a) for 60/40 Split Seat Type:
      (1) Using "Torx" socket wrench E10, remove the 3 bolts and pull up the rear seat cushion.

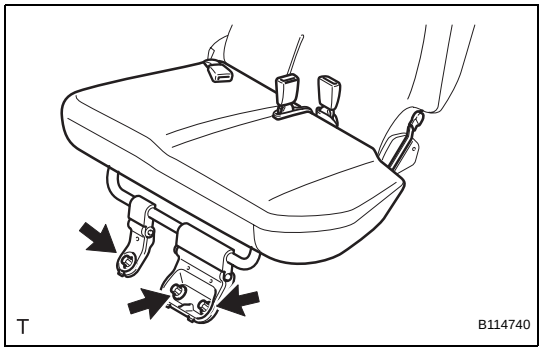

      (2) Remove the belt from the band.
      (3) Remove the bolt and the rear seat inner belt.

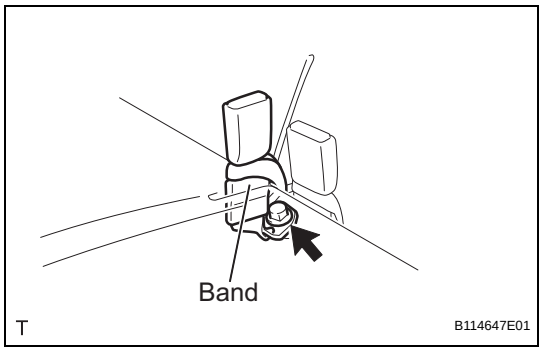

   (b) for Hold Down Seat Type:
      (1) Remove the bolt and the rear seat inner belt.

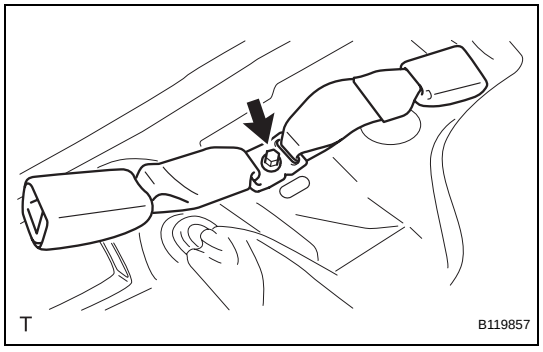

SB

INSTALLATION

NOTICE:
Always use "Torx" socket wrench E10 when installing the rear seat.

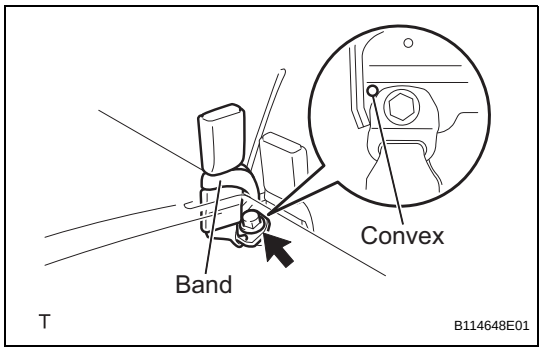

1. INSTALL REAR SEAT INNER BELT ASSEMBLY

(a) for 60/40 Split Seat Type:

(1) Install the rear seat inner belt with the bolt.
Torque: 42 N*m (430 kgf*cm, 31 ft.*lbf)
NOTICE:
Do not place the anchor plate over the convex area of the rear seat back frame.

(2) Install the belt into the band.

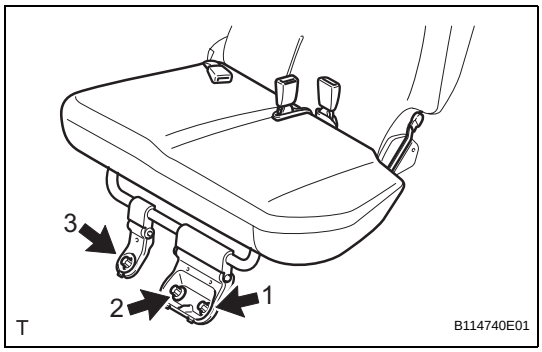

(3) Install the rear seat cushion.

(4) Using "Torx" socket wrench E10, tighten the 3 bolts in the sequence shown in the illustration.
Torque: 37 N*m (375 kgf*cm, 27 ft.*lbf)

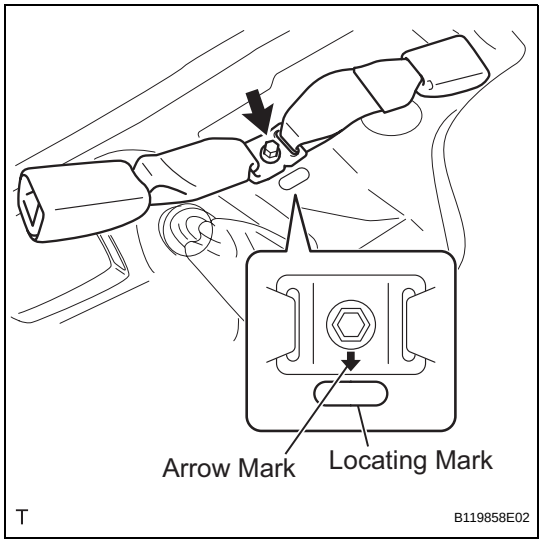

(b) for Hold Down Seat Type:

(1) Install the rear seat inner belt with the bolt.
Torque: 42 N*m (430 kgf*cm, 31 ft.*lbf)
NOTICE:
- **Install the anchor plate with the arrow mark facing forward.**
- **Do not place the anchor plate over the locating mark area of the floor panel.**

2. INSTALL NO. 2 REAR SEAT LEG COVER (for 60/40 Split Seat Type) (See page SE-85)

3. INSTALL NO. 1 REAR SEAT LEG COVER (for 60/40 Split Seat Type) (See page SE-85)

4. INSTALL REAR SEAT CUSHION COVER PAD SUB-ASSEMBLY (for Hold Down Seat Type) (See page SE-123)

REAR SEAT INNER BELT ASSEMBLY (for Hatchback RH Side)

COMPONENTS

SB

for 60/40 Split Seat Type:

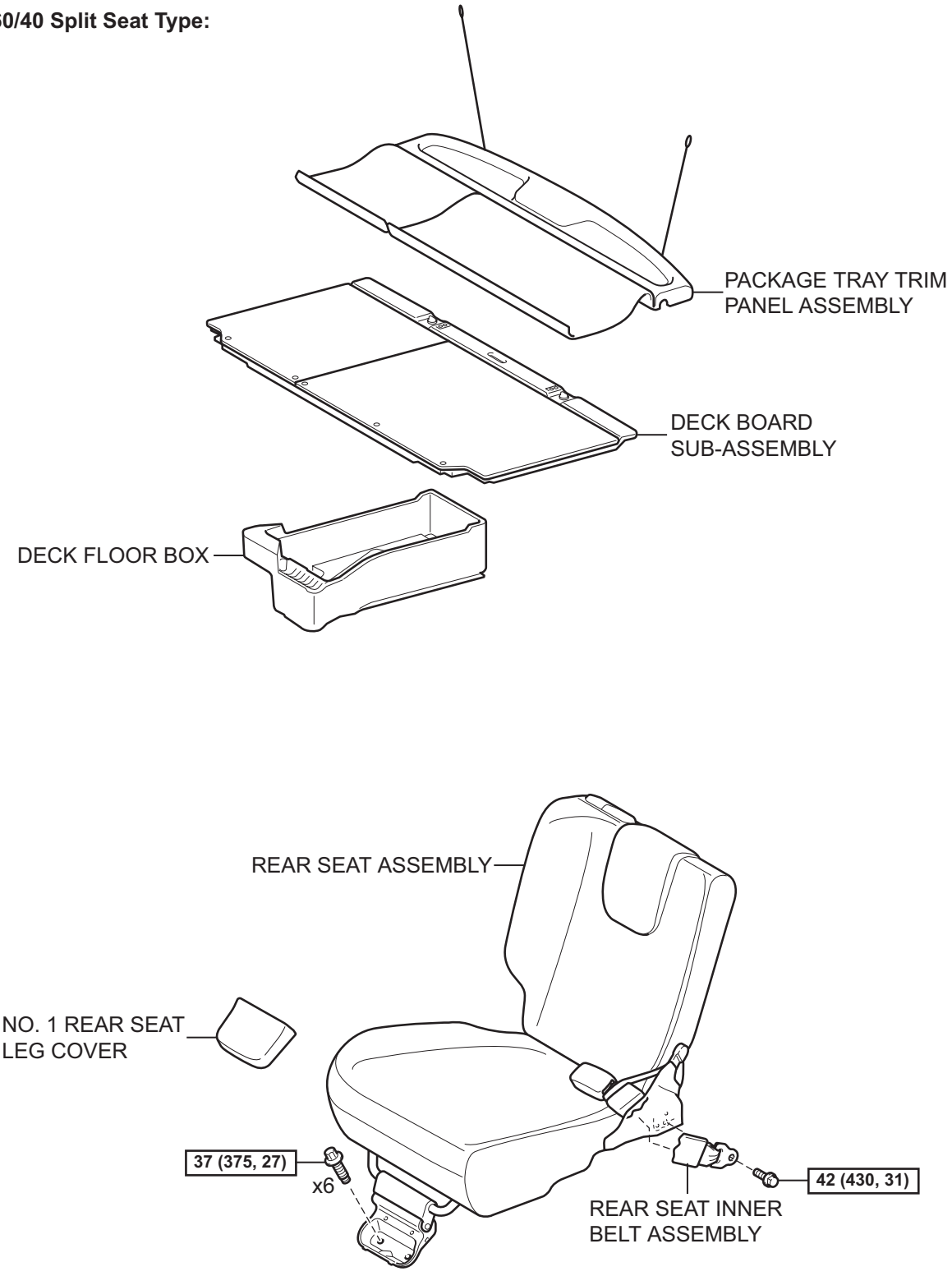

N*m (kgf*cm, ft*lbf) : Specified torque

T

B114642E02

SB

for Hold Down Seat Type:

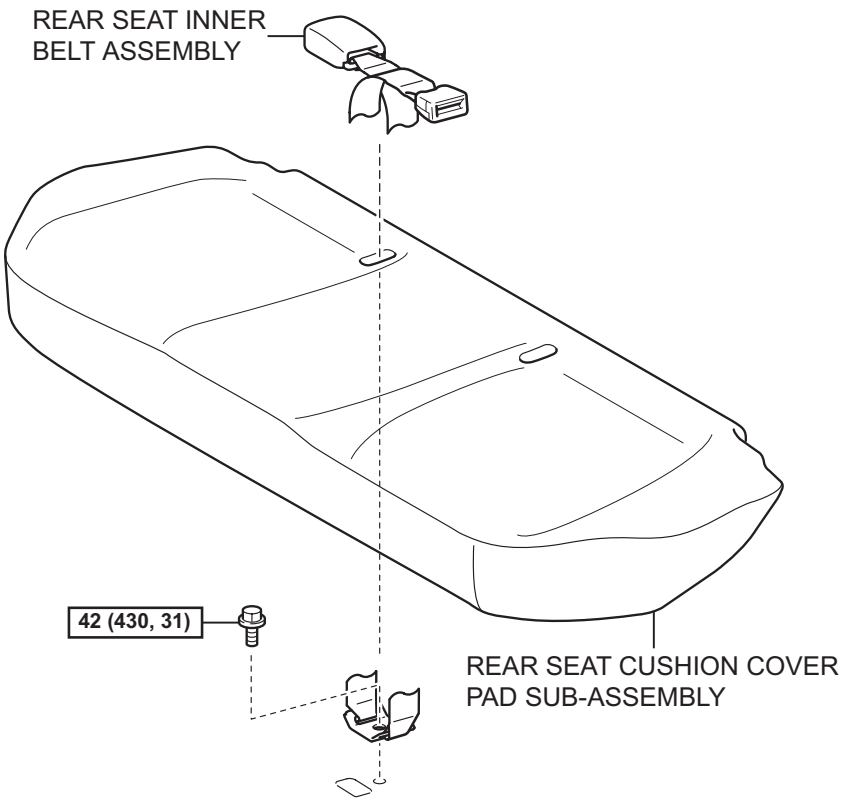

N*m (kgf*cm, ft*lbf) : Specified torque

T

B119856E03

REMOVAL

NOTICE:
Always use "Torx" socket wrench E10 when removing the rear seat.

1. **REMOVE PACKAGE TRAY TRIM PANEL ASSEMBLY (for 60/40 Split Seat Type) (See page IR-48)**
2. **REMOVE DECK BOARD SUB-ASSEMBLY (for 60/40 Split Seat Type) (See page IR-48)**
3. **REMOVE DECK FLOOR BOX (for 60/40 Split Seat Type) (See page IR-48)**
4. **REMOVE NO. 1 REAR SEAT LEG COVER (for 60/40 Split Seat Type) (See page SE-89)**
5. **REMOVE REAR SEAT ASSEMBLY (for 60/40 Split Seat Type) (See page SE-89)**
6. **REMOVE REAR SEAT CUSHION COVER PAD SUB-ASSEMBLY (for Hold Down Seat Type) (See page SE-114)**
7. **REMOVE REAR SEAT INNER BELT ASSEMBLY**
   (a) for 60/40 Split Seat Type:
      (1) Remove the belt from the band.
      (2) Remove the bolt and the rear seat inner belt.

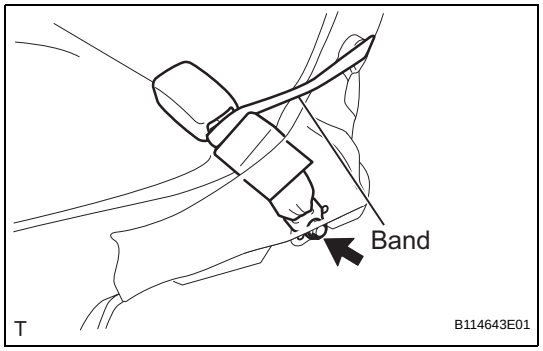

   (b) for Hold Down Seat Type:
      (1) Remove the bolt and the rear seat inner belt.

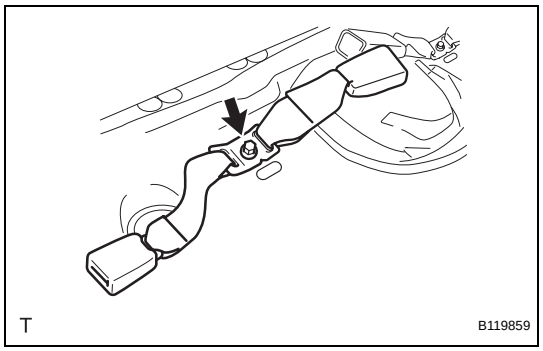

SB

INSTALLATION

NOTICE:
Always use "Torx" socket wrench E10 when installing the rear seat.

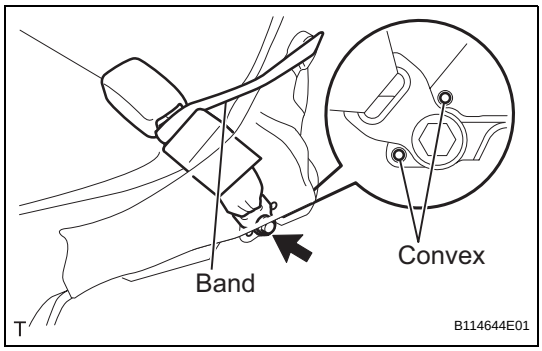

1. INSTALL REAR SEAT INNER BELT ASSEMBLY

(a) for 60/40 Split Seat Type:

(1) Install the rear seat inner belt with the bolt.
Torque: 42 N*m (430 kgf*cm, 31 ft.*lbf)
NOTICE:
Do not place the anchor plate over the convex areas of the rear seat back frame.

(2) Install the belt into the band.

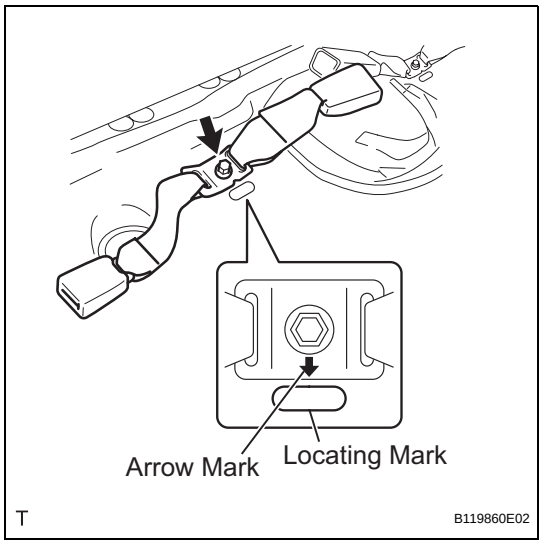

(b) for Hold Down Seat Type:

(1) Install the rear seat inner belt with the bolt.
Torque: 42 N*m (430 kgf*cm, 31 ft.*lbf)
NOTICE:
- **Install the anchor plate with the arrow mark facing forward.**
- **Do not place the anchor plate over the locating mark area of the floor panel.**

2. INSTALL REAR SEAT ASSEMBLY (for 60/40 Split Seat Type) (See page SE-102)

3. INSTALL NO. 1 REAR SEAT LEG COVER (for 60/40 Split Seat Type) (See page SE-103)

4. INSTALL REAR SEAT CUSHION COVER PAD SUB-ASSEMBLY (for Hold Down Seat Type) (See page SE-123)

5. INSTALL DECK FLOOR BOX (for 60/40 Split Seat Type) (See page IR-83)

6. INSTALL DECK BOARD SUB-ASSEMBLY (for 60/40 Split Seat Type) (See page IR-83)

7. INSTALL PACKAGE TRAY TRIM PANEL ASSEMBLY (for 60/40 Split Seat Type) (See page IR-83)

REAR SEAT OUTER BELT ASSEMBLY (for Sedan)

COMPONENTS

for 60/40 Split Seat Type:

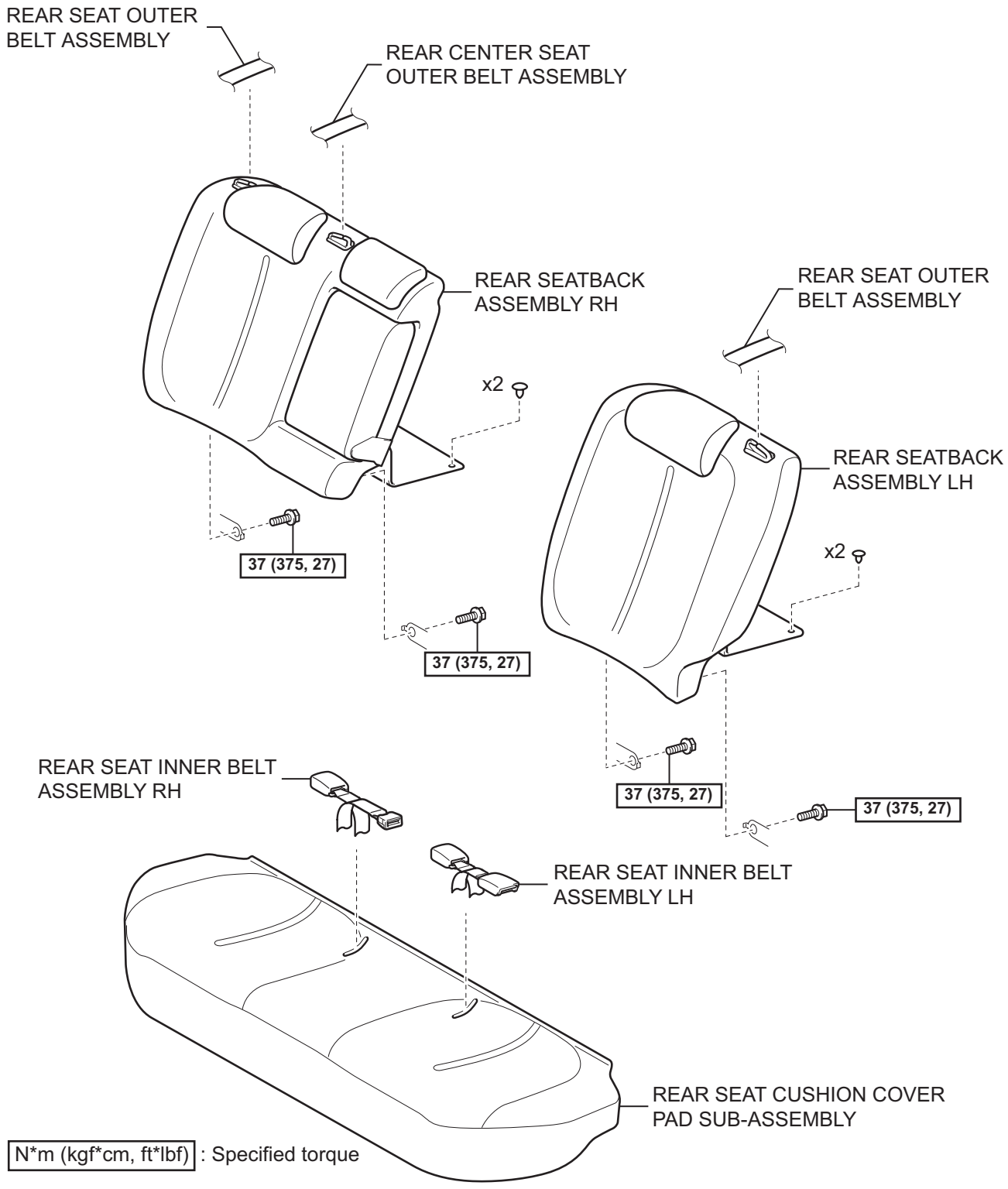

SB

for Fixed Seat Type:

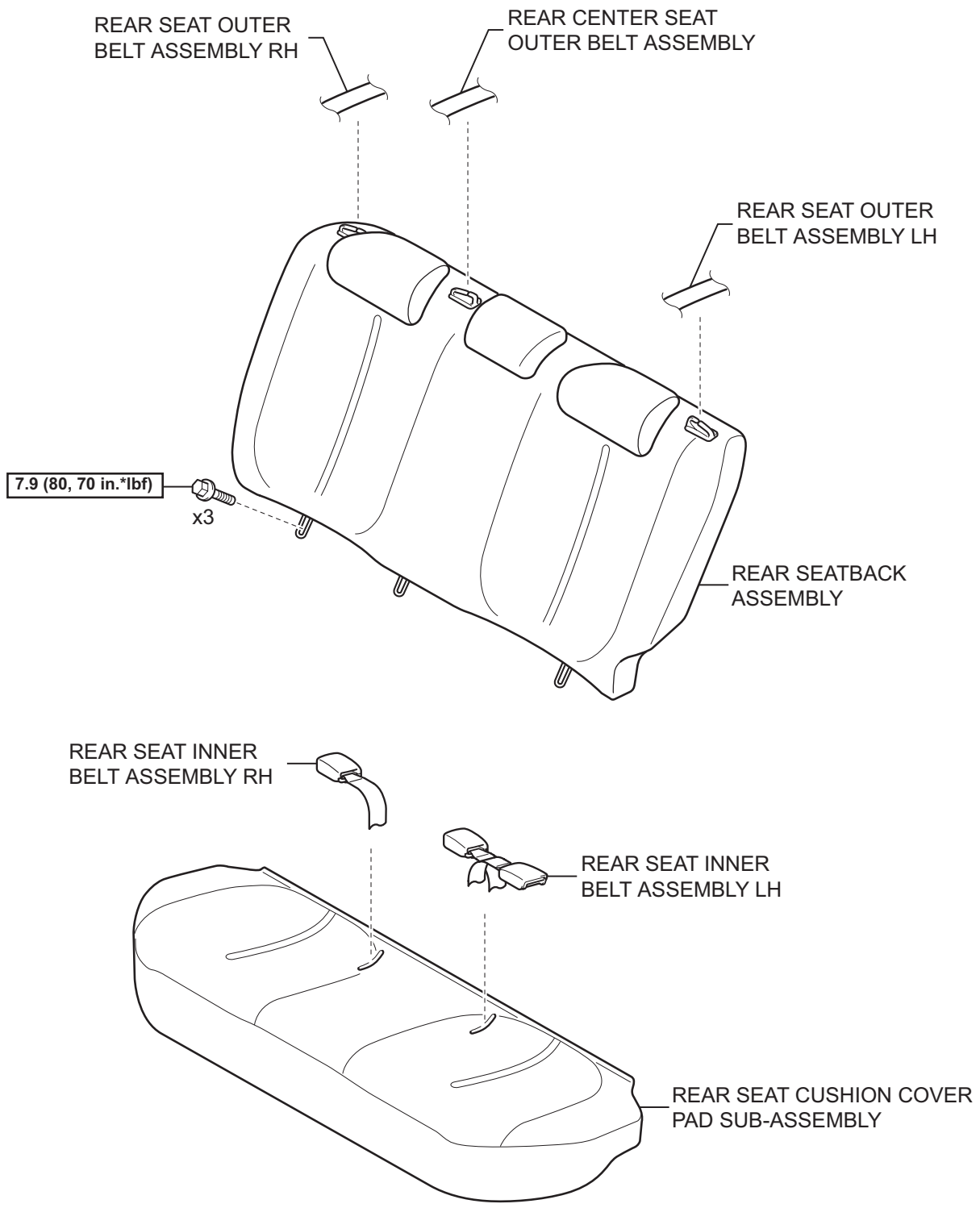

N*m (kgf*cm, ft*lbf) : Specified torque

T

B138611E01

for 60/40 Split Seat Type:

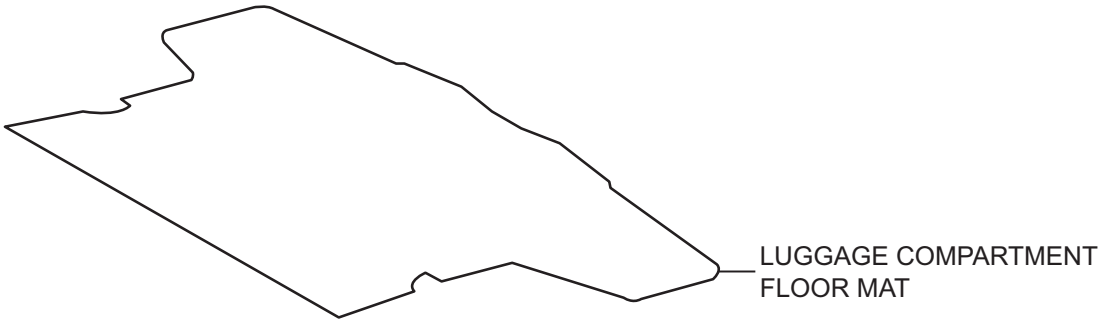

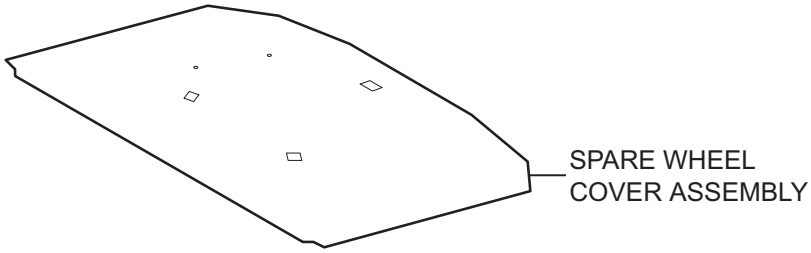

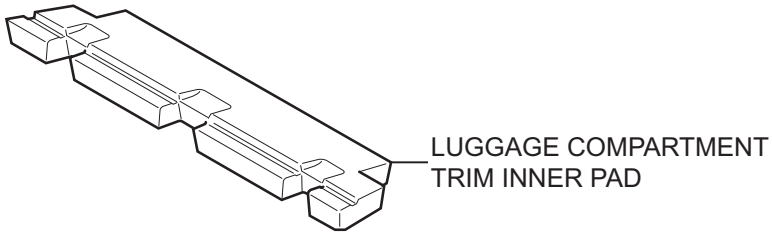

for Grand Tire:

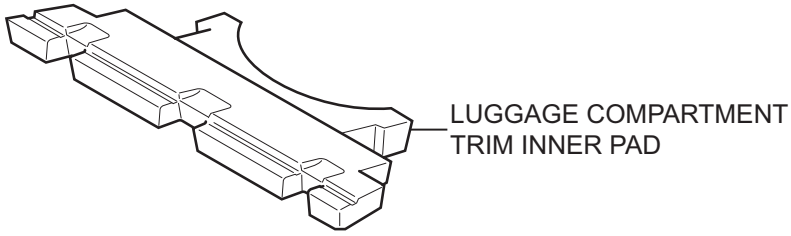

T

B138565E01

SB

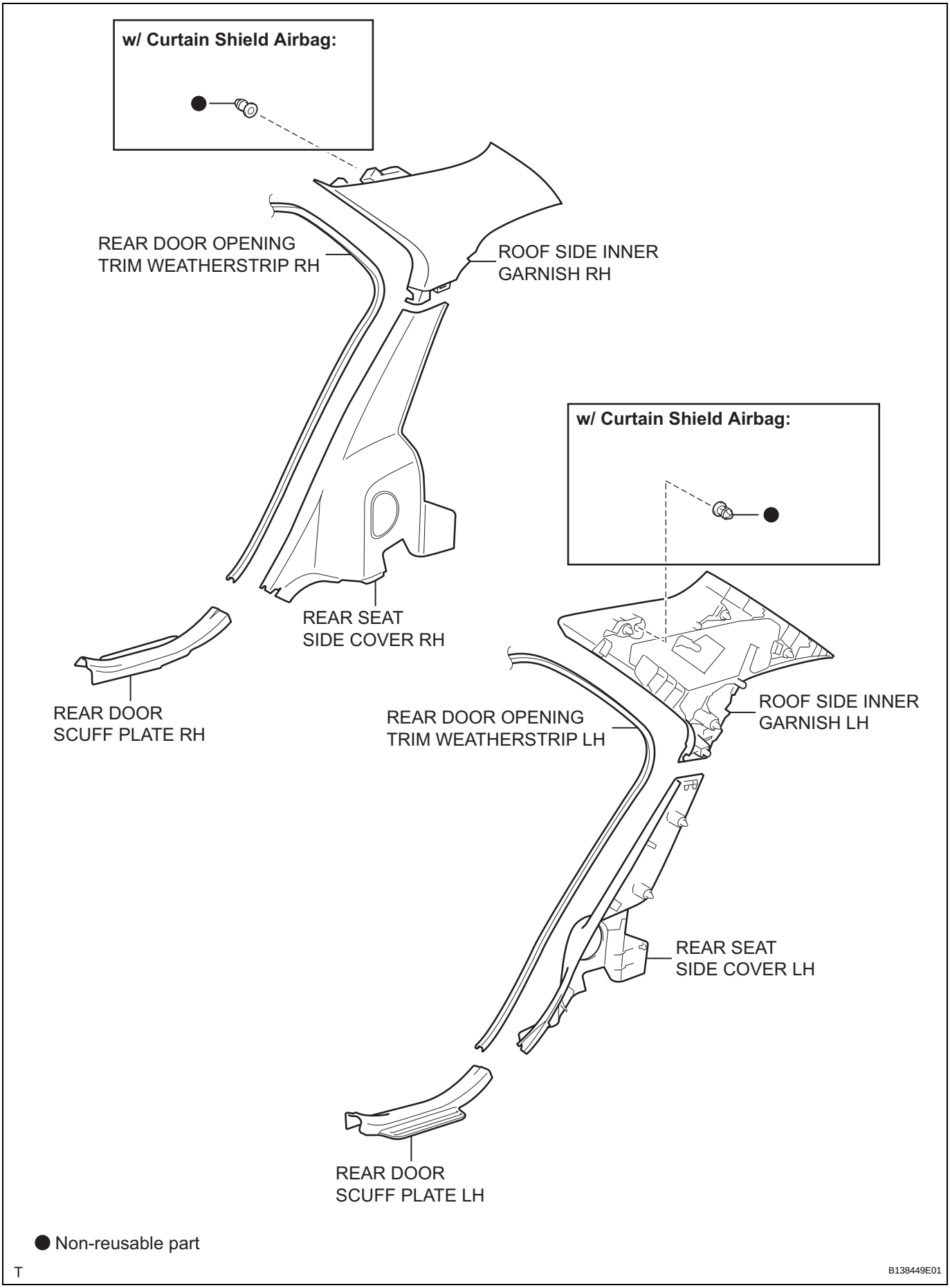
w/ Curtain Shield Airbag:
REAR DOOR OPENING TRIM WEATHERSTRIP RH
ROOF SIDE INNER GARNISH RH
REAR SEAT SIDE COVER RH
REAR DOOR SCUFF PLATE RH
w/ Curtain Shield Airbag:
ROOF SIDE INNER GARNISH LH
REAR DOOR OPENING TRIM WEATHERSTRIP LH
REAR SEAT SIDE COVER LH
REAR DOOR SCUFF PLATE LH
● Non-reusable part
T
B138449E01

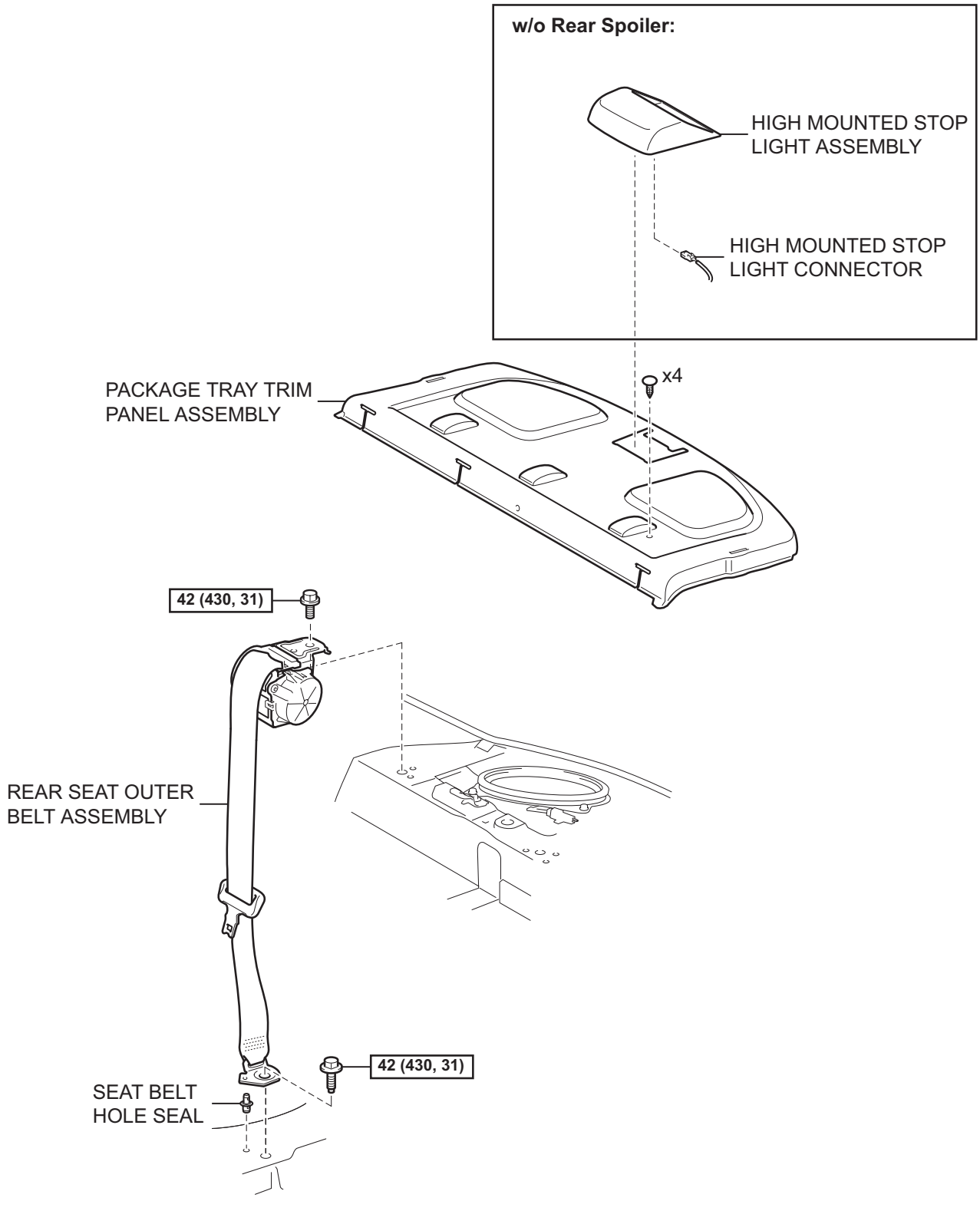

N*m (kgf*cm, ft*lbf) : Specified torque

T

B138567E01

SB

REMOVAL

HINT:
The procedure described below is for the RH side. Use the same procedure for both the RH and LH sides, unless otherwise specified.

1. **DISCONNECT CABLE FROM NEGATIVE BATTERY TERMINAL (w/o Rear Spoiler)**
2. **REMOVE REAR SEAT CUSHION COVER PAD SUB-ASSEMBLY**
   (a) for 60/40 Split Seat Type:
      (1) Remove the rear seat cushion cover pad (See page SE-46).
   (b) for Fixed Seat Type:
      (1) Remove the rear seat cushion cover pad (See page SE-106).
3. **REMOVE REAR SEATBACK ASSEMBLY RH (for 60/40 Split Seat Type) (See page SE-57)**
4. **REMOVE REAR SEATBACK ASSEMBLY LH (for 60/40 Split Seat Type) (See page SE-46)**
5. **REMOVE REAR SEATBACK ASSEMBLY (for Fixed Seat Type) (See page SE-106)**
6. **REMOVE LUGGAGE COMPARTMENT FLOOR MAT (for 60/40 Split Seat Type) (See page ED-133)**
7. **REMOVE SPARE WHEEL COVER ASSEMBLY (for 60/40 Split Seat Type) (See page ED-133)**
8. **REMOVE LUGGAGE COMPARTMENT TRIM INNER PAD (for 60/40 Split Seat Type) (See page ED-134)**
9. **REMOVE REAR DOOR SCUFF PLATE RH (See page IR-15)**
10. **REMOVE REAR DOOR SCUFF PLATE LH (See page IR-15)**
11. **REMOVE REAR DOOR OPENING TRIM WEATHERSTRIP RH (See page AV-173)**
12. **REMOVE REAR DOOR OPENING TRIM WEATHERSTRIP LH (See page AV-173)**
13. **REMOVE REAR SEAT SIDE COVER RH (See page IR-16)**
14. **REMOVE REAR SEAT SIDE COVER LH (See page IR-16)**
15. **REMOVE ROOF SIDE INNER GARNISH RH (See page IR-16)**
16. **REMOVE ROOF SIDE INNER GARNISH LH (See page IR-16)**
17. **REMOVE HIGH MOUNTED STOP LIGHT ASSEMBLY (w/o Rear Spoiler) (See page LI-141)**

18. REMOVE PACKAGE TRAY TRIM PANEL ASSEMBLY (See page AV-173)

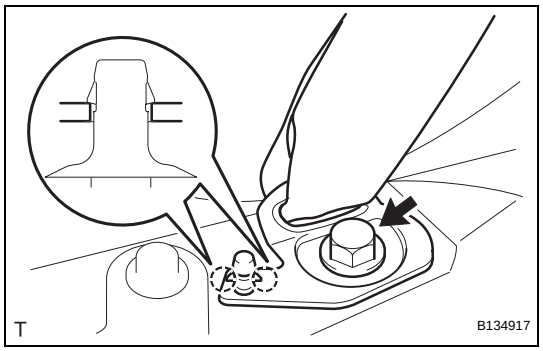

19. REMOVE REAR SEAT OUTER BELT ASSEMBLY

(a) Remove the bolt.

(b) Disengage the 2 claws and remove the anchor plate.

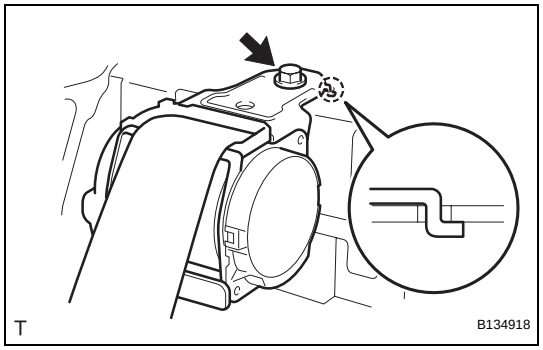

(c) Remove the bolt, the hook and the retractor.

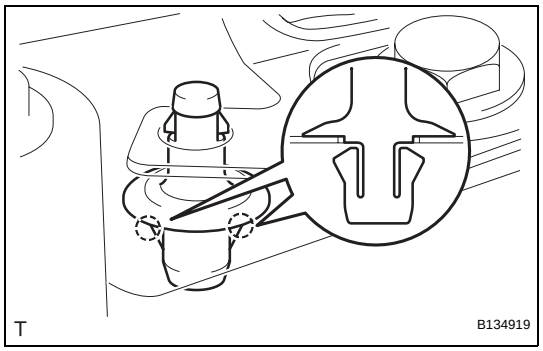

20. REMOVE SEAT BELT HOLE SEAL

(a) Disengage the 2 claws and remove the seat belt hole seal.

SB

SB

INSTALLATION

HINT:
The procedure described below is for the RH side. Use the same procedure for both the RH and LH sides, unless otherwise specified.

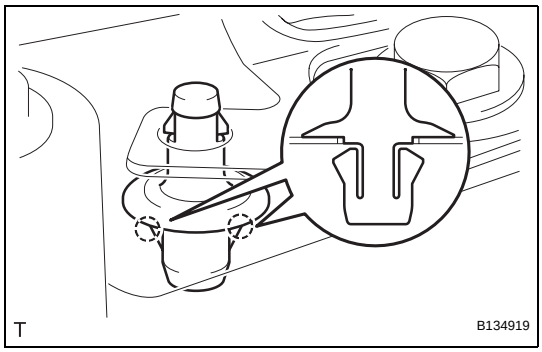

1. INSTALL SEAT BELT HOLE SEAL

(a) Engage the 2 claws and install the seat belt hole seal.

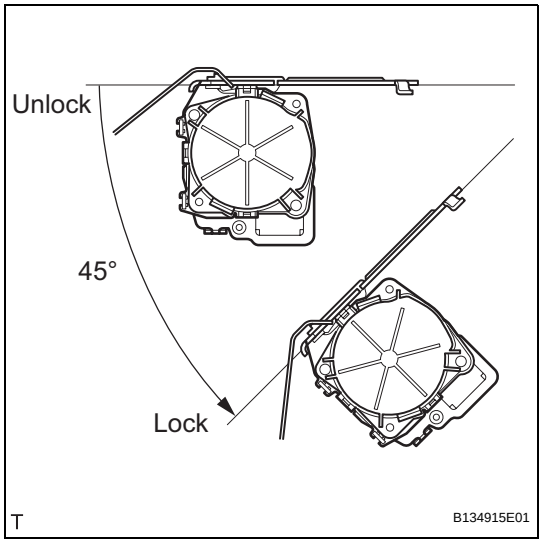

2. INSTALL REAR SEAT OUTER BELT ASSEMBLY

(a) Check the angle of inclination required to lock the retractor.

(1) Gently incline the retractor from its initial position. Check that the belt does not lock when the retractor is inclined 15° or less in any direction.
Also, check that the belt locks when the inclination of the retractor is 45° or more.
NOTICE:
Do not disassemble the retractor.
If the operation is not as specified, replace the rear seat outer belt.

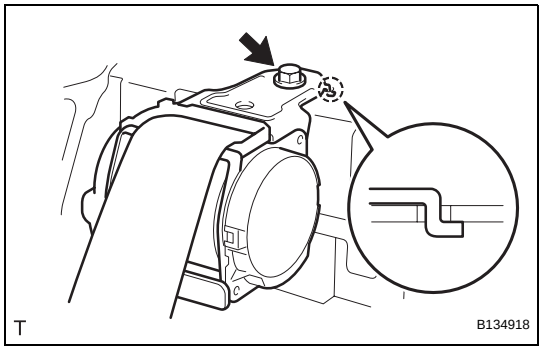

(b) Insert the hook into the body hole and install the retractor with the bolt.
Torque: 42 N*m (430 kgf*cm, 31 ft.*lbf)

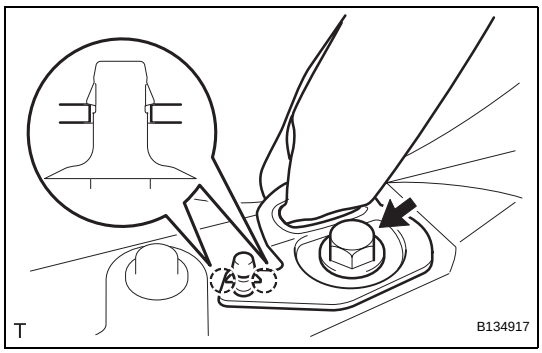

(c) Engage the 2 claws and install the anchor plate.
(d) Tighten the bolt.
Torque: 42 N*m (430 kgf*cm, 31 ft.*lbf)
(e) Check that the ELR locks.
NOTICE:
- **The check should be performed with the rear seat outer belt installed.**
- **Do not allow the anchor part of the rear seat outer belt and the protruding parts of the floor panel to overlap.**

(1) With the belt installed, check that the belt locks when it is pulled out quickly.
If the operation is not as specified, replace the rear seat outer belt.

3. **INSTALL PACKAGE TRAY TRIM PANEL ASSEMBLY (See page AV-174)**
4. **INSTALL HIGH MOUNTED STOP LIGHT ASSEMBLY (w/o Rear Spoiler) (See page LI-142)**
5. **INSTALL ROOF SIDE INNER GARNISH RH (See page IR-32)**
6. **INSTALL ROOF SIDE INNER GARNISH LH (See page IR-33)**
7. **INSTALL REAR SEAT SIDE COVER RH (See page IR-33)**
8. **INSTALL REAR SEAT SIDE COVER LH (See page IR-33)**
9. **INSTALL REAR DOOR OPENING TRIM WEATHERSTRIP RH (See page AV-175)**
10. **INSTALL REAR DOOR OPENING TRIM WEATHERSTRIP LH (See page AV-175)**
11. **INSTALL REAR DOOR SCUFF PLATE RH (See page IR-34)**
12. **INSTALL REAR DOOR SCUFF PLATE LH (See page IR-34)**
13. **INSTALL LUGGAGE COMPARTMENT TRIM INNER PAD (for 60/40 Split Seat Type) (See page ED-136)**
14. **INSTALL SPARE WHEEL COVER ASSEMBLY (for 60/40 Split Seat Type) (See page ED-137)**
15. **INSTALL LUGGAGE COMPARTMENT FLOOR MAT (for 60/40 Split Seat Type) (See page ED-137)**
16. **INSTALL REAR SEATBACK ASSEMBLY RH (for 60/40 Split Seat Type) (See page SE-65)**
17. **INSTALL REAR SEATBACK ASSEMBLY LH (for 60/40 Split Seat Type) (See page SE-52)**
18. **INSTALL REAR SEATBACK ASSEMBLY (for Fixed Seat Type) (See page SE-108)**
19. **INSTALL REAR SEAT CUSHION COVER PAD SUB-ASSEMBLY**
    (a) for 60/40 Split Seat Type:
        (1) Install the rear seat cushion cover pad (See page SE-53).
    (b) for Fixed Seat Type:
        (1) Install the rear seat cushion cover pad (See page SE-109).

SB

20. CONNECT CABLE TO NEGATIVE BATTERY TERMINAL (w/o Rear Spoiler)
Torque: 5.4 N*m (55 kgf*cm, 48 in.*lbf)

SB

INSTALLATION

HINT:
The procedure described below is for the RH side. Use the same procedure for both the RH and LH sides, unless otherwise specified.

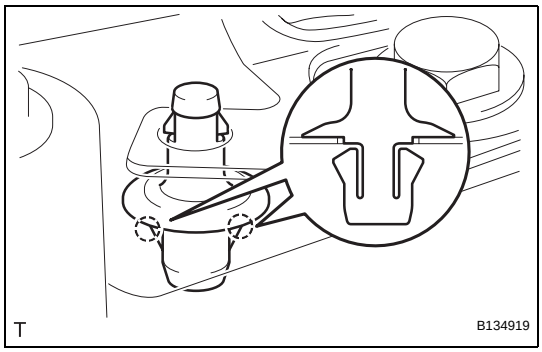

1. INSTALL SEAT BELT HOLE SEAL

(a) Engage the 2 claws and install the seat belt hole seal.

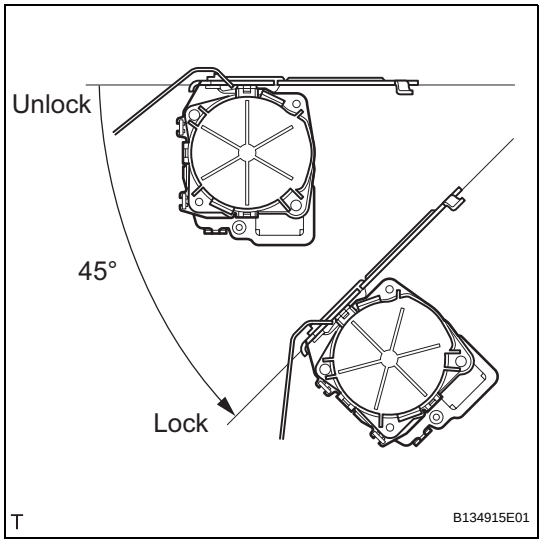

2. INSTALL REAR SEAT OUTER BELT ASSEMBLY

(a) Check the angle of inclination required to lock the retractor.

(1) Gently incline the retractor from its initial position. Check that the belt does not lock when the retractor is inclined 15° or less in any direction.
Also, check that the belt locks when the inclination of the retractor is 45° or more.
NOTICE:
Do not disassemble the retractor.
If the operation is not as specified, replace the rear seat outer belt.

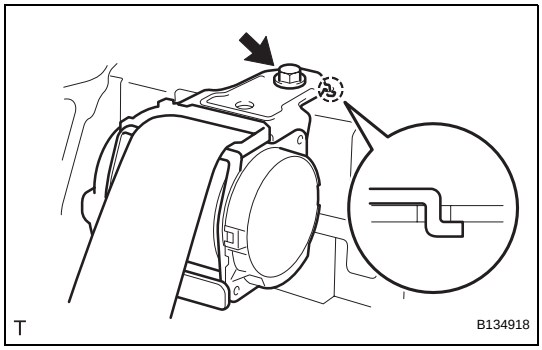

(b) Insert the hook into the body hole and install the retractor with the bolt.
Torque: 42 N*m (430 kgf*cm, 31 ft.*lbf)

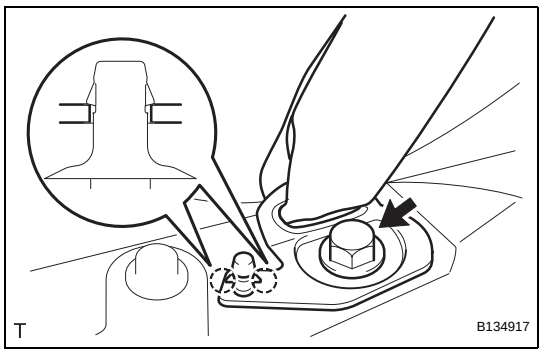

(c) Engage the 2 claws and install the anchor plate.
(d) Tighten the bolt.
Torque: 42 N*m (430 kgf*cm, 31 ft.*lbf)
(e) Check that the ELR locks.
NOTICE:
- **The check should be performed with the rear seat outer belt installed.**
- **Do not allow the anchor part of the rear seat outer belt and the protruding parts of the floor panel to overlap.**

(1) With the belt installed, check that the belt locks when it is pulled out quickly.
If the operation is not as specified, replace the rear seat outer belt.

3. **INSTALL PACKAGE TRAY TRIM PANEL ASSEMBLY (See page AV-174)**
4. **INSTALL HIGH MOUNTED STOP LIGHT ASSEMBLY (w/o Rear Spoiler) (See page LI-142)**
5. **INSTALL ROOF SIDE INNER GARNISH RH (See page IR-32)**
6. **INSTALL ROOF SIDE INNER GARNISH LH (See page IR-33)**
7. **INSTALL REAR SEAT SIDE COVER RH (See page IR-33)**
8. **INSTALL REAR SEAT SIDE COVER LH (See page IR-33)**
9. **INSTALL REAR DOOR OPENING TRIM WEATHERSTRIP RH (See page AV-175)**
10. **INSTALL REAR DOOR OPENING TRIM WEATHERSTRIP LH (See page AV-175)**
11. **INSTALL REAR DOOR SCUFF PLATE RH (See page IR-34)**
12. **INSTALL REAR DOOR SCUFF PLATE LH (See page IR-34)**
13. **INSTALL LUGGAGE COMPARTMENT TRIM INNER PAD (for 60/40 Split Seat Type) (See page ED-136)**
14. **INSTALL SPARE WHEEL COVER ASSEMBLY (for 60/40 Split Seat Type) (See page ED-137)**
15. **INSTALL LUGGAGE COMPARTMENT FLOOR MAT (for 60/40 Split Seat Type) (See page ED-137)**
16. **INSTALL REAR SEATBACK ASSEMBLY RH (for 60/40 Split Seat Type) (See page SE-65)**
17. **INSTALL REAR SEATBACK ASSEMBLY LH (for 60/40 Split Seat Type) (See page SE-52)**
18. **INSTALL REAR SEATBACK ASSEMBLY (for Fixed Seat Type) (See page SE-108)**
19. **INSTALL REAR SEAT CUSHION COVER PAD SUB-ASSEMBLY**
    (a) for 60/40 Split Seat Type:
        (1) Install the rear seat cushion cover pad (See page SE-53).
    (b) for Fixed Seat Type:
        (1) Install the rear seat cushion cover pad (See page SE-109).

SB

20. CONNECT CABLE TO NEGATIVE BATTERY TERMINAL (w/o Rear Spoiler)
Torque: 5.4 N*m (55 kgf*cm, 48 in.*lbf)

REAR SEAT OUTER BELT ASSEMBLY (for Hatchback 5 Door)

COMPONENTS

SB

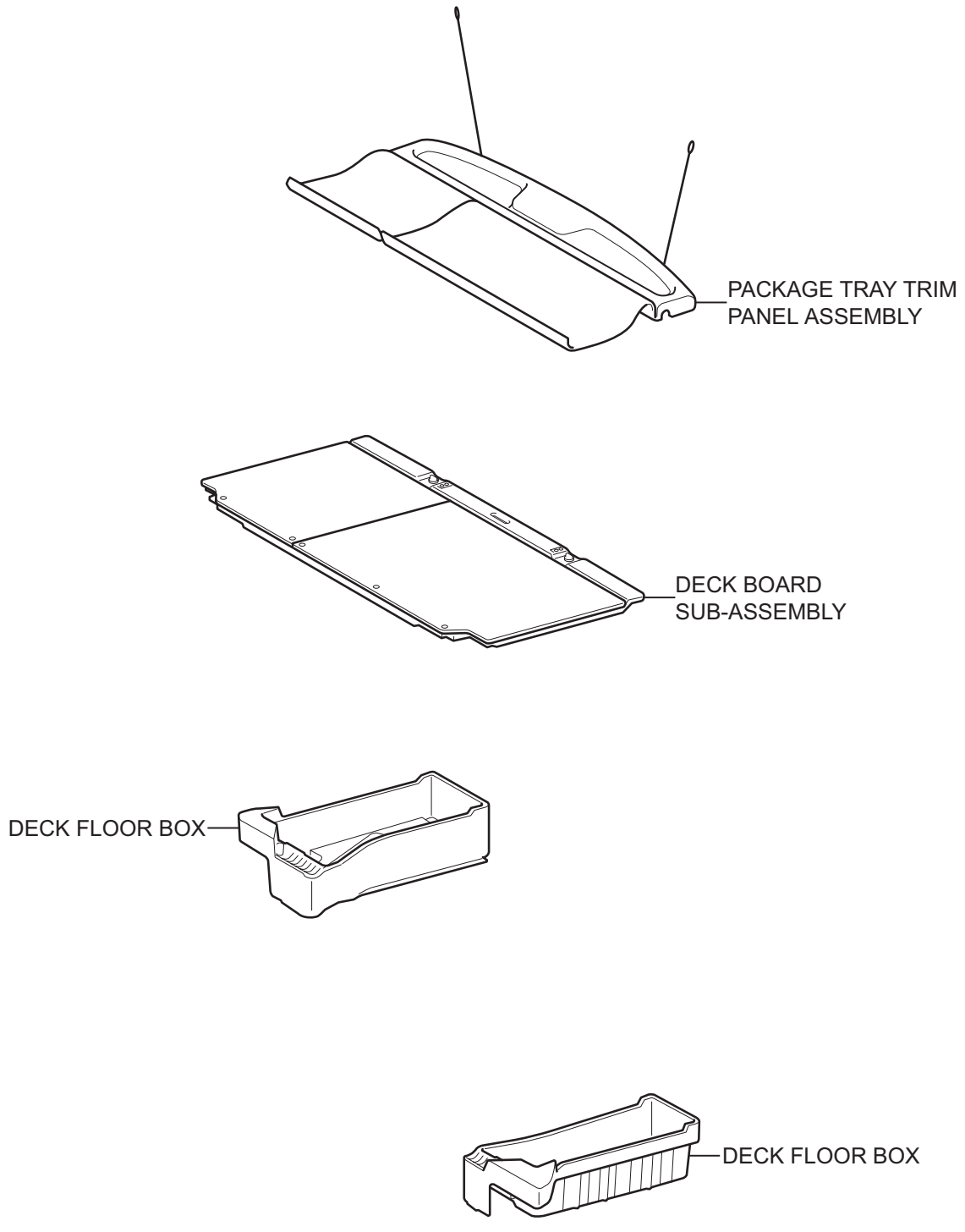

T

B127707E02

SB

for 60/40 Split Seat Type:

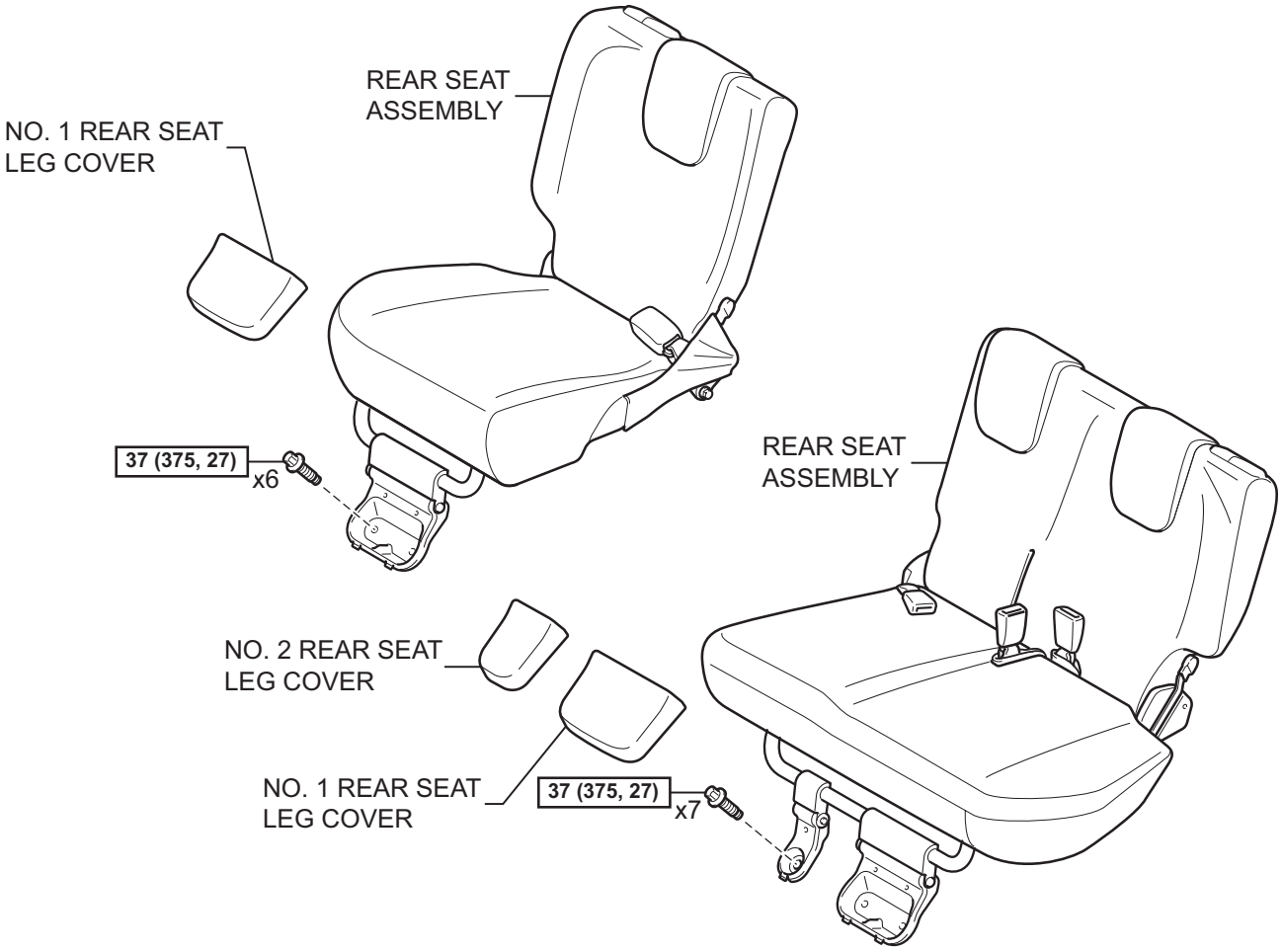

for Hold Down Seat Type:

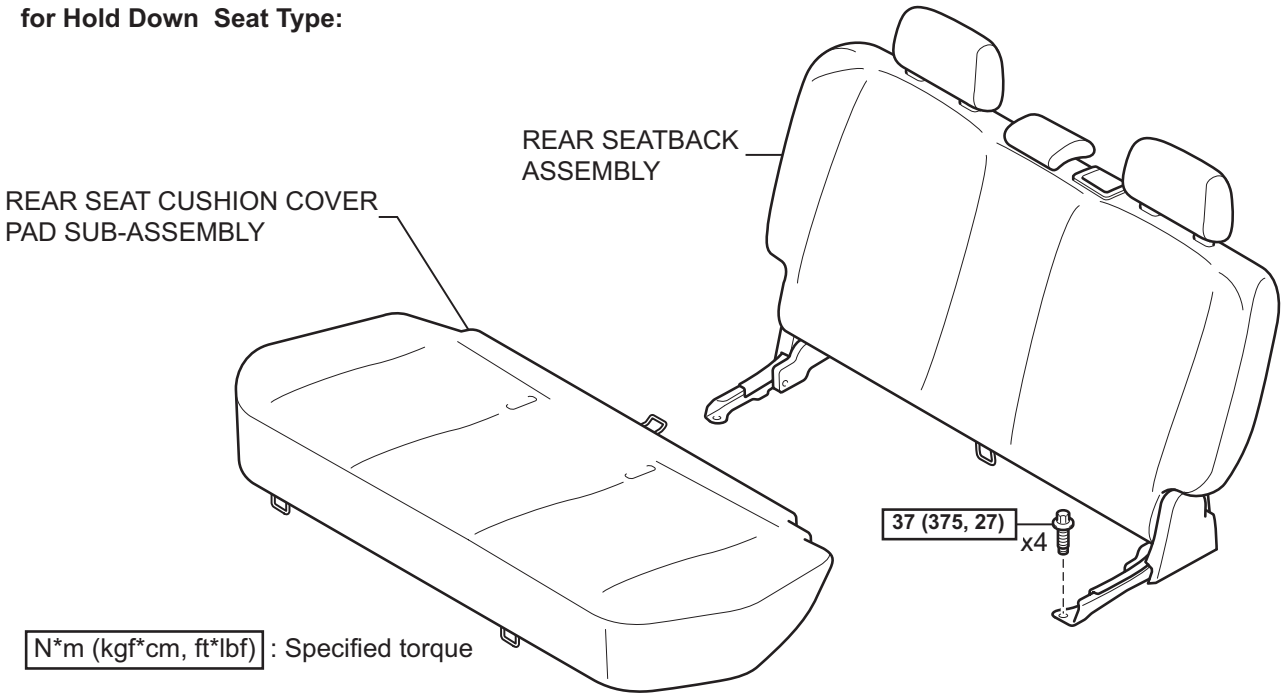

T

B121713E05

SB

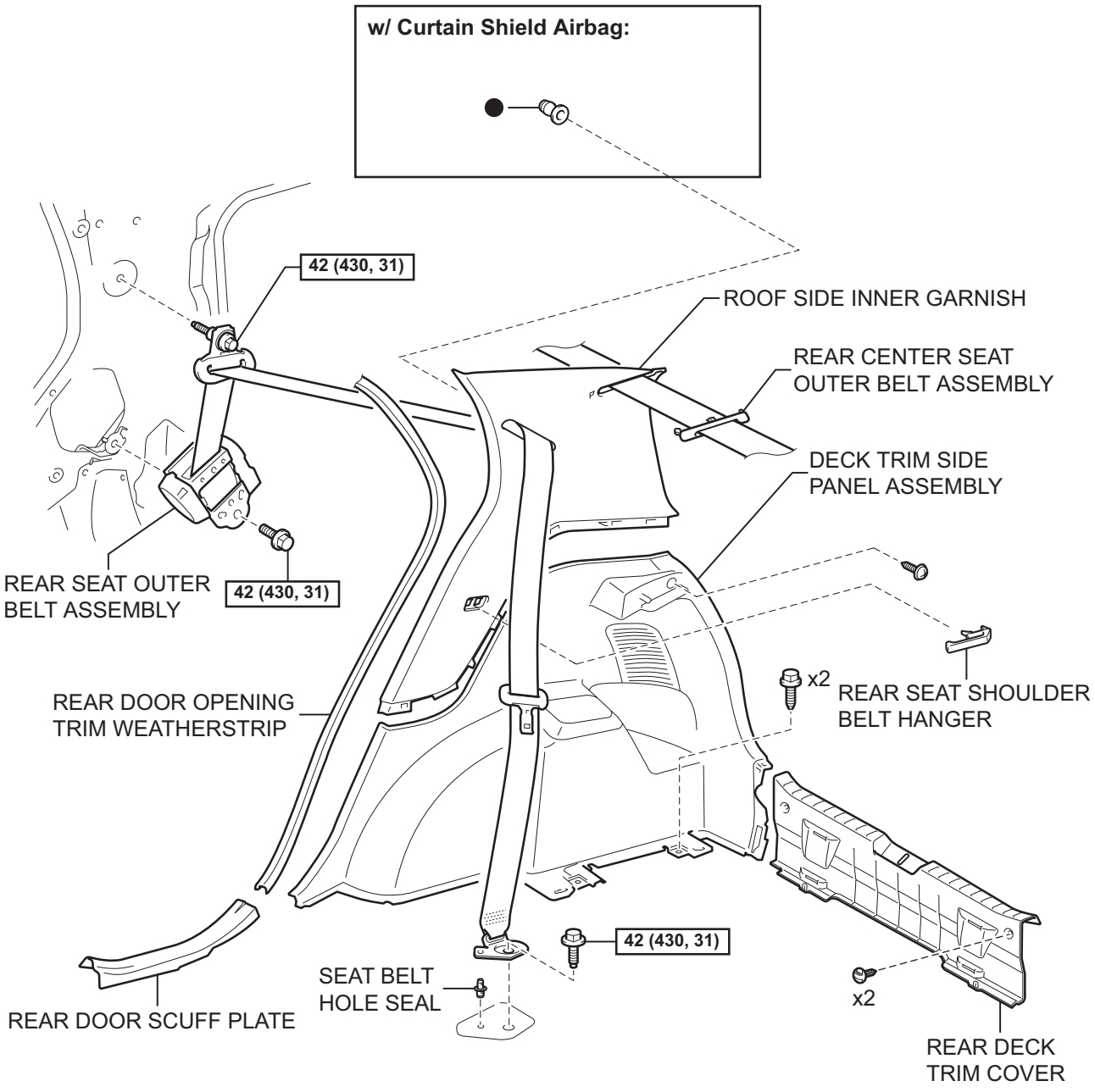

N*m (kgf*cm, ft*lbf) : Specified torque

● Non-reusable part

T

B114430E02

REMOVAL

CAUTION:
Always use "Torx" socket wrench E10 when removing the rear seat.
HINT:
The procedure described below is for the RH side. Use the same procedure for both the RH and LH sides, unless otherwise specified.

1. **DISCONNECT CABLE FROM NEGATIVE BATTERY TERMINAL (for LH Side)**
2. **REMOVE PACKAGE TRAY TRIM PANEL ASSEMBLY (See page IR-48)**
3. **REMOVE DECK BOARD SUB-ASSEMBLY (See page IR-48)**
4. **REMOVE DECK FLOOR BOX**
   (a) for RH Side:
      (1) Remove the deck floor box (See page IR-48).
   (b) for LH Side:
      HINT:
      Use the same procedure as for the RH side.
5. **REMOVE NO. 1 REAR SEAT LEG COVER (for 60/40 Split Seat Type)**
   (a) for RH Side:
      (1) Remove the No. 1 rear seat leg cover (See page SE-89).
   (b) for LH Side:
      (1) Remove the No. 1 rear seat leg cover (See page SE-70).
6. **REMOVE NO. 2 REAR SEAT LEG COVER (for 60/40 Split Seat Type LH Side) (See page SE-70)**
7. **REMOVE REAR SEAT ASSEMBLY (for 60/40 Split Seat Type)**
   (a) for RH Side:
      (1) Remove the rear seat assembly (See page SE-89).
   (b) for LH Side:
      (1) Remove the rear seat assembly (See page SE-71).
8. **REMOVE REAR SEAT CUSHION COVER PAD SUB-ASSEMBLY (for Hold Down Seat Type) (See page SE-114)**
9. **REMOVE REAR SEATBACK ASSEMBLY (for Hold Down Seat Type) (See page SE-115)**
10. **REMOVE REAR DOOR SCUFF PLATE (See page IR-51)**

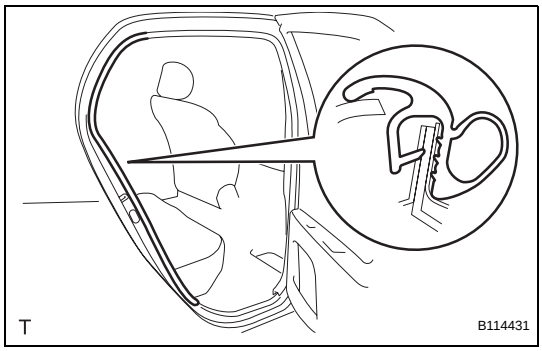

11. REMOVE REAR DOOR OPENING TRIM WEATHERSTRIP

(a) Remove the rear door opening trim weatherstrip to the extent that the deck trim side panel and roof side inner garnish can be removed.

12. REMOVE REAR DECK TRIM COVER (See page IR-49)

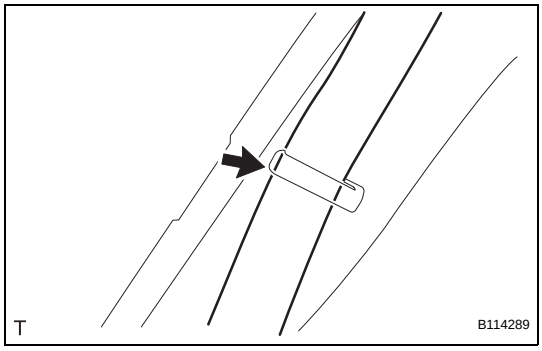

13. REMOVE DECK TRIM SIDE PANEL ASSEMBLY

(a) Remove the belt of the rear seat outer belt from the rear seat shoulder belt hanger.

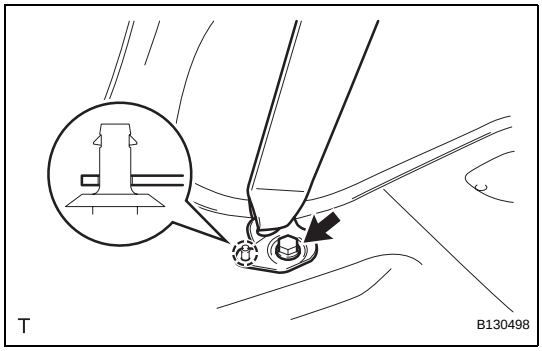

(b) Remove the bolt.

(c) Disengage the clip and remove the anchor plate of the rear seat outer belt.

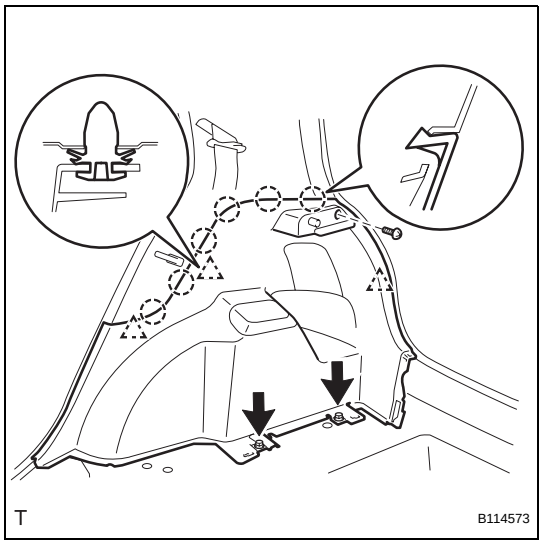

(d) for RH side:

(1) Remove the 3 screws.

(2) Disengage the 3 clips and the 6 claws and remove the deck trim side panel.

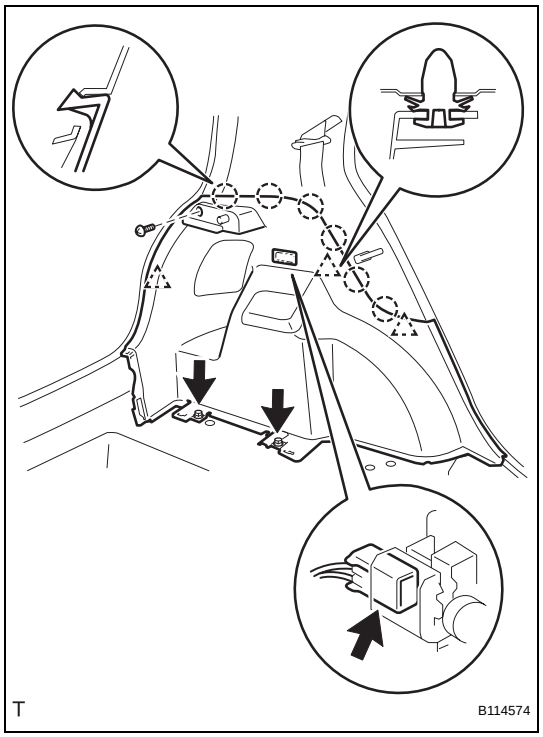

(e) for LH side:
(1) Remove the 3 screws.
(2) Disengage the 3 clips and the 6 claws.
(3) Disconnect the luggage compartment room light connector and remove the deck trim side panel.

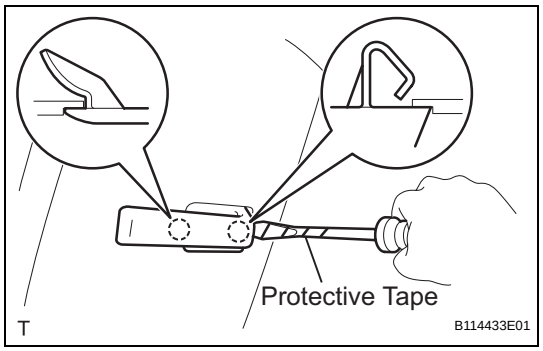

14. REMOVE REAR SEAT SHOULDER BELT HANGER

(a) Using a screwdriver with its tip wrapped in protective tape, disengage the 2 claws and remove the rear seat shoulder belt hanger.

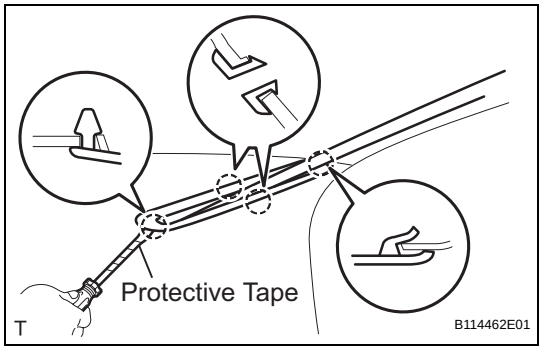

15. REMOVE REAR CENTER SEAT OUTER BELT ASSEMBLY (for RH Side)

(a) Using a screwdriver with its tip wrapped in protective tape, disengage the 4 claws and remove the center belt guide.

SB

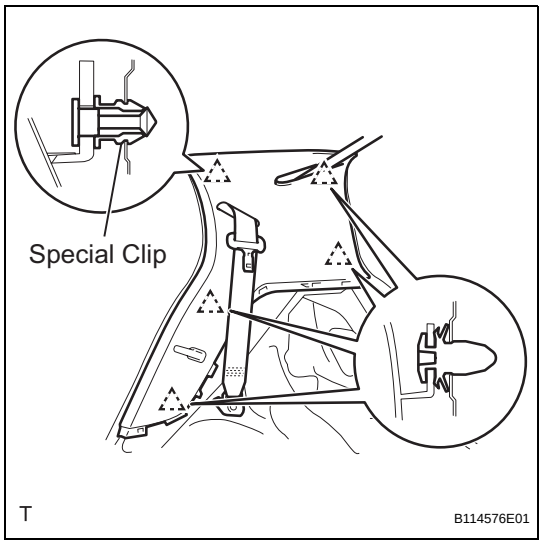

16. REMOVE ROOF SIDE INNER GARNISH

(a) for RH Side (w/ Curtain Shield Airbag):

NOTICE:

Replace the special clip with a new one because it is damaged when the roof side inner garnish is removed.

(1) Disengage the 5 clips.

(2) Pass the rear seat outer and rear center seat outer belts through the slit in the roof side inner garnish and remove the roof side inner garnish.

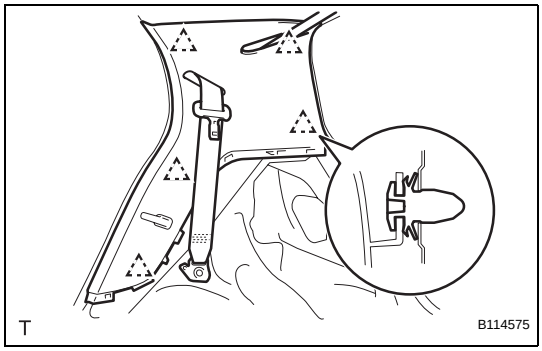

(b) for RH Side (w/o Curtain Shield Airbag):

(1) Disengage the 5 clips.

(2) Pass the rear seat outer and rear center seat outer belts through the slit in the roof side inner garnish and remove the roof side inner garnish.

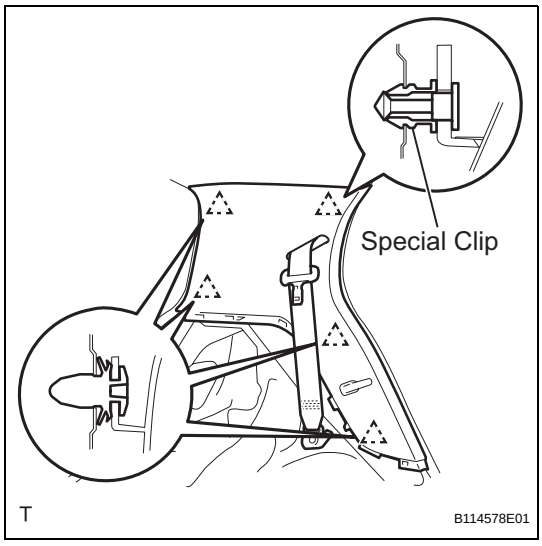

(c) for LH Side (w/ Curtain Shield Airbag):

NOTICE:

Replace the special clip with a new one because it is damaged when the roof side inner garnish is removed.

(1) Disengage the 5 clips.

(2) Pass the rear seat outer belt through the slit in the roof side inner garnish and remove the roof side inner garnish.

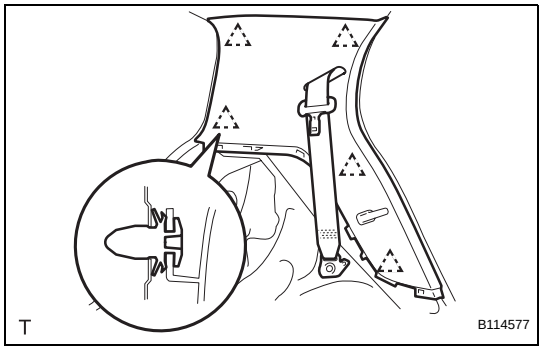

(d) for LH Side (w/o Curtain Shield Airbag):

(1) Disengage the 5 clips.

(2) Pass the rear seat outer belt through the slit in the roof side inner garnish and remove the roof side inner garnish.

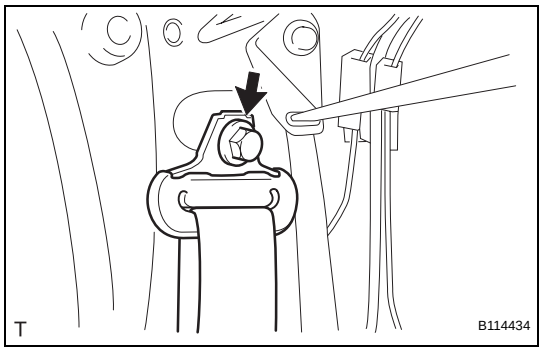

17. REMOVE REAR SEAT OUTER BELT ASSEMBLY

(a) Remove the bolt and the through anchor.

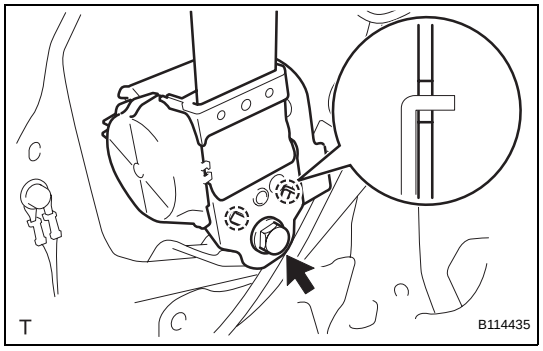

(b) Remove the bolt, the 2 hooks and the retractor.

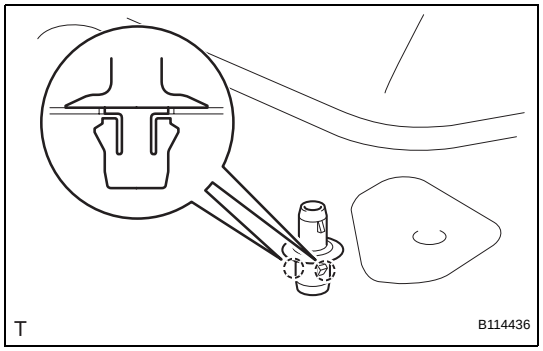

18. REMOVE SEAT BELT HOLE SEAL

(a) Disengage the 2 claws and remove the seat belt hole seal.

SB

INSTALLATION

CAUTION:
Always use "Torx" socket wrench E10 when installing the rear seat.
HINT:
The procedure described below is for the RH side. Use the same procedure for both the RH and LH sides, unless otherwise specified.

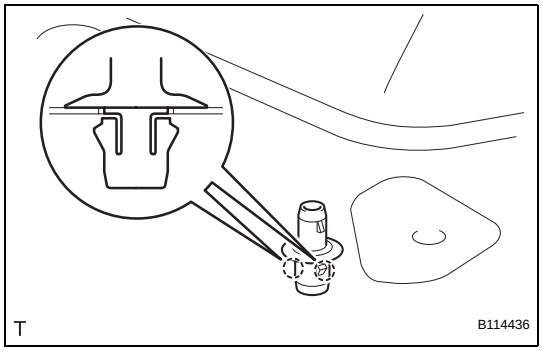

1. INSTALL SEAT BELT HOLE SEAL

(a) Engage the 2 claws and install the seat belt hole seal.

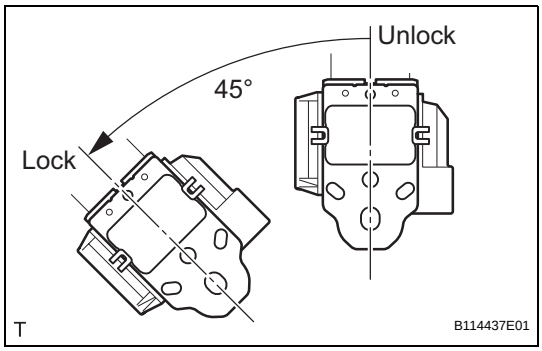

2. INSTALL REAR SEAT OUTER BELT ASSEMBLY

(a) Check the angle of inclination required to lock the retractor.

(1) Gently incline the retractor from its initial position. Check that the belt does not lock when the retractor is inclined 15° or less in any direction. Also, check that the belt locks when the inclination of the retractor is 45° or more.
NOTICE:
Do not disassemble the retractor.
If the operation is not as specified, replace the rear seat outer belt.

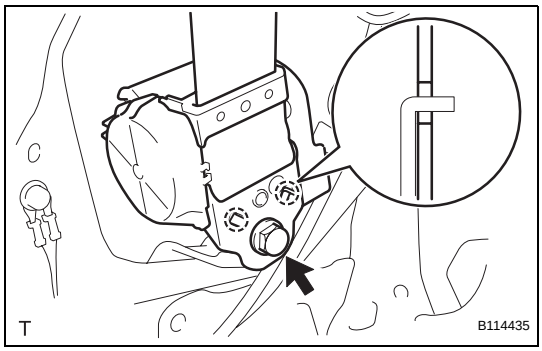

(b) Hook the lower stay of the retractor onto the 2 body hooks and install the retractor with the bolt.
Torque: 42 N*m (430 kgf*cm, 31 ft.*lbf)

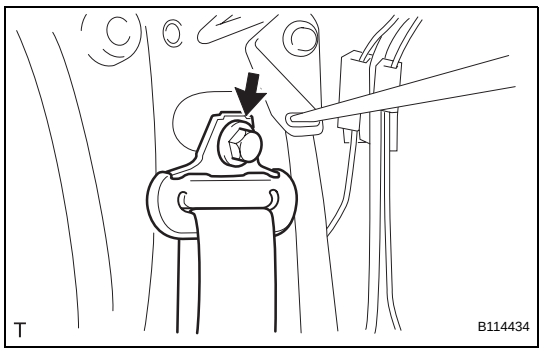

(c) Install the through anchor with the bolt.
Torque: 42 N*m (430 kgf*cm, 31 ft.*lbf)

(d) Check that the ELR locks.
NOTICE:
Perform the check with the rear seat outer belt installed.

(1) With the belt installed, check that the belt locks when it is pulled out quickly.
If the operation is not as specified, replace the rear seat outer belt.

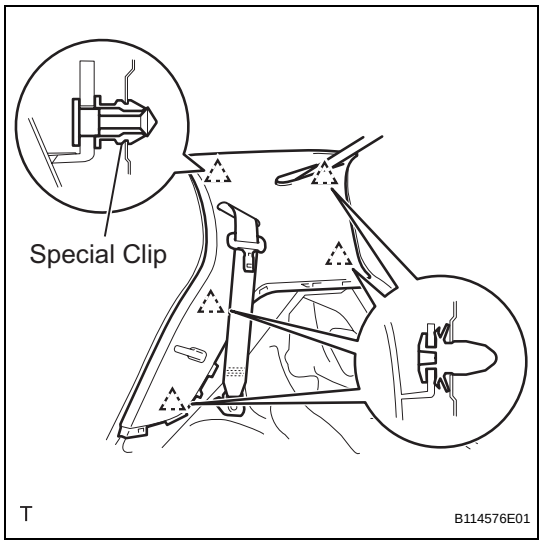

3. INSTALL ROOF SIDE INNER GARNISH

(a) for RH Side (w/ Curtain Shield Airbag):
  (1) Install a new special clip.
  (2) Pass the rear seat outer and rear center seat outer belts through the slit in the roof side inner garnish.
  (3) Engage the 5 clips and install the roof side inner garnish.

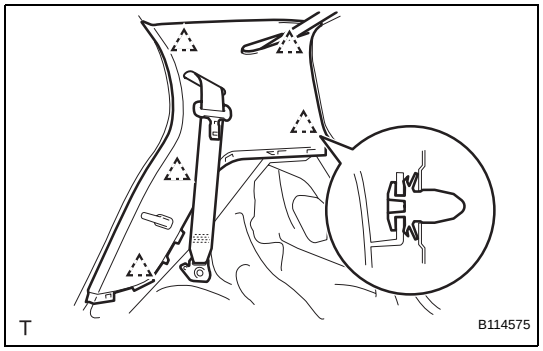

(b) for RH Side (w/o Curtain Shield Airbag):
  (1) Pass the rear seat outer and rear center seat outer belts through the slit in the roof side inner garnish.
  (2) Engage the 5 clips and install the roof side inner garnish.

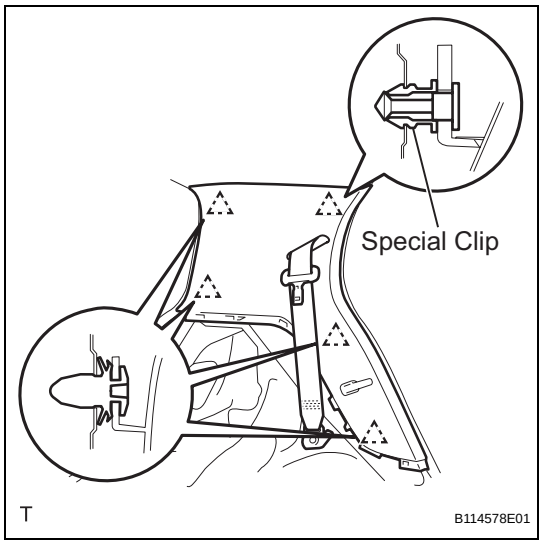

(c) for LH Side (w/ Curtain Shield Airbag):
  (1) Install a new special clip.
  (2) Pass the rear seat outer belt through the slit in the roof side inner garnish.
  (3) Engage the 5 clips and install the roof side inner garnish.

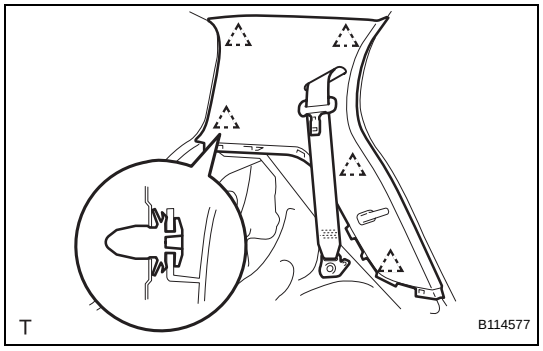

(d) for LH Side (w/o Curtain Shield Airbag):
  (1) Pass the rear seat outer belt through the slit in the roof side inner garnish.
  (2) Engage the 5 clips and install the roof side inner garnish.

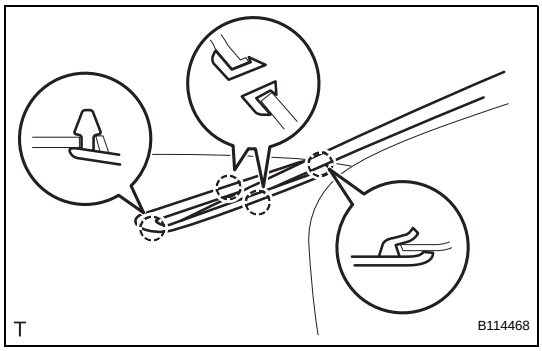

4. INSTALL REAR CENTER SEAT OUTER BELT ASSEMBLY (for RH Side)

(a) Engage the 4 claws and install the center belt guide.

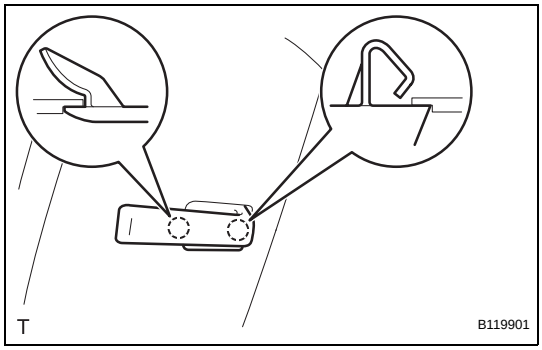

5. INSTALL REAR SEAT SHOULDER BELT HANGER

(a) Engage the 2 claws and install the rear seat shoulder belt hanger.

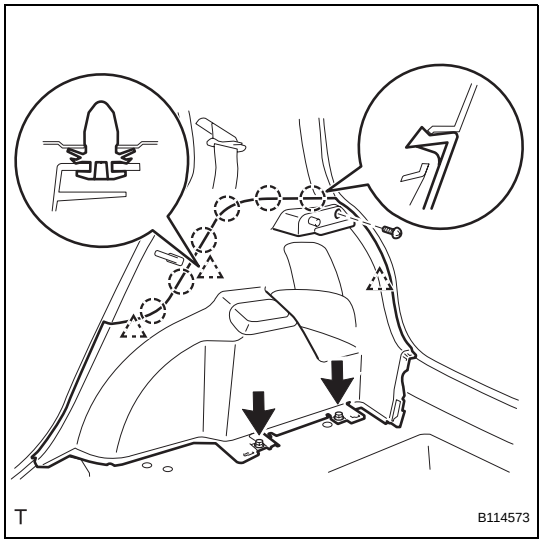

6. INSTALL DECK TRIM SIDE PANEL ASSEMBLY

(a) for RH Side:

(1) Engage the 3 clips and the 6 claws and install the deck trim side panel.

(2) Tighten the 3 screws.

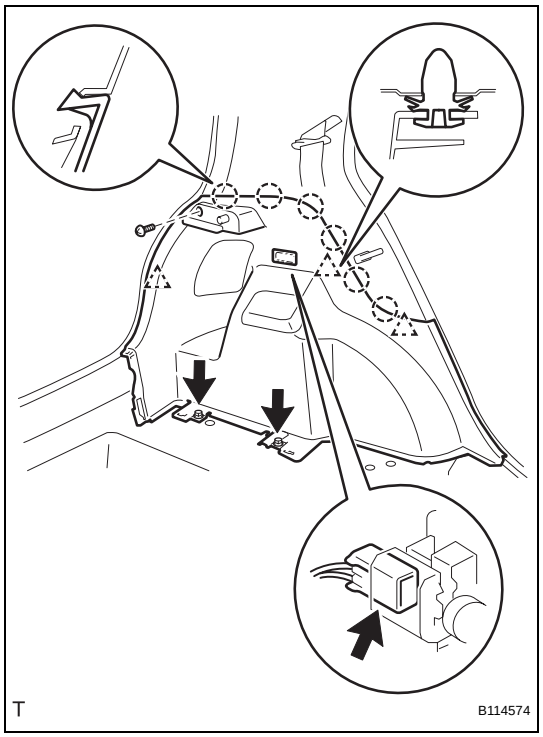

(b) for LH Side:
(1) Connect the luggage compartment room light connector.
(2) Engage the 3 clips and the 6 claws and install the deck trim side panel.
(3) Tighten the 3 screws.

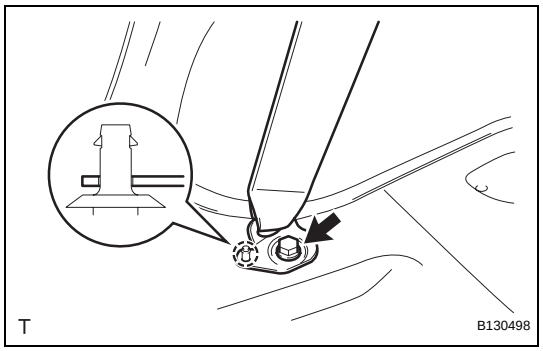

(c) Engage the clip and install the anchor plate of the rear seat outer belt.
(d) Tighten the bolt.
Torque: 42 N*m (430 kgf*cm, 31 ft.*lbf)

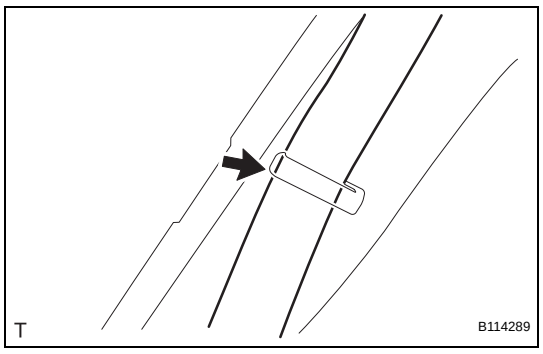

(e) Install the belt of the rear seat outer belt into the rear seat shoulder belt hanger.

7. INSTALL REAR DECK TRIM COVER (See page IR-82)

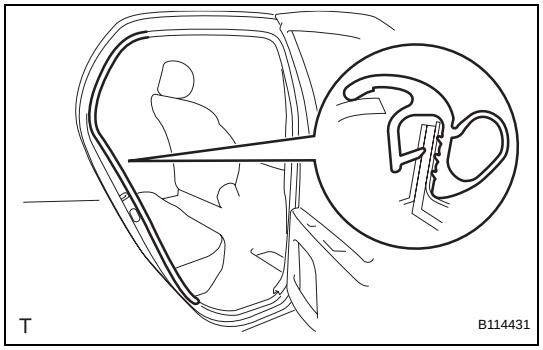

8. INSTALL REAR DOOR OPENING TRIM WEATHERSTRIP
(a) Install the rear door opening trim weatherstrip.

9. INSTALL REAR DOOR SCUFF PLATE (See page IR-80)

10. INSTALL REAR SEAT ASSEMBLY (for 60/40 Split Seat Type)
(a) for RH Side:
(1) Install the rear seat assembly (See page SE-102).

(b) for LH Side:
(1) Install the rear seat assembly (See page SE-84).

11. INSTALL NO. 2 REAR SEAT LEG COVER (for 60/40 Split Seat Type LH Side) (See page SE-85)

12. INSTALL NO. 1 REAR SEAT LEG COVER (for 60/40 Split Seat Type)
(a) for RH Side:
(1) Install the No. 1 rear seat leg cover (See page SE-103).
(b) for LH Side:
(1) Install the No. 1 rear seat leg cover (See page SE-85).

13. INSTALL REAR SEATBACK ASSEMBLY (for Hold Down Seat Type) (See page SE-122)

14. INSTALL REAR SEAT CUSHION COVER PAD SUB-ASSEMBLY (for Hold Down Seat Type) (See page SE-123)

15. INSTALL DECK FLOOR BOX
(a) for RH Side:
(1) Install the deck floor box (See page IR-83).
(b) for LH Side:
HINT:
Use the same procedure as for the RH side.

16. INSTALL DECK BOARD SUB-ASSEMBLY (See page IR-83)

17. INSTALL PACKAGE TRAY TRIM PANEL ASSEMBLY (See page IR-83)

18. CONNECT CABLE TO NEGATIVE BATTERY TERMINAL (for LH Side)
Torque: 5.4 N*m (55 kgf*cm, 48 in.*lbf)

REAR SEAT OUTER BELT ASSEMBLY (for Hatchback 3 Door)

COMPONENTS

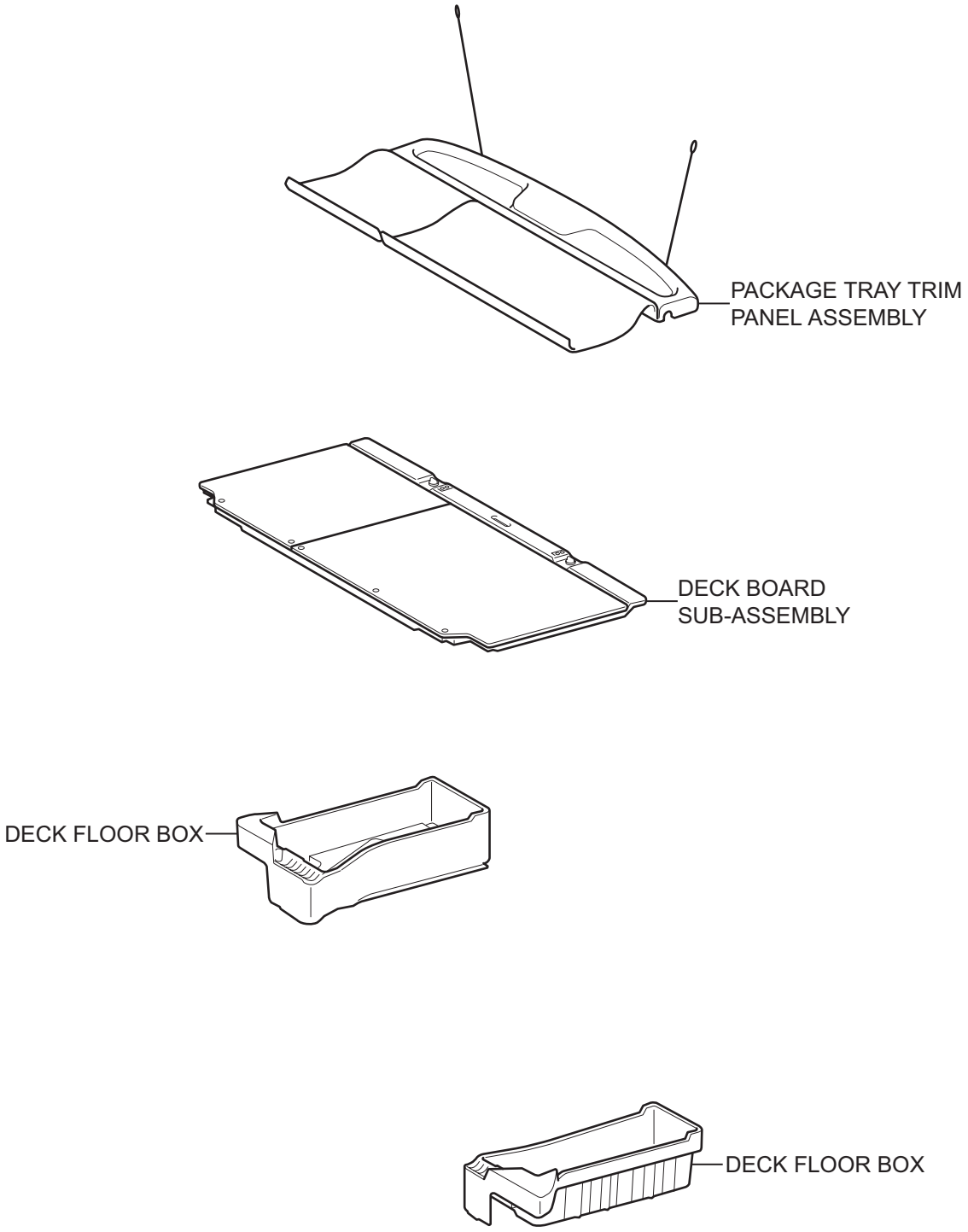

SB

for 60/40 Split Seat Type:

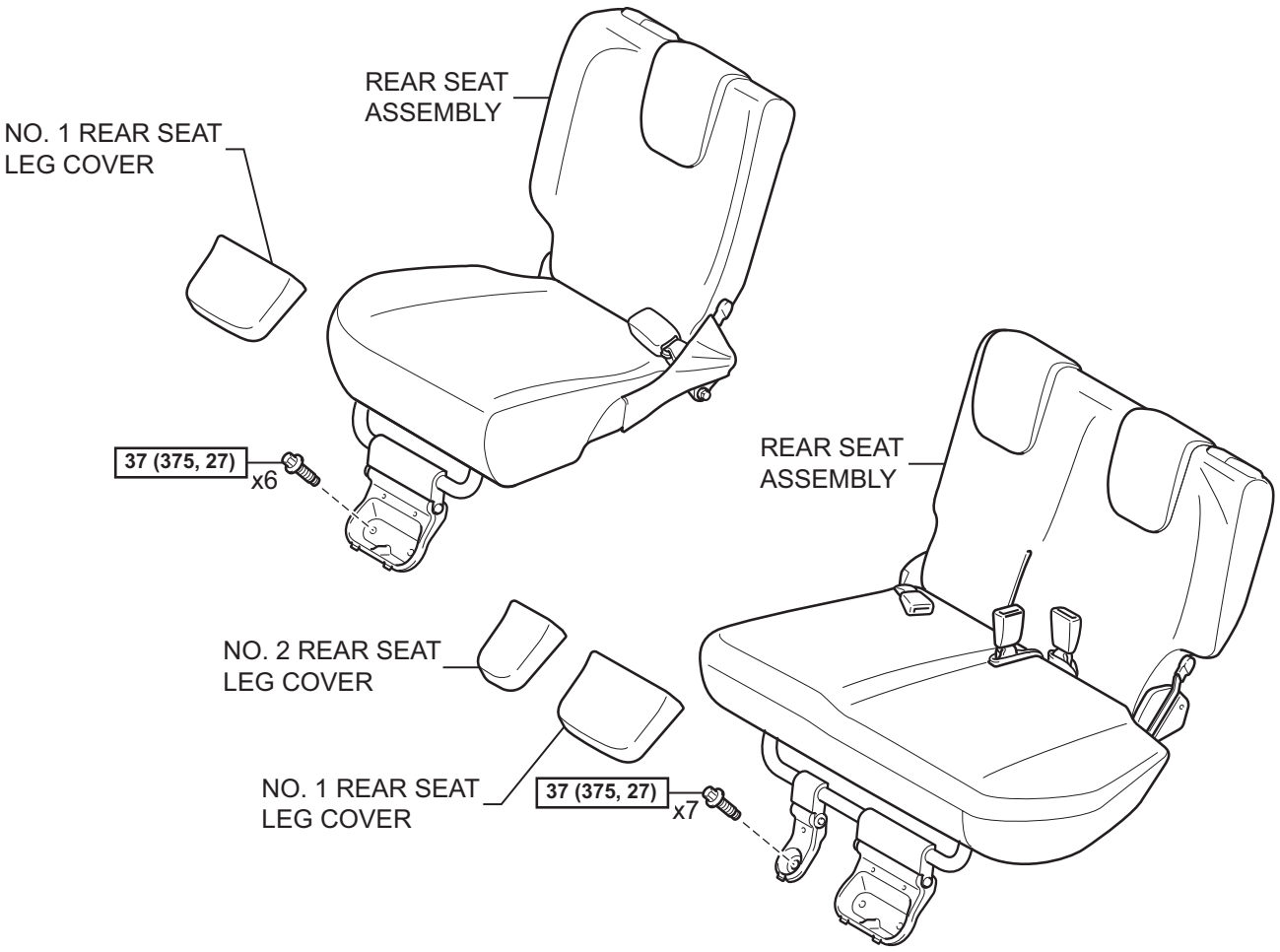

for Hold Down Seat Type:

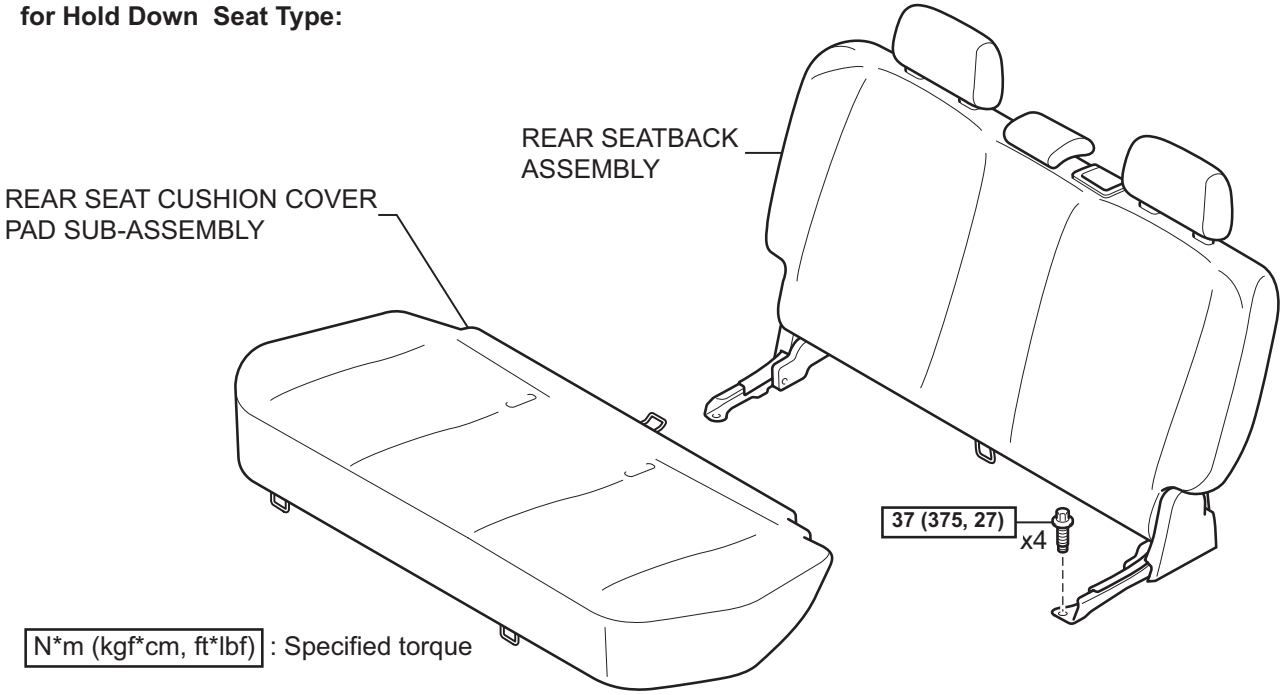

N*m (kgf*cm, ft*lbf) : Specified torque

T

B121713E05

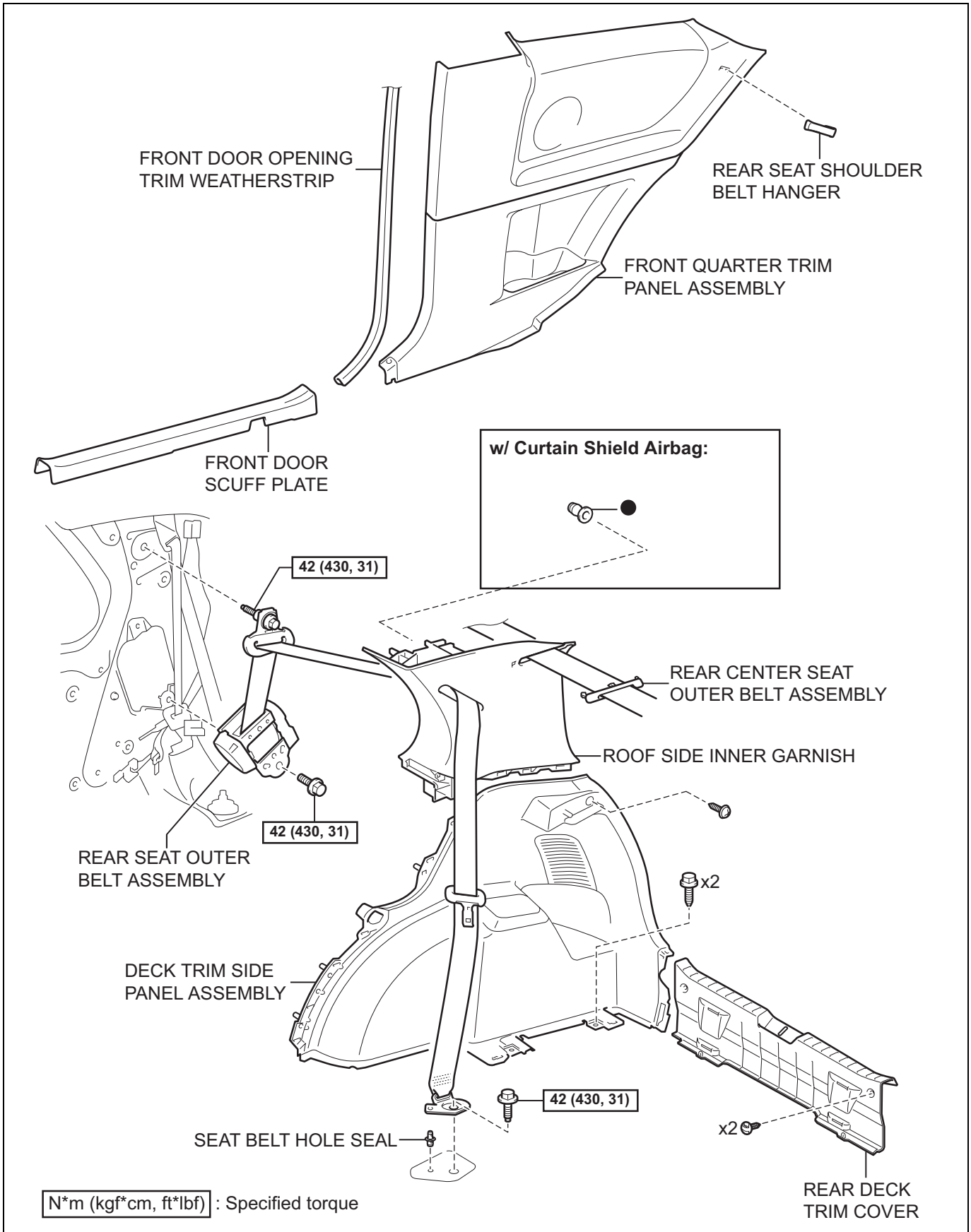

T

B114481E02

SB

REMOVAL

NOTICE:
Always use "Torx" socket wrench E10 when removing the rear seat.
HINT:
The procedure described below is for the RH side. Use the same procedure for both the RH and LH sides, unless otherwise specified.

1. **DISCONNECT CABLE FROM NEGATIVE BATTERY TERMINAL (for LH Side)**
2. **REMOVE PACKAGE TRAY TRIM PANEL ASSEMBLY (See page IR-48)**
3. **REMOVE DECK BOARD SUB-ASSEMBLY (See page IR-48)**
4. **REMOVE DECK FLOOR BOX**
   (a) for RH Side:
      (1) Remove the deck floor box (See page IR-48).
   (b) for LH Side:
      HINT:
      Use the same procedure as for the RH side.
5. **REMOVE NO. 1 REAR SEAT LEG COVER (for 60/40 Split Seat Type)**
   (a) for RH Side:
      (1) Remove the No. 1 rear seat leg cover (See page SE-89).
   (b) for LH Side:
      (1) Remove the No. 1 rear seat leg cover (See page SE-70).
6. **REMOVE NO. 2 REAR SEAT LEG COVER (for 60/40 Split Seat Type LH Side) (See page SE-70)**
7. **REMOVE REAR SEAT ASSEMBLY (for 60/40 Split Seat Type)**
   (a) for RH Side:
      (1) Remove the rear seat assembly (See page SE-89).
   (b) for LH Side:
      (1) Remove the rear seat assembly (See page SE-71).
8. **REMOVE REAR SEAT CUSHION COVER PAD SUB-ASSEMBLY (for Hold Down Seat Type) (See page SE-114)**
9. **REMOVE REAR SEATBACK ASSEMBLY (for Hold Down Seat Type) (See page SE-115)**
10. **REMOVE FRONT DOOR SCUFF PLATE (See page IR-97)**
11. **REMOVE FRONT DOOR OPENING TRIM WEATHERSTRIP (See page SB-76)**

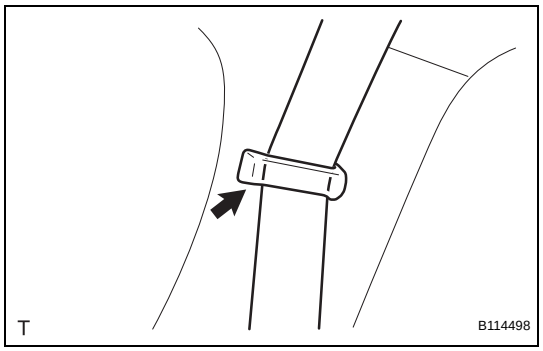

12. REMOVE REAR SEAT SHOULDER BELT HANGER

(a) Remove the belt of the rear seat outer belt.

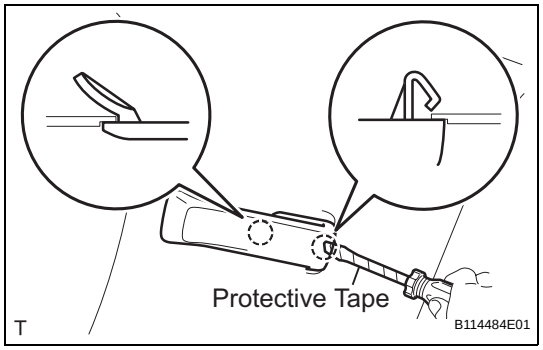

(b) Using a screwdriver with its tip wrapped in protective tape, disengage the 2 claws and remove the rear seat shoulder belt hanger.

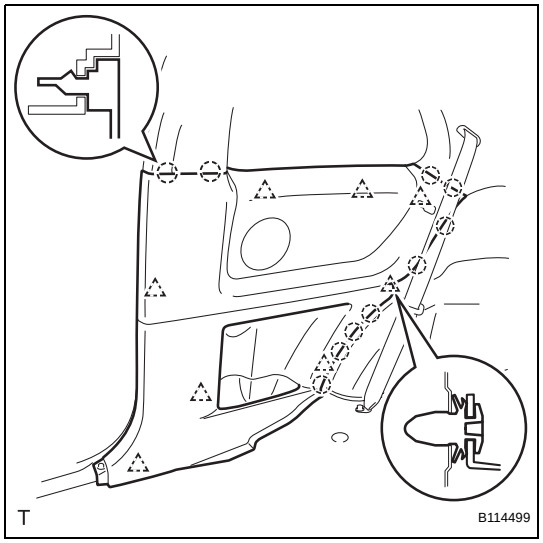

13. REMOVE FRONT QUARTER TRIM PANEL ASSEMBLY

(a) Disengage the 8 clips, the retainer and the 10 claws and remove the front quarter trim panel.

14. REMOVE REAR DECK TRIM COVER (See page IR-49)

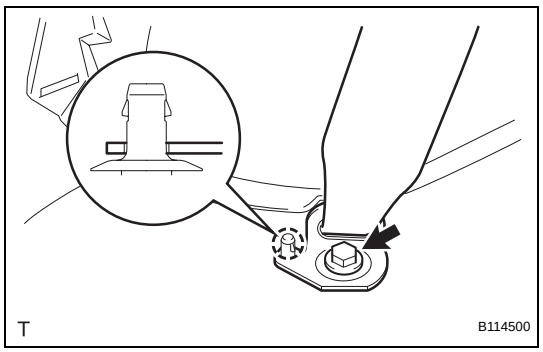

15. REMOVE DECK TRIM SIDE PANEL ASSEMBLY

(a) Remove the bolt.

(b) Disengage the clip and the anchor plate of the rear seat outer belt.

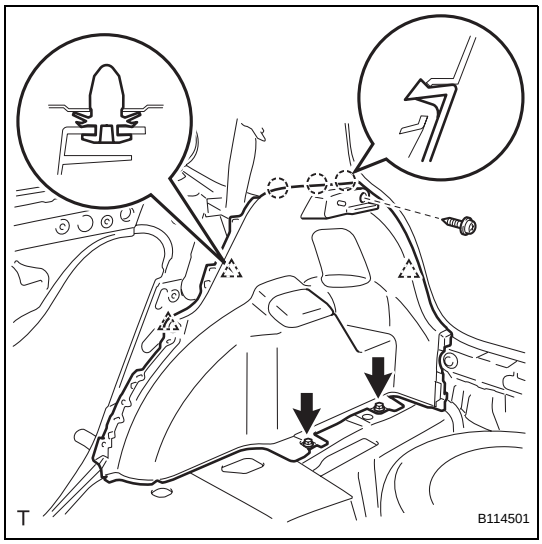

(c) for RH Side:
(1) Remove the 3 screws.
(2) Disengage the 3 clips and the 3 claws and remove the deck trim side panel.

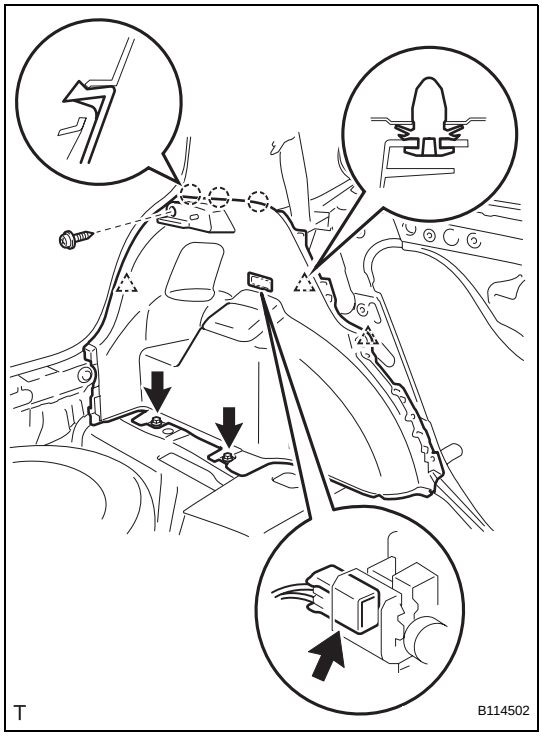

(d) for LH Side:
(1) Remove the 3 screws.
(2) Disengage the 3 clips and the 3 claws.
(3) Disconnect the luggage compartment room light connector and remove the deck trim side panel.

16. REMOVE REAR CENTER SEAT OUTER BELT ASSEMBLY (for RH Side) (See page SB-113)

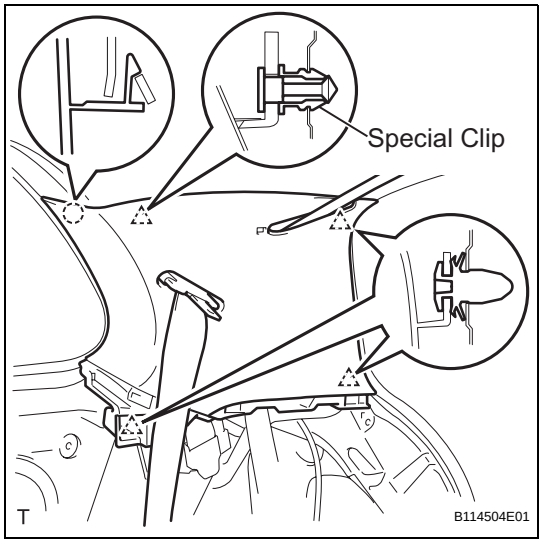

17. REMOVE ROOF SIDE INNER GARNISH

(a) for RH Side (w/ Curtain Shield Airbag):
NOTICE:
Replace the special clip with a new one because it is damaged when the roof side inner garnish is removed.
(1) Disengage the 4 clips and the claw.
(2) Pass the rear seat outer and rear center seat outer belts through the slit in the roof side inner garnish and remove the roof side inner garnish.

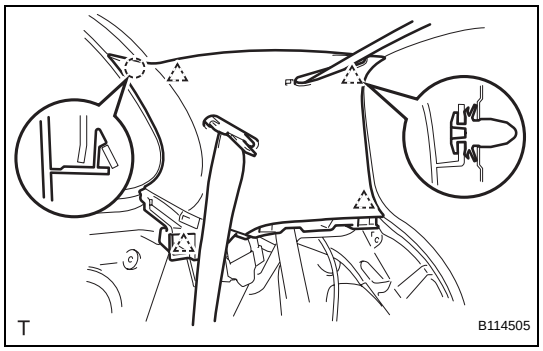

(b) for RH Side (w/o Curtain Shield Airbag):
(1) Disengage the 4 clips and the claw.
(2) Pass the rear seat outer and rear center seat outer belts through the slit in the roof side inner garnish and remove the roof side inner garnish.

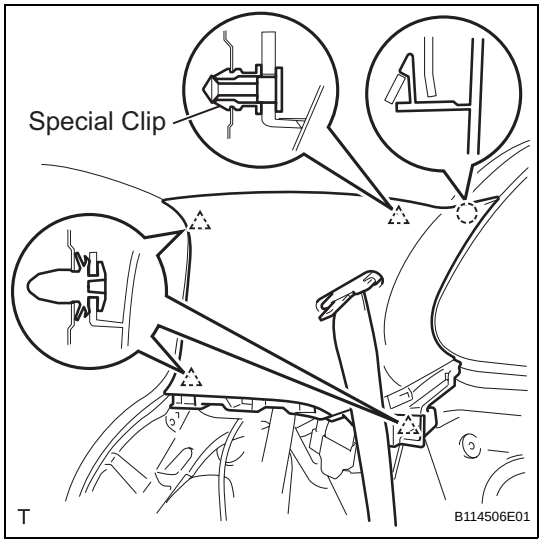

(c) for LH Side (w/ Curtain Shield Airbag):
NOTICE:
Replace the special clip with a new one because it is damaged when the roof side inner garnish is removed.
(1) Disengage the 4 clips and the claw.
(2) Pass the rear seat outer belt through the slit in the roof side inner garnish and remove the roof side inner garnish.

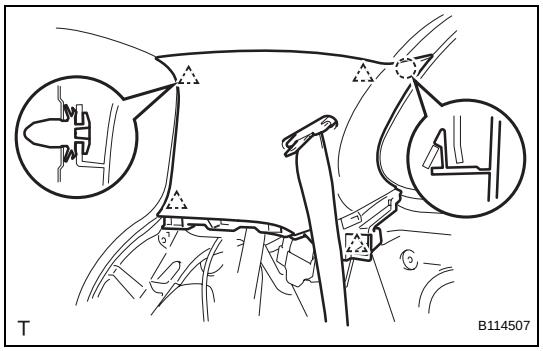

(d) for LH Side (w/o Curtain Shield Airbag):
(1) Disengage the 4 clips and the claw.
(2) Pass the rear seat outer belt through the slit in the roof side inner garnish and remove the roof side inner garnish.

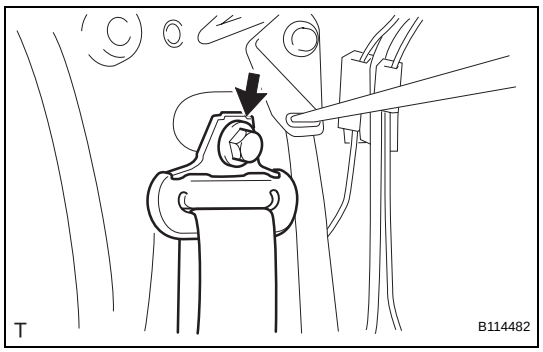

18. REMOVE REAR SEAT OUTER BELT ASSEMBLY
(a) Remove the bolt and the through anchor.

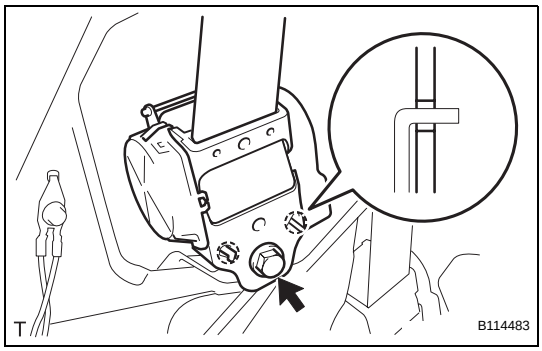

(b) Remove the bolt, the 2 hooks and the retractor.

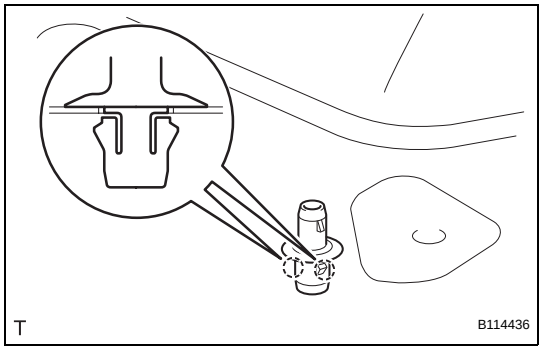

19. REMOVE SEAT BELT HOLE SEAL

(a) Disengage the 2 claws and remove the seat belt hole seal.

INSTALLATION

NOTICE:
Always use "Torx" socket wrench E10 when installing the rear seat.
HINT:
The procedure described below is for the RH side. Use the same procedure for both the RH and LH sides, unless otherwise specified.

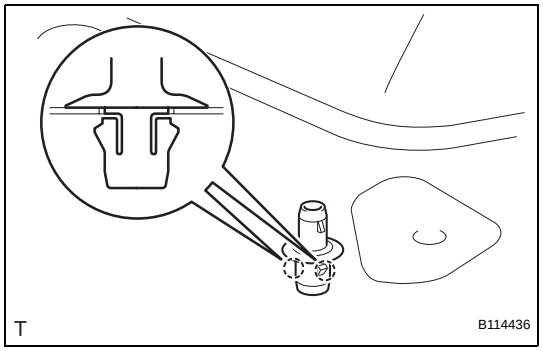

1. INSTALL SEAT BELT HOLE SEAL
(a) Engage the 2 claws and install the seat belt hole seal.

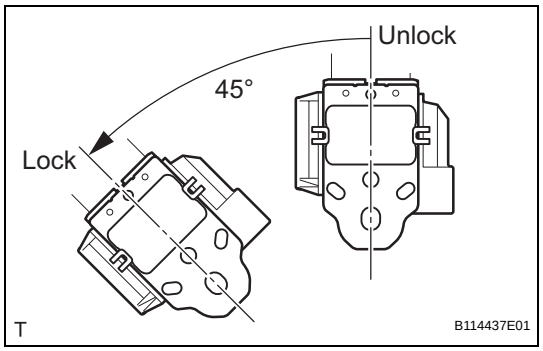

2. INSTALL REAR SEAT OUTER BELT ASSEMBLY
(a) Check the angle of inclination required to lock the retractor.
(1) Gently incline the retractor from its initial position. Check that the belt does not lock when the retractor is inclined 15° or less in any direction. Also, check that the belt locks when the inclination of the retractor is 45° or more.
NOTICE:
Do not disassemble the retractor.
If the operation is not as specified, replace the rear seat outer belt.

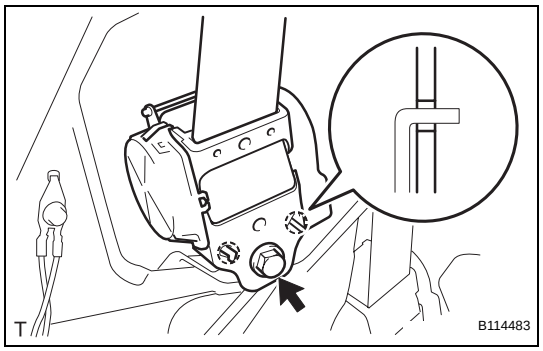

(b) Hook the lower stay of the retractor onto the 2 body hooks and install the retractor with the bolt.
Torque: 42 N*m (430 kgf*cm, 31 ft.*lbf)

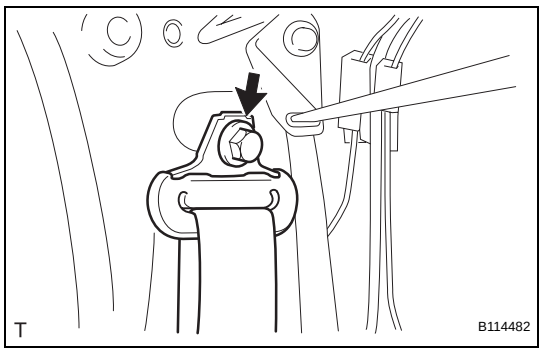

(c) Install the through anchor with the bolt.
Torque: 42 N*m (430 kgf*cm, 31 ft.*lbf)
(d) Check that the ELR locks.
NOTICE:
Perform the check with the rear seat outer belt installed.
(1) With the belt installed, check that the belt locks when it is pulled out quickly.
If the operation is not as specified, replace the rear seat outer belt.

SB

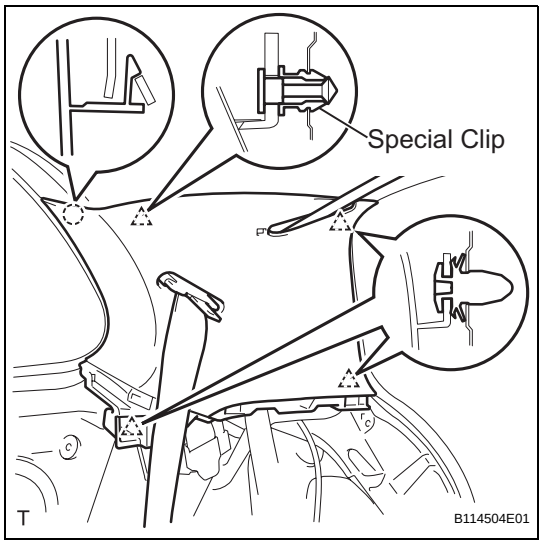

3. INSTALL ROOF SIDE INNER GARNISH

(a) for RH Side (w/ Curtain Shield Airbag):
- (1) Install a new special clip.
- (2) Pass the rear seat outer and rear center seat outer belts through the slit in the roof side inner garnish.
- (3) Engage the 4 clips and the claw and install the roof side inner garnish.

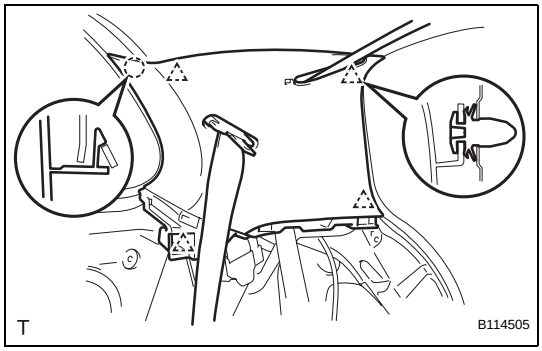

(b) for RH Side (w/o Curtain Shield Airbag):
- (1) Pass the rear seat outer and rear center seat outer belts through the slit in the roof side inner garnish.
- (2) Engage the 4 clips and the claw and install the roof side inner garnish.

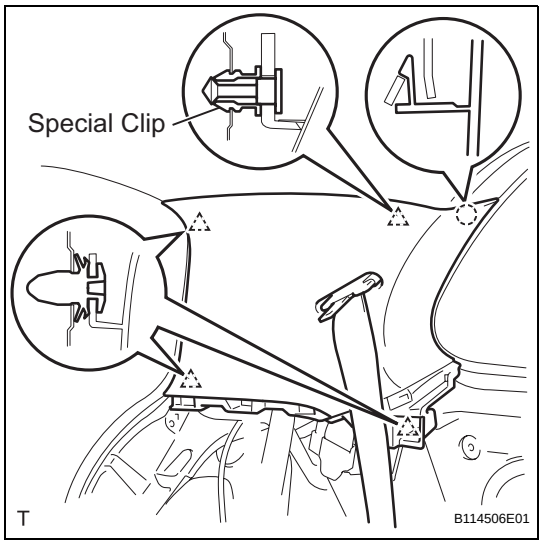

(c) for LH Side (w/ Curtain Shield Airbag):
- (1) Install a new special clip.
- (2) Pass the rear seat outer belt through the slit in the roof side inner garnish.
- (3) Engage the 4 clips and the claw and install the roof side inner garnish.

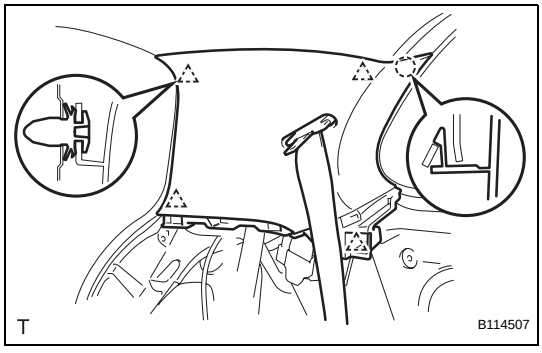

(d) for LH Side (w/o Curtain Shield Airbag):
- (1) Pass the rear seat outer belt through the slit in the roof side inner garnish.
- (2) Engage the 4 clips and the claw and install the roof side inner garnish.

4. INSTALL REAR CENTER SEAT OUTER BELT ASSEMBLY (for RH Side) (See page SB-117)

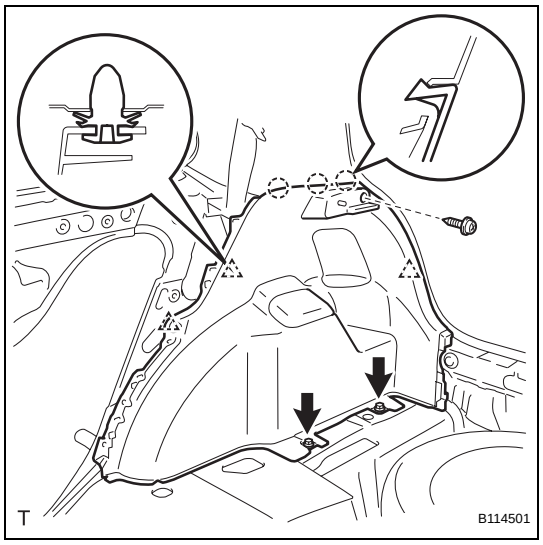

5. INSTALL DECK TRIM SIDE PANEL ASSEMBLY

(a) for RH Side:
  (1) Engage the 3 clips and the 3 claws and install the deck trim side panel.
  (2) Tighten the 3 screws.

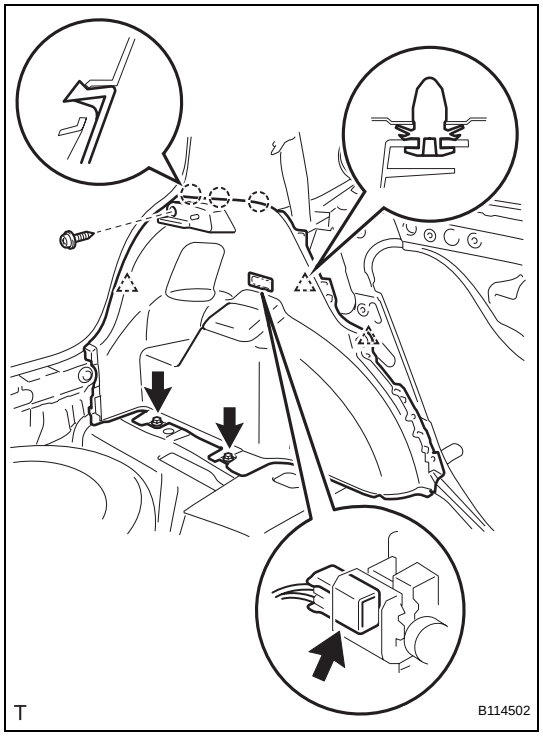

(b) for LH Side:
  (1) Connect the luggage compartment room light connector.
  (2) Engage the 3 clips and the 3 claws and install the deck trim side panel.
  (3) Tighten the 3 screws.

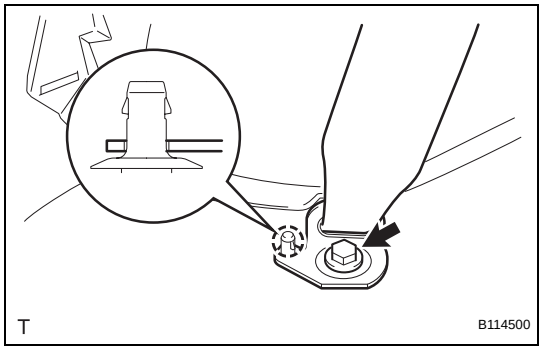

(c) Engage the clip and install the anchor plate of the rear seat outer belt.
(d) Tighten the bolt.
Torque: 42 N*m (430 kgf*cm, 31 ft.*lbf)

6. INSTALL REAR DECK TRIM COVER (See page IR-82)

SB

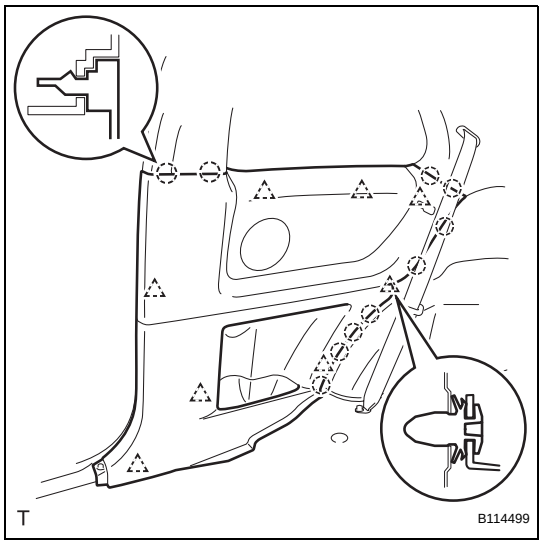

7. INSTALL FRONT QUARTER TRIM PANEL ASSEMBLY

(a) Engage the 8 clips, the retainer and the 10 claws and install the front quarter trim panel.

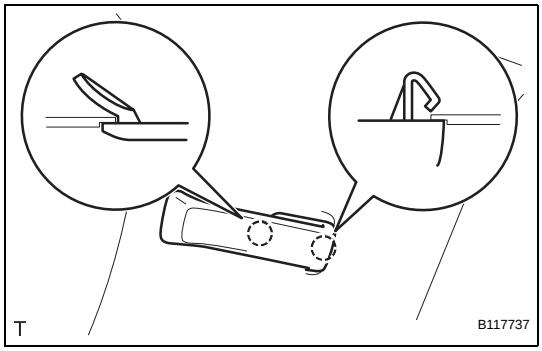

8. INSTALL REAR SEAT SHOULDER BELT HANGER

(a) Engage the 2 claws and install the rear seat shoulder belt hanger.

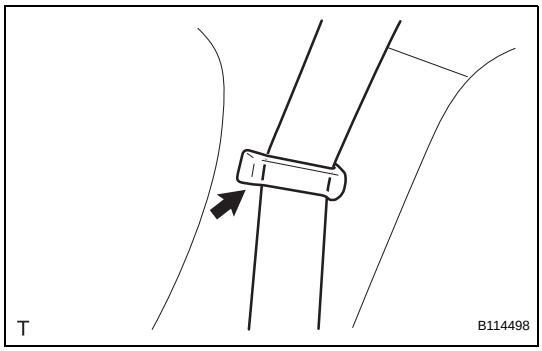

(b) Install the belt of the rear seat outer belt.

9. INSTALL FRONT DOOR OPENING TRIM WEATHERSTRIP (See page SB-80)

10. INSTALL FRONT DOOR SCUFF PLATE (See page IR-119)

11. INSTALL REAR SEAT ASSEMBLY (for 60/40 Split Seat Type)

(a) for RH Side:

(1) Install the rear seat assembly (See page SE-102).

(b) for LH Side:

(1) Install the rear seat assembly (See page SE-84).

12. INSTALL NO. 2 REAR SEAT LEG COVER (for 60/40 Split Seat Type LH Side) (See page SE-85)

13. INSTALL NO. 1 REAR SEAT LEG COVER (for 60/40 Split Seat Type)

(a) for RH Side:

(1) Install the No. 1 rear seat leg cover (See pageSE-103).

(b) for LH Side:

(1) Install the No. 1 rear seat leg cover (See page SE-85).

14. **INSTALL REAR SEATBACK ASSEMBLY (for Hold Down Seat Type) (See page SE-122)**

15. **INSTALL REAR SEAT CUSHION COVER PAD SUB-ASSEMBLY (for Hold Down Seat Type) (See page SE-123)**

16. **INSTALL DECK FLOOR BOX**
    (a) for RH Side:
        (1) Install the deck floor box (See page IR-83).
    (b) for LH Side:
        HINT:
        Use the same procedure as for the RH side.

17. **INSTALL DECK BOARD SUB-ASSEMBLY (See page IR-83)**

18. **INSTALL PACKAGE TRAY TRIM PANEL ASSEMBLY (See page IR-83)**

19. **CONNECT CABLE TO NEGATIVE BATTERY TERMINAL (for LH Side)**
    Torque: 5.4 N*m (55 kgf*cm, 48 in.*lbf)

REAR CENTER SEAT INNER BELT ASSEMBLY (for Sedan)

COMPONENTS

SB

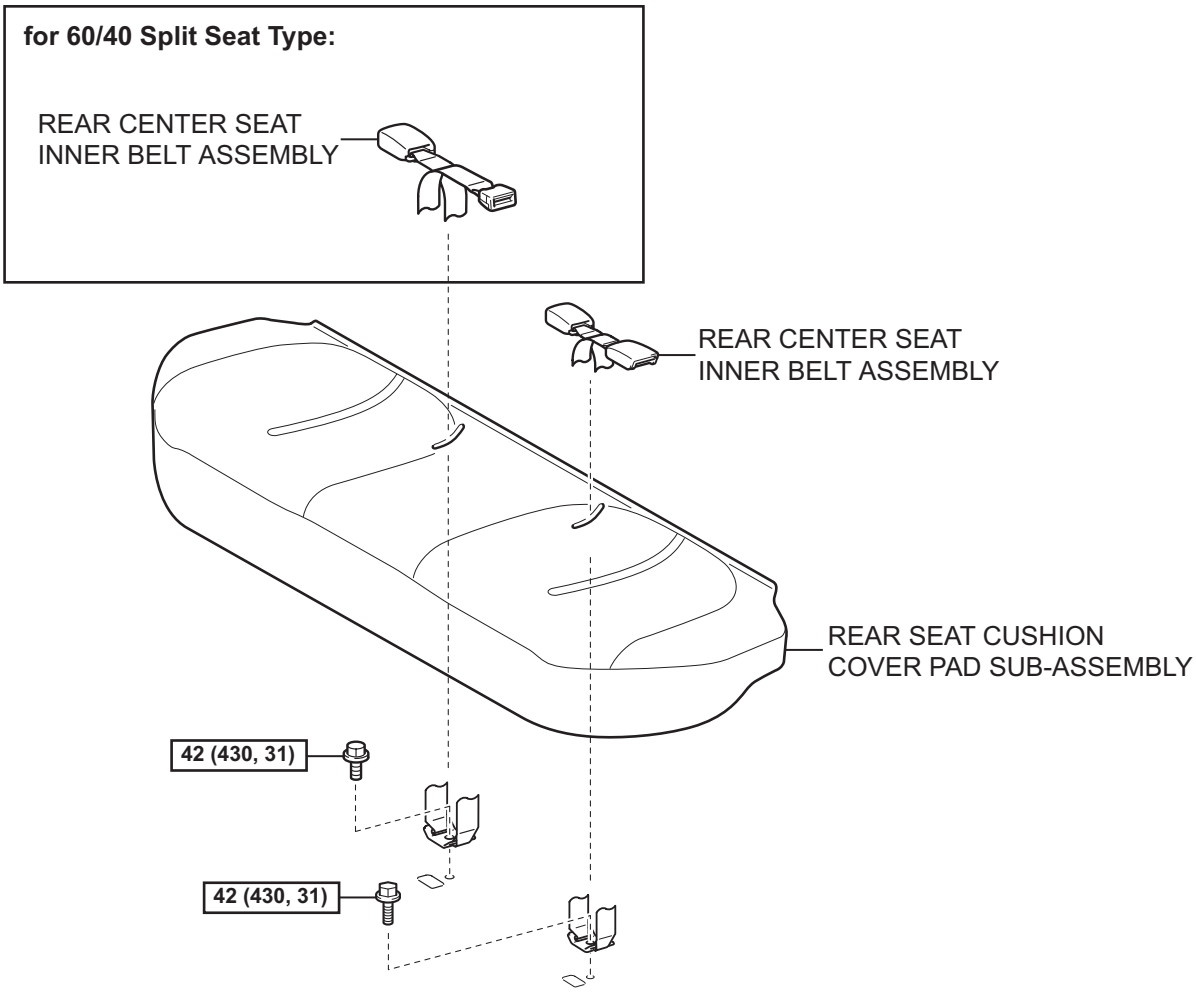

N*m (kgf*cm, ft*lbf) : Specified torque

T

B138566E03

REMOVAL

1. REMOVE REAR SEAT CUSHION COVER PAD SUB-ASSEMBLY

(a) for 60/40 Split Seat Type:

(1) Remove the rear seat cushion cover pad (See page SE-46).

(b) for Fixed Seat Type:

(1) Remove the rear seat cushion cover pad (See page SE-106).

2. REMOVE REAR CENTER SEAT INNER BELT ASSEMBLY

(a) for RH Side (for 60/40 Split Seat Type):

(1) Remove the bolt and the rear center seat inner belt.

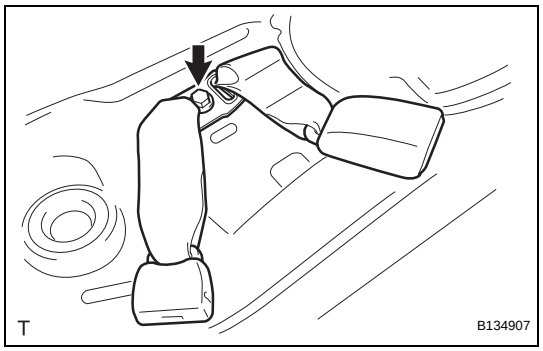

(b) for LH Side:

(1) Remove the bolt and the rear center seat inner belt.

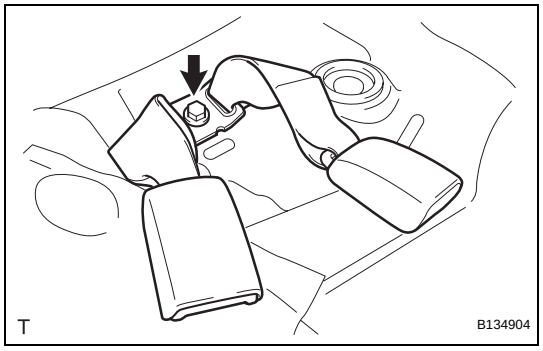

INSTALLATION

1. INSTALL REAR CENTER SEAT INNER BELT ASSEMBLY

(a) for RH Side (for 60/40 Split Seat Type):

(1) Install the rear center seat inner belt with the bolt.

Torque: 42 N*m (430 kgf*cm, 31 ft.*lbf)

NOTICE:

- **Install the anchor plate with the arrow mark facing forward.**
- **Do not place the anchor plate over the locating mark area of the floor panel.**

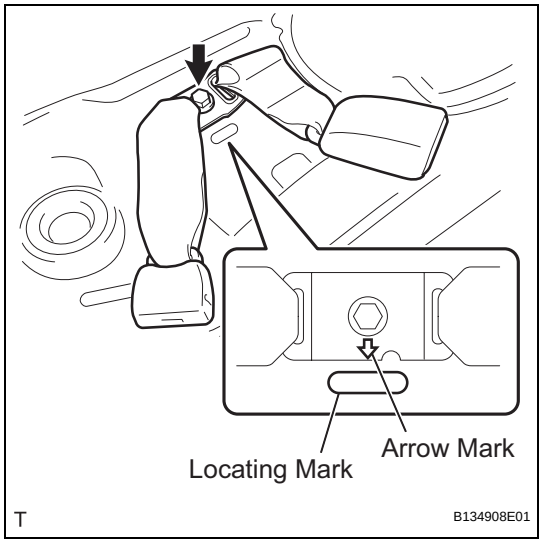

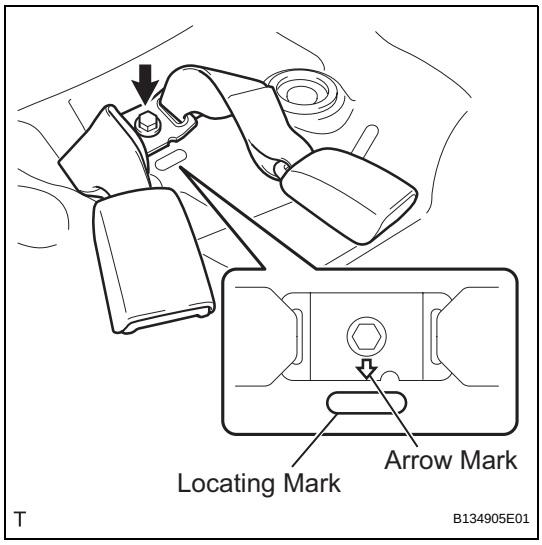

(b) for LH Side:

(1) Install the rear center seat inner belt with the bolt.

Torque: 42 N*m (430 kgf*cm, 31 ft.*lbf)

NOTICE:

- **Install the anchor plate with the arrow mark facing forward.**
- **Do not place the anchor plate over the locating mark area of the floor panel.**

2. INSTALL REAR SEAT CUSHION COVER PAD SUB-ASSEMBLY

(a) for 60/40 Split Seat Type:

(1) Install the rear seat cushion cover pad (See page SE-53).

(b) for Fixed Seat Type:

(1) Install the rear seat cushion cover pad (See page SE-109).

REAR CENTER SEAT INNER BELT ASSEMBLY (for Hatchback LH Side)

COMPONENTS

for 60/40 Split Seat Type:

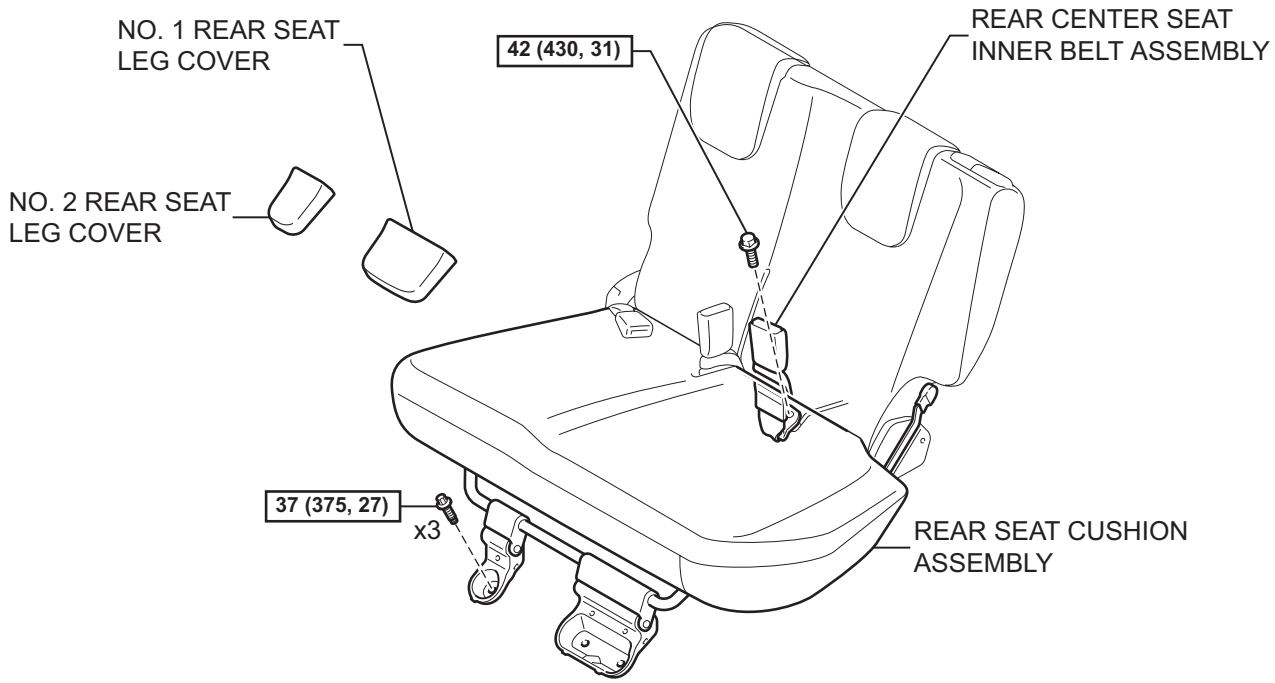

for Hold Down Seat Type:

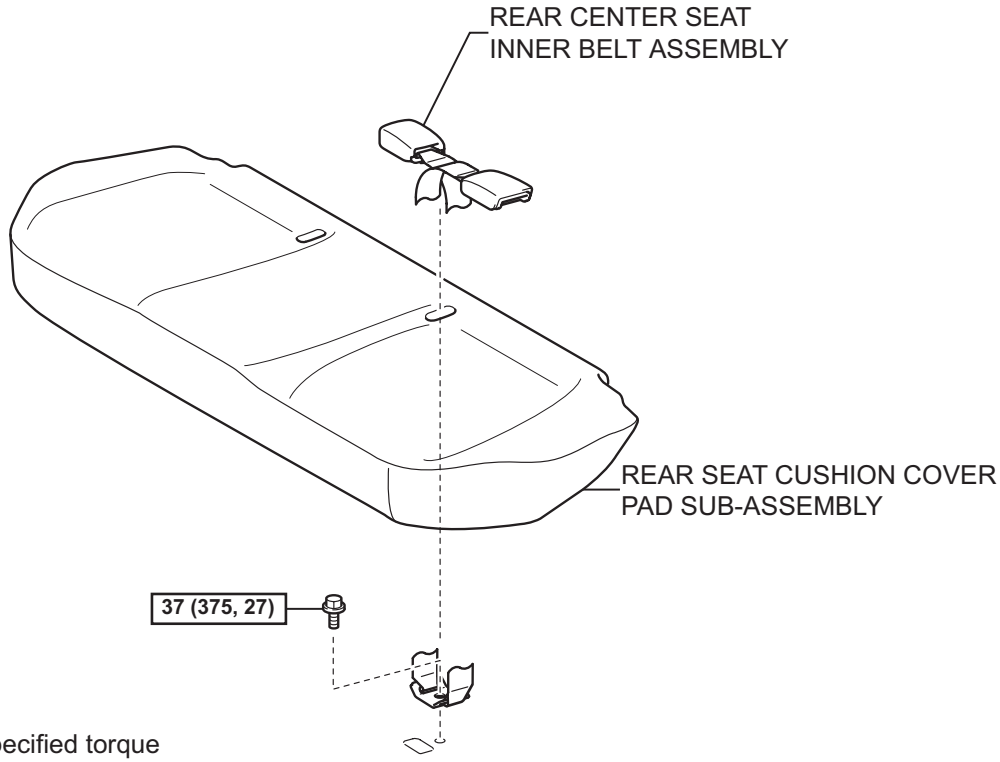

N*m (kgf*cm, ft*lbf) : Specified torque

T

B114645E03

SB

REMOVAL

NOTICE:
Always use "Torx" socket wrench E10 when removing the rear seat.

1. **REMOVE NO. 1 REAR SEAT LEG COVER (for 60/40 Split Seat Type) (See page SE-70)**
2. **REMOVE NO. 2 REAR SEAT LEG COVER (for 60/40 Split Seat Type) (See page SE-70)**
3. **REMOVE REAR SEAT CUSHION COVER PAD SUB-ASSEMBLY (for Hold Down Seat Type) (See page SE-114)**
4. **REMOVE REAR CENTER SEAT INNER BELT ASSEMBLY**
   (a) for 60/40 Split Seat Type:
      (1) Using "Torx" socket wrench E10, remove the 3 bolts and pull up the rear seat cushion.

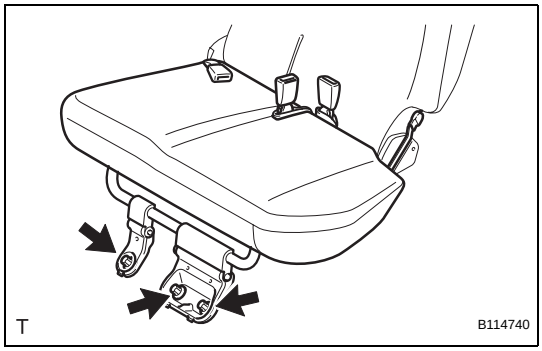

      (2) Remove the belt from the band.
      (3) Remove the bolt and the rear center seat inner belt.

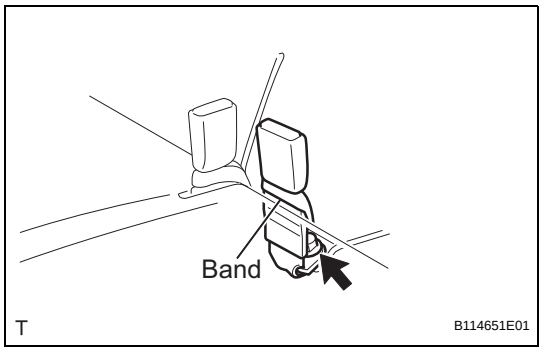

   (b) for Hold Down Seat Type:
      (1) Remove the bolt and the rear center seat inner belt.

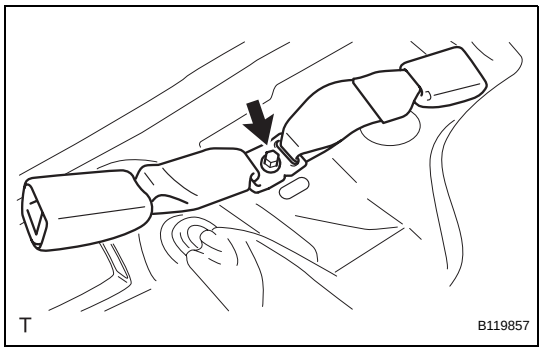

INSTALLATION

NOTICE:
Always use "Torx" socket wrench E10 when installing the rear seat.

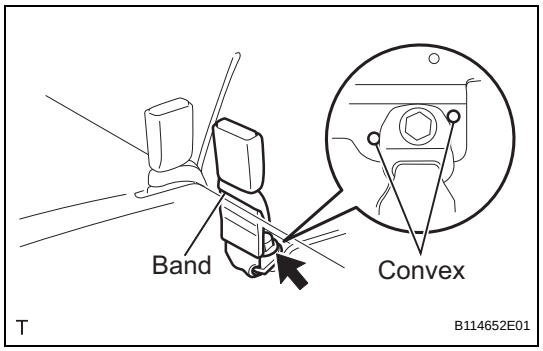

1. INSTALL REAR CENTER SEAT INNER BELT ASSEMBLY

(a) for 60/40 Split Seat Type

(1) Install the rear center seat inner belt with the bolt.
Torque: 42 N*m (430 kgf*cm, 31 ft.*lbf)
NOTICE:
Do not place the anchor plate over the convex areas of the rear seat back frame.

(2) Install the belt into the band.

(3) Install the rear seat cushion.

(4) Using "Torx" socket wrench E10, tighten the 3 bolts in the sequence shown in the illustration.
Torque: 37 N*m (375 kgf*cm, 27 ft.*lbf)

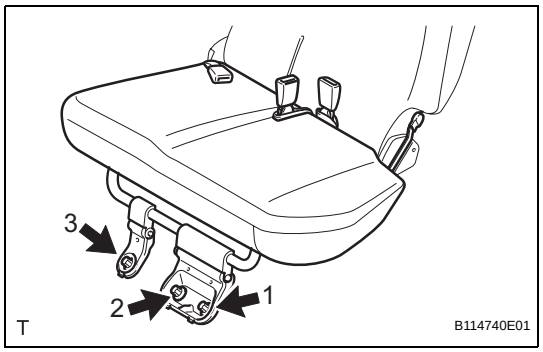

(b) for Hold Down Seat Type:

(1) Install the rear center seat inner belt with the bolt.
Torque: 42 N*m (430 kgf*cm, 31 ft.*lbf)
NOTICE:
- **Install the anchor plate with the arrow mark facing forward.**
- **Do not place the anchor plate over the locating mark area of the floor panel.**

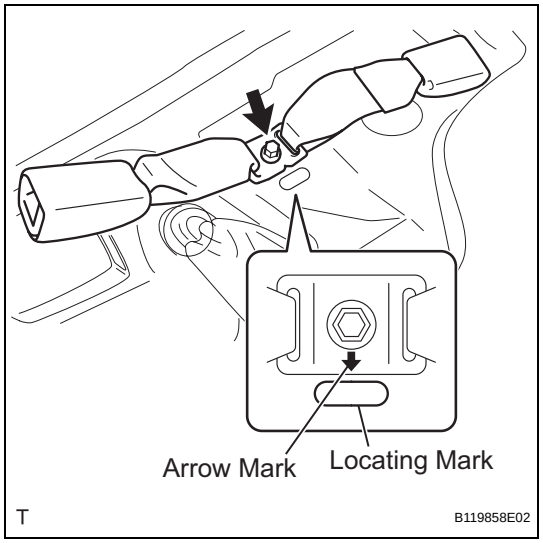

2. INSTALL NO. 2 REAR SEAT LEG COVER (for 60/40 Split Seat Type) (See page SE-85)

3. INSTALL NO. 1 REAR SEAT LEG COVER (for 60/40 Split Seat Type) (See page SE-85)

4. INSTALL REAR SEAT CUSHION COVER PAD SUB-ASSEMBLY (for Hold Down Seat Type) (See page SE-123)

SB

REAR CENTER SEAT INNER BELT ASSEMBLY (for Hatchback RH Side)

COMPONENTS

SB

for 60/40 Split Seat Type:

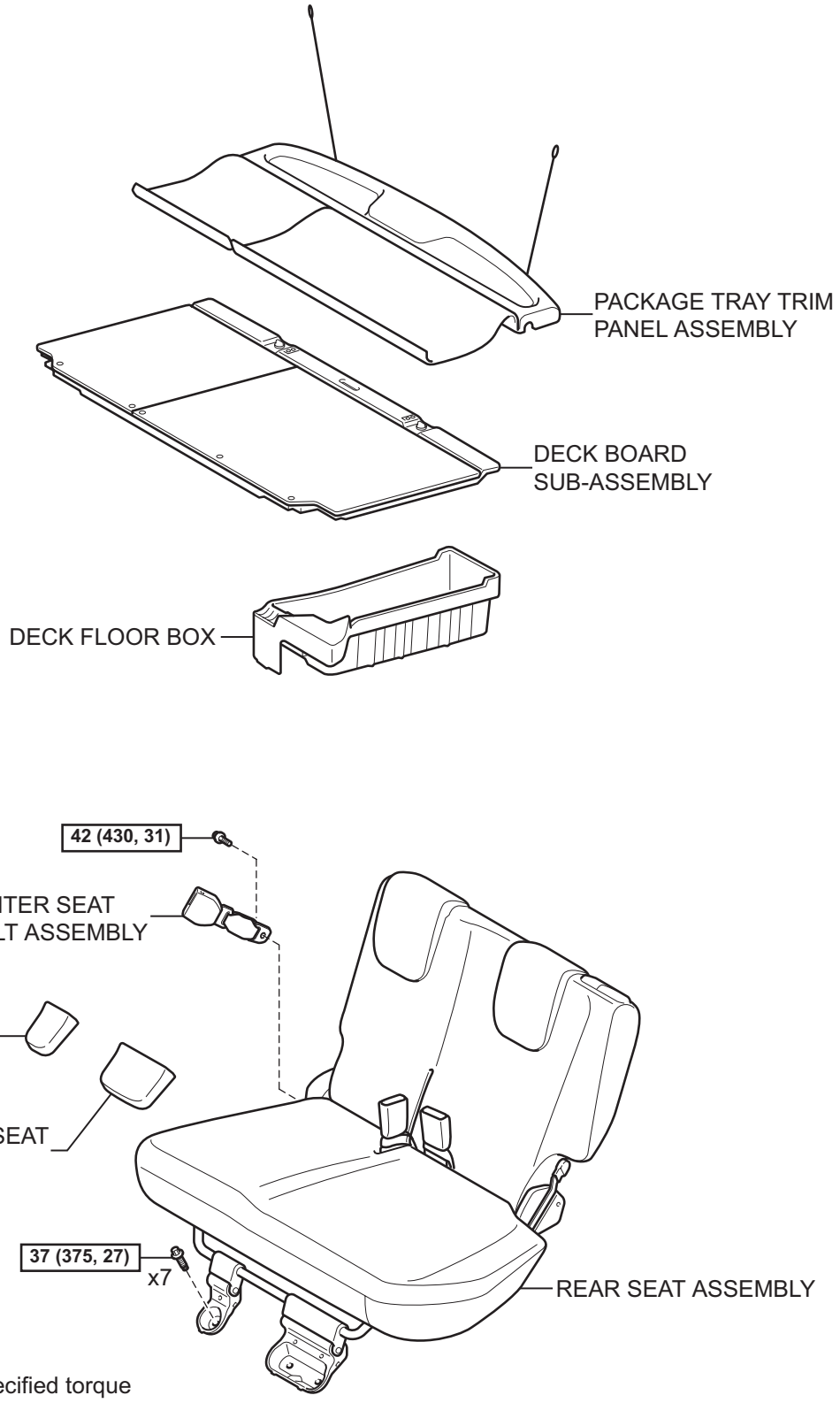

N*m (kgf*cm, ft*lbf) : Specified torque

T

B114653E02

for Hold Down Seat Type:

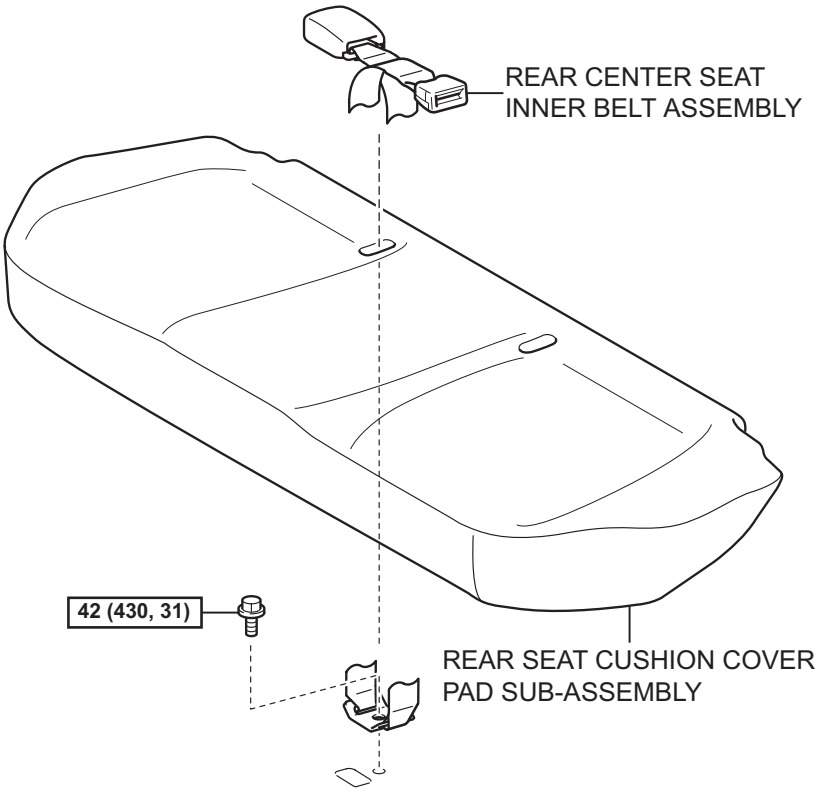

N*m (kgf*cm, ft*lbf) : Specified torque

T

B119856E05

SB

REMOVAL

NOTICE:
Always use "Torx" socket wrench E10 when removing the rear seat.

1. **REMOVE PACKAGE TRAY TRIM PANEL ASSEMBLY (for 60/40 Split Seat Type) (See page IR-48)**
2. **REMOVE DECK BOARD SUB-ASSEMBLY (for 60/40 Split Seat Type) (See page IR-48)**
3. **REMOVE DECK FLOOR BOX (for 60/40 Split Seat Type)**
   HINT:
   Use the same procedure as for the RH side (See page IR-48).
4. **REMOVE NO. 1 REAR SEAT LEG COVER (for 60/40 Split Seat Type) (See page SE-70)**
5. **REMOVE NO. 2 REAR SEAT LEG COVER (for 60/40 Split Seat Type) (See page SE-70)**
6. **REMOVE REAR SEAT ASSEMBLY (for 60/40 Split Seat Type) (See page SE-71)**
7. **REMOVE REAR SEAT CUSHION COVER PAD SUB-ASSEMBLY (for Hold Down Seat Type) (See page SE-114)**
8. **REMOVE REAR CENTER SEAT INNER BELT ASSEMBLY**
   (a) for 60/40 Split Seat Type:
      (1) Remove the bolt and the rear center seat inner belt.

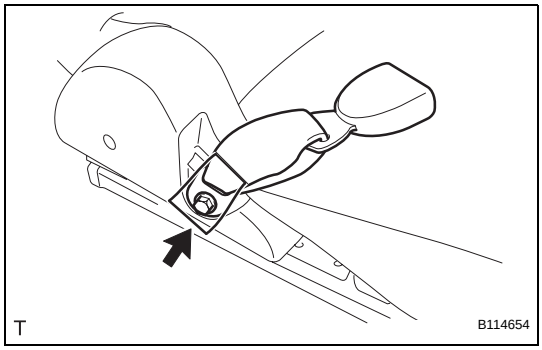

   (b) for Hold Down Seat Type:
      (1) Remove the bolt and the rear center seat inner belt.

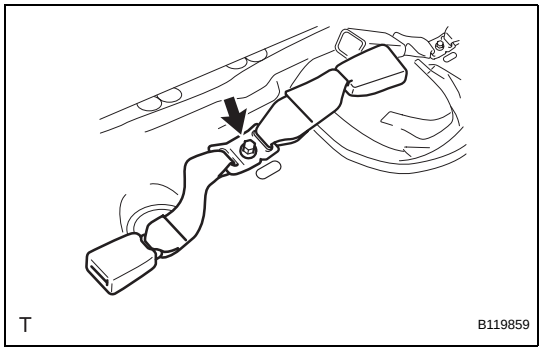

INSTALLATION

NOTICE:
Always use "Torx" socket wrench E10 when installing the rear seat.

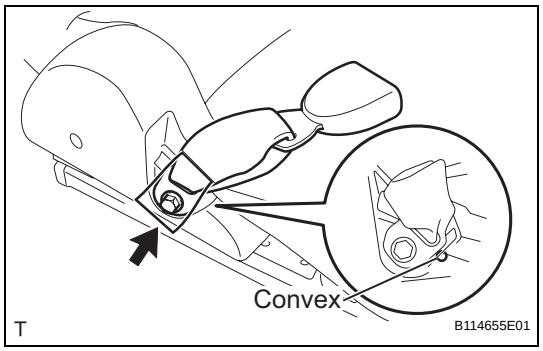

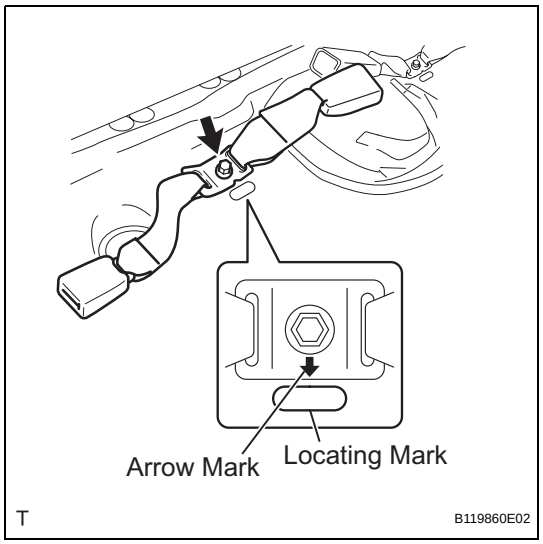

1. **INSTALL REAR CENTER SEAT INNER BELT ASSEMBLY**
   (a) for 60/40 Split Seat Type:
      (1) Install the rear center seat inner belt with the bolt.
      Torque: 42 N*m (430 kgf*cm, 31 ft.*lbf)
      NOTICE:
      Do not place the anchor plate over the convex area of the rear seat back frame.

   (b) for Hold Down Seat Type:
      (1) Install the rear center seat inner belt with the bolt.
      Torque: 42 N*m (430 kgf*cm, 31 ft.*lbf)
      NOTICE:
      - **Install the anchor plate with the arrow mark facing forward.**
      - **Do not place the anchor plate over the locating mark area of the floor panel.**

2. **INSTALL REAR SEAT ASSEMBLY (for 60/40 Split Seat Type) (See page SE-84)**
3. **INSTALL NO. 2 REAR SEAT LEG COVER (for 60/40 Split Seat Type) (See page SE-85)**
4. **INSTALL NO. 1 REAR SEAT LEG COVER (for 60/40 Split Seat Type) (See page SE-85)**
5. **INSTALL REAR SEAT CUSHION COVER PAD SUB-ASSEMBLY (for Hold Down Seat Type) (See page SE-123)**
6. **INSTALL DECK FLOOR BOX (for 60/40 Split Seat Type)**
   HINT:
   Use the same procedure as for the RH side (See page IR-83).
7. **INSTALL DECK BOARD SUB-ASSEMBLY (for 60/40 Split Seat Type) (See page IR-83)**
8. **INSTALL PACKAGE TRAY TRIM PANEL ASSEMBLY (for 60/40 Split Seat Type) (See page IR-83)**

SB

REAR CENTER SEAT OUTER BELT ASSEMBLY (for Sedan)

COMPONENTS

for 60/40 Split Seat Type:

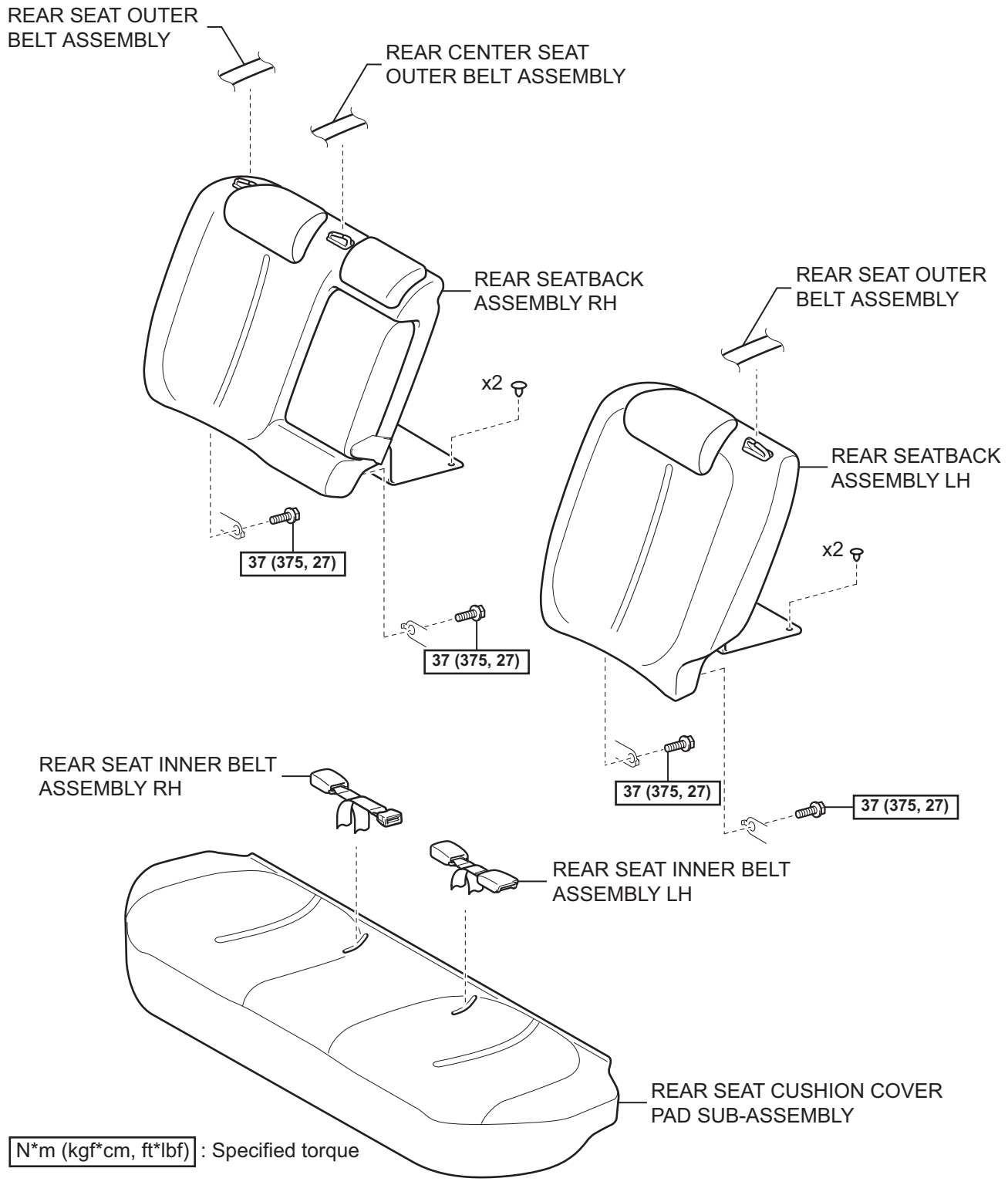

SB

for Fixed Seat Type:

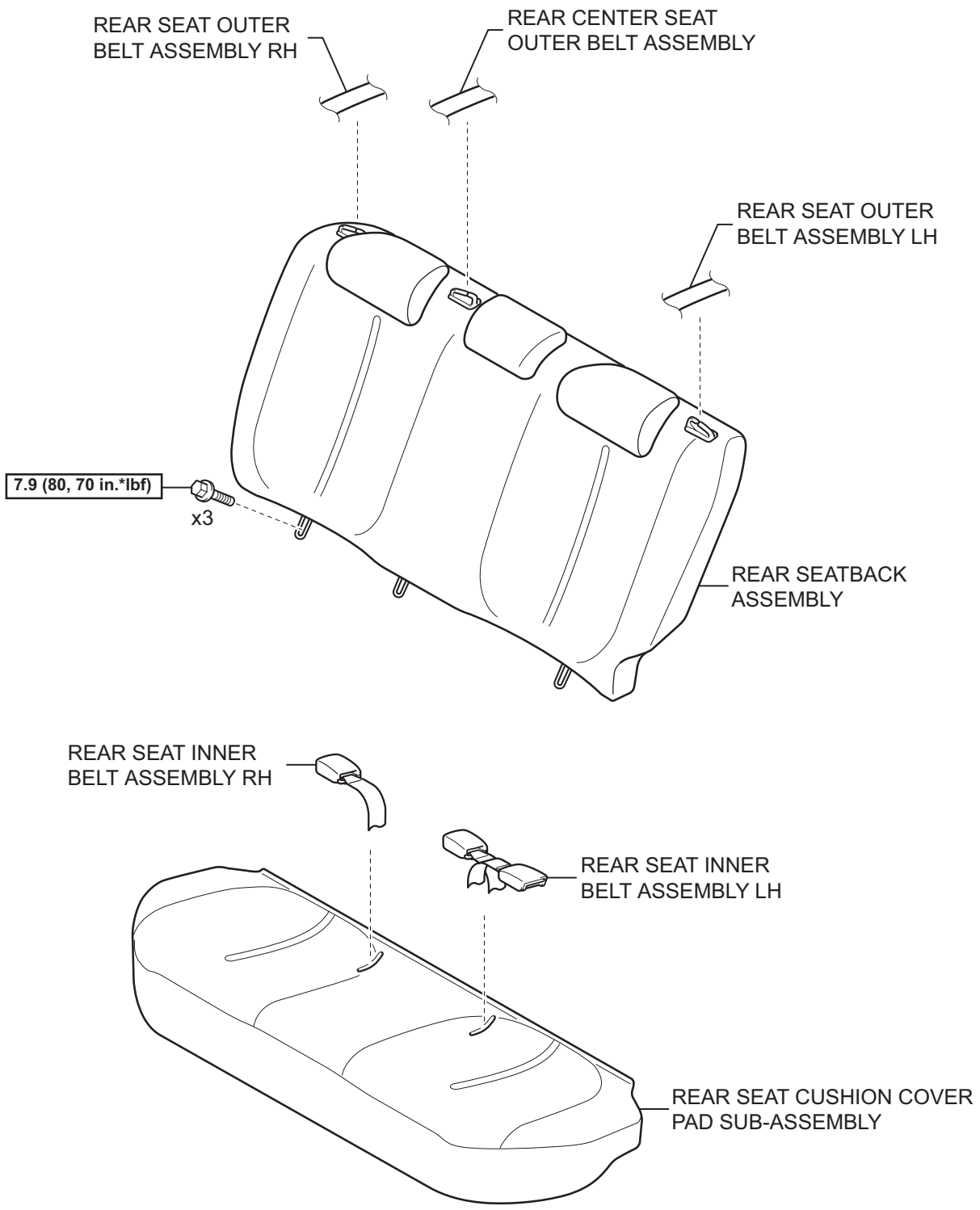

N*m (kgf*cm, ft*lbf) : Specified torque

T

B138611E01

SB

for 60/40 Split Seat Type:

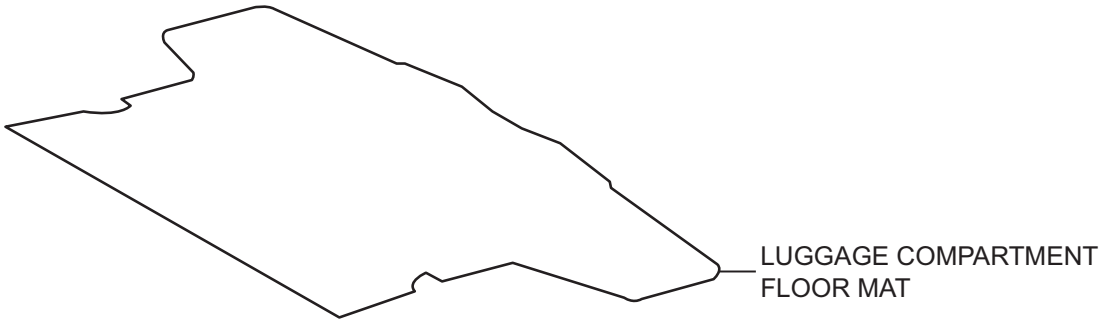

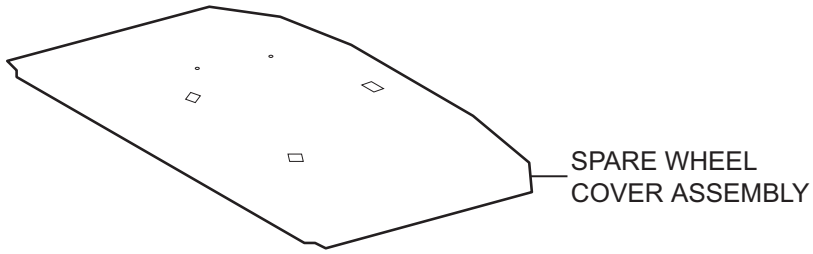

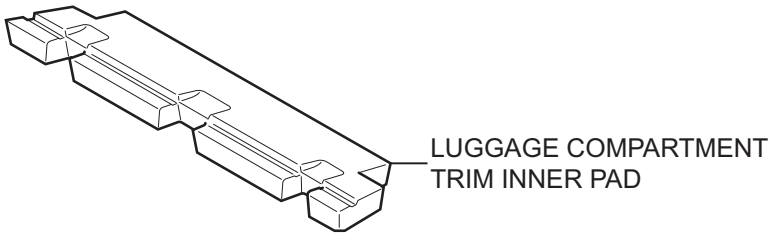

for Grand Tire:

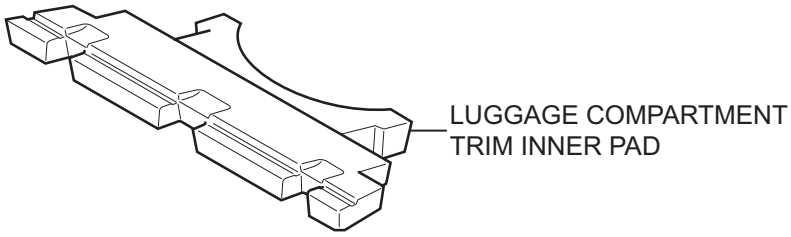

T

B138565E01

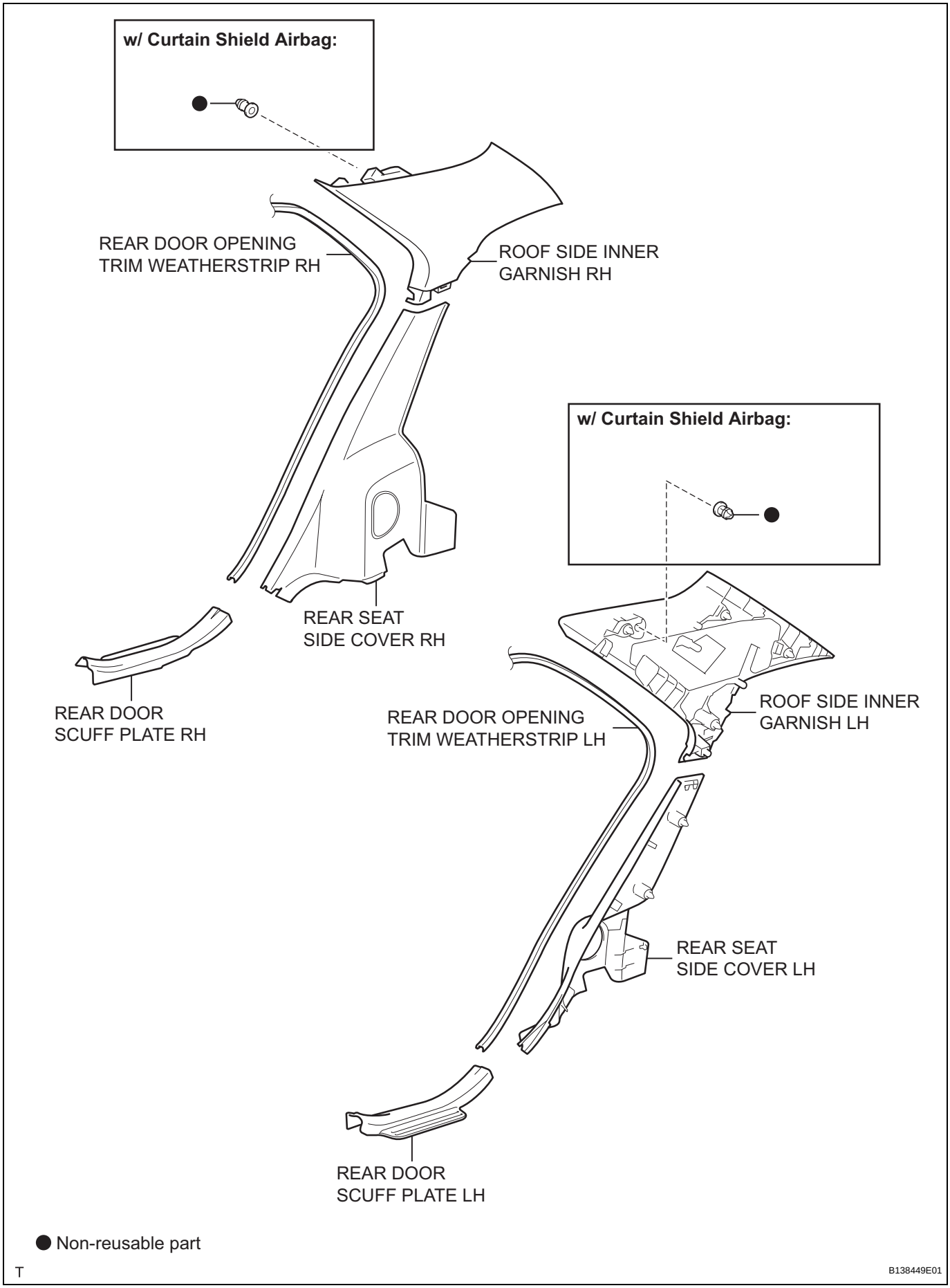
w/ Curtain Shield Airbag:
REAR DOOR OPENING TRIM WEATHERSTRIP RH
ROOF SIDE INNER GARNISH RH
REAR SEAT SIDE COVER RH
REAR DOOR SCUFF PLATE RH
w/ Curtain Shield Airbag:
ROOF SIDE INNER GARNISH LH
REAR DOOR OPENING TRIM WEATHERSTRIP LH
REAR SEAT SIDE COVER LH
REAR DOOR SCUFF PLATE LH
● Non-reusable part
T
B138449E01

SB

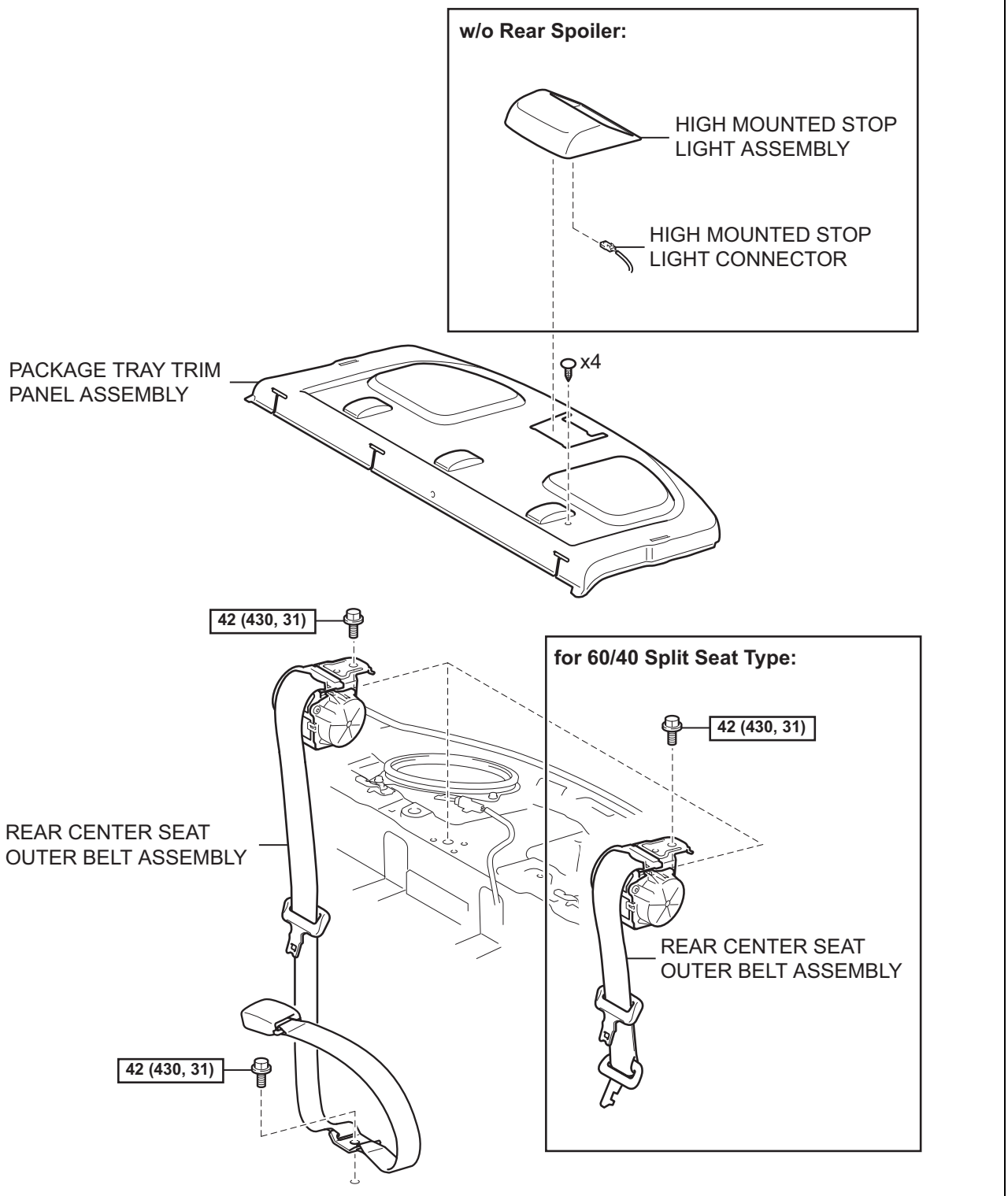

N*m (kgf*cm, ft*lbf) : Specified torque

T

B138564E02

REMOVAL

1. **DISCONNECT CABLE FROM NEGATIVE BATTERY TERMINAL (w/o Rear Spoiler)**
2. **REMOVE REAR SEAT CUSHION COVER PAD SUB-ASSEMBLY**
   (a) for 60/40 Split Seat Type:
      (1) Remove the rear seat cushion cover pad (See page SE-46).
   (b) for Fixed Seat Type:
      (1) Remove the rear seat cushion cover pad (See page SE-106).
3. **REMOVE REAR SEATBACK ASSEMBLY RH (for 60/40 Split Seat Type) (See page SE-57)**
4. **REMOVE REAR SEATBACK ASSEMBLY LH (for 60/40 Split Seat Type) (See page SE-46)**
5. **REMOVE REAR SEATBACK ASSEMBLY (for Fixed Seat Type) (See page SE-106)**
6. **REMOVE LUGGAGE COMPARTMENT FLOOR MAT (for 60/40 Split Seat Type) (See page ED-133)**
7. **REMOVE SPARE WHEEL COVER ASSEMBLY (for 60/40 Split Seat Type) (See page ED-133)**
8. **REMOVE LUGGAGE COMPARTMENT TRIM INNER PAD (for 60/40 Split Seat Type) (See page ED-134)**
9. **REMOVE REAR DOOR SCUFF PLATE RH (See page IR-15)**
10. **REMOVE REAR DOOR SCUFF PLATE LH (See page IR-15)**
11. **REMOVE REAR DOOR OPENING TRIM WEATHERSTRIP RH (See page AV-173)**
12. **REMOVE REAR DOOR OPENING TRIM WEATHERSTRIP LH (See page AV-173)**
13. **REMOVE REAR SEAT SIDE COVER RH (See page IR-16)**
14. **REMOVE REAR SEAT SIDE COVER LH (See page IR-16)**
15. **REMOVE ROOF SIDE INNER GARNISH RH (See page IR-16)**
16. **REMOVE ROOF SIDE INNER GARNISH LH (See page IR-16)**
17. **REMOVE HIGH MOUNTED STOP LIGHT ASSEMBLY (w/o Rear Spoiler) (See page LI-141)**
18. **REMOVE PACKAGE TRAY TRIM PANEL ASSEMBLY (See page AV-173)**

SB

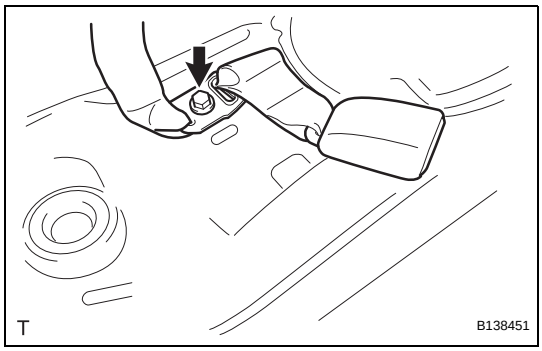

19. REMOVE REAR CENTER SEAT OUTER BELT ASSEMBLY

(a) for Fixed Seat Type:

(1) Remove the bolt and the anchor plate.

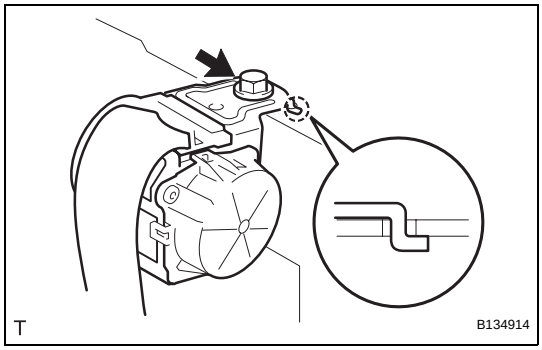

(b) Remove the bolt, the hook and the retractor.

INSTALLATION

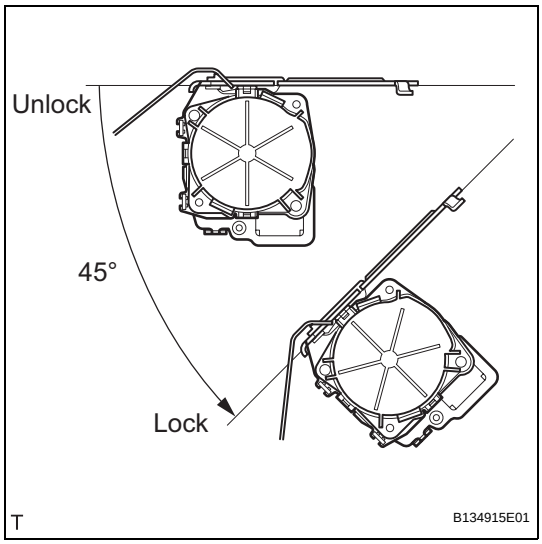

1. INSTALL REAR CENTER SEAT OUTER BELT ASSEMBLY

(a) Check the angle of inclination required to lock the retractor.

(1) Gently incline the retractor from its initial position. Check that the belt does not lock when the retractor is inclined 15° or less in any direction. Also, check that the belt locks when the inclination of the retractor is 45° or more.
NOTICE:
Do not disassemble the retractor.
If the operation is not as specified, replace the rear center seat outer belt.

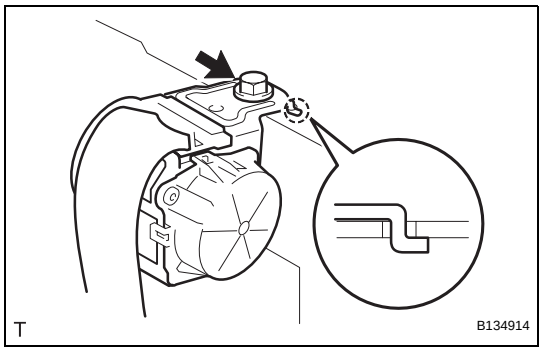

(b) Insert the hook into the body hole and install the retractor with the bolt.

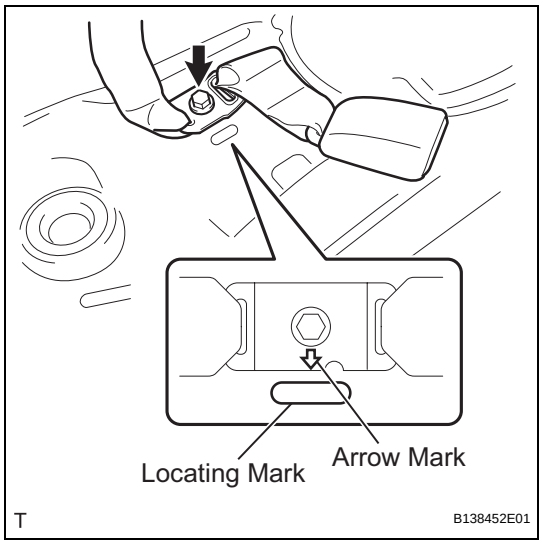

(c) for Fixed Seat Type:

(1) Install the anchor plate with the bolt.

Torque: 42 N*m (430 kgf*cm, 31 ft.*lbf)

NOTICE:

- **Install the anchor plate with the arrow mark facing forward.**
- **Do not place the anchor plate over the locating mark area of the floor panel.**

(d) Check that the ELR locks.

NOTICE:

- **The check should be performed with the rear seat outer belt installed.**
- **Do not allow the anchor part of the rear seat outer belt and the protruding parts of the floor panel to overlap.**

(1) With the belt installed, check that the belt locks when it is pulled out quickly.

If the operation is not as specified, replace the rear center seat outer belt.

2. **INSTALL PACKAGE TRAY TRIM PANEL ASSEMBLY (See page AV-174)**
3. **INSTALL HIGH MOUNTED STOP LIGHT ASSEMBLY (w/o Rear Spoiler) (See page LI-142)**
4. **INSTALL ROOF SIDE INNER GARNISH RH (See page IR-32)**
5. **INSTALL ROOF SIDE INNER GARNISH LH (See page IR-33)**
6. **INSTALL REAR SEAT SIDE COVER RH (See page IR-33)**
7. **INSTALL REAR SEAT SIDE COVER LH (See page IR-33)**
8. **INSTALL REAR DOOR OPENING TRIM WEATHERSTRIP RH (See page AV-175)**
9. **INSTALL REAR DOOR OPENING TRIM WEATHERSTRIP LH (See page AV-175)**
10. **INSTALL REAR DOOR SCUFF PLATE RH (See page IR-34)**
11. **INSTALL REAR DOOR SCUFF PLATE LH (See page IR-34)**
12. **INSTALL LUGGAGE COMPARTMENT TRIM INNER PAD (for 60/40 Split Seat Type) (See page ED-136)**
13. **INSTALL SPARE WHEEL COVER ASSEMBLY (for 60/40 Split Seat Type) (See page ED-137)**
14. **INSTALL LUGGAGE COMPARTMENT FLOOR MAT (for 60/40 Split Seat Type) (See page ED-137)**
15. **INSTALL REAR SEATBACK ASSEMBLY RH (for 60/40 Split Seat Type) (See page SE-65)**

16. **INSTALL REAR SEATBACK ASSEMBLY LH (for 60/40 Split Seat Type) (See page SE-52)**

17. **INSTALL REAR SEATBACK ASSEMBLY (for Fixed Seat Type) (See page SE-108)**

18. **INSTALL REAR SEAT CUSHION COVER PAD SUB-ASSEMBLY**
    (a) for 60/40 Split Seat Type:
        (1) Install the rear seat cushion cover pad (See page SE-53).
    (b) for Fixed Seat Type:
        (1) Install the rear seat cushion cover pad (See page SE-109).

19. **CONNECT CABLE TO NEGATIVE BATTERY TERMINAL (w/o Rear Spoiler)**
    Torque: 5.4 N*m (55 kgf*cm, 48 in.*lbf)

REAR CENTER SEAT OUTER BELT ASSEMBLY (for Hatchback 5 Door)

COMPONENTS

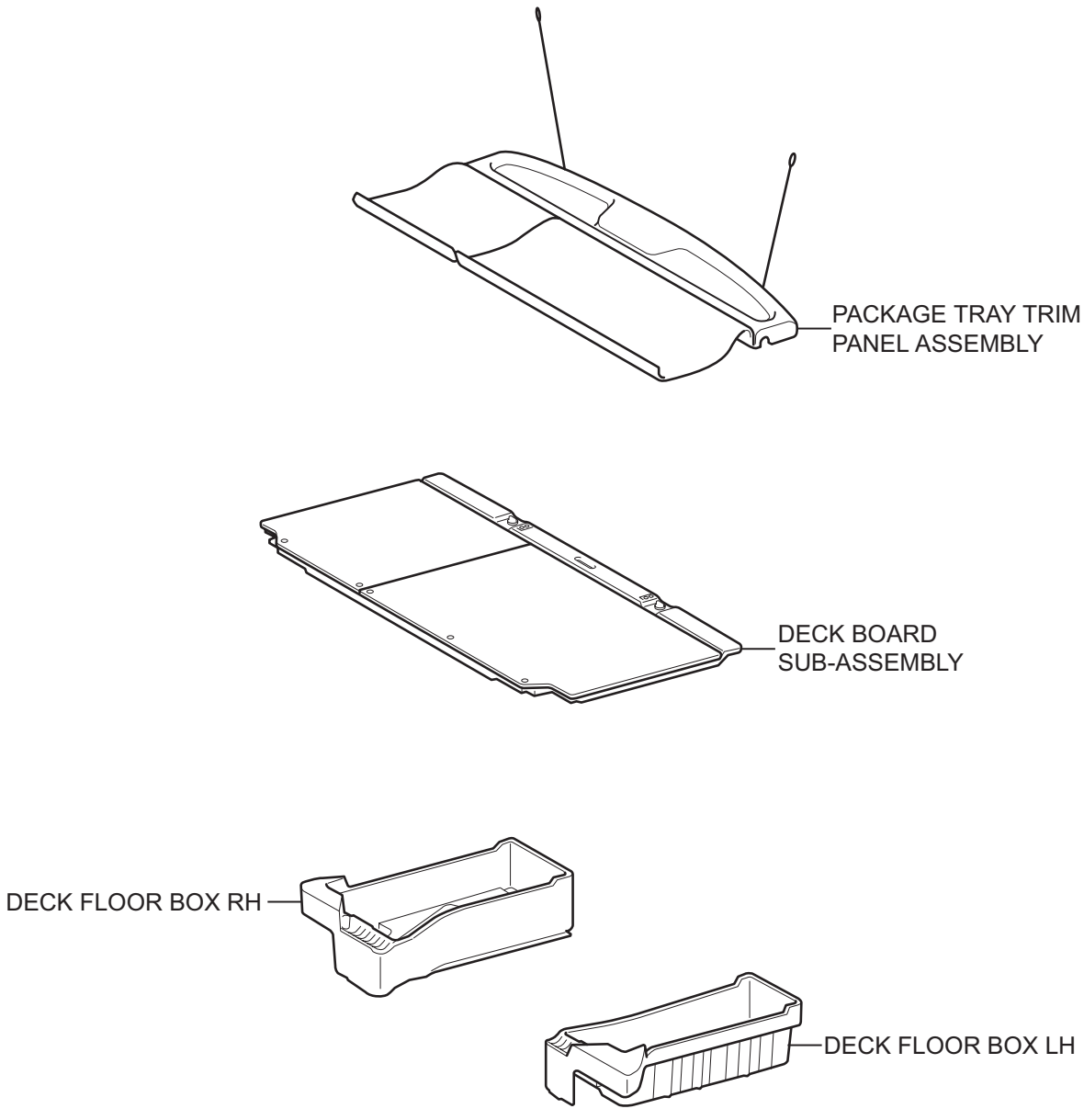

T

B114273E01

SB

for 60/40 Split Seat Type:

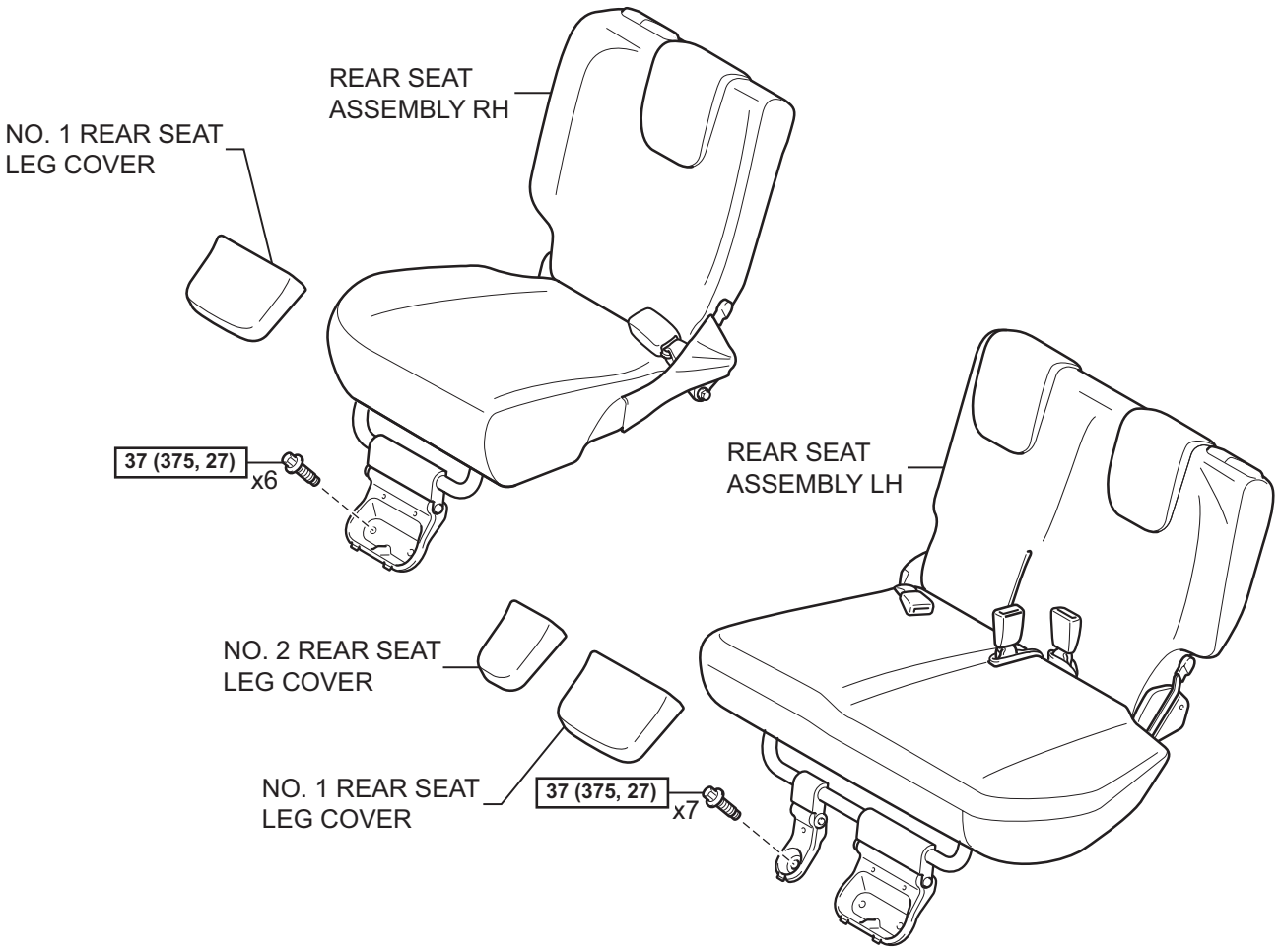

for Hold Down Seat Type:

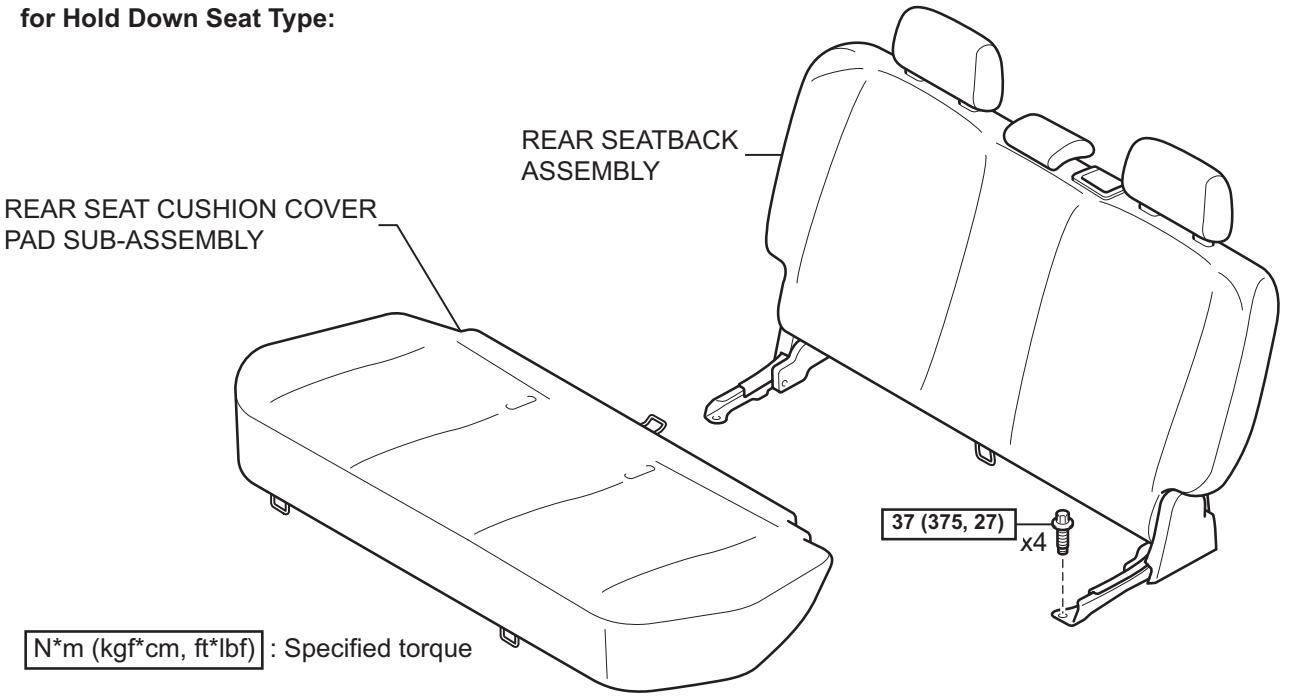

T

B121713E03

SB

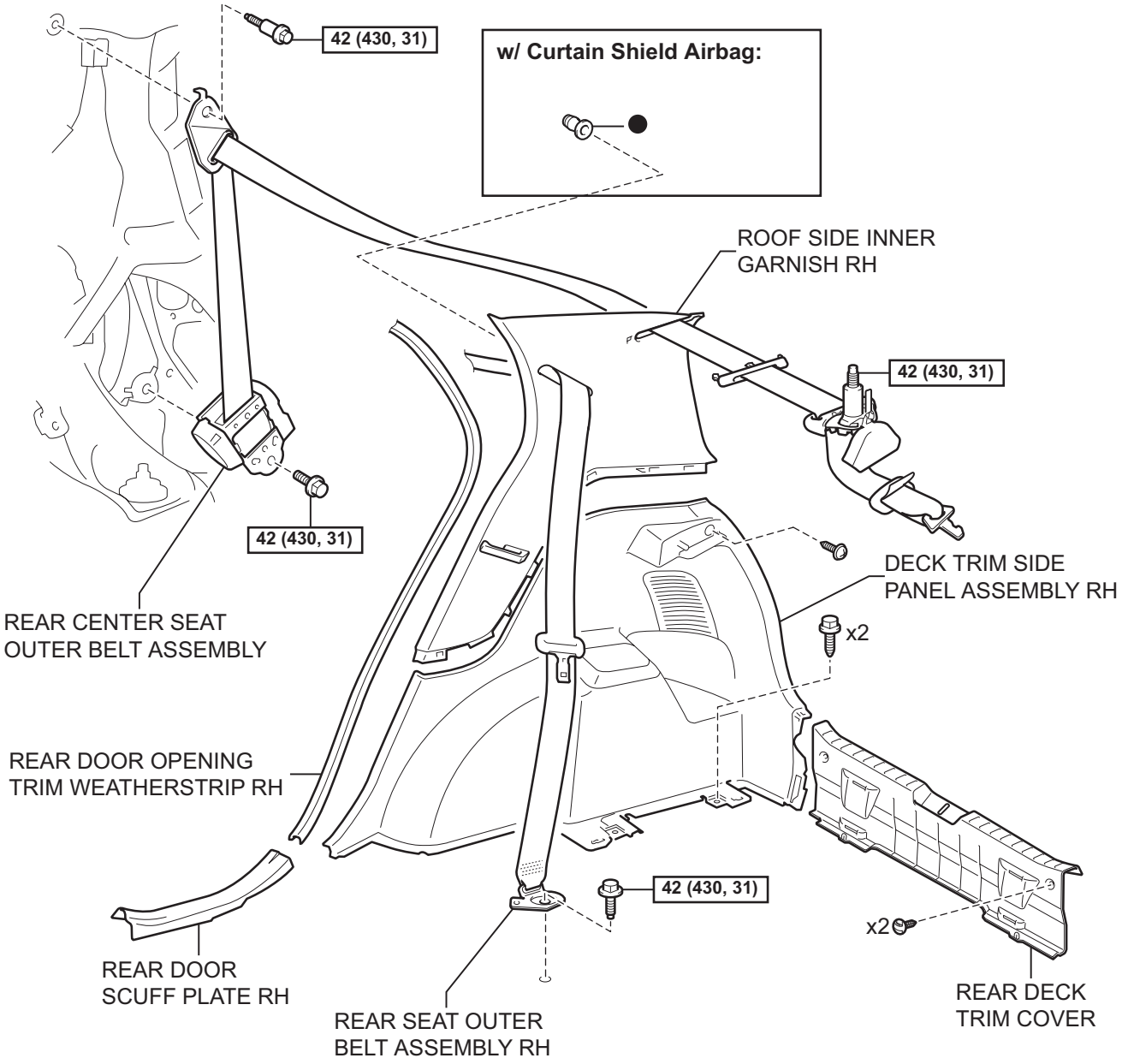

N*m (kgf*cm, ft*lbf) : Specified torque

● Non-reusable part

T

B114457E02

SB

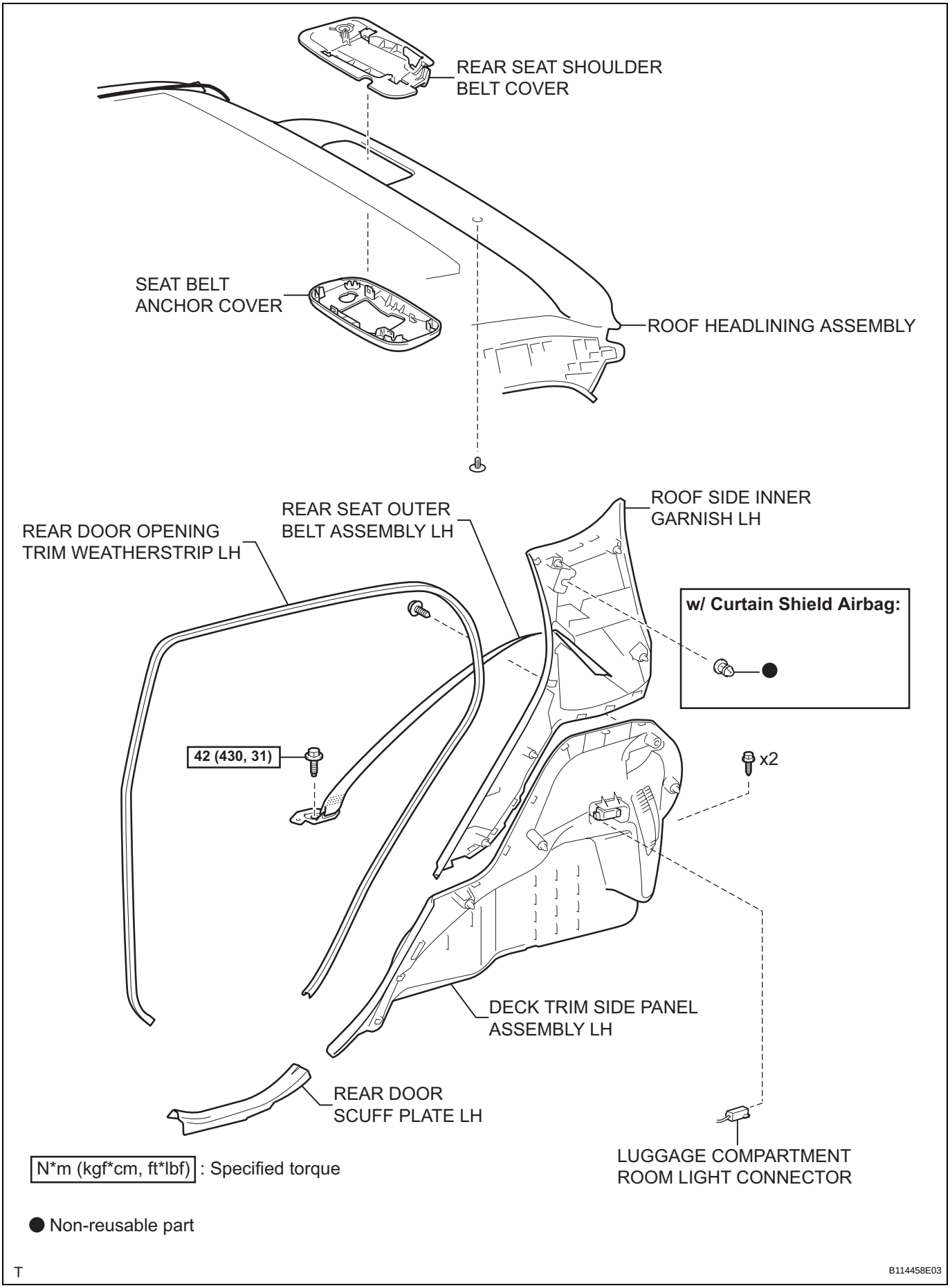

T

B114458E03

REMOVAL

CAUTION:
Always use "Torx" socket wrench E10 when removing the rear seat.

1. **DISCONNECT CABLE FROM NEGATIVE BATTERY TERMINAL**
2. **REMOVE PACKAGE TRAY TRIM PANEL ASSEMBLY (See page IR-48)**
3. **REMOVE DECK BOARD SUB-ASSEMBLY (See page IR-48)**
4. **REMOVE DECK FLOOR BOX RH (See page IR-48)**
5. **REMOVE DECK FLOOR BOX LH (See page IR-48)**
6. **REMOVE NO. 1 REAR SEAT LEG COVER (for 60/40 Split Seat Type)**
   (a) for RH side:
      (1) Remove the No. 1 rear seat leg cover (See page SE-89).
   (b) for LH side:
      (1) Remove the No. 1 rear seat leg cover (See page SE-70).
7. **REMOVE NO. 2 REAR SEAT LEG COVER (for 60/40 Split Seat Type) (See page SE-70)**
8. **REMOVE REAR SEAT ASSEMBLY RH (for 60/40 Split Seat Type) (See page SE-89)**
9. **REMOVE REAR SEAT ASSEMBLY LH (for 60/40 Split Seat Type) (See page SE-71)**
10. **REMOVE REAR SEAT CUSHION COVER PAD SUB-ASSEMBLY (for Hold Down Seat Type) (See page SE-114)**
11. **REMOVE REAR SEATBACK ASSEMBLY (for Hold Down Seat Type) (See page SE-115)**
12. **REMOVE REAR DOOR SCUFF PLATE RH (See page IR-51)**
13. **REMOVE REAR DOOR SCUFF PLATE LH (See page IR-51)**
14. **REMOVE REAR DOOR OPENING TRIM WEATHERSTRIP RH (See page SB-112)**
15. **REMOVE REAR DOOR OPENING TRIM WEATHERSTRIP LH**
    HINT:
    Use the same procedure as for the RH side.
16. **REMOVE REAR DECK TRIM COVER (See page IR-49)**
17. **REMOVE REAR SEAT OUTER BELT ASSEMBLY RH (See page IR-51)**
18. **REMOVE REAR SEAT OUTER BELT ASSEMBLY LH (See page IR-51)**

SB

19. REMOVE DECK TRIM SIDE PANEL ASSEMBLY RH (See page IR-52)

20. REMOVE DECK TRIM SIDE PANEL ASSEMBLY LH (See page IR-52)

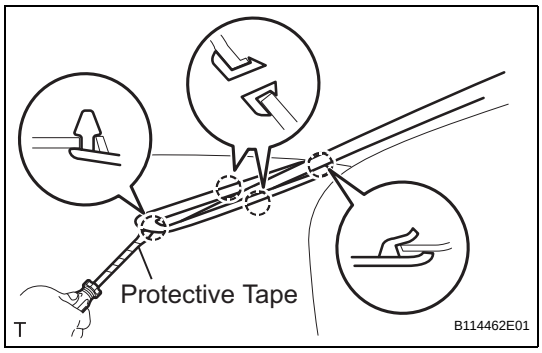

21. REMOVE ROOF SIDE INNER GARNISH RH

(a) Using a screwdriver with its tip wrapped in protective tape, disengage the 4 claws and remove the center belt guide.

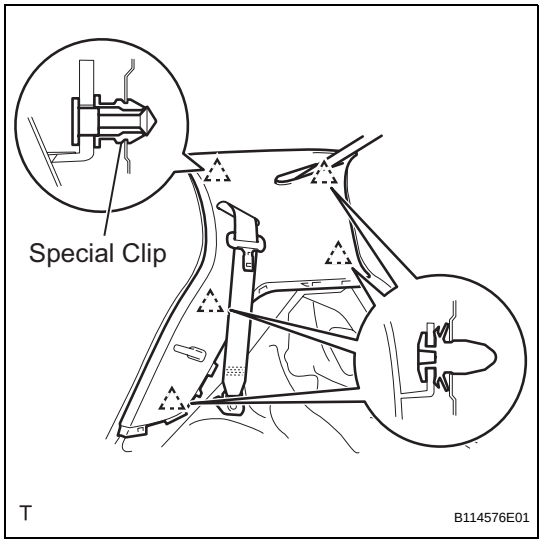

(b) w/ Curtain Shield Airbag:

NOTICE:

Replace the special clip with a new one when the roof side inner garnish is removed.

(1) Disengage the 5 clips.

(2) Pass the rear seat outer belt and the rear center seat outer belt through the slit in the roof side inner garnish and remove the roof side inner garnish.

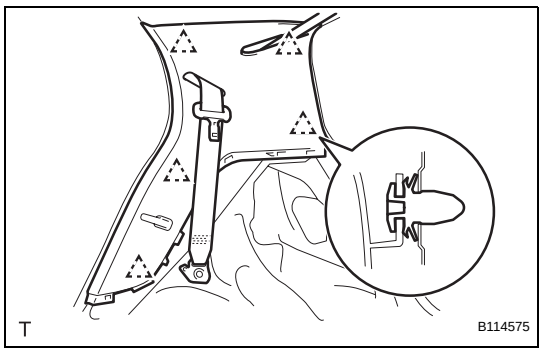

(c) w/o Curtain Shield Airbag:

(1) Disengage the 5 clips.

(2) Pass the rear seat outer belt and the rear center seat outer belt through the slit in the roof side inner garnish and remove the roof side inner garnish.

22. REMOVE ROOF SIDE INNER GARNISH LH (See page IR-54)

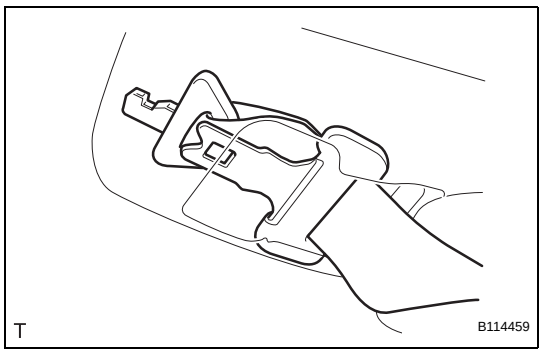

23. REMOVE REAR CENTER SEAT OUTER BELT ASSEMBLY

(a) Remove the 2 tongue plates.

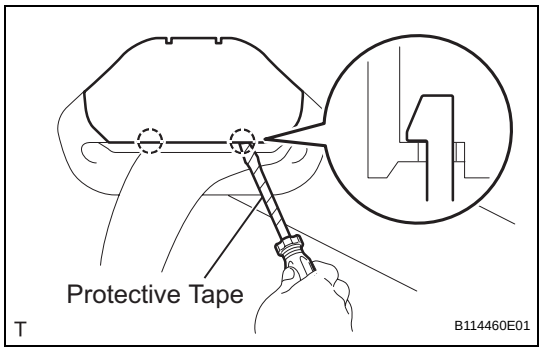

(b) Using a screwdriver with its tip wrapped in protective tape, disengage the 2 claws and open the slip joint cover.

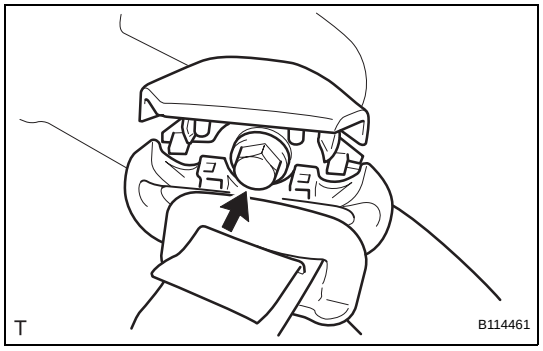

(c) Remove the bolt and the through anchor.

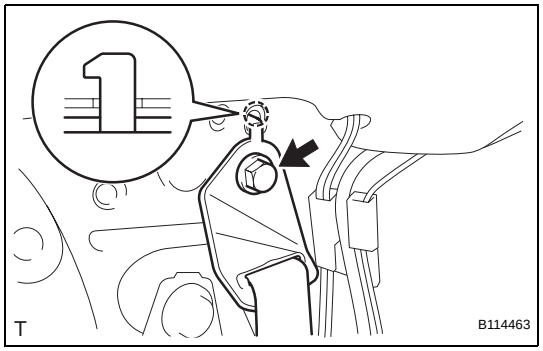

(d) Remove the bolt, the hook and the bracket.

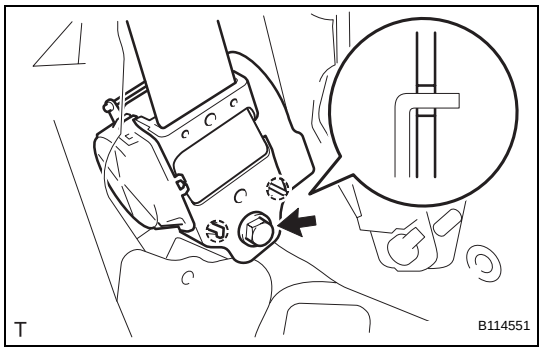

(e) Remove the bolt, the 2 hooks and the retractor.

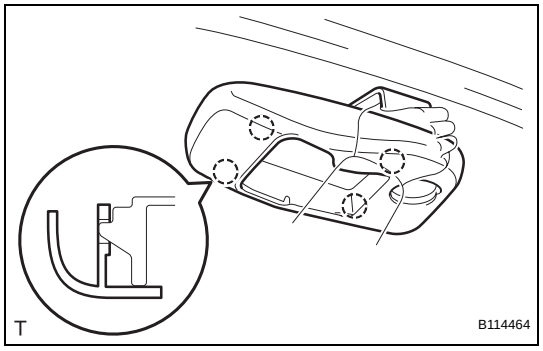

24. REMOVE SEAT BELT ANCHOR COVER

(a) Using a moulding remover, disengage the 4 claws and remove the seat belt anchor cover.

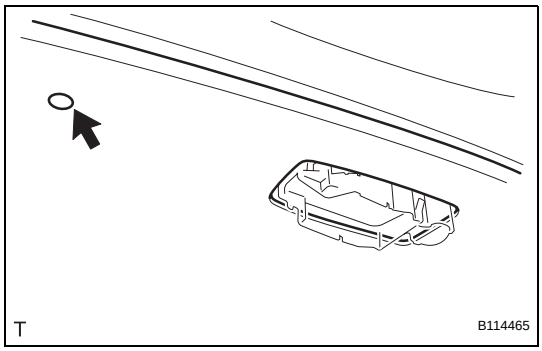

25. REMOVE ROOF HEADLINING ASSEMBLY

(a) Using a clip remover, remove the clip and the roof headlining.

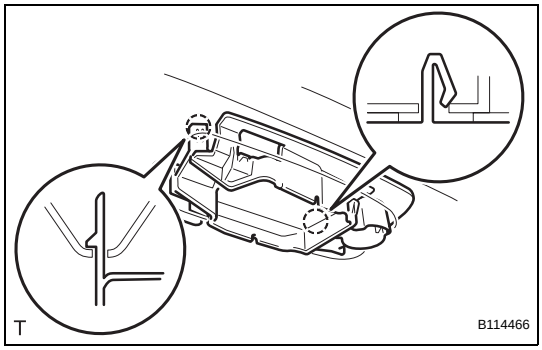

26. REMOVE REAR SEAT SHOULDER BELT COVER

(a) Disengage the 2 claws and remove the rear seat shoulder belt cover.

INSTALLATION

CAUTION:
Always use "Torx" socket wrench E10 when installing the rear seat.

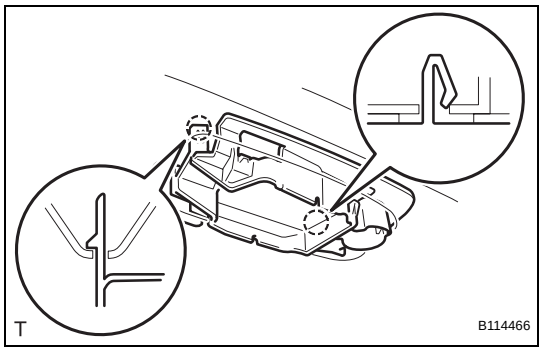

1. INSTALL REAR SEAT SHOULDER BELT COVER

(a) Engage the 2 claws and install the rear seat shoulder belt cover.

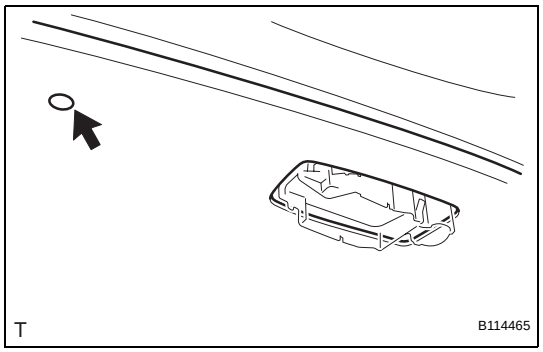

2. INSTALL ROOF HEADLINING ASSEMBLY

(a) Install the roof headlining with the clip.

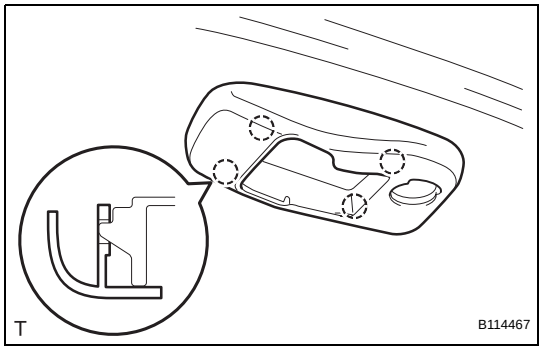

3. INSTALL SEAT BELT ANCHOR COVER

(a) Engage the 4 claws and install the seat belt anchor cover.

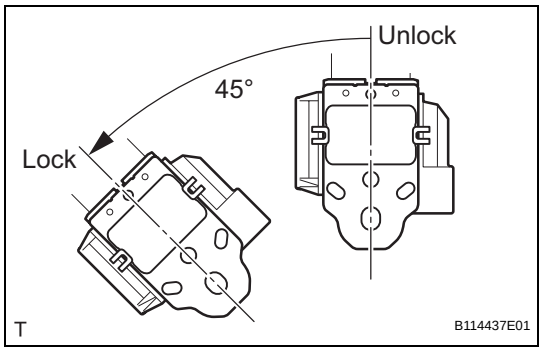

4. INSTALL REAR CENTER SEAT OUTER BELT ASSEMBLY

(a) Check the angle of inclination required to lock the retractor.

(1) Gently incline the retractor from its initial position. Check that the belt does not lock when the retractor is inclined 15° or less in any direction. Also, check that the belt locks when the inclination of the retractor is 45° or more.

NOTICE:
Do not disassemble the retractor.
If the operation is not as specified, replace the rear seat outer belt.

SB

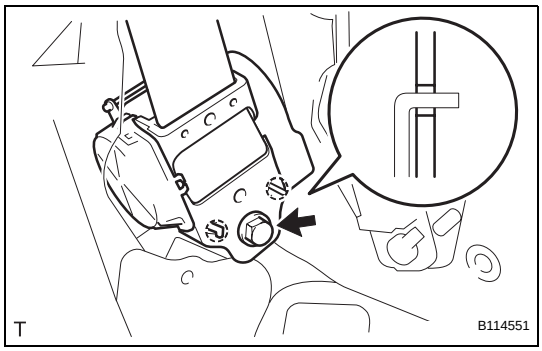

(b) Hook the lower stay of the retractor onto the 2 body hooks and install the retractor with the bolt.
Torque: 42 N*m (430 kgf*cm, 31 ft.*lbf)

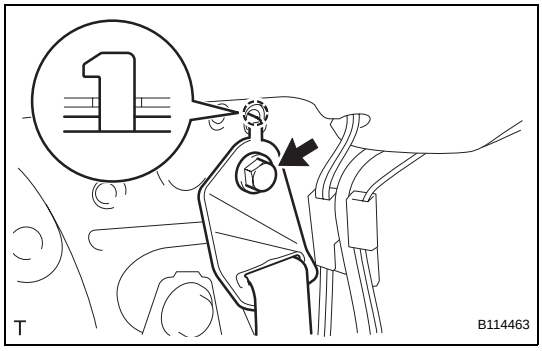

(c) Insert the hook into the body hole and install the bracket with the bolt.
Torque: 42 N*m (430 kgf*cm, 31 ft.*lbf)

(d) Check that the ELR locks.
NOTICE:
Perform the check with the rear center seat outer belt installed.
(1) With the belt installed, check that the belt locks when it is pulled out quickly.
If the operation is not as specified, replace the rear center seat outer belt.

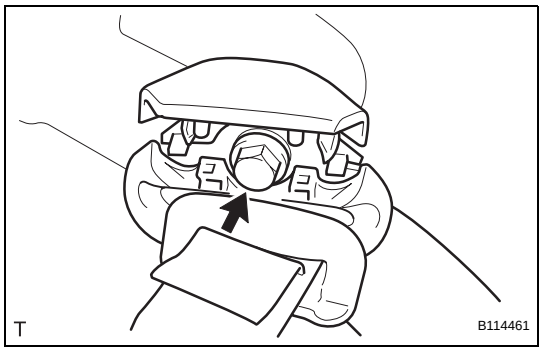

(e) Install the through anchor with the bolt.
Torque: 42 N*m (430 kgf*cm, 31 ft.*lbf)

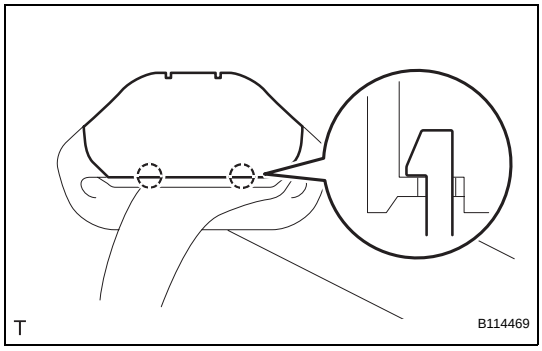

(f) Engage the 2 claws and close the slip joint cover.

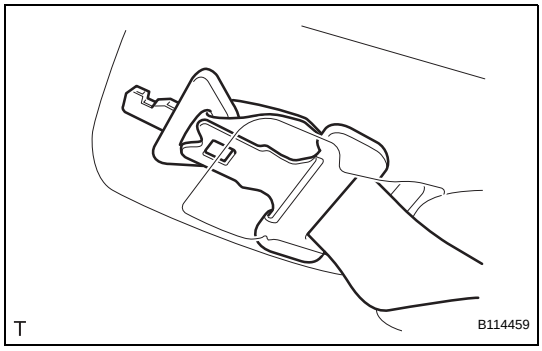

(g) Install the 2 tongue plates.

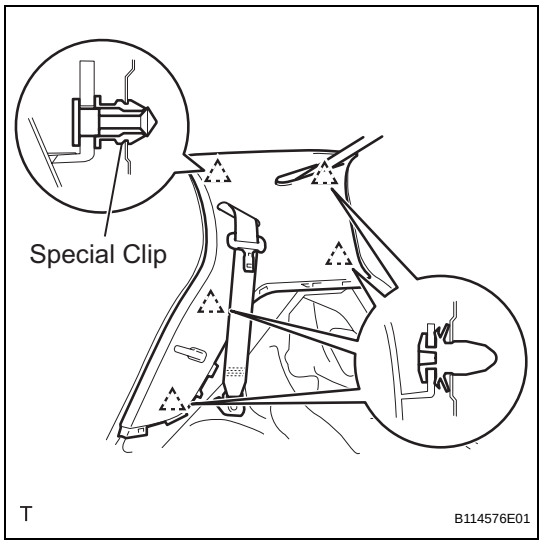

5. INSTALL ROOF SIDE INNER GARNISH RH

(a) w/ Curtain Shield Airbag:

(1) Install a new special clip.

(2) Pass the rear seat outer belt and the rear center seat outer belt through the slit in the roof side inner garnish.

(3) Engage the 5 clips and install the roof side inner garnish.

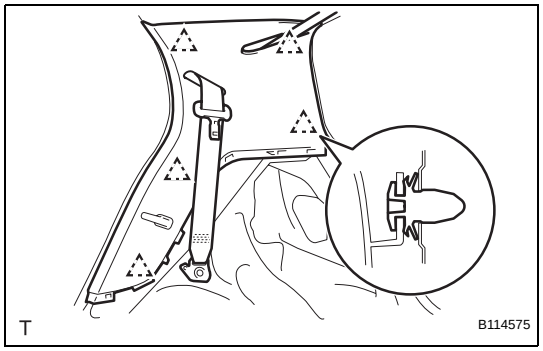

(b) w/o Curtain Shield Airbag:

(1) Pass the rear seat outer belt and the rear center seat outer belt through the slit in the roof side inner garnish.

(2) Engage the 5 clips and install the roof side inner garnish.

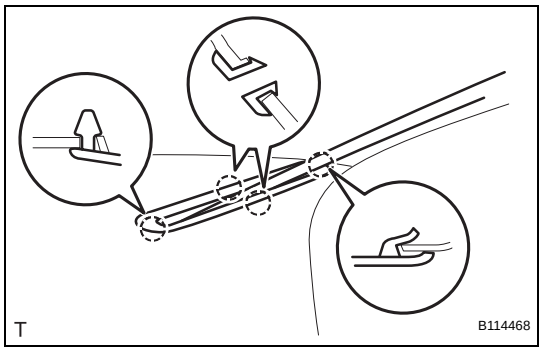

(c) Engage the 4 claws and install the center belt guide.

6. INSTALL ROOF SIDE INNER GARNISH LH (See page IR-77)

7. INSTALL DECK TRIM SIDE PANEL ASSEMBLY RH (See page IR-79)

8. INSTALL DECK TRIM SIDE PANEL ASSEMBLY LH (See page IR-79)

9. INSTALL REAR SEAT OUTER BELT ASSEMBLY RH (See page IR-79)

10. INSTALL REAR SEAT OUTER BELT ASSEMBLY LH (See page IR-80)

11. INSTALL REAR DECK TRIM COVER (See page IR-82)

12. INSTALL REAR DOOR OPENING TRIM WEATHERSTRIP RH (See page SB-119)

13. INSTALL REAR DOOR OPENING TRIM WEATHERSTRIP LH

HINT:

Use the same procedure as for the RH side.

14. INSTALL REAR DOOR SCUFF PLATE RH (See page IR-80)

15. INSTALL REAR DOOR SCUFF PLATE LH (See page IR-80)

SB

16. **INSTALL REAR SEAT ASSEMBLY LH (for 60/40 Split Seat Type) (See page SE-84)**

17. **INSTALL REAR SEAT ASSEMBLY RH (for 60/40 Split Seat Type) (See page SE-102)**

18. **INSTALL NO. 2 REAR SEAT LEG COVER (for 60/40 Split Seat Type) (See page SE-85)**

19. **INSTALL NO. 1 REAR SEAT LEG COVER (for 60/40 Split Seat Type)**
    (a) for RH Side:
        (1) Install the No. 1 rear seat leg cover (See page SE-103).
    (b) for LH Side:
        (1) Install the No. 1 rear seat leg cover (See page SE-85).

20. **INSTALL REAR SEATBACK ASSEMBLY (for Hold Down Seat Type) (See page SE-122)**

21. **INSTALL REAR SEAT CUSHION COVER PAD SUB-ASSEMBLY (for Hold Down Seat Type) (See page SE-123)**

22. **INSTALL DECK FLOOR BOX RH (See page IR-83)**

23. **INSTALL DECK FLOOR BOX LH (See page IR-83)**

24. **INSTALL DECK BOARD SUB-ASSEMBLY (See page IR-83)**

25. **INSTALL PACKAGE TRAY TRIM PANEL ASSEMBLY (See page IR-83)**

26. **CONNECT CABLE TO NEGATIVE BATTERY TERMINAL**
    Torque: 5.4 N*m (55 kgf*cm, 48 in.*lbf)

REAR CENTER SEAT OUTER BELT ASSEMBLY (for Hatchback 3 Door)

COMPONENTS

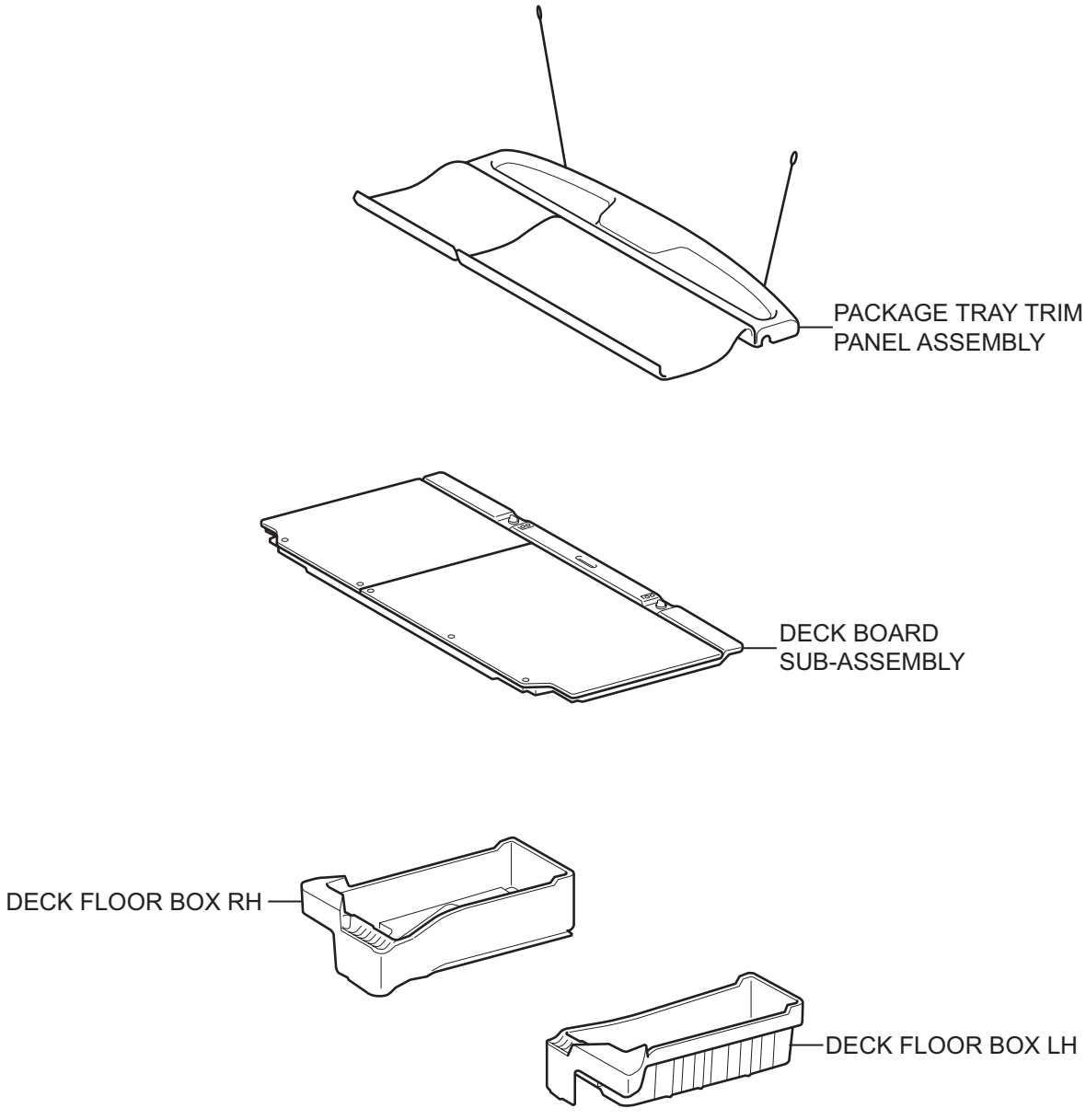

T

B114273E01

SB

for 60/40 Split Seat Type:

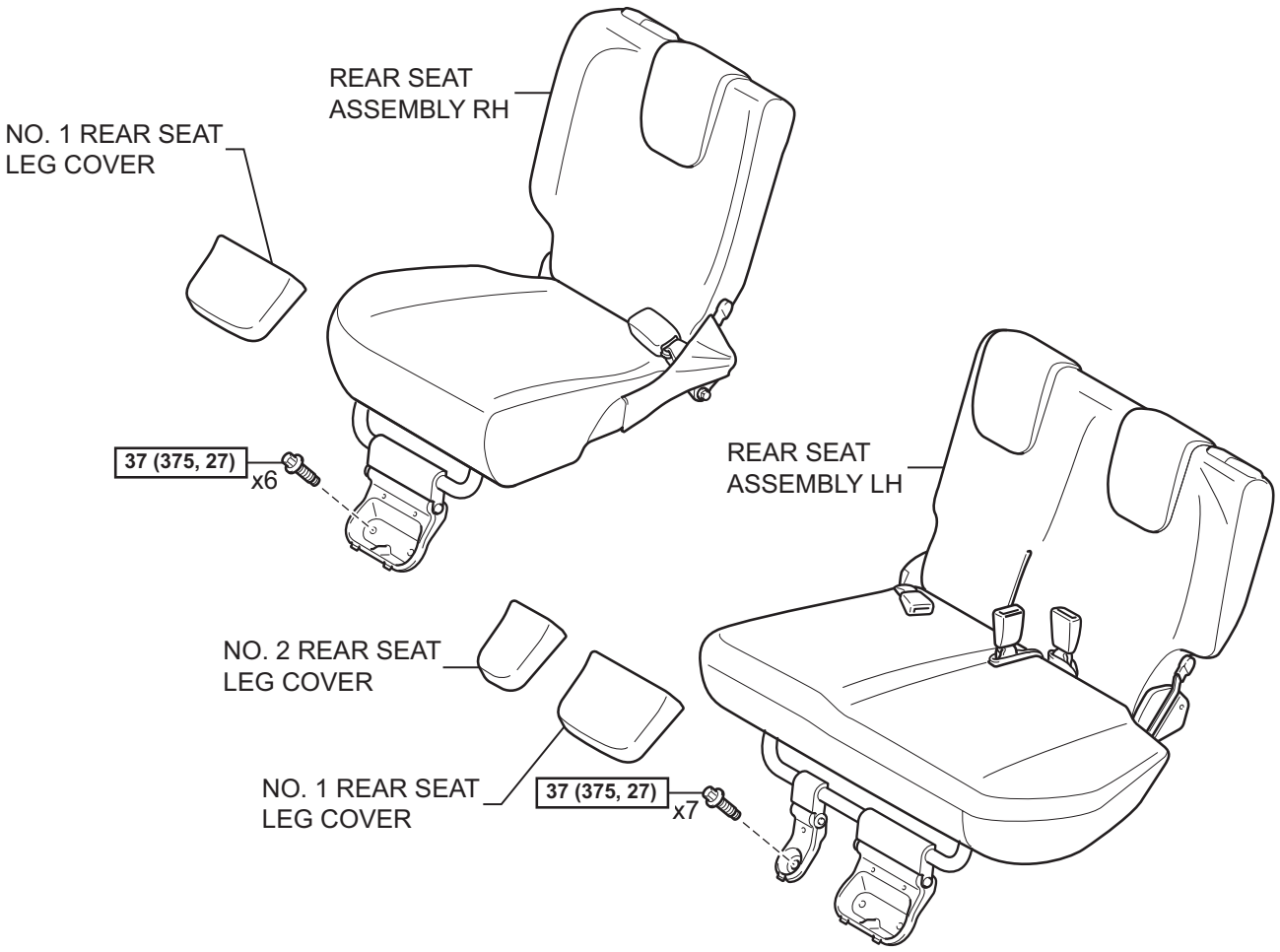

for Hold Down Seat Type:

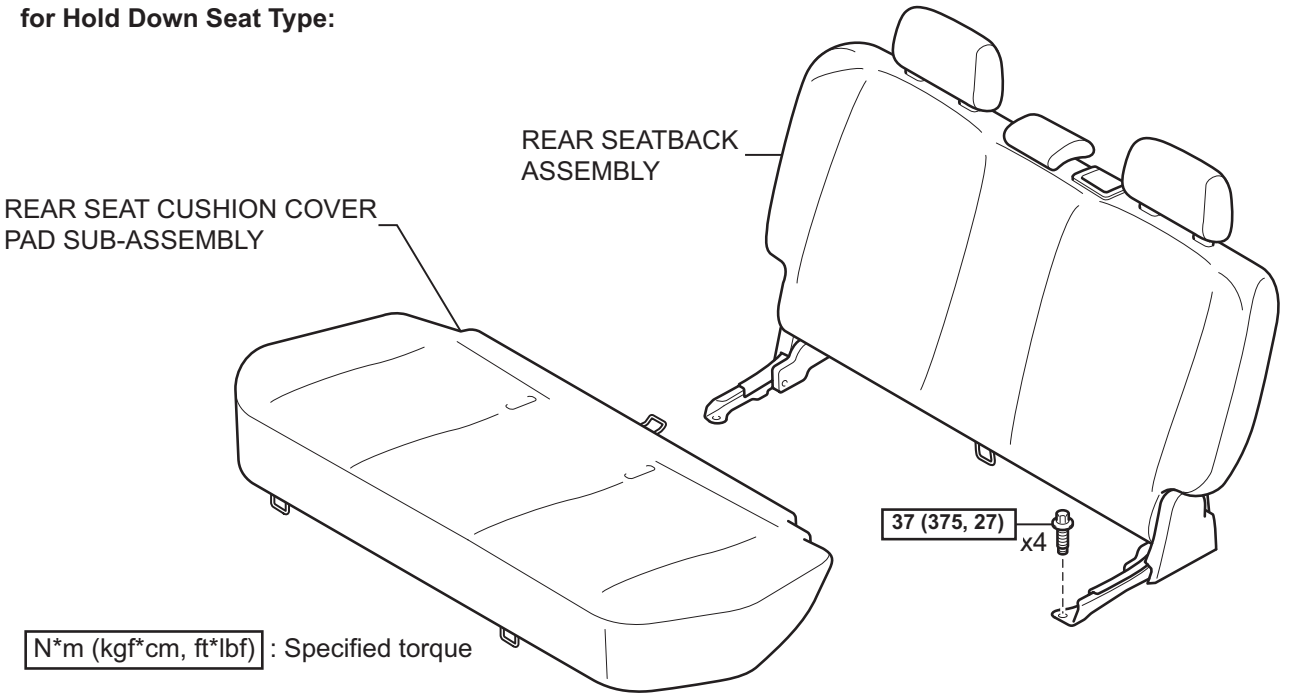

T

B121713E03

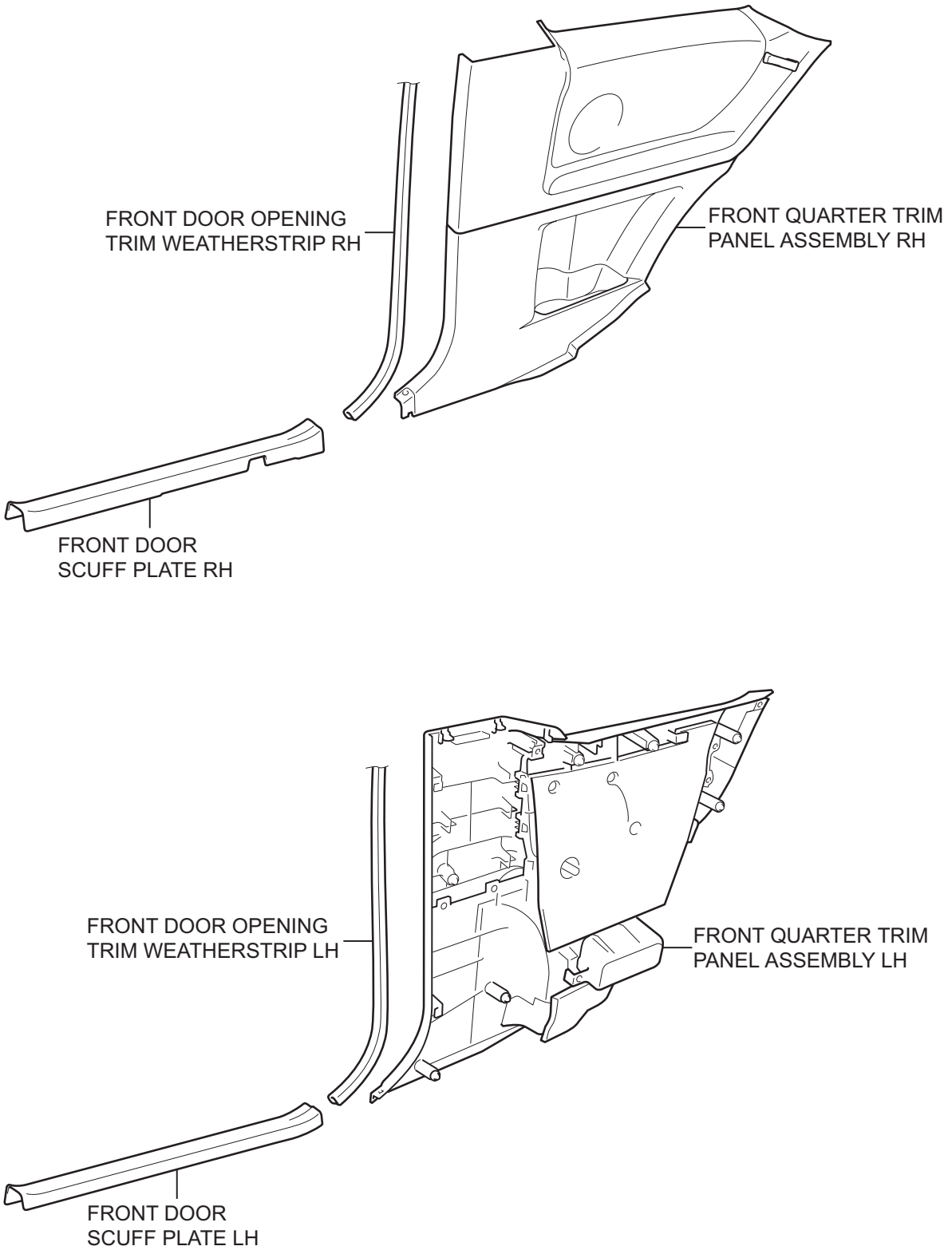

T

B114485E01

SB

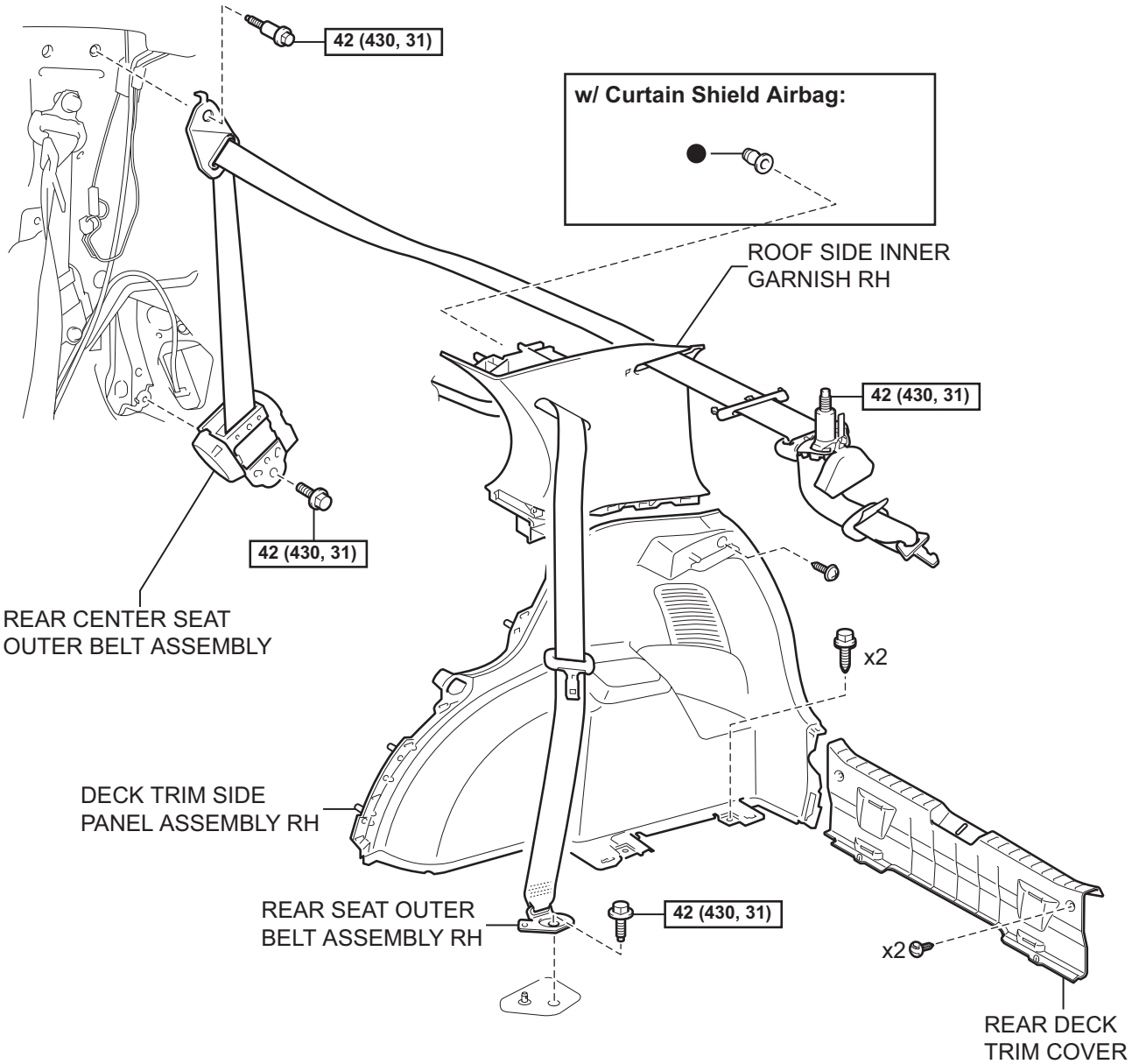

N*m (kgf*cm, ft*lbf) : Specified torque

● Non-reusable part

T

B114486E02

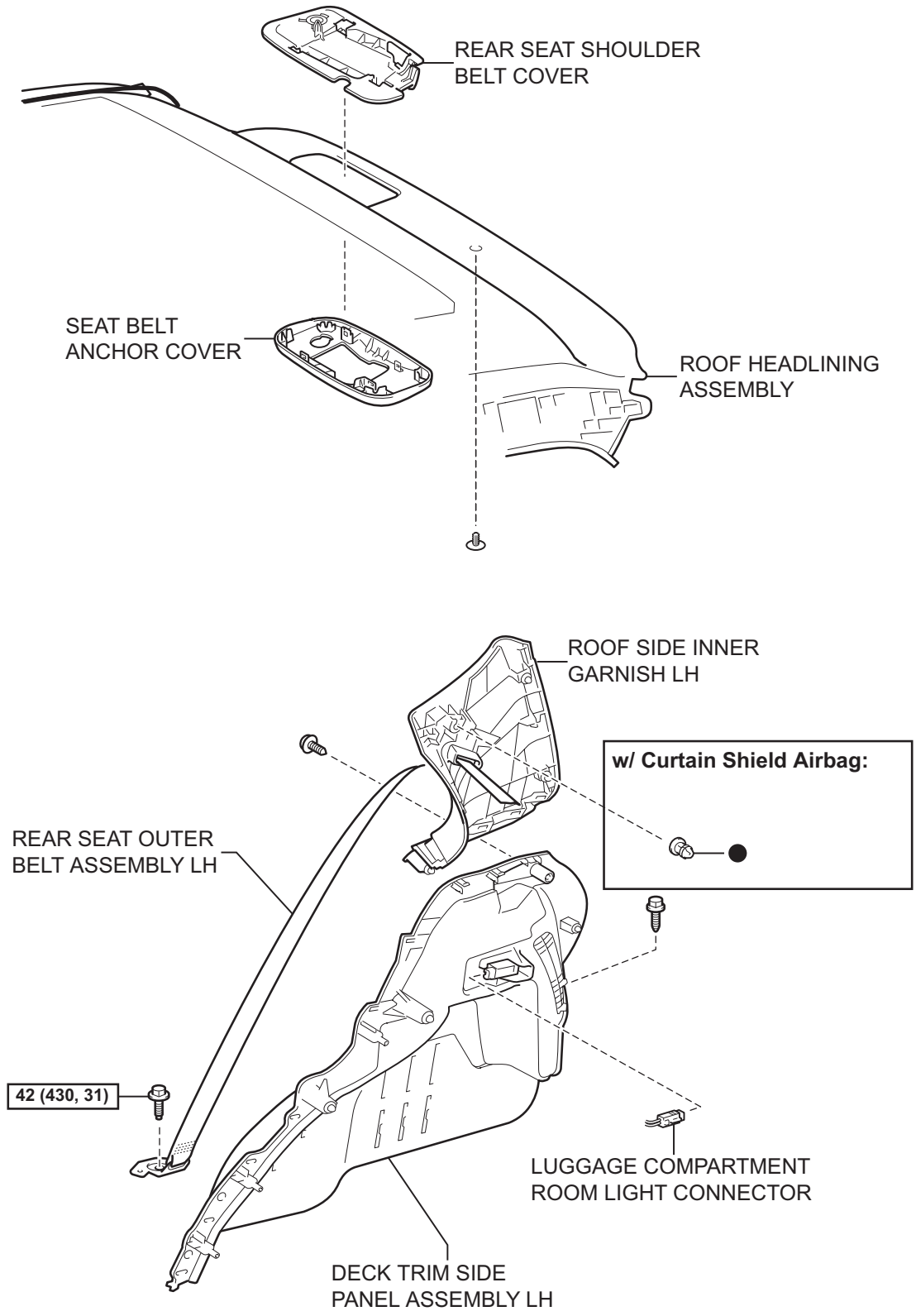

N*m (kgf*cm, ft*lbf) : Specified torque

● Non-reusable part

T

B114487E02

SB

REMOVAL

NOTICE:
Always use "Torx" socket wrench E10 when removing the rear seat.

1. **DISCONNECT CABLE FROM NEGATIVE BATTERY TERMINAL**
2. **REMOVE PACKAGE TRAY TRIM PANEL ASSEMBLY (See page IR-48)**
3. **REMOVE DECK BOARD SUB-ASSEMBLY (See page IR-48)**
4. **REMOVE DECK FLOOR BOX RH (See page IR-48)**
5. **REMOVE DECK FLOOR BOX LH (See page IR-48)**
6. **REMOVE NO. 1 REAR SEAT LEG COVER (for 60/40 Split Seat Type)**
   (a) for RH Side:
      (1) Remove the No. 1 rear seat leg cover (See page SE-89).
   (b) for LH Side:
      (1) Remove the No. 1 rear seat leg cover (See page SE-70).
7. **REMOVE NO. 2 REAR SEAT LEG COVER (for 60/40 Split Seat Type) (See page SE-70)**
8. **REMOVE REAR SEAT ASSEMBLY RH (for 60/40 Split Seat Type) (See page SE-89)**
9. **REMOVE REAR SEAT ASSEMBLY LH (for 60/40 Split Seat Type) (See page SE-71)**
10. **REMOVE REAR SEAT CUSHION COVER PAD SUB-ASSEMBLY (for Hold Down Seat Type) (See page SE-114)**
11. **REMOVE REAR SEATBACK ASSEMBLY (for Hold Down Seat Type) (See page SE-115)**
12. **REMOVE FRONT DOOR SCUFF PLATE RH (See page IR-97)**
13. **REMOVE FRONT DOOR SCUFF PLATE LH (See page IR-97)**
14. **REMOVE FRONT DOOR OPENING TRIM WEATHERSTRIP RH (See page SB-76)**
15. **REMOVE FRONT DOOR OPENING TRIM WEATHERSTRIP LH**
    HINT:
    Use the same procedure as for the RH side.
16. **REMOVE FRONT QUARTER TRIM PANEL ASSEMBLY RH (See page IR-97)**
17. **REMOVE FRONT QUARTER TRIM PANEL ASSEMBLY LH (See page IR-97)**
18. **REMOVE REAR DECK TRIM COVER (See page IR-49)**

19. REMOVE REAR SEAT OUTER BELT ASSEMBLY RH (See page IR-98)

20. REMOVE REAR SEAT OUTER BELT ASSEMBLY LH (See page IR-98)

21. REMOVE DECK TRIM SIDE PANEL ASSEMBLY RH (See page IR-98)

22. REMOVE DECK TRIM SIDE PANEL ASSEMBLY LH (See page IR-98)

23. REMOVE ROOF SIDE INNER GARNISH RH

(a) Using a screwdriver with its tip wrapped in protective tape, disengage the 4 claws and remove the center belt guide.

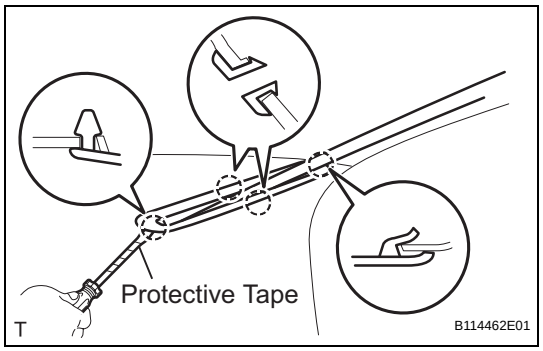

(b) w/ Curtain shield Airbag:

NOTICE:

Replace the special clip with a new one when the roof side inner garnish is removed.

(1) Disengage the 4 clips and the claw.

(2) Pass the rear seat outer belt and the rear center seat outer belt through the slit in the roof side inner garnish and remove the roof side inner garnish.

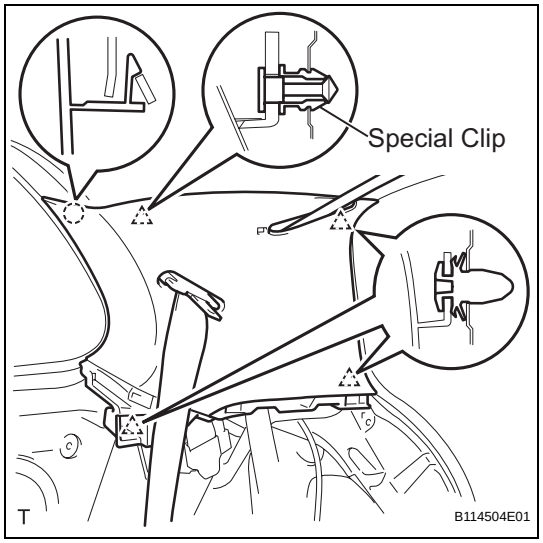

(c) w/o Curtain Shield Airbag:

(1) Disengage the 4 clips and the claw.

(2) Pass the rear seat outer belt and the rear center seat outer belt through the slit in the roof side inner garnish and remove the roof side inner garnish.

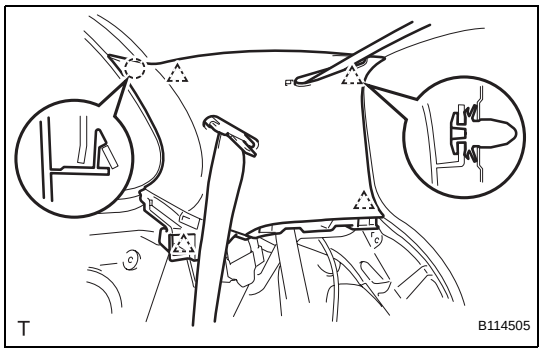

24. REMOVE ROOF SIDE INNER GARNISH LH (See page IR-100)

25. REMOVE REAR CENTER SEAT OUTER BELT ASSEMBLY (See page SB-158)

26. REMOVE SEAT BELT ANCHOR COVER (See page SB-159)

27. REMOVE ROOF HEADLINING ASSEMBLY (See page SB-160)

28. REMOVE REAR SEAT SHOULDER BELT COVER
(See page SB-160)

INSTALLATION

CAUTION:
Always use "Torx" socket wrench E10 when installing the rear seat.

1. **INSTALL REAR SEAT SHOULDER BELT COVER (See page SB-160)**
2. **INSTALL ROOF HEADLINING ASSEMBLY (See page SB-160)**
3. **INSTALL SEAT BELT ANCHOR COVER (See page SB-160)**
4. **INSTALL REAR CENTER SEAT OUTER BELT ASSEMBLY (See page SB-161)**
5. **INSTALL ROOF SIDE INNER GARNISH RH**
   (a) w/ Curtain Shield Airbag:
      (1) Install a new special clip onto the roof side inner garnish.
      (2) Pass the rear seat outer belt and the rear center seat outer belt through the slit in the roof side inner garnish.
      (3) Engage the 4 clips and the claw and install the roof side inner garnish.

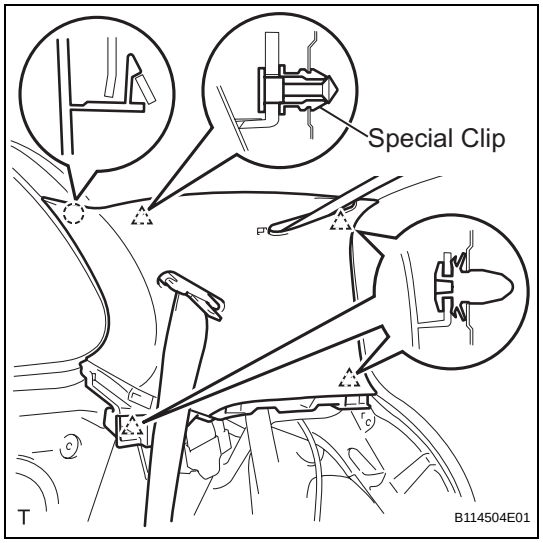

   (b) w/o Curtain Shield Airbag:
      (1) Pass the rear seat outer belt and the rear center seat outer belt through the slit in the roof side inner garnish.
      (2) Engage the 4 clips and the claw and install the roof side inner garnish.

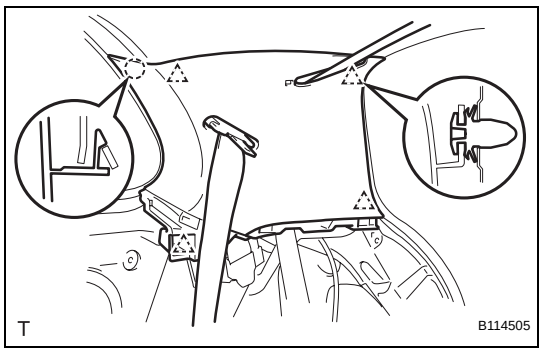

   (c) Engage the 4 claws and install the center belt guide.

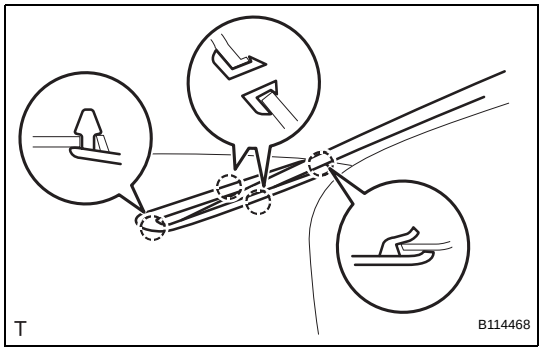

6. **INSTALL ROOF SIDE INNER GARNISH LH (See page IR-116)**
7. **INSTALL DECK TRIM SIDE PANEL ASSEMBLY RH (See page IR-117)**
8. **INSTALL DECK TRIM SIDE PANEL ASSEMBLY LH (See page IR-118)**
9. **INSTALL REAR SEAT OUTER BELT ASSEMBLY RH (See page IR-118)**

10. **INSTALL REAR SEAT OUTER BELT ASSEMBLY LH (See page IR-118)**
11. **INSTALL REAR DECK TRIM COVER (See page IR-82)**
12. **INSTALL FRONT QUARTER TRIM PANEL ASSEMBLY RH (See page IR-118)**
13. **INSTALL FRONT QUARTER TRIM PANEL ASSEMBLY LH (See page IR-119)**
14. **INSTALL FRONT DOOR OPENING TRIM WEATHERSTRIP RH (See page SB-80)**
15. **INSTALL FRONT DOOR OPENING TRIM WEATHERSTRIP LH**
    HINT:
    Use the same procedure as for the RH side.
16. **INSTALL FRONT DOOR SCUFF PLATE RH (See page IR-119)**
17. **INSTALL FRONT DOOR SCUFF PLATE LH (See page IR-119)**
18. **INSTALL REAR SEAT ASSEMBLY LH (for 60/40 Split Seat Type) (See page SE-84)**
19. **INSTALL REAR SEAT ASSEMBLY RH (for 60/40 Split Seat Type) (See page SE-102)**
20. **INSTALL NO. 2 REAR SEAT LEG COVER (for 60/40 Split Seat Type) (See page SE-85)**
21. **INSTALL NO. 1 REAR SEAT LEG COVER (for 60/40 Split Seat Type)**
    (a) for RH Side:
        (1) Install the No. 1 rear seat leg cover (See page SE-103).
    (b) for LH Side:
        (1) Install the No. 1 rear seat leg cover (See page SE-85).
22. **INSTALL REAR SEATBACK ASSEMBLY (for Hold Down Seat Type) (See page SE-122)**
23. **INSTALL REAR SEAT CUSHION COVER PAD SUB-ASSEMBLY (for Hold Down Seat Type) (See page SE-123)**
24. **INSTALL DECK FLOOR BOX RH (See page IR-83)**
25. **INSTALL DECK FLOOR BOX LH (See page IR-83)**
26. **INSTALL DECK BOARD SUB-ASSEMBLY (See page IR-83)**
27. **INSTALL PACKAGE TRAY TRIM PANEL ASSEMBLY (See page IR-83)**
28. **CONNECT CABLE TO NEGATIVE BATTERY TERMINAL**
    Torque: 5.4 N*m (55 kgf*cm, 48 in.*lbf)

CHILD RESTRAINT SEAT ANCHOR BRACKET (for Sedan)

COMPONENTS

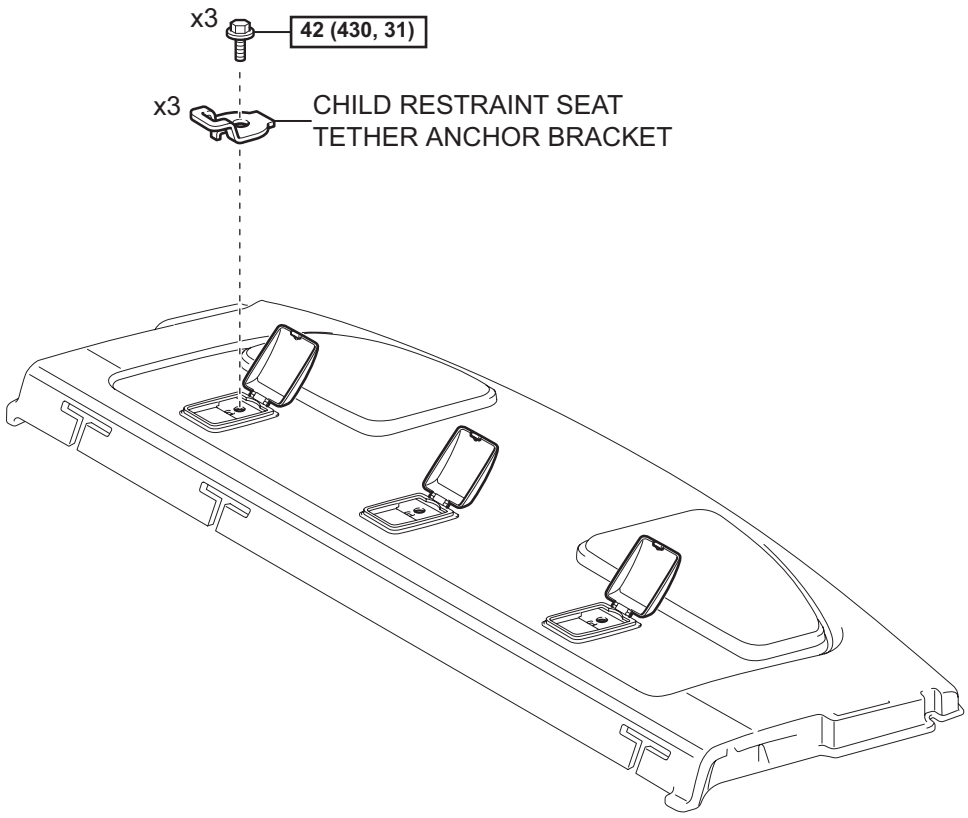

N*m (kgf*cm, ft*lbf) : Specified torque

T

B138377E01

SB

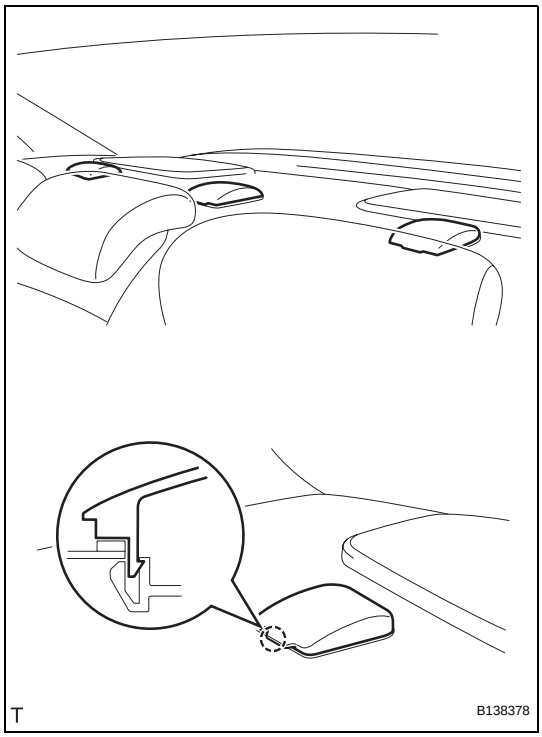

REMOVAL

1. REMOVE CHILD RESTRAINT SEAT TETHER ANCHOR BRACKET

HINT:

Use the same procedure to remove all the child restraint seat tether anchor brackets.

(a) Disengage the claw and open the package tray trim cover.

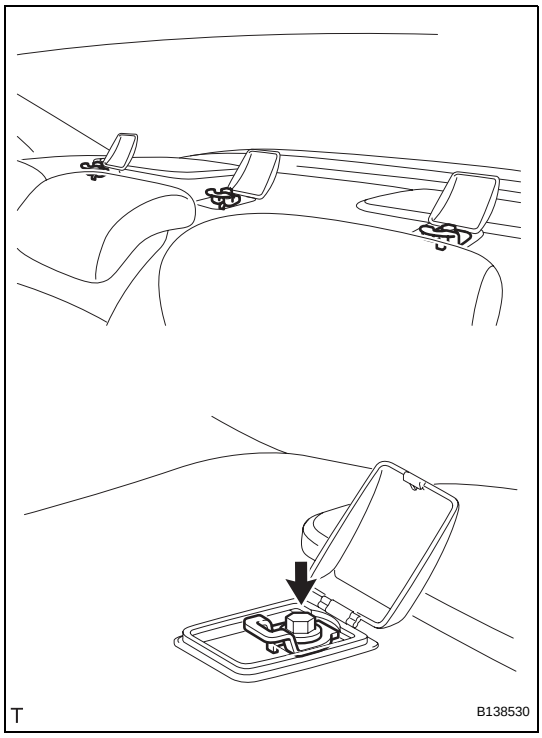

(b) Remove the bolt and the child restraint seat tether anchor bracket.

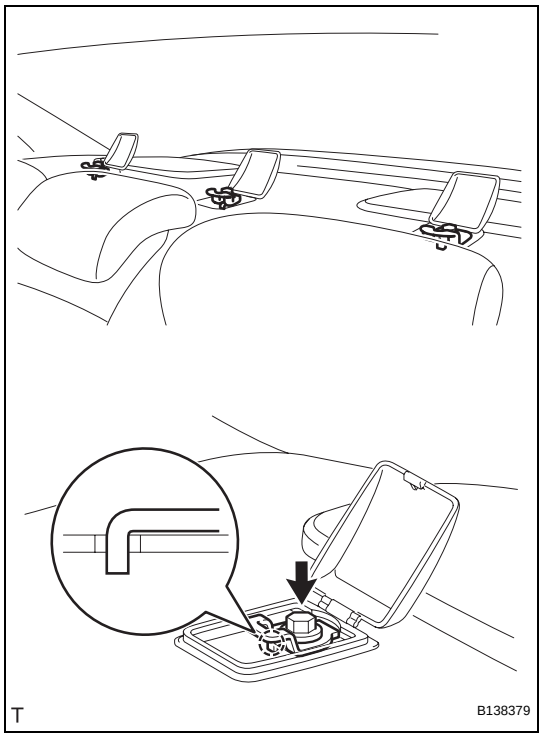

INSTALLATION

1. INSTALL CHILD RESTRAINT SEAT TETHER ANCHOR BRACKET

HINT:

Use the same procedure to install all the child restraint seat tether anchor brackets.

(a) Insert the hook into the body hole and install the child restraint seat tether anchor bracket with the bolt.

Torque: 42 N*m (430 kgf*cm, 31 ft.*lbf)

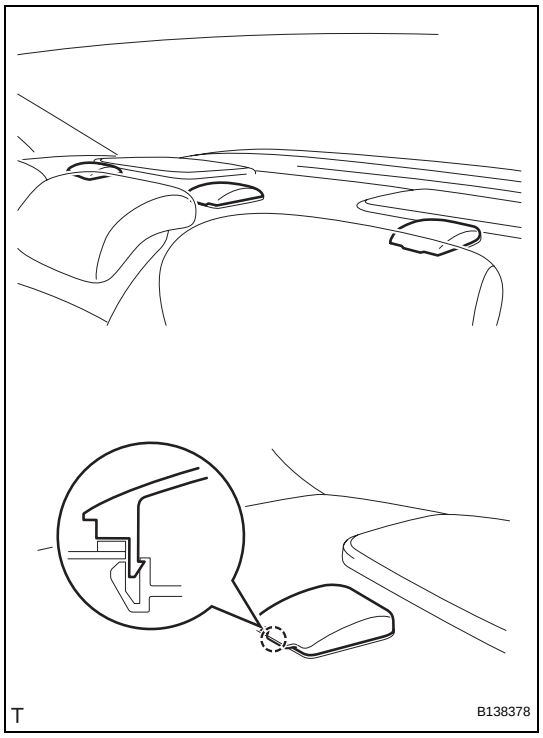

(b) Engage the claw and close the package tray rim cover.

THEFT DETERRENT SYSTEM

PARTS LOCATION

HATCHBACK:

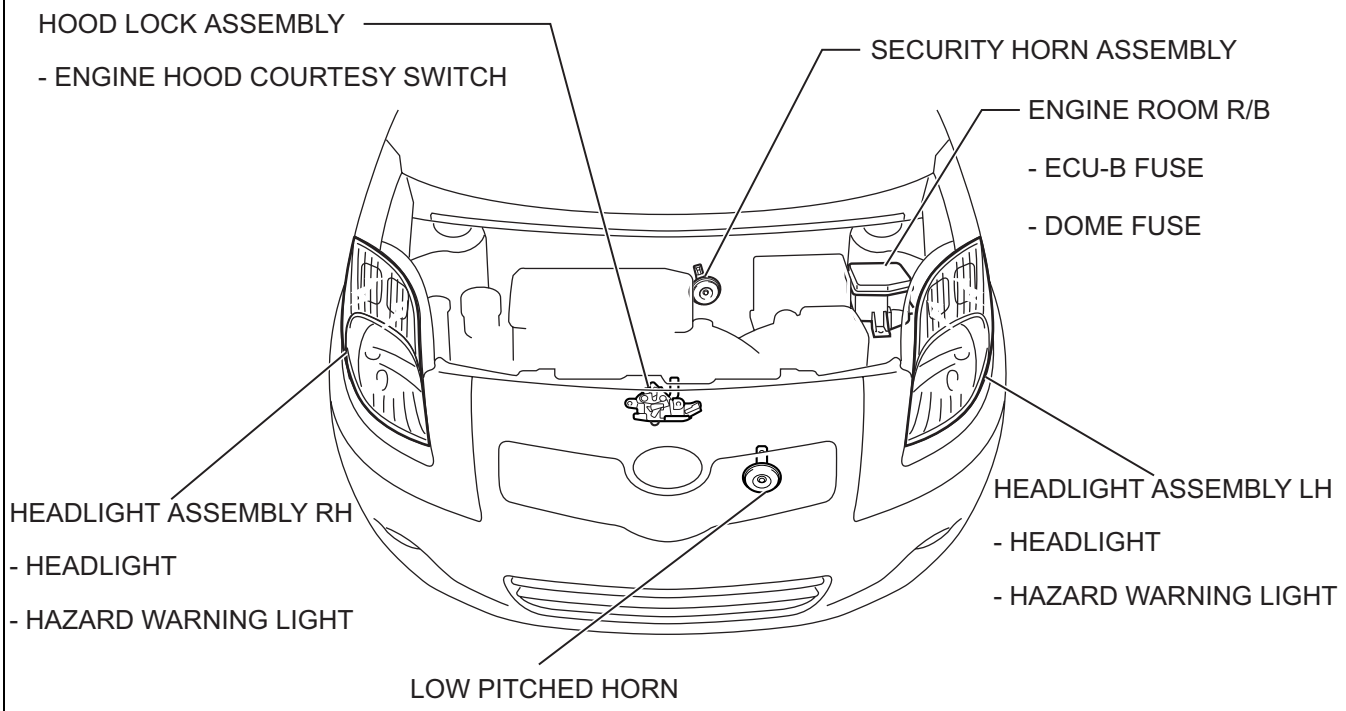

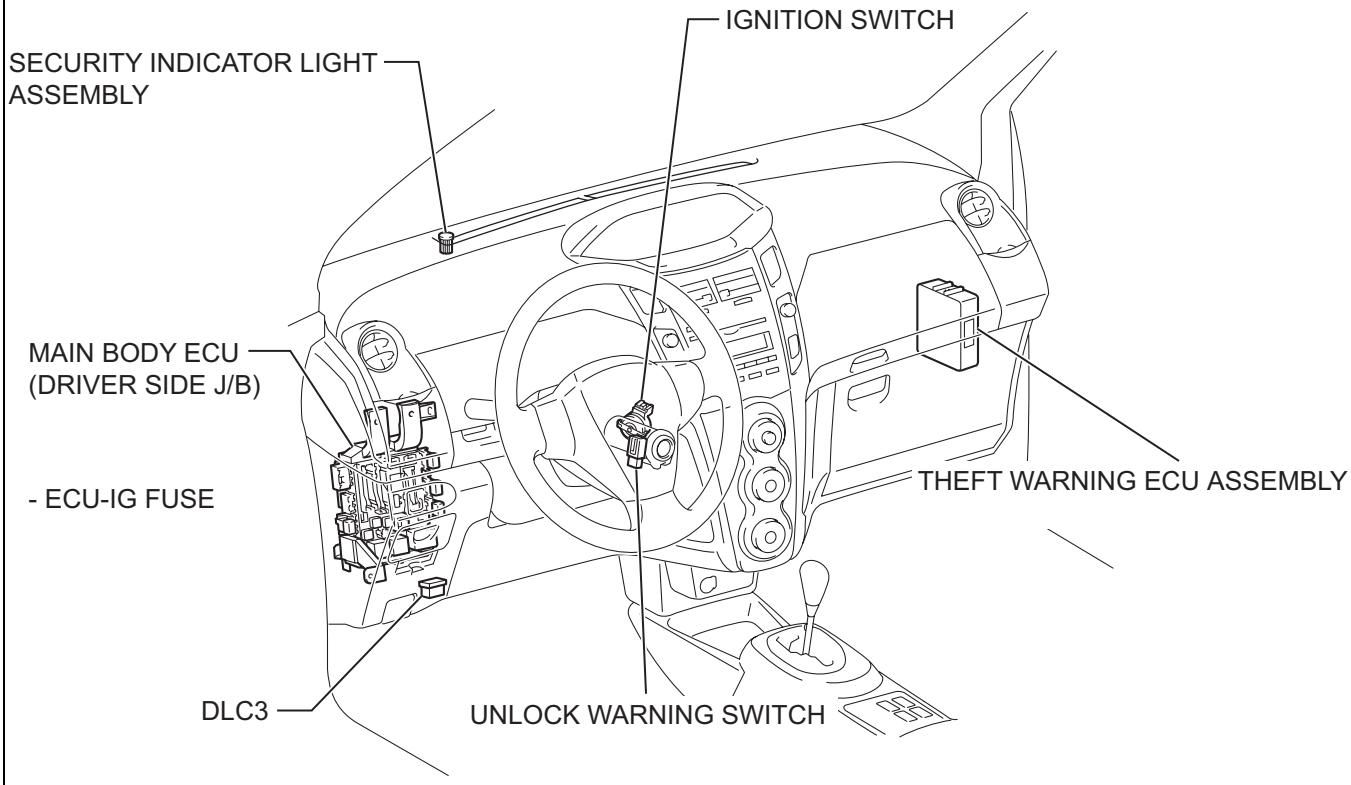

Y

B121320E03

TD

SEDAN:

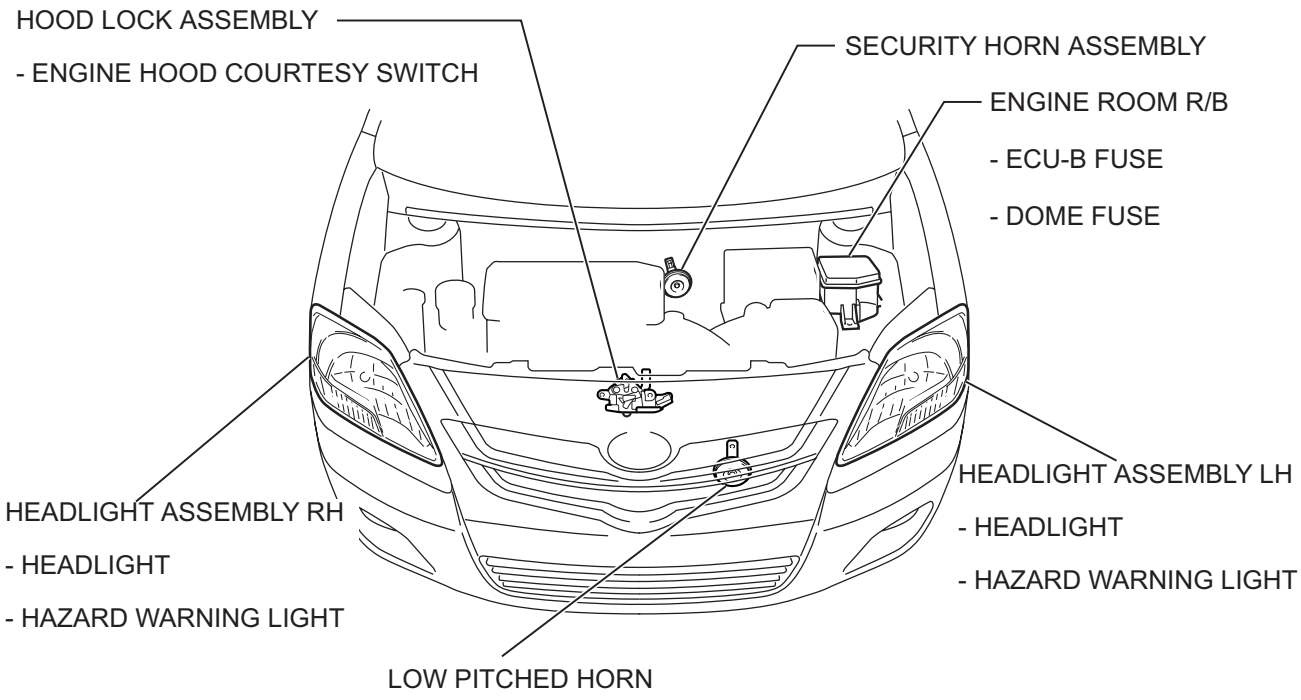

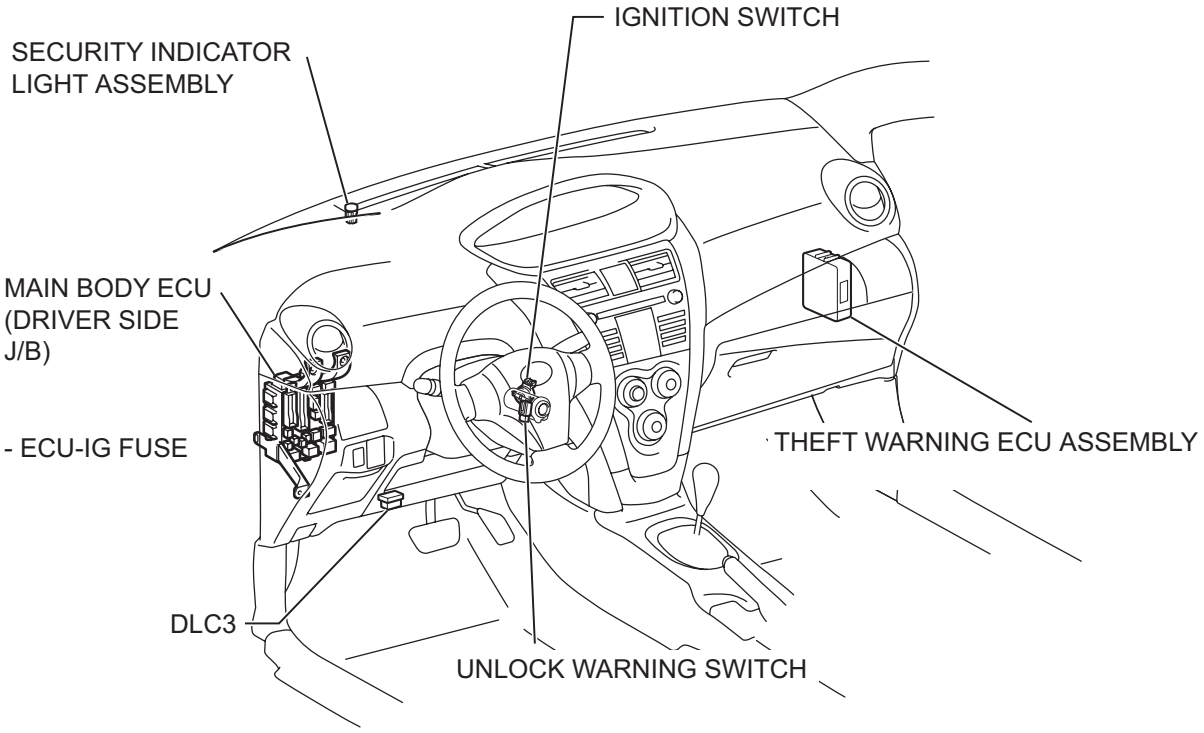

Y

B143227E01

HATCHBACK:

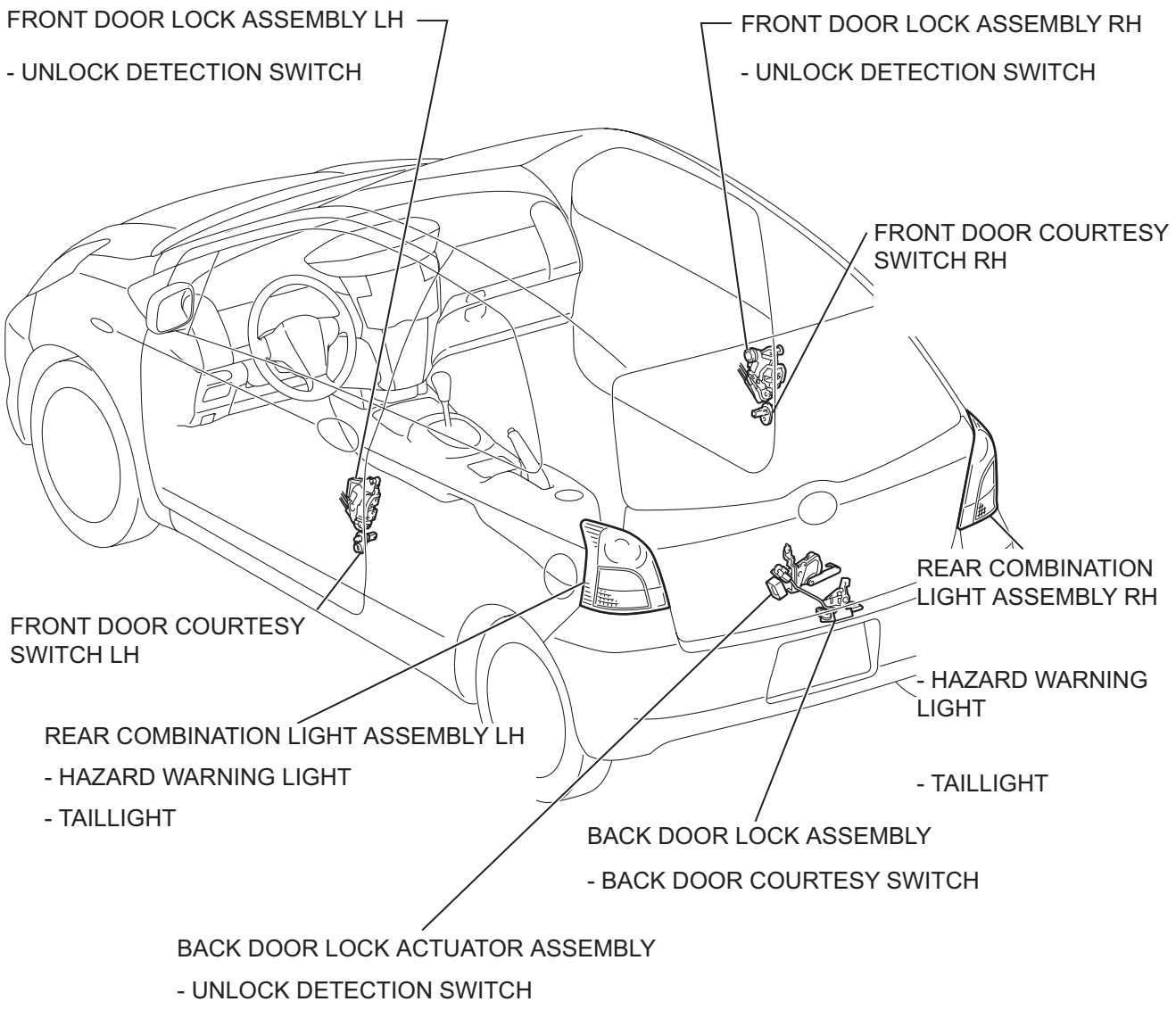

Y

B121321E03

SEDAN:

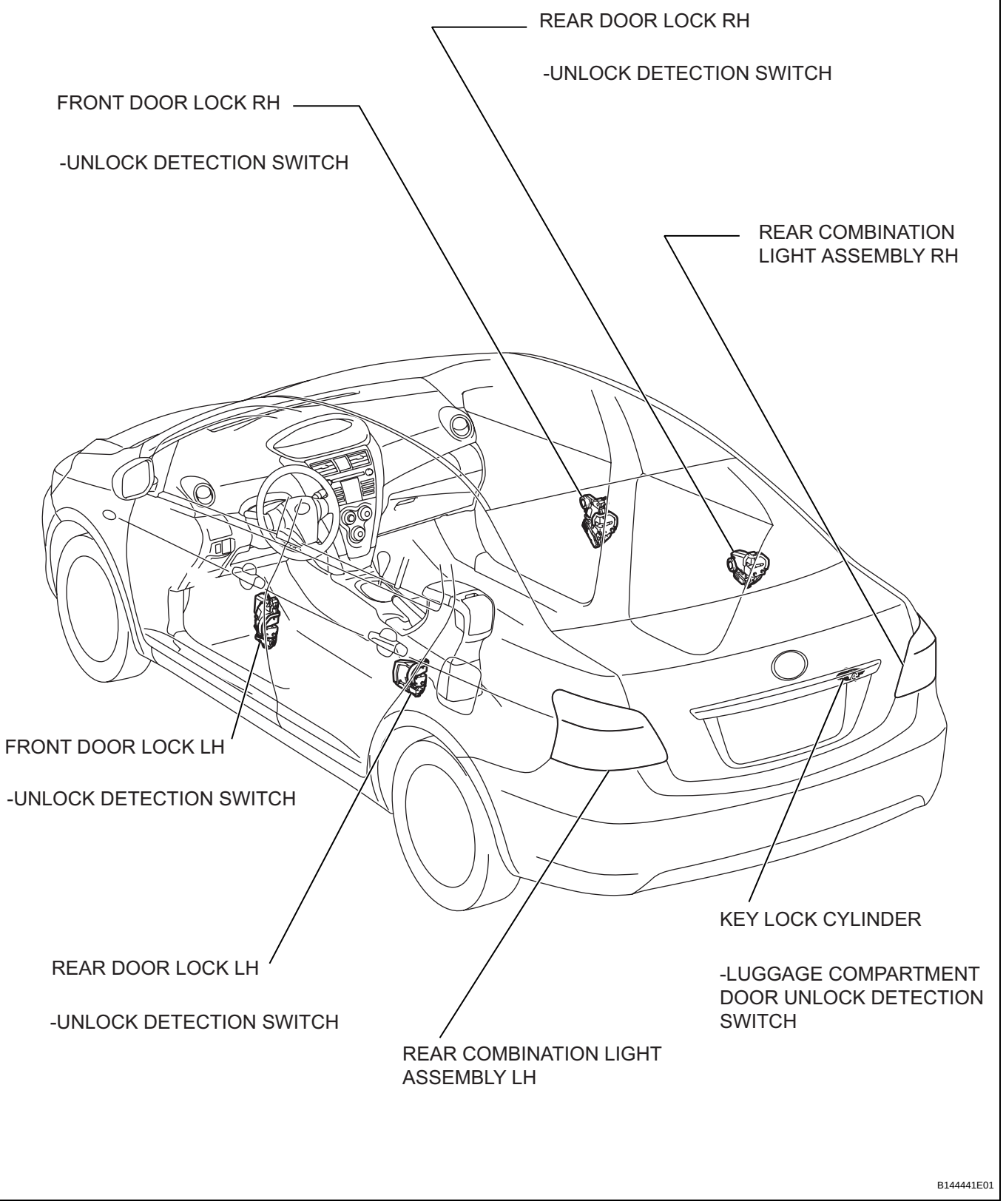
REAR DOOR LOCK RH
-UNLOCK DETECTION SWITCH
FRONT DOOR LOCK RH
-UNLOCK DETECTION SWITCH
REAR COMBINATION LIGHT ASSEMBLY RH
FRONT DOOR LOCK LH
-UNLOCK DETECTION SWITCH
KEY LOCK CYLINDER
-LUGGAGE COMPARTMENT DOOR UNLOCK DETECTION SWITCH
REAR DOOR LOCK LH
-UNLOCK DETECTION SWITCH
REAR COMBINATION LIGHT ASSEMBLY LH
B144441E01

SEDAN:

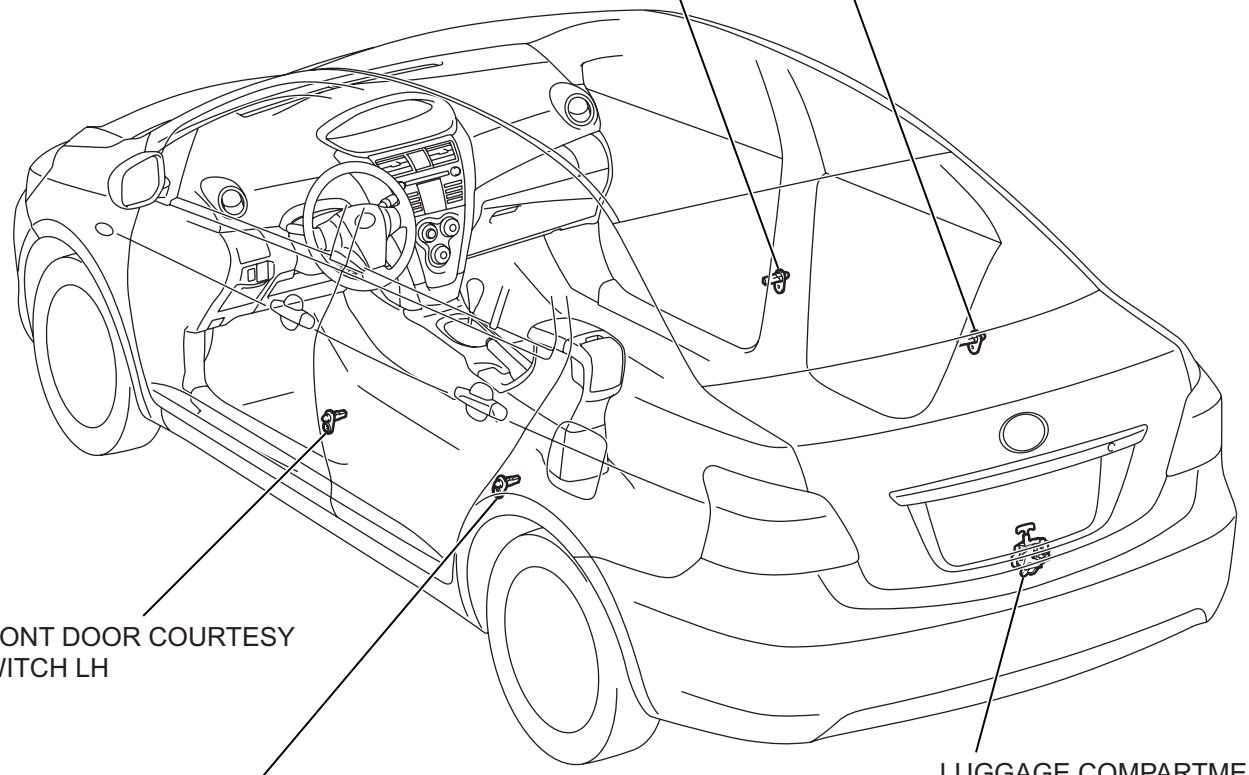

H

B144442E01

TD

SYSTEM DIAGRAM

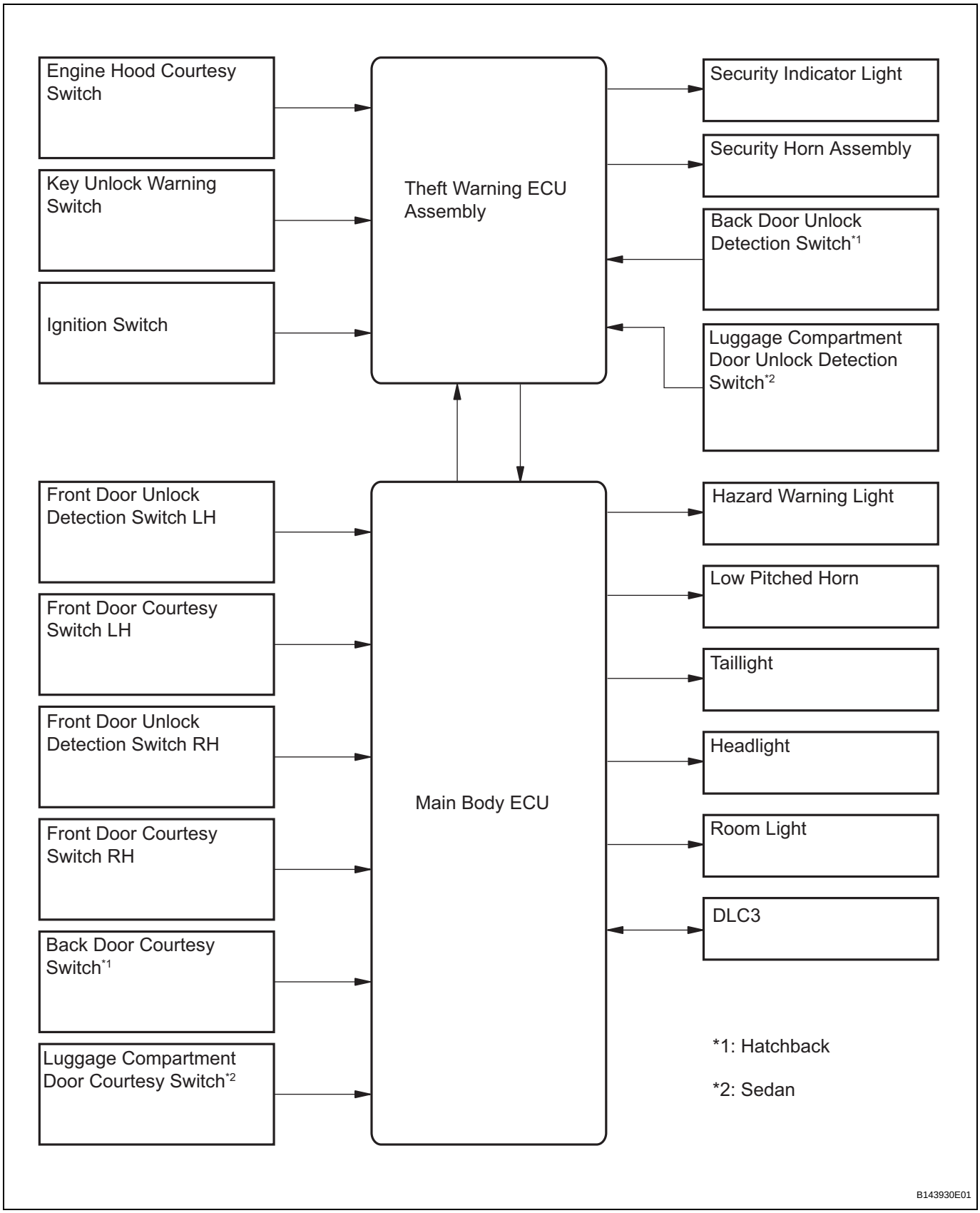

SYSTEM DESCRIPTION

1. OUTLINE OF THEFT DETERRENT SYSTEM

(a) When any attempt is made to forcibly enter the vehicle, open the engine hood or unlock any door without using a key, or when the battery terminals are disconnected and then reconnected, this system causes the vehicle horn and security horn to sound, the interior light to light up, and the hazard warning lights, taillights and headlights to flash, in order to deter break-in and theft.

(b) The theft deterrent system has two arming modes; Active and Passive. Active arming mode allows the theft deterrent system to activate normally. Passive arming mode is used for the servicing. The intelligent tester allows the theft deterrent system to switch between Active and Passive.
(See pageTD-16)

(c) Each mode has 4 states; a disarmed state, an arming preparation state, an armed state and an alarm sounding state.

(1) Disarmed state:
- The alarm function is not operating.
- The theft deterrent system is not operating.

(2) Arming preparation state:
- The state before the system goes into the armed state.
- The theft deterrent system is not operating.

(3) Armed state:
- The theft deterrent system is operating.

(4) Alarm sounding state:
- The alarm function is operating.

Alarm time:
Approximately 57 seconds.

Alarm form manifestation and duration:

Alarm Form	Headlight	Blinks (approximately 0.4 seconds cycles)
	Taillight	Blinks (approximately 0.4 seconds cycles)
	Hazard Warning Light	Blinks (Cycle of flasher relay)
	Interior Light	Illuminates
	Vehicle Horn	Sounds (approximately 0.4 seconds cycles)
	Security Horn	Sounds (approximately 0.4 seconds cycles)
Alarm Duration	Approximately 57 seconds	

2. ACTIVE ARMING MODE

HINT:
- Active arming mode starts the alarm control immediately after the doors are locked.
- This system activates as described in the diagram below when one item for each condition is met.

(a) Active arming mode

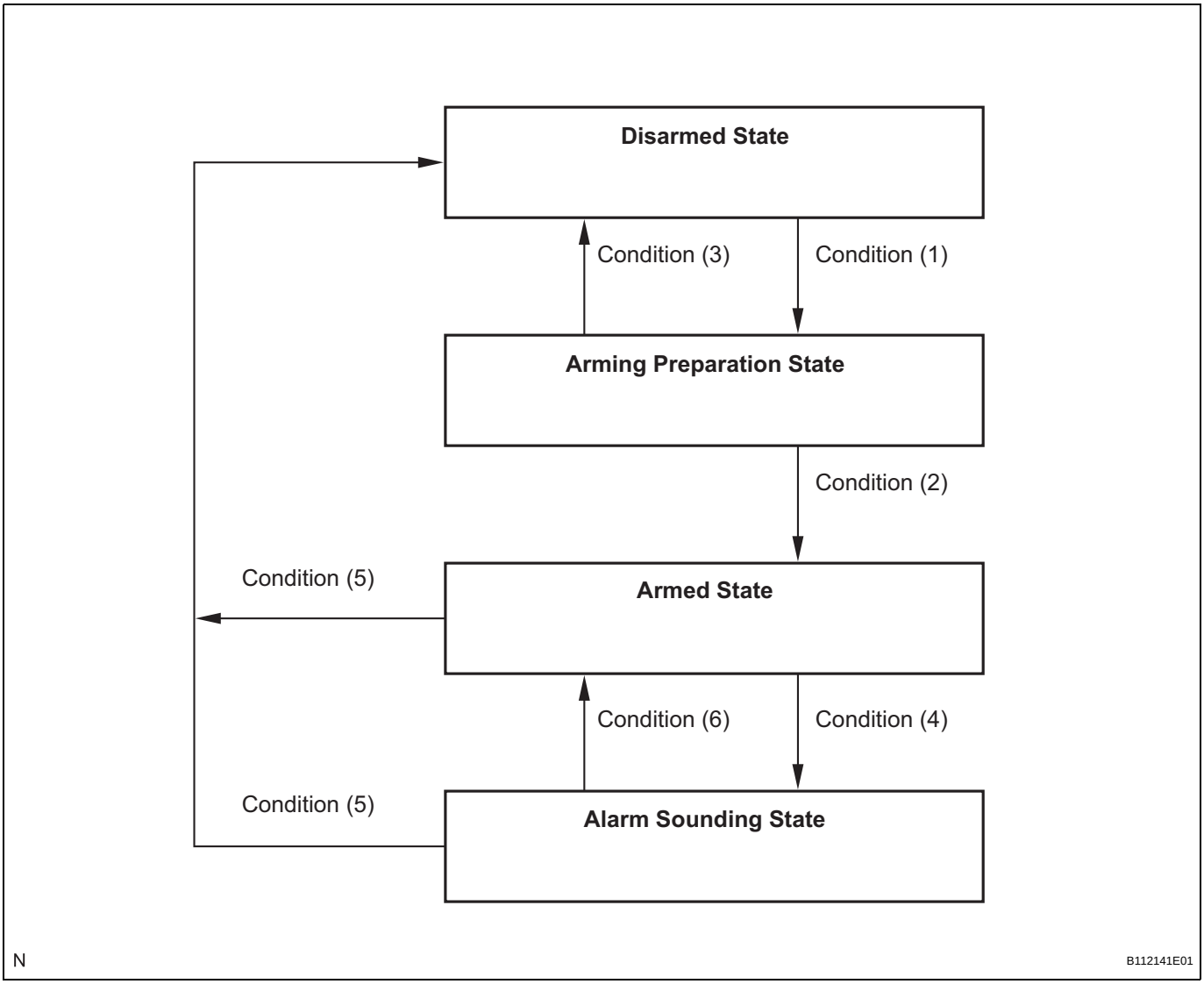

Hatchback:

Condition	Item
Condition (1)	(No key in ignition key cylinder) 1. All doors locked using key* when all doors and engine hood closed. 2. Any open door closed and locked when all other doors locked and engine hood closed.
Condition (2)	1. After condition (1) met, 30 seconds allowed to enter armed state.
Condition (3)	One of following operations performed within 30 seconds of entering arming preparation state: 1. Any door unlocked. 2. Any door opened. 3. Engine hood opened. 4. Key inserted into ignition key cylinder. 5. Battery reconnected.
Condition (4)	One of following operations performed in armed state: 1. Any door opened. 2. Engine hood opened. 3. Battery reconnected. 4. Any door unlocked without using key.
Condition (5)	One of following operations performed in alarm sounding state or armed state: 1. Any door unlocked using key. 2. Key inserted into ignition key cylinder and 2 seconds elapse since engine start.
Condition (6)	1. After approximately 57 seconds, alarm stops sounding and system returns to armed state.

HINT:
*: When the driver door or passenger door key cylinder is turned to the lock position using a key with all the doors locked and the engine hood closed, the system enters the arming preparation state. However, the system does not enter the arming preparation state when the back door lock key cylinder is turned to the lock position.

Sedan:

Condition	Item
Condition (1)	(No key in ignition key cylinder) 1. All doors locked using key when all doors, engine hood and luggage compartment door closed. 2. Any open door closed and locked when all other doors locked, and engine hood and luggage compartment door closed. 3. All doors locked by using transmitter LOCK switch*.
Condition (2)	1. After condition (1) met, 30 seconds allowed to enter armed state.
Condition (3)	One of following operations performed within 30 seconds of entering arming preparation state: 1. Any door unlocked. 2. Any door opened. 3. Engine hood opened. 4. Luggage compartment door opened. 5. Key inserted into ignition key cylinder. 6. Battery reconnected.
Condition (4)	One of following operations performed in armed state: 1. Any door opened. 2. Any door unlocked without using key or transmitter*. 3. Engine hood opened. 4. Luggage compartment door opened without using key. 5. Battery reconnected. 6. Ignition switch turned on without using key.
Condition (5)	One of following operations performed in alarm sounding state or armed state: 1. Any door unlocked or luggage compartment door opened using key. 2. Key inserted into ignition key cylinder and 2 seconds elapse since engine start. 3. All doors unlocked by wireless operation*.
Condition (6)	1. After approximately 57 seconds, alarm stops sounding and system returns to armed state.

*: Only for vehicles with transmitter.

3. PASSIVE ARMING MODE

Passive arming mode can be switched ON and OFF using the specified method. The theft deterrent system is initially set to active arming mode when vehicles are shipped from factories.

HINT:

- Passive arming mode starts the alarm control after the key is removed from the ignition key cylinder and the doors are closed.
- During passive arming mode, the theft deterrent system goes into the armed state even if the doors are not locked.
- Even if the theft deterrent system detects that a door is opened during passive arming mode, the system does not go into the alarm sounding state immediately because an entry delay time is set.
- If either of the following conditions is met during passive arming mode, the theft deterrent system switches to active arming mode.
  - With all the doors and the engine hood closed, all the doors are locked by the key operation.

– With the engine hood closed and all the doors locked with any door still open, the open door is closed.

- This system activates as described in the diagram below when one item for each condition is met.

(a) Passive arming mode

HATCHBACK:

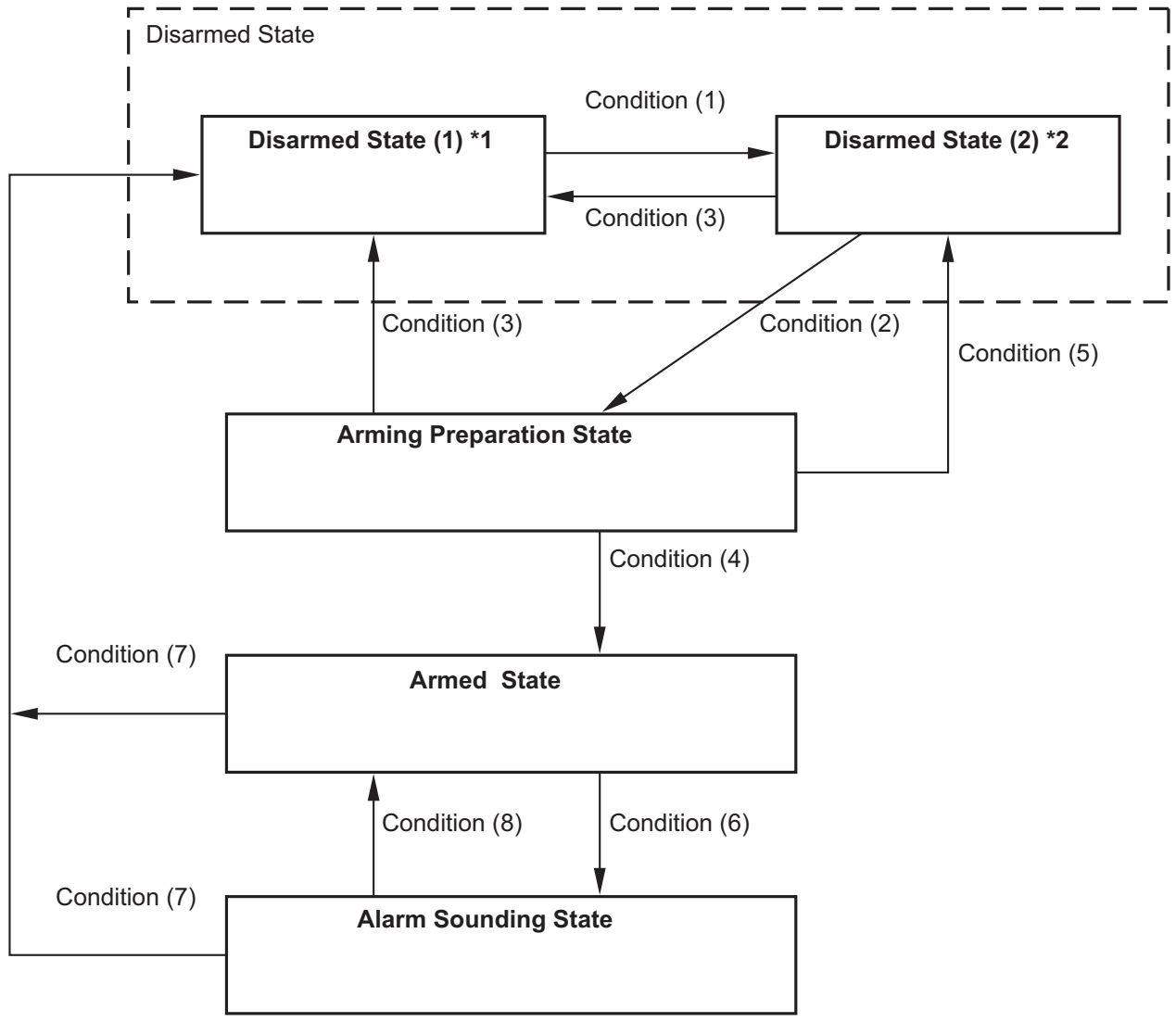

- *1: Disarmed state (1) is the normal disarmed state.
- *2: Disarmed state (2) is set from either the disarmed state (1) or the arming preparation state.

HINT:
The terms "all doors", "any door" and "door" below include the back door.

Hatchback:

Condition	Item
Condition (1)	1. With ignition switch OFF, any door opened and key removed from ignition key cylinder.
Condition (2)	1. Engine hood and all doors closed.
Condition (3)	One of following operations performed in arming preparation state or disarmed state (2): 1. Key inserted into ignition key cylinder. 2. Battery reconnected. 3. Any door unlocked using key.
Condition (4)	1. Approximately 30 seconds allowed to elapse in arming preparation state.
Condition (5)	1. Any door or engine hood opened.
Condition (6)	One of following operations performed in armed state: 1. Any door opened and entry delay time (see Entry Delay Function) allowed to elapse. 2. Engine hood opened. 3. Battery reconnected. 4. Ignition switch turned on without using key.
Condition (7)	One of following operations performed in armed state or alarm sounding state: 1. Driver door or passenger door unlocked using key*. 2. Key inserted into ignition key cylinder and 2 seconds elapse since engine start.
Condition (8)	1. After approximately 57 seconds, alarm stops sounding and system returns to armed state.

HINT:
*: System does not return to disarmed state if the back door key cylinder is turned to the unlock position using a key.

SEDAN:

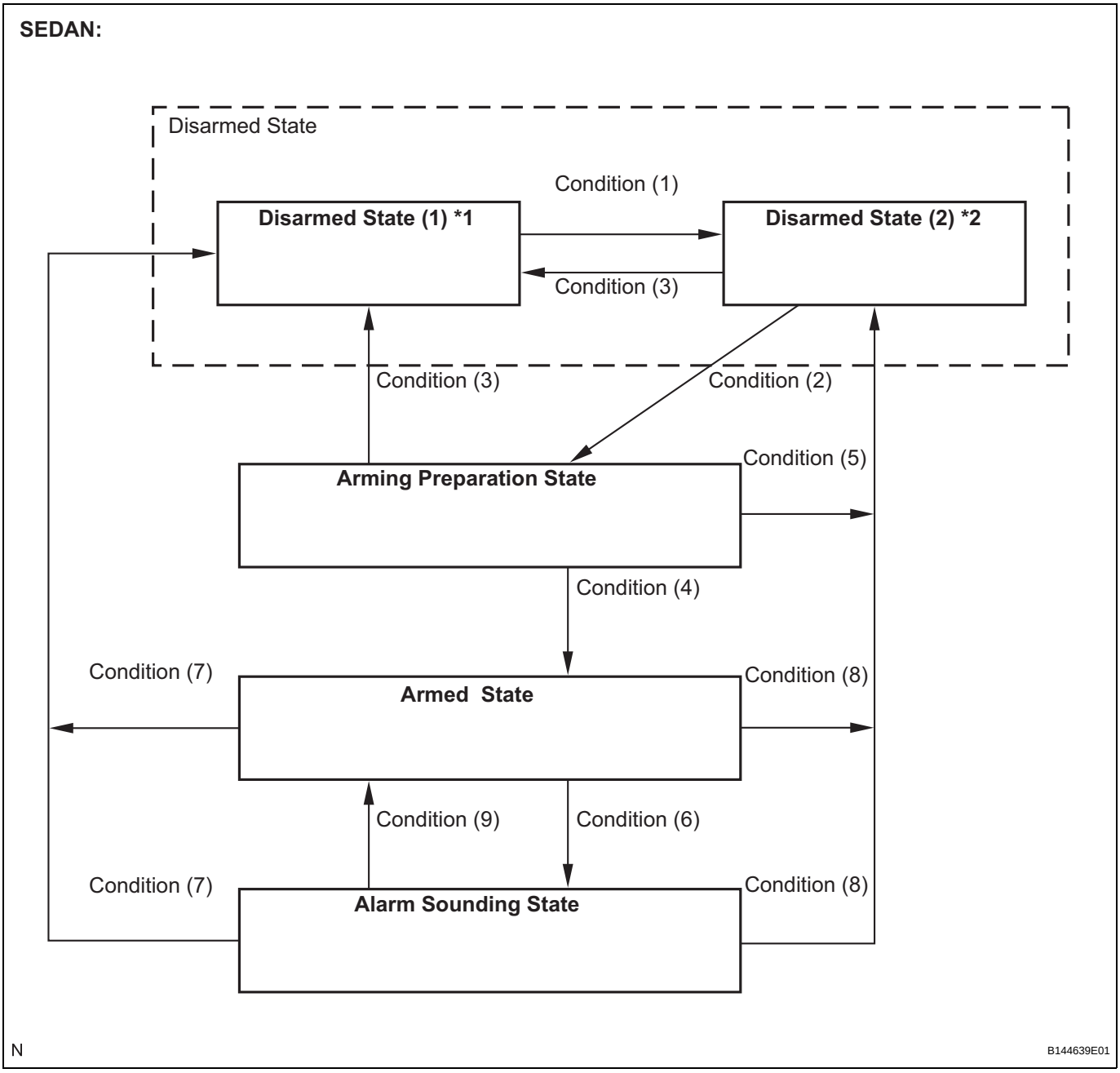

- *1: Disarmed state (1) is the normal disarmed state.
- *2: Disarmed state (2) is set from either the disarmed state (1) or the arming preparation state.

SEDAN:

Condition	Item
Condition (1)	1. With ignition switch OFF, any door opened and key removed from ignition key cylinder.
Condition (2)	1. Engine hood, all doors and luggage compartment door closed.
Condition (3)	One of following operations performed in arming preparation state or disarmed state (2): 1. Key inserted into ignition key cylinder. 2. Battery reconnected. 3. Any door unlocked using key. 4. All doors unlocked using transmitter UNLOCK switch*1.
Condition (4)	1. Approximately 30 seconds allowed to elapse in arming preparation state.
Condition (5)	1. Any door, engine hood or luggage compartment door opened.

Condition	Item
Condition (6)	One of following operations performed in armed state: 1. Any door opened and entry delay time (see Entry Delay Function) allowed to elapse. 2. Engine hood opened. 3. Luggage compartment door opened without using key. 4. Battery reconnected. 5. Ignition switch turned on without using key.
Condition (7)	One of following operations performed in armed state or alarm sounding state: 1. All doors unlocked using transmitter UNLOCK switch*1. 2. Driver door or passenger door unlocked using key*2. 3. Key inserted into ignition key cylinder and 2 seconds elapse since engine start.
Condition (8)	1. Luggage compartment door opened using key.
Condition (9)	1. After approximately 57 seconds, alarm stops sounding and system returns to armed state.

*1: Only for vehicles with transmitter.

*2: System does not return to disarmed state if the luggage compartment door key cylinder is turned to the unlock position using a key.

4. ALARM MEMORY FUNCTION

(a) If the alarm is set off (tampering is detected) while the theft deterrent system is armed, the alarm memory function records it. Whenever the theft deterrent system is canceled, the alarm memory function causes the taillights to light up for 2 seconds in order to indicate that the alarm has been set off.

(1) Conditions of the alarm memory function that cause the taillights to light up:
When the theft deterrent system has entered the alarm sounding state (tampering has been detected), the taillights light up for 2 seconds if either of the following conditions is met.
- Switched to the disarmed state from the armed state during active arming mode.
- Switched to the disarmed state (1) from the armed state during passive arming mode.

HINT:
Active arming mode: See ACTIVE ARMING MODE.
Passive arming mode: See PASSIVE ARMING MODE.

5. SECURITY INDICATOR OUTPUT

(a) The theft warning ECU outputs a signal to light up the security indicator, according to the state of the theft deterrent system. However, some of the actual lighting conditions of the security indicator are different from the output signals of the theft warning ECU.

Output:

Theft Deterrent System Condition*	Security Indicator	
	Output Signals from Theft Warning ECU	Actual Lighting Condition
Disarmed state (1), (2)	OFF	OFF (immobiliser system unset) BLINKING (immobiliser system set)
Arming preparation state	ON	ON
Armed state (During entry delay time)	BLINKING (ON)	BLINKING (ON)

Alarm sounding state	ON	ON

Blinking cycle:

Time	Security Indicator
0.2 seconds	ON
1.8 seconds	OFF

HINT:

- *: The above condition is common to both active arming mode and passive arming mode.
- When the immobiliser system is set, the security indicator blinks in both the disarmed state and the armed state, due to the output signals from the immobiliser system.

6. ENTRY DELAY FUNCTION

(a) When any door is opened while all the doors are closed during passive arming mode, the entry delay time starts. If the switch condition (7) or (8) (see PASSIVE ARMING MODE) is met during the entry delay time, the theft deterrent system will not set off the alarm. However, if the switch condition (7) or (8) is not met, the theft deterrent system will recognize it as a theft and set off the alarm.

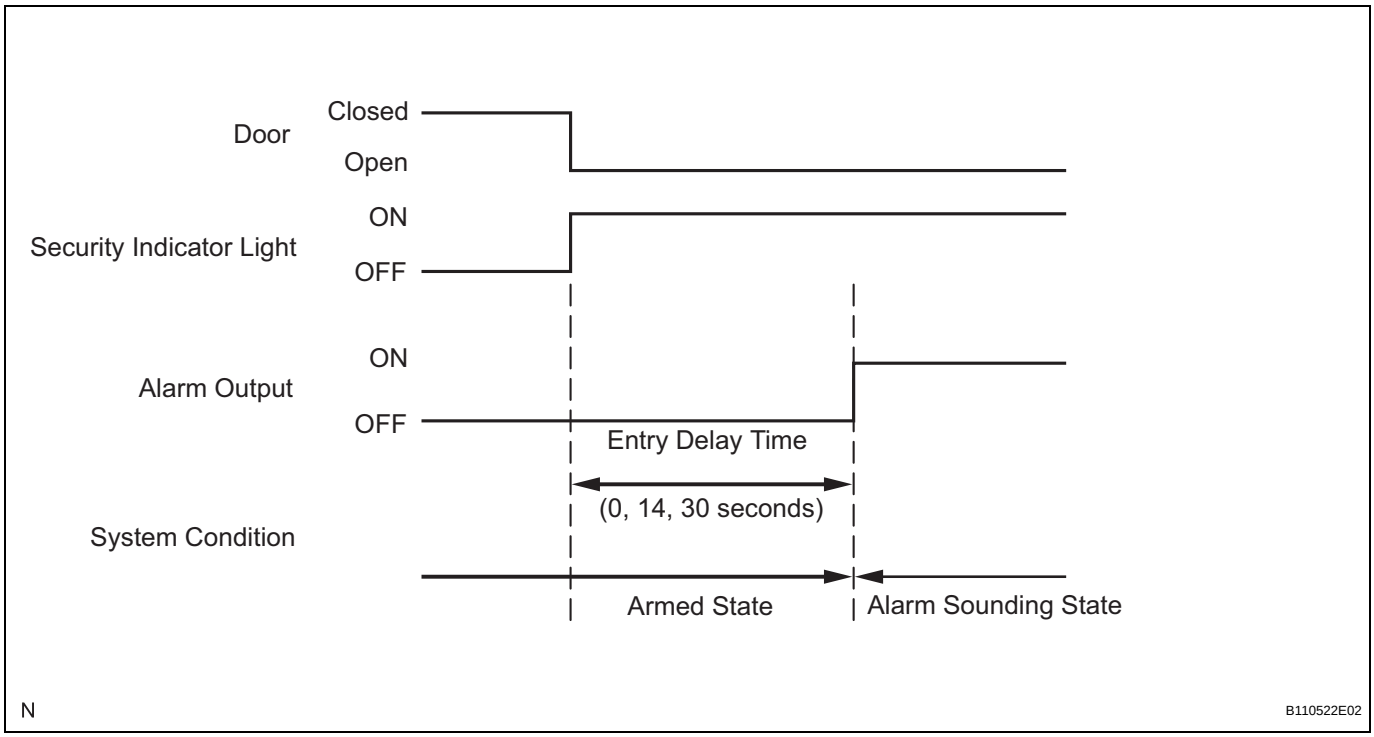

HINT:

The entry delay time can be selected from among 0, 14, 30 seconds by customizing the setting.

HOW TO PROCEED WITH TROUBLESHOOTING

HINT:

- Use this procedure to troubleshoot the theft deterrent system.
- The intelligent tester should be used in steps 3 and 5.

1 VEHICLE BROUGHT TO WORKSHOP

NEXT

2 INSPECT BATTERY VOLTAGE

Standard voltage:
11 to 14 V

HINT:

If the voltage is below 11 V, recharge or replace the battery before proceeding.

NEXT

3 CHECK FOR DTC

(a) Check for DTCs and note any codes that are output.
(b) Delete the DTCs.
(c) Check whether the same DTCs recur by simulating the conditions indicated by the DTCs noted in step (a) above.
  (1) If no DTCs recur, proceed to A.
  (2) If the same DTCs recur, proceed to B.

B → **Go to step 6**

A

4 PROBLEM SYMPTOMS TABLE

(a) If the fault is not listed in the problem symptoms table, proceed to A.
(b) If the fault is listed in the problem symptoms table, proceed to B.

B → **Go to step 6**

A

5 OVERALL ANALYSIS AND TROUBLESHOOTING

(a) Data list/Active test (See page TD-20)
(b) Terminals of ECU (See page TD-17)
(c) System Description (See page TD-7)

NEXT

6	ADJUST, REPAIR OR REPLACE

NEXT

7	CONFIRMATION TEST

NEXT

END

CUSTOMIZE PARAMETERS

HINT:
The following items can be customized.
NOTICE:

- **After confirming whether the items requested by the customer are applicable or not for customization, perform customizing operations.**
- **Be sure to record the current settings before customization.**
- **When troubleshooting, make sure that the item in question is not set to OFF due to customization. (For example, when the problem is that the wireless function is inoperative, first check whether the wireless function has been set to OFF before troubleshooting.)**

Theft Deterrent System:

Display (Item)	Default	Function	Setting
PASSIVE MODE (Passive Arming Mode)	OFF	In passive arming mode, theft deterrent system switched from arming preparation state to armed state 30 seconds after both of following operations performed. – Key removed from ignition key cylinder – All doors closed (not locked) In passive arming mode, if following operations are not performed within 14 seconds of door being opened while in armed state, theft deterrent system determines that condition as theft and switches to alarm sounding state. – Battery reconnected – Key inserted into ignition key cylinder and ignition switch turned from OFF to ON – Any door unlocked using key	ON/OFF
WARNING (HORN) (Warning horn)	ON	Allows vehicle horn and security horn to be used as warning devices	ON/OFF
ENTRY DELAY (Entry delay time)	14 seconds	Changes entry delay time (time before warning starts) for passive arming mode	0 /14 /30 (seconds)

PROBLEM SYMPTOMS TABLE

HINT:
Use the table below to help determine the cause of the problem symptom. The potential causes of the symptoms are listed in order of probability in the "Suspected Area" column of the table. Check each symptom by checking the suspected areas in the order they are listed. Replace parts as necessary.

Theft Deterrent System

Symptom	Suspected area	See page
Theft deterrent system cannot be set.	Engine hood courtesy switch circuit	TD-25
	Security indicator light circuit	TD-35
	ECU power source circuit	TD-44
	Unlock warning switch circuit	TD-46
	Back door UNLOCK detection switch circuit*1	TD-38
	Luggage compartment door key cylinder switch circuit*2	-
	Theft warning ECU assembly	-
Security indicator light does not blink when theft deterrent system is set.	Security indicator light circuit	TD-35
	Theft warning ECU assembly	-
Theft deterrent system can be set, but does not operate when engine hood is opened.	Engine hood courtesy switch circuit	TD-25
	Theft warning ECU assembly	-
Theft deterrent system can be set, but is not canceled when ignition switch is turned to ACC or ON position.	Ignition switch circuit	TD-32
	Theft warning ECU assembly	-
Theft deterrent system can be set, but still operates when back door is opened with key.	Back door UNLOCK detection switch circuit	TD-38
	Theft warning ECU assembly	-
Theft deterrent system can be set, but still operates when luggage compartment door is opened with key*2.	Luggage compartment door key cylinder switch circuit	TD-41
	Theft warning ECU assembly	-
While theft deterrent system is in warning operation, horns do not sound.	Security horn circuit	TD-28
	Theft warning ECU assembly	-
Horns sound even when theft deterrent system is not set.	Security horn circuit	TD-28
	Theft warning ECU assembly	-

*1: Hatchback
*2: Sedan

TERMINALS OF ECU

1. CHECK THEFT WARNING ECU ASSEMBLY (THEFT DETERRENT ECU)

Theft Warning ECU (Theft Deterrent ECU):

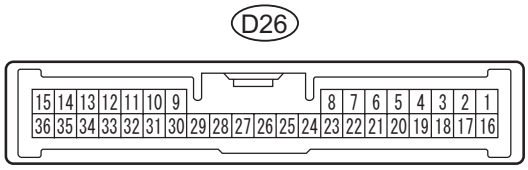

B121323E01

(a) Disconnect the D26 ECU connector.
(b) Check the voltage or resistance of each terminal of the wire harness side connector.

Standard:

Symbols (Terminal No.)	Wiring Color	Terminal Description	Condition	Specified Condition
+B1 (D26-11) - Body ground	B - Body ground	Battery	Always	11 to 14 V
+B2 (D26-13) - Body ground	L*1 - Body ground	Battery	Always	11 to 14 V
	BR*2 - Body ground			
IG (D26-9) - E (D26-16)	GR - W-B	Ignition switch signal	Ignition switch OFF → ON	Below 1 V → 11 to 14 V
LSR (D26-6)*1 - Body ground	O - Body ground	Back door unlock detection switch signal	Back door LOCK → UNLOCK	10 kΩ or higher → Below 1 Ω
LUG (D26-6)*2 - Body ground	P - Body ground	Luggage compartment door unlock detection switch signal	Luggage compartment door LOCK → UNLOCK	10 kΩ or higher → Below 1 Ω
E (D26-16) - Body ground	W-B - Body ground	Ground	Always	Below 1 Ω

*1: Hatchback
*2: Sedan
If the result is not as specified, there may be a malfunction on the wire harness side.

(c) Reconnect the D26 ECU connector.
(d) Check the voltages of each terminal of the connector.

Standard voltage:

Symbols (Terminal No.)	Wiring Color	Terminal Description	Condition	Specified Condition
BRK+ (D26-24) - Body ground	P - Body ground	Alarm BERKES Communication	Theft deterrent system is in alarm sounding state.	Pulse generation (1.5 V ← → Below 1.2 V)
BRK- (D26-25) - Body ground	O - Body ground	Alarm BERKES Communication	All doors are locked using key (Theft deterrent system is in arming preparation state).	Pulse generation (1.5 V ← → Below 1.2 V)
SH- (D26-15) - Body ground	O - Body ground	Security horn	Security horn is sounding (Theft deterrent system is in alarm sounding state).	Pulse generation (11 to 14 V ← → Below 1 V)
+B1 (D26-11) - E (D26-16)	B - W-B	+B power supply	Always	11 to 14 V
KSW (D26-7) - E (D26-16)	Y - W-B	Key unlock warning switch input	Key unlock warning switch ON (Key inserted) → OFF (Key removed from ignition key cylinder)	Below 1 V → 11 to 14 V

Symbols (Terminal No.)	Wiring Color	Terminal Description	Condition	Specified Condition
IND (D26-29) - E (D26-16)	LG*1 - W-B G*2 - W-B	Security indicator	Security indicator lights up (illuminates for 30 seconds in alarm sounding state, flashes when immobiliser system is operating).	5 V or more
DSWH (D26-4) - E (D26-16)	W - W-B	Engine hood courtesy switch input	Engine hood courtesy switch OFF (Closed) → ON (Open)	11 to 14 V → Below 1 V

*1: Hatchback
*2: Sedan
If the result is not as specified, the theft warning ECU assembly may be malfunctioning.

DIAGNOSIS SYSTEM

1. DESCRIPTION

(a) The theft warning ECU controls the functions of the theft deterrent system on the vehicle. Theft deterrent system data can be read through the Data Link Connector 3 (DLC3) of the vehicle. When the system seems to be malfunctioning, use the intelligent tester to check for malfunctions and perform repairs.

2. CHECK DLC3

(a) The ECU uses ISO 15765-4 for communication. The terminal arrangement of the DLC3 complies with SAE J1962 and matches the ISO 15765-4 format.

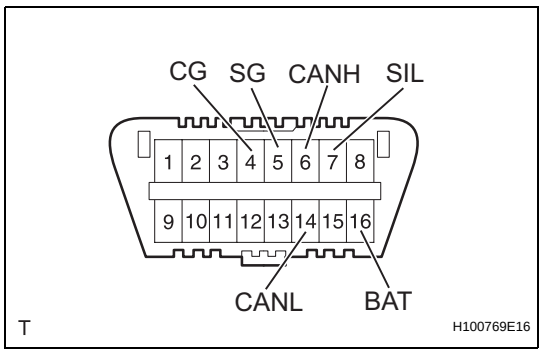

Symbols (Terminal No.)	Terminal Description	Condition	Specified Condition
SIL (7) - SG (5)	Bus "+" line	During transmission	Pulse generation
CG (4) - Body ground	Chassis ground	Always	Below 1 Ω
SG (5) - Body ground	Signal ground	Always	Below 1 Ω
BAT (16) - Body ground	Battery positive	Always	11 to 14 V
CANH (6) - CANL (14)	CAN bus line	Ignition switch OFF*	54 to 69 Ω
CANH (6) - CG (4)	HIGH-level CAN bus line	Ignition switch OFF*	200 Ω or higher
CANL (14) - CG (4)	LOW-level CAN bus line	Ignition switch OFF*	200 Ω or higher
CANH (6) - BAT (16)	HIGH-level CAN bus line	Ignition switch OFF*	6 kΩ or higher
CANL (14) - BAT (16)	LOW-level CAN bus line	Ignition switch OFF*	6 kΩ or higher

NOTICE:

***: Before measuring the resistance, leave the vehicle as is for at least 1 minute and do not operate the ignition switch, any other switches or the doors.**

If the result is not as specified, the DLC3 may have a malfunction. Repair or replace the harness and connector.

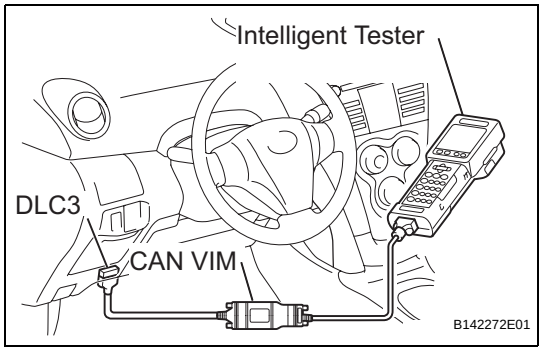

(b) Intelligent tester

HINT:

Connect the cable of the intelligent tester to the CAN VIM, connect the CAN VIM to the DLC3, turn the ignition switch ON and attempt to use the tester. If the display indicates that a communication error has occurred, there is a problem either with the vehicle or with the tester.

- If communication is normal when the tester is connected to another vehicle, inspect the DLC3 of the original vehicle.

- If communication is still not possible when the tester is connected to another vehicle, the problem may be in the tester itself. Consult the Service Department listed in the tester's instruction manual.

3. INSPECT BATTERY VOLTAGE

Standard voltage:

11 to 14 V

If the voltage is below 11 V, recharge or replace the battery before proceeding.

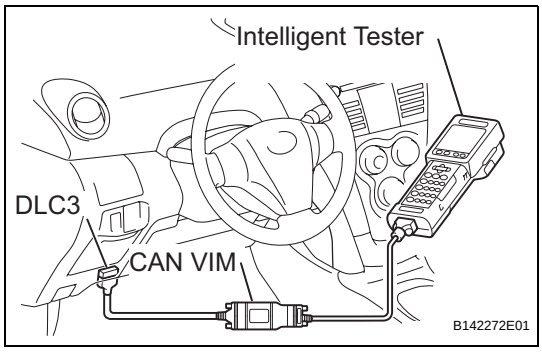

DTC CHECK / CLEAR

1. DTC CHECK

(a) Connect the intelligent tester with CAN VIM to the DLC3.

(b) Turn the ignition switch ON.

(c) Read the DTCs by following the prompts on the tester's screen.

HINT:

Refer to the intelligent tester operator's manual for further details.

2. DTC CLEAR

(a) Connect the intelligent tester with CAN VIM to the DLC3.

(b) Turn the ignition switch ON.

(c) Erase the DTCs by following the prompts on the tester's screen.

HINT:

Refer to the intelligent tester operator's manual for further details.

DATA LIST / ACTIVE TEST

1. DATA LIST

HINT:

Using the intelligent tester DATA LIST allows switch, sensor, actuator and other item values to be read without removing any parts. Reading the DATA LIST early in troubleshooting is one way to shorten labor time.

(a) Connect the intelligent tester with CAN VIM to the DLC3.

(b) Turn the ignition switch ON.

(c) Read the DATA LIST according to the display on the tester.

Theft Warning ECU:

Item	Measurement Item/Display (Range)	Normal Condition	Diagnostic Note
TRUNK KEY UNLK*2	Luggage compartment door unlock detection switch signal/ON or OFF	ON: Luggage compartment door is unlocked OFF: Luggage compartment door is locked	-
HOOD COURTSY SW	Engine hood courtesy switch signal/ON or OFF	ON: Engine hood is open OFF: Engine hood is closed	-
BACK DOOR LOCK*1	Back door unlock detection switch signal/ON or OFF	ON: Back door is locked OFF: Back door is unlocked	-
BACK DOOR UNLOCK*1	Back door unlock detection switch signal/ON or OFF	ON: Back door is unlocked OFF: Back door is locked	-
IG SW	Ignition switch signal/ON or OFF	ON: Key is in ON or START position OFF: Key is in LOCK or ACC position	-
KEY UNLK WRN SW	Unlock warning switch signal/ON or OFF	ON: Key is inserted into ignition key cylinder OFF: Key is removed from ignition key cylinder	-
ALARM TRIGGER	Alarm Trigger	D CRTSY: Alarms are caused by door courtesy light switch D POS: Alarms are caused by door position switch H CRTSY: Alarms are caused by hood courtesy switch L CRTSY: Alarms are caused by back door or luggage compartment door courtesy switch IG SW: Alarms are caused by ignition switch OPEN: Alarms are caused by open circuit NO SIG: No signals	-
PASSIVE MODE	Passive mode/ON or OFF	ON: When switched from active mode OFF: When switched to active mode	-
WARNING(HORN)	Warning by horn/ON or OFF	ON: When switched from armed state to alarm sounding state OFF: When switched from alarm sounding state to armed state or disarmed state	-
ENTRY DELAY	Entry delay time during passive mode	0s: Entry delay time is 0 sec. 14s: Entry delay time is 14 sec. 30s: Entry delay time is 30 sec.	-

*1: Hatchback

*2: Sedan

Main Body ECU:

Item	Measurement Item/Display (Range)	Normal Condition	Diagnostic Note
D DOR CTY SW	Driver side door courtesy switch signal / ON or OFF	ON: Driver side door is open OFF: Driver side door is closed	-
D LOCK POS SW	Driver side door unlock detection switch signal / ON or OFF	ON: Driver side door is unlocked OFF: Driver side door is locked	-
P DOR CTY SW	Passenger side door courtesy switch signal / ON or OFF	ON: Passenger side door is open OFF: Passenger side door is closed	-
P LOCK POS SW	Passenger side door unlock detection switch signal / ON or OFF	ON: Passenger side door is unlocked OFF: Passenger side door is locked	-
BK DOR CTY SW*1	Back door courtesy switch/ON or OFF	ON: Back door is open OFF: Back door is closed	-

Item	Measurement Item/Display (Range)	Normal Condition	Diagnostic Note
LUGG COURTSY SW*2	Luggage compartment door courtesy switch/ON or OFF	ON: Luggage compartment door is open OFF: Luggage compartment door is closed	
ACC SW	ACC switch signal/ON or OFF	ON: Key is in ACC position OFF: Key is in LOCK position	-

*1: Hatchback
*2: Sedan

2. ACTIVE TEST

HINT:

Performing the intelligent tester ACTIVE TEST allows a relay, VSV, actuator and other items to be operated without removing any parts. Performing the ACTIVE TEST early in troubleshooting is one way to shorten the labor time. The DATA LIST can be displayed during the ACTIVE TEST.

(a) Connect the intelligent tester with CAN VIM to the DLC3.
(b) Turn the ignition switch ON.
(c) Perform the ACTIVE TEST according to the instructions on the tester.

Theft Warning ECU:

Item	Test Detail	Diagnostic Note
SECURITY INDIC	Security indicator ON/OFF	-
SECURITY HORN	Security horn ON/OFF	-

Main Body ECU:

Item	Test Detail	Diagnostic Note
HAZARD	Hazard warning light ON/OFF	-
VEHICLE HORN	Vehicle horn ON/OFF	-
TAIL LIGHT	Taillight relay ON/OFF	-
HEAD LIGHT	Headlight relay ON/OFF	-

DIAGNOSTIC TROUBLE CODE CHART

If a malfunction code is displayed during the DTC check, check the circuit listed for that code in the table below and then proceed to the page given for that circuit.

MAIN BODY ECU DIAGNOSTIC TROUBLE CODE CHART

DTC No.	Detection Item	Trouble Area	See page
B1269	Theft Deterrent ECU Communication Stop	1. Wire harness and connector 2. Theft warning ECU assembly	TD-23

DTC	B1269	Theft Deterrent ECU Communication Stop

DESCRIPTION

DTC B1269 is output when the communication between the theft warning ECU (theft deterrent ECU) and the main body ECU stops for more than 10 seconds.

DTC No.	DTC Detection Condition	Trouble Area
B1269	No communication from theft warning ECU for more than 10 seconds.	• Theft warning ECU assembly • Wire harness and connector

TD

WIRING DIAGRAM

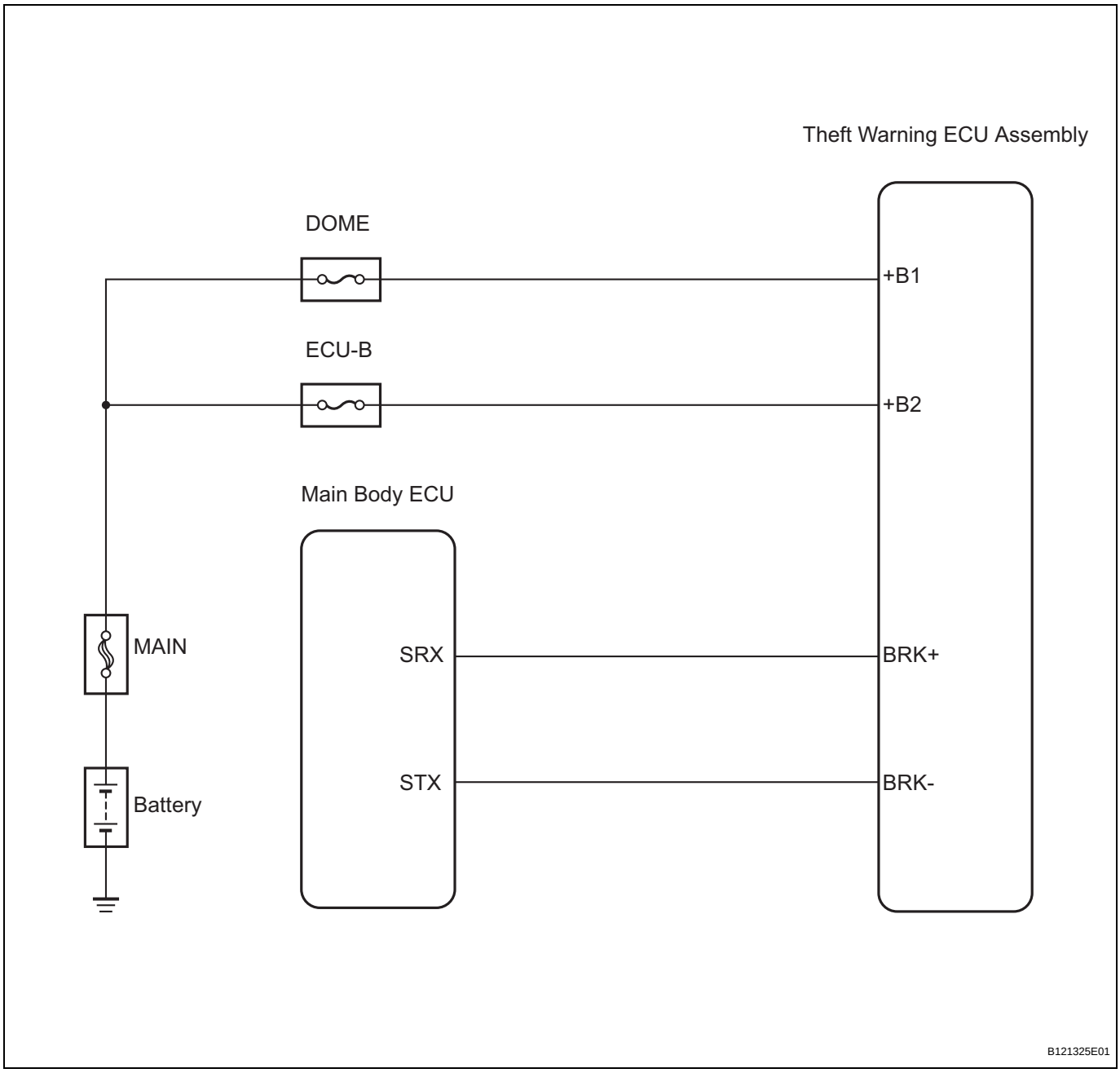

INSPECTION PROCEDURE

1 CHECK HARNESS AND CONNECTOR (THEFT WARNING ECU ASSEMBLY - MAIN BODY ECU)

Wire Harness Side:

Main Body ECU Connector

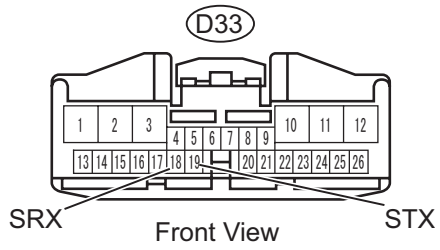

Theft Warning ECU Assembly Connector

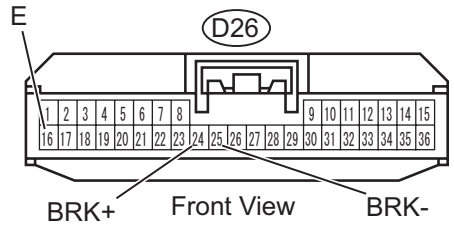

B121326E01

(a) Disconnect the D26 theft warning ECU and D33 main body ECU connectors.
(b) Measure the resistance of the wire harness side connectors.

Standard resistance

Tester Connection	Specified Condition
D26-24 (BRK+) - D33-18 (SRX)	Below 1 Ω
D26-25 (BRK-) - D33-19 (STX)	Below 1 Ω
D26-24 (BRK+) or D33-18 (SRX) - Body ground	10 kΩ or higher
D26-25 (BRK-) or D33-19 (STX) - Body ground	10 kΩ or higher
D26-16 (E) - Body ground	Below 1 Ω

(c) Reconnect the theft warning ECU and main body ECU connectors.

NG → **REPAIR OR REPLACE HARNESS AND CONNECTOR**

OK

2 CHECK HARNESS AND CONNECTOR (BATTERY VOLTAGE)

Wire Harness Side:

Theft Warning ECU Assembly Connector

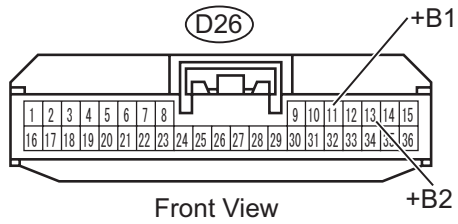

B121327E01

(a) Disconnect the D26 theft warning ECU connector.
(b) Check the voltage between the wire harness side connector and body ground.

Standard voltage

Tester Connection	Specified Condition
D26-11 (+B1) - Body ground	11 to 14 V
D26-13 (+B2) - Body ground	11 to 14 V

(c) Reconnect the theft warning ECU connector.

NG → **REPAIR OR REPLACE HARNESS AND CONNECTOR**

OK

REPLACE THEFT WARNING ECU ASSEMBLY

Engine Hood Courtesy Switch Circuit

DESCRIPTION

The engine hood courtesy switch is built into the engine hood lock assembly. The switch turns on when the engine hood is opened and turns off when the engine hood is closed.

WIRING DIAGRAM

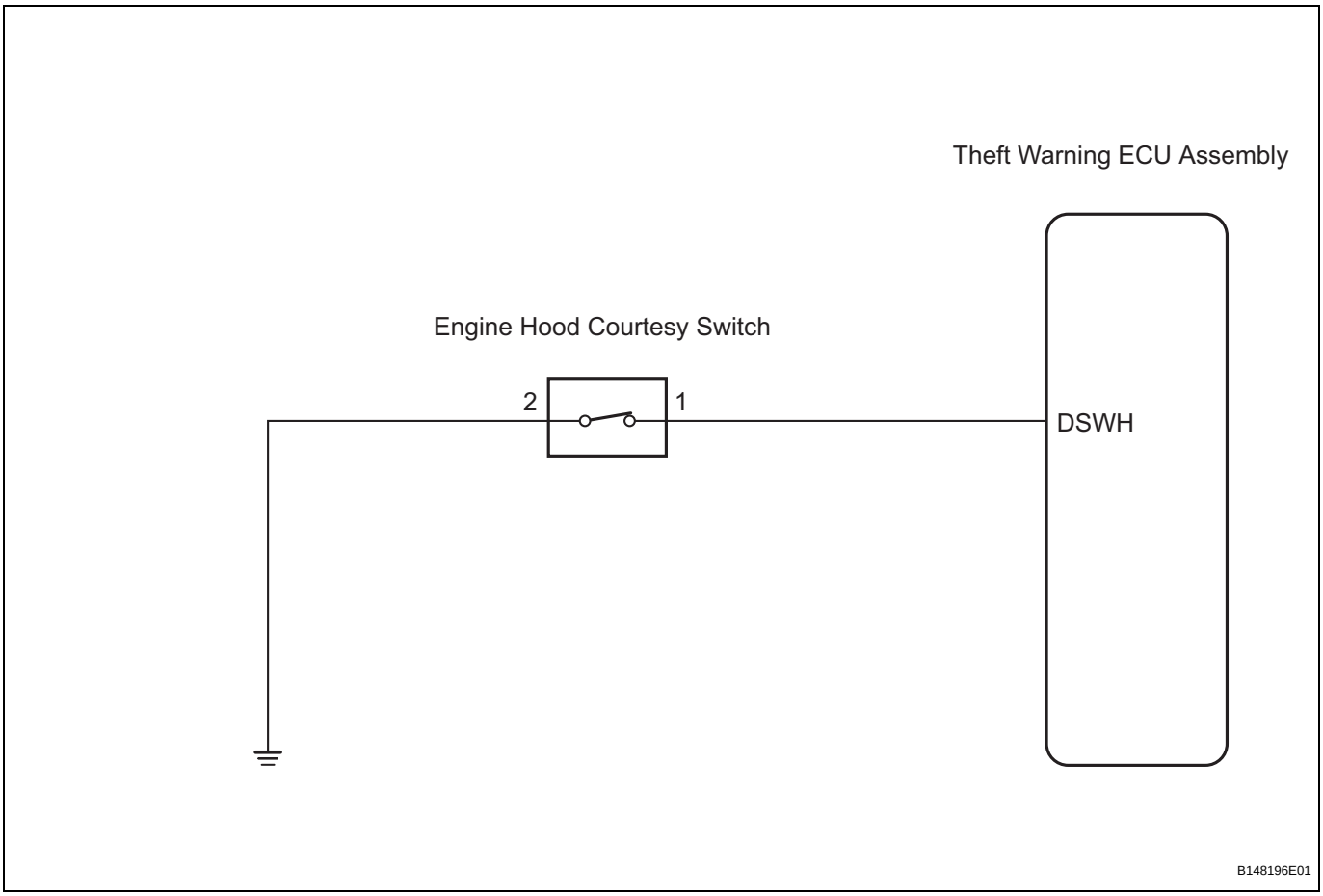

INSPECTION PROCEDURE

1	READ VALUE USING INTELLIGENT TESTER (ENGINE HOOD COURTESY SWITCH)

(a) Connect the intelligent tester with CAN VIM to the DLC3.
(b) Turn the ignition switch ON.
(c) Turn the intelligent tester main switch ON.
(d) Select the item below in the DATA LIST and read the display on the tester.

Theft Warning ECU

Item	Measurement Item/Display (Range)	Normal Condition	Diagnostic Note
HOOD COURTSY SW	Engine hood courtesy switch signal/ON or OFF	ON: Engine hood is OPEN OFF: Engine hood is CLOSED	-

NG	Go to step 2

OK

PROCEED TO NEXT CIRCUIT INSPECTION SHOWN IN PROBLEM SYMPTOMS TABLE

2 INSPECT HOOD LOCK ASSEMBLY (ENGINE HOOD COURTESY SWITCH)

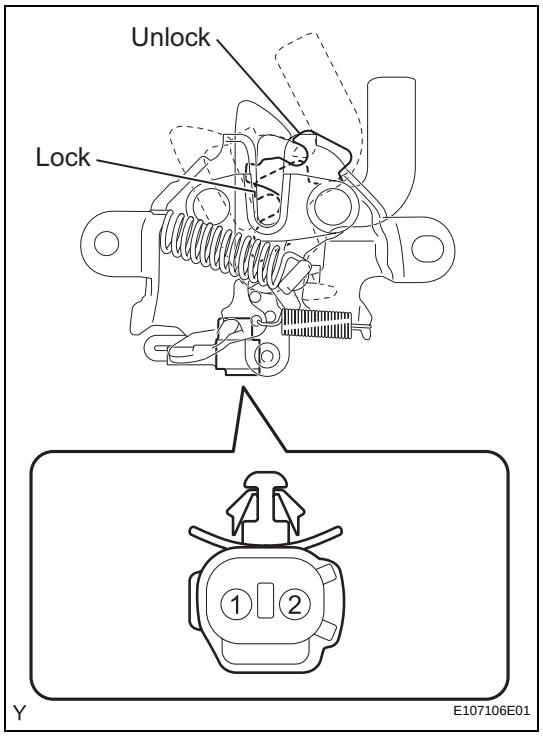

(a) Disconnect the A18 courtesy switch connector.
(b) Check the resistance of the engine hood courtesy switch.

Standard resistance

Tester Connection	Condition	Specified Condition
1 - 2	Lock (OFF)	10 kΩ or higher
1 - 2	Unlock (ON)	Below 1 Ω

(c) Reconnect the courtesy switch connector.

NG → **REPLACE HOOD LOCK ASSEMBLY**

OK

3	CHECK HARNESS AND CONNECTOR (THEFT WARNING ECU ASSEMBLY - ENGINE HOOD COURTESY SWITCH)

Wire Harness Side:

Engine Hood Courtesy Switch Connector

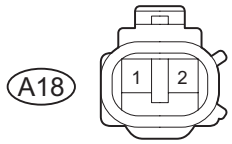

Front View

Theft Warning ECU Assembly Connector

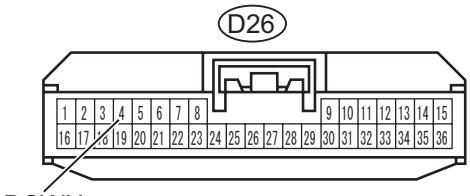

Front View

B121330E01

(a) Disconnect the D26 theft warning ECU and A18 engine hood courtesy switch connectors.
(b) Measure the resistance.
Standard resistance

Tester Connection	Specified Condition
D26-4 (DSWH) - A18-1	Below 1 Ω
D26-4 (DSWH) - Body ground	10 kΩ or higher

(c) Reconnect the theft warning ECU and engine hood courtesy switch connectors.

NG → **REPAIR OR REPLACE HARNESS OR CONNECTOR**

OK

4	CHECK HARNESS AND CONNECTOR (ENGINE HOOD COURTESY SWITCH - BODY GROUND)

Wire Harness Side:

Engine Hood Courtesy Switch Connector

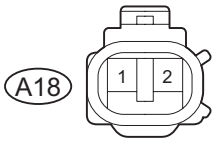

Front View

B121331E01

(a) Disconnect the A18 engine hood courtesy switch connector.
(b) Measure the resistance.
Standard resistance

Tester Connection	Specified Condition
A18-2 - Body ground	Below 1 Ω

(c) Reconnect the engine hood courtesy switch connector.

NG → **REPAIR OR REPLACE HARNESS OR CONNECTOR**

OK

REPLACE THEFT WARNING ECU ASSEMBLY

Security Horn Circuit

DESCRIPTION

When the theft deterrent system is changed from the armed state to the alarm sounding state, the theft warning ECU can sound the security horn. The horn cycles between ON and OFF at intervals of approximately 0.4 seconds.

WIRING DIAGRAM

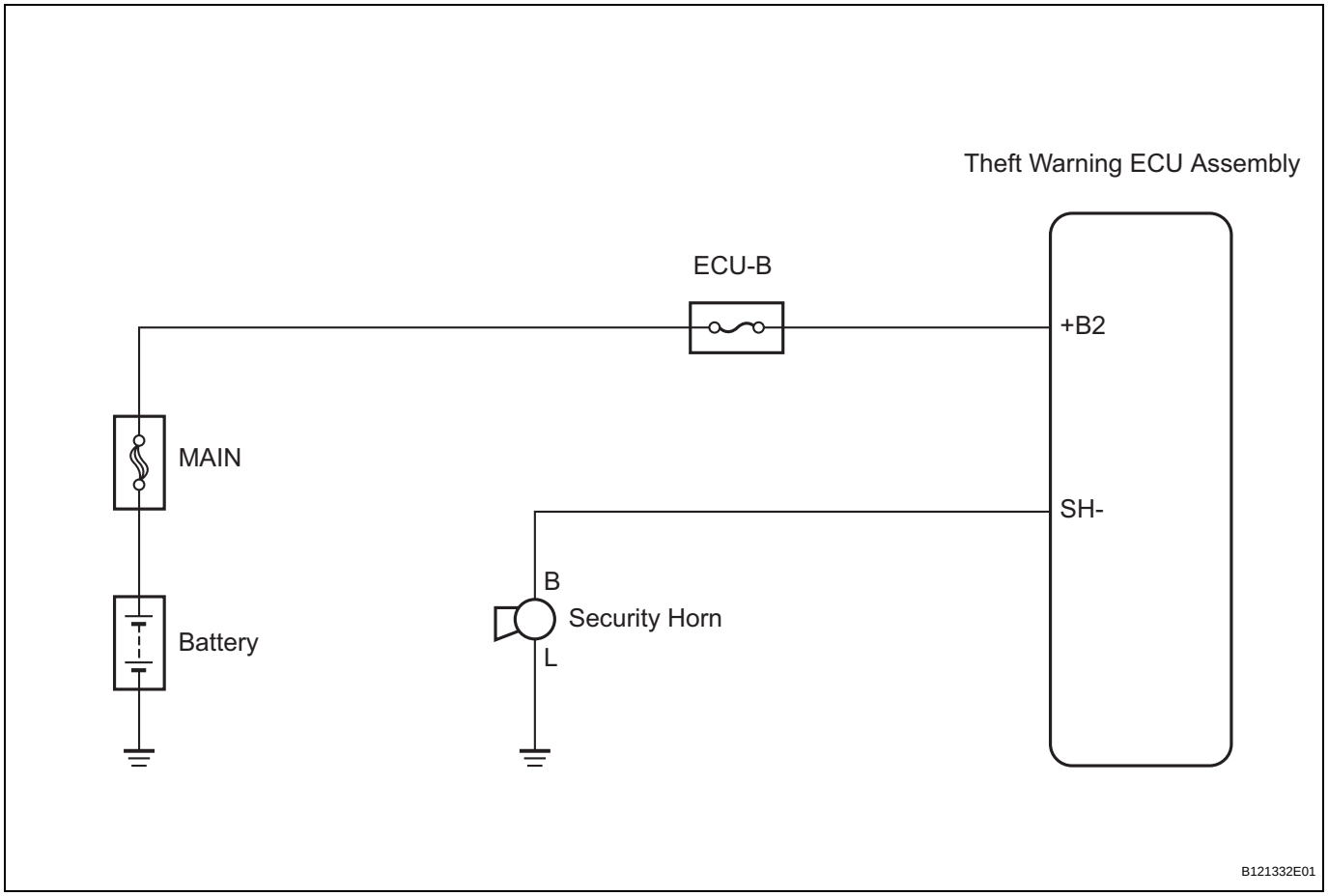

INSPECTION PROCEDURE

1	PERFORM ACTIVE TEST USING INTELLIGENT TESTER (SECURITY HORN)

(a) Connect the intelligent tester with CAN VIM to the DLC3.
(b) Turn the ignition switch ON.
(c) Turn the intelligent tester main switch ON.
(d) Select the item below in the ACTIVE TEST and then check that the horn operates.

Theft Warning ECU

Item	Test Details	Diagnostic Note
SECURITY HORN	Security horn ON/OFF	-

OK:

Security horn operates normally.

NG → Go to step 2

OK

PROCEED TO NEXT CIRCUIT INSPECTION SHOWN IN PROBLEM SYMPTOMS TABLE

TD

2 INSPECT FUSE (ECU-B)

Engine Room R/B:

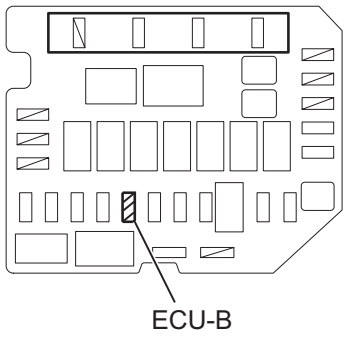

B122728E01

(a) Remove the ECU-B fuse from the engine room R/B.
(b) Measure the resistance.
Standard resistance:
Below 1 Ω
(c) Reinstall the ECU-B fuse.

NG → **REPLACE FUSE**

OK

3 CHECK HARNESS AND CONNECTOR (THEFT WARNING ECU ASSEMBLY- BODY GROUND)

Wire Harness Side:

Theft Warning ECU Assembly Connector

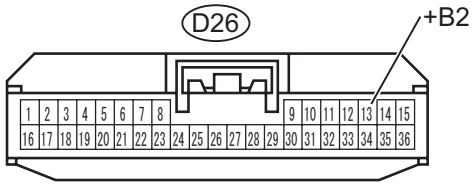

Front View

B121327E10

(a) Disconnect the D26 theft warning ECU connector.
(b) Measure the voltage.
Standard voltage

Tester Connection	Specified Condition
D26-13 (+B2) - Body ground	11 to 14 V

(c) Reconnect the theft warning ECU connector.

NG → **REPAIR OR REPLACE HARNESS OR CONNECTOR**

OK

4 INSPECT SECURITY HORN ASSEMBLY

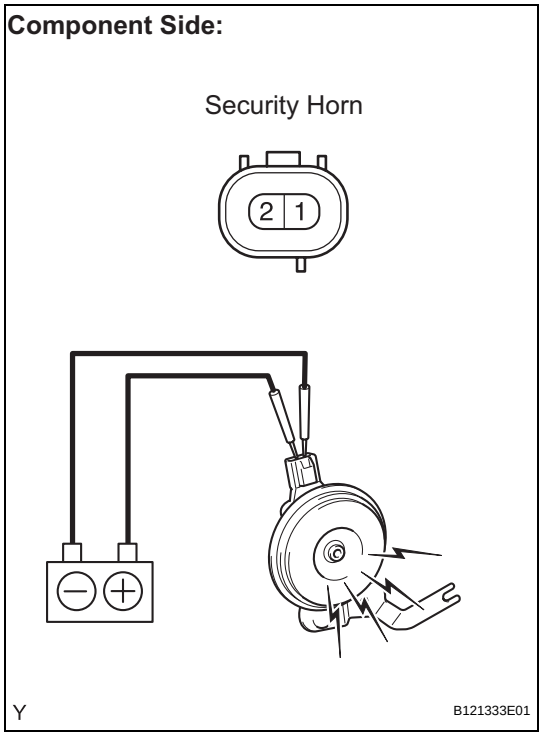

(a) Disconnect the A23 security horn connector.
(b) Check the operation of the security horn.
Standard

Measurement Condition	Specified Condition
Battery positive (+) → Terminal 1 Battery negative (-) → Terminal 2	Security horn sounds

(c) Reconnect the security horn connector.

NG → **REPLACE SECURITY HORN ASSEMBLY**

OK

5 CHECK HARNESS AND CONNECTOR (THEFT WARNING ECU ASSEMBLY - SECURITY HORN ASSEMBLY)

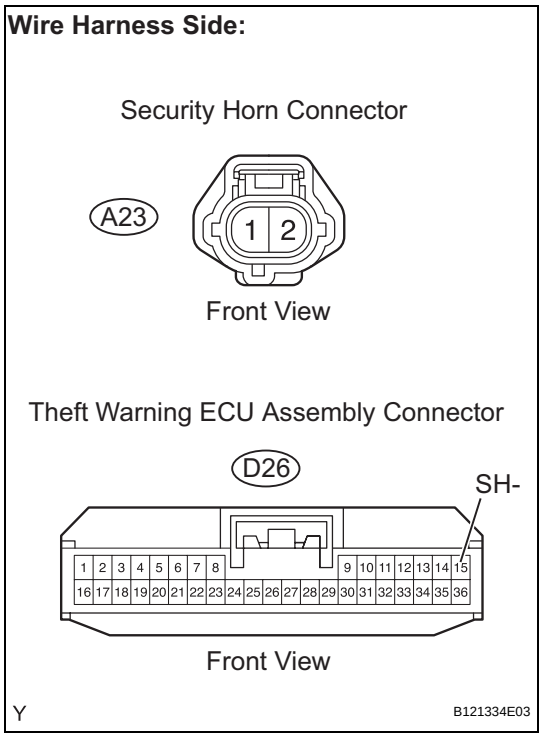

(a) Disconnect the D26 theft warning ECU and the A23 security horn connectors.
(b) Measure the resistance.
Standard resistance

Tester Connection	Specified Condition
D26-15 (SH-) - A23-1	Below 1 Ω
A23-2 - Body ground	Below 1 Ω
D26-15 (SH-) or (A23-1) - Body ground	10 kΩ or higher

(c) Reconnect the theft warning ECU and the security horn connectors.

NG → **REPAIR OR REPLACE HARNESS OR CONNECTOR**

OK

REPLACE THEFT WARNING ECU ASSEMBLY

Ignition Switch Circuit

DESCRIPTION

When the ignition switch is turned to the ON position, the battery positive voltage is applied to terminal IG of the theft warning ECU. When the battery positive voltage is applied to terminal IG of the ECU while the theft deterrent system is operating, the warning stops. Furthermore, the power supplied from terminal IG of the ECU is used as the power for the door courtesy switch and position switch, etc.

WIRING DIAGRAM

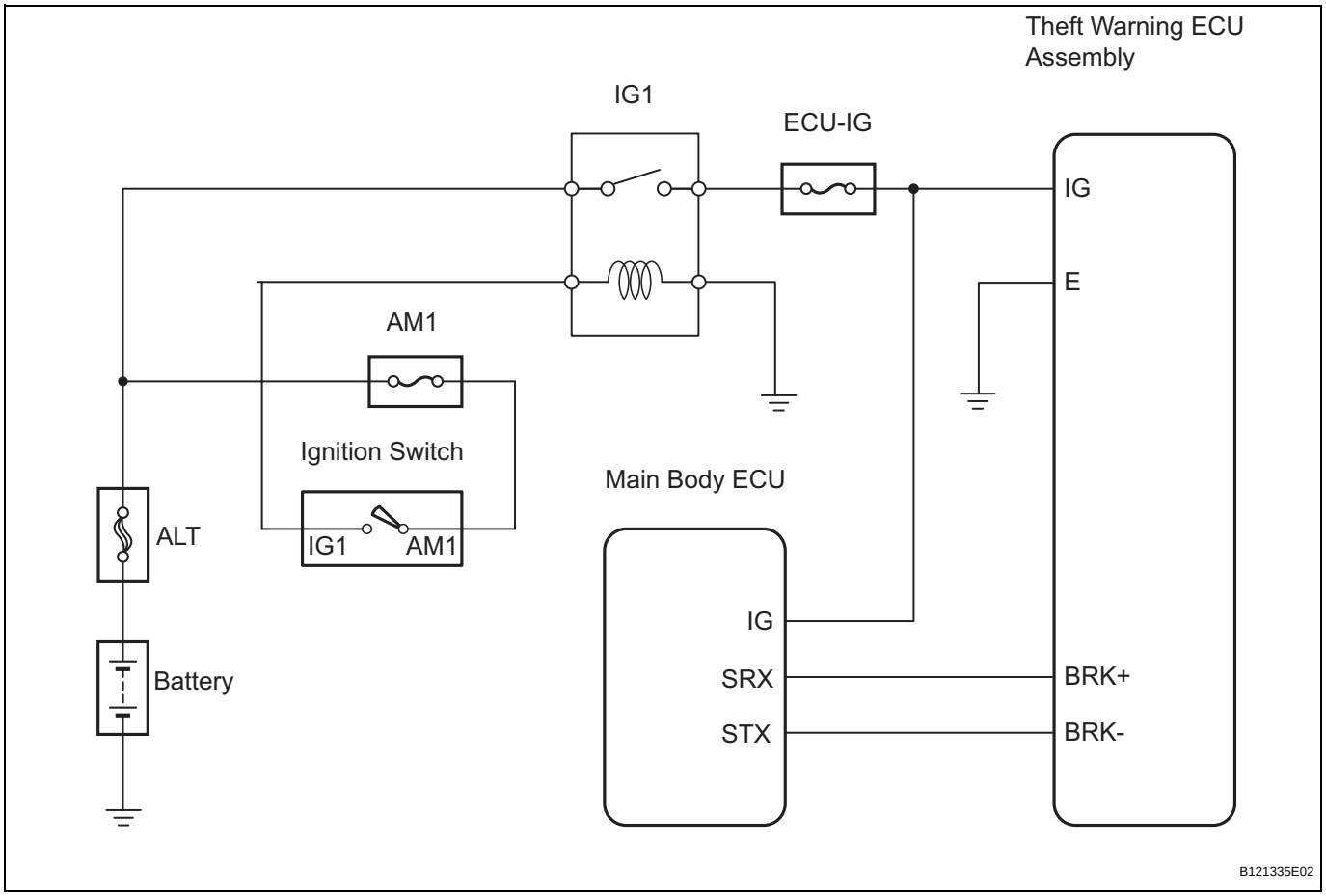

INSPECTION PROCEDURE

1	CHECK FOR DTC

(a) Connect the intelligent tester with CAN VIM to the DLC3.
(b) Turn the ignition switch ON and turn the tester ON.
(c) Clear the DTCs.
(d) Check whether DTC B1269 recurs 10 seconds or more after the ignition switch is turned on.
OK:
No DTC is output.

NG	GO TO DTC CHART

OK

2	READ VALUE USING INTELLIGENT TESTER (IGNITION SWITCH)

(a) Connect the intelligent tester with CAN VIM to the DLC3.
(b) Turn the ignition switch ON.
(c) Turn the intelligent tester main switch ON.
(d) Select the item below in the DATA LIST and read the display on the tester.

TD

Theft Warning ECU

Item	Measurement Item/Display (Range)	Normal Condition	Diagnostic Note
IG SW	Ignition switch signal ON/OFF	ON: Key is in ON or START position OFF: Key is in LOCK or ACC position	-

NG → **Go to step 3**

OK

PROCEED TO NEXT CIRCUIT INSPECTION SHOWN IN PROBLEM SYMPTOMS TABLE

3	INSPECT FUSE (ECU-IG)

Main Body ECU:

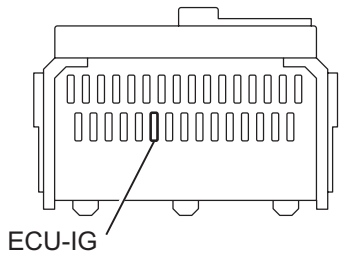

(a) Remove the ECU-IG fuse from the main body ECU.
(b) Measure the resistance.
Standard resistance:
Below 1 Ω
(c) Reinstall the ECU-IG fuse.

NG → **REPLACE FUSE**

OK

4	CHECK HARNESS OR CONNECTOR (IG POWER SOURCE)

Wire Harness Side:

Theft Warning ECU Assembly Connector

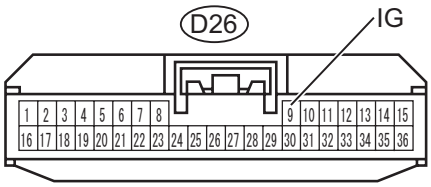

Front View

B121327E03

(a) Disconnect the D26 theft warning ECU connector.
(b) Turn the ignition switch ON.
(c) Measure the voltage.

Standard voltage

Tester Connection	Specified Condition
D26-9 (IG) - Body ground	11 to 14 V

(d) Reconnect the theft warning ECU connector.

NG → **REPAIR OR REPLACE HARNESS OR CONNECTOR**

OK

REPLACE THEFT WARNING ECU ASSEMBLY

TD

Security Indicator Light Circuit

DESCRIPTION

While the theft deterrent system is preparing itself to be set, this circuit lights up the security indicator light. When the system is set, it continuously turns the indicator light on for 0.2 seconds and then turns it off for 1.8 seconds, thus the indicator light blinks.

WIRING DIAGRAM

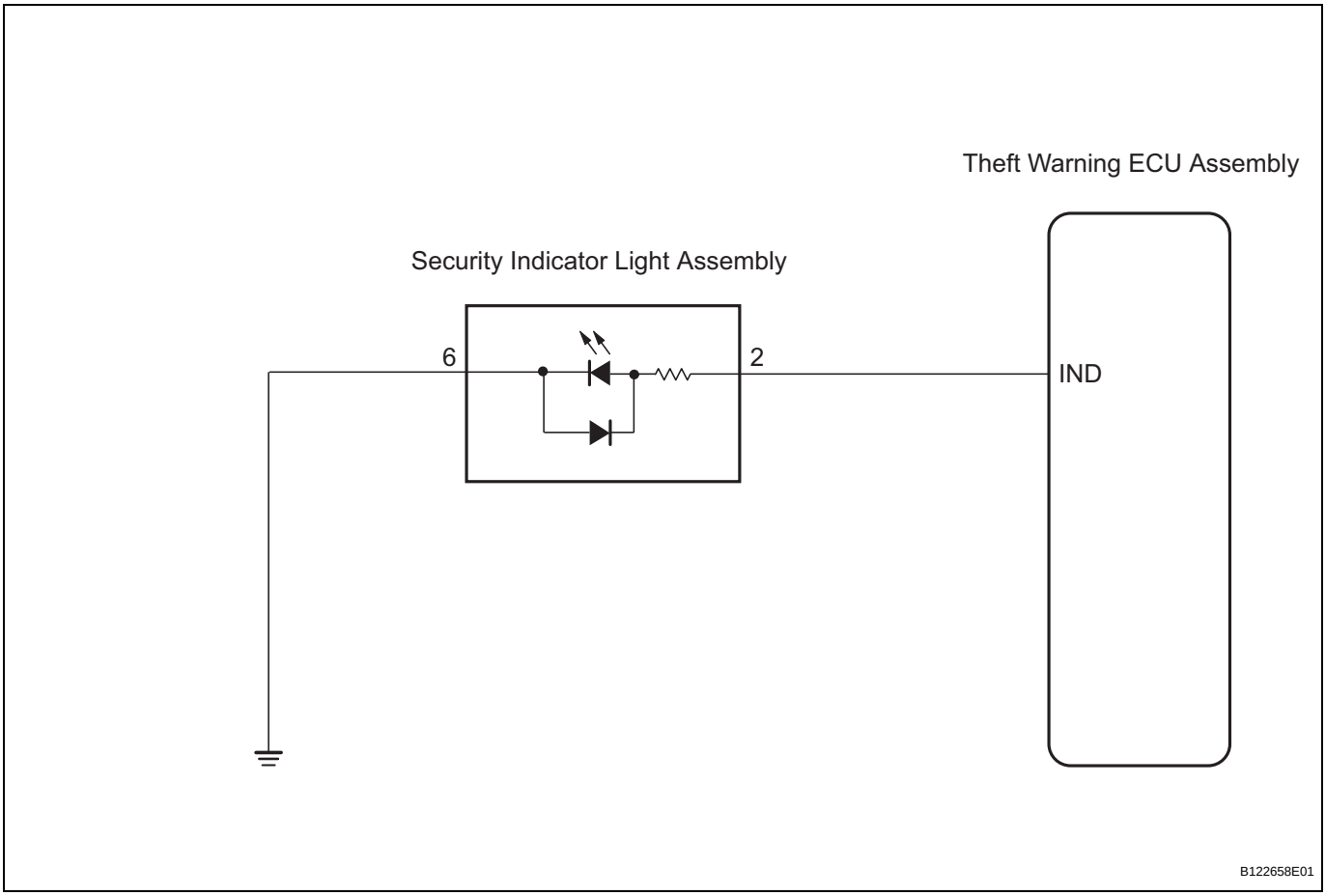

INSPECTION PROCEDURE

1	PERFORM ACTIVE TEST USING INTELLIGENT TESTER (SECURITY INDICATOR LIGHT)

(a) Connect the intelligent tester with CAN VIM to the DLC3.
(b) Turn the ignition switch ON.
(c) Turn the intelligent tester main switch ON.
(d) Select the item below in the ACTIVE TEST and then check that the security indicator operates.

Theft Warning ECU

Item	Test Details	Diagnostic Note
SECURITY INDIC	Security indicator light ON/OFF	-

OK:
The security indicator light turns on and off correctly when it is operated through the intelligent tester.

NG → **Go to step 2**

OK

PROCEED TO NEXT CIRCUIT INSPECTION SHOWN IN PROBLEM SYMPTOMS TABLE

TD

2 CHECK SECURITY INDICATOR LIGHT ASSEMBLY

Component Side:

Security Indicator Light Assembly

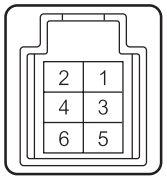

E108193E04

(a) Disconnect the D25 security indicator light connector.
(b) Apply battery voltage to the terminals of the security indicator and check the lighting condition.
Standard

Measurement Condition	Specified Operation
Battery positive (+) - Terminal 2 Battery negative (-) - Terminal 6	Indicator light comes on.

(c) Reconnect the indicator light connector.

NG → **REPLACE SECURITY INDICATOR LIGHT ASSEMBLY**

OK

3 CHECK HARNESS AND CONNECTOR (THEFT WARNING ECU - SECURITY INDICATOR LIGHT ASSEMBLY)

Wire Harness Side:

Security Indicator Light Assembly Connector

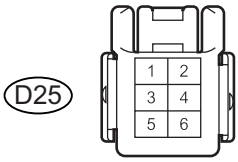

Front View

Theft Warning ECU Assembly Connector

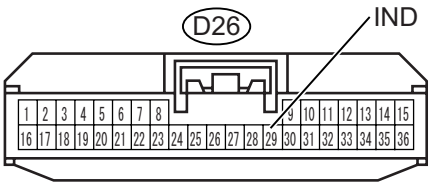

Front View

B122659E01

(a) Disconnect the D26 theft warning ECU and the D25 security indicator light connectors.
(b) Measure the resistance.
Standard resistance

Tester Connection	Specified Condition
D26-29 (IND) - D25-2	Below 1 Ω
D26-29 (IND) - Body ground	10 kΩ or higher

(c) Reconnect the theft warning ECU and the security indicator light connectors.

NG → **REPAIR OR REPLACE HARNESS OR CONNECTOR**

OK

4	CHECK HARNESS AND CONNECTOR (SECURITY INDICATOR LIGHT ASSEMBLY - BODY GROUND)

Wire Harness Side:

Security Indicator Light Assembly Connector

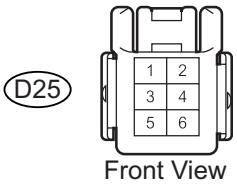

B122660E01

(a) Disconnect the D25 security indicator light connector.
(b) Measure the resistance.
Standard resistance

Tester Connection	Specified Condition
D25-6 - Body ground	Below 1 Ω

(c) Reconnect the security indicator light connector.

NG → **REPAIR OR REPLACE HARNESS OR CONNECTOR**

OK

REPLACE THEFT WARNING ECU ASSEMBLY

Back Door UNLOCK Detection Switch Circuit

DESCRIPTION

The back door unlock detection switch comes on when the back door key cylinder is turned to the unlock position with the key.

WIRING DIAGRAM

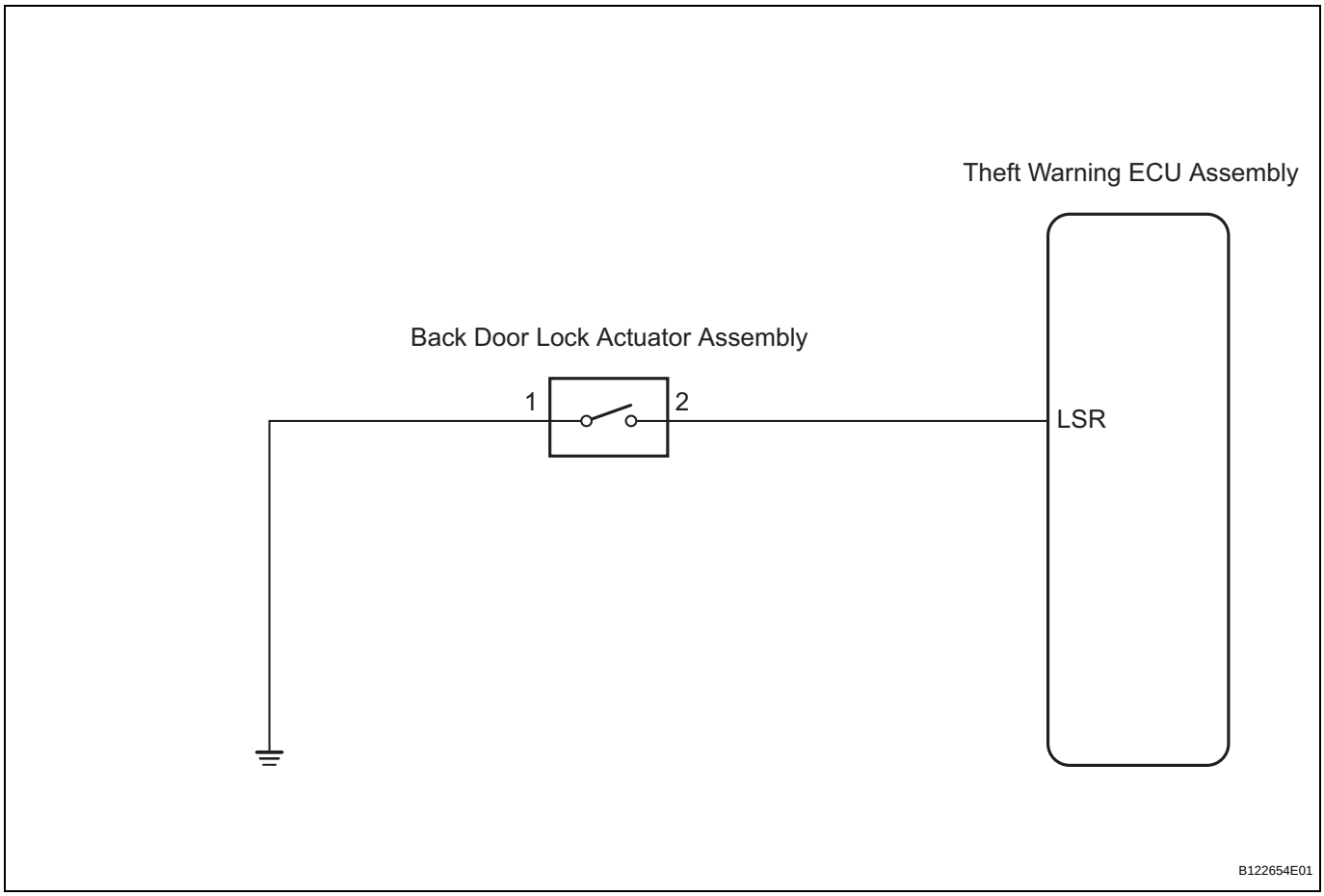

INSPECTION PROCEDURE

1	READ VALUE USING INTELLIGENT TESTER (BACK DOOR UNLOCK DETECTION SWITCH)

(a) Connect the intelligent tester with CAN VIM to the DLC3.
(b) Turn the ignition switch ON.
(c) Turn the intelligent tester main switch on.
(d) Select the item below in the DATA LIST and then read the display on the tester.

Theft Warning ECU

Item	Test Details	Diagnostic Note
BACK DOOR LOCK	Back door unlock detection switch signal OFF	-

OK:

When the back door is locked, "ON" appears on the screen.

Theft Warning ECU

Item	Test Details	Diagnostic Note
BACK DOOR UNLOCK	Back door unlock detection switch signal ON	-

OK:

When the back door is unlocked, "ON" appears on the screen.

HINT:

The theft warning ECU detects the back door lock condition using signals from the back door unlock detection switch. The condition can be displayed as BACK DOOR LOCK or BACK DOOR UNLOCK on an intelligent tester by the theft warning ECU.

NG → **Go to step 2**

OK

PROCEED TO NEXT CIRCUIT INSPECTION SHOWN IN PROBLEM SYMPTOMS TABLE

2 INSPECT BACK DOOR LOCK ACTUATOR ASSEMBLY (UNLOCK DETECTION SWITCH)

Component Side:

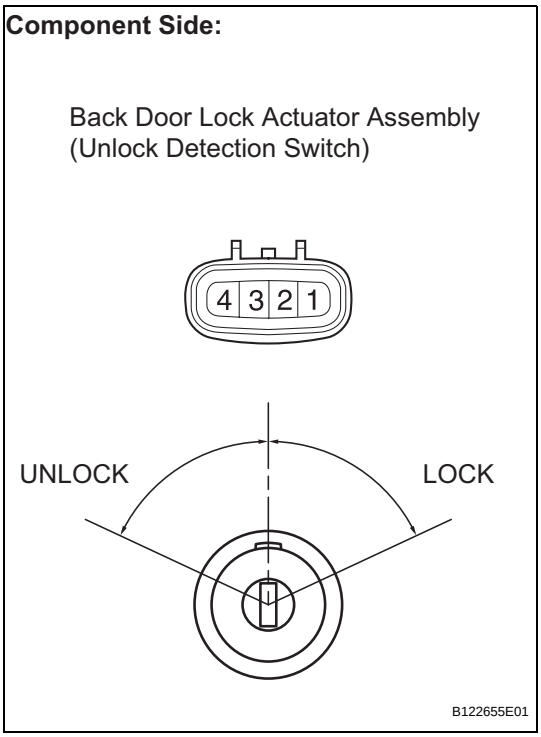

(a) Disconnect the N4 unlock detection switch connector.

(b) Measure the resistance.

Standard resistance

Tester Connection	Condition	Specified Condition
1 - 2	The back door is locked	10 kΩ or higher
1 - 2	The back door is unlocked	Below 1 Ω

(c) Reconnect the unlock detection switch connector.

NG → **REPLACE BACK DOOR LOCK ACTUATOR ASSEMBLY**

OK

3	CHECK HARNESS AND CONNECTOR (THEFT WARNING ECU ASSEMBLY - BACK DOOR LOCK ACTUATOR ASSY)

Wire Harness Side:

Back Door Lock Actuator Assembly
(Unlock Detection Switch) Connector

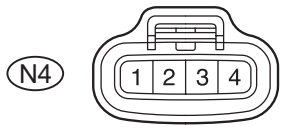

Front View

Theft Warninng ECU Assembly Connector

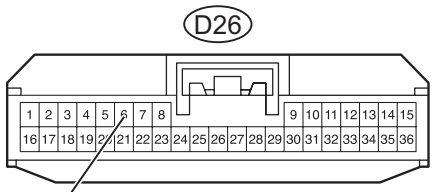

Front View

Y B122656E03

(a) Disconnect the D26 theft warning ECU and the N4 unlock detection switch connectors.
(b) Measure the resistance.

Standard resistance

Tester Connection	Specified Condition
D26-6 (LSR) - N4-2	Below 1 Ω
N4-2 - Body ground	10 kΩ or higher

(c) Reconnect the theft warning ECU and the unlock detection switch connectors.

NG → **REPAIR OR REPLACE HARNESS OR CONNECTOR**

OK

4	CHECK HARNESS AND CONNECTOR (BACK DOOR LOCK ACTUATOR ASSEMBLY - BODY GROUND)

Wire Harness Side:

Back Door Lock Actuator Assembly
(Unlock Detection Switch) Connector

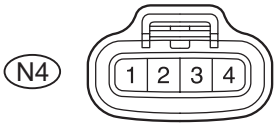

Front View

B122657E01

(a) Disconnect the N4 unlock detection switch connector.
(b) Measure the resistance.

Standard resistance

Tester Connection	Specified Condition
N4-1 - Body ground	Below 1 Ω

(c) Reconnect the unlock detection switch connector.

NG → **REPAIR OR REPLACE HARNESS OR CONNECTOR**

OK

REPLACE THEFT WARNING ECU ASSEMBLY

Luggage Compartment Door Key Cylinder Switch Circuit

DESCRIPTION

The luggage compartment door unlock detection switch comes on when the luggage compartment door key cylinder is turned to the unlock position with the key.

WIRING DIAGRAM

TD

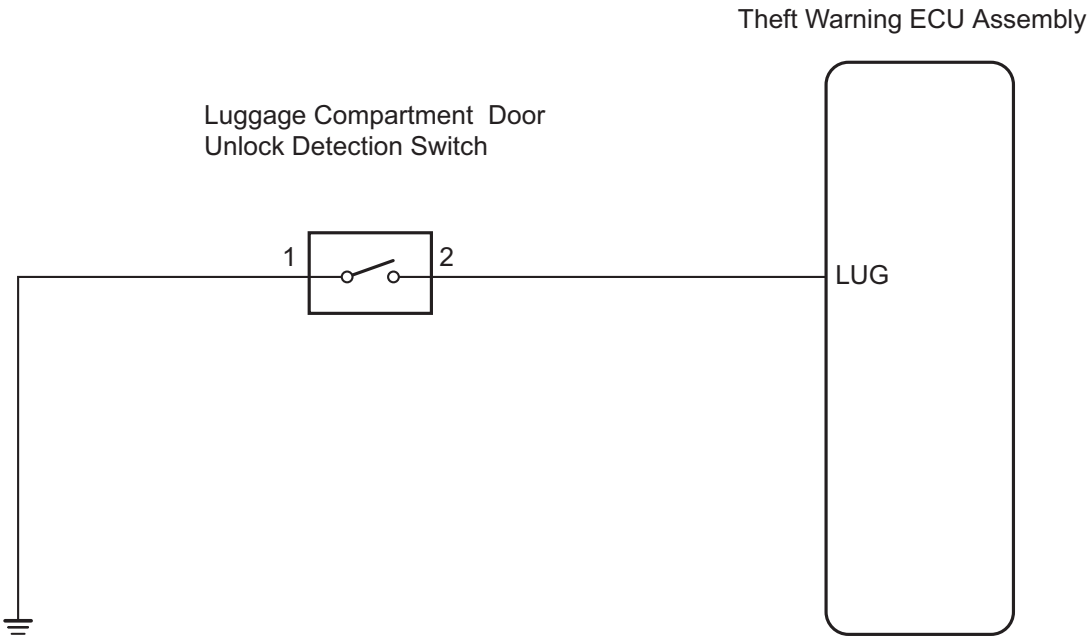

B122654E03

INSPECTION PROCEDURE

1	READ VALUE USING INTELLIGENT TESTER (LUGGAGE COMPARTMENT DOOR UNLOCK DETECTION SWITCH)

(a) Connect the intelligent tester with CAN VIM to the DLC3.
(b) Turn the ignition switch ON.
(c) Turn the intelligent tester main switch ON.
(d) Select the item below in the DATA LIST and then read the display on the tester.

Theft Warning ECU

Item	Test Details	Diagnostic Note
TRUNK KEY UNLK	Luggage compartment door unlock detection switch signal ON	-

OK:

When the luggage compartment door is unlocked, "ON" appears on the screen.

HINT:
The theft warning ECU detects the luggage compartment door lock condition using signals from the luggage compartment door unlock detection switch.

NG → Go to step 2

OK

PROCEED TO NEXT CIRCUIT INSPECTION SHOWN IN PROBLEM SYMPTOMS TABLE

TD

2 INSPECT LUGGAGE COMPARTMENT DOOR UNLOCK DETECTION SWITCH

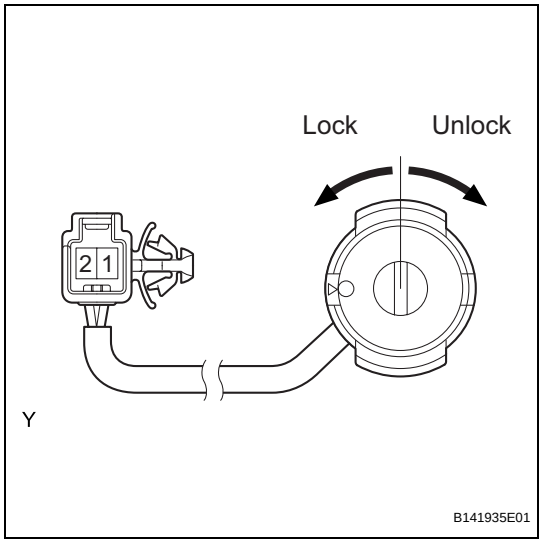

(a) Disconnect the J43 unlock detection switch connector.
(b) Measure the resistance.
Standard resistance

Tester Connection	Condition	Specified Condition
1 - 2	The luggage compartment door is locked	10 kΩ or higher
1 - 2	The luggage compartment door is unlocked	Below 1 Ω

(c) Reconnect the unlock detection switch connector.

NG → REPLACE LUGGAGE COMPARTMENT DOOR UNLOCK DETECTION SWITCH

OK

3	CHECK HARNESS AND CONNECTOR (THEFT WARNING ECU - UNLOCK DETECTION SWITCH)

Wire Harness Side:

Luggage Compartment Door Unlock Detection Switch Connector

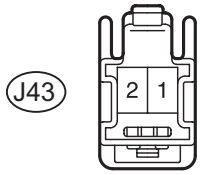

Front View

Theft Warninng ECU Assembly Connector

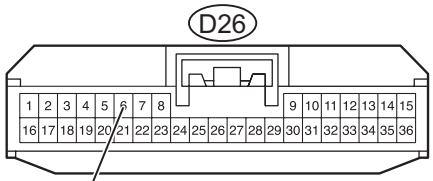

Front View

B144487E01

(a) Disconnect the D26 theft warning ECU and the J43 unlock detection switch connectors.
(b) Measure the resistance.
Standard resistance

Tester Connection	Specified Condition
D26-6 (LUG) - J43-2	Below 1 Ω
D26-6 (LUG) or J43-2 - Body ground	10 kΩ or higher

(c) Reconnect the theft warning ECU and the unlock detection switch connectors.

NG → **REPAIR OR REPLACE HARNESS OR CONNECTOR**

OK

4	CHECK HARNESS AND CONNECTOR (UNLOCK DETECTION SWITCH - BODY GROUND)

Wire Harness Side:

Luggage Compartment Door Unlock Detection Switch Connector

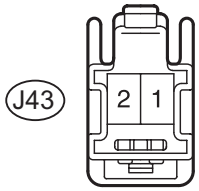

Front View

P

B144427E01

(a) Disconnect the J43 unlock detection switch connector.
(b) Measure the resistance.
Standard resistance

Tester Connection	Specified Condition
J43-1 - Body ground	Below 1 Ω

(c) Reconnect the unlock detection switch connector.

NG → **REPAIR OR REPLACE HARNESS OR CONNECTOR**

OK

REPLACE THEFT WARNING ECU ASSEMBLY

ECU Power Source Circuit

DESCRIPTION

This circuit provides power to operate the theft warning ECU.

WIRING DIAGRAM

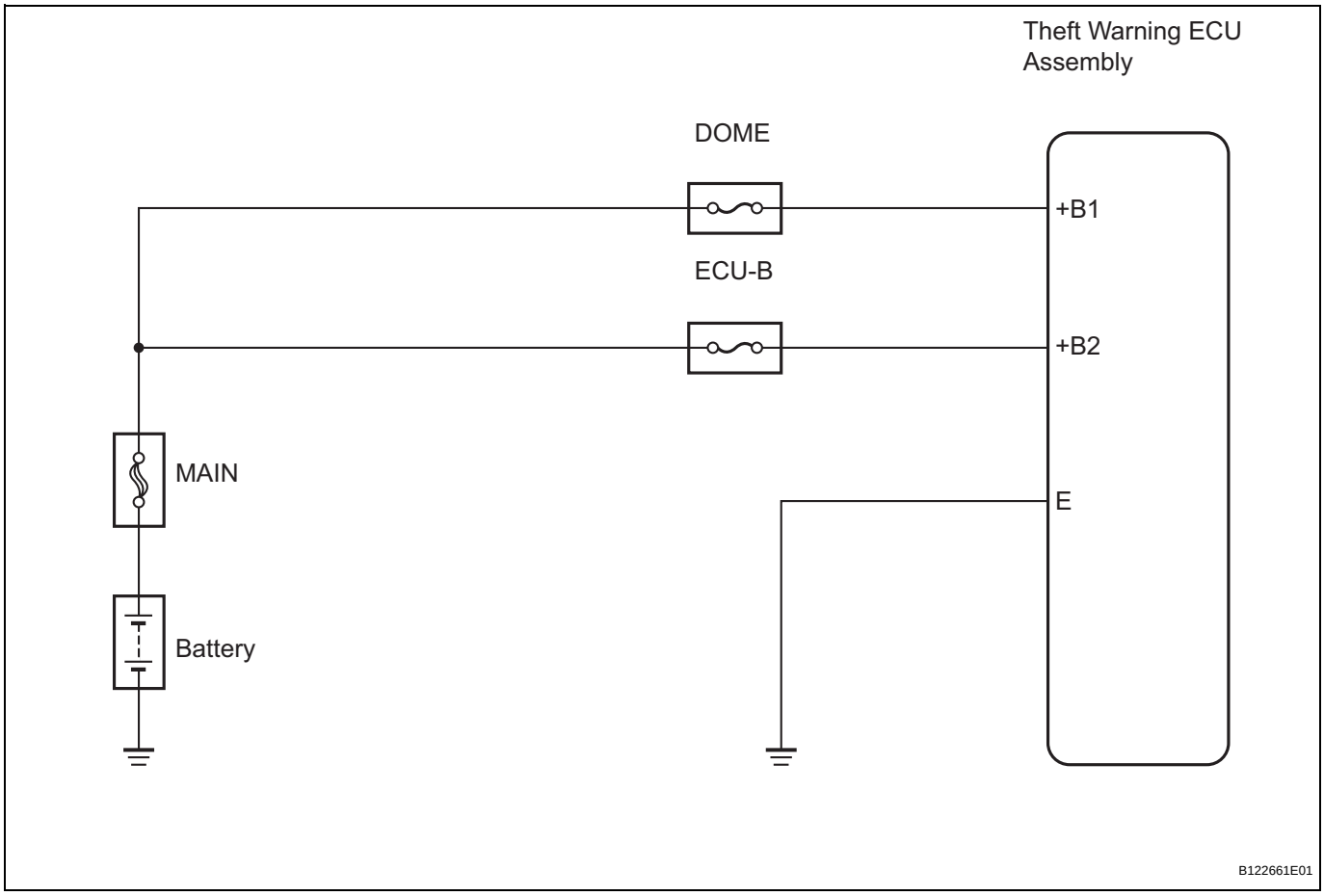

INSPECTION PROCEDURE

1	INSPECT FUSE (ECU-B, DOME)

(a) Remove the ECU-B fuse and DOME fuse from the engine room R/B.
(b) Measure the resistance.
Standard resistance:
Below 1 Ω
(c) Reinstall the fuses.

NG → **REPLACE FUSE**

OK

2 INSPECT THEFT WARNING ECU ASSEMBLY

Wire Harness Side:

Theft Warning ECU Assembly Connector

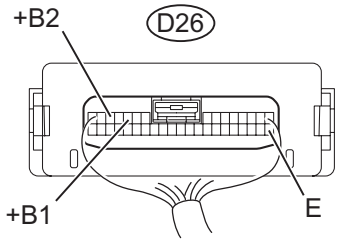

Y B122662E01

(a) Remove the theft warning ECU assembly without disconnecting the D26 connector.
(b) Measure the voltage.
Standard voltage

Tester Connection	Specified Condition
D26-11 (+B1) - D26-16 (E)	11 to 14 V
D26-13 (+B2) - D26-16 (E)	11 to 14 V

OK → **PROCEED TO NEXT CIRCUIT INSPECTION SHOWN IN PROBLEM SYMPTOMS TABLE**

NG

3 CHECK HARNESS AND CONNECTOR (POWER SOURCE)

Wire Harness Side:

Theft Warning ECU Assembly Connector

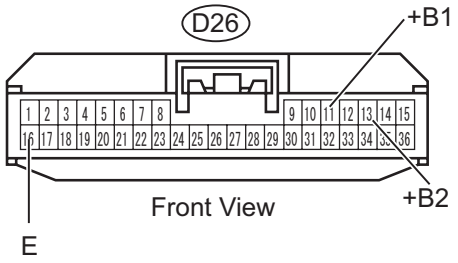

B121327E09

(a) Disconnect the D26 theft warning ECU connector.
(b) Measure the voltage.
Standard voltage

Tester Connection	Specified Condition
D26-11 (+B1) - Body ground	11 to 14 V
D26-13 (+B2) - Body ground	11 to 14 V

(c) Measure the resistance.
Standard resistance

Tester Connection	Specified Condition
D26-16 (E) - Body ground	Below 1 Ω

(d) Reconnect the theft warning ECU connector.

NG → **REPAIR OR REPLACE HARNESS OR CONNECTOR**

OK

REPLACE THEFT WARNING ECU ASSEMBLY

Unlock Warning Switch Circuit

DESCRIPTION

The key unlock warning switch comes on when the ignition key is inserted into the ignition key cylinder and goes off when the ignition key is removed.
The theft warning ECU operates the key confinement prevention function while the key unlock warning switch is on.

WIRING DIAGRAM

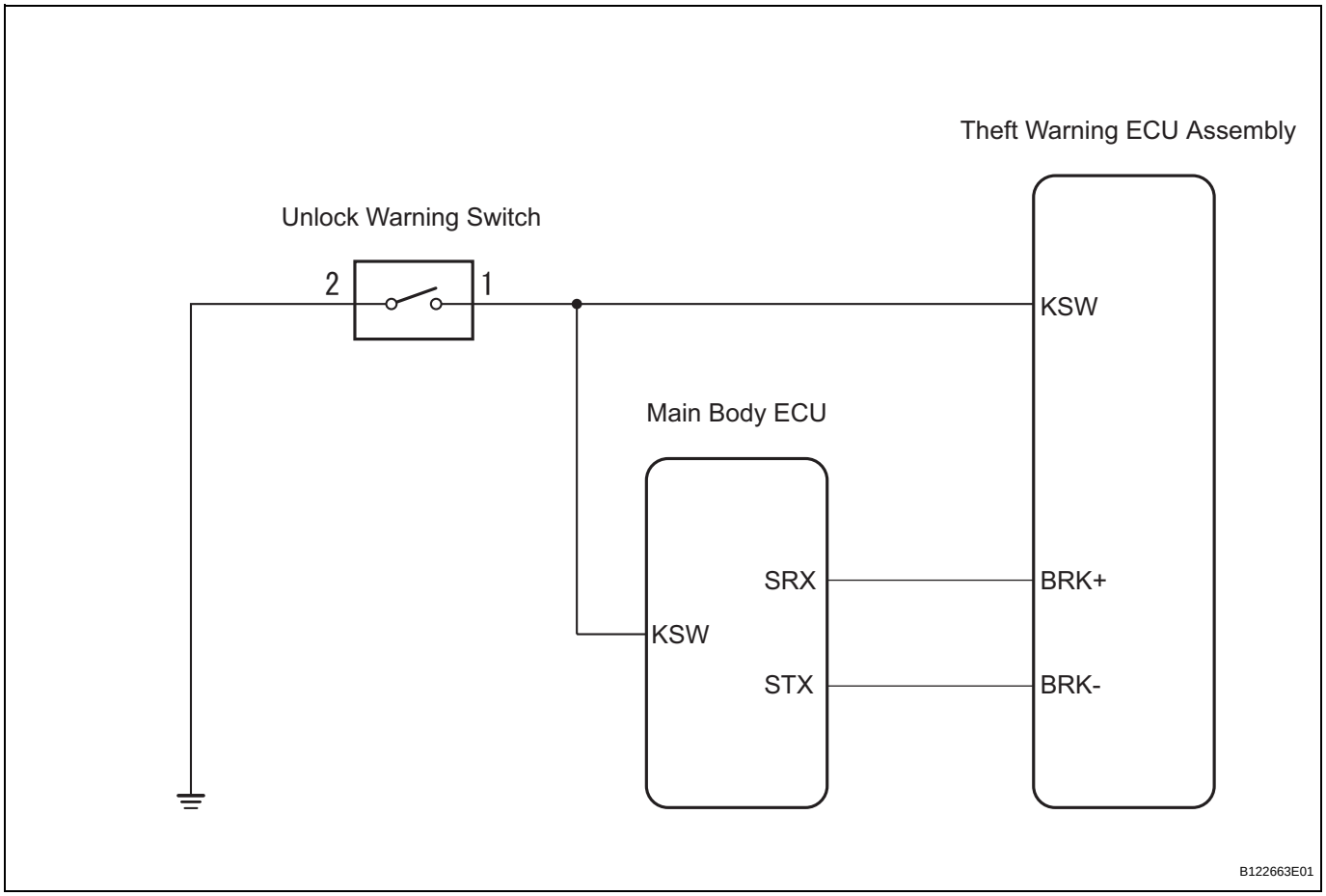

INSPECTION PROCEDURE

1	**CHECK FOR DTC**

(a) Connect the intelligent tester with CAN VIM to the DLC3.
(b) Turn the ignition switch ON and turn the tester ON.
(c) Clear the DTCs.
(d) Check whether DTC B1269 recurs 10 seconds or more after the ignition switch is turned ON.
OK:
No DTC is output.

NG	**GO TO DTC CHART**

OK

2	READ VALUE USING INTELLIGENT TESTER (UNLOCK WARNING SWITCH)

(a) Connect the intelligent tester with CAN VIM to the DLC3.
(b) Turn the ignition switch ON.
(c) Turn the intelligent tester main switch ON.
(d) Select the item below in the DATA LIST and then read the display on the tester.

TD

Theft Warning ECU

Item	Measurement Item/Display (Range)	Normal Condition	Diagnostic Note
KEY UNLK WRN SW	Unlock warning switch signal ON/OFF	ON: Key is inserted into ignition key cylinder OFF: Key is removed from ignition key cylinder	-

OK:
When the key is in the ignition key cylinder, "ON" appears on the screen.

NG → **Go to step 3**

OK

PROCEED TO NEXT CIRCUIT INSPECTION SHOWN IN PROBLEM SYMPTOMS TABLE

3	INSPECT UNLOCK WARNING SWITCH ASSEMBLY

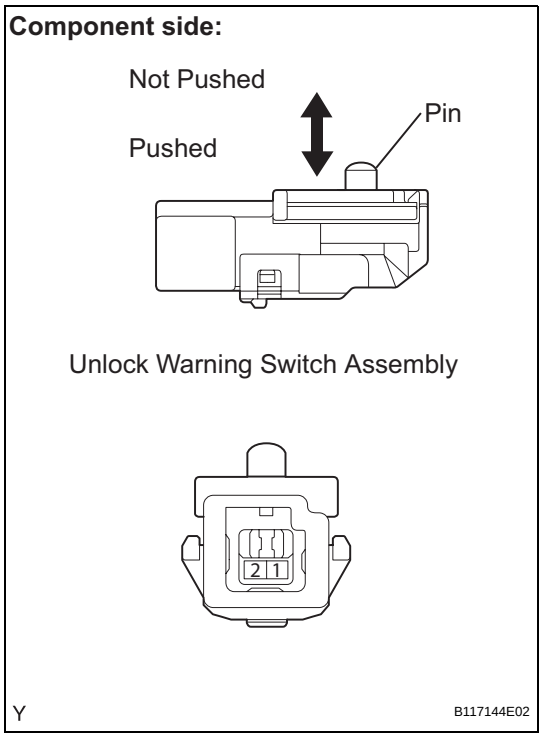

(a) Remove the unlock warning switch assembly.
(b) Measure the resistance.
Standard resistance

Tester Connection	Condition	Specified Condition
1 - 2	Pushed (ON (Key inserted))	Below 1 Ω
1 - 2	Not pushed (OFF (Key removed))	10 kΩ or higher

(c) Reinstall the unlock warning switch assembly.

NG → **REPLACE UNLOCK WARNING SWITCH ASSEMBLY**

OK

4	CHECK HARNESS AND CONNECTOR (THEFT WARNING ECU ASSEMBLY - UNLOCK WARNING SWITCH ASSEMBLY)

Wire Harness Side:

Unlock Warning Switch Assembly Connector

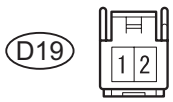

Front View

Theft Warning ECU Assembly Connector

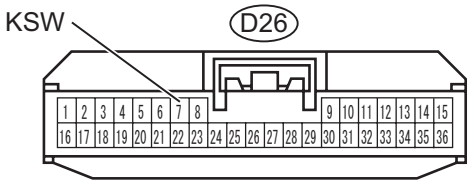

Front View

B122664E01

(a) Disconnect the D26 theft warning ECU and the D19 unlock warning switch connectors.
(b) Measure the resistance.
Standard resistance

Tester Connection	Specified Condition
D26-7 (KSW) - (D19-1)	Below 1 Ω
D26-7 (KSW) - Body ground	10 kΩ or higher

(c) Reconnect the theft warning ECU and the unlock warning switch connectors.

NG → **REPAIR OR REPLACE HARNESS OR CONNECTOR**

OK

5	CHECK HARNESS AND CONNECTOR (UNLOCK WARNING SWITCH ASSEMBLY - BODY GROUND)

Wire Harness Side:

Unlock Warning Switch Assembly Connector

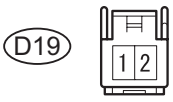

Front View

B122665E01

(a) Disconnect the D19 unlock warning switch connector.
(b) Measure the resistance.
Standard resistance

Tester Connection	Specified Condition
D19-2 - Body ground	Below 1 Ω

(c) Reconnect the unlock warning switch connector.

NG → **REPAIR OR REPLACE HARNESS OR CONNECTOR**

OK

REPLACE THEFT WARNING ECU ASSEMBLY

ENGINE HOOD COURTESY SWITCH (for Sedan)

COMPONENTS

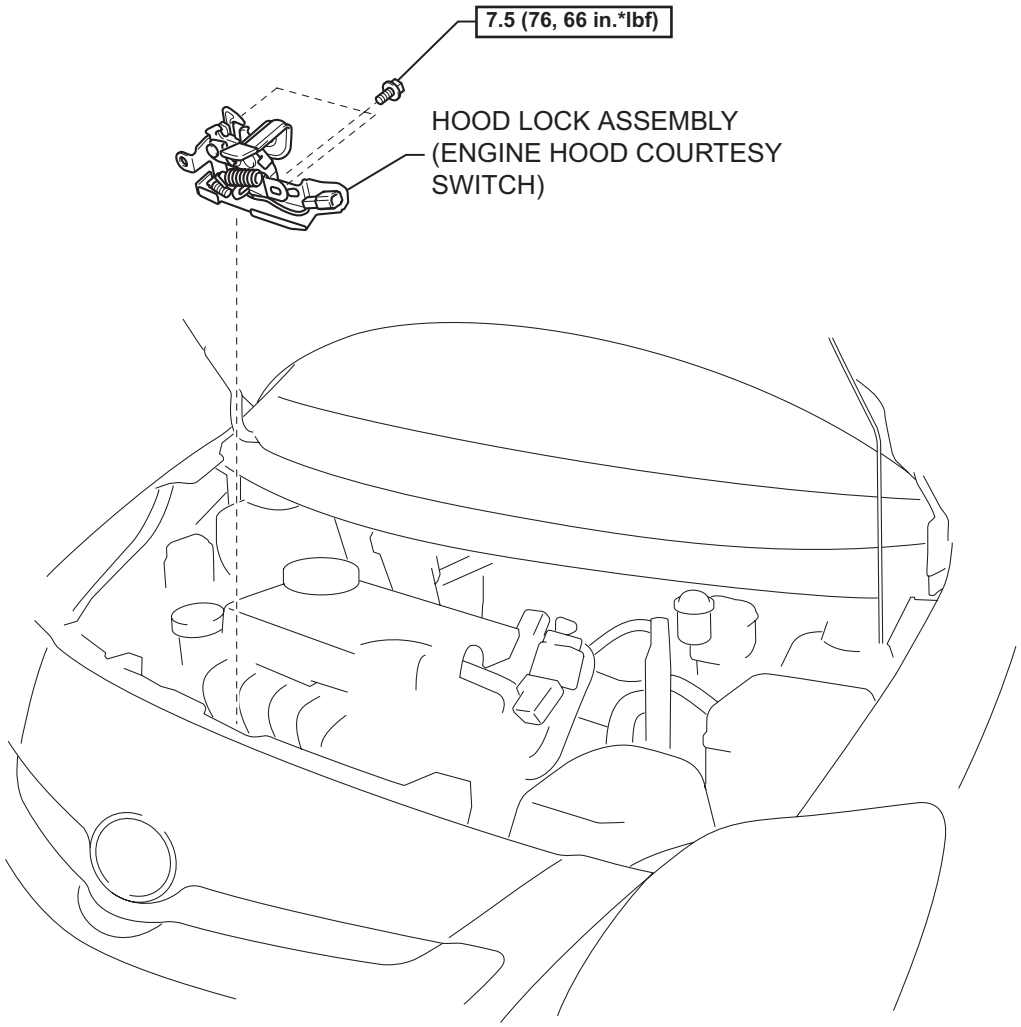

N*m (kgf*cm, ft*lbf) : Specified torque

Y

B141931E01

TD

REMOVAL

1. DISCONNECT CABLE FROM NEGATIVE BATTERY TERMINAL

2. REMOVE HOOD LOCK ASSEMBLY

(a) Disconnect the connector and the harness clamp.

(b) Remove the 3 bolts.

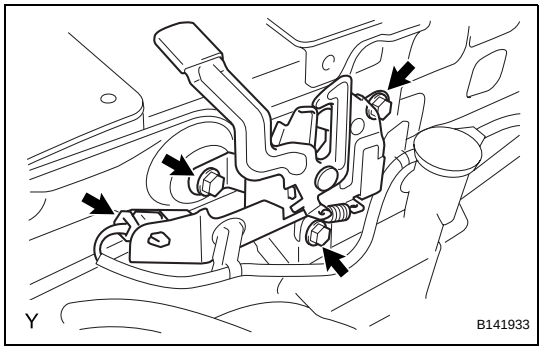

(c) Disconnect the hood lock control cable, then remove the hood lock.

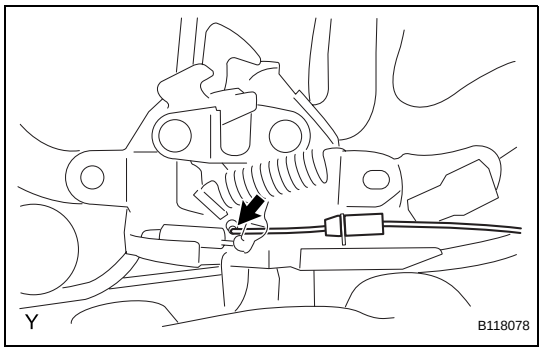

INSPECTION

1. INSPECT HOOD LOCK ASSEMBLY

(a) Check the resistance of the engine hood courtesy switch.

(1) Using an ohmmeter, measure the resistance and check the results in accordance with the value(s) in the table below.

Standard Resistance

Tester Connection	Condition	Specified Condition
1 - 2	Lock	10 kΩ or higher
1 - 2	Unlock	Below 1 Ω

If the results is not as specified, replace the hood lock.

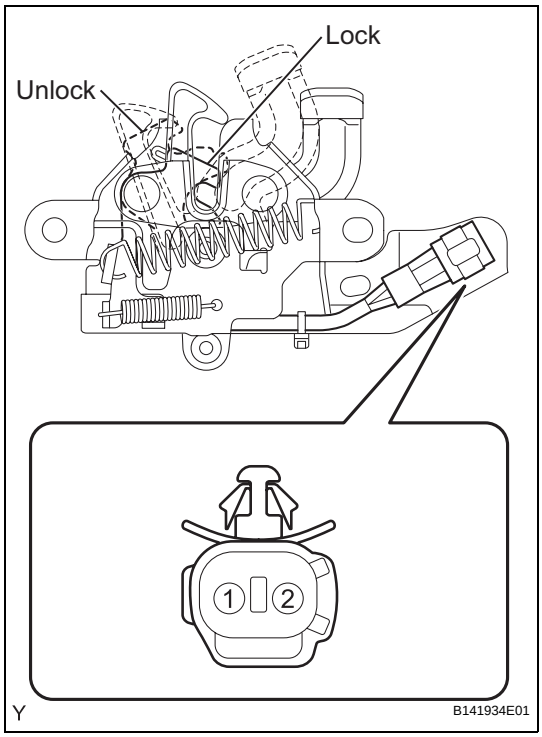

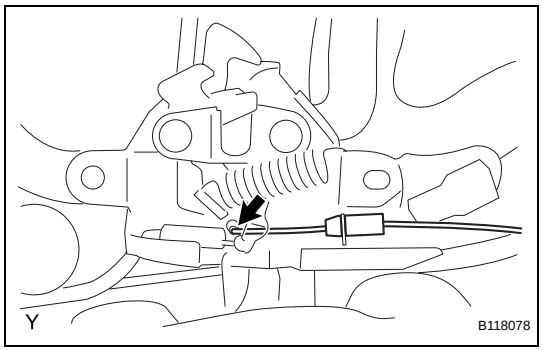

INSTALLATION

1. INSTALL HOOD LOCK ASSEMBLY

(a) Connect the hood lock control cable.

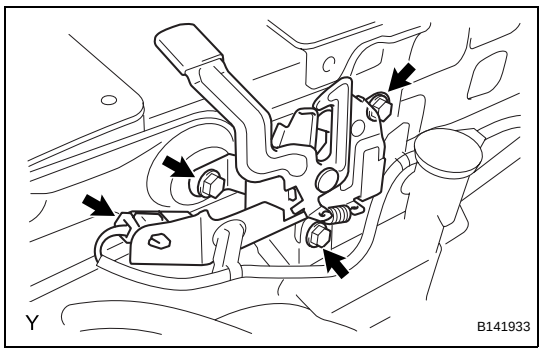

(b) Install the hood lock with the 3 bolts.
Torque: 7.5 N*m (76 kgf*cm, 66 in.*lbf)

(c) Connect the connector and the harness clamp.

2. CONNECT CABLE TO NEGATIVE BATTERY TERMINAL
Torque: 5.4 N*m (55 kgf*cm, 48 in.*lbf)

ENGINE HOOD COURTESY SWITCH (for Hatchback)

COMPONENTS

TD

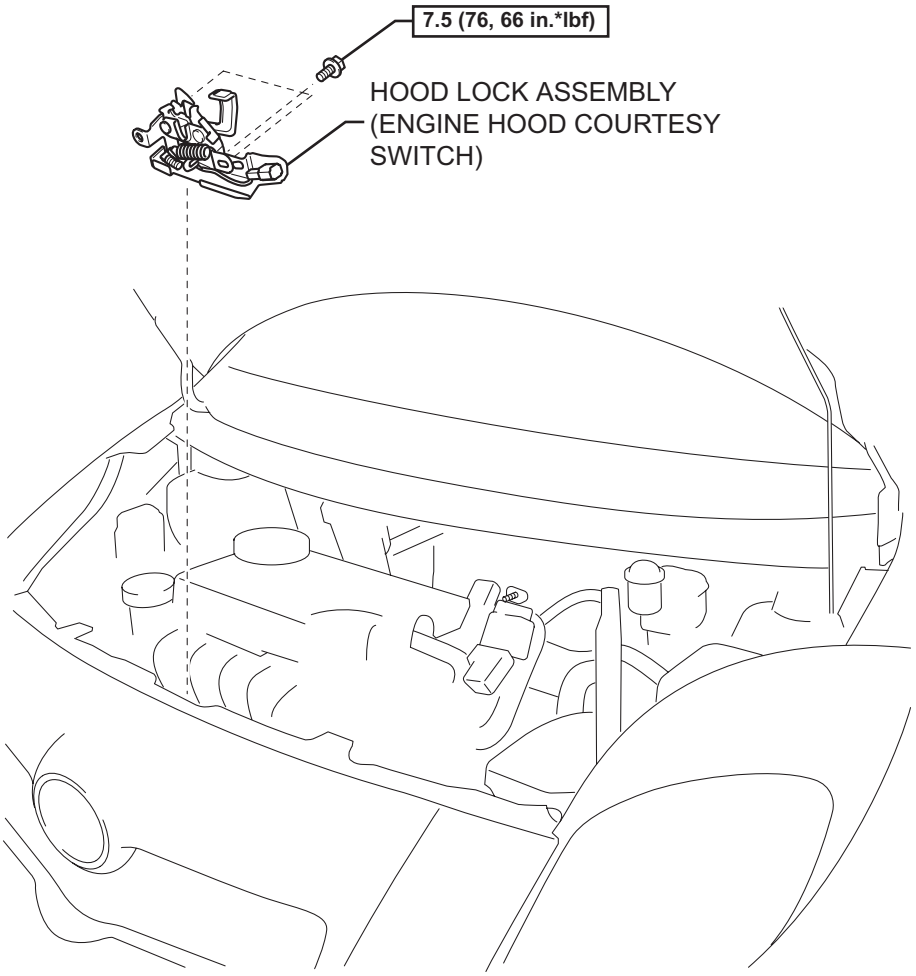

N*m (kgf*cm, ft*lbf) : Specified torque

Y

B118087E01

REMOVAL

1. DISCONNECT CABLE FROM NEGATIVE BATTERY TERMINAL

2. REMOVE HOOD LOCK ASSEMBLY

(a) Disconnect the connector and the harness clamp.

(b) Remove the 3 bolts.

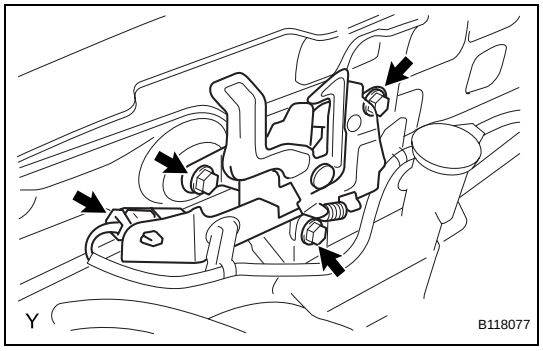

(c) Disconnect the hood lock control cable, then remove the hood lock.

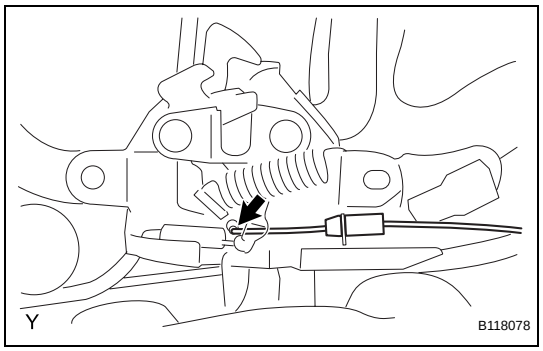

INSPECTION

1. INSPECT HOOD LOCK ASSEMBLY

(a) Check the resistance of the engine hood courtesy switch.

(1) Using an ohmmeter, measure the resistance and check the results in accordance with the value(s) in the table below.

Standard Resistance

Tester Connection	Condition	Specified Condition
1 - 2	Lock	10 kΩ or higher
1 - 2	Unlock	Below 1 Ω

If the results is not as specified, replace the hood lock.

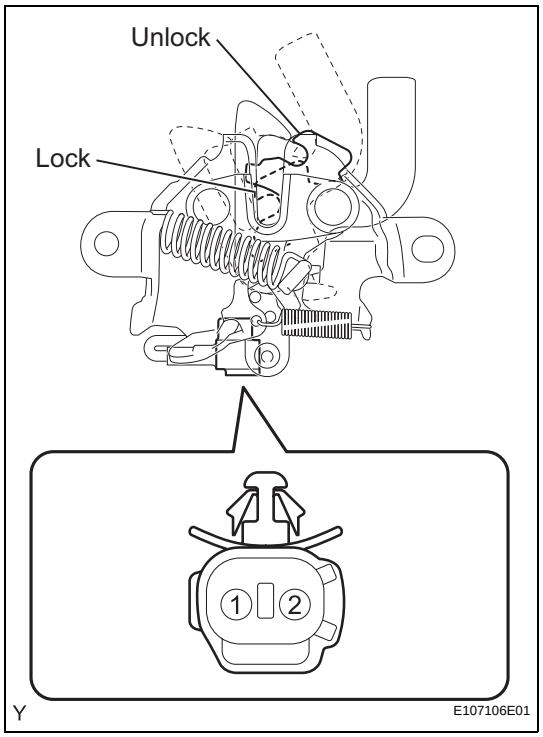

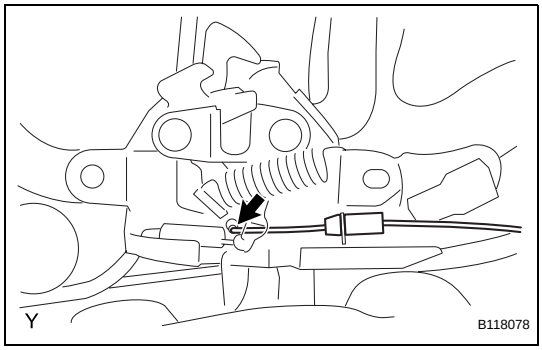

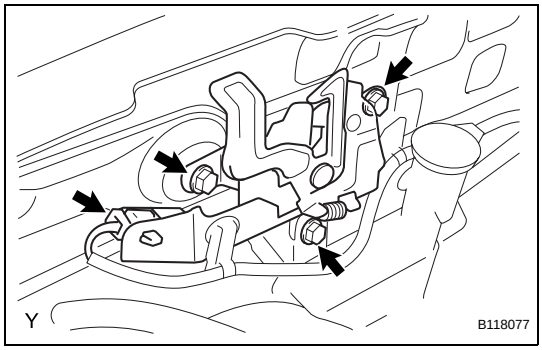

INSTALLATION

1. INSTALL HOOD LOCK ASSEMBLY

(a) Connect the hood lock control cable.

(b) Install the hood lock with the 3 bolts.
Torque: 7.5 N*m (76 kgf*cm, 66 in.*lbf)

(c) Connect the connector and the harness clamp.

2. CONNECT CABLE TO NEGATIVE BATTERY TERMINAL
Torque: 5.4 N*m (55 kgf*cm, 48 in.*lbf)

DOOR UNLOCK SWITCH (for Sedan)

COMPONENTS

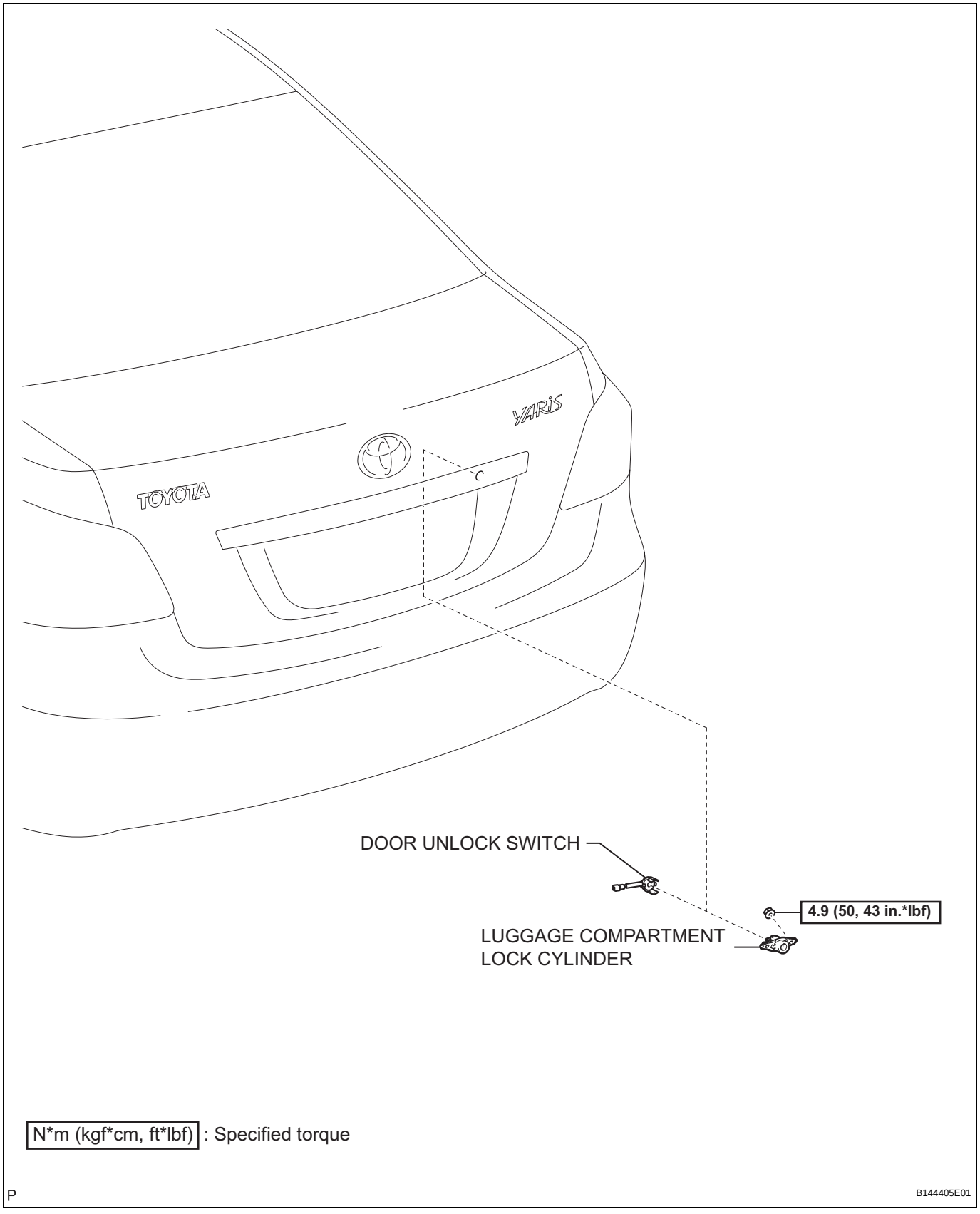

TD

REMOVAL

1. DISCONNECT CABLE FROM NEGATIVE BATTERY TERMINAL

2. REMOVE LUGGAGE COMPARTMENT LOCK CYLINDER

(a) Disconnect the connector.

(b) Disconnect the luggage compartment door lock link, remove the 2 nuts and remove the luggage compartment lock cylinder.

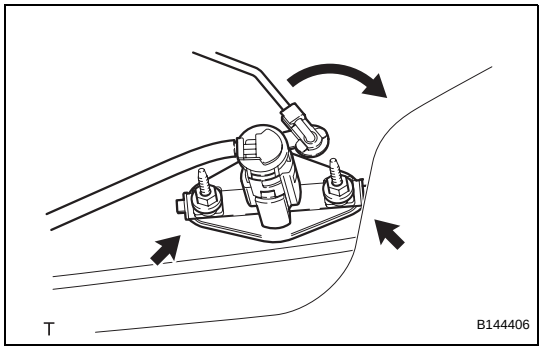

3. REMOVE DOOR UNLOCK SWITCH

(a) Disengage the 2 claws and remove the door unlock switch.

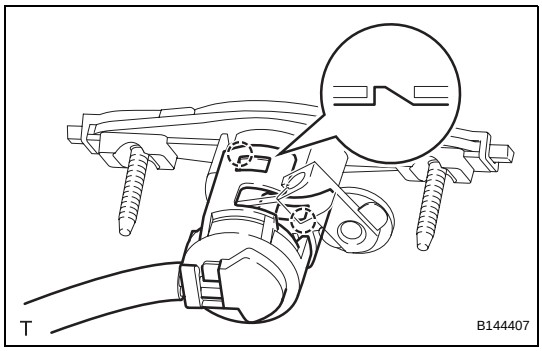

INSPECTION

1. INSPECT DOOR UNLOCK SWITCH

(a) Check the resistance.

(1) Using an ohmmeter, measure the resistance and check the results in accordance with the value(s) in the table below.

Standard Resistance

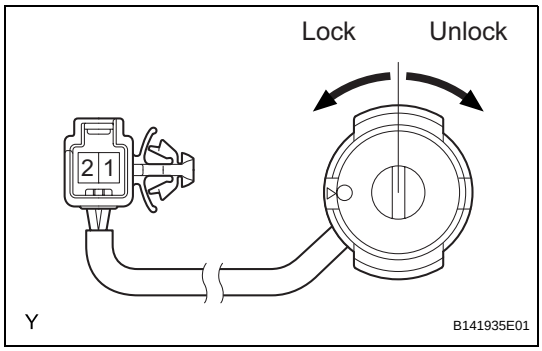

Tester Connection	Condition	Specified Condition
1 - 2	Locked	10 kΩ or higher
1 - 2	Unlocked	Below 1 Ω

If the result is not as specified, replace the door unlock switch.

INSTALLATION

1. INSTALL DOOR UNLOCK SWITCH

(a) Engage the 2 claws and install the door unlock switch.

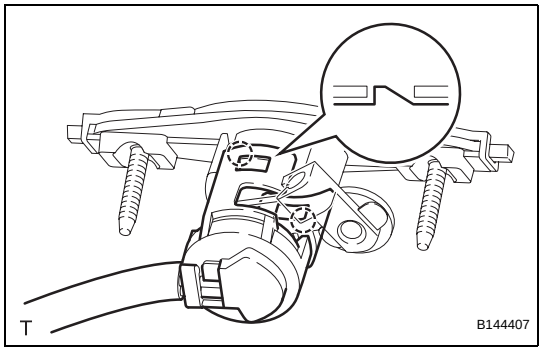

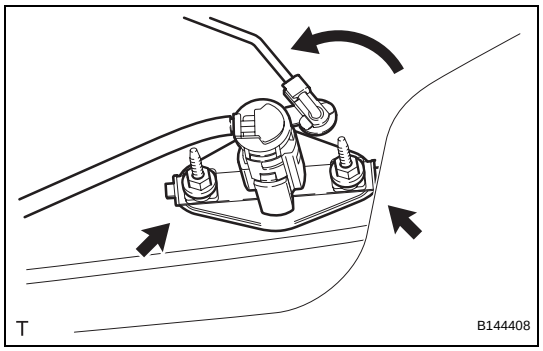

2. INSTALL LUGGAGE COMPARTMENT LOCK CYLINDER

(a) Install the luggage compartment lock cylinder with the 2 nuts.
Torque: 4.9 N*m (50 kgf*cm, 43 in.*lbf)

(b) Connect the luggage compartment door lock link and connector.

3. CONNECT CABLE TO NEGATIVE BATTERY TERMINAL
Torque: 5.4 N*m (55 kgf*cm, 48 in.*lbf)

SECURITY HORN ASSEMBLY (for Sedan)

COMPONENTS

TD

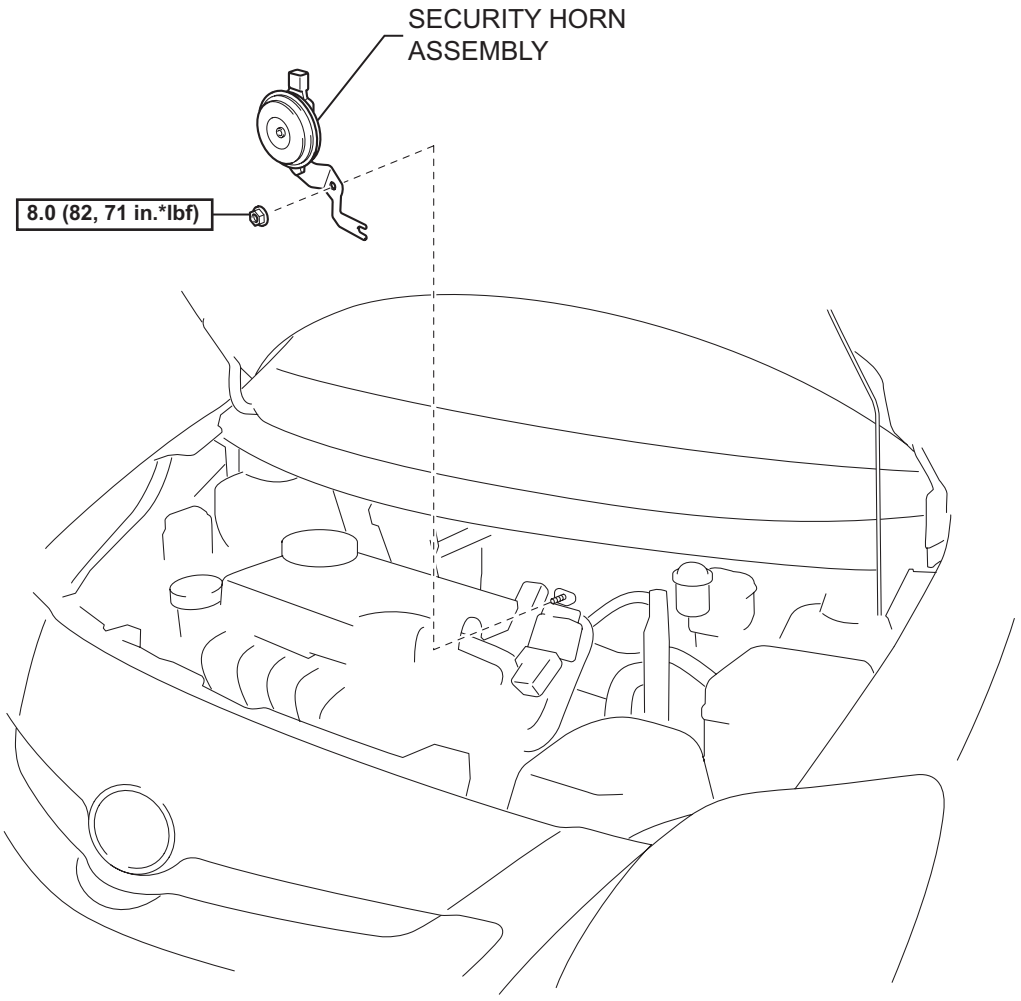

N*m (kgf*cm, ft*lbf) : Specified torque

Y

B141932E01

REMOVAL

1. **DISCONNECT CABLE FROM NEGATIVE BATTERY TERMINAL**
2. **REMOVE SECURITY HORN ASSEMBLY**
   (a) Disconnect the connector.
   (b) Remove the nut and the security horn.

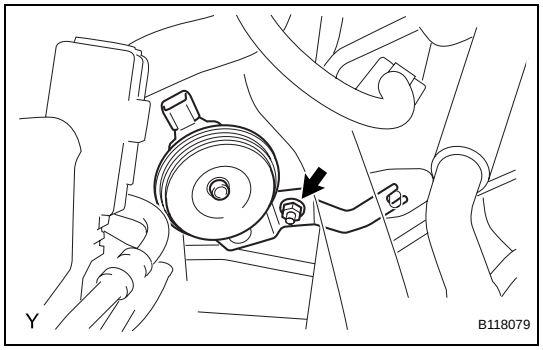

INSPECTION

1. **INSPECT SECURITY HORN ASSEMBLY**
   (a) Check the operation.
      (1) Apply battery voltage and check the horn.
      Standard

Condition	Specified Operation
Battery positive (+) - Terminal 1 Battery negative (-) - Terminal 2	Horn sounds

If the result is not as specified, replace the horn.

Component Side:

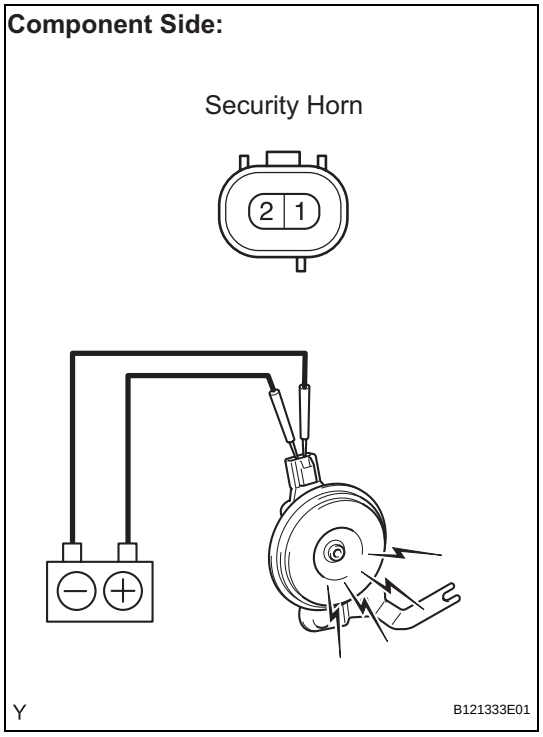

INSTALLATION

1. **INSTALL SECURITY HORN ASSEMBLY**
   (a) Install the security horn with the nut.
   Torque: 8.0 N*m (82 kgf*cm, 71 in.*lbf)
   (b) Connect the connector.
2. **CONNECT CABLE TO NEGATIVE BATTERY TERMINAL**
   Torque: 5.4 N*m (55 kgf*cm, 48 in.*lbf)

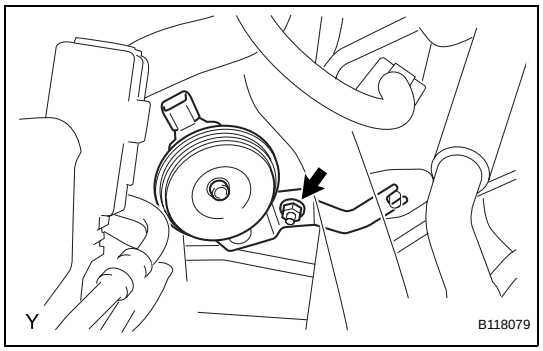

SECURITY HORN ASSEMBLY (for Hatchback)

COMPONENTS

TD

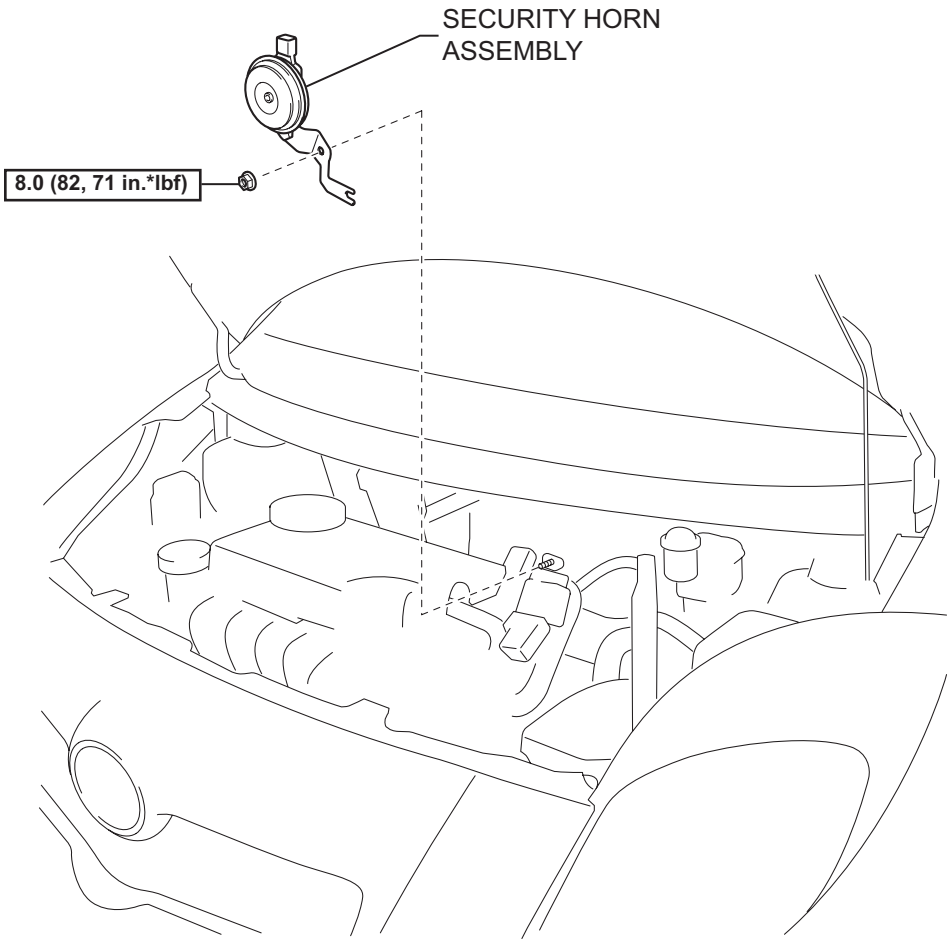

N*m (kgf*cm, ft*lbf) : Specified torque

Y

B118088E01

REMOVAL

1. **DISCONNECT CABLE FROM NEGATIVE BATTERY TERMINAL**
2. **REMOVE SECURITY HORN ASSEMBLY**
   (a) Disconnect the connector.
   (b) Remove the nut and the security horn.

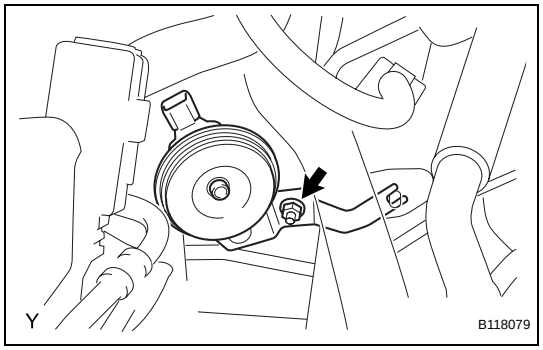

INSPECTION

1. **INSPECT SECURITY HORN ASSEMBLY**
   (a) Check the operation.
      (1) Apply battery voltage and check the horn.
      Standard

Condition	Specified Operation
Battery positive (+) - Terminal 1 Battery negative (-) - Terminal 2	Horn sounds

If the result is not as specified, replace the horn.

Component Side:

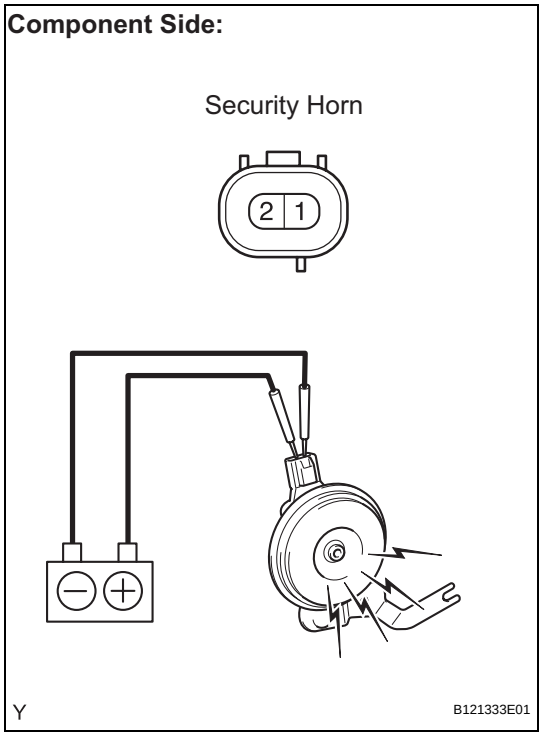

INSTALLATION

1. **INSTALL SECURITY HORN ASSEMBLY**
   (a) Install the security horn with the nut.
   Torque: 8.0 N*m (82 kgf*cm, 71 in.*lbf)
   (b) Connect the connector.
2. **CONNECT CABLE TO NEGATIVE BATTERY TERMINAL**
   Torque: 5.4 N*m (55 kgf*cm, 48 in.*lbf)

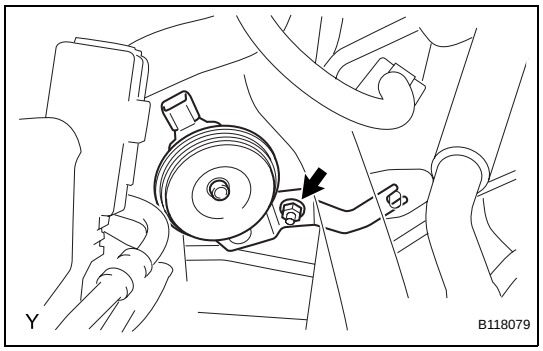

ENGINE IMMOBILISER SYSTEM

HOW TO PROCEED WITH TROUBLESHOOTING

HINT:
Use this procedure to troubleshoot the engine immobiliser system.
The intelligent tester should be used in steps 4, 5 and 7.

1	**VEHICLE BROUGHT TO WORKSHOP**

NEXT

2	**CUSTOMER PROBLEM ANALYSIS CHECK AND SYMPTOM CHECK**

NEXT

3	**CRANK ENGINE FOR MORE THAN 10 SECONDS**

NEXT

4	**CHECK FOR DTCS**

(a) Check for DTCs and note any codes that are output.
(b) Delete the DTC.
(c) Recheck for DTCs. Based on the DTC output in (a), try to force output of the same SFI system DTC or engine immobiliser system DTC by simulating the original activity indicated by the DTC.
  (1) If the DTC does not reoccur, proceed to A.
  (2) If the SFI system DTC reoccurs, proceed to B.
  (3) If the engine immobiliser system DTC reoccurs, proceed to C.

B	**Go to SFI SYSTEM**
C	**Go to step 8**

A

5	**READ VALUE OF INTELLIGENT TESTER**

(a) Connect the intelligent tester to the DLC3.
(b) Turn the ignition switch ON and push the intelligent tester main switch ON.

(c) On the intelligent tester, enter the following menus: DIAGNOSIS/OBD MOBD/DATA LIST/IMMOBILISER/KEY SW. Read the values.

Transponder key ECU assembly

Item	Measurement Item/ Display (Range)	Normal Condition	Diagnostic Note
KEY SW	Unlock warning switch signal/ ON or OFF	OFF: No key is in ignition key cylinder ON: Key is in ignition key cylinder	-

OK:
"ON" (key is in ignition key cylinder) appears on the screen.

NG → **Go to DTC B2780**

OK

6 PROBLEM SYMPTOMS TABLE

(a) If the fault is not listed in the problem symptoms table, proceed to A.
(b) If the fault is listed in the problem symptoms table, proceed to B.

B → **Go to step 8**

A

7 OVERALL ANALYSIS AND TROUBLESHOOTING

(a) DATA LIST/ACTIVE TEST (See page EI-21)
  (1) Inspection with the intelligent tester (DATA LIST)
  (2) Inspection with the intelligent tester (ACTIVE TEST)
(b) Terminals of ECU (See page EI-15)

NEXT

8 ADJUST, REPAIR OR REPLACE

NEXT

9 CONFIRMATION TEST

NEXT

END

PARTS LOCATION

HATCHBACK:

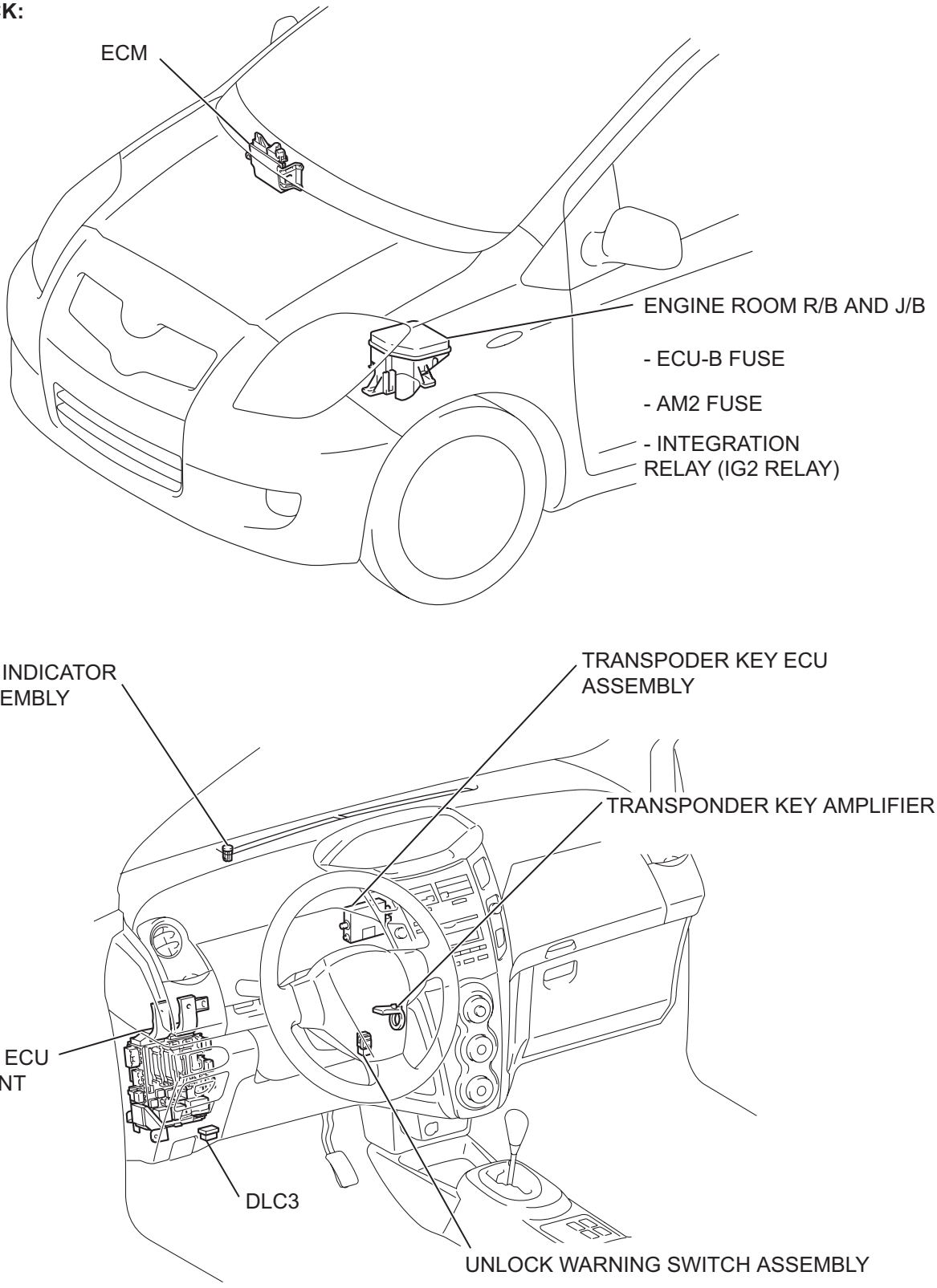

Y

B116296E03

SEDAN:

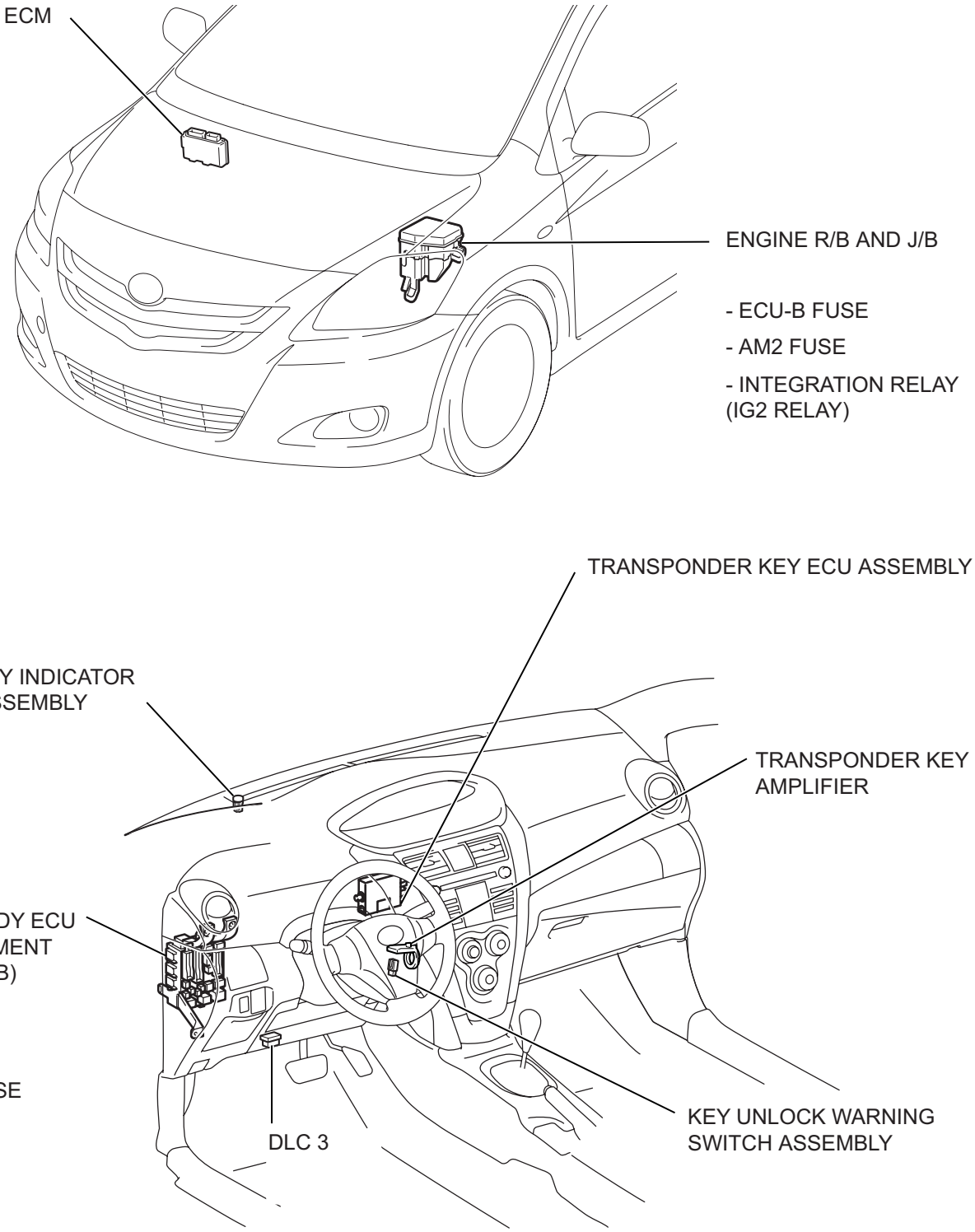

H

B143387E01

HATCHBACK:

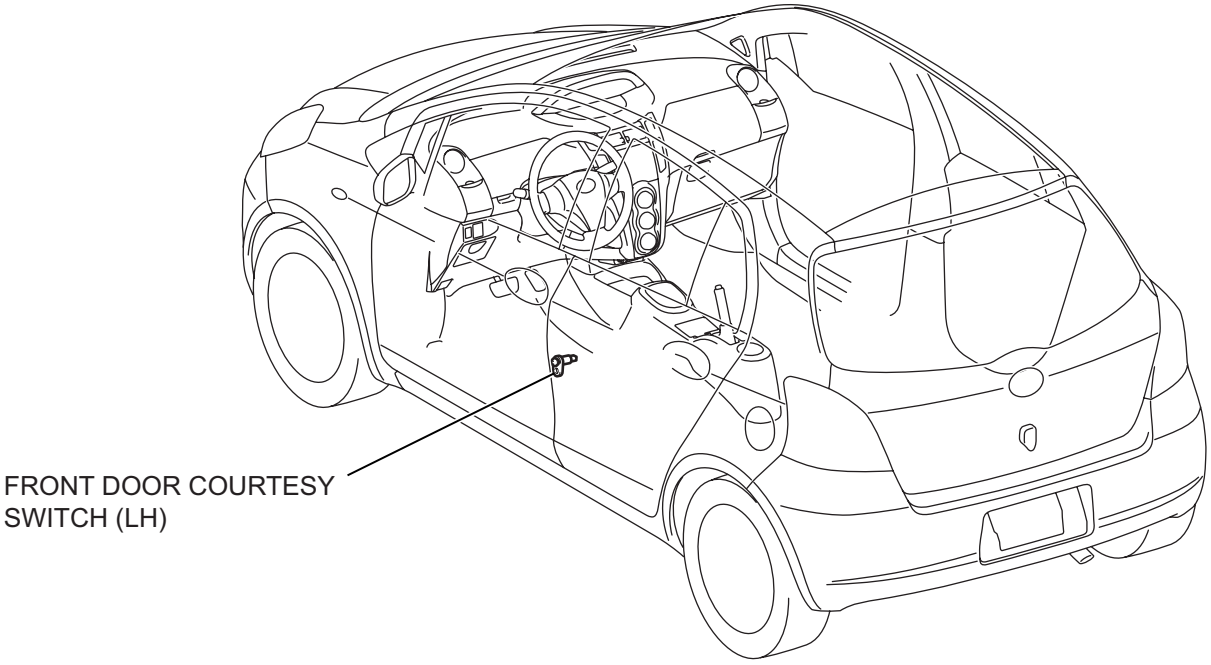

SEDAN:

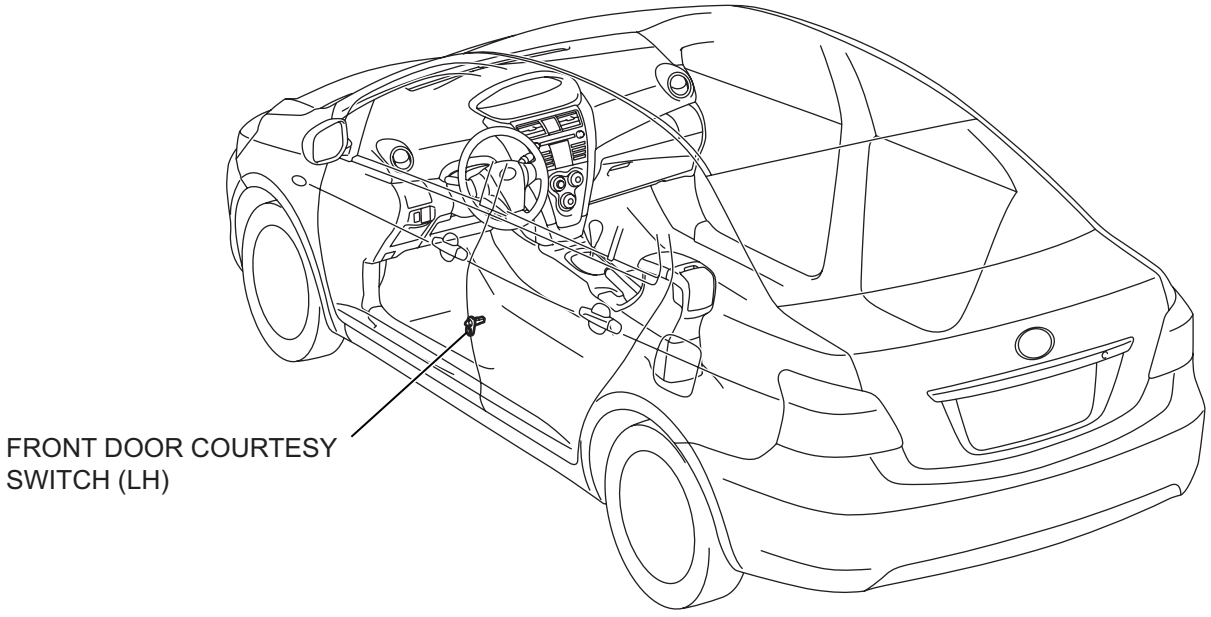

B143388E01

SYSTEM DIAGRAM

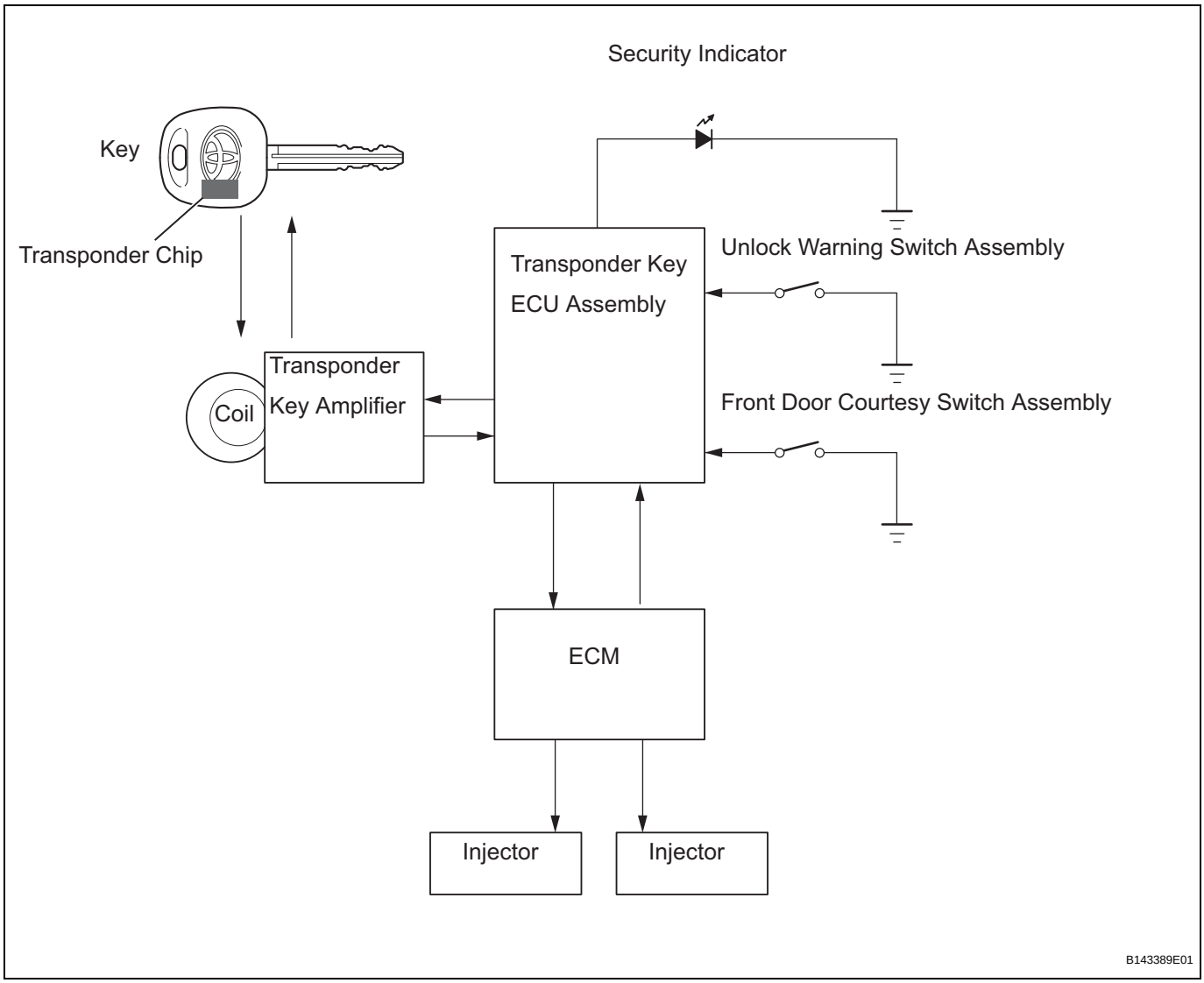

SYSTEM DESCRIPTION

1. ENGINE IMMOBILISER SYSTEM DESCRIPTION

The engine immobiliser system is designed to prevent the vehicle from being stolen. This system uses a transponder key ECU that stores the key codes of authorized ignition keys. If an attempt is made to start the engine using an unauthorized key, the ECU sends a signal to the ECM to prohibit fuel delivery and ignition, effectively disabling the engine.

2. FUNCTIONS OF MAIN COMPONENTS

Component	Outline
Transponder key coil/amplifier	When key is inserted in ignition key cylinder, key coil receives key code. Then amplifier amplifies ID code and outputs it to transponder key ECU assembly.
Unlock warning switch assembly	Detects if key is in ignition key cylinder and outputs results to transponder key ECU assembly.
ECM	Through SFI communication, ECM receives ID verification results from transponder key ECU assembly. ECM also verifies ECUs. Then judges whether or not to enter immobiliser engine mode.
Security indicator light	Depending on operation of transponder key ECU, interior security indicator light comes on or starts blinking.

3. SYSTEM FUNCTION

- When the transponder key ECU assembly detects that the unlock warning switch is ON, the ECU provides current to the transponder key coil and produces a faint electric wave. A transponder chip in the key grip receives the faint electric wave. Upon receiving the faint electric wave, the transponder chip outputs a key ID code signal. The transponder key coil receives this signal, the transponder key amplifier amplifies it, and then the signal is transmitted to the ECU. The ECU compares the key's ID code with the vehicle's ID code, which was previously registered in the ECU and then communicates the results to the ECM using the SFI communication.
- After the identification results show that the key's ID code matches the vehicle's ID code and the ECU has confirmed that they match: 1) the immobiliser system is canceled and the engine starting controls (fuel injection control and ignition control) enter standby mode; and 2) the ECU transmits a security indicator signal that communicates "indicator OFF" to the transponder key ECU. Then, the transponder key ECU turns OFF the security indicator light.

REGISTRATION

HINT:
The key has 2 codes: the key code (immobiliser code) and the wireless code (recognition code). Both of these codes need to be registered. Refer to the following pages for the key code registration procedures and refer to page for the wireless code registration procedures.

1. DESCRIPTION OF CODE REGISTRATION

(a) When adding master keys and sub-keys (additional registration).
(1) Register the key codes in the transponder key ECU.

Target ECU	See Procedure
Transponder key ECU	Procedure "A"

(b) After replacing the transponder key ECU (new key code registration).
(1) Register the key codes (immobiliser codes) in the new transponder key ECU.

Target ECU	See Procedure
Transponder key ECU	Procedure "B"

(2) Register the ECM COMMUNICATION ID for communication between the ECM and the new transponder key ECU.

Target ECU	See Procedure
ECM	Procedure "C"

(c) After replacing the ECM.
(1) Register the ECU COMMUNICATION ID for communication between the new ECM and the transponder key ECU.

Target ECU	See Procedure
Transponder key ECU	Procedure "C"

(d) After replacing the transponder key ECU and ECM.
(1) Register the ECU COMMUNICATION ID for communication between the new ECM and the new transponder key ECU.

Target ECU	See Procedure
Transponder key ECU	Procedure "C"

(e) Erasure of key codes.
(1) Erase the key code(s) of the lost key(s).

Target ECU	See Procedure
Transponder key ECU	Procedure "D"

2. NEW KEY CODE REGISTRATION (PROCEDURE "B")

(a) New key code registration (When using intelligent tester).
Condition:
No key codes are registered in the transponder key ECU.

HINT:

- In this mode, a maximum of 3 key codes for 2 master keys and 1 sub-key can be registered. The master keys and sub-key can be registered in any order because the transponder key ECU can distinguish between different types of key.
- New key codes must be registered with the battery connected. The ignition switch can be either ON or OFF.
- When a new transponder key ECU is installed, key codes must be registered in the transponder key ECU.

EI

Procedure	Security Indicator Condition
1. START	- HINT: Until the first key is inserted.
2. Insert the key into the ignition key cylinder.	BLINKING
3. Select the following items on the tester: (1) Select IMMOBILISER (2) Select ID UTILITY (3) Select IMMOB CODE REG HINT: After the above operation, proceed to the next step in accordance with the prompts on the tester screen.	ON HINT: Within 2 minutes.
	OFF for 1 second and then ON
4. Remove the key and then push the NEXT button on the tester.	ON
5. Insert a master key or sub-key to be registered.	OFF for 1 second and then ON
6. Remove the key and then push the NEXT button on the tester.	ON
7. Insert a master key or sub-key to be registered.	OFF for 1 second and then ON
	OFF HINT: 0.5 seconds after turning ON
8. Remove the key.	BLINKING
9. END	

HINT:

- The new key code registration mode can be deliberately ended by following procedure A or B below when the battery is connected, and at least 1 key code for the master key has been registered.
  A (Without using intelligent tester)
  (a) Insert the key into the ignition key cylinder.
  (b) Turn the ignition switch from ON to OFF 5 times within 10 seconds.
  (c) New key code registration mode ends.
  B (When using intelligent tester)
  (a) Insert the key into the ignition key cylinder and turn the intelligent tester on.
  (b) Follow the instructions on the intelligent tester screen to end new key code registration mode.
  (c) New key code registration mode ends.
- When the immobiliser system is operating normally and the key is removed, the security indicator blinks continuously.

- If the new key code registration fails, code 2-1 is output by the security indicator. Trying to re-register an already registered key causes code 2-2 to be output when the key is inserted. If the number of registered key codes exceeds the limit, code 2-3 is output by the security indicator. The output details are shown below.

Security Indicator:

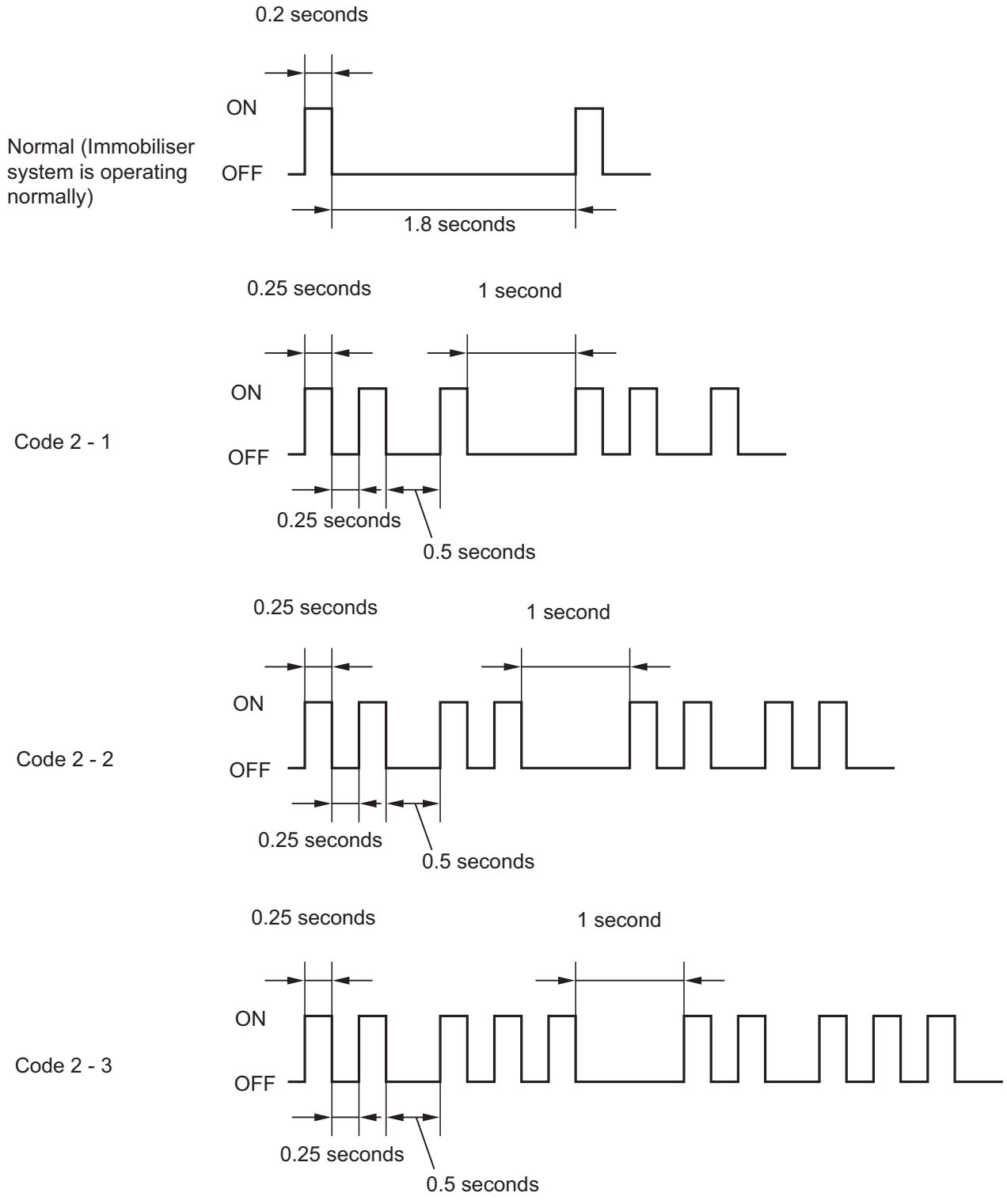

(b) New key code registration (Without using intelligent tester)

Conditions:

- No key codes are registered in the transponder key ECU.

- All doors are closed, the ignition switch is OFF, and no key is inserted into the ignition key cylinder for 5 seconds or more.

Procedure	Time (Operation completion time)	Security Indicator Condition
1. START	-	- HINT: Until the first key is inserted.
2. Insert a previously registered key into the ignition key cylinder. Remove and insert it again. Repeat this 4 times.	Within 35 seconds	BLINKING
3. Open and close the driver door 6 times.		
4. Remove the key.		ON
5. Insert the master key to be registered into the ignition key cylinder.	Within 10 seconds	BLINKING
6. After 60 seconds, the key is registered. HINT: Security indicator goes off.	-	
7. Remove the key.		BLINKING
8. END		

HINT:

- Only the master key can be registered.
- Unless the key is inserted into the ignition key cylinder within 10 seconds in step 5, the ECU cancels registration mode.
- Follow the additional key code registration procedure to register 2 or more keys.
- If the new key code registration has failed, the security indicator blinks as follows.
  (a) Code 2-1 is output when the transponder key ECU fails to receive a key ID code.
  (b) Code 2-3 is output when a sub-key is inserted.

3. REGISTRATION OF ADDITIONAL KEY (PROCEDURE "A")

HINT:

- A maximum of 5 master key codes and 3 sub-key codes can be registered.
- Additional key code registration mode ends if any step is not completed within the specified time.
- When proceeding to the next step while the timer is running, the timer is reset and begins the countdown for the next step.
- When the ignition cylinder or the key cylinder set is replaced, remove the transmitter module from the original master key. Then install this transmitter module to a new key and use the new key as the master key. If necessary, use this new master key to register other keys.

NOTICE:
When the ignition key cylinder has been replaced, locking and unlocking doors is possible with the new master key once the transmitter module from the original master key has been transferred to it. However, the new master key will not be able to lock and unlock doors through the door key cylinder. Keep the original master key. If the new master key transmitter module battery fails, the original master key can be used to lock and unlock doors through the door key cylinder.

(a) Additional key code registration
Condition:
At least one key code must be registered in the transponder key ECU

Procedure	Time (Operation completion time)	Security Indicator Condition
1. START	-	BLINKING HINT: Until the first key is inserted.
2. Insert a previously registered master key into the ignition key cylinder, turn the ignition switch to the ON position, and turn the intelligent tester on.	-	OFF
3. Select the following items on the tester: (1) IMMOBILISER (2) ID UTILITY (3) IMMOB CODE REG		ON
4. Remove the master key and then push the NEXT button on the tester. Immediately after above operation insert a previously registered master key into the ignition key cylinder, turn the ignition switch to the ON position, and then push the NEXT button on the tester.	Within 120 seconds	BLINKING→ON
5. Remove the master key and then push the NEXT button on the tester.	Within 20 seconds HINT: After the tester instruction.	ON
6. Insert the key to be registered into the ignition key cylinder.	Within 10 seconds.	BLINKING
7. After 60 seconds, the key is registered. HINT: The security indicator goes off.	-	OFF
8. Remove the key and then push the NEXT button on the tester.		BLINKING
9. The tester screen displays the number of registered keys.		
10. END		

HINT:
- If the key is removed within 60 seconds in step 6, additional key code registration mode is canceled.
- A brief outline of the procedures for key code registration is shown above. For more detailed information, please refer to the intelligent tester screen's instructions.
- When the immobiliser system is operating normally and the key is removed, the security indicator blinks continuously.

- If the additional key code registration fails, code 2-1 is output by the security indicator. Trying to re-register a previously registered key causes code 2-2 to be output when the key is inserted. If the number of registered key codes exceeds the limit, code 2-3 is output by the security indicator. The output details are shown in procedure "B".

4. ERASURE OF KEY CODE (PROCEDURE "D")

HINT:
All key codes are erased except for the master key, which is used for erasing the key codes. In order to use a key whose code has been erased, the key code must be re-registered.

(a) Erasure of key code

Condition:
At least two key codes must be registered in the transponder key ECU.

Procedure	Time (Operation completion time)	Security Indicator Condition
1. START	-	BLINKING HINT: Until the first key is inserted.
2. Insert a previously registered master key into the ignition key cylinder, turn the ignition switch to the ON position, and turn the intelligent tester on.	-	OFF
3. Select the following items on the tester: (1) IMMOBILISER (2) ID UTILITY (3) IMMOB CODE ERS		OFF
4. Remove the key and then push the NEXT button on the tester. Immediately after the above operation insert a previously registered master key into the ignition key cylinder, turn the ignition switch to the ON position, and then push the NEXT button on the tester.	Within 120 seconds	BLINKING→ ON for 1 second then OFF.
5. Remove the master key.	Within 10 seconds HINT: After the tester instruction.	BLINKING
6. END		

HINT:

- To cancel erasure mode after the erasure request is sent from the tester to the ECU, leave the master key inserted until the timer times out.
- A brief outline of the procedures for key code erasure is shown above. For more detailed information, please refer to the intelligent tester screen's instructions.
- When the immobiliser system is operating normally and the key is removed, the security indicator blinks continuously.

5. ECU - ECM COMMUNICATION ID REGISTRATION (PROCEDURE "C")

NOTICE:

- **The ECU communication ID should be registered when the transponder key ECU and/or the ECM is replaced in order to match the ECM communication ID.**
- **The engine cannot be started unless the ECM communication IDs match.**
- **Do not disconnect the battery while the ECU - ECM communication ID is being set.**
- **Do not turn the ignition switch from ON to OFF 20 times or more before setting the ECU - ECM communication ID. If this operation is likely to be performed 20 times or more, disconnect the negative battery terminal cable in order to avoid engine start disablement. Failure to do so will result in the engine not starting unless the transponder key ECU is replaced with a new one.**

(a) After replacing the transponder key ECU

(1) Register the key code(s) by following the new key code registration procedure. (Procedure "B")

(2) Using SST, connect the TC and CG terminals of the DLC3 before inserting the key into the key cylinder.

SST 09843-18040

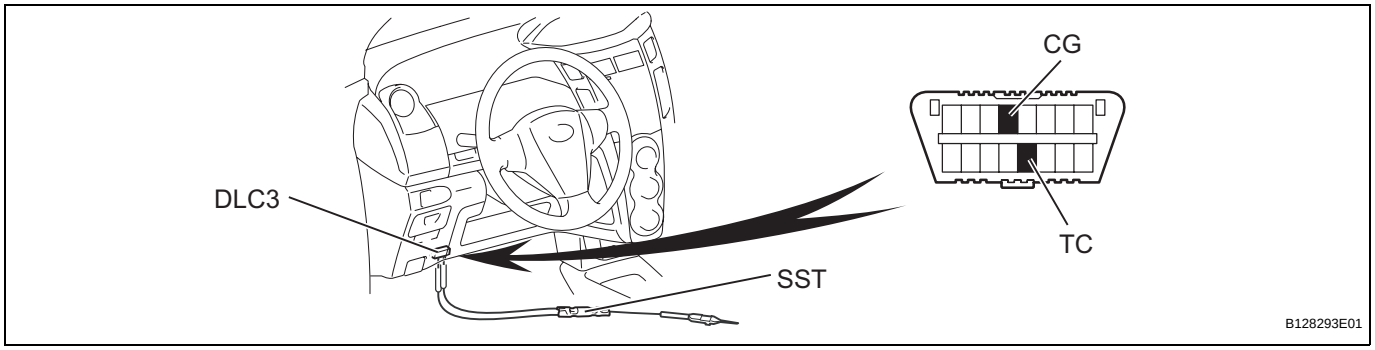

(3) Insert a previously registered key into the ignition key cylinder, turn the ignition switch ON (do not start the engine), and leave it as is for 30 minutes.

(4) Turn the ignition switch OFF and disconnect terminals TC and CG.

(5) Start the engine.

(6) Check that the engine starts and stays on for more then 3 seconds. The registration is complete.

(b) After replacing the ECM.
(1) Register the ECU - ECM communication ID

Procedure	Security Indicator Condition
1. Insert a previously registered key into the ignition key cylinder.	OFF
2. Start the engine.	
3. Check that the engine starts and stays on for more than 3 seconds. The registration is complete.	

(c) After replacing the transponder key ECU and ECM
(1) Register the key code(s) by following the new key code registration procedure. (Procedure "B")
(2) Register the ECU - ECM communication ID

Procedure	Security Indicator Condition
1. Insert a previously registered key into the ignition key cylinder.	OFF
2. Start the engine.	
3. Check that the engine starts and stays on for more than 3 seconds. The registration is complete.	

PROBLEM SYMPTOMS TABLE

HINT:
Use the table below to help determine the cause of the problem symptom. The potential causes of the symptoms are listed in order of probability in the "Suspected Area" column of the table. Check each symptom by checking the suspected areas in the order they are listed. Replace parts as necessary.

Symptom	Suspected area	See page
Engine does not start	1. ECU power source circuit	EI-44
	2. Transponder key ECU assembly	EI-15
	3. SFI system	ES-24

TERMINALS OF ECU

1. CHECK TRANSPONDER KEY AMPLIFIER

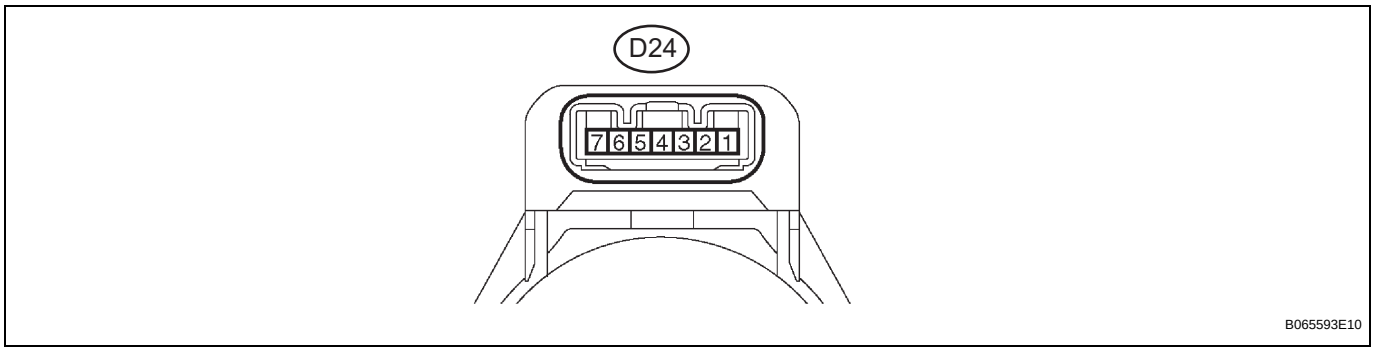

(a) Disconnect the D24 transponder key amplifier connector.
(b) Measure the resistance of the wire harness side connector.

Standard resistance

Symbols (Terminal No.)	Wiring Color	Terminal Description	Condition	Specified Condition
AGND (D24-7) - Body ground	GR - Body ground	Ground	Always	Below 1 Ω

If the result is not as specified, there may be a malfunction on the wire harness side.

(c) Reconnect the D24 transponder key amplifier connector.
(d) Measure the resistance and voltage of the connector.

Standard

Symbols (Terminal No.)	Wiring Color	Terminal Description	Condition	Specified Condition
VC5 (D24-1) - AGND (D24-7)	P- GR	Power source	1: No key in ignition key cylinder → 2: Key inserted	1: 0 V → 2: 4.6 to 5.4 V
CODE (D24-4) - AGND (D24-7)	G- GR	Demodulated signal of key code data	No key in ignition key cylinder → Key inserted	Pulse generation (see waveform 1)
TXCT (D24-5) - AGND (D24-7)	V- GR	Key code output signal	1: No key in ignition key cylinder → 2: Key inserted	Pulse generation (see waveform 2)
AGND (D24-7) - Body ground	GR- Body ground	Ground	Always	Below 1 Ω

If the result is not as specified, there may be a malfunction in the amplifier.

(e) Inspect using an oscilloscope.
(1) Waveform 1

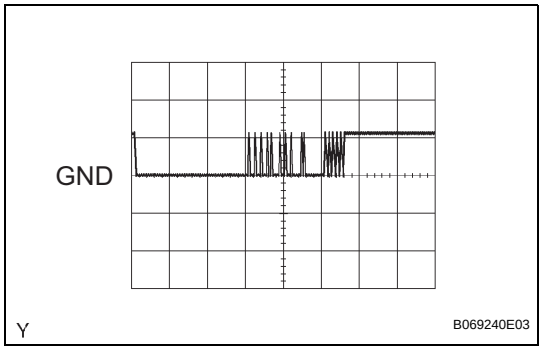

Terminal	CODE (D24-4) - AGND (D24-7)
Tool Setting	5 V/DIV., 20 ms/DIV.
Condition	No key in ignition key cylinder → Key inserted

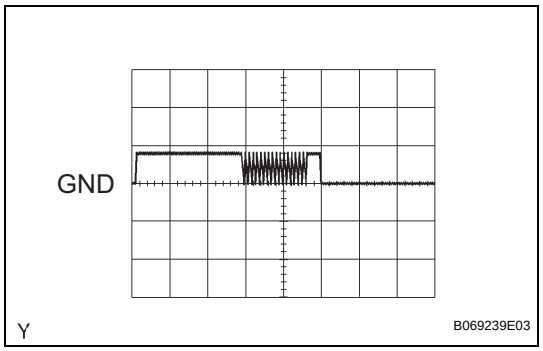

(2) Waveform 2

Terminal	TXCT (D24-5) - AGND (D24-7)
Tool Setting	5 V/DIV., 20 ms/DIV.
Condition	No key in ignition key cylinder → Key inserted

2. CHECK TRANSPONDER KEY ECU ASSEMBLY

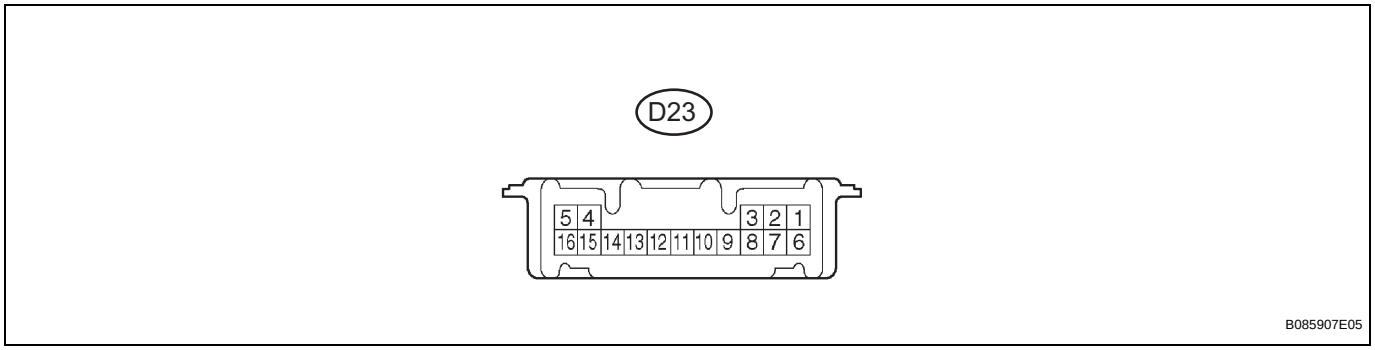

(a) Disconnect the D23 transponder key ECU connector.
(b) Measure the voltage and resistance of the wire harness side connector.

Standard

Symbols (Terminal No.)	Wiring Color	Terminal Description	Condition	Specified Condition
GND (D23-16) - Body ground	W-B - Body ground	Ground	Always	Below 1 Ω
+B (D23-1) - GND (D23-16)	L - W-B	Battery	Always	11 to 14 V
IG (D23-2) - GND (D23-16)	R - W-B	Ignition switch	Ignition switch 1: OFF → 2: Key inserted	1: 0 V → 2: 11 to 14 V

If the result is not as specified, there may be a malfunction on the wire harness side.
(c) Reconnect the D23 transponder key ECU connector.
(d) Measure the voltage of the connector.

Standard voltage

Symbols (Terminal No.)	Wiring Color	Terminal Description	Condition	Specified Condition
KSW (D23-3) - AGND (D23-5)	O - GR	Unlock warning switch	1: No key in ignition key cylinder → 2: Key inserted	1: 11 to 14 V→ 2: Below 1 V
VC5 (D23-14) - AGND (D23-5)	P - GR	Power source	1: No key in ignition key cylinder → 2: Key inserted	1: 0 V → 2: 4.6 to 5.4 V
TXCT (D23-4) - AGND (D23-5)	V - GR	Transponder key amplifier communication signal	1: No key in ignition key cylinder → 2: Key inserted	Pulse generation (see waveform 1)
CODE (D23-15) - AGND (D23-5)	G - GR	Transponder key amplifier communication signal	1: No key in ignition key cylinder → 2: Key inserted	Pulse generation (see waveform 2)
EFIO (D23-13) - EGND (D23-11)	W - BR	ECM output signal	Ignition switch OFF → ON	Pulse generation (see waveform 3)

Symbols (Terminal No.)	Wiring Color	Terminal Description	Condition	Specified Condition
EFII (D23-12) - EGND (D23-11)	O - BR	ECM input signal	Ignition switch OFF → ON	Pulse generation (see waveform 4)
CTY (D23-7) - GND (D23-16)	B - W-B	Courtesy signal	1: Driver side door open → 2: closed	1: 11 to 14 V → 2: Below 1 V
IND (D23-8) - GND (D23-16)	LG - W-B	Security indicator signal	Engine immobiliser system 1: SET → 2: UNSET	1: 3 to 5 V → 2: Below 1 V
D (D23-9) - GND (D23-16)	W - W-B	Diagnosis tester communication	Ignition switch ON	Pulse generation

EI

If the result is not as specified, there may be a malfunction in the ECU.

(e) Inspect using an oscilloscope.

(1) Waveform 1

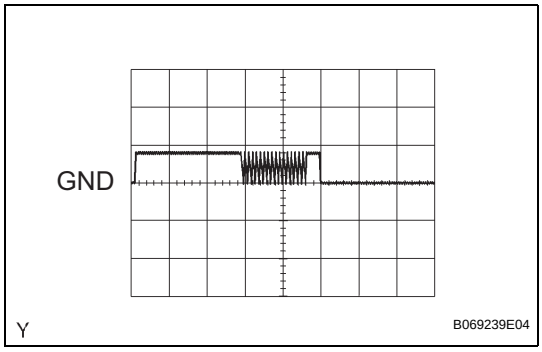

Terminal	TXCT (D23-4) - AGND (D23-5)
Tool Setting	5 V/DIV., 20 ms/DIV.
Condition	Ignition switch 1: No key in ignition key cylinder → 2: Key inserted

(2) Waveform 2

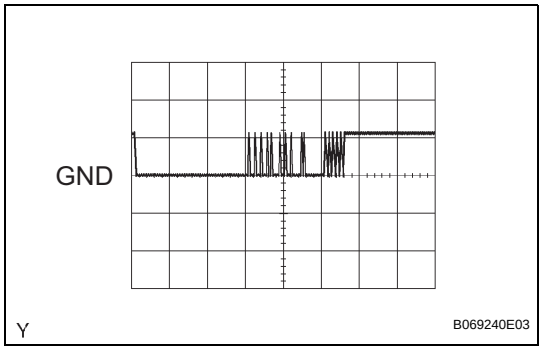

Terminal	CODE (D23-15) - AGND (D23-5)
Tool Setting	5 V/DIV., 20 ms/DIV.
Condition	Ignition switch 1: No key in ignition key cylinder → 2: Key inserted

(3) Waveform 3

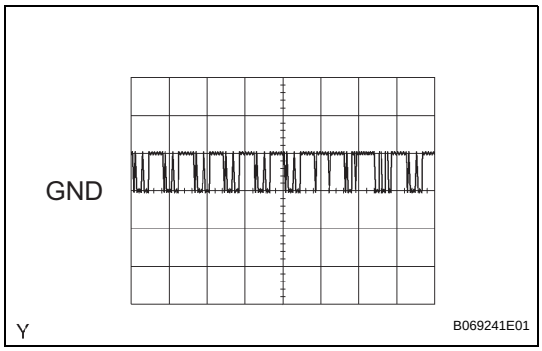

Terminal	EFIO (D23-13) - EGND (D23-1)
Tool Setting	10 V/DIV., 500 ms/DIV.
Condition	Ignition switch OFF → ON

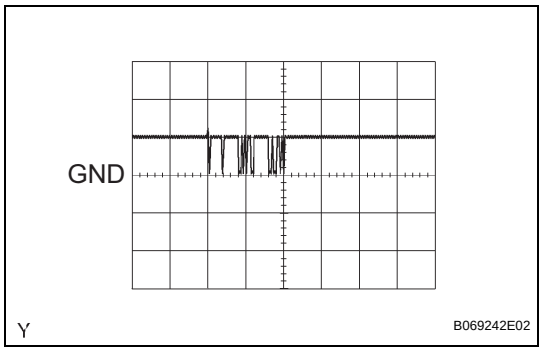

(4) Waveform 4

Terminal	EFII (D23-12) - EGND (D23-11)
Tool Setting	10 V/DIV., 500 ms/DIV.
Condition	Ignition switch OFF → ON

(f) Measure the resistance between each pair of connector terminal.

Standard resistance

Symbols (Terminal No.)	Wiring Color	Terminal Description	Condition	Specified Condition
AGND (D23-5) - GND (D23-16)	GR - W-B	Amplifier ground circuit	Always	Below 1 Ω
EGND (D23-11) - GND (D23-16)	BR - W-B	ECM ground circuit	Always	Below 1 Ω

EI

3. CHECK ECM

1NZ-FE, 2NZ-FE:

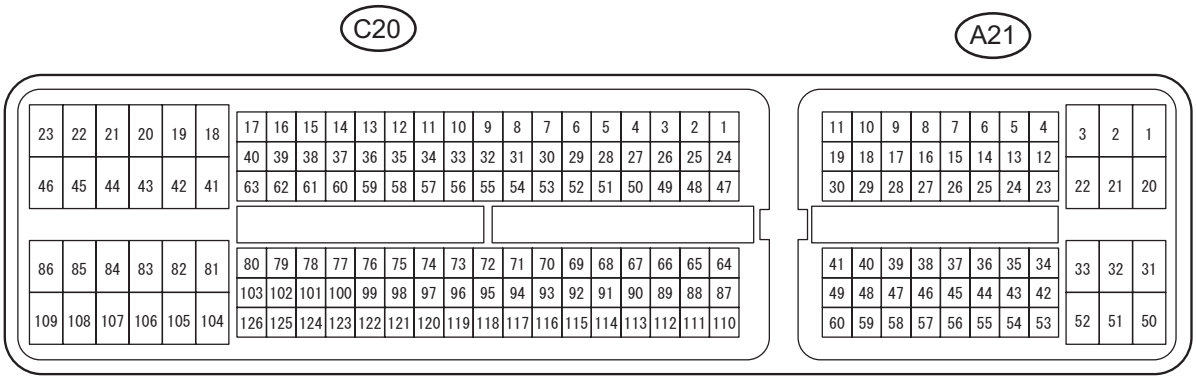

(a) Disconnect the A21 ECM connector.
(b) Measure the voltage and resistance of the wire harness side connector.

Standard

Symbols (Terminal No.)	Wiring Color	Terminal Description	Condition	Specified Condition
IMI (A21-11) - EOM (A21-9)	W - BR	Transponder key ECU input signal	No key in ignition key cylinder → Key inserted	Pulse generation (see waveform 1)
IMO (A21-10) - EOM (A21-9)	O - BR	Transponder key ECU output signal	1: No key in ignition key cylinder → 2: Key inserted	Pulse generation (see waveform 2)
EOM (A21-9) - Body ground	BR - Body ground	Ground	Always	Below 1 Ω

If the result is not as specified, there may be a malfunction on the wire harness side.
(c) Reconnect the A21 ECU connector.

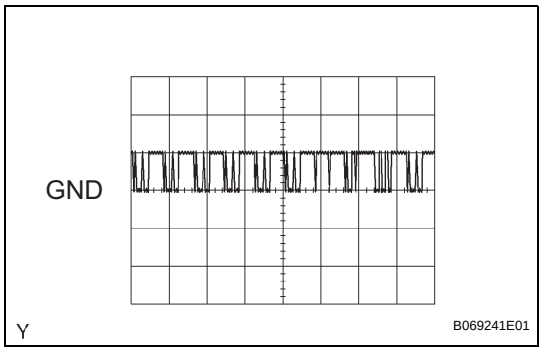

(d) Inspect using an oscilloscope.
(1) Waveform 1

Terminal	IMI (A21-11) - EOM (A21-9)
Tool Setting	10 V/DIV., 500 ms/DIV.
Condition	No key in ignition key cylinder → Key inserted

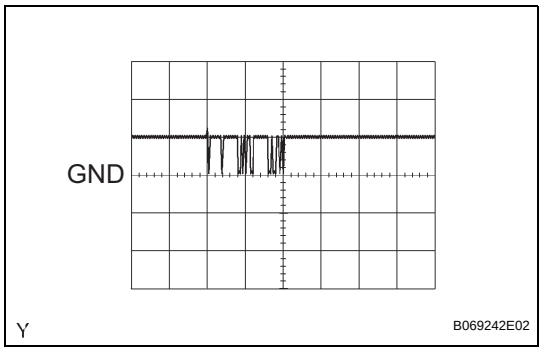

(2) Waveform 2

Terminal	IMO (A21-10) - EOM (A21-9)
Tool Setting	10 V/DIV., 500 ms/DIV.
Condition	No key in ignition key cylinder → Key inserted

DIAGNOSIS SYSTEM

1. DESCRIPTION

(a) The ECM controls the vehicle's immobiliser system functions. Immobiliser system data and the DTCs can be read through the vehicle's DLC3.

2. CHECK DLC3

(a) The ECU uses ISO 15765-4 for communication. The terminal arrangement of the DLC3 complies with SAE J1962 and matches the ISO 15765-4 format.

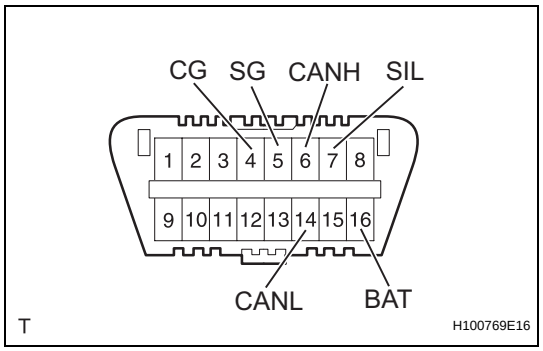

Symbols (Terminal No.)	Terminal Description	Condition	Specified Condition
SIL (7) - SG (5)	Bus "+" line	During transmission	Pulse generation
CG (4) - Body ground	Chassis ground	Always	Below 1 Ω
SG (5) - Body ground	Signal ground	Always	Below 1 Ω
BAT (16) - Body ground	Battery positive	Always	11 to 14 V
CANH (6) - CANL (14)	CAN bus line	Ignition switch OFF*	54 to 69 Ω
CANH (6) - CG (4)	HIGH-level CAN bus line	Ignition switch OFF*	200 Ω or higher
CANL (14) - CG (4)	LOW-level CAN bus line	Ignition switch OFF*	200 Ω or higher
CANH (6) - BAT (16)	HIGH-level CAN bus line	Ignition switch OFF*	6 kΩ or higher
CANL (14) - BAT (16)	LOW-level CAN bus line	Ignition switch OFF*	6 kΩ or higher

NOTICE:

***: Before measuring the resistance, leave the vehicle as is for at least 1 minute and do not operate the ignition switch, any other switches or the doors.**

If the result is not as specified, the DLC3 may have a malfunction. Repair or replace the harness and connector.

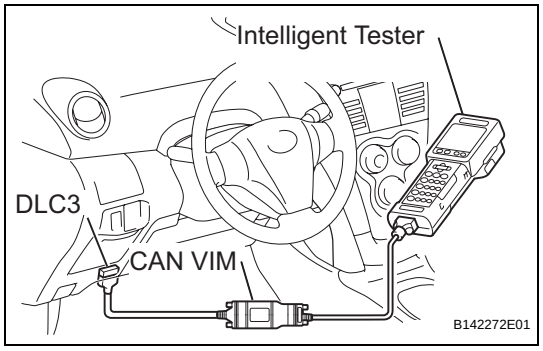

(b) Intelligent tester

HINT:

Connect the cable of the intelligent tester to the CAN VIM, connect the CAN VIM to the DLC3, turn the ignition switch ON and attempt to use the tester. If the display indicates that a communication error has occurred, there is a problem either with the vehicle or with the tester.

- If communication is normal when the tester is connected to another vehicle, inspect the DLC3 of the original vehicle.
- If communication is still not possible when the tester is connected to another vehicle, the problem may be in the tester itself. Consult the Service Department listed in the tester's instruction manual.

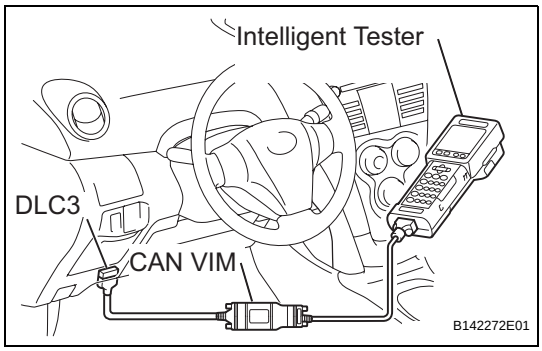

3. **INSPECT BATTERY VOLTAGE**
   Standard voltage:
   11 to 14 V
   If the voltage is below 11 V, recharge or replace the battery before proceeding.

DTC CHECK / CLEAR

1. **CHECK DTC**
   (a) Connect the intelligent tester with CAN VIM to the DLC3.
   (b) Turn the ignition switch ON.
   (c) Turn the tester ON.
   (d) Select the following menu items: DIAGNOSIS / OBD/MOBD / IMMOBILISER / DTC INFO / CURRENT CODES.
   (e) Check the DTC(s) and then write them down.
   (f) See page EI-22 to check the details of the DTC(s).
2. **CLEAR DTC**
   (a) Connect the intelligent tester to the DLC3.
   (b) Turn the ignition switch ON.
   (c) Turn the tester ON.
   (d) Select the following menu items: DIAGNOSIS / OBD/MOBD / IMMOBILISER / DTC INFO / CLEAR CODES.
   (e) Press the YES button.

DATA LIST / ACTIVE TEST

1. DATA LIST

HINT:

Using the intelligent tester DATA LIST allows switch, sensor, actuator and other item values to be read without removing any parts. Reading the DATA LIST early in troubleshooting is one way to shorten labor time.

(a) Connect the intelligent tester to the DLC3.

(b) Turn the ignition switch ON and push the intelligent tester main switch ON.

(c) On the intelligent tester, enter the following menus: DIAGNOSIS/OBD MOBD/DATA LIST.

Transponder key ECU assembly

Item	Measurement Item/ Display (Range)	Normal Condition	Diagnostic Note
KEY SW	Unlock warning switch signal/ ON or OFF	OFF: No key is in ignition key cylinder ON: Key is in ignition key cylinder	-
IG SW	Ignition switch signal/ ON or OFF	OFF: Ignition switch OFF or ACC ON: Ignition switch ON	-
IMMOBILISER	Immobiliser system status/ SET or UNSET	UNSET: Ignition switch ON SET: Without key	-
PERMIT (START)	Start control system starting control / OK or NG	OK: Start control system starting is permitted NG: Start control system starting is not permitted	-
RESPONSE	Transponder chip data/ NG or OK	NG: Data error OK: Data OK	-
FRAME ERROR	Transponder chip data/ NG or OK	NG: Data error OK: Data OK	-
SERIAL NUMBER	Transponder chip data/ NG or OK	NG: Data error OK: Data OK	-
ENCRYPT CODE	Transponder chip data/ NG or OK	NG: Data error OK: Data OK	-
STATUS	Transponder chip data/ NG or OK	NG: Data error OK: Data OK	-
BCC	Transponder chip signal/ NG or OK	NG: Incorrect data sending OK: Correct data sending	-
SUB KEY	Sub-key code signal/ NOMATCH or MATCH	NOMATCH: Unmatched sub-key code is sent MATCH: Matched sub-key code is sent	-
MASTER KEY	Master key code signal/ NOMATCH or MATCH	NOMATCH: Unmatched master key code is sent MATCH: Matched master key code is sent	-
REGIST SUB CODE	Number of registered sub-keys/ min. 0, max. 15	Number of registered sub-keys	-
REGIST MAS CODE	Number of registered master keys/ min. 0, max. 15	Number of registered master keys	-
REG CODE SPACE	Memory space for key code registration/ NOT FUL or FULL	NOT FUL: Possible to register more key codes FULL: Cannot register any more key codes	-
+B	+B judgment / NORMAL or BREAK	NORMAL: Battery supply is normal BREAK: Battery supply is malfunctioning	-
ANTENNA COIL	Antenna coil condition/ NORMAL or FAIL	NORMAL: Antenna coil is normal FAIL: Antenna coil is malfunctioning	-

2. ACTIVE TEST

HINT:

Performing the intelligent tester ACTIVE TEST allows relay, VSV, actuator and other items to be operated without removing any parts. Performing the ACTIVE TEST early in troubleshooting is one way to save time. The DATA LIST can be displayed during the ACTIVE TEST.

(a) Connect the intelligent tester to the DLC3.
(b) Turn the ignition switch ON and push the intelligent tester main switch ON.
(c) On the intelligent tester, enter the following menus: DIAGNOSIS/OBD MOBD/ACTIVE TEST.

Transponder key ECU assembly

Item	Normal Condition	Diagnostic Note
SECURITY INDIC	Turn security indicator ON/OFF	-

DIAGNOSTIC TROUBLE CODE CHART

TRANSPONDER KEY ECU DIAGNOSTIC TROUBLE CODE CHART

DTC No.	Detection Item	Trouble Area	See page
B2780	Push Switch / Key Unlock Warning Switch Malfunction	1. Unlock warning switch assembly 2. Wire harness 3. Transponder key ECU assembly	EI-24
B2784	Antenna Coil Open / Short	1. Wire harness 2. Transponder key amplifier 3. Transponder key ECU assembly	EI-27
B2793	Transponder Chip Malfunction	1. Key	EI-29
B2794	Unmatched Encryption Code	1. Key	EI-30
B2795	Unmatched Key Code	1.Key	EI-31
B2796	No Communication in Immobiliser System	1.Key 2. Transponder key amplifier 3. Wire harness 4. Transponder key ECU assembly	EI-32
B2797	Communication Malfunction No. 1	1. Key 2. Wire harness 3. Transponder key amplifier 4. Transponder key ECU assembly	EI-35
B2798	Communication Malfunction No. 2	1. Key	EI-32

ECM DAIAGNOSTIC TROUBLE CODE CHART

DTC No.	Detection Item	Trouble Area	See page
B2799	Engine Immobiliser System	1. Wire harness 2. ECM	EI-38

NOTICE:
The DTCs for the immobiliser system are specified above. If the other codes are output, check the DTC(s) chart for the engine control system.

EI

DTC	B2780	Push Switch / Key Unlock Warning Switch Malfunction

DESCRIPTION

This DTC will be output if the transponder key ECU does not detect that the unlock warning switch is ON even when the ignition switch is ON. Under normal conditions, the unlock warning switch is ON when the ignition switch is ON.

DTC No.	DTC Detection Condition	Trouble Area
B2780	Unlock warning switch ON is not detected when ignition switch is ON	• Unlock warning switch assembly • Wire harness • Transponder key ECU assembly

EI

WIRING DIAGRAM

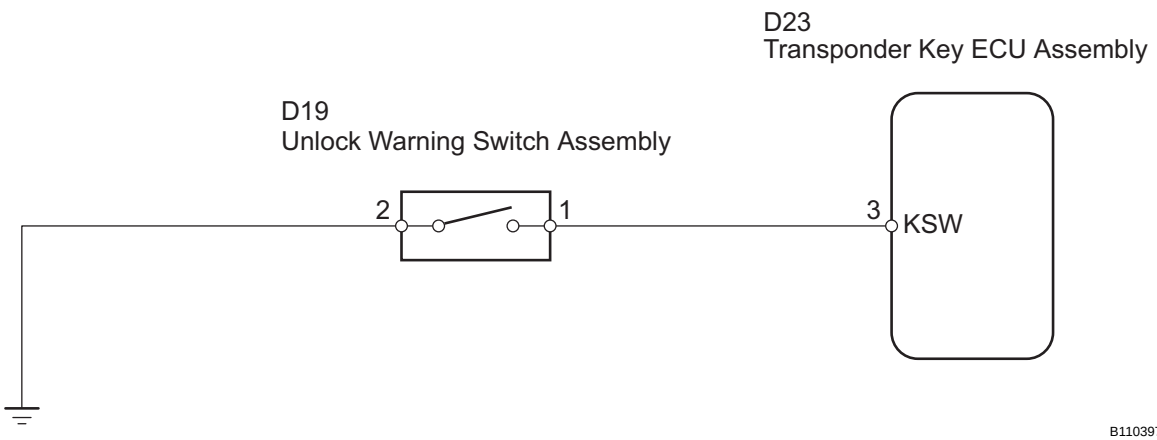

INSPECTION PROCEDURE

1	READ VALUE OF INTELLIGENT TESTER

(a) Connect the intelligent tester to the DLC3.
(b) Turn the ignition switch ON with the key that cannot start the engine.
(c) On the intelligent tester, enter the following menus: DIAGNOSIS/OBD MOBD/DATA LIST/IMMOBILISER/KEY SW. Read the values.

Transponder key ECU assembly

Item	Measurement Item/ Display (Range)	Normal Condition	Diagnostic Note
KEY SW	Unlock warning switch signal/ ON or OFF	OFF: No key is in ignition key cylinder ON: Key is in ignition key cylinder	-

OK:
"ON" (key is in ignition key cylinder) appears on the screen.

NG → **Go to step 2**

OK

REPLACE TRANSPONDER KEY ECU ASSEMBLY

2 INSPECT UNLOCK WARNING SWITCH ASSEMBLY

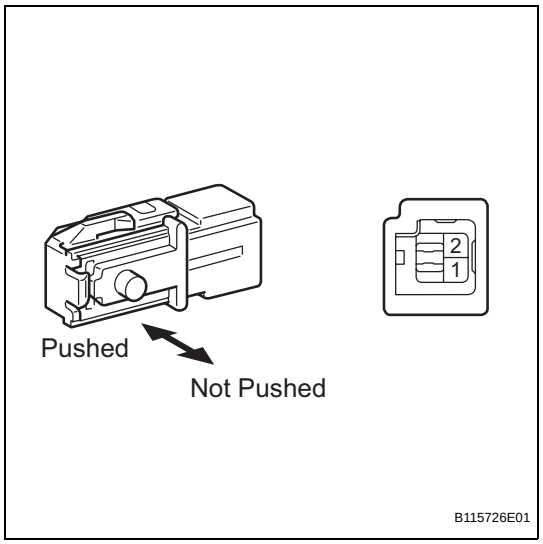

(a) Remove the unlock warning switch assembly.
(b) Measure the resistance of the switch.
Standard resistance

Tester Connection	Switch Condition	Specified Condition
1 - 2	Pushed	Below 1 Ω
1 - 2	Not pushed	10 kΩ or higher

(c) Reinstall the unlock warning switch assembly.

NG → **REPLACE UNLOCK WARNING SWITCH ASSEMBLY**

OK

3 CHECK HARNESS AND CONNECTOR (UNLOCK WARNING SWITCH ASSEMBLY - BODY GROUND)

Wire Harness Side:

Unlock Warning Switch Assembly Connector

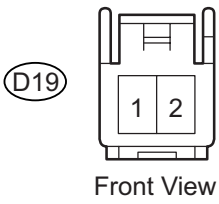

(a) Disconnect the D19 Unlock warning switch assembly connector.
(b) Measure the resistance of the wire harness side connector.
Standard resistance

Tester Connection	Specified Condition
D19-2 - Body ground	Below 1 Ω

(c) Reconnect the D19 unlock warning switch assembly connector.

NG → **REPAIR OR REPLACE HARNESS OR CONNECTOR**

OK

4	CHECK HARNESS AND CONNECTOR (TRANSPONDER KEY ECU - UNLOCK WARNING SWITCH ASSEMBLY)

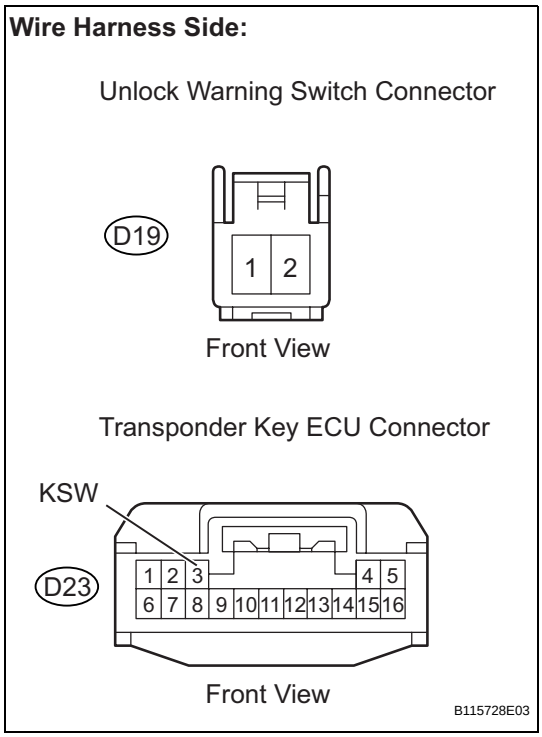

(a) Disconnect the D23 transponder key ECU connector.
(b) Disconnect the D19 unlock warning switch assembly connector.
(c) Measure the resistance of the wire harness side connectors.

Standard resistance

Tester Connection	Specified Condition
D23-3 (KSW) - D19-1	Below 1 Ω

(d) Reconnect the D23 transponder key ECU connector.
(e) Reconnect the D19 unlock warning switch assembly connector.

NG → **REPAIR OR REPLACE HARNESS OR CONNECTOR**

OK

REPLACE TRANSPONDER KEY ECU ASSEMBLY

DTC	B2784	Antenna Coil Open / Short

DESCRIPTION

The transponder key coil receives key code signals from the key's transponder chip. The coil is built into the transponder key amplifier, which amplifies the key code signals and outputs the signals to the transponder key ECU.

DTC No.	DTC Detection Condition	Trouble Area
B2784	Antenna coil is open/short	• Wire harness • Transponder key amplifier • Transponder key ECU assembly

EI

WIRING DIAGRAM

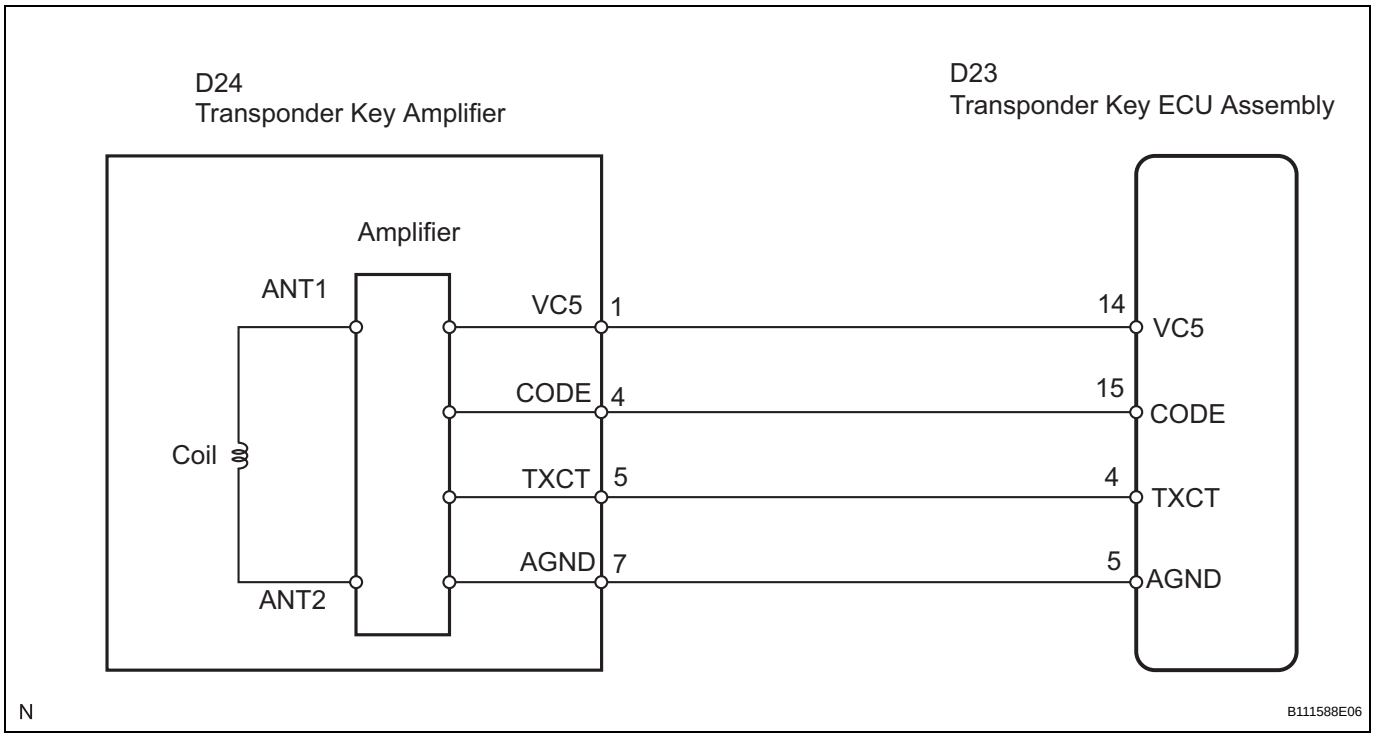

INSPECTION PROCEDURE

1	READ VALUE OF INTELLIGENT TESTER

(a) Connect the intelligent tester to the DLC3.
(b) Turn the ignition switch ON with the key that cannot start the engine.
(c) On the intelligent tester, enter the following menus: DIAGNOSIS/OBD MOBD/DATA LIST/IMMOBILISER/ ANTENNA COIL. Read the values.

Transponder key ECU assembly

Item	Measurement Item/ Display (Range)	Normal Condition	Diagnostic Note
ANTENNA COIL	Antenna coil condition/ NORMAL or FAIL	NORMAL: Antenna coil is normal FAIL: Antenna coil is malfunctioning	-

OK:
"NORMAL" (antenna coil is normal) appears on the screen.

NG → **Go to step 2**

OK

REPLACE TRANSPONDER KEY ECU ASSEMBLY

EI

2 CHECK HARNESS AND CONNECTOR (TRANSPONDER KEY ECU - TRANSPONDER KEY AMPLIFIER)

Wire Harness Side:

Transponder Key ECU Connector

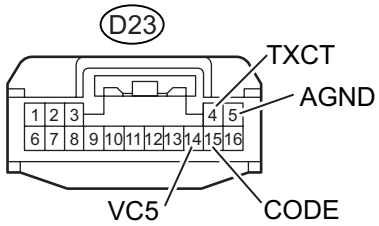

Front View

Transponder Key Amplifier Connector

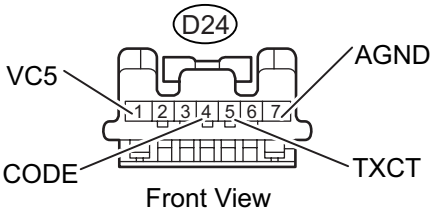

Front View

B110403E15

(a) Disconnect the D23 transponder key ECU connector.
(b) Disconnect the D24 transponder key amplifier connector.
(c) Measure the resistance of the wire harness side connectors.

Standard resistance

Tester Connection	Specified Condition
D23-14 (VC5) - D24-1 (VC5)	Below 1 Ω
D23-15 (CODE) - D24-4 (CODE)	Below 1 Ω
D23-4 (TXCT) - D24-5 (TXCT)	Below 1 Ω
D23-5 (AGND) - D24-7 (AGND)	Below 1 Ω
D23-14 (VC5) or D24-1 (VC5) - Body ground	10 kΩ or higher
D23-15 (CODE) or D24-4 (CODE) - Body ground	10 kΩ or higher
D23-4 (TXCT) or D24-5 (TXCT) - Body ground	10 kΩ or higher
D23-5 (AGND) or D24-7 (AGND) - Body ground	10 kΩ or higher

(d) Reconnect the D23 transponder key ECU connector.
(e) Reconnect the D24 transponder key amplifier connector.

NG → **REPAIR OR REPLACE HARNESS OR CONNECTOR**

OK

REPLACE TRANSPONDER KEY AMPLIFIER

DTC	B2793	Transponder Chip Malfunction

DESCRIPTION

This DTC is output when: 1) during key code registration, a key malfunction occurs; or 2) the key code was unable to be registered properly. Follow the inspection procedure below.

DTC No.	DTC Detection Condition	Trouble Area
B2793	Transponder chip malfunction	Key

INSPECTION PROCEDURE

1	RE-REGISTER KEY

(a) Delete the DTC (See page EI-22).
(b) Re-register the key (See page EI-7), and check that the engine starts with the key.
OK:
Engine starts.

NG → **REPLACE KEY**

OK ↓

END (INSPECTION FINISHED)

DTC	B2794	Unmatched Encryption Code

DESCRIPTION

This DTC is output when a key with an incomplete key code is inserted into the ignition key cylinder.

DTC No.	DTC Detection Condition	Trouble Area
B2794	Key with incomplete key code is inserted	Key

INSPECTION PROCEDURE

1	**REPLACE KEY**

NEXT

END

DTC	B2795	Unmatched Key Code

DESCRIPTION

This DTC is output when a key with a key code that has not been registered in the ECU is inserted into the ignition key cylinder.

DTC No.	DTC Detection Condition	Trouble Area
B2795	Key with unregistered key code is inserted	Key

INSPECTION PROCEDURE

1	DELETE DTC AND INSERT ALL PRESENTLY AVAILABLE KEYS TO CHECK WHETHER ENGINE STARTS OR NOT

(a) Delete the DTC and insert all presently available keys to check whether engine starts or not.
OK:
Engine starts.

NG → **REPLACE KEY THAT CANNOT START ENGINE**

OK

END (BECAUSE OF KEY RE-REGISTRATION)

DTC	B2796	No Communication in Immobiliser System

DTC	B2798	Communication Malfunction No. 2

DESCRIPTION

This DTC is output when a key that does not have a transponder chip is inserted into the ignition key cylinder or if communication between the key and transponder key ECU is not possible.

DTC No.	DTC Detection Condition	Trouble Area
B2796	No communication	• Key • Wire harness • Transponder key amplifier • Transponder key ECU assembly
B2798	Communication error	Key

EI

WIRING DIAGRAM

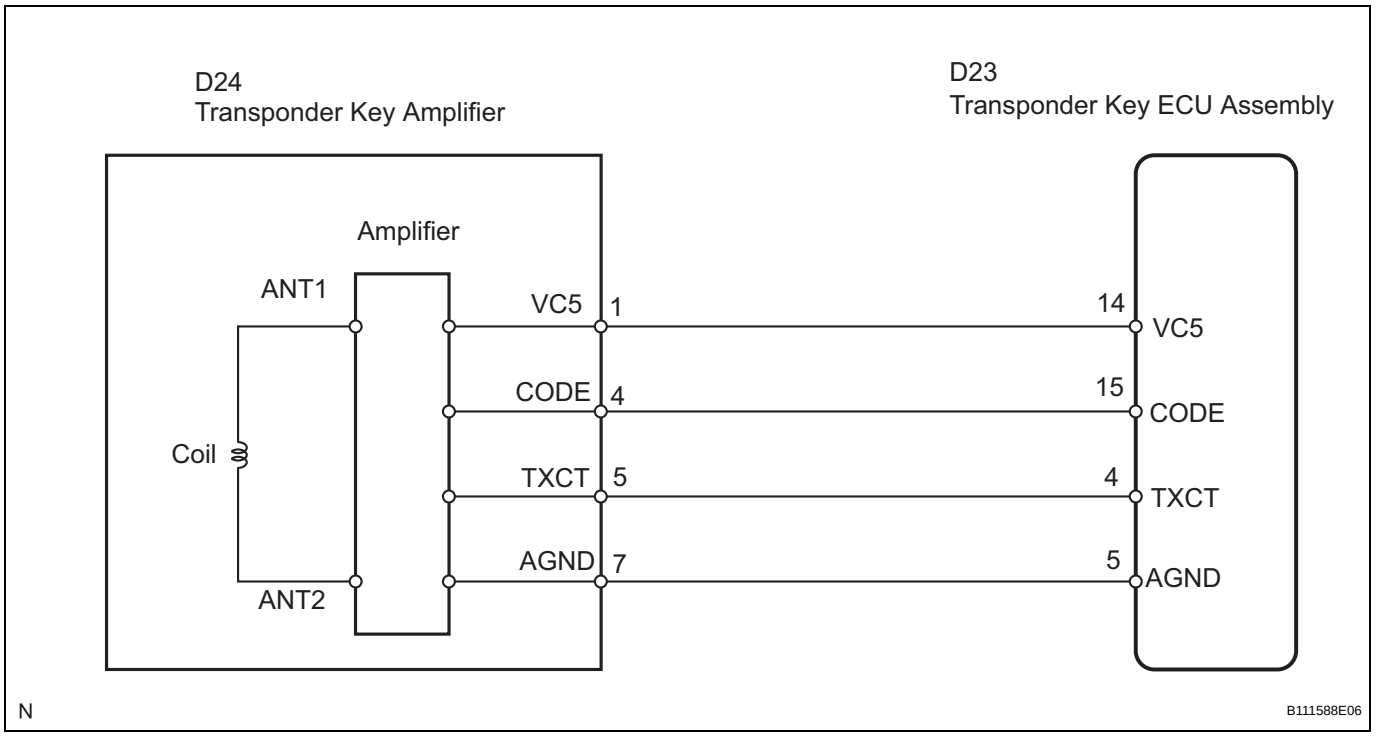

INSPECTION PROCEDURE

1	READ VALUE OF INTELLIGENT TESTER

(a) Connect the intelligent tester to the DLC3.
(b) Turn the ignition switch ON with the key that cannot start the engine.

(c) On the intelligent tester, enter the following menus: DIAGNOSIS/OBD MOBD/DATA LIST/IMMOBILISER/ IMMOBILISER. Read the values.

Transponder key ECU assembly

Item	Measurement Item/ Display (Range)	Normal Condition	Diagnostic Note
IMMOBILISER	Immobiliser system status/ SET or UNSET	UNSET: Ignition switch ON SET: Without key	-

OK:

"UNSET" (ignition switch ON) appears on the screen.

NG → **Go to step 2**

OK

REPLACE TRANSPONDER KEY ECU ASSEMBLY

2 CHECK WHETHER ENGINE STARTS WITH OTHER KEYS

(a) Check whether the engine starts with the vehicle's other keys.

OK:

Engine starts.

NG → **Go to step 3**

OK

RE-REGISTER OR REPLACE KEY THAT CANNOT START ENGINE

3 READ VALUE OF INTELLIGENT TESTER

(a) Connect the intelligent tester to the DLC3.
(b) Turn the ignition switch ON with the key that cannot start the engine.
(c) On the intelligent tester, enter the following menus: DIAGNOSIS/OBD MOBD/DATA LIST/IMMOBILISER/ ANTENNA COIL. Read the values.

Transponder key ECU assembly

Item	Measurement Item/ Display (Range)	Normal Condition	Diagnostic Note
ANTENNA COIL	Antenna coil condition/ NORMAL or FAIL	NORMAL: Antenna coil is normal FAIL: Antenna coil is malfunctioning	-

OK:

"NORMAL" (antenna coil is normal) appears on the screen.

NG → **REPLACE TRANSPONDER KEY AMPLIFIER**

OK

4	CHECK HARNESS AND CONNECTOR (TRANSPONDER KEY ECU - TRANSPONDER KEY AMPLIFIER)

Wire Harness Side:

Transponder Key ECU Connector

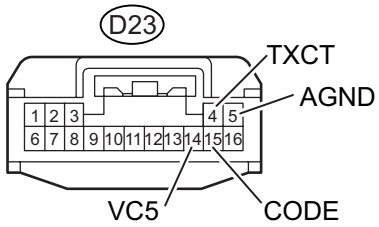

Front View

Transponder Key Amplifier Connector

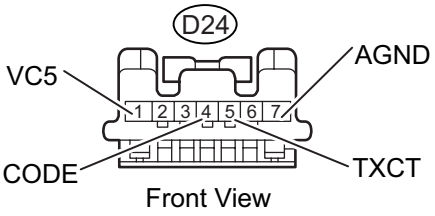

Front View

B110403E15

(a) Disconnect the D23 transponder key ECU connector.
(b) Disconnect the D24 transponder key amplifier connector.
(c) Measure the resistance of the wire harness side connectors.

Standard resistance

Tester Connection	Specified Condition
D23-14 (VC5) - D24-1 (VC5)	Below 1 Ω
D23-15 (CODE) - D24-4 (CODE)	Below 1 Ω
D23-4 (TXCT) - D24-5 (TXCT)	Below 1 Ω
D23-5 (AGND) - D24-7 (AGND)	Below 1 Ω
D23-14 (VC5) or D24-1 (VC5) - Body ground	10 kΩ or higher
D23-15 (CODE) or D24-4 (CODE) - Body ground	10 kΩ or higher
D23-4 (TXCT) or D24-5 (TXCT) - Body ground	10 kΩ or higher
D23-5 (AGND) or D24-7 (AGND) - Body ground	10 kΩ or higher

(d) Reconnect the D23 transponder key ECU connector.
(e) Reconnect the D24 transponder key amplifier connector.

NG → **REPAIR OR REPLACE HARNESS OR CONNECTOR**

OK

5	REPLACE TRANSPONDER KEY AMPLIFIER

(a) After replacing the transponder key amplifier with a normally functioning amplifier, check that the engine starts.

OK:

Engine starts.

NG → **REPLACE TRANSPONDER KEY ECU ASSEMBLY**

OK

END (TRANSPONDER KEY AMPLIFIER DEFECTIVE)

DTC	B2797	Communication Malfunction No. 1

DESCRIPTION

This DTC is output when a communication error occurs between the transponder key amplifier and transponder key ECU. Some possible reasons for the communication error are: 1) 2 or more ignition keys are positioned too close together, or 2) noise is occurring in the communication line.

DTC No.	DTC Detection Condition	Trouble Area
B2797	Keys are positioned too close to each other, or noise occurred in communication line	• Key • Wire harness • Transponder key amplifier • Transponder key ECU assembly

EI

WIRING DIAGRAM

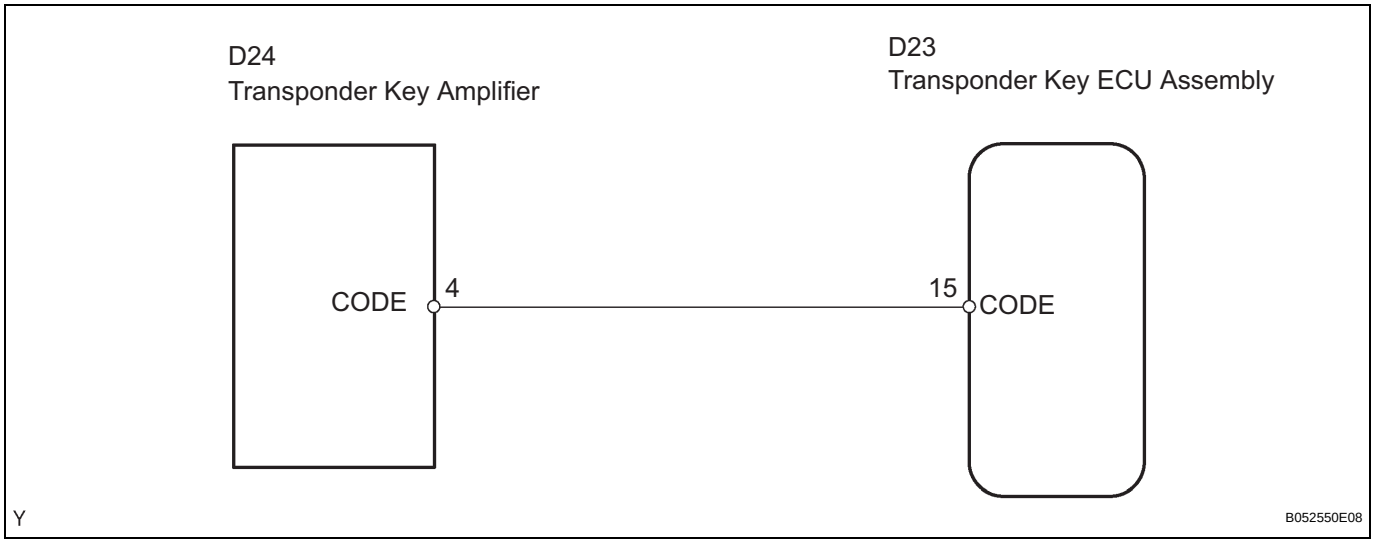

INSPECTION PROCEDURE

1	CHECK KEYS

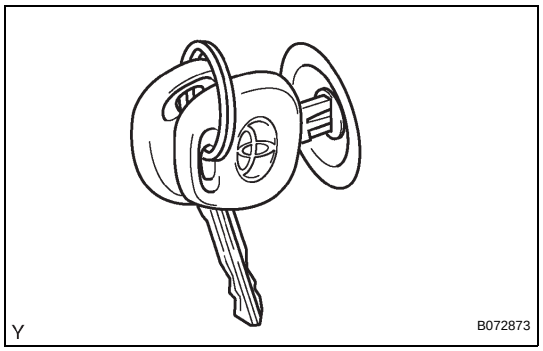

(a) Check if the ignition key being used is near other ignition keys, as shown in the illustration. Also, check if the key ring is in contact with the key grip.

Result

Result	Proceed to
The key is near other keys and/or the key ring is in contact with the key grip.	**A**
The key is not near other keys and/or the key ring is not in contact with the key grip.	**B**

B → **Go to step 3**

A

2	CHECK DTC

(a) Separate the keys from each other and/or remove the key ring.
(b) Delete the DTC (See page EI-22).
(c) Insert a key into the ignition cylinder. Remove it. Repeat for all the other keys.
(d) Check that no code is output.
OK:
No code is output.

EI

NG → **Go to step 3**

OK →

END (INSPECTION FINISHED)

3	CHECK TRANSPONDER KEY ECU ASSEMBLY

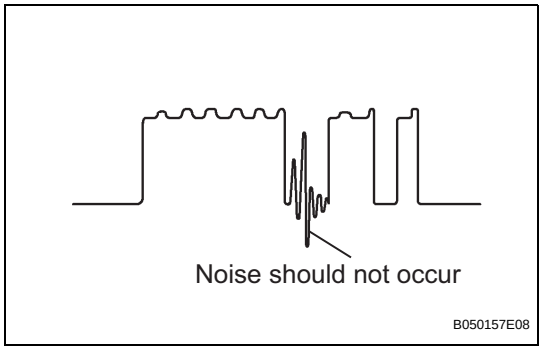

(a) Using an oscilloscope or the intelligent tester, check for noise in the waveform between the terminals of the D24 transponder key amplifier connector and D23 transponder key ECU connector.
Result

Tester Connection	Specified Condition
D23-15 (CODE) - D24-4 (CODE)	No noise is occur

Tool Setting	5 V/DIV., 20 ms/DIV.
Condition	Ignition switch OFF → ON

NG → **FIND CAUSE OF NOISE AND REMOVE IT**

OK →

4	CHECK HARNESS AND CONNECTOR (TRANSPONDER KEY ECU - TRANSPONDER KEY AMPLIFIER)

Wire Harness Side:

Transponder Key ECU Connector

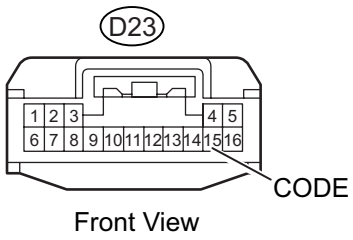

Front View

Transponder Key Amplifier Connector

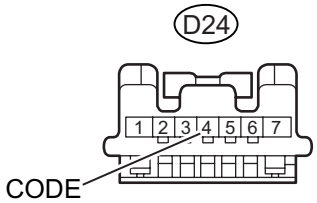

Front View

B110403E16

(a) Disconnect the D23 transponder key ECU connector.
(b) Disconnect the D24 transponder key amplifier connector.
(c) Measure the resistance of the wire harness side connectors.

Standard resistance

Tester Connection	Specified Condition
D23-15 (CODE) - D24-4 (CODE)	Below 1 Ω

(d) Reconnect the D23 transponder key ECU connector.
(e) Reconnect the D24 transponder amplifier connector.

NG → **REPAIR OR REPLACE HARNESS OR CONNECTOR**

OK

5	REPLACE TRANSPONDER KEY AMPLIFIER

(a) After replacing the transponder key amplifier with a normally functioning amplifier, check that the engine starts.

OK:

Engine starts.

NG → **REPLACE TRANSPONDER KEY ECU ASSEMBLY**

OK

END (TRANSPONDER KEY AMPLIFIER DEFECTIVE)

DTC	B2799	Engine Immobiliser System Malfunction

DESCRIPTION

This DTC is output when: 1) the ECM detects errors in its own communication with the transponder key ECU; 2) the ECM detects errors in the communication lines; and 3) the ECU - ECM communication IDs between the transponder key ECU and the ECM are different and an engine start is attempted.
Before troubleshooting for this DTC, make sure no transponder key ECU DTCs are present. If present, troubleshoot the transponder key ECU DTCs first.

DTC No.	DTC Detection Condition	Trouble Area
B2799	• Error in communication between ECM and transponder key ECU, or in communication line • Communication ID in transponder key ECU is different	• Wire harness • ECM

EI

WIRING DIAGRAM

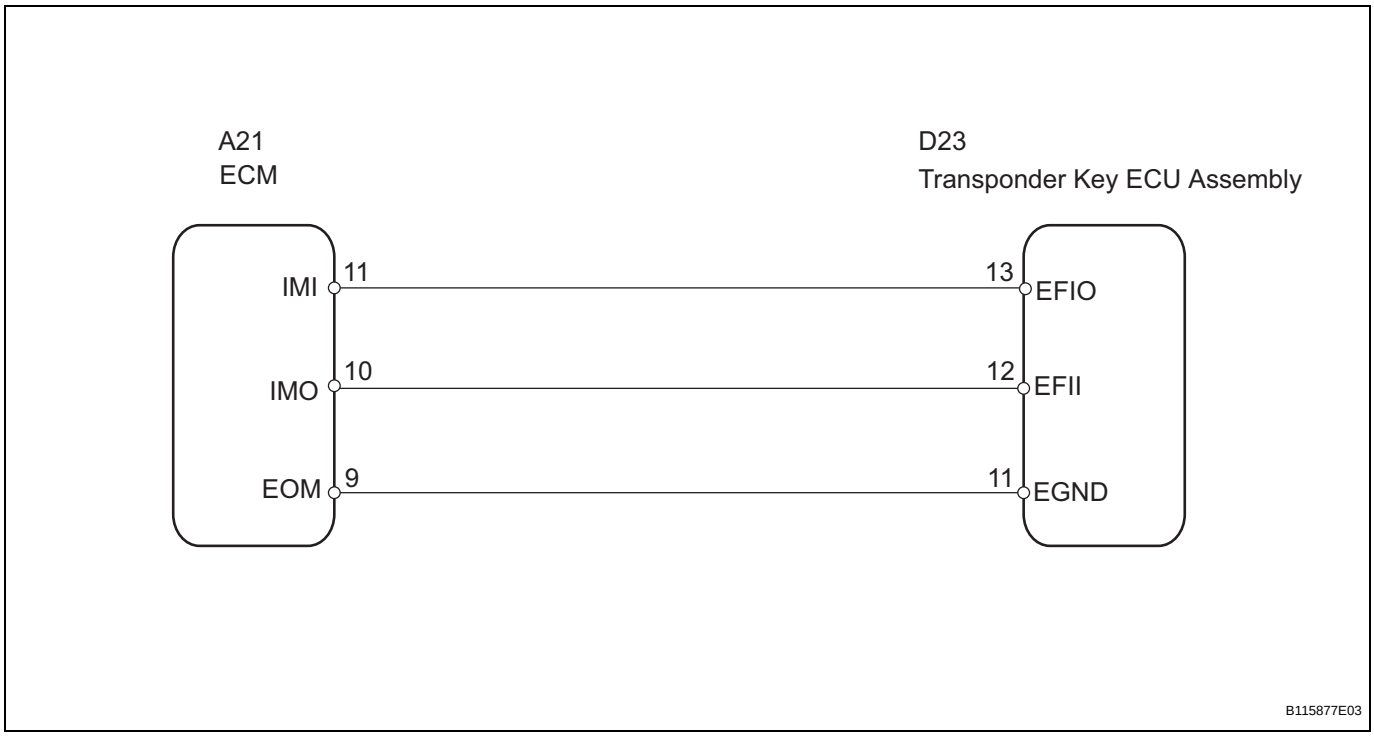

INSPECTION PROCEDURE

1	CHECK HARNESS AND CONNECTOR (TRANSPONDER KEY ECU ASSEMBLY - ECM)

Wire Harness Side:

Transponder Key ECU Connector

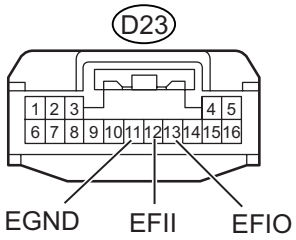

Front View

ECM Connector

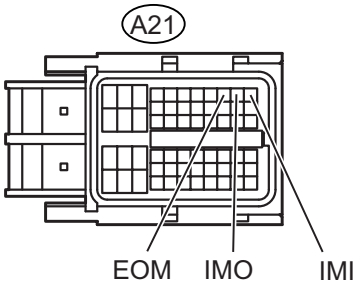

Front View

B116298E02

(a) Disconnect the D23 transponder key ECU connector.
(b) Disconnect the A21 ECM connector.
(c) Measure the resistance of the wire harness side connectors.

Standard resistance

Tester Connection	Specified Condition
D23-13 (EFIO) - A21-11 (IMI)	Below 1 Ω
D23-12 (EFII) - A21-10 (IMO)	Below 1 Ω
D23-11 (EGND) - A21-9 (EOM)	Below 1 Ω
D23-13 (EFIO) or A21-11 (IMI) - Body ground	10 kΩ or higher
D23-12 (EFII) or A21-10 (IMO) - Body ground	10 kΩ or higher

(d) Reconnect the D23 transponder key ECU connector.
(e) Reconnect the A21 ECM connector.

NG → **REPAIR OR REPLACE HARNESS OR CONNECTOR**

OK

REPLACE ECM

EI

Security Indicator Light Circuit

DESCRIPTION

When the transponder key is registered, the transponder key ECU assembly outputs the key registration condition by lighting up, blinking or turning off the security indicator.

WIRING DIAGRAM

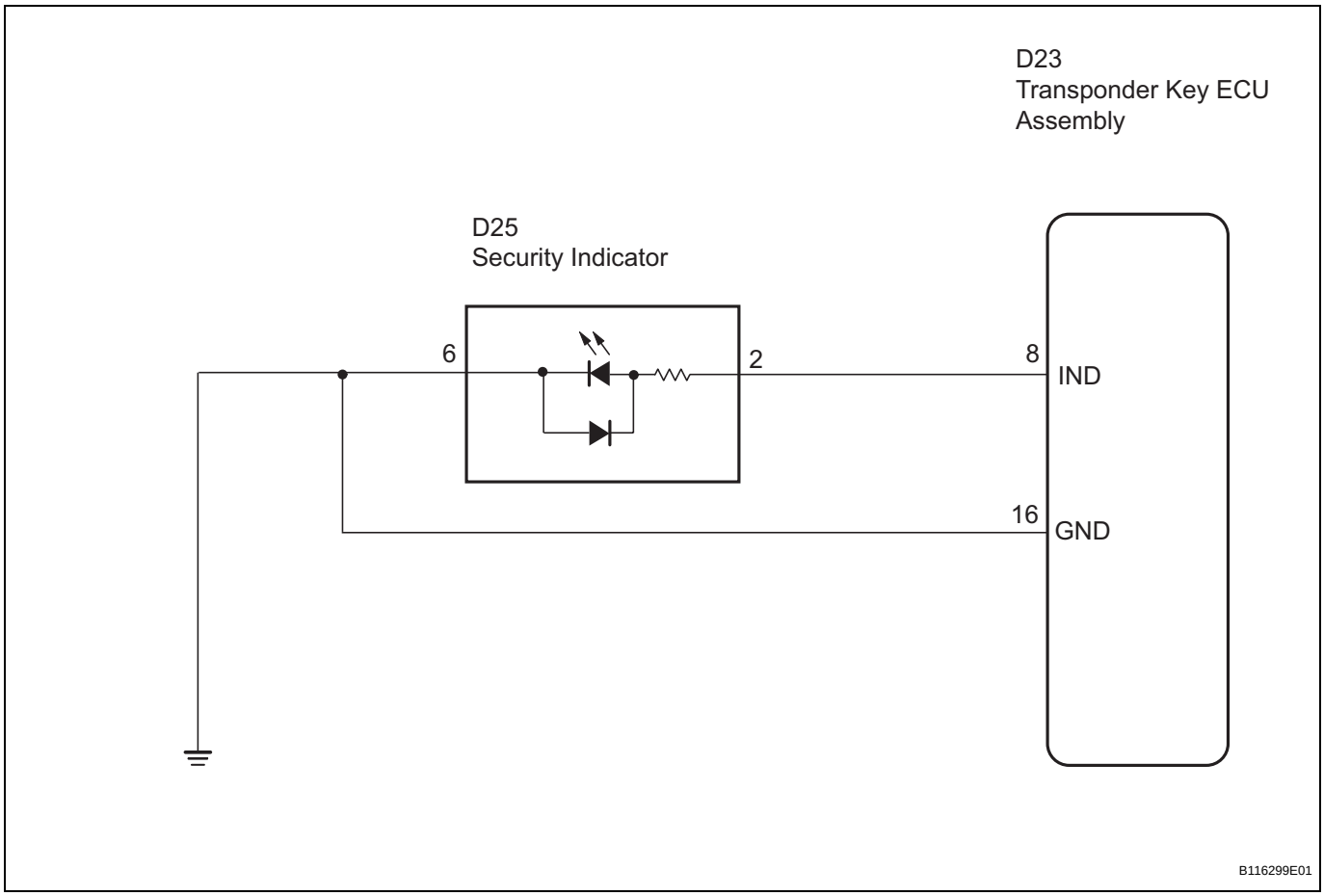

INSPECTION PROCEDURE

1	PERFORM ACTIVE TEST BY INTELLIGENT TESTER

(a) Connect the intelligent tester to the DLC3.
(b) Turn the ignition switch on.
(c) Perform the ACTIVE TEST according to the display on the tester.

Transponder Key ECU

Item	Tester Details	Diagnostic Note
SECURITY INDIC	Turn security indicator ON/OFF	-

OK:
Security indicator turns ON and OFF

OK	Go to step 3

NG

2 CHECK HARNESS AND CONNECTOR (TRANSPONDER KEY ECU - SECURITY INDICATOR LIGHT)

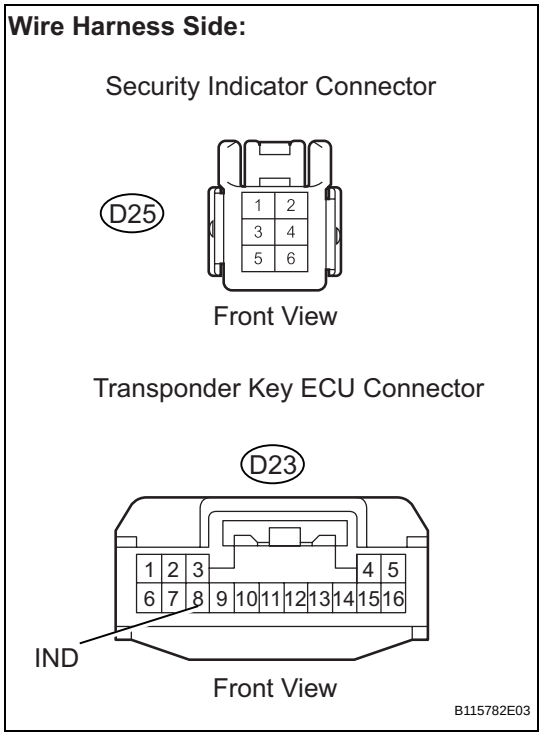

(a) Disconnect the D23 transponder key ECU connector.
(b) Disconnect the D25 security indicator connector.
(c) Measure the resistance.

Standard resistance

Tester Condition	Specified Condition
D23-8 (IND) - D25-2	Below 1Ω
D23-8 (IND) - Body ground	10 kΩor higher

(d) Reconnect the D23 transponder key ECU connector.
(e) Reconnect the D25 security indicator connector.

NG → **REPAIR OR REPLACE HARNESS OR CONNECTOR**

OK

3 INSPECT TRANSPONDER KEY ECU ASSEMBLY

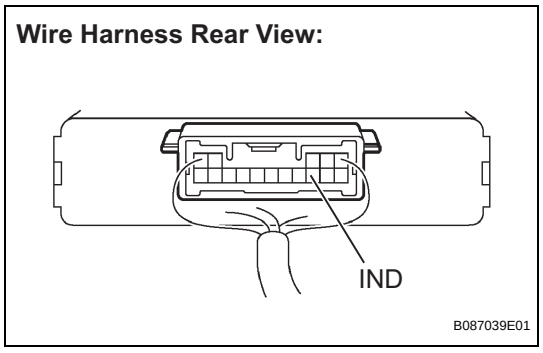

(a) Measure the voltage.

Standard voltage

Tester Condition	Condition	Specified Condition
D23-8 (IND) - Body ground	Immobiliser set	11 to 14 V and below 1 V output alternately

NG → **REPLACE TRANSPONDER KEY ECU ASSEMBLY**

OK

REPLACE SECURITY INDICATOR LIGHT

EI

Door Courtesy Switch Circuit

DESCRIPTION

When an additional transponder key is registered, the transponder key ECU assembly detects the front door courtesy light switch open/closed condition to register the key.

WIRING DIAGRAM

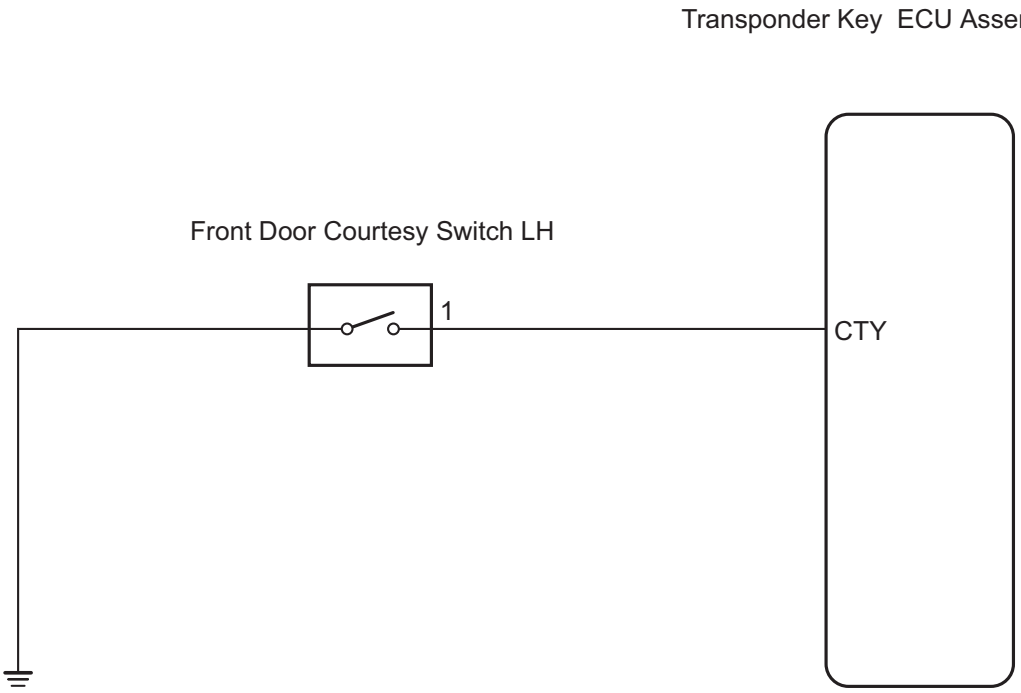

INSPECTION PROCEDURE

1	INSPECT FRONT DOOR COURTESY SWITCH ASSEMBLY

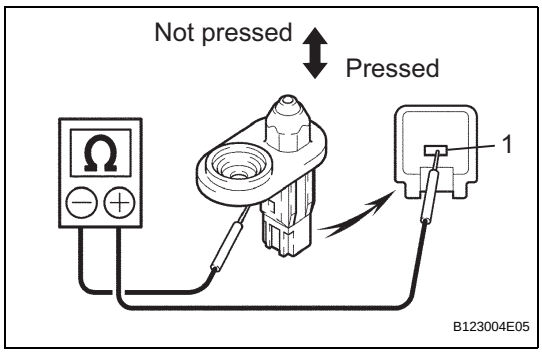

(a) Remove the driver side front door courtesy switch.
(b) Measure the resistance.

Standard resistance

Tester Connection	Condition	Specified Condition
1 - Switch body	Switch pressed	10 kΩ or higher
1 - Switch body	Switch free	Below 1 Ω

(c) Reinstall the driver side front door courtesy switch.

NG → **REPLACE FRONT DOOR COURTESY SWITCH ASSEMBLY**

OK

2	CHECK HARNESS AND CONNECTOR (FRONT DOOR COURTESY SWITCH CIRCUIT)

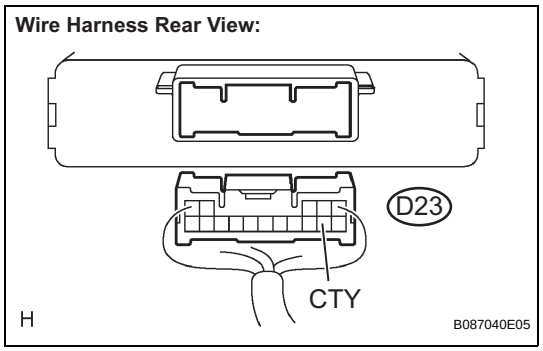

(a) Disconnect the D23 ECU connector.
(b) Measure the resistance.
Standard resistance

Tester Connection	Condition	Specified Condition
D23-7 (CTY) - Body ground	Courtesy switch pushed	10 kΩ or higher
D23-7 (CTY) - Body ground	Courtesy switch free	Below 1 Ω

(c) Reconnect the ECU connector.

NG → REPAIR OR REPLACE HARNESS OR CONNECTOR

OK

PROCEED TO NEXT CIRCUIT INSPECTION SHOWN IN PROBLEM SYMPTOMS TABLE

EI

ECU Power Source Circuit

DESCRIPTION

This circuit provides power to operate the transponder key ECU assembly.

WIRING DIAGRAM

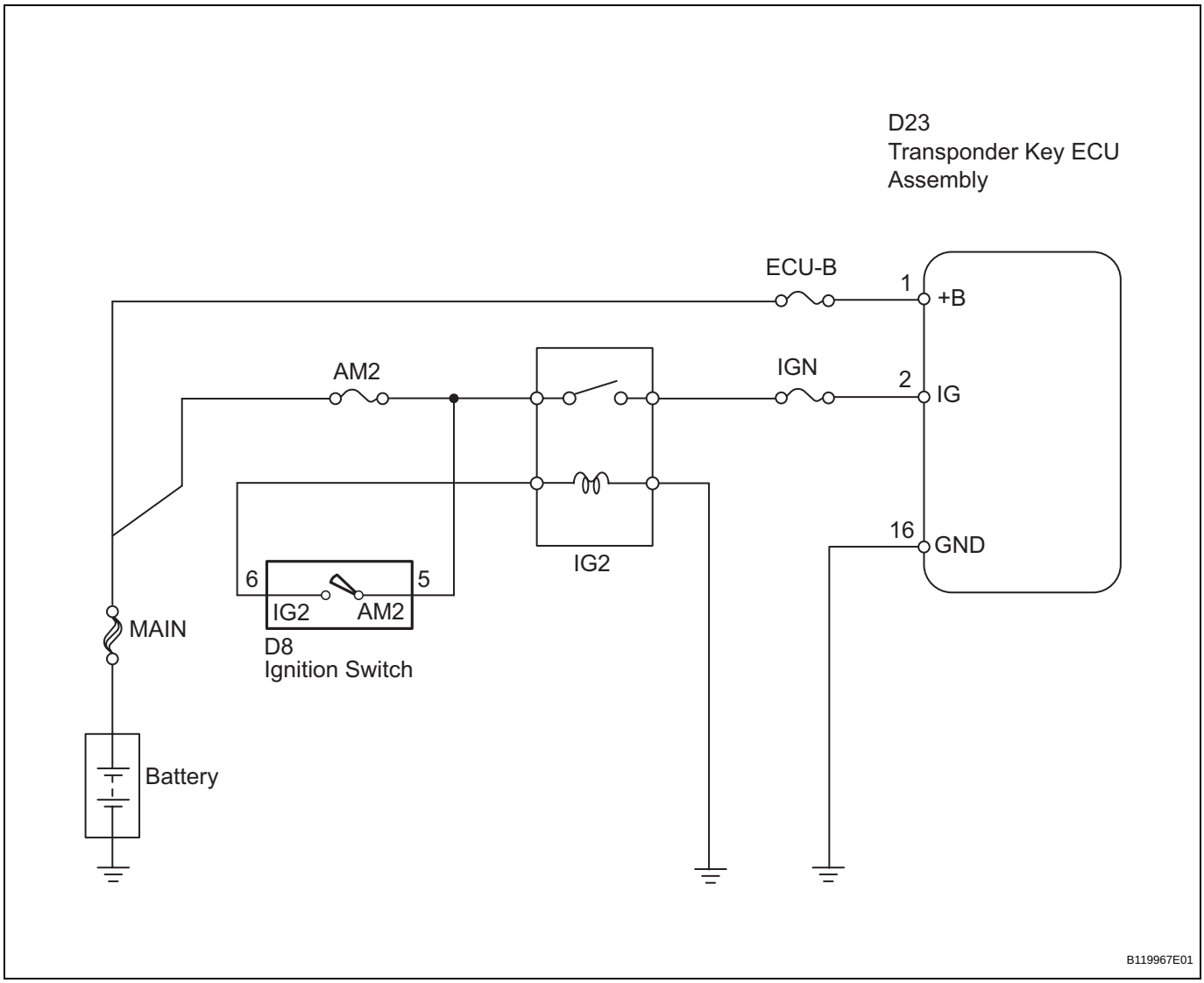

INSPECTION PROCEDURE

1	**INSPECT FUSE (ECU-B)**

Engine Room R/B:

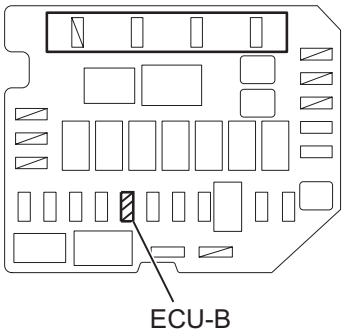

B122728E01

(a) Remove the ECU-B fuse from the engine room R/B and J/B.
(b) Measure the ECU-B fuse resistance.
Standard resistance:
Below 1 Ω
(c) Reinstall the ECU-B fuse.

NG → **REPLACE FUSE**

OK

2	**INSPECT FUSE (IGN)**

Main Body ECU:

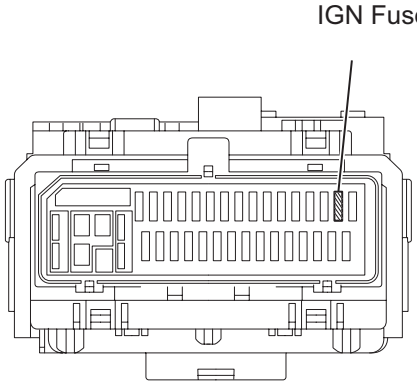

A107935E06

(a) Remove the IGN fuse from the main body ECU.
(b) Measure the IGN fuse resistance.
Standard resistance:
Below 1 Ω
(c) Reinstall the IGN fuse.

NG → **REPLACE FUSE**

OK

3 INSPECT INTEGRATION RELAY (IG2 RELAY AND AM2 FUSE)

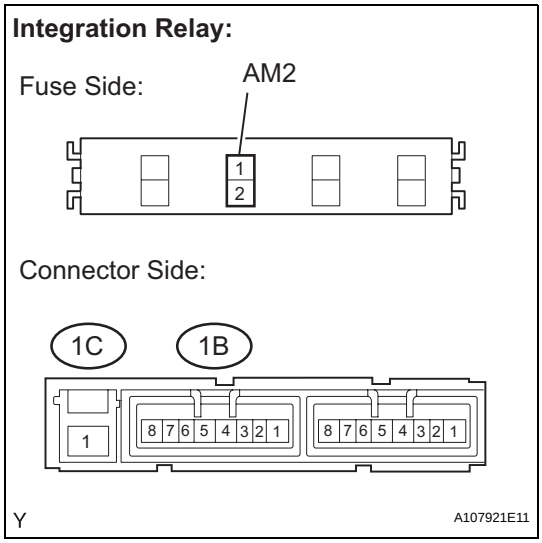

(a) Remove the integration relay from the engine room R/B and J/B.
(b) Inspect the AM2 fuse.
  (1) Remove the AM2 fuse from the integration relay.
  (2) Measure the resistance of the AM2 fuse.
    Standard resistance:
    Below 1 Ω
  (3) Reinstall the AM2 fuse.
(c) Inspect the IG2 relay.
  (1) Measure the resistance between the terminals shown below.
    Standard resistance

Tester Connections	Specified Conditions
1C-1-1B-4	10 kΩ or higher
	Below 1 Ω (when battery voltage is applied to terminals 1B-2 and 1B-3)
1C-1-1B-1	Below 1 Ω

  (2) Reinstall the integration relay.

NG → REPLACE INTEGRATION RELAY

OK

4 INSPECT IGNITION SWITCH ASSEMBLY

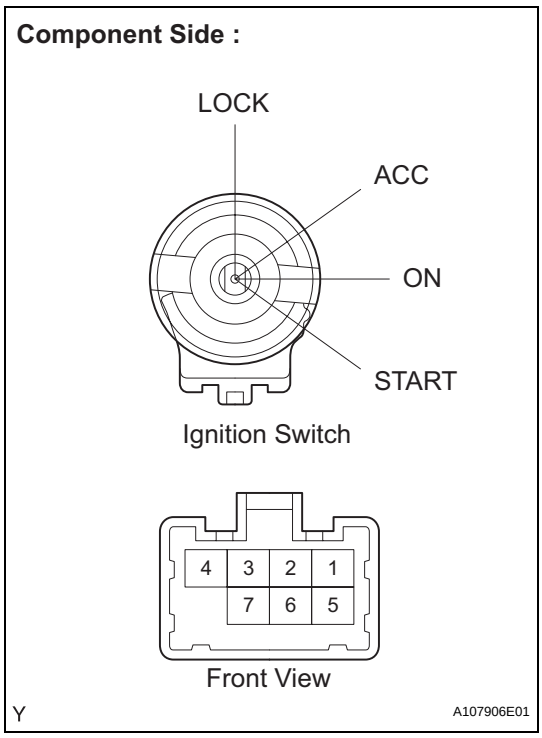

(a) Disconnect the D8 ignition switch connector.
(b) Measure the resistance between the terminals shown below.
  Standard resistance

Key Position	Tester Connection	Specified Condition
LOCK	-	10 kΩor higher
ACC	2-4	Below 1 Ω
ON	1-2-4	Below 1 Ω
	5-6	Below 1 Ω
START	1-3-4	Below 1 Ω
	5-6-7	Below 1 Ω

(c) Reconnect the D8 ignition switch connector.

NG → REPLACE IGNITION SWITCH ASSEMBLY

OK

5	CHECK HARNESS AND CONNECTOR (TRANSPONDER KEY ECU - BATTERY AND BODY GROUND)

Wire Harness Side:

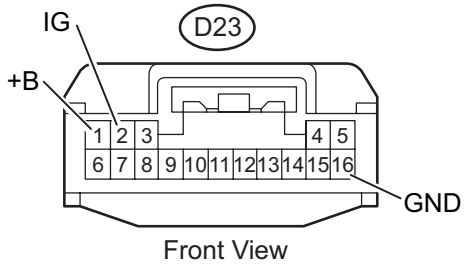

B110782E07

(a) Disconnect the D23 transponder key ECU connector.
(b) Measure the voltage of the wire harness side connector.
Standard voltage

Tester Connection	Condition	Specified Condition
D23-1 (+B) - Body ground	Always	11 to 14 V
D23-2 (IG) - Body ground	Ignition switch OFF	Below 1 V
	Ignition switch ON	11 to 14 V

(c) Measure the resistance of the wire harness side connector.
Standard resistance

Tester Connection	Specified Condition
D23-16 (GND) - Body ground	Below 1 Ω

(d) Reconnect the D23 transponder key ECU connector.

NG → **REPAIR OR REPLACE HARNESS OR CONNECTOR**

OK ↓

REPLACE TRANSPONDER KEY ECU ASSEMBLY

EI

CRUISE CONTROL SYSTEM

PARTS LOCATION

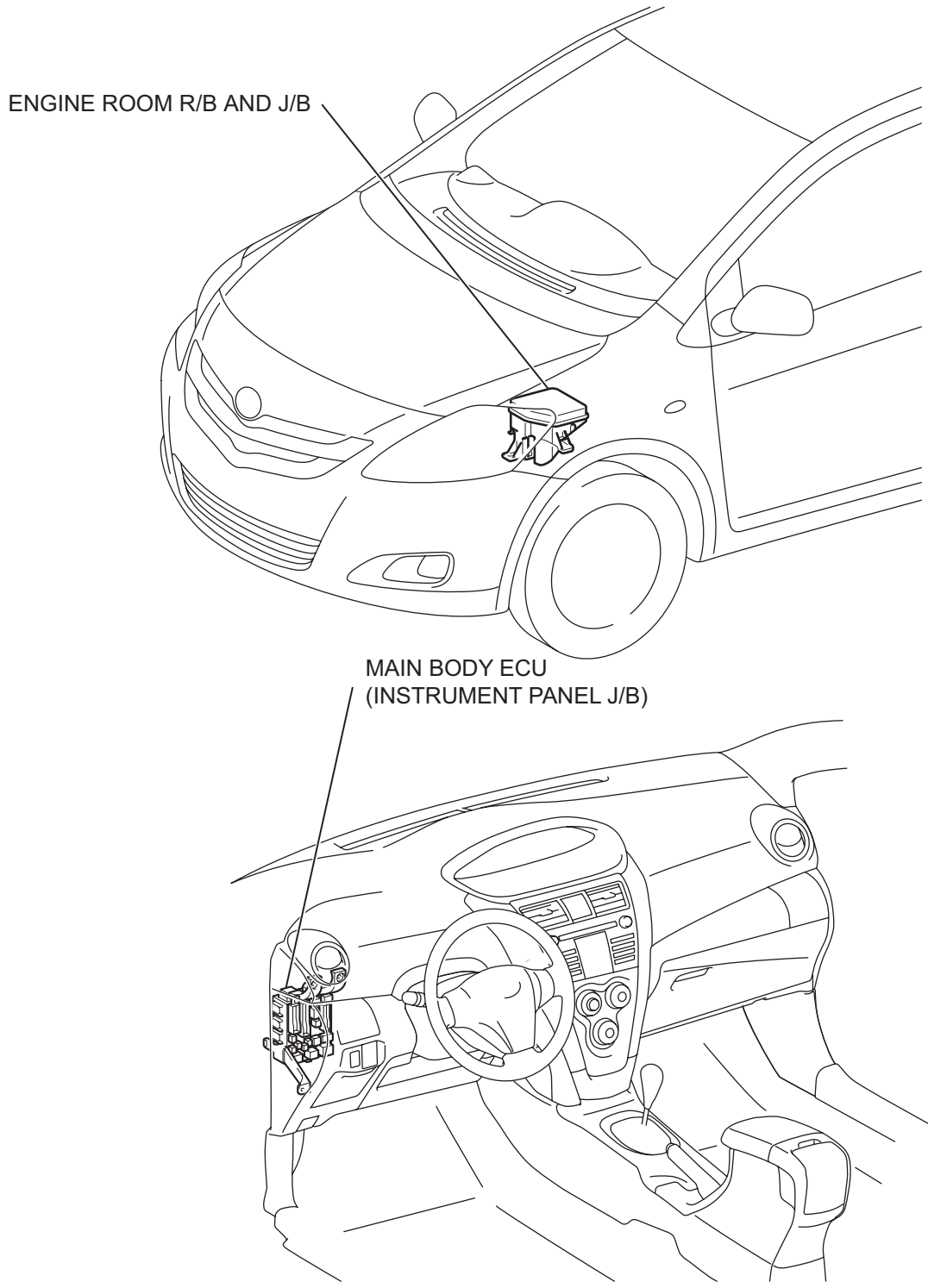

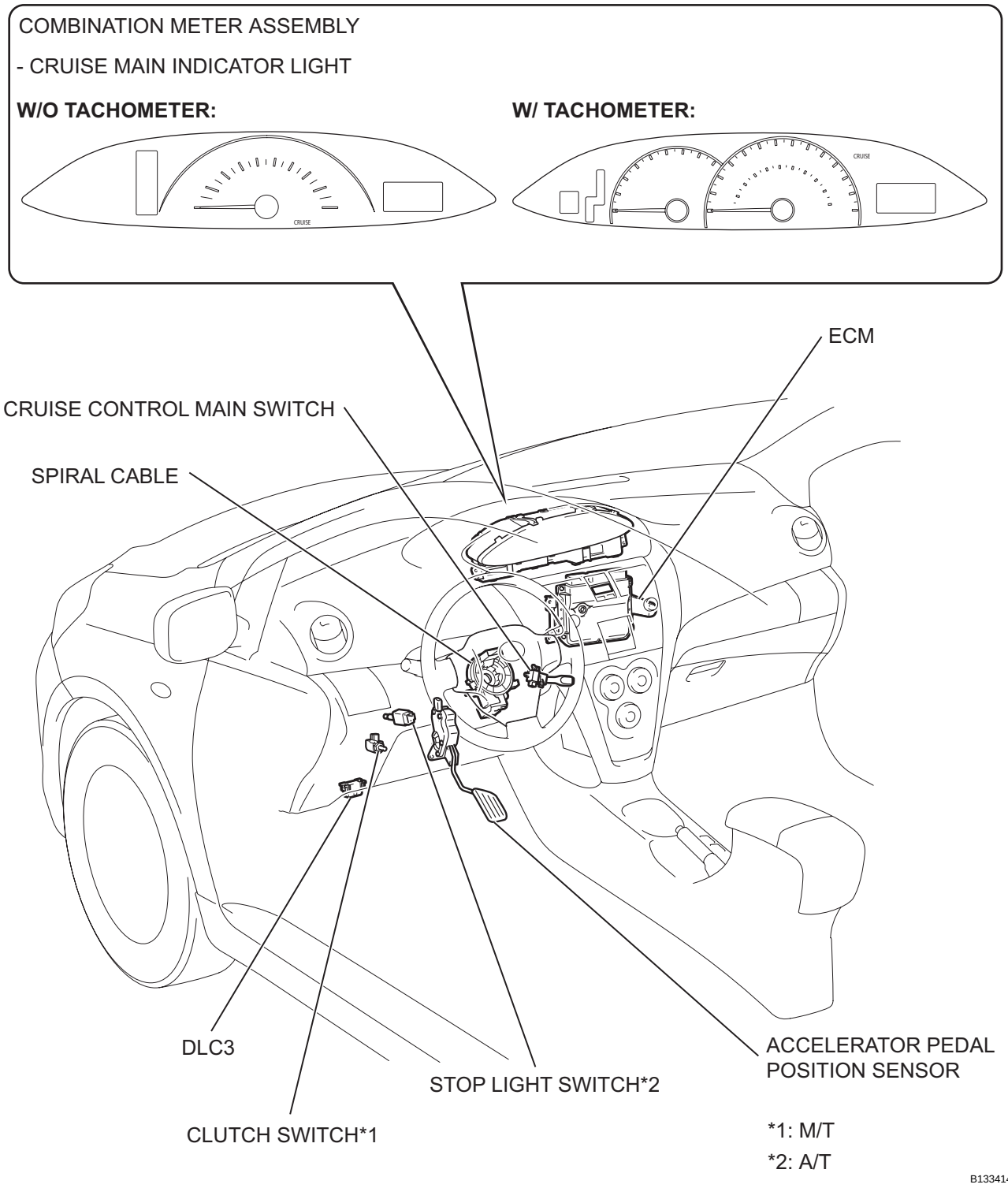
COMBINATION METER ASSEMBLY
- CRUISE MAIN INDICATOR LIGHT
W/O TACHOMETER:
W/ TACHOMETER:
CRUISE
ECM
CRUISE CONTROL MAIN SWITCH
SPIRAL CABLE
DLC3
STOP LIGHT SWITCH*2
ACCELERATOR PEDAL POSITION SENSOR
CLUTCH SWITCH*1
*1: M/T
*2: A/T
B133414E01

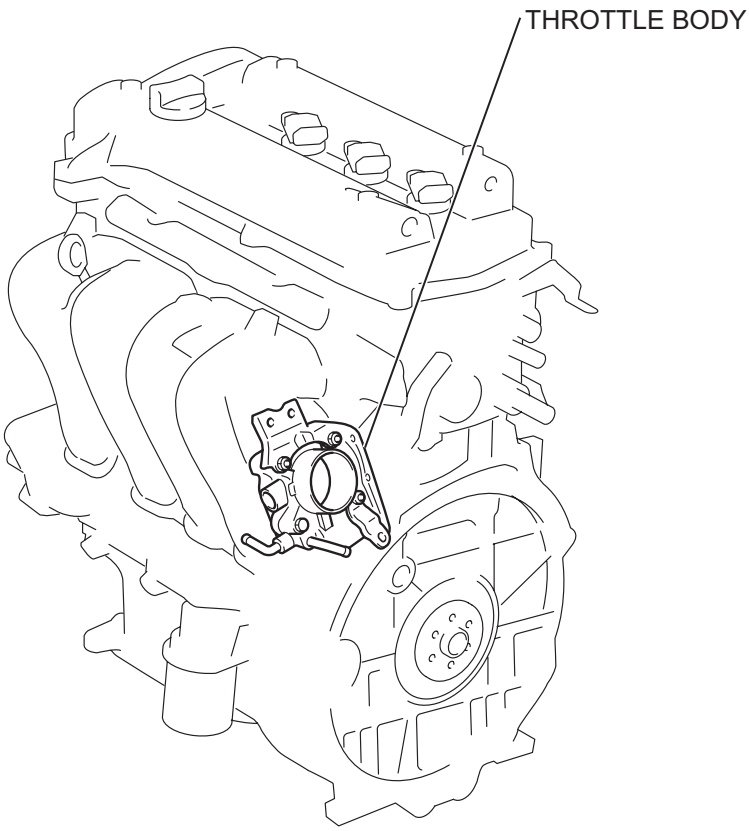

B133419E01

SYSTEM DIAGRAM

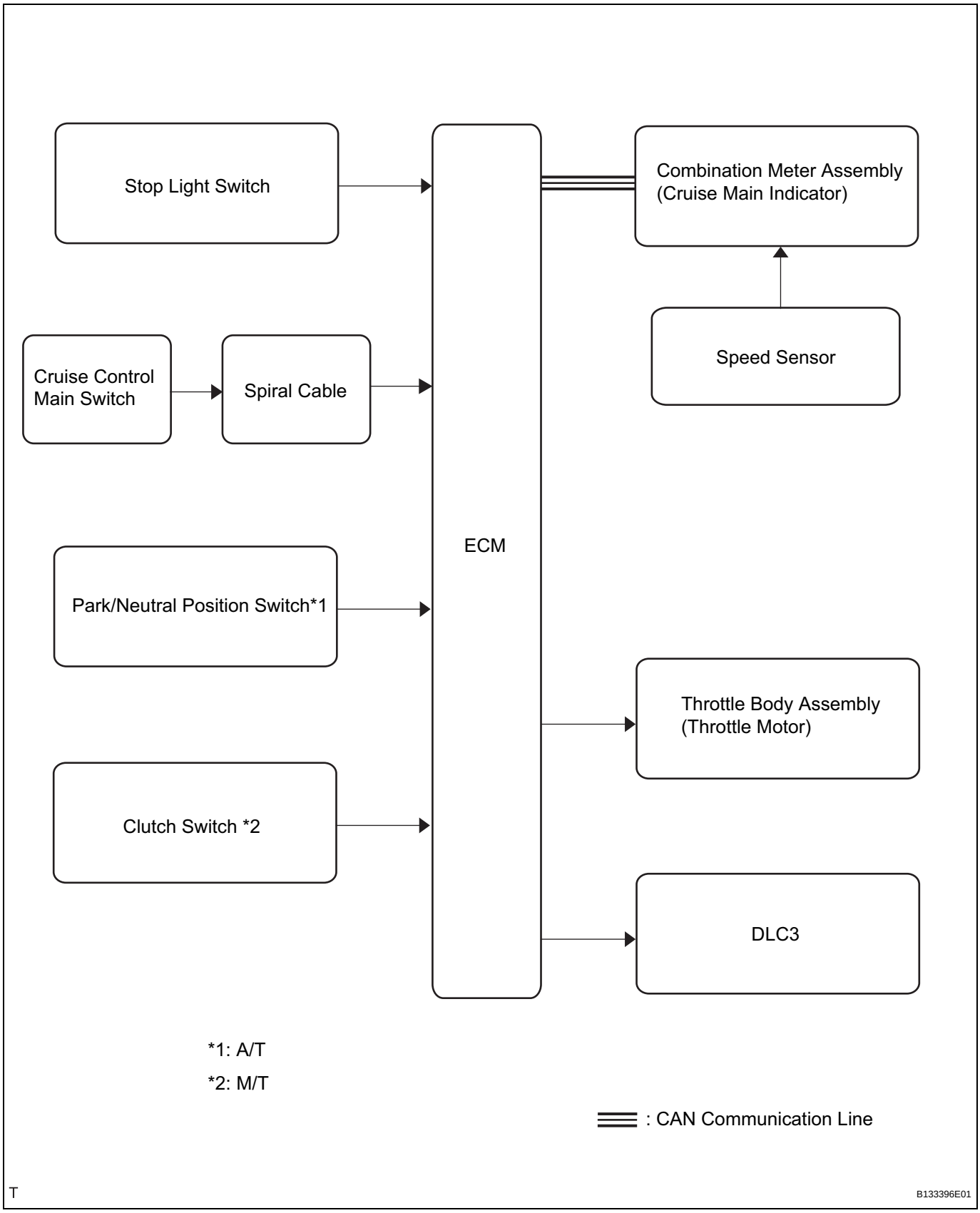

SYSTEM DESCRIPTION

1. CRUISE CONTROL SYSTEM

The cruise control system makes it possible to drive at a desired speed without using the accelerator pedal. The ECM controls the throttle opening angle based on signals from switches and sensors.

The microcomputer which controls the cruise control system is built into the ECM, and uses is the throttle position sensor and motor as the actuator.

Constant speed control gets ready when the cruise control main switch ON-OFF button is pushed (the CRUISE MAIN indicator light comes on).

By operating the cruise control main switch, the driver can control the following functions.

HINT:

- The cruise control main switch is an automatic return type switch which operates only while it is pushed in each allow direction and turns off when it is released.
- "SET" and "-", "RES" and "+", "ON" and "OFF" operations are all controlled by using the same switch.

(a) 'SET' function

When the cruise control main switch is pushed down to "-/SET", the ECM stores the set speed and compares it with the actual vehicle speed. If the actual driving speed is greater than the set speed, the ECM sends a signal to the throttle position sensor and motor to close the throttle valve. If lower, it opens the throttle valve. The cruise control operative speed range is between the low and high speed limits.

(b) '+' function

The cruise set speed increases while the cruise control main switch lever is pushed up to "+/RES". The vehicle begins to cruise at the newly set speed when the cruise control main switch lever is released.

(c) Tap-up function

When the cruise control main switch lever is tapped up to "+/RES" (approximately 0.6 seconds), the ECM increases the stored set speed by 1 mph (1.6 km/h) at a time. However, when the difference between the driving and the stored vehicle speeds is more than 3.1 mph (approximately 5 km/h), the stored vehicle speed will not change.

(d) '-' function

The cruise set speed decreases while the cruise control main switch lever is pushed down to "-/SET". The vehicle begins to cruise at the newly set speed when the cruise control main switch lever is released.

(e) Tap-down function
When the cruise control main switch lever is tapped down to "-/SET" (approximately 0.6 seconds), the ECM decreases the stored set speed by 1 mph (1.6 km/h) at a time. However, when the difference between the driving and the stored vehicle speeds is more than 3.1 mph (approximately 5 km/h), the vehicle speed, when the cruise control main switch lever is released from "-/SET", will be stored and constant speed control is maintained.

(f) Low speed limit
The lowest possible limit of the speed setting range is approximately 25 mph (40 km/h). The cruise control system cannot be set when the vehicle speed is below that low speed limit. Cruise control operation is automatically canceled when the vehicle speed decreases to below the low speed limit while the cruise control is in operation.

(g) High speed limit
The highest possible limit of the speed setting range is approximately 125 mph (200 km/h). The cruise control system cannot be set when the vehicle speed is over the high speed limit. The speed cannot be increased using "+/RES" with the cruise control main switch assembly to beyond the high speed limit.

(h) 'RES' function
If the cruise control operation was canceled under the manual cancel condition (other than by turning cruise control main switch ON-OFF button off), and if the driving speed is within the limit range, pushing the cruise control main switch to "+/RES" restores the vehicle speed stored at the time of cancellation, and maintains constant speed control. Even when cruise control is canceled automatically due to the vehicle speed decreasing below the low speed limit, cruise control can be resumed when the vehicle speed returns to over the low speed limit, since the stored vehicle speed remains in the memory.

(i) MANUAL CANCEL function
The ECM cancels the cruise control while driving under the following conditions:
- The cruise control main switch is pulled to "CANCEL".
- The brake pedal is depressed.
- The clutch pedal is depressed (M/T only).
- The cruise control main switch ON-OFF button is pushed off.
- The D position circuit in the neutral start switch is turned from ON to OFF. The gear is shifted from the D or 3rd position to any of the N, 2nd or 1st positions (A/T only).

(j) AUTO CANCEL function

(1) When any of the following malfunctions occurs, the ECM clears the set vehicle speed and deactivates the cruise control.
In this case, the power indicator continues blinking until the cruise control main switch is turned OFF and the ECM allows the cruise control to be reactivated when the main switch is next turned ON again.
- Open or short malfunctions in the stop light switch.
- Abnormalities in the vehicle speed signal.
- Malfunctions in the throttle body.

(2) When any of the following malfunctions occurs, the ECM clears the set vehicle speed and deactivates the cruise control.
In this case, the power indicator continues blinking until the cruise control main switch is turned OFF and the ECM allows the cruise control to be reactivated when the ignition switch is next turned ON again.
- Malfunctions in the stop light switch input circuit.
- Malfunctions in the cancel circuit.

(3) When the vehicle is in one of the following conditions, the ECM deactivates the cruise control (the cruise control can be reset).
- Actual vehicle speed is below the lower vehicle speed limit (the set vehicle speed is retained).
- Actual vehicle speed decreases by 10 mph (16 km/h) from the set vehicle speed (the set vehicle speed is cleared).

HOW TO PROCEED WITH TROUBLESHOOTING

HINT:

- Use the following procedures to troubleshoot the cruise control system.
- *: Use the intelligent tester.

1 VEHICLE BROUGHT TO WORKSHOP

NEXT

CC

2 PROBLEM SYMPTOM CONFIRMATION

NEXT

3 CHECK CAN COMMUNICATION SYSTEM*

(a) Check for output DTCs.
Result

Result	Proceed to
CAN DTC is not output	A
CAN DTC is output	B

HINT:
The ECM of this system is connected to the CAN communication system. Therefore, before starting troubleshooting, be sure to check that there is no trouble in the CAN communication system.

B → PROCEED TO CAN COMMUNICATION SYSTEM

A

4 DTC CHECK AND CLEAR*

Refer to the DTC CHECK / CLEAR (See page CC-15).

NEXT

5 DTC CHECK (OTHER THAN CAN SYSTEM DTC)*

Result

Result	Proceed to
DTC is not output	A
DTC is output	B

A → GO TO STEP 7

B

6	DTC CHART

Refer to the DIAGNOSTIC TROUBLE CODE CHART (See page CC-17).

NEXT

GO TO STEP 10

CC

7	PROBLEM SYMPTOM CONFIRMATION

Result

Result	Proceed to
Symptom occurs	A
Symptom does not occur	B

A → GO TO STEP 9

B

8	SYMPTOM SIMULATION

Refer to the ELECTRONIC CIRCUIT INSPECTION PROCEDURE See page IN-34).

NEXT

9	PROBLEM SYMPTOMS TABLE

Refer to the PROBLEM SYMPTOMS TABLE (See page CC-11).

NEXT

10	CIRCUIT INSPECTION

NEXT

11	TERMINALS OF ECM

Refer to TERMINALS OF ECM (See page CC-12).

NEXT

12	IDENTIFICATION OF PROBLEM

NEXT

13	REPAIR OR REPLACE

NEXT

CC

14	CONFIRMATION TEST

NEXT

END

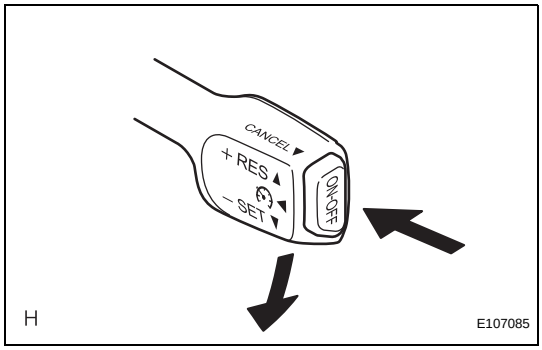

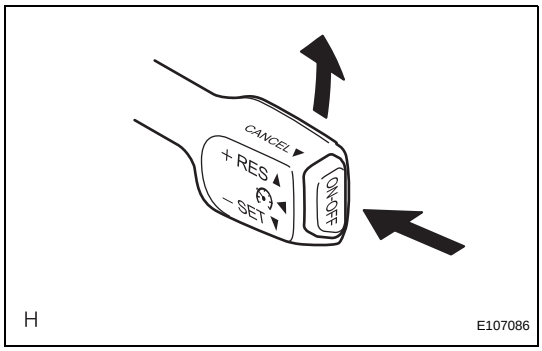

ROAD TEST

1. PROBLEM SYMPTOM CONFIRMATION

(a) Inspect the SET function.
  (1) Turn the cruise control main switch on.
  (2) Drive at the required speed between 25 mph (40 km/h) and 125 mph (200 km/h).
  (3) Push the cruise control main switch to - (COAST)/SET.
  (4) After releasing the switch, check that the vehicle cruises at the set speed.

(b) Inspect the ACCELERATION function.
  (1) Turn the cruise control main switch on.
  (2) Drive at the required speed between 25 mph (40 km/h) and 125 mph (200 km/h).
  (3) Push the cruise control main switch to - (COAST)/SET.
  (4) Check that the vehicle speed increases while the cruise control main switch is pushed to + (ACCEL)/RES (RESUME), and that the vehicle cruises at the newly set speed when the switch is released.
  (5) Push the cruise control main switch to + (ACCEL)/RES (RESUME) and then release it immediately. Check that the vehicle speed increases by approximately 1.0 mph (1.6 km/h) (tap-up control).

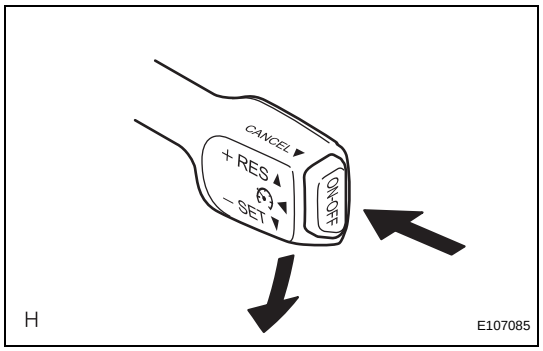

(c) Inspect the - (COAST) function.
(1) Turn the cruise control main switch on.
(2) Drive at the required speed between 25 mph (40 km/h) and 125 mph (200 km/h).
(3) Push the cruise control main switch to - (COAST)/SET.
(4) Check that the vehicle speed decreases while the cruise control main switch is pushed to - (COAST)/SET, and the vehicle cruises at the newly set speed when the switch is released.
(5) Push the cruise control main switch to - (COAST)/SET, and then release it immediately. Check that the vehicle speed decreases by approximately 1.0 mph (1.6 km/h) (tap-down control).

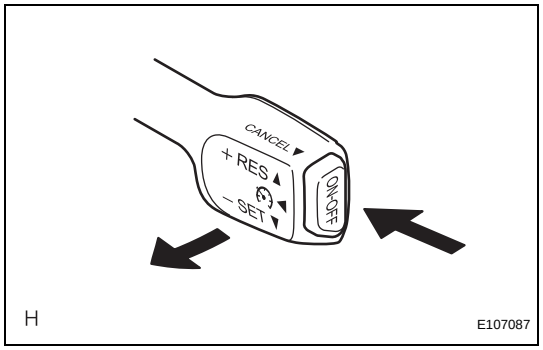

(d) Inspect the CANCEL function.
(1) Turn the cruise control main switch on.
(2) Drive at the required speed between 25 mph (40 km/h) and 125 mph (200 km/h).
(3) Push the cruise control main switch to - (COAST)/SET.
(4) When performing any one of the following, check that the cruise control system is canceled and that the normal driving mode is reset.
- Depressing the brake pedal
- Depressing the clutch pedal (M/T only)
- The shift lever is moved from the D or 3rd position to any of the N, 2nd , or L positions (A/T only)
- Turning the cruise control main switch off
- Pulling the cruise control main switch to CANCEL

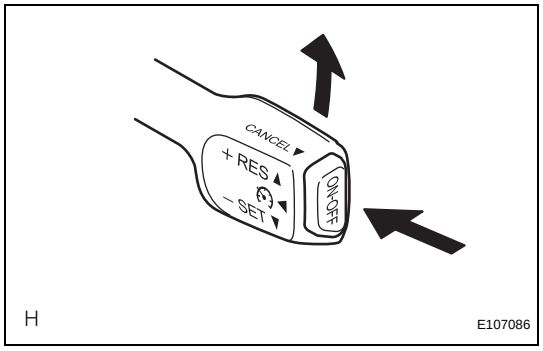

(e) Inspect the RES (RESUME) function.
(1) Turn the cruise control main switch on.
(2) Drive at the required speed between 25 mph (40 km/h) and 125 mph (200 km/h).
(3) Push the cruise control main switch to - (COAST)/SET.
(4) Cancel the cruise control system by performing any of the above operations (other than turning the main switch off).
(5) After pushing the cruise control main switch to + (ACCEL)/RES (RESUME) at a driving speed of more than 25 mph (40 km/h), check that the vehicle resumes the speed set prior to the cancellation.

CC

PROBLEM SYMPTOMS TABLE

HINT:
Use the table below to help determine the causes of the problem symptom. The potential cases of the symptoms are listed in order of probability in the "Suspected Area" column of the table. Check each symptom by checking the suspected areas in the order they are listed. Replace parts as necessary.

Cruise Control System

Symptom	Suspected area	See page
Main switch cannot be turned ON (Indicator light on the combination meter does not come on)	Cruise control switch circuit	CC-26
	CRUISE MAIN indicator light circuit	CC-31
	ECM	-
Desired speed cannot be set (Indicator light on the combination meter comes on when the main switch is turned ON, but goes off when operating the "SET" function)	Cruise control switch circuit	CC-26
	ECM	-
Desired speed cannot be set (Indicator light on the combination comes on when the main switch is turned ON and it remains ON, while operating the "SET" function)	Cruise control switch circuit	CC-26
	Stop light switch circuit	CC-19
	Clutch switch circuit (M/T)	CC-23
	Park/neutral position switch circuit (A/T)	AX-6
	Combination meter system	ME-8
	Vehicle speed sensor circuit	CC-18
	ECM	-
While cruise control driving, the set speed is canceled (Indicator light remains ON)	Cruise control switch circuit	CC-26
	Vehicle speed sensor circuit	CC-18
	Stop light switch circuit	CC-19
	Combination meter system	ME-8
	Clutch switch circuit (M/T)	CC-23
	Park/neutral position switch circuit (A/T)	AX-6
	ECM	-
Hunting occurs (Speed is not constant)	Vehicle speed sensor circuit	CC-18
	ECM	-
Speed setting cannot be canceled ("CANCEL" function failure only)	Cruise control switch circuit	CC-26
	ECM	-
DTC is not output, or is output when should not be	DLC3 circuit	CC-32
	ECM	-
Cruise control cannot be canceled when vehicle speed decreases to below low speed limit	Vehicle speed sensor circuit	CC-18
	ECM	-
Cruise control cannot be canceled when brake pedal is depressed	Stop light switch circuit	CC-19
	ECM	-
Cruise control cannot be canceled when shift lever is operated (A/T)	Park/neutral position switch circuit (A/T)	AX-6
	ECM	-
Cruise control cannot be canceled when clutch pedal is depressed (M/T)	Clutch switch circuit (M/T)	CC-23
	ECM	-

TERMINALS OF ECM

1. CHECK ECM

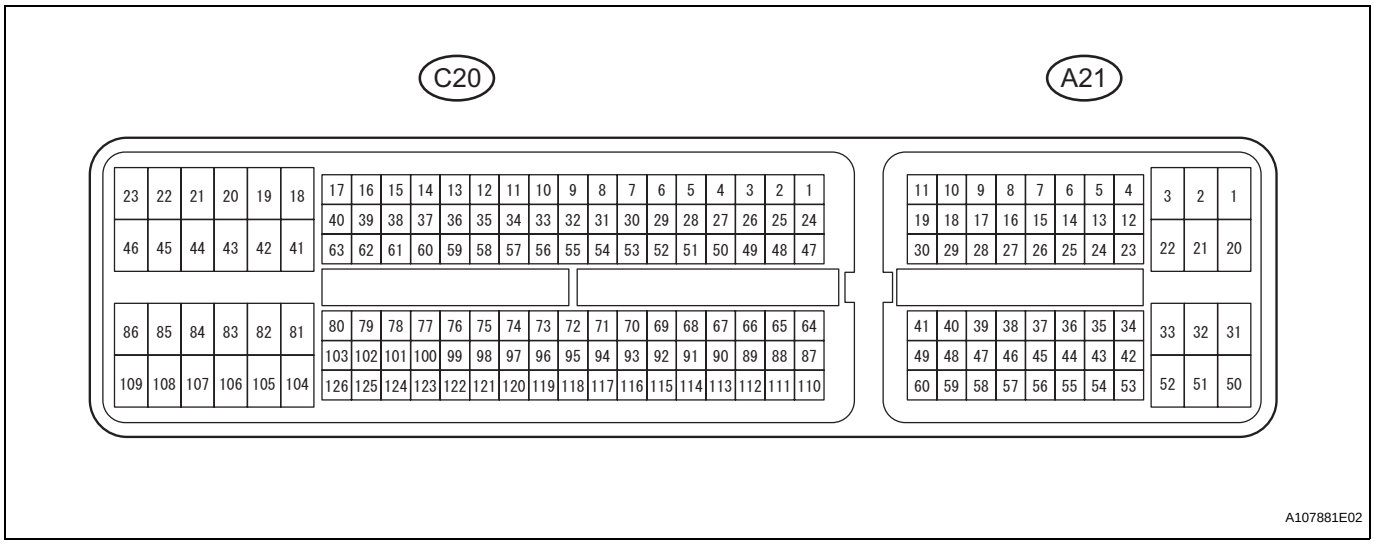

(a) Measure the voltages of the wire harness side connectors.

Standard voltage:

Symbols (Terminals No.)	Wiring Color	Terminal Description	Condition	Specified Condition
TC (A21-27) - E1 (C20-104)	P - W	DTC output signal	Ignition switch ON	10 to 14 V
TC (A21-27) - E1 (C20-104)	P - W	DTC output signal	Ignition switch ON Connect terminals TC and CG of DLC3	Below 2 V
ST1- (A21-35) - E1 (C20-104)	Y - W	Cruise cancel input signal	Ignition switch ON Depress brake pedal	Below 1 V
ST1- (A21-35) - E1 (C20-104)	Y - W	Cruise cancel input signal	Ignition switch ON Release brake pedal	10 to 14 V
STP (A21-36) - E1 (C20-104)	G - W	Stop light switch input signal	Ignition switch ON Depress brake pedal	10 to 14 V
STP (A21-36) - E1 (C20-104)	G - W	Stop light switch input signal	Ignition switch ON Release brake pedal	Below 1 V
CCS (A21-40) - E1 (C20-104)	L - W	Cruise control main switch output signal	Ignition switch ON	10 to 14 V
CCS (A21-40) - E1 (C20-104)	L - W	Cruise control main switch output signal	Ignition switch ON CANCEL switch held ON	6.6 to 10.1 V
CCS (A21-40) - E1 (C20-104)	L - W	Cruise control main switch output signal	Ignition switch ON -/SET switch held ON	4.5 to 7.1 V
CCS (A21-40) - E1 (C20-104)	L - W	Cruise control main switch output signal	Ignition switch ON +/RES switch held ON	2.3 to 4.5 V
CCS (A21-40) - E1 (C20-104)	L - W	Cruise control main switch output signal	Ignition switch ON MAIN switch held ON	Below 1 V
E1 (C20-104) - Body ground	W - Body ground	Ground	Always	Below 1 V
D (C20-56) - E1 (C20-104)	L - W	Clutch switch input signal	Ignition switch ON Depress clutch pedal	Below 1 V
D (C20-56) - E1 (C20-104)	L - W	Clutch switch input signal	Ignition switch ON Release clutch pedal	10 to 14 V
CANH (A21-41) - E1 (C20-104)	L - W	CAN communication line	Ignition switch ON	Pulse generation (see waveform 1)
CANL (A21-49) - E1 (C20-104)	W - W	CAN communication line	Ignition switch ON	Pulse generation (see waveform 2)

CC

If the result is not as specified, there may be a malfunction on the wire harness side.

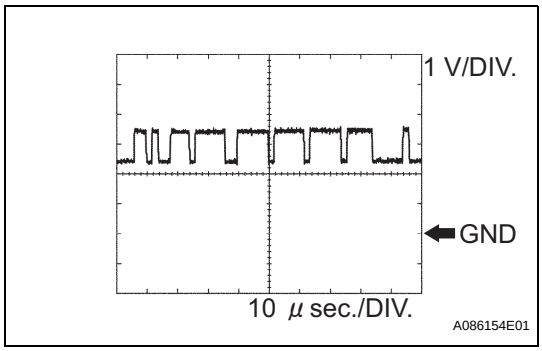

2. WAVEFORM 1(Reference)
CAN communication signal

ECM Terminal Names	Between CANH and E1
Tester Ranges	1 V/DIV, 10 μs/DIV
Conditions	Engine stops and ignition switch ON

HINT:
The waveform varies depending on the CAN communication signal.

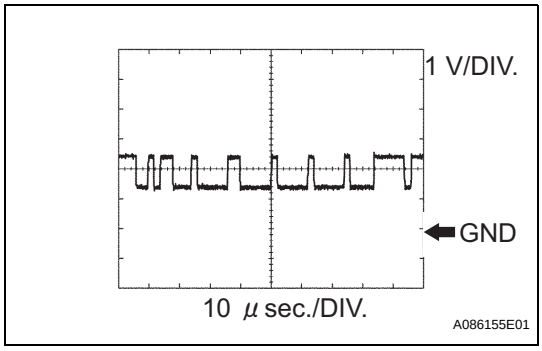

3. WAVEFORM 2(Reference)
CAN communication signal

ECM Terminal Names	Between CANL and E1
Tester Ranges	1 V/DIV, 10 μs/DIV
Conditions	Engine stops and ignition switch ON

HINT:
The waveform varies depending on the CAN communication signal.

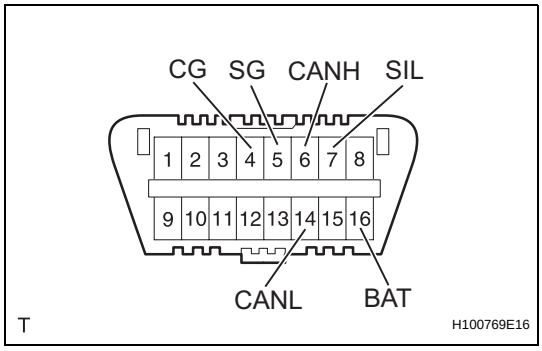

DIAGNOSIS SYSTEM

1. CHECK DLC3

(a) The ECU uses ISO 15765-4 for communication. The terminal arrangement of the DLC3 complies with SAE J1962 and matches the ISO 15765-4 format.

Symbols (Terminal No.)	Terminal Description	Condition	Specified Condition
SIL (7) - SG (5)	Bus " +" line	During transmission	Pulse generation
CG (4) - Body ground	Chassis ground	Always	Below 1 Ω
SG (5) - Body ground	Signal ground	Always	Below 1 Ω
BAT (16) - Body ground	Battery positive	Always	11 to 14 V
CANH (6) - CANL (14)	CAN bus line	Ignition switch OFF*	54 to 69 Ω
CANH (6) - CG (4)	HIGH-level CAN bus line	Ignition switch OFF*	200 Ω or higher
CANL (14) - CG (4)	LOW-level CAN bus line	Ignition switch OFF*	200 Ω or higher
CANH (6) - BAT (16)	HIGH-level CAN bus line	Ignition switch OFF*	6 kΩ or higher
CANL (14) - BAT (16)	LOW-level CAN bus line	Ignition switch OFF*	6 kΩ or higher

NOTICE:
***: Before measuring the resistance, leave the vehicle as is for at least 1 minute and do not operate the ignition switch, any other switches or the doors.**
If the result is not as specified, the DLC3 may have a malfunction. Repair or replace the harness and connector.

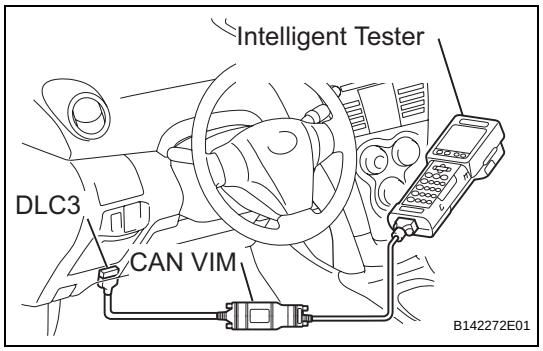

HINT:
Connect the cable of the intelligent tester to the CAN VIM, connect the CAN VIM to the DLC3, turn the ignition switch ON and attempt to use the tester. If the display indicates that a communication error has occurred, there is a problem either with the vehicle or with the tester.

- If communication is normal when the tester is connected to another vehicle, inspect the DLC3 of the original vehicle.
- If communication is still not possible when the tester is connected to another vehicle, the problem is probably in the tester itself. Consult the Service Department listed in the tester's instruction manual.

2. CHECK INDICATOR

(a) Turn the ignition switch to the ON position.

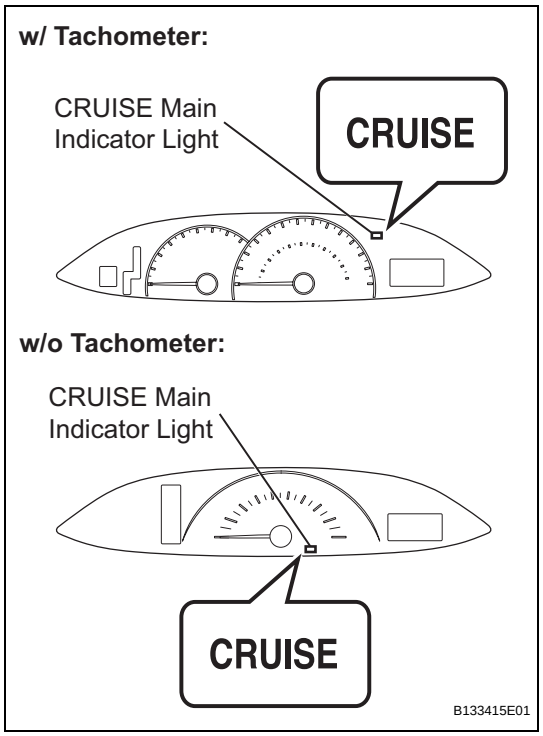

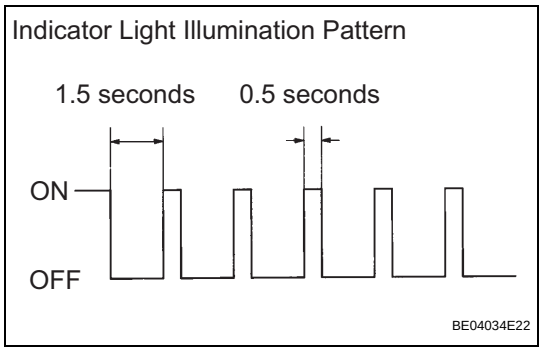

(b) Check that the CRUISE MAIN indicator light comes on when the cruise control main switch ON-OFF button is pushed on, and that the indicator light goes off when the ON-OFF button is pushed off.
HINT:
If there is a problem with the ON/OFF illumination of the indicator light, inspect the cruise main indicator light circuit (See page CC-31).
HINT:
If a malfunction occurs in the vehicle speed sensor, stop light switch assembly or other related parts during cruise control driving, the ECM actuates AUTO CANCEL of the cruise control. Then the CRUISE MAIN indicator light starts to blink, to inform the driver of the malfunction. At the same time, data of the malfunction is stored as a diagnostic trouble code (DTC).

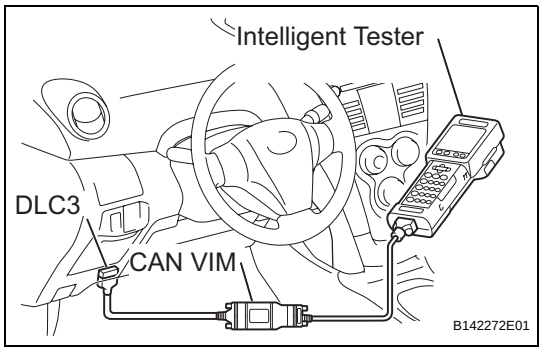

DTC CHECK / CLEAR

1. DTC CHECK

(a) Connect the intelligent tester with CAN VIM to the DLC3.
(b) Turn the ignition switch ON.
(c) Read the DTCs by following the prompts on the tester's screen.
HINT:
Refer to the intelligent tester operator's manual for further details.

2. DTC CLEAR

(a) Connect the intelligent tester with CAN VIM to the DLC3.
(b) Turn the ignition switch ON.
(c) Erase the DTCs by following the prompts on the tester's screen.
HINT:
Refer to the intelligent tester operator's manual for further details.

FAIL-SAFE CHART

HINT:
If the following conditions are detected while the cruise control is in operation, the system clears the stored vehicle speed in the ECM and cancels the cruise control operation.

Vehicle Condition	Auto Cancel Condition	Re-operation Condition
CRUISE main indicator light blinks	• There is open or short in stop light switch circuit • There is problem with vehicle speed signal • There is problem with throttle position sensor and motor	Turn cruise control main switch on again
CRUISE main indicator light blinks	• There is problem with input circuit of stop light switch circuit • There is problem with cancel circuit	• Turn cruise control main switch on again • Turn engine switch off then on again
CRUISE main indicator light remains on (Cruise control is canceled)	• Vehicle speed is lower than low speed limit (approximately 25 km/h (40 mph)) while running with cruise control on	Push cruise control main switch to + (ACCEL)/RES (RESUME)
	• Vehicle speed is lower than stored speed by approximately 10 km/h (16 mph) or more	Push cruise control main switch to - (COAST)/ SET

DATA LIST / ACTIVE TEST

1. READ DATA LIST

(a) While the intelligent tester is connected to the DLC3 with the ignition switch in the ON position, the CRUISE CONTROL data list can be displayed. Follow the prompts on the tester screen to access the data list.

ECM (Cruise Control System)

Item	Measurement Item / Display (Range)	Normal Condition	Diagnostic Note
VEHICLE SPD	Vehicle speed / min.: 0 km/h (0 mph) max.: 255 km/h (158 mph)	Actual vehicle speed	-
MEMORY SPD	Vehicle speed / min.: 0 km/h (0 mph) max.: 255 km/h (158 mph)	Actual vehicle speed stored in memory	-
THROTTLE	Throttle operating angle / min.: 0 deg. max.: 125 deg.	Actual demanded throttle angle	-
CCS OPER STATUS	Cruise control / ON or OFF	ON: Cruise control is SET OFF: Cruise control is UNSET	-
CRUISE CONTROL	Cruise control / ON or OFF	ON: Cruise control is SET OFF: Cruise control is UNSET	-
CCS INDICATOR M	Switch indicator (Main CPU) / ON or OFF	ON: Switch indicator (Main CPU) is SET OFF: Switch indicator (Main CPU) is UNSET	-
CCS INDICATOR S	Switch indicator (Sub CPU) / ON or OFF	ON: Switch indicator (Sub CPU) is SET OFF: Switch indicator (Sub CPU) is UNSET	-
CCS READY M	Switch ready (Main CPU) / ON or OFF	ON: Switch ready (Main CPU) is SET OFF: Switch ready (Main CPU) is UNSET	-
CCS READY S	Switch ready (Sub CPU) / ON or OFF	ON: Switch ready (Sub CPU) is SET OFF: Switch ready (Sub CPU) is UNSET	-
MAIN SW (MAIN)	Main switch (Main CPU) / ON or OFF	ON: Main switch (Main CPU) is SET OFF: Main switch (Main CPU) is UNSET	-
MAIN SW (SUB)	Main switch (Sub CPU) / ON or OFF	ON: Main switch (Sub CPU) is SET OFF: Main switch (Sub CPU) is UNSET	-
CANCEL SW	CANCEL switch / ON or OFF	ON: CANCEL switch is SET OFF: CANCEL switch is UNSET	-
SET/COAST SW	- / SET switch / ON or OFF	ON: - / SET switch is SET OFF: - / SET switch is UNSET	-
RES/ACC SW	+ / RES switch / ON or OFF	ON: + / RES switch is SET OFF: + / RES switch is UNSET	-
STP LIGHT SW M	Stop light switch signal (Main CPU) / ON or OFF	ON: Brake pedal depressed OFF: Brake pedal released	-
STP LIGHT SW S1	Stop light switch signal (Sub CPU) / ON or OFF	ON: Brake pedal depressed OFF: Brake pedal released	-
STP LIGHT SW S2	Stop light switch signal (Sub CPU) / ON or OFF	ON: Brake pedal depressed OFF: Brake pedal released	-

Item	Measurement Item / Display (Range)	Normal Condition	Diagnostic Note
SHIFT D POS	Shift D position / ON or OFF (A/T)	ON: Shift is D or 3 position OFF: Shift is except D or 3 position	-
	Clutch switch/ ON or OFF (M/T)	ON: Clutch pedal released OFF: Clutch pedal depressed	-

DIAGNOSTIC TROUBLE CODE CHART

If a trouble code is indicated while checking DTCs, inspect the circuit listed for that code in the table below, and proceed to the applicable page.

Cruise Control System

DTC No.	Detection Item	Trouble Area	See page
P0500	Vehicle Speed Sensor Circuit Malfunction	- Combination meter assembly - Vehicle speed sensor - Vehicle speed sensor signal circuit - ECM	CC-18
P0503	Vehicle Speed Sensor Circuit Malfunction	- Combination meter assembly - Veicle speed sensor - Vehicle speed sensor signal circuit - ECM	CC-18
P0571	Stop Light Switch Circuit Malfunction	- Stop light switch assembly - Stop light switch assembly circuit - ECM	CC-19
P0607	Input Signal Circuit Malfunction	- ECM	CC-22

DTC	P0500	Vehicle Speed Sensor Circuit Malfunction

DTC	P0503	Vehicle Speed Sensor Circuit Malfunction

DESCRIPTION

Refer to DTC P0500 (see page ES-213).

DTC No.	DTC Detection Conditions	Trouble Areas
P0500	This trouble code is output when the vehicle speed signal from the vehicle speed sensor is cut for 0.14 seconds or more while the cruise control is in operation.	• Combination meter assembly • Vehicle speed sensor • Vehicle speed sensor signal circuit • ECM
P0503	Momentary interruption and noise are detected when a rapid change of vehicle speed occurs while the cruise control is in operation.	• Combination meter assembly • Vehicle speed sensor • Vehicle speed sensor signal circuit • ECM

CC

WIRING DIAGRAM

Refer to DTC P0500 (see page ES-215).

INSPECTION PROCEDURE

Refer to DTC P0500 (see page ES-215).

DTC	P0571	Stop Light Switch Circuit Malfunction

DESCRIPTION

The cruise control system cancels cruising when the ECM detects that the brake pedal is depressed during cruise control driving. The stop light switch assembly sends signals to the ECM according to the brake pedal conditions. When the brake pedal is released, terminal ST1- is the positive (+) battery voltage, and terminal STP voltage is below 1 V. While the brake pedal is depressed, terminal ST1- is below 1 V, and STP is positive (+) battery voltage. During braking, the ECM cancels cruise control as one of the manual cancel functions.

The ECM outputs this trouble code when the voltage of terminals ST1- and STP are both below 1 V for 0.5 seconds or more at the same time.

The fail-safe function operates to enable normal driving even if there is a malfunction in the stop light signal circuit.

DTC No.	DTC Detected Conditions	Trouble Areas
P0571	ECM detects a malfunction of the stop light switch circuit under both of the following conditions. • Voltage of terminal STP is below 1 V for 0.5 seconds or more. • Voltage of terminal ST1- is below 1 V for 0.5 seconds or more.	• Stop light switch assembly • Stop light switch assembly circuit • ECM

WIRING DIAGRAM

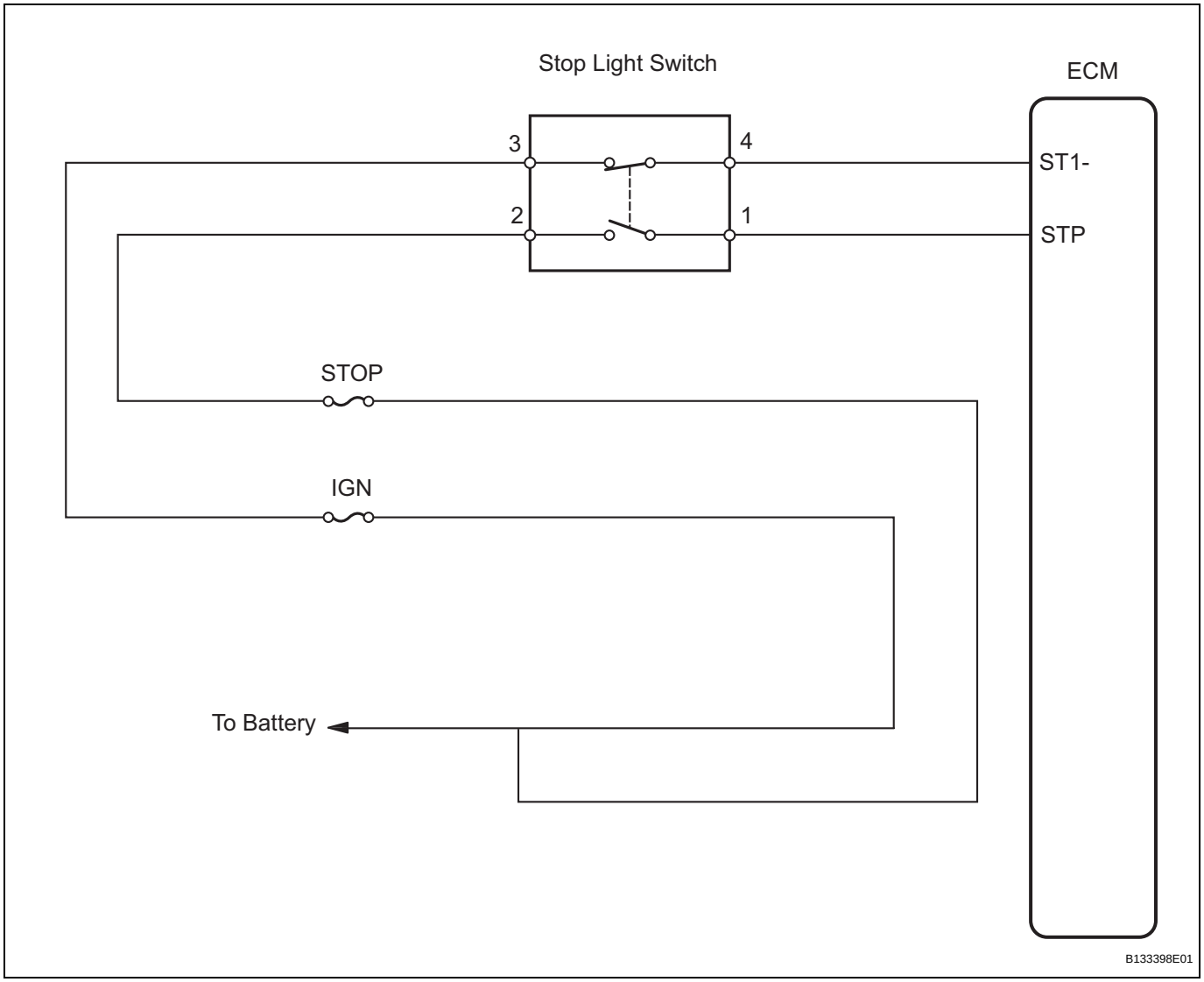

INSPECTION PROCEDURE

1	INSPECT STOP LIGHT SWITCH OPERATION

(a) Check that the stop lights come on while the brake pedal is depressed, and go off when the brake pedal is released.

OK

Brake Pedal Condition	Stop Light Condition
Depressed	ON
Released	OFF

NG → **INSPECT STOP LIGHT SWITCH CIRCUIT**

OK

2 INSPECT STOP LIGHT SWITCH ASSEMBLY

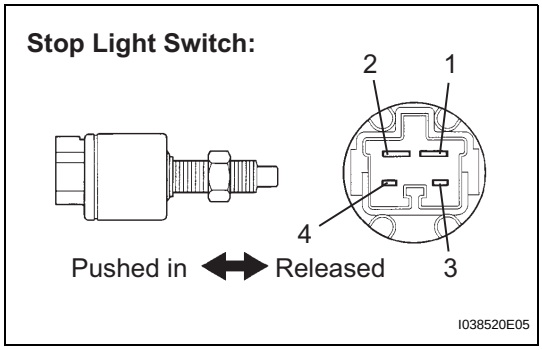

(a) Disconnect the stop light switch assembly connector.
(b) Measure the resistance.

Standard resistance

Tester Connection	Switch Condition	Stop Light Condition
1 - 2	Switch pin free (Brake pedal depressed)	Below 1Ω
3 - 4	Switch pin free (Brake pedal depressed)	10 kΩ or higher
1 - 2	Switch pin pushed in (Brake pedal released)	10 kΩ or higher
3 - 4	Switch pin pushed in (Brake pedal released)	Below 1Ω

(c) Reconnect the stop light switch assembly connector.

NG → **REPLACE STOP LIGHT SWITCH ASSEMBLY**

OK

3 INSPECT ECM (STP SIGNAL)

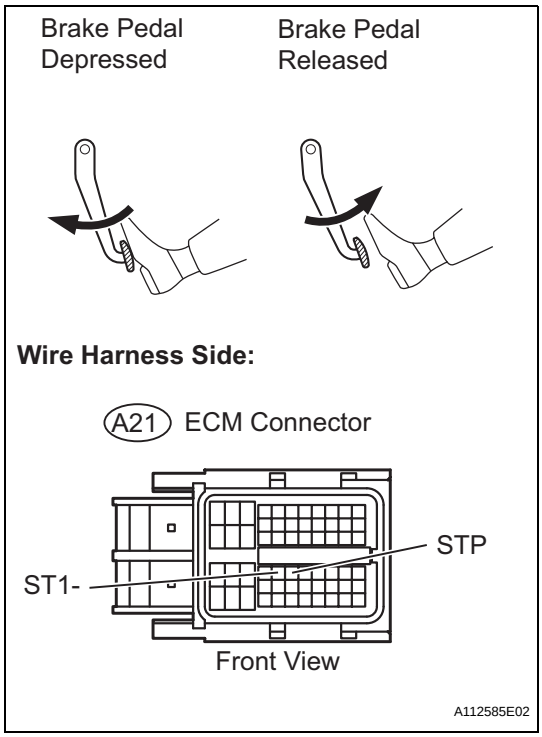

(a) Disconnect the A21 ECM connector.
(b) Turn the ignition switch to the ON position.
(c) Measure the voltage.

Standard voltage

Tester Connection	Brake Pedal Condition	Specified Condition
STP (A21-36) - Body ground	Depressed	10 to 14 V
STP (A21-36) - Body ground	Released	Below 1V
ST1- (A21-35) - Body ground	Depressed	Below 1V
ST1- (A21-35) - Body ground	Released	10 to 14 V

(d) Reconnect the ECM connector.

NG → **REPAIR OR REPLACE HARNESS OR CONNECTOR (STOP LIGHT SWITCH ASSEMBLY - ECM)**

OK

REPLACE ECM

DTC	P0607	Input Signal Circuit Malfunction

DESCRIPTION

This DTC indicates the internal abnormalities of the ECM.

DTC No.	DTC Detection condition	Trouble Area
P0607	The ECM has a supervisory CPU and a control ECU inside. • When each input STP signal is different for 0.15 seconds or more, this trouble code is output. • This trouble code is output after 0.4 seconds has passed from the time the cruise cancel input signal (STP input) is input into the ECM.	ECM

HINT:
When a trouble code is detected, fail-safe continues until the ignition switch is turned off.

INSPECTION PROCEDURE

1	REPLACE ECM

NEXT

END

Clutch Switch Circuit

DESCRIPTION

Clutch switch circuit inspection is necessary for M/T vehicles.
When the clutch pedal is released, the ECM receives the positive (+) battery voltage through the ECU-IG fuse and ignition switch. While the clutch pedal is depressed, the clutch switch assembly sends a signal to terminal D of the ECM. The ECM cancels cruise control when terminal D receives the signal (voltage of below 1 V).

WIRING DIAGRAM

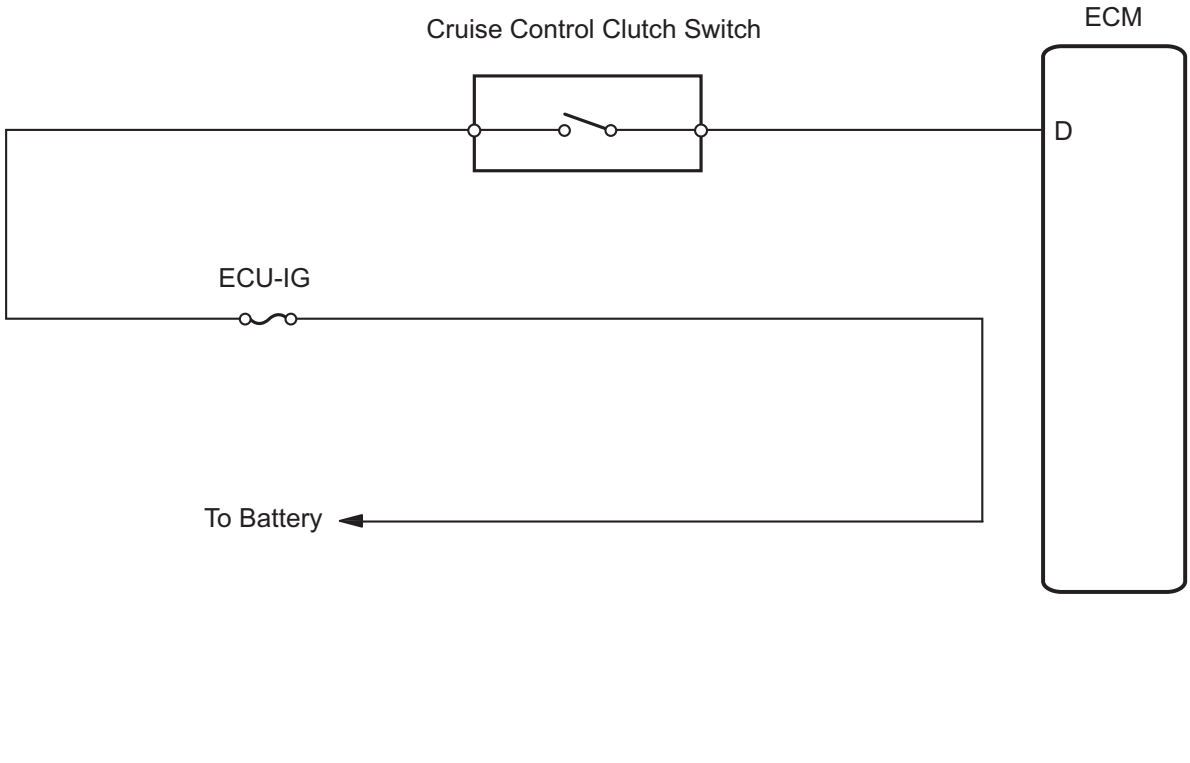

INSPECTION PROCEDURE

1 CHECK HARNESS AND CONNECTOR (ECM - BATTERY)

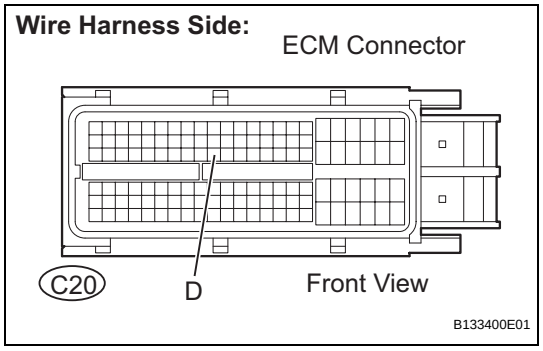

(a) Disconnect the C20 ECM connector.
(b) Turn the ignition switch to the ON position.
(c) Measure the voltage.

Standard voltage

Tester Connection	Clutch Pedal Condition	Specified Condition
D (C20-56) - Body ground	Depressed	Below 1 V
D (C20-56) - Body ground	Released	10 to 14 V

(d) Reconnect the ECM connector.

OK → **PROCEED TO NEXT CIRCUIT INSPECTION SHOWN IN PROBLEM SYMPTOMS TABLE**

NG

2 INSPECT CLUTCH SWITCH ASSEMBLY

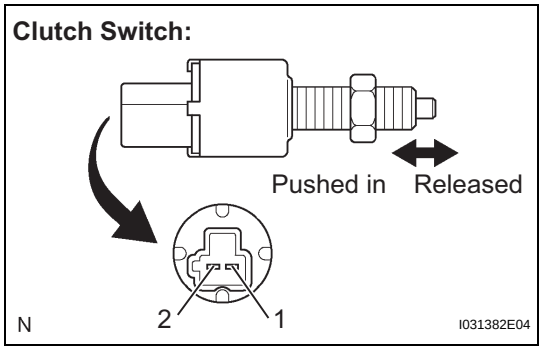

(a) Disconnect the clutch switch connector.
(b) Measure the resistance.

Standard resistance

Tester Connection	Clutch Pedal Condition	Specified Condition
1 - 2	Switch pin free (Clutch pedal depressed)	10 kΩ or higher
1 - 2	Switch pin pushed in (Clutch pedal released)	Below 1 Ω

(c) Reconnect the clutch switch connector.

NG → **REPLACE CLUTCH SWITCH ASSEMBLY**

OK

CC

3	CHECK HARNESS AND CONNECTOR (CLUTCH SWITCH ASSEMBLY - ECM)

Wire Harness Side:

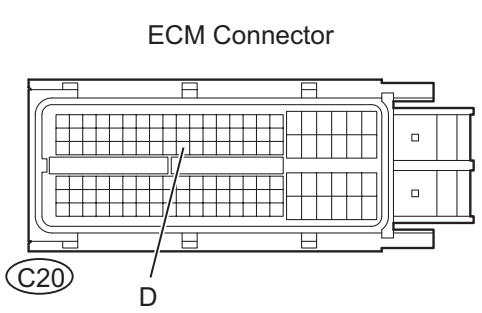

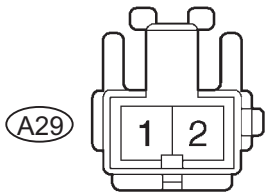

B133401E01

(a) Disconnect the C20 ECM connector.
(b) Disconnect the A29 clutch switch connector.
(c) Measure the resistance.

Standard resistance

Tester Connection	Specified Condition
A29-2 - D (C20-56)	Below 1 Ω
A29-2 - D (C20-56) - Body ground	10 kΩ or higher

(d) Reconnect the clutch switch connector.
(e) Reconnect the ECM connector.

NG → **REPAIR OR REPLACE HARNESS OR CONNECTOR (CLUTCH SWITCH ASSEMBLY - ECM)**

OK

REPAIR OR REPLACE HARNESS OR CONNECTOR (CLUTCH SWITCH ASSEMBLY - BATTERY)

Cruise Control Switch Circuit

DESCRIPTION

The cruise control main switch operates 7 functions: SET, - (COAST), TAP-DOWN, RES (RESUME), + (ACCEL), TAP-UP, and CANCEL. The SET, TAP-DOWN, and - (COAST) functions, and the RES (RESUME), TAP-UP, and + (ACCEL) functions are operated with the same switch. The cruise control main switch is an automatic return type switch which turns on only while operated in the directions of the arrows and turns off when it is released. The internal contact point of the cruise control main switch is turned on with the switch operation. Then the ECM reads the voltage value that has been changed by the switch operation to control SET, - (COAST), RES (RESUME), + (ACCEL), and CANCEL.

WIRING DIAGRAM

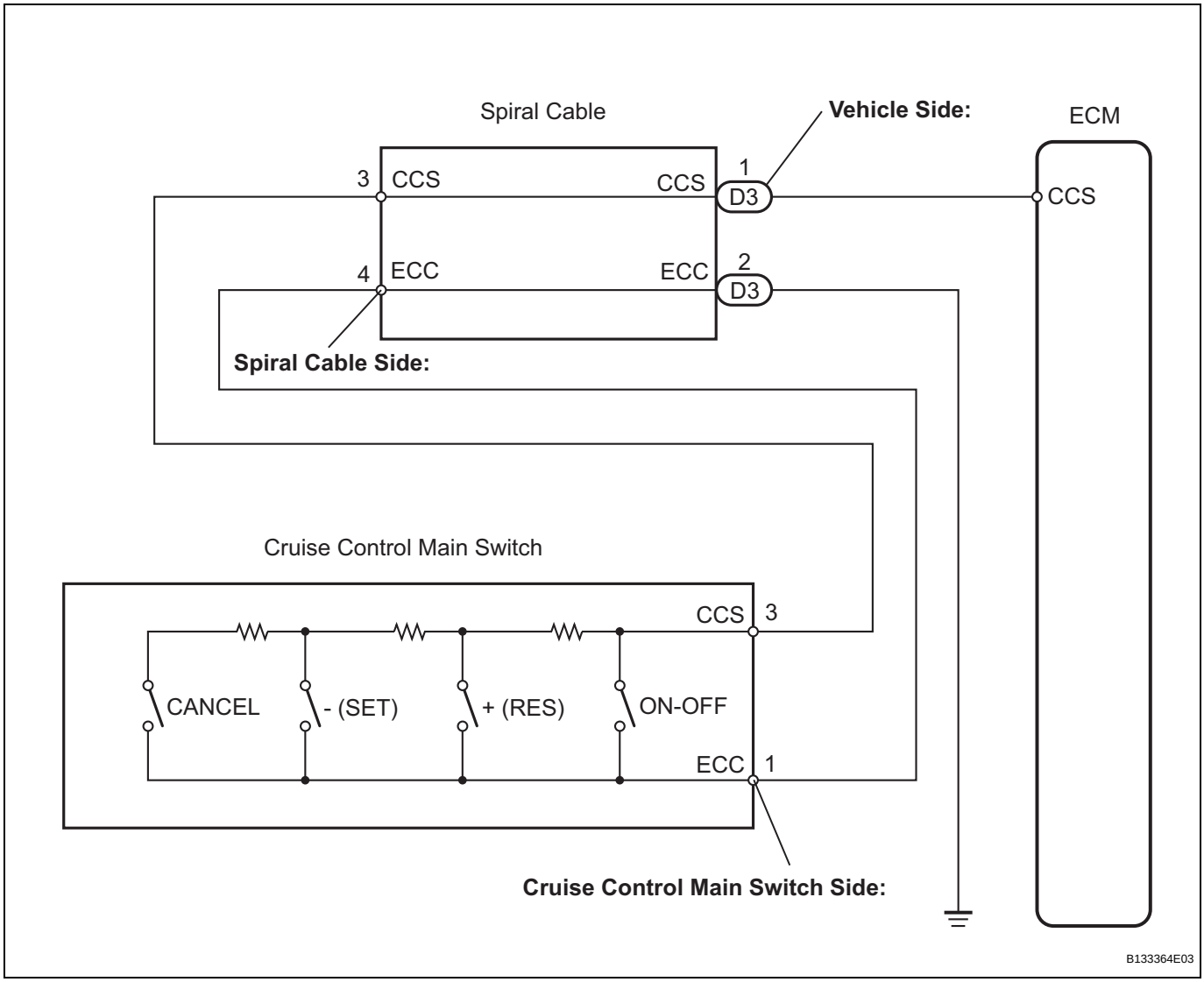

INSPECTION PROCEDURE

1	READ VALUE OF INTELLIGENT TESTER

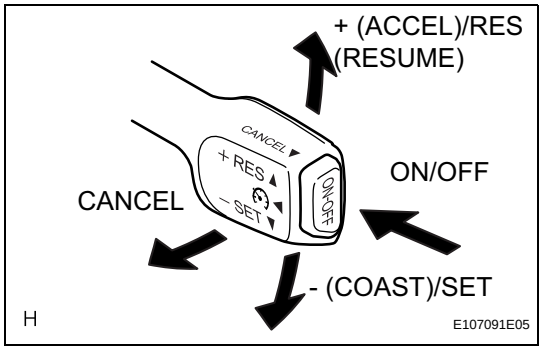

(a) Connect the intelligent tester to the DLC3.
(b) Turn the ignition switch ON and turn the intelligent tester main switch on.
(c) Check the DATA LIST for proper functioning of the cruise control main switch.

CC

ECM (Cruise Control System)

Item	Measurement Item / Display (Range)	Normal Condition	Diagnostic Note
MAIN SW (MAIN)	Main switch (Main CPU) / ON or OFF	ON: Main switch (Main CPU) is ON OFF: Main switch (Main CPU) is OFF	-
MAIN SW (SUB)	Main switch (Sub CPU) / ON or OFF	ON: Main switch (Sub CPU) is ON OFF: Main switch (Sub CPU) is OFF	-
CANCEL SW	CANCEL switch / ON or OFF	ON: CANCEL switch is ON OFF: CANCEL switch is OFF	-
SET/COAST SW	- / SET switch / ON or OFF	ON: - / SET switch is ON OFF: - / SET switch is OFF	-
RES/ACC SW	+ / RES switch / ON or OFF	ON: + / RES switch is ON OFF: + / RES switch is OFF	-

OK:
When the cruise control main switch is operated, the display changes as shown above.

Result:

Result	Proceed to
OK	A
NG (All items are defective)	B
NG (1 to 5 items are defective)	C

A → **PROCEED TO NEXT CIRCUIT INSPECTION SHOWN IN PROBLEM SYMPTOMS TABLE**

C → **REPLACE CRUISE CONTROL MAIN SWITCH**

B

2 INSPECT CRUISE CONTROL MAIN SWITCH

Cruise Control Main Switch:

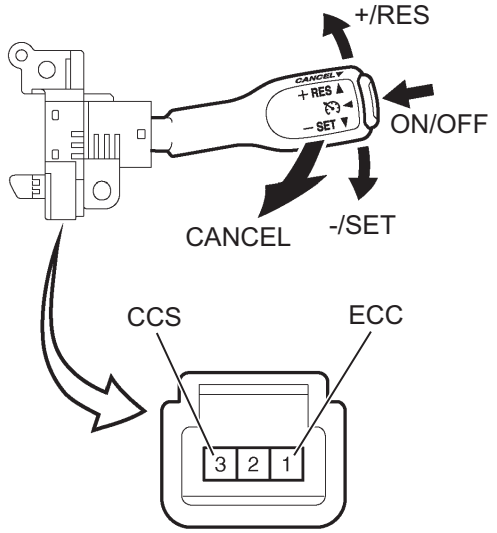

(a) Remove the cruise control main switch.
(b) Measure the resistance.

Standard resistance

Tester Connection	Switch Condition	Specified Condition
1 - 3	cruise control switch neutral	10 kΩ or higher
	cruise control switch ON	Below 1 Ω
	cruise control switch OFF	10 kΩ or higher
	+/RES	216 to 264 Ω
	-/SET	567 to 693 Ω
	CANCEL	1,386 to 1,694 Ω

(c) Reinstall the cruise control main switch.

NG → **REPLACE CRUISE CONTROL MAIN SWITCH**

OK

3 CHECK HARNESS AND CONNECTOR (CRUISE CONTROL MAIN SWITCH - SPIRAL CABLE)

Spiral Cable Side:

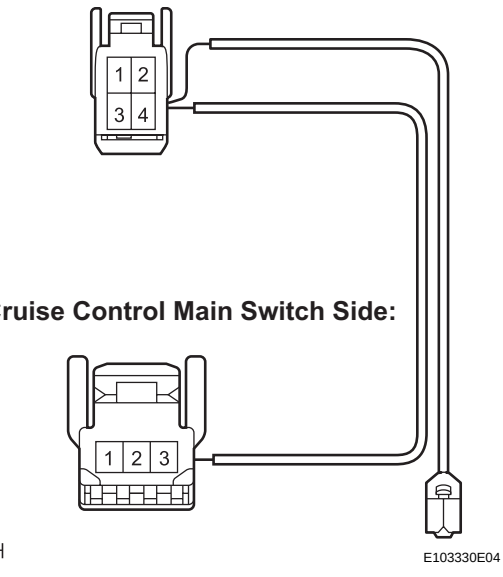

(a) Disconnect the spiral cable side connector.
(b) Disconnect the cruise control main switch side connector.
(c) Measure the resistance.

Standard resistance

Tester Connection	Specified Condition
Terminal 1 (ECC) main switch side - Terminal 4 (ECC) spiral cable side	Below 1 Ω
Terminal 3 (CCS) main switch side - Terminal 3 (CCS) spiral cable side	Below 1 Ω

(d) Reconnect the spiral cable side connector.
(e) Reconnect the cruise control main switch side connector.

NG → **REPAIR OR REPLACE HARNESS OR CONNECTOR**

CC

OK

4	CHECK SPIRAL CABLE

NOTICE:
The spiral cable is an important part of the SRS airbag system. Incorrect removal or installation of the spiral cable may prevent the airbag from deploying. Be sure to read the page shown in the brackets. (See page RS-1)

(a) Remove the spiral cable.

CC

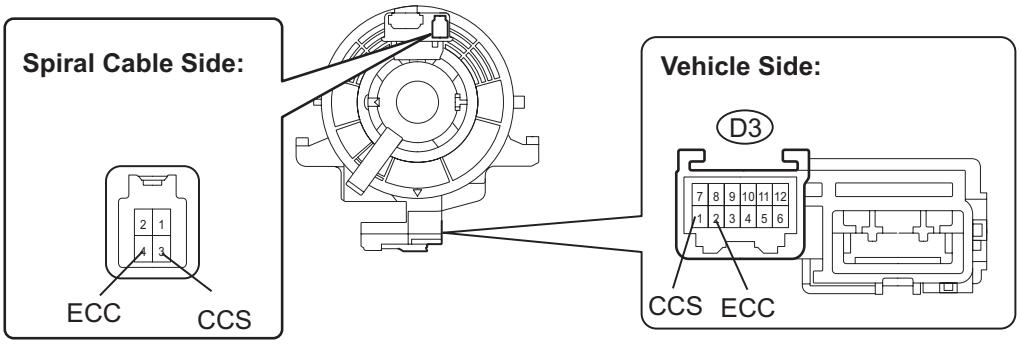

E124662E05

(b) Measure the resistance.

Standard resistance

Tester Connection	Specified Condition
Terminal 3 (CCS) main switch side - CCS (D3-1)	Below 1 Ω
Terminal 4 (ECC) main switch side - ECC (D3-2)	Below 1 Ω

HINT:
The spiral cable makes a maximum of approximately 5 rotations.

(c) Reinstall the spiral cable.

NG → REPLACE SPIRAL CABLE

OK

5	CHECK HARNESS AND CONNECTOR (SPIRAL CABLE - ECM AND BODY GROUND)

Wire Harness Side:

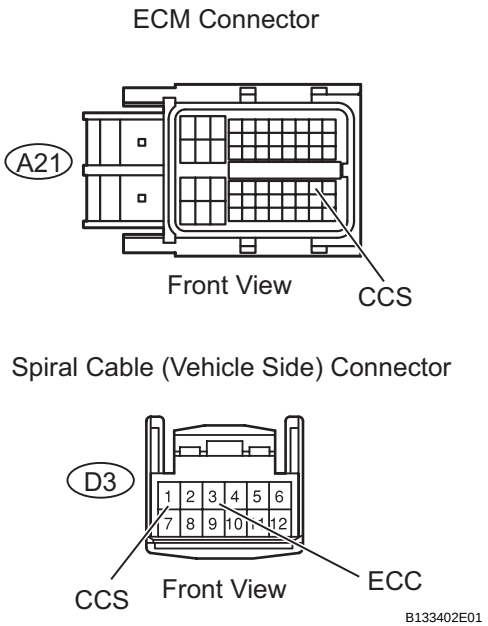

(a) Disconnect the A21 ECM connector.
(b) Disconnect the D3 spiral cable (vehicle side) connector.
(c) Measure the resistance.

Standard resistance

Tester Connection	Specified Condition
A21-40 (CCS) - D3-1 (CCS)	Below 1 Ω
A21-40 (CCS) or D3-1 (CCS) - Body ground	10 kΩ or higher
D3-2 (ECC) - Body ground	Below 1 Ω

(d) Reconnect the ECM connector.
(e) Reconnect the spiral cable (vehicle side) connector.

NG → **REPAIR OR REPLACE HARNESS OR CONNECTOR**

OK

REPLACE ECM

CC

Cruise Main Indicator Light Circuit

DESCRIPTION

When the cruise control main switch is turned off, cruise control does not operate.

WIRING DIAGRAM

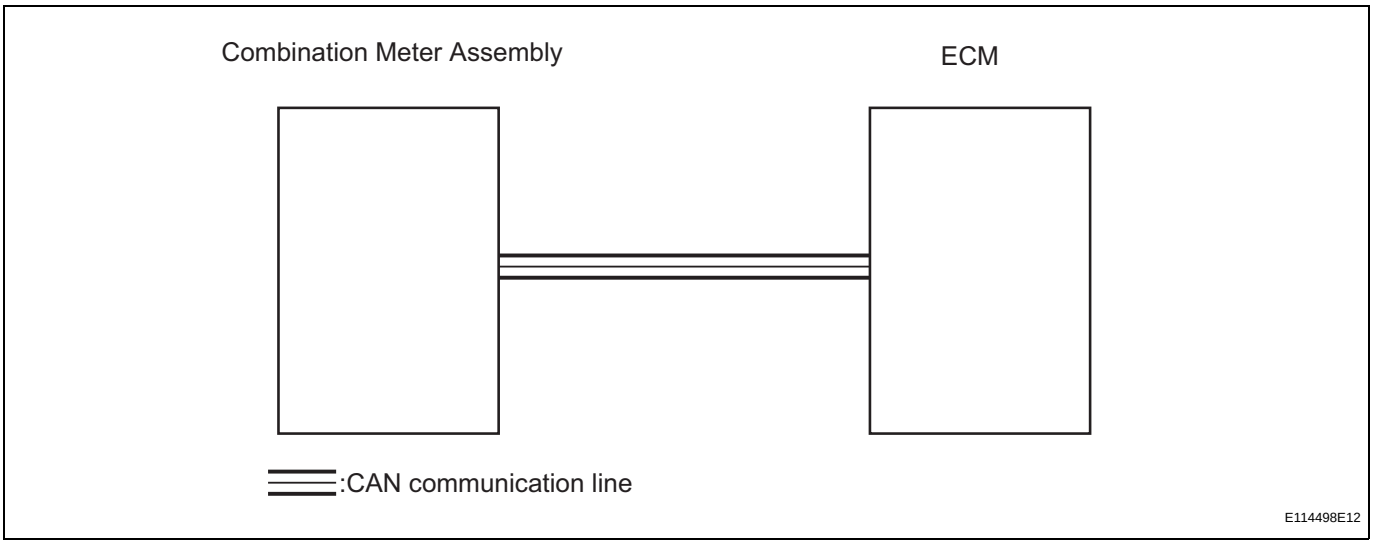

INSPECTION PROCEDURE

Refer to HOW TO PROCEED WITH TROUBLESHOOTING (see page ME-72).
HINT:
If DTC U0100 has been stored, troubleshoot the CAN communication system first.

TC and CG Terminal Circuit

DESCRIPTION

The DLC3 circuit enables reading of Diagnostic Trouble Codes (DTCs) without using intelligent testers by connecting terminals TC and CG of the DLC3 connector.
Stored DTCs are displayed in blinking patterns of the CRUISE MAIN indicator light located on the combination meter.

WIRING DIAGRAM

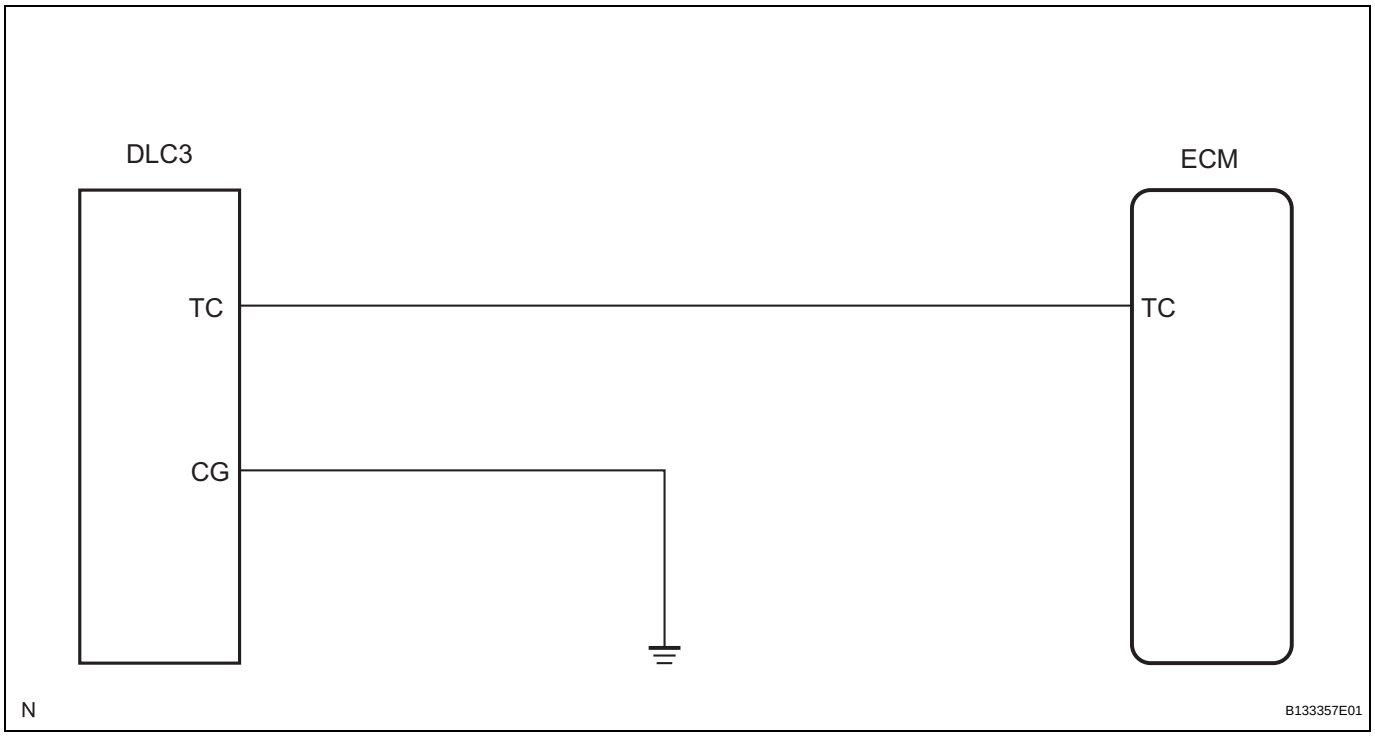

HINT:
When a particular warning light blinks continuously, a ground short in the wiring of terminal TC of the DLC3 or an internal ground short in the relevant ECU is suspected.

INSPECTION PROCEDURE

1	CHECK HARNESS AND CONNECTOR (TC of DLC3 - ECM)

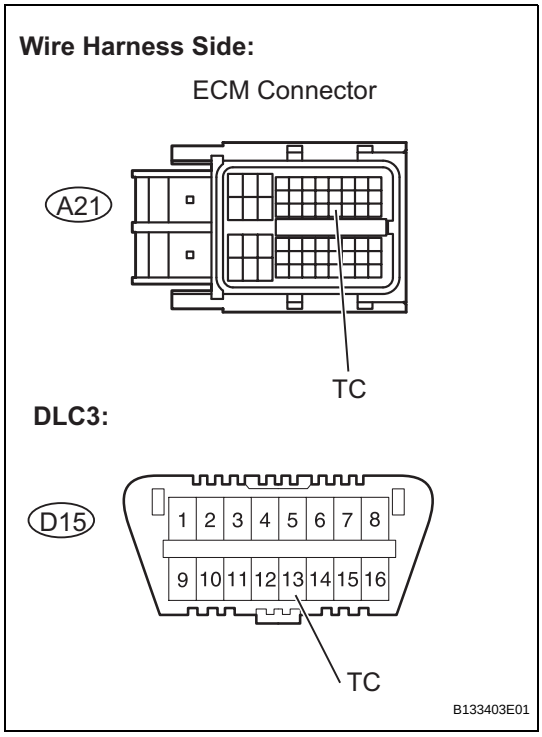

(a) Disconnect the A21 connector of the ECM.
(b) Measure the resistance.
Standard resistance

Tester Connection	Specified Condition
TC (D15-13) - TC (A21-27)	Below 1 Ω

(c) Reconnect the ECM connector.

NG → **REPAIR OR REPLACE HARNESS OR CONNECTOR (TC of DLC3 - ECM)**

OK

2	CHECK HARNESS AND CONNECTOR (TC of DLC3 - BODY GROUND)

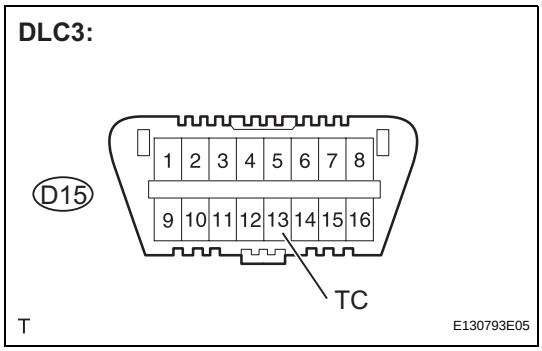

(a) Measure the resistance.
Standard resistance

Tester Connection	Specified Condition
TC (D15-13) - Body ground	10 kΩ or higher

NG → **REPAIR OR REPLACE HARNESS OR CONNECTOR (TC CIRCUIT)**

OK

3	CHECK HARNESS AND CONNECTOR (CG of DLC3 - BODY GROUND)

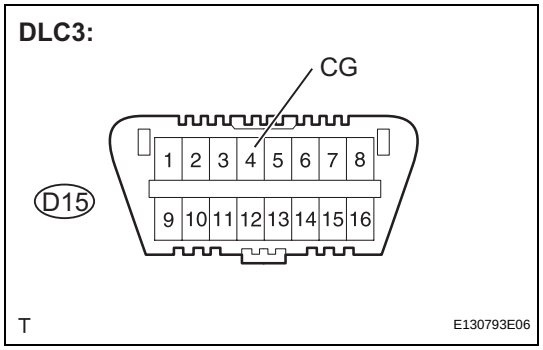

(a) Measure the resistance.
Standard resistance

Tester Connection	Specified Condition
CG (D15-4) - Body ground	Below 1 Ω

NG → **REPAIR OR REPLACE HARNESS OR CONNECTOR (CG of DLC3 - BODY GROUND)**

OK

REPLACE ECM

CC

CRUISE CONTROL MAIN SWITCH

COMPONENTS

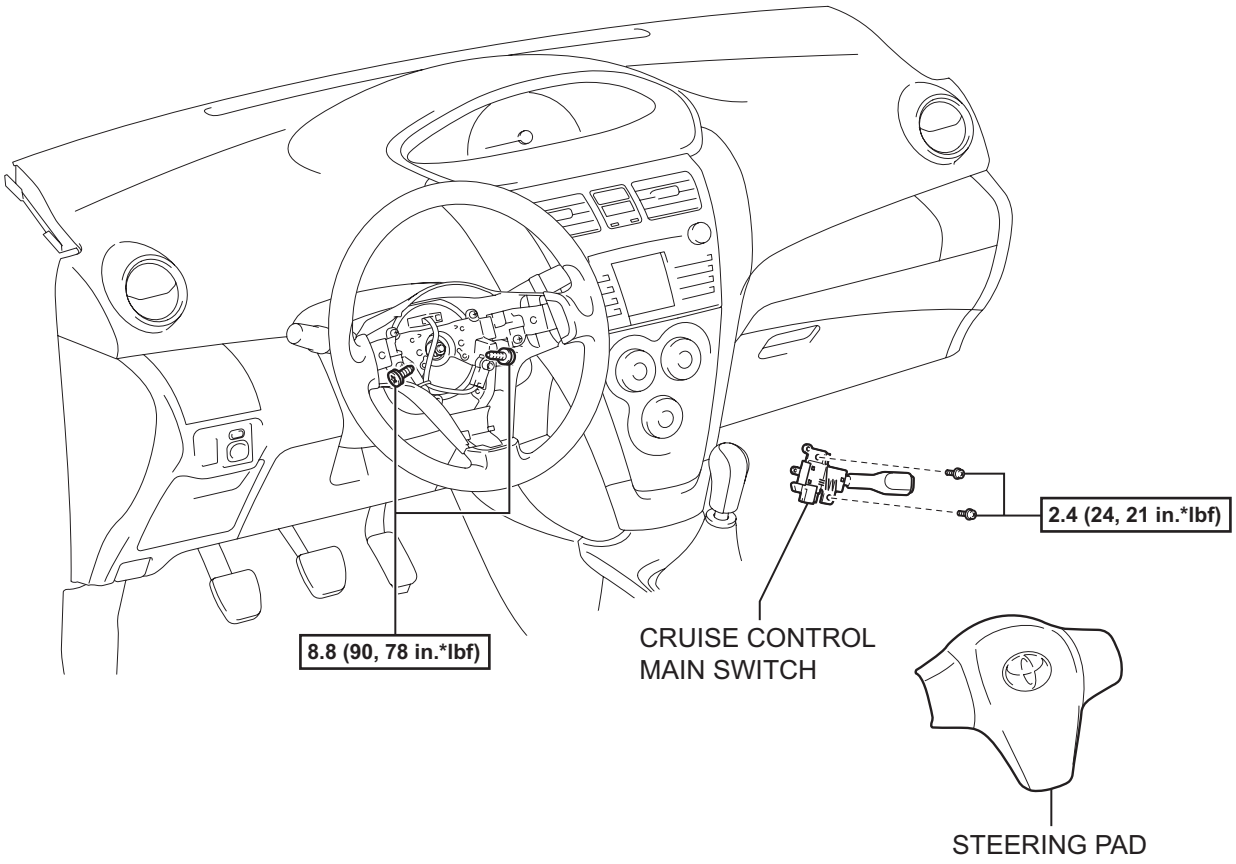

N*m (kgf*cm, ft*lbf) : Specified torque

P

E116825E01

REMOVAL

1. **DISCONNECT CABLE FROM NEGATIVE BATTERY TERMINAL**
   Wait for at least 90 seconds after disconnecting the cable to prevent the airbag from working.
2. **REMOVE STEERING PAD (See page RS-309)**
3. **REMOVE CRUISE CONTROL MAIN SWITCH**
   (a) Disconnect the connector.
   (b) Remove the 2 screws and remove the cruise control main switch.

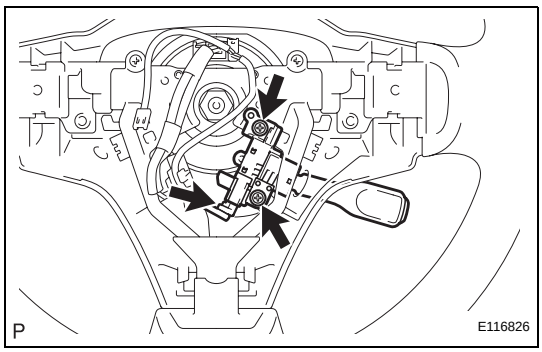

INSPECTION

1. INSPECT CRUISE CONTROL MAIN SWITCH

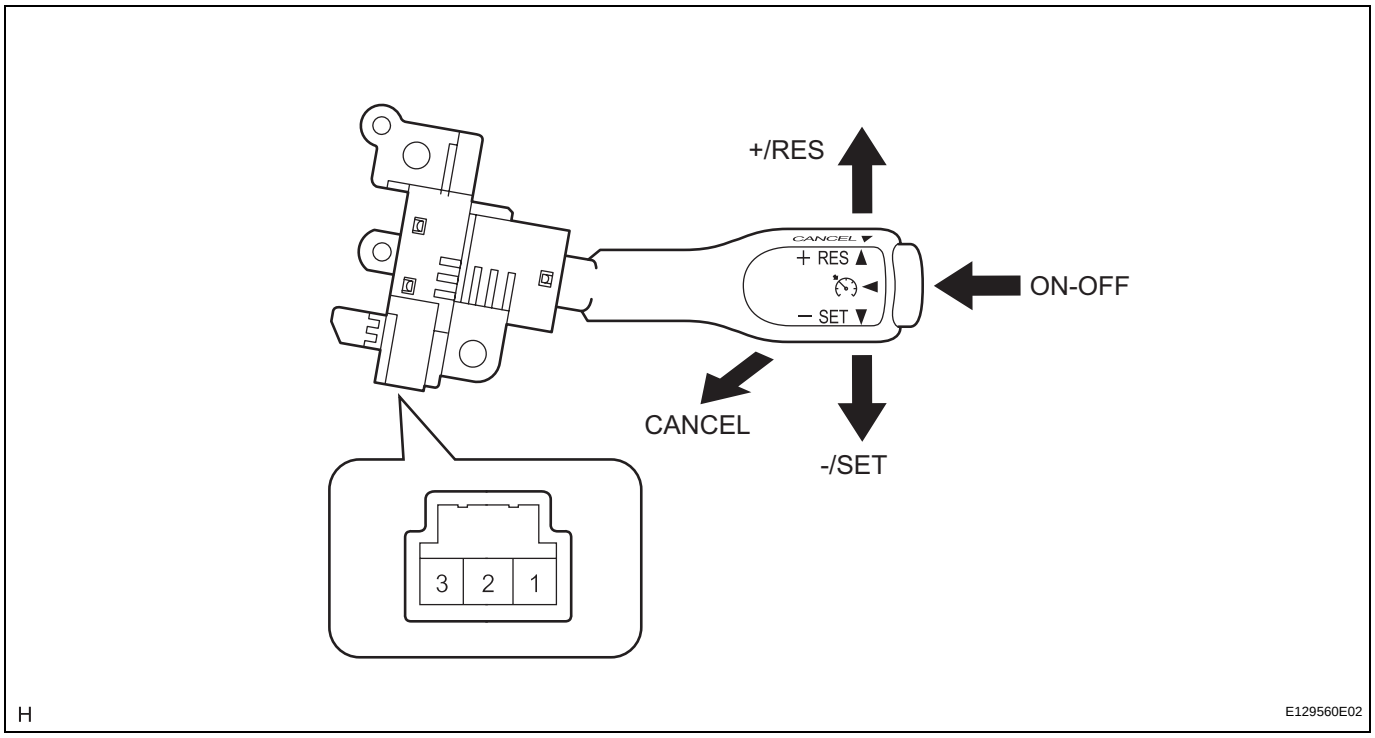

(a) Measure the resistance and check the results in accordance the value(s) in the table below.

Standard resistance

Tester Connection	Switch Condition	Specified Condition
1(ECC) - 3(CCS)	Neutral	10 kΩ or higher
1(ECC) - 3(CCS)	+ /RES	216 to 264Ω
1(ECC) - 3(CCS)	- /SET	567 to 693Ω
1(ECC) - 3(CCS)	CANCEL	1,386 to 1,694Ω
1(ECC) - 3(CCS)	Main Switch off	10kΩ or higher
1(ECC) - 3(CCS)	Main Switch on	Below 1Ω

If the result is not as specified, replace the cruise control main switch.

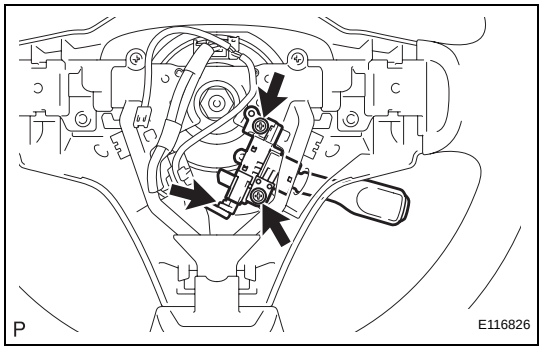

INSTALLATION

1. INSTALL CRUISE CONTROL MAIN SWITCH

(a) Install the cruise control main switch with the 2 screws.
Torque: 2.4 N*m (24 kgf*cm, 21 in.*lbf)

(b) Connect the connector.

2. INSTALL STEERING PAD (See page RS-310)

3. CONNECT CABLE TO NEGATIVE BATTERY TERMINAL
Torque: 5.4 N*m (55 kgf*cm, 48 in.*lbf)

4. INSPECT SRS WARNING LIGHT
(See page RS-31)

CLUTCH SWITCH

COMPONENTS

CC

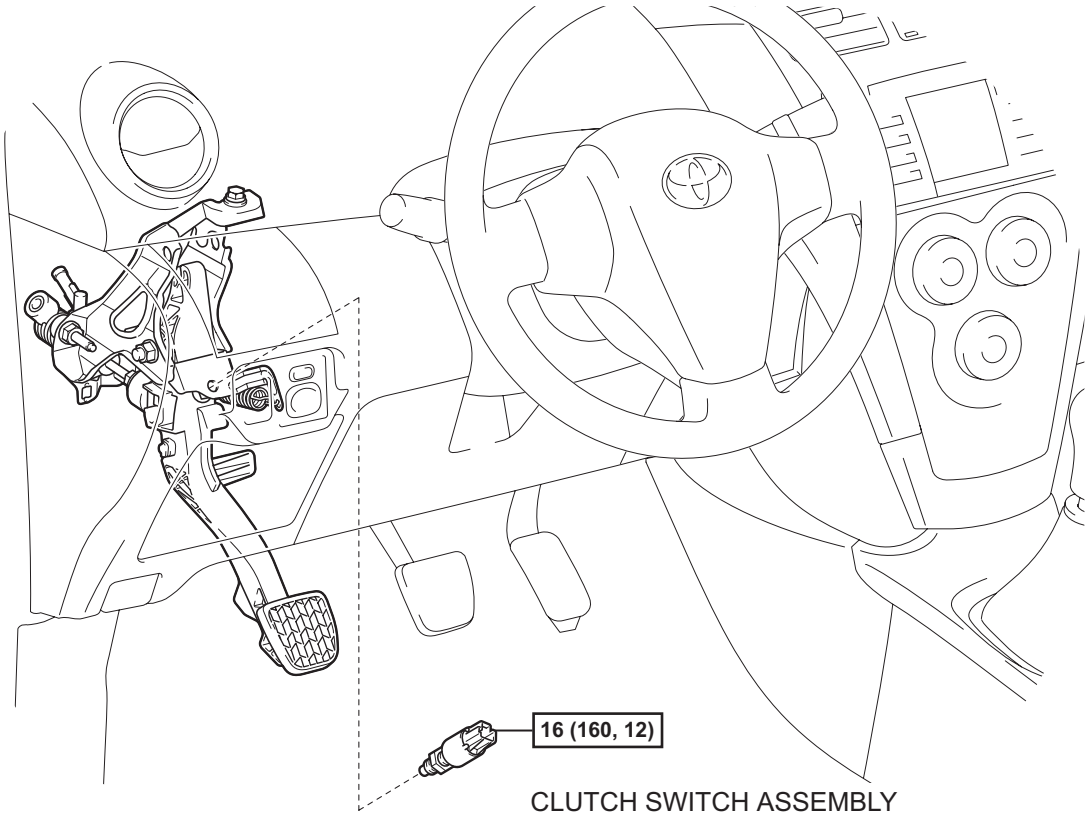

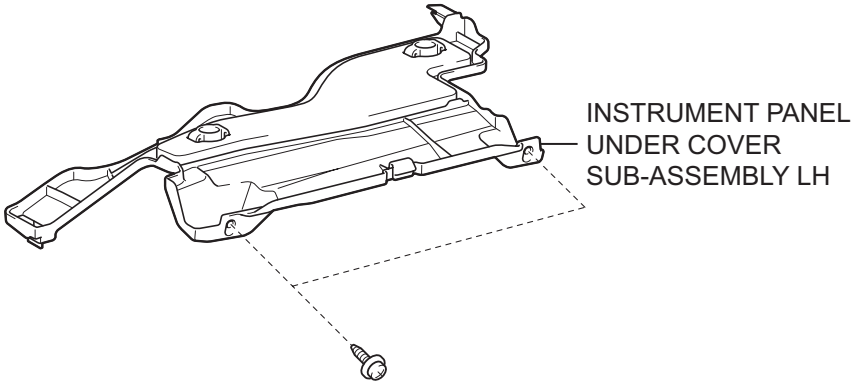

N*m (kgf*cm, ft*lbf) : Specified torque

P

E116827E01

REMOVAL

1. **DISCONNECT CABLE FROM NEGATIVE BATTERY TERMINAL**
2. **REMOVE INSTRUMENT PANEL UNDER COVER SUB-ASSEMBLY LH (See page IR-14)**
3. **REMOVE CLUTCH SWITCH ASSEMBLY**
   (a) Disconnect the connector.
   (b) Loosen the nut and remove the clutch switch assembly.

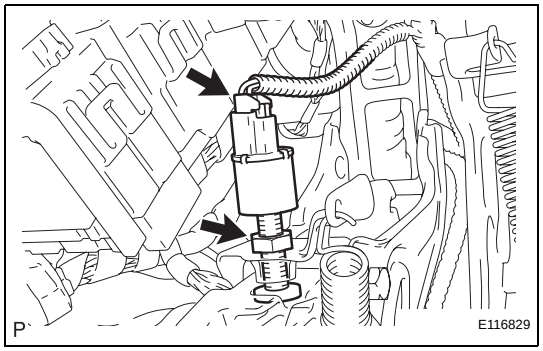

INSPECTION

1. **INSPECT CLUTCH SWITCH ASSEMBLY**
   (a) Remove the clutch switch.
   (b) Measure the resistance and check that the results in accordance with the value(s) in the table below.
   Standard resistance

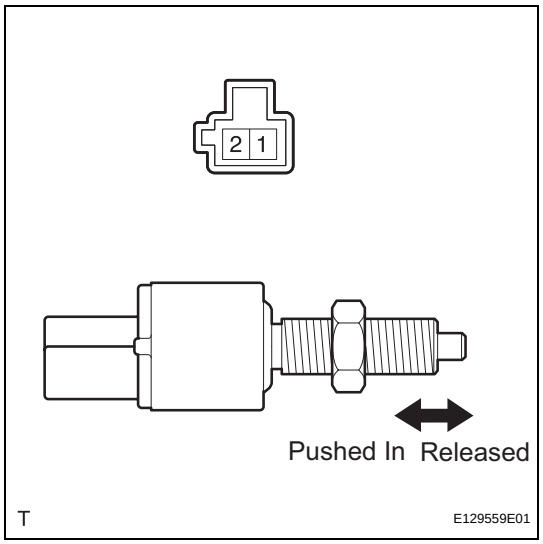

Tester Connection	Condition	Specified Condition
1 - 2	Switch pin released (Clutch pedal depressed)	10 kΩ or higher
1 - 2	Switch pin pushed in (Clutch pedal released)	Below 1Ω

If the result is not as specified, replace the clutch switch.

INSTALLATION

1. **INSTALL CLUTCH SWITCH ASSEMBLY**
   (a) Fully loosen the lock nut of the clutch switch assembly.
   (b) Adjust the clutch switch until the threaded portion comes into contact with the cushion. Tighten the lock nut and ensure that the threaded portion is in contact with the cushion.
   Torque: 16 N*m (160 kgf*cm, 12 ft.*lbf)
   (c) Connect the connector.

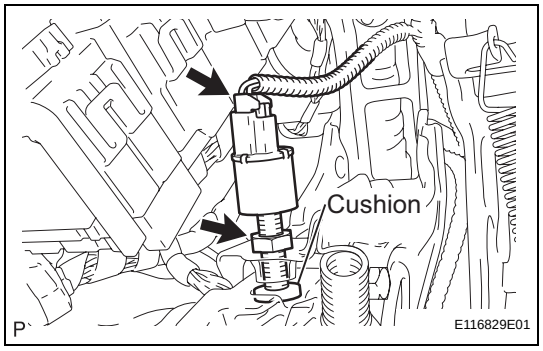

2. **INSTALL INSTRUMENT PANEL UNDER COVER SUB-ASSEMBLY LH (See page IR-35)**
3. **CONNECT CABLE TO NEGATIVE BATTERY TERMINAL**
   Torque: 5.4 N*m (55 kgf*cm, 48 in.*lbf)

LIGHTING SYSTEM

PARTS LOCATION

HATCHBACK:

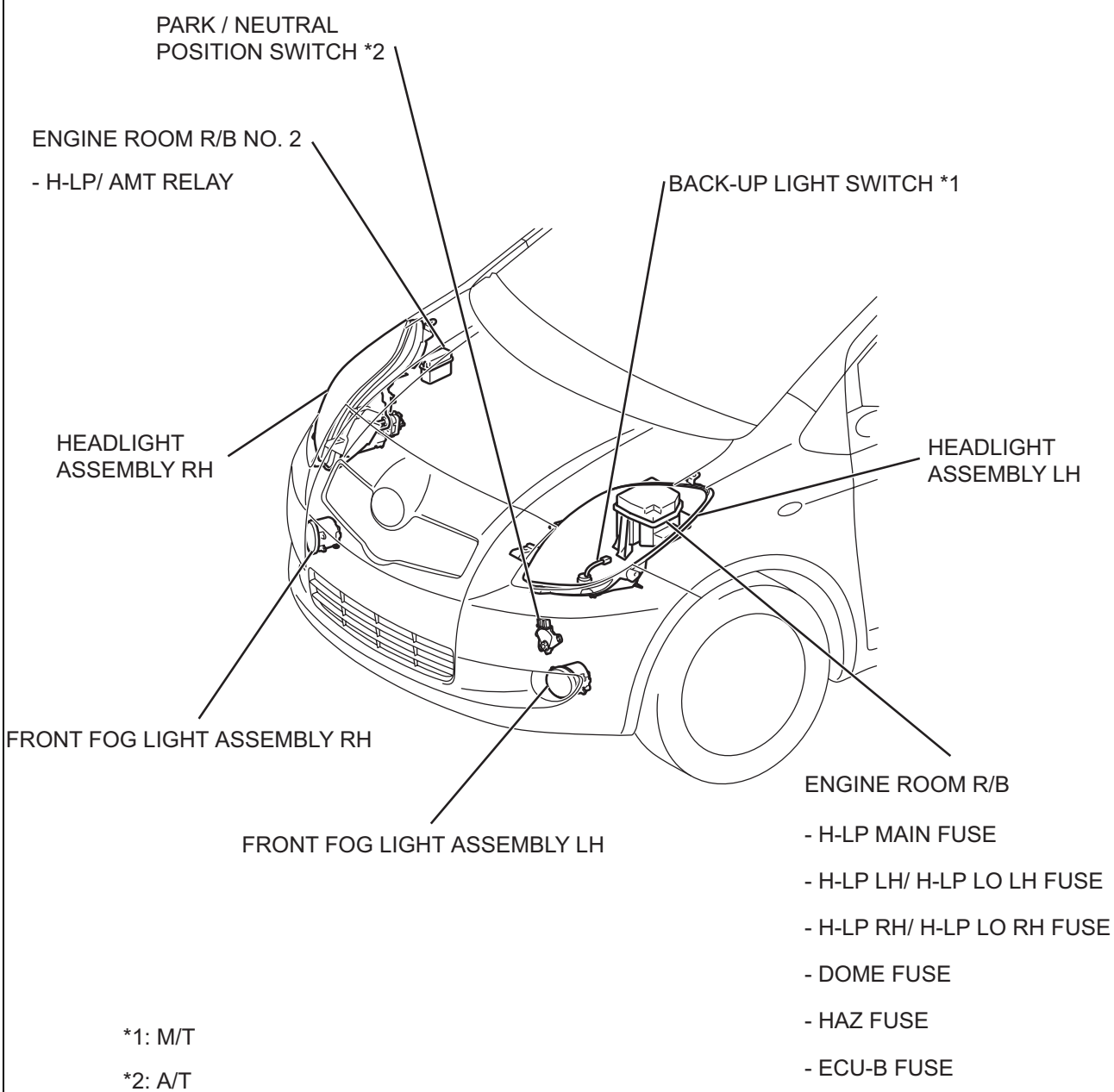

SEDAN:

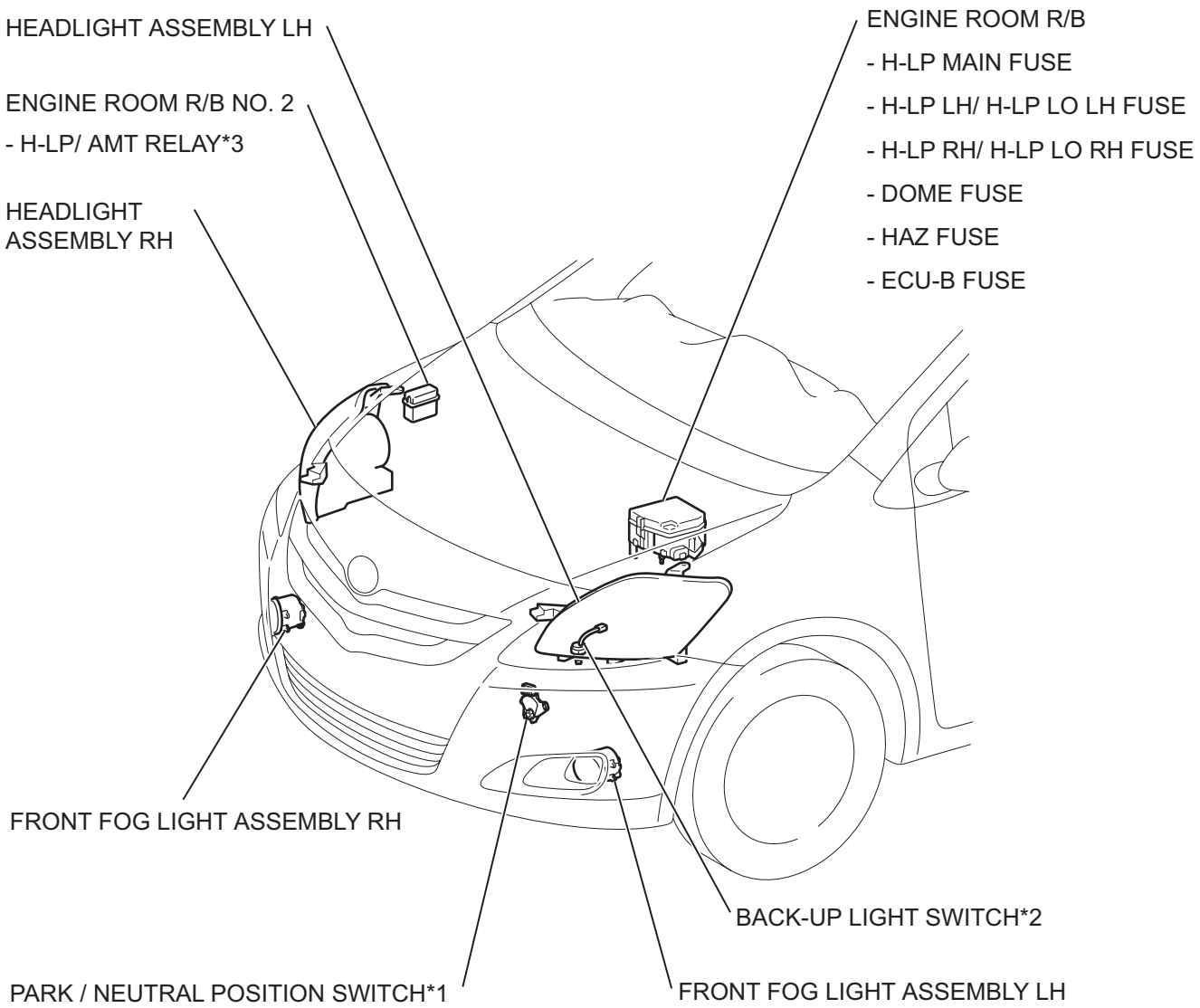

*1: A/T

*2: M/T

*3: W/ DAYTIME RUNNING LIGHT SYSTEM

B142264E01

HATCHBACK:

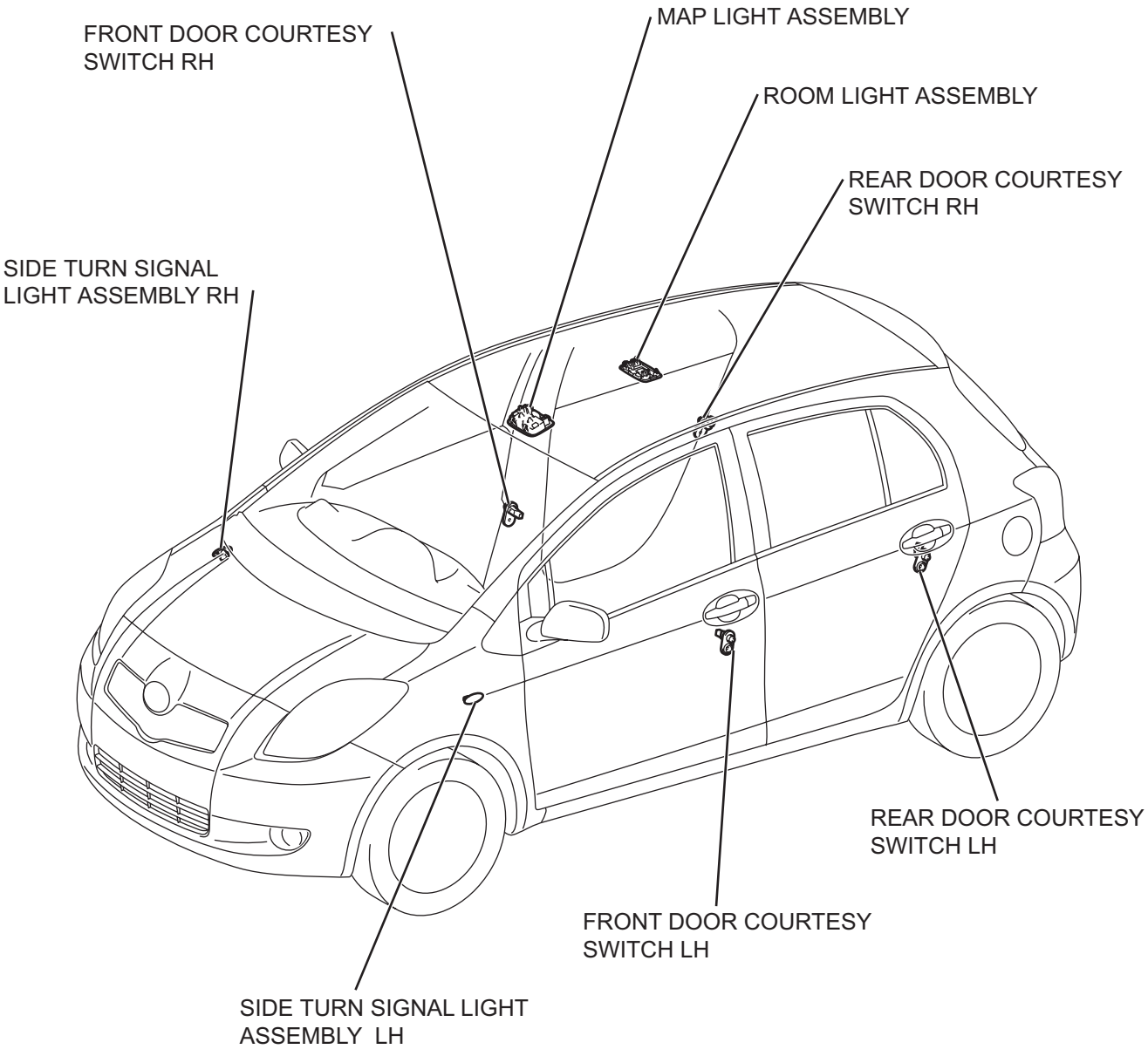

B125737E04

SEDAN:

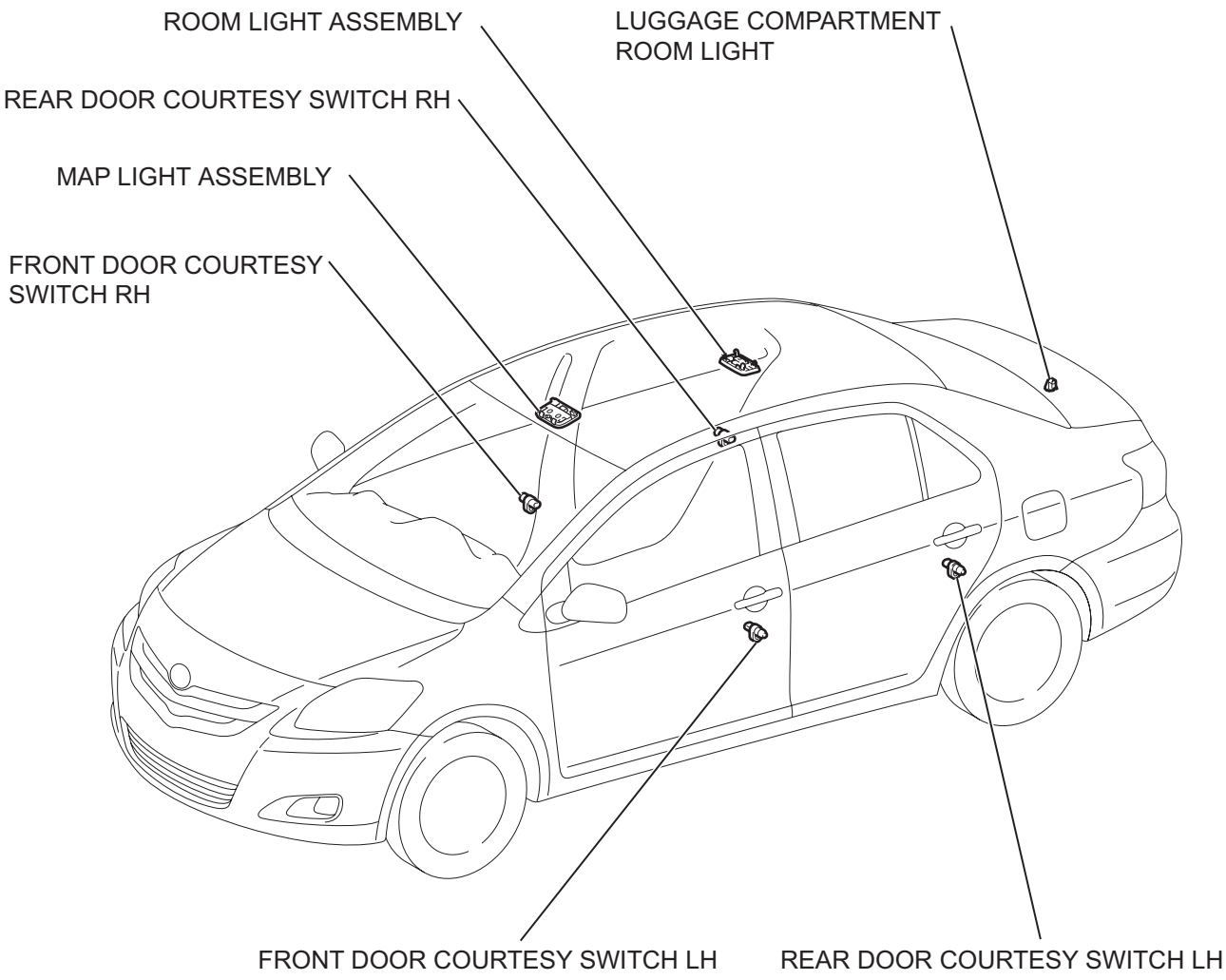
ROOM LIGHT ASSEMBLY
LUGGAGE COMPARTMENT ROOM LIGHT
REAR DOOR COURTESY SWITCH RH
MAP LIGHT ASSEMBLY
FRONT DOOR COURTESY SWITCH RH
FRONT DOOR COURTESY SWITCH LH
REAR DOOR COURTESY SWITCH LH
B142265E01

HATCHBACK:

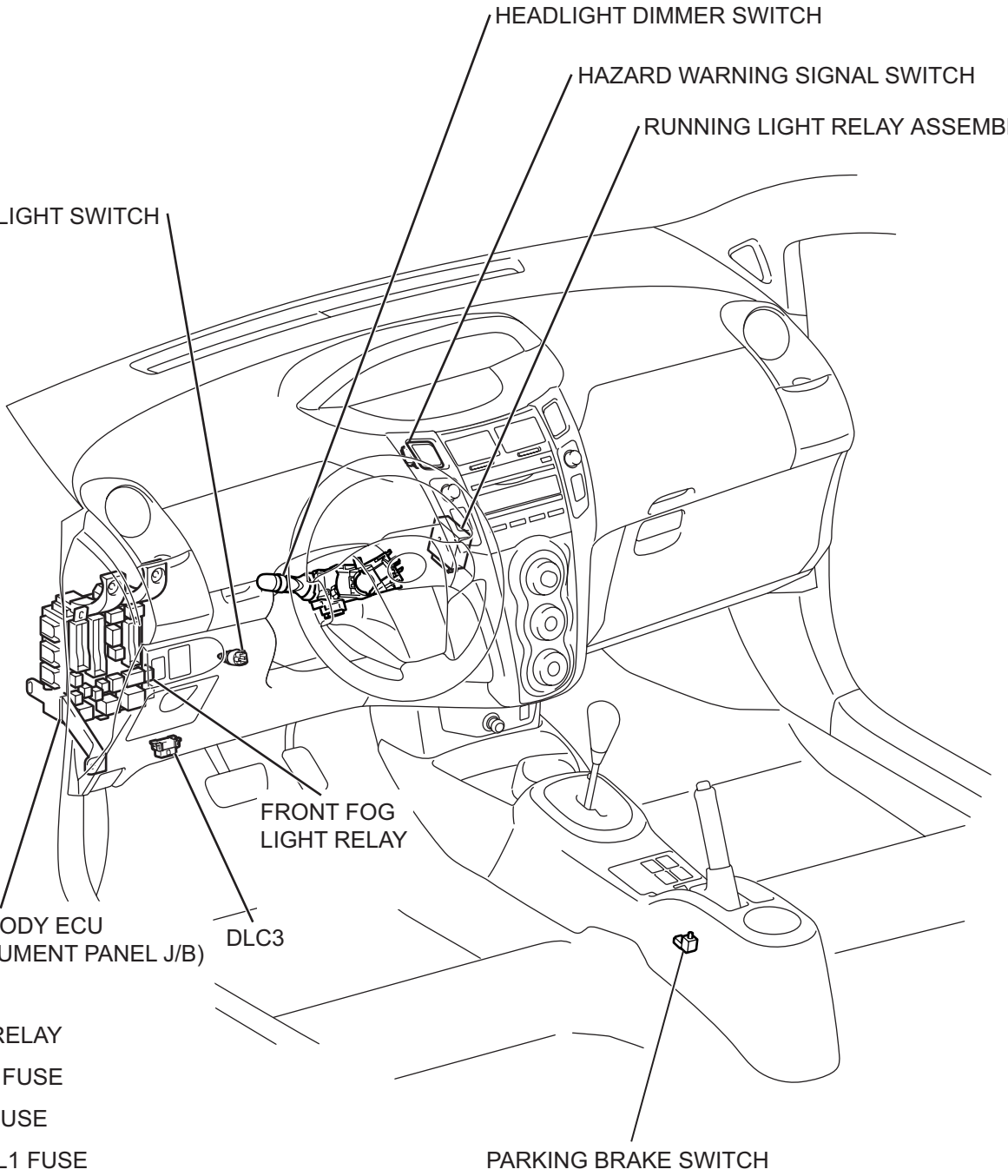

- T-LP RELAY
- STOP FUSE
- TAIL FUSE
- PANEL1 FUSE
- FRONT FOG FUSE
- ECU-IG FUSE
- GAUGE FUSE
- FLASH RELAY

*: W/ DAYTIME RUNNING LIGHT SYSTEM

B125739E02

LI

SEDAN:

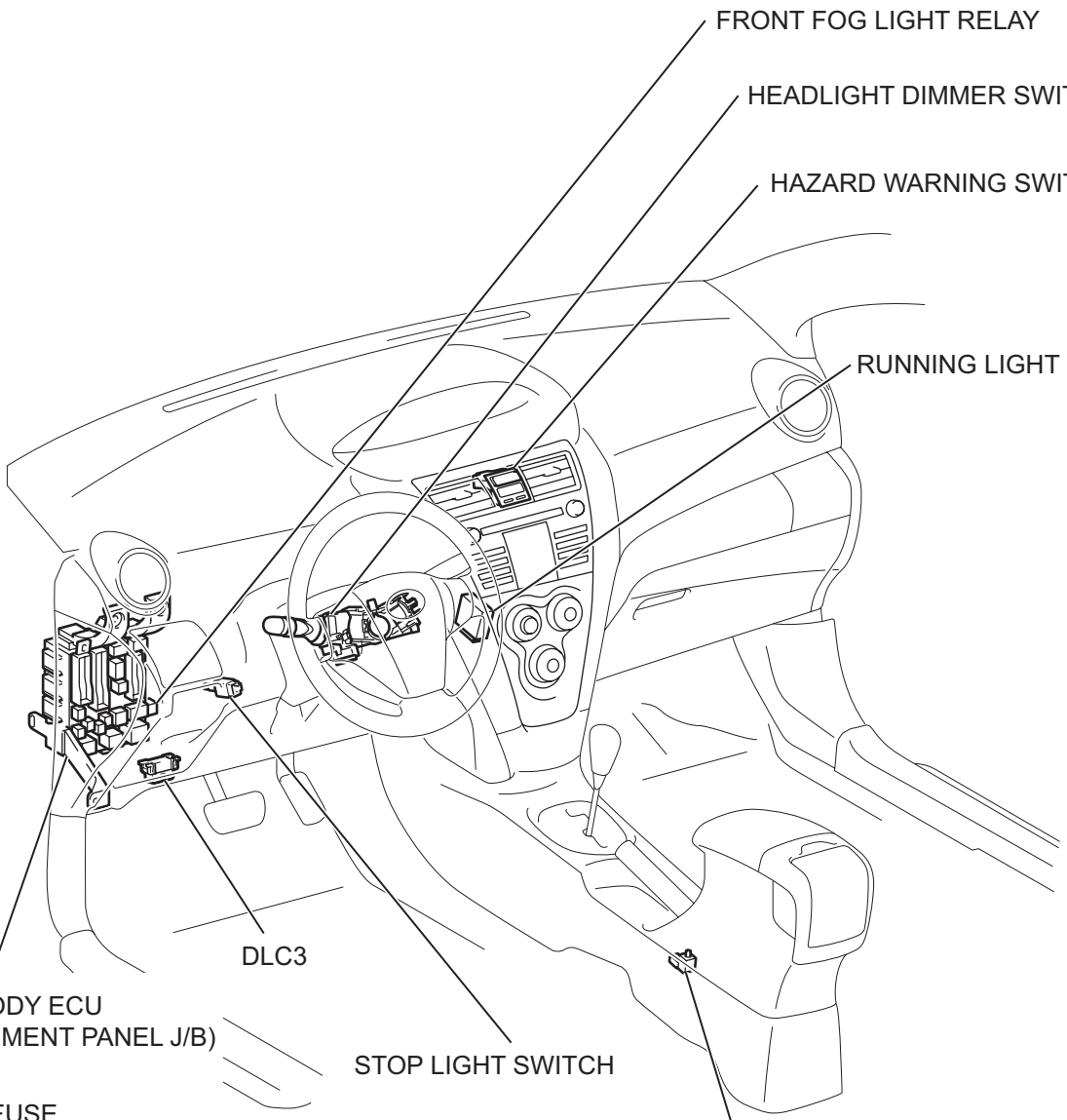

- STOP FUSE
- PANEL1 FUSE
- FR FOG FUSE
- MET FUSE
- GAUGE FUSE
- TAIL FUSE
- FLASH RELAY
- T-LP RELAY

B142266E01

HATCHBACK:

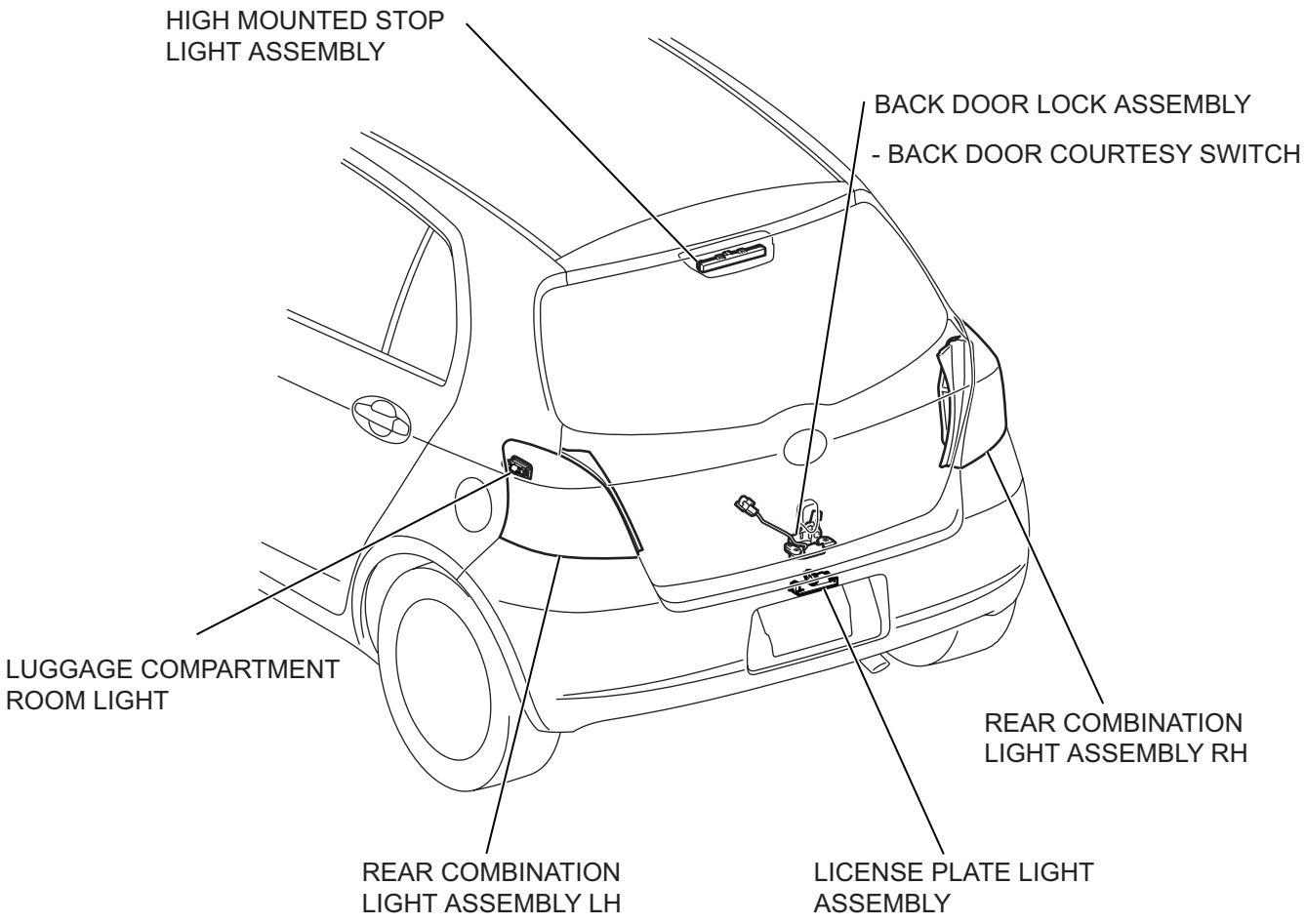

LI

SEDAN:

W/O REAR SPOILER:

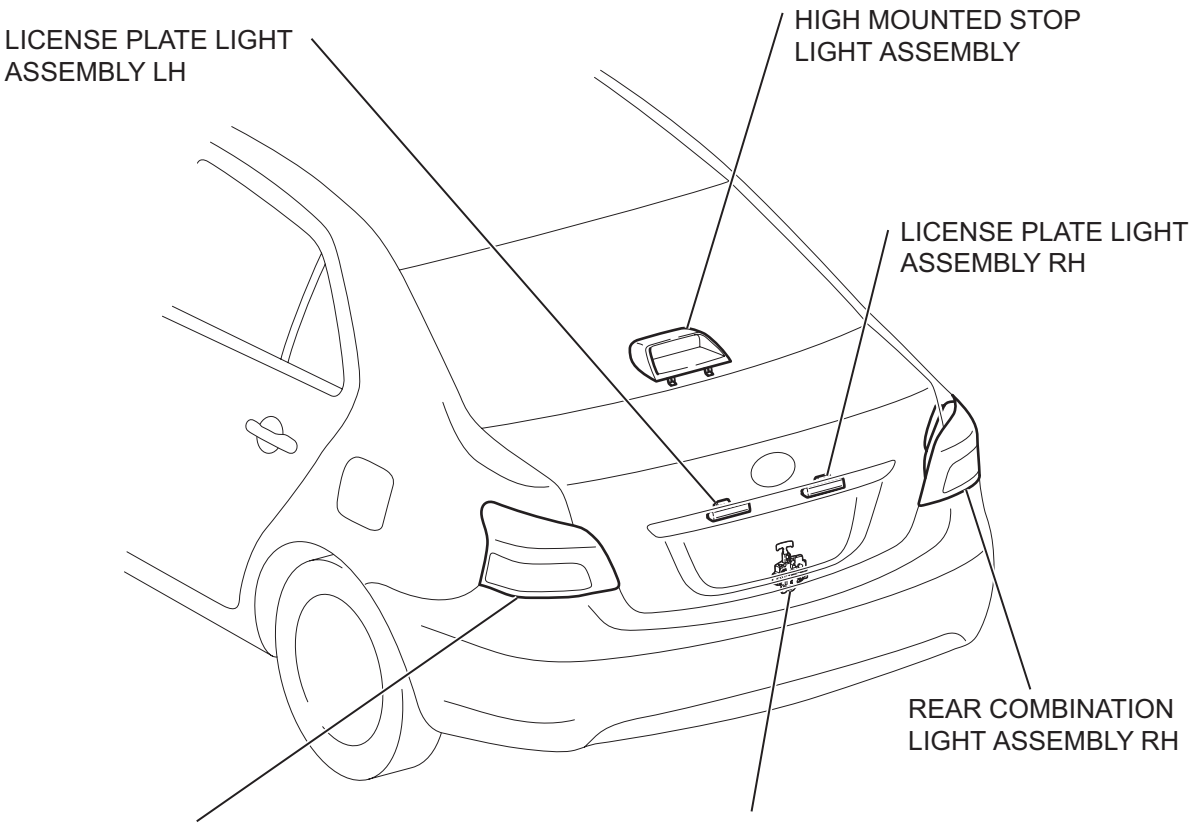

W/ REAR SPOILER:

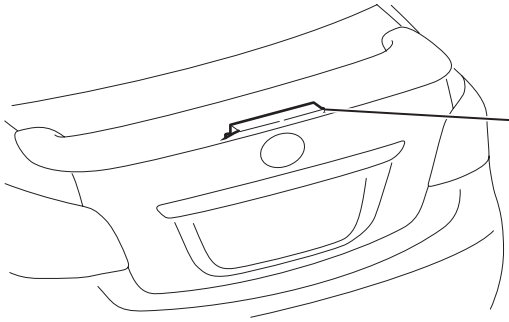

B142268E01

SYSTEM DIAGRAM

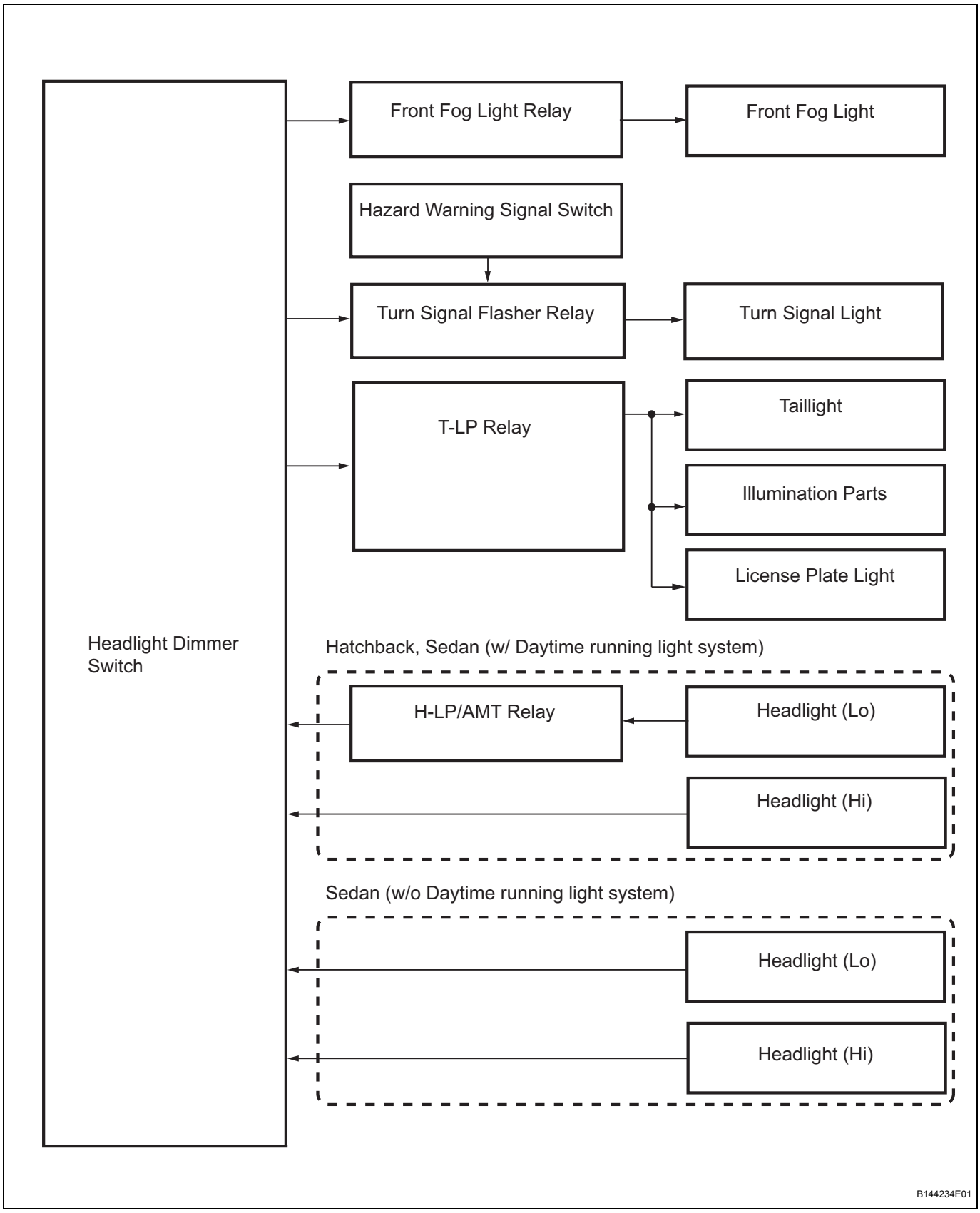

LI

Hatchback:

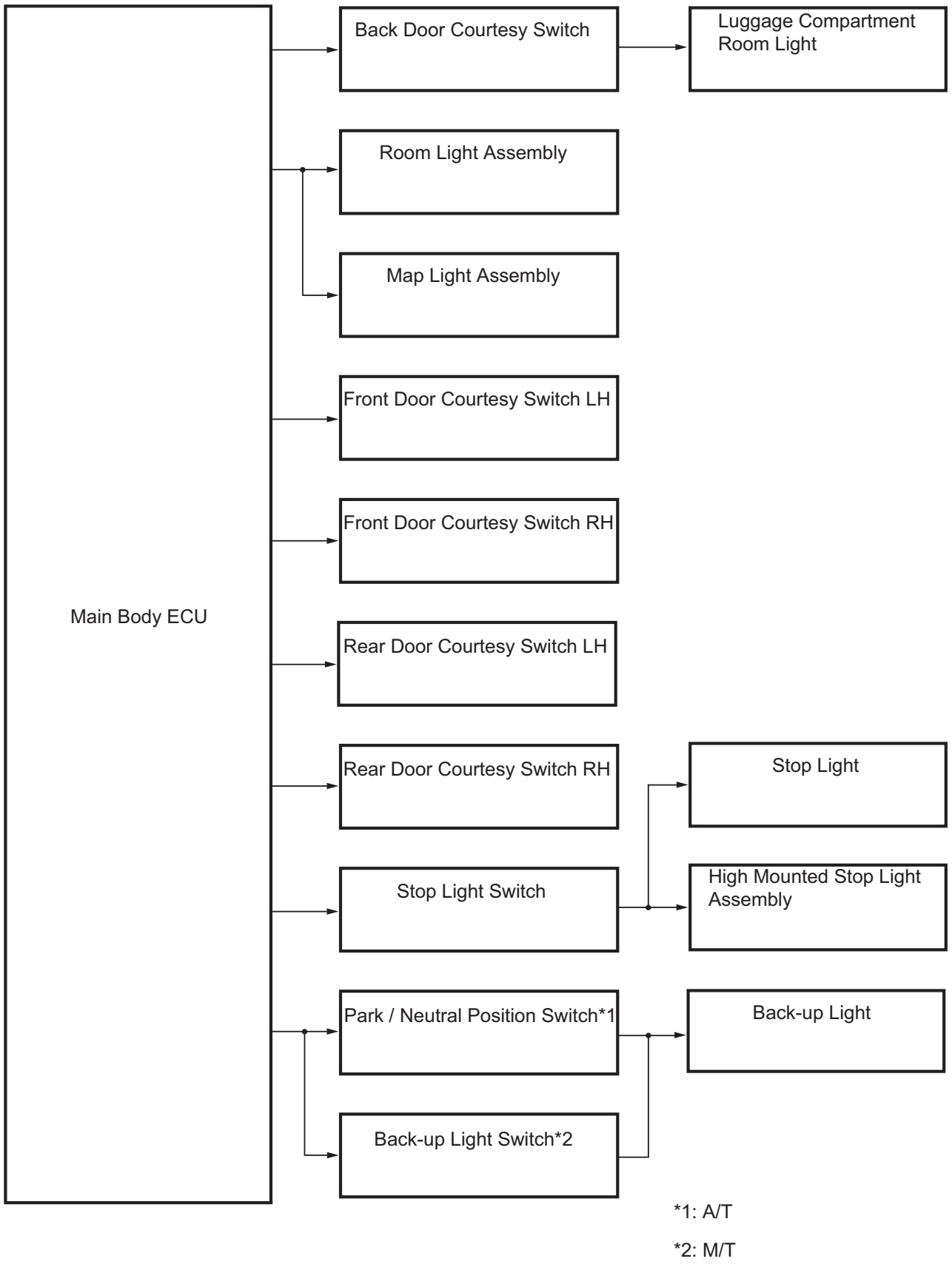
Main Body ECU
Back Door Courtesy Switch
Luggage Compartment Room Light
Room Light Assembly
Map Light Assembly
Front Door Courtesy Switch LH
Front Door Courtesy Switch RH
Rear Door Courtesy Switch LH
Rear Door Courtesy Switch RH
Stop Light
Stop Light Switch
High Mounted Stop Light Assembly
Park / Neutral Position Switch*1
Back-up Light
Back-up Light Switch*2
*1: A/T
*2: M/T
E122896E05

Sedan:

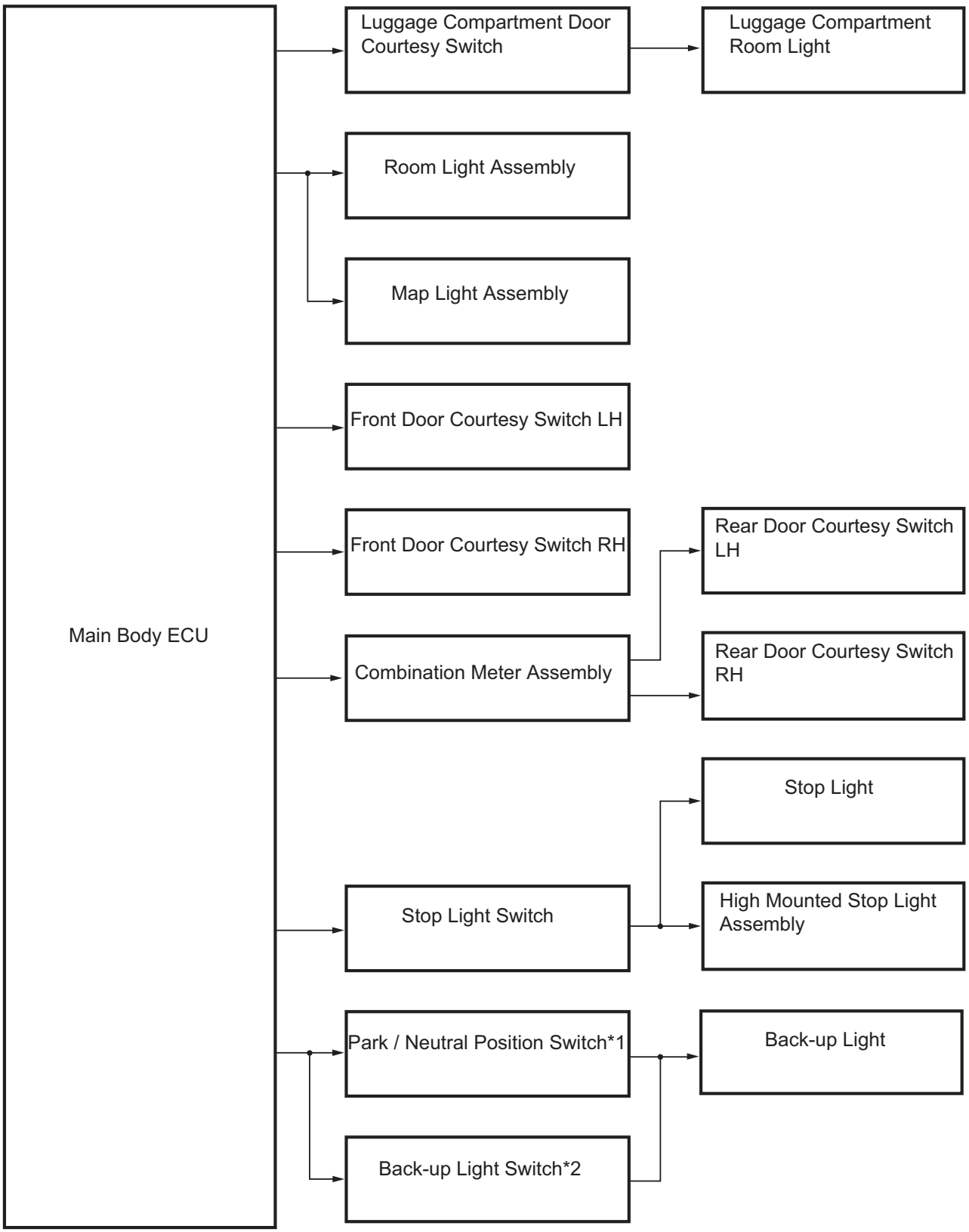
Main Body ECU
Luggage Compartment Door Courtesy Switch
Luggage Compartment Room Light
Room Light Assembly
Map Light Assembly
Front Door Courtesy Switch LH
Front Door Courtesy Switch RH
Rear Door Courtesy Switch LH
Combination Meter Assembly
Rear Door Courtesy Switch RH
Stop Light
Stop Light Switch
High Mounted Stop Light Assembly
Park / Neutral Position Switch*1
Back-up Light
Back-up Light Switch*2
*1: A/T
*2: M/T
B141724E01

LI

w/ Daytime Running Light System:

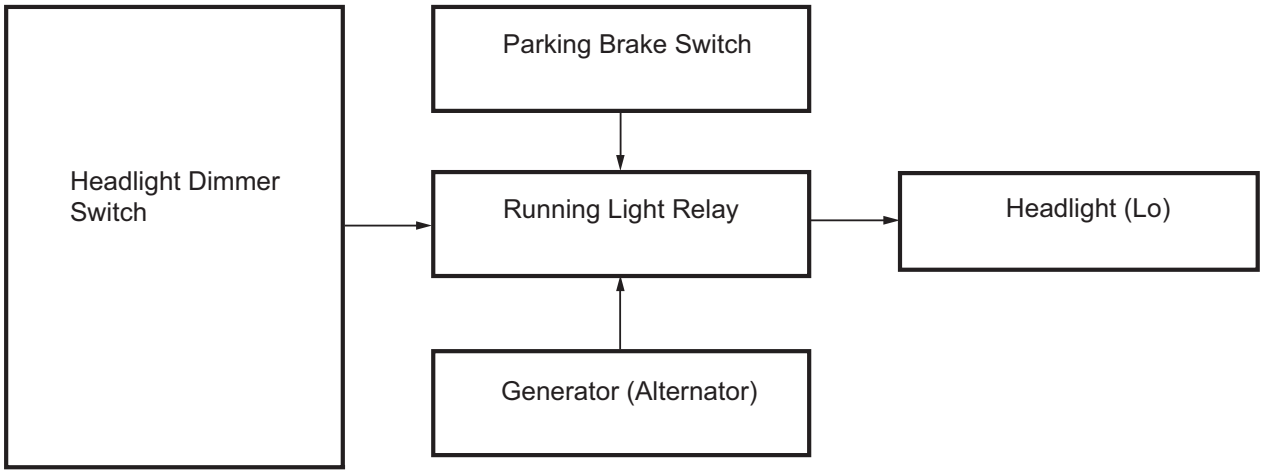

B144235E01

SYSTEM DESCRIPTION

1. LIGHTING SYSTEM

(a) Illumination control system (Illuminated entry system):
When the doors are unlocked through a key or transmitter operation, or when a door is opened or closed, the illuminated entry system turns on the room light assembly.
(1) The main body ECU receives the following signal (A).
- Door courtesy switch signal
- Door detection switch signal
- Ignition switch signal

(2) The main body ECU controls the following signal based on the signals listed in A.
- Illumination operation signal

(3) The main body ECU controls the on/off and fade-in/fade-out operation of the following parts.
- Room light assembly

(b) Battery saver system:
When the ignition switch is turned off and the any of the doors is open continuously for 20 minutes, the main body ECU turns the illumination operation signal off. As a result, the room light assembly, taillights, and the headlights turn off.
(1) The main body ECU receives the following signals (B).
- Door courtesy switch signal
- Ignition switch signal

(2) The main body ECU controls the following signal based on the signals listed in B (C).
- Illumination operation signal

(3) The main body ECU controls the illumination period of the following parts based on the signals listed in C.
- Room light assembly
- Headlight (Low)
- Position light (Front and Rear)

(c) Manual light control system:
This system functions when lights such as the headlights and taillights are illuminated through manual operation of the light control switch.
(1) The main body ECU receives the following signals (D).
- Light control switch signal
- Headlight dimmer switch signal
- Front fog light switch signal

(2) The main body ECU controls the following signals based on the signals listed in D (E).
- H-LP/AMT relay operation signal
- T-LP relay operation signal
- Running light relay assembly operation signal
- Front fog light relay operation signal

(3) The main body ECU controls the on/off operation of the following parts based on the signals listed in E.
- Headlight (Low)
- Headlight (Hi)
- Position light (Front and Rear)
- Front fog light

(d) Light auto turn off system:
When the headlights and taillights are illuminated through the operation of the automatic light control switch, if the ignition switch is turned off and all doors are closed, this system continues illuminating the headlights and taillights for approximately 30 seconds, and then turns off the lights. However, when all the doors locked manually, using the door lock button or using the key or pressing the LOCK on the wireless remote turns the headlights and taillights off immediately.

(1) The main body ECU receives the following signals (F).
- Door courtesy switch signal
- Ignition switch signal

(2) The main body ECU controls the following signals based on the signals listed in F (G).
- H-LP/AMT relay operation signal
- T-LP relay operation signal
- Running light relay assembly operation signal
- Front fog light relay operation signal

(3) The main body ECU controls the illumination period of the following parts based on the signals listed in G.
- Headlight (Low)
- Headlight (Hi)
- Position light (Front and Rear)
- Front fog light

(e) Daytime running light system:
This system is directly connected to the low-beam headlights and is designed to automatically activate the daytime running lights in order to increase the visibility of the vehicle.

(1) The main body ECU receives the following signals (I).
- Ignition switch signal
- Generator signal
- Parking brake switch signal
- Light control switch signal

(2) The main body ECU controls the following signal based on the signals listed in I.
- Running light relay assembly operation signal

(3) The main body ECU controls the on/off operation of the following part.
- Headlight (Low)

HOW TO PROCEED WITH TROUBLESHOOTING

HINT:
- Use these procedures to troubleshoot the lighting system.
- Use an intelligent tester in step 4.

1 VEHICLE BROUGHT TO WORKSHOP

NEXT

2 INSPECT BATTERY VOLTAGE

Standard voltage:
11 to 14 V
If the voltage is below 11 V, recharge or replace the battery before proceeding.

NEXT

3 REFER TO PROBLEM SYMPTOMS TABLE

Result	Proceed to
Fault is not listed in problem symptoms table	A
Fault is listed in problem symptoms table	B

B → **Go to step 5**

A

4 OVERALL ANALYSIS AND TROUBLESHOOTING

(a) Data List/Active Test (See page LI-21)
(b) Terminals of ECU (See page LI-18)

NEXT

5 ADJUST, REPAIR OR REPLACE

NEXT

6 CONFIRMATION TEST

NEXT

END

CUSTOMIZE PARAMETERS

HINT:
The following items can be customized.
NOTICE:

- **When the customer requests modification of items, first make sure that the functions can be customized.**
- **Make a note of the current settings before customization.**
- **When troubleshooting items, first make sure that the functions are set to their default settings.**

ILLUMINATED ENTRY:

Display (Item)	Default	Contents	Setting
LIGHTING TIME (Lighting Time)	15 seconds	Changes illumination duration after door closure. (It will quickly fade out when turning the ignition switch ON.)	7.5/ 15/ 30 (seconds)
I/L ON / ACC OFF (Room light illuminates when ignition switch turned off)	ON	Illuminates light when ignition switch turned from ACC to LOCK. (Room light illuminated when room light switch in DOOR position)	ON/OFF
I/L ON / UNLOCK (Room light illuminates when door key unlocked)	ON	Function to light up the room light, when unlocking with the door key cylinder. (Room light illuminated when room light switch in DOOR position)	ON/OFF

HINT:
Sensitivity adjustments are difficult to confirm. Check by driving the customer's vehicle.

PROBLEM SYMPTOMS TABLE

HINT:
Use the table below to help determine the causes of the problem symptom. The potential causes of the symptoms are listed in order of probability in the "Suspected Area" column of the table. Check each symptom by checking the suspected areas in the order they are listed. Replace parts as necessary.

HEADLIGHT AND TAILLIGHT SYSTEM:

Symptom	Suspected area	See page
Neither headlight comes on. (w/o Daytime running light system)	Harness or connector	LI-28
	Headlight relay circuit	LI-28
Neither headlight comes on. (w/ Daytime running light system)	Harness or connector	LI-33
	DRL Relay circuit	LI-33
	Headlight signal circuit	LI-78
	Headlight relay circuit	LI-28
Only one headlight comes on.	Bulb	LI-28
	Harness or connector	LI-28
	Headlight signal circuit	LI-78
	Headlight relay circuit	LI-28
LO-Beam lights do not come on.	Bulb	LI-28
	Harness or connector	LI-28
	Headlight signal circuit	LI-78
	Headlight relay circuit	LI-28
HI-Beam lights do not come on.	Bulb	LI-28
	Harness or connector	LI-28
	Headlight signal circuit	LI-78
	Headlight relay circuit	LI-28
Flash does not come on. (Headlights and Hi-beam normal)	Harness or connector	LI-28
	Headlight signal circuit	LI-78
	Headlight relay circuit	LI-28
No taillights come on. (Headlights normal)	Harness or connector	LI-53
	Taillight circuit	LI-53
Only one taillight comes on.	Bulb	LI-53
	Harness or connector	LI-53
	Taillight circuit	LI-53

FOG LIGHT SYSTEM:

Symptom	Suspected area	See page
Front fog lights do not come on when light control switch in TAIL or HEAD position. (Headlights normal)	Harness or connector	LI-37
	Front fog light circuit	LI-37
Only one fog light comes on.	Bulb	LI-37
	Harness or connector	LI-37
	Front fog light circuit	LI-37

BACK-UP LIGHT SYSTEM:

Symptom	Suspected area	See page
No back-up lights do not come on.	Harness or connector	LI-68
	Back up light circuit	LI-68
Only one Buck-up light comes on.	Bulb	LI-68
	Harness or connector	LI-68
	Back up light circuit	LI-68

STOP LIGHT SYSTEM:

Symptom	Suspected area	See page
No stop lights come on.	Harness or connector	LI-22
	Stop light switch circuit	LI-22
Only one stop light does not come on.	Bulb	LI-22
	Harness or connector	LI-22
	Stop light switch circuit	LI-22
High mounted stop light does not come on.	Bulb	LI-22
	Harness or connector	LI-22
	Stop light switch circuit	LI-22

TURN SIGNAL LIGHT SYSTEM:

Symptom	Suspected area	See page
No turn signal lights come on.	Harness or connector	LI-41
	Turn signal light circuit	LI-41
Only one turn signal light does not come on.	Bulb	LI-41
	Harness or connector	LI-41
	Turn signal light circuit	LI-41

HAZARD WARNING LIGHT SYSTEM:

Symptom	Suspected area	See page
Hazard warning light does not come on. (Turn signal light normal)	Harness or connector	LI-49
	Hazard warning switch circuit	LI-49

LICENSE PLATE LIGHT SYSTEM:

Symptom	Suspected area	See page
License plate light does not come on.	Bulb	LI-53
	Taillight circuit	LI-53

MAP LIGHT SYSTEM:

Symptom	Suspected area	See page
Map light does not come on.	DOME fuse	-
	Map light assembly	LI-147
	Harness or connector	-

ROOM LIGHT SYSTEM:

Symptom	Suspected area	See page
Room light assembly does not come on.	Harness or connector	LI-82
	Room light assembly	LI-151
	Bulb	-
	Illumination circuit	LI-82

TERMINALS OF ECU

1. CHECK MAIN BODY ECU

Main Body ECU (Rear View):

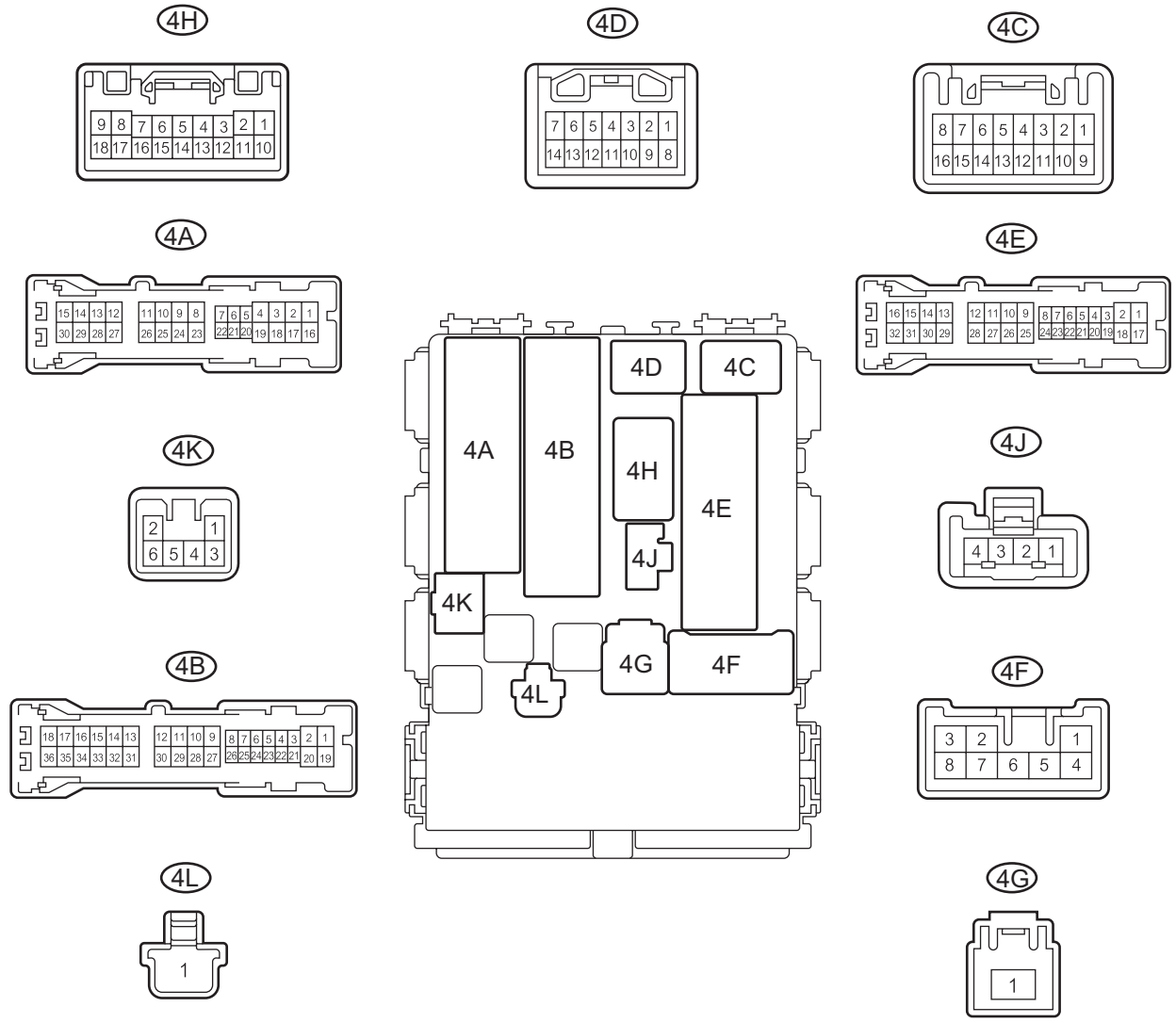

H

E114510E06

LI

Main Body ECU (Front View):

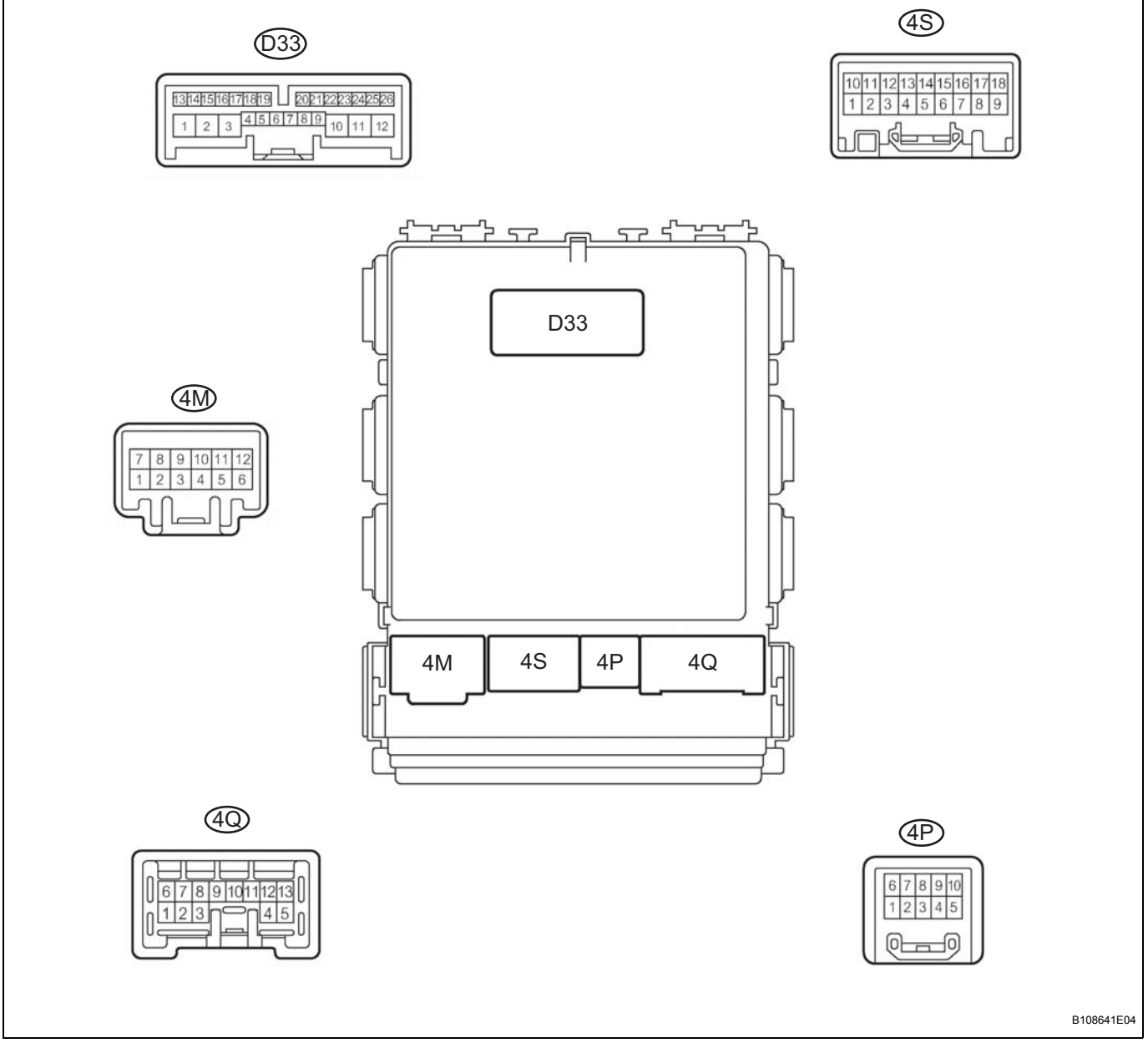

(a) Disconnect the 4B and 4E main body ECU (vehicle rear side) connectors.
(b) Measure the voltages of the wire harness side connectors.

Standard voltage:

Symbols (Terminals No.)	Wiring Color	Terminal Description	Condition	Specified Condition
BECU (4B-30) - GND1 (4E-17)	L - W-B	Battery (Power supply)	Always	11 to 14 V
GND1 (4E-17) - Body ground	W-B - Body ground	Ground	Always	Below 1 V

If the result is not as specified, there may be a malfunction in the wire harness.
(c) Reconnect the main body ECU (vehicle rear side) connectors.

(d) Measure the voltages of the wire harness side connectors.

Standard voltage:

Symbols (Terminals No.)	Wiring Color	Terminal Description	Condition	Specified Condition
DCTY (4A-21) - Body ground	R - Body ground	Driver door courtesy switch input	Driver door closed	11 to 14 V
DCTY (4A-21) - Body ground	R - Body ground	Driver door courtesy switch input	Driver door open	Below 1 V
PCTY (4A-24) - Body ground	L - Body ground	Front passenger door courtesy switch input	Front passenger door closed	11 to 14 V
PCTY (4A-24) - Body ground	L - Body ground	Front passenger side door courtesy switch input	Front passenger door open	Below 1 V
RRCY (4A-20)*3 - Body ground	L - Body ground	Rear RH door courtesy switch input	Rear RH door closed	11 to 14 V
RRCY (4A-20)*3 - Body ground	L - Body ground	Rear RH door courtesy switch input	Rear RH door open	Below 1 V
RRCY (4A-5)*3 - Body ground	G - Body ground	Rear LH door courtesy switch input	Rear LH door closed	11 to 14 V
RRCY (4A-5)*3 - Body ground	G - Body ground	Rear LH door courtesy switch input	Rear LH door open	Below 1 V
RRCY (4A-5)*4 - Body ground	Y - Body ground	Rear LH and RH door courtesy switch input	Rear LH and RH door closed	11 to 14 V
RRCY (4A-5)*4 - Body ground	Y - Body ground	Rear LH and RH door courtesy switch input	Rear LH or RH door open	Below 1 V
BCTY (4A-7)*1 - Body ground	SB - Body ground	Back door courtesy switch input	Back door closed	11 to 14 V
BCTY (4A-7)*1 - Body ground	SB - Body ground	Back door courtesy switch input	Back door open	Below 1 V
LCTY (4A-7)*2 - Body ground	SB - Body ground	Luggage compartment door courtesy switch input	Luggage compartment door closed	11 to 14 V
LCTY (4A-7)*2 - Body ground	SB - Body ground	Luggage compartment door courtesy switch input	Luggage compartment door open	Below 1 V
PKB (4C-2) - Body ground	Y - Body ground	Parking brake switch input	Parking brake switch ON	Below 1 V
PKB (4C-2) - Body ground	Y - Body ground	Parking brake switch input	Parking brake switch OFF	11 to 14 V
ILE (4K-2) - Body ground	P - Body ground	Illumination signal (To room light assembly)	Room light switch in DOOR position and room light assembly comes on	11 to 14 V
ILE (4K-2) - Body ground	P - Body ground	Illumination signal (To room light assembly)	Room light switch in OFF position and room light assembly comes off	Below 1 V

*1: Hatchback
*2: Sedan
*3: Hatchback, Sedan except *5
*4: Sedan *5
*5: Cold area specification, w/ Engine immobilizer system, w/ ABS, w/ Rear window defogger, w/ Power door lock system, w/ Daytime running light, w/ Remote control mirror, w/ Air conditioning
If the result is not as specified, there may be a malfunction in the wire harness.

DATA LIST / ACTIVE TEST

1. READ DATA LIST

HINT:

Using the intelligent tester's DATA LIST allows switch, sensor, actuator and other item values to be read without removing any parts. Reading the DATA LIST early in troubleshooting is one way to save time.

(a) Connect the intelligent tester to the DLC3.
(b) Turn the ignition switch ON.
(c) Read the DATA LIST according to the prompts displayed on the tester.

MAIN BODY ECU:

Item	Measurement Item/Dispay (Range)	Normal Condition	Diagnostic Note
D DOR CTY SW	D Door Courtesy SW/ON or OFF	ON :Driver door open OFF: Driver door closed	-
P DOR CTY SW	P Door Courtesy SW/ON or OFF	ON: Front passenger door open OFF: Front passenger door closed	-
RR DOR CTY SW	RR Door Courtesy SW/ON or OFF	ON: Rear right side door open OFF: Rear right side door closed	-
RL DOR CTY SW	RL Door Courtesy SW/ON or OFF	ON: Rear left side door open OFF: Rear left side door closed	-
BACK DOR CTY SW*1	Back Door Courtesy SW/ON or OFF	ON: Back door open OFF: Back door closed	-
LUGG COURTSY SW*2	Luggage Courtesy SW/ON or OFF	ON: Luggage compartment door open OFF: Luggage compartment door closed	-

*1: Hatchback
*2: Sedan

2. PERFORM ACTIVE TEST

HINT:

Performing the intelligent tester's ACTIVE TEST allows relays, VSV, actuators and other items to be operated without removing any parts. Performing the ACTIVE TEST early in troubleshooting is one way to save time. The DATA LIST can be displayed during the ACTIVE TEST.

(a) Connect the intelligent tester to the DLC3.
(b) Turn the ignition switch ON.
(c) Perform the ACTIVE TEST according to the prompts displayed on the tester.

ACTIVE TEST:

Item	Test Details/ Display (Range)	Diagnostic Note
ILLUMI OUTPUT	Illuminated Entry System ON/OFF	-
HAZARD	Hazard ON/OFF	-
TAIL LIGHT	Taillight Relay ON/OFF	-
HEAD LIGHT	Headlight Relay ON/OFF	-

Stop Light Switch Circuit

DESCRIPTION

When the stop light switch is turned on, the current flows to the stop lights to illuminate.

WIRING DIAGRAM

Hatchback:

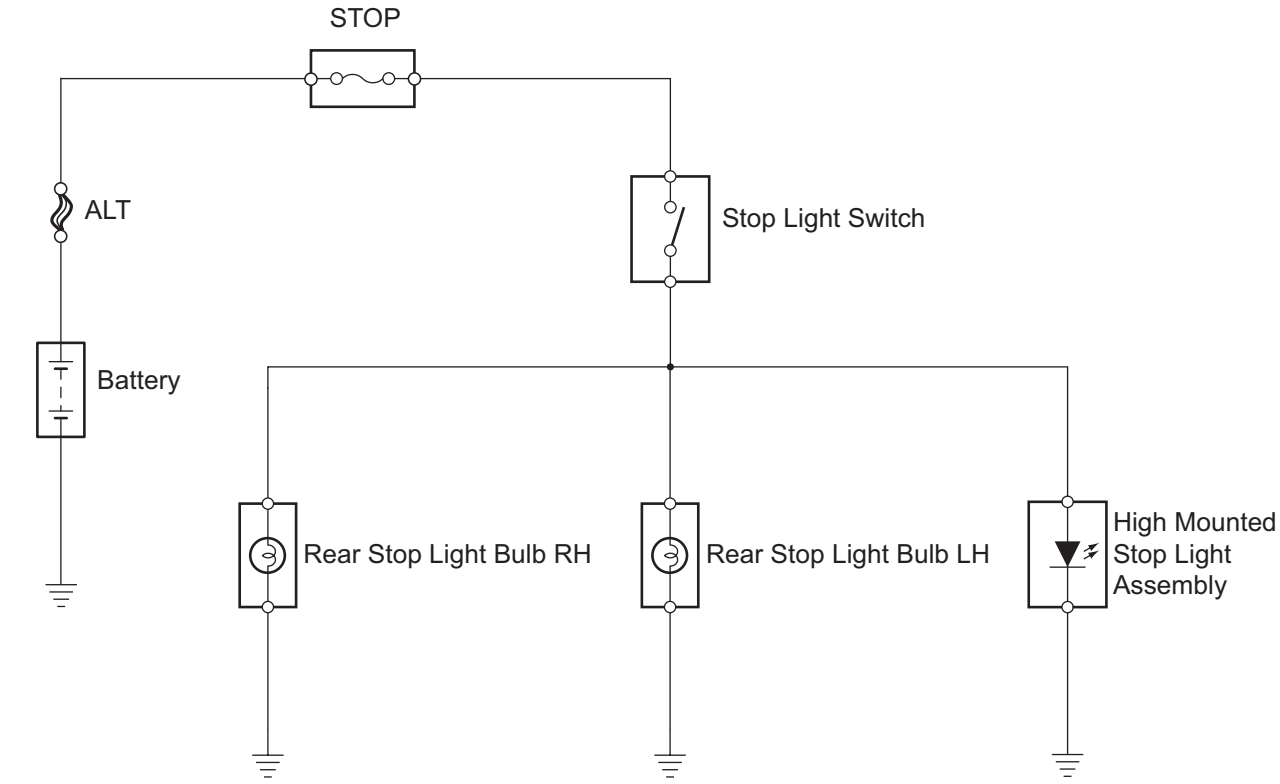

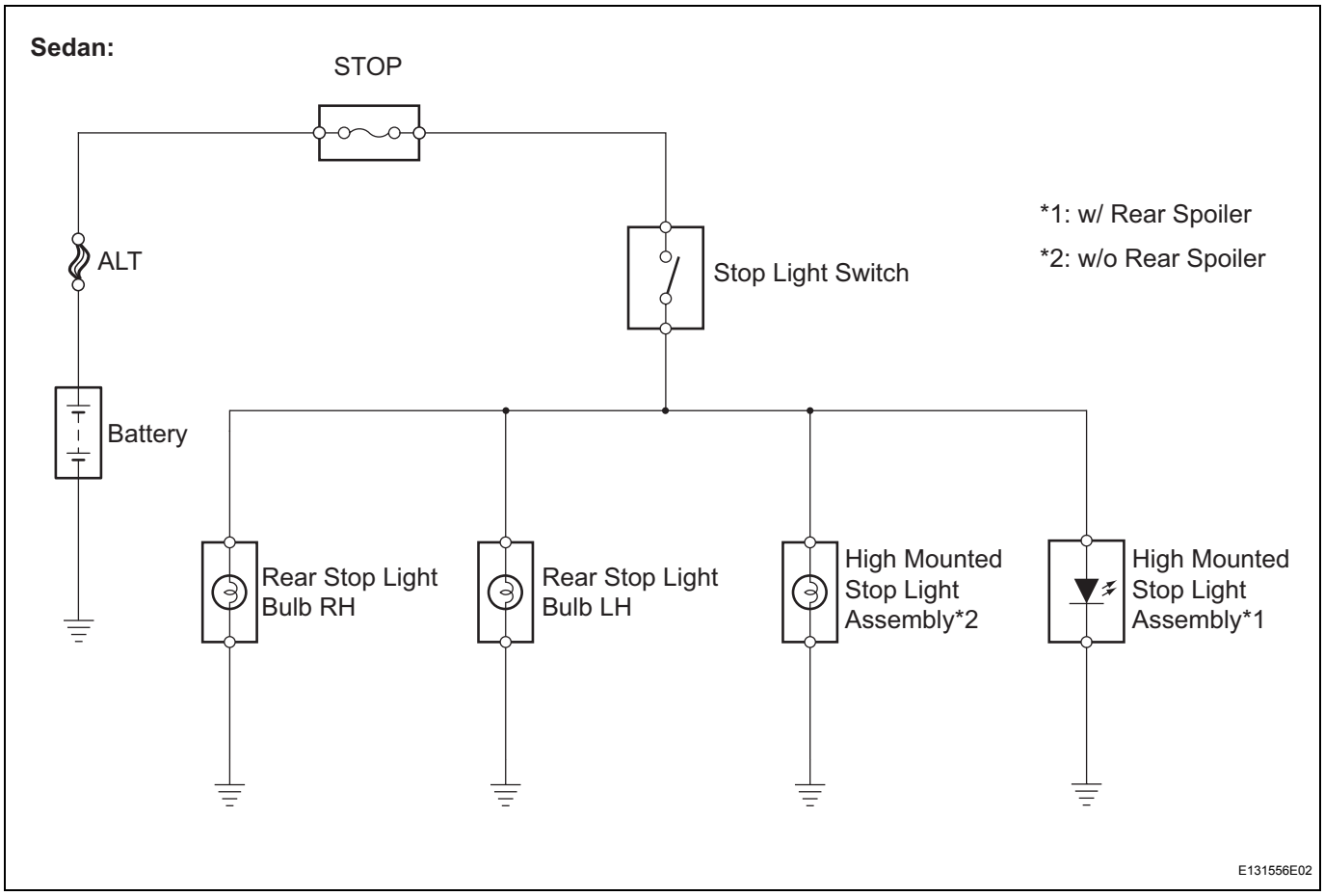

INSPECTION PROCEDURE

1	**INSPECT FUSE (STOP)**

(a) Remove the STOP fuse from the main body ECU.
(b) Measure the resistance.
Standard resistance:
Below 1 Ω
(c) Reinstall the STOP fuse.

NG → **REPLACE FUSE**

OK

2	**INSPECT BULB (REAR STOP LIGHT BULB)**

Component Side:

High Mounted Stop Light Assembly



Rear Combination Light Assembly*

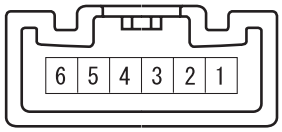

*: LH or RH

B129902E02

(a) Hatchback:
(1) Remove the high mounted stop light assembly.
(2) Remove the rear combination light assembly.
(3) Apply battery voltage to the terminals and check that the rear stop light and high mounted stop light illuminates.

Standard:

High Mounted Stop Light

Measurement Condition	Standard
Positive battery - Terminal 1 Negative battery - Terminal 2	High mounted stop light illuminates

Rear Stop Light

Measurement Condition	Standard
Positive battery - Terminal 5 Negative battery - Terminal 6	Rear stop light illuminates

(4) Reinstall the high mounted stop light assembly.
(5) Reinstall the rear combination light assembly.

Component Side:

w/ Rear Spoiler:

High Mounted Stop Light Assembly



w/o Rear Spoiler:

High Mounted Stop Light Assembly

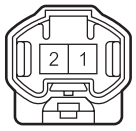

Rear Combination Light Assembly*

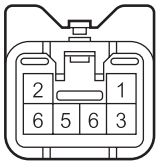

*: LH or RH

B142262E01

(b) Sedan:
(1) Remove the high mounted stop light assembly.
(2) Remove the rear combination light assembly.
(3) Apply battery voltage to the terminals and check that the rear stop light and high mounted stop light illuminates.

Standard:

High Mounted Stop Light (w/ Rear Spoiler)

Measurement Condition	Standard
Positive battery - Terminal 2 Negative battery - Terminal 1	High mounted stop light illuminates

High Mounted Stop Light (w/o Rear Spoiler)

Measurement Condition	Standard
Positive battery - Terminal 1 Negative battery - Terminal 2	High mounted stop light illuminates

Rear Stop Light

Measurement Condition	Standard
Positive battery - Terminal 1 Negative battery - Terminal 6	Rear stop light illuminates

(4) Reinstall the high mounted stop light assembly.
(5) Reinstall the rear combination light assembly.

NG	**REPLACE BULB**

LI

OK

3	INSPECT STOP LIGHT SWITCH

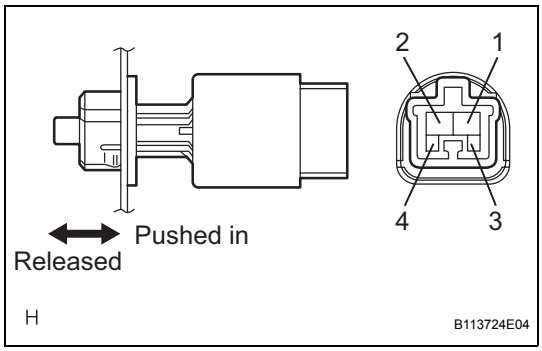

(a) Remove the stop light switch.
(b) Measure the resistance.
Standard resistance

Tester Connection	Condition	Specified Condition
1 - 2	Switch pin released	Below 1 Ω
3 - 4	Switch pin pushed in	10 kΩ or higher
1 - 2	Switch pin pushed in	10 kΩ or higher
3 - 4	Switch pin released	Below 1 Ω

(c) Reinstall the stop light switch.

NG → **REPLACE STOP LIGHT SWITCH**

OK

4	CHECK HARNESS AND CONNECTOR (FUSE - STOP LIGHT SWITCH)

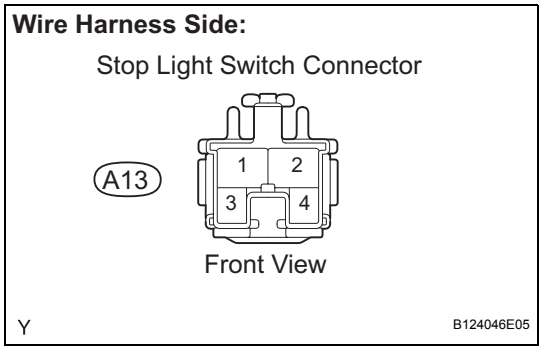

(a) Disconnect the A13 stop light switch connector.
(b) Measure the voltage.
Standard voltage

Tester Connection	Condition	Specified Condition
A13-2 - Body ground	Always	11 to 14 V

(c) Reconnect the stop light switch connector.

NG → **REPAIR OR REPLACE HARNESS OR CONNECTOR**

OK

5	CHECK HARNESS AND CONNECTOR (STOP LIGHT SWITCH - REAR STOP LIGHT)

Wire Harness Side:

Stop Light Switch Connector

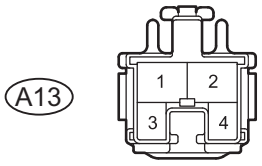

Front View

Rear Combination Light Assembly Connector

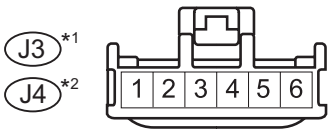

Front View

*1: RH

*2: LH

High Mounted Stop Light Assembly Connector

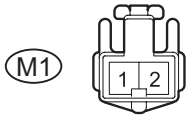

Front View

E120438E04

(a) Hatchback:
  (1) Disconnect the A13 stop light switch connector.
  (2) Disconnect the J3 and J4 rear combination light assembly connectors.
  (3) Disconnect the M1 high mounted stop light assembly connector.
  (4) Measure the resistance.

Standard resistance

Tester Connection	Specified Condition
A13-1 - J3-5	Below 1 Ω
A13-1 - J4-5	Below 1 Ω
A13-1 - M1-1	Below 1 Ω
A13-1 or J3-5 - Body ground	10 kΩ or higher
A13-1 or J4-5 - Body ground	10 kΩ or higher
A13-1 or M1-1 - Body ground	10 kΩ or higher

  (5) Reconnect the stop light switch connector.
  (6) Reconnect the rear combination light assembly connectors.
  (7) Reconnect the high mounted stop light assembly connector.

LI

Wire Harness Side:

Stop Light Switch Connector

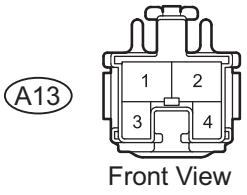

Front View

Rear Combination Light Assembly Connector

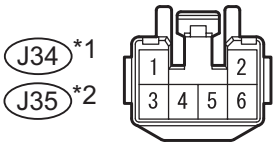

Front View

*1: RH

*2: LH

High Mounted Stop Light Assembly

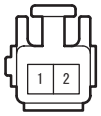

Front View

High Mounted Stop Light Assembly

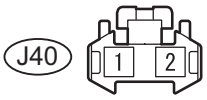

Front View

B142263E01

(b) Sedan:

(1) Disconnect the A13 stop light switch connector.
(2) Disconnect the J34 and J35 rear combination light assembly connectors.
(3) Remove the high mounted stop light assembly. (With rear spoiler)
(4) Disconnect the J40 high mounted stop light assembly connector. (Without rear spoiler)
(5) Measure the resistance.

Standard resistance

Tester Connection	Specified Condition
A13-1 - J34-1	Below 1 Ω
A13-1 - J35-1	Below 1 Ω
A13-1 - High mounted stop light connector-2*1	Below 1 Ω
A13-1 - J40-1*2	Below 1 Ω
A13-1 or J34-1 - Body ground	10 kΩ or higher
A13-1 or J35-1 - Body ground	10 kΩ or higher
A13-1 or High mounted stop light connector-2*1 - Body ground	10 kΩ or higher
A13-1 or J40-1*2 - Body ground	10 kΩ or higher

*1: w/ Rear spoiler
*2: w/o Rear spoiler

(6) Reconnect the stop light switch connector.
(7) Reconnect the rear combination light assembly connectors.
(8) Reinstall the high mounted stop light assembly connector. (With rear spoiler)
(9) Reconnect the high mounted stop light assembly connector. (Without rear spoiler)

NG → **REPAIR OR REPLACE HARNESS OR CONNECTOR**

OK

REPAIR OR REPLACE HARNESS OR CONNECTOR (REAR STOP LIGHT - BODY GROUND)

Headlight Relay Circuit

DESCRIPTION

When the light control switch, located on the headlight dimmer switch, is turned to the HEAD position, the H-LP/AMT relay illuminates the headlights.

WIRING DIAGRAM

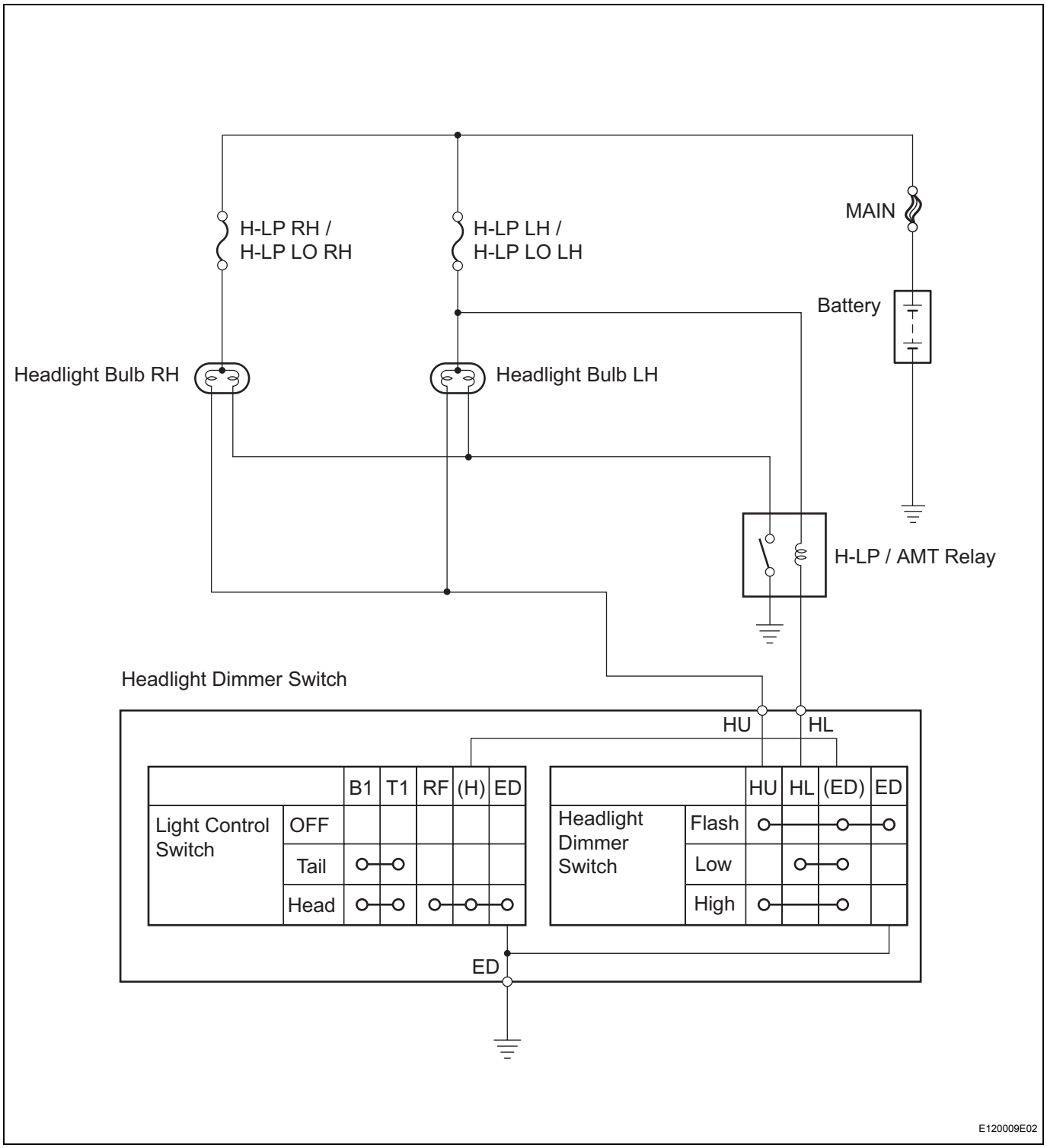

INSPECTION PROCEDURE

1	PERFORM ACTIVE TEST BY INTELLIGENT TESTER (HEAD LIGHT)

(a) Connect the intelligent tester to the DLC3.
(b) Turn the ignition switch ON and turn the tester ON.
(c) Select the item below in the ACTIVE TEST and then check the relay operation.

Main Body ECU

Item	Test Details: Display (Range)	Diagnostic Note
HEAD LIGHT	Headlight Relay ON/OFF	-

OK:
Headlights come on

OK → **Go to step 7**

NG

2	INSPECT FUSE (H-LP RH/H-LP LO RH, H-LP LH/H-LP LO LH)

(a) Remove the H-LP RH/H-LP LO RH and H-LP LH/H-LP LO LH fuses from the engine room relay block.
(b) Measure the resistance.
Standard resistance:
Below 1 Ω
(c) Reinstall the H-LP RH/H-LP LO RH and H-LP LH/H-LP LO LH fuses

NG → **REPLACE FUSE**

OK

3	INSPECT BULB (HEADLIGHT BULB)

Component Side:

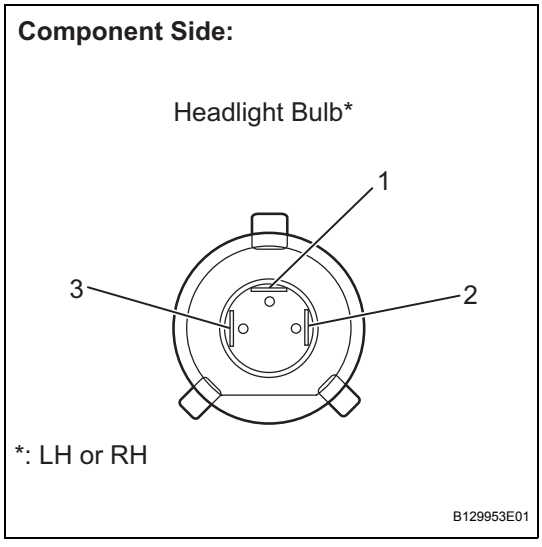

(a) Disconnect the B4 and B6 headlight connectors.
(b) Apply battery voltage to the terminals and check that the headlight illuminates.
Standard

Measurement Condition	Standard
Positive battery - Terminal 1 Negative battery - Terminal 3	Headlight illuminates (HI-Beam)
Positive battery - Terminal 2 Negative battery - Terminal 3	Headlight illuminates (LO-Beam)

(c) Reconnect the headlight connectors.

NG → **REPLACE BULB**

OK

4 INSPECT H-LP/AMT RELAY

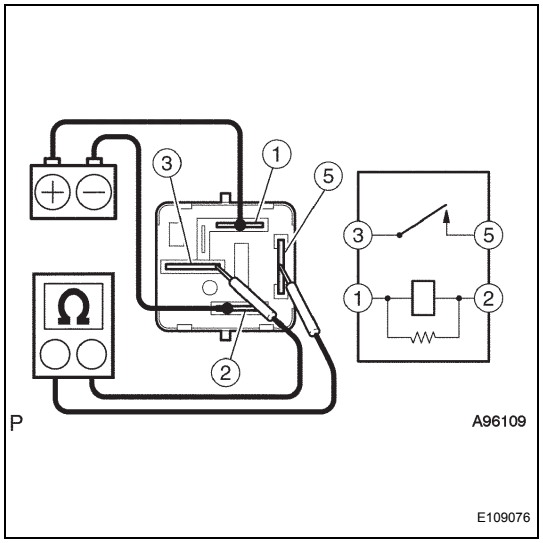

(a) Remove the H-LP/AMT relay from the engine room relay block No. 2.
(b) Measure the resistance.
Standard resistance

Tester Connection	Specified Condition
3 - 5	10 kΩ or higher
3 - 5	Below 1 Ω (When battery voltage applied to terminals 1 and 2)

(c) Reinstall the H-LP/AMT relay.

NG → **REPLACE H-LP/AMT RELAY**

OK

5 CHECK HARNESS AND CONNECTOR (FUSE - HEADLIGHT BULB)

Wire Harness Side:

Headlight Bulb Connector

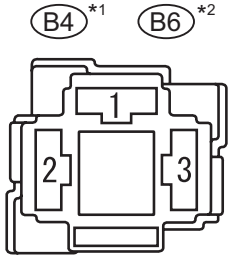

*1: RH
*2: LH

B125793E04

(a) Disconnect the B4 and B6 headlight bulb connectors.
(b) Measure the voltage.
Standard voltage

Tester Connection	Condition	Specified Condition
B4-3 - Body ground	Always	11 to 14 V
B6-3 - Body ground	Always	11 to 14 V

(c) Reconnect the headlight bulb connectors.

NG → **REPAIR OR REPLACE HARNESS OR CONNECTOR**

OK

6 CHECK HARNESS AND CONNECTOR (HEADLIGHT - H-LP/AMT RELAY)

Component Side:

Engine Room Relay Block No, 2

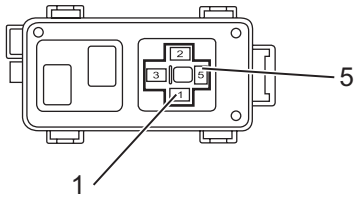

B125794E01

(a) Remove the H-LP/AMT relay from the engine room relay block No. 2.
(b) Measure the voltage.
Standard voltage

Tester Connection	Condition	Specified Condition
1 - Body ground	Always	11 to 14 V
5 - Body ground	Always	11 to 14 V

(c) Reinstall the H-LP/AMT relay.

NG → **REPAIR OR REPLACE HARNESS OR CONNECTOR**

OK

REPAIR OR REPLACE HARNESS OR CONNECTOR (HEADLIGHT - HEADLIGHT DIMMER SWITCH)

7 INSPECT HEADLIGHT DIMMER SWITCH

Component Side:

Headlight Dimmer Switch

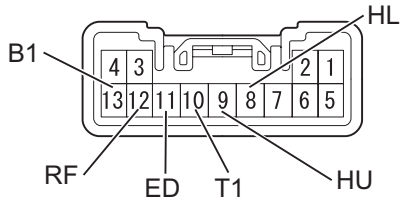

E123010E02

(a) Remove the headlight dimmer switch.
(b) Inspect the light control switch.
(c) Measure the resistance.
Standard resistance

Tester Connection	Condition	Specified Condition
10 (T1) - 13 (B1)	TAIL	Below 1 Ω
10 (T1) - 13 (B1)	OFF	10 kΩ or higher
10 (T1) - 13 (B1)	HEAD	Below 1 Ω
10 (T1) - 13 (B1)	OFF	10 kΩ or higher
11 (ED) - 12 (RF)	HEAD	Below 1 Ω
11 (ED) - 12 (RF)	OFF	10 kΩ or higher

(d) Inspect the headlight dimmer switch.
(e) Measure the resistance.
Standard resistance

Tester Connection	Condition	Specified Condition
9 (HU) - 11 (ED)	FLASH	Below 1 Ω
8 (HL) - 11 (ED)	LOW BEAM	Below 1 Ω
9 (HU) - 11 (ED)	HI BEAM	Below 1 Ω

(f) Reinstall the headlight dimmer switch.

NG → **REPLACE HEADLIGHT DIMMER SWITCH**

OK

8	CHECK HARNESS AND CONNECTOR (H-LP/AMT RELAY - HEADLIGHT DIMMER SWITCH)

Wire Harness Side:

Headlight Dimmer Switch Connector

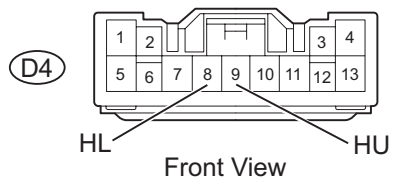

Y

B124050E07

(a) Disconnect the D4 headlight dimmer switch connector.

(b) Measure the voltage.

Standard voltage

Tester Connection	Condition	Specified Condition
D4-8 (HL) - Body ground	Always	11 to 14 V
D4-9 (HU) - Body ground	Always	11 to 14 V

(c) Reconnect the headlight dimmer switch connector.

NG → REPAIR OR REPLACE HARNESS OR CONNECTOR

OK

REPAIR OR REPLACE HARNESS OR CONNECTOR (HEADLIGHT DIMMER SWITCH - BODY GROUND)

LI

DRL Relay Circuit

DESCRIPTION

When the engine is started, signals are transmitted from the generator to the running light relay assembly, causing the headlights to illuminate.

WIRING DIAGRAM

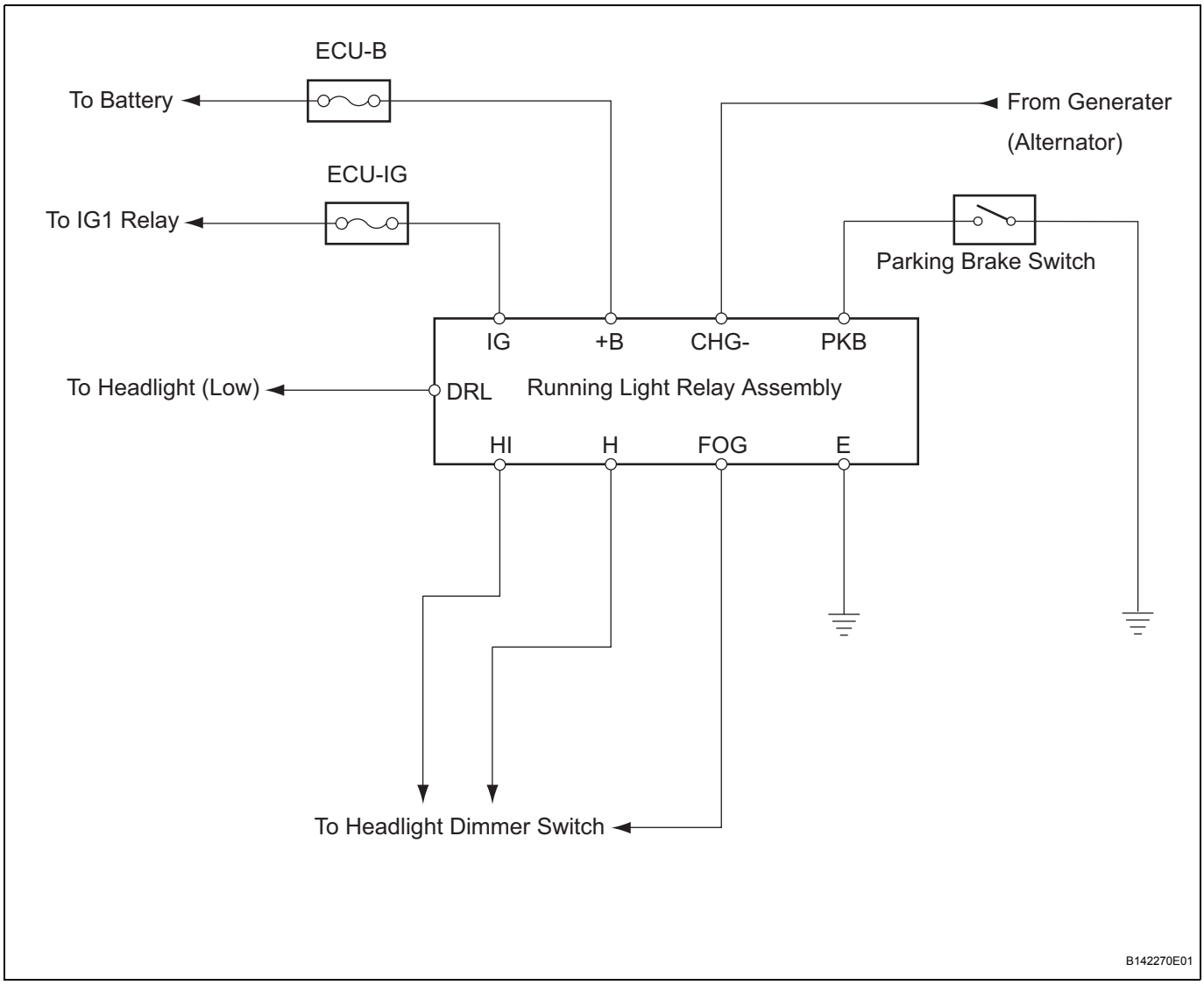

INSPECTION PROCEDURE

1	INSPECT FUSE (ECU-B, ECU-IG)

(a) Remove the ECU-B fuse from the engine room relay block.
(b) Remove the ECU-IG fuse from the main body ECU.
(c) Measure the resistance.
Standard resistance:
Below 1 Ω
(d) Reinstall the ECU-B and ECU-IG fuses.

NG → REPLACE FUSE

OK

2 CHECK HARNESS AND CONNECTOR (FUSE - RUNNING LIGHT RELAY ASSEMBLY)

Wire Harness Side:

Running Light Relay Assembly Connector

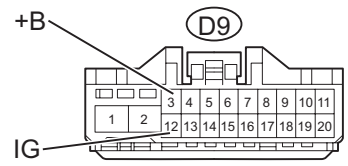

B142269E01

(a) Disconnect the D9 running light relay assembly connector.
(b) Measure the voltage.
Standard voltage

Tester Connection	Condition	Specified Condition
D9-3 (+B) - Body ground	Always	11 to 14 V
D9-12 (IG) - Body ground	Ignition switch ON	11 to 14 V

(c) Reconnect the running light relay assembly connector.

NG → REPAIR OR REPLACE HARNESS OR CONNECTOR

OK

3 CHECK HARNESS AND CONNECTOR (RUNNING LIGHT RELAY ASSEMBLY - HEAD LIGHT)

Wire Harness Side:

Running Light Relay Assembly Connector

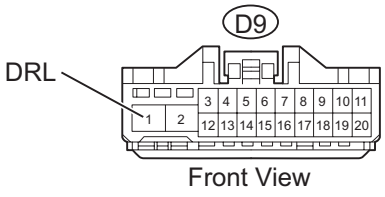

B142269E02

(a) Disconnect the D9 running light relay assembly connector.
(b) Measure the voltage.
Standard voltage

Tester Connection	Condition	Specified Condition
D9-1 (DRL) - Body ground	Always	11 to 14 V

(c) Reconnect the running light relay assembly connector.

NG → REPAIR OR REPLACE HARNESS OR CONNECTOR

OK

4 CHECK HARNESS AND CONNECTOR (RUNNING LIGHT RELAY ASSEMBLY - HEAD LIGHT DIMMER SWITCH)

Wire Harness Side:

Running Light Relay Assembly Connector

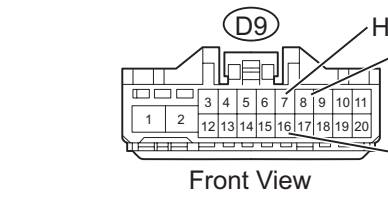

B142269E03

(a) Disconnect the D9 running light relay assembly connector.
(b) Measure the voltage.
Standard voltage

Tester Connection	Condition	Specified Condition
D9-7 (H) - Body ground	Always	11 to 14 V
D9-16 (FOG) - Body ground	Fog light switch ON	11 to 14 V
D9-8 (HI) - Body ground	Light control switch OFF	11 to 14 V

LI

(c) Reconnect the running light relay assembly connector.

NG → **REPAIR OR REPLACE HARNESS OR CONNECTOR**

OK

5 CHECK HARNESS AND CONNECTOR (GENERATER - RUNNING LIGHT RELAY ASSEMBLY)

Wire Harness Side:

Running Light Relay Assembly Connector

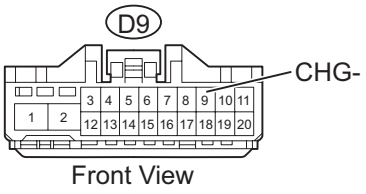

(a) Disconnect the D9 running light relay assembly connector.
(b) Measure the voltage.
Standard voltage

Tester Connection	Condition	Specified Condition
D9-9 (CHG-) - Body ground	Confirm that vehicle is stopped and engine is idling	11 to 14 V

(c) Reconnect the running light relay assembly connector.

NG → **REPAIR OR REPLACE HARNESS OR CONNECTOR**

OK

6 CHECK HARNESS AND CONNECTOR (RUNNING LIGHT RELAY ASSEMBLY - PARKING BRAKE SWITCH)

Wire Harness Side:

Parking Brake Switch Connector

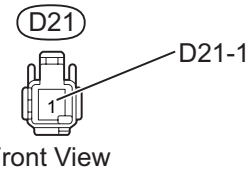

Running Light Relay Assembly Connector

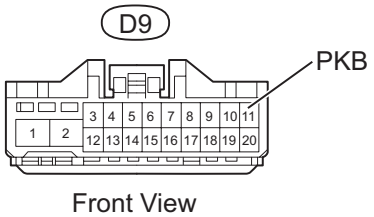

(a) Disconnect the D9 running light relay assembly connector.
(b) Disconnect the D21 parking brake switch connector.
(c) Measure the resistance.
Standard resistance

Tester Connection	Specified Condition
D9-11 (PKB) - D21-1	Below 1 Ω

(d) Reconnect the parking brake switch connector.
(e) Reconnect the running light relay assembly connector.

NG → **REPAIR OR REPLACE HARNESS OR CONNECTOR**

OK

7	CHECK HARNESS AND CONNECTOR (RUNNING LIGHT RELAY - BODY GROUND)

Wire Harness Side:

Running Light Relay Assembly Connector

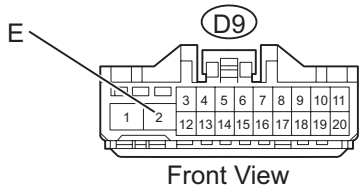

(a) Disconnect the D9 running light relay assembly connector.

(b) Measure the resistance.

Standard resistance

Tester Connection	Specified Condition
D9-2 (E) - Body ground	Below 1 Ω

(c) Reconnect the running light relay assembly connector.

NG → **REPAIR OR REPLACE HARNESS OR CONNECTOR**

OK

REPLACE RUNNING LIGHT RELAY ASSEMBLY

LI

Front Fog Light Circuit

DESCRIPTION

When the front fog light switch is turned on, the front fog light relay illuminates the front fog lights.

WIRING DIAGRAM

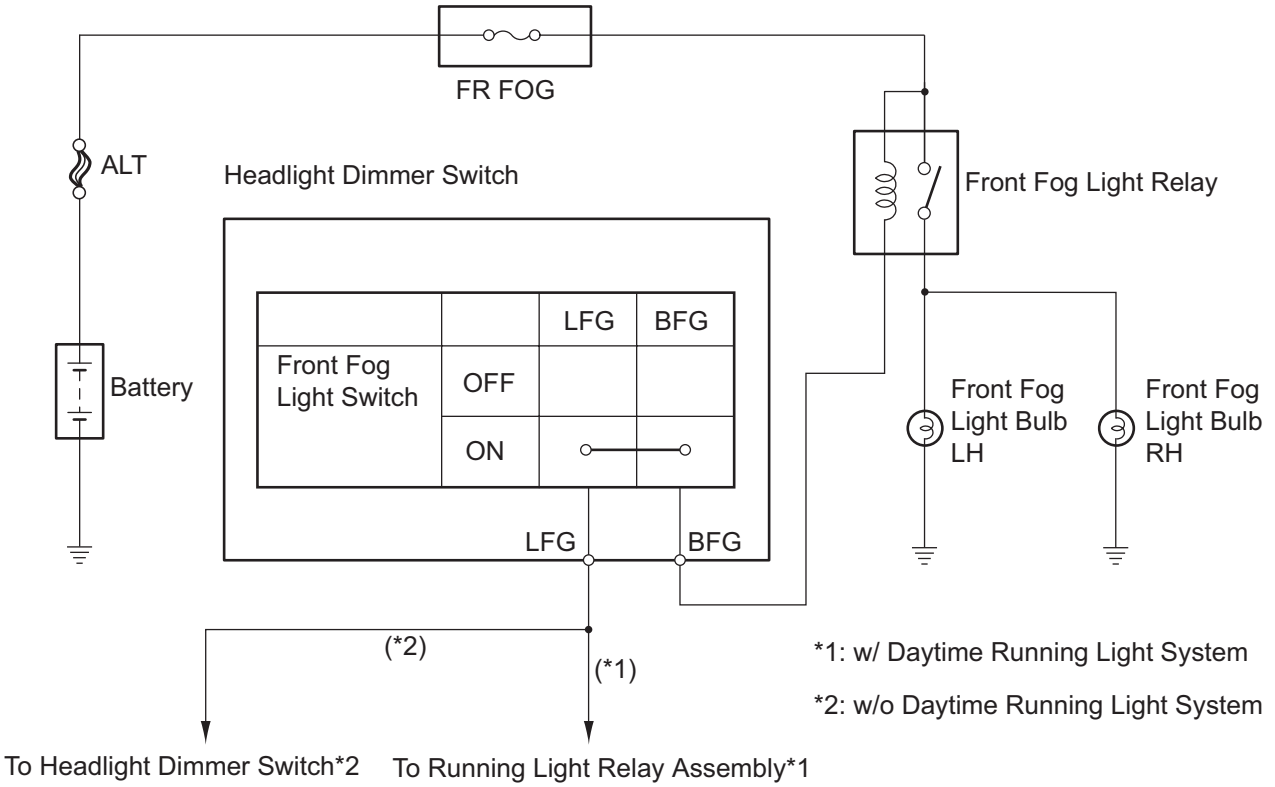

INSPECTION PROCEDURE

1	CHECK WHETHER FRONT FOG LIGHTS ILLUMINATE

(a) Check whether the front fog lights illuminate.
Result

Condition	Proceed to
Neither left nor right fog light illuminates	A
Either left or right fog light illuminates	B

B → Go to step 7

A

2	INSPECT FUSE (FR FOG)

(a) Remove the FR FOG fuse from the main body ECU.
(b) Measure the resistance.
Standard resistance:
Below 1 Ω
(c) Reinstall the FR FOG fuse.

NG → **REPLACE FUSE**

OK

3	INSPECT FRONT FOG LIGHT RELAY

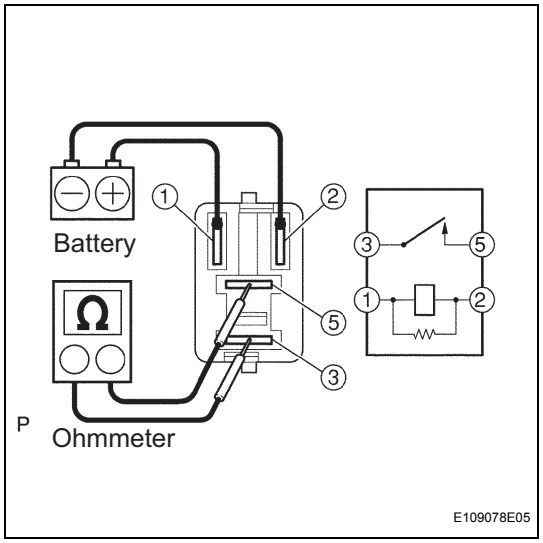

(a) Remove the front fog light relay.
(b) Measure the resistance.
Standard resistance

Tester Connection	Specified Condition
3 - 5	10 kΩ or higher
3 - 5	Below 1 Ω (When battery voltage applied to terminals 1 and 2)

(c) Reinstall the front fog light relay.

NG → **REPLACE FRONT FOG LIGHT RELAY**

OK

4	CHECK HARNESS AND CONNECTOR (FUSE - FRONT FOG LIGHT RELAY)

Component Side:

Front Fog Light Relay

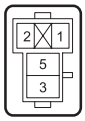

B125720E01

(a) Remove the front fog light relay.
(b) Measure the voltage.
Standard voltage

Tester Connection	Condition	Specified Condition
2 - Body ground	Always	11 to 14 V
5 - Body ground	Always	11 to 14 V

(c) Reinstall the front fog light relay.

NG → **REPAIR OR REPLACE HARNESS OR CONNECTOR**

OK

5 INSPECT HEADLIGHT DIMMER SWITCH

Component Side:

Headlight Dimmer Switch

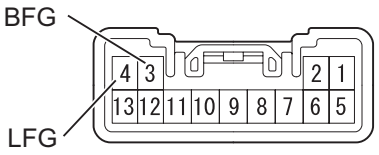

E123010E14

(a) Remove the headlight dimmer switch.
(b) Inspect the front fog light switch.
(c) Measure the resistance.
Standard resistance

Tester Connection	Condition	Specified Condition
3 (BFG) - 4 (LFG)	Front fog light switch OFF	10 kΩ or higher
3 (BFG) - 4 (LFG)	Front fog light switch ON	Below 1 Ω

(d) Reinstall the headlight dimmer switch.

NG → REPLACE HEADLIGHT DIMMER SWITCH

OK

6 CHECK HARNESS AND CONNECTOR (FRONT FOG LIGHT RELAY - HEADLIGHT DIMMER SWITCH)

Wire Harness Side:

Headlight Dimmer Switch Connector

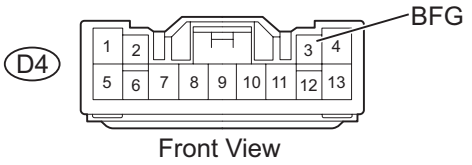

Front View

Y

B124050E08

(a) Disconnect the D4 headlight dimmer switch connector.
(b) Measure the voltage.
Standard voltage

Tester Connection	Condition	Specified Condition
D4-3 (BFG) - Body ground	Always	11 to 14 V

(c) Reconnect the headlight dimmer switch connector.

NG → REPAIR OR REPLACE HARNESS OR CONNECTOR

OK

REPAIR OR REPLACE HARNESS OR CONNECTOR (HEADLIGHT DIMMER SWITCH - BODY GROUND)

7 INSPECT BULB (FRONT FOG LIGHT BULB)

Component Side:

Front Fog Light Assembly*

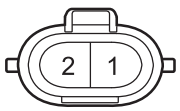

*: LH or RH

B129855E01

(a) Remove the front fog light assembly.
(b) Apply battery voltage to the terminals and check that the front fog light illuminates.
Standard

Measurement Condition	Standard
Positive battery - Terminal 2 Negative battery - Terminal 1	Front fog light illuminates

(c) Reinstall the front fog light assembly.

NG → REPLACE BULB

OK

8	CHECK HARNESS AND CONNECTOR (FRONT FOG LIGHT RELAY - FRONT FOG LIGHT ASSEMBLY)

Wire Harness Side:

Front Fog Light Assembly Connector

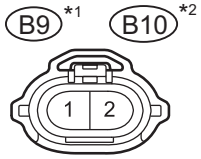

Front View

*1: RH

*2: LH

B125795E04

(a) Disconnect the B9 and B10 front fog light assembly connectors.

(b) Measure the voltage.

Standard voltage

Tester Connection	Condition	Specified Condition
B9-2 - Body ground	Front fog light switch ON	11 to 14 V
B10-2 - Body ground	Front fog light switch ON	11 to 14 V

(c) Reconnect the front fog light assembly connectors.

NG → **REPAIR OR REPLACE HARNESS OR CONNECTOR**

OK

REPAIR OR REPLACE HARNESS OR CONNECTOR (FRONT FOG LIGHT ASSEMBLY - BODY GROUND)

LI

Turn Signal Light Circuit

DESCRIPTION

The turn signal flasher relay in the main body ECU turns on when it receives signals from the headlight dimmer switch integrated with the turn signal switch, causing the turn signal lights to flash.

WIRING DIAGRAM

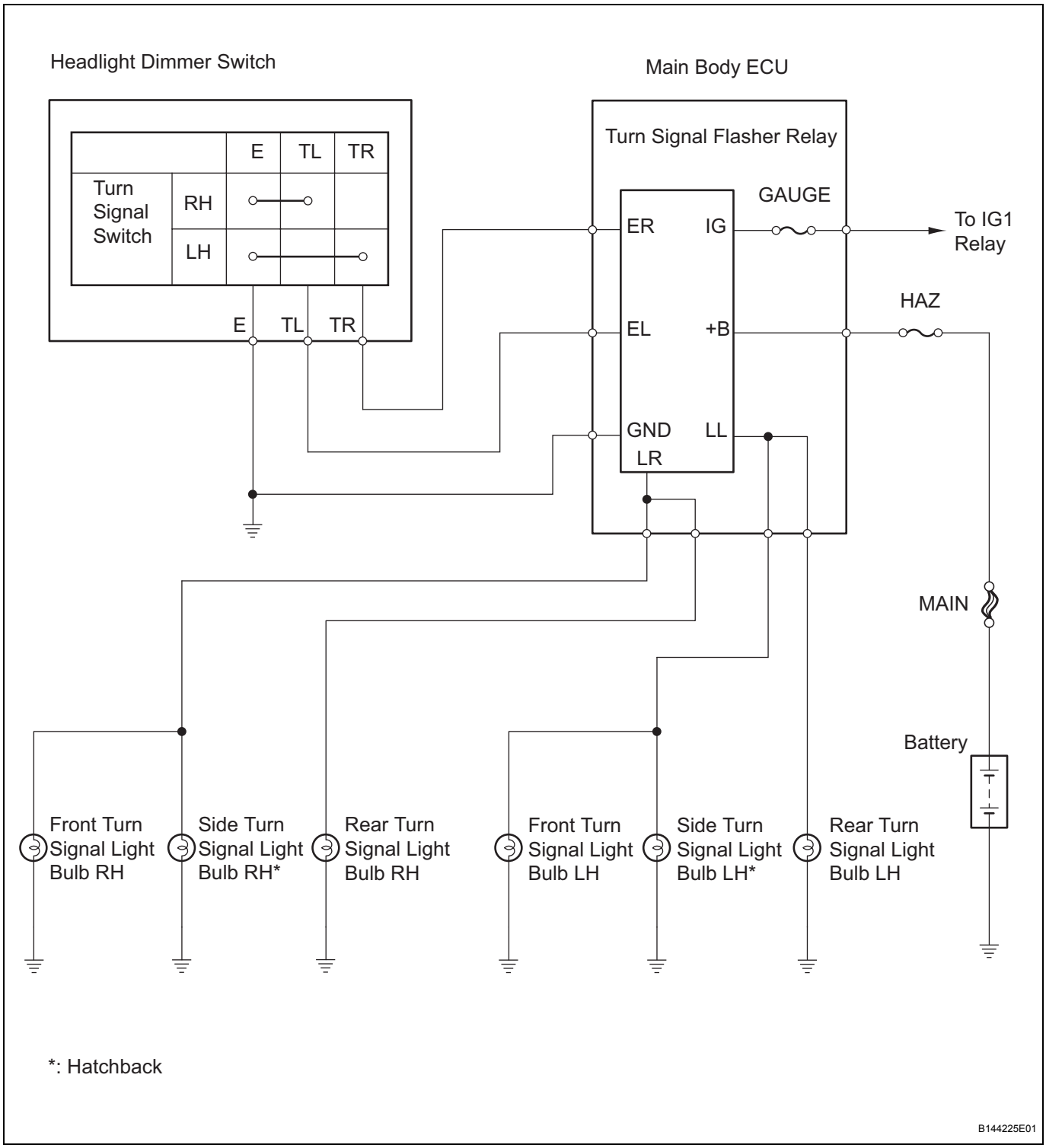

INSPECTION PROCEDURE

1	CHECK OPERATION OF TURN SIGNAL LIGHT

(a) When the turn signal light switch is operated, check that the appropriate turn signal light flashes.

Result

Condition	Proceed To
No lights flash	A
Front turn signal light (LH or RH) does not flash	B
Side turn signal light (LH or RH) does not flash (Hatchback)	C
Rear turn signal light (LH or RH) does not flash	D

B → Go to step 6

C → Go to step 8

D → Go to step 10

A

2	INSPECT FUSE (GAUGE, HAZ)

(a) Remove the GAUGE fuse from the main body ECU.
(b) Remove the HAZ fuse from the engine room relay block.
(c) Measure the resistance.
Standard resistance:
Below 1 Ω
(d) Reinstall the GAUGE and HAZ fuses.

NG → REPLACE FUSE

OK

3	CHECK HARNESS AND CONNECTOR (FUSE - MAIN BODY ECU)

Wire Harness Side:

Main Body ECU Connector

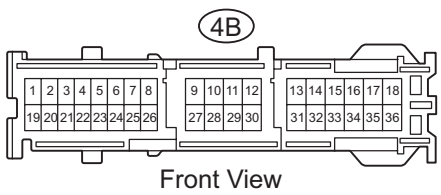

(a) Disconnect the 4B main body ECU connector.
(b) Measure the voltage.
Standard voltage

Tester Connection	Condition	Specified Condition
4B-32 - Body ground	Always	11 to 14 V

(c) Reconnect the main body ECU connector.

NG → REPAIR OR REPLACE HARNESS OR CONNECTOR

OK

4 INSPECT HEADLIGHT DIMMER SWITCH

Component Side:

Headlight Dimmer Switch

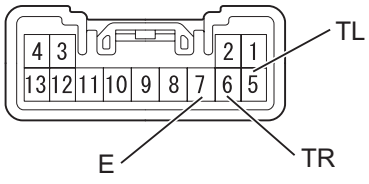

E123010E04

(a) Remove the headlight dimmer switch.
(b) Inspect the turn signal switch.
(c) Measure the resistance.
Standard resistance

Tester Connection	Condition	Specified Condition
6 (TR) - 7 (E)	Right	Below 1 Ω
6 (TR) - 7 (E)	Neutral	10 kΩ or higher
5 (TL) - 7 (E)	Left	Below 1 Ω
5 (TL) - 7 (E)	Neutral	10 kΩ or higher

(d) Reinstall the headlight dimmer switch.

NG → **REPLACE HEADLIGHT DIMMER SWITCH**

OK

5 CHECK HARNESS AND CONNECTOR (HEADLIGHT DIMMER SWITCH - MAIN BODY ECU)

Wire Harness Side:

Headlight Dimmer Switch Connector

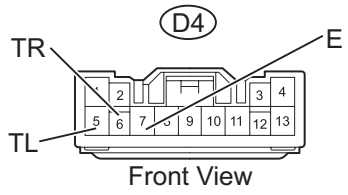

Front View

Main Body ECU Connector

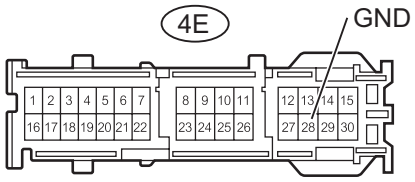

Front View

Main Body ECU Connector

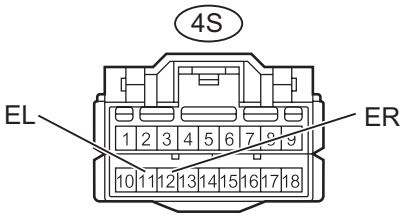

Front View

B135313E01

(a) Disconnect the D4 headlight dimmer switch connector.
(b) Disconnect the 4S and 4E and main body ECU connectors.
(c) Measure the resistance.
Standard resistance

Tester Connection	Specified Condition
D4-5 (TL) - 4S-11 (EL)	Below 1 Ω
D4-6 (TR) - 4S-12 (ER)	Below 1 Ω
D4-7 (E) - 4E-28 (GND)	Below 1 Ω
D4-5 (TL) or 4S-11 (EL) - Body ground	10 kΩ or higher
D4-6 (TR) or 4S-12 (ER) - Body ground	10 kΩ or higher
D4-7 (E) or 4E-28 (GND) - Body ground	10 kΩ or higher

(d) Reconnect the headlight dimmer switch connector.
(e) Reconnect the main body ECU connectors.

NG → **REPAIR OR REPLACE HARNESS OR CONNECTOR**

OK

REPLACE MAIN BODY ECU

6	INSPECT BULB (FRONT TURN SIGNAL LIGHT BULB)

Component Side:

Front Turn Signal Light*

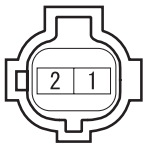

*: LH or RH

B129905E02

(a) Hatchback:
(1) Remove the front turn signal light.
(2) Apply battery voltage to the terminals and check that the front turn signal light illuminates.
(3) Reinstall the front turn signal light.

Standard

Measurement Condition	Standard
Positive battery - Terminal 1 Negative battery - Terminal 2	Front turn signal light illuminates

Component Side:

Front Turn Signal Light*

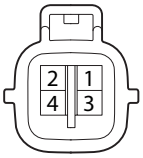

*: LH or RH

Y

B144226E01

(b) Sedan:
(1) Remove the front turn signal light.
(2) Apply battery voltage to the terminals and check that the front turn signal light illuminates.
(3) Reinstall the front turn signal light.

Standard

Measurement Condition	Standard
Positive battery - Terminal 1 Negative battery - Terminal 2	Front turn signal light illuminates

NG → **REPLACE BULB**

OK

LI

7	CHECK HARNESS AND CONNECTOR (MAIN BODY ECU - FRONT TURN SIGNAL LIGHT)

Wire Harness Side:

Front Turn Signal Light Connector

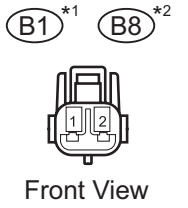

Main Body ECU Connector

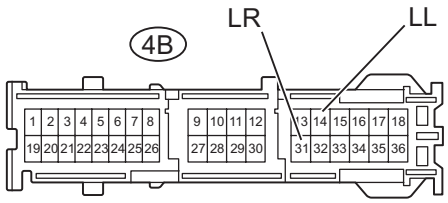

B135315E01

(a) Hatchback:
(1) Disconnect the B1 and B8 front turn signal light connectors.
(2) Disconnect the 4B main body ECU connector.
(3) Measure the resistance.
Standard resistance

Tester Connection	Specified Condition
4B-31 (LR) - B1-1	Below 1 Ω
4B-14 (LL) - B8-1	Below 1 Ω
4B-31 (LR) or B1-1 - Body ground	10 kΩ or higher
4B-14 (LL) or B8-1 - Body ground	10 kΩ or higher

(4) Reconnect the front turn signal light connectors.
(5) Reconnect the main body ECU connector.

Wire Harness Side:

Front Turn Signal Light Connector



Main Body ECU Connector

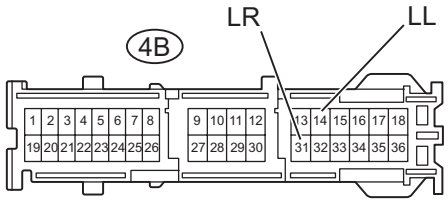

B144227E01

(b) Sedan:
(1) Disconnect the B14 and B15 front turn signal light (Headlight assembly) connectors.
(2) Disconnect the 4B main body ECU connector.
(3) Measure the resistance.
Standard resistance

Tester Connection	Specified Condition
4B-31 (LR) - B14-1	Below 1 Ω
4B-14 (LL) - B15-1	Below 1 Ω
4B-31 (LR) or B14-1 - Body ground	10 kΩ or higher
4B-14 (LL) or B15-1 - Body ground	10 kΩ or higher

(4) Reconnect the front turn signal light connectors.
(5) Reconnect the main body ECU connector.

NG → **REPAIR OR REPLACE HARNESS OR CONNECTOR**

OK

REPAIR OR REPLACE HARNESS OR CONNECTOR (FRONT TURN SIGNAL LIGHT - BODY GROUND)

8	INSPECT BULB (SIDE TURN SIGNAL LIGHT BULB)

Component Side:

Side Turn Signal Light Assembly*

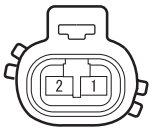

*: LH or RH

B129906E01

(a) Remove the side turn signal light assembly.
(b) Apply battery voltage to the terminals and check that the side turn signal light illuminates.

Standard

Measurement Condition	Standard
Positive battery - Terminal 1 Negative battery - Terminal 2	Side turn signal light illuminates

(c) Reinstall the side turn signal light assembly.

NG → REPLACE BULB

OK

9	CHECK HARNESS AND CONNECTOR (MAIN BODY ECU - SIDE TURN SIGNAL LIGHT ASSEMBLY)

Wire Harness Side:

Side Turn Signal Light Assembly Connector

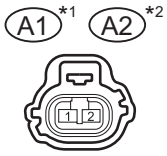

Front View

*1: RH
*2: LH

Main Body ECU Connector

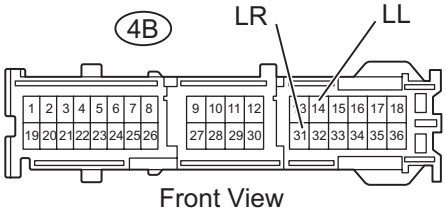

Front View

B135316E01

(a) Disconnect the A1 and A2 side turn signal light assembly connectors.
(b) Disconnect the 4B main body ECU connector.
(c) Measure the resistance.

Standard resistance

Tester Connection	Specified Condition
4B-31 (LR) - A1-1	Below 1 Ω
4B-14 (LL) - A2-1	Below 1 Ω
4B-31 (LR) or A1-1 - Body ground	10 kΩ or higher
4B-14 (LL) or A2-1 - Body ground	10 kΩ or higher

(d) Reconnect the side turn signal light assembly connectors.
(e) Reconnect the main body ECU connector.

NG → REPAIR OR REPLACE HARNESS OR CONNECTOR

OK

REPAIR OR REPLACE HARNESS OR CONNECTOR (SIDE TURN SIGNAL LIGHT ASSEMBLY - BODY GROUND)

LI

10	INSPECT BULB (REAR TURN SIGNAL LIGHT BULB)

Component Side:

Rear Combination Light Assembly*

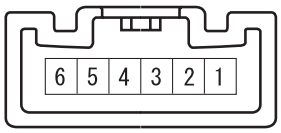

*: LH or RH

B129860E04

(a) Hatchback:
(1) Remove the rear combination light assembly.
(2) Apply battery voltage to the terminals and check that the rear turn signal light illuminates.
Standard

Measurement Condition	Standard
Positive battery - Terminal 3 Negative battery - Terminal 6	Rear turn signal light illuminates

(3) Reinstall the rear combination light assembly.

Component Side:

Rear Combination Light Assembly*

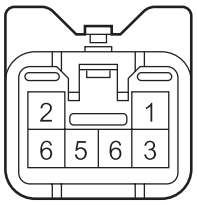

*: LH or RH

H

B141033E01

(b) Sedan:
(1) Remove the rear combination light assembly.
(2) Apply battery voltage to the terminals and check that the rear turn signal light illuminates.
Standard

Measurement Condition	Standard
Positive battery - Terminal 2 Negative battery - Terminal 6	Rear turn signal light illuminates

(3) Reinstall the rear combination light assembly.

OK

NG → **REPLACE BULB**

11	CHECK HARNESS AND CONNECTOR (MAIN BODY ECU - REAR TURN SIGNAL LIGHT)

Wire Harness Side:

Rear Combination Light Assembly Connector

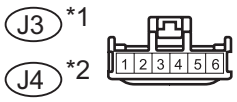

Front View

*1: RH

*2: LH

Main Body ECU Connector

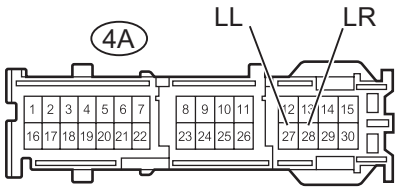

Front View

B131873E04

(a) Hatchback:

(1) Disconnect the J3 and J4 rear combination light assembly connectors.

(2) Disconnect the 4A main body ECU connector.

(3) Measure the resistance.

Standard resistance

Tester Connection	Specified Condition
4A-28 (LR) - J3-3	Below 1 Ω
4B-27 (LL) - J4-3	Below 1 Ω
4A-28 (LR) or J3-3 - Body ground	10 kΩ or higher
4A-27 (LL) or J4-3 - Body ground	10 kΩ or higher

(4) Reconnect the rear combination light assembly connectors.

(5) Reconnect the main body ECU connector.

Wire Harness Side:

Rear Combination Light Assembly Connector

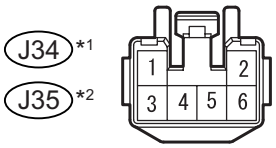

*1: RH

*2: LH

Front View

Main Body ECU Connector

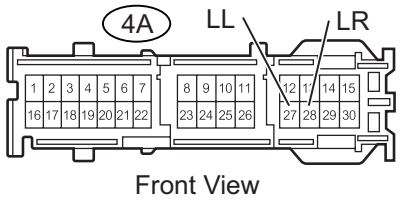

Front View

B141726E03

(b) Sedan:

(1) Disconnect the J34 and J35 rear combination light assembly connectors.

(2) Disconnect the 4A main body ECU connector.

(3) Measure the resistance.

Standard resistance

Tester Connection	Specified Condition
4A-28 (LR) - J34-2	Below 1 Ω
4B-27 (LL) - J35-2	Below 1 Ω
4A-28 (LR) or J34-2 - Body ground	10 kΩ or higher
4A-27 (LL) or J35-2 Body ground	10 kΩ or higher

(4) Reconnect the rear combination light assembly connectors.

(5) Reconnect the main body ECU connector.

NG → **REPAIR OR REPLACE HARNESS OR CONNECTOR**

OK

REPAIR OR REPLACE HARNESS OR CONNECTOR (REAR TURN SIGNAL LIGHT - BODY GROUND)

LI

Hazard Warning Switch Circuit

DESCRIPTION

When the hazard warning signal switch is turned on, the turn signal flasher relay in the main body ECU turns on to flash the hazard warning signal lights.

WIRING DIAGRAM

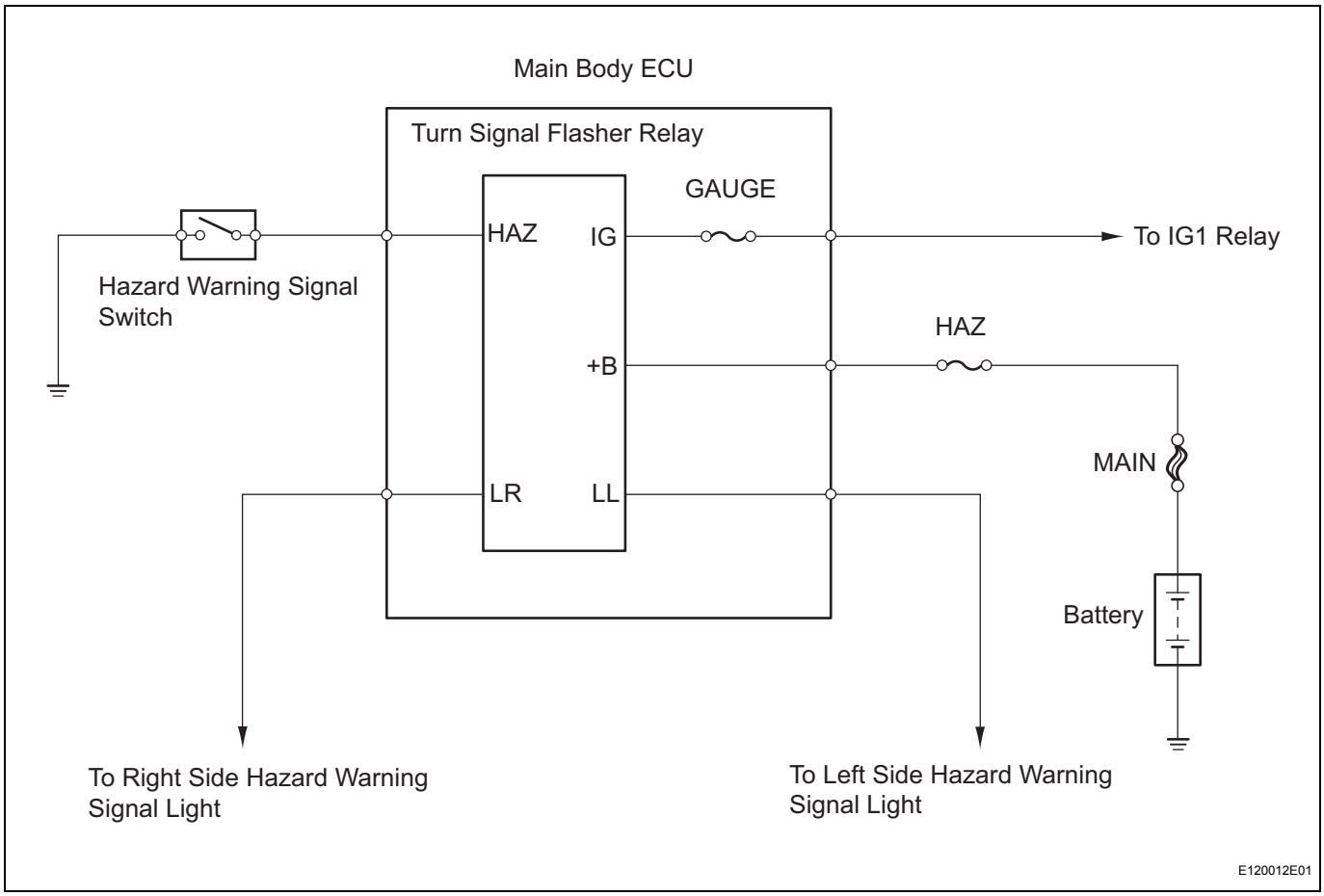

INSPECTION PROCEDURE

1	PERFORM ACTIVE TEST BY INTELLIGENT TESTER

(a) Connect the intelligent tester to the DLC3.
(b) Turn the ignition switch ON and turn the tester ON.
(c) Select the item below in the ACTIVE TEST and then check the relay operation.

ACTIVE TEST

Item	Test Details/Display (Range)	Diagnostic Note
HAZARD	HAZARD ON/OFF	-

OK:
All hazard warning signal lights flash.

OK	Go to step 4

NG

2	INSPECT FUSE (GAUGE, HAZ)

(a) Remove the GAUGE fuse from the main body ECU.
(b) Remove the HAZ fuse from the engine room relay block.
(c) Measure the resistance.
Standard resistance:
Below 1 Ω
(d) Reinstall the GAUGE and HAZ fuses.

NG → **REPLACE FUSE**

OK

LI

3	CHECK HARNESS AND CONNECTOR (FUSE - MAIN BODY ECU)

Wire Harness Side:

Main Body ECU Connector

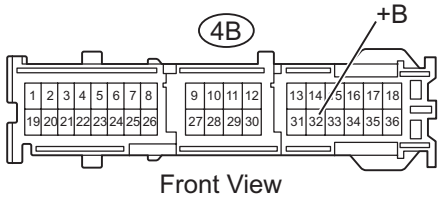

Front View

B135312E02

(a) Disconnect the 4B main body ECU connector.
(b) Measure the voltage.
Standard voltage

Tester Connection	Condition	Specified Condition
4B-32 (+B) - Body ground	Always	11 to 14 V

(c) Reconnect the main body ECU connector.

NG → **REPAIR OR REPLACE HARNESS OR CONNECTOR**

OK

REPLACE MAIN BODY ECU

4	INSPECT HAZARD WARNING SIGNAL SWITCH

Component Side:

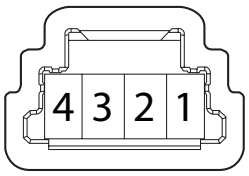

Hazard Warning Signal Switch

Y

E107908E06

(a) Hatchback:
(1) Remove the hazard warning signal switch.
(2) Measure the resistance.
Standard resistance

Tester Connection	Condition	Specified Condition
1 - 4	OFF	10 kΩ or higher
1 - 4	ON	Below 1 Ω

(3) Install the hazard warning signal switch.

Component Side:

Hazard Warning Signal Switch

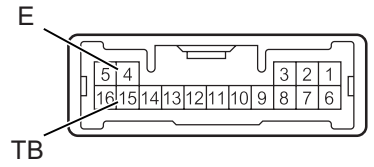

B141750E02

(b) Sedan:
(1) Remove the hazard warning signal switch.
(2) Measure the resistance.
Standard resistance

Tester Connection	Condition	Specified Condition
15 (TB) - 4 (E)	OFF	10 kΩ or higher
15 (TB) - 4 (E)	ON	Below 1 Ω

(3) Install the hazard warning signal switch.

NG → **REPLACE HAZARD WARNING SIGNAL SWITCH**

OK

LI

5	CHECK HARNESS AND CONNECTOR (HAZARD WARNING SIGNAL SWITCH - MAIN BODY ECU)

Wire Harness Side:

Hazard Warning Signal Switch Connector

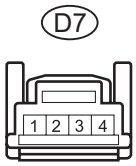

Front View

Main Body ECU Connector

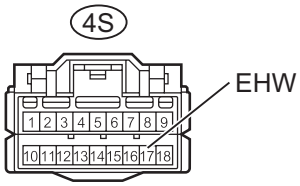

Front View

B135317E01

(a) Hatchback:
(1) Disconnect the D7 hazard warning signal switch connector.
(2) Disconnect the 4S main body ECU connector.
(3) Measure the resistance.
Standard resistance

Tester Connection	Specified Condition
D7-4 - 4S-17 (EHW)	Below 1 Ω
D7-4 or 4S-17 (EHW) - Body ground	10 kΩ or higher

(4) Reconnect the hazard warning signal switch connector.
(5) Reconnect the main body ECU connector.

Wire Harness Side:

Hazard Warning Signal Switch Connector

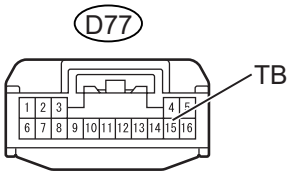

Front View

Main Body ECU Connector

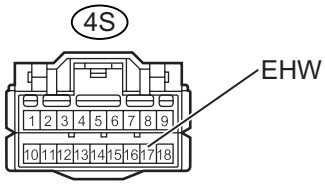

Front View

B141751E02

(b) Sedan:

(1) Disconnect the D77 hazard warning signal switch connector.

(2) Disconnect the 4S main body ECU connector.

(3) Measure the resistance.

Standard resistance

Tester Connection	Specified Condition
D77-15 (TB) - 4S-17 (EHW)	Below 1 Ω
D77-15 (TB) or 4S-17 (EHW) - Body ground	10 kΩ or higher

(4) Reconnect the hazard warning signal switch connector.

(5) Reconnect the main body ECU connector.

NG → **REPAIR OR REPLACE HARNESS OR CONNECTOR**

OK

REPAIR OR REPLACE HARNESS OR CONNECTOR (HAZARD WARNING SIGNAL SWITCH - BODY GROUND)

LI

Taillight Circuit

DESCRIPTION

When the light control switch, located on the headlight dimmer switch, is turned to the TAIL position, the front position lights, front marker lights, rear taillights and license plate light(s) illuminate.

WIRING DIAGRAM

Hatchback:

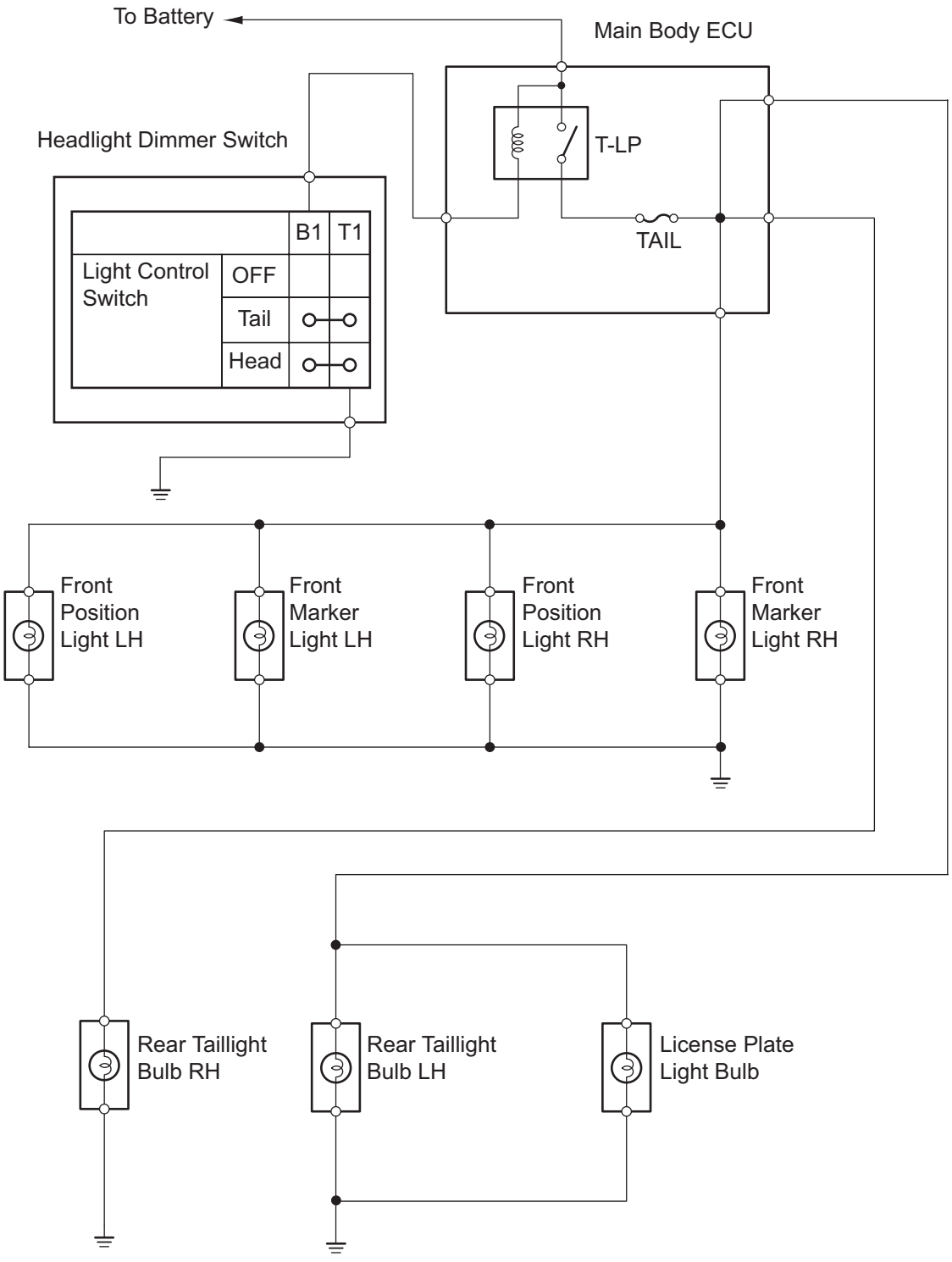

Sedan (w/ Front Fog Light):

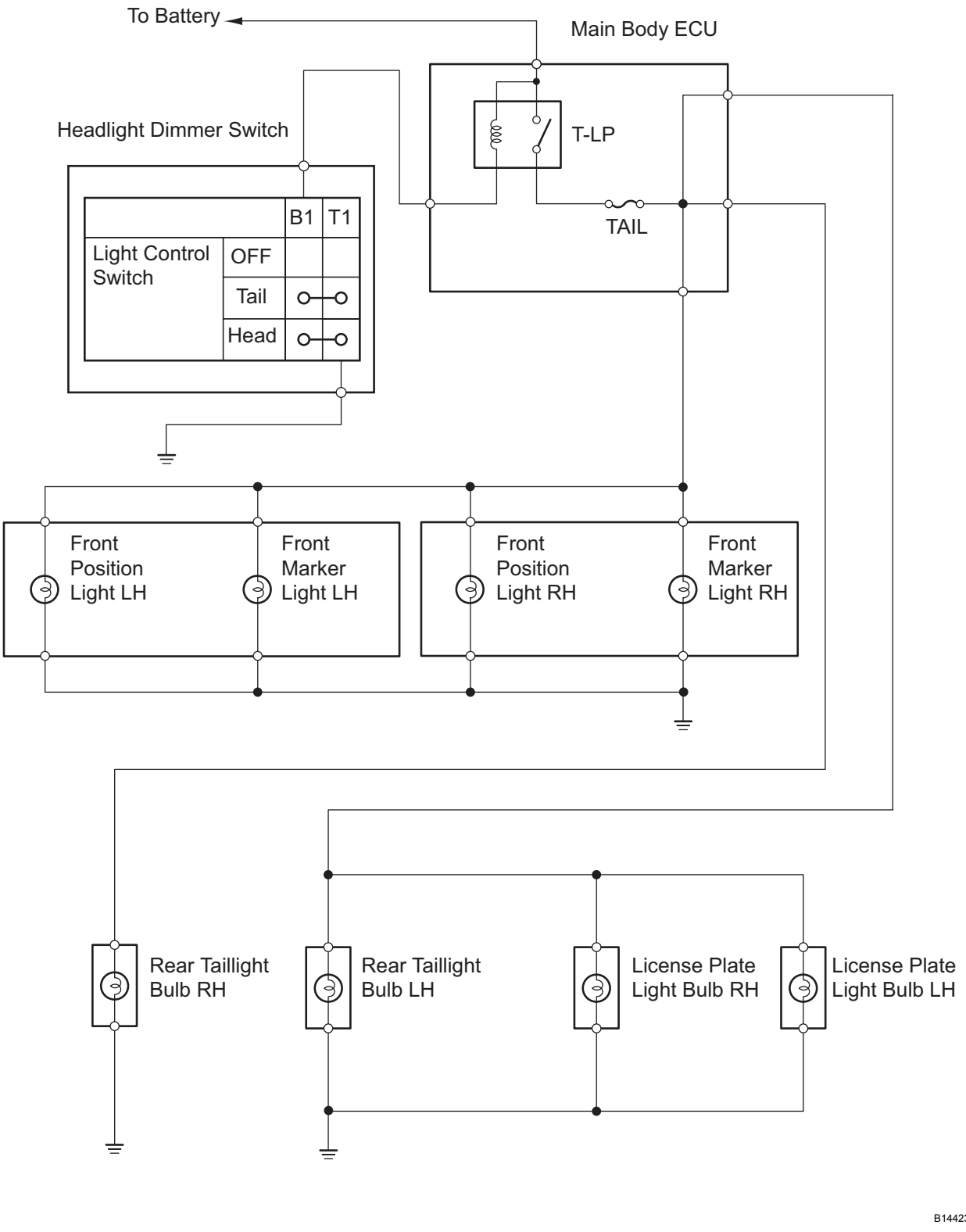

Sedan (w/o Front Fog Light):

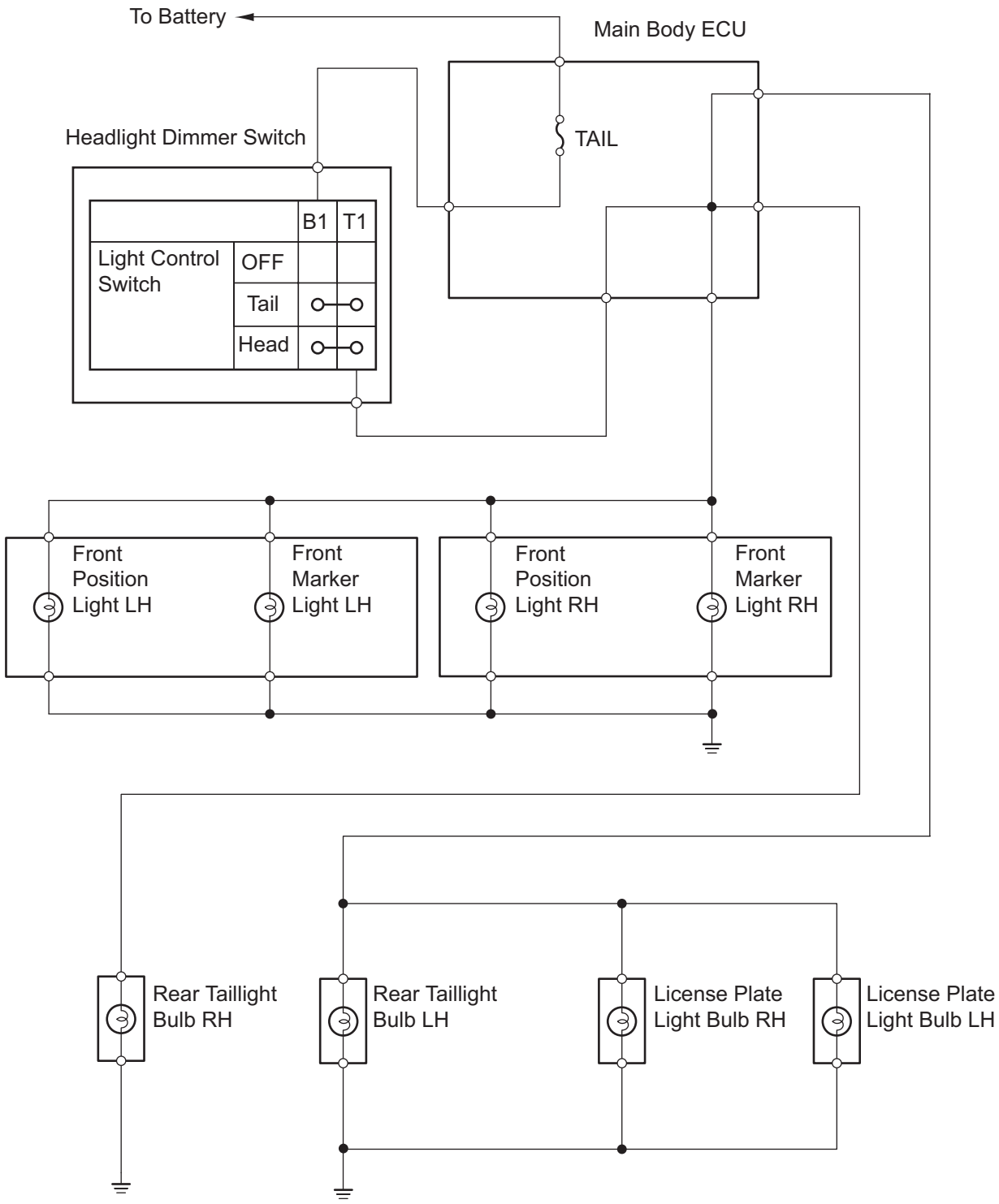

INSPECTION PROCEDURE

1	CHECK WHETHER LIGHTS ILLUMINATE

(a) Check whether the following lights illuminate: Front position lights, Rear taillights and License plate light.

Result

Illumination Condition	Proceed To
All lights do not illuminate	A
Front position lights do not illuminate	B
Front marker lights do not illuminate	C
Rear taillights do not illuminate	D
License plate light does not illuminate	E

B → **Go to step 10**

C → **Go to step 12**

D → **Go to step 14**

E → **Go to step 16**

A

2	CHECK VEHICLE SPECIFICATIONS

(a) Check the vehicle type.
Result

Vehicle Type	Proceed To
Hatchback, Sedan with front fog light (w/ T-LP relay)	A
Sedan without front fog light (w/o T-LP relay)	B

B → **Go to step 7**

A

3	INSPECT FUSE (TAIL)

(a) Remove the TAIL fuse from the main body ECU.
(b) Measure the resistance.
Standard resistance:
Below 1 Ω
(c) Reconnect the TAIL fuse.

NG → **REPLACE FUSE**

OK

4	PERFORM ACTIVE TEST BY INTELLIGENT TESTER (TAIL LIGHT)

(a) Connect the intelligent tester with CAN VIM to the DLC3.
(b) Turn the ignition switch ON.
(c) Turn the intelligent tester main switch ON.
(d) Select the item below in the ACTIVE TEST and then check the relay operation.

Main Body ECU

Item	Test Details	Diagnostic Note
TAIL LIGHT	Taillight relay ON/OFF	-

OK:
Taillight comes on.

LI

NG → **PROCEED TO NEXT INSPECTION PROCEDURE SHOWN IN PROBLEM SYMPTOMS TABLE**

OK

5	INSPECT HEADLIGHT DIMMER SWITCH

Component Side:

Headlight Dimmer Switch

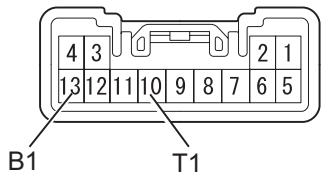

E123010E17

(a) Remove the headlight dimmer switch.
(b) Inspect the light control switch.
(c) Measure the resistance.
Standard resistance

Tester Connection	Condition	Specified Condition
10 (T1) - 13 (B1)	TAIL	Below 1 Ω
10 (T1) - 13 (B1)	OFF	10 kΩ or higher
10 (T1) - 13 (B1)	HEAD	Below 1 Ω
10 (T1) - 13 (B1)	OFF	10 kΩ or higher

(d) Reinstall the headlight dimmer switch.

NG → **REPLACE HEADLIGHT DIMMER SWITCH**

OK

6	CHECK HARNESS AND CONNECTOR (MAIN BODY ECU - HEADLIGHT DIMMER SWITCH)

Wire Harness Side:

Headlight Dimmer Switch Connector

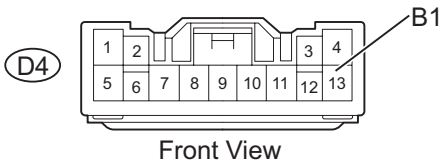

Front View

Y

B124050E09

(a) Disconnect the D4 headlight dimmer switch connector.
(b) Measure the voltage.
Standard voltage

Tester Connection	Specified Condition
D4-13 (B1) - Body Ground	11 to 14 V

(c) Reconnect the headlight dimmer switch connector.

NG → **REPAIR OR REPLACE HARNESS OR CONNECTOR**

OK

REPAIR OR REPLACE HARNESS OR CONNECTOR (HEADLIGHT DIMMER SWITCH - BODY GROUND)

7	INSPECT FUSE (TAIL)

(a) Remove the TAIL fuse from the main body ECU.
(b) Measure the resistance.
Standard resistance:
Below 1 Ω
(c) Reconnect the TAIL fuse.

NG → **REPLACE FUSE**

OK

8	INSPECT HEADLIGHT DIMMER SWITCH

Component Side:

Headlight Dimmer Switch

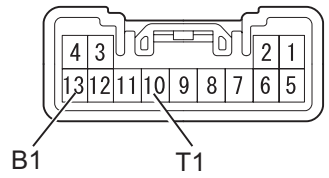

E123010E17

(a) Remove the headlight dimmer switch.
(b) Inspect the light control switch.
(c) Measure the resistance.
Standard resistance

Tester Connection	Condition	Specified Condition
10 (T1) - 13 (B1)	TAIL	Below 1 Ω
10 (T1) - 13 (B1)	OFF	10 kΩ or higher
10 (T1) - 13 (B1)	HEAD	Below 1 Ω
10 (T1) - 13 (B1)	OFF	10 kΩ or higher

(d) Reinstall the headlight dimmer switch.

NG → **REPLACE HEADLIGHT DIMMER SWITCH**

OK

9 CHECK HARNESS AND CONNECTOR (MAIN BODY ECU - HEADLIGHT DIMMER SWITCH)

Wire Harness Side:

Main Body ECU Connector

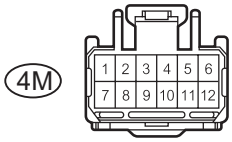

Front View

Main Body ECU Connector

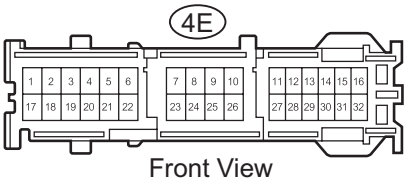

Front View

Headlight Dimmer Switch Connector

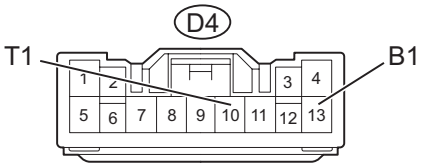

Front View

B144230E01

(a) Disconnect the D4 headlight dimmer switch connector.
(b) Disconnect the 4M and 4E main body ECU connectors.
(c) Measure the resistance.

Standard resistance

Tester Connection	Specified Condition
D4-13 (B1) - 4M-4	Below 1 Ω
D4-10 (T1) - 4E-10	Below 1 Ω
D4-13 (B1) or 4M-4 - Body Ground	10 kΩ or higher
D4-10 (T1) or 4E-10 - Body Ground	10 kΩ or higher

(d) Reconnect the headlight dimmer switch connector.
(e) Reconnect the main body ECU connectors.

NG → **REPAIR OR REPLACE HARNESS OR CONNECTOR**

OK

REPLACE MAIN BODY ECU

10 INSPECT BULB (FRONT POSITION LIGHT BULB)

Component Side:

Front Position Light*

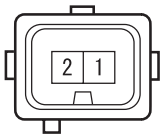

*: LH or RH

B141827E01

(a) Hatchback:
(1) Remove the front position light.
(2) Apply battery voltage to the terminals and check that the front position light illuminates.

Standard

Measurement Condition	Standard
Positive battery - Terminal 1 Negative battery - Terminal 2	Front position light illuminates

(3) Reinstall the front position light.

Component Side:

Front Position Light*

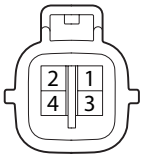

*: LH or RH

Y B144226E02

(b) Sedan:
(1) Remove the front position light.
(2) Apply battery voltage to the terminals and check that the front position light illuminates.
Standard

Measurement Condition	Standard
Positive battery - Terminal 3 Negative battery - Terminal 2	Front position light illuminates

(3) Reinstall the front position light.

NG → **REPLACE BULB**

OK

LI

11	CHECK HARNESS AND CONNECTOR (MAIN BODY ECU - FRONT POSITION LIGHT)

Wire Harness Side:

Front Position Light Connector

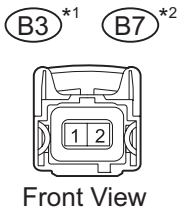

Front View

*1: RH
*2: LH

Main Body ECU Connector

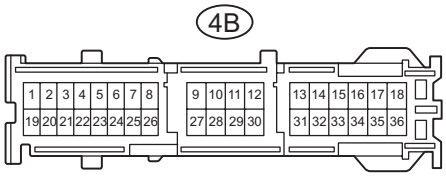

Front View

B135318E01

(a) Hatchback:
(1) Disconnect the B3 and B4 front position light connectors.
(2) Disconnect the 4B main body ECU connector.
(3) Measure the resistance.
Standard resistance

Tester Connection	Specified Condition
4B-33 - B3-1	Below 1 Ω
4B-33 - B7-1	Below 1 Ω
4B-33 or B3-1 - Body ground	10 kΩ or higher
4B-33 or B7-1 - Body ground	10 kΩ or higher

(4) Reconnect the front position light connectors.
(5) Reconnect the main body ECU connector.

Wire Harness Side:

Front Position Light Connector

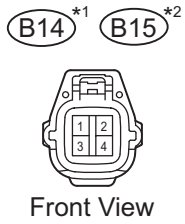

Main Body ECU Connector

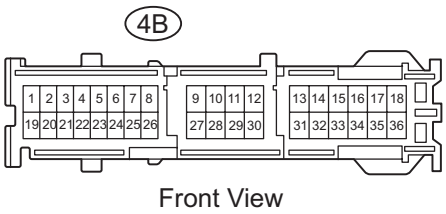

B144227E02

(b) Sedan:
(1) Disconnect the B14 and B15 front position light connectors.
(2) Disconnect the 4B main body ECU connector.
(3) Measure the resistance.
Standard resistance

Tester Connection	Specified Condition
4B-33 - B14-3	Below 1 Ω
4B-33 - B15-3	Below 1 Ω
4B-33 or B14-3 - Body ground	10 kΩ or higher
4B-33 or B15-3 - Body ground	10 kΩ or higher

(4) Reconnect the front position light connectors.
(5) Reconnect the main body ECU connector.

NG → **REPAIR OR REPLACE HARNESS OR CONNECTOR**

OK

REPAIR OR REPLACE HARNESS OR CONNECTOR (FRONT POSITION LIGHT - BODY GROUND)

12 INSPECT BULB (FRONT MARKER LIGHT)

Component Side:

Front Marker Light*

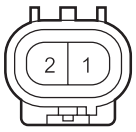

*: LH or RH

B129903E02

(a) Hatchback:
(1) Remove the front marker light.
(2) Apply battery voltage to the terminals and check that the front marker light illuminates.
Standard

Measurement Condition	Standard
Positive battery - Terminal 2 Negative battery - Terminal 1	Front marker light illuminates

(3) Reinstall the front marker light.

Component Side:

Front Marker Light*

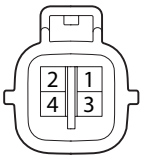

*: LH or RH

Y

B144226E03

(b) Sedan:
(1) Remove the front marker light.
(2) Apply battery voltage to the terminals and check that the front marker light illuminates.
Standard

Measurement Condition	Standard
Positive battery - Terminal 4 Negative battery - Terminal 2	Front marker light illuminates

(3) Reinstall the front marker light.

NG → **REPLACE BULB**

OK

13	CHECK HARNESS AND CONNECTOR (MAIN BODY ECU - FRONT MARKER LIGHT)

Wire Harness Side:

Front Marler Light Connector

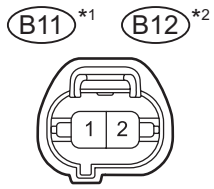

Main Body ECU Connector

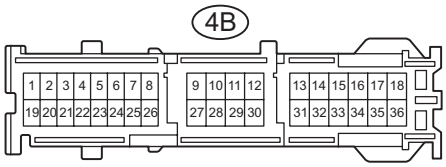

(a) Hatchback:
(1) Disconnect the B11 and B12 front marker light connectors.
(2) Disconnect the 4B main body ECU connector.
(3) Measure the resistance.
Standard resistance

Tester Connection	Specified Condition
4B-33 - B11-2	Below 1 Ω
4B-33 - B12-2	Below 1 Ω
4B-33 or B11-2 - Body ground	10 kΩ or higher
4B-33 or B12-2 - Body ground	10 kΩ or higher

(4) Reconnect the front marker light connectors.
(5) Reconnect the main body ECU connector.

Wire Harness Side:

Front Marker Light Connector

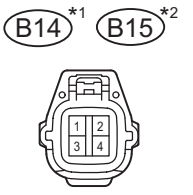

Main Body ECU Connector

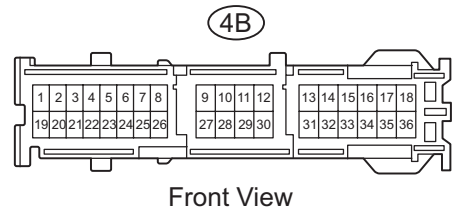

(b) Sedan:
(1) Disconnect the B14 and B15 front marker light connectors.
(2) Disconnect the 4B main body ECU connector.
(3) Measure the resistance.
Standard resistance

Tester Connection	Specified Condition
4B-33 - B14-4	Below 1 Ω
4B-33 - B15-4	Below 1 Ω
4B-33 or B14-4 - Body ground	10 kΩ or higher
4B-33 or B15-4 - Body ground	10 kΩ or higher

(4) Reconnect the front marker light connectors.
(5) Reconnect the main body ECU connector.

NG → **REPAIR OR REPLACE HARNESS OR CONNECTOR**

OK

REPAIR OR REPLACE HARNESS OR CONNECTOR (FRONT MARKER LIGHT - BODY GROUND)

14 INSPECT BULB (REAR TAILLIGHT BULB)

Component Side:

Rear Combination Light Assembly*

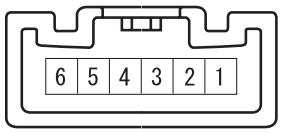

*: LH or RH

B129860E03

(a) Hatchback:
(1) Remove the rear combination light assembly.
(2) Apply battery voltage to the terminals and check that the rear taillight illuminates.
Standard

Measurement Condition	Standard
Positive battery - Terminal 4 Negative battery - Terminal 6	Rear taillight illuminates

(3) Reinstall the rear combination light assembly.

Component Side:

Rear Combination Light Assembly*

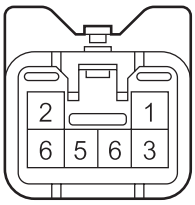

*: LH or RH

H

B141033E01

(b) Sedan:
(1) Remove the rear combination light assembly.
(2) Apply battery voltage to the terminals and check that the rear taillight illuminates.
Standard

Measurement Condition	Standard
Positive battery - Terminal 4 Negative battery - Terminal 6	Rear taillight illuminates

(3) Reinstall the rear combination light assembly.

OK

NG → **REPLACE BULB**

LI

15	CHECK HARNESS AND CONNECTOR (MAIN BODY ECU - REAR TAILLIGHT)

Wire Harness Side:

Rear Combination Light Assembly Connector

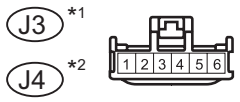

Front View

*1: RH

*2: LH

Main Body ECU Connector

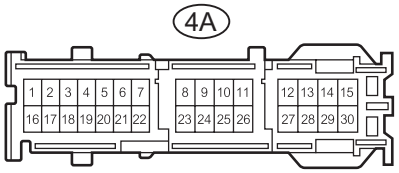

Front View

B131873E03

(a) Hatchback:

(1) Disconnect the J3 and J4 rear combination light assembly connectors.

(2) Disconnect the 4A main body ECU connector.

(3) Measure the resistance.

Standard resistance

Tester Connection	Specified Condition
4A-10 - J3-4	Below 1 Ω
4A-29 - J4-4	Below 1 Ω
4A-10 or J3-4 - Body ground	10 kΩ or higher
4A-29 or J4-4 - Body ground	10 kΩ or higher

(4) Reconnect the rear combination light assembly connectors.

(5) Reconnect the main body ECU connector.

Wire Harness Side:

Rear Combination Light Assembly Connector

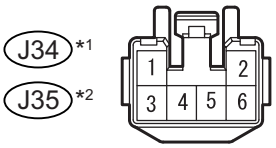

*1: RH

*2: LH

Front View

Main Body ECU Connector

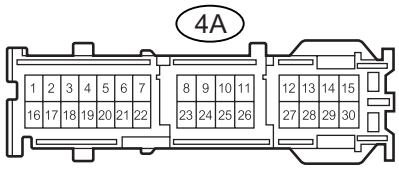

Front View

B141726E05

(b) Sedan:

(1) Disconnect the J34 and J35 rear combination light assembly connectors.

(2) Disconnect the 4A main body ECU connector.

(3) Measure the resistance.

Standard resistance

Tester Connection	Specified Condition
4A-10 - J34-4	Below 1 Ω
4A-29 - J35-4	Below 1 Ω
4A-10 or J34-4 - Body ground	10 kΩ or higher
4A-29 or J35-4 - Body ground	10 kΩ or higher

(4) Reconnect the rear combination light assembly connectors.

(5) Reconnect the main body ECU connector.

NG → **REPAIR OR REPLACE HARNESS OR CONNECTOR**

OK

REPAIR OR REPLACE HARNESS OR CONNECTOR (REAR TAILLIGHT - BODY GROUND)

16 INSPECT BULB (LICENSE PLATE LIGHT BULB)

Component Side:

License Plate Light Assemsly

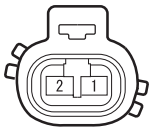

B141830E01

Component Side:

License Plate Light Assemsly*

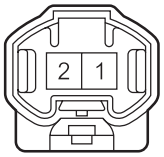

*: LH or RH

B141842E01

(a) Hatchback:
(1) Remove the license plate light assembly.
(2) Apply battery voltage to the terminals and check that the license plate light illuminates.
Standard

Measurement Condition	Standard
Positive battery - Terminal 2 Negative battery - Terminal 1	License plate light illuminates

(3) Reinstall the license plate light assembly.

(b) Sedan:
(1) Remove the license plate light assembly.
(2) Apply battery voltage to the terminals and check that the license plate light illuminates.
Standard

Measurement Condition	Standard
Positive battery - Terminal 2 Negative battery - Terminal 1	License plate light illuminates

(3) Reinsrall the license plate light assembly.

NG → **REPLACE BULB**

OK

17 CHECK HARNESS AND CONNECTOR (MAIN BODY ECU - LICENSE PLATE LIGHT ASSEMBLY)

Wire Harness Side:

License Plate Light Assembly Connector

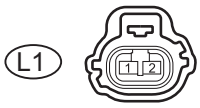

Front View

Main Body ECU Connector

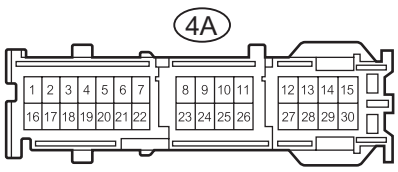

Front View

B133140E02

(a) Hatchback:
(1) Disconnect the L1 license plate light assembly connector.
(2) Disconnect the 4A main body ECU connector.
(3) Measure the resistance.
Standard resistance

Tester Connection	Specified Condition
4A-29 - L1-2	Below 1 Ω
4A-29 or L1-2 - Body ground	10 kΩ or higher

(4) Reconnect the license plate light assembly connector.
(5) Reconnect the main body ECU connector.

Wire Harness Side:

License Plate Light Assembly Connector

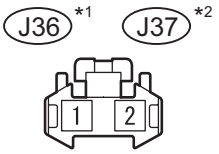

Front View

*1: RH

*2: LH

Main Body ECU Connector

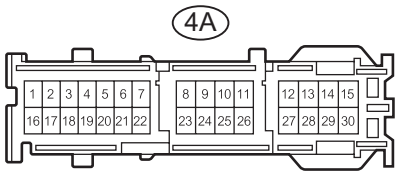

Front View

B141841E02

(b) Sedan:

(1) Disconnect the J36 and J37 license plate light assembly connectors.

(2) Disconnect the 4A main body ECU connector.

(3) Measure the resistance.

Standard resistance

Tester Connection	Specified Condition
4A-29 - J36-2	Below 1 Ω
4A-29 - J37-2	Below 1 Ω
4A-29 or J36-2 - Body ground	10 kΩ or higher
4A-29 or J37-2 - Body ground	10 kΩ or higher

(4) Reconnect the license plate light assembly connectors.

(5) Reconnect the main body ECU connector.

NG → **REPAIR OR REPLACE HARNESS OR CONNECTOR**

OK

REPAIR OR REPLACE HARNESS OR CONNECTOR (LICENSE PLATE LIGHT ASSEMBLY - BODY GROUND)

Back-up Light Circuit

DESCRIPTION

A/T models: The park / neutral position switch turns on when the shift lever is moved into the R position, causing the back-up light to illuminate.
M/T models: The back-up light switch turns on when the shift lever is moved into the R position, causing the back-up light to illuminate.

WIRING DIAGRAM

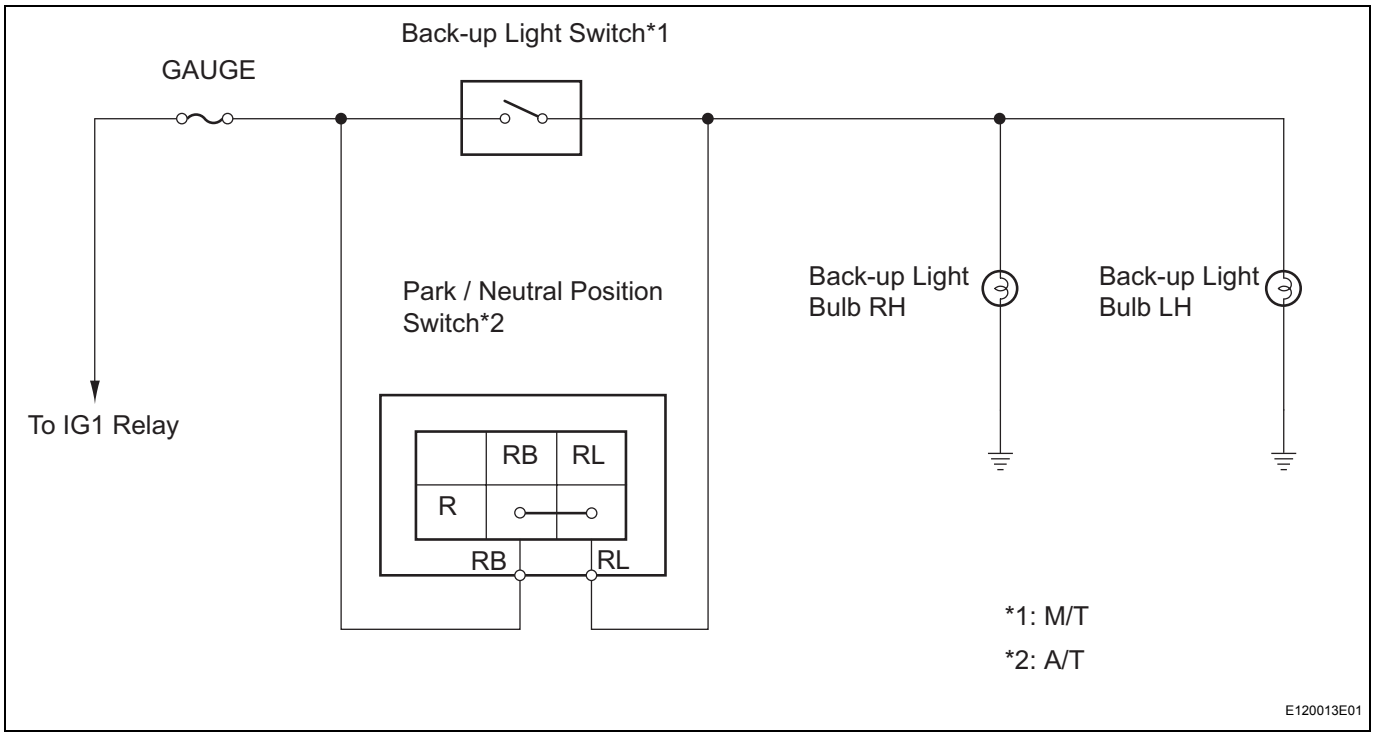

INSPECTION PROCEDURE

1	INSPECT FUSE (GAUGE)

(a) Remove the GAUGE fuse from the main body ECU.
(b) Measure the resistance.
Standard resistance:
Below 1 Ω
(c) Reinstall the GAUGE fuse.

NG → **REPLACE FUSE**

OK

2	INSPECT BULB (BACK-UP LIGHT BULB)

Component Side:

Rear Combination Light Assembly*

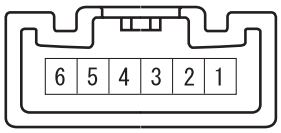

*: LH or RH

B129860E01

(a) Hatchback:
(1) Remove the rear combination light assembly.
(2) Apply battery voltage to the terminals and check that the back-up light illuminates.
Standard

Measurement Condition	Standard
Positive battery - Terminal 1 Negative battery - Terminal 6	Back-up light illuminates

(3) Reinstall the rear combination light assembly.

Component Side:

Rear Combination Light Assembly*

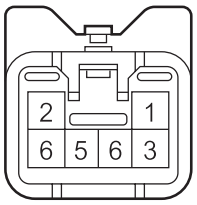

*: LH or RH

H

B141033E01

(b) Sedan:
(1) Remove the rear combination light assembly.
(2) Apply battery voltage to the terminals and check that the back-up light illuminates.
Standard

Measurement Condition	Standard
Positive battery - Terminal 5 Negative battery - Terminal 6	Back-up light illuminates

(c) Reinstall the back-up light bulbs.

NG → **REPLACE BULB**

OK

3	CHECK TRANSAXLE TYPE

(a) Check the vehicle's transaxle type.
Result

Transaxle Type	Proceed To
A/T	A
M/T	B

B → **Go to step 7**

A

4 INSPECT PARK / NEUTRAL POSITION SWITCH

Component Side:

Park / Neutral Position Switch

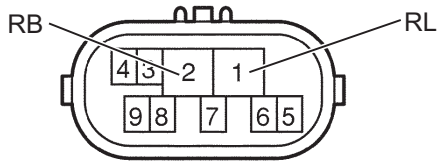

C110340E19

(a) Disconnect the C27 park / neutral position switch connector.
(b) Measure the resistance.
Standard resistance

Tester Connection	Shift Position	Specified Connection
2 (RB) - 1 (RL)	R	Below 1 Ω
2 (RB) - 1 (RL)	Except R	10 kΩ or higher

(c) Reconnect the park / neutral position switch connector.

NG → **REPLACE PARK / NEUTRAL POSITION SWITCH**

OK

5 CHECK HARNESS AND CONNECTOR (FUSE - PARK / NEUTRAL POSITION SWITCH)

Wire Harness Side:

Park / Neutral Position Switch Connector

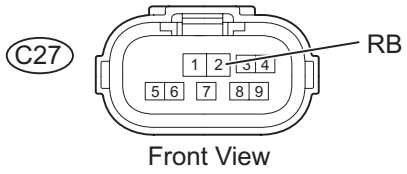

Front View

Y

B124048E09

(a) Disconnect the C27 park / neutral position switch connector.
(b) Measure the voltage.
Standard voltage

Tester Connection	Condition	Specified Condition
C27-2 (RB) - Body ground	Ignition switch ON	11 to 14 V

(c) Reconnect the park / neutral position switch connector.

NG → **REPAIR OR REPLACE HARNESS OR CONNECTOR**

OK

LI

6	**CHECK HARNESS AND CONNECTOR (PARK / NEUTRAL POSITION SWITCH - REAR BACK-UP LIGHT)**

Wire Harness Side:

Rear Combination Light Assembly Connector

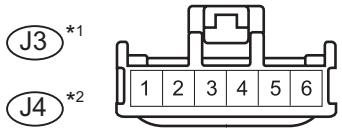

Park / Neutral Position Switch Connector

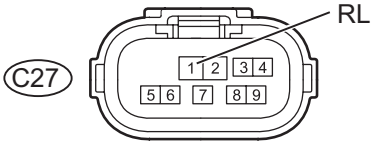

B125723E06

(a) Hatchback:
(1) Disconnect the C27 park / neutral position switch connector.
(2) Disconnect the J3 and J4 rear combination light assembly connectors.
(3) Measure the resistance.
Standard resistance

Tester Connection	Specified Condition
C27-1 (RL) - J3-1	Below 1 Ω
C27-1 (RL) - J4-1	Below 1 Ω
C27-1 (RL) or J3-1 - Body ground	10 kΩ or higher
C27-1 (RL) or J4-1 - Body ground	10 kΩ or higher

(4) Reconnect the park / neutral position switch connector.
(5) Reconnect the rear combination light assembly connectors.

Wire Harness Side:

Rear Combination Light Assembly Connector

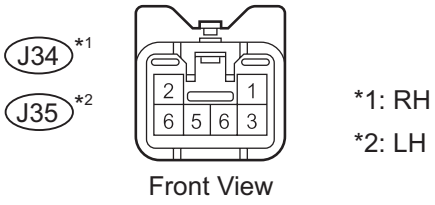

Park / Neutral Position Switch Connector

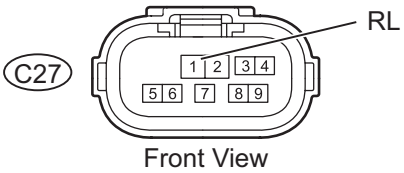

E131560E02

(b) Sedan:
(1) Disconnect the C27 park / neutral position switch connector.
(2) Disconnect the J34 and J35 rear combination light assembly connectors.
(3) Measure the resistance.
Standard resistance

Tester Connection	Specified Condition
C27-1 (RL) - J34-1	Below 1 Ω
C27-1 (RL) - J35-1	Below 1 Ω
C27-1 (RL) or J34-1 - Body ground	10 kΩ or higher
C27-1 (RL) or J35-1 - Body ground	10 kΩ or higher

(4) Reconnect the park / neutral position switch connector.
(5) Reconnect the rear combination light assembly connectors.

NG → **REPAIR OR REPLACE HARNESS OR CONNECTOR**

OK

REPAIR OR REPLACE HARNESS OR CONNECTOR (BACK-UP LIGHT - BODY GROUND)

7 INSPECT BACK-UP LIGHT SWITCH

Component Side:

Back-up Light Switch

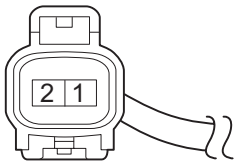

Y B133141E02

(a) Disconnect the back-up light switch connector.
(b) Measure the resistance.
Standard resistance

Tester Connection	Shift Position	Specified Connection
1 - 2	R	Below 1 Ω
1 - 2	Except R	10 kΩ or higher

(c) Reconnect the back-up light switch connector.

NG → **REPLACE BACK-UP LIGHT SWITCH**

OK

8 CHECK HARNESS AND CONNECTOR (FUSE - BACK-UP LIGHT SWITCH)

Wire Harness Side:

Back-up Light Switch Connector

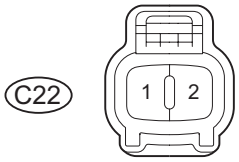

Front View

Y B124047E07

(a) Disconnect the C22 back-up light switch connector.
(b) Measure the voltage.
Standard voltage

Tester Connection	Condition	Specified Condition
C22-2 - Body ground	Ignition switch ON	11 to 14 V

(c) Reconnect the back-up light switch connector.

NG → **REPAIR OR REPLACE HARNESS OR CONNECTOR**

OK

9	CHECK HARNESS AND CONNECTOR (BACK-UP LIGHT SWITCH - BACK-UP LIGHT)

Wire Harness Side:

Rear Combination Light Assembly Connector

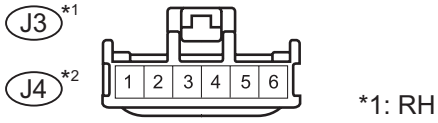

Back-up Light Switch Connector

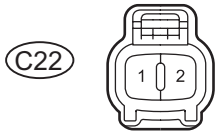

B125724E06

(a) Hatchback:
(1) Disconnect the C22 back-up light switch connector.
(2) Disconnect the J3 and J4 rear combination light assembly connectors.
(3) Measure the resistance.
Standard resistance

Tester Connection	Specified Condition
C22-1 - J3-1	Below 1 Ω
C22-1 - J4-1	Below 1 Ω
C22-1 or J3-1 - Body ground	10 kΩ or higher
C22-1 or J4-1 - Body ground	10 kΩ or higher

(4) Reconnect the back-up light switch connector.
(5) Reconnect the rear combination light assembly connectors.

Wire Harness Side:

Rear Combination Light Assembly Connector

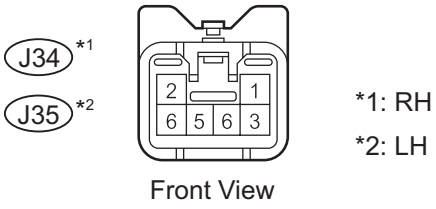

Park / Neutral Position Switch Connector

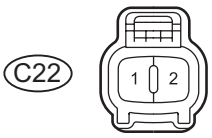

E131561E02

(b) Sedan:
(1) Disconnect the C22 back-up light switch connector.
(2) Disconnect the J34 and J35 rear combination light assembly connectors.
(3) Measure the resistance.
Standard resistance

Tester Connection	Specified Condition
C22-1 - J34-1	Below 1 Ω
C22-1 - J35-1	Below 1 Ω
C22-1 or J34-1 - Body ground	10 kΩ or higher
C22-1 or J35-1 - Body ground	10 kΩ or higher

(4) Reconnect the back-up light switch connector.
(5) Reconnect the rear combination light assembly connectors.

NG → **REPAIR OR REPLACE HARNESS OR CONNECTOR**

OK

REPAIR OR REPLACE HARNESS OR CONNECTOR (BACK-UP LIGHT - BODY GROUND)

Light Control Switch Circuit

DESCRIPTION

This circuit detects the state of the headlight dimmer switch.

WIRING DIAGRAM

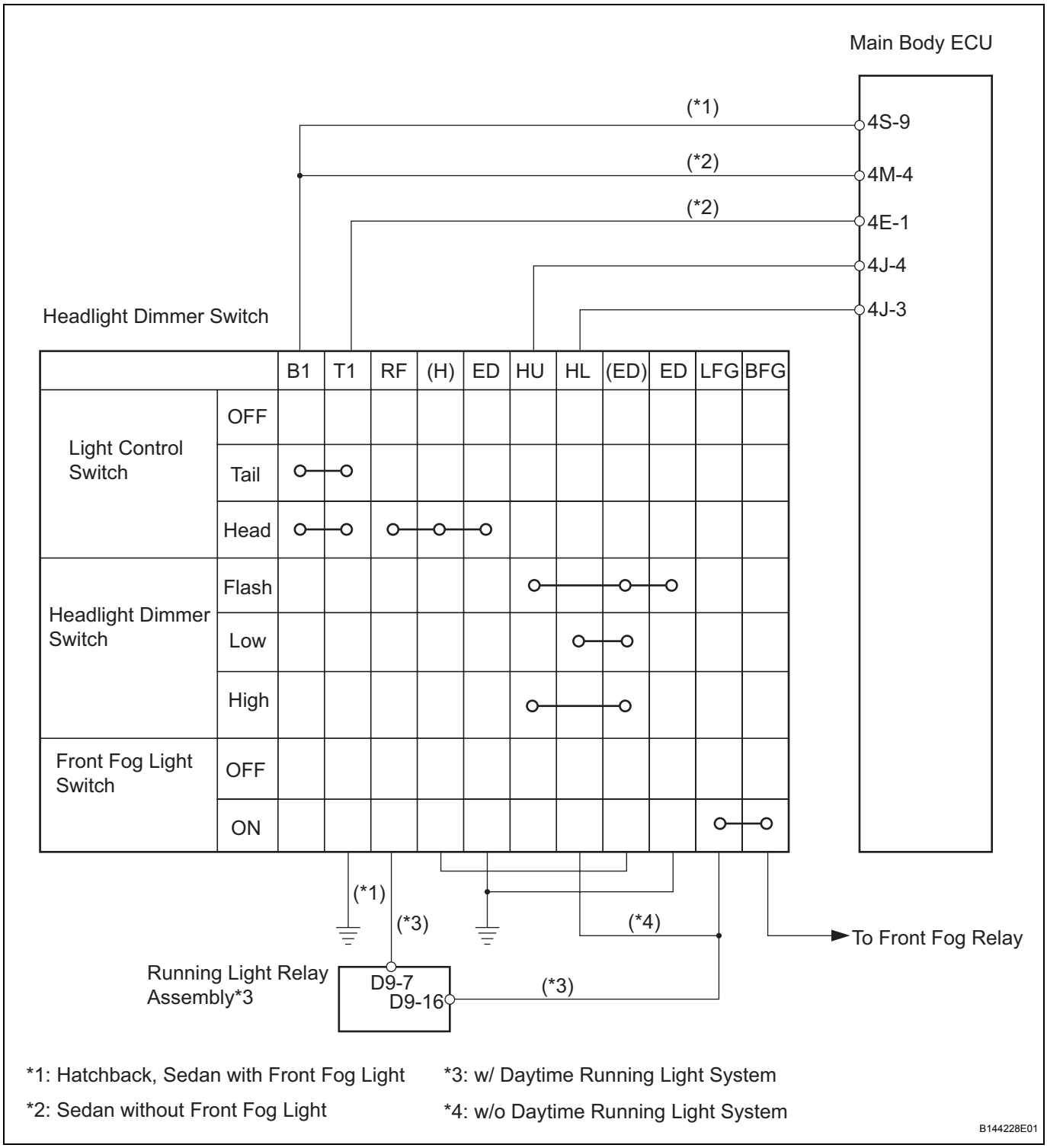

LI

INSPECTION PROCEDURE

1	CHECK HARNESS AND CONNECTOR (HEADLIGHT DIMMER SWITCH - MAIN BODY ECU, RUNNING LIGHT RELAY)

Wire Harness Side:

Main Body ECU Connector

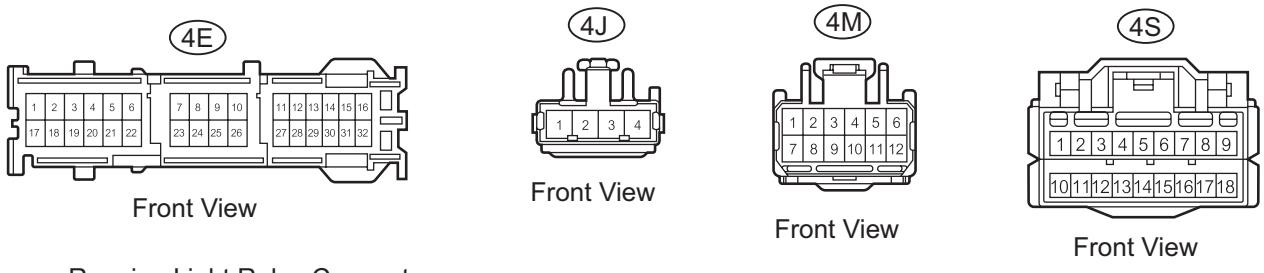

Running Light Relay Connector

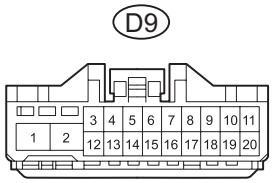

B144229E01

(a) Disconnect the 4J and 4S main body ECU connectors.*1
(b) Disconnect the 4J , 4E and 4M main body ECU connectors.*2
(c) Disconnect the D9 running light relay assembly connector.*3
HINT:
*1: Hatchback, Sedan with front fog light
*2: Sedan without front fog light
*3: w/ Daytime running light system
(d) Measure the resistance.

Standard resistance

Tester connection	Condition	Specified Condition
4J-3 - Body ground	Light control switch OFF → HEAD Headlight dimmer switch LOW position	10 kΩ or higher → Below 1 Ω
4J-4 - Body ground	Light control switch OFF → HEAD Headlight dimmer switch HIGH position	10 kΩ or higher → Below 1 Ω
4J-4 - Body ground	Light control switch HIGH position	10 kΩ or higher → Below 1 Ω
4S-9 - Body ground*1	Light control switch OFF → TAIL	10 kΩ or higher → Below 1 Ω
4S-9 - Body ground*1	Light control switch OFF → HEAD	10 kΩ or higher → Below 1 Ω
4E-10 - 4M-4*2	Light control switch OFF → TAIL	10 kΩ or higher → Below 1 Ω
4E-10 - 4M-4*2	Light control switch OFF → HEAD	10 kΩ or higher → Below 1 Ω
4M-9 - Body ground*2	Front fog light switch OFF → ON	10 kΩ or higher → Below 1 Ω
D9-7 - Body ground*3	Light control switch OFF → HEAD	10 kΩ or higher → Below 1 Ω

HINT:
*1: Hatchback, Sedan with front fog light
*2: Sedan without front fog light

*3: w/ Daytime running light system

(e) Reconnect the main body ECU connectors.

(f) Reconnect the running light relay assembly connector*.

HINT:

*: w/ Daytime running light system

NG → **Go to step 2**

OK

PROCEED TO NEXT CIRCUIT INSPECTION SHOWN IN PROBLEM SYMPTOMS TABLE

2 INSPECT HEADLIGHT DIMMER SWITCH

Component Side:

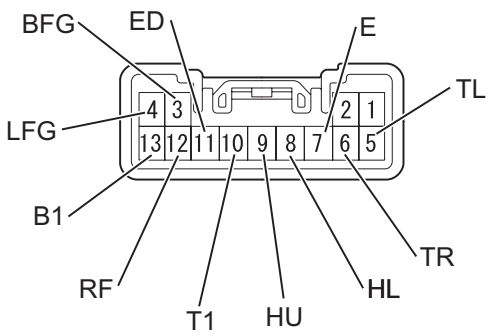

(a) Inspect the light control switch.

(1) Measure the resistance.

Standard resistance

Tester Connection	Condition	Specified Condition
10 (T1) - 13 (B1)	TAIL	Below 1 Ω
10 (T1) - 13 (B1)	OFF	10 kΩ or higher
10 (T1) - 13 (B1)	HEAD	Below 1 Ω
10 (T1)- 13 (B1)	OFF	10 kΩ or higher
11 (ED)- 12 (RF)	HEAD	Below 1 Ω
11 (ED)- 12 (RF)	OFF	10 kΩ or higher

(b) Inspect the headlight dimmer switch.

(1) Measure the resistance.

Standard resistance

Tester Connection	Condition	Specified Condition
9 (HU) - 11 (ED)	FLASH	Below 1 Ω
8 (HL) - 11 (ED)	LOW BEAM	Below 1 Ω
9 (HU) - 11 (ED)	HI BEAM	Below 1 Ω

(c) Inspect the turn signal switch.

(1) Measure the resistance.

Standard resistance

Tester Connection	Condition	Specified Condition
6 (TR) - 7 (E)	Right	Below 1 Ω
6 (TR) - 7 (E)	Neutral	10 kΩ or higher
5 (TL) - 7 (E)	Left	Below 1 Ω
5 (TL) - 7 (E)	Neutral	10 kΩ or higher

(d) Inspect the front fog light switch.

(1) Measure the resistance.

Standard resistance

Tester Connection	Condition	Specified Condition
3 (BFG) - 4 (LFG)	Front fog light switch ON	Below 1 Ω
3 (BFG)- 4 (LFG)	Front fog light switch OFF	10 kΩ or higher

LI

NG → **REPLACE HEADLIGHT DIMMER SWITCH**

OK

REPAIR OR REPLACE HARNESS OR CONNECTOR

Headlight Signal Circuit

DESCRIPTION

The headlights are illuminated when the light control switch, located on the headlight dimmer switch, is turned to the HEAD position.
For models with the H-LP/AMT relay (sedan models equipped with the daytime running light system and all hatchback models), refer to Headlight Relay Circuit (See page LI-28).

WIRING DIAGRAM

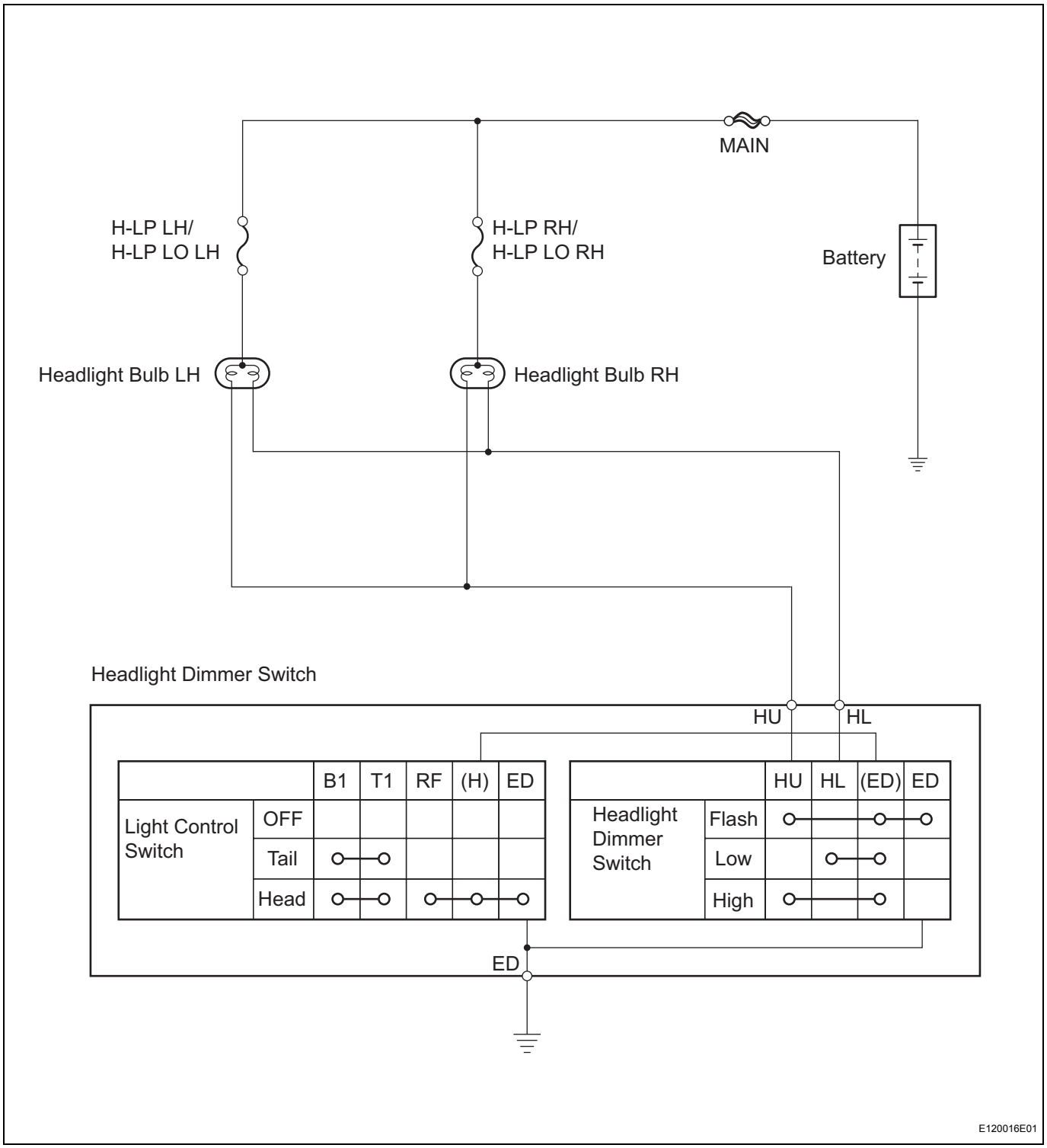

INSPECTION PROCEDURE

1	INSPECT FUSE (H-LP RH/H-LP LO RH, H-LP LH/H-LP LO LH)

(a) Remove the H-LP RH/H-LP LO RH and H-LP LH/H-LP LO LH fuses from the engine room relay block.
(b) Measure the resistance.
Standard resistance:
Below 1 Ω
(c) Reinstall the H-LP RH/H-LP LO RH and H-LP LH/H-LP LO LH fuses.

NG → **REPLACE FUSE**

LI

OK

2	INSPECT BULB (HEADLIGHT BULB)

Component Side:

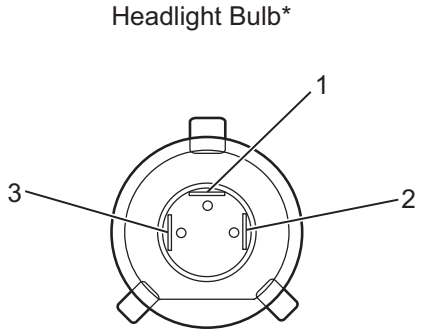

*: LH or RH

B129953E01

(a) Disconnect the B4 and B6 headlight connectors.
(b) Apply battery voltage to the terminals and check that the headlight illuminates.
Standard

Measurement Condition	Standard
Positive battery - Terminal 1 Negative battery - Terminal 3	Headlight illuminates (HI-Beam)
Positive battery - Terminal 2 Negative battery - Terminal 3	Headlight illuminates (LO-Beam)

(c) Reconnect the headlight connectors.

NG → **REPLACE BULB**

OK

3 CHECK HARNESS AND CONNECTOR (FUSE - HEADLIGHT)

Wire Harness Side:

Headlight Bulb Connector

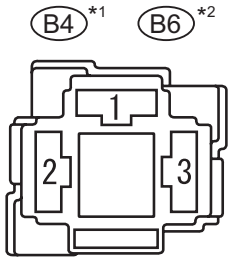

*1: RH

*2: LH

B125793E04

(a) Disconnect the B4 and B6 headlight bulb connectors.

(b) Measure the voltage.

Standard voltage

Tester Connection	Condition	Specified Condition
B4-3 - Body ground	Always	11 to 14 V
B6-3 - Body ground	Always	11 to 14 V

(c) Reconnect the headlight bulb connectors.

NG → **REPAIR OR REPLACE HARNESS OR CONNECTOR**

OK

4 INSPECT HEADLIGHT DIMMER SWITCH

Component Side:

Headlight Dimmer Switch

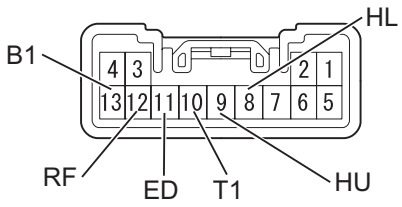

E123010E02

(a) Remove the headlight dimmer switch.

(b) Inspect the light control switch.

(1) Measure the resistance.

Standard resistance

Tester Connection	Condition	Specified Condition
10 (T1) - 13 (B1)	TAIL	Below 1 Ω
10 (T1) - 13 (B1)	HEAD	Below 1 Ω
10 (T1) - 13 (B1)	OFF	10 kΩ or higher
11 (ED) - 12 (RF)	HEAD	Below 1 Ω
11 (ED) - 12 (RF)	OFF	10 kΩ or higher

(c) Inspect the headlight dimmer switch.

(1) Measure the resistance.

Standard resistance

Tester Connection	Condition	Specified Condition
9 (HU) - 11 (ED)	FLASH	Below 1 Ω
8 (HL) - 11 (ED)	LOW BEAM	Below 1 Ω
9 (HU) - 11 (ED)	HI BEAM	Below 1 Ω

(d) Reinstall the headlight dimmer switch.

NG → **REPLACE HEADLIGHT DIMMER SWITCH**

OK

LI

5	CHECK HARNESS AND CONNECTOR (HEADLIGHT - HEADLIGHT DIMMER SWITCH)

Wire Harness Side:

Headlight Dimmer Switch Connector

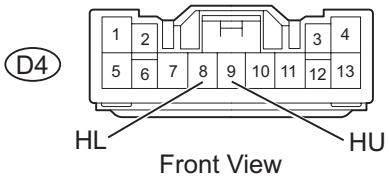

Y

B124050E07

(a) Disconnect the D4 headlight dimmer switch connector.
(b) Measure the voltage.
Standard voltage

Tester Connection	Condition	Specified Condition
D4-8 (HL) - Body ground	Always	11 to 14 V
D4-9 (HU) - Body ground	Always	11 to 14 V

(c) Reconnect the headlight dimmer switch connector.

NG → **REPAIR OR REPLACE HARNESS OR CONNECTOR**

OK

REPAIR OR REPLACE HARNESS OR CONNECTOR (HEADLIGHT DIMMER SWITCH - BODY GROUND)

Illumination Circuit

DESCRIPTION

The main body ECU receives information regarding the door courtesy switch and door lock position switch, and turns on the room light assembly.

WIRING DIAGRAM

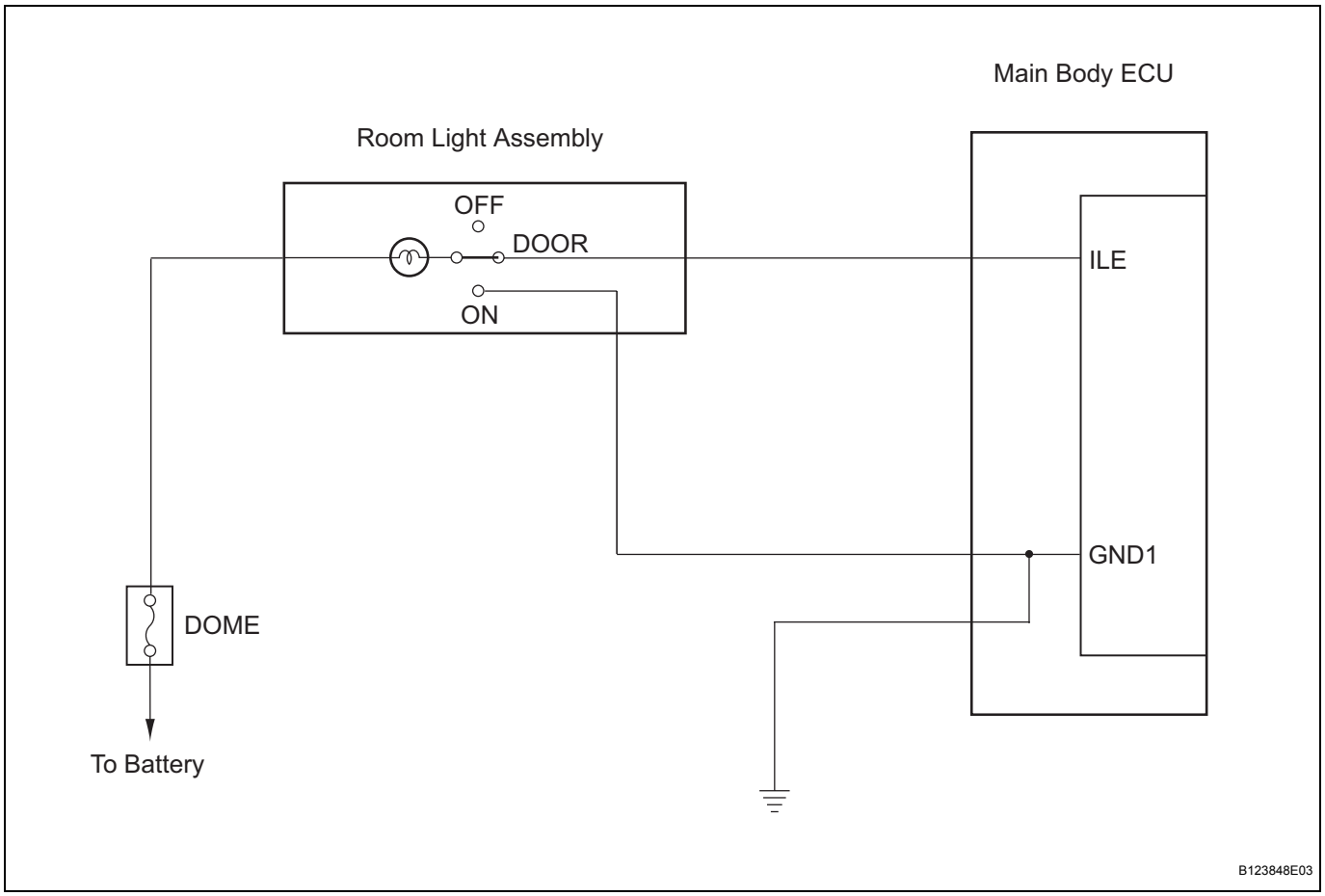

INSPECTION PROCEDURE

1	INSPECT FUSE (DOME)

(a) Remove the DOME fuse from the engine room relay block.
(b) Measure the resistance.
Standard resistance:
Below 1 Ω
(c) Reinstall the DOME fuse.

NG → **REPLACE FUSE**

OK

2	INSPECT ROOM LIGHT ASSEMBLY

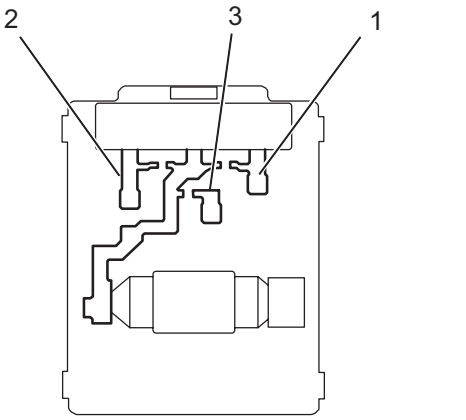

(a) Inspect the room light assembly.
(1) Remove the room light assembly.
(2) Measure the resistance.
Standard resistance

Tester Connection	Switch Operation	Specified Condition
1 - 2 1 - 3	OFF	10 kΩor higher
1 - 2	DOOR	Below 1Ω
1 - 3	ON	Below 1Ω

(3) Connect the positive (+) lead from the battery to terminal 1 and the negative (-) lead to terminal 2, then check that the light comes on when the switch is in the DOOR position.
OK:
Light comes on.
(4) Connect the positive (+) lead from the battery to terminal 1 and the negative (-) lead to terminal 3, then check that the light comes on when the switch is in the ON position.
OK:
Light comes on.
(5) Reinstall the room light assembly.

NG → **REPLACE ROOM LIGHT ASSEMBLY**

OK

3	CHECK HARNESS AND CONNECTOR (BATTERY - ROOM LIGHT ASSEMBLY AND MAIN BODY ECU)

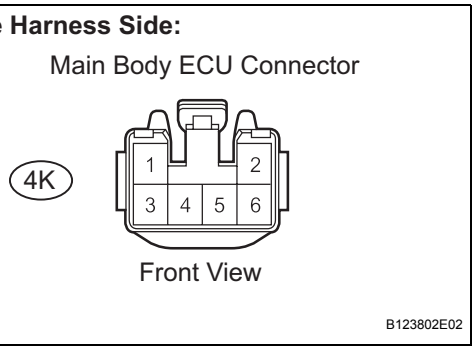

(a) Disconnect the 4K main body ECU connector.
(b) Measure the voltage.
Standard voltage

Tester Connection	Condition	Specified Condition
4K-2 (ILE) - Body ground	Room light switch in DOOR position	11 to 14 V
4K-1 (GND1)- Body ground	Room light switch in ON position	11 to 14 V

(c) Reconnect the main body ECU connector.

NG → **REPAIR OR REPLACE HARNESS OR CONNECTOR**

OK

PROCEED TO NEXT CIRCUIT INSPECTION SHOWN IN PROBLEM SYMPTOMS TABLE

HEADLIGHT ASSEMBLY (for Sedan)

COMPONENTS

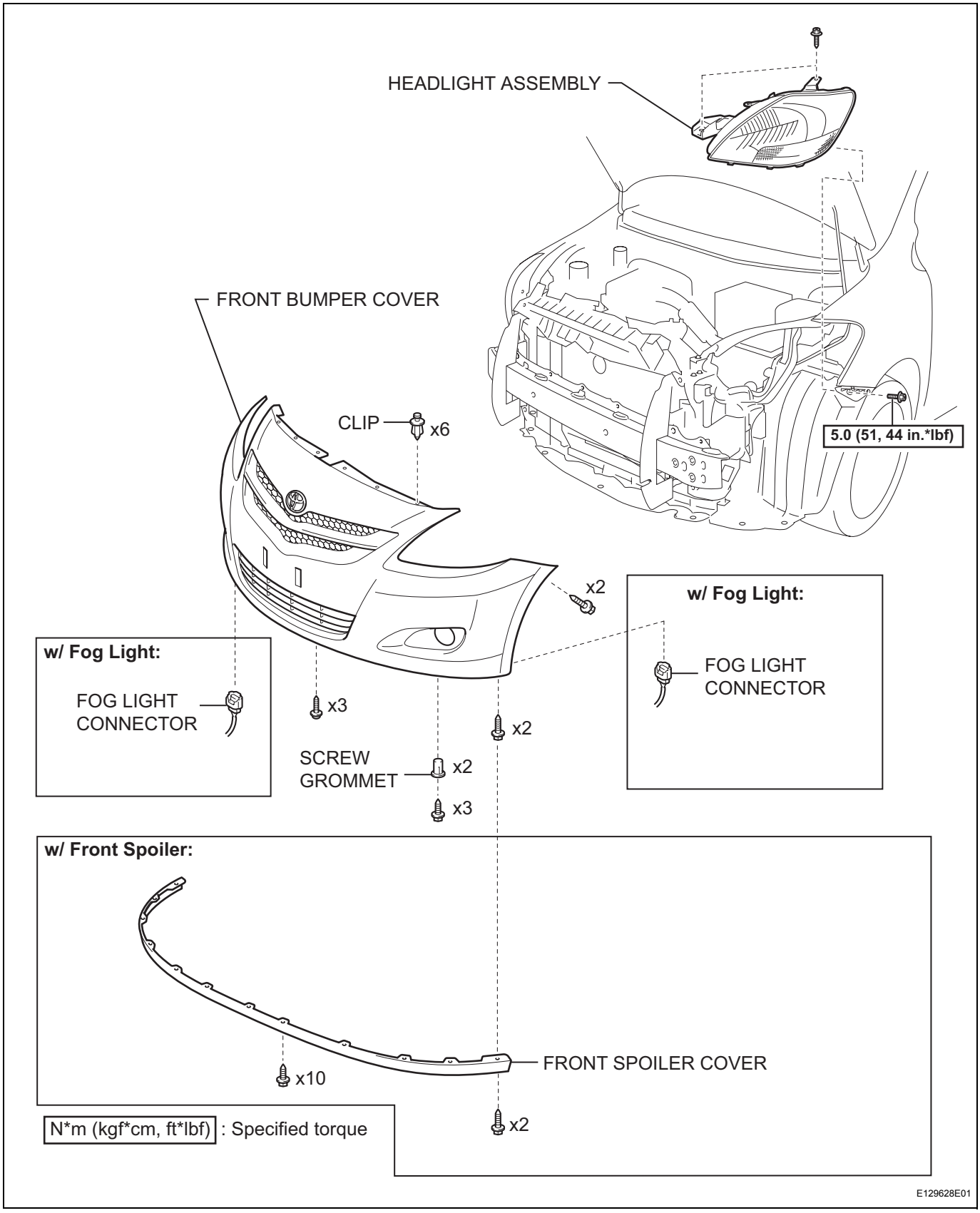

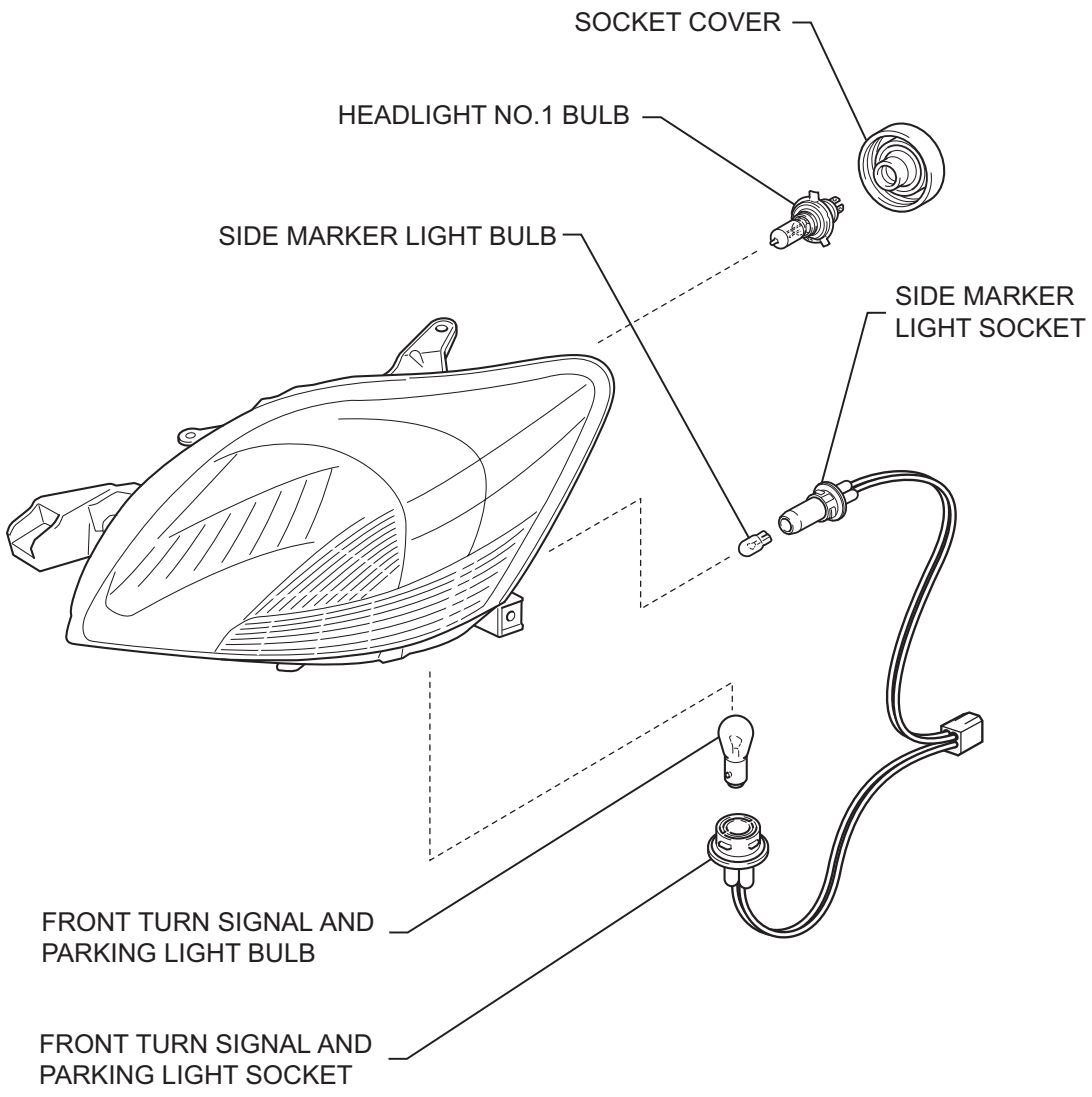

BRACKET FOR REPAIR:

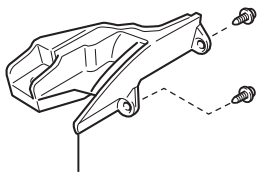

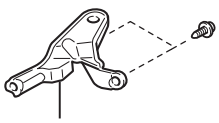

Y

E129629E01

REMOVAL

HINT:
- Use the same procedure for both the RH and LH sides.
- The procedure described below is for the LH side.
- Set the headlight leveling switch to 0 (zero) before conducting the procedure.

1. **DISCONNECT CABLE FROM NEGATIVE BATTERY TERMINAL**
2. **REMOVE FRONT SPOILER COVER (w/ Front Spoiler) (See page ET-6)**
3. **REMOVE FRONT BUMPER COVER (See page ET-6)**
4. **REMOVE HEADLIGHT ASSEMBLY**
   (a) Remove the 2 screws and the bolt.
   (b) Disconnect the 2 connectors, then remove the headlight.

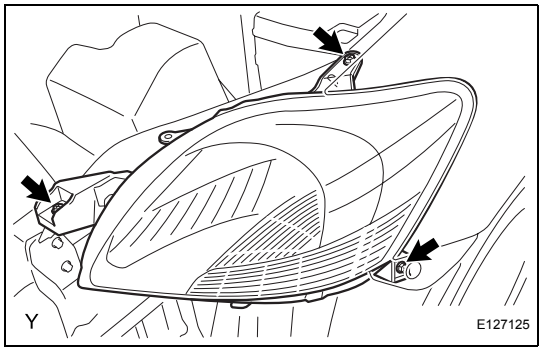

DISASSEMBLY

1. **REMOVE HEADLIGHT NO.1 BULB**
   (a) Remove the socket cover.

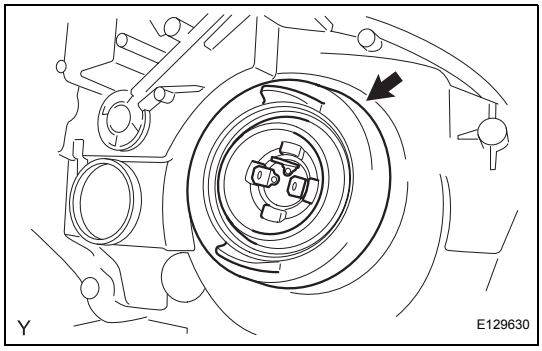

   (b) Push the set spring, and pull it in the directions indicated by the arrow in the illustration, to disengage it.

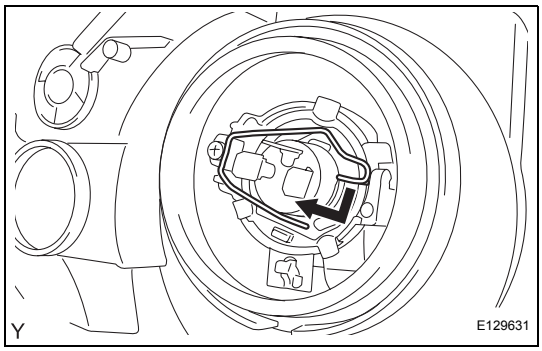

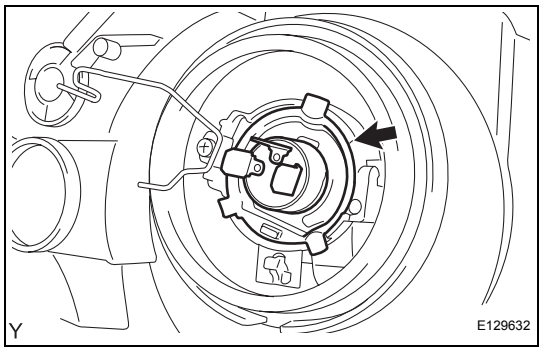

(c) Remove the headlight No. 1 bulb.
NOTICE:
Do not touch the bulb glass with your fingers.

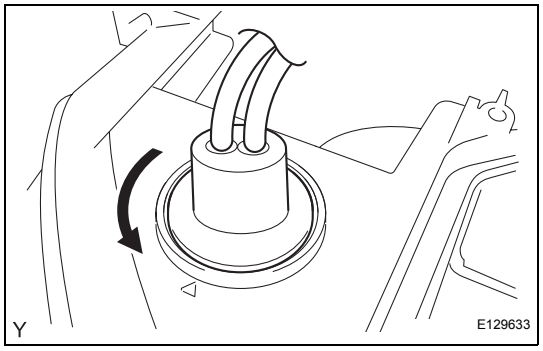

2. REMOVE FRONT TURN SIGNAL AND PARKING LIGHT BULB

(a) Turn the front turn signal and parking light socket and bulb, in the direction indicated by the arrow in the illustration, to remove them.
(b) Remove the front turn signal and parking light bulb from the light socket.

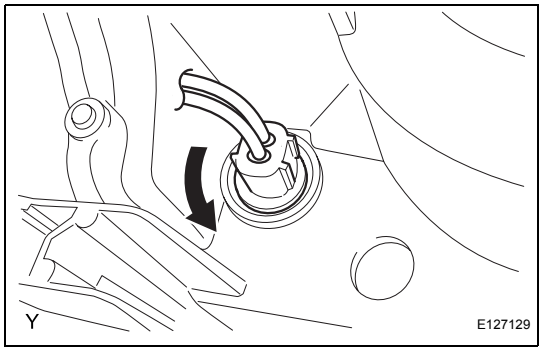

3. REMOVE SIDE MARKER LIGHT BULB

(a) Turn the side marker light socket and bulb, in the direction indicated by the arrow in the illustration, to remove them.
(b) Remove the side marker light bulb from the light socket.

ADJUSTMENT

1. PREPARE VEHICLE FOR HEADLIGHT AIMING ADJUSTMENT

(a) Prepare the vehicle:
- Ensure that there is no damage or deformation of the body around the headlights.
- Fill the fuel tank.
- Fill the oil to the specified level.
- Fill the coolant to the specified level.
- Inflate the tires to the appropriate pressure.
- Place the spare tire, tools and jack in their original positions.
- Unload the trunk.
- Sit a person of average weight (68 kg, 150 lb) in the driver seat.

2. PREPARE FOR HEADLIGHT AIMING (for Using a Tester)

(a) Prepare the vehicle for headlight aim check.

(b) Adjust in accordance with headlight tester instructions.

3. PREPARE FOR HEADLIGHT AIMING (for Using a Screen)

(a) Prepare the following vehicle conditions:
- Place the vehicle in a location that is dark enough to clearly observe the cutoff line. The cutoff line is a distinct line, below which light from the headlights can be observed and above which it cannot.
- Place the vehicle at a 90° angle to the wall.
- Keep a 7.62 m (25 ft) distance between the center of the headlight bulb and the wall.
- Place the vehicle on a level surface.
- Bounce the vehicle up and down to settle the suspension.

NOTICE:

A distance of 7.62 m (25 ft) between the vehicle (the center of the headlight bulb) and the wall is necessary for proper aim adjustment. If unable to secure a distance of 7.62 m (25 ft), set a distance of exactly 3 m (9.84 ft) to check and adjust the headlight aim. (Since the target zone changes depending on the distance, follow the instructions shown in the illustration.)

(b) Prepare a piece of thick white paper (approximately 2 m (6.6 ft) high x 4 m (13.1 ft) wide) to use as a screen.

(c) Draw a vertical line down the center of the screen (V line).

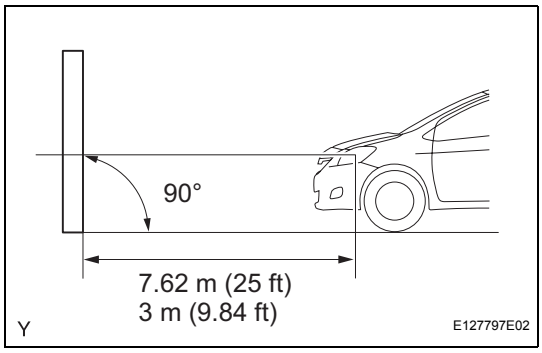

(d) Set the screen, as shown in the illustration.

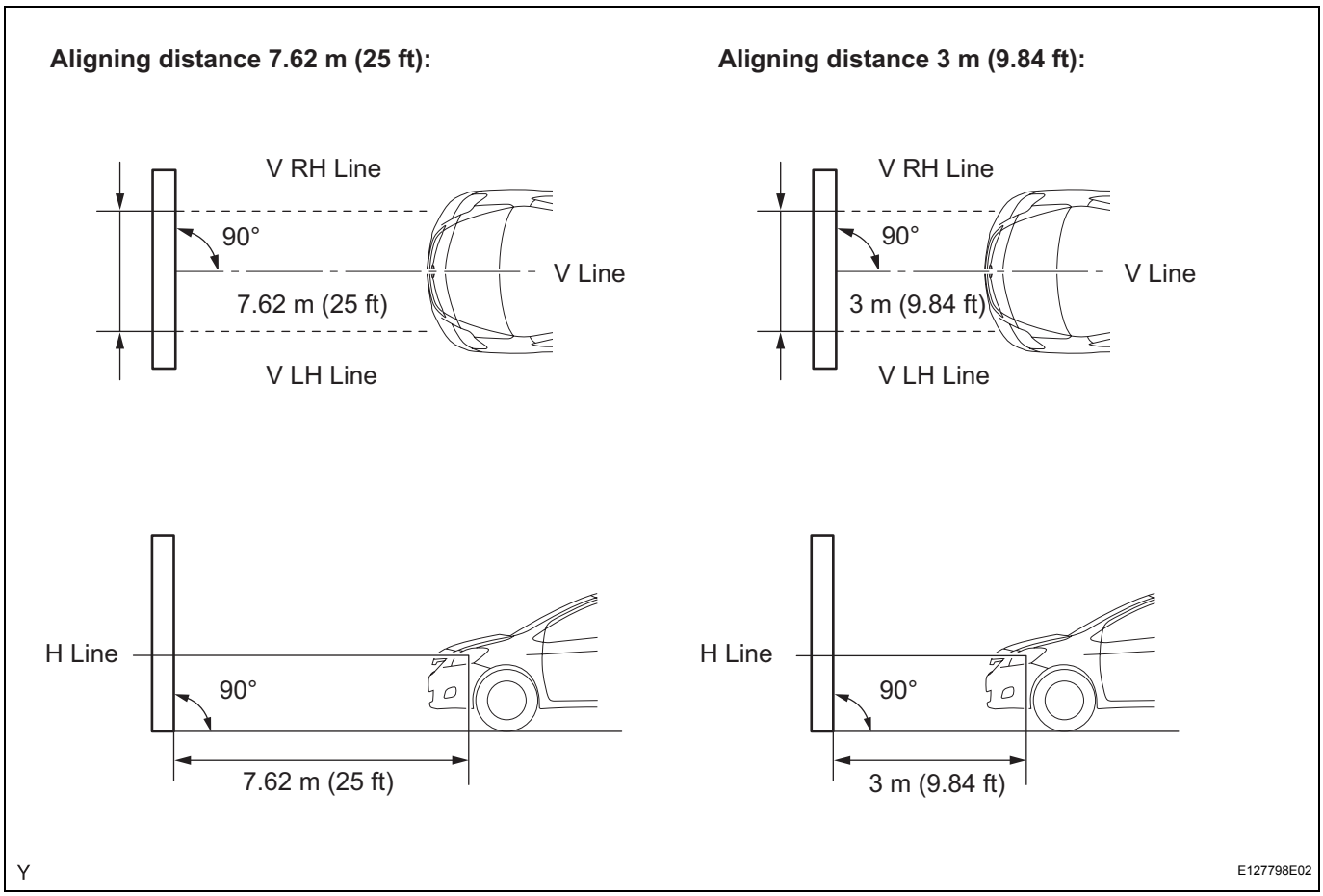

HINT:
- Stand the screen perpendicular to the ground.
- Align the V line on the screen with the center of the vehicle.

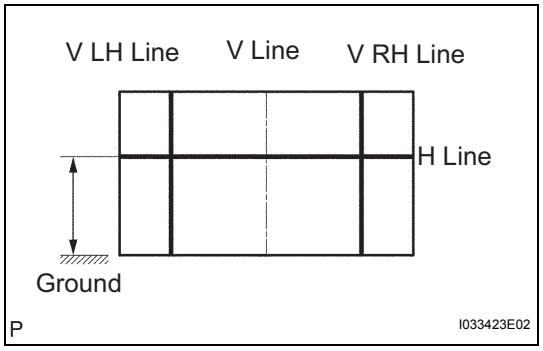

(e) Draw base lines (H line, V LH and V RH lines) on the screen, as shown in the illustration.
HINT:
- The base lines differ for "low-beam inspection" and "high-beam inspection".
- Mark the headlight bulb center marks on the screen. If the center mark cannot be observed on the headlight, use the center of the headlight bulb.

(1) H Line (Headlight height):
Draw a horizontal line across the screen so that it passes through the center marks. The H line should be at the same height as the headlight bulb center marks of the low-beam headlights.

(2) V LH Line and V RH Line (Center mark positions of left-hand (LH) and right-hand (RH) headlights):
Draw two vertical lines so that they intersect the H line at each center mark (aligned with the center of the low-beam headlight bulbs).

4. INSPECT HEADLIGHT AIMING

(a) Cover the headlight on the opposite side or disconnect its connector, to prevent light from the headlight not being inspected from affecting the headlight aiming inspection.

NOTICE:

Do not keep the headlight covered for more than 3 minutes. The headlight lens is made of synthetic resin, and may easily melt or be damaged due to heat.

(b) Start the engine.

NOTICE:

Engine rpm must be 1,500 or more.

(c) Turn on the headlight and make sure that the cutoff line falls within the specified area, as shown in the illustration.

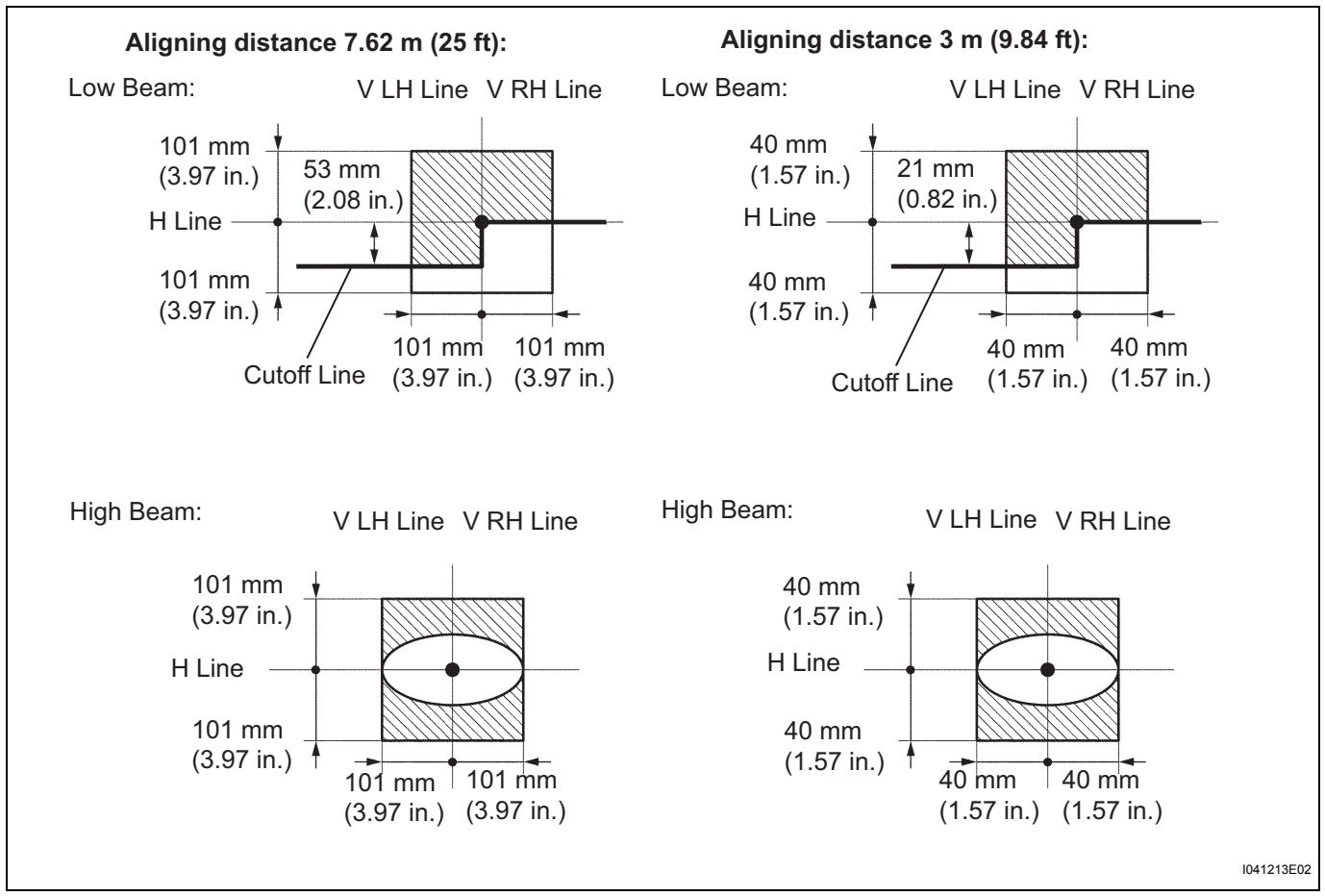

HINT:

- Since the low-beam light and the high-beam light are a unit, if the aim on one is correct, the other should also be correct. However, check both beams just to make sure.
- Alignment distance is 7.62 m (25 ft):
  The cutoff line is 101 mm (3.97 in.) above and below the H line as well as to the left and right of the V line with low-beam (SAE J599).

- Alignment distance is 3 m (9.84 ft):
  The cutoff line is 40 mm (1.57 in.) above and below the H line as well as to the left and right of the V line with low-beam (SAE J599).
- Alignment distance is 7.62 m (25 ft):
  The cutoff line is 101 mm (3.97 in.) above and below the H line as well as to the left and right of the V line with high-beam (SAE J599).
- Alignment distance is 3 m (9.84 ft):
  The cutoff line is 40 mm (1.57 in.) above and below the H line as well as to the left and right of the V line with high-beam (SAE J599).
- Alignment distance is 7.62 m (25 ft):
  The cutoff line is 53 mm (2.08 in.) below the H line with low-beam.
- Alignment distance is 3 m (9.84 ft):
  The cutoff line is 21 mm (0.82 in.) below the H line with low-beam.

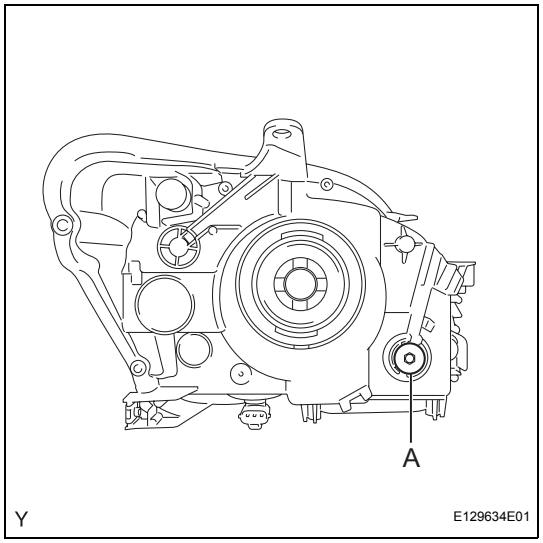

5. ADJUST HEADLIGHT AIMING

(a) Adjust the aiming vertically:
Adjust the headlight aim to within the specified range by turning aiming screw A with a screwdriver.
NOTICE:
The final turn of the aiming screw should be made in the clockwise direction. If the screw is tightened excessively, loosen it and then retighten it, so that the final turn of the screw is in the clockwise direction.

(b) Perform low-beam aim adjustment.
HINT:
The headlight aim moves down when the aiming screw is turned clockwise, and moves up when the aiming screw is turned counterclockwise.

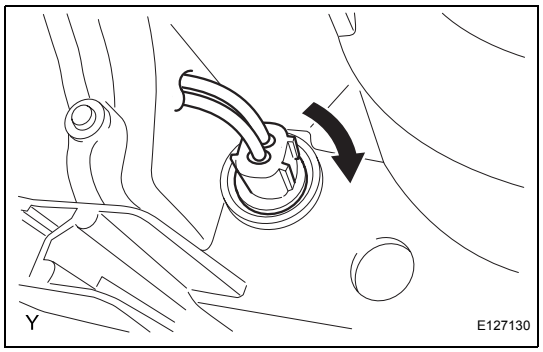

REASSEMBLY

1. INSTALL SIDE MARKER LIGHT BULB

(a) Install the side marker light bulb into the light socket.
(b) Turn the side marker light bulb socket and bulb, in the direction indicated by the arrow in the illustration, to install them.

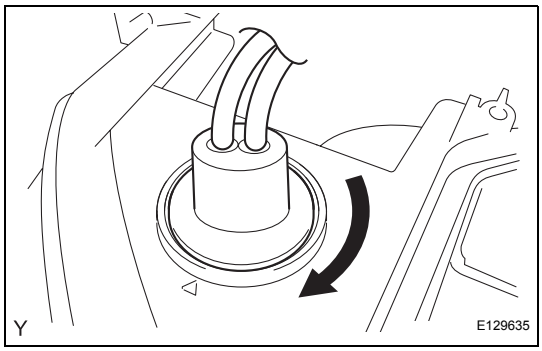

2. INSTALL FRONT TURN SIGNAL AND PARKING LIGHT BULB

(a) Install the front turn signal and parking light bulb into the light socket.

(b) Turn the front turn signal and parking light bulb socket and bulb, in the direction indicated by the arrow in the illustration, to install them.

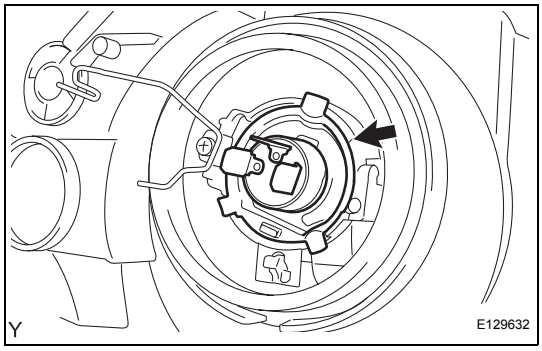

3. INSTALL HEADLIGHT NO.1 BULB

(a) Install the headlight No. 1 bulb.

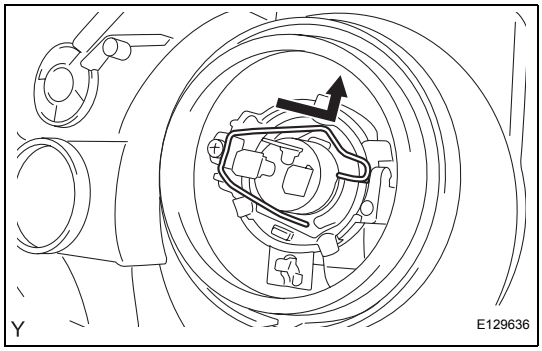

(b) Lock the set spring by moving it in the directions indicated by the arrow in the illustration.

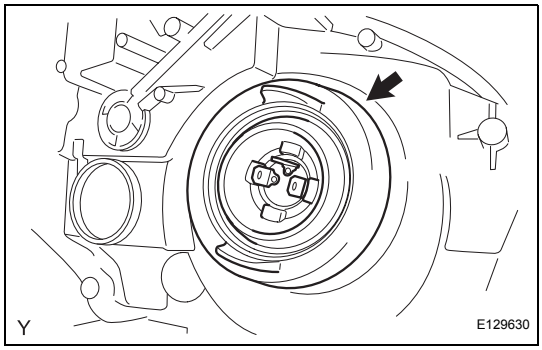

(c) Install the socket cover.

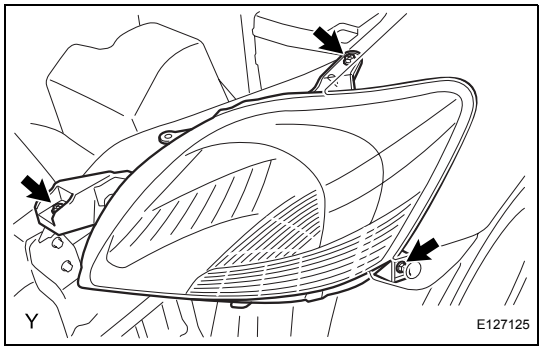

INSTALLATION

1. INSTALL HEADLIGHT ASSEMBLY

(a) Connect the 2 connectors.

(b) Install the headlight with the 2 screws and the bolt.
Torque: 5.0 N*m (51 kgf*cm, 44 in.*lbf)
(for bolt)

2. INSTALL FRONT BUMPER COVER (See page ET-16)

3. INSTALL FRONT SPOILER COVER (w/ Front Spoiler) (See page ET-19)

4. CONNECT CABLE TO NEGATIVE BATTERY TERMINAL
Torque: 5.4 N*m (55 kgf*cm, 48 in.*lbf)
5. PREPARE VEHICLE FOR HEADLIGHT AIMING ADJUSTMENT (See page LI-87)
6. PREPARE FOR HEADLIGHT AIMING (for Using a Screen) (See page LI-88)
7. INSPECT HEADLIGHT AIMING (See page LI-90)
8. ADJUST HEADLIGHT AIMING (See page LI-91)

REPAIR

HINT:
- Use the same procedure for both the RH and LH sides.
- The procedure described below is for the LH side.
- If only the installation area of the headlight is damaged, the repairs described below can be performed inexpensively by using bracket for the repair. This may only be done if other areas of the headlight are not damaged.

1. DISCONNECT CABLE FROM NEGATIVE BATTERY TERMINAL

2. REMOVE FRONT SPOILER COVER (w/ Front Spoiler) (See page ET-6)

3. REMOVE FRONT BUMPER COVER (See page ET-6)

4. REMOVE HEADLIGHT ASSEMBLY (See page LI-86)

5. INSTALL HEADLIGHT PROTECTOR RETAINER UPPER

HINT:
- If only the installation area of the headlight is damaged, use a bracket for a low-cost repair.
- Ensure that other areas of the headlight are not damaged.

(a) Cut off the portion indicated by the hatched lines in the illustration and smooth the surface with sandpaper.

NOTICE:
After cutting off the shaded portion, place the headlight protector retainer upper against the bosses and gradually file away the shaded portion until installation is possible.

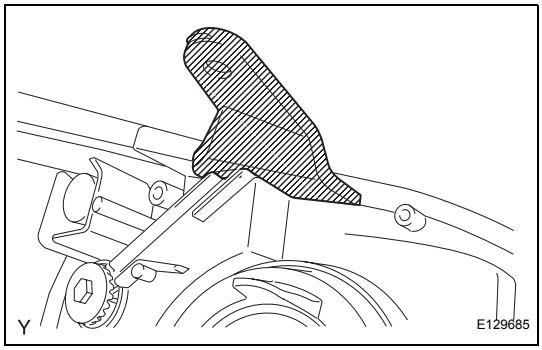

(b) Install the headlight protector retainer upper with the 2 screws.

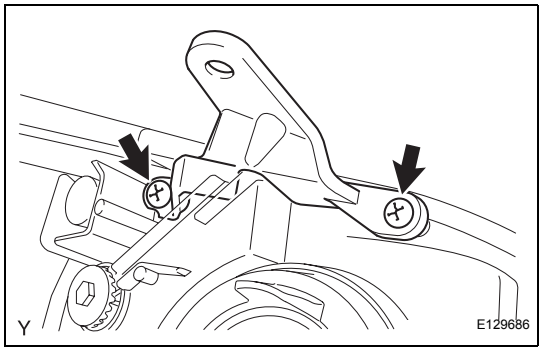

6. INSTALL HEADLIGHT PROTECTOR RETAINER LOWER

HINT:
- If only the installation area of the headlight is damaged, use a bracket for a low-cost repair.
- Ensure that other areas of the headlight are not damaged.

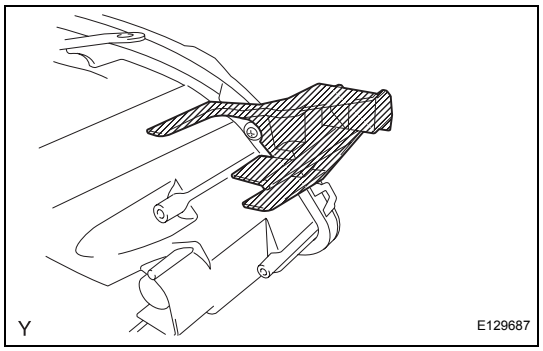

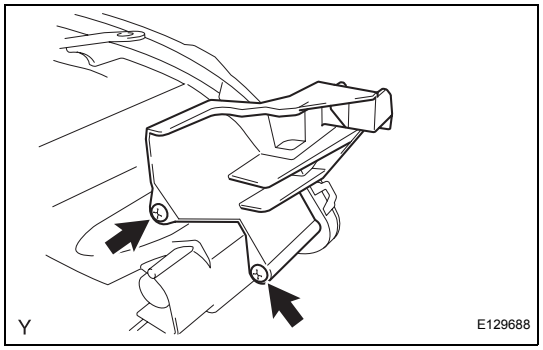

(a) Cut off the portion indicated by the hatched lines in the illustration and smooth the surface with sandpaper.
NOTICE:
After cutting off the shaded portion, place the headlight protector retainer lower against the bosses and gradually file away the shaded portion until installation is possible.

(b) Install the headlight protector retainer lower with the 2 screws.

7. **INSTALL HEADLIGHT ASSEMBLY (See page LI-92)**
8. **INSTALL FRONT BUMPER COVER (See page ET-16)**
9. **INSTALL FRONT SPOILER COVER (w/ Front Spoiler) (See page ET-19)**
10. **CONNECT CABLE TO NEGATIVE BATTERY TERMINAL**
Torque: 5.4 N*m (55 kgf*cm, 48 in.*lbf)
11. **PREPARE VEHICLE FOR HEADLIGHT AIMING ADJUSTMENT (See page LI-87)**
12. **PREPARE FOR HEADLIGHT AIMING (for Using a Tester) (See page LI-87)**
13. **PREPARE FOR HEADLIGHT AIMING (for Using a Screen) (See page LI-88)**
14. **INSPECT HEADLIGHT AIMING (See page LI-90)**
15. **ADJUST HEADLIGHT AIMING (See page LI-91)**

HEADLIGHT ASSEMBLY (for Hatchback)

COMPONENTS

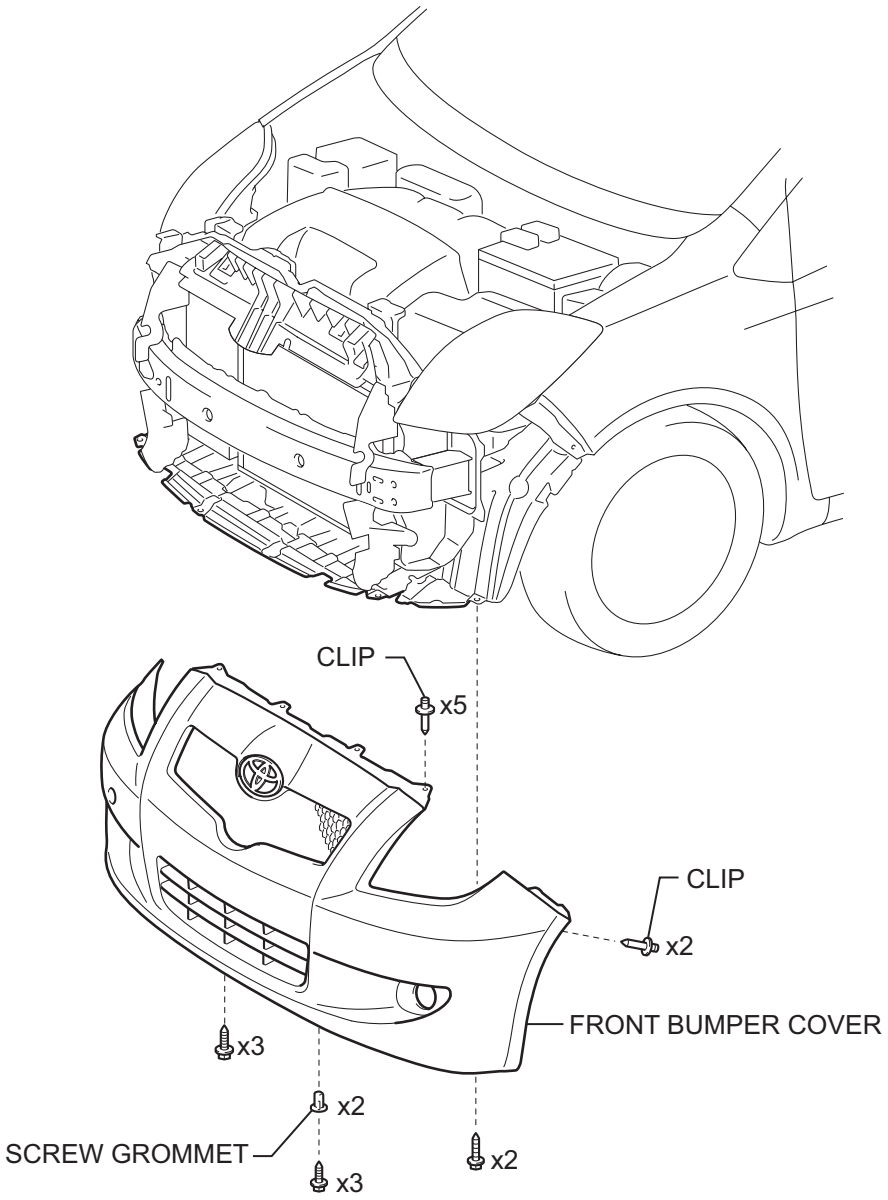

T

E117642E01

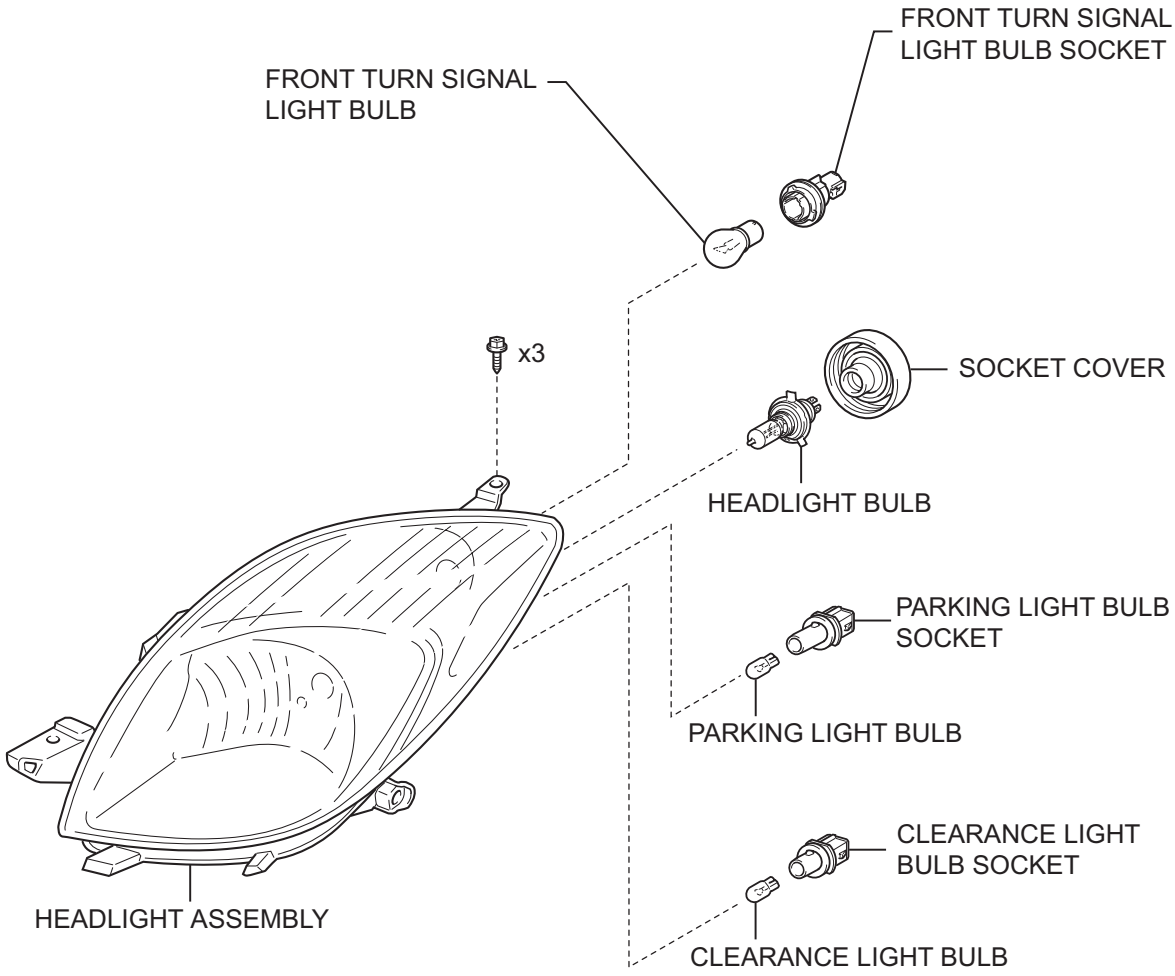

BRACKET FOR REPAIR:

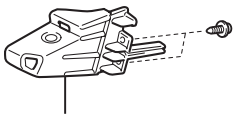

HEADLIGHT PROTECTOR RETAINER LOWER

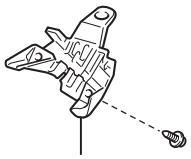

HEADLIGHT PROTECTOR RETAINER UPPER

Y

E129692E01

REMOVAL

HINT:
- Use the same procedure for both the RH and LH sides.
- The procedure described below is for the LH side.

1. **DISCONNECT CABLE FROM NEGATIVE BATTERY TERMINAL**
2. **REMOVE FRONT BUMPER COVER (See page ET-24)**
3. **REMOVE HEADLIGHT ASSEMBLY**
   (a) Remove the 3 screws.
   (b) Disconnect the 3 connectors, then remove the headlight.

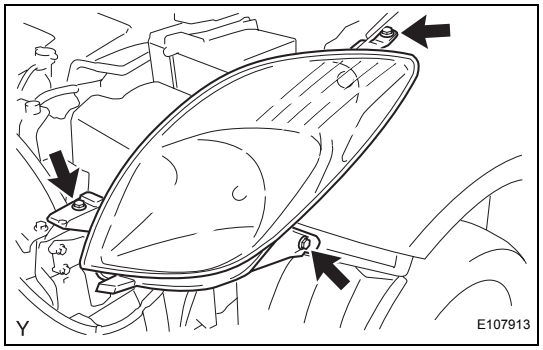

DISASSEMBLY

1. **REMOVE HEADLIGHT BULB**
   (a) Remove the socket cover.

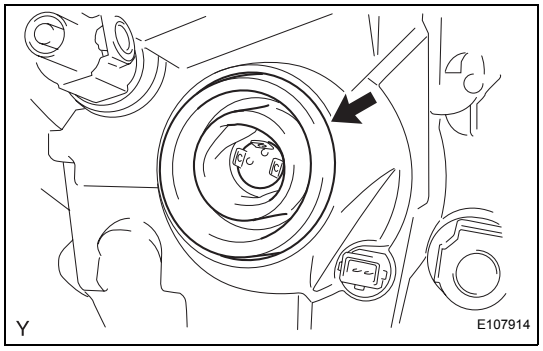

   (b) Push the set spring, and pull it in the direction indicated by the arrows in the illustration, to disengage it.

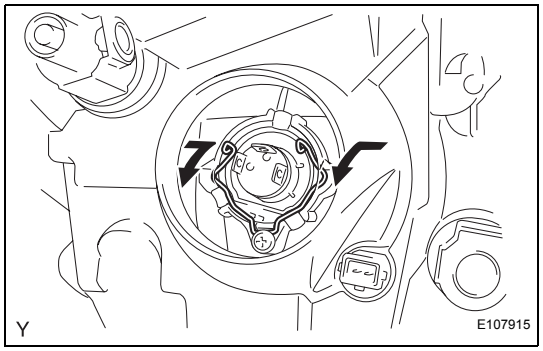

   (c) Remove the headlight bulb.
   NOTICE:
   Do not touch the bulb glass with your fingers.

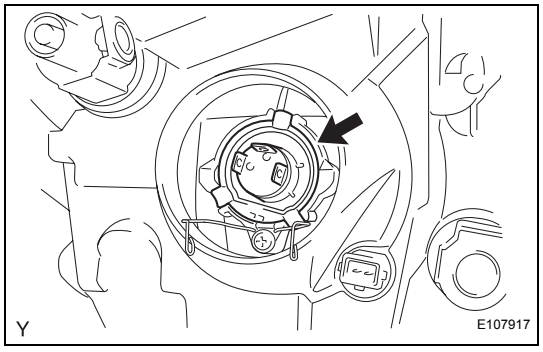

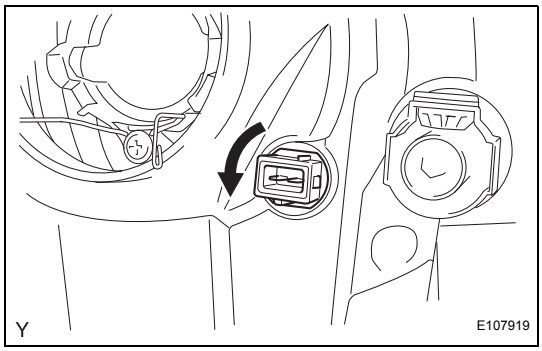

2. REMOVE CLEARANCE LIGHT BULB

(a) Turn the clearance light bulb socket and bulb, in the direction indicated by the arrow in the illustration, to remove them.

(b) Remove the clearance light bulb from the light socket.

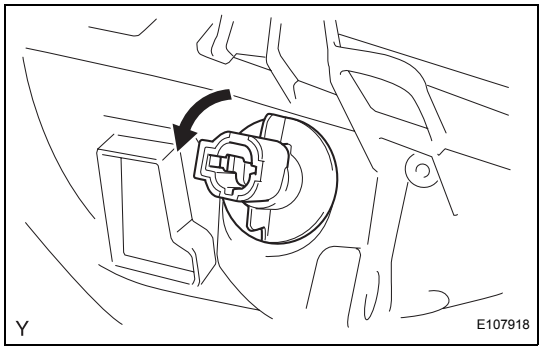

3. REMOVE FRONT TURN SIGNAL LIGHT BULB

(a) Turn the front turn signal light socket and bulb, in the direction indicated by the arrow in the illustration, to remove them.

(b) Remove the front turn signal light bulb from the light socket.

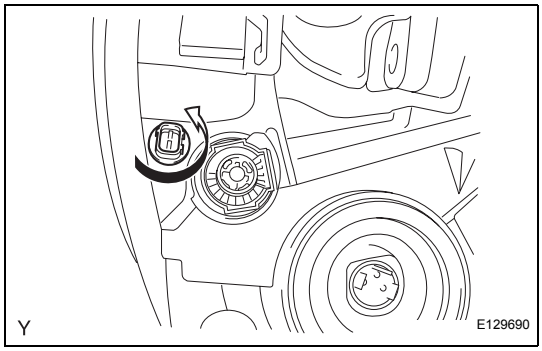

4. REMOVE PARKING LIGHT BULB

(a) Turn the parking light socket and bulb, in the direction indicated by the arrow in the illustration, to remove them.

(b) Remove the parking light bulb from the light socket.

ADJUSTMENT

1. PREPARE VEHICLE FOR HEADLIGHT AIMING ADJUSTMENT

(a) Prepare the vehicle:
- Ensure that there is no damage or deformation of the body around the headlights.
- Fill the fuel tank.
- Fill the oil to the specified level.
- Fill the coolant to the specified level.
- Inflate the tires to the appropriate pressure.
- Place the spare tire, tools and jack in their original positions.
- Unload the trunk.
- Sit a person of average weight (68 kg, 150 lb) in the driver seat.

2. PREPARE FOR HEADLIGHT AIMING (for Using a Tester)

(a) Prepare the vehicle for headlight aim check.

(b) Adjust in accordance with headlight tester instructions.

3. PREPARE FOR HEADLIGHT AIMING (for Using a Screen)

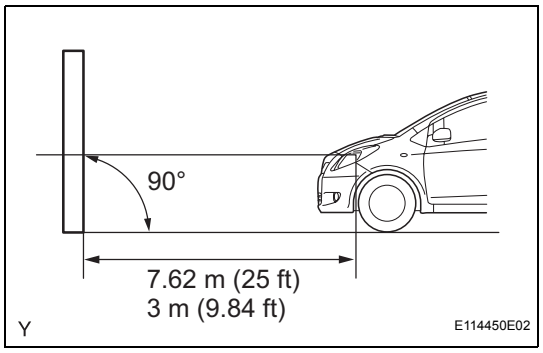

(a) Prepare the vehicle in accordance with the following conditions:
- Place the vehicle in a location that is dark enough to clearly observe the cutoff line. The cutoff line is a distinct line, below which light from the headlights can be observed and above which it cannot.
- Place the vehicle at a 90° angle to the wall.
- Keep a 7.62 m (25 ft) distance between the center of the headlight bulb and the wall.
- Place the vehicle on a level surface.
- Bounce the vehicle up and down to settle the suspension.

NOTICE:

A distance of 7.62 m (25 ft) between the vehicle (the center of the headlight bulb) and the wall is necessary for proper aim adjustment. If unable to secure a distance of 7.62 m (25 ft), set a distance of exactly 3 m (9.84 ft) to check and adjust the headlight aim. (Since the target zone changes depending on the distance, follow the instructions shown in the illustration.)

(b) Prepare a piece of thick white paper (approximately 2 m (6.6 ft) high x 4 m (13.1 ft) wide) to use as a screen.

(c) Draw a vertical line down the center of the screen (V line).

(d) Set the screen, as shown in the illustration.

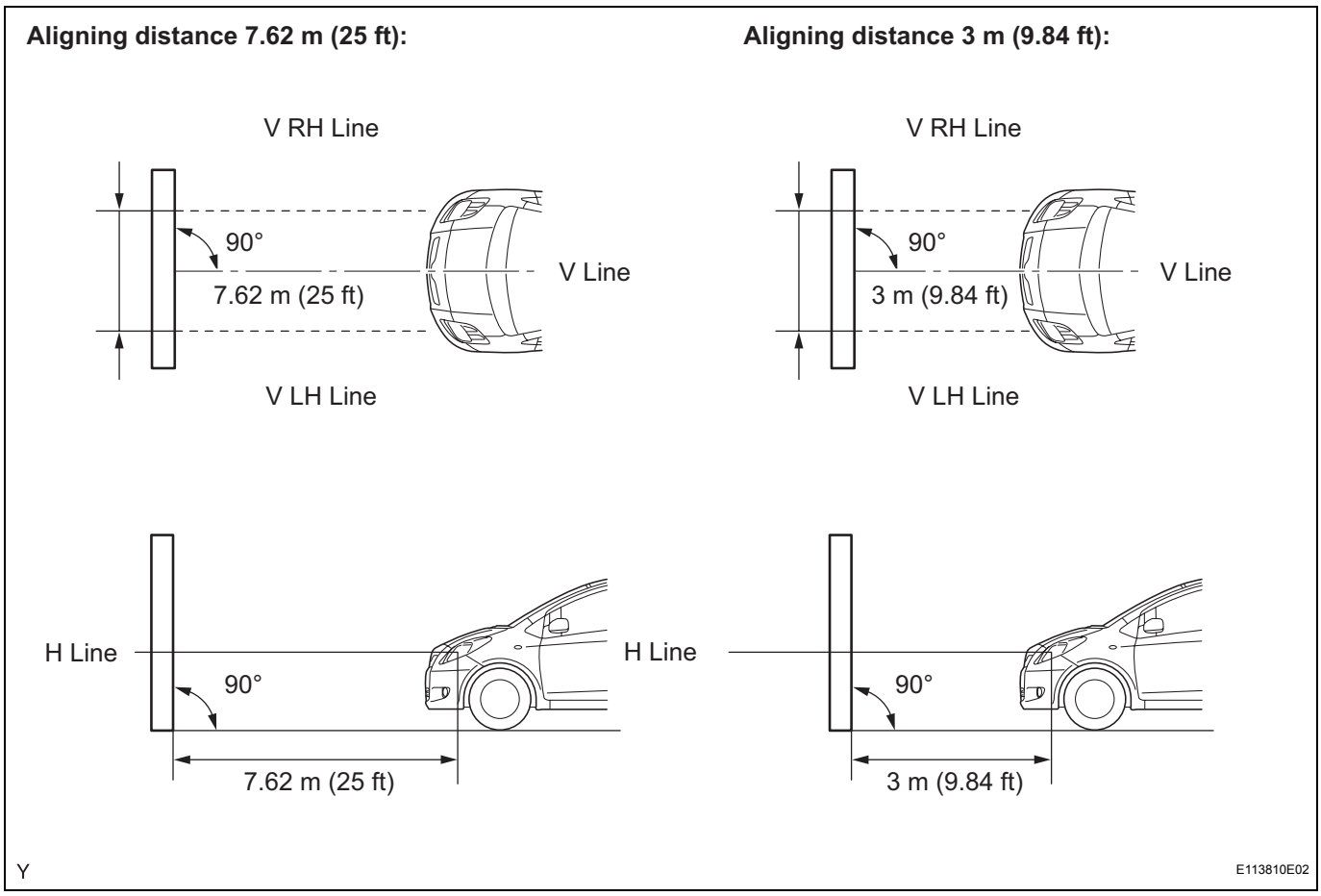

HINT:
- Stand the screen perpendicular to the ground.
- Align the V line on the screen with the center of the vehicle.

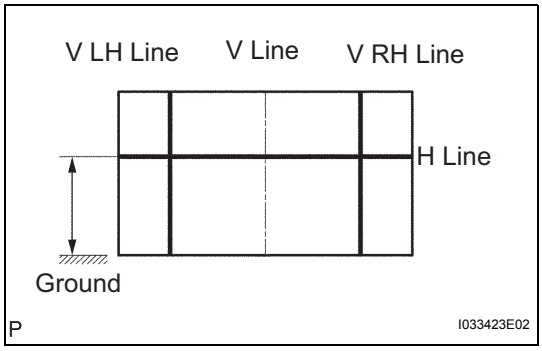

(e) Draw base lines (H line, V LH and V RH lines) on the screen, as shown in the illustration.
HINT:
- The base lines differ for "low-beam inspection" and "high-beam inspection".
- Mark the headlight bulb center marks on the screen. If the center mark cannot be observed on the headlight, use the center of the headlight bulb.

(1) H Line (Headlight height):
Draw a horizontal line across the screen so that it passes through the center marks. The H line should be at the same height as the headlight bulb center marks of the low-beam headlights.

(2) V LH Line and V RH Line (Center mark positions of left-hand (LH) and right-hand (RH) headlights):
Draw two vertical lines so that they intersect the H line at each center mark (aligned with the center of the low-beam headlight bulbs).

4. INSPECT HEADLIGHT AIMING

(a) Cover the headlight on the opposite side or disconnect its connector, to prevent light from the headlight not being inspected from affecting the headlight aiming inspection.

NOTICE:

Do not keep the headlight covered for more than 3 minutes. The headlight lens is made of synthetic resin, and may easily melt or be damaged due to heat.

(b) Start the engine.

NOTICE:

Engine rpm must be 1,500 or more.

(c) Turn on the headlight and make sure that the cutoff line falls within the specified area, as shown in the illustration.

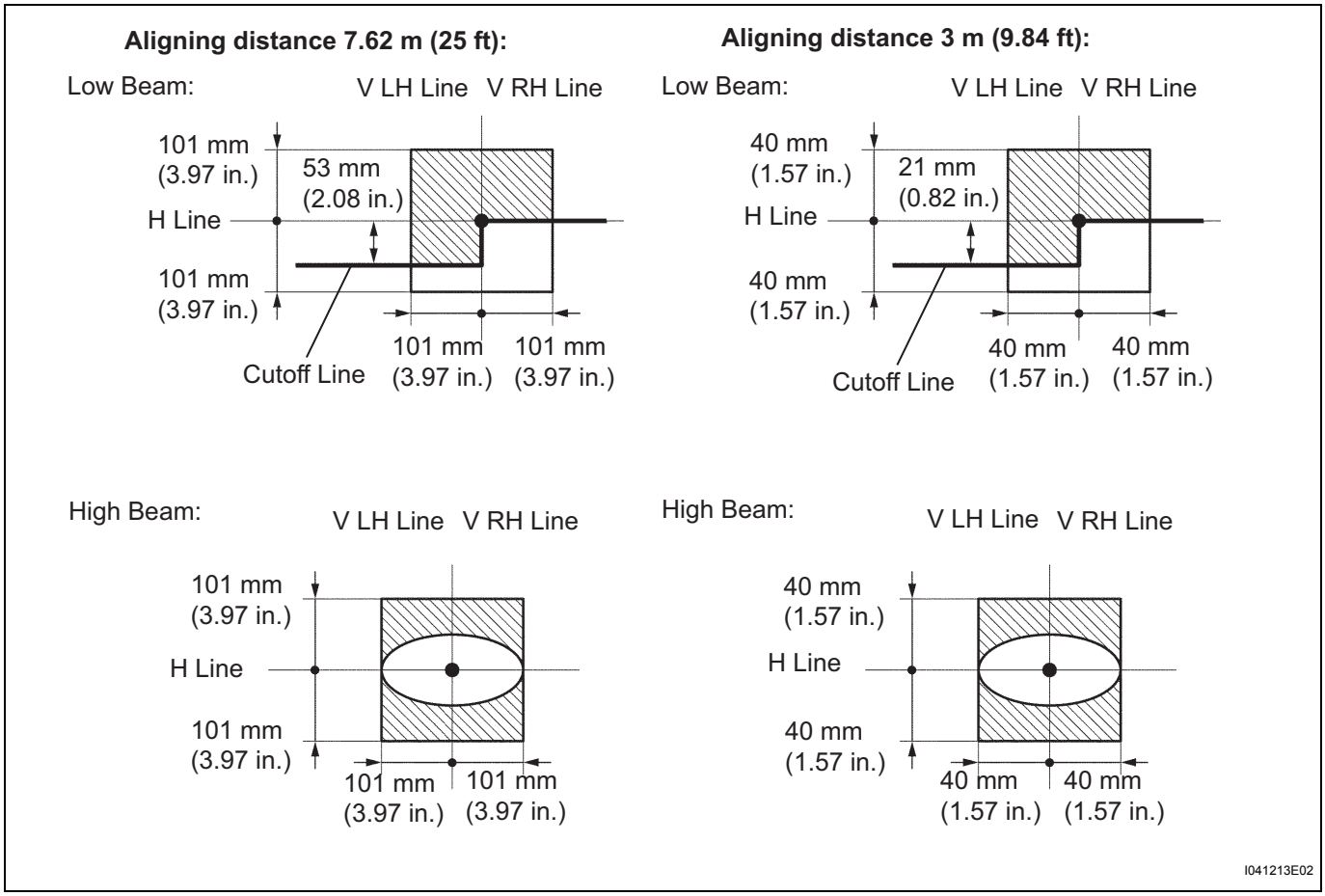

HINT:

- Since the low-beam light and the high-beam light are a unit, if the aim on one is correct, the other should also be correct. However, check both beams just to make sure.
- Alignment distance is 7.62 m (25 ft):
  The cutoff line is 101 mm (3.97 in.) above and below the H line as well as to the left and right of the V line with low-beam (SAE J599).

- Alignment distance is 3 m (9.84 ft):
  The cutoff line is 40 mm (1.57 in.) above and below the H line as well as to the left and right of the V line with low-beam (SAE J599).
- Alignment distance is 7.62 m (25 ft):
  The cutoff line is 101 mm (3.97 in.) above and below the H line as well as to the left and right of the V line with high-beam (SAE J599).
- Alignment distance is 3 m (9.84 ft):
  The cutoff line is 40 mm (1.57 in.) above and below the H line as well as to the left and right of the V line with high-beam (SAE J599).
- Alignment distance is 7.62 m (25 ft):
  The cutoff line is 53 mm (2.08 in.) below the H line with low-beam.
- Alignment distance is 3 m (9.84 ft):
  The cutoff line is 21 mm (0.82 in.) below the H line with low-beam.

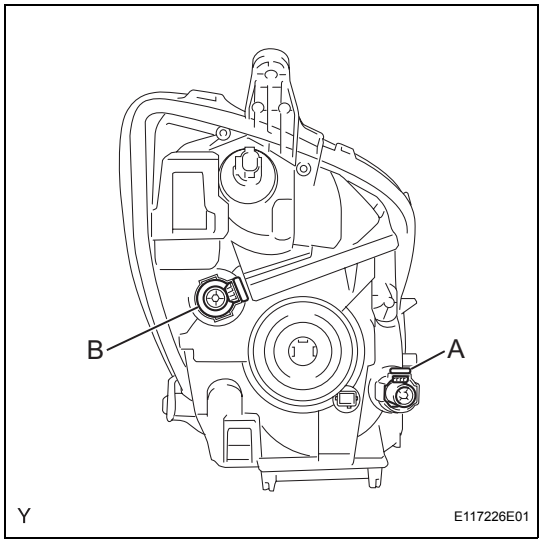

5. ADJUST HEADLIGHT AIMING

(a) Adjust the aiming vertically:
Adjust the headlight aim to within the specified range by turning aiming screw A with a screwdriver.
NOTICE:
The final turn of the aiming screw should be made in the clockwise direction. If the screw is tightened excessively, loosen it and then retighten it, so that the final turn of the screw is in the clockwise direction.

(b) Perform low-beam aim adjustment.
HINT:
The headlight aim moves down when the aiming screw is turned clockwise, and moves up when the aiming screw is turned counterclockwise.

(c) Adjust the aim horizontally:
Adjust the headlight aim to within the specified range by turning aiming screw B with a screwdriver.
NOTICE:
The final turn of the aiming screw should be made in the clockwise direction. If the screw is tightened excessively, loosen it and then retighten it, so that the final turn of the screw is in the clockwise direction.

REASSEMBLY

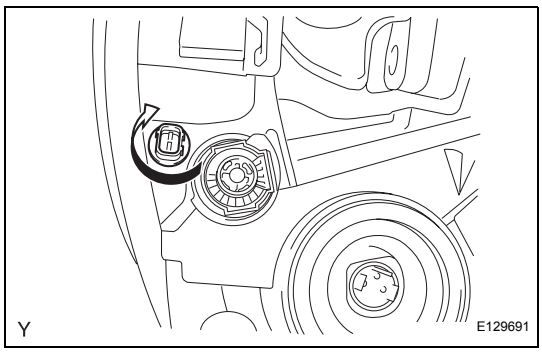

1. INSTALL PARKING LIGHT BULB

(a) Install the parking light bulb into the light socket.

(b) Turn the parking light bulb socket and bulb, in the direction indicated by the arrow in the illustration, to install them.

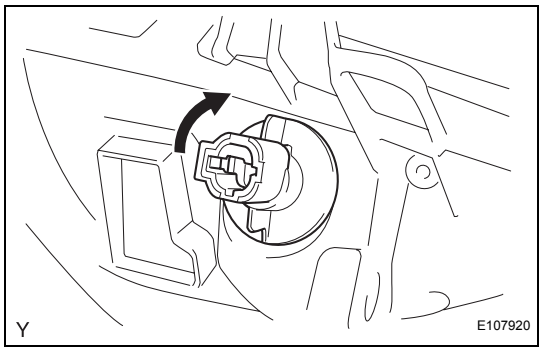

2. INSTALL FRONT TURN SIGNAL LIGHT BULB

(a) Install the front turn signal light bulb into the light socket.

(b) Turn the front turn signal light bulb socket and bulb, in the direction indicated by the arrow in the illustration, to install them.

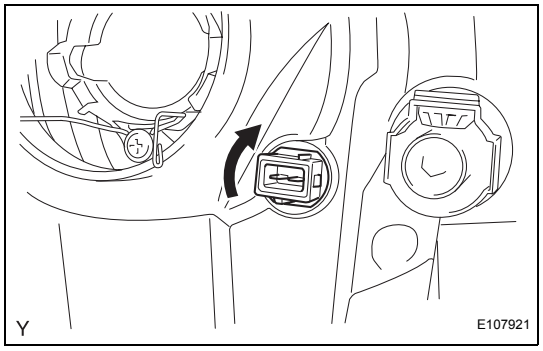

3. INSTALL CLEARANCE LIGHT BULB

(a) Install the clearance light bulb into the light socket.

(b) Turn the clearance light bulb socket and bulb, in the direction indicated by the arrow in the illustration, to install them.

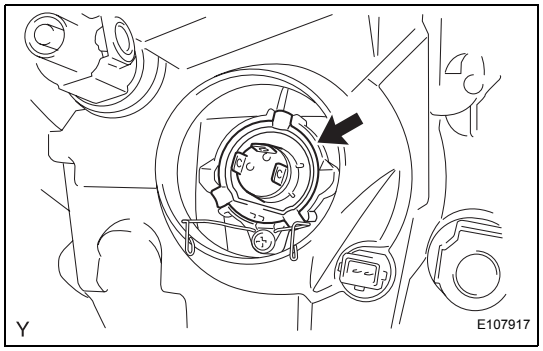

4. INSTALL HEADLIGHT BULB

(a) Install the headlight bulb.

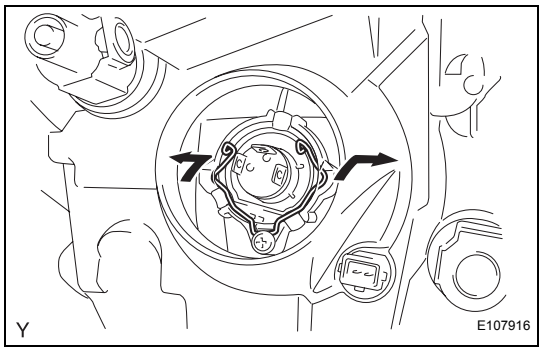

(b) Lock the set spring by moving it in the directions indicated by the arrows in the illustration.

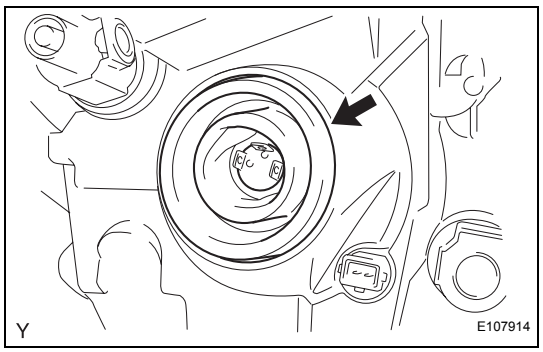

(c) Install the socket cover.

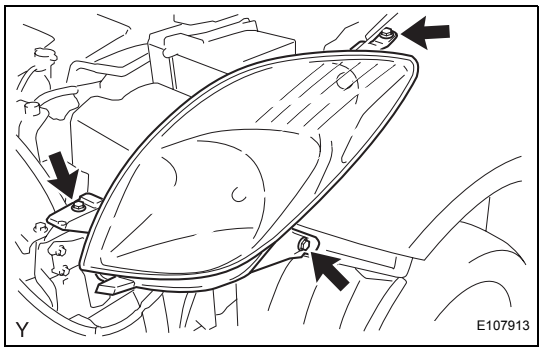

INSTALLATION

1. **INSTALL HEADLIGHT ASSEMBLY**
   (a) Connect the 3 connectors.
   (b) Install the headlight with the 3 screws.
2. **INSTALL FRONT BUMPER COVER (See page ET-33)**
3. **CONNECT CABLE TO NEGATIVE BATTERY TERMINAL**
   Torque: 5.4 N*m (55 kgf*cm, 48 in.*lbf)
4. **PREPARE VEHICLE FOR HEADLIGHT AIMING ADJUSTMENT (See page LI-98)**
5. **PREPARE FOR HEADLIGHT AIMING (for Using a Tester) (See page LI-98)**
6. **PREPARE FOR HEADLIGHT AIMING (for Using a Screen) (See page LI-99)**
7. **INSPECT HEADLIGHT AIMING (See page LI-101)**
8. **ADJUST HEADLIGHT AIMING (See page LI-102)**

REPAIR

HINT:

- Use the same procedure for both the RH and LH sides.
- The procedure described below is for the LH side.
- If only the installation area of the headlight is damaged, the repairs described below can be performed inexpensively by using brackets for the repair. This may only be done if the other areas of the headlight are not damaged.

1. DISCONNECT CABLE FROM NEGATIVE BATTERY TERMINAL

2. REMOVE FRONT BUMPER COVER (See page ET-24)

3. REMOVE HEADLIGHT ASSEMBLY (See page LI-97)

4. INSTALL HEADLIGHT PROTECTOR RETAINER UPPER

HINT:

- If only the installation area of the headlight is damaged, use a bracket for a low-cost repair.
- Ensure that other areas of the headlight are not damaged.

(a) Cut off the portion indicated by the hatched lines in the illustration and smooth the surface with sandpaper.

NOTICE:

After cutting off the shaded portion, place the headlight protector retainer upper against the bosses and gradually file away the shaded portion until installation is possible.

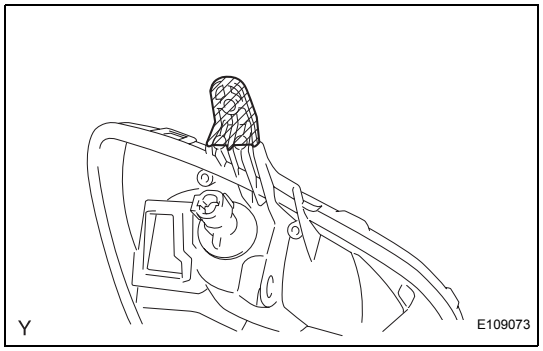

(b) Install the headlight protector retainer upper with the 2 screws.

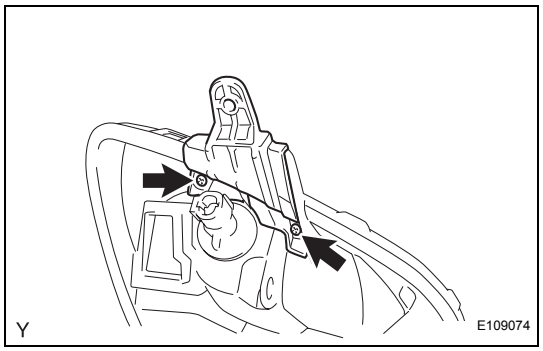

5. INSTALL HEADLIGHT PROTECTOR RETAINER LOWER

HINT:

- If only the installation area of the headlight is damaged, use a bracket for a low-cost repair.
- Ensure that other areas of the headlight are not damaged.

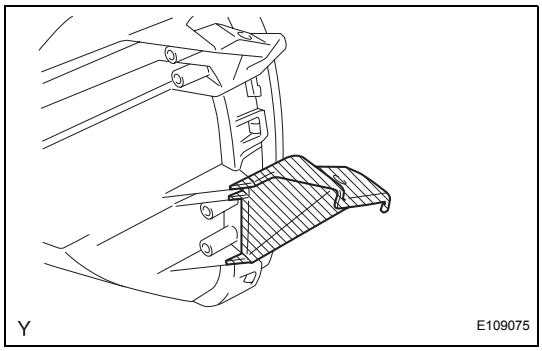

(a) Cut off the portion indicated by the hatched lines in the illustration and smooth the surface with sandpaper.
NOTICE:
After cutting off the shaded portion, place the headlight protector retainer lower against the bosses and gradually file away the shaded portion until installation is possible.

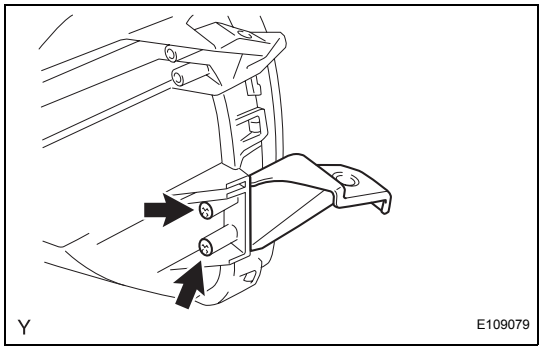

(b) Install the headlight protector retainer lower with the 2 screws.

6. **INSTALL HEADLIGHT ASSEMBLY (See page LI-104)**
7. **INSTALL FRONT BUMPER COVER (See page ET-33)**
8. **CONNECT CABLE TO NEGATIVE BATTERY TERMINAL**
   Torque: 5.4 N*m (55 kgf*cm, 48 in.*lbf)
9. **PREPARE VEHICLE FOR HEADLIGHT AIMING ADJUSTMENT (See page LI-98)**
10. **PREPARE FOR HEADLIGHT AIMING (for Using a Tester) (See page LI-98)**
11. **PREPARE FOR HEADLIGHT AIMING (for Using a Screen) (See page LI-99)**
12. **INSPECT HEADLIGHT AIMING (See page LI-101)**
13. **ADJUST HEADLIGHT AIMING (See page LI-102)**

SIDE TURN SIGNAL LIGHT ASSEMBLY (for Hatchback)

COMPONENTS

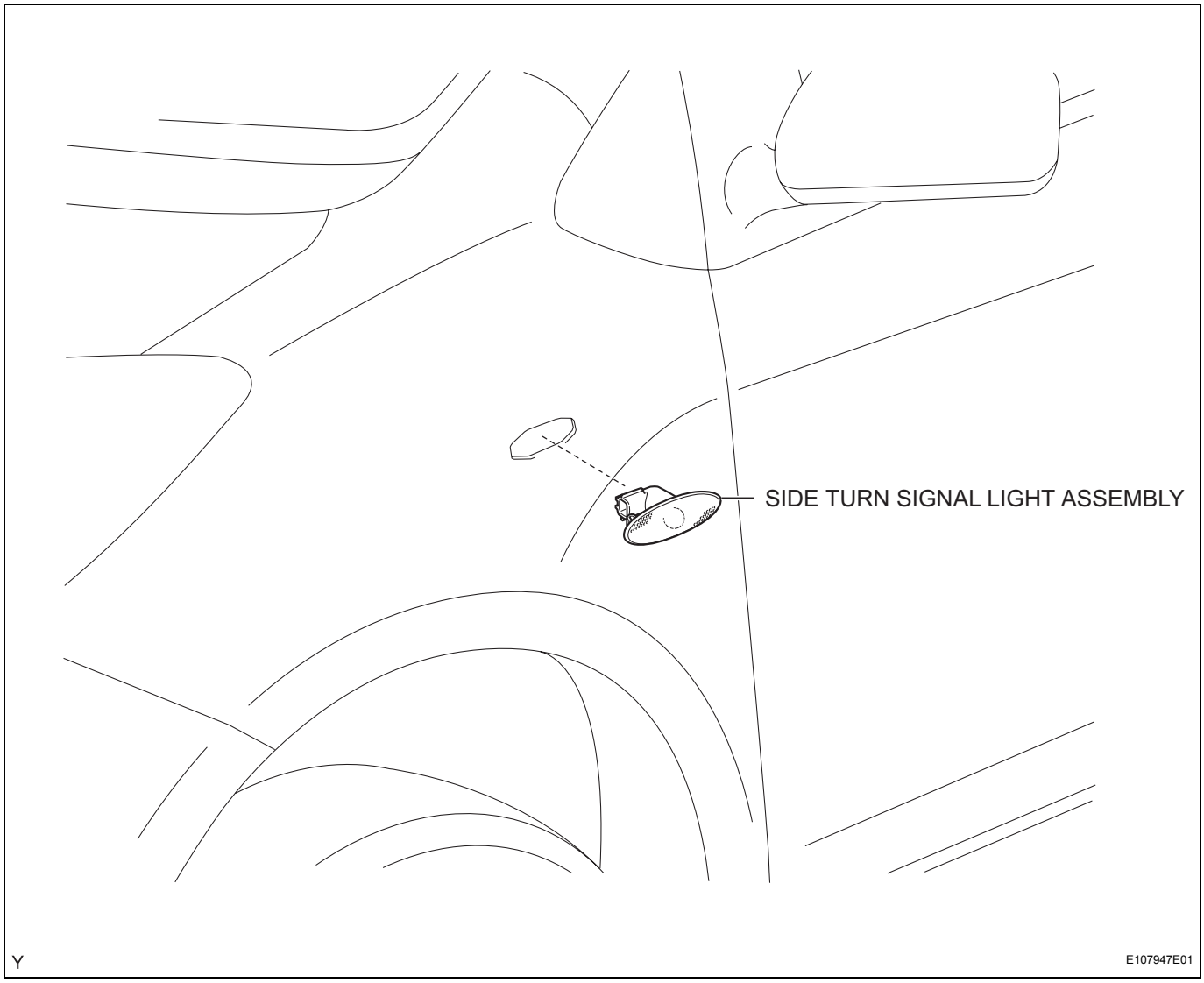

REMOVAL

HINT:
- Use the same procedure for both the RH and LH sides.
- The procedure described below is for the LH side.

1. DISCONNECT CABLE FROM NEGATIVE BATTERY TERMINAL

2. REMOVE SIDE TURN SIGNAL LIGHT ASSEMBLY
(a) Disengage the 2 claws and disconnect the side turn signal light.
(b) Disconnect the connector and remove the side turn signal light.

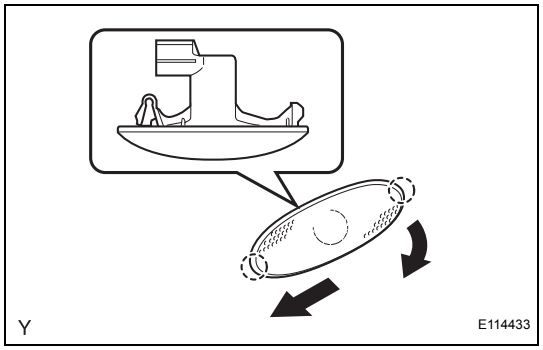

INSTALLATION

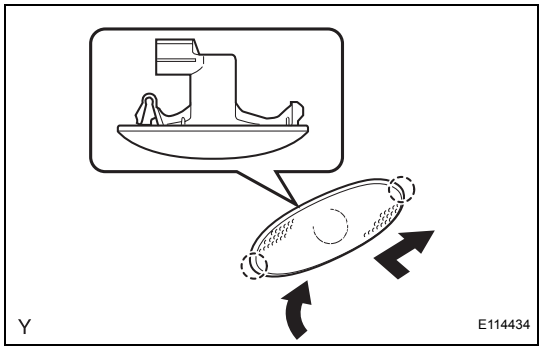

1. INSTALL SIDE TURN SIGNAL LIGHT ASSEMBLY
(a) Connect the connector.
(b) Engage the 2 claws and install the side turn signal light assembly, as shown in the illustration.

2. CONNECT CABLE TO NEGATIVE BATTERY TERMINAL
Torque: 5.4 N*m (55 kgf*cm, 48 in.*lbf)

FOG LIGHT ASSEMBLY (for Sedan)

COMPONENTS

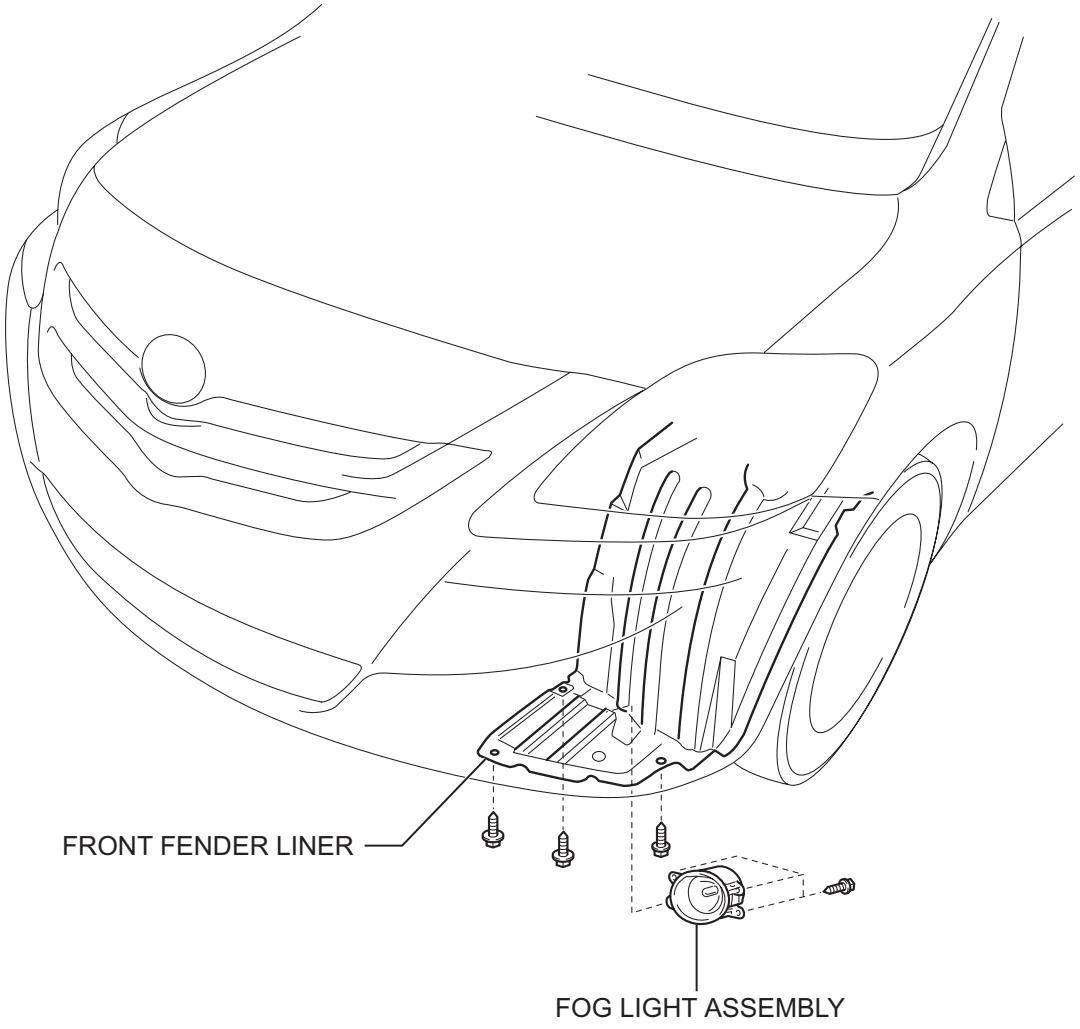

Y

E127801E01

REMOVAL

HINT:
- Use the same procedure for both the RH and LH sides.
- The procedure described below is for the LH side.

1. DISCONNECT CABLE FROM NEGATIVE BATTERY TERMINAL

2. REMOVE FRONT FENDER LINER

(a) Remove the 3 screws and remove the front side of the front fender liner.

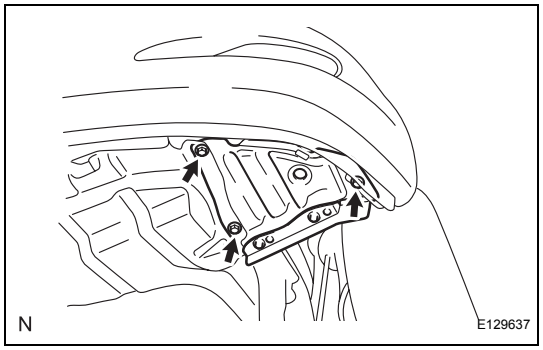

3. REMOVE FOG LIGHT ASSEMBLY

(a) Disconnect the connector.

(b) Remove the 3 screws, then remove the fog light.

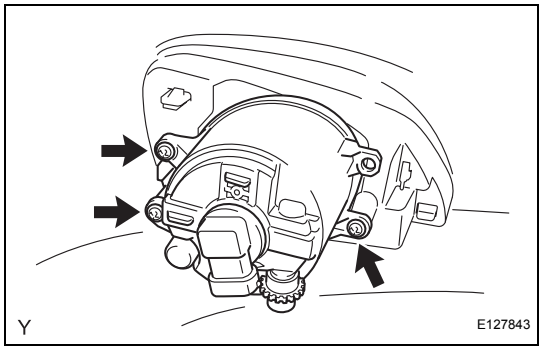

(c) Turn the fog light bulb, in the direction indicated by the arrow in the illustration, to remove it.

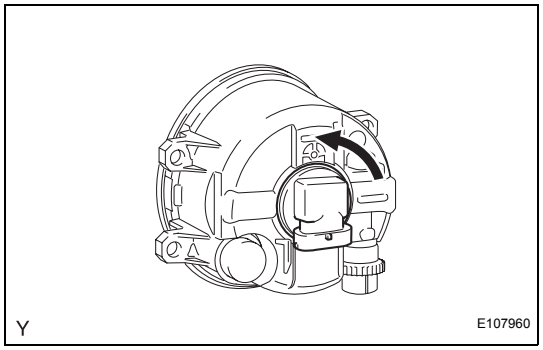

LI

ADJUSTMENT

1. PREPARE VEHICLE FOR FOG LIGHT AIMING ADJUSTMENT

(a) Prepare the vehicle:
- Ensure that there is no damage or deformation of the body around the fog lights.
- Fill the fuel tank.
- Fill the oil to the specified level.
- Fill the coolant to the specified level.
- Inflate the tires to the appropriate pressure.
- Place the spare tire, tools and jack in their original positions.
- Unload the trunk.
- Sit a person of average weight (75 kg, 165 lb) in the driver seat.

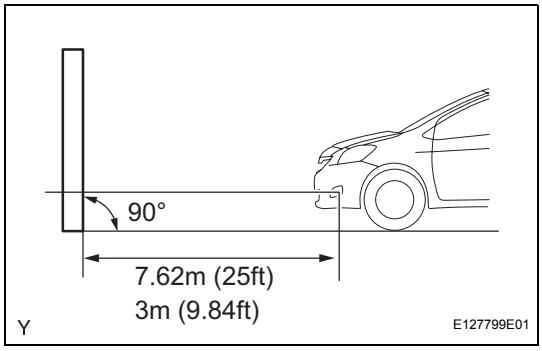

2. PREPARE FOR FOG LIGHT AIMING

(a) Prepare the vehicle in accordance with the following conditions:
- Place the vehicle in a location that is dark enough to clearly observe the cutoff line. The cutoff line is a distinct line, below which light from the fog lights can be observed and above which it cannot.
- Place the vehicle at a 90°angle to the wall.
- Keep a 7.62 m (25 ft) distance between the center of the fog light bulb and the wall.
- Place the vehicle on a level surface.
- Bounce the vehicle up and down to settle the suspension.

NOTICE:

A distance of 7.62 m (25 ft) between the vehicle (center of the fog light bulb) and the wall is necessary for proper aim adjustment. If unable to secure a distance of 7.62 m (25 ft), secure a distance of exactly 3 m (9.84 ft) to check and adjust the fog light aim. (Since the target zone will change with the distance, follow the instructions shown in the illustration.)

(b) Prepare a piece of thick white paper (approximately 2 m (6.6 ft) (high) x 4 m (13.1 ft) (wide)) to use as a screen.

(c) Draw a vertical line down the center of the screen (V line).

(d) Set the screen as shown in the illustration.

HINT:
- Stand the screen perpendicular to the ground.
- Align the V line on the screen with the center of the vehicle.

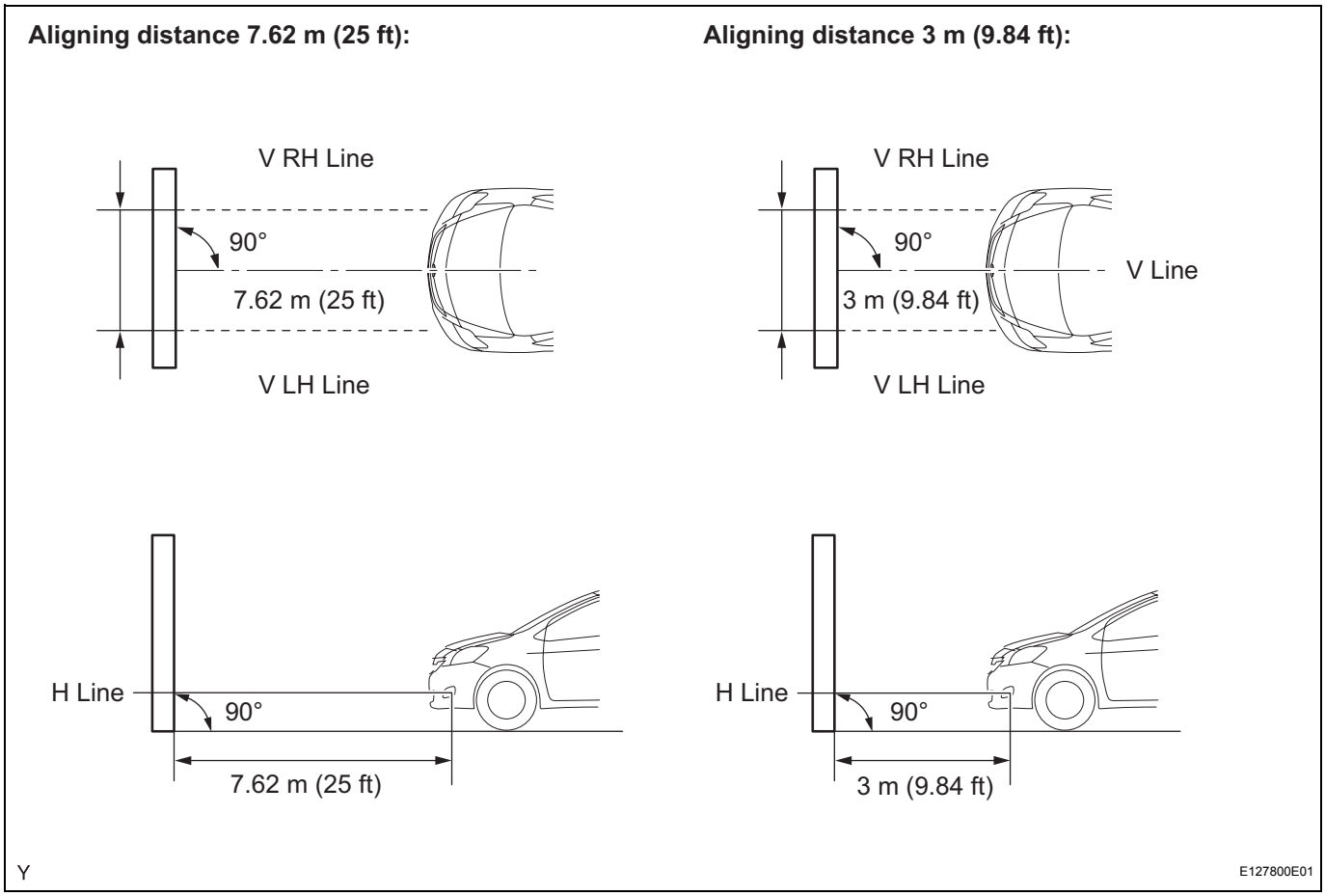

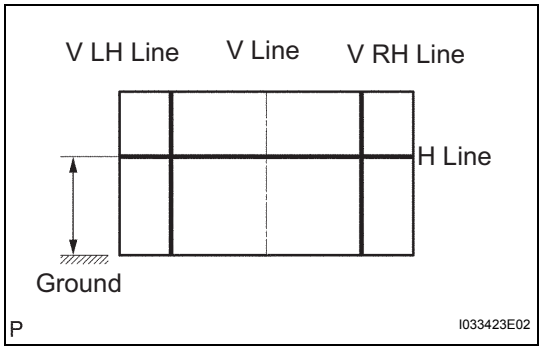

(e) Draw base lines (H line, V LH, V RH lines) on the screen as shown in the illustration.
HINT:
Mark the fog light bulb center marks on the screen. If the center mark cannot be observed on the fog light, use the center of the fog light bulb or the manufacturer's name marked on the fog light as the center mark.
(1) H Line (Fog light height):
Draw a horizontal line across the screen so that it passes through the center marks. The H line should be at the same height as the fog light bulb center marks of the low-beam fog lights.
(2) V LH Line and V RH Line (Center mark positions of left-hand (LH) and right-hand (RH) fog lights):
Draw two vertical lines so that they intersect the H line at each center mark.

3. INSPECT FOG LIGHT AIMING

(a) Cover the fog light or disconnect the connector of the fog light on the opposite side to prevent light from the fog light not being inspected from affecting fog light aiming inspection.
(b) Start the engine.
NOTICE:
Engine rpm must be 1,500 or more.

(c) Turn on the fog light and make sure that the cutoff line falls within the specified area, as shown in the illustration.

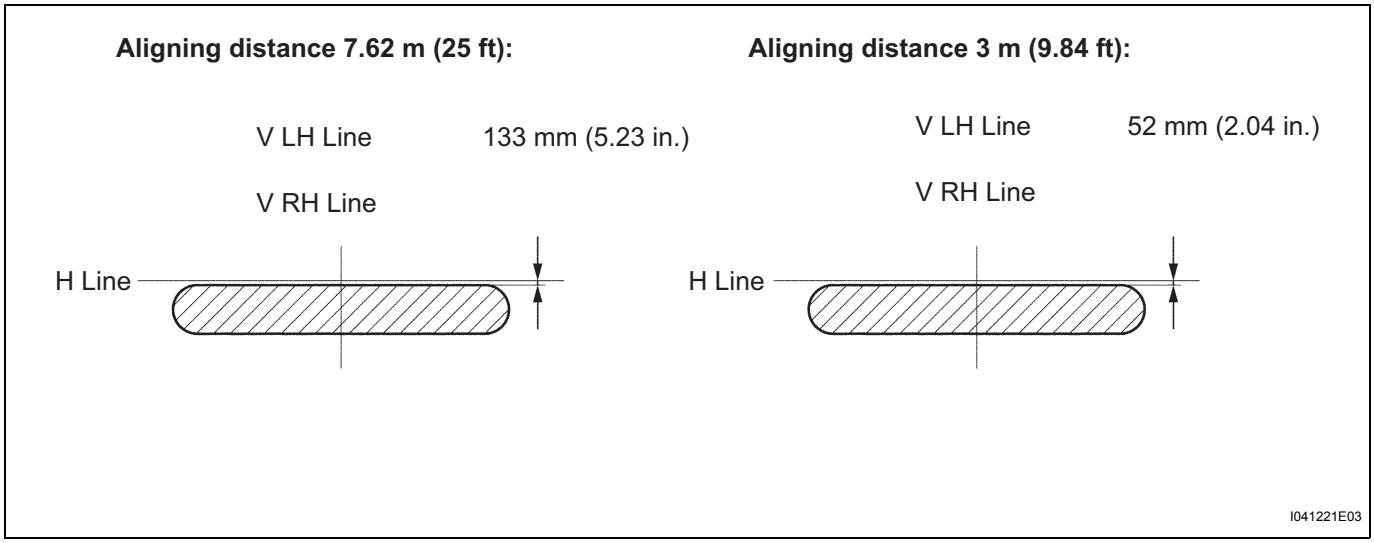

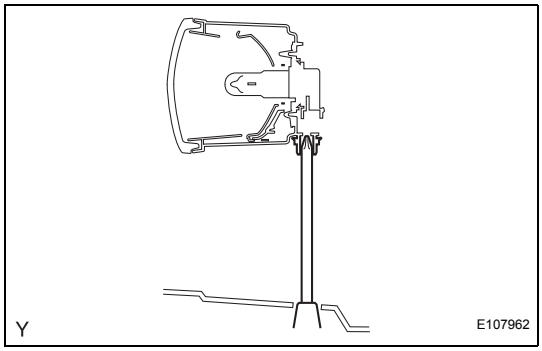

4. ADJUST FOG LIGHT AIMING

(a) Adjust the fog light aim to within the specified range by turning the aiming screw with a screwdriver.

NOTICE:

The final turn of the aiming screw should be made in the clockwise direction. If the screw is tightened excessively, loosen it and then retighten it, so that the final turn of the screw is in the clockwise direction.

INSTALLATION

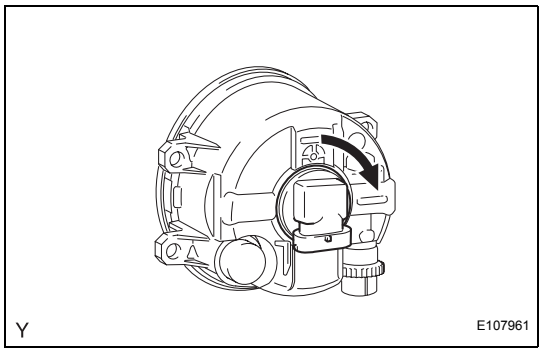

1. INSTALL FOG LIGHT ASSEMBLY

(a) Turn the fog light bulb, in the direction indicated by the arrow in the illustration, to install it.

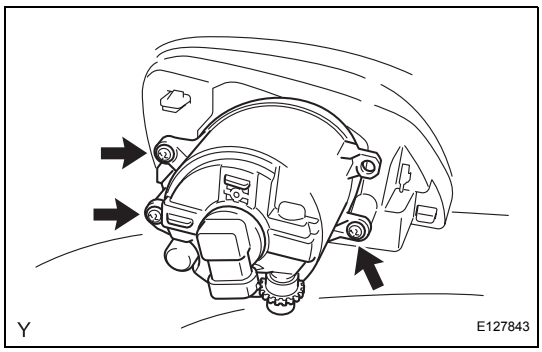

(b) Install the fog light with the 3 screws.

(c) Connect the connector.

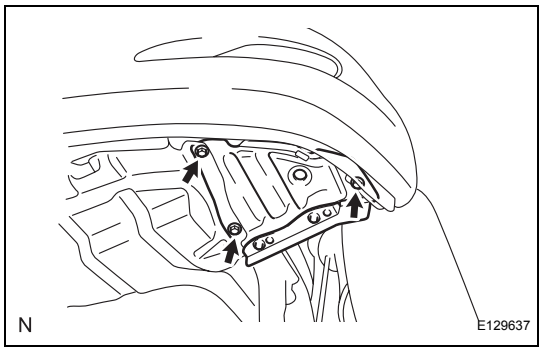

2. **INSTALL FRONT FENDER LINER**
   (a) Install the 3 screws.
3. **CONNECT CABLE TO NEGATIVE BATTERY TERMINAL**
   Torque: 5.4 N*m (55 kgf*cm, 48 in.*lbf)
4. **PREPARE VEHICLE FOR FOG LIGHT AIMING ADJUSTMENT (See page LI-109)**
5. **PREPARE FOR FOG LIGHT AIMING (See page LI-110)**
6. **INSPECT FOG LIGHT AIMING (See page LI-111)**
7. **ADJUST FOG LIGHT AIMING (See page LI-112)**

FOG LIGHT ASSEMBLY (for Hatchback)

COMPONENTS

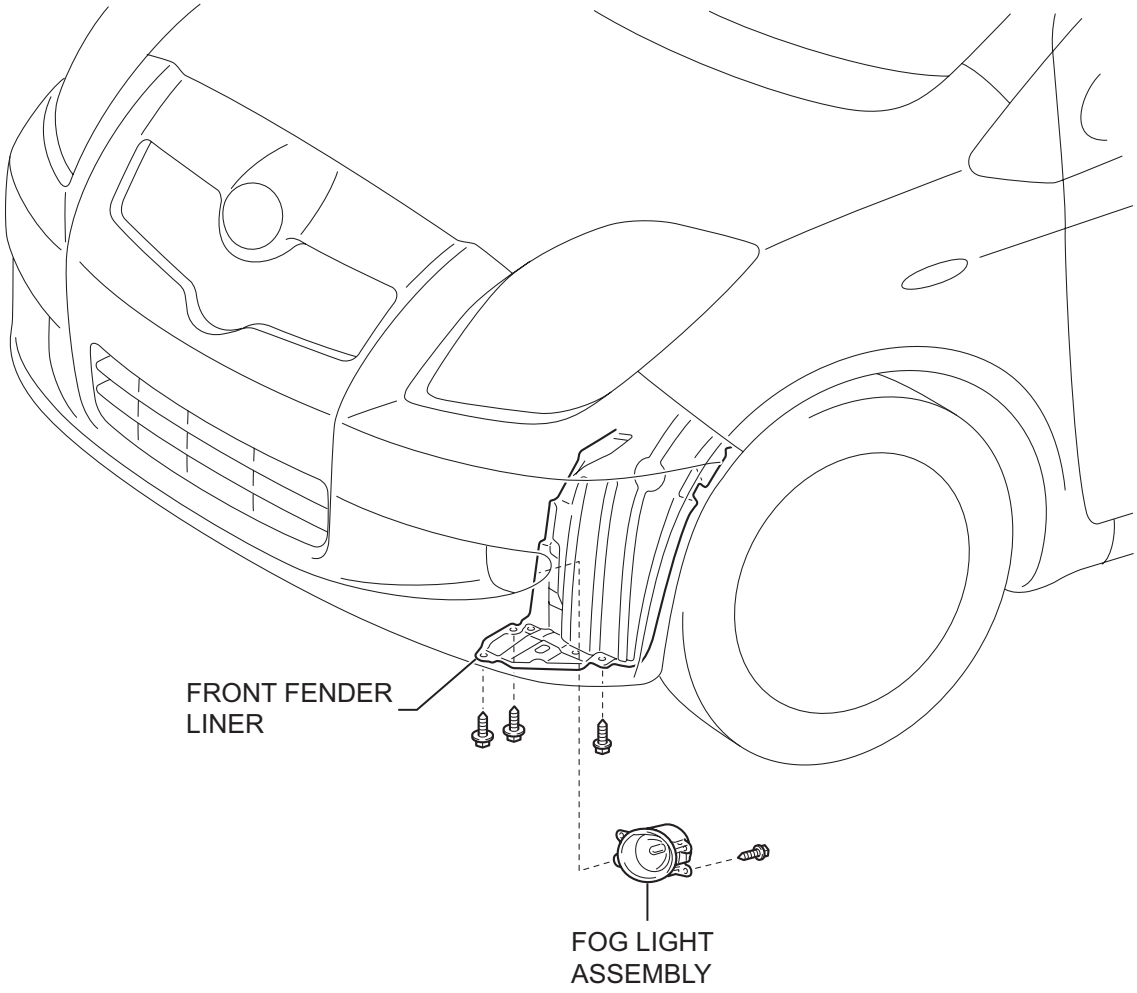

Y

E114475E01

REMOVAL

HINT:
- Use the same procedure for both the RH and LH sides.
- The procedure described below is for the LH side.

1. DISCONNECT CABLE FROM NEGATIVE BATTERY TERMINAL

2. REMOVE FRONT FENDER LINER

(a) Remove the 3 screws and remove the front side of the front fender liner.

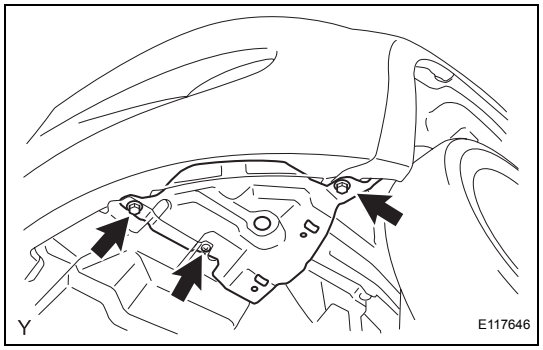

3. REMOVE FOG LIGHT ASSEMBLY

(a) Disconnect the connector.

(b) Remove the screw, then remove the fog light.

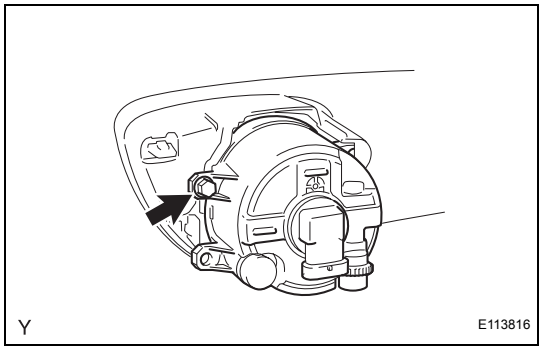

(c) Turn the fog light bulb, in the direction indicated by the arrow in the illustration, to remove it.

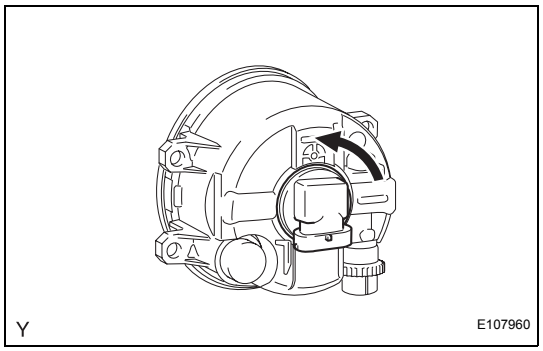

LI

ADJUSTMENT

1. PREPARE VEHICLE FOR FOG LIGHT AIMING ADJUSTMENT

(a) Prepare the vehicle:
- Ensure that there is no damage or deformation of the body around the fog lights.
- Fill the fuel tank.
- Fill the oil to the specified level.
- Fill the coolant to the specified level.
- Inflate the tires to the appropriate pressure.
- Place the spare tire, tools and jack in their original positions.
- Unload the trunk.
- Sit a person of average weight (68 kg, 150 lb) in the driver seat.

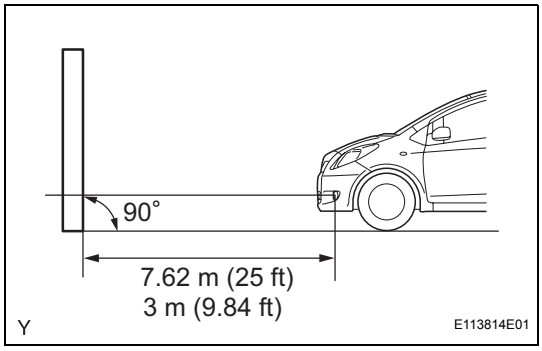

2. PREPARE FOR FOG LIGHT AIMING

(a) Prepare the vehicle in accordance with the following conditions:
- Place the vehicle in a location that is dark enough to clearly observe the cutoff line. The cutoff line is a distinct line, below which light from the fog lights can be observed and above which it cannot.
- Place the vehicle at a 90°angle to the wall.
- Keep a 7.62 m (25 ft) distance between the center of the fog light bulb and the wall.
- Place the vehicle on a level surface.
- Bounce the vehicle up and down to settle the suspension.

NOTICE:

A distance of 7.62 m (25 ft) between the vehicle (center of the fog light bulb) and the wall is necessary for proper aim adjustment. If unable to secure a distance of 7.62 m (25 ft), secure a distance of exactly 3 m (9.84 ft) to check and adjust the fog light aim. (Since the target zone will change with the distance, follow the instructions shown in the illustration.)

(b) Prepare a piece of thick white paper (approximately 2 m (6.6 ft) (height) x 4 m (13.1 ft) (width)) to use as a screen.

(c) Draw a vertical line down the center of the screen (V line).

(d) Set the screen as shown in the illustration.

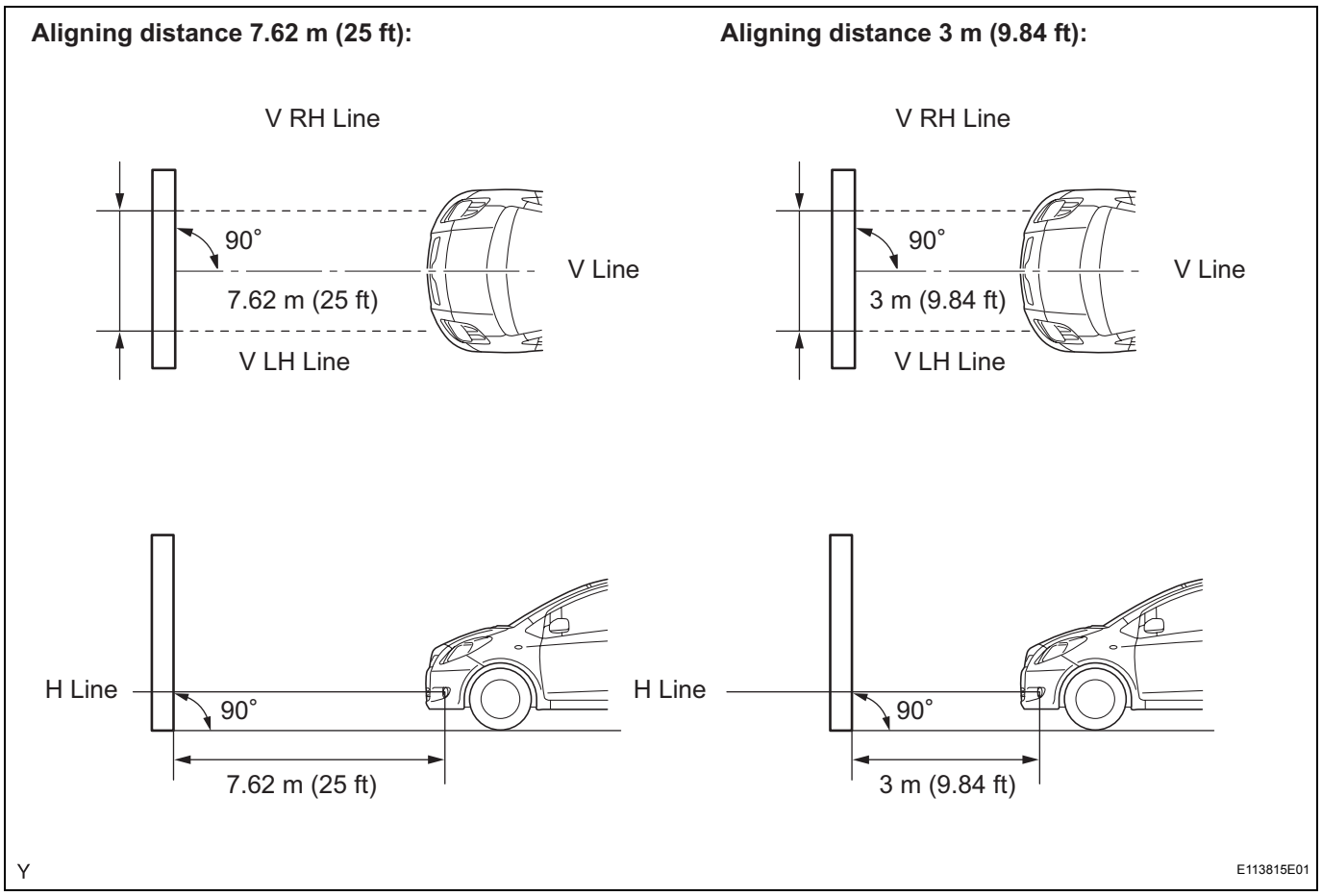

HINT:
- Stand the screen perpendicular to the ground.
- Align the V line on the screen with the center of the vehicle.

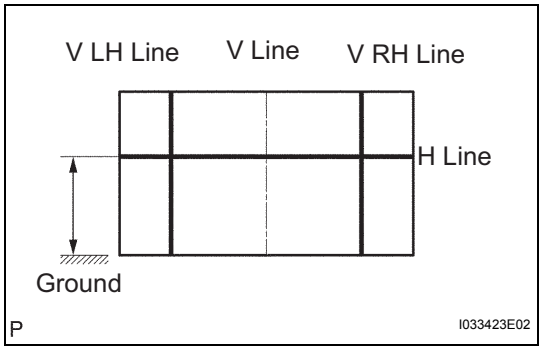

(e) Draw base lines (H line, V LH, V RH lines) on the screen as shown in the illustration.
HINT:
Mark the fog light bulb center marks on the screen. If the center mark cannot be observed on the fog light, use the center of the fog light bulb or the manufacturer's name marked on the fog light as the center mark.

(1) H Line (Fog light height):
Draw a horizontal line across the screen so that it passes through the center marks. The H line should be at the same height as the fog light bulb center marks of the low-beam fog lights.

(2) V LH Line and V RH Line (Center mark positions of left-hand (LH) and right-hand (RH) fog lights):
Draw two vertical lines so that they intersect the H line at each center mark.

3. INSPECT FOG LIGHT AIMING

(a) Cover the fog light or disconnect the connector of the fog light on the opposite side to prevent light from the fog light not being inspected from affecting fog light aiming inspection.

(b) Start the engine.
NOTICE:
Engine rpm must be 1,500 or more.

(c) Turn on the fog light and make sure that the cutoff line falls within the specified area, as shown in the illustration.

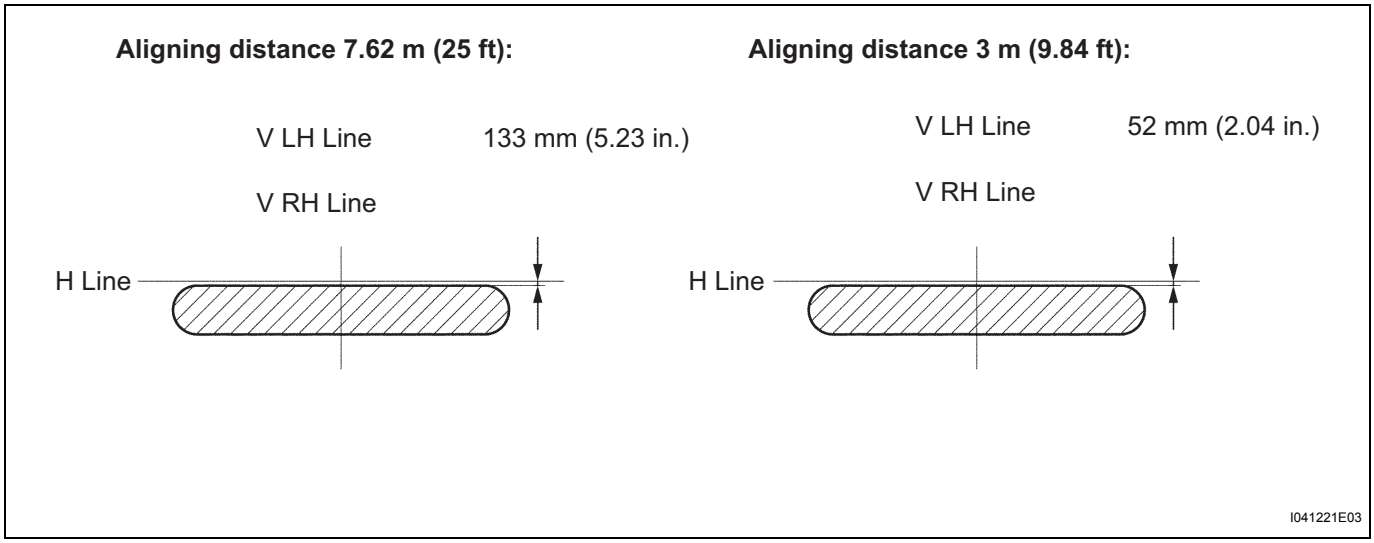

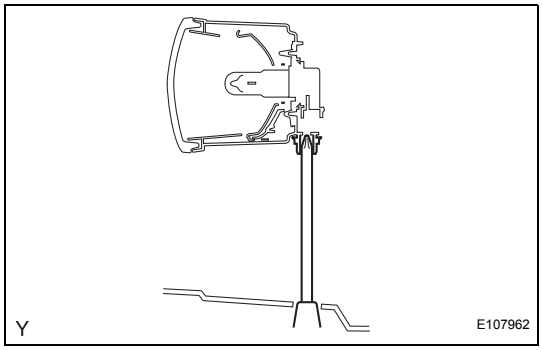

4. ADJUST FOG LIGHT AIMING

(a) Adjust the fog light aim to within the specified range by turning the aiming screw with a screwdriver.
NOTICE:
The final turn of the aiming screw should be made in the clockwise direction. If the screw is tightened excessively, loosen it and then retighten it, so that the final turn of the screw is in the clockwise direction.

INSTALLATION

1. INSTALL FOG LIGHT ASSEMBLY

(a) Turn the fog light bulb, in the direction indicated by the arrow in the illustration, to install it.

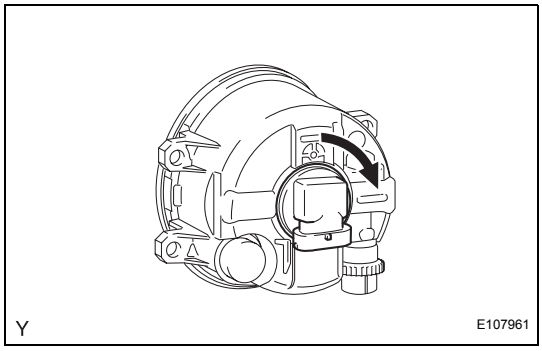

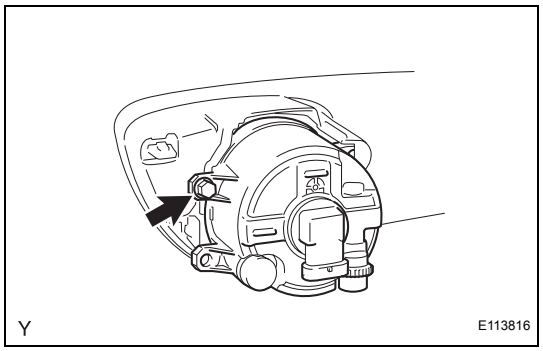

(b) Install the fog light with the screw.
(c) Connect the connector.

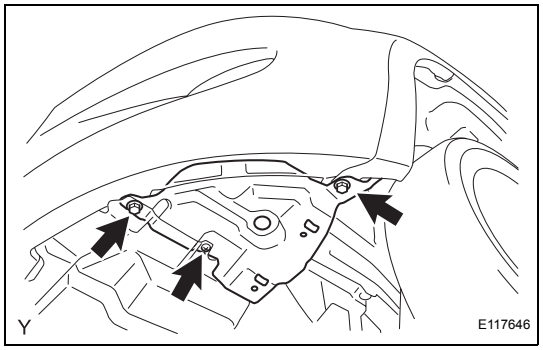

2. **INSTALL FRONT FENDER LINER**
   (a) Install the 3 screws.
3. **CONNECT CABLE TO NEGATIVE BATTERY TERMINAL**
   Torque: 5.4 N*m (55 kgf*cm, 48 in.*lbf)
4. **PREPARE VEHICLE FOR FOG LIGHT AIMING ADJUSTMENT (See page LI-115)**
5. **PREPARE FOR FOG LIGHT AIMING (See page LI-116)**
6. **INSPECT FOG LIGHT AIMING (See page LI-118)**
7. **ADJUST FOG LIGHT AIMING (See page LI-118)**

REAR COMBINATION LIGHT ASSEMBLY (for Sedan)

COMPONENTS

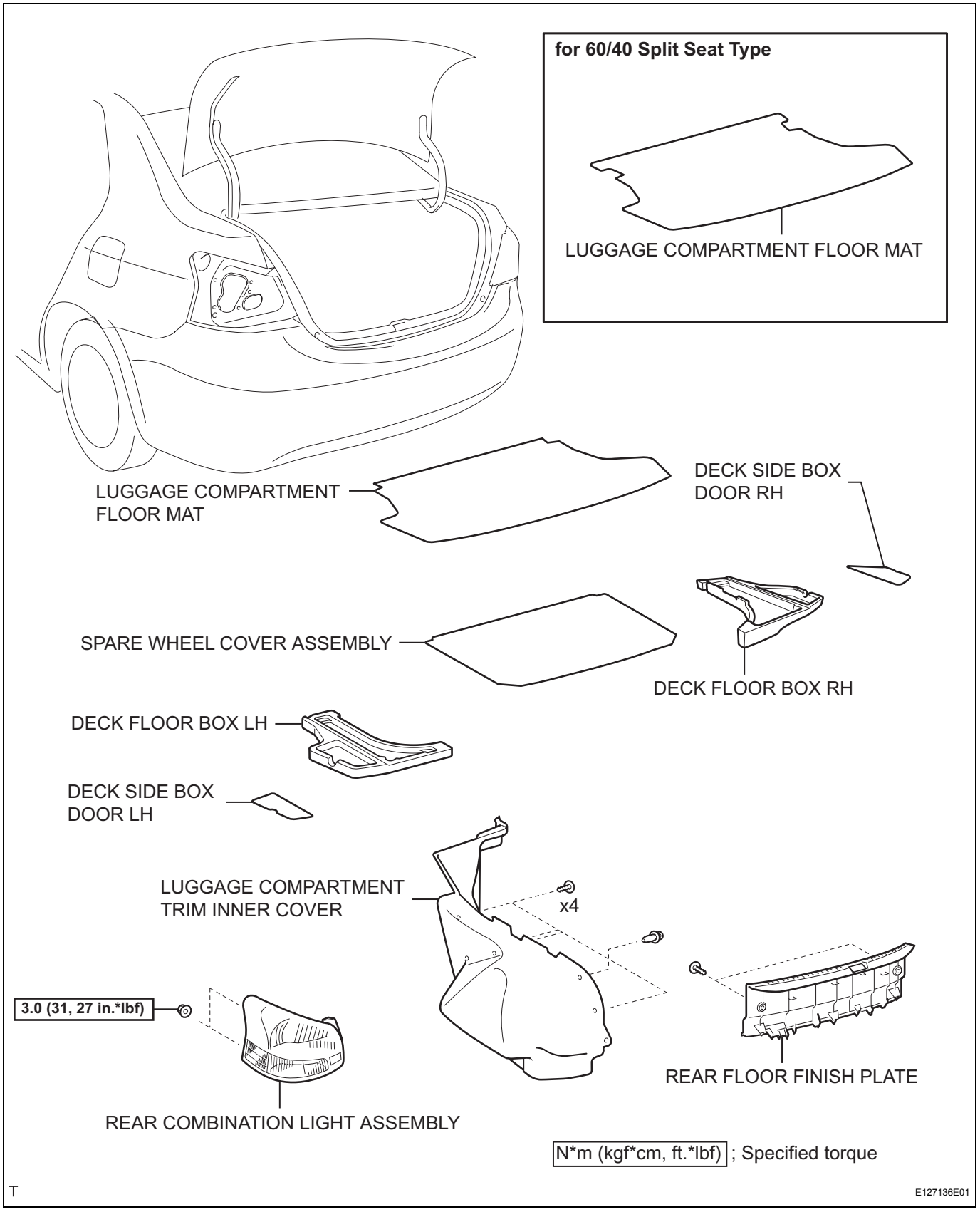

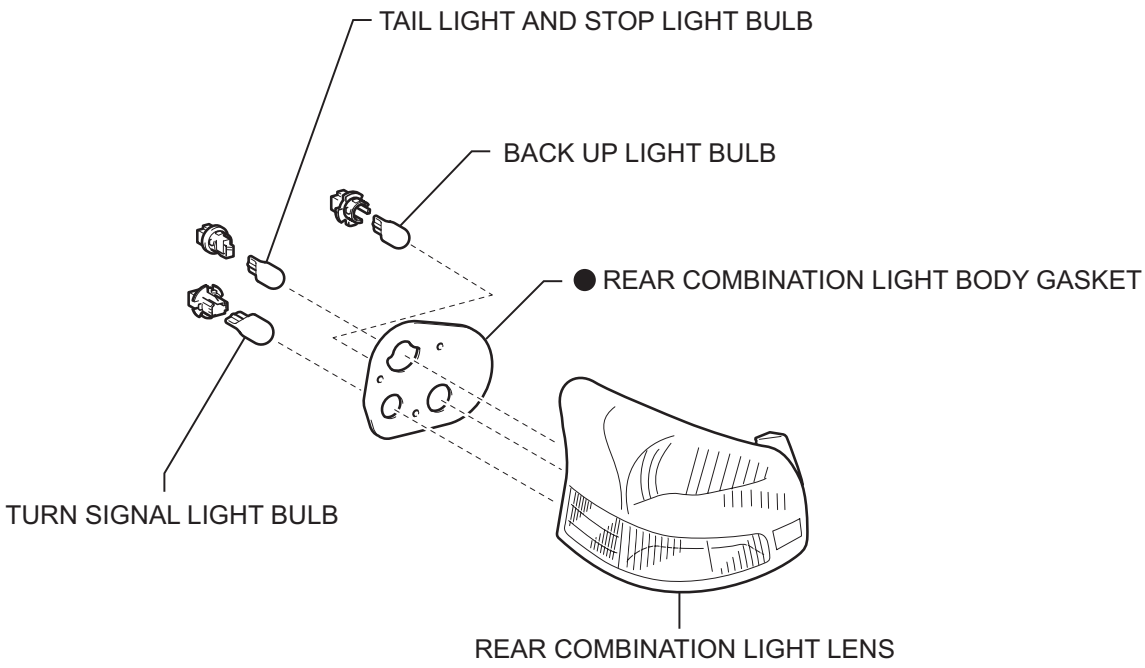

● Non-reusable part

T

E127137E01

REMOVAL

HINT:
- Use the same procedure for both the RH and LH sides.
- The procedure described below is for the LH side.

1. DISCONNECT CABLE FROM NEGATIVE BATTERY TERMINAL

2. REMOVE LUGGAGE COMPARTMENT FLOOR MAT

(a) Remove the luggage compartment floor mat.

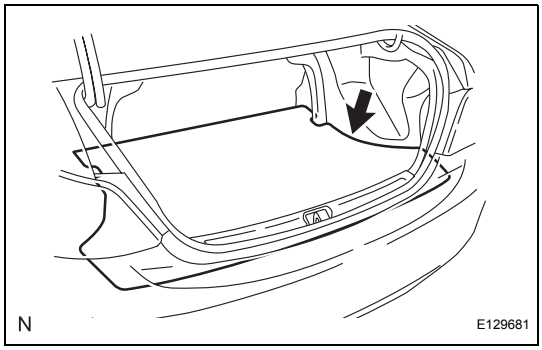

3. REMOVE SPARE WHEEL COVER ASSEMBLY

(a) Remove the spare wheel cover assembly.

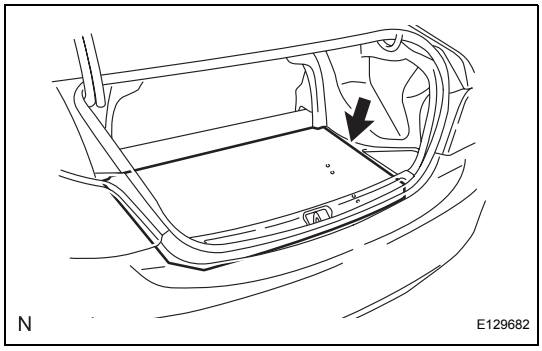

4. REMOVE DECK FLOOR BOX LH

(a) Remove the deck floor box with the deck side box door.

5. REMOVE DECK FLOOR BOX RH

HINT:
Use the same procedure as for the LH side.

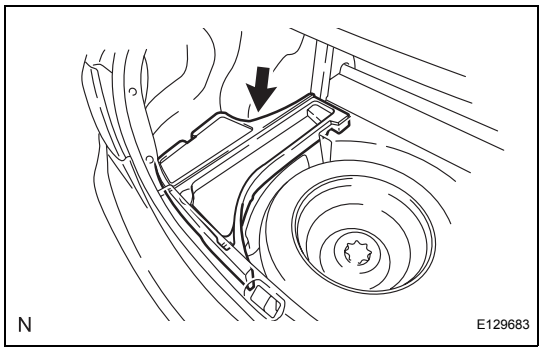

6. REMOVE REAR FLOOR FINISH PLATE

(a) Disengage the 2 clips and the rear floor finish plate.

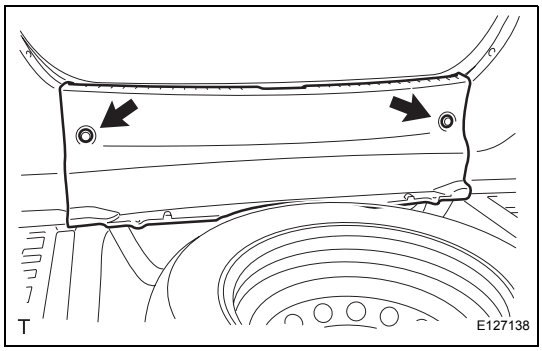

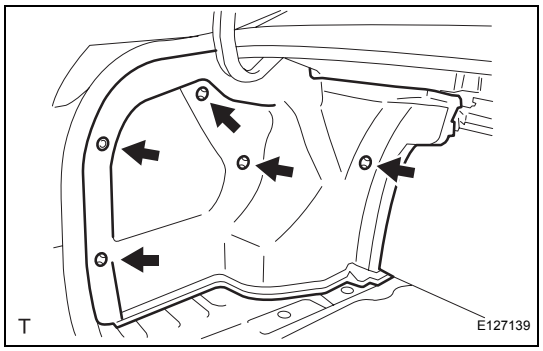

7. REMOVE LUGGAGE COMPARTMENT TRIM INNER COVER

(a) Disengage the 5 clips and remove the luggage compartment trim inner cover.

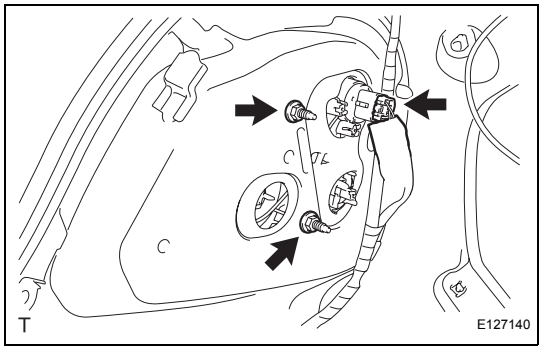

8. REMOVE REAR COMBINATION LIGHT ASSEMBLY

(a) Remove the 2 nuts.

(b) Disconnect the connector.

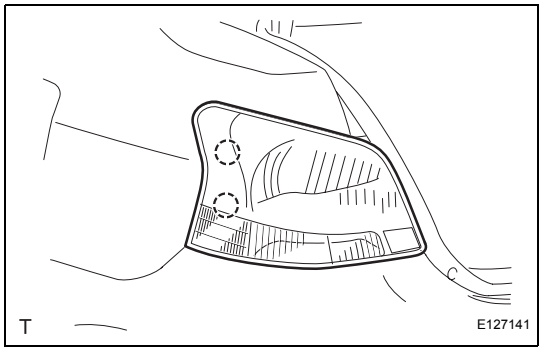

(c) Slide the rear combination light assembly toward the rear of the vehicle.

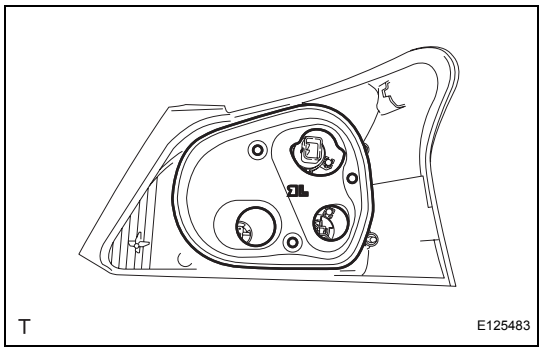

9. REMOVE REAR COMBINATION LIGHT BODY GASKET

(a) Remove the rear combination light body gasket.
NOTICE:
- **Detach the gasket if it adheres to the body.**
- **Do not reuse a removed gasket. Replace it with a new one to prevent water from entering.**

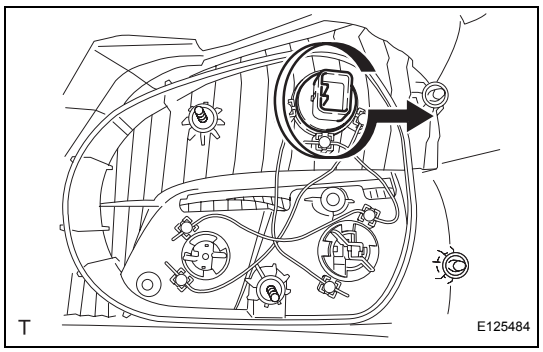

10. REMOVE TAIL LIGHT AND STOP LIGHT BULB

(a) Turn the tail light and stop light bulb socket and bulb, in the direction indicated by the arrow in the illustration, to remove them.

(b) Remove the tail light and stop light bulb from the light socket.

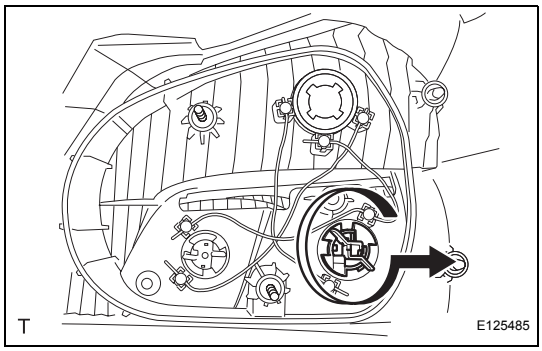

11. REMOVE TURN SIGNAL LIGHT BULB

(a) Turn the turn signal light bulb socket and bulb, in the direction indicated by the arrow in the illustration, to remove them.

(b) Remove the turn signal light bulb from the light socket.

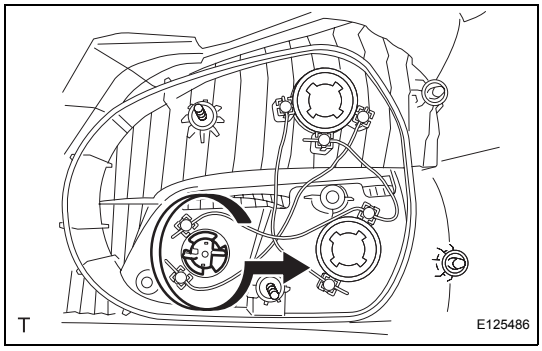

12. REMOVE BACK UP LIGHT BULB

(a) Turn the back up light bulb socket and bulb, in the direction indicated by the arrow in the illustration, to remove them.

(b) Remove the back up light bulb from the light socket.

LI

INSTALLATION

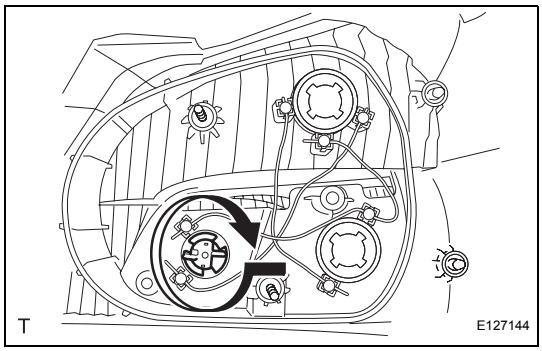

1. INSTALL BACK UP LIGHT BULB

(a) Install the back up light bulb into the socket.

(b) Turn the back up light socket, in the direction indicated by the arrow in the illustration, to install them.

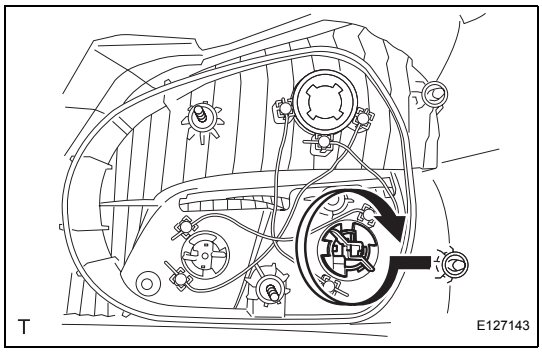

2. INSTALL TURN SIGNAL LIGHT BULB

(a) Install the turn signal light bulb into the socket.

(b) Turn the turn signal light socket, in the direction indicated by the arrow in the illustration, to install them.

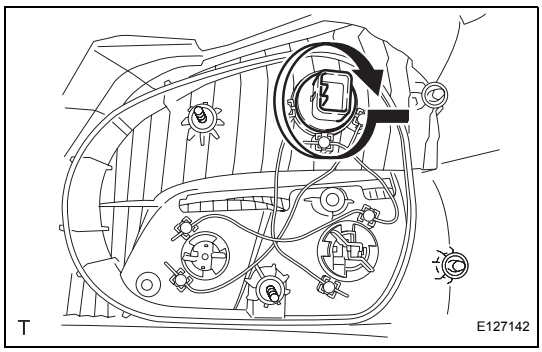

3. INSTALL TAIL LIGHT AND STOP LIGHT BULB

(a) Install the tail light and stop light bulb into the socket.

(b) Turn the tail light and stop light bulb socket, in the direction indicated by the arrow in the illustration, to install them.

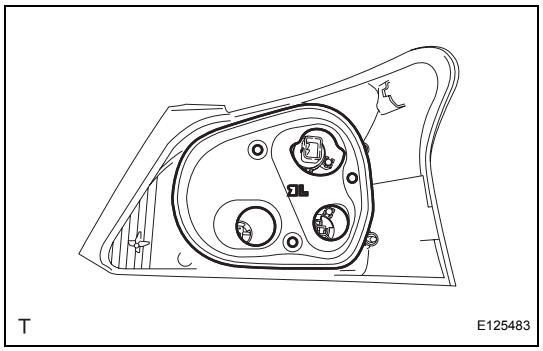

4. INSTALL REAR COMBINATION LIGHT BODY GASKET

(a) Install a new rear combination light body gasket.

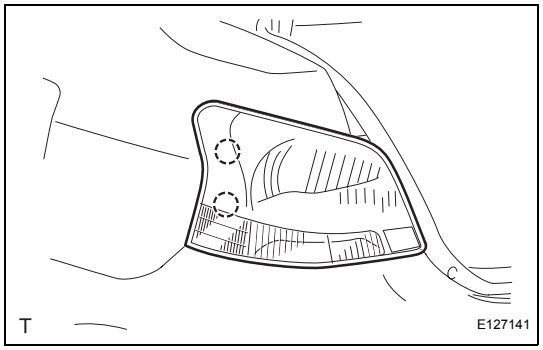

5. INSTALL REAR COMBINATION LIGHT ASSEMBLY

(a) Install the rear combination light assembly onto the vehicle.

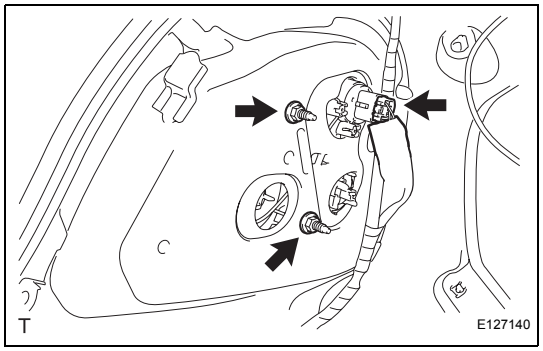

(b) Connect the connector.

(c) Install the 2 nuts.
Torque: 3.0 N*m (31 kgf*cm, 27 in.*lbf)

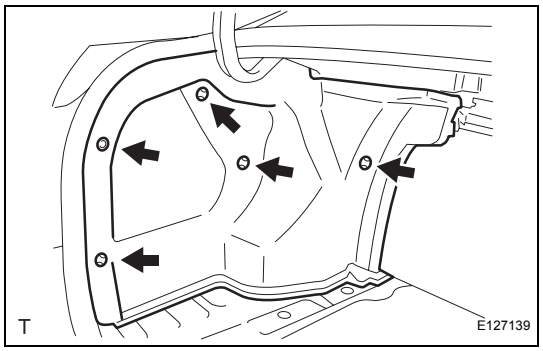

6. INSTALL LUGGAGE COMPARTMENT TRIM INNER COVER

(a) Engage the 5 clips and install the luggage compartment trim inner cover.

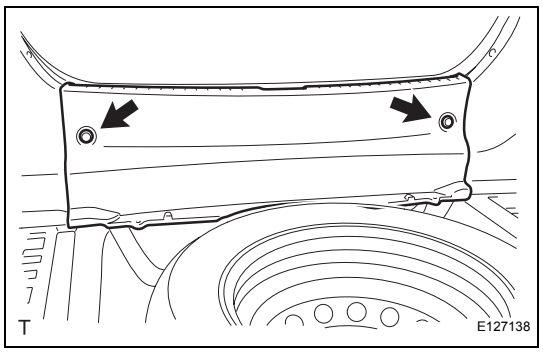

7. INSTALL REAR FLOOR FINISH PLATE

(a) Engage the 2 clips and install the rear floor finish plate.

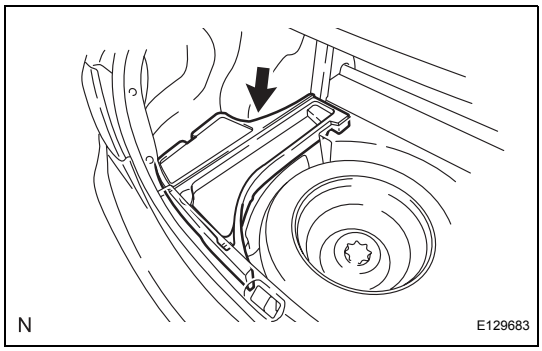

8. INSTALL DECK FLOOR BOX LH

(a) Install the deck floor box and the deck side box door.

9. INSTALL DECK FLOOR BOX RH

HINT:

Use the same procedure as for the LH side.

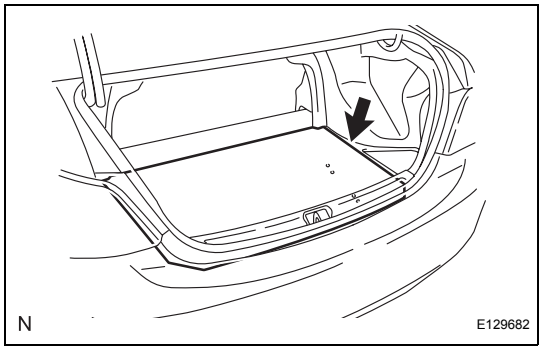

10. INSTALL SPARE WHEEL COVER ASSEMBLY

(a) Install the spare wheel cover assembly.

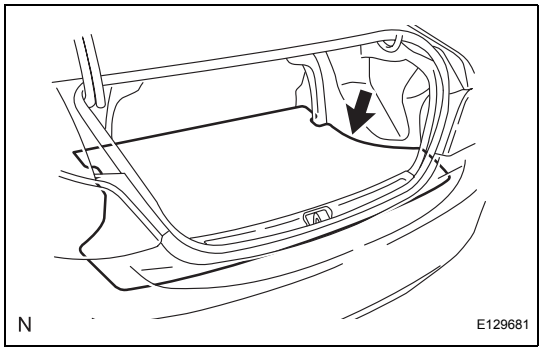

11. INSTALL LUGGAGE COMPARTMENT FLOOR MAT

(a) Install the luggage compartment floor mat.

12. CONNECT CABLE TO NEGATIVE BATTERY TERMINAL

Torque: 5.4 N*m (55 kgf*cm, 48 in.*lbf)

REAR COMBINATION LIGHT ASSEMBLY (for Hatchback)

COMPONENTS

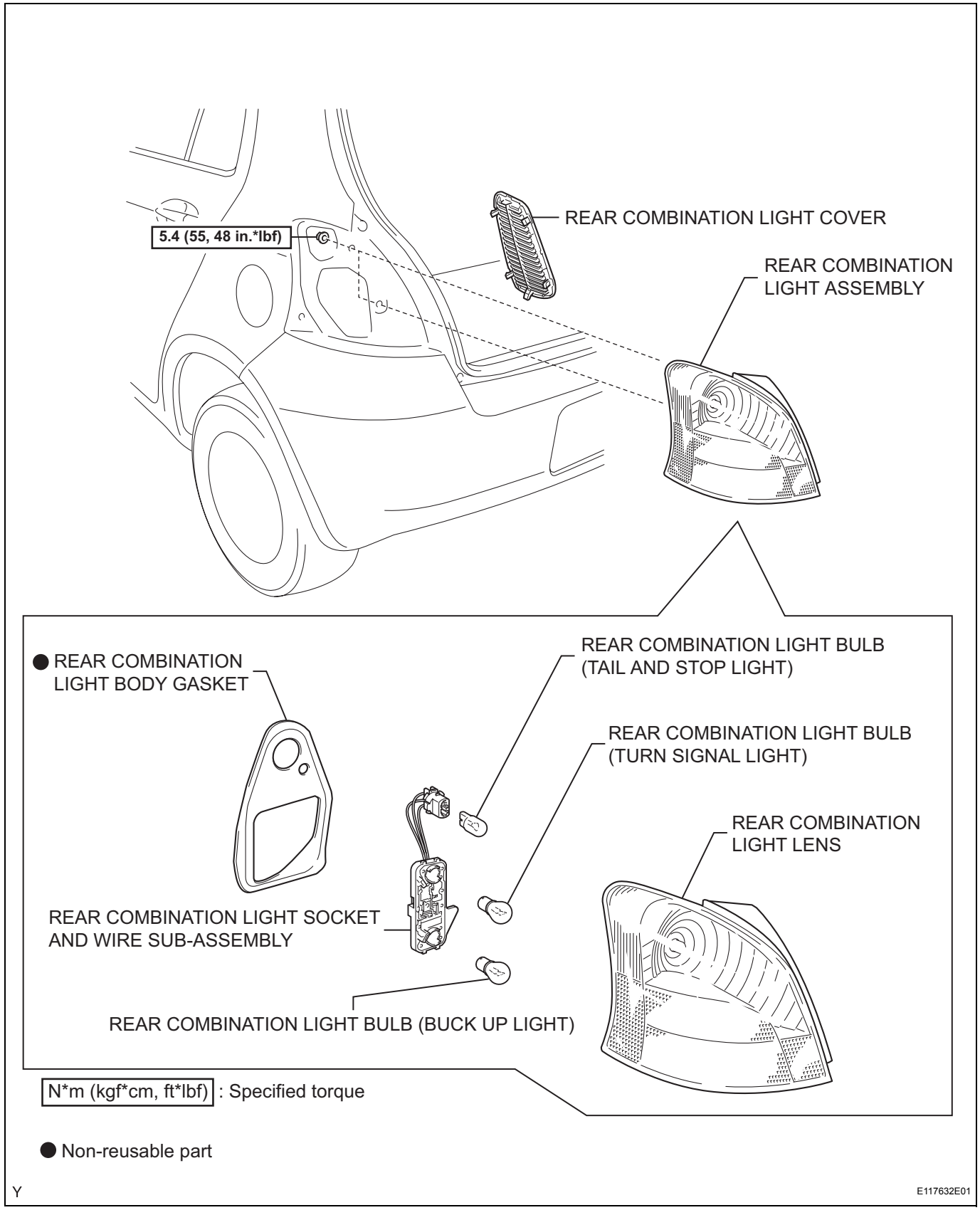

REMOVAL

HINT:
- Use the same procedure for both the RH and LH sides.
- The procedure described below is for the LH side.

1. DISCONNECT CABLE FROM NEGATIVE BATTERY TERMINAL

2. REMOVE REAR COMBINATION LIGHT COVER

(a) Using a screwdriver with its tip wrapped in protective tape, disengage the 6 claws and remove the rear combination light cover.

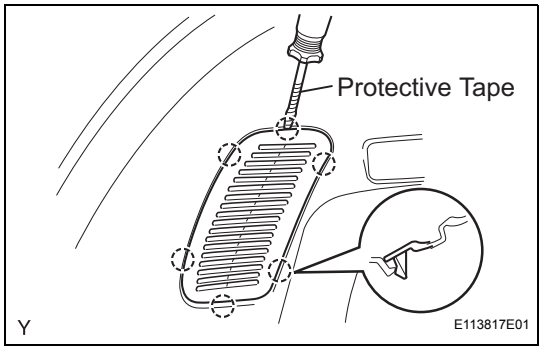

3. REMOVE REAR COMBINATION LIGHT ASSEMBLY

(a) Remove the 2 nuts.

(b) Disconnect the connector.

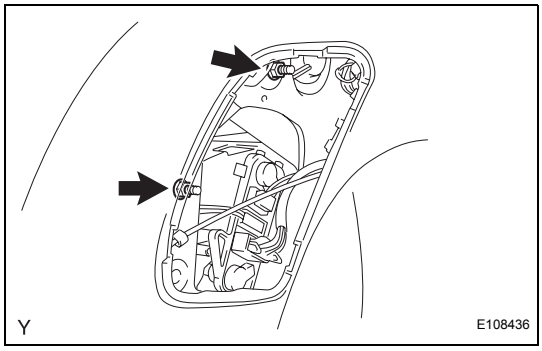

(c) Slide the tail light (rear combination light) toward the rear of the vehicle.

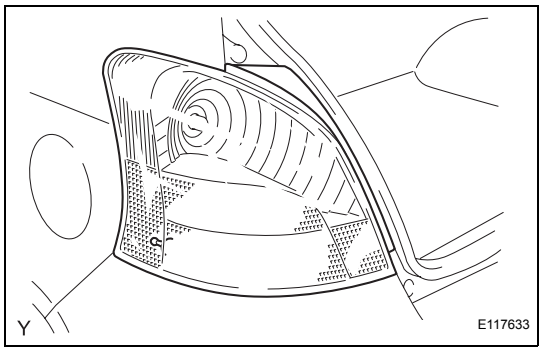

4. REMOVE REAR COMBINATION LIGHT BODY GASKET

(a) Remove the rear combination light body gasket.

NOTICE:
- **Detach the gasket if it adheres to the body.**
- **Do not reuse a removed gasket. Replace it with a new one to prevent water from entering.**

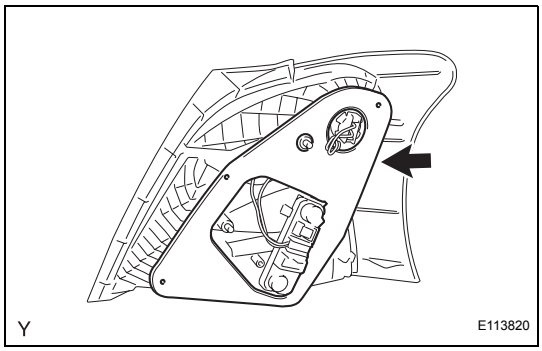

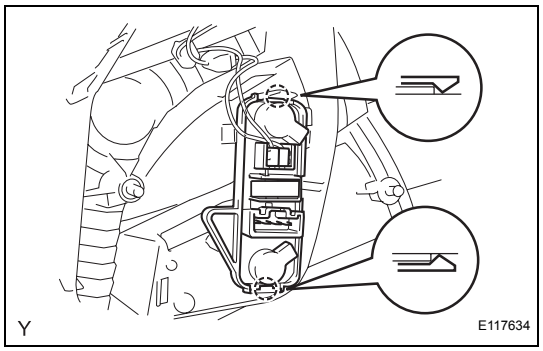

5. REMOVE REAR COMBINATION LIGHT BULB

(a) Disengage the fitting of the rib.

(b) Disengage the claw on the upper side, then on the lower side.

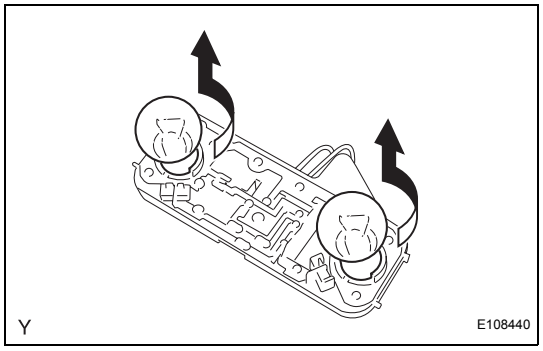

(c) Turn the 2 rear combination light bulbs, in the direction indicated by the arrows in the illustration, to remove them.

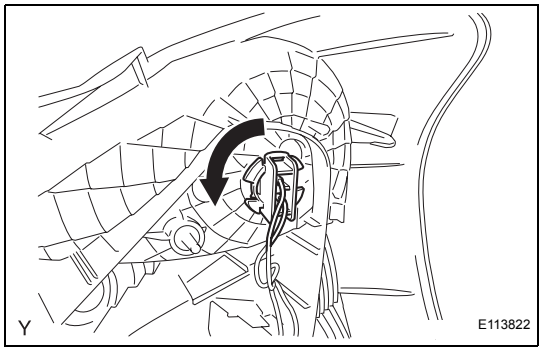

(d) Turn the rear combination light socket and wire, in the direction indicated by the arrow in the illustration, to remove it.

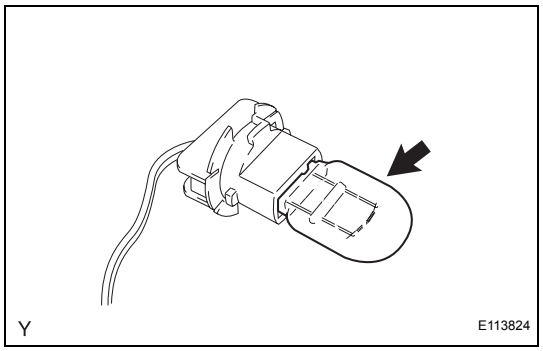

(e) Remove the rear combination light bulb from the socket and wire.

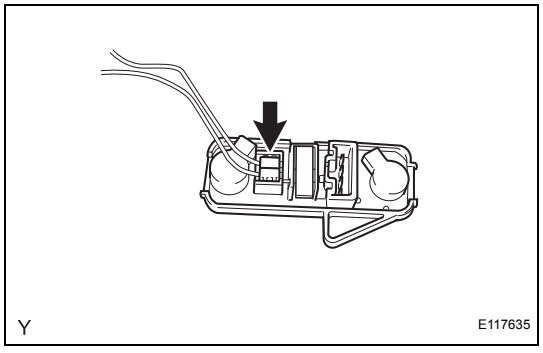

6. REMOVE REAR COMBINATION LIGHT SOCKET AND WIRE SUB-ASSEMBLY

(a) Disconnect the connector and remove the rear combination light socket and wire.

LI

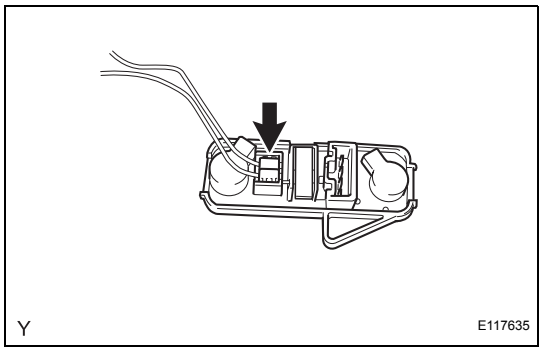

INSTALLATION

1. INSTALL REAR COMBINATION LIGHT SOCKET AND WIRE SUB-ASSEMBLY

(a) Connect the connector and install the rear combination light socket and wire.

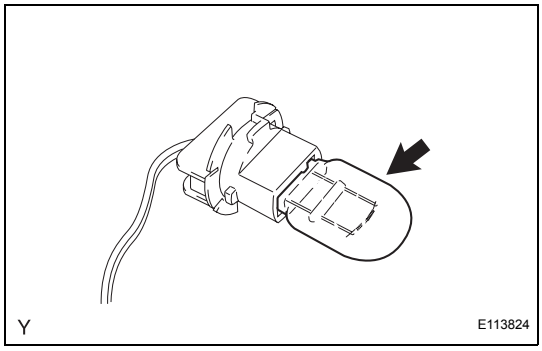

2. INSTALL REAR COMBINATION LIGHT BULB

(a) Install the rear combination light bulb into the light socket.

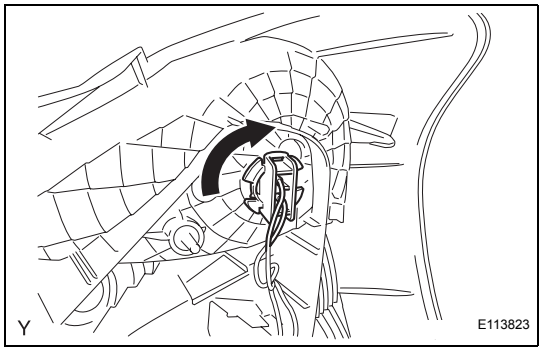

(b) Turn the rear combination light bulb socket and bulb, in the direction indicated by the arrow in the illustration, to install them.

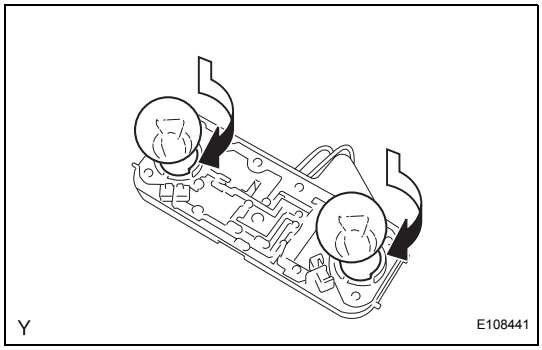

(c) Turn the 2 rear combination light bulbs, in the direction indicated by the arrows in the illustration, to install them.

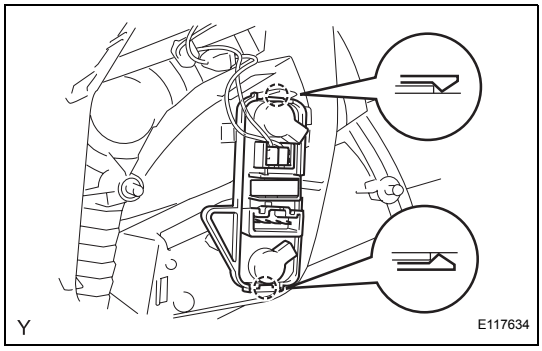

(d) Engage the 2 claws and install the rear combination light socket and wire.

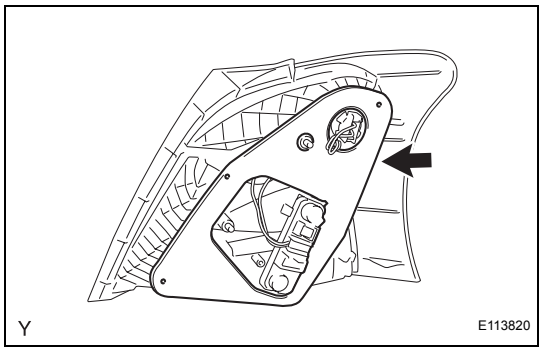

3. INSTALL REAR COMBINATION LIGHT BODY GASKET

(a) Install a new rear combination light body gasket.

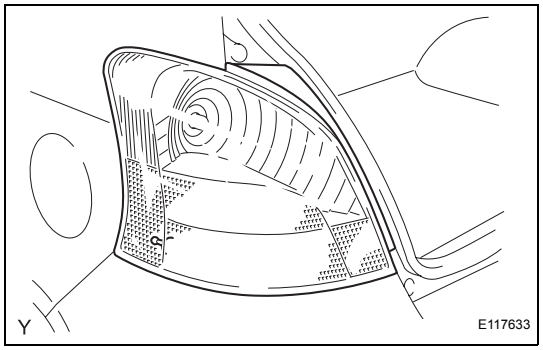

4. INSTALL REAR COMBINATION LIGHT ASSEMBLY

(a) Install the rear combination light assembly onto the vehicle.

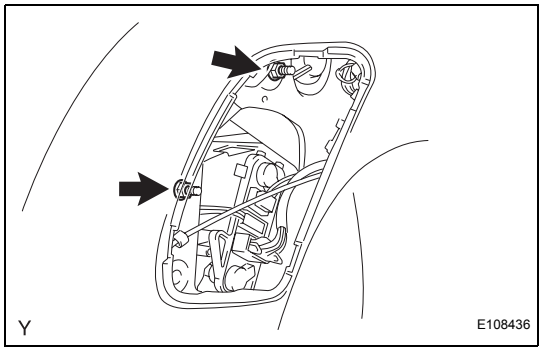

(b) Connect the connector.

(c) Install the 2 nuts.

Torque: 5.4 N*m (55 kgf*cm, 48 in.*lbf)

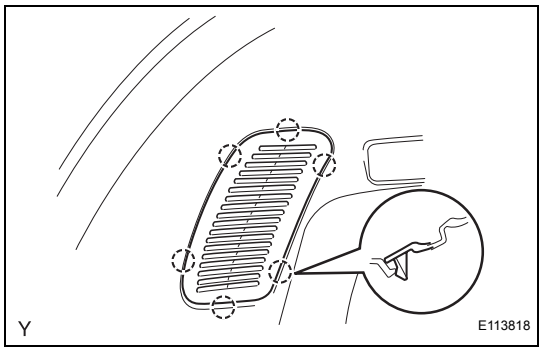

5. INSTALL REAR COMBINATION LIGHT COVER

(a) Engage the 6 claws and install the rear combination light cover.

6. CONNECT CABLE TO NEGATIVE BATTERY TERMINAL

Torque: 5.4 N*m (55 kgf*cm, 48 in.*lbf)

LI

LICENSE PLATE LIGHT ASSEMBLY (for Sedan)

COMPONENTS

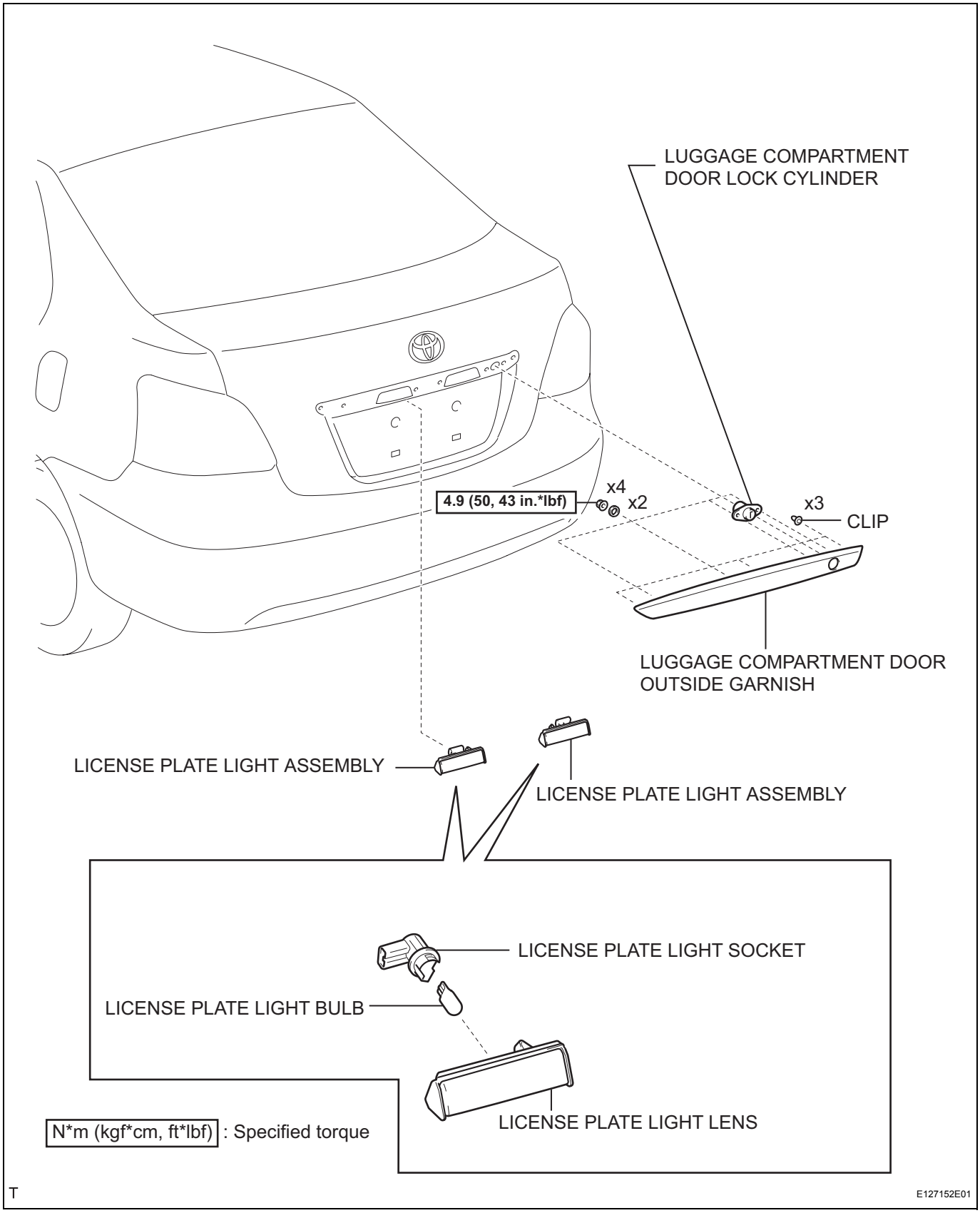

REMOVAL

1. DISCONNECT CABLE FROM NEGATIVE BATTERY TERMINAL

2. REMOVE LUGGAGE COMPARTMENT DOOR LOCK CYLINDER

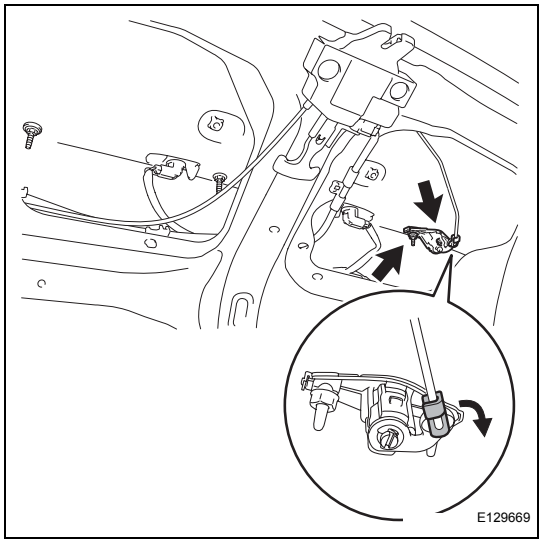

(a) Remove the snap ring in the direction indicated by the arrow and remove the luggage compartment door lock link.

(b) Remove the 2 nuts and the luggage compartment door lock cylinder.

3. REMOVE LUGGAGE COMPARTMENT DOOR OUTSIDE GARNISH

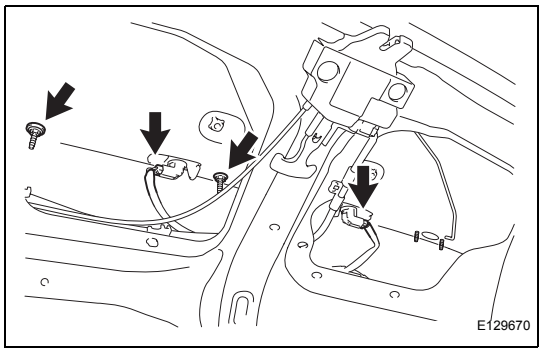

(a) Disconnect the 2 connectors.

(b) Remove the 2 nuts.

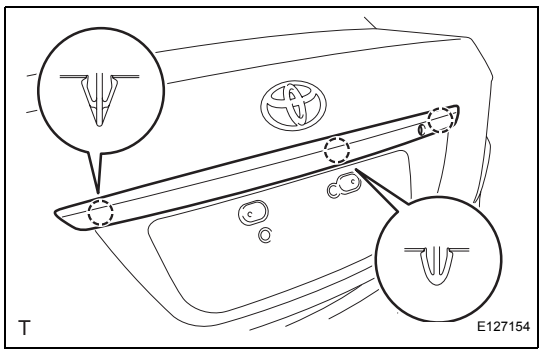

(c) Disengage the 3 claws and remove the luggage compartment door outside garnish.

4. REMOVE LICENSE PLATE LIGHT ASSEMBLY

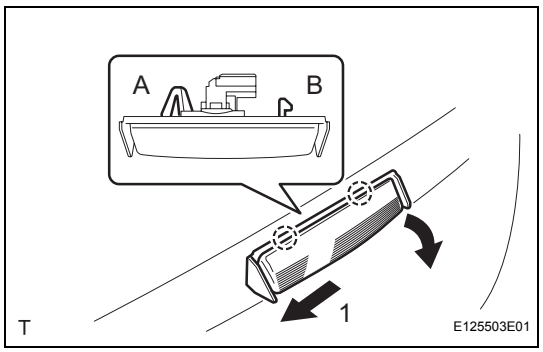

(a) Pull the license plate light assembly in the direction indicated by arrow 1, shown in the illustration. Disengage claw B by pulling claw A toward you while flexing it and remove the license plate light assembly.

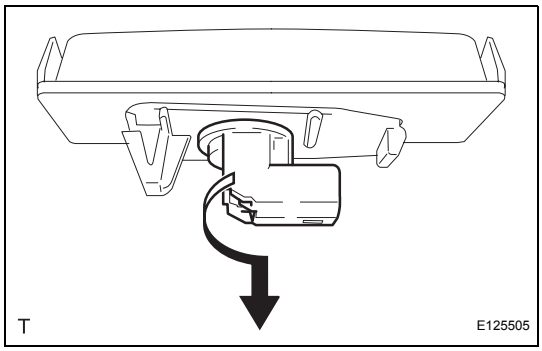

(b) Turn the license plate light socket and bulb, in the directions indicated by the arrow in the illustration, to remove them.
(c) Remove the license plate light bulb from the light socket.

INSTALLATION

1. INSTALL LICENSE PLATE LIGHT ASSEMBLY

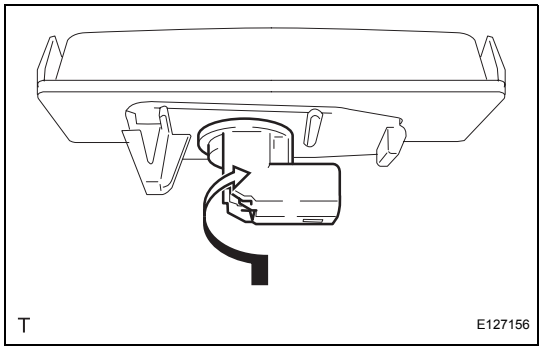

(a) Install the license plate light bulb into the light socket.
(b) Turn the license plate light bulb socket and bulb, in the directions indicated by the arrow in the illustration, to install them.

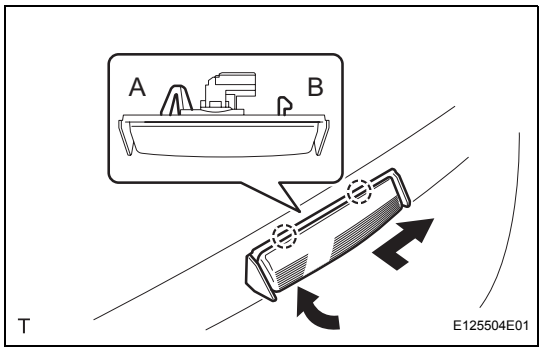

(c) Engage claw A and claw B, and install the license plate light assembly.

2. INSTALL LUGGAGE COMPARTMENT DOOR OUTSIDE GARNISH

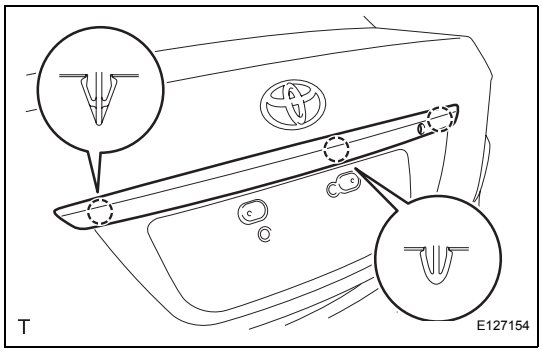

(a) Engage the 3 claws and install the luggage compartment door outside garnish.

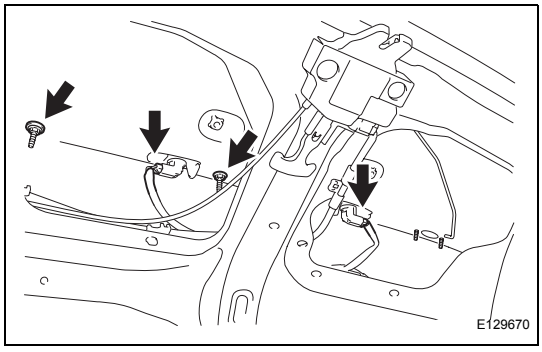

(b) Connect the 2 connectors.
(c) Install the luggage compartment door outside garnish with the 2 nuts.
Torque: 4.9 N*m (50 kgf*cm, 43 in.*lbf)

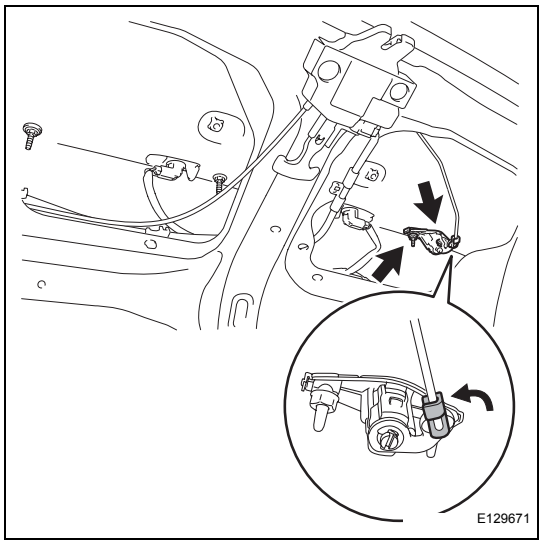

3. INSTALL LUGGAGE COMPARTMENT DOOR LOCK CYLINDER

(a) Install the luggage compartment door lock cylinder with the 2 nuts.
Torque: 4.9 N*m (50 kgf*cm, 43 in.*lbf)

(b) Install the luggage compartment door lock link.

4. CONNECT CABLE TO NEGATIVE BATTERY TERMINAL
Torque: 5.4 N*m (55 kgf*cm, 48 in.*lbf)

LICENSE PLATE LIGHT ASSEMBLY (for Hatchback)

COMPONENTS

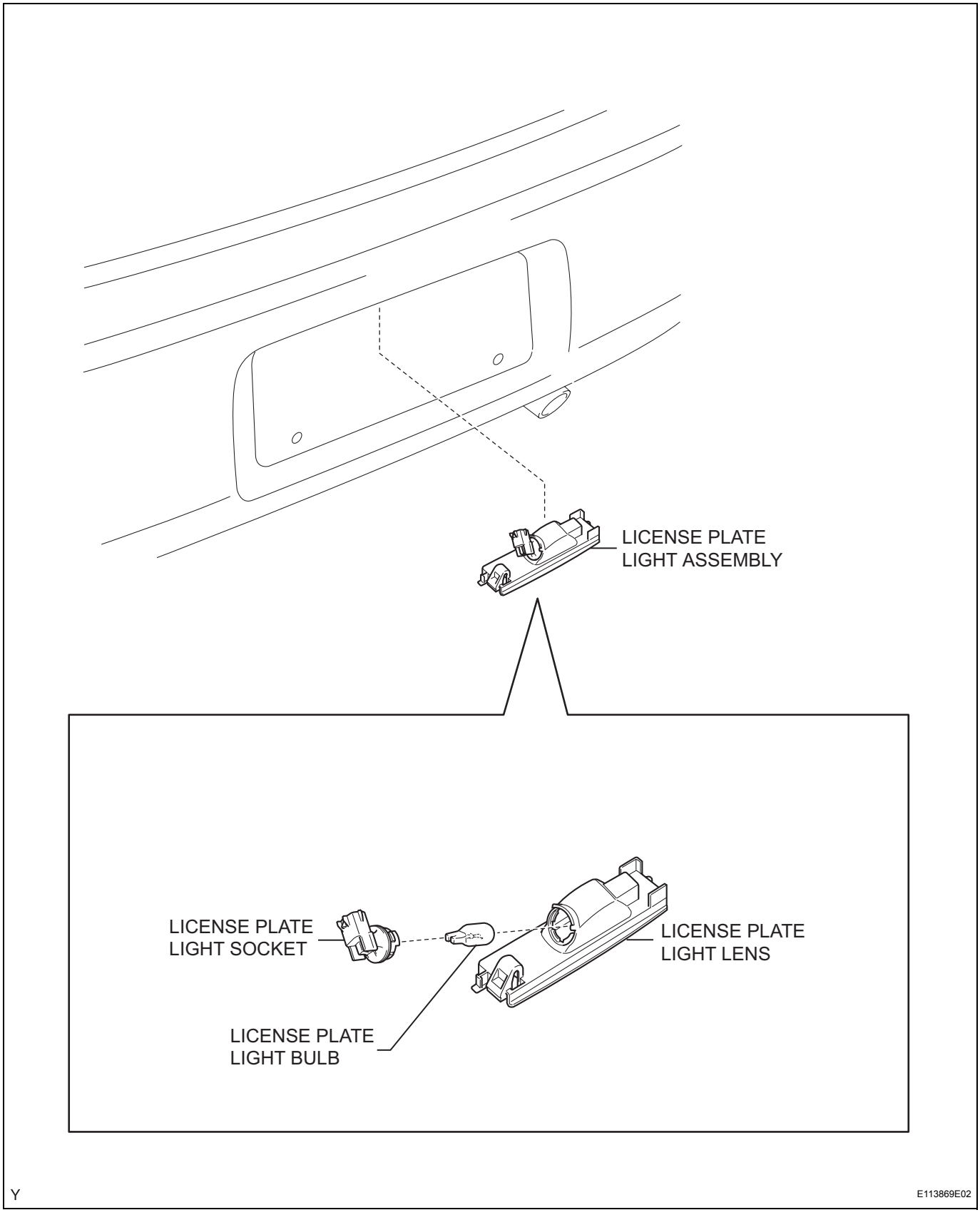

REMOVAL

1. DISCONNECT CABLE FROM NEGATIVE BATTERY TERMINAL

2. REMOVE LICENSE PLATE LIGHT ASSEMBLY

(a) Insert a screwdriver in the position shown in the illustration and move the license plate light in the direction shown in the illustration to disengage the claw.

(b) Disconnect the connector, then remove the license plate light.

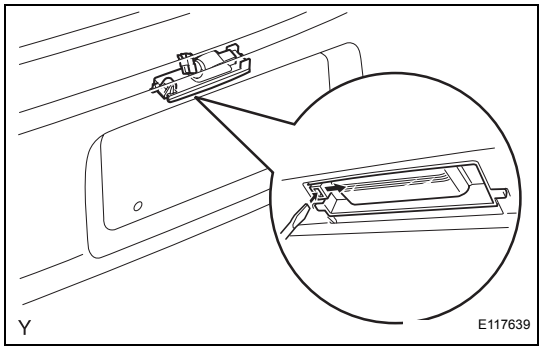

(c) Turn the license plate light socket and bulb, in the direction indicated by the arrow in the illustration, to remove them.

(d) Remove the license plate light bulb from the light socket.

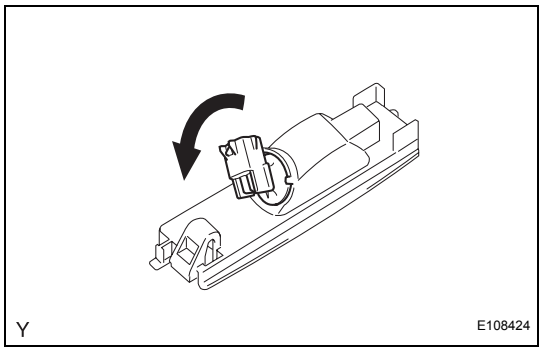

INSTALLATION

1. INSTALL LICENSE PLATE LIGHT ASSEMBLY

(a) Install the license plate light bulb into the light socket.

(b) Turn the license plate light bulb socket and bulb, in the direction indicated by the arrow in the illustration, to install them.

(c) Connect the connector.

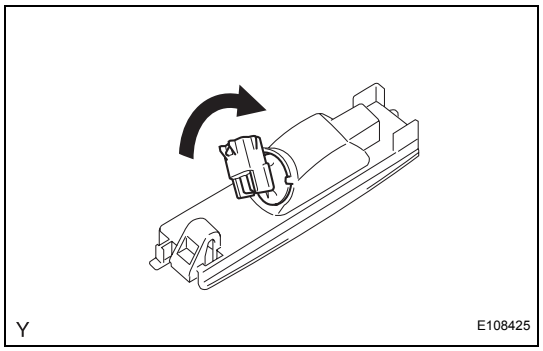

(d) Engage the claw and install the license plate light.

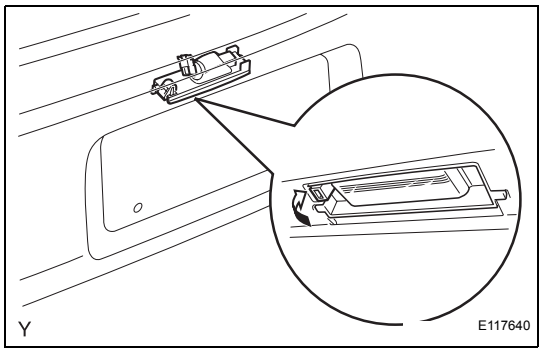

2. CONNECT CABLE TO NEGATIVE BATTERY TERMINAL

Torque: 5.4 N*m (55 kgf*cm, 48 in.*lbf)

HIGH MOUNTED STOP LIGHT ASSEMBLY (for Sedan with Rear Spoiler)

COMPONENTS

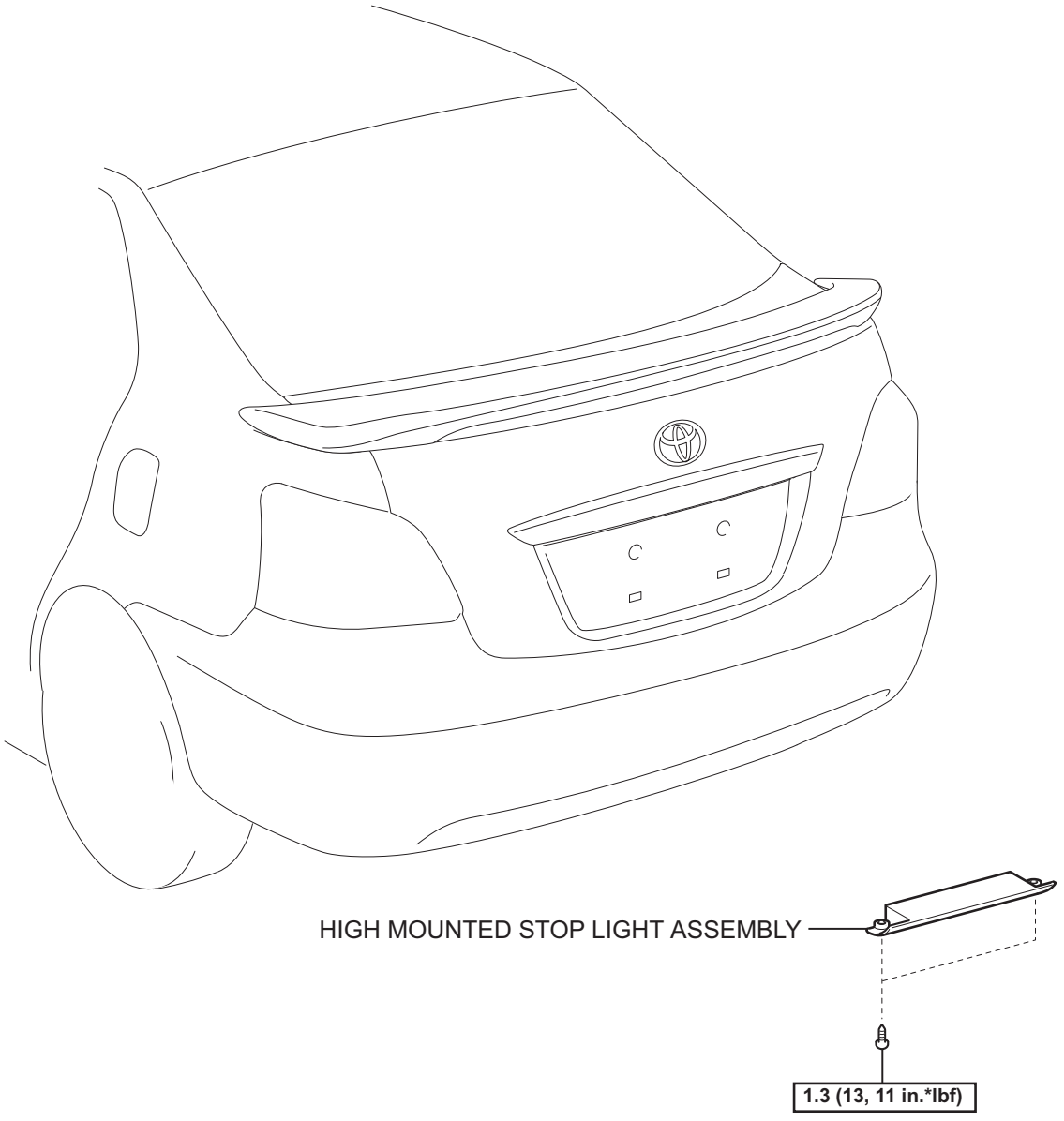

N*m (kgf*cm, ft*lbf) : Specified torque

T

E125511E01

REMOVAL

1. DISCONNECT CABLE FROM NEGATIVE BATTERY TERMINAL

2. REMOVE HIGH MOUNTED STOP LIGHT ASSEMBLY

(a) Remove the 2 bolts and the high mounted stop light.

(b) Disconnect the connector.

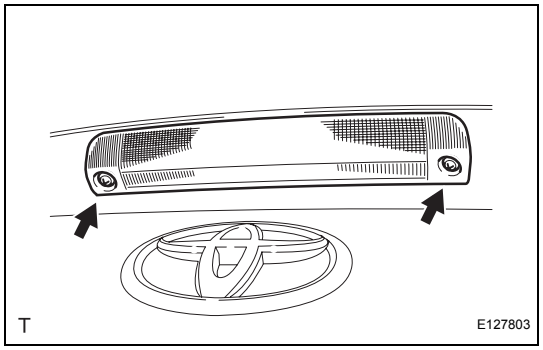

INSTALLATION

1. INSTALL HIGH MOUNTED STOP LIGHT ASSEMBLY

(a) Connect the connector.

(b) Install the high mounted stop light with the 2 bolts.
Torque: 1.3 N*m (13 kgf*cm, 11 in.*lbf)

2. CONNECT CABLE TO NEGATIVE BATTERY TERMINAL
Torque: 5.4 N*m (55 kgf*cm, 48 in.*lbf)

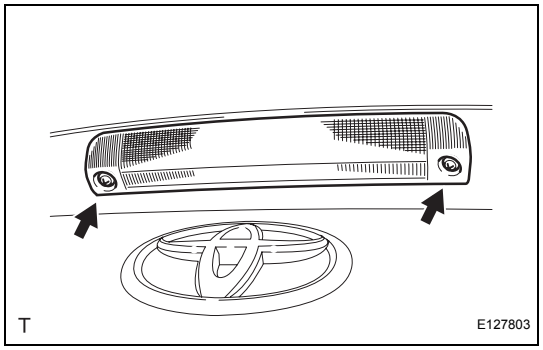

LI

HIGH MOUNTED STOP LIGHT ASSEMBLY (for Sedan without Rear Spoiler)

COMPONENTS

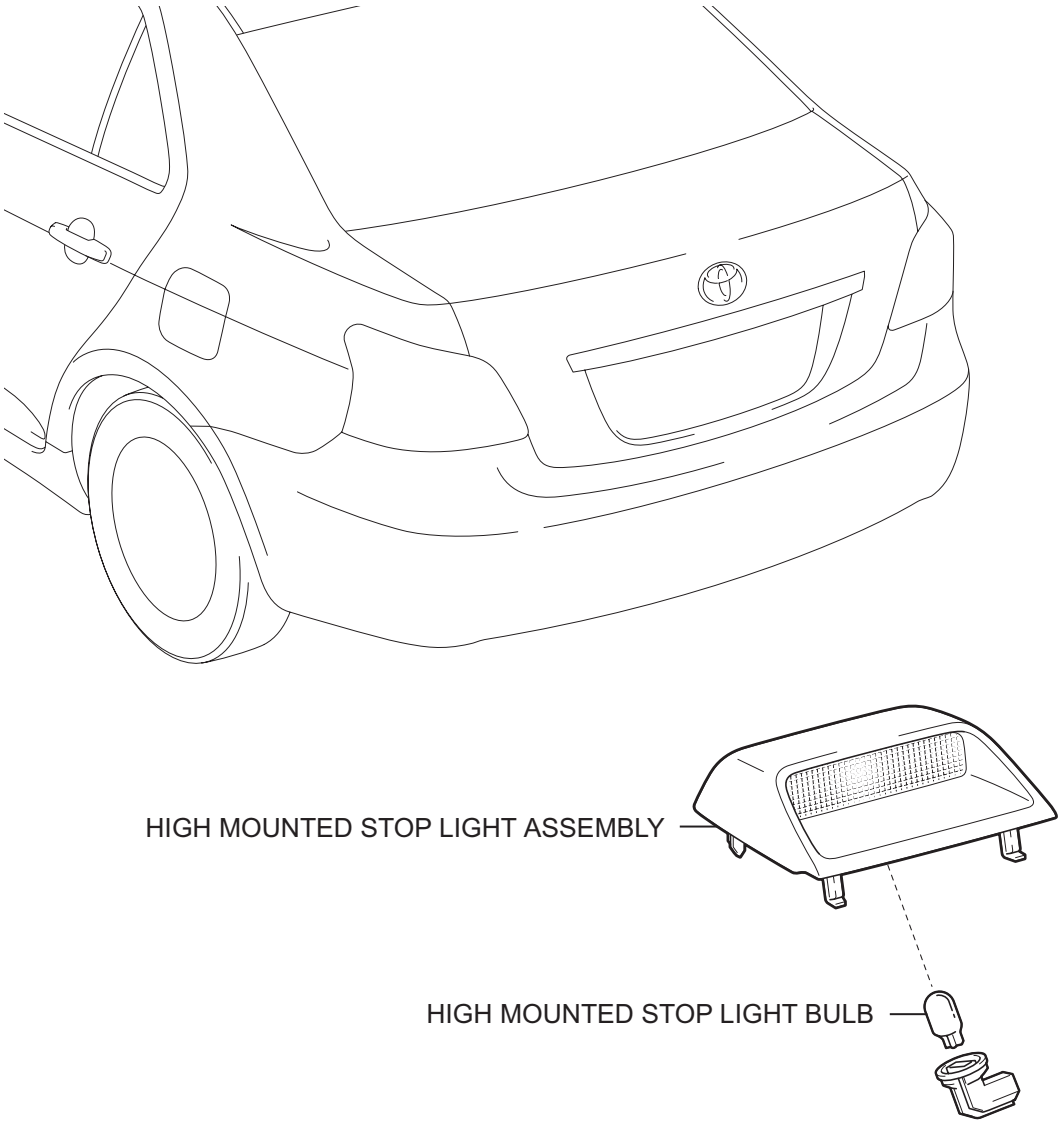

E127157E01

REMOVAL

1. DISCONNECT CABLE FROM NEGATIVE BATTERY TERMINAL

2. REMOVE HIGH MOUNTED STOP LIGHT ASSEMBLY

(a) Disengage the 2 claws.

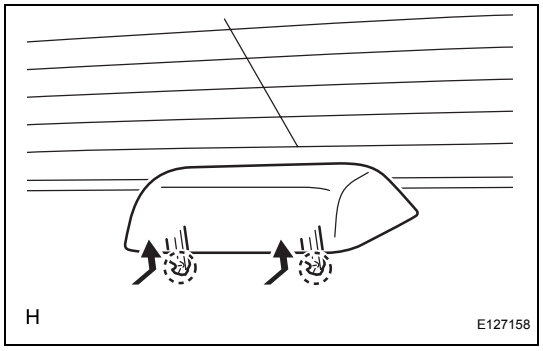

(b) Disengage the 2 claws.

(c) Disconnect the connector and remove the high mounted stop light assembly.

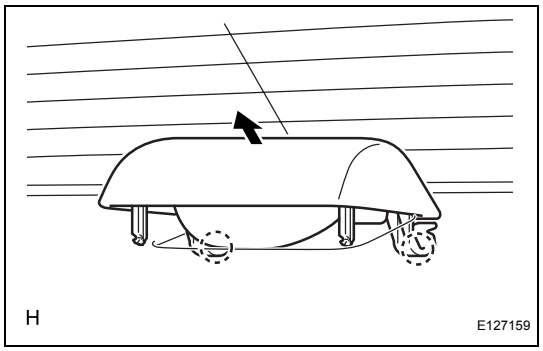

3. REMOVE HIGH MOUNTED STOP LIGHT BULB

(a) Turn the high mounted stop light socket and bulb, in the direction indicated by the arrow in the illustration, to remove them.

(b) Remove the high mounted stop light bulb from the light socket.

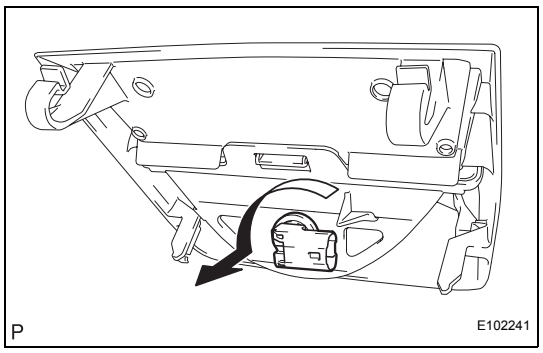

INSTALLATION

1. INSTALL HIGH MOUNTED STOP LIGHT BULB

(a) Install the high mounted stop light bulb into the light socket.

(b) Turn the high mounted stop light bulb socket and bulb, in the direction indicated by the arrow in the illustration, to install them.

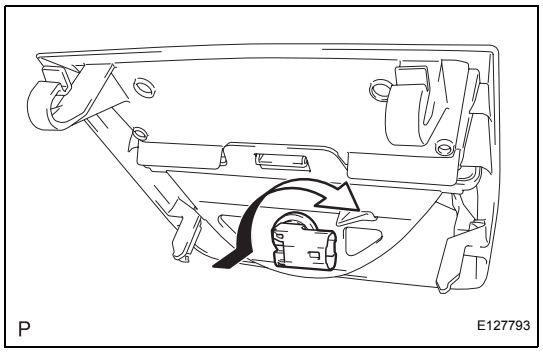

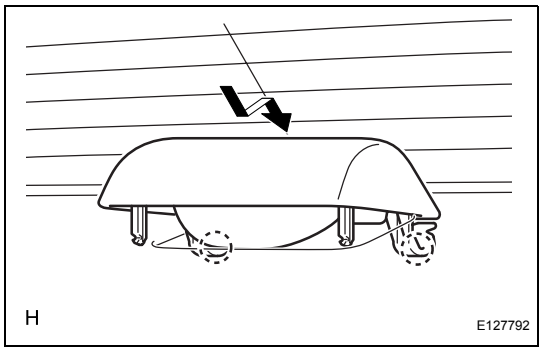

2. INSTALL HIGH MOUNTED STOP LIGHT ASSEMBLY

(a) Connect the connector.

(b) Engage the 4 claws and install the high mounted stop light assembly.

3. CONNECT CABLE TO NEGATIVE BATTERY TERMINAL

Torque: 5.4 N*m (55 kgf*cm, 48 in.*lbf)

HIGH MOUNTED STOP LIGHT ASSEMBLY (for Hatchback)

COMPONENTS

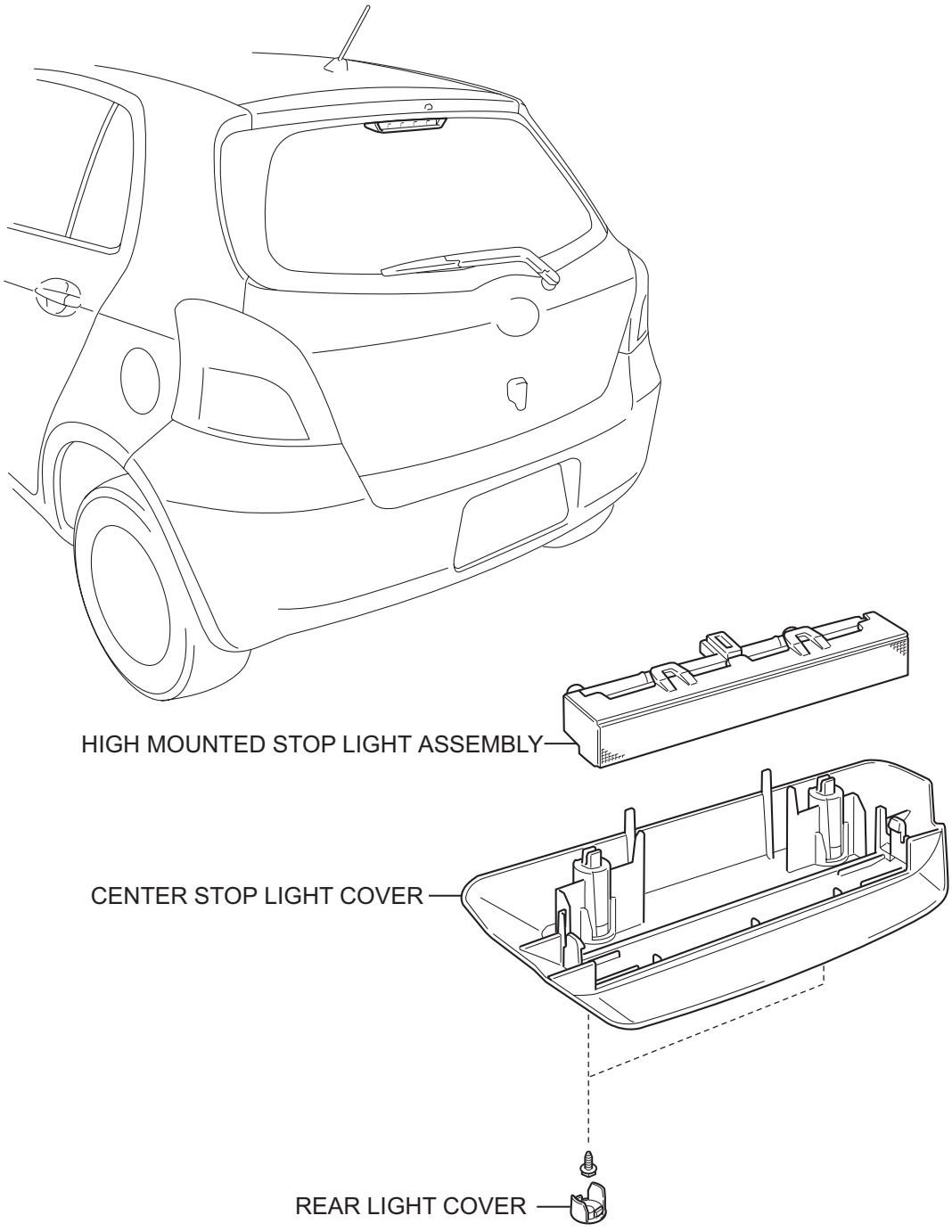

Y

E107948E01

REMOVAL

1. DISCONNECT CABLE FROM NEGATIVE BATTERY TERMINAL

2. REMOVE CENTER STOP LIGHT COVER

(a) Using a screwdriver with its tip wrapped in protective tape, disengage the 4 claws and remove the 2 rear light covers.

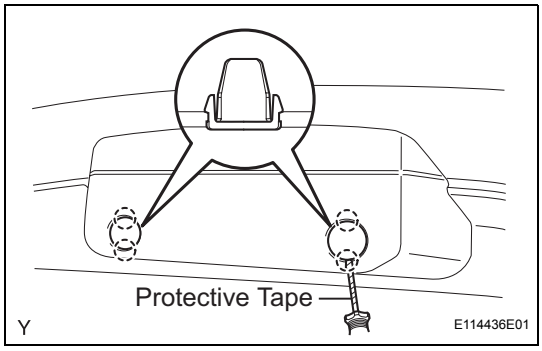

(b) Remove the 2 screws.

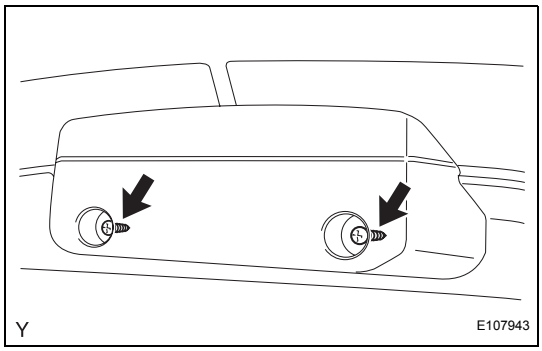

(c) Disengage the 2 claws.

(d) Disconnect the connector and remove the center stop light cover.

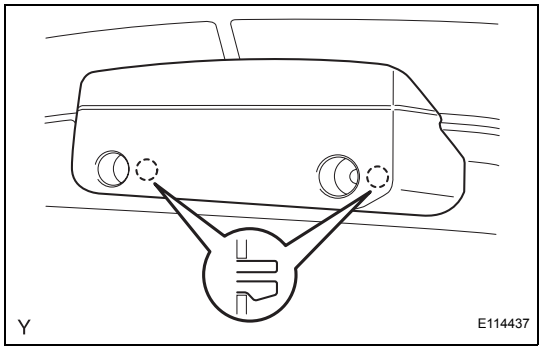

3. REMOVE HIGH MOUNTED STOP LIGHT ASSEMBLY

(a) Disengage the 2 claws and remove the high mounted stop light.

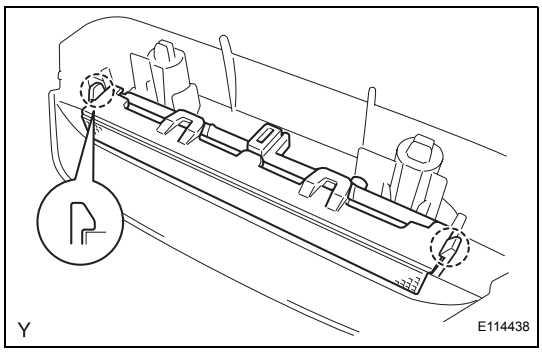

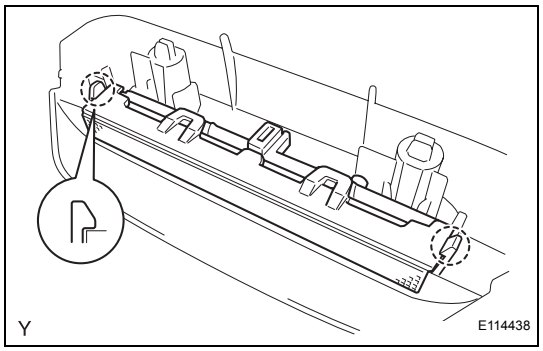

INSTALLATION

1. INSTALL HIGH MOUNTED STOP LIGHT ASSEMBLY

(a) Engage the 2 claws and install the high mounted stop light.

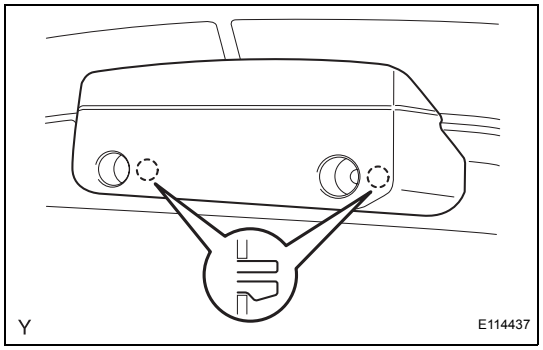

2. INSTALL CENTER STOP LIGHT COVER

(a) Connect the connector.

(b) Engage the 2 claws.

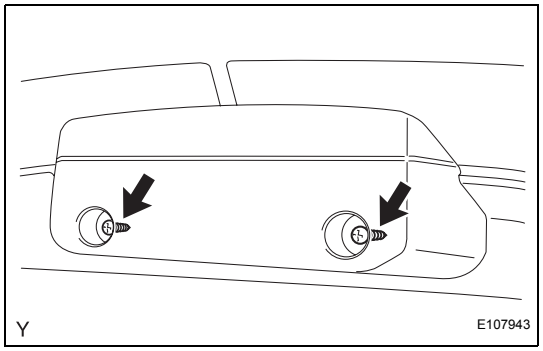

(c) Install the center stop light cover with the 2 screws.

NOTICE:
When reusing the center stop light cover, replace the screws with 90159-60303 screws to avoid insecure installation.

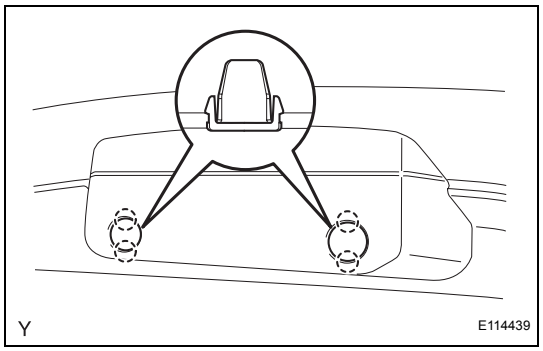

(d) Engage the 4 claws and install the rear light cover.

3. CONNECT CABLE TO NEGATIVE BATTERY TERMINAL

Torque: 5.4 N*m (55 kgf*cm, 48 in.*lbf)

LI

MAP LIGHT ASSEMBLY

COMPONENTS

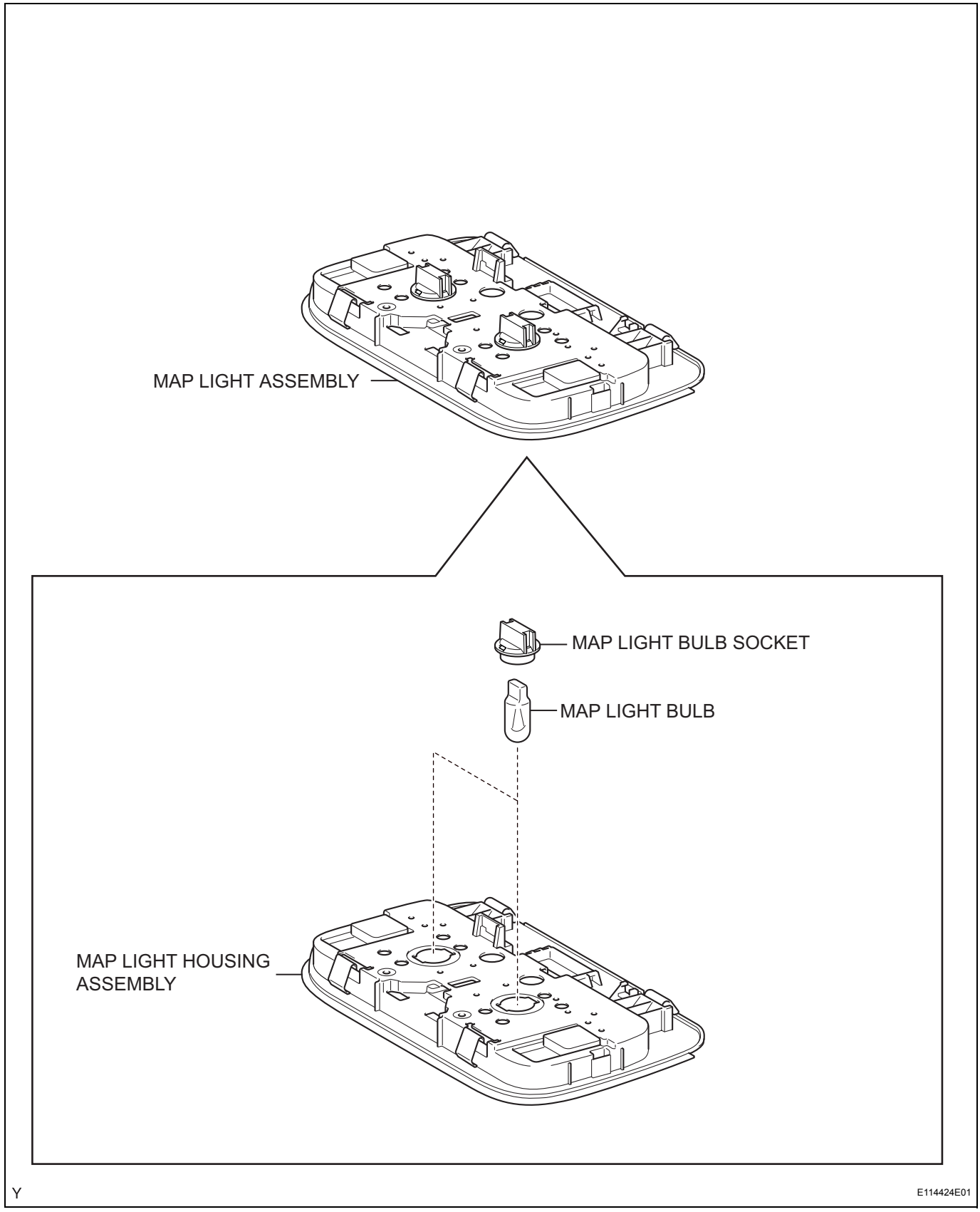

REMOVAL

1. DISCONNECT CABLE FROM NEGATIVE BATTERY TERMINAL

2. REMOVE MAP LIGHT ASSEMBLY

(a) Using a roof moulding remover, disengage the 4 claws.

(b) Disconnect the connector, and remove the map light.

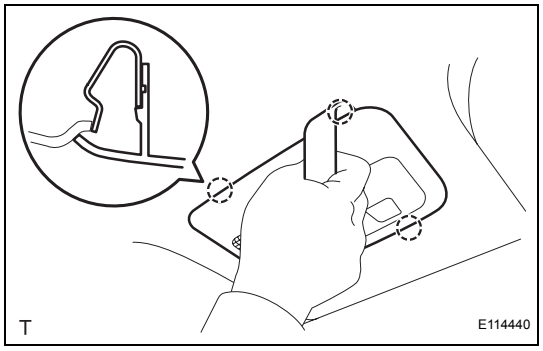

3. REMOVE MAP LIGHT BULB

(a) Turn the 2 map light sockets and bulbs, in the direction indicated by the arrows in the illustration, to remove them.

(b) Remove the 2 map light bulbs from the light socket.

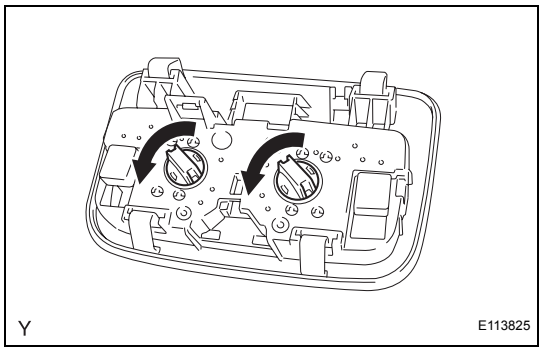

INSPECTION

1. INSPECT MAP LIGHT ASSEMBLY

(a) Check the resistance.

(1) Using an ohmmeter, measure the resistance and check the results in accordance with the value(s) in the table below.

Standard Resistance

Tester Connection	Condition	Specified Condition
1 - 2	OFF	10 kΩ or higher
1 - 2	Drivers switch ON	Below 1 Ω
1 - 2	Passengers switch OFF	Below 1 Ω

If the result is not as specified, replace the map light.

(b) Check the light operation.

(1) Connect the positive (+) battery lead to terminal 1 and the negative (-) battery lead to terminal 2, then check that the light illuminates.

standard:

Light illuminates.

If the light does not illuminate, replace the bulb.

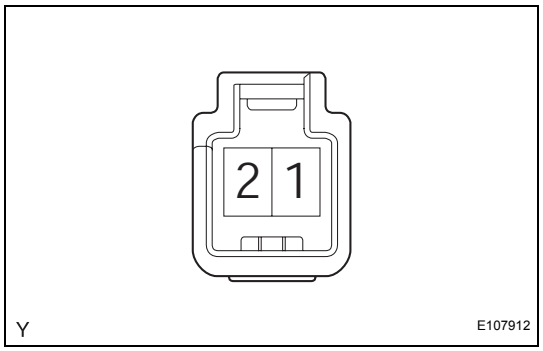

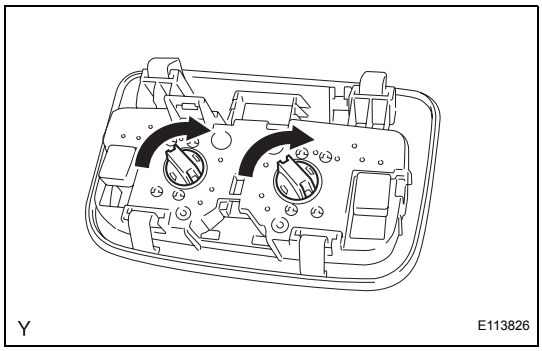

INSTALLATION

1. INSTALL MAP LIGHT BULB

(a) Install the map light bulb into the light socket.

(b) Turn the map light bulb socket and bulb, in the direction indicated by the arrows in the illustration.

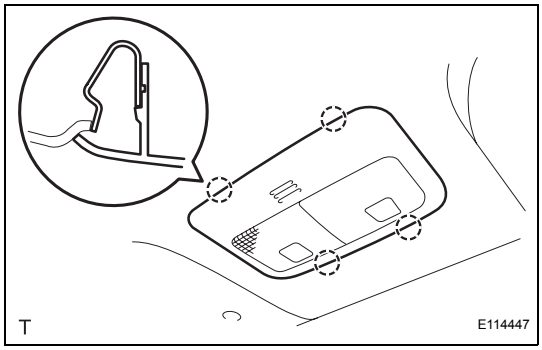

2. INSTALL MAP LIGHT ASSEMBLY

(a) Connect the connector.

(b) Engage the 4 claws and install the map light.

3. CONNECT CABLE TO NEGATIVE BATTERY TERMINAL

Torque: 5.4 N*m (55 kgf*cm, 48 in.*lbf)

ROOM LIGHT ASSEMBLY

COMPONENTS

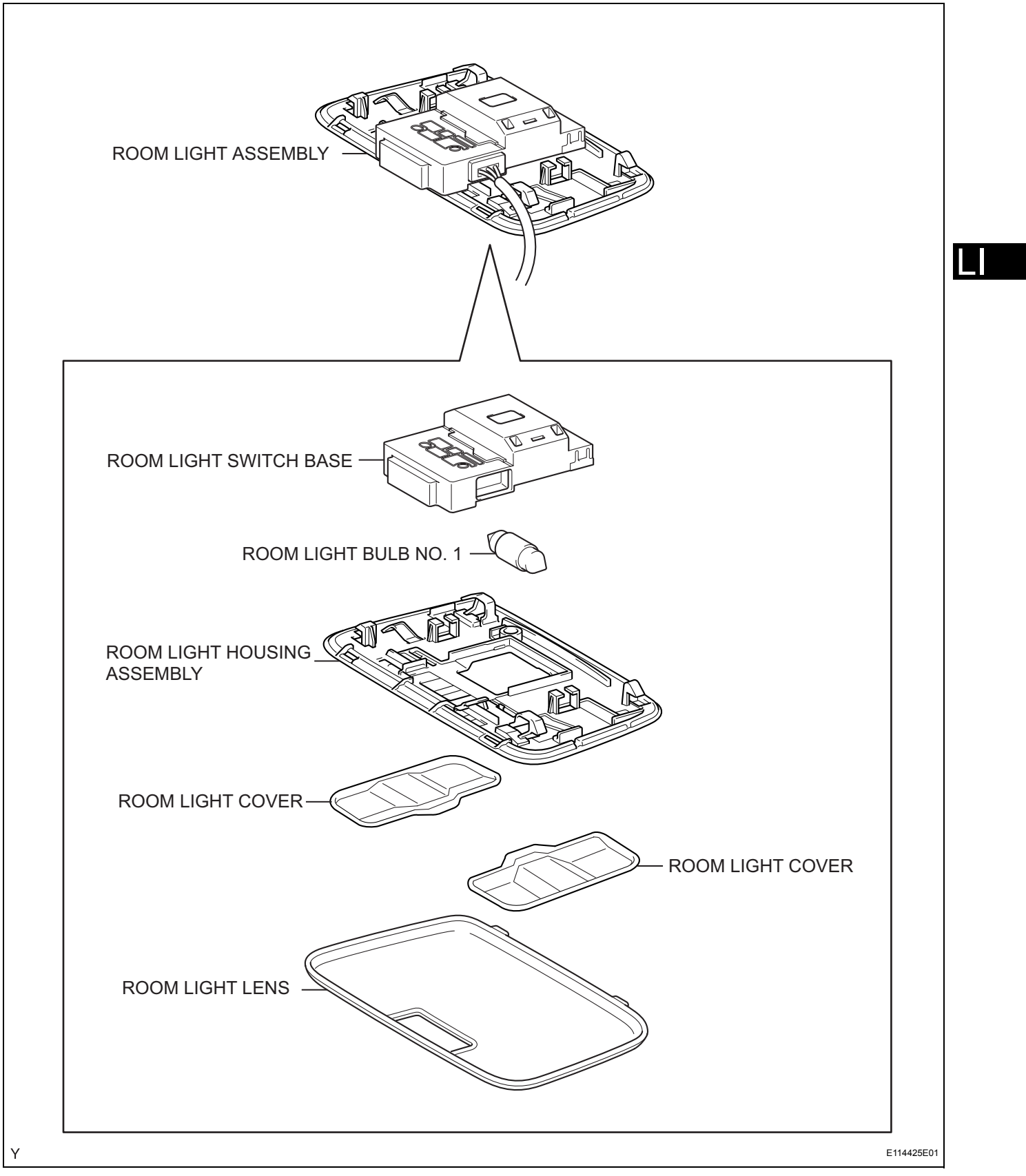

REMOVAL

1. DISCONNECT CABLE FROM NEGATIVE BATTERY TERMINAL

2. REMOVE ROOM LIGHT ASSEMBLY

(a) Using a screwdriver with its tip wrapped in protective tape, disengage the 4 claws and remove the room light lens.

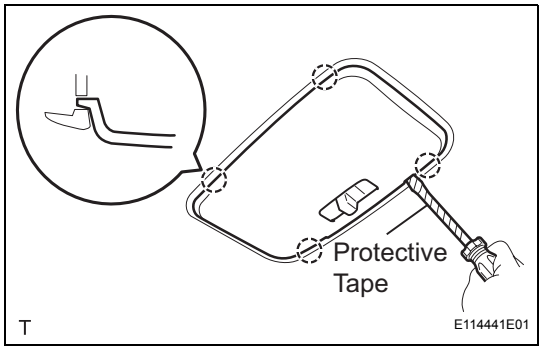

(b) Using a screwdriver with its tip wrapped in protective tape, disengage the 4 claws and remove the 2 covers.

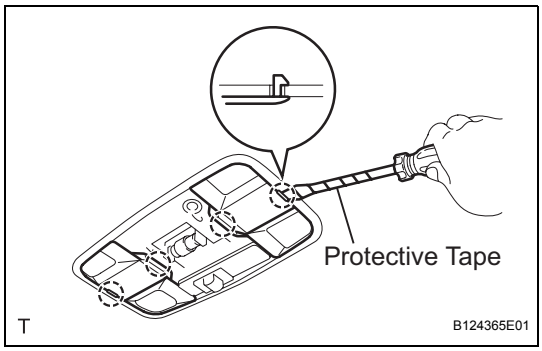

(c) Using a screwdriver with its tip wrapped in protective tape, disengage the 4 claws.

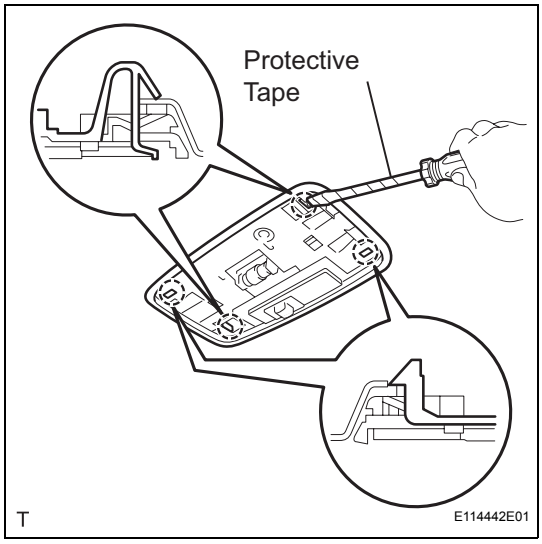

(d) Disengage the roof wire from the claw of the room light.

(e) Using a screwdriver with its tip wrapped in protective tape, disengage the 4 claws and remove the room light switch base.

(f) Remove room light bulb No. 1.

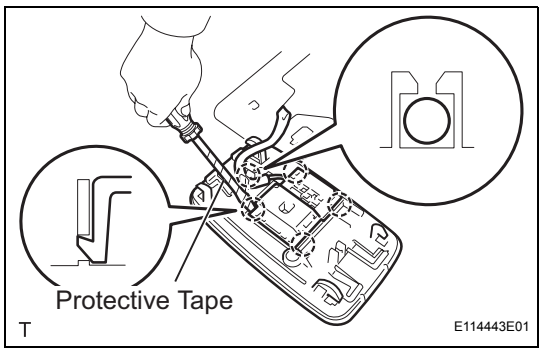

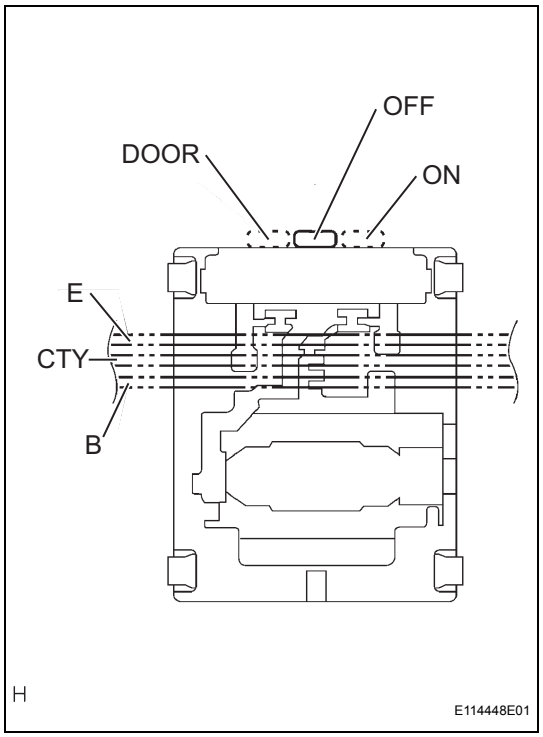

INSPECTION

1. INSPECT ROOM LIGHT ASSEMBLY

(a) Check the resistance.

(1) Using an ohmmeter, measure the resistance and check the results in accordance with the value(s) in the table below.

Standard Resistance

Tester Connection	Condition	Specified Condition
CTY - B - E	OFF	10 kΩ or higher
CTY - B	DOOR	Below 1 Ω
B - E	ON	Below 1 Ω

If the result is not as specified, replace the room light.

(b) Check the light operation.

(1) Connect the positive (+) battery lead to terminal B and the negative (-) battery lead to terminal CTY, then check that the light illuminates when the switch is in the DOOR position.

Standard:

Light illuminates.

If the light does not come on, replace the bulb.

(2) Connect the positive (+) battery lead to terminal B and the negative (-) battery lead to terminal E, then check that the light illuminates when the switch is in the ON position.

Standard:

Light illuminates.

If the light does not illuminate, replace the bulb.

INSTALLATION

1. INSTALL ROOM LIGHT ASSEMBLY

(a) Install room light bulb No. 1.

(b) Engage the 4 claws and install the room light switch base.

(c) Install the roof wire into the claw of the room light.

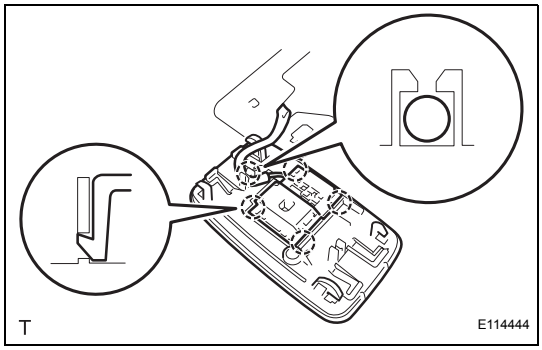

(d) Engage the 4 claws and install the room light.

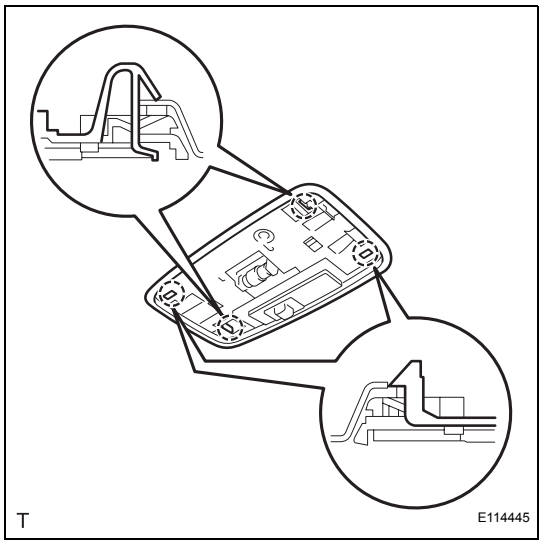

(e) Engage the 4 claws and install the 2 covers.

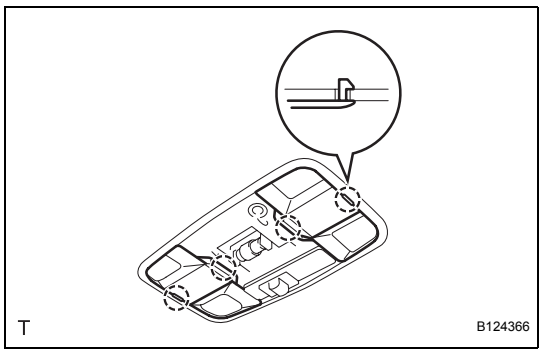

(f) Engage the 4 claws and install the room light lens.

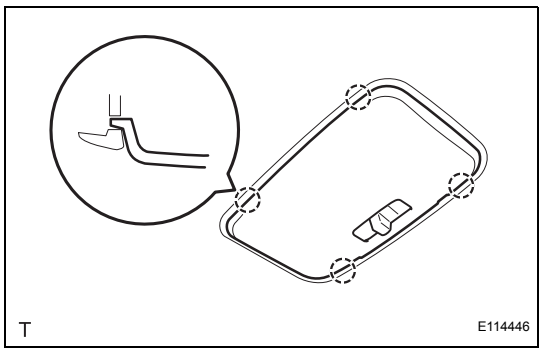

2. CONNECT CABLE TO NEGATIVE BATTERY TERMINAL
Torque: 5.4 N*m (55 kgf*cm, 48 in.*lbf)

LUGGAGE COMPARTMENT ROOM LIGHT (for Sedan)

COMPONENTS

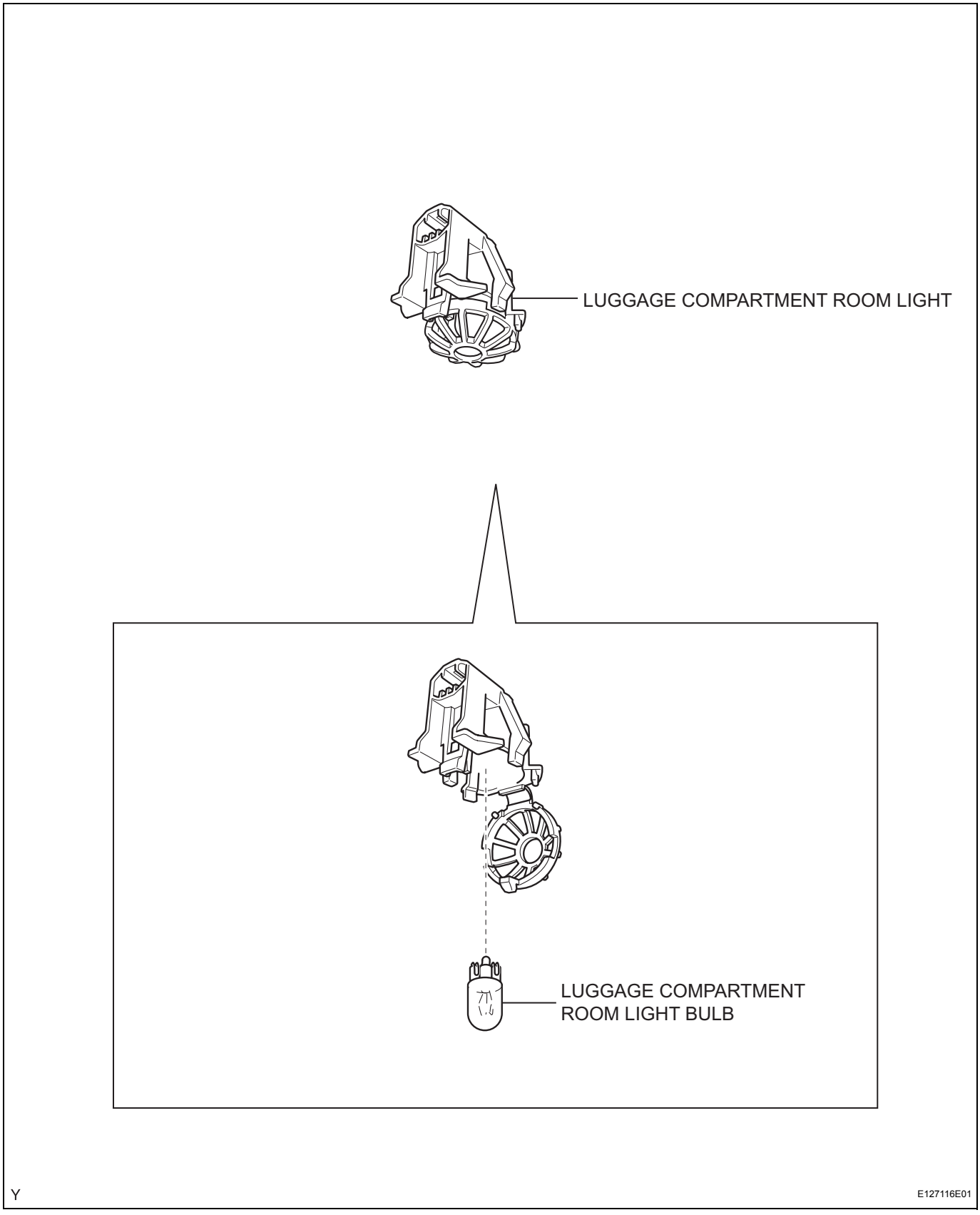

REMOVAL

1. DISCONNECT CABLE FROM NEGATIVE BATTERY TERMINAL

2. REMOVE LUGGAGE COMPARTMENT ROOM LIGHT

(a) Disengage the claw and pull up the luggage compartment room light in the direction indicated by the arrow.

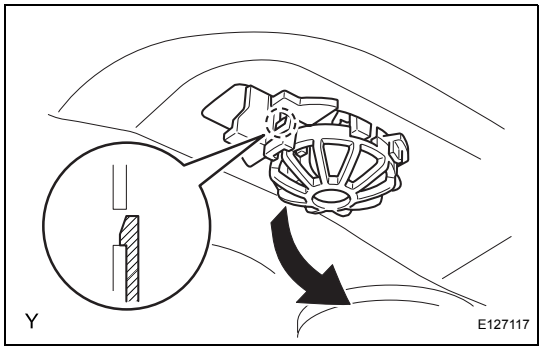

(b) Disengage the 2 claws and remove the luggage compartment room light.

(c) Disconnect the connector.

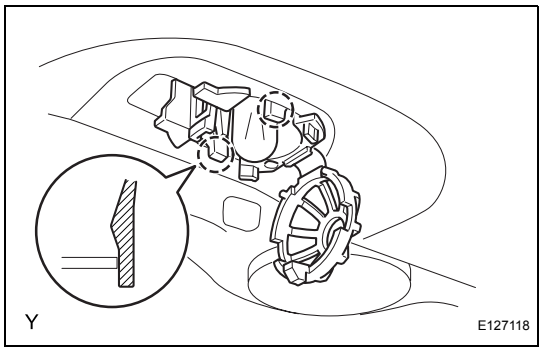

3. REMOVE LUGGAGE COMPARTMENT ROOM LIGHT BULB

(a) Remove the luggage compartment room light bulb.

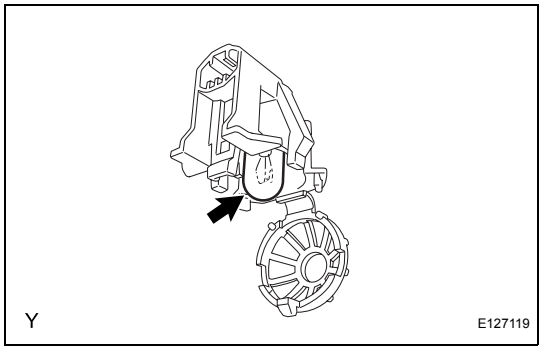

INSPECTION

1. INSPECT LUGGAGE COMPARTMENT ROOM LIGHT

(a) Check the light operation.

(1) Connect the positive (+) battery lead to terminal 1 and the negative (-) battery lead to terminal 2, then check that the light illuminates.

Standard:

Light illuminates.

If the light does not illuminate, replace the bulb.

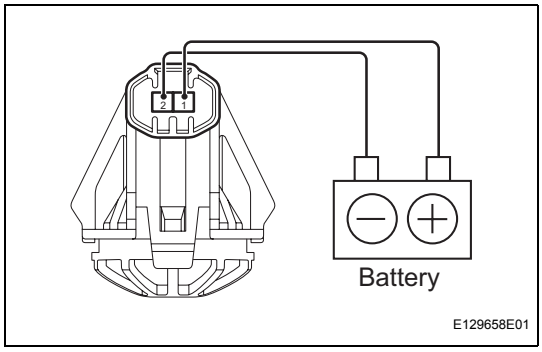

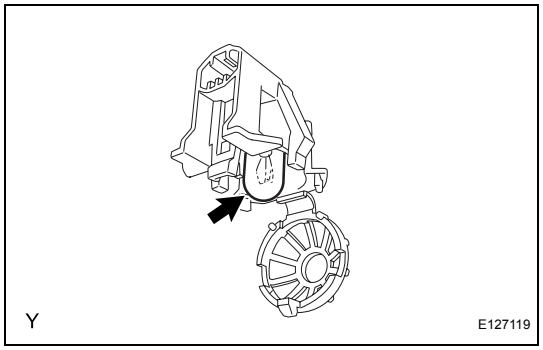

INSTALLATION

1. INSTALL LUGGAGE COMPARTMENT ROOM LIGHT BULB

(a) Install the luggage compartment room light bulb.

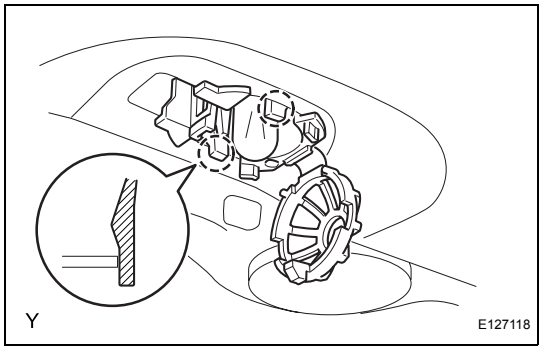

2. INSTALL LUGGAGE COMPARTMENT ROOM LIGHT

(a) Connect the connector.

(b) Engage the 2 claws and install the luggage compartment room light.

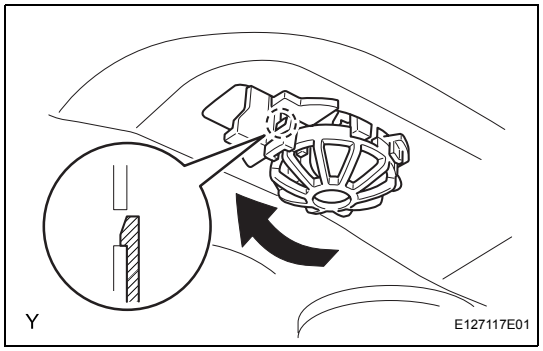

(c) Tilt the luggage compartment room light in the direction shown in the illustration and lock it.

3. CONNECT CABLE TO NEGATIVE BATTERY TERMINAL

Torque: 5.4 N*m (55 kgf*cm, 48 in.*lbf)

LI

LUGGAGE COMPARTMENT ROOM LIGHT (for Hatchback)

COMPONENTS

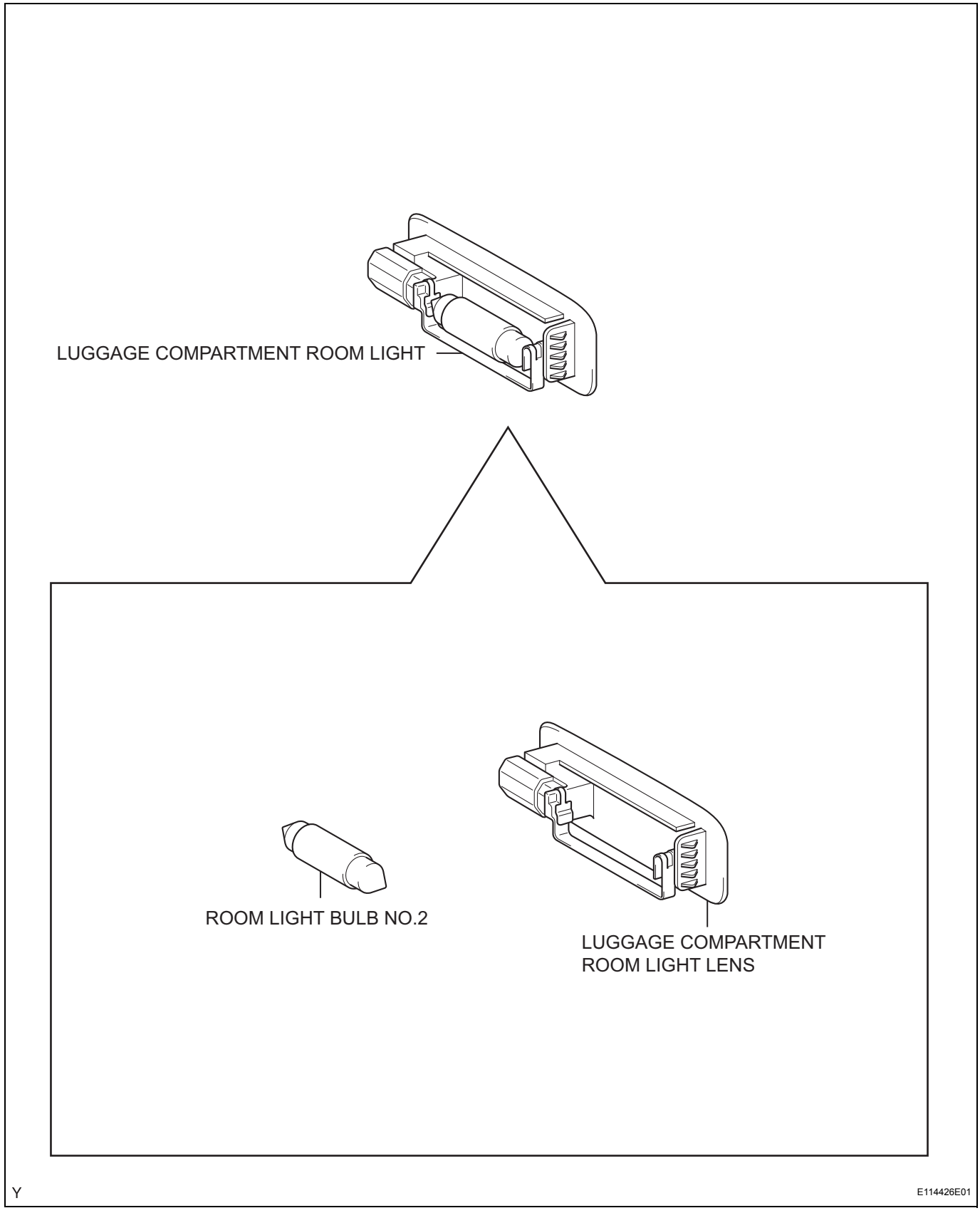

REMOVAL

1. DISCONNECT CABLE FROM NEGATIVE BATTERY TERMINAL

2. REMOVE LUGGAGE COMPARTMENT ROOM LIGHT

(a) Using a screwdriver with its tip wrapped in protective tape, disengage the claw and remove the luggage compartment room light.

(b) Disconnect the connector.

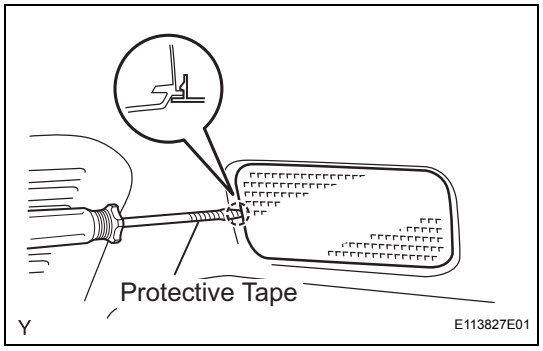

3. REMOVE ROOM LIGHT BULB NO.2

(a) Remove room light bulb No. 2.

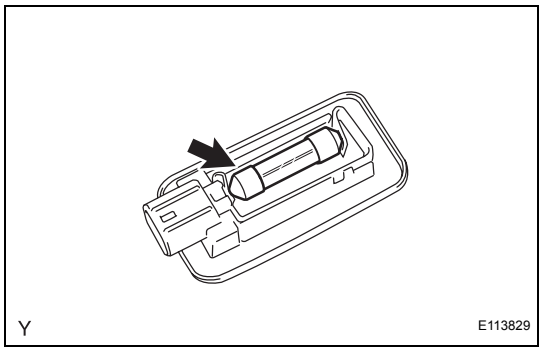

LI

INSPECTION

1. INSPECT LUGGAGE COMPARTMENT ROOM LIGHT

(a) Check the light operation.

(1) Connect the positive (+) battery lead to terminal 2 and the negative (-) battery lead to terminal 1, then check that the light illuminates.

Standard:

Light illuminates.

If the light does not illuminate, replace the bulb.

INSTALLATION

1. INSTALL ROOM LIGHT BULB NO.2

(a) Install room light bulb No. 2.

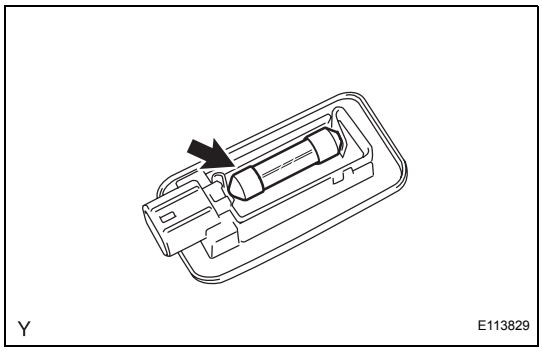

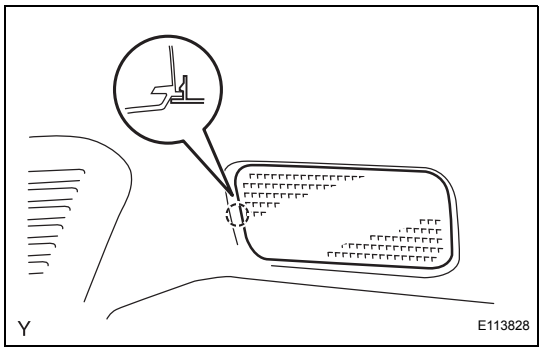

2. INSTALL LUGGAGE COMPARTMENT ROOM LIGHT

(a) Connect the connector.

(b) Engage the claw and install the luggage compartment room light.

3. CONNECT CABLE TO NEGATIVE BATTERY TERMINAL

Torque: 5.4 N*m (55 kgf*cm, 48 in.*lbf)

HEADLIGHT DIMMER SWITCH

COMPONENTS

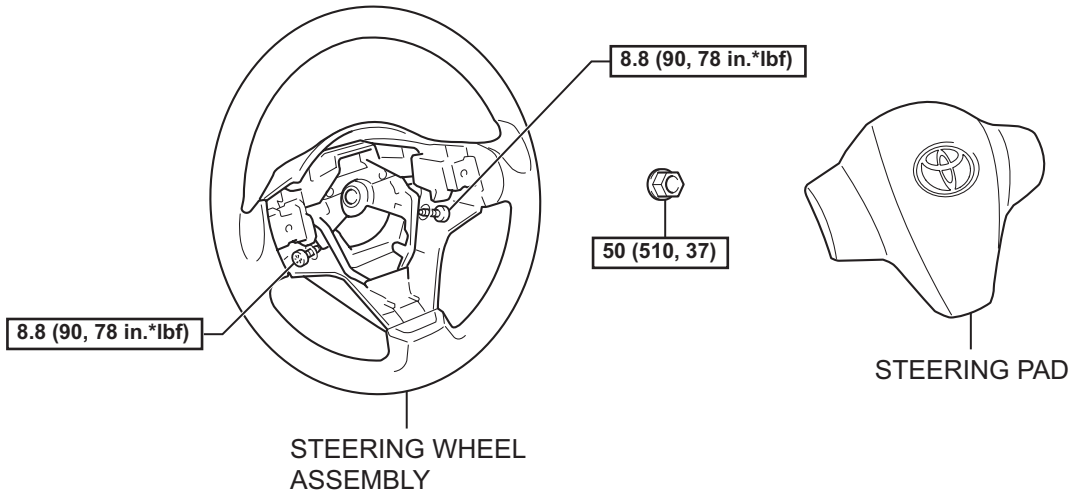

N*m (kgf*cm, ft*lbf) : Specified torque

Y

E117227E02

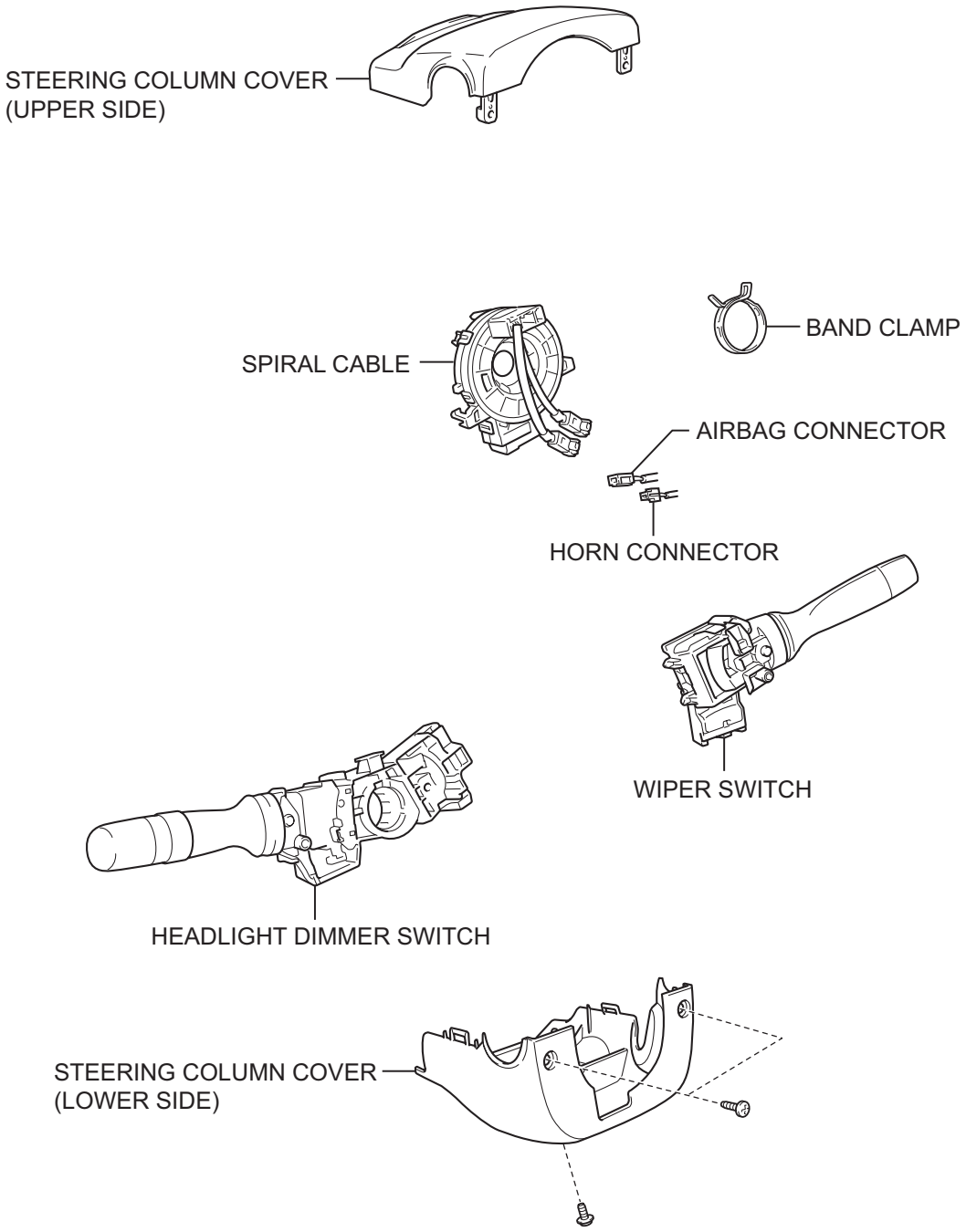

Y

E129698E01

REMOVAL

CAUTION:
Some of these service operations affect the SRS airbag system. Read the precautionary notices concerning the SRS airbag system before servicing (see page RS-1).

1. **DISCONNECT CABLE FROM NEGATIVE BATTERY TERMINAL**
   Wait for at least 90 seconds after disconnecting the cable to prevent the airbag from working.
2. **POSITION FRONT WHEELS FACING STRAIGHT AHEAD**
3. **REMOVE STEERING PAD (See page RS-309)**
4. **REMOVE STEERING WHEEL ASSEMBLY (for Hatchback) (See page SR-30)**
5. **REMOVE STEERING WHEEL ASSEMBLY (for Sedan) (See page SR-12)**
6. **REMOVE STEERING COLUMN COVER (for Hatchback) (See page SR-30)**
7. **REMOVE STEERING COLUMN COVER (for Sedan) (See page SR-12)**
8. **REMOVE SPIRAL CABLE (See page RS-321)**
9. **REMOVE WIPER SWITCH**
   (a) Disconnect the 2 connectors.
   (b) Using a screwdriver with its tip wrapped in protective tape, disengage the claw and remove the wiper switch.
   NOTICE:
   Do not press the claw too hard, as it may be damaged.

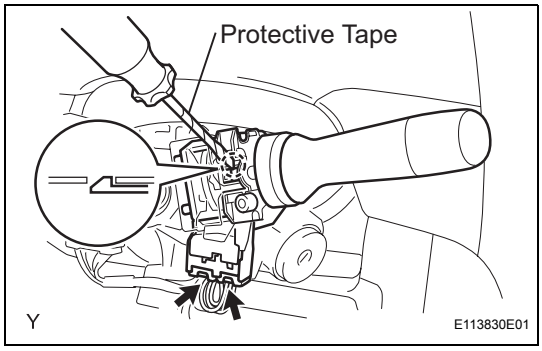

10. **REMOVE HEADLIGHT DIMMER SWITCH**
    (a) Disconnect the connector.
    (b) Remove the headlight dimmer switch, as shown in the illustration.

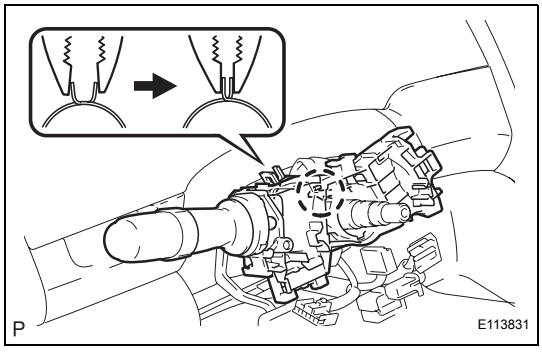

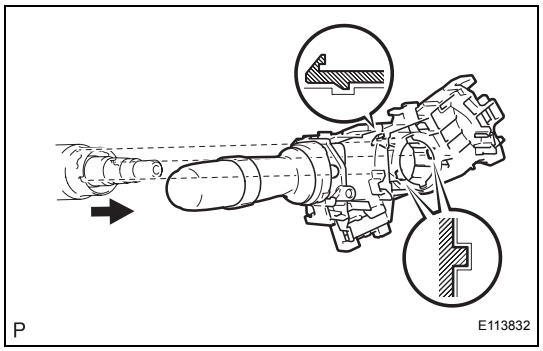

(c) Disengage the 2 claws and remove the headlight dimmer switch.

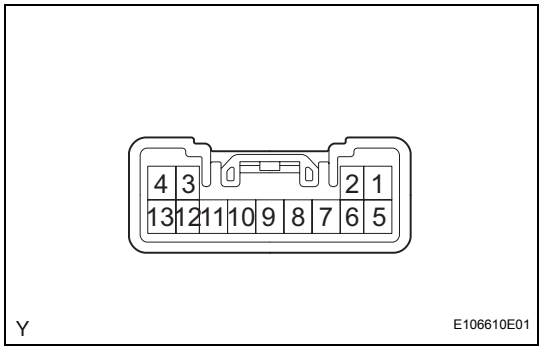

INSPECTION

1. INSPECT HEADLIGHT DIMMER SWITCH

(a) Check the resistance of the light control switch.

(1) Using an ohmmeter, measure the resistance and check the results in accordance with the value(s) in the table below.

Standard Resistance

Tester Connection	Condition	Specified Condition
10 - 11 - 12 - 13	OFF	10 kΩ or higher
10 - 13	TAIL	Below 1 Ω
10 - 13	HEAD	Below 1 Ω
11 - 12	HEAD	Below 1 Ω

If the result is not as specified, replace the headlight dimmer switch.

(b) Check the resistance of the headlight dimmer switch.

(1) Using an ohmmeter, measure the resistance and check the results in accordance with the value(s) in the table below.

Standard Resistance

Tester Connection	Condition	Specified Condition
9 - 11	FLASH	Below 1 Ω
8 - 11	LOW BEAM	Below 1 Ω
9 - 11	HI BEAM	Below 1 Ω

If the result is not as specified, replace the headlight dimmer switch.

(c) Check the resistance of the turn signal switch.

(1) Using an ohmmeter, measure the resistance and check the results in accordance with the value(s) in the table below.

Standard Resistance

Tester Connection	Condition	Specified Condition
6 - 7	Right turn	Below 1 Ω
5 - 6 - 7	Neutral	10 kΩ or higher
5 - 7	Left turn	Below 1 Ω

If the result is not as specified, replace the headlight dimmer switch.

(d) w/ Front fog light:

Check the resistance of the front fog light switch.

(1) Using an ohmmeter, measure the resistance and check the results in accordance with the value(s) in the table below.

Standard Resistance

Tester Connection	Condition	Specified Condition
3 - 4	OFF	10 kΩ or higher
3 - 4	Front fog light switch ON	Below 1 Ω

If the result is not as specified, replace the headlight dimmer switch.

INSTALLATION

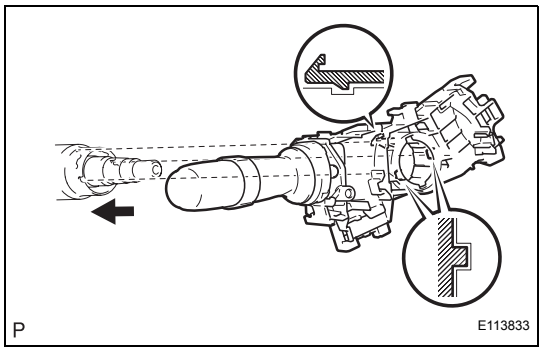

1. INSTALL HEADLIGHT DIMMER SWITCH

(a) Engage the 2 claws and install the headlight dimmer switch, as shown in the illustration.

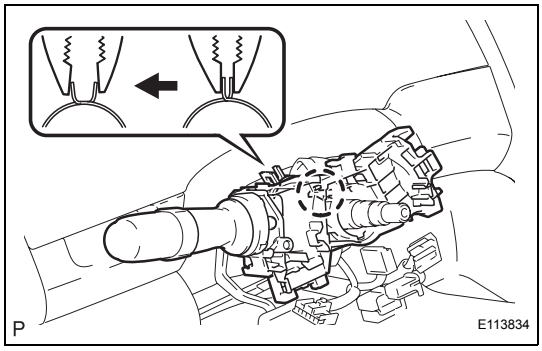

(b) Install the headlight dimmer switch with the clamp.

(c) Connect the connector.

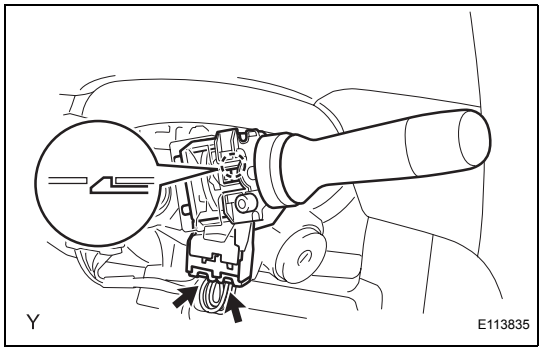

2. INSTALL WIPER SWITCH

(a) Engage the claw and install the windshield wiper switch.

(b) Connect the 2 connectors.

3. INSTALL SPIRAL CABLE (See page RS-322)

4. INSTALL STEERING COLUMN COVER (for Hatchback) (See page SR-40)

5. INSTALL STEERING COLUMN COVER (for Sedan) (See page SR-22)

6. ADJUST SPIRAL CABLE (See page RS-323)

7. INSTALL STEERING WHEEL ASSEMBLY (for Hatchback) (See page SR-41)

8. INSTALL STEERING WHEEL ASSEMBLY (for Sedan) (See page SR-22)

9. INSTALL STEERING PAD (See page RS-310)

10. CONNECT CABLE TO NEGATIVE BATTERY TERMINAL
Torque: 5.4 N*m (55 kgf*cm, 48 in.*lbf)

11. INSPECT SRS WARNING LIGHT
(See page RS-310).

HAZARD WARNING SWITCH (for Sedan)

COMPONENTS

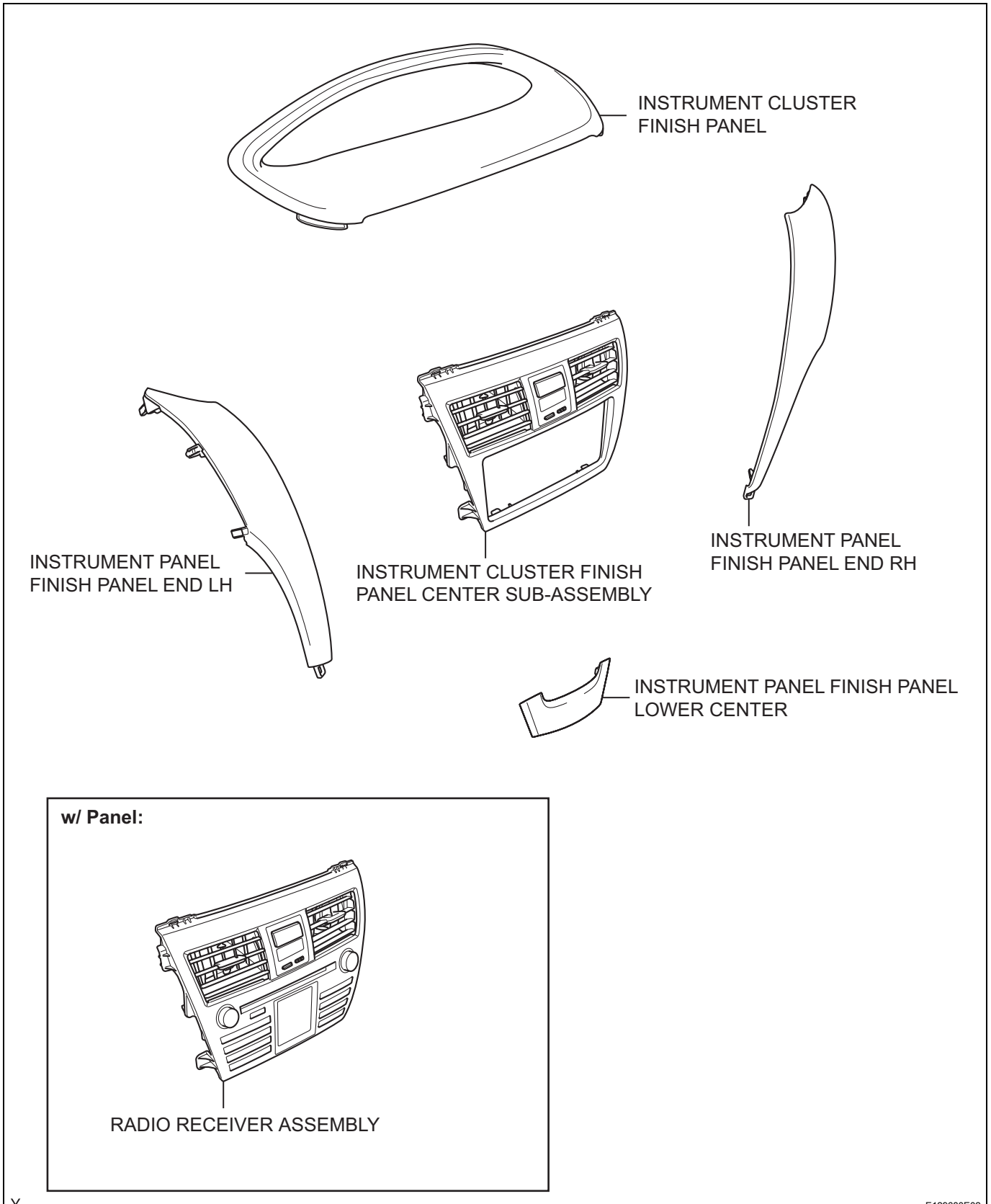

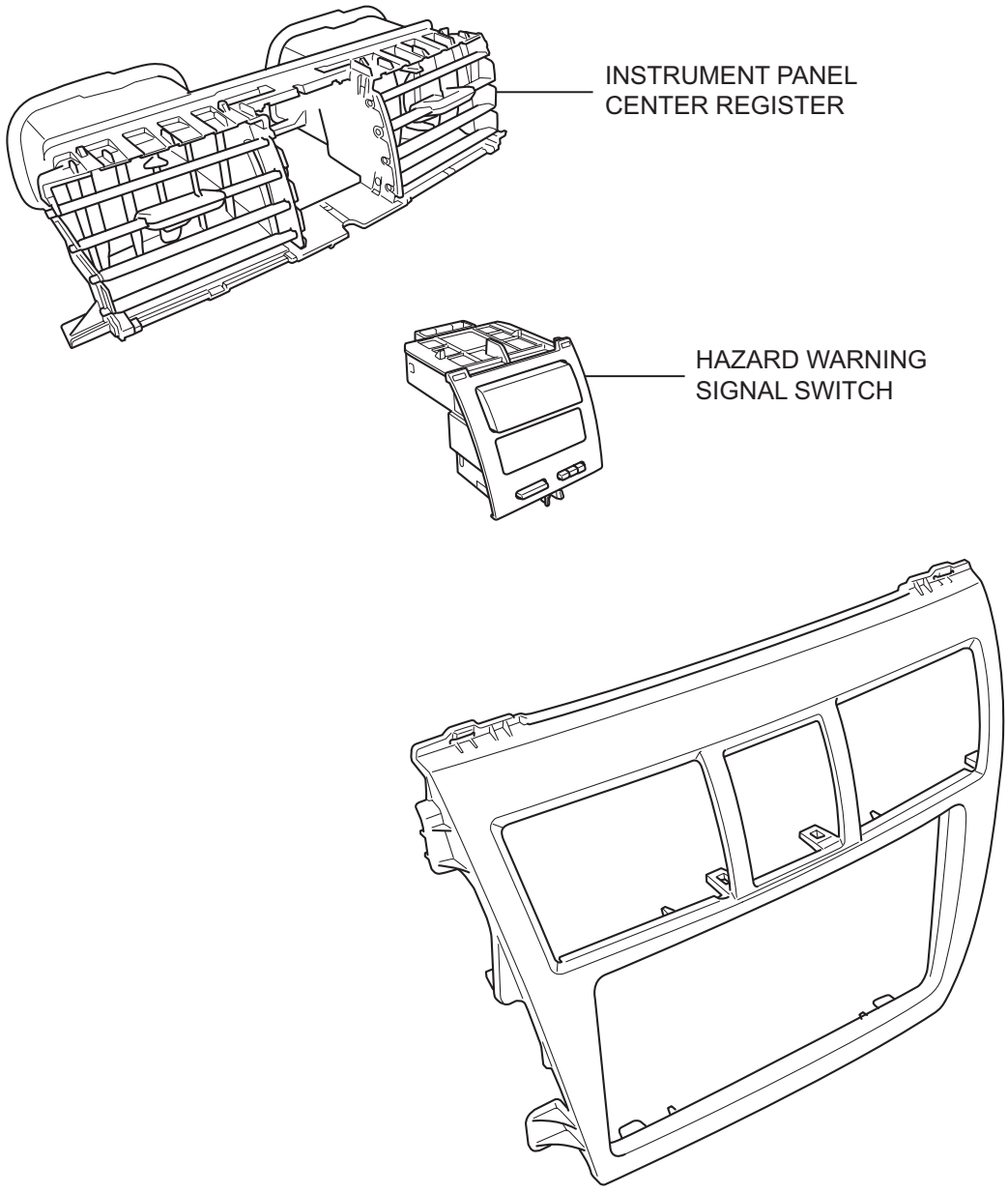

Y

E127120E01

REMOVAL

1. **DISCONNECT CABLE FROM NEGATIVE BATTERY TERMINAL**
2. **REMOVE INSTRUMENT CLUSTER FINISH PANEL (See page ME-139)**
3. **REMOVE INSTRUMENT PANEL FINISH PANEL LOWER CENTER (See page ME-138)**
4. **REMOVE INSTRUMENT PANEL FINISH PANEL END RH (See page ME-138)**
5. **REMOVE INSTRUMENT PANEL FINISH PANEL END LH (See page ME-138)**
6. **REMOVE INSTRUMENT CLUSTER FINISH PANEL CENTER SUB-ASSEMBLY (w/o Radio Receiver) (See page IP-43)**
7. **REMOVE RADIO RECEIVER ASSEMBLY (w/ Radio Receiver) (See page AV-38)**
8. **REMOVE INSTRUMENT PANEL CENTER REGISTER**
   (a) Disengage the 8 claws and remove the instrument panel center register.

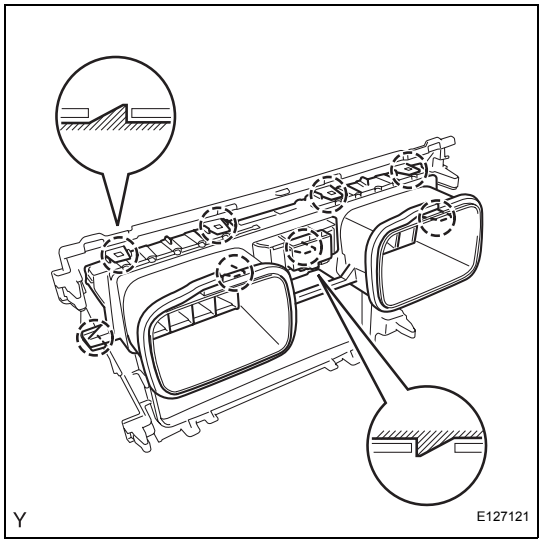

9. **REMOVE HAZARD WARNING SIGNAL SWITCH**
   (a) Disengage the 3 claws and remove the hazard warning signal switch.

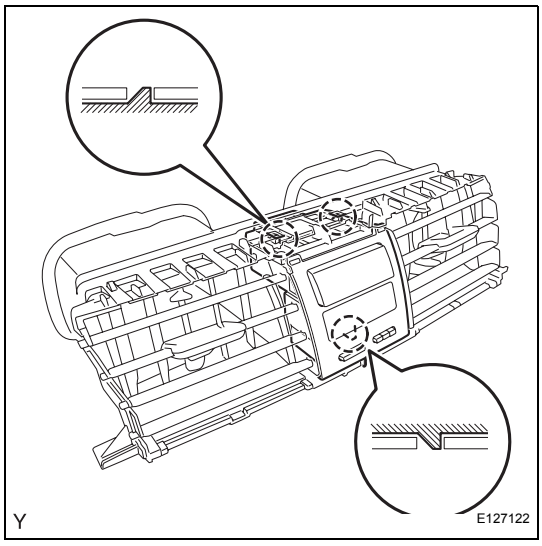

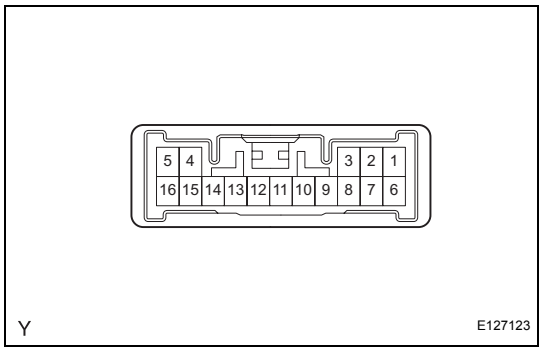

INSPECTION

1. INSPECT HAZARD WARNING SIGNAL SWITCH

(a) Check the resistance.

(1) Using an ohmmeter, measure the resistance and check the results in accordance with the value(s) in the table below.

Standard Resistance

Tester Connection	Condition	Specified Condition
4 - 15	OFF	10 kΩ or higher
4 - 15	ON	Below 1 Ω
3 - 13	Illumination circuit	Below 1 Ω

If the result is not as specified, replace the hazard warning signal switch.

(b) Check the illumination operation.

(1) Connect the positive (+) battery lead to terminal 13 and the negative (-) battery lead to terminal 3, then check that the illumination illuminates.

Standard:

Illumination illuminates.

If the illumination does not illuminate, replace the hazard warning signal switch.

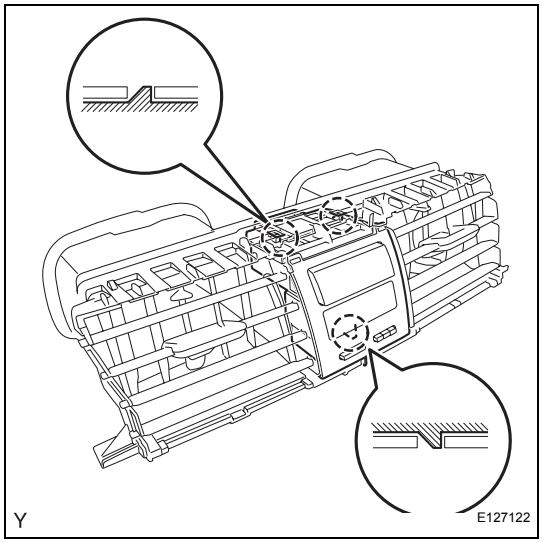

INSTALLATION

1. INSTALL HAZARD WARNING SIGNAL SWITCH

(a) Engage the 3 claws and remove the hazard warning signal switch.

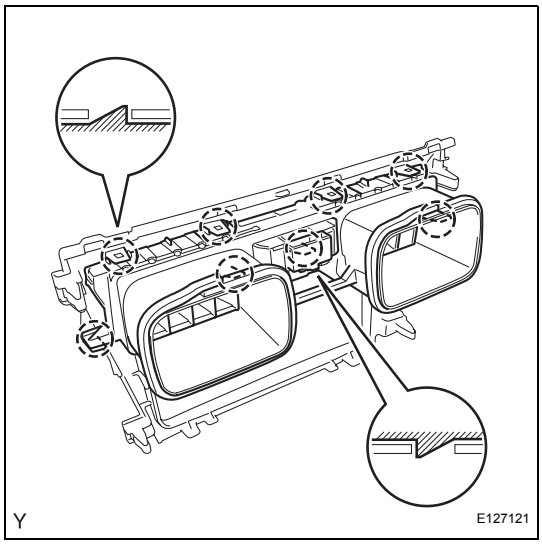

2. **INSTALL INSTRUMENT PANEL CENTER REGISTER**
   (a) Engage the 8 claws and the instrument panel center register.
3. **INSTALL INSTRUMENT CLUSTER FINISH PANEL CENTER SUB-ASSEMBLY (w/o Radio Receiver) (See page IP-56)**
4. **REMOVE RADIO RECEIVER ASSEMBLY (w/ Radio Receiver) (See page AV-40)**
5. **INSTALL INSTRUMENT CLUSTER FINISH PANEL (See page ME-140)**
6. **INSTALL INSTRUMENT PANEL FINISH PANEL END LH (See page ME-141)**
7. **INSTALL INSTRUMENT PANEL FINISH PANEL END RH (See page ME-141)**
8. **INSTALL INSTRUMENT PANEL FINISH PANEL LOWER CENTER (See page ME-142)**
9. **CONNECT CABLE TO NEGATIVE BATTERY TERMINAL**
   Torque: 5.4 N*m (55 kgf*cm, 48 in.*lbf)

HAZARD WARNING SWITCH (for Hatchback)

COMPONENTS

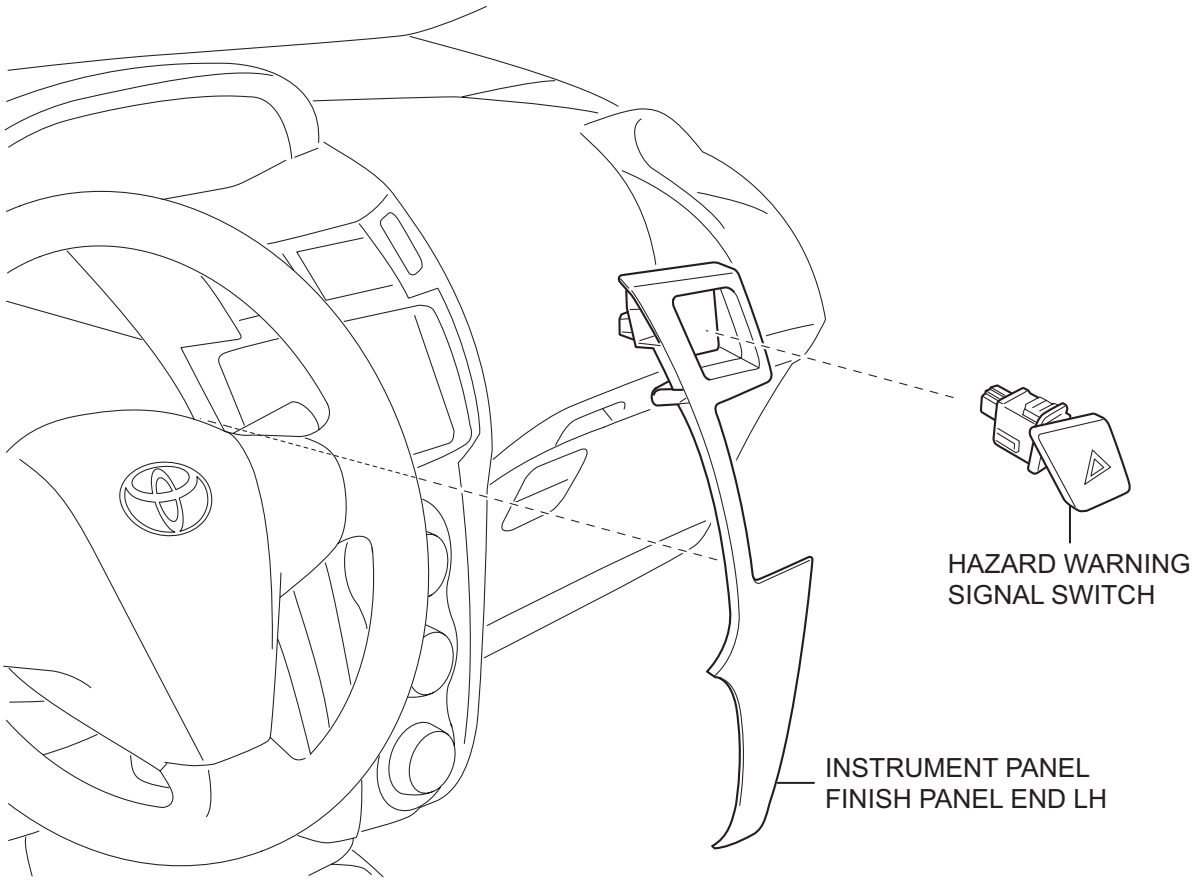

Y

E117229E01

REMOVAL

1. **DISCONNECT CABLE FROM NEGATIVE BATTERY TERMINAL**
2. **REMOVE INSTRUMENT PANEL FINISH PANEL END LH (See page ME-145)**
3. **REMOVE HAZARD WARNING SIGNAL SWITCH**
   (a) Disengage the 2 claws and remove the hazard warning signal switch.

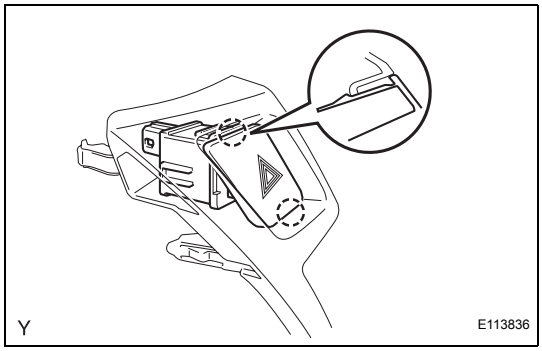

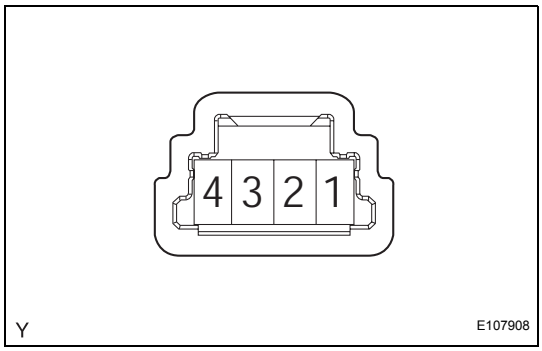

INSPECTION

1. **INSPECT HAZARD WARNING SIGNAL SWITCH**
   (a) Check the resistance.
      (1) Using an ohmmeter, measure the resistance and check the results in accordance with the value(s) in the table below.
      Standard Resistance

Tester Connection	Condition	Specified Condition
1 - 4	OFF	10 kΩ or higher
1 - 4	ON	Below 1 Ω
2 - 3	Illumination circuit	Below 1 Ω

      If the result is not as specified, replace the hazard warning signal switch.
   (b) Check the illumination operation.
      (1) Connect the positive (+) battery lead to terminal 3 and the negative (-) battery lead to terminal 2, then check that the illumination illuminates.
      Standard:
      Illumination illuminates.
      If the illumination does not illuminate, replace the hazard warning signal switch.

INSTALLATION

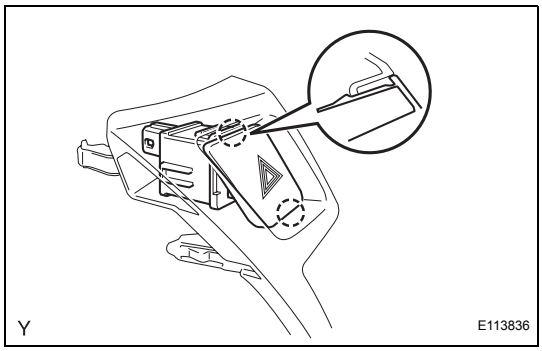

1. **INSTALL HAZARD WARNING SIGNAL SWITCH**
   (a) Engage the 2 claws and install the hazard warning signal switch.
2. **INSTALL INSTRUMENT PANEL FINISH PANEL END LH (See page ME-149)**
3. **CONNECT CABLE TO NEGATIVE BATTERY TERMINAL**
   Torque: 5.4 N*m (55 kgf*cm, 48 in.*lbf)

STOP LIGHT SWITCH (for Sedan)

COMPONENTS

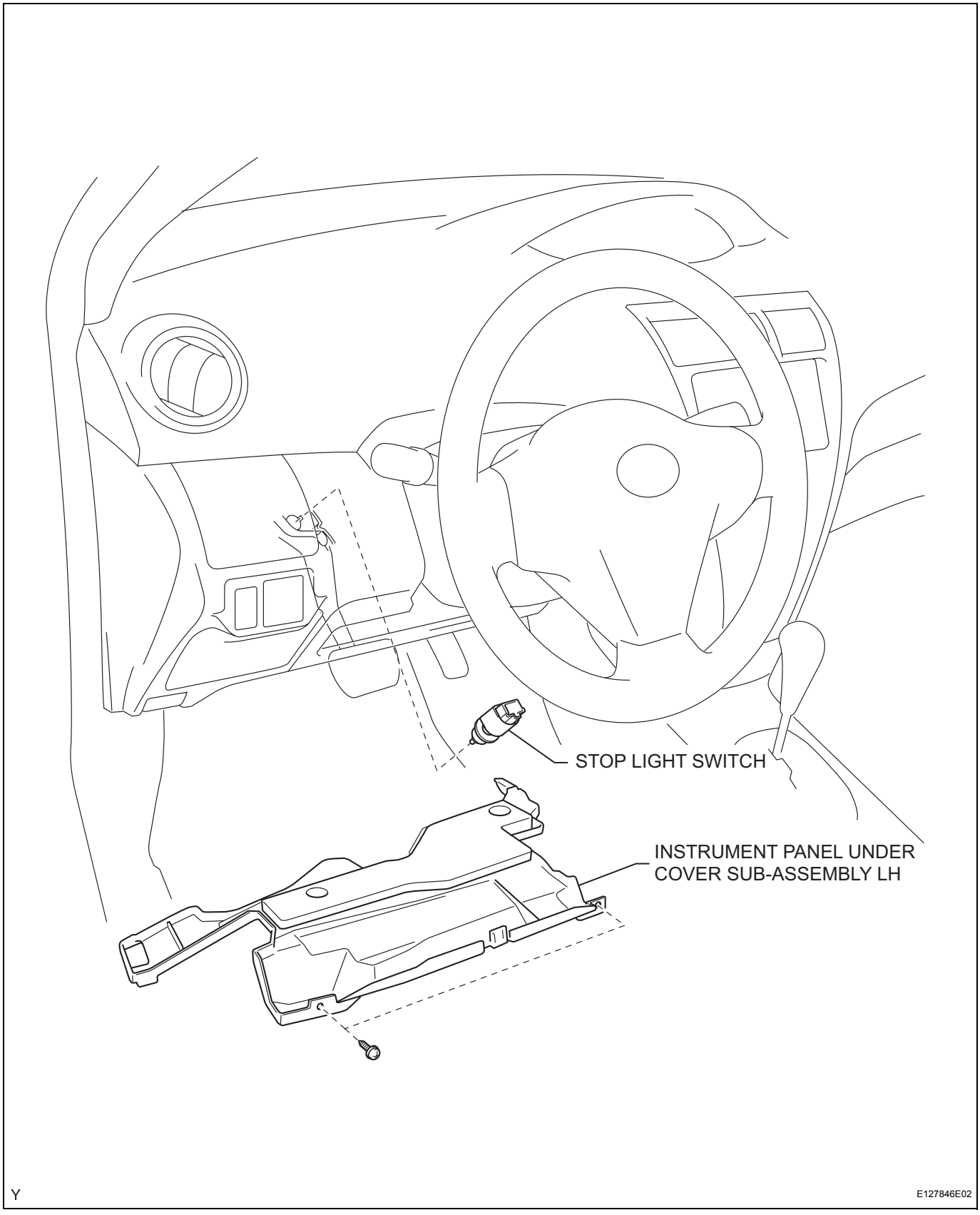

REMOVAL

1. **DISCONNECT CABLE FROM NEGATIVE BATTERY TERMINAL**
2. **REMOVE INSTRUMENT PANEL UNDER COVER SUB-ASSEMBLY LH (See page IR-14)**
3. **REMOVE STOP LIGHT SWITCH**
   (a) Remove the stop light switch connector from the stop light switch.

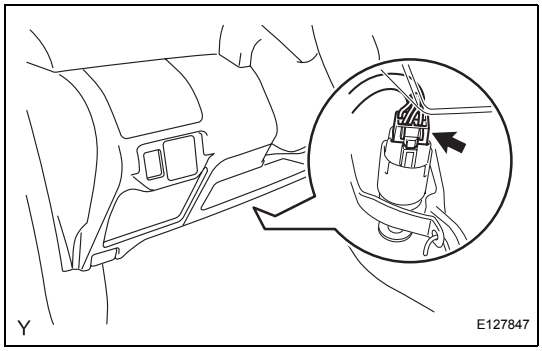

   (b) Turn the stop light switch counterclockwise and remove it.

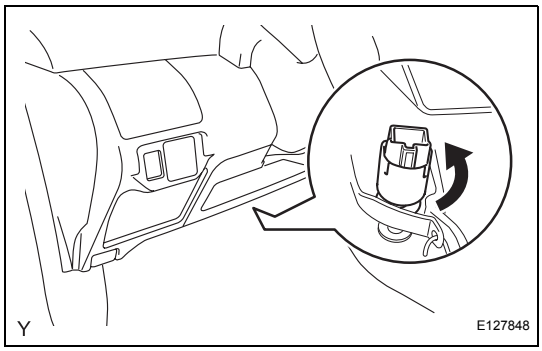

INSPECTION

1. **INSPECT STOP LIGHT SWITCH**
   (a) Check the resistance.
      (1) Using an ohmmeter, measure the resistance and check the results in accordance with the value(s) in the table below.
      Standard Resistance

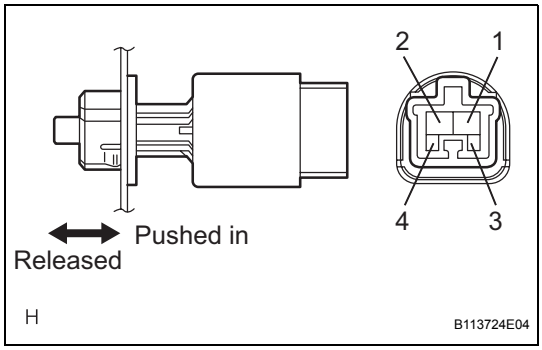

Tester Connection	Condition	Specified Condition
1 - 2	Switch pin released	Below 1 Ω
3 - 4		10 kΩ or higher
1 - 2	Switch pin pushed in	10 kΩ or higher
3 - 4		Below 1 Ω

      If the result is not as specified, replace the stop light switch.

INSTALLATION

1. **INSTALL STOP LIGHT SWITCH**
   (a) Install the stop light switch into the adjuster until it slightly touches the brake pedal.
   NOTICE:
   Do not depress the brake pedal.

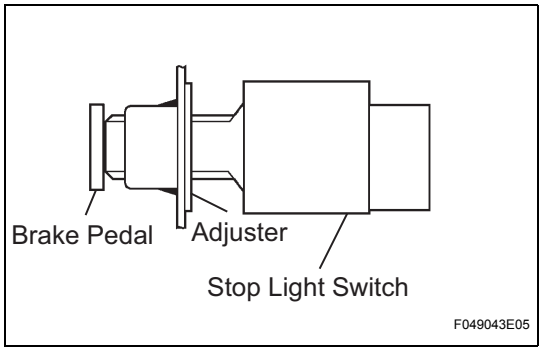

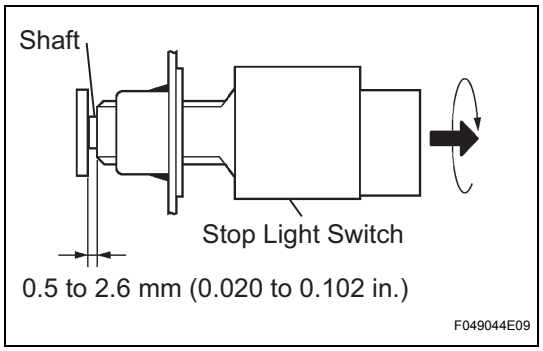

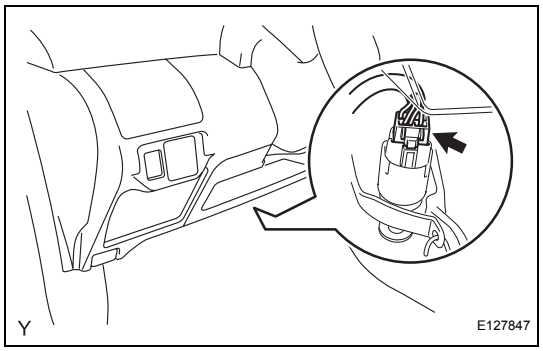

(1) Make a quarter turn clockwise to install the stop light switch.
NOTICE:
Do not depress the brake pedal.
HINT:
The turning torque for installing the stop light switch is as below.
Torque: 1.5 N*m (15 kgf*cm, 13 in.*lbf) or less

(b) Check the stop light switch clearance.
Stop light switch clearance:
0.5 to 2.6 mm (0.020 to 0.102 in.)

(c) Connect the stop light switch connector to the stop light switch.

2. INSTALL INSTRUMENT PANEL UNDER COVER SUB-ASSEMBLY LH (See page IR-35)

3. CONNECT CABLE TO NEGATIVE BATTERY TERMINAL
Torque: 5.4 N*m (55 kgf*cm, 48 in.*lbf)

STOP LIGHT SWITCH (for Hatchback)

COMPONENTS

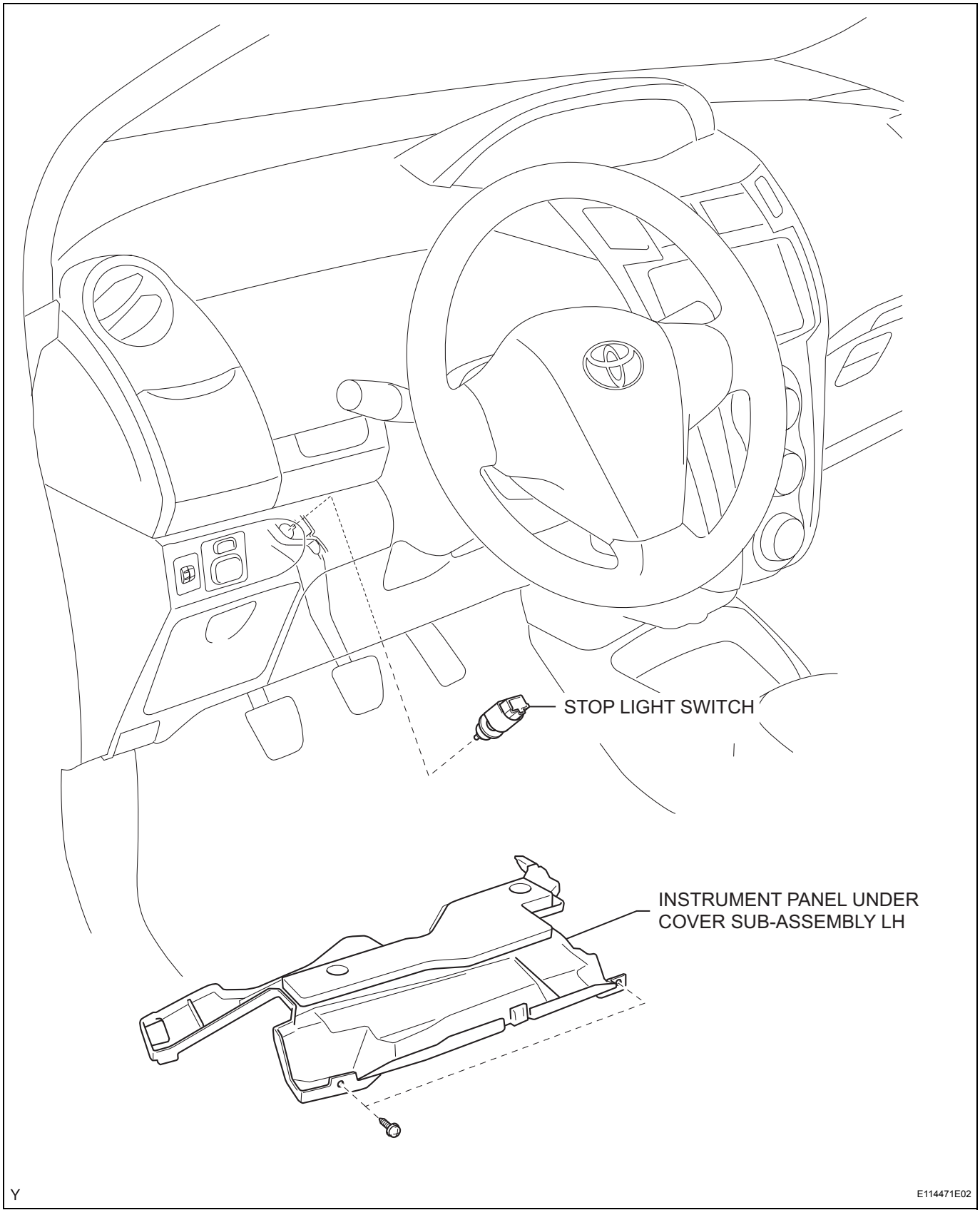

REMOVAL

1. **DISCONNECT CABLE FROM NEGATIVE BATTERY TERMINAL**
2. **REMOVE INSTRUMENT PANEL UNDER COVER SUB-ASSEMBLY LH (See page IR-50)**
3. **REMOVE STOP LIGHT SWITCH**
   (a) Remove the stop light switch connector from the stop light switch.

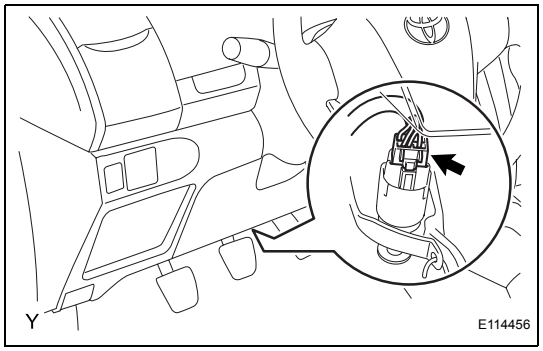

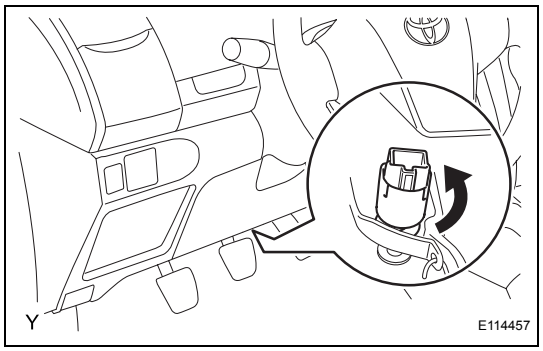

   (b) Turn the stop light switch counterclockwise and remove it.

INSPECTION

1. **INSPECT STOP LIGHT SWITCH**
   (a) Check the resistance.
      (1) Using an ohmmeter, measure the resistance and check the results in accordance with the value(s) in the table below.
      Standard Resistance

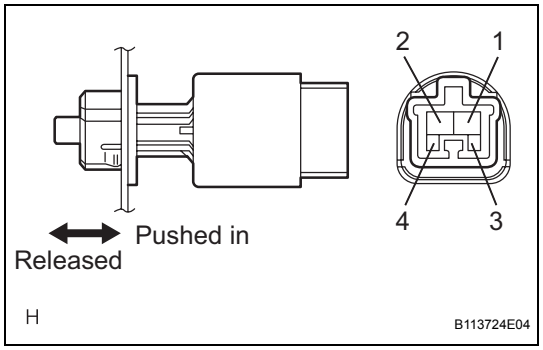

Tester Connection	Condition	Specified Condition
1 - 2	Switch pin released	Below 1 Ω
3 - 4	Switch pin released	10 kΩ or higher
1 - 2	Switch pin pushed in	10 kΩ or higher
3 - 4	Switch pin pushed in	Below 1 Ω

      If the result is not as specified, replace the stop light switch.

INSTALLATION

1. **INSTALL STOP LIGHT SWITCH**
   (a) Install the stop light switch into the adjuster until it slightly touches the brake pedal.
   NOTICE:
   Do not depress the brake pedal.

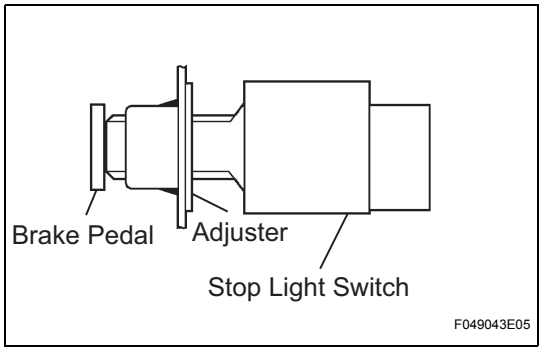

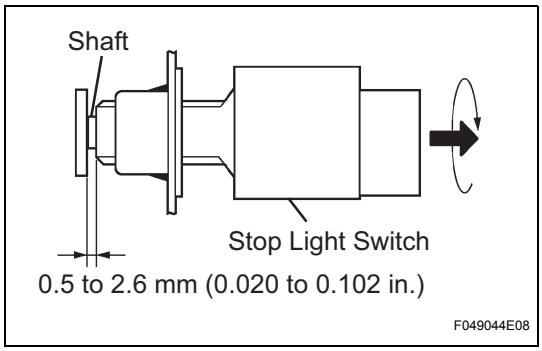

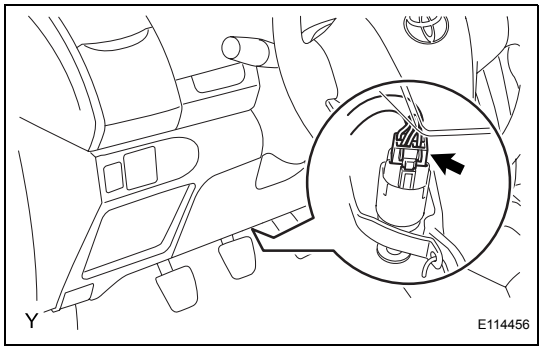

(1) Make a quarter turn clockwise to install the stop light switch.
NOTICE:
Do not depress the brake pedal.
HINT:
The turning torque for installing the stop light switch is as below.
Torque: 1.5 N*m (15 kgf*cm, 13 in.*lbf) or less

(b) Check the stop light switch clearance.
Stop light switch clearance:
0.5 to 2.6 mm (0.020 to 0.102 in.)

(c) Connect the stop light switch connector to the stop light switch.

2. INSTALL INSTRUMENT PANEL UNDER COVER SUB-ASSEMBLY LH (See page IR-82)

3. CONNECT CABLE TO NEGATIVE BATTERY TERMINAL
Torque: 5.4 N*m (55 kgf*cm, 48 in.*lbf)

FRONT DOOR COURTESY SWITCH (for Sedan)

COMPONENTS

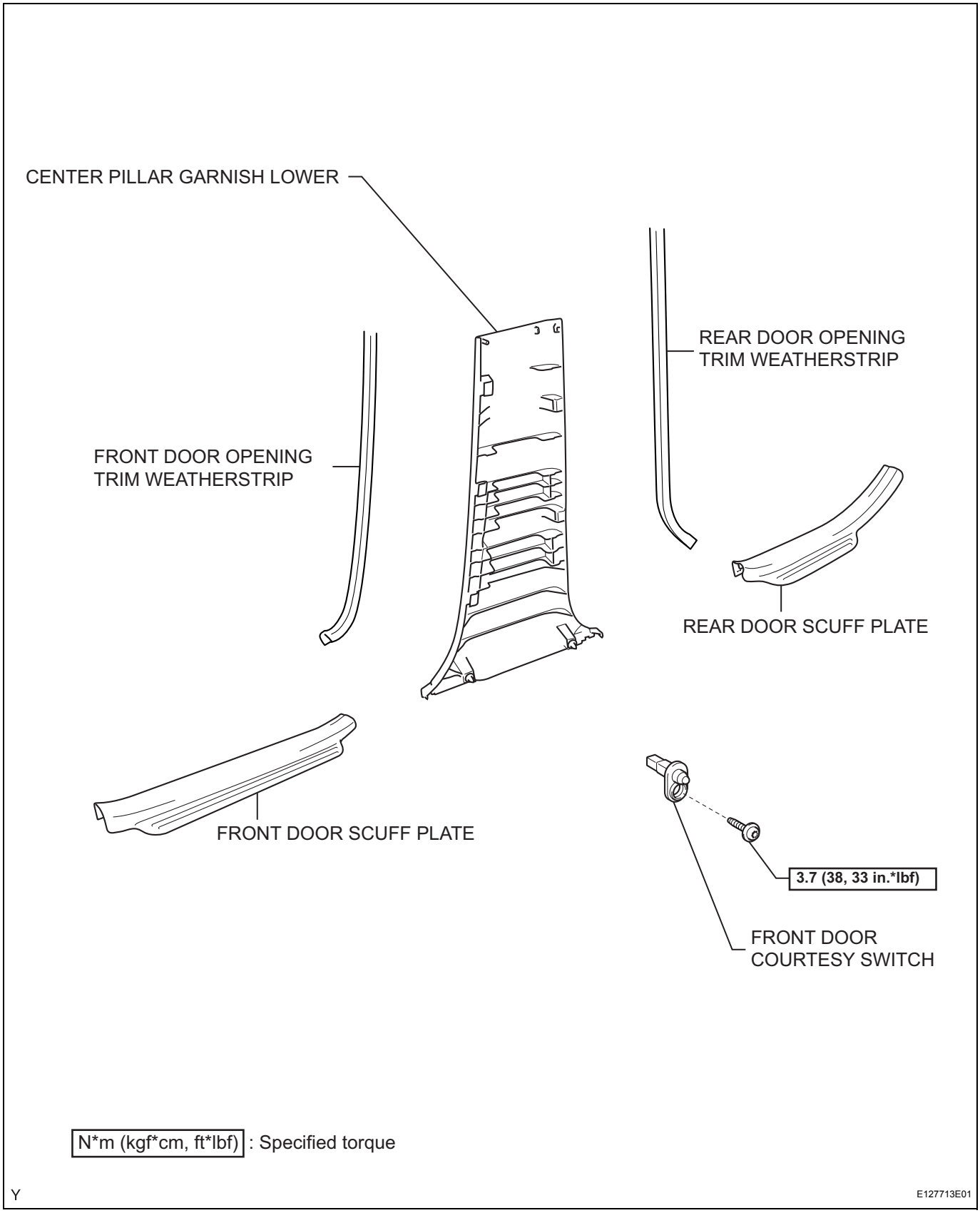

REMOVAL

HINT:
- Use the same procedure for both the RH and LH sides.
- The procedure described below is for the LH side.

1. **DISCONNECT CABLE FROM NEGATIVE BATTERY TERMINAL**
2. **REMOVE FRONT DOOR SCUFF PLATE (See page IR-14)**
3. **REMOVE REAR DOOR SCUFF PLATE (See page IR-15)**
4. **REMOVE FRONT DOOR OPENING TRIM WEATHERSTRIP**
   (a) Remove the front door opening trim weatherstrip.

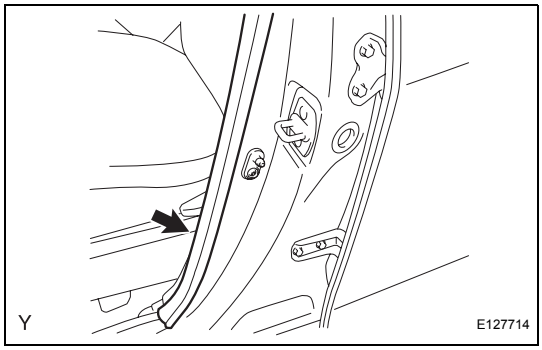

5. **REMOVE REAR DOOR OPENING TRIM WEATHERSTRIP**
   (a) Remove the rear door opening trim weatherstrip.
6. **REMOVE CENTER PILLAR GARNISH LOWER (See page IR-16)**

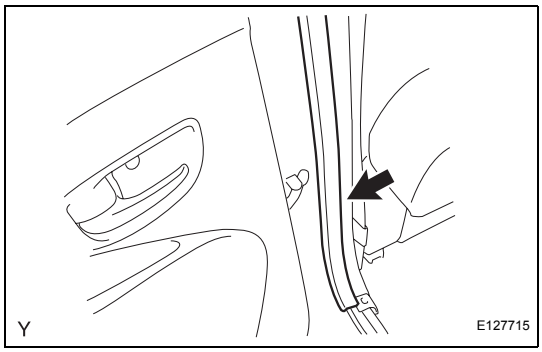

7. **REMOVE FRONT DOOR COURTESY SWITCH**
   (a) Using "Torx" socket wrench T30, remove the screw.
   (b) Disconnect the connector and remove the front door courtesy switch.

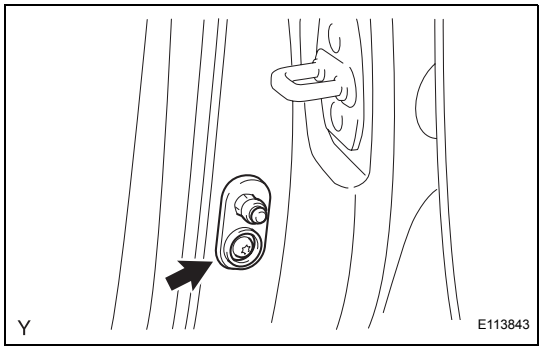

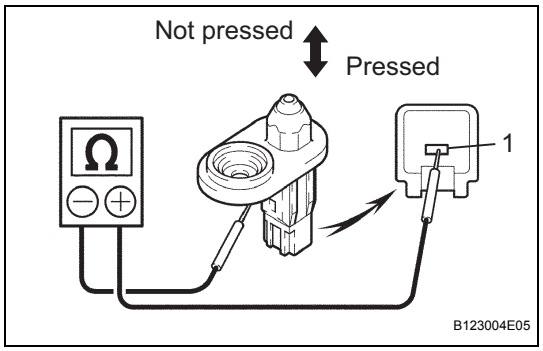

INSPECTION

1. **INSPECT FRONT DOOR COURTESY SWITCH**
   (a) Check the resistance.
      (1) Using an ohmmeter, measure the resistance and check the results in accordance with the value(s) in the table below.
      Standard Resistance

Tester Connection	Condition	Specified Condition
1 - Switch body	ON (Shaft not pressed)	Below 1 Ω
1 - Switch body	OFF (Shaft pressed)	10 kΩ or higher

If the result is not as specified, replace the front door courtesy switch.

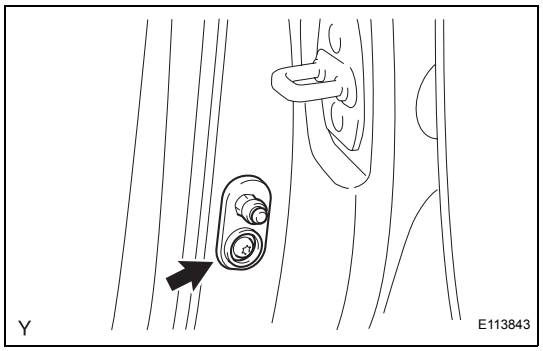

INSTALLATION

1. **INSTALL FRONT DOOR COURTESY SWITCH**
   (a) Connect the connector.
   (b) Using "Torx" socket wrench T30, install the front door courtesy switch with the screw.
   Torque: 3.7 N*m (38 kgf*cm, 33 in.*lbf)

2. **INSTALL CENTER PILLAR GARNISH LOWER (See page IR-32)**

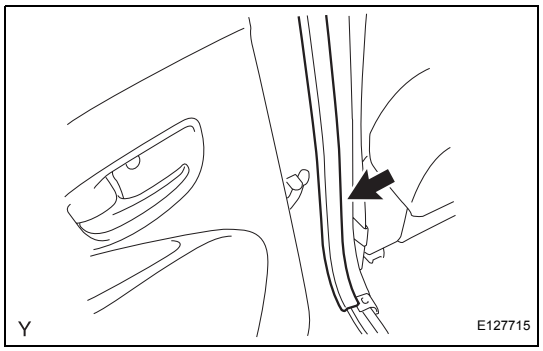

3. **INSTALL REAR DOOR OPENING TRIM WEATHERSTRIP**
   (a) Install the rear door opening trim weatherstrip.

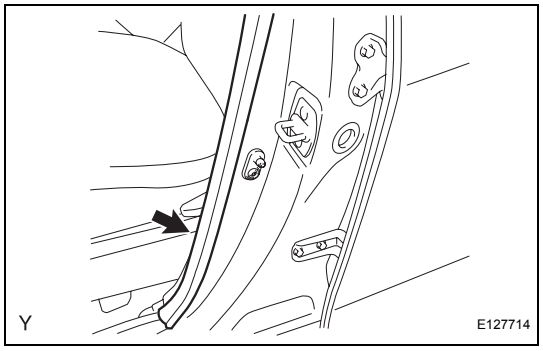

4. **INSTALL FRONT DOOR OPENING TRIM WEATHERSTRIP**
   (a) Install the front door opening trim weatherstrip.

5. **INSTALL REAR DOOR SCUFF PLATE (See page IR-34)**

6. **INSTALL FRONT DOOR SCUFF PLATE (See page IR-35)**

7. **CONNECT CABLE TO NEGATIVE BATTERY TERMINAL**
   Torque: 5.4 N*m (55 kgf*cm, 48 in.*lbf)

FRONT DOOR COURTESY SWITCH (for Hatchback)

COMPONENTS

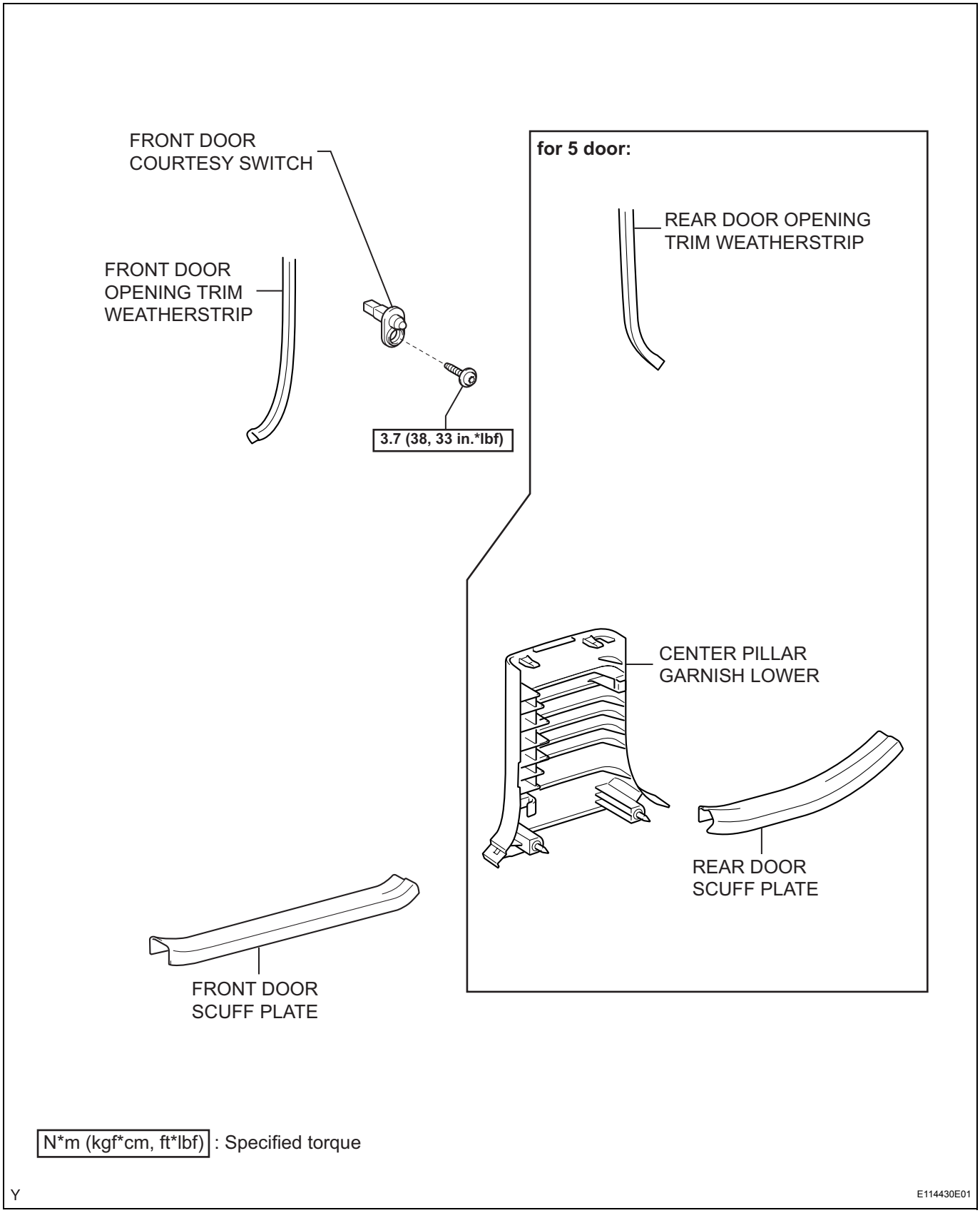

REMOVAL

HINT:
- Use the same procedure for both the RH and LH sides.
- The procedure described below is for the LH side.

1. **DISCONNECT CABLE FROM NEGATIVE BATTERY TERMINAL**
2. **REMOVE FRONT DOOR SCUFF PLATE (for 5 Door) (See page IR-49)**
3. **REMOVE FRONT DOOR SCUFF PLATE (for 3 Door) (See page IR-97)**
4. **REMOVE REAR DOOR SCUFF PLATE (for 5 Door) (See page IR-51)**
5. **REMOVE FRONT DOOR OPENING TRIM WEATHERSTRIP**
   (a) Remove the front door opening trim weatherstrip.

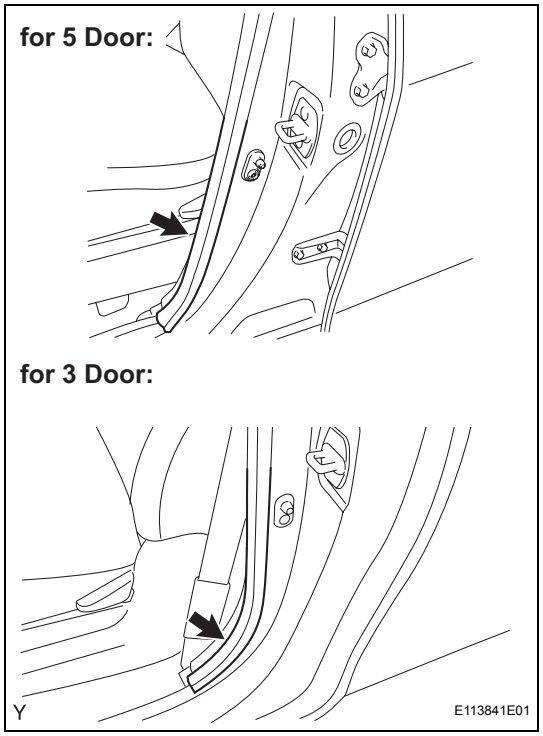

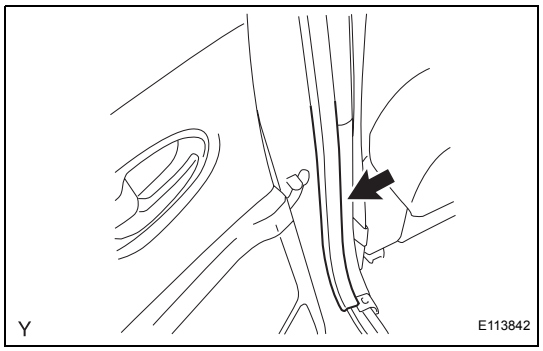

6. **REMOVE REAR DOOR OPENING TRIM WEATHERSTRIP (for 5 Door)**
   (a) Remove the rear door opening trim weatherstrip.
7. **REMOVE CENTER PILLAR GARNISH LOWER (for 5 Door) (See page IR-55)**

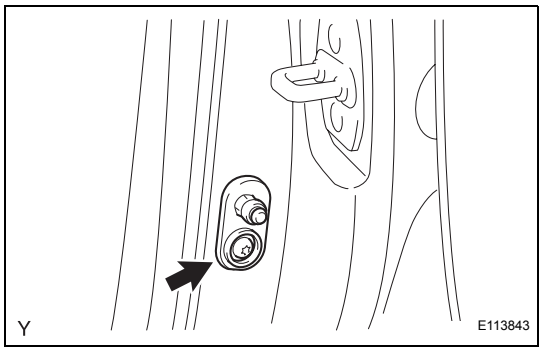

8. **REMOVE FRONT DOOR COURTESY SWITCH**
   (a) Using "Torx" socket wrench T30, remove the screw.
   (b) Disconnect the connector and remove the front door courtesy switch.

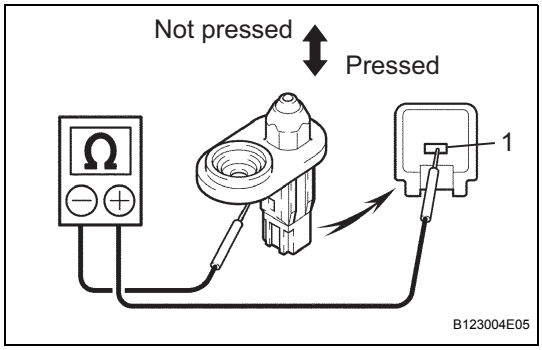

INSPECTION

1. **INSPECT FRONT DOOR COURTESY SWITCH**
   (a) Check the resistance.
      (1) Using an ohmmeter, measure the resistance and check the results in accordance with the value(s) in the table below.
      Standard Resistance

Tester Connection	Condition	Specified Condition
1 - Switch body	ON (Shaft not pressed)	Below 1 Ω
1 - Switch body	OFF (Shaft pressed)	10 kΩ or higher

If the result is not as specified, replace the front door courtesy switch.

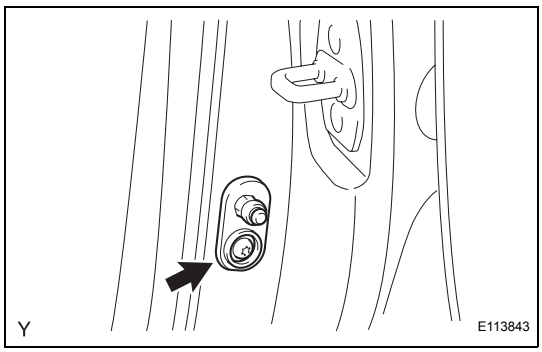

INSTALLATION

1. **INSTALL FRONT DOOR COURTESY SWITCH**
   (a) Connect the connector.
   (b) Using "Torx" socket wrench T30, install the front door courtesy switch with the screw.
   Torque: 3.7 N*m (38 kgf*cm, 33 in.*lbf)

2. **INSTALL CENTER PILLAR GARNISH LOWER (for 5 Door) (See page IR-76)**

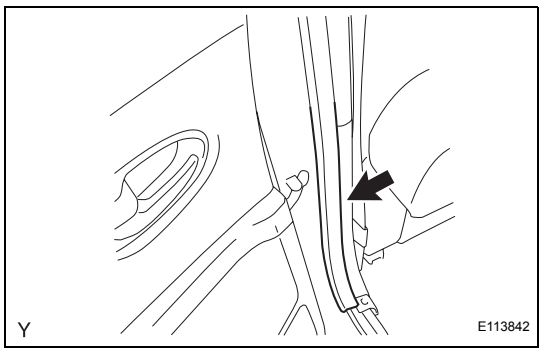

3. **INSTALL REAR DOOR OPENING TRIM WEATHERSTRIP (for 5 Door)**
   (a) Install the rear door opening trim weatherstrip.

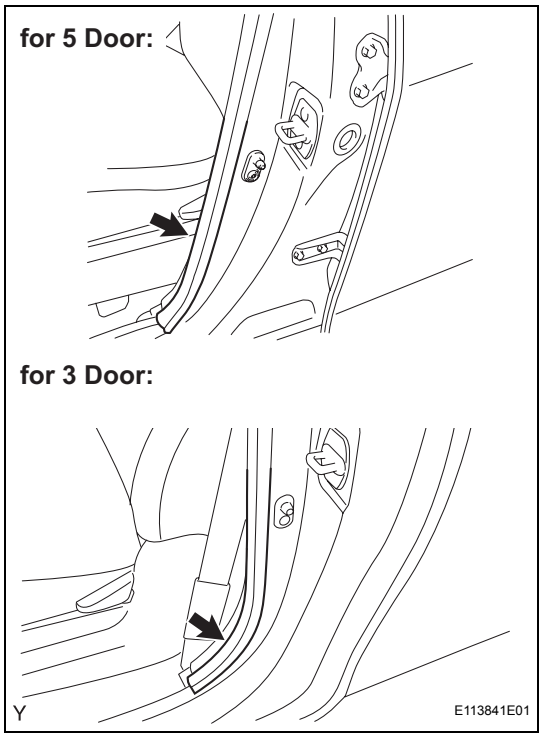

4. **INSTALL FRONT DOOR OPENING TRIM WEATHERSTRIP**
   (a) Install the front door opening trim weatherstrip.
5. **INSTALL REAR DOOR SCUFF PLATE (for 5 Door) (See page IR-80)**
6. **INSTALL FRONT DOOR SCUFF PLATE (for 5 Door) (See page IR-82)**
7. **INSTALL FRONT DOOR SCUFF PLATE (for 3 Door) (See page IR-119)**
8. **CONNECT CABLE TO NEGATIVE BATTERY TERMINAL**
   Torque: 5.4 N*m (55 kgf*cm, 48 in.*lbf)

REAR DOOR COURTESY SWITCH

COMPONENTS

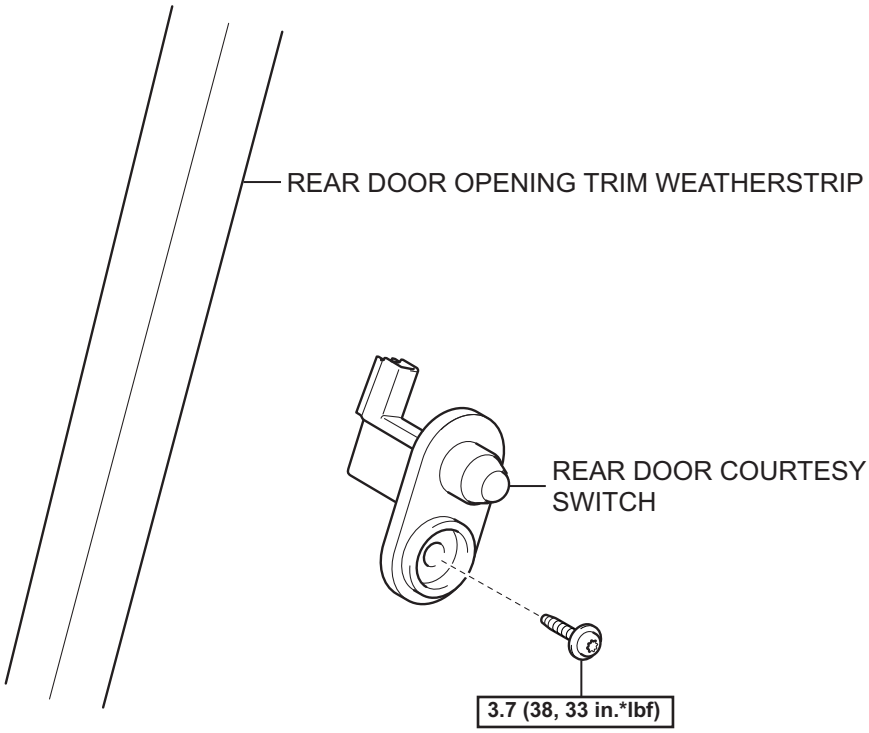

N*m (kgf*cm, ft*lbf) : Specified torque

Y

E114431E04

REMOVAL

HINT:
- Use the same procedure for both the RH and LH sides.
- The procedure described below is for the LH side.

1. DISCONNECT CABLE FROM NEGATIVE BATTERY TERMINAL

2. REMOVE REAR DOOR OPENING TRIM WEATHERSTRIP

(a) Remove the rear door opening trim weatherstrip.

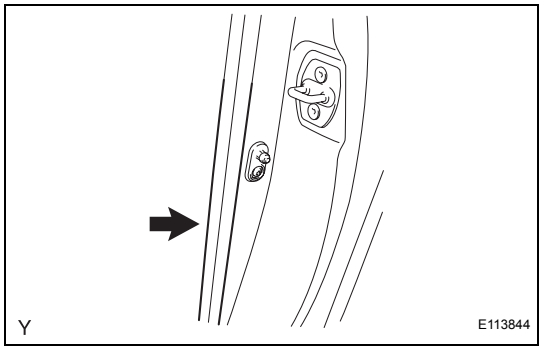

3. REMOVE REAR DOOR COURTESY SWITCH

(a) Disconnect the connector.

(b) Using "Torx" socket wrench T30, remove the screw and the rear door courtesy switch.

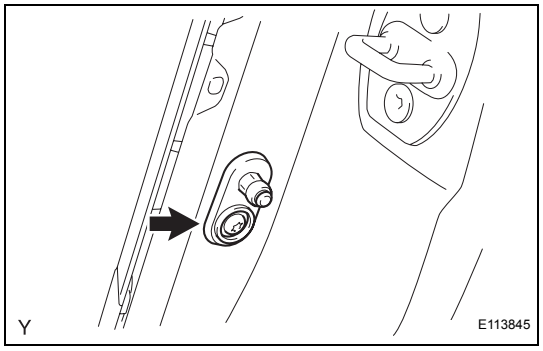

INSPECTION

1. INSPECT REAR DOOR COURTESY SWITCH

(a) Check the resistance.

(1) Using an ohmmeter, measure the resistance and check the results in accordance with the value(s) in the table below.

Standard Resistance

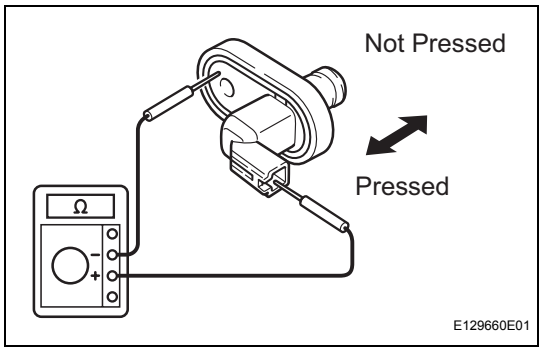

Tester Connection	Condition	Specified Condition
1 - Switch body	ON (Shaft not pressed)	Below 1 Ω
1 - Switch body	OFF (Shaft pressed)	10 kΩ or higher

If the result is not as specified, replace the rear door courtesy switch.

INSTALLATION

1. INSTALL REAR DOOR COURTESY SWITCH

(a) Using "Torx" socket wrench T30, install the rear door courtesy switch with the screw.

Torque: 3.7 N*m (38 kgf*cm, 33 in.*lbf)

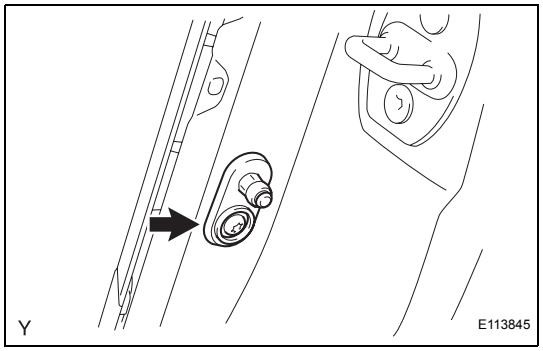

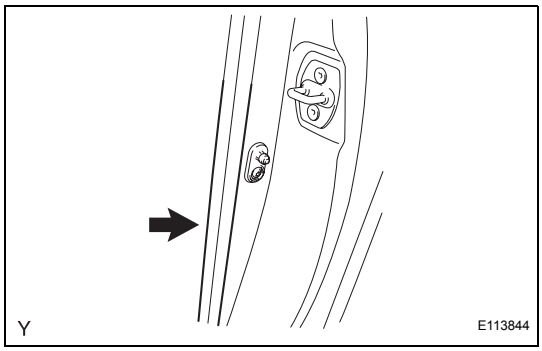

2. INSTALL REAR DOOR OPENING TRIM WEATHERSTRIP

(a) Install the rear door opening trim weatherstrip.

3. CONNECT CABLE TO NEGATIVE BATTERY TERMINAL

Torque: 5.4 N*m (55 kgf*cm, 48 in.*lbf)

BACK DOOR COURTESY SWITCH (for Sedan)

COMPONENTS

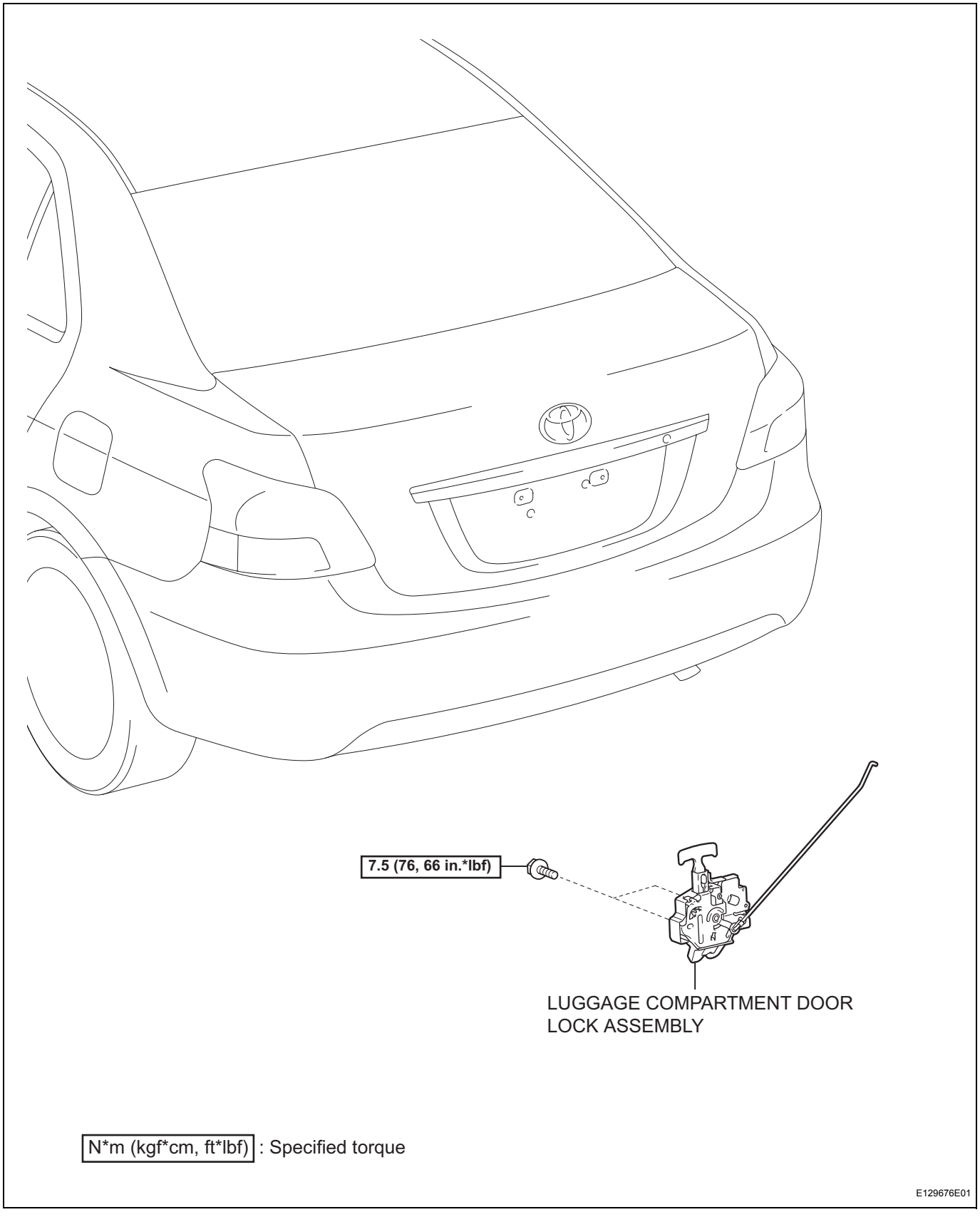

REMOVAL

1. DISCONNECT CABLE FROM NEGATIVE BATTERY TERMINAL

2. REMOVE LUGGAGE COMPARTMENT DOOR LOCK ASSEMBLY

(a) Remove the snap ring in the direction indicated by the arrow and remove the luggage compartment door lock link.

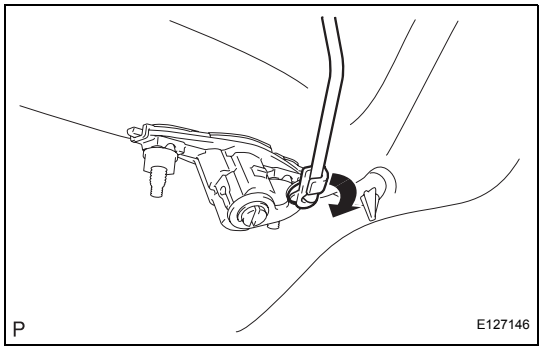

(b) Disconnect the connector.
(c) Disengage the claw and pull up the protector lid in the direction indicated by the arrow.

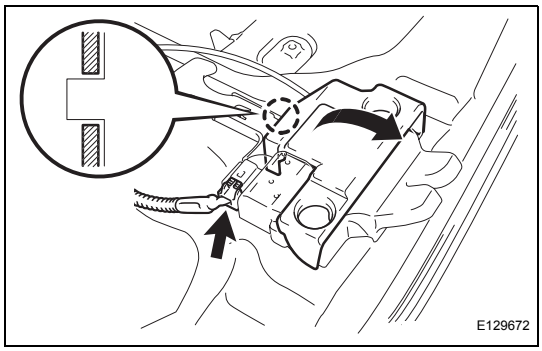

(d) Remove the luggage door lock control cable.
(e) Remove the 2 bolts and the luggage compartment door lock assembly.

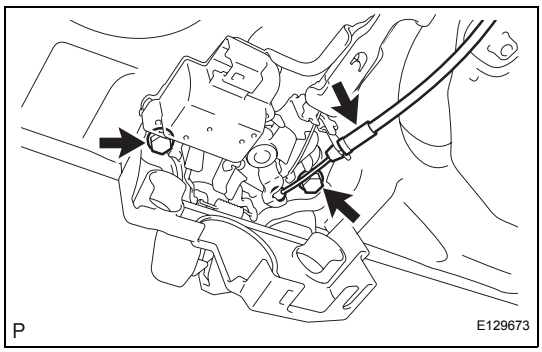

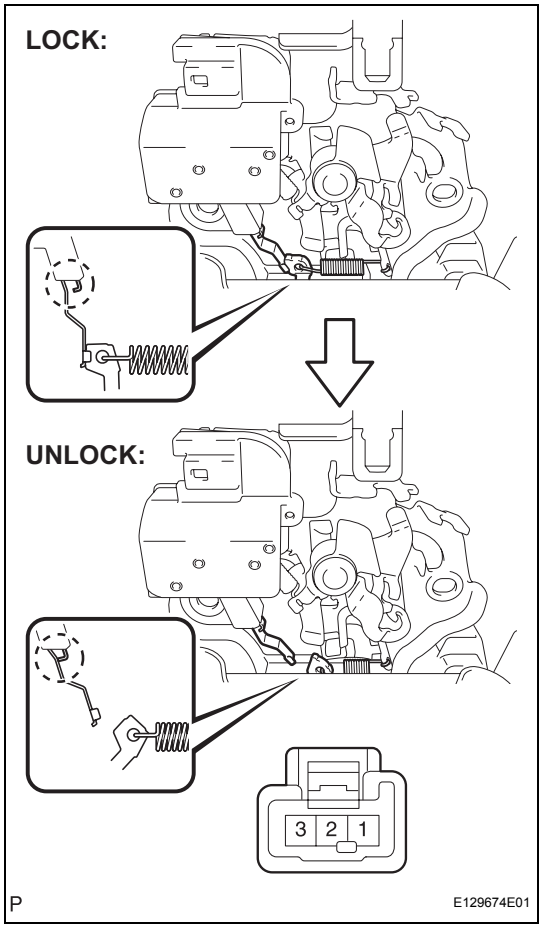

INSPECTION

1. INSPECT LUGGAGE COMPARTMENT DOOR LOCK ASSEMBLY

(a) Check the resistance of the back door courtesy switch.

(1) Using an ohmmeter, measure the resistance between the terminals when the latch is operated with a screwdriver.

Standard Resistance

Tester Connection	Condition	Specified Condition
1 - 2	Unlocked	Below 1 Ω
1 - 2	Locked	10 kΩ or higher

If the result is not as specified, replace the luggage compartment door lock assembly.

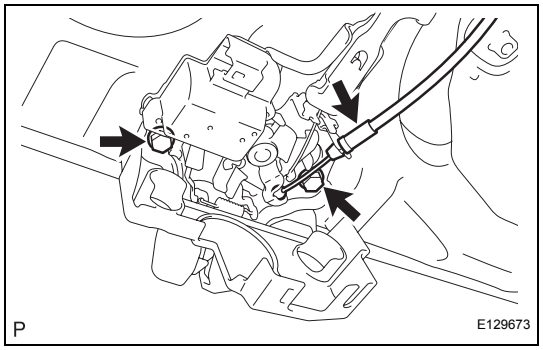

INSTALLATION

1. INSTALL LUGGAGE COMPARTMENT DOOR LOCK ASSEMBLY

(a) Install the luggage door lock control cable.

(b) Install the luggage compartment door lock assembly with the 2 bolts.

Torque: 7.5 N*m (76 kgf*cm, 66 in.*lbf)

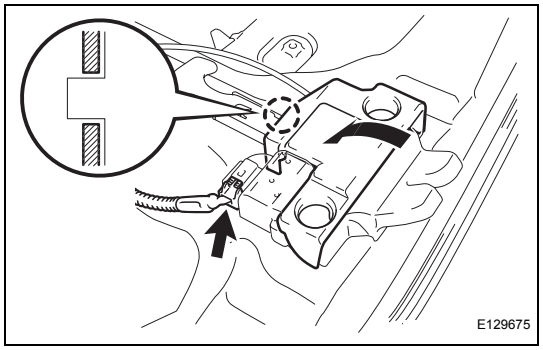

(c) Connect the connector.

(d) Install the protector lid.

LI

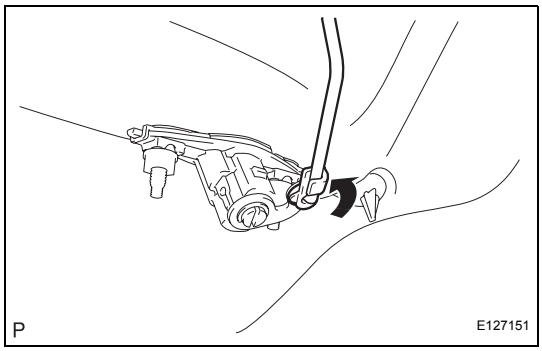

(e) Install the luggage compartment door lock link.

2. CONNECT CABLE TO NEGATIVE BATTERY TERMINAL
Torque: 5.4 N*m (55 kgf*cm, 48 in.*lbf)

BACK DOOR COURTESY SWITCH (for Hatchback)

COMPONENTS

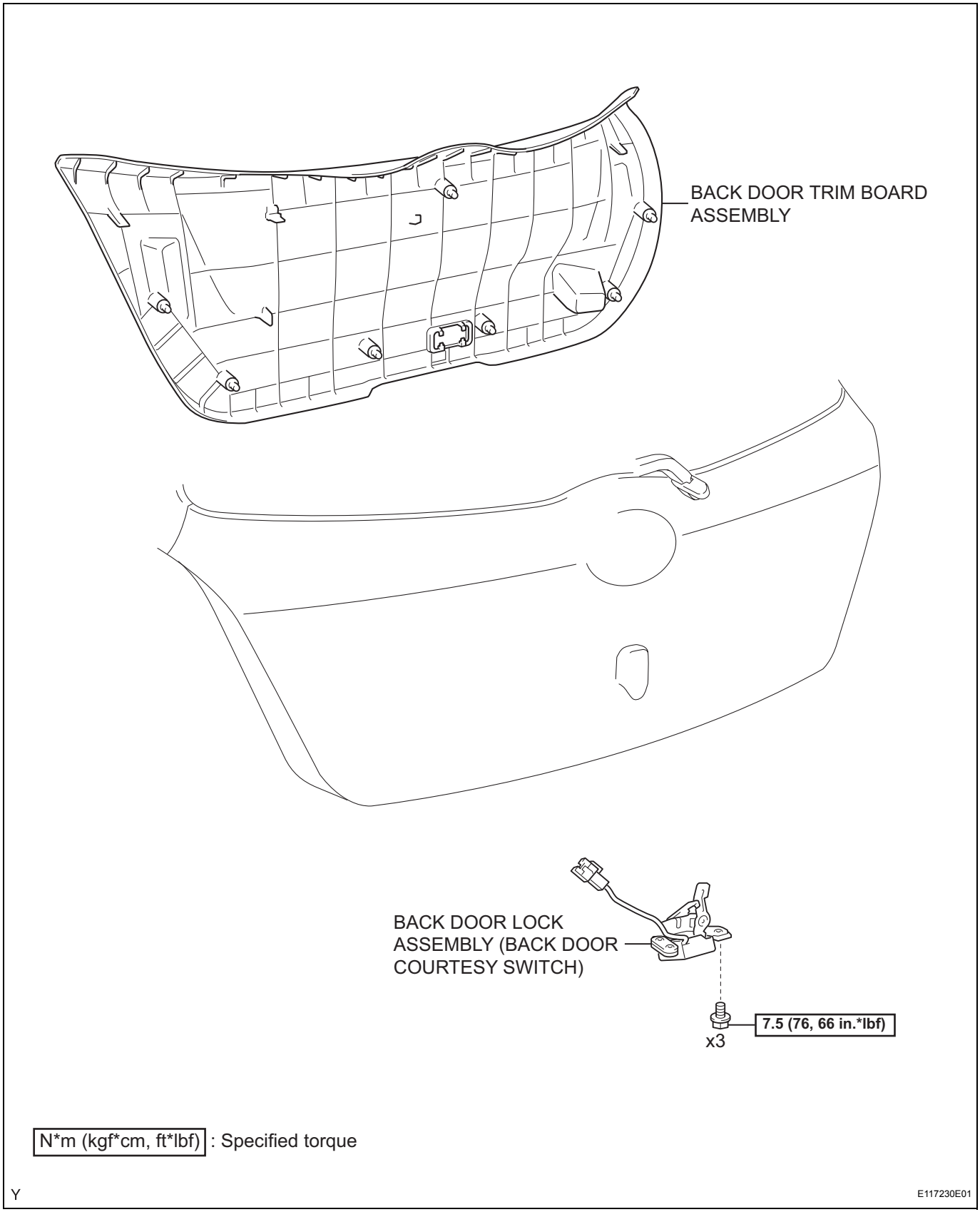

REMOVAL

1. **DISCONNECT CABLE FROM NEGATIVE BATTERY TERMINAL**
2. **REMOVE BACK DOOR TRIM BOARD ASSEMBLY (See page ED-142)**
3. **REMOVE BACK DOOR LOCK ASSEMBLY**
   (a) Disconnect the connector and clamp.
   (b) Remove the 3 bolts and the back door lock.

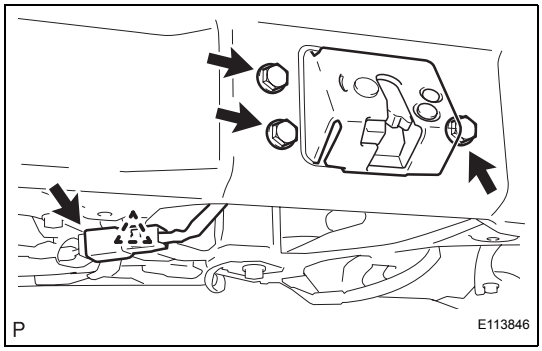

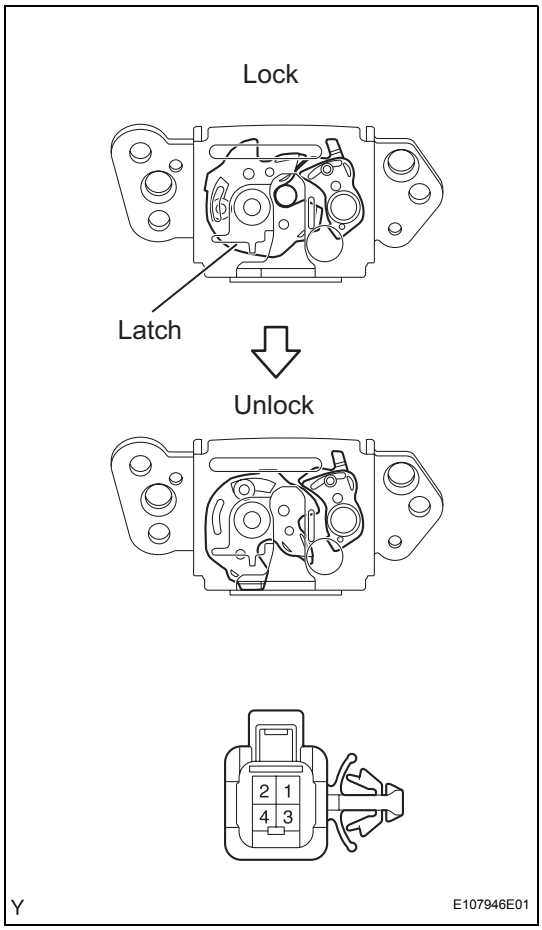

INSPECTION

1. **INSPECT BACK DOOR LOCK ASSEMBLY**
   (a) Check the resistance of the back door courtesy switch.
      (1) Using an ohmmeter, measure the resistance between the terminals when the latch is operated with a screwdriver.
      Standard Resistance

Tester Connection	Condition	Specified Condition
1 - 2	Unlocked	Below 1 Ω
1 - 2	Locked	10 kΩ or higher

If the result is not as specified, replace the back door lock.

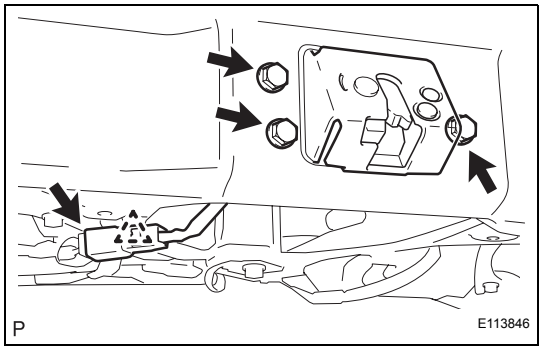

INSTALLATION

1. **INSTALL BACK DOOR LOCK ASSEMBLY**
   (a) Install the back door lock with the 3 bolts.
   Torque: 7.5 N*m (76 kgf*cm, 66 in.*lbf)
   (b) Connect the connector and clamp.
2. **INSTALL BACK DOOR TRIM BOARD ASSEMBLY (See page ED-146)**

3. CONNECT CABLE TO NEGATIVE BATTERY TERMINAL
Torque: 5.4 N*m (55 kgf*cm, 48 in.*lbf)

Main Body ECU
Connector Front View:

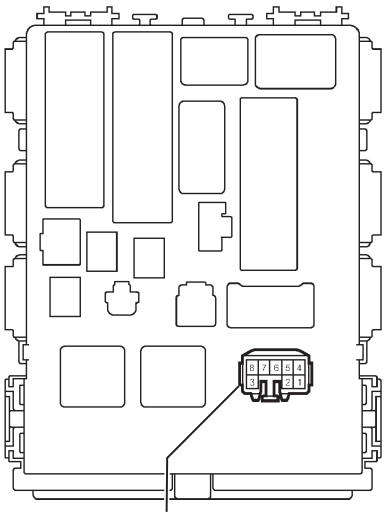

H

I042805E02

TURN SIGNAL FLASHER ASSEMBLY

ON-VEHICLE INSPECTION

1. INSPECT TURN SIGNAL FLASHER CIRCUIT

(a) Check the power source circuit and ground circuit.
  (1) Remove the turn signal flasher relay from the main body ECU.
  (2) Measure the voltage and check the results in accordance with the value(s) in the table below.
  Standard Voltage

Tester Connection	Condition	Specified Condition
1 - Body ground	Ignition switch OFF	0 V
1 - Body ground	Ignition switch ON	11 to 14 V
4 - Body ground	Always	11 to 14 V

  (3) Measure the resistance and check the result in accordance with the value(s) in the table below.
  Standard Resistance

Tester Connection	Condition	Specified Condition
7 - Body ground	Always	Below 1 Ω

(b) Check the output operation signal.
  (1) Install the turn signal flasher relay onto the main body ECU.

Main Body ECU
(Front Side) Wire Harness View:

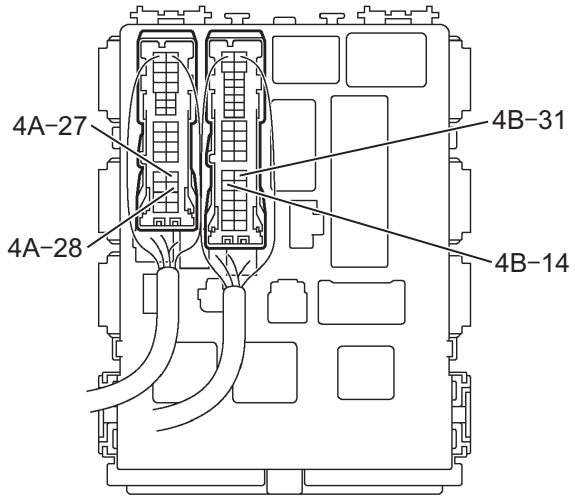

(Rear Side) Wire Harness View:

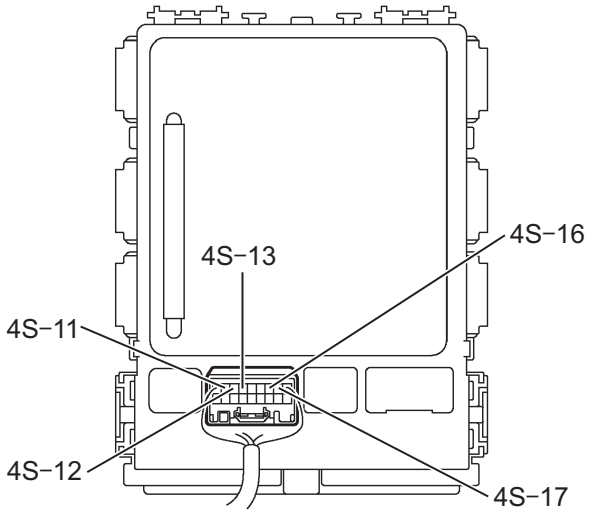

H

I042806E02

(2) Measure the voltage and check the results in accordance with the values in the table below.

Standard

Tester Connection	Condition	Specified Condition
4A-27 - Body ground	Hazard warning switch OFF → ON	0 V → 11 to 14 V (60 to 120 times per minute)
4A-27 - Body ground	Turn signal switch (left turn) OFF → ON	0 V → 11 to 14 V (60 to 120 times per minute)
4A-28 - Body ground	Hazard warning switch OFF → ON	0 V → 11 to 14 V (60 to 120 times per minute)
4A-28 - Body ground	Turn signal switch (right turn) OFF → ON	0 V → 11 to 14 V (60 to 120 times per minute)
4B-14 - Body ground	Hazard warning switch OFF → ON	0 V → 11 to 14 V (60 to 120 times per minute)
4B-14 - Body ground	Turn signal switch (left turn) OFF → ON	0 V → 11 to 14 V (60 to 120 times per minute)
4B-31 - Body ground	Hazard warning switch OFF → ON	0 V → 11 to 14 V (60 to 120 times per minute)
4B-31 - Body ground	Turn signal switch (right turn) OFF → ON	0 V → 11 to 14 V (60 to 120 times per minute)
4S-11 - Body ground	Turn signal switch (left turn) OFF → ON	11 to 14 V → 0 V
4S-12 - Body ground	Turn signal switch (right turn) OFF → ON	11 to 14 V → 0 V
4S-13 - Body ground	Hazard warning switch OFF → ON	0 V → 11 to 14 V (60 to 120 times per minute)
4S-13 - Body ground	Turn signal switch (left turn) OFF → ON	0 V → 11 to 14 V (60 to 120 times per minute)
4S-16 - Body ground	Hazard warning switch OFF → ON	0 V → 11 to 14 V (60 to 120 times per minute)
4S-16 - Body ground	Turn signal switch (right turn) OFF → ON	0 V → 11 to 14 V (60 to 120 times per minute)
4S-17 - Body ground	Hazard warning switch OFF → ON	11 to 14 V → 0 V

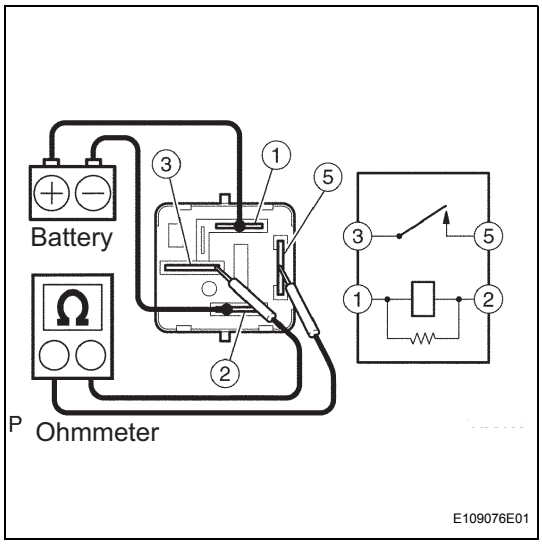

HEADLIGHT RELAY

ON-VEHICLE INSPECTION

1. INSPECT HEADLIGHT RELAY

(a) Check the resistance.

(1) Using an ohmmeter, measure the resistance between the terminals.

Standard Resistance

Tester Connection	Specified Condition
3 - 5	10 kΩ or higher
3 - 5	Below 1 Ω (Battery voltage applied to terminals 1 and 2)

If the result is not as specified, replace the headlight relay.

FOG LIGHT RELAY (for Sedan)

COMPONENTS

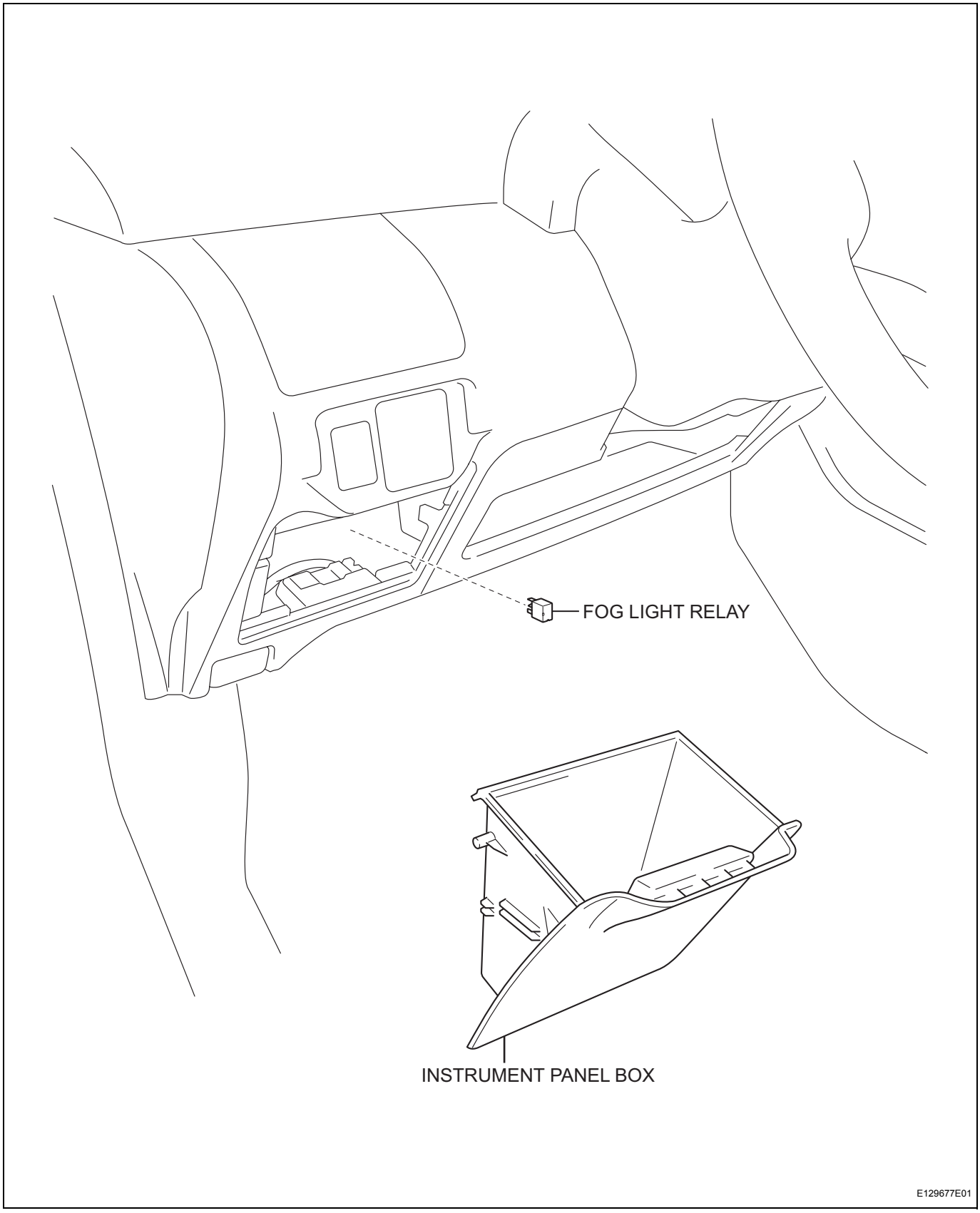

REMOVAL

1. **DISCONNECT CABLE FROM NEGATIVE BATTERY TERMINAL**
2. **REMOVE INSTRUMENT PANEL BOX (See page IP-45)**
3. **REMOVE FOG LIGHT RELAY**
   (a) Remove the fog light relay.

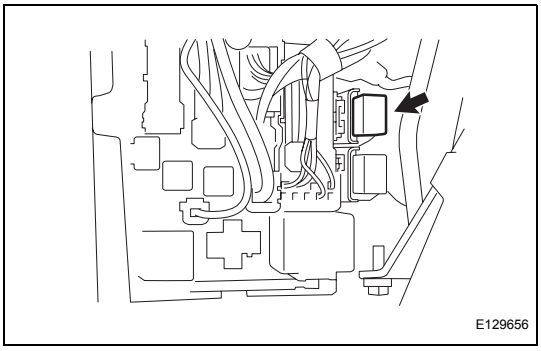

INSPECTION

1. **INSPECT FOG LIGHT RELAY**
   (a) Check the resistance.
      (1) Using an ohmmeter, measure the resistance between the terminals.
      Standard Resistance

Tester Connection	Specified Condition
3 - 5	10 kΩor higher
3 - 5	Below 1 Ω (Battery voltage applied to terminals 1 and 2)

If the result is not as specified, replace the fog light relay.

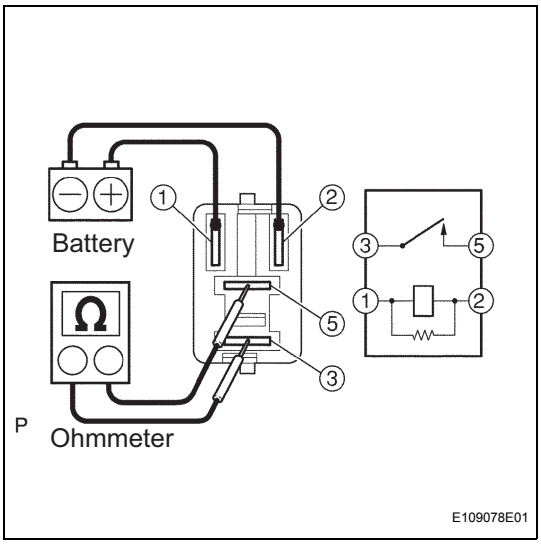

INSTALLATION

1. **INSTALL FOG LIGHT RELAY**
   (a) Install the fog light relay.
2. **INSTALL INSTRUMENT PANEL BOX (See page IP-53)**
3. **CONNECT CABLE TO NEGATIVE BATTERY TERMINAL**
   Torque: 5.4 N*m (55 kgf*cm, 48 in.*lbf)

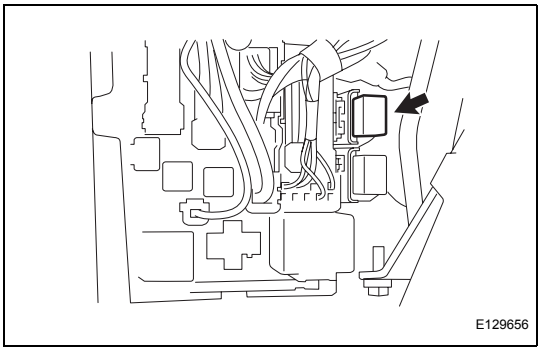

FOG LIGHT RELAY (for Hatchback)

COMPONENTS

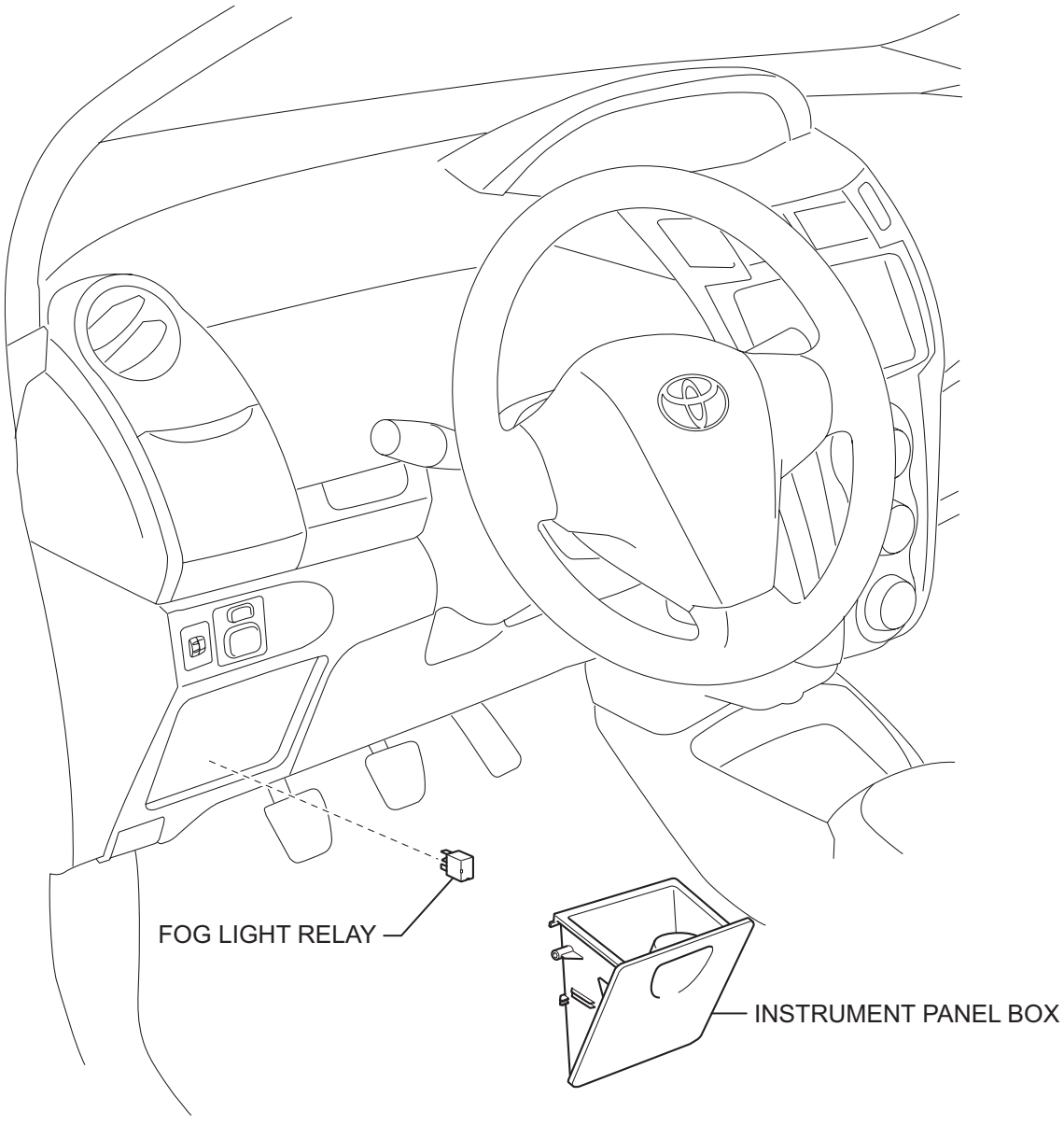

REMOVAL

1. **DISCONNECT CABLE FROM NEGATIVE BATTERY TERMINAL**
2. **REMOVE INSTRUMENT PANEL BOX (See page IP-70)**
3. **REMOVE FOG LIGHT RELAY**
   (a) Remove the fog light relay.

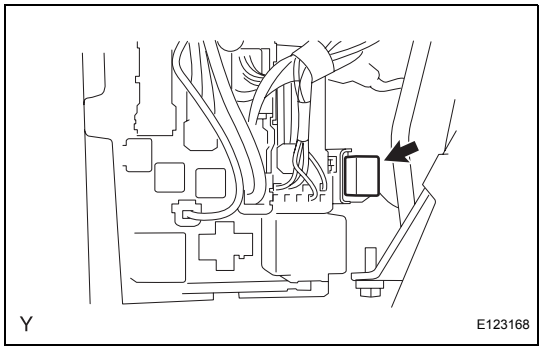

INSPECTION

1. **INSPECT FOG LIGHT RELAY**
   (a) Check the resistance.
      (1) Using an ohmmeter, measure the resistance between the terminals.
      Standard Resistance

Tester Connection	Specified Condition
3 - 5	10 kΩor higher
3 - 5	Below 1 Ω (Battery voltage applied to terminals 1 and 2)

If the result is not as specified, replace the fog light relay.

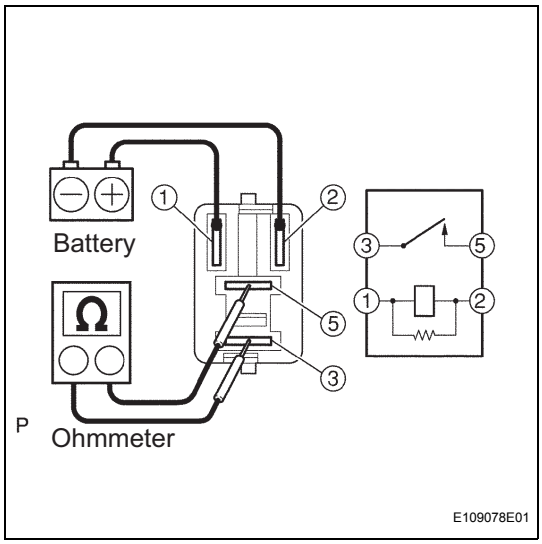

INSTALLATION

1. **INSTALL FOG LIGHT RELAY**
   (a) Install the fog light relay.
2. **INSTALL INSTRUMENT PANEL BOX (See page IP-78)**
3. **CONNECT CABLE TO NEGATIVE BATTERY TERMINAL**
   Torque: 5.4 N*m (55 kgf*cm, 48 in.*lbf)

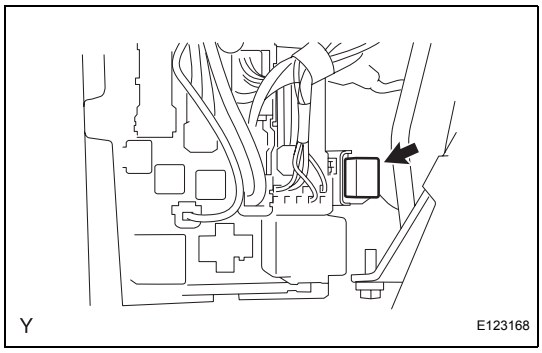

WIPER AND WASHER SYSTEM

PRECAUTION

1. WASHER NOZZLE ADJUSTMENT PRECAUTION

(a) Do not clean or adjust the washer nozzle using objects such as needles or safety pins, because;
  (1) The washer nozzle tip is made of resin and could be damaged.
  (2) Adjustment is not necessary as the washer nozzle is a spray type.

(b) If the washer nozzle is clogged with substances such as car wax, remove it and clean the nozzle hole with a soft resin brush or similar tool.

PARTS LOCATION

HACHBACK:

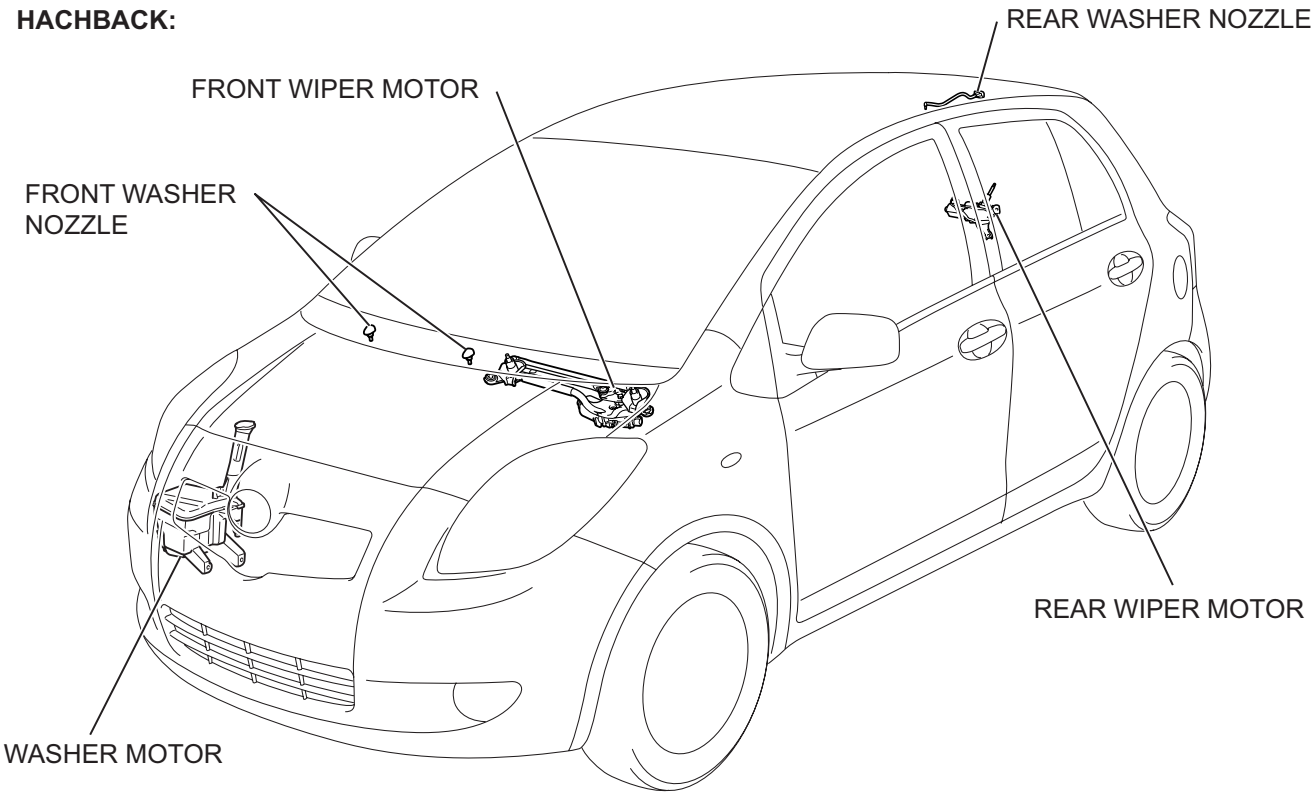

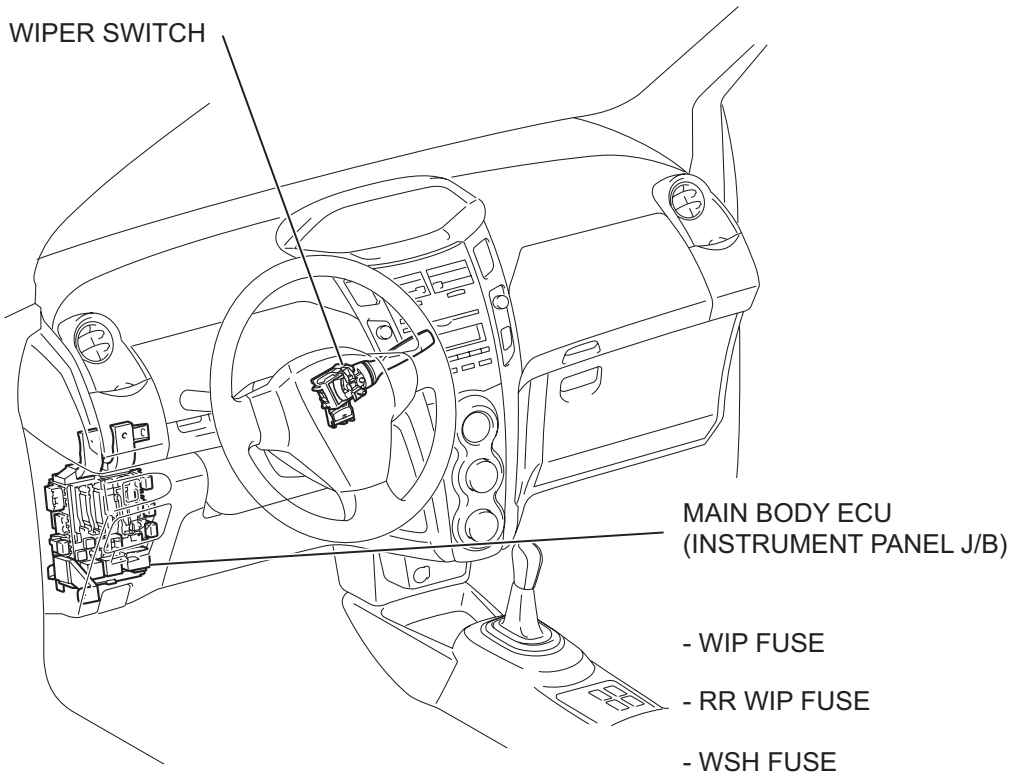

Y

E114278E04

SEDAN:

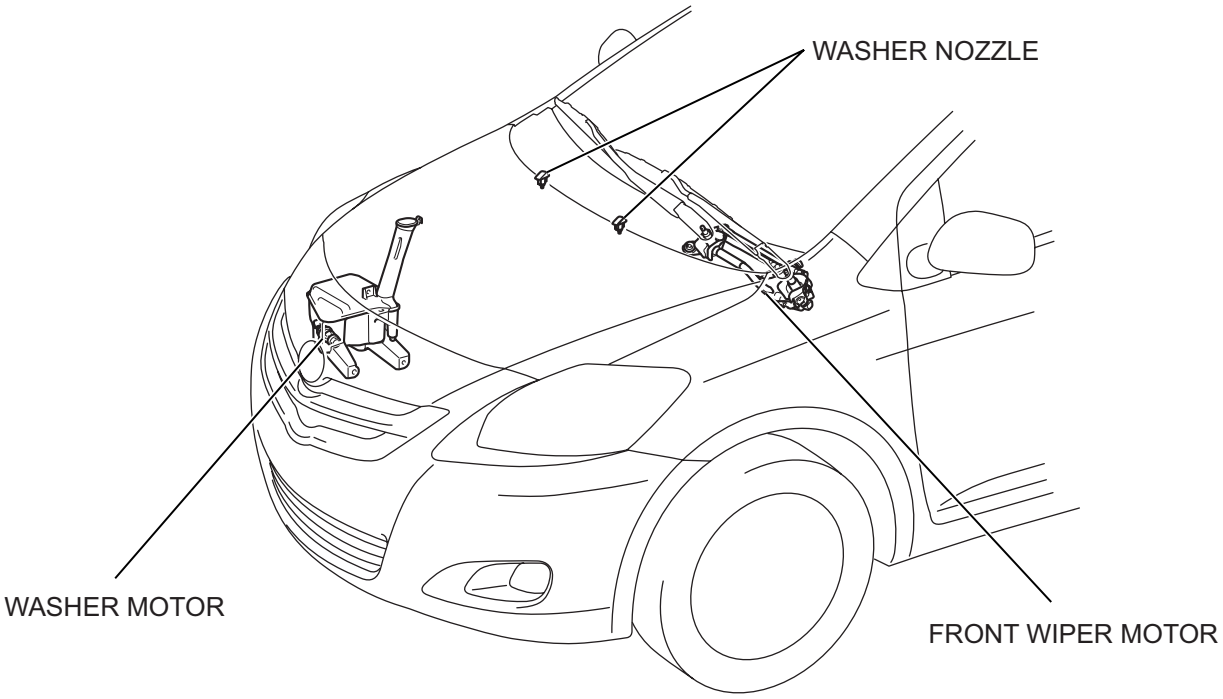

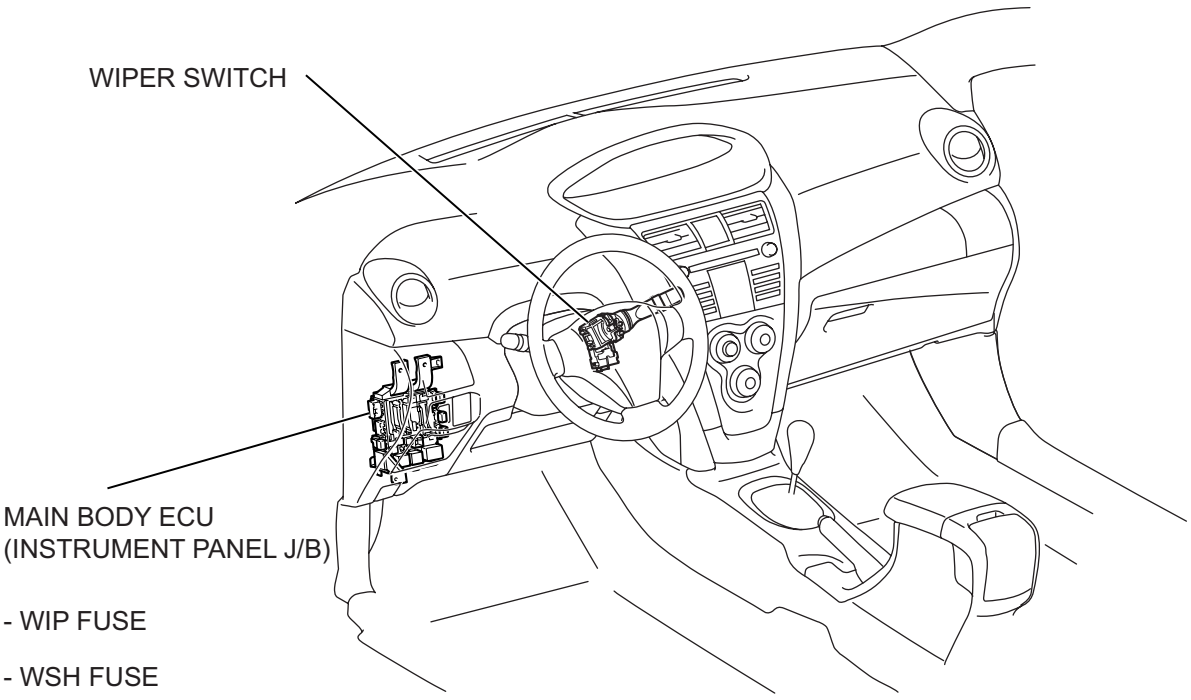

H

B142259E01

WW

SYSTEM DIAGRAM

Front Wiper and Washer:

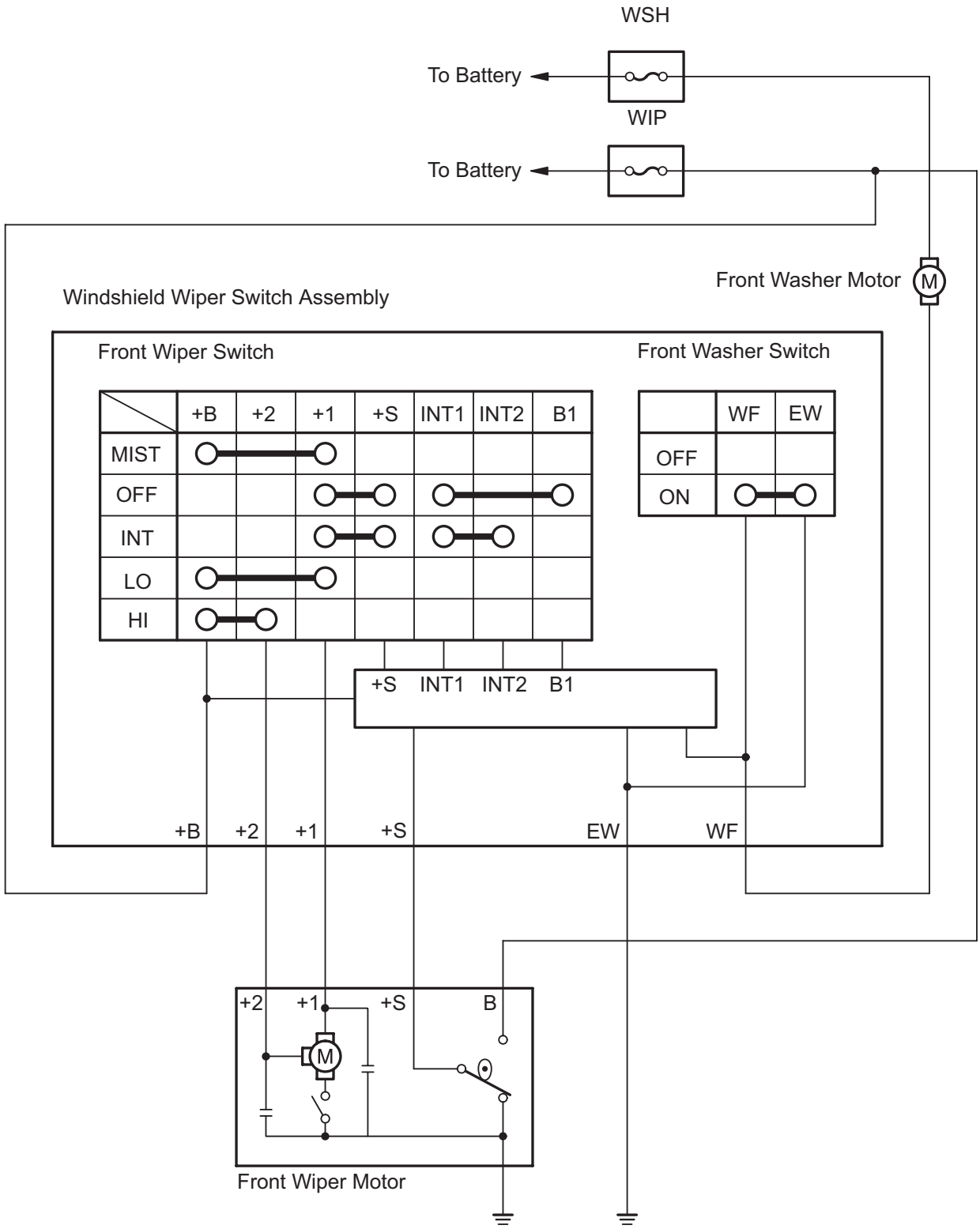

Rear Wiper and Washer:

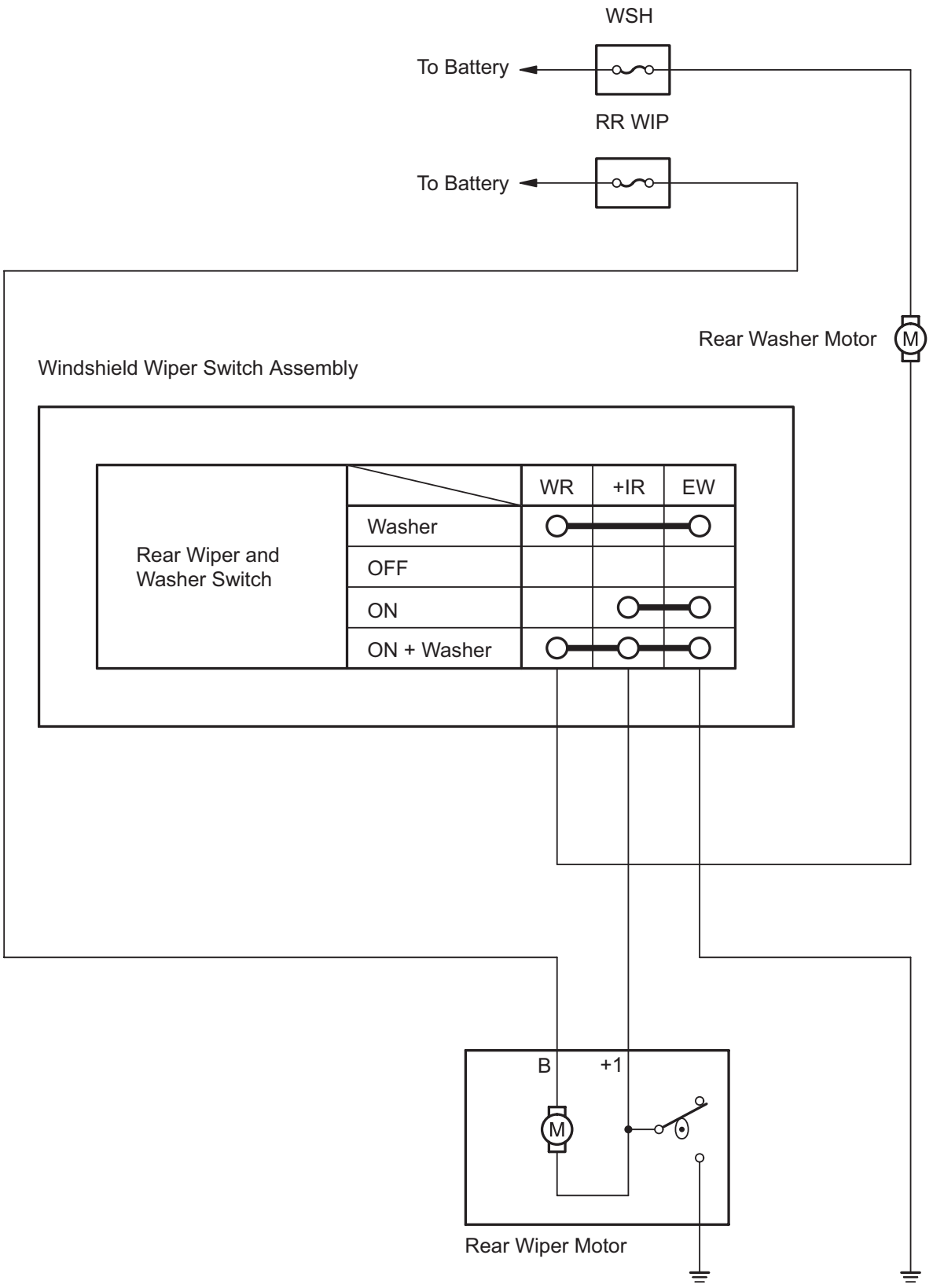

PROBLEM SYMPTOMS TABLE

HINT:
Use the table below to help determine the causes of the problem symptom. The potential causes of the symptoms are listed in order of probability in the "Suspected Area" column of the table. Check each symptom by checking the suspected areas in the order they are listed. Replace parts as necessary.

Wiper and washer system

Symptom	Suspected area	See page
Front wipers and washer system do not operate	WIP fuse	WW-2
	WSH fuse	WW-2
	Windshield wiper switch assembly (for hatchback)	WW-39
	Windshield wiper switch assembly (for sedan)	WW-35
	Wire harness	-
Front wipers do not operate in LO or HI	WIP fuse	WW-2
	Windshield wiper switch assembly (for hatchback)	WW-39
	Windshield wiper switch assembly (for sedan)	WW-35
	Front wiper motor (for hatchback)	WW-19
	Front wiper motor (for sedan)	WW-11
	Wire harness	-
Front wipers do not operate in INT	WIP fuse	WW-2
	Windshield wiper switch assembly (for hatchback)	WW-39
	Windshield wiper switch assembly (for sedan)	WW-35
	Front wiper motor (for hatchback)	WW-19
	Front wiper motor (for sedan)	WW-11
	Wire harness	-
Front washer motor does not operate	WSH fuse	WW-2
	Windshield wiper switch assembly (for hatchback)	WW-39
	Windshield wiper switch assembly (for sedan)	WW-35
	Front washer motor (for hatchback)	WW-51
	Front washer motor (for sedan)	WW-45
	Wire harness	-
Front wipers do not operate when washer switch on	WIP fuse	WW-2
	Windshield wiper switch assembly (for hatchback)	WW-39
	Windshield wiper switch assembly (for sedan)	WW-35
	Front wiper motor (for hatchback)	WW-19
	Front wiper motor (for sedan)	WW-11
	Wire harness	-
Front wiper arms do not return to their original positions when wiper switch turned off	Front wiper motor (for hatchback)	WW-19
	Front wiper motor (for sedan)	WW-11
	Wire harness	-
Rear wiper and washer system do not operate	RR WIP fuse	WW-2
	WSH fuse	WW-2
	Windshield wiper switch assembly	WW-39
	Wire harness	-
Rear wiper motor does not operate	RR WIP fuse	WW-2
	Windshield wiper switch assembly	WW-39
	Rear wiper motor	WW-29
	Wire harness	-

Symptom	Suspected area	See page
Rear washer motor does not operate	WSH fuse	WW-2
	Windshield wiper switch assembly	WW-39
	Rear washer motor	WW-51
	Wire harness	-
Rear wiper arm does not return to its original position when rear wiper switch turned off	Rear wiper motor	WW-29
	Wire harness	-

FRONT WIPER MOTOR (for Sedan)

COMPONENTS

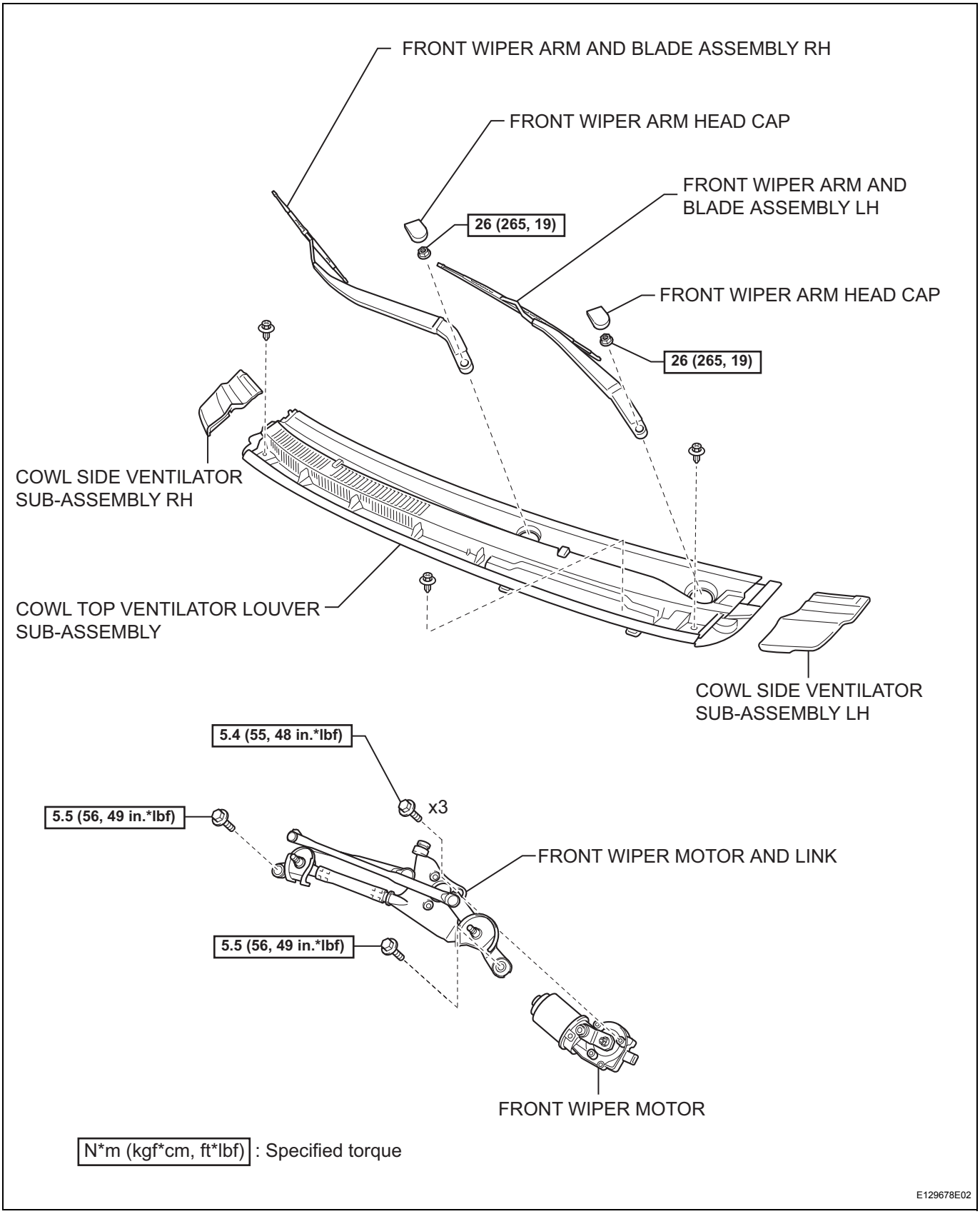

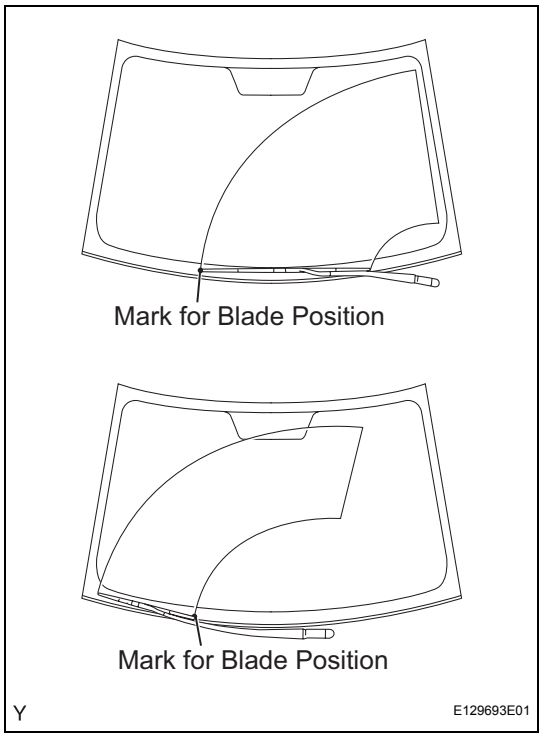

ON-VEHICLE INSPECTION

1. INSPECT FRONT WIPER MOTOR

(a) Check the automatic stop position.

(1) Operate the front wiper motor, then stop the operation.

(2) Check the automatic stop position when the front wiper motor operation has stopped.

Standard:

Front wiper arm stops in the position shown in the illustration.

REMOVAL

1. DISCONNECT CABLE FROM NEGATIVE BATTERY TERMINAL

2. REMOVE FRONT WIPER ARM HEAD CAP

(a) Using a screwdriver with its tip wrapped in protective tape, disengage the claw and remove the 2 front wiper arm head caps.

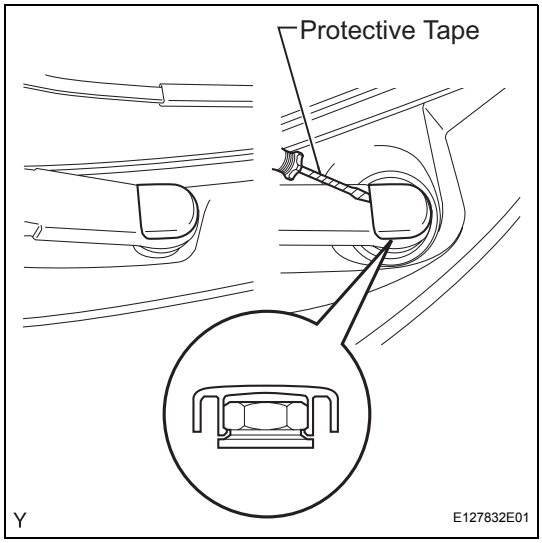

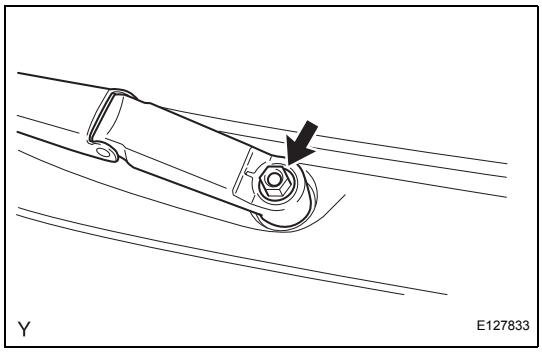

3. REMOVE FRONT WIPER ARM AND BLADE ASSEMBLY LH

(a) Operate the wiper, then stop the windshield wiper motor in the automatic stop position.

(b) Remove the nut and front wiper arm.

4. REMOVE FRONT WIPER ARM AND BLADE ASSEMBLY RH

HINT:

Use the same procedure as for the LH side.

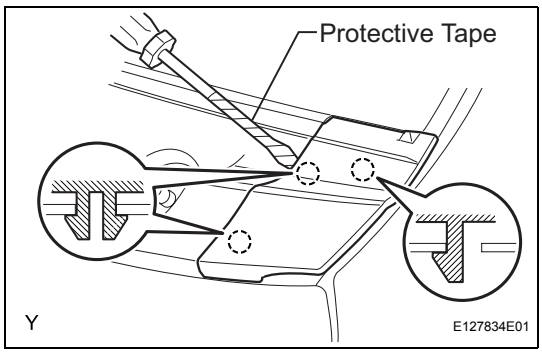

5. REMOVE COWL SIDE VENTILATOR SUB-ASSEMBLY LH

(a) Using a screwdriver with its tip wrapped in protective tape, disengage the 3 claws and remove the cowl side ventilator sub-assembly LH.

6. REMOVE COWL SIDE VENTILATOR SUB-ASSEMBLY RH

HINT:

Use the same procedure as for the LH side.

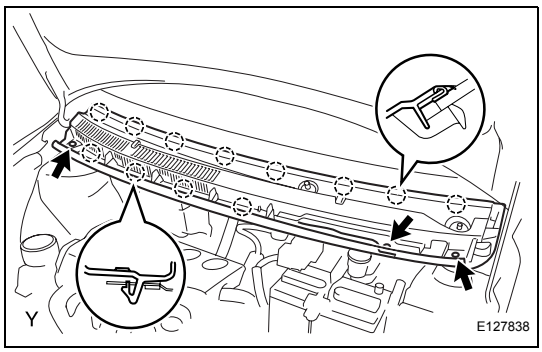

7. REMOVE COWL TOP VENTILATOR LOUVER SUB-ASSEMBLY

(a) Disengage the 3 clips, the 4 claws and the 8 hooks.

(b) Remove the cowl top ventilator louver sub-assembly.

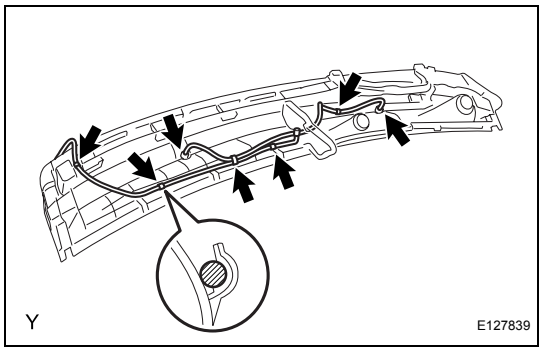

(c) Disconnect the washer hoses.
(d) Disengage the 5 hooks.

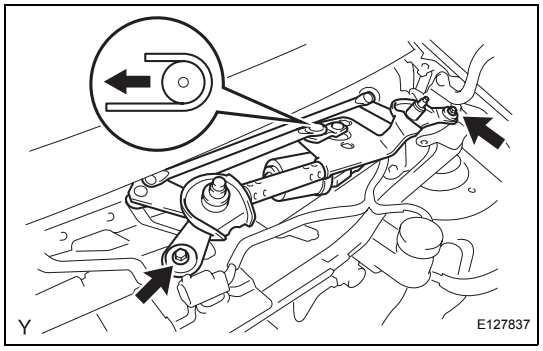

8. REMOVE FRONT WIPER MOTOR AND LINK

(a) Remove the 2 bolts.
(b) Slide the wiper link. Disengage the meshing of the rubber pin, then disconnect the connector and remove the front wiper motor and link.

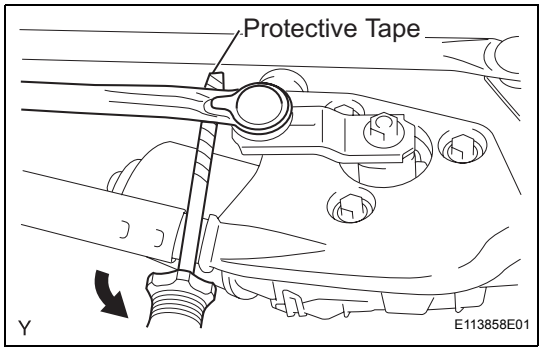

9. REMOVE FRONT WIPER MOTOR

(a) Using a screwdriver with its tip wrapped in protective tape, disengage the meshing of the rod at the crank arm pivot of the front wiper motor.

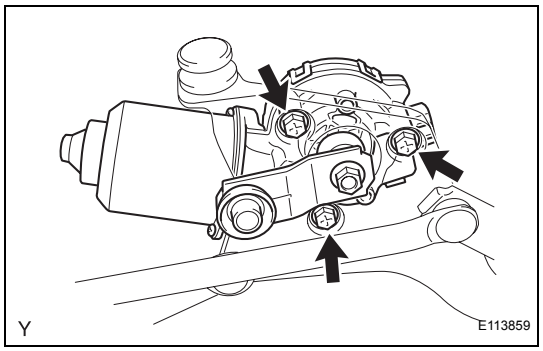

(b) Remove the 3 bolts and the front wiper motor.

INSPECTION

1. INSPECT FRONT WIPER MOTOR

(a) Check the LO operation.
(1) Connect the positive (+) battery lead to terminal 5 (+1) of the connector and the negative (-) battery lead to terminal 4 (E), then check that the motor operates at low speed (LO).
Standard:
Motor operates at low speed (LO).
If the result is not as specified, replace the motor.

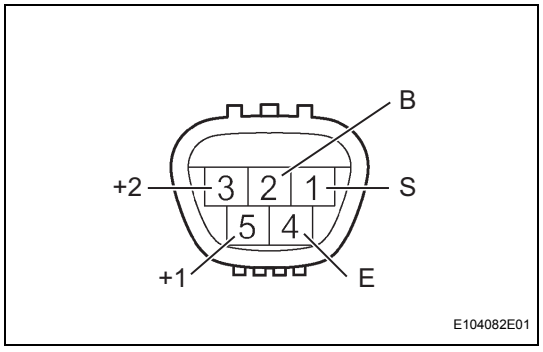

(b) Check the HI operation.
(1) Connect the positive (+) battery lead to terminal 3 (+2) of the connector and the negative (-) battery lead to terminal 4 (E), then check that the motor operates at high speed (HI).
Standard:
Motor operates at high speed (HI).
If the result is not as specified, replace the motor.

(c) Check the automatic stop operation.
(1) Connect the positive (+) battery lead to terminal 5 (+1) of the connector and the negative (-) battery lead to terminal 4 (E). With the motor operating at low speed (LO), disconnect terminal 5 (+1) to stop the wiper motor operation at any position other than the automatic stop position.
(2) Using SST, connect terminals 1 (S) and 5 (+1). Connect the positive (+) battery lead to terminal 2 (B) of the connector to restart the motor operation at low speed (LO).
SST 09843-18040
(3) Check that the motor stops automatically in the automatic stop position.
Standard:
Refer to the illustration.
If the result is not as specified, replace the motor assembly.

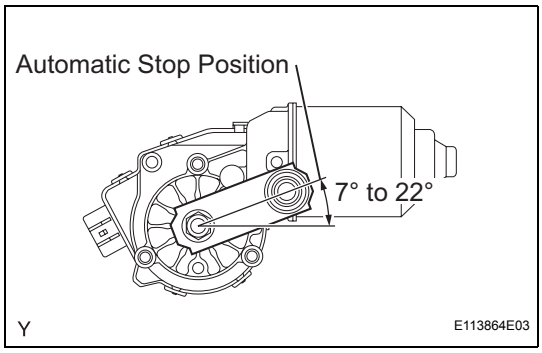

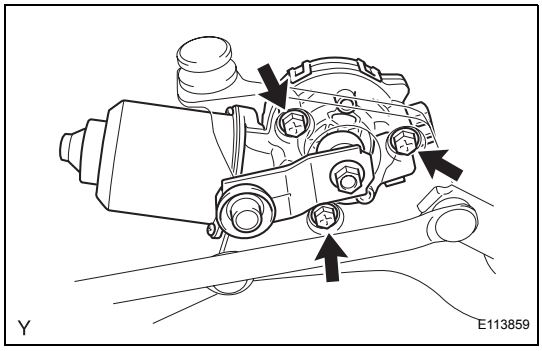

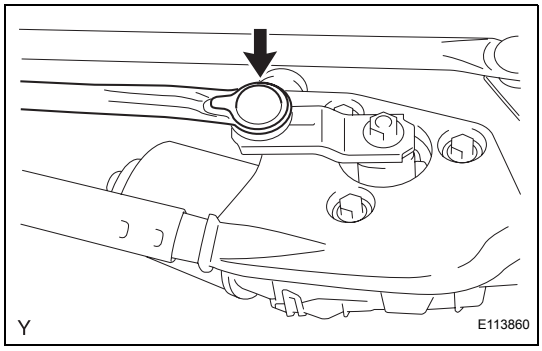

INSTALLATION

1. INSTALL FRONT WIPER MOTOR

(a) Install the front wiper motor with the 3 bolts.
Torque: 5.4 N*m (55 kgf*cm, 48 in.*lbf)

(b) Apply DENSO No. 50 grease to the crank arm pivot of the front wiper motor.

(c) Install the rod onto the crank arm pivot of the front wiper motor.

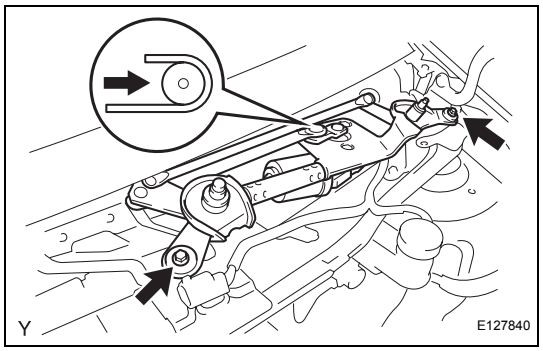

2. INSTALL FRONT WIPER MOTOR AND LINK

(a) Connect the connector.

(b) Slide the wiper link as shown in the illustration and engage the rubber pin with the body.

(c) Install the front wiper motor and link with the 2 bolts.
Torque: 5.5 N*m (56 kgf*cm, 49 in.*lbf)

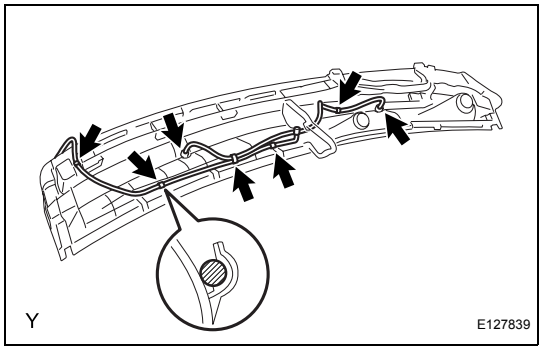

3. INSTALL COWL TOP VENTILATOR LOUVER SUB-ASSEMBLY

(a) Connect the washer hoses.

(b) Engage the 5 hooks.

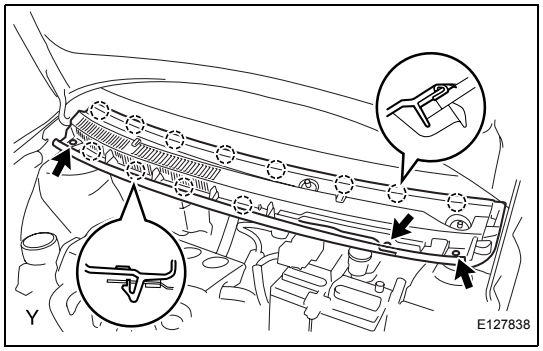

(c) Engage the 8 hooks and the 4 claws.

(d) Install the cowl top ventilator louver sub-assembly with the 3 clips.

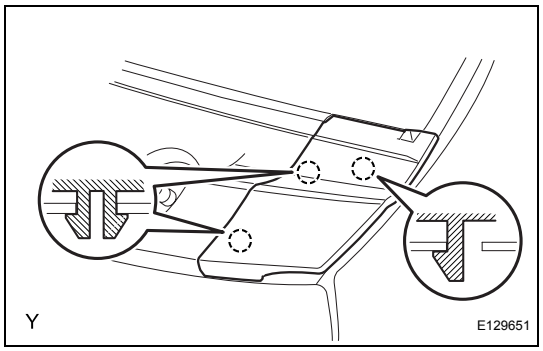

4. INSTALL COWL SIDE VENTILATOR SUB-ASSEMBLY LH

(a) Engage the 3 claws and install the cowl side ventilator sub-assembly LH.

5. INSTALL COWL SIDE VENTILATOR SUB-ASSEMBLY RH

HINT:

Use the same procedure as for the LH side.

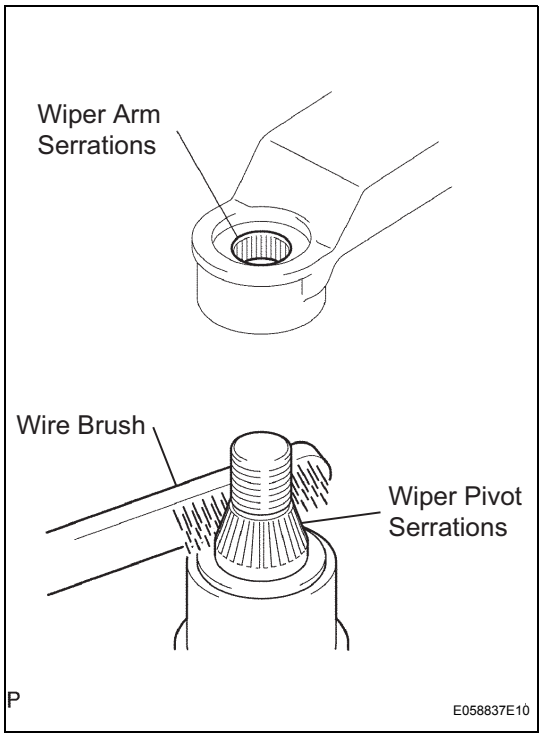

6. INSTALL FRONT WIPER ARM AND BLADE ASSEMBLY LH

(a) Scrape any metal powder off the serrated part of the wiper arm with a round file or the equivalent (when reinstalling).
(b) Clean the wiper pivot serrations with a wire brush.
(c) Operate the wiper, then stop the windshield wiper motor in the automatic stop position.

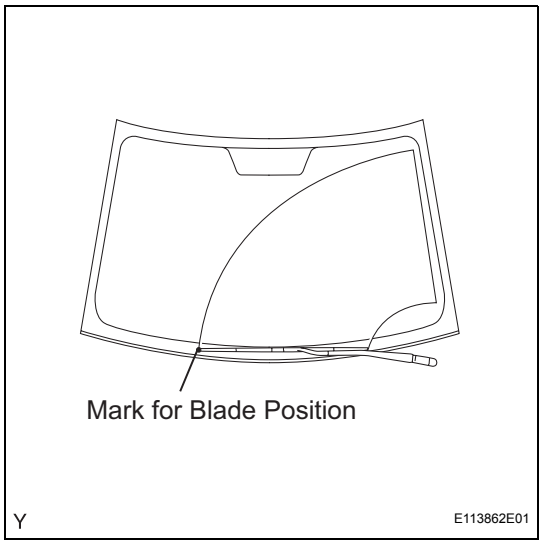

(d) Align the blade tip with the mark on the windshield glass, as shown in the illustration.
(e) Tighten the nut of the front wiper arm.
Torque: 26 N*m (265 kgf*cm, 19 ft.*lbf)

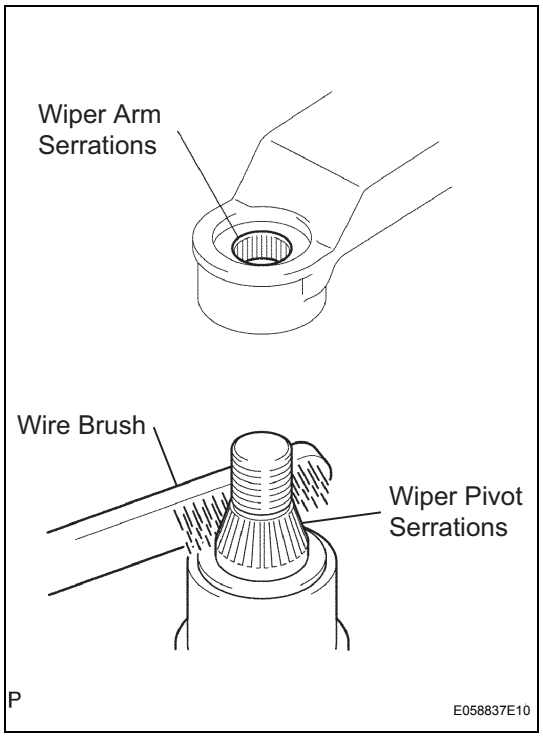

7. INSTALL FRONT WIPER ARM AND BLADE ASSEMBLY RH

(a) Scrape any metal powder off the serrated part of the wiper arm with a round file or the equivalent (when reinstalling).
(b) Clean the wiper pivot serrations with a wire brush.
(c) Operate the wiper, then stop the windshield wiper motor in the automatic stop position.

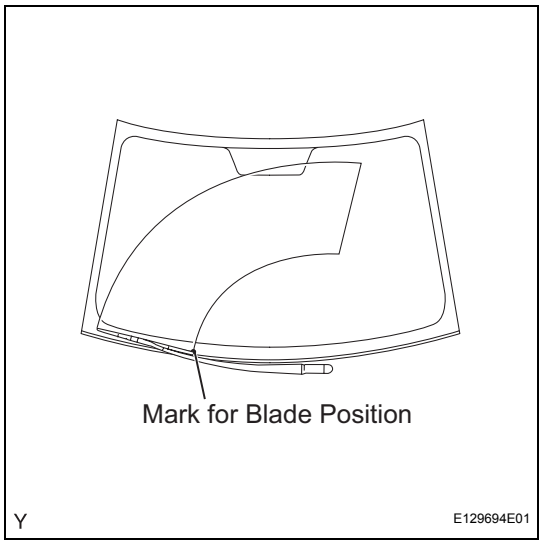

(d) Align the blade tip with the mark on the windshield glass, as shown in the illustration.
(e) Tighten the nut of the front wiper arm.
Torque: 26 N*m (265 kgf*cm, 19 ft.*lbf)

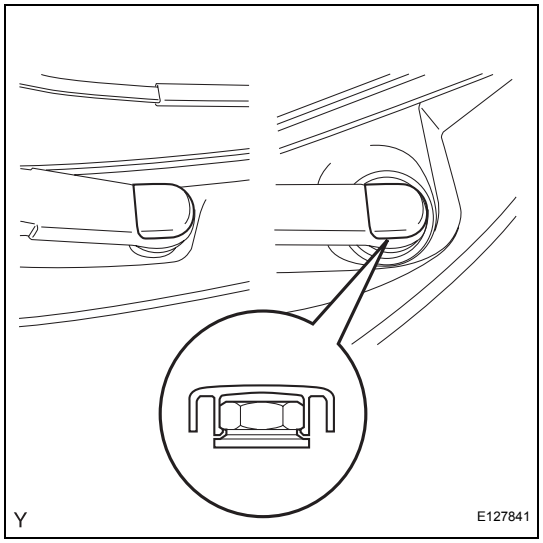

8. INSTALL FRONT WIPER ARM HEAD CAP

(a) Engage the claw and install the 2 front wiper arm head caps.

9. CONNECT CABLE TO NEGATIVE BATTERY TERMINAL
Torque: 5.4 N*m (55 kgf*cm, 48 in.*lbf)

WW

FRONT WIPER MOTOR (for Hatchback)

COMPONENTS

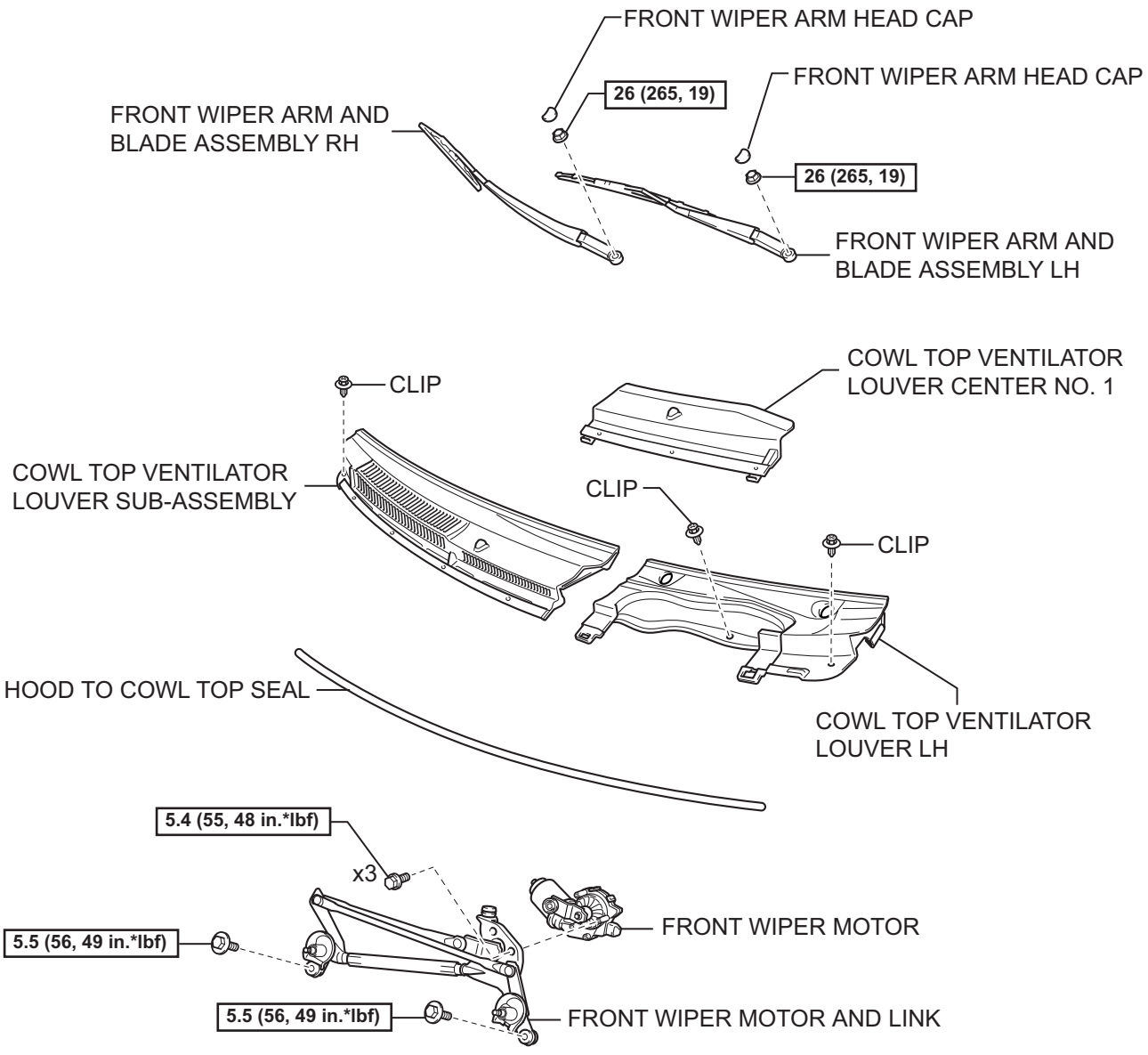

N*m (kgf*cm, ft*lbf) : Specified torque

Y

E117222E02

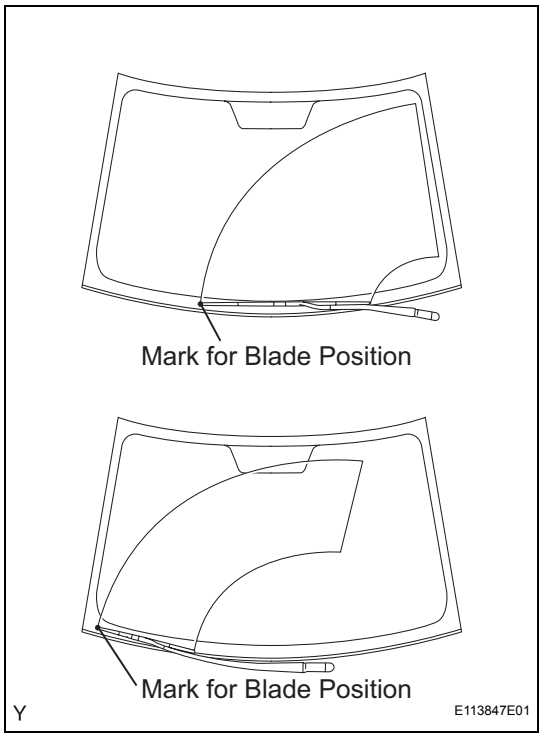

ON-VEHICLE INSPECTION

1. INSPECT FRONT WIPER MOTOR

(a) Check the automatic stop position.

(1) Operate the front wiper motor, then stop the operation.

(2) Check the automatic stop position when the front wiper motor operation has stopped.

Standard:

Front wiper arm stops in the position shown in the illustration.

REMOVAL

1. DISCONNECT CABLE FROM NEGATIVE BATTERY TERMINAL

2. REMOVE FRONT WIPER ARM HEAD CAP

(a) Using a screwdriver with its tip wrapped in protective tape, disengage the claw and remove the 2 front wiper arm head caps.

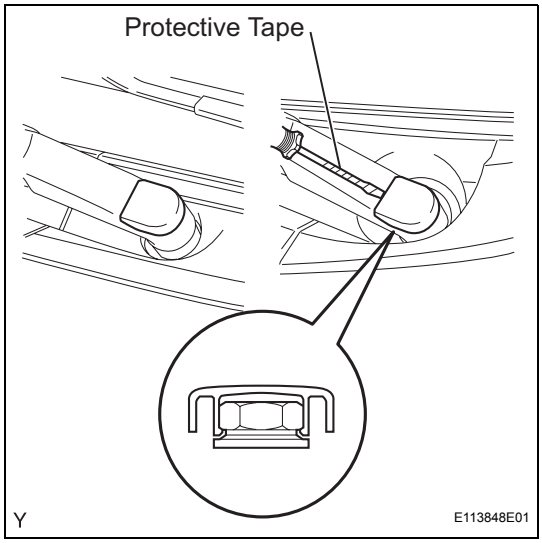

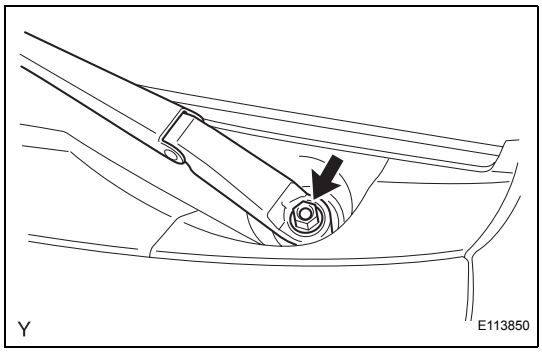

3. REMOVE FRONT WIPER ARM AND BLADE ASSEMBLY LH

(a) Operate the wiper, then stop the windshield wiper motor in the automatic stop position.

(b) Remove the nut and front wiper arm.

4. REMOVE FRONT WIPER ARM AND BLADE ASSEMBLY RH

HINT:

Use the same procedure as for the LH side.

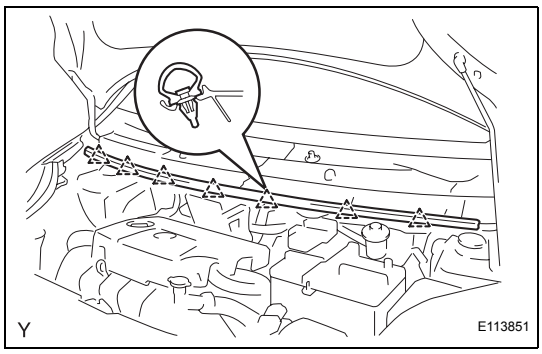

5. REMOVE HOOD TO COWL TOP SEAL

(a) Disengage the 7 clips and remove the hood to cowl top seal.

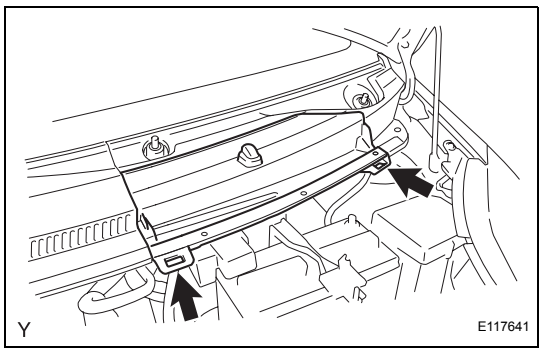

6. REMOVE COWL TOP VENTILATOR LOUVER SUB-ASSEMBLY

(a) Disengage the 2 hooks and remove cowl top ventilator louver center No. 1.

(b) Disconnect the washer hose.

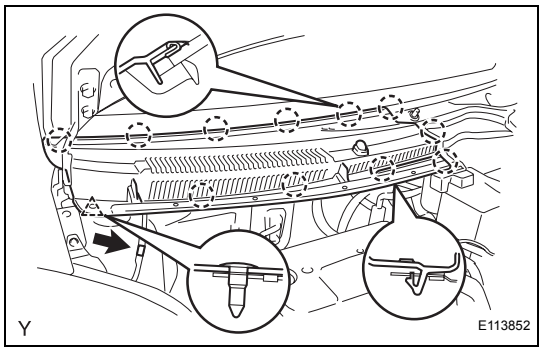

(c) Disengage the 11 claws and clip.

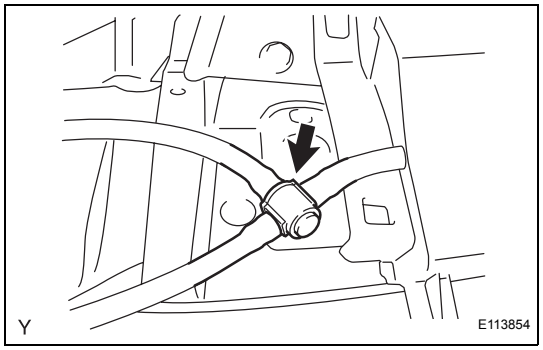

(d) Disconnect the washer hose and remove the cowl top ventilator louver sub-assembly.

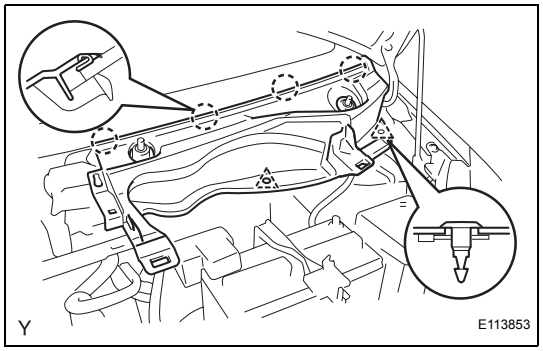

7. REMOVE COWL TOP VENTILATOR LOUVER LH

(a) Remove the 2 clips.
(b) Disengage the 4 claws and remove the cowl top ventilator louver LH.

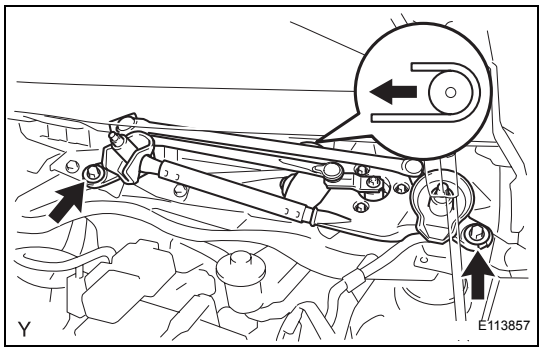

8. REMOVE FRONT WIPER MOTOR AND LINK

(a) Remove the 2 bolts.
(b) Slide the wiper link. Disengage the meshing of the rubber pin, then disconnect the connector and remove the front wiper motor and link.

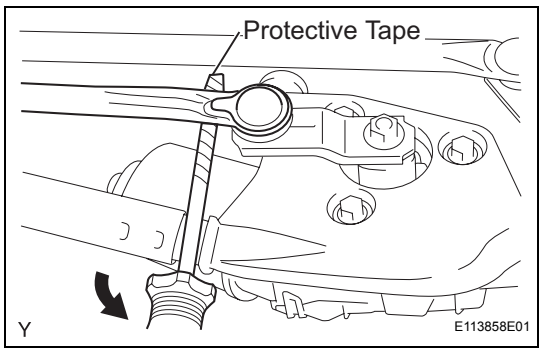

9. REMOVE FRONT WIPER MOTOR

(a) Using a screwdriver with its tip wrapped in protective tape, disengage the meshing of the rod at the crank arm pivot of the front wiper motor.

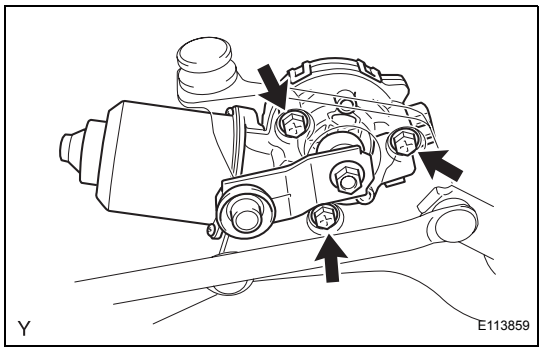

(b) Remove the 3 bolts and the front wiper motor.

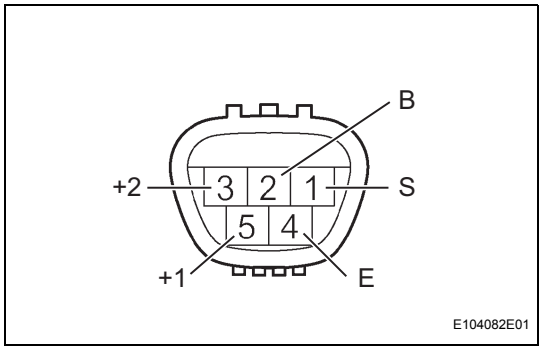

INSPECTION

1. INSPECT FRONT WIPER MOTOR

(a) Check the LO operation.

(1) Connect the positive (+) battery lead to terminal 5 (+1) of the connector and the negative (-) battery lead to terminal 4 (E), then check that the motor operates at low speed (LO).

Standard:

Motor operates at low speed (LO).

If the result is not as specified, replace the motor.

(b) Check the HI operation.

(1) Connect the positive (+) battery lead to terminal 3 (+2) of the connector and the negative (-) battery lead to terminal 4 (E), then check that the motor operates at high speed (HI).

Standard:

Motor operates at high speed (HI).

If the result is not as specified, replace the motor.

(c) Check the automatic stop operation.

(1) Connect the positive (+) battery lead to terminal 5 (+1) of the connector and the negative (-) battery lead to terminal 4 (E). With the motor operating at low speed (LO), disconnect terminal 5 (+1) to stop the wiper motor operation at any position other than the automatic stop position.

(2) Using SST, connect terminals 1 (S) and 5 (+1). Connect the positive (+) battery lead to terminal 2 (B) of the connector to restart the motor operation at low speed (LO).

SST 09843-18040

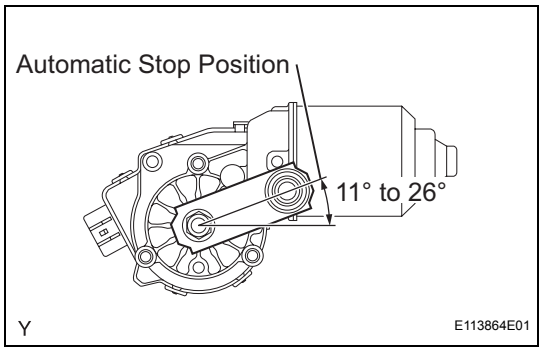

(3) Check that the motor stops automatically in the automatic stop position.
Standard:
Refer to the illustration.
If the result is not as specified, replace the motor assembly.

INSTALLATION

1. INSTALL FRONT WIPER MOTOR

(a) Install the front wiper motor with the 3 bolts.
Torque: 5.4 N*m (55 kgf*cm, 48 in.*lbf)

(b) Apply DENSO No. 50 grease to the crank arm pivot of the front wiper motor.

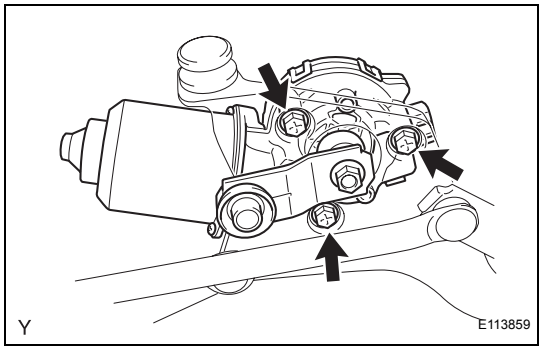

(c) Install the rod onto the crank arm pivot of the front wiper motor.

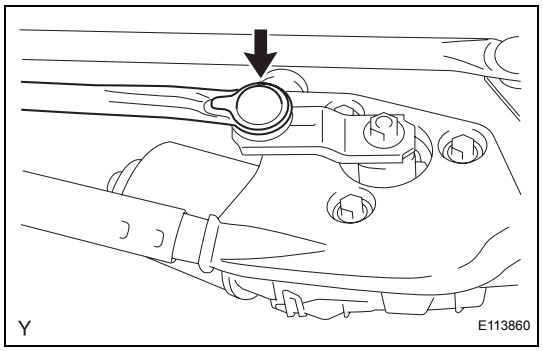

2. INSTALL FRONT WIPER MOTOR AND LINK

(a) Connect the connector.

(b) Slide the wiper link as shown in the illustration and engage the rubber pin with the body.

(c) Install the front wiper motor and link with the 2 bolts.
Torque: 5.5 N*m (56 kgf*cm, 49 in.*lbf)

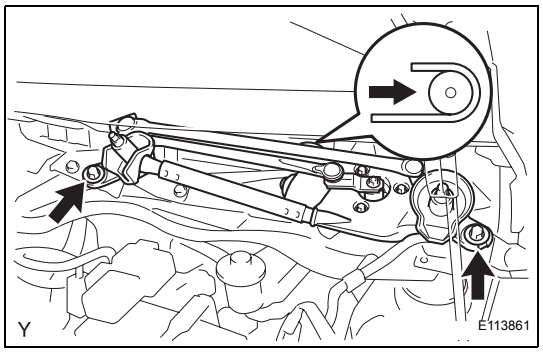

3. INSTALL COWL TOP VENTILATOR LOUVER LH

(a) Engage the 4 claws and install the cowl top ventilator louver LH.

(b) Install the 2 clips.

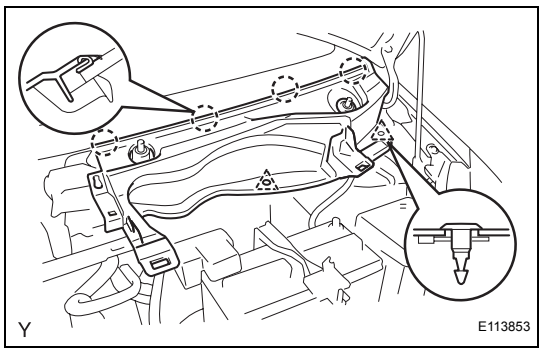

WW

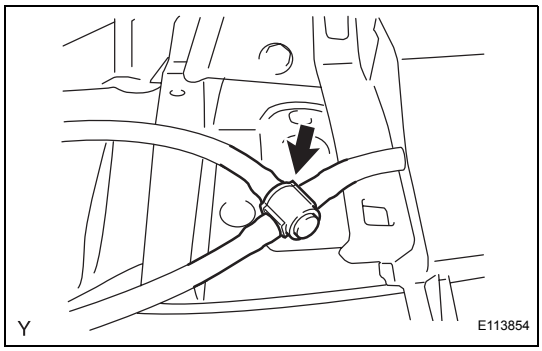

4. INSTALL COWL TOP VENTILATOR LOUVER SUB-ASSEMBLY

(a) Connect the washer hose.

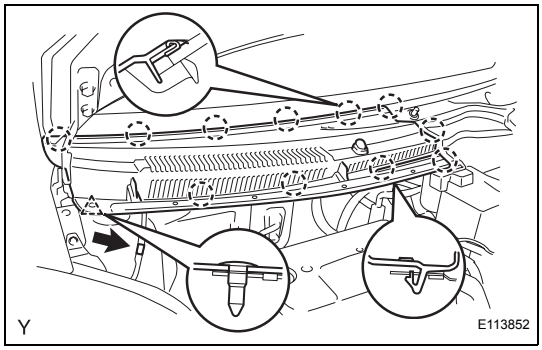

(b) Engage the 11 claws and install the cowl top ventilator louver sub-assembly.

(c) Install the clip.

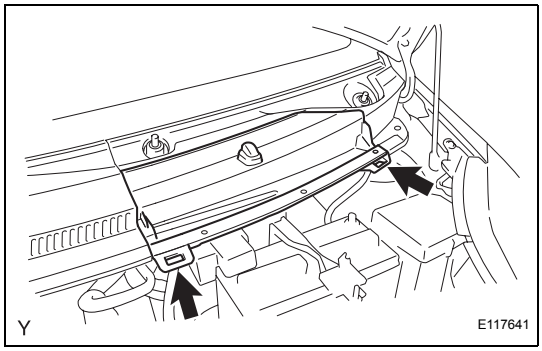

(d) Connect the washer hose.

(e) Engage the 2 hooks and install cowl top ventilator louver center No. 1.

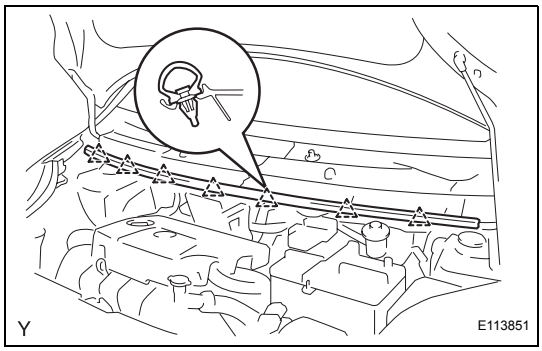

5. INSTALL HOOD TO COWL TOP SEAL

(a) Engage the 7 clips and install the hood to cowl top seal.

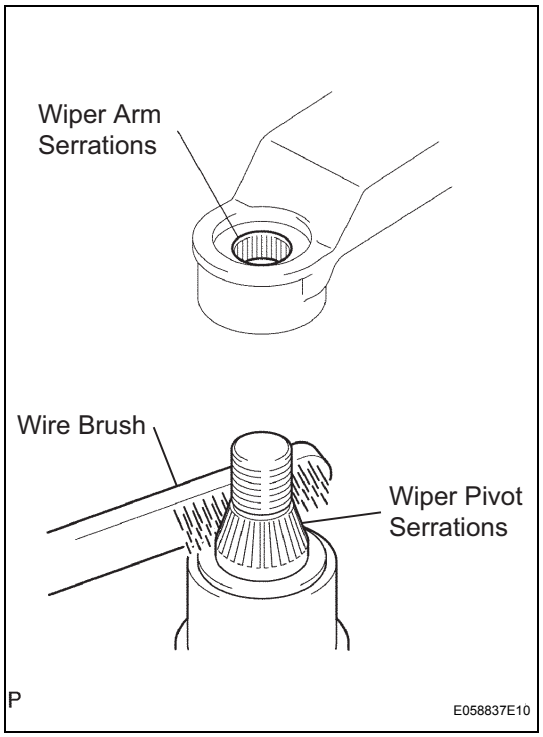

6. INSTALL FRONT WIPER ARM AND BLADE ASSEMBLY LH

(a) Scrape any metal powder off the serrated part of the wiper arm with a round file or the equivalent (when reinstalling).
(b) Clean the wiper pivot serrations with a wire brush.
(c) Operate the wiper, then stop the windshield wiper motor in the automatic stop position.

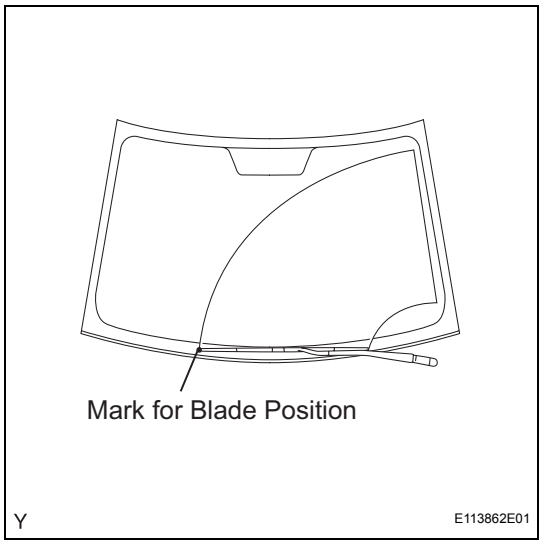

(d) Align the blade tip with the mark on the windshield glass, as shown in the illustration.
(e) Tighten the nut of the front wiper arm.
Torque: 26 N*m (265 kgf*cm, 19 ft.*lbf)

WW

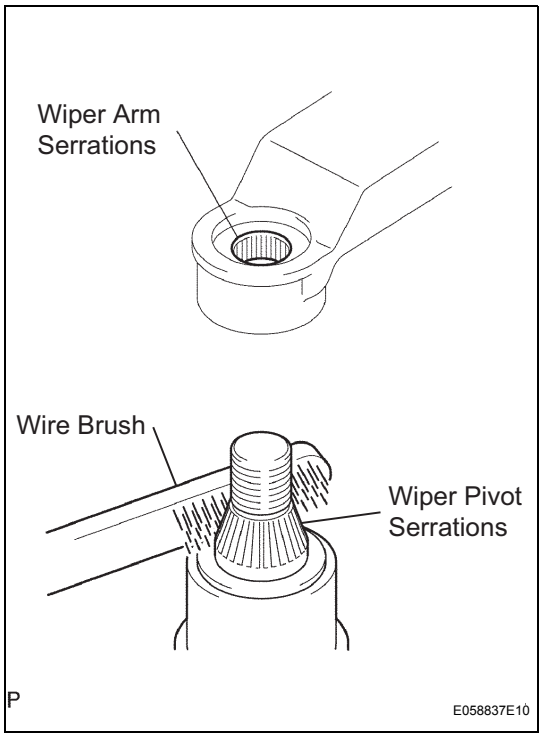

7. INSTALL FRONT WIPER ARM AND BLADE ASSEMBLY RH

(a) Scrape any metal powder off the serrated part of the wiper arm with a round file or the equivalent (when reinstalling).
(b) Clean the wiper pivot serrations with a wire brush.
(c) Operate the wiper, then stop the windshield wiper motor in the automatic stop position.

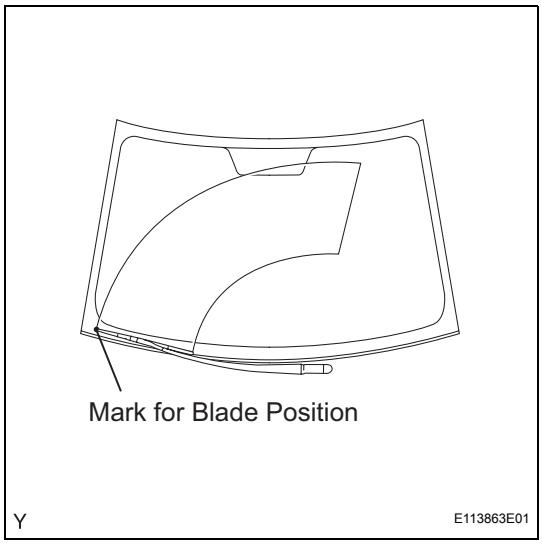

(d) Align the blade tip with the mark on the windshield glass, as shown in the illustration.
(e) Tighten the nut of the front wiper arm.
Torque: 26 N*m (265 kgf*cm, 19 ft.*lbf)

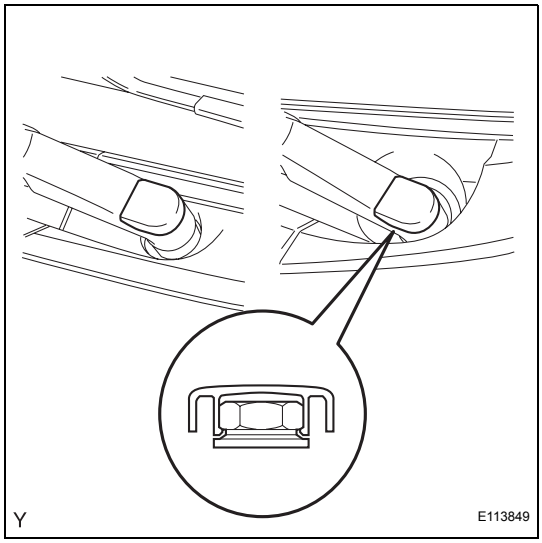

8. INSTALL FRONT WIPER ARM HEAD CAP

(a) Engage the claw and install the 2 front wiper arm head caps.

9. CONNECT CABLE TO NEGATIVE BATTERY TERMINAL
Torque: 5.4 N*m (55 kgf*cm, 48 in.*lbf)

FRONT WIPER RUBBER

COMPONENTS

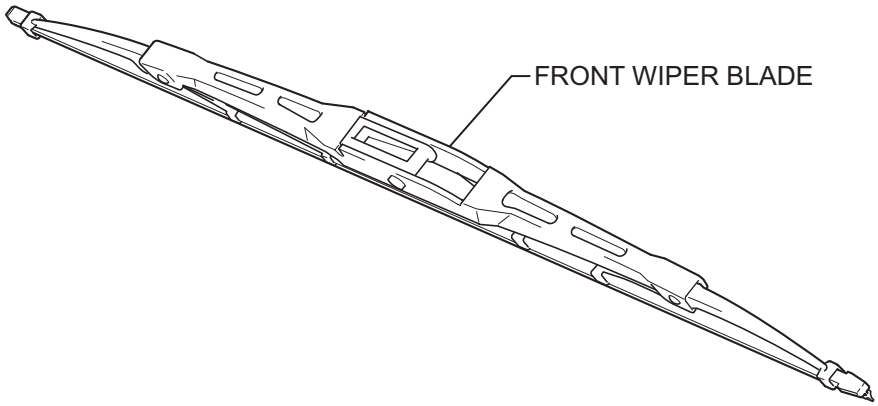

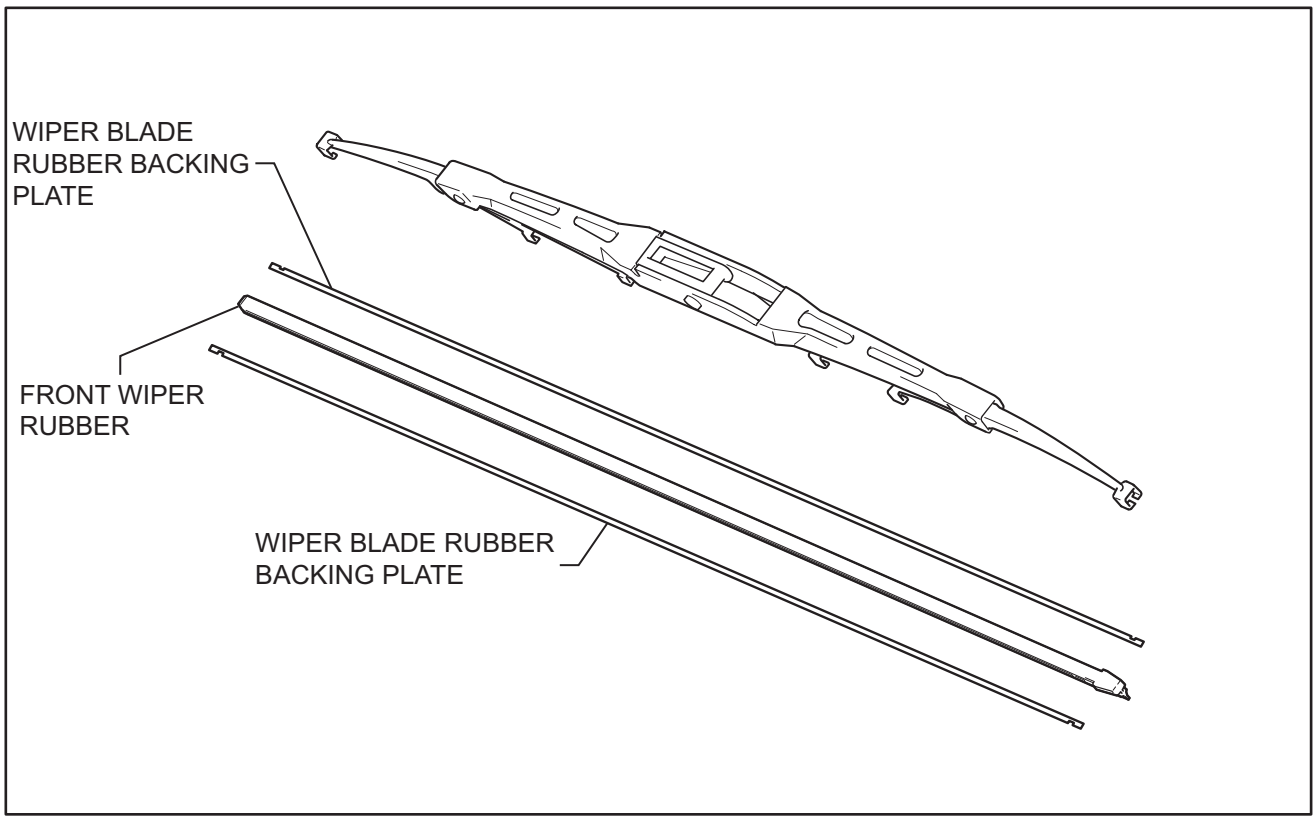

P

E103823E01

REMOVAL

HINT:
- Use the same procedures for both the RH and LH sides.
- The procedure described below is for the LH side.

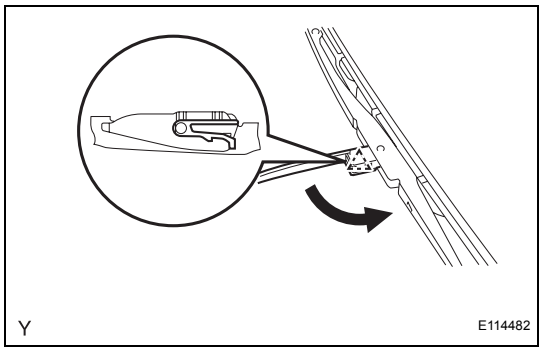

1. REMOVE FRONT WIPER BLADE

(a) Disengage the claw as shown in the illustration.

NOTICE:
Do not fold the wiper arm with the wiper blade removed. The arm tip may damage the windshield surface.

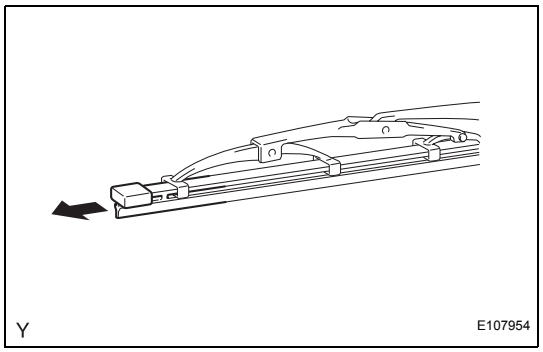

2. REMOVE FRONT WIPER RUBBER

(a) Remove the wiper rubber from the wiper blade.

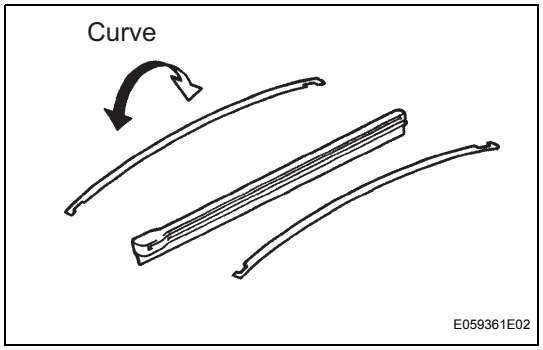

(b) Remove the 2 wiper rubber backing plates from the wiper rubber.

INSTALLATION

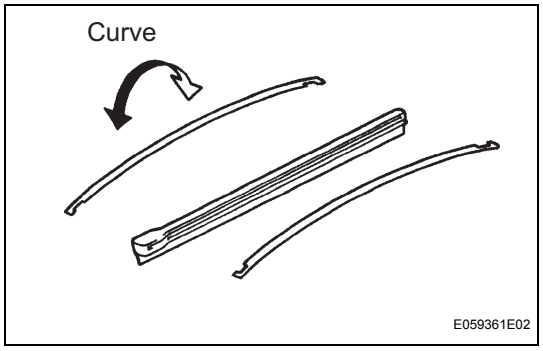

1. INSTALL FRONT WIPER RUBBER

(a) Install the 2 wiper rubber backing plates onto the wiper rubber.

NOTICE:
Install the backing plates facing the correct direction.

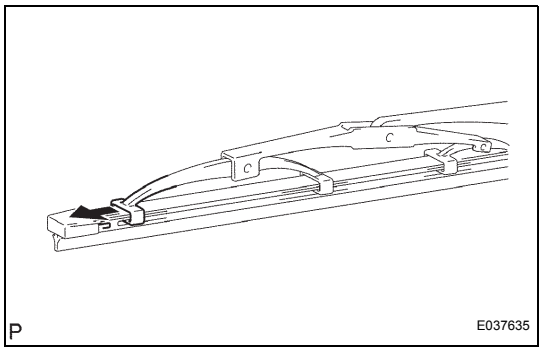

(b) Install the wiper rubber with its head portion (swelled portion) facing the arm bearing.
NOTICE:
Push the wiper blade into the grooves of the wiper rubber to attach it completely.

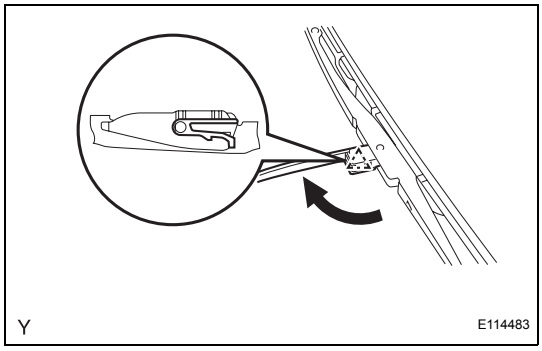

2. INSTALL FRONT WIPER BLADE

(a) Engage the claw and install the wiper blade.

REAR WIPER MOTOR (for Hatchback)

COMPONENTS

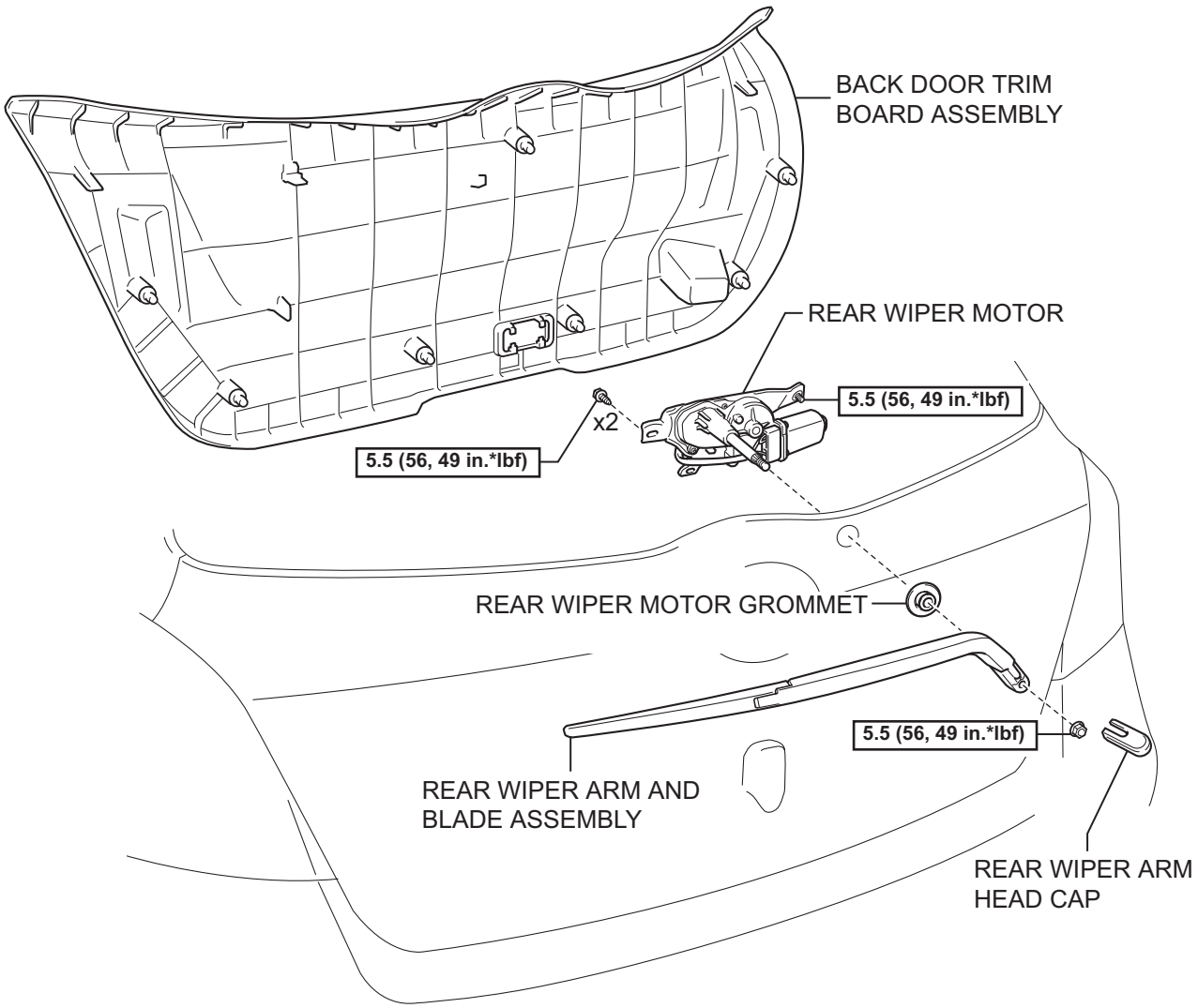

N*m (kgf*cm, ft*lbf) : Specified torque

Y

E117636E01

WW

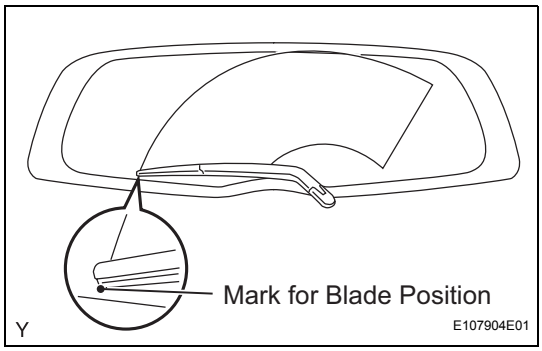

ON-VEHICLE INSPECTION

1. INSPECT REAR WIPER MOTOR

(a) Check the automatic stop position.

(1) Operate the rear wiper motor, then stop the operation.

(2) Check the automatic stop position when the rear wiper motor operation has stopped.

Standard:

Rear wiper arm stops in the position shown in the illustration.

REMOVAL

1. **DISCONNECT CABLE FROM NEGATIVE BATTERY TERMINAL**

2. **REMOVE BACK DOOR TRIM BOARD ASSEMBLY (See page ED-142)**

3. **REMOVE REAR WIPER ARM AND BLADE ASSEMBLY**
   (a) Remove the rear wiper arm head cap.

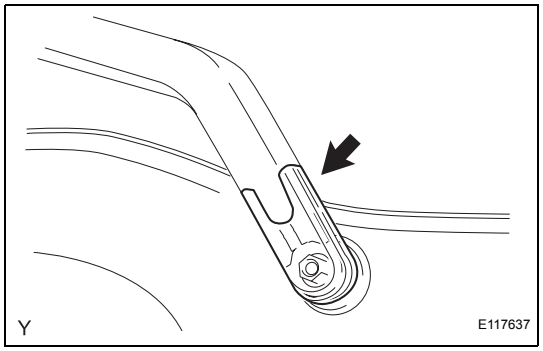

   (b) Remove the nut and rear wiper arm and blade.

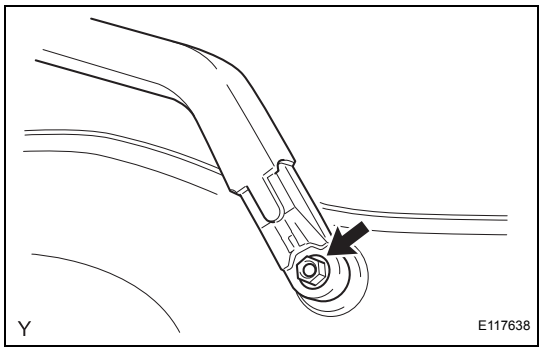

4. **REMOVE REAR WIPER MOTOR GROMMET**
   (a) Remove the rear wiper motor grommet.

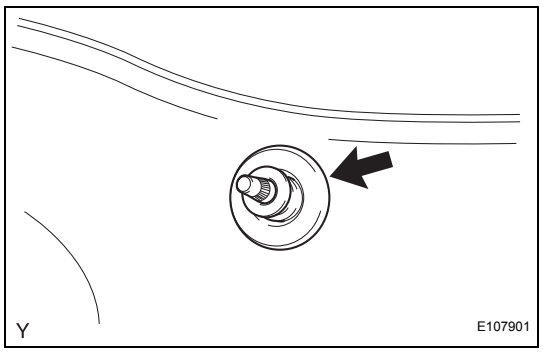

5. **REMOVE REAR WIPER MOTOR**
   (a) Disconnect the connector.
   (b) Loosen bolt A.
   NOTICE:
   Do not try to remove the bolt since it is integrated with the motor.
   (c) Remove bolt B and the rear wiper motor.

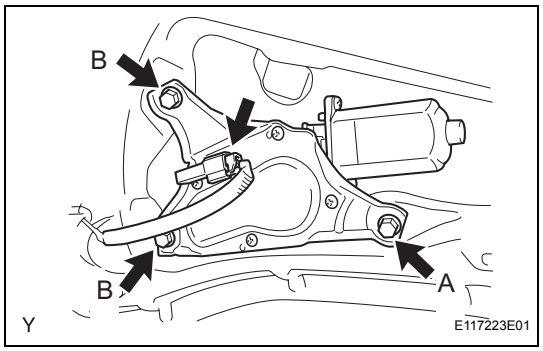

WW

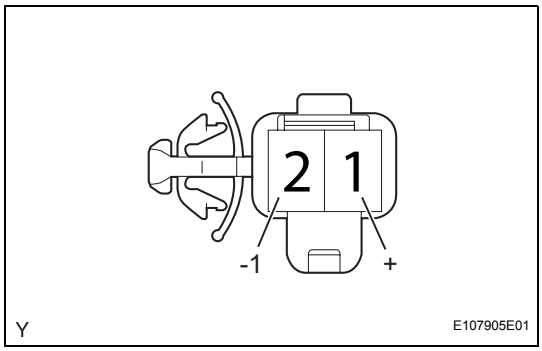

INSPECTION

1. INSPECT REAR WIPER MOTOR

(a) Check the operation.

(1) Connect the positive (+) battery lead to terminal 1 (+) and the negative (-) battery lead to terminal 2 (-1), and check that the rear wiper motor operates.

Standard:

The rear wiper motor operates.

NOTICE:

Check that the body ground is connected.

If the result is not as specified, replace the motor.

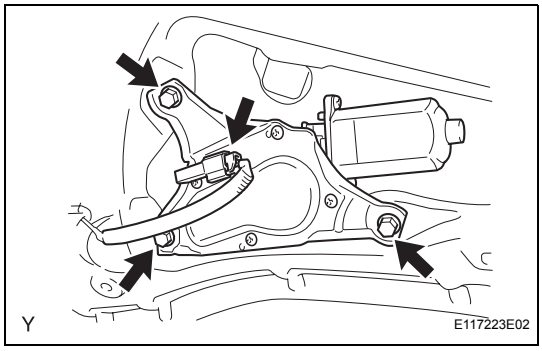

INSTALLATION

1. INSTALL REAR WIPER MOTOR

(a) Install the rear wiper motor with the 3 bolts.

Torque: 5.5 N*m (56 kgf*cm, 49 in.*lbf)

(b) Connect the connector.

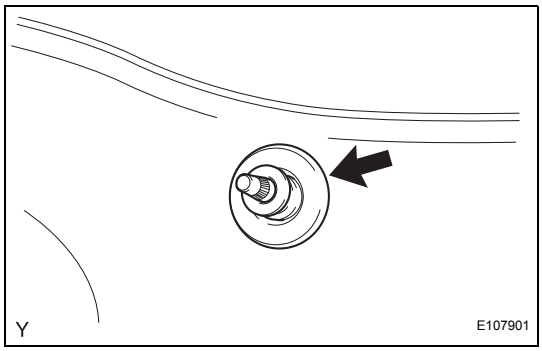

2. INSTALL REAR WIPER MOTOR GROMMET

(a) Install the rear wiper motor grommet.

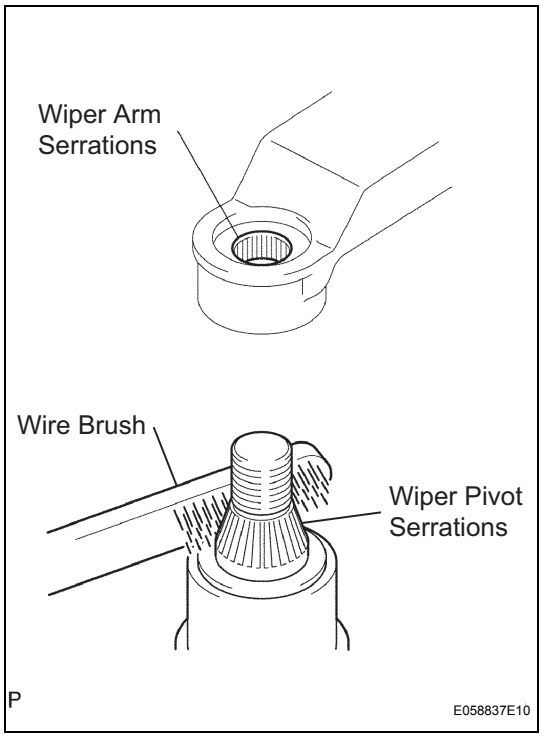

3. **INSTALL REAR WIPER ARM AND BLADE ASSEMBLY**
   (a) Scrape any metal powder off the serrated part of the wiper arm with a round file or the equivalent (when reinstalling).
   (b) Clean the wiper pivot serrations with a wire brush.
   (c) Operate the wiper, then stop the windshield wiper motor in the automatic stop position.

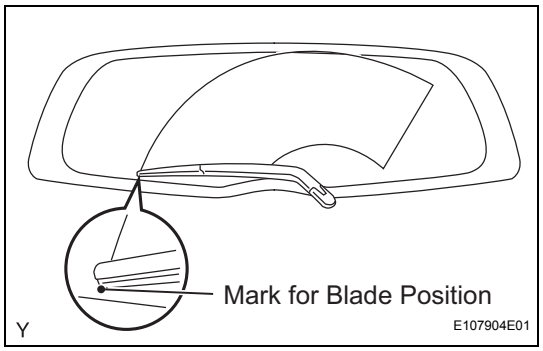

   (d) Install the rear wiper arm into the position shown in the illustration with the nut.
   Torque: 5.5 N*m (56 kgf*cm, 49 in.*lbf)
   HINT:
   Hold the arm hinge down by hand while tightening the nut.

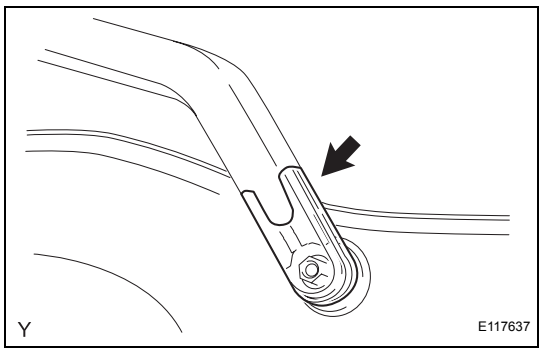

   (e) Install the rear wiper arm head cap.

4. **REMOVE BACK DOOR TRIM BOARD ASSEMBLY (See page ED-146)**

5. **CONNECT CABLE TO NEGATIVE BATTERY TERMINAL**
   Torque: 5.4 N*m (55 kgf*cm, 48 in.*lbf)

WW

REAR WIPER RUBBER (for Hatchback)

COMPONENTS

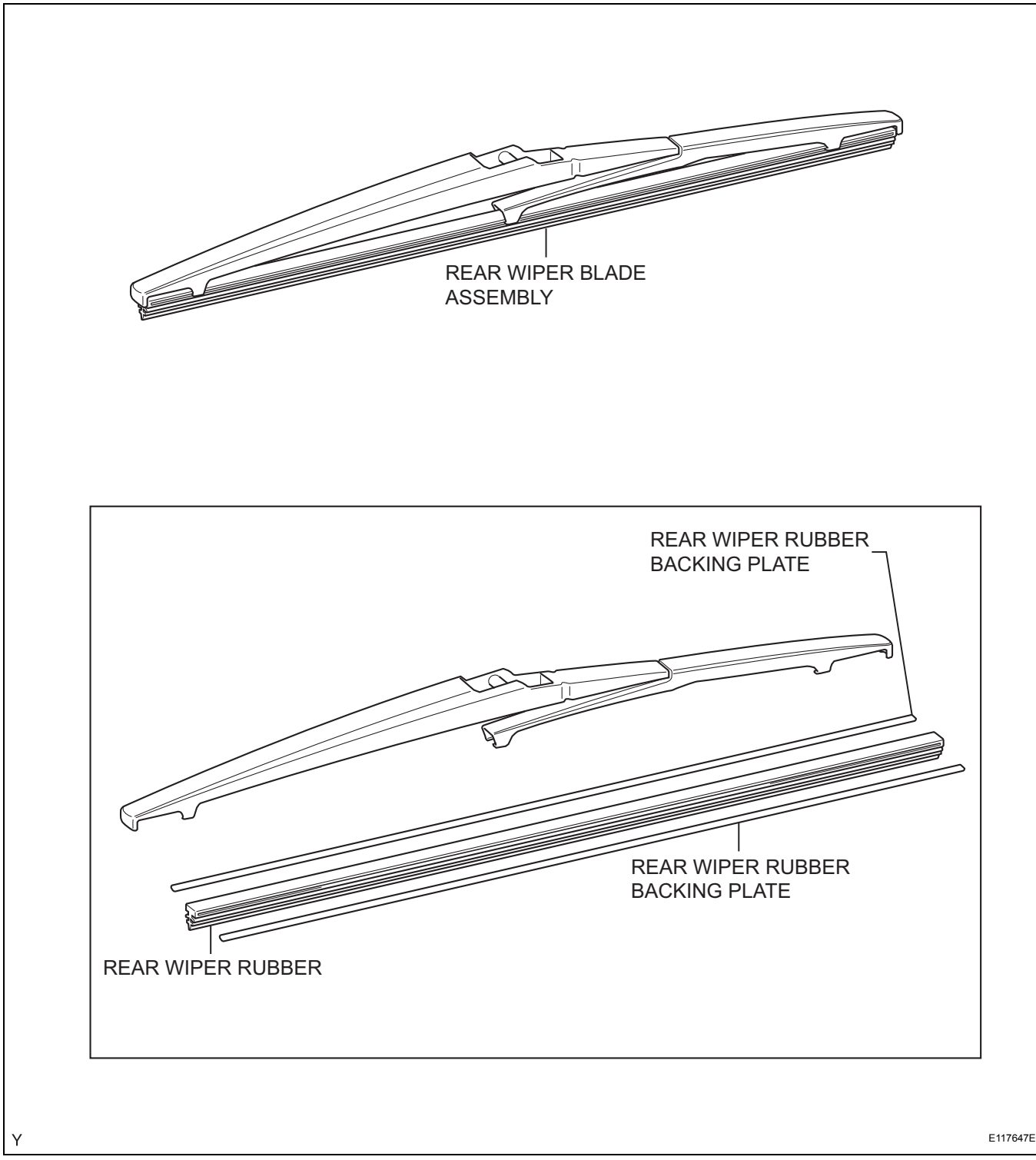

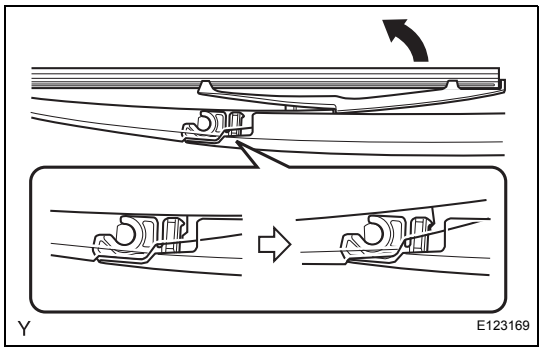

REMOVAL

1. REMOVE REAR WIPER BLADE ASSEMBLY

(a) Raise the rear wiper blade to the position shown in the illustration, where the meshing of the claw disengages making a clicking sound.
NOTICE:
Do not break the claw.

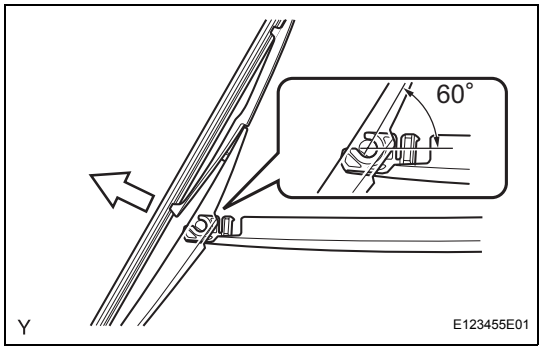

(b) Pull the rear wiper blade straight away from the wiper arm toward the left side of the vehicle.
NOTICE:
Do not bend the rear wiper arm with the rear wiper blade removed, as the arm tip could damage the windshield surface.

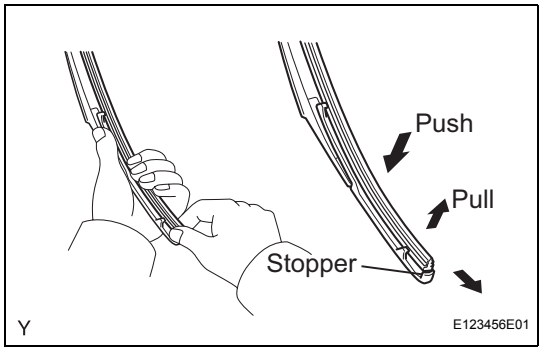

2. REMOVE REAR WIPER RUBBER

(a) Pull the end of the wiper rubber protruding from the blade stopper as shown in the illustration.
NOTICE:
Do not pull out the wiper rubber forcibly. Otherwise, the backing plates will be deformed or the blade claw will be damaged.
HINT:
Pushing the rubber from the end toward the middle of the rear wiper blade allows it to be removed more easily.

(b) Remove the 2 wiper rubber backing plates from the wiper rubber.

INSTALLATION

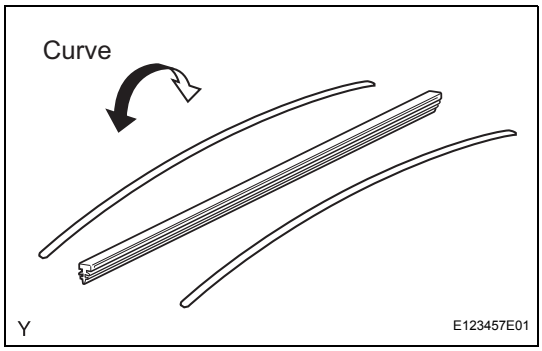

1. INSTALL REAR WIPER RUBBER

(a) Install the 2 wiper rubber backing plates onto the wiper rubber.
NOTICE:
Install the backing plates facing the correct direction.

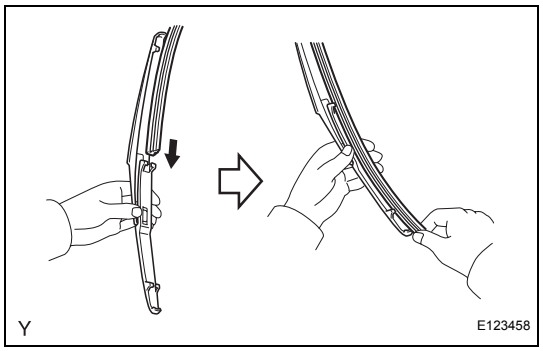

(b) Insert the rear wiper rubber from the claw position of the middle of the rear wiper blade to the end.

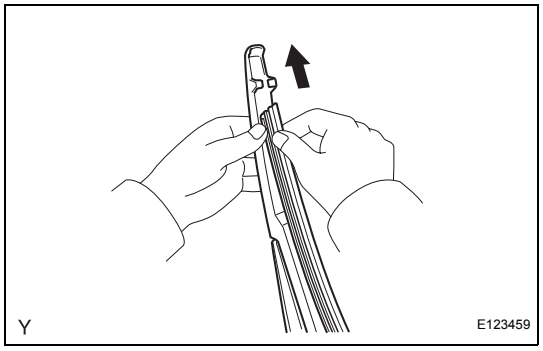

(c) After passing the rear wiper rubber through the rear end side claw, allow it to protrude from the rear end stopper and slide it through the front tip side claw.

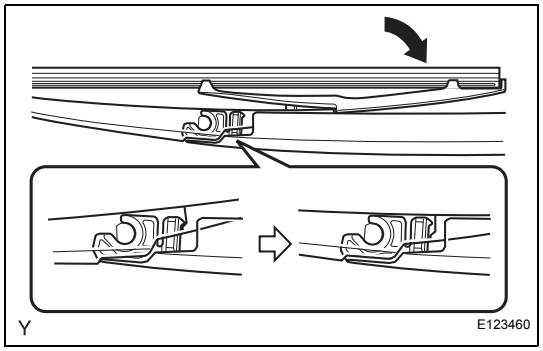

2. INSTALL REAR WIPER BLADE ASSEMBLY

(a) Engage the claw and install the wiper blade.

WIPER SWITCH (for Sedan)

COMPONENTS

WW

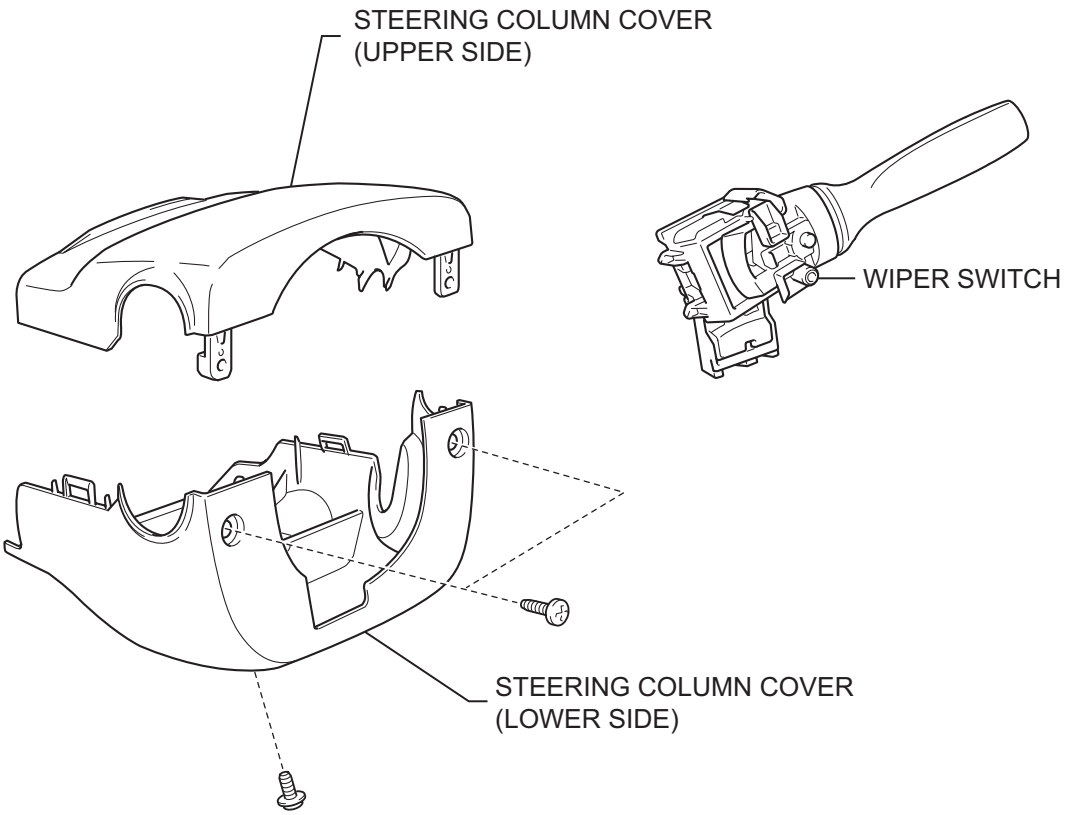

Y

E127794E01

REMOVAL

1. **DISCONNECT CABLE FROM NEGATIVE BATTERY TERMINAL**
2. **REMOVE STEERING COLUMN COVER (See page SR-12)**
3. **REMOVE WIPER SWITCH**
   (a) Disconnect the 2 connectors.
   (b) Using a screwdriver with its tip wrapped in protective tape, disengage the claw and remove the wiper switch.
   NOTICE:
   Do not press the claw too hard, as it may be damaged.

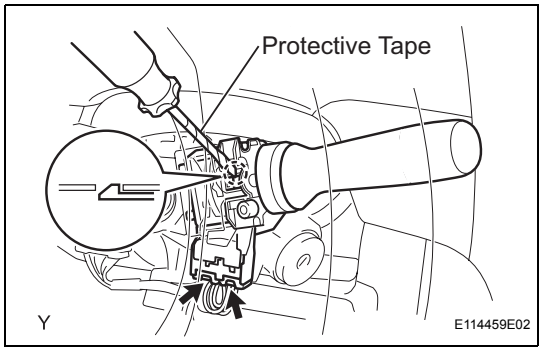

Windshield Wiper Switch Assembly Connector Front View:

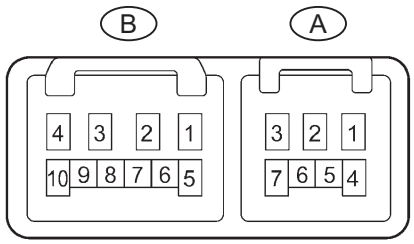

H

E109077E01

INSPECTION

1. **INSPECT WIPER SWITCH**
   (a) Check the resistance.
   (1) Measure the resistance and check the results in accordance with the value(s) in the tables below.
   Standard Resistance

Tester Connection	Condition	Specified Condition
+B (B-2) - +1 (B-3)	MIST	Below 1 Ω
+S (B-1) - +1 (B-3)	OFF	Below 1 Ω
+S (B-1) - +1 (B-3)	INT	Below 1 Ω
+B (B-2) - +1 (B-3)	LO	Below 1 Ω
+B (B-2) - +2 (B-4)	HI	Below 1 Ω

If the result is not as specified, replace the wiper switch.

Standard Resistance

Tester Connection	Condition	Specified Condition
EW (A-2) - WF (A-3)	OFF	10 kΩ or higher
EW (A-2) - WF (A-3)	ON	Below 1 Ω

If the result is not as specified, replace the wiper switch.
If the result is not as specified, replace the wiper switch.

(b) Check the intermittent operation.
(1) Connect the positive (+) voltmeter terminal to terminal 3 (+1) of the B connector and the negative (-) voltmeter terminal to terminal 2 (EW) of the A connector.
(2) Connect the positive (+) battery lead to terminal 2 (+B) of the B connector and the negative (-) battery lead to terminals 2 (EW) of the A connector and 1 (+S) of the B connector.
(3) Turn the wiper switch to the INT position.

WW

(4) Connect the positive (+) battery lead to terminal 1 (+S) of the B connector for 5 seconds.
(5) Connect the negative (-) battery lead to terminal 1 (+S) of the B connector. Operate the intermittent wiper relay and check the voltage between terminals 3 (+1) of the B connector and 2 (EW) of the A connector.
Standard:
Refer to the illustration below.

Connect the negative (-) battery terminal cable to terminal 1 (+S) of the B connector

Voltage between terminals 3 (+1) of the B connector and 2 (EW) of the A connector

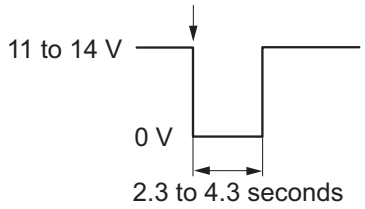

Y

E129662E01

If the result is not as specified, replace the windshield wiper switch.

(c) Check the operation (front washer).
(1) Turn the wiper switch off.
(2) Connect the positive (+) battery lead to terminal 2 (+B) of the B connector and the negative (-) battery lead to terminals 1 (+S) of the B connector and 2 (EW) of the A connector.
(3) Connect the positive (+) voltmeter terminal to terminal 3 (+1) of the B connector and the negative (-) voltmeter terminal to terminal 2 (EW) of the A connector. Turn the washer switch on and off, and check the voltage between terminals 3 (+1) of the B connector and 2 (EW) of the A connector.

Voltage between terminals 3 (+1) of the B connector and 2 (EW) of the A connector

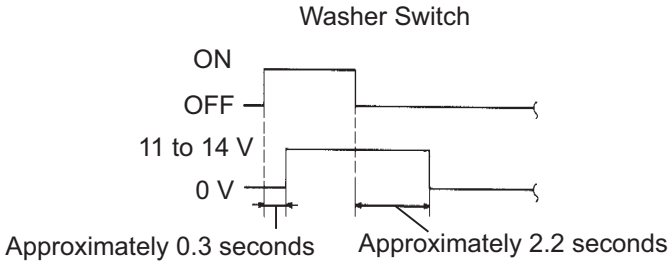

E129663E01

If the result is not as specified, replace the windshield wiper switch.

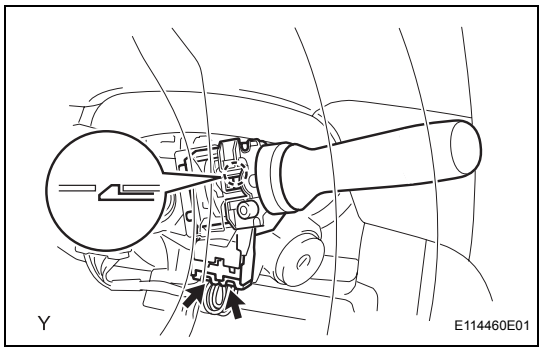

INSTALLATION

1. **INSTALL WIPER SWITCH**
   (a) Engage the claw and install the windshield wiper switch.
   (b) Connect the 2 connectors.
2. **INSTALL STEERING COLUMN COVER (See page SR-22)**
3. **CONNECT CABLE TO NEGATIVE BATTERY TERMINAL**
   Torque: 5.4 N*m (55 kgf*cm, 48 in.*lbf)

WIPER SWITCH (for Hatchback)

COMPONENTS

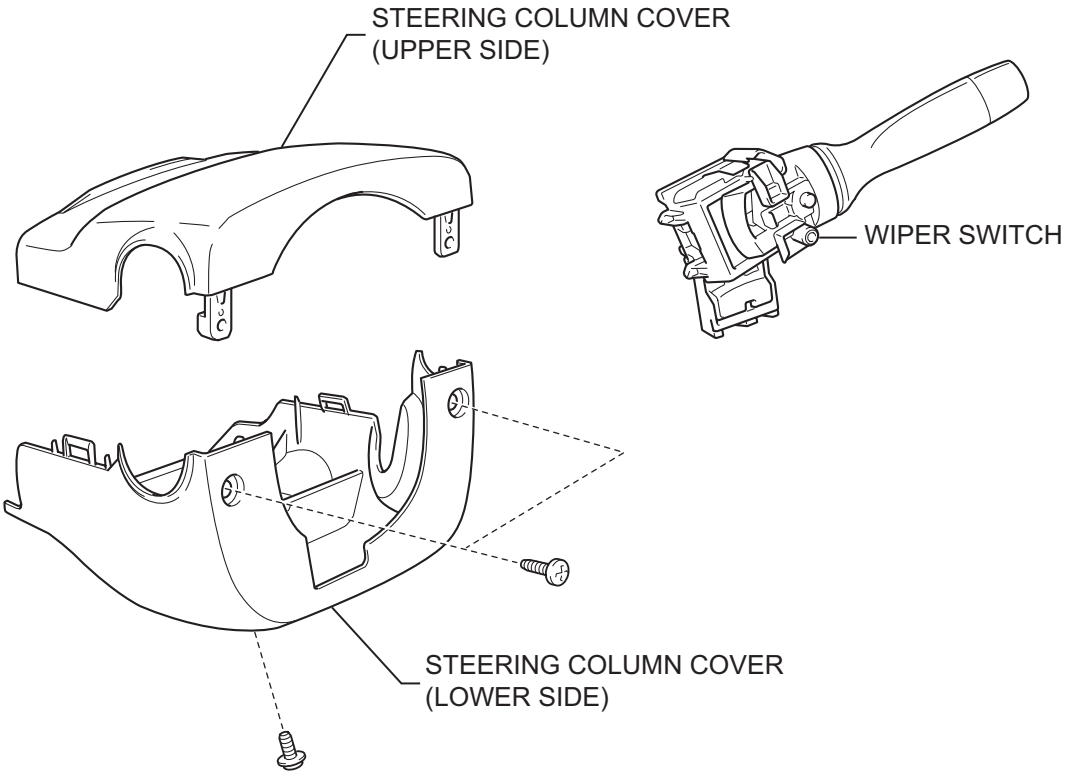

Y

E117224E01

REMOVAL

1. **DISCONNECT CABLE FROM NEGATIVE BATTERY TERMINAL**
2. **REMOVE STEERING COLUMN COVER (See page SR-30)**
3. **REMOVE WIPER SWITCH**
   (a) Disconnect the 2 connectors.
   (b) Using a screwdriver with its tip wrapped in protective tape, disengage the claw and remove the wiper switch.
   NOTICE:
   Do not press the claw too hard, as it may be damaged.

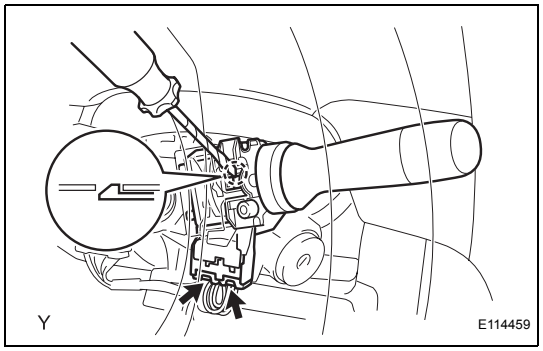

Windshield Wiper Switch Assembly Connector Front View:

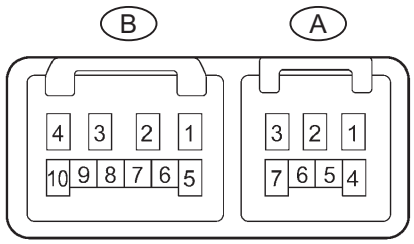

INSPECTION

1. **INSPECT WIPER SWITCH**
   (a) Check the resistance.
   (1) Measure the resistance and check the results in accordance with the value(s) in the tables below.
   Standard Resistance:
   Front Wiper Switch

Tester Connection	Condition	Specified Condition
+B (B-2) - +1 (B-3)	MIST	Below 1 Ω
+S (B-1) - +1 (B-3)	OFF	Below 1 Ω
+S (B-1) - +1 (B-3)	INT	Below 1 Ω
+B (B-2) - +1 (B-3)	LO	Below 1 Ω
+B (B-2) - +2 (B-4)	HI	Below 1 Ω

If the result is not as specified, replace the wiper switch.
Standard Resistance:
Front Washer Switch

Tester Connection	Condition	Specified Condition
EW (A-2) - WF (A-3)	OFF	10 kΩ or higher
EW (A-2) - WF (A-3)	ON	Below 1 Ω

If the result is not as specified, replace the wiper switch.
Standard Resistance:
Rear Wiper and Washer Switch

Tester Connection	Condition	Specified Condition
EW (A-2) - WR (B-5)	WASH (Rear wiper switch OFF)	Below 1 Ω
EW (A-2) - WR (B-5) EW (A-2) - +1R (A-7)	OFF	10 kΩ or higher
EW (A-2) - +1R (A-7)	ON	Below 1 Ω
EW (A-2) - WR (B-5) EW (A-2) - +1R (A-7) +1R (A-7) - WR (B-5)	WASH (Rear wiper switch ON)	Below 1 Ω

WW

If the result is not as specified, replace the wiper switch.

(b) Check the intermittent operation.
(1) Connect the positive (+) voltmeter terminal to terminal 3 (+1) of the B connector and the negative (-) voltmeter terminal to terminal 2 (EW) of the A connector.
(2) Connect the positive (+) battery lead to terminal 2 (+B) of the B connector and the negative (-) battery lead to terminals 2 (EW) of the A connector and 1 (+S) of the B connector.
(3) Turn the wiper switch to the INT position.
(4) Connect the positive (+) battery lead to terminal 1 (+S) of the B connector for 5 seconds.
(5) Connect the negative (-) battery lead to terminal 1 (+S) of the B connector. Operate the intermittent wiper relay and check the voltage between terminals 3 (+1) of the B connector and 2 (EW) of the A connector.
Standard:
Refer to the illustration below.

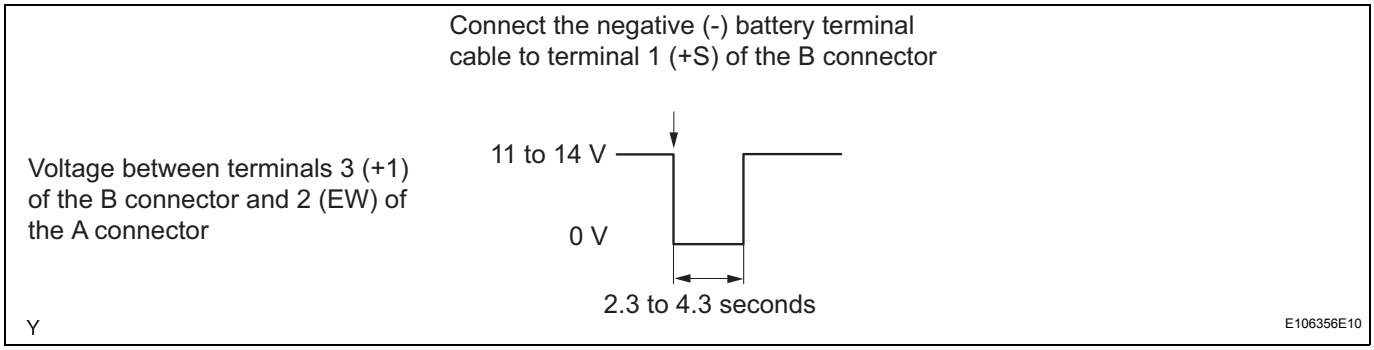

If the result is not as specified, replace the windshield wiper switch.

(c) Check the operation (front washer).
(1) Turn the wiper switch off.
(2) Connect the positive (+) battery lead to terminal 2 (+B) of the B connector and the negative (-) battery lead to terminals 1 (+S) of the B connector and 2 (EW) of the A connector.

(3) Connect the positive (+) voltmeter terminal to terminal 3 (+1) of the B connector and the negative (-) voltmeter terminal to terminal 2 (EW) of the A connector. Turn the washer switch on and off, and check the voltage between terminals 3 (+1) of the B connector and 2 (EW) of the A connector.

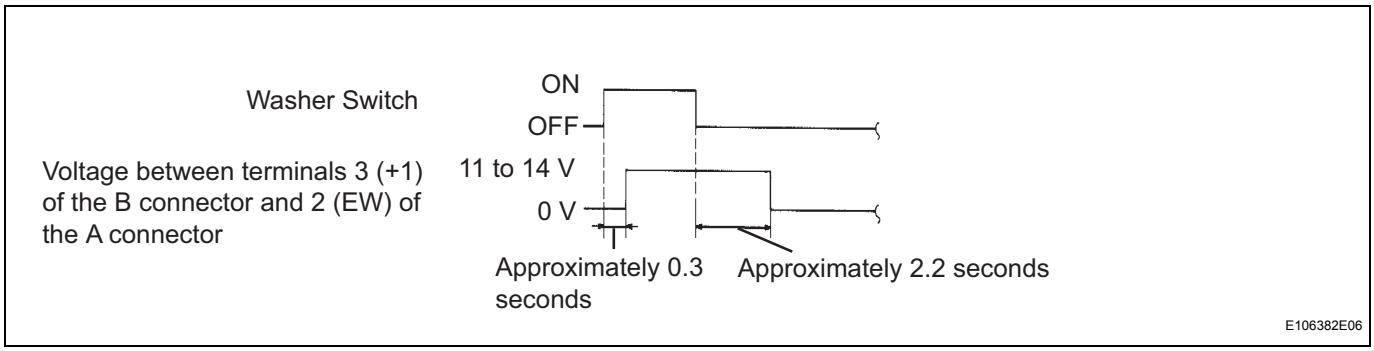

If the result is not as specified, replace the windshield wiper switch.

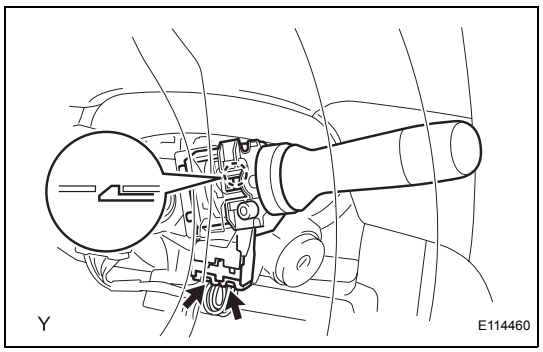

INSTALLATION

1. **INSTALL WIPER SWITCH**
   (a) Engage the claw and install the windshield wiper switch.
   (b) Connect the 2 connectors.
2. **INSTALL STEERING COLUMN COVER (See page SR-40)**
3. **CONNECT CABLE TO NEGATIVE BATTERY TERMINAL**
   Torque: 5.4 N*m (55 kgf*cm, 48 in.*lbf)

WASHER MOTOR (for Sedan)

COMPONENTS

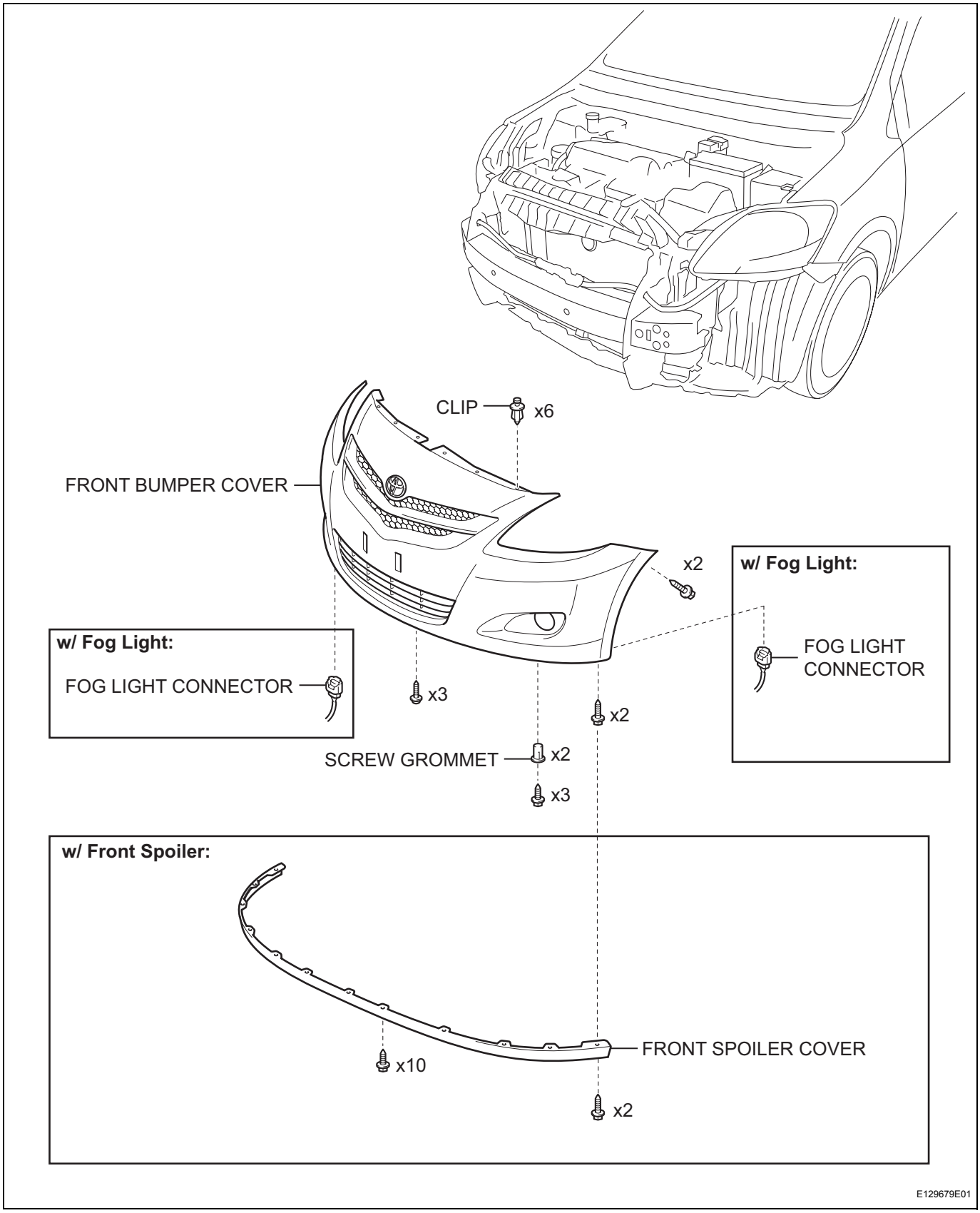

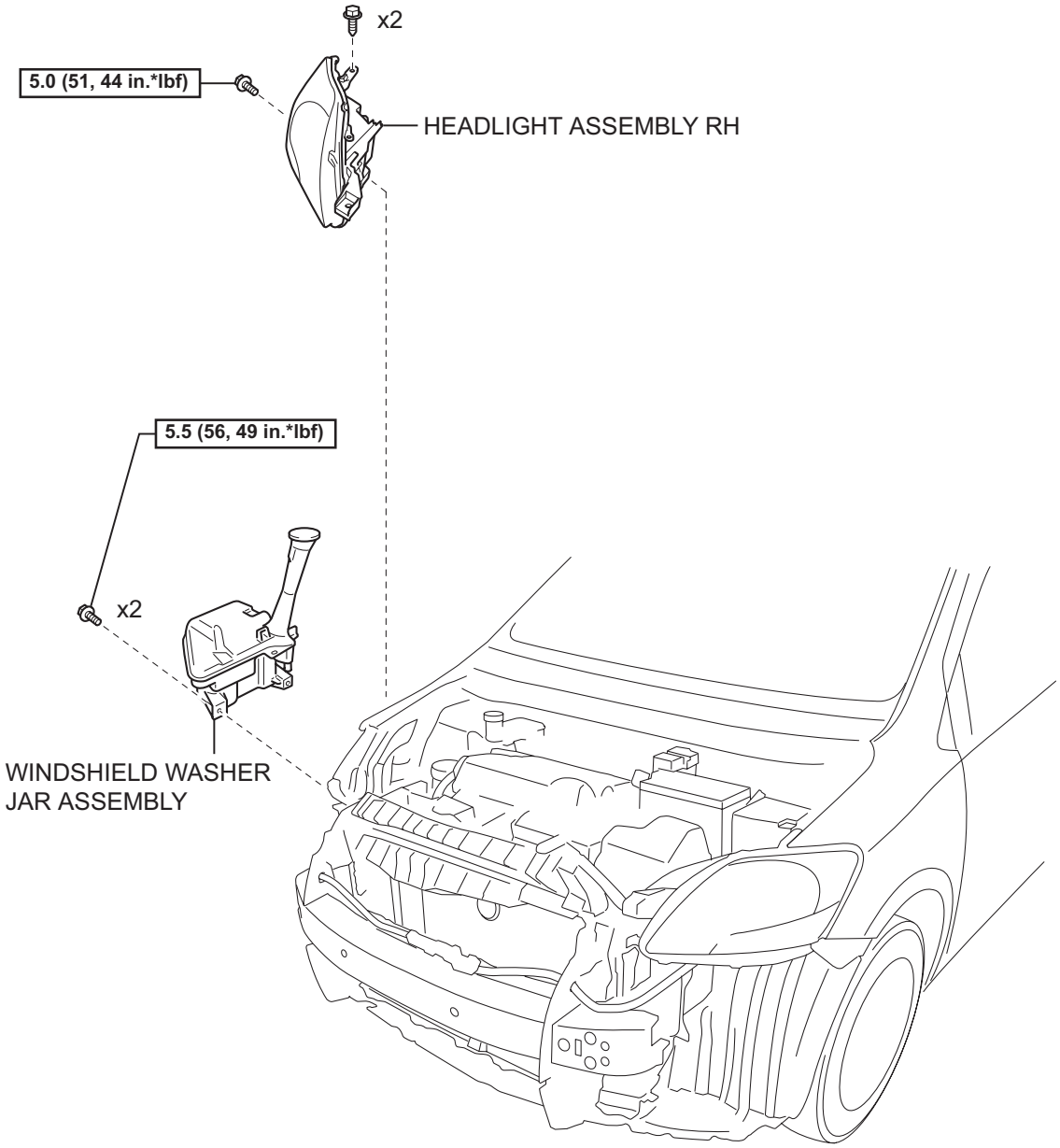

N*m (kgf*cm, ft*lbf) : Specified torque

Y

E129620E01

w/o Washer Level Warning Switch:

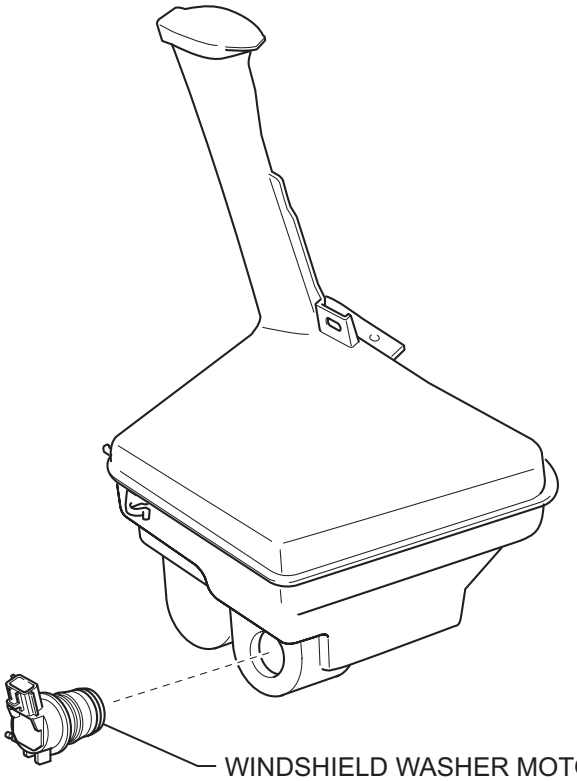

w/ Washer Level Warning Switch:

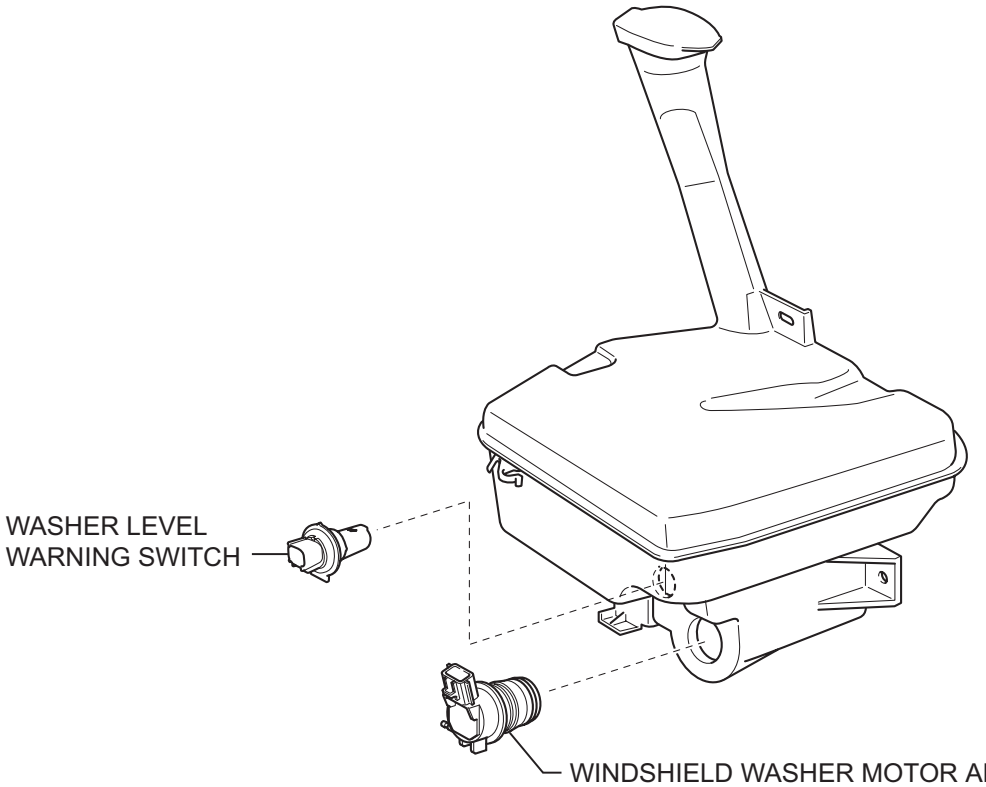

Y

E129621E01

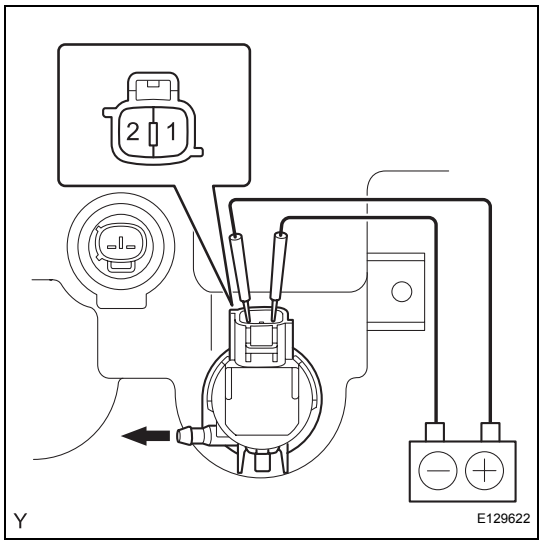

ON-VEHICLE INSPECTION

1. INSPECT WINDSHIELD WASHER MOTOR AND PUMP ASSEMBLY

(a) Check the operation of the windshield washer motor and pump.

(1) Fill the washer jar with washer fluid.

HINT:

The operation should be performed with the windshield washer motor and pump installed on the washer jar.

(2) Connect the positive (+) battery lead to terminal 1 of the windshield washer motor and pump, and the negative (-) battery lead to terminal 2. Check that washer fluid flows from the washer jar.

Standard:

Washer fluid flows from the washer jar.

If the result is not as specified, replace the windshield washer motor and pump.

REMOVAL

1. **DISCONNECT CABLE FROM NEGATIVE BATTERY TERMINAL**
2. **REMOVE FRONT SPOILER COVER (w/ Front Spoiler) (See page ET-6)**
3. **REMOVE FRONT BUMPER COVER (See page ET-6)**
4. **REMOVE HEADLIGHT ASSEMBLY RH (See page LI-86)**
5. **DRAIN WASHER FLUID**
   (a) Disconnect the washer hose from the windshield washer motor and pump, and drain the washer fluid.
6. **REMOVE WINDSHIELD WASHER JAR ASSEMBLY**
   (a) w/ Washer Level Warning Switch
      (1) Disconnect the 2 harness clamps.
      (2) Disconnect the 2 connectors.
      (3) Remove the 2 bolts.
      (4) Remove the windshield washer jar.
   (b) w/o Washer Level Warning Switch
      (1) Disconnect the 2 harness clamps.
      (2) Disconnect the connector.
      (3) Remove the 2 bolts.
      (4) Remove the windshield washer jar.

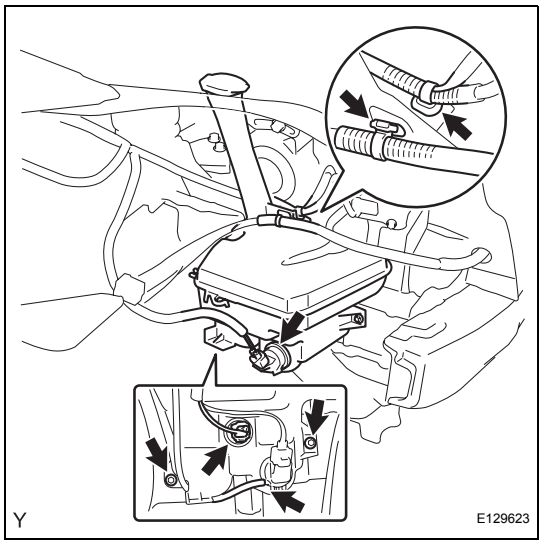

7. **REMOVE WINDSHIELD WASHER MOTOR AND PUMP ASSEMBLY**
   (a) Pull the washer motor and pump out of the packing of the washer jar.

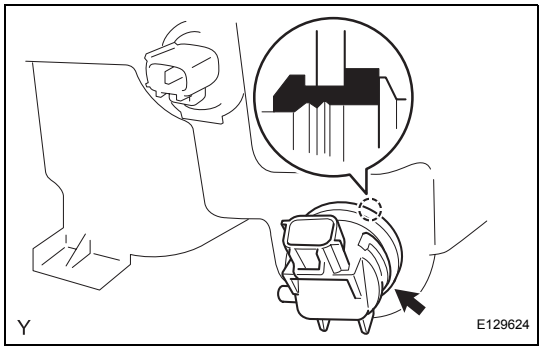

INSTALLATION

1. **INSTALL WINDSHIELD WASHER MOTOR AND PUMP ASSEMBLY**
   (a) Install the windshield washer motor and pump onto the packing of the washer jar.

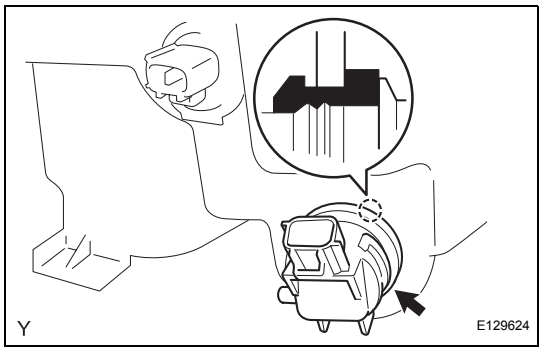

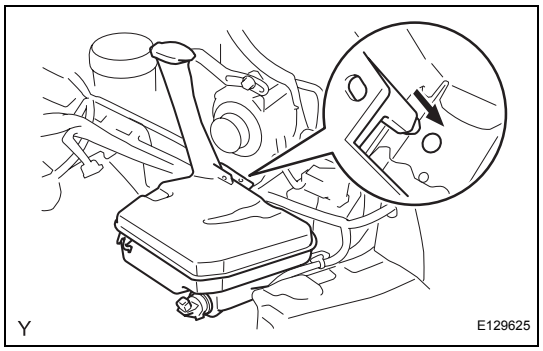

2. INSTALL WINDSHIELD WASHER JAR ASSEMBLY

(a) Install the windshield washer jar.

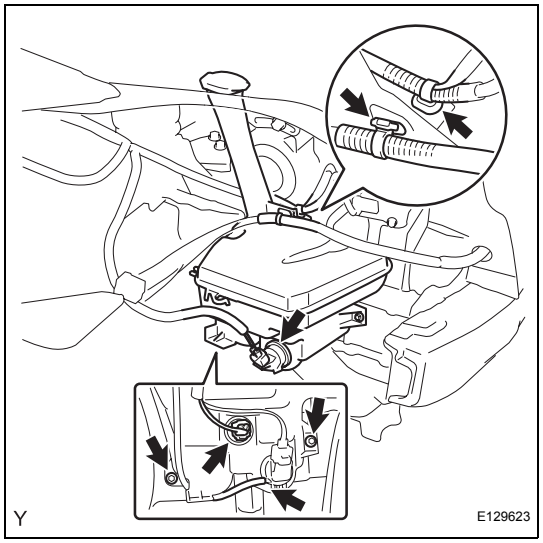

(b) w/ Washer Level Warning Switch
  (1) Install the 2 bolts.
    Torque: 5.5 N*m (56 kgf*cm, 49 in.*lbf)
  (2) Connect the 2 connectors.
  (3) Connect the 2 harness clamps.

(c) w/o Washer level warning switch
  (1) Install the 2 bolts.
    Torque: 5.5 N*m (56 kgf*cm, 49 in.*lbf)
  (2) Connect the connector.
  (3) Connect the 2 harness clamps.

3. FILL UP WASHER JAR AND PUMP ASSEMBLY WITH WASHER FLUID

(a) Connect the washer hose to the washer motor and pump, and fill the washer jar with washer fluid.

4. INSTALL HEADLIGHT ASSEMBLY RH (See page LI-92)

5. INSTALL FRONT BUMPER COVER (See page ET-16)

6. INSTALL FRONT SPOILER COVER (w/ Front Spoiler) (See page ET-19)

7. CONNECT CABLE TO NEGATIVE BATTERY TERMINAL
Torque: 5.4 N*m (55 kgf*cm, 48 in.*lbf)

WASHER MOTOR (for Hatchback)

COMPONENTS

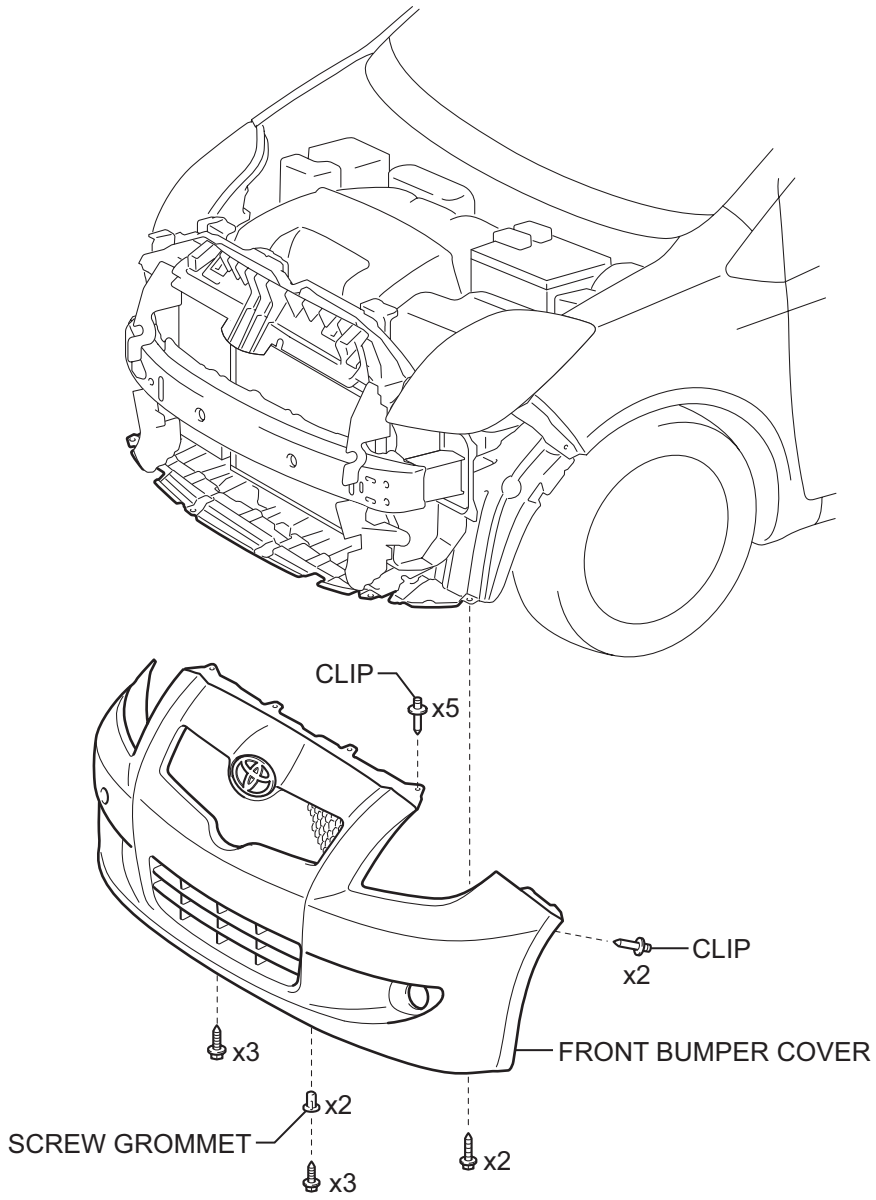

T

E117642E02

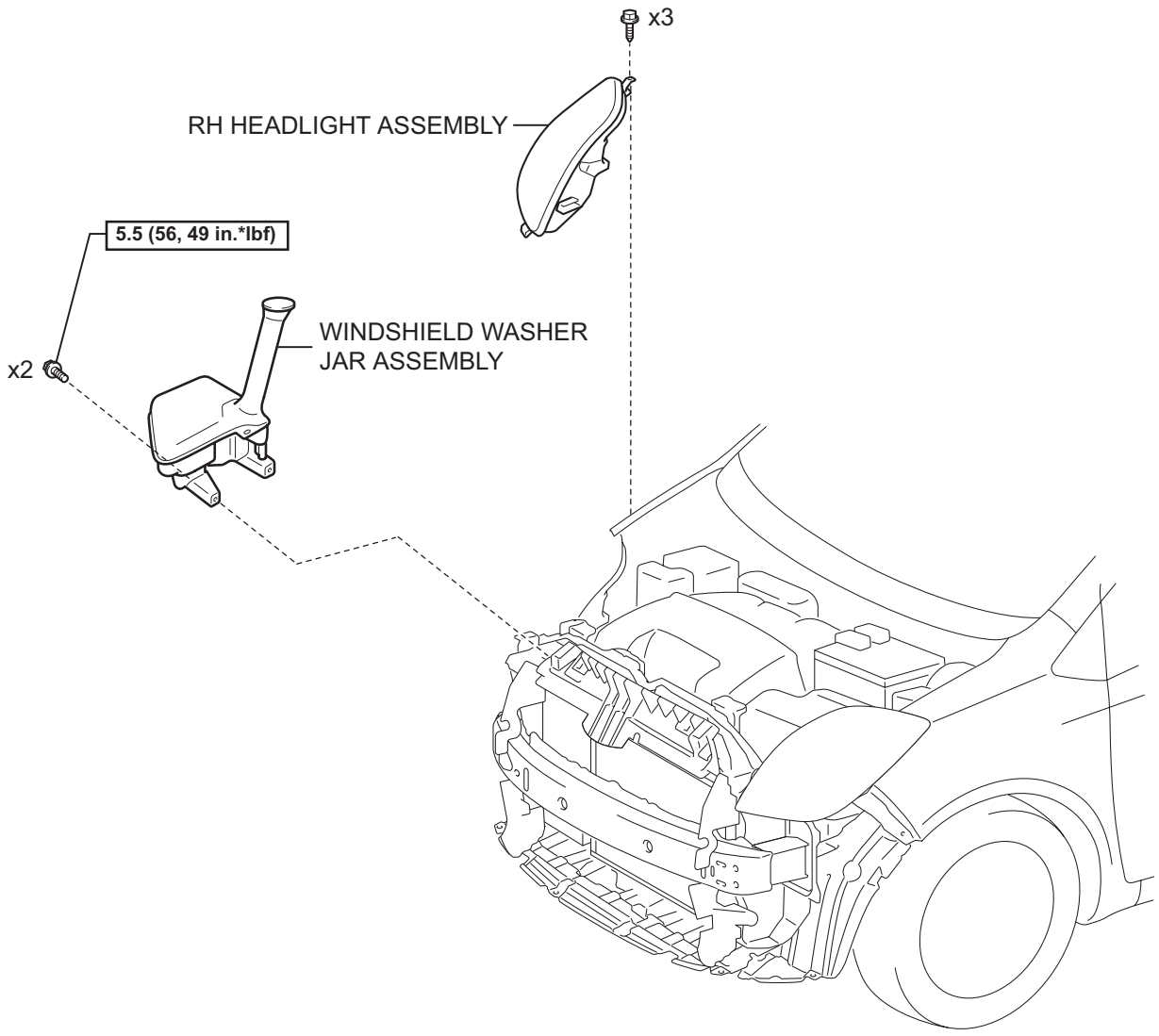

N*m (kgf*cm, ft*lbf) : Specified torque

T

E117643E02

WW

WW

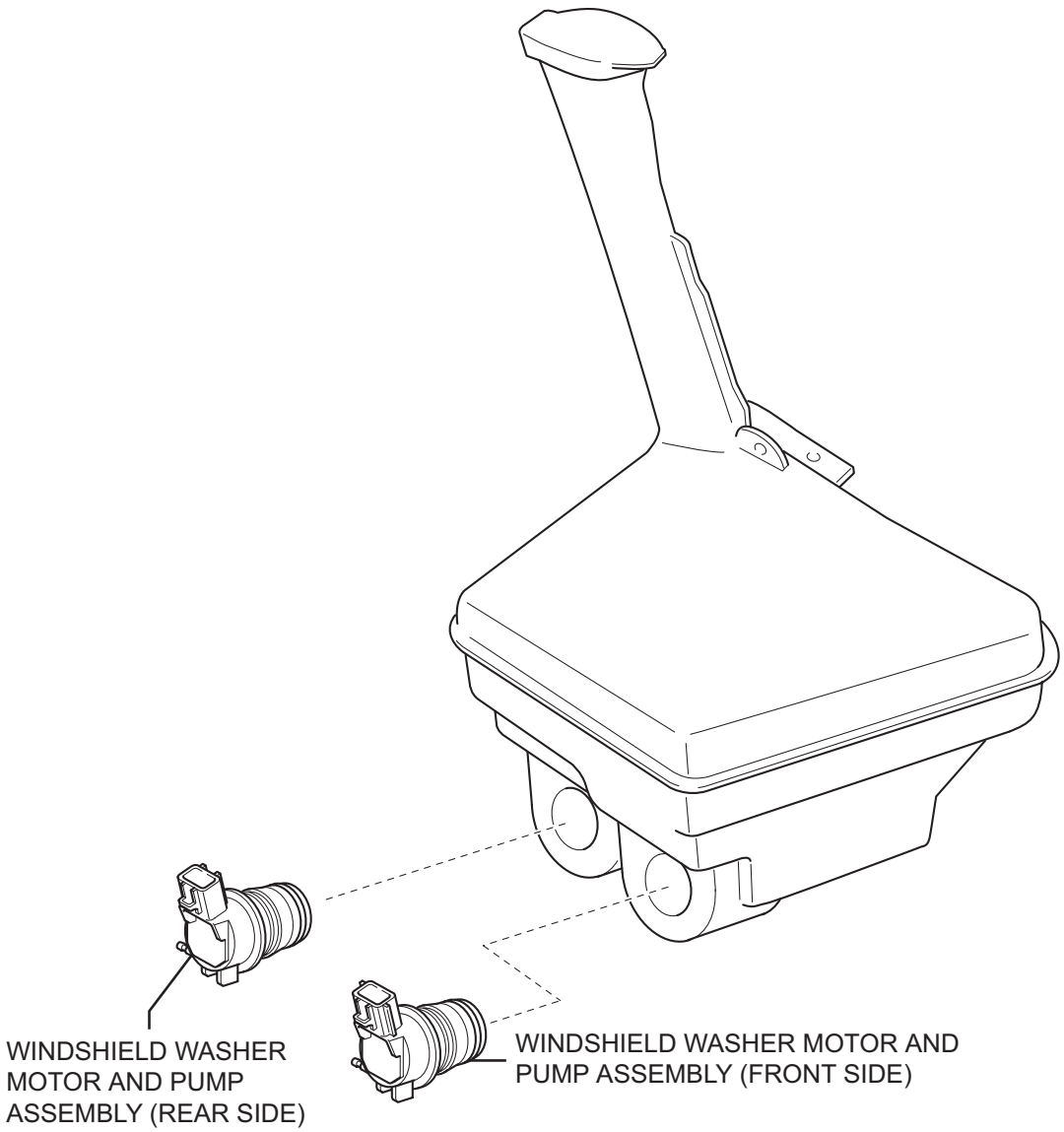

Y

E114481E01

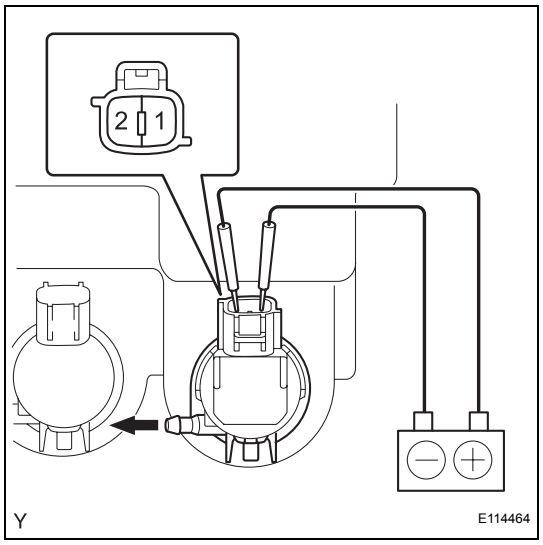

ON-VEHICLE INSPECTION

1. INSPECT WINDSHIELD WASHER MOTOR AND PUMP ASSEMBLY (for Front Side)

(a) Check the operation of the windshield washer motor and pump front side.

(1) Fill the washer jar with washer fluid.

HINT:

The operation should be performed with the windshield washer motor and pump installed on the washer jar.

(2) Connect the positive (+) battery lead to terminal 1 of the windshield washer motor and pump, and the negative (-) battery lead to terminal 2. Check that washer fluid flows from the washer jar.

Standard:

Washer fluid flows from the washer jar.

If the result is not as specified, replace the windshield washer motor and pump.

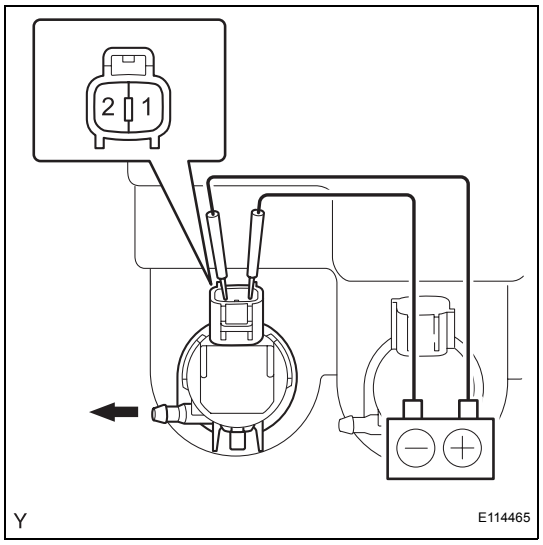

2. INSPECT REAR WASHER MOTOR AND PUMP ASSEMBLY (for Rear Side)

(a) Check the operation of the windshield washer motor and pump rear side.

(1) Fill the washer jar with washer fluid.

HINT:

The operation should be performed with the windshield washer motor and pump installed onto the washer jar.

(2) Connect the positive (+) battery lead to terminal 1 of the windshield washer motor and pump, and the negative (-) battery lead to terminal 2. Check that washer fluid flows from the washer jar.

Standard:

Washer fluid flows from the washer jar.

If the result is not as specified, replace the rear washer motor and pump.

REMOVAL

1. **DISCONNECT CABLE FROM NEGATIVE BATTERY TERMINAL**
2. **REMOVE FRONT BUMPER COVER (See page ET-24)**
3. **REMOVE RH HEADLIGHT ASSEMBLY (See page LI-97)**
4. **DRAIN WASHER FLUID**
   (a) Disconnect the 2 washer hoses from the windshield washer motor and pump, and drain the washer fluid.
5. **REMOVE WINDSHIELD WASHER JAR ASSEMBLY**
   (a) Disconnect the 2 harness clamps.
   (b) Disconnect the 2 connectors.
   (c) Remove the 2 bolts.
   (d) Remove the windshield washer jar.

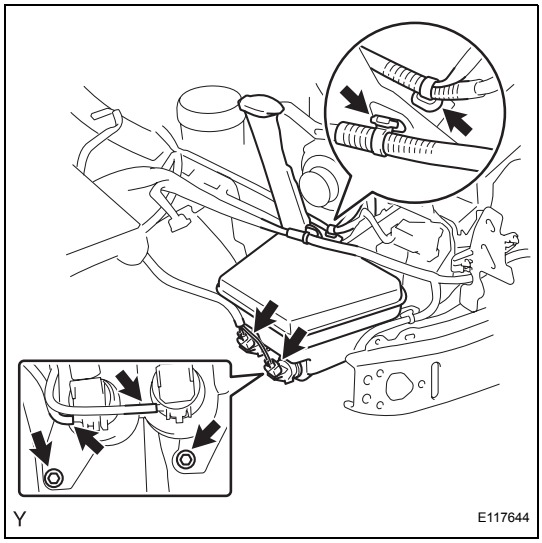

6. **REMOVE WINDSHIELD WASHER MOTOR AND PUMP ASSEMBLY**
   (a) Pull the washer motor and pump out of the packing of the washer jar.

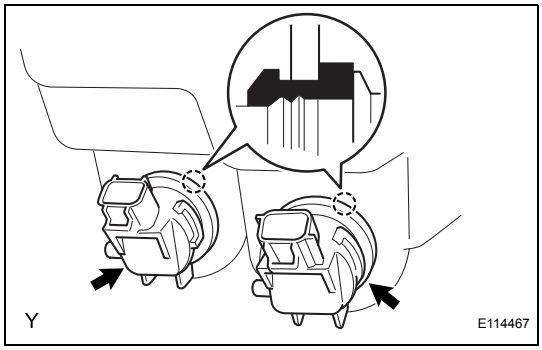

INSTALLATION

1. **INSTALL WINDSHIELD WASHER MOTOR AND PUMP ASSEMBLY**
   (a) Install the windshield washer motor and pump onto the packing of the washer jar.

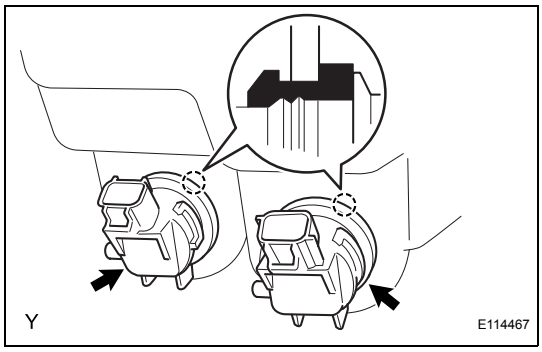

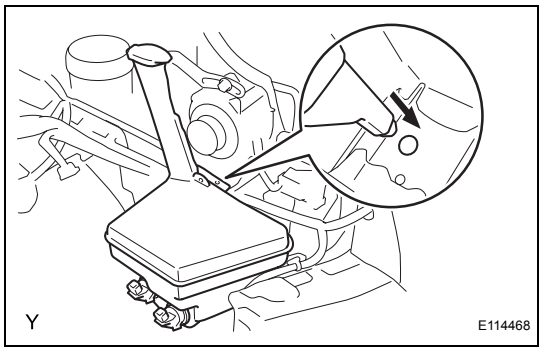

2. INSTALL WINDSHIELD WASHER JAR ASSEMBLY

(a) Install the windshield washer jar.

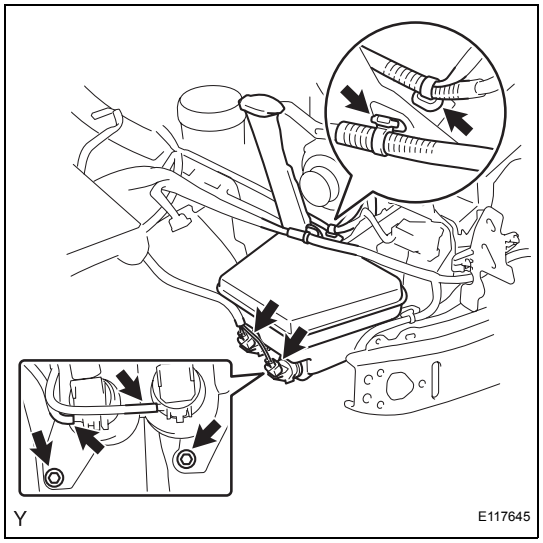

(b) Install the 2 bolts.
Torque: 5.5 N*m (56 kgf*cm, 49 in.*lbf)

(c) Connect the 2 connectors.

(d) Connect the 2 harness clamps.

3. FILL UP WASHER JAR AND PUMP ASSEMBLY WITH WASHER FLUID

(a) Connect the washer hose to the washer motor and pump, and fill the washer jar with washer fluid.

4. INSTALL RH HEADLIGHT ASSEMBLY (See page LI-104)

5. INSTALL FRONT BUMPER COVER (See page ET-33)

6. CONNECT CABLE TO NEGATIVE BATTERY TERMINAL
Torque: 5.4 N*m (55 kgf*cm, 48 in.*lbf)

WW

WASHER NOZZLE (for Sedan)

ON-VEHICLE INSPECTION

1. INSPECT WASHER NOZZLE

(a) Start the engine.

(b) Check where the washer fluid hits the windshield.

Standard:

Washer fluid hits the windshield in the areas shown in the illustration.

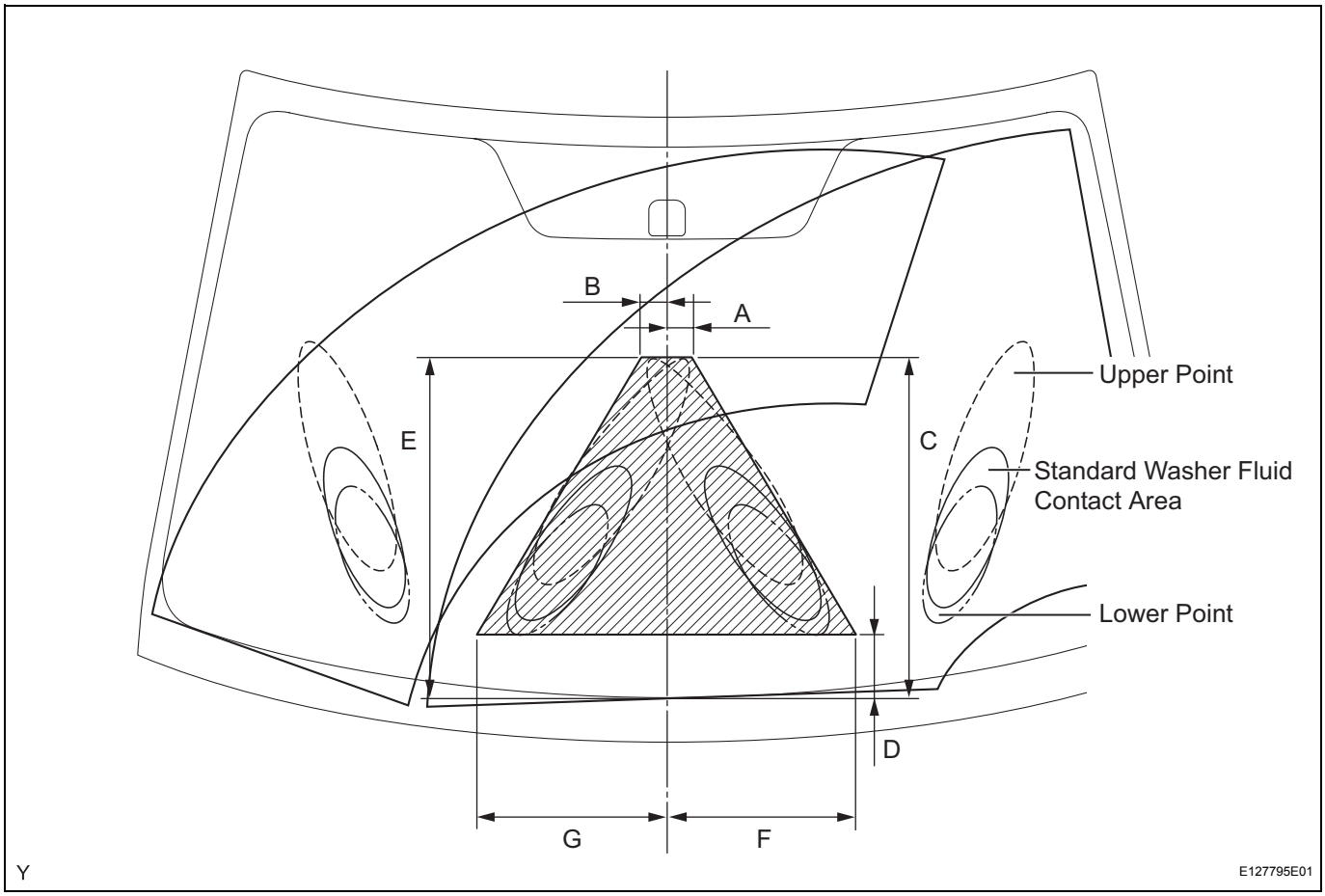

Specification

Area	Measurement
A	29.2 mm (1.15 in.)
B	26.6 mm (1.05 in.)
C	427.8 mm (16.84 in.)
D	79.9 mm (3.15 in.)
E	426.2 mm (16.78 in.)
F	234.8 mm (9.24 in.)
G	234.5 mm (9.23 in.)

ADJUSTMENT

1. **REMOVE FRONT WIPER ARM HEAD CAP (See page WW-9)**
2. **REMOVE FRONT WIPER ARM AND BLADE ASSEMBLY LH (See page WW-9)**
3. **REMOVE FRONT WIPER ARM AND BLADE ASSEMBLY RH (See page WW-9)**
4. **REMOVE COWL SIDE VENTILATOR SUB-ASSEMBLY LH (See page WW-10)**
5. **REMOVE COWL SIDE VENTILATOR SUB-ASSEMBLY RH (See page WW-10)**
6. **REMOVE COWL TOP VENTILATOR LOUVER SUB-ASSEMBLY (See page WW-10)**
7. **REMOVE WASHER NOZZLE**
   (a) Disconnect the washer hose.
   (b) Disengage the 2 claws and remove the front washer nozzle.
   NOTICE:
   Do not reuse the washer nozzle.

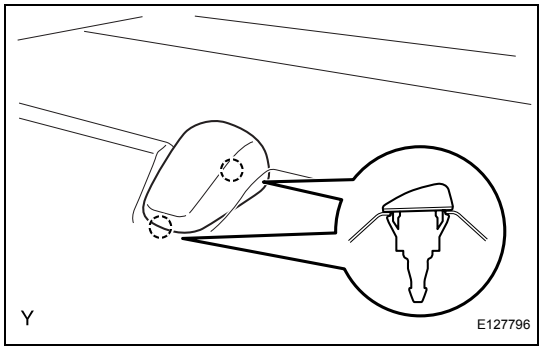

8. **ADJUST WASHER NOZZLE**
   (a) Select a washer nozzle from the table so as to make the washer fluid hit within the specified area.
   Available Washer Nozzle

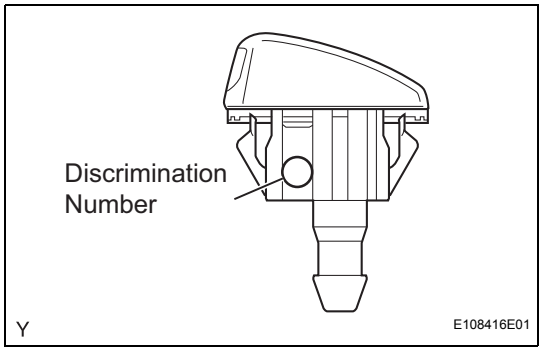

Part Number	Discrimination Number	Washer Fluid Injection Angle
85381-52250	12	0°
85381-52280	13	+ 1°
85381-52290	11	- 1°
85381-52300	14	+ 2°
85381-52310	10	- 2°

9. **INSTALL COWL TOP VENTILATOR LOUVER SUB-ASSEMBLY (See page WW-12)**
10. **INSTALL COWL SIDE VENTILATOR SUB-ASSEMBLY LH (See page WW-13)**
11. **INSTALL COWL SIDE VENTILATOR SUB-ASSEMBLY RH (See page WW-13)**
12. **INSTALL FRONT WIPER ARM AND BLADE ASSEMBLY LH (See page WW-13)**
13. **INSTALL FRONT WIPER ARM AND BLADE ASSEMBLY RH (See page WW-14)**
14. **INSTALL FRONT WIPER ARM HEAD CAP (See page WW-15)**

WASHER NOZZLE (for Hatchback)

ON-VEHICLE INSPECTION

1. INSPECT WASHER NOZZLE

(a) Start the engine.

(b) Check where the washer fluid hits the windshield.

Standard:

Washer fluid hits the windshield in the areas shown in the illustration.

(1) Front:

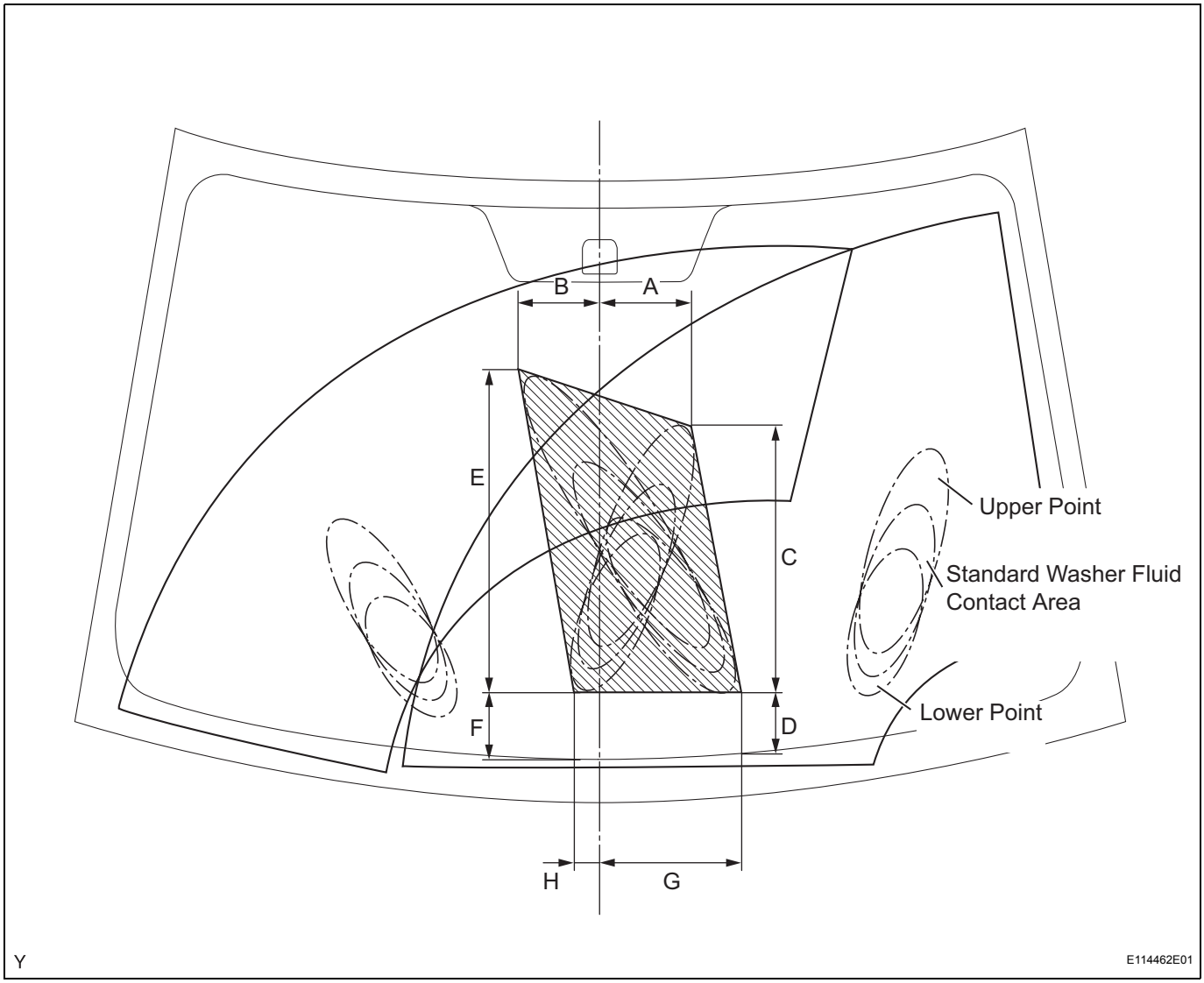

Specification

Area	Measurement
A	115 mm (4.53 in.)
B	100 mm (3.94 in.)
C	375 mm (14.76 in.)
D	85 mm (3.35 in.)
E	454 mm (17.87 in.)
F	88 mm (3.46 in.)
G	178 mm (7.01 in.)

Area	Measurement
H	31 mm (1.22 in.)

(2) Rear:

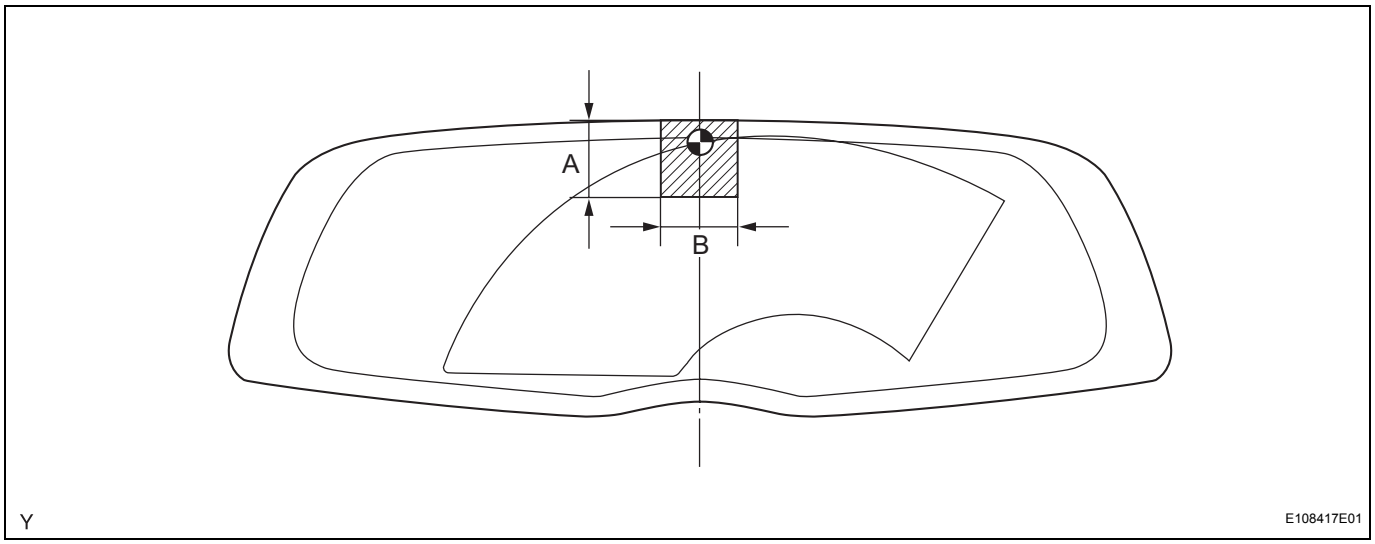

Specification

Area	Measurement
A	100 mm (3.94 in.)
B	100 mm (3.94 in.)

ADJUSTMENT

1. **REMOVE FRONT WIPER ARM HEAD CAP (See page WW-17)**
2. **REMOVE FRONT WIPER ARM AND BLADE ASSEMBLY LH (See page WW-17)**
3. **REMOVE FRONT WIPER ARM AND BLADE ASSEMBLY RH (See page WW-17)**
4. **REMOVE HOOD TO COWL TOP SEAL (See page WW-18)**
5. **REMOVE COWL TOP VENTILATOR LOUVER SUB-ASSEMBLY (See page WW-18)**
6. **REMOVE COWL TOP VENTILATOR LOUVER LH (See page WW-18)**

WW

7. **REMOVE WASHER NOZZLE**
   (a) Disconnect the washer hose.
   (b) Disengage the 2 claws and remove the front washer nozzle.
   NOTICE:
   Do not reuse the washer nozzle.

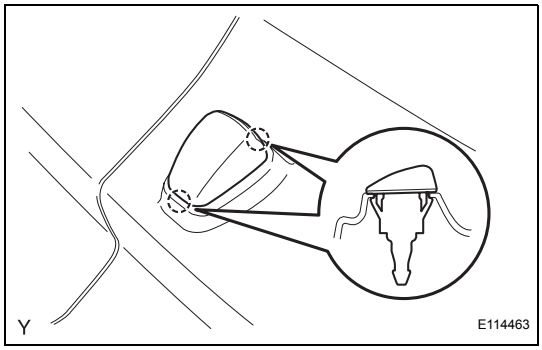

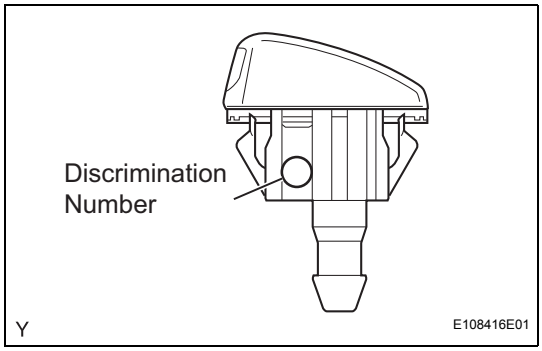

8. **ADJUST WASHER NOZZLE**
   (a) Select a washer nozzle from the table so as to make the washer fluid hit within the specified area.
   Available Washer Nozzle

Part Number	Discrimination Number	Washer Fluid Injection Angle
85381-52250	12	0°
85381-52280	13	+ 1°
85381-52290	11	- 1°
85381-52300	14	+ 2°
85381-52310	10	- 2°

9. **INSTALL COWL TOP VENTILATOR LOUVER LH (See page WW-21)**
10. **INSTALL COWL TOP VENTILATOR LOUVER SUB-ASSEMBLY (See page WW-21)**
11. **INSTALL HOOD TO COWL TOP SEAL (See page WW-22)**
12. **INSTALL FRONT WIPER ARM AND BLADE ASSEMBLY LH (See page WW-22)**
13. **INSTALL FRONT WIPER ARM AND BLADE ASSEMBLY RH (See page WW-23)**
14. **INSTALL FRONT WIPER ARM HEAD CAP (See page WW-23)**

WASHER LEVEL WARNING SWITCH (for Sedan)

COMPONENTS

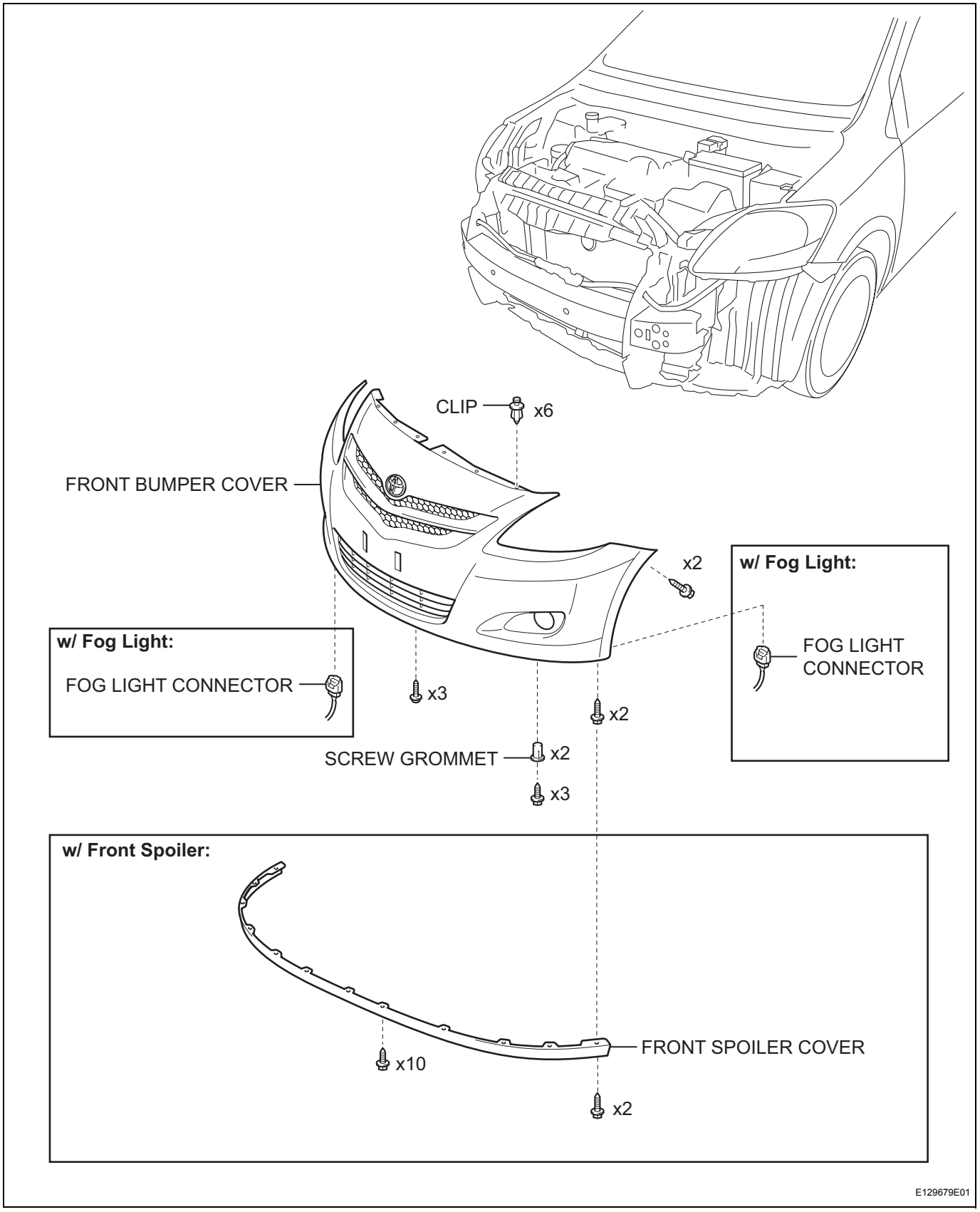

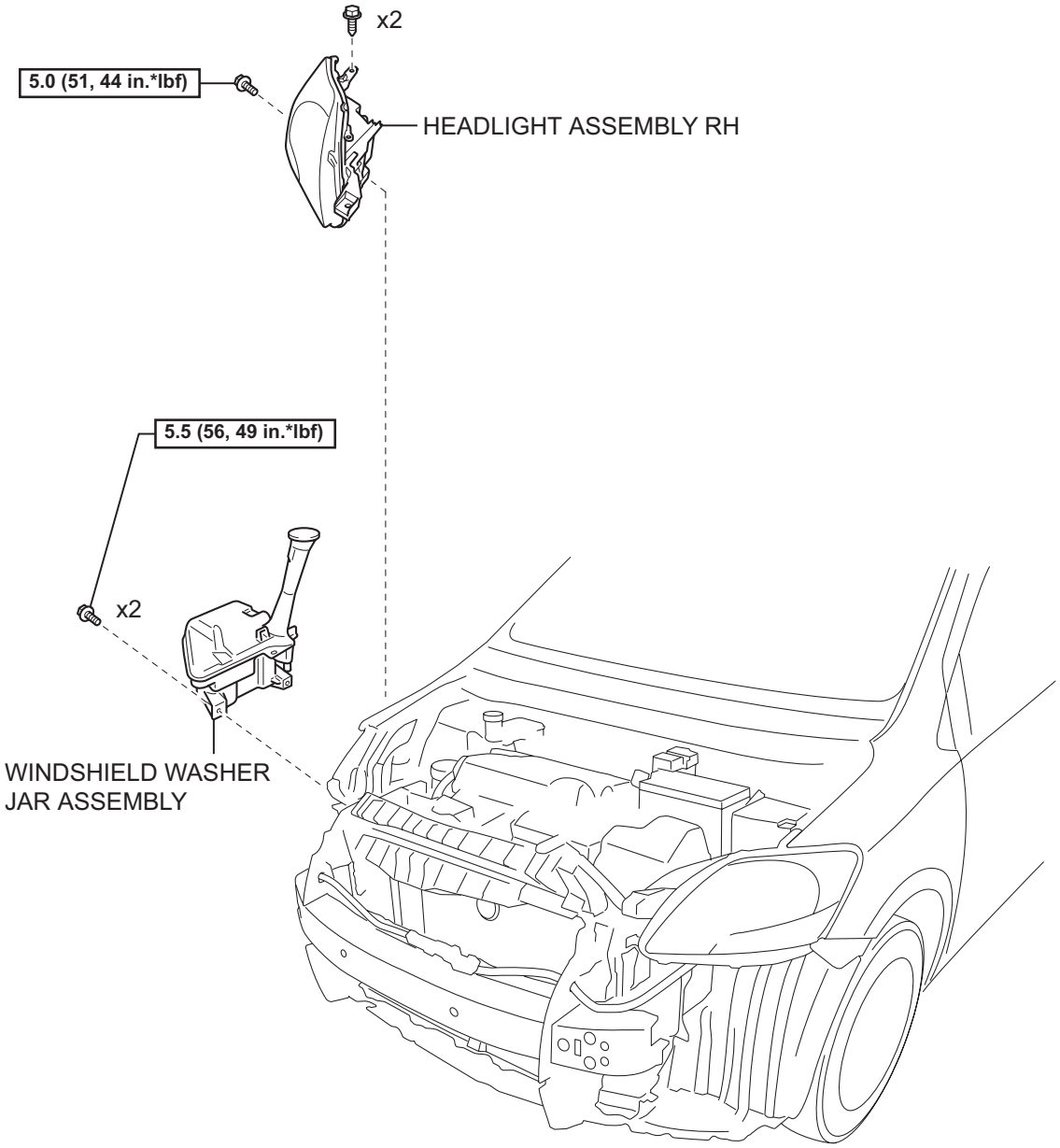

N*m (kgf*cm, ft*lbf) : Specified torque

Y

E129620E01

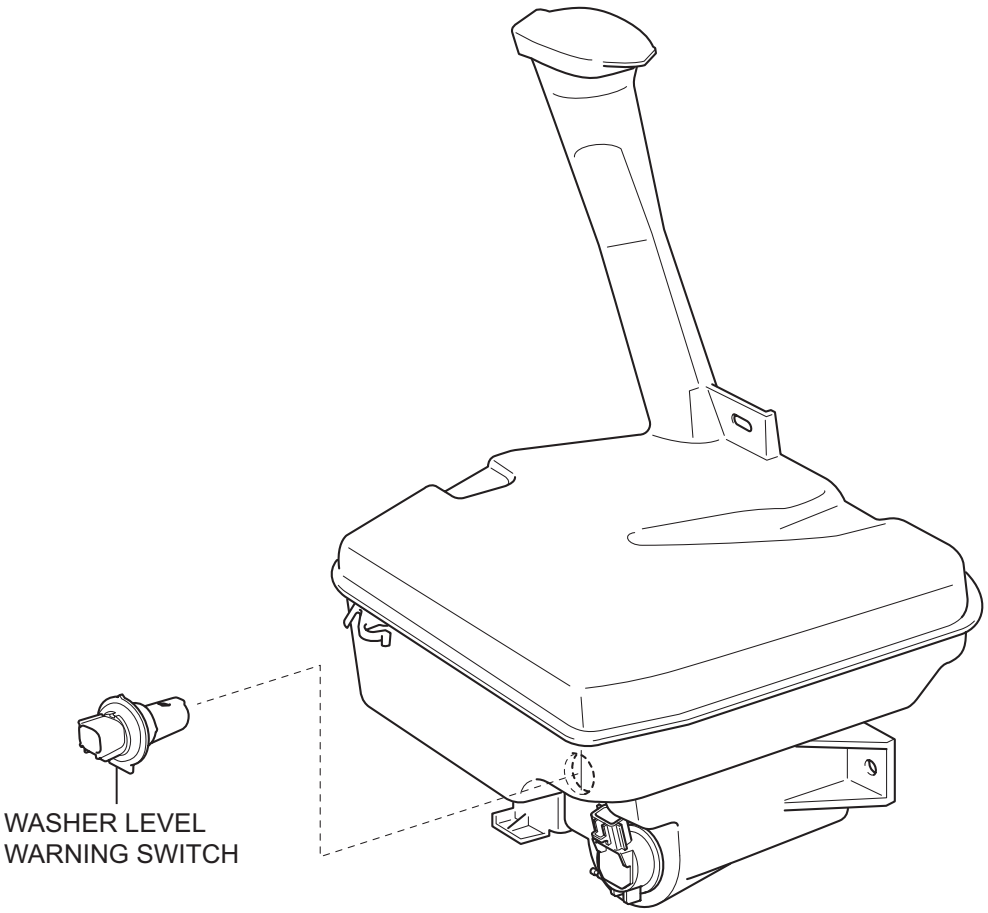

Y

E129684E01

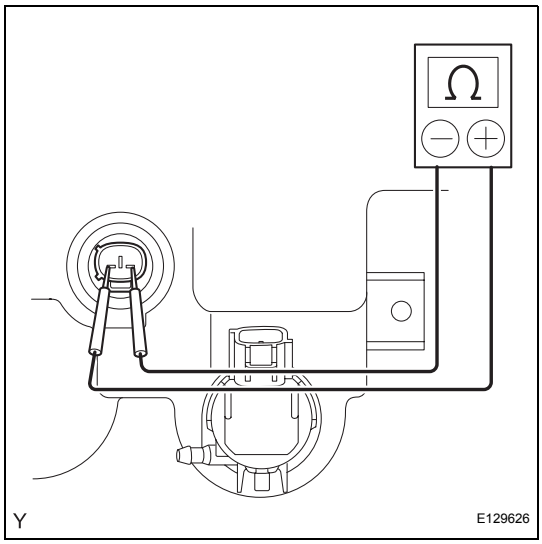

ON-VEHICLE INSPECTION

1. INSPECT WASHER LEVEL WARNING SWITCH

(a) Check the operation of the washer level warning switch.

(1) Fill the washer jar with washer fluid.

HINT:

The operation should be performed with the washer level warning switch installed on the washer jar.

(2) Connect the positive (+) battery lead to terminal 1 of the washer level warning switch, and the negative (-) battery lead to terminal 2.

(3) Check the resistance.

HINT:

Pull out the washer hose connected to the washer motor. Perform the inspection while draining the washer fluid off.

Standard Resistance

Amount of remaining washer fluid	Specified Condition
600 to 800 ml or more	10 kΩ or higher
600 to 800 ml or less	Below 1Ω

If the result is not as specified, replace the washer jar .

WW

REMOVAL

1. **DISCONNECT CABLE FROM NEGATIVE BATTERY TERMINAL**
2. **REMOVE FRONT SPOILER COVER (w/ Front Spoiler) (See page ET-6)**
3. **REMOVE FRONT BUMPER COVER (See page ET-6)**
4. **REMOVE HEADLIGHT ASSEMBLY RH (See page LI-86)**
5. **DRAIN WASHER FLUID**
   (a) Disconnect the 2 washer hoses from the windshield washer motor and pump, and drain the washer fluid.
6. **REMOVE WINDSHIELD WASHER JAR ASSEMBLY**
   (a) Disconnect the 2 harness clamps.
   (b) Disconnect the 2 connectors.
   (c) Remove the 2 bolts.
   (d) Remove the windshield washer jar.

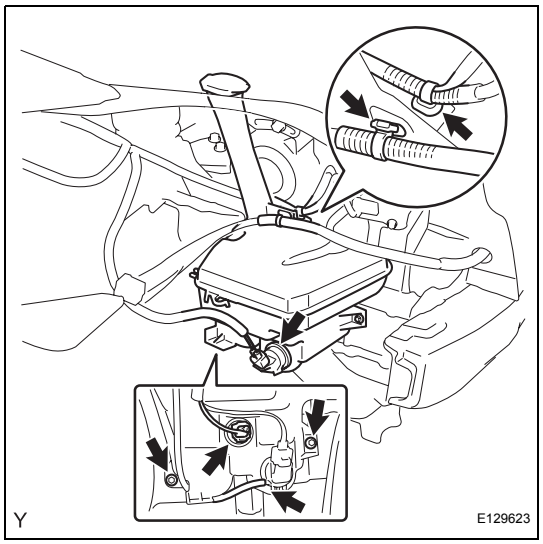

7. **REMOVE WASHER LEVEL WARNING SWITCH**
   (a) Pull the washer motor and pump out of the packing of the washer jar.

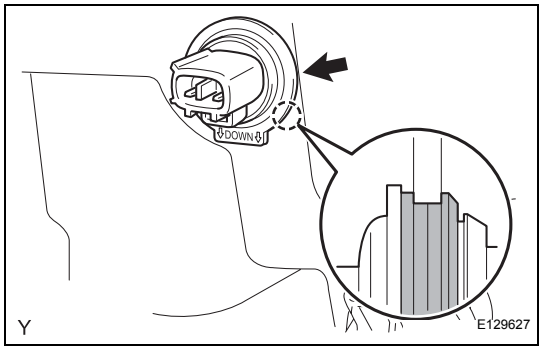

INSTALLATION

1. **INSTALL WASHER LEVEL WARNING SWITCH**
   (a) Install the washer level warning switch onto the packing of the washer jar.

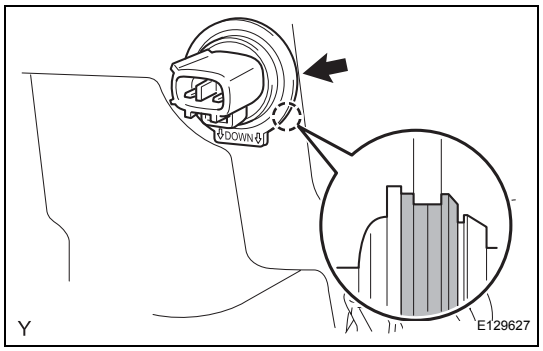

WW

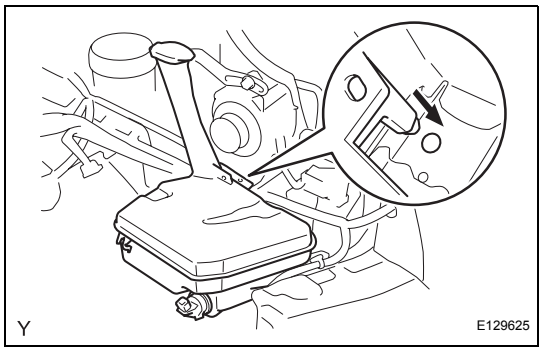

2. INSTALL WINDSHIELD WASHER JAR ASSEMBLY

(a) Install the windshield washer jar.

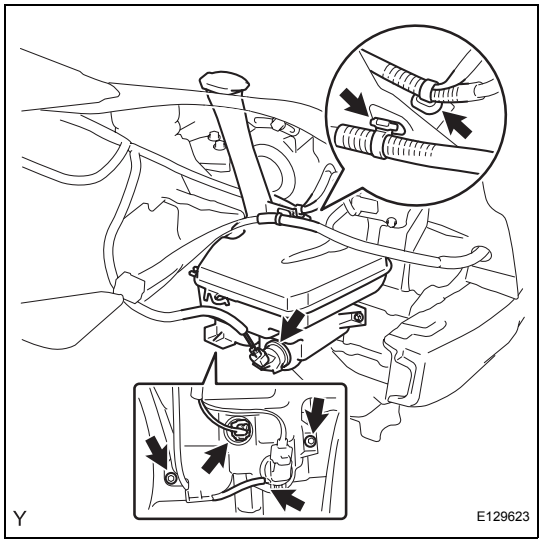

(b) Install the 2 bolts.
Torque: 5.5 N*m (56 kgf*cm, 49 in.*lbf)

(c) Connect the 2 connectors.

(d) Connect the 2 harness clamps.

3. FILL UP WASHER JAR AND PUMP ASSEMBLY WITH WASHER FLUID

(a) Connect the washer hose to the washer motor and pump, and fill the washer jar with washer fluid.

4. INSTALL HEADLIGHT ASSEMBLY RH (See page LI-92)

5. INSTALL FRONT BUMPER COVER (See page ET-16)

6. INSTALL FRONT SPOILER COVER (w/ Front Spoiler) (See page ET-19)

7. CONNECT CABLE TO NEGATIVE BATTERY TERMINAL
Torque: 5.4 N*m (55 kgf*cm, 48 in.*lbf)

POWER DOOR LOCK CONTROL SYSTEM

PARTS LOCATION

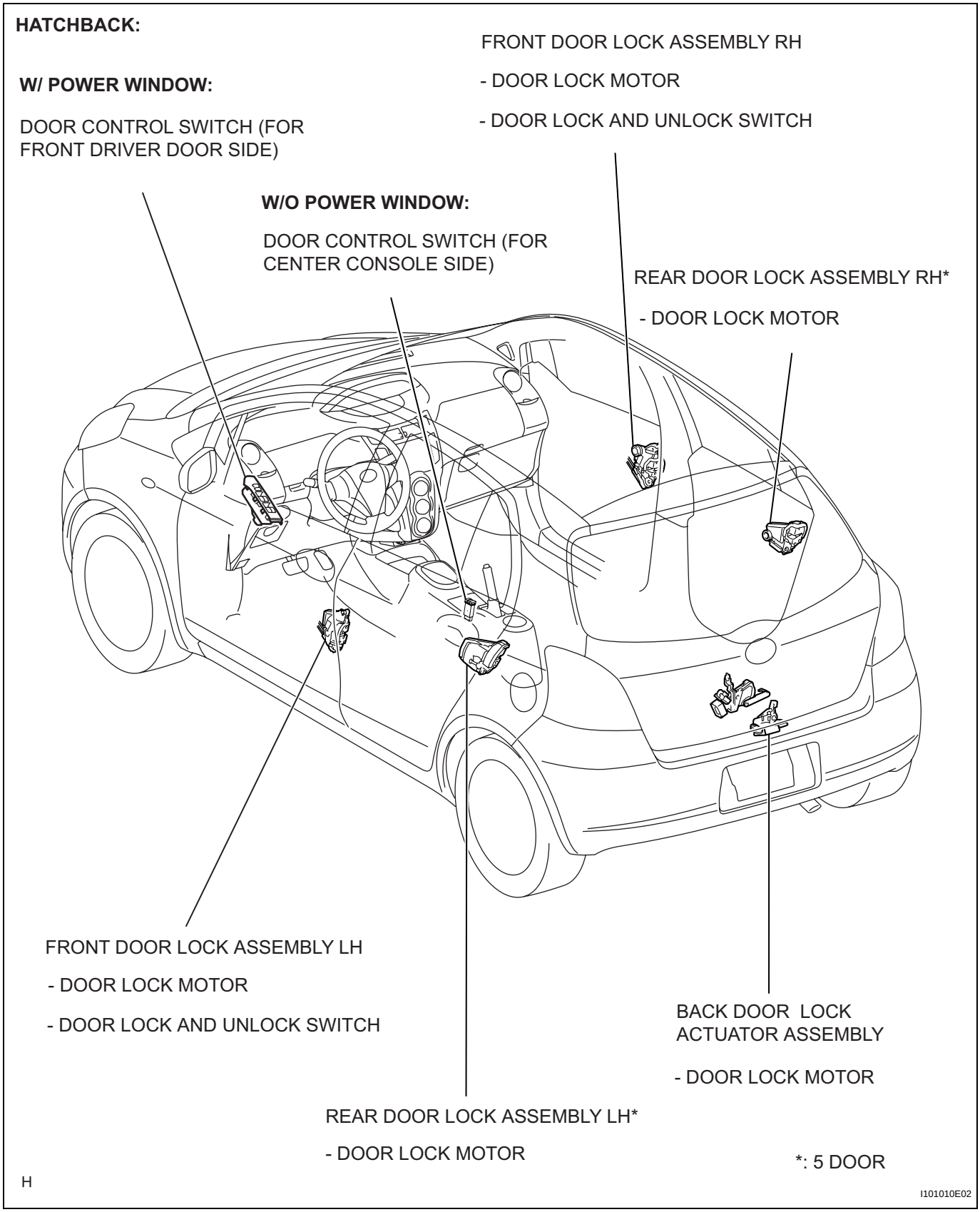

DL

SEDAN:

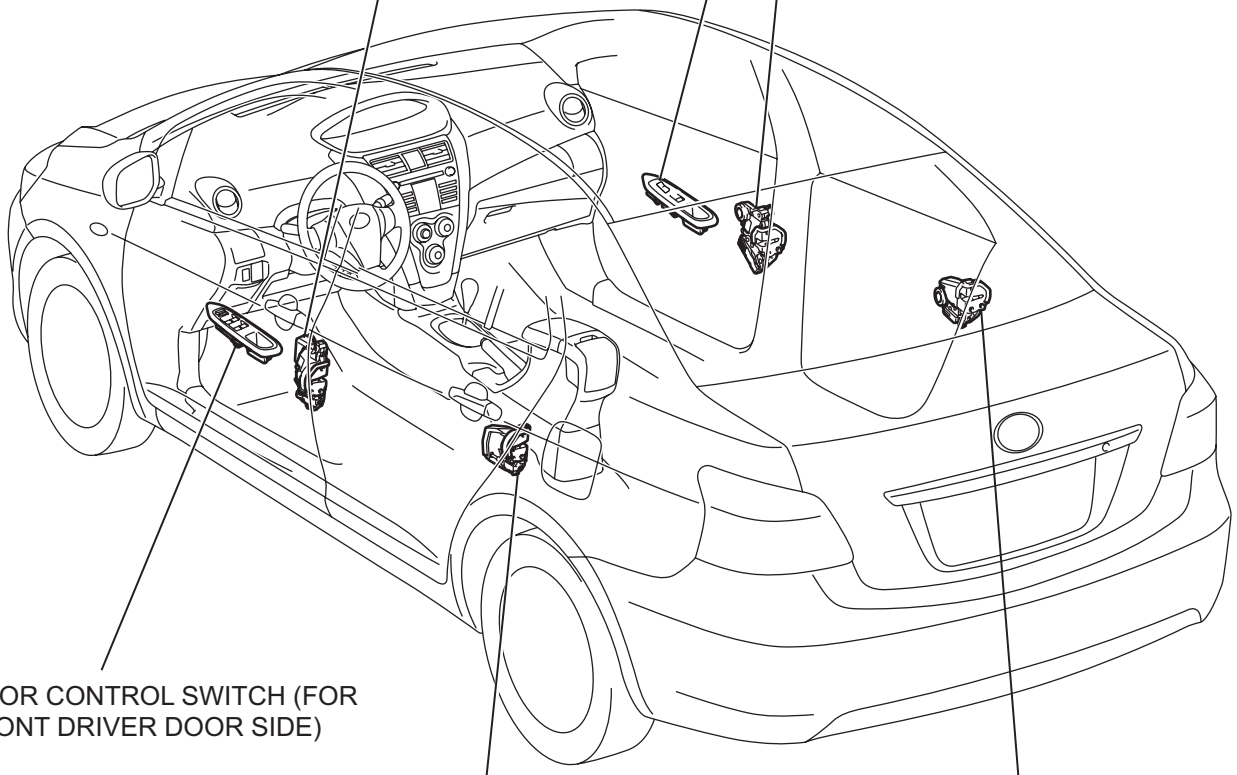

B145635E01

DL

HATCHBACK:

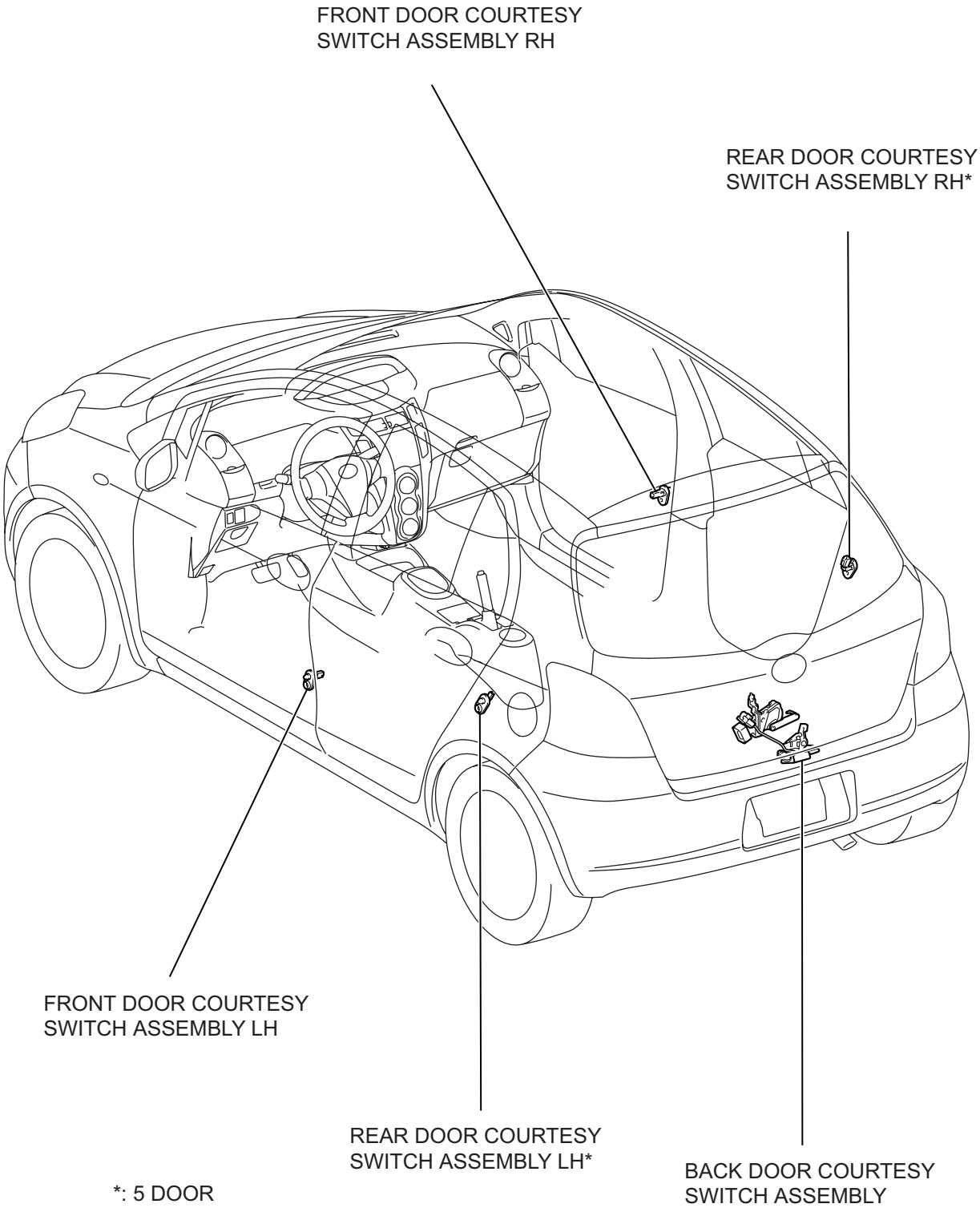

*: 5 DOOR

H

B123850E02

DL

SEDAN:

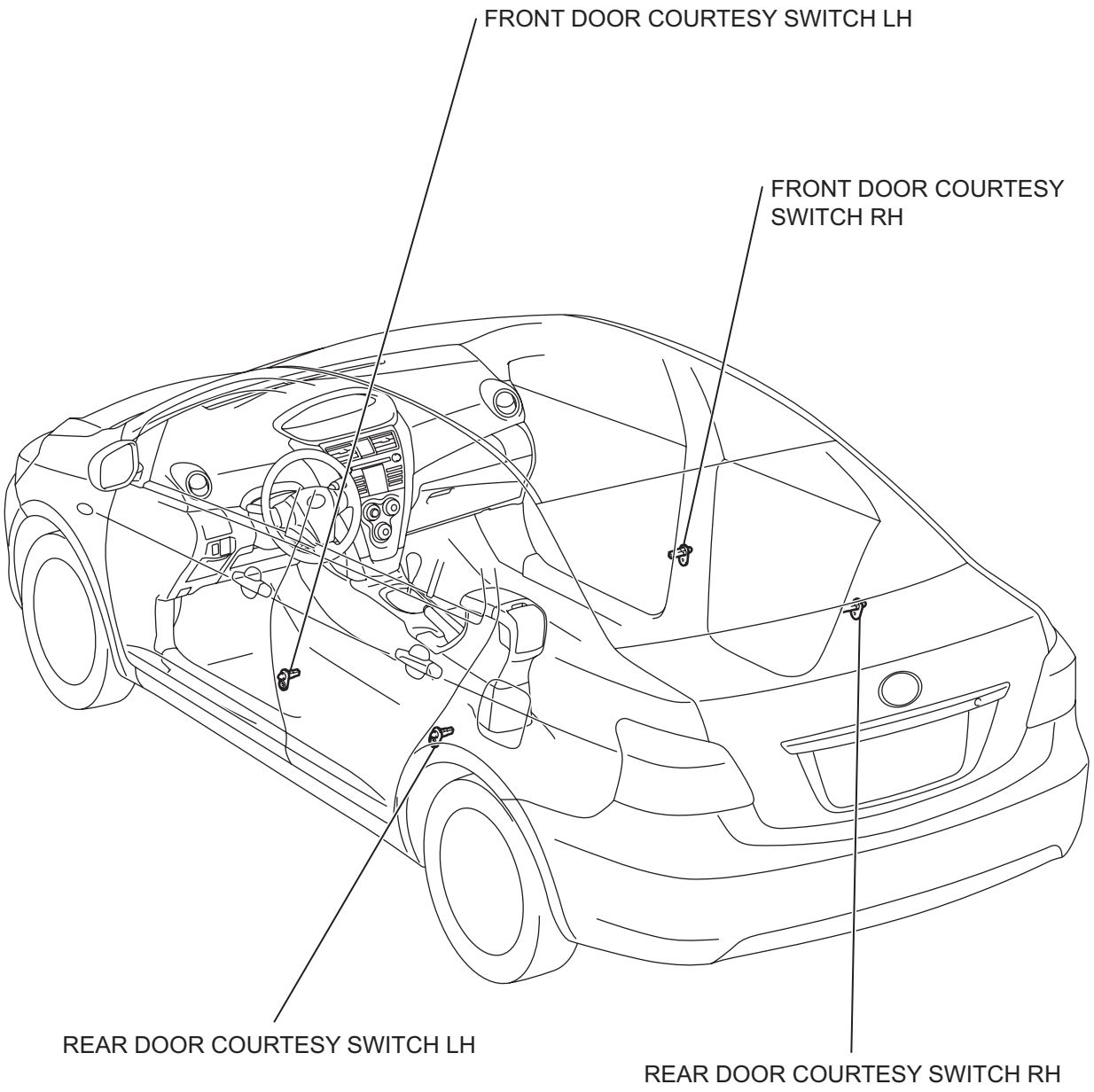

H

B140310E01

HATCHBACK:

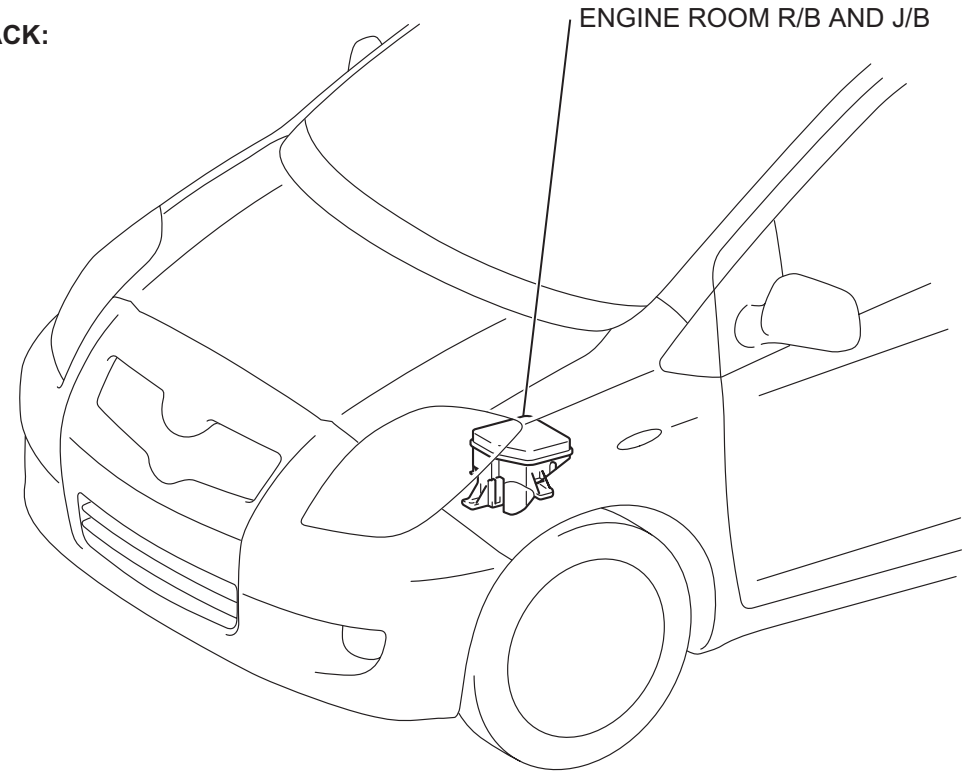

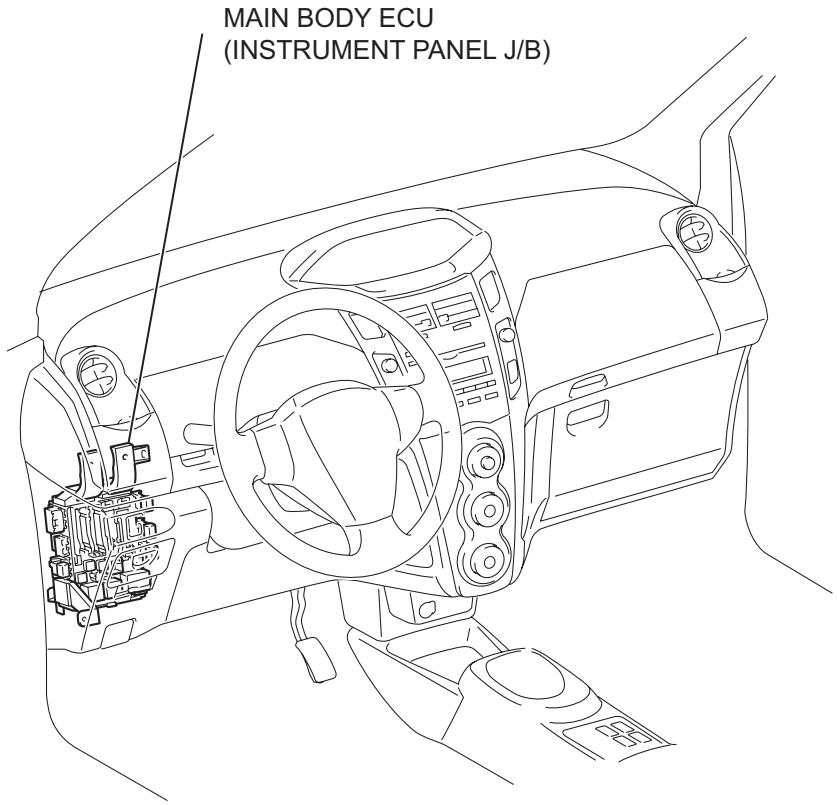

Y

I101011E08

SEDAN:

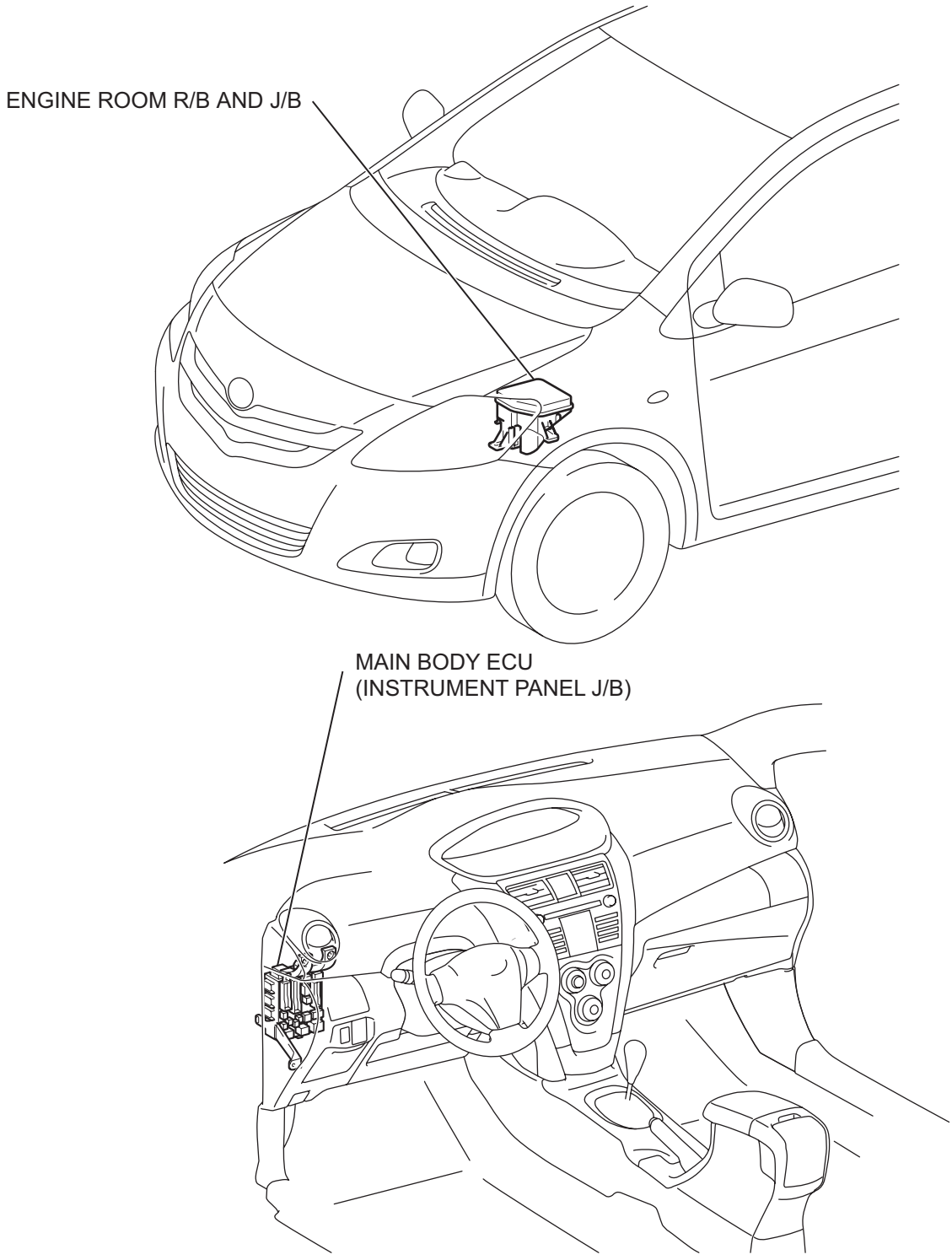

B142328E04

SYSTEM DIAGRAM

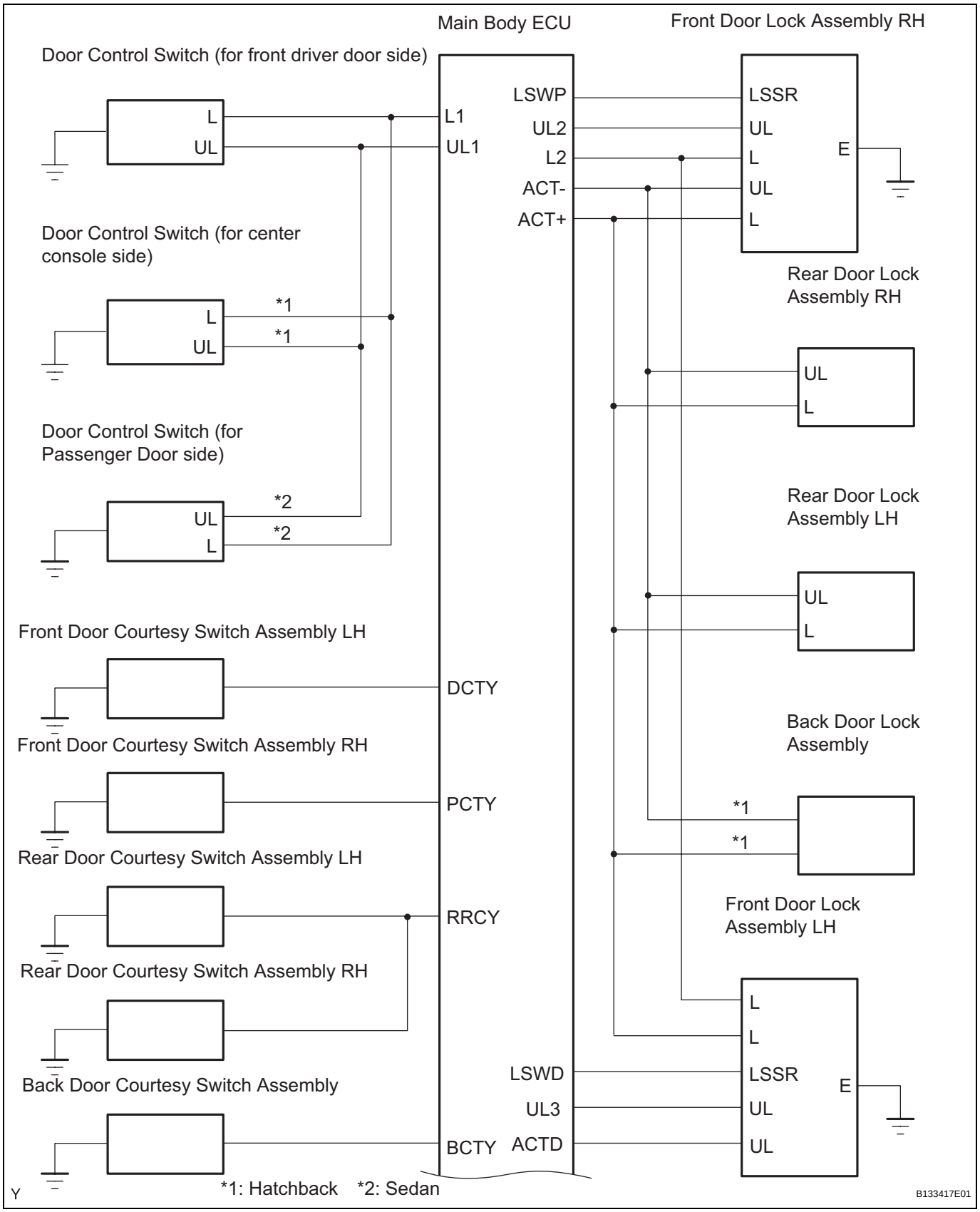

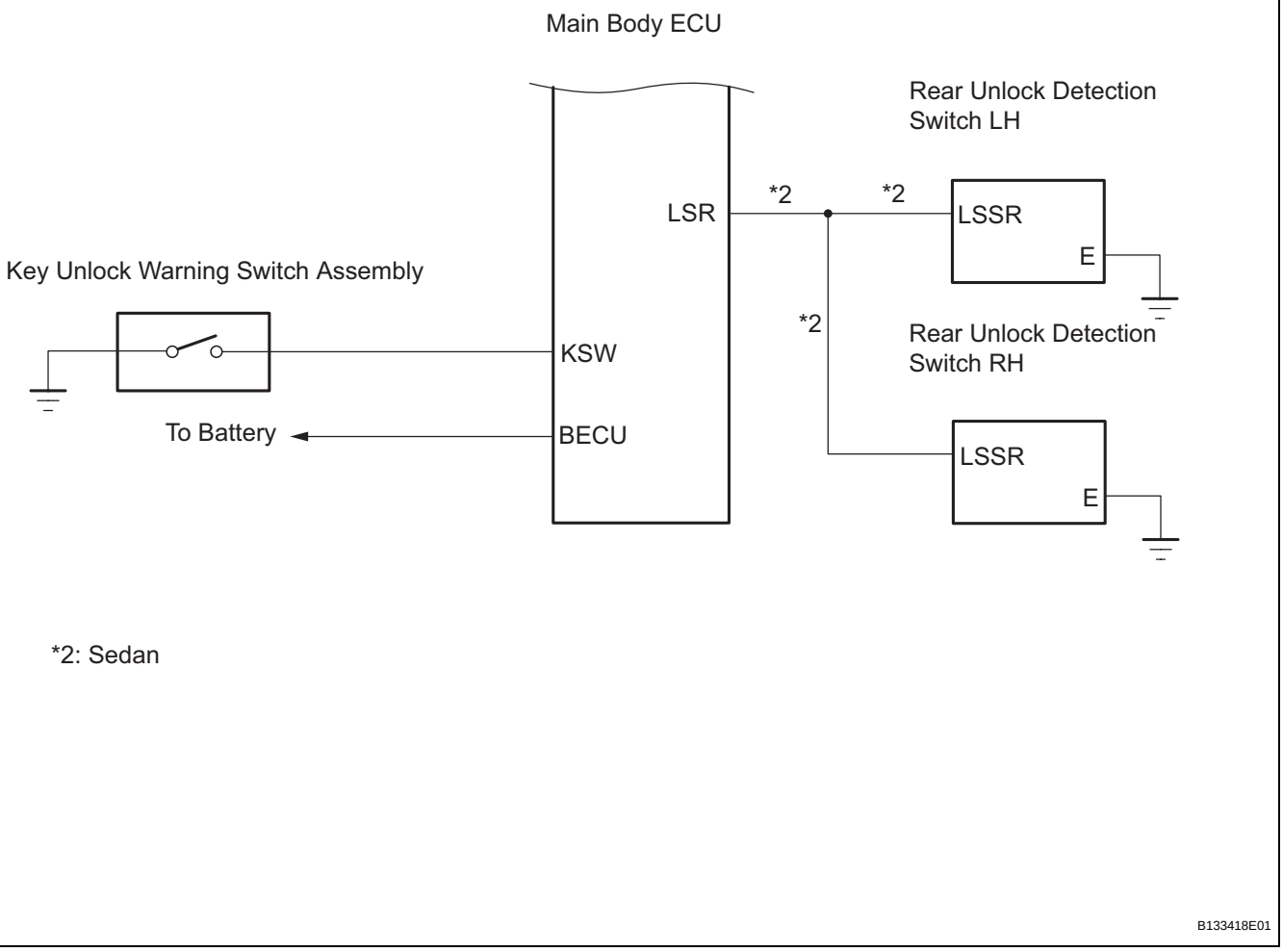
Main Body ECU
Rear Unlock Detection Switch LH
LSR
*2
*2
LSSR
E
Key Unlock Warning Switch Assembly
*2
Rear Unlock Detection Switch RH
KSW
To Battery
BECU
LSSR
E
*2: Sedan
B133418E01

SYSTEM DESCRIPTION

1. POWER DOOR LOCK CONTROL SYSTEM DESCRIPTION

The power door lock system locks / unlocks all the doors simultaneously.

The door control switch sends lock / unlock request signals to the main body ECU. Then, the main body ECU sends these requests to lock motors in each door to lock / unlock all the doors simultaneously. Operating the driver or front passenger side door lock using a key sends lock / unlock request signals to the main body ECU.

2. FUNCTION OF MAIN COMPONENT

Component	Function
Master switch	Door control switch (for front driver door side) on master switch locks / unlocks all doors
Door courtesy switch	• One for each door • Detects door status (open or closed) and outputs data to integration relay • Turns on when door is open and off when door is closed
Driver door lock	• Built-in motor locks / unlocks door • Built-in door control switch (key-linked) detects door lock status (locked or unlocked) and outputs data to integration relay
Passenger door, rear LH door, rear RH door and back door locks	Built-in motor locks / unlocks doors

3. DESCRIPTION

This system is controlled by the main body ECU. The main body ECU outputs signals to each door lock motor. The door lock control system in the vehicle has the following functions:

Function	Outline
Manual lock and unlock function	Locks / unlocks all doors by door control switch lock operation (manual operation)
Key-linked lock and unlock function	• Linked with driver door key cylinder • Locks / unlocks all doors when lock / unlock operation is possible • Driver side door key-linked lock / unlock function does not operate when seat belt is fastened
Key-linked 2-step unlock	This function is provided to unlock driver's door by turning key cylinder first step and to unlock all doors by turning it second step. However, second step must be performed within three seconds.
All doors lock with transmitter*	Pressing transmitter's LOCK switch locks all doors
All doors unlock with transmitter*	Pressing transmitter's UNLOCK switch unlocks all doors

HINT:

*: Only for models with wireless door lock system

HOW TO PROCEED WITH TROUBLESHOOTING

HINT:
Use these procedures to troubleshoot the power door lock control system.

1 VEHICLE BROUGHT TO WORKSHOP

NEXT

2 INSPECT BATTERY VOLTAGE

Standard voltage:
11 to 14 V
If the voltage is below 11 V, recharge or replace the battery before proceeding.

NEXT

3 PROBLEM SYMPTOMS TABLE

Result:

Result	Proceed to
Fault is not listed in problem symptoms table	A
Fault is listed in problem symptoms table	B

B → **Go to step 5**

A

4 OVERALL ANALYSIS AND TROUBLESHOOTING

(a) Terminals of ECU (see page DL-12)
(b) On-vehicle Inspection (see page DL-17)

NEXT

5 ADJUST, REPAIR OR REPLACE

NEXT

6 CONFIRMATION TEST

NEXT

END

CUSTOMIZE PARAMETERS

1. CUSTOMIZING FUNCTION WITH INTELLIGENT TESTER (REFERENCE)

HINT:

The following item can be customized.

NOTICE:

- **When the customer requests a change in a function, first make sure that the function can be customized.**
- **Make a note of the current settings before customizing.**
- **When troubleshooting a function, first make sure that the function is set to the default setting.**

Power door lock control system:

Display (Item)	Default	Function	Setting
UNLK/KEY TWICE	ON	Unlocks only driver side door when driver side door key cylinder turned to unlock once, and unlocks all doors when turned to unlock twice. For OFF setting, turning it once unlocks all doors	ON/OFF

PROBLEM SYMPTOMS TABLE

HINT:
Use the table below to help determine the causes of the problem symptom. The potential cases of the symptoms are listed in order of probability in the "Suspected Area" column of the table. Check each symptom by checking the suspected areas in the order they are listed. Replace parts as necessary.

Power door lock control system

Symptom	Suspected area	See page
All Doors LOCK / UNLOCK Functions do not Operate Via Master Switch, Driver	Door control switch (for front driver door side)	DL-19
	Front door lock assembly LH	DL-19
	Wire harness	DL-19
	Main body ECU	DL-19
Only driver door lock/unlock functions do not operate	Front door lock assembly LH	DL-30
	Wire harness	DL-30
	Main body ECU	DL-30
Only passenger door lock/unlock functions do not operate	Front door lock assembly RH	DL-32
	Wire harness	DL-32
	Main body ECU	DL-32
Only rear door LH lock/unlock functions do not operate	Rear door lock assembly LH	DL-34
	Wire harness	DL-34
	Main body ECU	DL-34
Only rear door RH lock/unlock functions do not operate	Rear door lock assembly RH	DL-36
	Wire harness	DL-36
	Main body ECU	DL-36
Only back door lock/unlock functions do not operate (Hatchback)	Back door lock assembly RH	DL-38
	Wire harness	DL-38
	Main body ECU	DL-38
Key lock-in prevention function does not work properly (manual operation and key-linked lock available)	Front door courtesy switch assembly LH	DL-40
	Unlock warning switch assembly	DL-40
	Wire harness	DL-40
	Main body ECU	DL-40

TERMINALS OF ECU

1. CHECK MAIN BODY ECU

Main Body ECU (Rear View):

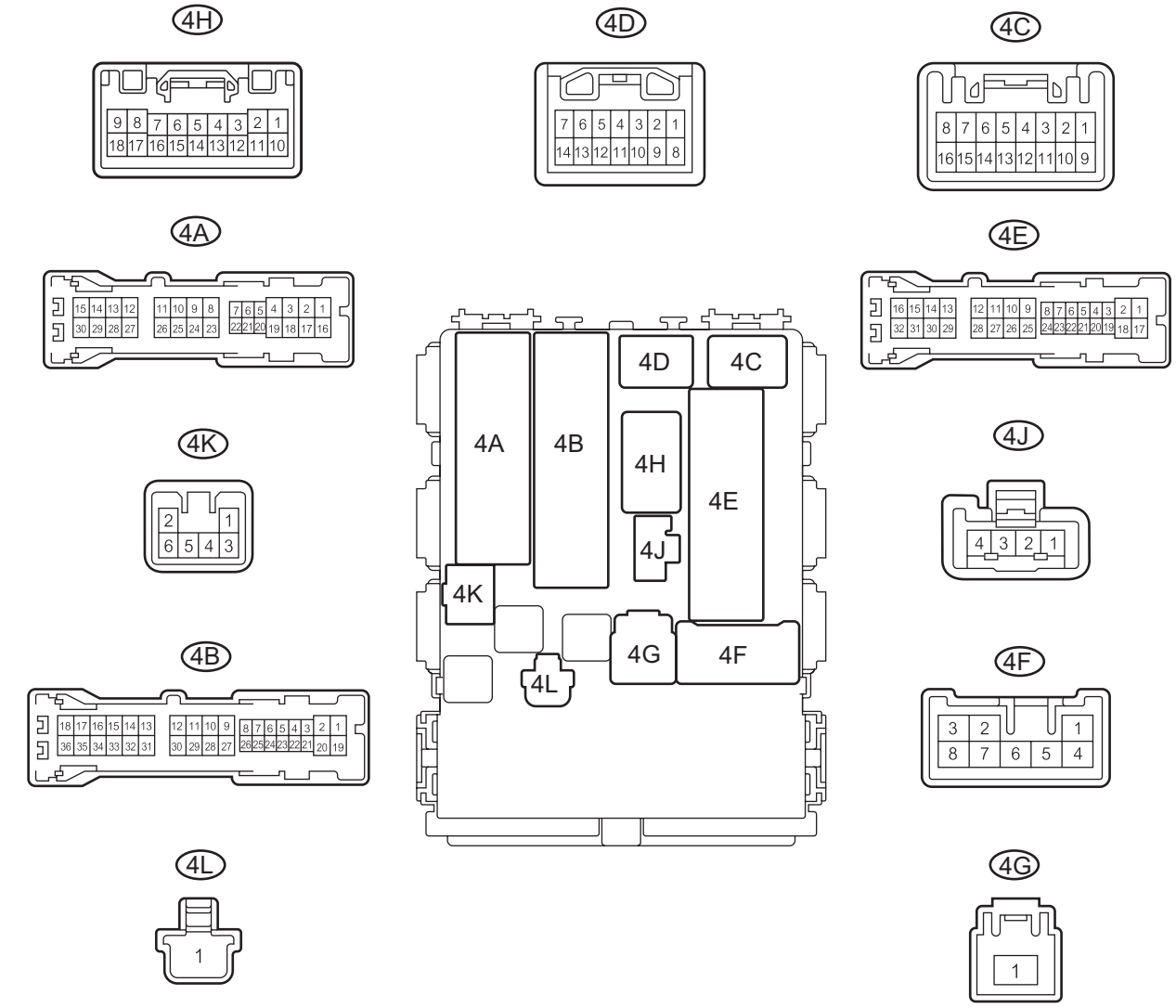

H

E114510E06

DL

Main Body ECU (Front View):

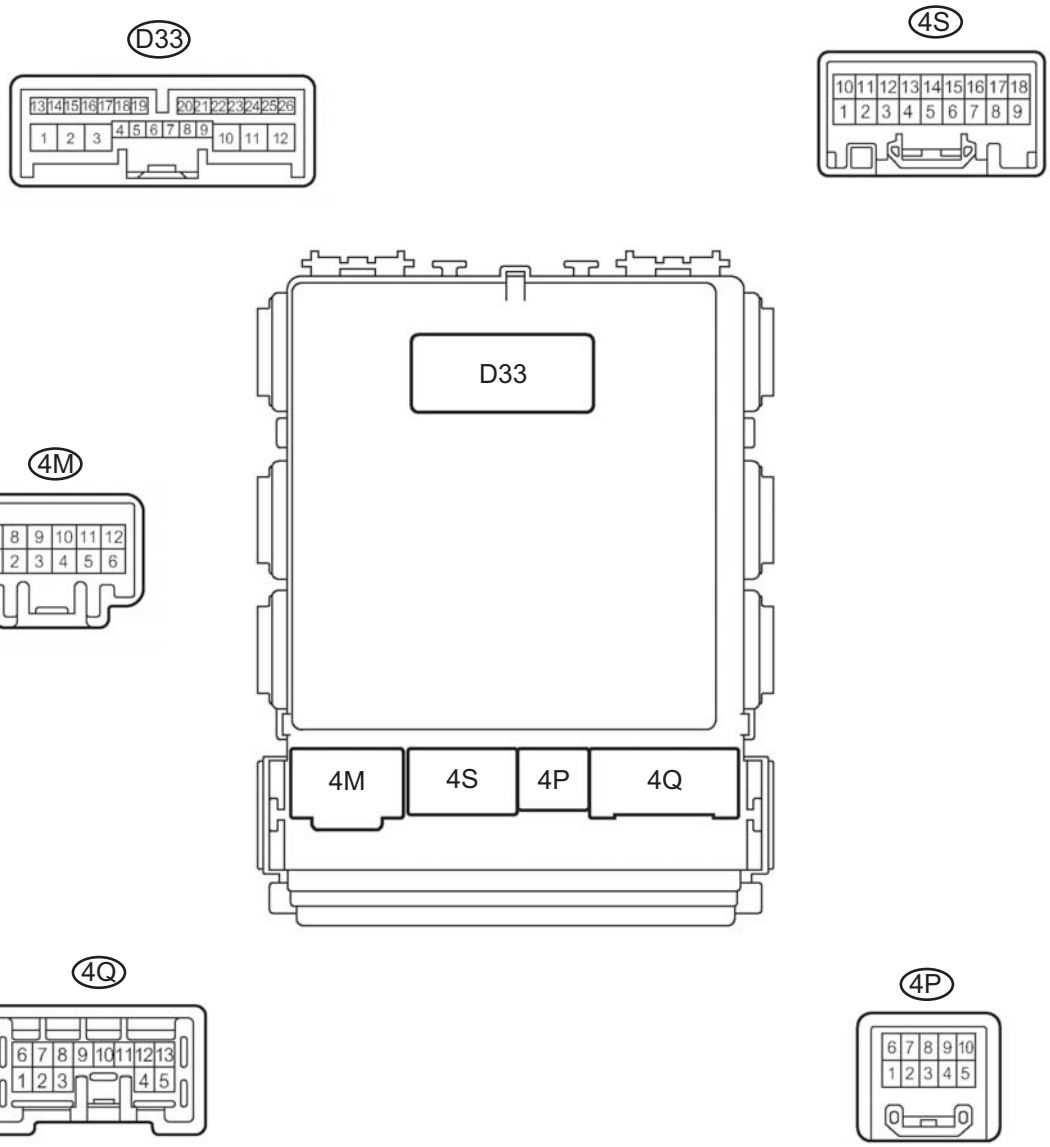

(a) Disconnect the 4B and 4E main body ECU (vehicle rear side) connectors.
(b) Measure the voltage and resistance of the wire harness side connectors.

Standard:

Symbols (Terminal No.)	Wiring Color	Terminal Description	Condition	Specified Condition
BECU (4B-30) - GND1 (4E-17)	L - W-B	Battery (power supply)	Always	11 to 14 V
GND1 (4E-17) - Body ground	W-B - Body ground	Ground	Always	Below 1 Ω

If the result is not as specified, there may be a malfunction in the wire harness.
(c) Reconnect the main body ECU (vehicle rear side) connectors.

(d) Measure the voltage of the wire harness side connectors.

Standard voltage:

Symbols (Terminal No.)	Wiring Color	Terminal Description	Condition	Specified Condition
KSW (4D-7) - GND1 (4E-17)	Y - W-B	Key unlock warning switch input	Key inserted	0 V
KSW (4D-7) - GND1 (4E-17)	Y - W-B	Key unlock warning switch input	No key in ignition key cylinder	11 to 14 V
DCTY (4A-21) - Body ground	R - Body ground	Driver side door courtesy switch input	Driver side door closed	11 to 14 V
DCTY (4A-21) - Body ground	R - Body ground	Driver side door courtesy switch input	Driver side door open	0 V
PCTY (4A-24) - Body ground	L - Body ground	Passenger side door courtesy switch input	Passenger side door closed	11 to 14 V
PCTY (4A-24) - Body ground	L - Body ground	Passenger side door courtesy switch input	Passenger side door open	0 V
RRCY (4A-20) - Body ground*3	L - Body ground	Rear RH door courtesy switch input	Rear RH door closed	11 to 14 V
RRCY (4A-20) - Body ground*3	L - Body ground	Rear RH door courtesy switch input	Rear RH door open	0 V
RRCY (4A-5) - Body ground*3	G - Body ground	Rear LH door courtesy switch input	Rear LH door closed	11 to 14 V
RRCY (4A-5) - Body ground*3	G - Body ground	Rear LH door courtesy switch input	Rear LH door open	0 V
RRCY (4A-5) - Body ground*4	Y - Body ground	Rear LH and RH door courtesy switch input	Rear LH and RH door closed	11 to 14 V
RRCY (4A-5) - Body ground*4	Y - Body ground	Rear LH and RH door courtesy switch input	Rear LH and RH door open	0 V
BCTY (4A-7) - Body ground*1	SB- Body ground	Back door courtesy switch input	Back side door closed	11 to 14 V
BCTY (4A-7) - Body ground*1	SB- Body ground	Back door courtesy switch input	Back side door open	0 V
LGCY (4A-7) - Body ground*2	SB- Body ground	Luggage room courtesy switch input	Luggage room closed	11 to 14 V
LGCY (4A-7) - Body ground*2	SB- Body ground	Luggage room courtesy switch input	Luggage room open	0 V
L1 (4H-4) - Body ground	LG - Body ground	Door control switch lock input	Door control switch OFF	11 to 14 V
L1 (4H-4) - Body ground	LG - Body ground	Door control switch lock input	Door control switch ON (LOCK)	0 V
UL1 (4H-5) - Body ground	O - Body ground	Door control switch unlock input	Door control switch OFF	11 to 14 V
UL1 (4H-5) - Body ground	O - Body ground	Door control switch unlock input	Door control switch ON (UNLOCK)	0 V
ACTD (D33-2) - Body ground	SB - Body ground	Door lock motor UNLOCK drive output	Door control switch or driver side door key cylinder OFF	0 V
ACTD (D33-2) - Body ground	SB - Body ground	Door lock motor UNLOCK drive output	Door control switch or driver side door key cylinder ON (UNLOCK)	11 to 14 V → 0 V
ACT+ (4H-8) - Body ground	O - Body ground	Door lock motor LOCK drive output	Door control switch or driver side door key cylinder OFF	0 V
ACT+ (4H-8) - Body ground	O - Body ground	Door lock motor LOCK drive output	Door control switch or driver side door key cylinder ON (LOCK)	11 to 14 V → 0 V
ACT+ (4A-3) - Body ground	GR - Body ground	Door lock motor LOCK drive output	Door control switch or driver side door key cylinder OFF	0 V

Symbols (Terminal No.)	Wiring Color	Terminal Description	Condition	Specified Condition
ACT+ (4A-3) - Body ground	GR - Body ground	Door lock motor LOCK drive output	Door control switch or driver side door key cylinder ON (LOCK)	11 to 14 V → 0 V
ACT+ (4H-17) - Body ground	W - Body ground	Door lock motor LOCK drive output	Door control switch or driver side door key cylinder OFF	0 V
ACT+ (4H-17) - Body ground	W - Body ground	Door lock motor LOCK drive output	Door control switch or driver side door key cylinder ON (LOCK)	11 to 14 V → 0 V
ACT- (4H-18) - Body ground	P - Body ground	Door lock motor UNLOCK drive output	Door control switch or driver side door key cylinder OFF	0 V
ACT- (4H-18) - Body ground	P - Body ground	Door lock motor UNLOCK drive output	Door control switch or driver side door key cylinder ON (UNLOCK)	11 to 14 V → 0 V
ACT- (4A-4) - Body ground	P - Body ground	Door lock motor UNLOCK drive output	Door control switch or driver side door key cylinder OFF	0 V
ACT- (4A-4) - Body ground	P - Body ground	Door lock motor UNLOCK drive output	Door control switch or driver side door key cylinder ON (UNLOCK)	11 to 14 V → 0 V
LSWD (D33-21) - Body ground	L - Body ground	Driver side door lock position switch input	Driver side door UNLOCK	0 V
LSWD (D33-21) - Body ground	L - Body ground	Driver side door lock position switch input	Driver side door LOCK	11 to 14 V
LSWP (D33-5) - Body ground	L - Body ground	Passenger side door lock position switch input	Passenger side door UNLOCK	0 V
LSWP (D33-5) - Body ground	L - Body ground	Passenger side door lock position switch input	Passenger side door LOCK	11 to 14 V
LSR (D33-24) - Body ground	O - Body ground	Rear LH or rear RH door lock position switch input	Rear LH or rear RH door UNLOCK	0 V
LSR (D33-24) - Body ground	O - Body ground	Rear LH or rear RH door lock position switch input	Rear LH or rear RH door LOCK	11 to 14 V
UL3 (D33-14) - Body ground	Y - Body ground	Door lock motor UNLOCK drive output	Driver side door key cylinder OFF	11 to 14 V
UL3 (D33-14) - Body ground	Y - Body ground	Door lock motor UNLOCK drive output	Driver side door key cylinder ON (UNLOCK)	0 V
UL2 (4H-15) - Body ground	G - Body ground	Door lock motor UNLOCK drive output	Passenger side door key cylinder OFF	11 to 14 V
UL2 (4H-15) - Body ground	G - Body ground	Door lock motor UNLOCK drive output	Passenger side door key cylinder ON (UNLOCK)	0 V
L2 (4H-16) - Body ground	O - Body ground	Door lock motor LOCK drive output	Door control switch or driver side door key cylinder OFF	0 V
L2 (4H-16) - Body ground	O - Body ground	Door lock motor LOCK drive output	Door control switch or driver side door key cylinder ON (LOCK)	11 to 14 V

*1: Hatchback
*2: Sedan
*3: Hatchback, Sedan except *5
*4: Sedan *5
*5: Cold area specification, w/ Engine immobilizer system, w/ ABS, w/ Rear window defogger, w/ Power door lock system, w/ Daytime running light, w/ Remote control mirror, w/ Air conditioning
If the result is not as specified, there may be a malfunction in the wire harness.

DATA LIST / ACTIVE TEST

1. READ DATA LIST

HINT:

Using the intelligent tester's DATA LIST allows switch, sensor, actuator and other item values to be read without removing any parts. Reading the DATA LIST early in troubleshooting is one way to save time.

(a) Connect the intelligent tester to the DLC3.
(b) Turn the ignition switch ON.
(c) Read the DATA LIST in accordance with the display on the tester.

Main body ECU:

Item	Measurement Item/Display (Range)	Normal Condition	Diagnostic Note
D DOR CTY SW	Driver side door courtesy switch signal/ ON or OFF	ON: Driver side door is open OFF: Driver side door is closed	-
D LOCK POS SW	Driver side door lock position switch signal/ ON or OFF	ON: Driver side door is unlocked OFF: Driver side door is locked	-
D/L SW-LOCK	Door manual lock switch signal/ ON or OFF	ON: Door control switch (for front driver door side) is turned to lock position OFF: Door control switch (for front driver door side) is turned to unlock position	-
D/L SW-UNLOCK	Door manual unlock switch signal/ ON or OFF	ON: Door control switch (for front driver door side) is turned to unlock position OFF: Door control switch (for front driver door side) is turned to lock position	-
DOR KEY SW-LOCK	Door key linked lock switch signal/ ON or OFF	ON: Driver side door key cylinder is turned to lock position OFF: Driver side door key cylinder is turned to unlock position	-
DOR KEY SW-UNLOCK	Door key linked unlock switch signal/ ON or OFF	ON: Driver side door key cylinder is turned to unlock position OFF: Driver side door key cylinder is turned to lock position	-
D DOR KEY SW-UL	Driver side door key linked unlock switch signal/ ON or OFF	ON: Driver side door key cylinder is turned to unlock position OFF: Driver side door key cylinder is turned to lock position	-
P DOR CTY SW	Passenger side door courtesy switch signal/ ON or OFF	ON: Passenger side door is open OFF: Passenger side door is closed	-
P LOCK POS SW	Passenger side door lock position switch signal/ ON or OFF	ON: Passenger side door is unlocked OFF: Passenger side door is locked	-
RR DOR CTY SW	Rear door RH courtesy switch signal/ ON or OFF	ON: Rear door RH is open OFF: Rear door RH is closed	-
RL DOR CTY SW	Rear door LH courtesy switch signal/ ON or OFF	ON: Rear door LHis open OFF: Rear door LH is closed	-
BACK DOR CTY SW	Back door courtesy switch signal/ ON or OFF	ON: Back door is open OFF: Back door is closed	-
BACK LOCK POS SW	Back door lock position switch signal/ ON or OFF	ON: Back door is unlocked OFF: Back door is locked	-

Item	Measurement Item/Display (Range)	Normal Condition	Diagnostic Note
KEY UNLK WRN SW	Unlock warning switch signal/ ON or OFF	ON: Key is in ignition key cylinder OFF: No key is in ignition key cylinder	-

2. PERFORM ACTIVE TEST

HINT:

Performing the intelligent tester's ACTIVE TEST allows relays, VSV, actuators and other items to be operated without removing any parts. Performing the ACTIVE TEST early in troubleshooting is one way to save time. The DATA LIST can be displayed during the ACTIVE TEST.

(a) Connect the intelligent tester to the DLC3.
(b) Turn the ignition switch ON.
(c) Perform the ACTIVE TEST in accordance with the display on the tester.

Main body ECU:

Item	Test Details	Diagnostic Note
DOOR LOCK	Operate door lock motor LOCK/UNLOCK	-
D DOOR UNLOCK	Operate driver door lock motor unlock side ON/OFF	-

ON-VEHICLE INSPECTION

1. CHECK DOOR LOCK FAIL-SAFE

(a) When a malfunction in the door control switch or driver side door key cylinder is detected, the door lock/unlock operation is disabled.

2. CHECK ELECTRICAL DOOR LOCK OPERATION

(a) Check that all doors are locked and unlocked in accordance with the door control switch operation.

(b) Check that only the driver side door unlocks when the driver side door lock key cylinder is turned to UNLOCK and all doors unlock when turned to UNLOCK once again within 3 seconds using the key (2-step unlocking function).
HINT:
Doors cannot be locked or unlocked using the key when the ignition switch is on and the driver seat belt is fastened.

(c) Check the key lock-in prevention function.
NOTICE:
Perform this operation with the driver door window open to prevent the key from being locked inside the vehicle.
(1) Insert the ignition key into the ignition key cylinder.
(2) Check that all doors are immediately unlocked when the driver side door lock knob is turned to the lock position with the driver door open.
(3) Check that all doors are immediately unlocked when the door control switch is turned to the lock position with the driver door open.
(4) Check that all doors are unlocked when the driver door is closed after the driver door lock knob is held in the lock position for 2 seconds with the driver door open.

(d) Check the key-linked lock and unlock function.
(1) Check that doors cannot be locked or unlocked using the key from outside the vehicle when the ignition switch is on and the driver seat belt is fastened.

All Doors cannot be Locked / Unlocked Simultaneously

DESCRIPTION

The main body ECU receives switch signals from the door control switch and driver side door key cylinder, and activates the door lock motor on each door accordingly.

WIRING DIAGRAM

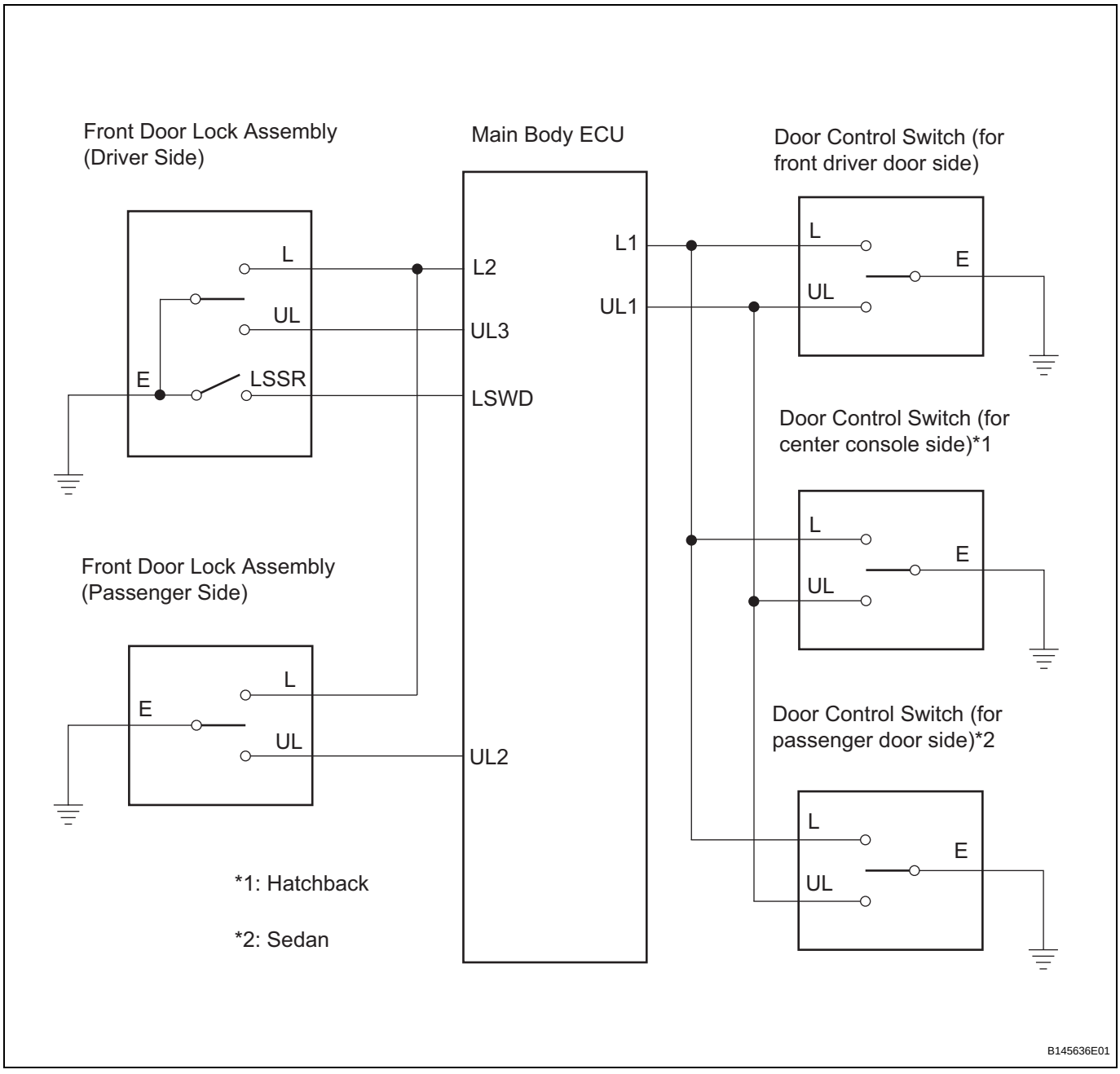

INSPECTION PROCEDURE

1 INSPECT FRONT DOOR LOCK ASSEMBLY LH

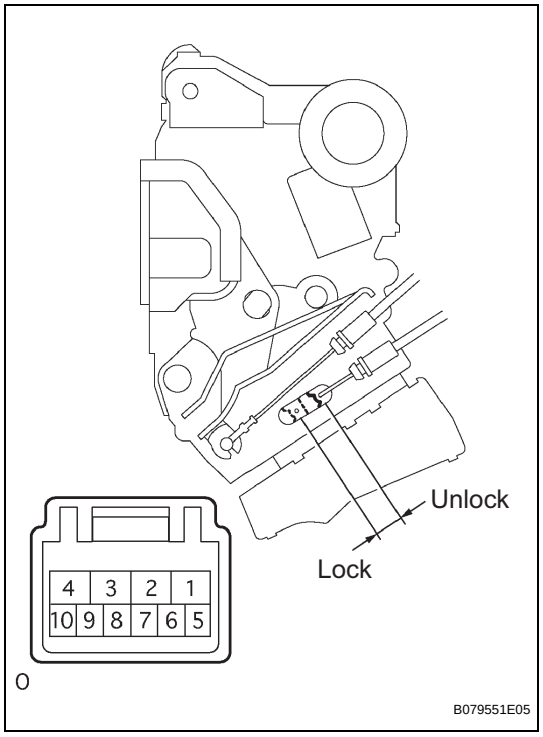

B079551E05

(a) Apply the battery voltage to the door lock motor and measure the resistance.

Standard resistance

Tester Connection	Condition	Specified Condition
8 (LSSR) - 7 (E)	Battery positive (+) → Terminal 1 Battery negative(-) → Terminal 4	Below 1 Ω
8 (LSSR) - 7 (E)	Battery positive (+) → Terminal 4 Battery negative(-) → Terminal 1	10 kΩ or higher

NG → **REPLACE FRONT DOOR LOCK ASSEMBLY LH**

OK

2 CHECK HARNESS AND CONNECTOR (MAIN BODY ECU - FRONT DOOR LOCK ASSEMBLY LH)

Wire Harness Side:

Main Body ECU Connector

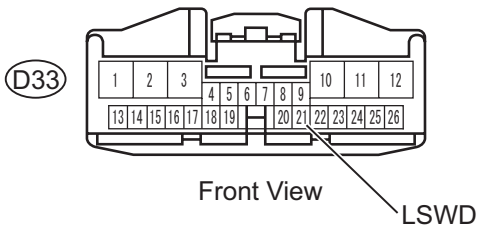

Front Door Lock Assembly LH Connector

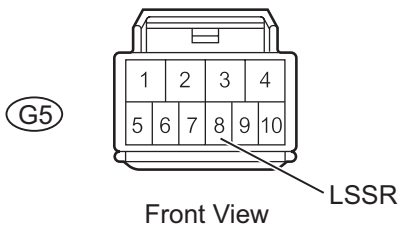

B145640E01

(a) Disconnect the D33main body ECU connector.
(b) Disconnect the G5 door lock connector.
(c) Measure the resistance.

Standard resistance

Tester Connection	Specified Condition
D33-21 (LSWD) - G5-8 (LSSR)	Below 1 Ω
D33-21 (LSWD) or G5-8 (LSSR) - Body ground	10 kΩ or higher

(d) Reconnect the main body ECU connector.
(e) Reconnect the door lock connector.

NG → **REPAIR OR REPLACE HARNESS OR CONNECTOR**

DL

OK

3 CHECK DOOR LOCK OPERATION

(a) Proceed to the next step according to the symptom listed in the table below.

Result

Symptom	Proceed to
Doors cannot be locked using door control switch (for front driver door side)	A
Doors cannot be locked using driver side door key cylinder	B
Hatchback only: Doors cannot be locked using door control switch (for center console side)	C
Doors cannot be locked using front passenger side door key cylinder	D
Sedan only: Doors cannot be locked using door control switch (for passenger side)	E

B → Go to step 6

C → Go to step 8

D → Go to step 10

E → Go to step 12

A

4 INSPECT DOOR CONTROL SWITCH (for Front Driver Door Side)

Component Side:

Door Control Switch (for front driver door side)

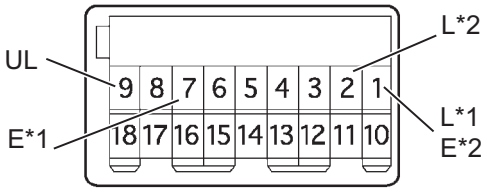

*1: 3 door

*2: 5 door

B108644E01

(a) 3 Door, 5 Door, Sedan w/ Power window:

(1) Disconnect the G1 door control switch (for front driver door side) connector.

(2) Measure the resistance of the switch.

Standard resistance (3 Door)

Tester Connection	Switch Condition	Specified Condition
1 (L) - 7 (E)	Lock	Below 1 Ω
9 (UL) - 7 (E)	Unlock	Below 1 Ω
1 (L) - 7 (E)	OFF	10 kΩ or higher
9 (UL) - 7 (E)	OFF	10 kΩ or higher

Standard resistance (5 Door, Sedan w/ Power window)

Tester Connection	Switch Condition	Specified Condition
2 (L) - 1 (E)	Lock	Below 1 Ω
9 (UL) - 1 (E)	Unlock	Below 1 Ω
2 (L) - 1 (E)	OFF	10 kΩ or higher
9 (UL) - 1 (E)	OFF	10 kΩ or higher

(3) Reconnect the door control switch (for front driver door side) connector.

Component Side:

Door Control Switch (for front driver door side)

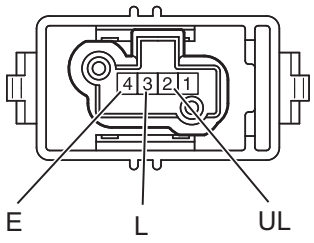

B145638E01

(b) Sedan w/o Power window:
(1) Disconnect the G7 door control switch (for front driver door side) connector.
(2) Measure the resistance of the switch.
Standard resistance

Tester Connection	Switch Condition	Specified Condition
3 (L) - 4 (E)	Lock	Below 1 Ω
2 (UL) - 4 (E)	Unlock	Below 1 Ω
3 (L) - 4 (E)	OFF	10 kΩ or higher
2 (UL) - 4 (E)	OFF	10 kΩ or higher

(3) Reconnect the door control switch (for front driver door side) connector.

NG → **REPLACE DOOR CONTROL SWITCH (for Front Driver Door Side)**

OK

DL

5 CHECK HARNESS AND CONNECTOR (MAIN BODY ECU - DOOR CONTROL SWITCH (Front Driver Door Side))

Wire Harness Side:

Main Body ECU Connector

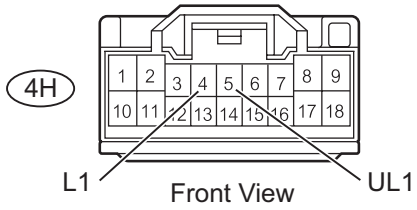

Door Control Switch (for front driver door side) Connector

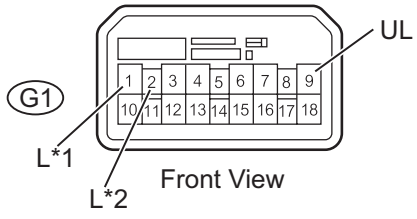

*1: 3 door

*2: 5 door

B123822E01

(a) 3 Door, 5 Door, Sedan w/ Power window:
(1) Disconnect the 4H main body ECU connector.
(2) Disconnect the G1 door control switch (for front driver door side) connector.
(3) Measure the resistance.
Standard resistance (3 Door)

Tester Connection	Specified Condition
4H-5 (UL1) - G1-9 (UL)	Below 1 Ω
4H-4 (L1) - G1-1 (L)	Below 1 Ω
4H-5 (UL1) or G1-9 (UL) - Body ground	10 kΩ or higher
4H-4 (L1) or G1-1 (L) - Body ground	10 kΩ or higher

Standard resistance (5 Door, Sedan w/ Power window)

Tester Connection	Specified Condition
4H-5(UL1) - G1-9(UL)	Below 1 Ω
4H-4(L1) - G1-2(L)	Below 1 Ω
4H-5(UL1) or G1-9(UL) - Body ground	10 kΩ or higher
4H-4(L1) or G1-2(L) - Body ground	10 kΩ or higher

(4) Reconnect the main body ECU connector.
(5) Reconnect the door control switch (for front driver door side) connector.

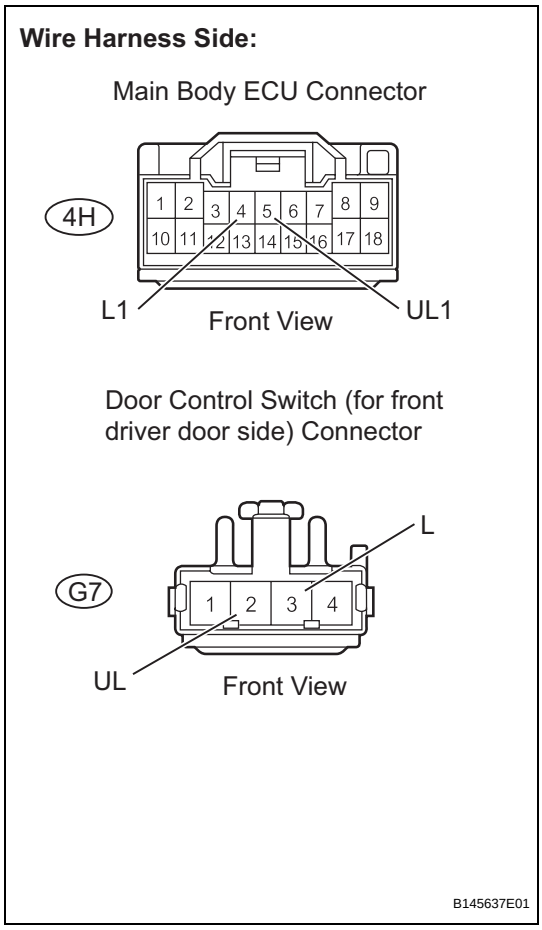

(b) Sedan w/o Power window:
(1) Disconnect the 4H main body ECU connector.
(2) Disconnect the G7 door control switch (for front driver door side) connector.
(3) Measure the resistance.
Standard resistance

Tester Connection	Specified Condition
4H-5 (UL1) - G7-2 (UL)	Below 1 Ω
4H-4 (L1) - G7-3 (L)	Below 1 Ω
4H-5 (UL1) or G7-2 (UL) - Body ground	10 kΩ or higher
4H-4 (L1) or G7-3 (L) - Body ground	10 kΩ or higher

(4) Reconnect the main body ECU connector.
(5) Reconnect the door control switch (for front driver door side) connector.

NG → **REPAIR OR REPLACE HARNESS OR CONNECTOR**

OK →

REPLACE MAIN BODY ECU

6 READ VALUE OF INTELLIGENT TESTER (DOR KEY SW-LOCK)

(a) Check the DATA LIST to ensure the proper operation of the door lock and unlock switch.

Main Body ECU

Item	Measurement Item/Display (Range)	Normal Condition	Diagnostic Note
Dor Key SW-Lock	Door key-linked lock switch signal/ ON or OFF	ON: Door key cylinder is turned to lock position OFF: Driver side door key cylinder is turned to unlock position	-

Main Body ECU

Item	Measurement Item/Display (Range)	Normal Condition	Diagnostic Note
Dor Key SW-ULock	Door key-linked lock switch signal/ ON or OFF	ON: Door key cylinder is turned to lock position OFF: Driver side door key cylinder is turned to unlock position	-

OK:
ON (driver side door key cylinder is turned to lock/ unlock position) appears on tester screen.

OK → **REPLACE MAIN BODY ECU**

NG

7 CHECK HARNESS AND CONNECTOR (DRIVER SIDE DOOR LOCK ASSEMBLY - MAIN BODY ECU)

Wire Harness Side:

Main Body ECU Connector

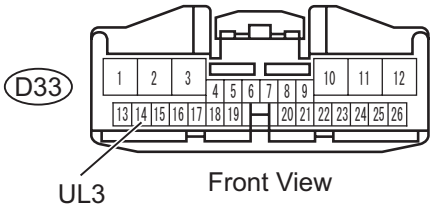

Main Body ECU Connector

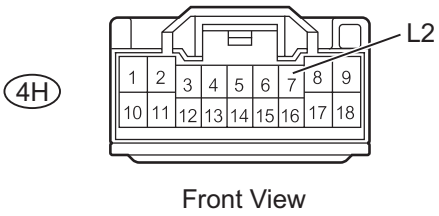

Front Door Lock Assembly LH Connector

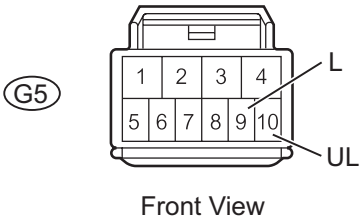

B123825E01

(a) Disconnect the D33 and 4H main body ECU connectors.
(b) Disconnect the G5 door lock connector.
(c) Measure the resistance.

Standard resistance

Tester Connection	Specified Condition
D33-14 (UL3) - G5-10 (UL)	Below 1 Ω
4H-7 (L2) - G5-9 (L)	Below 1 Ω
D33-14 (UL3) or G5-10 (UL) - Body ground	10 kΩ or higher
4H-7 (L2) or G5-9 (L) - Body ground	10 kΩ or higher

(d) Reconnect the main body ECU connectors.
(e) Reconnect the door lock connector.

NG → **REPAIR OR REPLACE HARNESS OR CONNECTOR**

OK

REPLACE MAIN BODY ECU

DL

8	**INSPECT DOOR CONTROL SWITCH (for Center Console Side)**

Component Side:

Door Control Switch (for center console side)

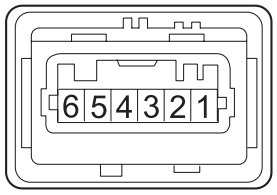

B145639E02

(a) Disconnect the D30 door control switch (for center console side) connector.
(b) Measure the resistance.
Standard resistance

Tester Connection	Condition	Specified Condition
5 - 6	Lock	Below 1 Ω
4 - 6	Unlock	Below 1 Ω
5 - 6	OFF	Below 1 Ω
4 - 6	OFF	Below 1 Ω

(c) Reconnect the door control switch (for center console side) connector.

NG → **REPLACE DOOR CONTROL SWITCH (for Center Console Side)**

OK

DL

9	**CHECK HARNESS AND CONNECTOR (MAIN BODY ECU - DOOR CONTROL SWITCH (Center Console Side))**

Wire Harness Side:

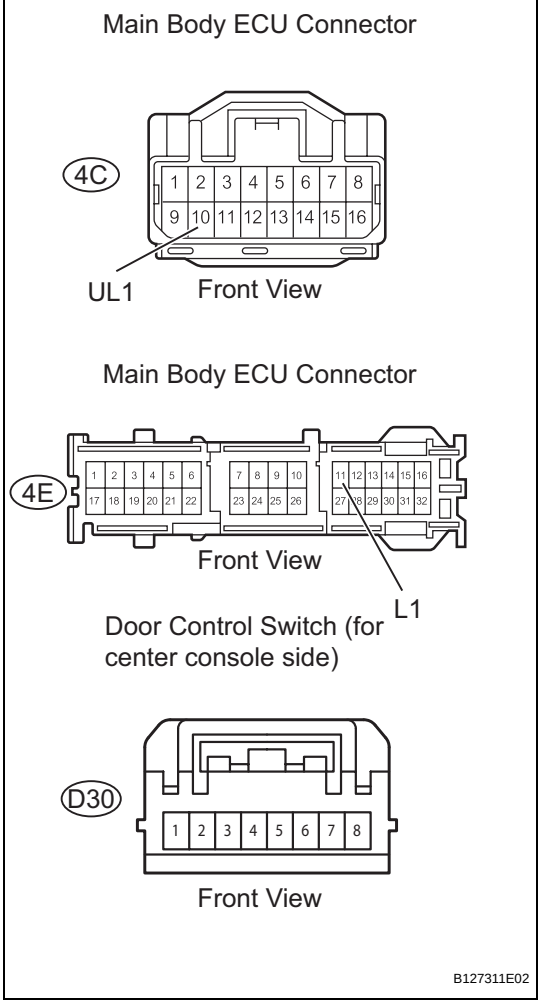

(a) Disconnect the 4C and 4E main body ECU connectors.
(b) Disconnect the D30 door control switch (for center console side) connector.
(c) Measure the resistance of the fuses.
Standard resistance

Tester Connection	Specified Condition
4C-10(UL1) - D30-4	Below 1 Ω
4E-11(L1) - D30-5	Below 1 Ω
4C-10(UL1) or D30-4 - Body ground	10 kΩ or higher
4E-11(L1) or D30-5 - Body ground	10 kΩ or higher

(d) Reconnect the main body ECU connector.
(e) Reconnect the door control switch (for center console side) connector.

NG → **REPAIR OR REPLACE HARNESS OR CONNECTOR**

OK

REPLACE MAIN BODY ECU

10	**READ VALUE OF INTELLIGENT TESTER (DOR KEY SW-LOCK, DOR KEY SW-ULCK)**

(a) Check the DATA LIST to ensure the proper operation of the door lock and unlock switch.

DL

Main Body ECU

Item	Measurement Item/Display (Range)	Normal Condition	Diagnostic Note
Dor Key SW-Lock	Door key-linked lock switch signal/ ON or OFF	ON: Door key cylinder is turned to lock position OFF: Driver side door key cylinder is turned to unlock position	-

Main Body ECU

Item	Measurement Item/Display (Range)	Normal Condition	Diagnostic Note
Dor Key SW-ULck	Door key-linked unlock switch signal/ ON or OFF	ON: Door key cylinder is turned to unlock position OFF: Door key cylinder is turned to lock position	-

OK:

ON (driver side door key cylinder is turned to lock/ unlock position) appears on screen.

DL

OK → **REPLACE MAIN BODY ECU**

NG

11	CHECK HARNESS AND CONNECTOR (PASSENGER SIDE DOOR LOCK ASSEMBLY - MAIN BODY ECU)

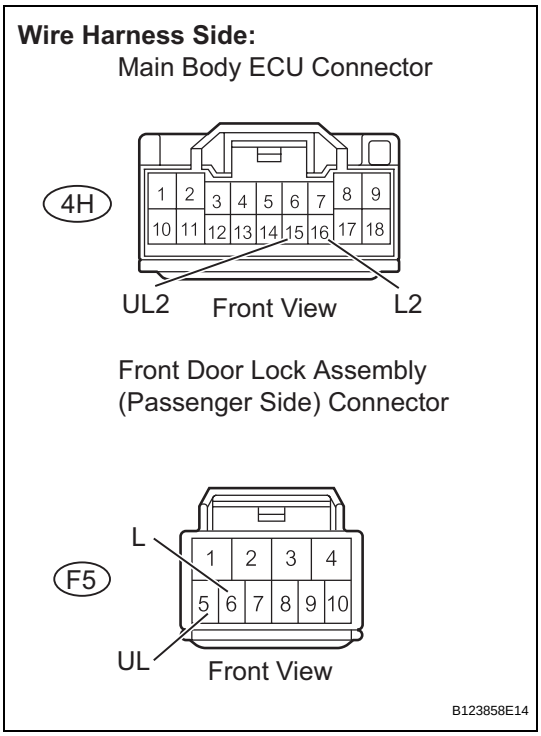

(a) Disconnect the 4H main body ECU connector.
(b) Disconnect the F5 front door lock assembly connector.
(c) Measure the resistance.

Standard resistance

Tester Connection	Specified Condition
4H-15(UL2) - F5-5(UL)	Below 1 Ω
4H-16(L2) - F5-6(L)	Below 1 Ω
4H-15(UL2) or F5-5(UL) - Body ground	10 kΩ or higher
4H-16(L2) or F5-6(L) - Body ground	10 kΩ or higher

(d) Reconnect the main body ECU connector.
(e) Reconnect the front door lock assembly connector.

NG → **REPAIR OR REPLACE HARNESS OR CONNECTOR**

OK

REPLACE MAIN BODY ECU

12 INSPECT DOOR CONTROL SWITCH (for Front Passenger Door Side)

Component Side:

Door Control Switch (for front passenger door side)

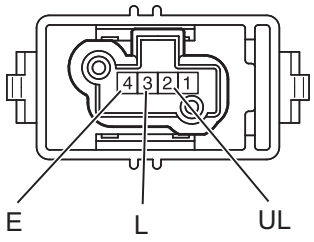

B145638E02

(a) Disconnect the F7 door control switch (for front passenger door side) connector.
(b) Measure the resistance of the switch.
Standard resistance

Tester Connection	Switch Condition	Specified Condition
3 (L) - 4 (E)	Lock	Below 1 Ω
2 (UL) - 4 (E)	Unlock	Below 1 Ω
3 (L) - 4 (E)	OFF	10 kΩ or higher
2 (UL) - 4 (E)	OFF	10 kΩ or higher

(c) Reconnect the door control switch (for front passenger door side) connector.

NG → **REPLACE DOOR CONTROL SWITCH (for Front Passenger Door Side)**

OK

13 CHECK HARNESS AND CONNECTOR (MAIN BODY ECU - DOOR CONTROL SWITCH (Passenger Door Side))

Wire Harness Side:

Main Body ECU Connector

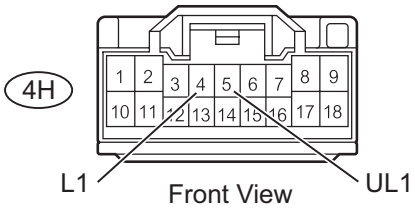

Door Control Switch (for front passenger door side) Connector

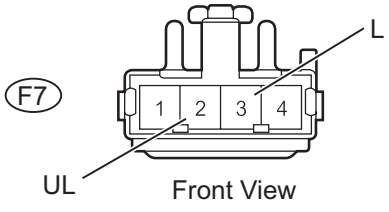

B145637E02

(a) Disconnect the 4H main body ECU connector.
(b) Disconnect the F7 door control switch (for front passenger door side) connector.
(c) Measure the resistance.
Standard resistance

Tester Connection	Specified Condition
4H-5 (UL1) - F7-2 (UL)	Below 1 Ω
4H-4 (L1) - F7-3 (L)	Below 1 Ω
4H-5 (UL1) or F7-2 (UL) - Body ground	10 kΩ or higher
4H-4 (L1) or F7-3 (L) - Body ground	10 kΩ or higher

(d) Reconnect the main body ECU connector.
(e) Reconnect the door control switch (for front passenger door side) connector.

NG → **REPAIR OR REPLACE HARNESS OR CONNECTOR**

DL

OK

REPLACE MAIN BODY ECU

Only Driver Door LOCK / UNLOCK Functions do not Operate

DESCRIPTION

The main body ECU receives lock/unlock switch signals and activates the door lock motor accordingly.

WIRING DIAGRAM

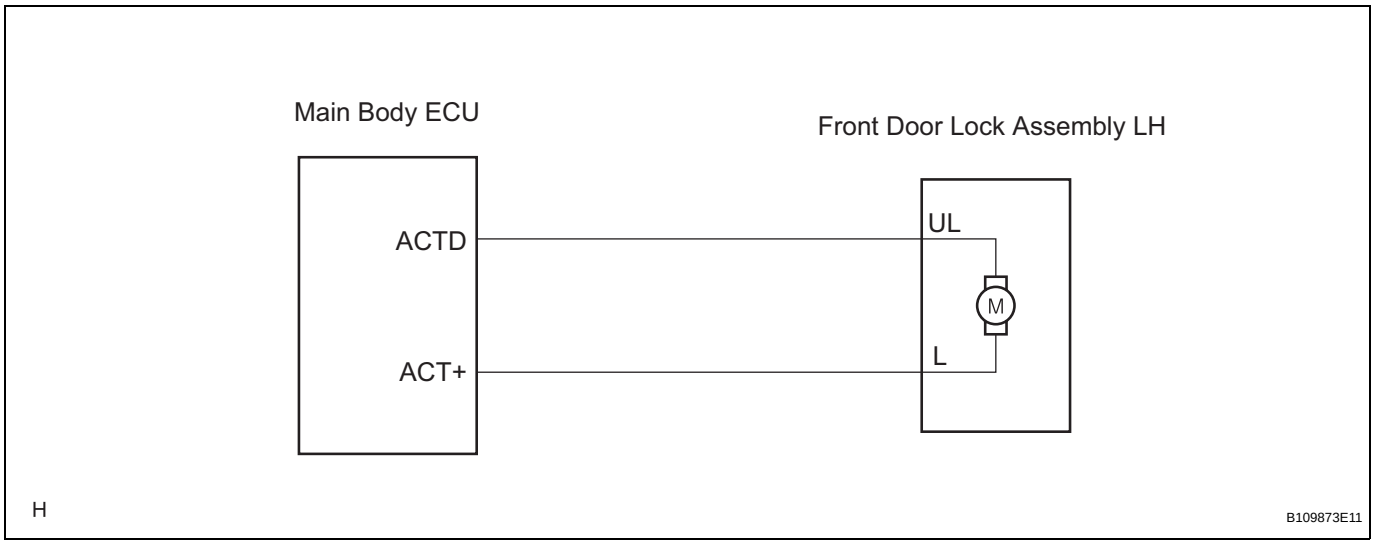

INSPECTION PROCEDURE

1	INSPECT FRONT DOOR LOCK ASSEMBLY LH

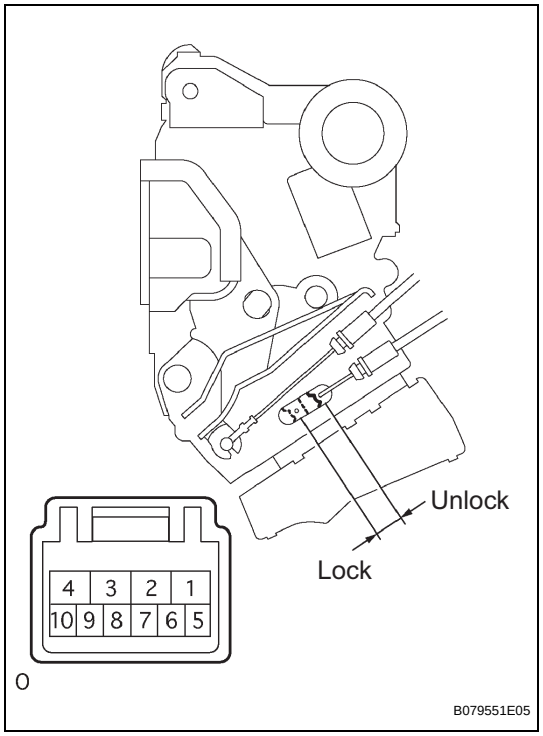

(a) Apply the battery voltage to the door lock motor and check the operation of the door lock motor.
OK

Measurement Condition	Specified Condition
Battery positive (+) → Terminal 4 Battery negative(-) → Terminal 1	Lock
Battery positive (+) → Terminal 1 Battery negative(-) → Terminal 4	Unlock

NG → **REPLACE FRONT DOOR LOCK ASSEMBLY LH**

OK

2	CHECK HARNESS AND CONNECTOR (MAIN BODY ECU - FRONT DOOR LOCK ASSEMBLY LH)

Wire Harness Side:

Main Body ECU Connector

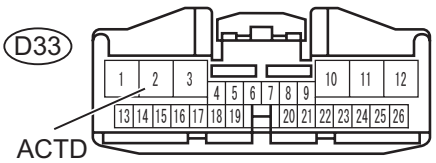

Front View

Main Body ECU Connector

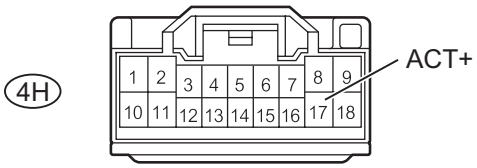

Front View

Front Door Lock Assembly LH Connector

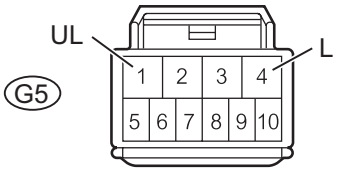

Front View

B123825E04

(a) Disconnect the D33 and 4H main body ECU connectors.
(b) Disconnect the G5 door lock connector.
(c) Measure the resistance.

Standard resistance

Tester Connection	Specified Condition
4H-17 (ACT+) - G5-4 (L)	Below 1 Ω
D33-2 (ACTD) - G5-1 (UL)	Below 1 Ω

(d) Reconnect the main body ECU connectors.
(e) Reconnect the door lock connector.

NG → **REPAIR OR REPLACE HARNESS OR CONNECTOR**

OK

REPLACE MAIN BODY ECU

Only Passenger Door LOCK / UNLOCK Functions do not Operate

DESCRIPTION

The main body ECU receives lock/unlock switch signals and activates the door lock motor accordingly.

WIRING DIAGRAM

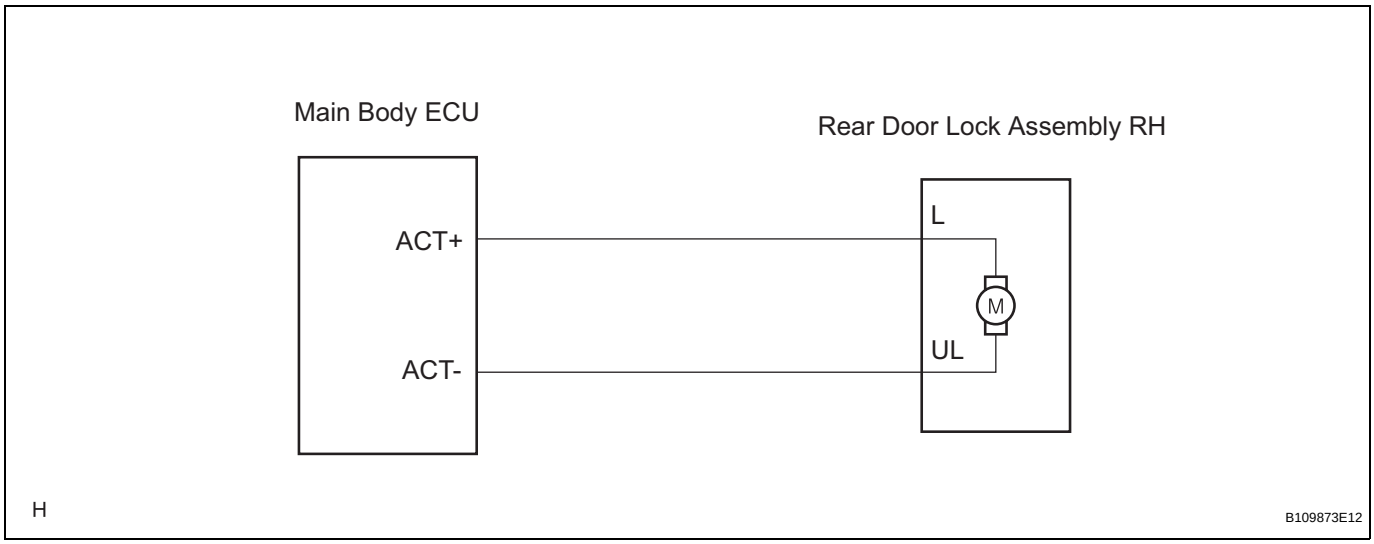

INSPECTION PROCEDURE

1	INSPECT FRONT DOOR LOCK ASSEMBLY RH

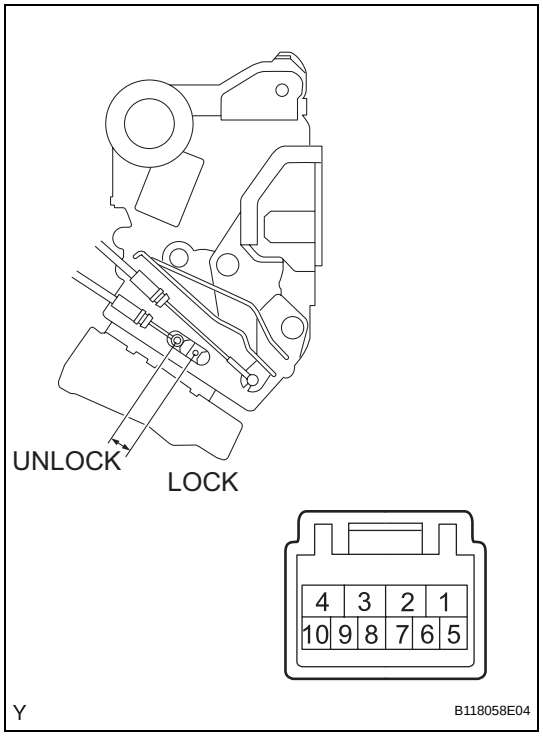

(a) Apply the battery voltage to the door lock motor and check the operation of the door lock motor.
OK

Measurement Condition	Specified Condition
Battery position (+) → Terminal 4 Battery negative (-) → Terminal 1	Lock
Battery position (+) → Terminal 1 Battery negative (-) → Terminal 4	Unlock

NG → **REPLACE FRONT DOOR LOCK ASSEMBLY RH**

OK

2	CHECK HARNESS AND CONNECTOR (MAIN BODY ECU - FRONT DOOR LOCK ASSEMBLY RH)

Wire Harness Side:

Main Body ECU Connector

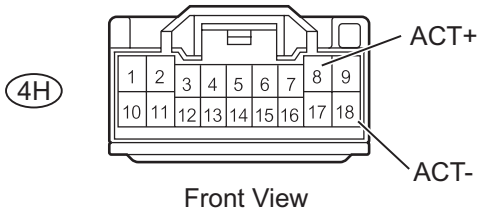

Front View

Front Door Lock Assembly RH Connector

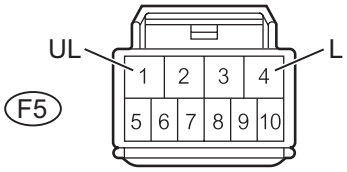

Front View

B145634E01

(a) Disconnect the 4H main body ECU connector.
(b) Disconnect the F5 door lock connector.
(c) Measure the resistance.

Standard resistance

Tester Connection	Specified Condition
4H-8 (ACT+) - F5-4 (L)	Below 1 Ω
4H-18 (ACT-) - F5-1 (UL)	Below 1 Ω

(d) Reconnect the main body ECU connectors.
(e) Reconnect the door lock connector.

NG → **REPAIR OR REPLACE HARNESS OR CONNECTOR**

OK

REPLACE MAIN BODY ECU

DL

Only Rear Door LH LOCK / UNLOCK Functions do not Operate

DESCRIPTION

The main body ECU receives lock/unlock switch signals and activates the door lock motor accordingly.

WIRING DIAGRAM

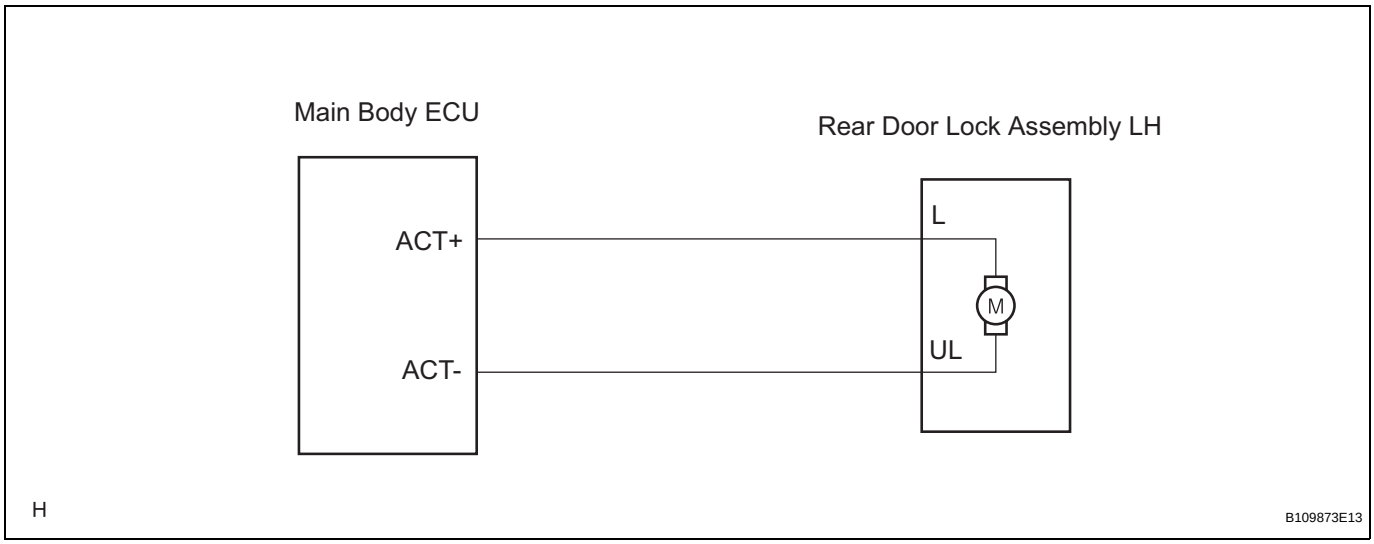

INSPECTION PROCEDURE

1	INSPECT REAR DOOR LOCK ASSEMBLY LH

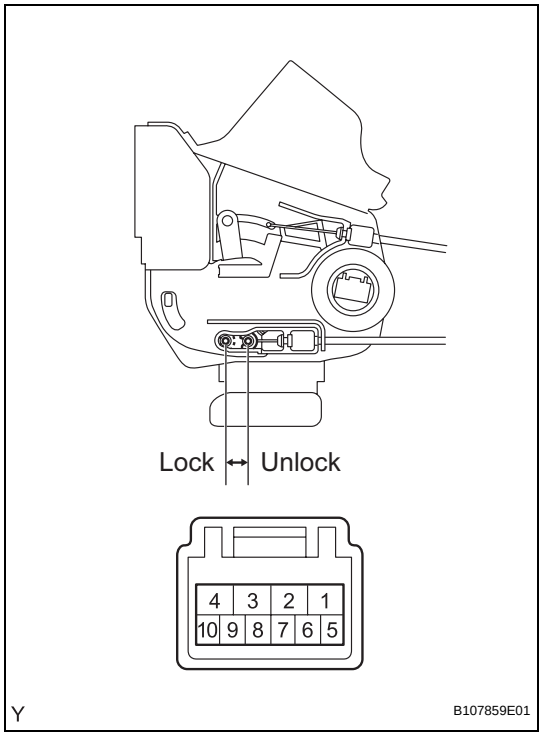

(a) Apply the battery voltage to the door lock motor and check the operation of the door lock motor.
OK

Measurement Condition	Specified Condition
Battery positive (+) → Terminal 4 Battery negative (-) → Terminal 1	Lock
Battery positive (+) → Terminal 1 Battery negative (-) → Terminal 4	Unlock

NG → **REPLACE REAR DOOR LOCK ASSEMBLY LH**

OK

2	CHECK HARNESS AND CONNECTOR (MAIN BODY ECU - REAR DOOR LOCK ASSEMBLY LH)

Wire Harness Side:

Main Body ECU Connector

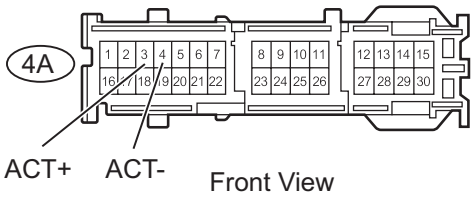

Front View

Rear Door Lock Assembly LH Connector

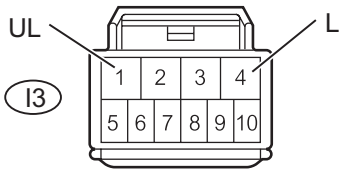

Front View

B123824E05

(a) Disconnect the 4A main body ECU connector.
(b) Disconnect the I3 door lock connector.
(c) Measure the resistance.

Standard resistance

Tester Connection	Specified Condition
4A-3 (ACT+) - I3-4 (L)	Below 1 Ω
4A-4 (ACT-) - I3-1 (UL)	Below 1 Ω

(d) Reconnect the main body ECU connector.
(e) Reconnect the door lock connector.

NG → **REPAIR OR REPLACE HARNESS OR CONNECTOR**

OK

REPLACE MAIN BODY ECU

Only Rear Door RH LOCK / UNLOCK Functions do not Operate

DESCRIPTION

The main body ECU receives lock/unlock switch signals and activates the door lock motor accordingly.

WIRING DIAGRAM

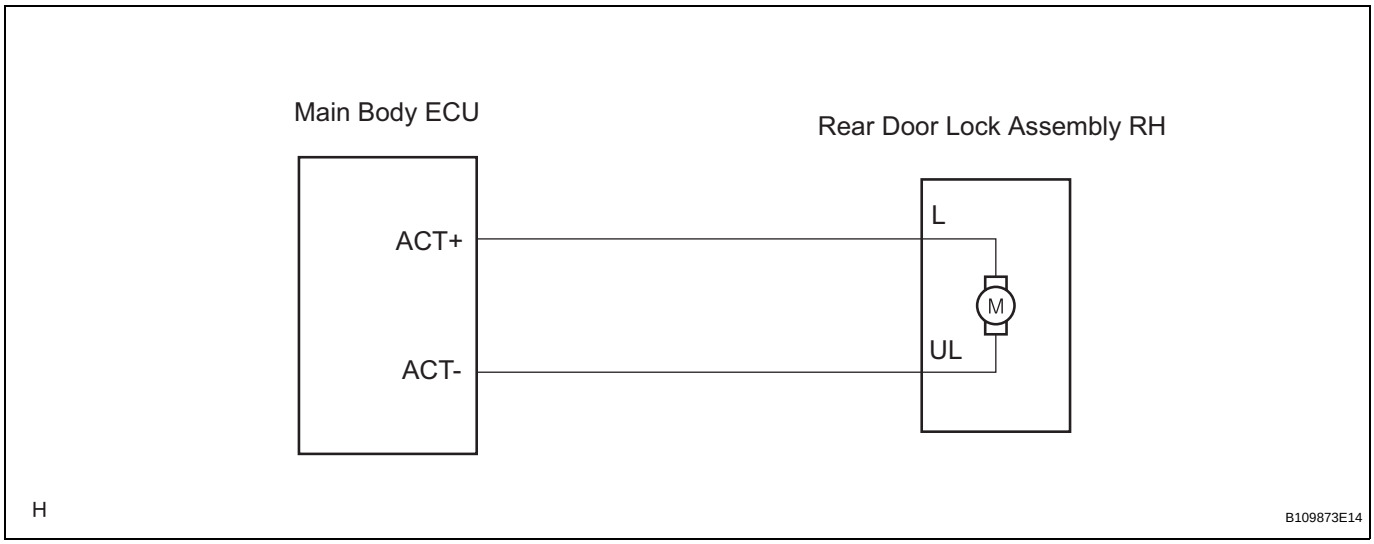

INSPECTION PROCEDURE

1	INSPECT REAR DOOR LOCK ASSEMBLY RH

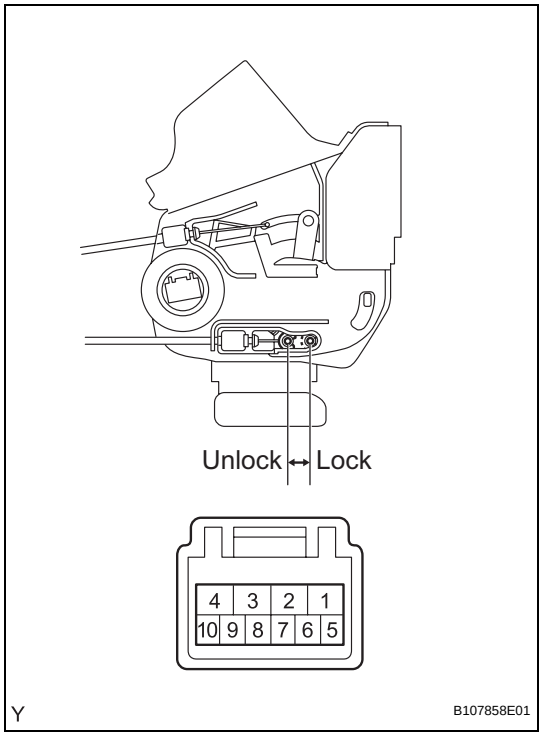

(a) Apply the battery voltage to the door lock motor and check the operation of the door lock motor.
OK

Measurement Condition	Specified Condition
Battery position (+) → Terminal 4 Battery negative (-) → Terminal 1	Lock
Battery position (+) → Terminal 1 Battery negative (-) → Terminal 4	Unlock

NG → **REPLACE REAR DOOR LOCK ASSEMBLY RH**

OK

2	CHECK HARNESS AND CONNECTOR (MAIN BODY ECU - REAR DOOR LOCK ASSEMBLY RH)

Wire Harness Side:

Main Body ECU Connector

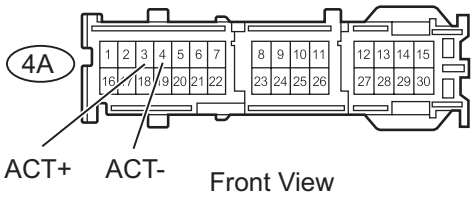

Front View

Rear Door Lock Assembly RH Connector

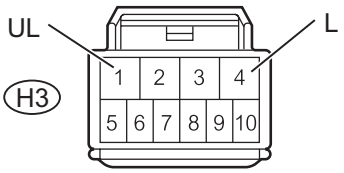

Front View

B123824E06

(a) Disconnect the 4A main body ECU connector.
(b) Disconnect the H3 door lock connector.
(c) Measure the resistance.

Standard resistance

Tester Connection	Specified Condition
4A-3 (ACT+) - H3-4 (L)	Below 1 Ω
4A-4 (ACT-) - H3-1 (UL)	Below 1 Ω

(d) Reconnect the main body ECU connector.
(e) Reconnect the door lock connector.

NG → **REPAIR OR REPLACE HARNESS OR CONNECTOR**

OK

REPLACE MAIN BODY ECU

Only Back Door LOCK / UNLOCK Functions do not Operate

DESCRIPTION

This circuit inspection is necessary for hatchback models.
The main body ECU receives lock/unlock switch signals and activates the door lock motor accordingly.

WIRING DIAGRAM

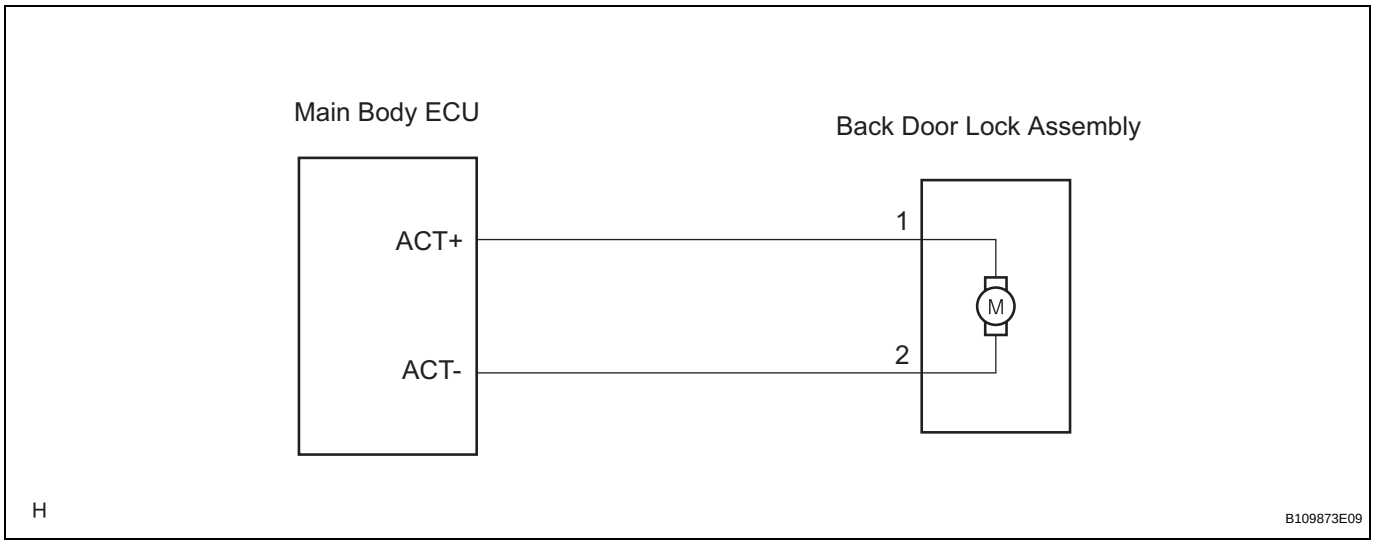

INSPECTION PROCEDURE

1 **INSPECT BACK DOOR LOCK ASSEMBLY**

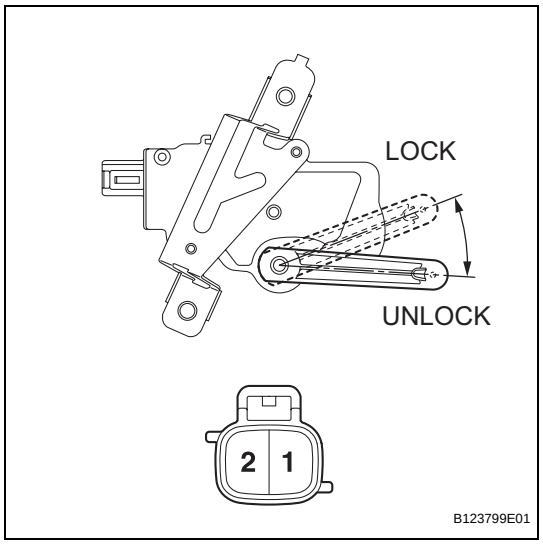

(a) Apply the battery voltage to the door lock motor and check the operation of the door lock motor.
OK

Measurement Condition	Specified Condition
Battery position (+) → Terminal 1 Battery negative (-) → Terminal 2	Lock
Battery position (+) → Terminal 2 Battery negative (-) → Terminal 1	Unlock

NG → **REPLACE BACK DOOR LOCK ASSEMBLY**

OK

2	CHECK HARNESS AND CONNECTOR (MAIN BODY ECU - BACK DOOR LOCK ASSEMBLY)

Wire Harness Side:

Main Body ECU Connector

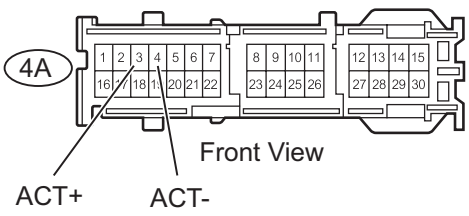

Back Door Look Assembly Connector

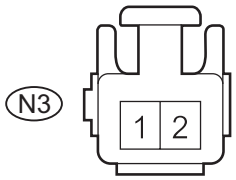

B123826E01

(a) Disconnect the 4A main body ECU connector.
(b) Disconnect the N3 door lock connector.
(c) Measure the resistance.

Standard resistance

Tester Connection	Specified Condition
4A-3 (ACT+) - N3-1	Below 1 Ω
4A-4 (ACT-) - N3-2	Below 1 Ω

(d) Reconnect the main body ECU connector.
(e) Reconnect the door lock connector.

NG → **REPAIR OR REPLACE HARNESS OR CONNECTOR**

OK

REPLACE MAIN BODY ECU

DL

Key Lock-in Prevention Function does not Work Properly

DESCRIPTION

When the key is in the ignition key cylinder or the door courtesy light ON signal is output to the main body ECU, performing the door lock operation with the lock switch does not lock the doors.
HINT:
Since the key reminder warning system has functions that use CAN communication, firstly confirm that there is no malfunction in the communication system by inspecting the CAN communication functions in accordance with How to Proceed with Troubleshooting. Then, conduct the following troubleshooting procedure.

WIRING DIAGRAM

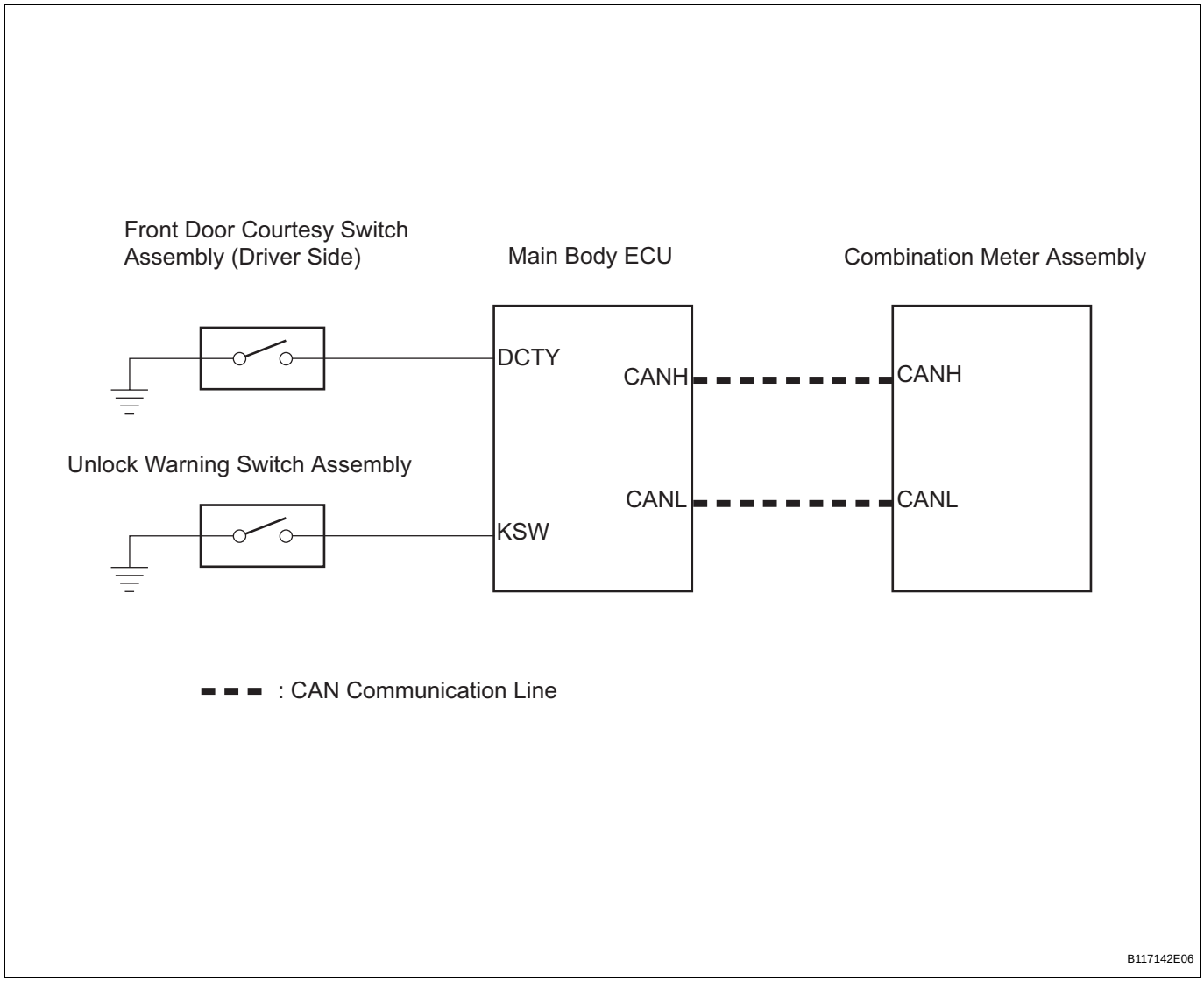

INSPECTION PROCEDURE

1	READ VALUE OF INTELLIGENT TESTER

(a) Use the DATA LIST to check the operation of the front door courtesy light switch.

Main Body ECU

Item	Measurement Item / Display (Range)	Normal Condition	Diagnostic Note
D DOR CTY SW	Driver side door courtesy switch signal / ON or OFF	ON: Driver side door is open OFF: Driver side door is closed	-

OK:

The display is as specified in the normal condition.

NG → **Go to step 5**

OK

2	READ VALUE OF INTELLIGENT TESTER

(a) Use the DATA LIST to check the operation of the door unlock warning switch.

Main Body ECU

DL

Item	Measurement Item / Display (Range)	Normal Condition	Diagnostic Note
KEY UNLK WRN SW	Unlock warning switch signal / ON or OFF	ON: Key is in ignition key cylinder OFF: No key is in ignition key cylinder	-

OK:

The display is as specified in the normal condition.

NG → **REPLACE COMBINATION METER ASSEMBLY**

OK

3 INSPECT UNLOCK WARNING SWITCH ASSEMBLY

Component side:

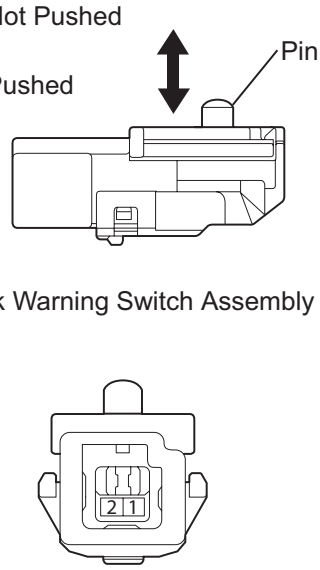

(a) Remove the unlock warning switch assembly.
(b) Measure the resistance.
Standard resistance

Tester Connection	Condition	Specified Condition
1 - 2	Not pushed	10 kΩor higher
1 - 2	Pushed	Below 1 Ω

NG → **REPLACE UNLOCK WARNING SWITCH ASSEMBLY**

OK

4 CHECK HARNESS AND CONNECTOR (UNLOCK WARNING SWITCH ASSEMBLY - MAIN BODY ECU)

Wire Harness Side:

Unlock Warning Switch Assembly Connector



Front View

Main Body ECU Connector

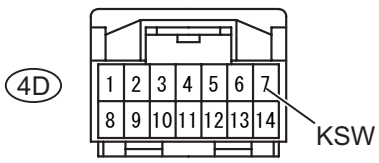

Front View

B121085E01

(a) Disconnect the D19 unlock warning switch connector.
(b) Disconnect the 4D main body ECU connector.
(c) Measure the resistance.
Standard resistance

Tester Connection	Specified Condition
D19-1 - 4D-7 (KSW)	Below 1 Ω
D19-2 - Body ground	Below 1 Ω

(d) Reconnect the unlock warning switch connector.
(e) Reconnect the main body ECU connector.

NG → **REPAIR OR REPLACE HARNESS OR CONNECTOR**

DL

OK

REPLACE MAIN BODY ECU

5 INSPECT FRONT DOOR COURTESY SWITCH ASSEMBLY (DRIVER SIDE)

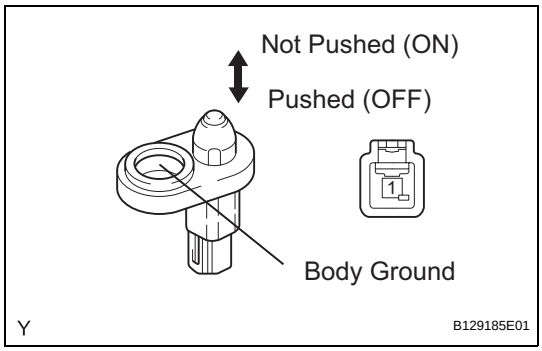

(a) Remove the door courtesy switch.
(b) Measure the resistance.

Standard resistance

Tester Connection	Condition	Specified Condition
1 - Body ground	Not pushed (ON)	Below 1 Ω
1 - Body ground	Pushed (OFF)	10 kΩor higher

(c) Reinstall the courtesy switch.

NG → **REPLACE FRONT DOOR COURTESY SWITCH ASSEMBLY (DRIVER SIDE)**

DL

OK

6	**CHECK HARNESS AND CONNECTOR (FRONT DOOR COURTESY SWITCH - MAIN BODY ECU)**

Wire Harness Side:

Front Door Courtesy Switch Assembly Connector (Driver Side)

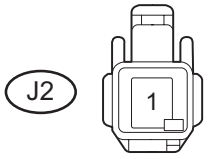

Front View

Main Body ECU Connector

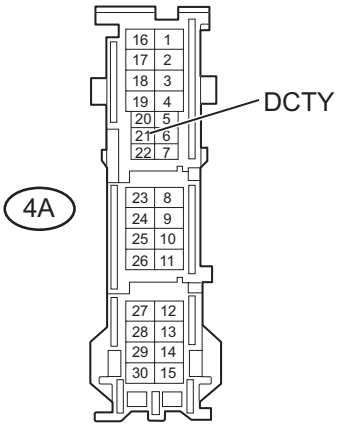

Front View

Y

B112021E10

(a) Disconnect the J2 door courtesy switch connector.
(b) Disconnect the 4A main body ECU connector.
(c) Measure the resistance.

Standard resistance

Tester Connection	Specified Condition
J2-1 - 4A-21 (DCTY)	Below 1 Ω

(d) Reconnect the door courtesy switch connector.
(e) Reconnect the main body ECU connector.

NG → **REPAIR OR REPLACE HARNESS OR CONNECTOR**

OK

REPLACE MAIN BODY ECU

DL

WIRELESS DOOR LOCK CONTROL SYSTEM

PARTS LOCATION

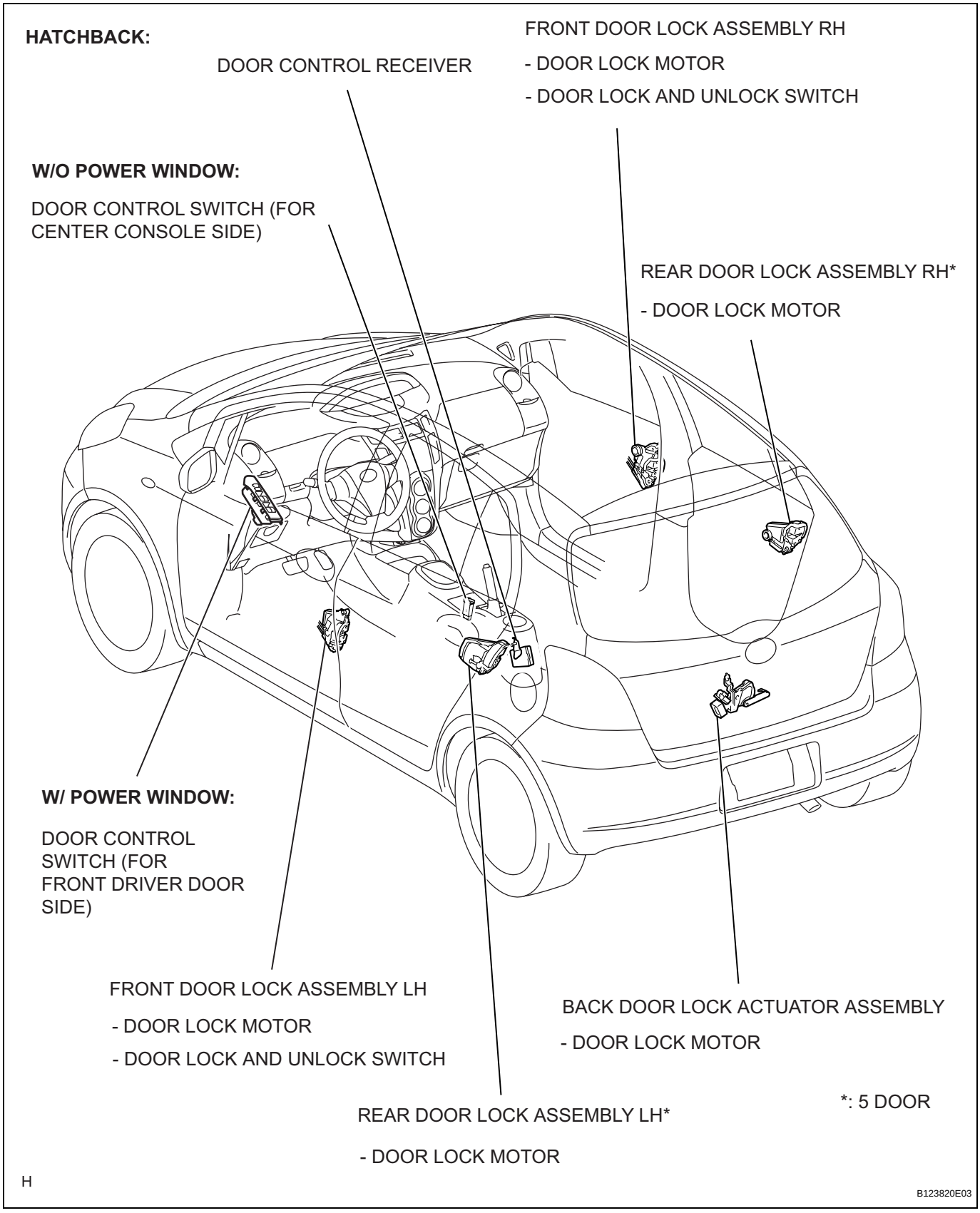

DL

SEDAN:

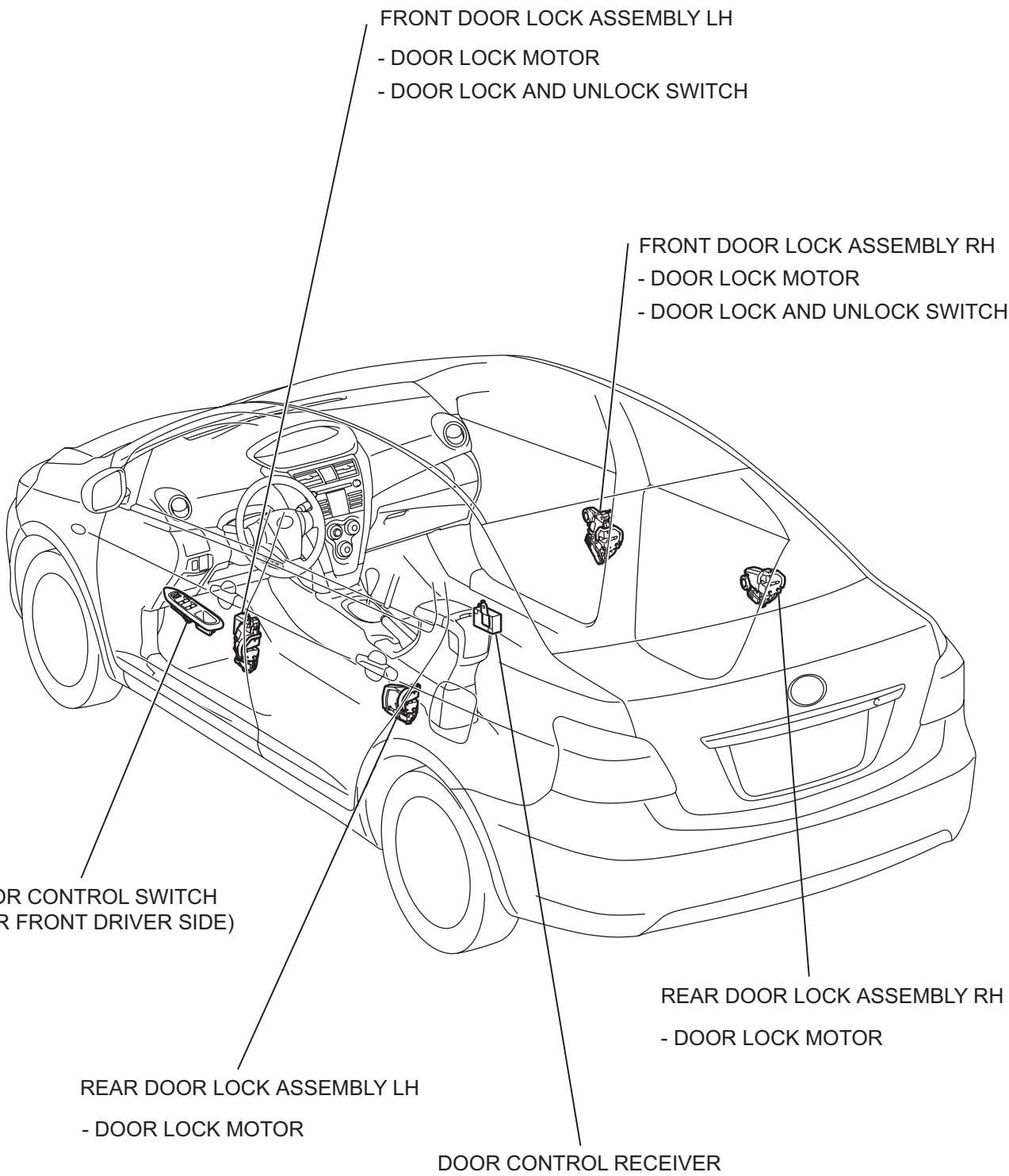

B144913E03

HATCHBACK:

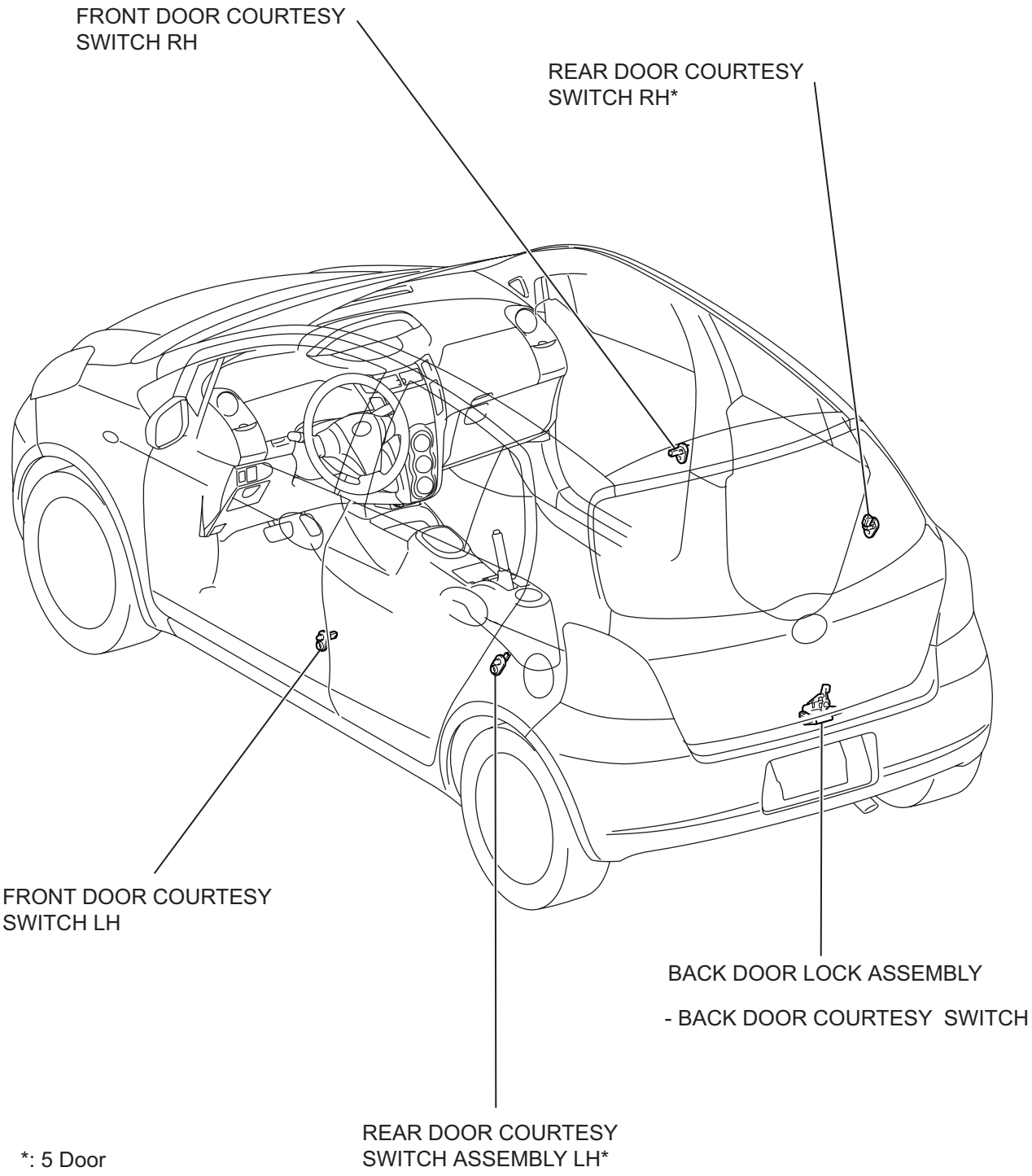

*: 5 Door

H

B123849E05

DL

SEDAN:

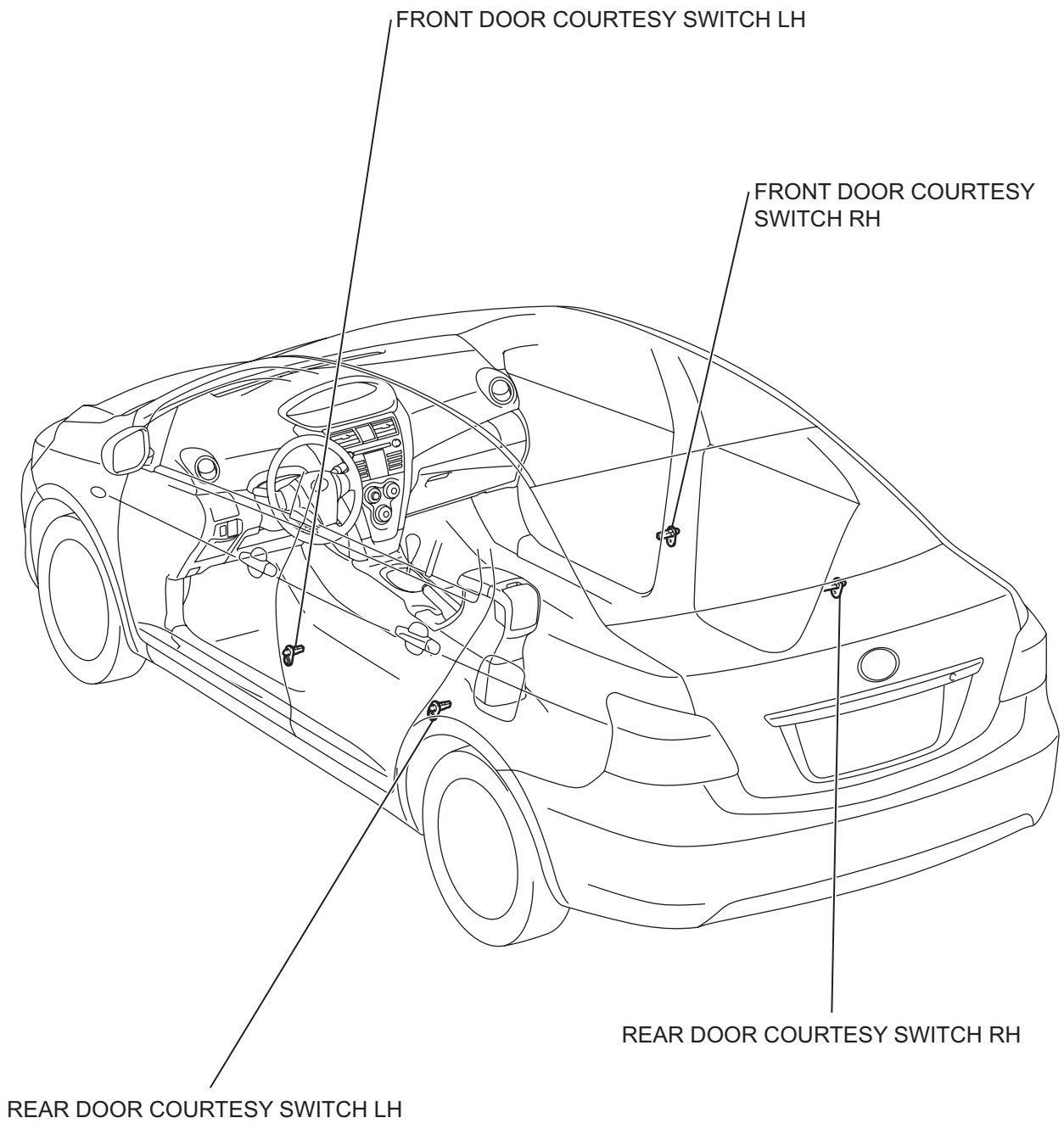

H

B140310E02

HATCHBACK:

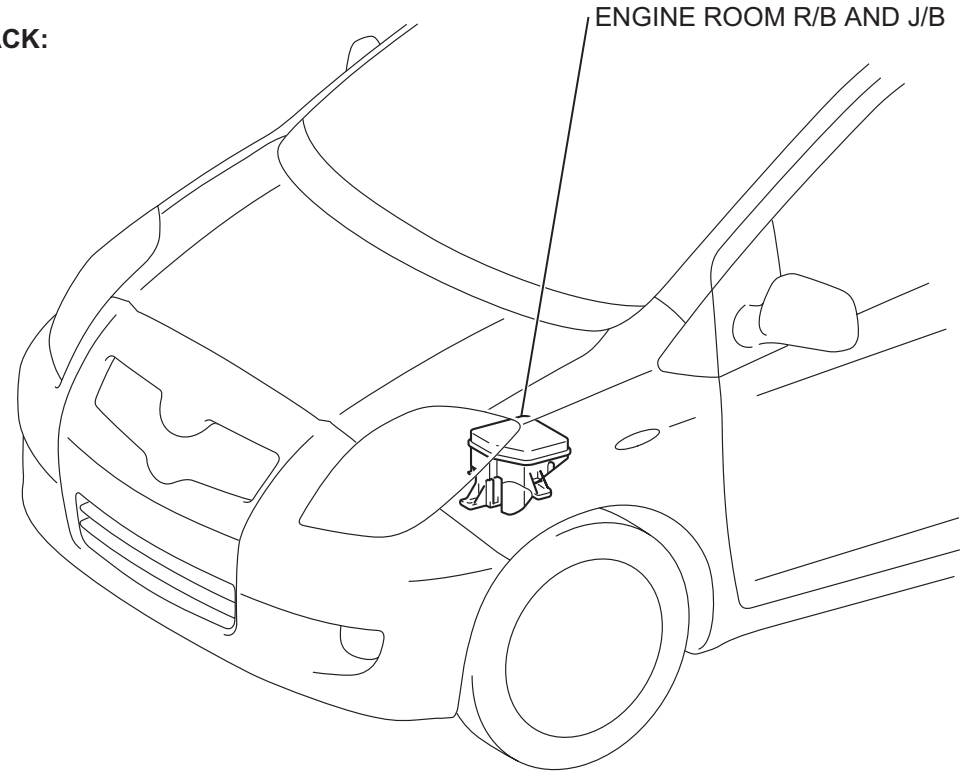

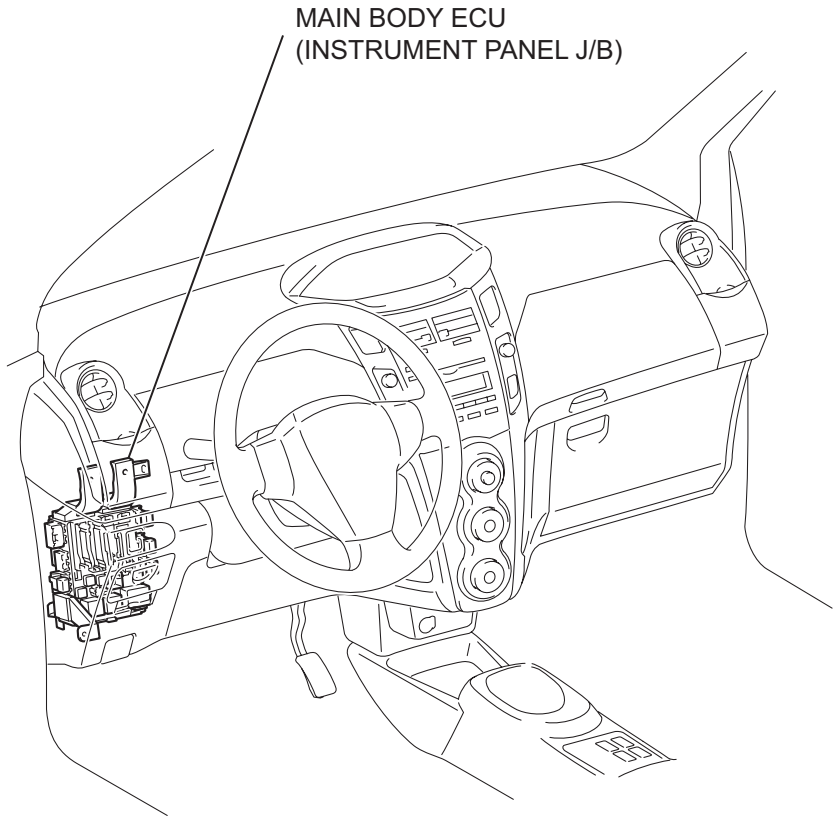

Y

I101011E07

SEDAN:

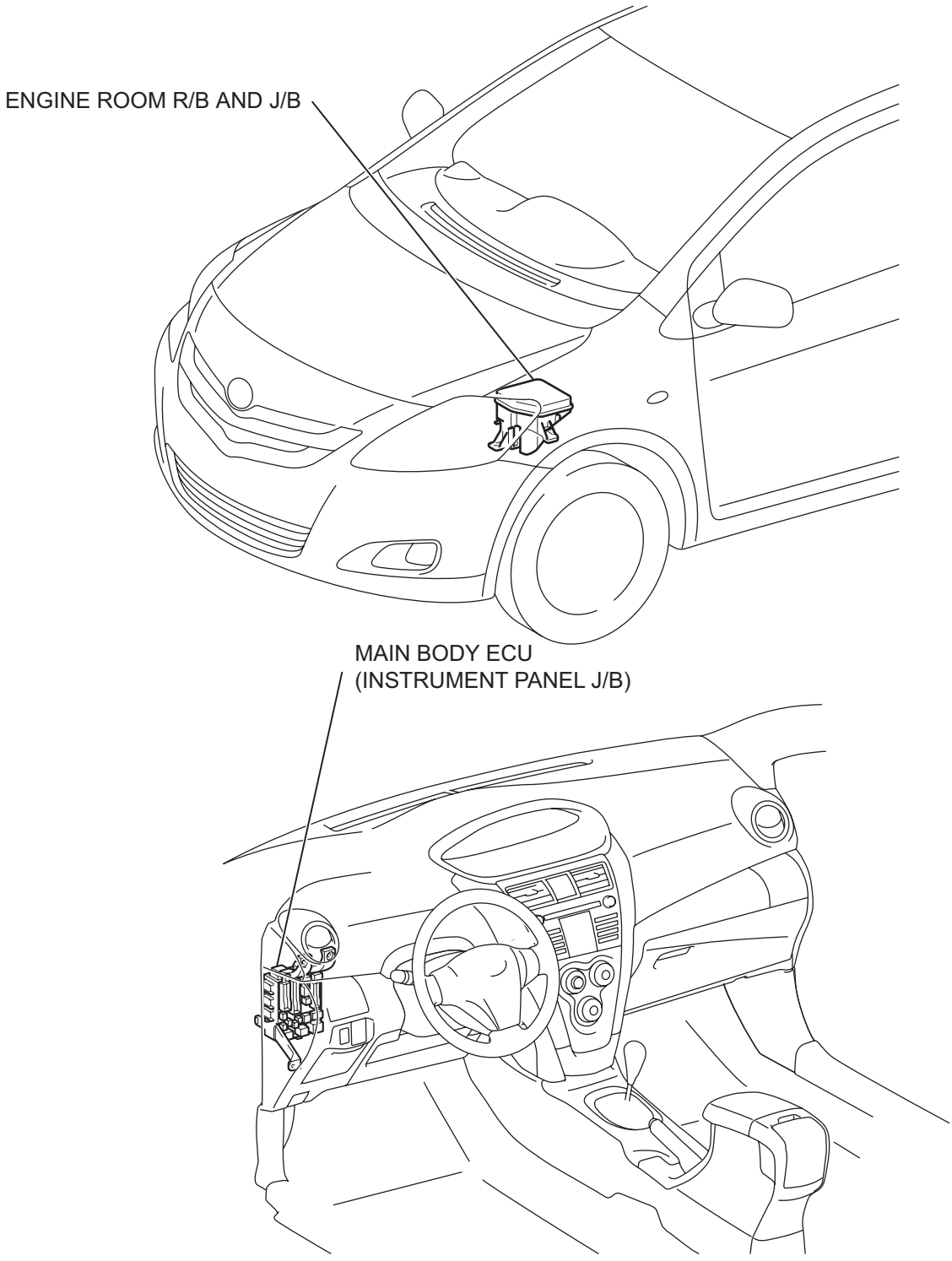

B142328E03

SYSTEM DIAGRAM

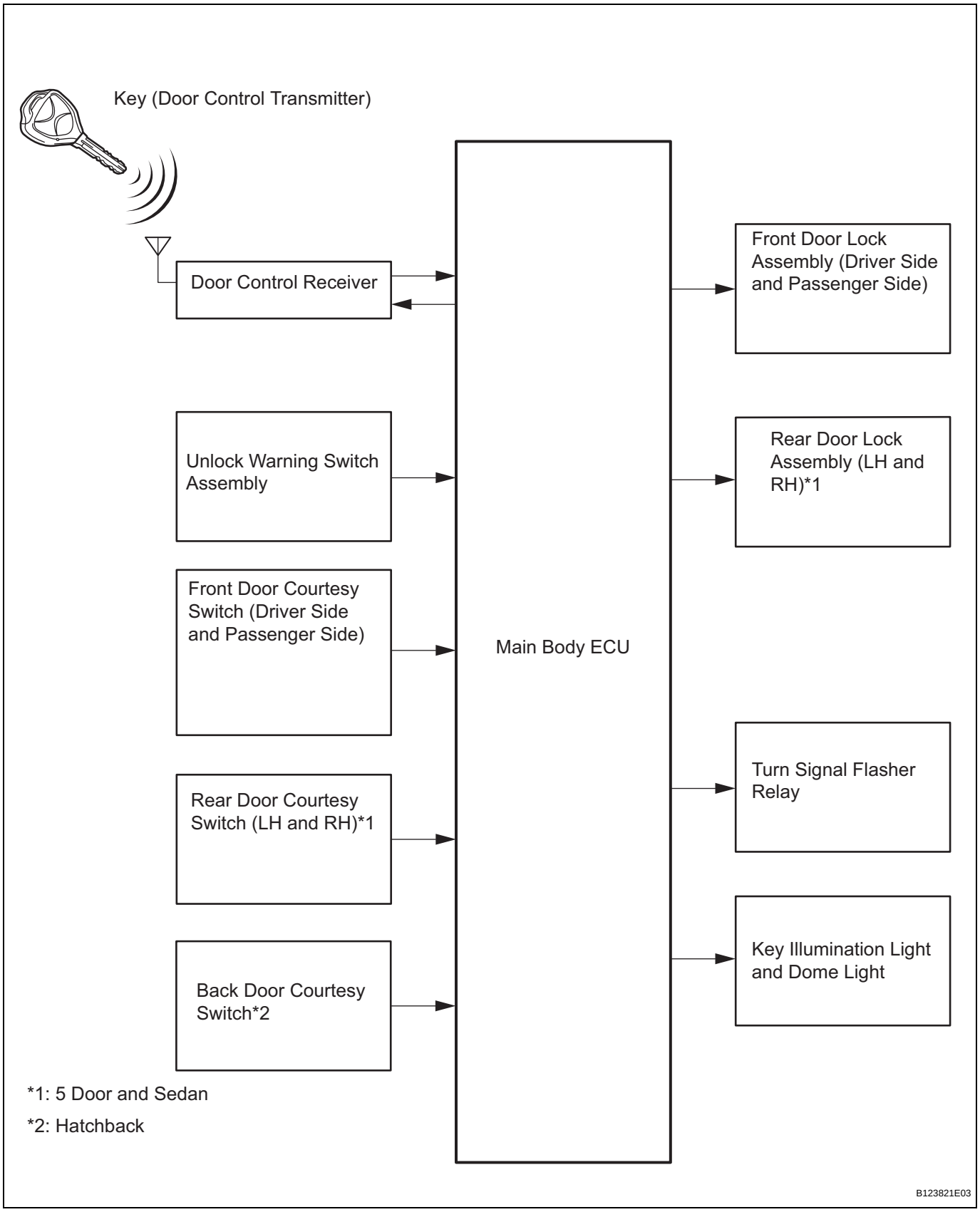

DL

SYSTEM DESCRIPTION

1. WIRELESS DOOR CONTROL SYSTEM DESCRIPTION

(a) This system locks and unlocks the vehicle's doors remotely. The wireless control system has the following features:

- The door control receiver performs the code identification procedure and the main body ECU operates the door lock control. A serial data link is provided for communication between the receiver and main body ECU.
- A key-integrated type transmitter is used and it contains the following 2 switches: the door lock switch and door unlock switch.
- An LED is built into the transmitter so that the battery status can be checked.

2. FUNCTION OF MAIN COMPONENTS

Components	Functions
Door control transmitter	• Contains LOCK and UNLOCK switches • Transmits faint electric waves (recognition codes and function codes) to door control receiver • Illuminates indicator light (LED) during transmission
Door control receiver	Receives weak electric waves (recognition codes and function codes) from door control transmitter, and changes waves to code data
Door lock position switch	Transmits door lock conditions of each door to main body ECU
Unlock warning switch assembly	Detects if key is in ignition key cylinder
Front door courtesy light switch assembly Rear door courtesy light switch assembly Back door courtesy light switch assembly	Turns ON when door is open and turns OFF when door is closed. Outputs door status (open or closed) to main body ECU.

3. SYSTEM FUNCTION

(a) Door lock / unlock function:

With no key in the ignition key cylinder (unlock warning switch is OFF) and all door courtesy light switches OFF, pressing the door control transmitter's LOCK / UNLOCK switch causes the transmitter to output faint electric waves. The transmitter sends the faint electrical wave to the door control receiver. The high frequency circuit built into the door control receiver demodulates the wave into code data, computes the data, and compares the data with previously registered ID codes. If the data is verified, a door lock / unlock request signal is output to the main body ECU. When the request signal is received, the main body ECU outputs a door lock / unlock control signal to each door lock assembly. Each door lock assembly then locks / unlocks its respective door and turns ON / OFF its door lock position switch in accordance with the signal.

(b) Answer-back function:
The main body ECU receives the door unlock detection switch's ON / OFF signals and uses these signals to confirm if the door control operation has been completed. The main body ECU then outputs the hazard warning light control signals to flash the hazard warning lights as an answer-back indication.

(c) The wireless door lock control system has the following functions.

Function	Outline
All door lock function	Pressing LOCK switch locks all doors
All door unlock function	Pressing UNLOCK switch unlocks all doors
Answer-back function	Hazard warning lights flash once when doors are locked, and flash twice when doors are unlocked to indicate that operation has been completed
Automatic locking function	If no doors are opened within 30 seconds after being unlocked by wireless transmitter, all doors are locked again automatically
Illuminated entry function	If locked doors are unlocked through wireless operation, ignition key cylinder light and dome light illuminate. If one of following situations occurs, lights fade out: • Within 15 seconds, doors are not opened and doors are locked through wireless operation • Within 15 seconds, key is inserted into ignition key cylinder and ignition switch is turned ON • No operations or actions are performed within 15 seconds
Panic alarm function	Pressing PANIC switch for more than 1 second sounds horn
Security function	Sends signal as rolling code
Transmitter recognition code registration function	Enables 4 modes for registering (writing and storing) transmitter recognition codes in EEPROM, built into door control receiver

HOW TO PROCEED WITH TROUBLESHOOTING

HINT:

- The wireless door lock control system troubleshooting procedures are based on the premise that the power door lock system is operating normally. Check the power door lock system first before troubleshooting the wireless door lock control system.
- Use these procedures to troubleshoot the wireless door lock control system.
- *: Use the intelligent tester.

1 VEHICLE BROUGHT TO WORKSHOP

NEXT

2 INSPECT BATTERY VOLTAGE

Standard voltage:
11 to 14 V

If the voltage is below 11 V, recharge or replace the battery before proceeding.

NEXT

3 PROBLEM SYMPTOMS TABLE

Result:

Result	Proceed to
Fault is not listed in problem symptoms table	A
Fault is listed in problem symptoms table	B

B → **Go to step 5**

A

4 OVERALL ANALYSIS AND TROUBLESHOOTING*

(a) Terminals of ECU (see page DL-56)
(b) Data List / Active Test (see page DL-63)
(c) On-vehicle Inspection (see page DL-64)

NEXT

5 REPAIR OR REPLACE

NEXT

6	**CONFIRMATION TEST**

NEXT

END

CUSTOMIZE PARAMETERS

1. CUSTOMIZING FUNCTION WITH INTELLIGENT TESTER (REFERENCE)

HINT:

The following items can be customized.

NOTICE:

- **When the customer requests a change in a function, first make sure that the function can be customized.**
- **Record the current settings before customizing.**
- **When troubleshooting a function, first make sure that the function is set to the default setting.**

Wireless door lock control system

Display (Item)	Default	Contents	Setting
HAZARD ANS BACK	ON	When wireless lock switch on transmitter pressed, illuminates all hazard warning lights once. When unlock switch pressed, all hazard warning lights illuminate twice	ON / OFF
WIRELESS OPER	ON	ON /OFF of wireless door lock function	ON / OFF
ALARM FUNCTION	ON	Operates security alarm when panic switch on transmitter continuously pressed for 1 second	ON / OFF
UNLOCK/2 OPER	ON	Function that unlocks driver side door when unlock switch on transmitter is pressed once, and unlocks all doors when pressed twice. if setting is OFF, pressing unlock switch once makes all doors unlock.	ON / OFF
AUTO LOCK DELAY	30 seconds	Time until relocking after unlocking with wireless door lock function	60 seconds / 30 seconds

PROBLEM SYMPTOMS TABLE

Use the table below to help determine the cause of the problem symptom. The potential causes of the symptoms are listed in order of probability in the "Suspected Area" column of the table. Check each symptom by checking the suspected areas in the order they are listed. Replace parts as necessary.

Wireless door lock control

Symptom	Suspected area	See page
Only wireless control function inoperative	Transmitter battery	DL-71
	Door control transmitter	DL-71
	Door control receiver	DL-71
	Wire harness	DL-71
	Main body ECU	DL-71
No answer-back	Lighting system	DL-79
	Wire harness	DL-79
	Main body ECU	DL-79

TERMINALS OF ECU

1. CHECK MAIN BODY ECU

Main Body ECU (Rear View):

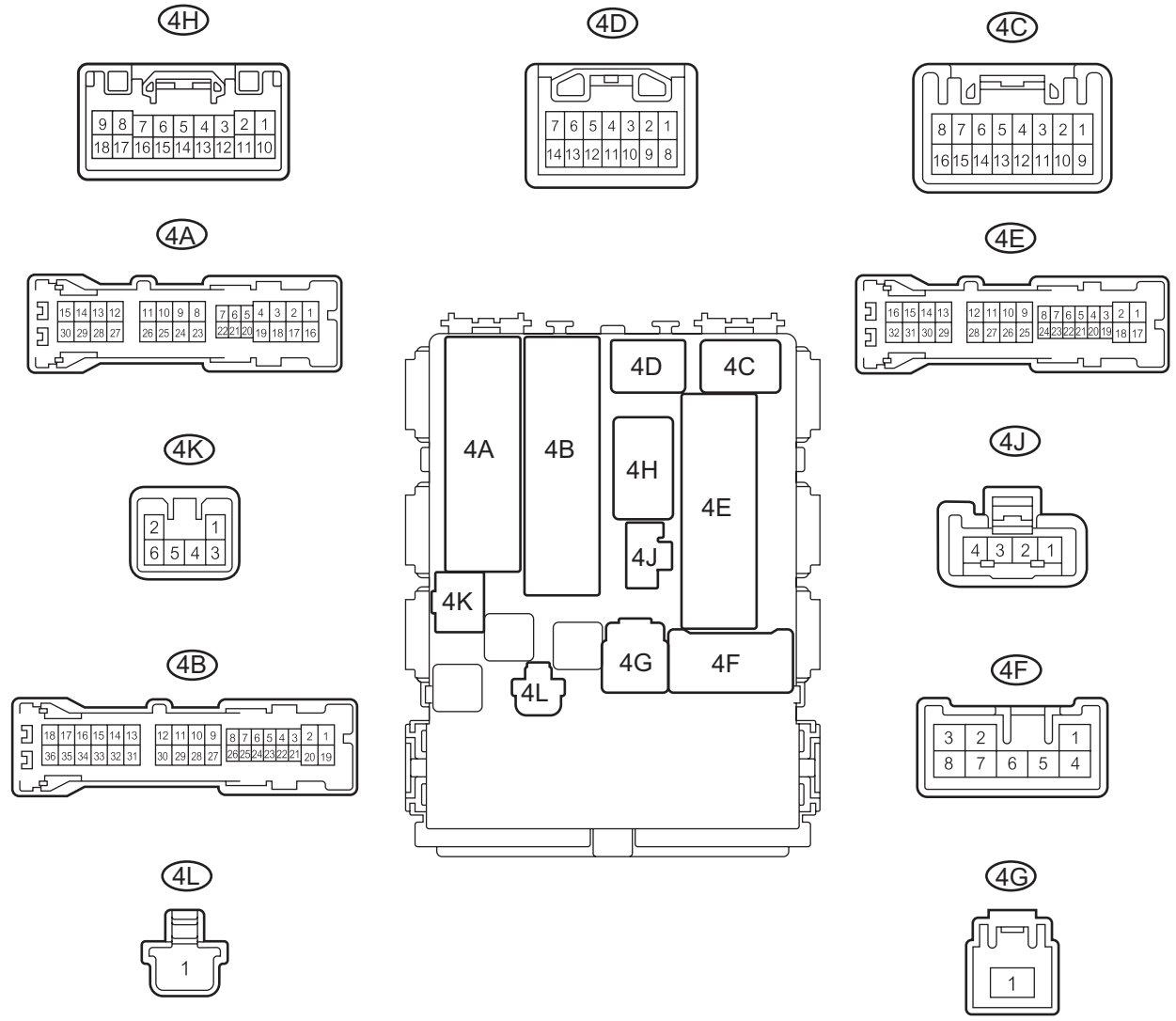

H

E114510E06

Main Body ECU (Front View):

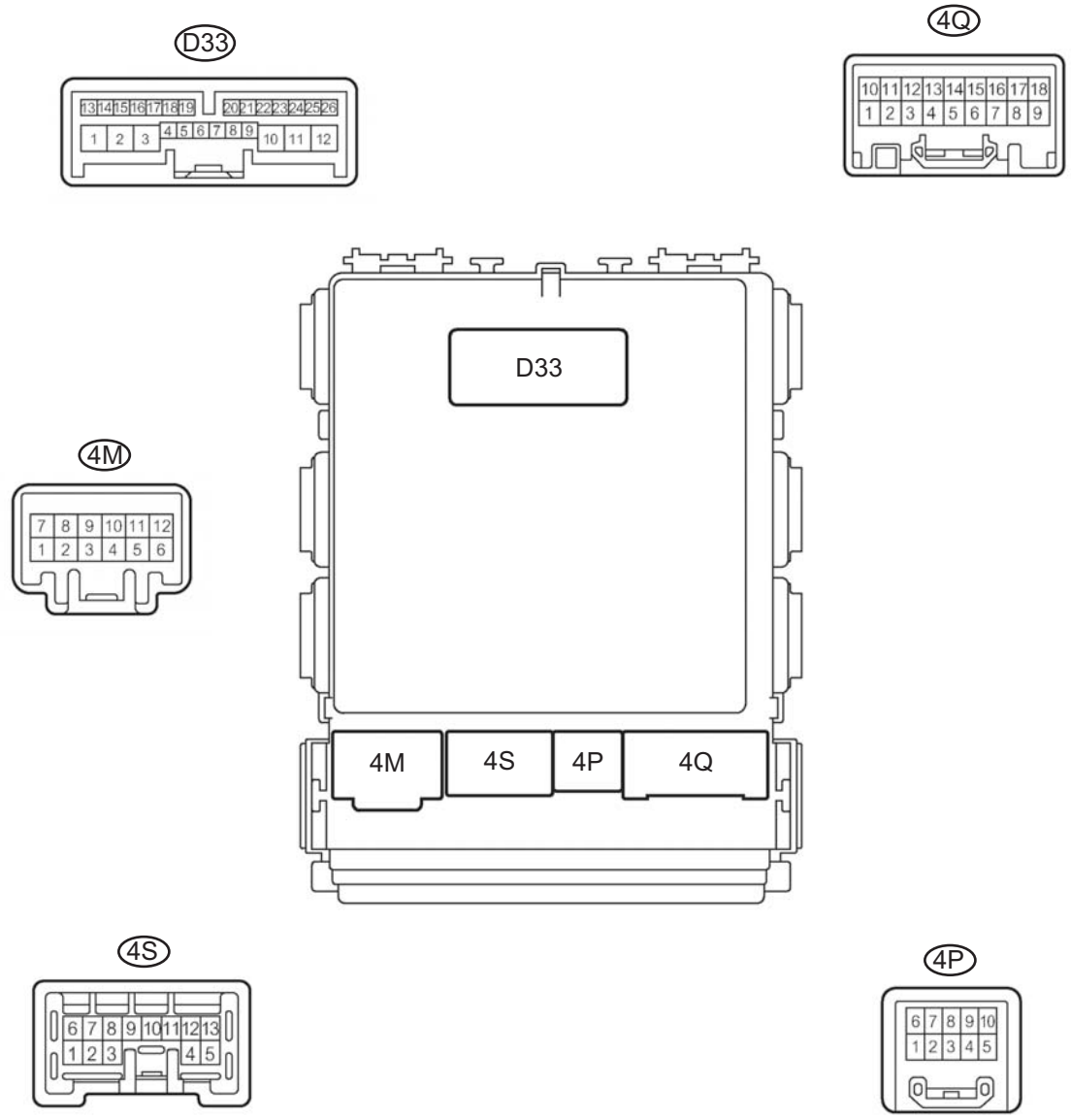

(a) Disconnect the 4B and 4E main body ECU (vehicle rear side) connectors.

(b) Measure the voltage and resistance of the wire harness side connectors.

Standard:

Symbols (Terminal No.)	Wiring Color	Terminal Description	Condition	Specified Condition
BECU (4B-30) - GND1 (4E-17)	L - W-B	Battery (power supply)	Always	11 to 14 V
GND1 (4E-17) - Body ground	W-B - Body ground	Ground	Always	Below 1 Ω

If the result is not as specified, there may be a malfunction in the wire harness.

(c) Reconnect the main body ECU (vehicle rear side) connectors.

(d) Measure the voltage of the wire harness side connectors.

Standard voltage:

Symbols (Terminal No.)	Wiring Color	Terminal Description	Condition	Specified Condition
KSW (4D-7) - GND1 (4E-17)	Y - W-B	Key unlock warning switch input	Key inserted	0 V
KSW (4D-7) - GND1 (4E-17)	Y - W-B	Key unlock warning switch input	No key in ignition key cylinder	11 to 14 V
DCTY (4A-21) - Body ground	R - Body ground	Driver side door courtesy switch input	Driver side door closed	11 to 14 V
DCTY (4A-21) - Body ground	R - Body ground	Driver side door courtesy switch input	Driver side door open	0 V
PCTY (4A-24) - Body ground	L - Body ground	Passenger side door courtesy switch input	Passenger side door closed	11 to 14 V
PCTY (4A-24) - Body ground	L - Body ground	Passenger side door courtesy switch input	Passenger side door open	0 V
RRCY (4A-20) - Body ground*3	L - Body ground	Rear RH door courtesy switch input	Rear RH door closed	11 to 14 V
RRCY (4A-20) - Body ground*3	L - Body ground	Rear RH door courtesy switch input	Rear RH door open	0 V
RRCY (4A-5) - Body ground*3	G - Body ground	Rear LH door courtesy switch input	Rear LH door closed	11 to 14 V
RRCY (4A-5) - Body ground*3	G - Body ground	Rear LH door courtesy switch input	Rear LH door open	0 V
RRCY (4A-5) - Body ground*4	Y - Body ground	Rear LH and RH door courtesy switch input	Rear LH and RH door closed	11 to 14 V
RRCY (4A-5) - Body ground*4	Y - Body ground	Rear LH and RH door courtesy switch input	Rear LH and RH door open	0 V
BCTY (4A-7) - Body ground*1	SB- Body ground	Back door courtesy switch input	Back side door closed	11 to 14 V
BCTY (4A-7) - Body ground*1	SB- Body ground	Back door courtesy switch input	Back side door open	0 V
LGCY (4A-7) - Body ground*2	SB- Body ground	Luggage room courtesy switch input	Luggage room closed	11 to 14 V
LGCY (4A-7) - Body ground*2	SB- Body ground	Luggage room courtesy switch input	Luggage room open	0 V
PRG (D33-17) - Body ground	W - Body ground	Door control receiver output	Transmitter switch ON → OFF (No key in ignition key cylinder, all doors closed)	6 to 7 V → Below 1 V → 6 to 7 V
RDA (D33-16) - Body ground	R - Body ground	Door control receiver input	Transmitter switch ON → OFF (No key in ignition key cylinder, all doors closed)	Below 1 V → 6 to 7 V → Below 1 V
HAZ (4S-17) - Body ground	B- Body ground	Hazard warning light signal	Answer-back ON	Pulse generation
HAZ (4S-17) - Body ground	B- Body ground	Hazard warning light signal	Answer-back OFF	11 to 14 V

*1: Hatchback
*2: Sedan
*3: Hatchback, Sedan except *5
*4: Sedan *5
*5: Cold area specification, w/ Engine immobilizer system, w/ ABS, w/ Rear window defogger, w/ Power door lock system, w/ Daytime running light, w/ Remote control mirror, w/ Air conditioning
If the result is not as specified, there may be a malfunction in the wire harness.

2. CHECK DOOR CONTROL RECEIVER

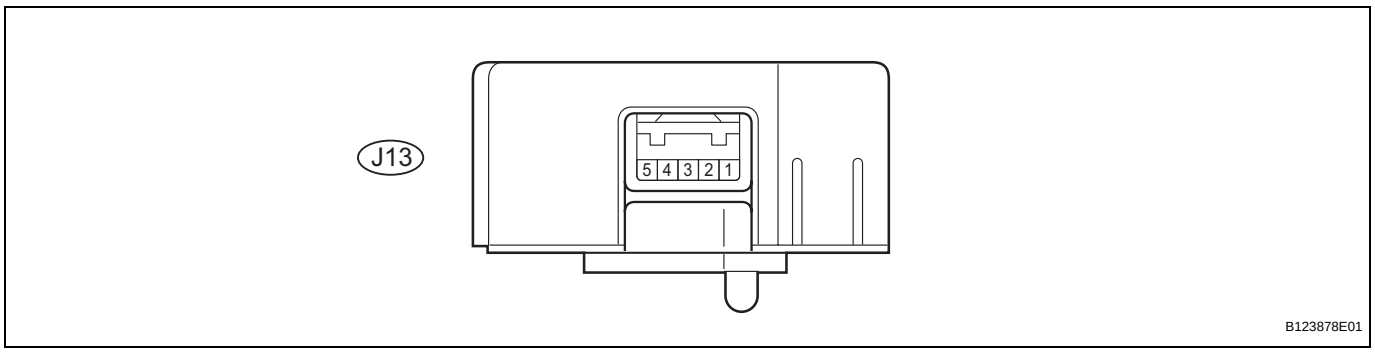

(a) Disconnect the door control receiver connector.
(b) Measure the voltage and resistance of the wire harness side connectors.

Standard:

Symbols (Terminal No.)	Wiring Color	Terminal Description	Condition	Specified Condition
+B (J13-5) - GND (J13-1)	L - W-B	Battery (power supply)	Always	11 to 14 V
GND (J13-1) - Body ground	W-B - Body ground	Ground	Always	Below 1 Ω

If the result is not as specified, there may be a malfunction in the wire harness.

(c) Reconnect the door control receiver connector.
(d) Measure the voltage of the wire harness side connectors.

Standard voltage:

Symbols (Terminal No.)	Wiring Color	Terminal Description	Condition	Specified Condition
PRG (J13-3) - Body ground	W - Body ground	Door control receiver output	Transmitter switch ON → OFF (No key in ignition key cylinder, all doors closed)	6 to 7 V → Below 1 V → 6 to 7 V
RDA (J13-2) - Body ground	R - Body ground	Door control receiver input	Transmitter switch ON → OFF (No key in ignition key cylinder, all doors closed)	Below 1 V → 6 to 7 V → Below 1 V

If the result is not as specified, there may be a malfunction in the wire harness.

DIAGNOSIS SYSTEM

1. CHECK DLC3

(a) The ECU uses ISO 15765-4 for communication. The terminal arrangement of the DLC3 complies with SAE J1962 and matches the ISO 15765-4 format.

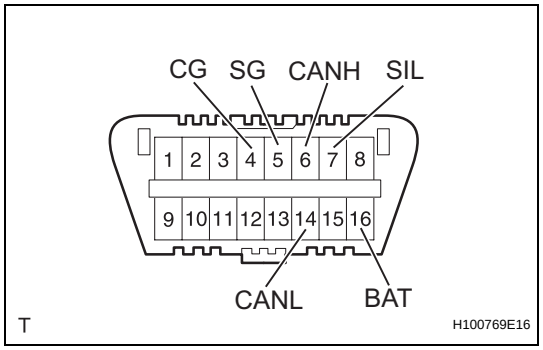

Symbols (Terminal No.)	Terminal Description	Condition	Specified Condition
SIL (7) - SG (5)	Bus " +" line	During transmission	Pulse generation
CG (4) - Body ground	Chassis ground	Always	Below 1 Ω
SG (5) - Body ground	Signal ground	Always	Below 1 Ω
BAT (16) - Body ground	Battery positive	Always	11 to 14 V
CANH (6) - CANL (14)	CAN bus line	Ignition switch OFF*	54 to 69 Ω

Symbols (Terminal No.)	Terminal Description	Condition	Specified Condition
CANH (6) - CG (4)	HIGH-level CAN bus line	Ignition switch OFF*	200 Ω or higher
CANL (14) - CG (4)	LOW-level CAN bus line	Ignition switch OFF*	200 Ω or higher
CANH (6) - BAT (16)	HIGH-level CAN bus line	Ignition switch OFF*	6 kΩ or higher
CANL (14) - BAT (16)	LOW-level CAN bus line	Ignition switch OFF*	6 kΩ or higher

NOTICE:

***: Before measuring the resistance, leave the vehicle as is for at least 1 minute and do not operate the ignition switch, any other switches or the doors.**

If the result is not as specified, the DLC3 may have a malfunction. Repair or replace the harness and connector.

Hatchback:

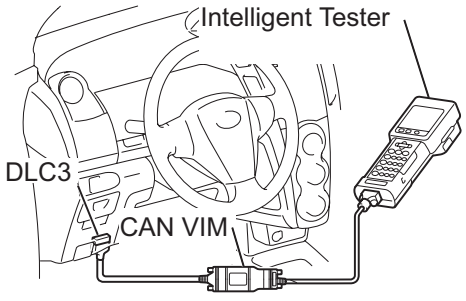

Sedan:

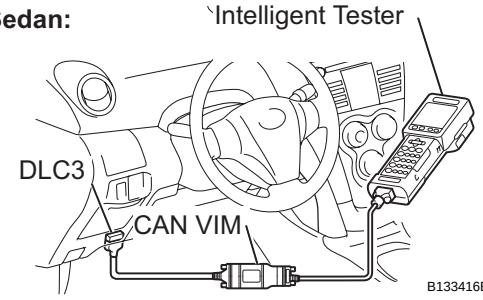

HINT:

Connect the cable of the intelligent tester to the CAN VIM, connect the CAN VIM to the DLC3, turn the ignition switch ON and attempt to use the tester. If the display indicates that a communication error has occurred, there is a problem either with the vehicle or with the tester.

- If communication is normal when the tester is connected to another vehicle, inspect the DLC3 of the original vehicle.
- If communication is still not possible when the tester is connected to another vehicle, the problem is probably in the tester itself. Consult the Service Department listed in the tester's instruction manual.

Hatchback:

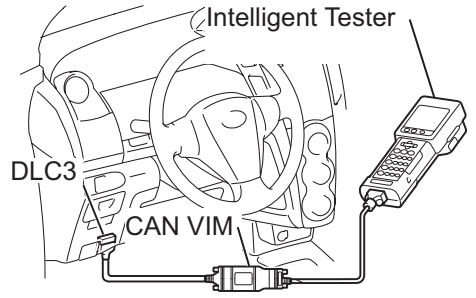

Sedan:

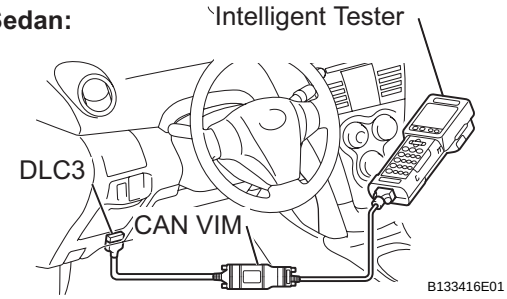

DTC CHECK / CLEAR

1. DTC CHECK

(a) Connect the intelligent tester with CAN VIM to the DLC3.

(b) Turn the ignition switch ON.

(c) Read the DTCs by following the prompts on the tester's screen.

HINT:

Refer to the intelligent tester operator's manual for further details.

2. DTC CLEAR

(a) Connect the intelligent tester with CAN VIM to the DLC3.

(b) Turn the ignition switch ON.

(c) Erase the DTCs by following the prompts on the tester's screen.

HINT:

Refer to the intelligent tester operator's manual for further details.

3. SELF-DIAGNOSTIC MODE (OPERATING IGNITION KEY CYLINDER)

(a) Switch to self-diagnostic mode.

(1) Establish the vehicle's initial condition.

(2) Insert the key into the ignition key cylinder and remove it.

(3) Within 5 seconds of removing the key, insert it into the ignition key cylinder again.

(4) Turn the ignition switch ON and then OFF.

(5) Within 30 seconds of turning the ignition switch OFF, perform the following operation 9 more times: Turn the ignition switch ON and then OFF.

HINT:

- Turning the ignition switch ON after the procedure above has been completed ends self-diagnostic mode.
- Do not lock or unlock doors while in self-diagnostic mode.

NOTICE:

If the system cannot enter self-diagnostic mode, the system returns to normal mode.

DL

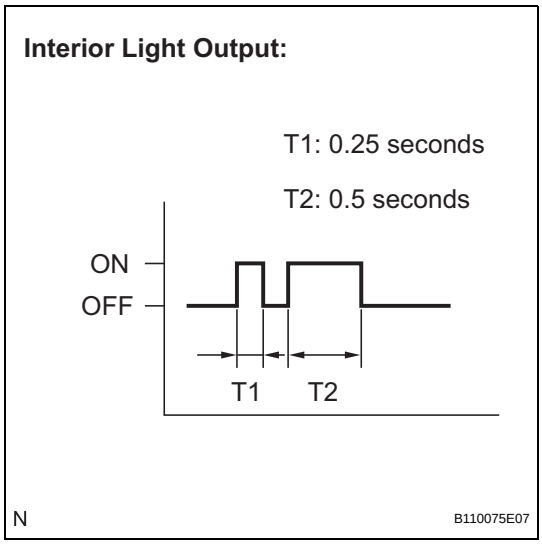

(b) Check that the system has switched to self-diagnostic mode by checking the flash pattern of the interior light.
(c) Check the diagnostic outputs when the door control transmitter switch is held down. The diagnostic outputs can be checked by the flash patterns of the interior light.

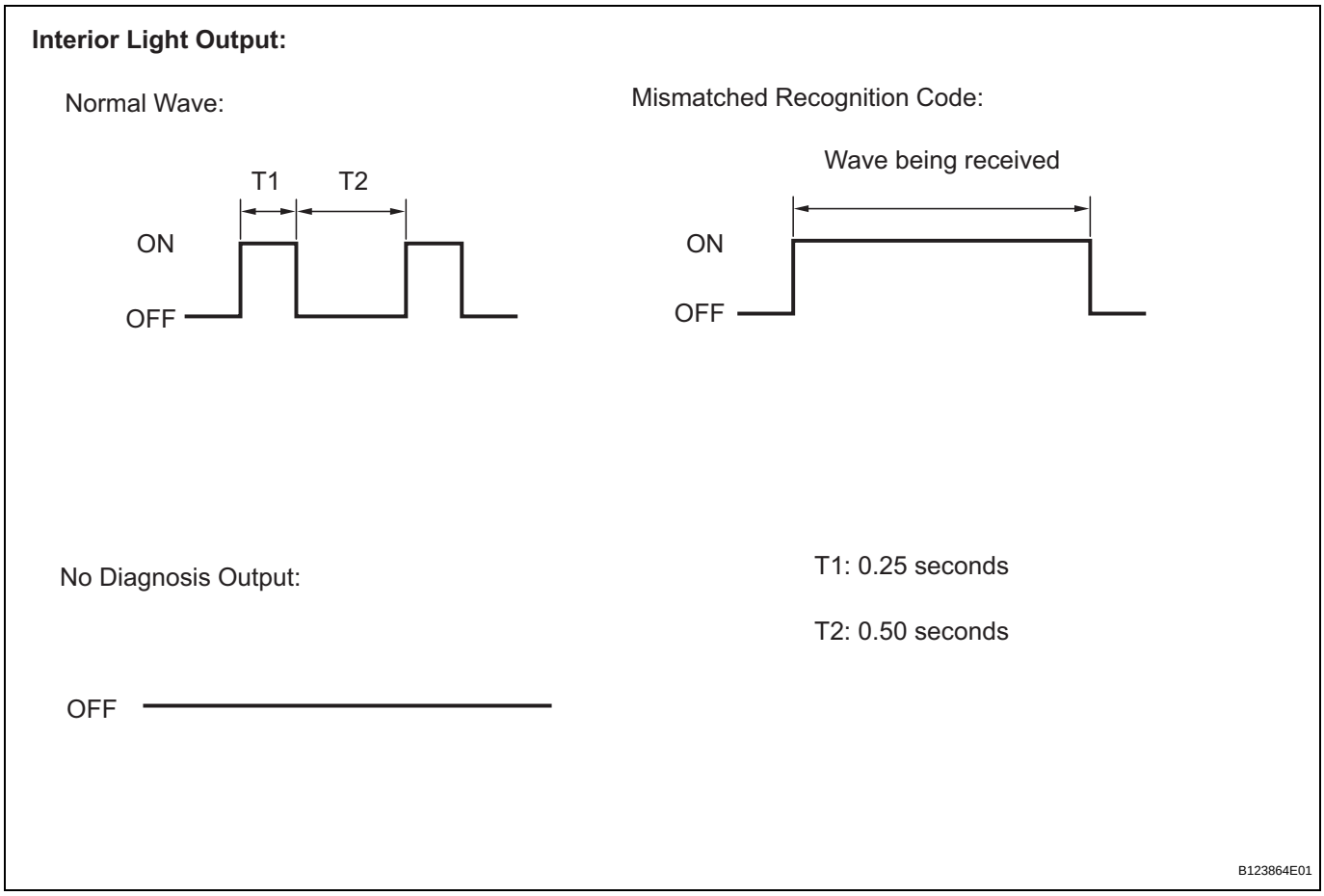

4. SELF-DIAGNOSTIC MODE (USING INTELLIGENT TESTER)

(a) Switch to self-diagnostic mode.
(1) Connect the intelligent tester to the DLC3.
(2) Turn the ignition switch ON and turn the intelligent tester main switch on.
HINT:
Refer to the intelligent tester operator's manual for further details.

DATA LIST / ACTIVE TEST

1. READ DATA LIST

HINT:

Using the intelligent tester's DATA LIST allows switch, sensor, actuator and other item values to be read without removing any parts. Reading the DATA LIST early in troubleshooting is one way to save time.

(a) Connect the intelligent tester to the DLC3.
(b) Turn the ignition switch ON.
(c) Read the DATA LIST in accordance with the display on the tester.

Main body ECU:

Item	Measurement Item/Display (Range)	Normal Condition	Diagnostic Note
D DOR CTY SW	Driver side door courtesy light switch signal/ ON or OFF	ON: Driver side door is open OFF: Driver side door is closed	-
D LOCK POS SW	Driver side door lock position switch signal/ ON or OFF	ON: Driver side door is unlocked OFF: Driver side door is locked	-
D/L SW-LOCK	Door manual lock switch signal/ ON or OFF	ON: Door control switch (for front driver door side) is turned to lock position OFF: Door control switch (for front driver door side) is turned to unlock position	-
D/L SW-UNLOCK	Door manual unlock switch signal/ ON or OFF	ON: Door control switch (for front driver door side) is turned to unlock position OFF: Door control switch (for front driver door side) is turned to lock position	-
DOR KEY SW-LOCK	Door key linked lock switch signal/ ON or OFF	ON: Driver side door key cylinder is turned to lock position OFF: Driver side door key cylinder is turned to unlock position	-
DOR KEY SW-UNLOCK	Door key linked unlock switch signal/ ON or OFF	ON: Driver side door key cylinder is turned to unlock position OFF: Driver side door key cylinder is turned to lock position	-
D DOR KEY SW-UL	Driver side door key linked unlock switch signal/ ON or OFF	ON: Driver side door key cylinder is turned to unlock position OFF: Driver side door key cylinder is turned to lock position	-
P DOR CTY SW	Passenger side door courtesy light switch signal/ ON or OFF	ON: Passenger side door is open OFF: Passenger side door is closed	-
RR DOR CTY SW*1	Rear door RH courtesy light switch signal/ ON or OFF	ON: Rear door RH is open OFF: Rear door RH is closed	-
RL DOR CTY SW*1	Rear door LH courtesy light switch signal/ ON or OFF	ON: Rear door LH is open OFF: Rear door LH is closed	-
BACK DOR CTY SW*2	BACK DOR CTY SW	ON: Back door is open OFF: Back door is closed	-
KEY UNLK WRN SW	Unlock warning switch / ON or OFF	ON: Ignition key is inserted OFF: Ignition key is not inserted	-

*1: 5 Door, Sedan
*2: Hatchback

DL

2. PERFORM ACTIVE TEST

HINT:

Performing the intelligent tester's ACTIVE TEST allows relays, VSV, actuators and other items to be operated without removing any parts. Performing the ACTIVE TEST early in troubleshooting is one way to save time. The DATA LIST can be displayed during the ACTIVE TEST.

(a) Connect the intelligent tester to the DLC3.
(b) Turn the ignition switch ON.
(c) Perform the ACTIVE TEST in accordance with the display on the tester.

Main body ECU:

Item	Test Details	Diagnostic Note
DOOR LOCK	Operate door lock motor LOCK/UNLOCK	-
D DOOR UNLOCK	Operate driver door lock motor unlock side ON/OFF	-
HAZARD	Turns turn signal flasher relay ON / OFF	-

DIAGNOSTIC TROUBLE CODE CHART

HINT:

- If a trouble code is displayed during the DTC check, inspect the suspected areas listed for that code. For details of the code, refer to the "See page" in the DTC chart.
- Inspect the fuse and relay before investigating the suspected areas shown in the table below.

Wirelass Door Lock Control

DTC No.	Detection Item	Suspected Area	See page
B1242	Wireless Door Lock Tuner Circuit Malfunction	1. Wire harness 2. Door control receiver 3. Main body ECU	DL-67

ON-VEHICLE INSPECTION

1. NOTICES WHEN CHECKING

(a) Wireless door LOCK / UNLOCK function:
This function operates only when the vehicle is in its initial condition (the following 3 conditions are met).
(1) No key is inserted into the ignition key cylinder.
(2) All the doors are closed.
(3) The power door lock system is functioning normally.
HINT:
- The UNLOCK function operates even when one of the doors is open.
- The UNLOCK function operates even when the key is inserted into the ignition key cylinder. However, the ignition switch must be OFF.

(b) The operating range differs depending on the situation.
(1) The operating range differs depending on the user, the way the transmitter is held and the location.
(2) In certain areas, the operating range will be reduced due to the vehicle body shape and the influence of the surrounding environment.
(3) The transmitter's faint electric waves may be affected if the area has strong electric waves or noise. The transmitter's operating range may be reduced or the transmitter may not function.
(4) When the battery weakens, the operating range is reduced or the transmitter may not function.
HINT:
If the transmitter has had prolonged exposure to direct sunlight, such as being left on the instrument panel, the battery may weaken or other problems may occur.

2. CHECK WIRELESS DOOR LOCK CONTROL FUNCTIONS

HINT:
- The switches described below transmit signals and are built into the door control transmitter.
- The transmitter's operating range must be taken into account while checks are being made.

(a) Make sure the vehicle is in a condition in which the wireless control functions can be operated (see above).
(b) Check the basic functions.
(1) Check that the transmitter's LED illuminates 3 times when each switch is pressed 3 times.
HINT:
If the LED does not illuminate when the switch has been pressed 3 times or more, the battery may be depleted.

(c) Check the chattering prevention function.
  (1) When a switch is pressed, check that the corresponding operation occurs only once. When the switch is held down, check that the corresponding operation occurs only once and does not repeatedly activate. Lastly, when the switch is pressed at 1 second intervals, check that the corresponding operation activates once for each press of the switch.

(d) Check the automatic locking function.
  (1) When all doors are unlocked with the UNLOCK switch and none of the doors are opened or locked within 30 seconds, check that the doors are relocked automatically.

(e) Check the switch operation fail-safe function.
  (1) If the key is in the ignition key cylinder, check that the doors cannot be locked by the LOCK switch. However, this does not apply when the system is in recognition code registration mode.

(f) Check the answer-back function.
  (1) When the LOCK switch is pressed, check that the hazard warning lights flash once and all doors are locked.
  (2) When the UNLOCK switch is pressed, check that the hazard warning lights flash twice and all doors are unlocked.

DTC	B1242	Wireless Door Lock Tuner Circuit Malfunction

DESCRIPTION

The door control receiver receives signals from the transmitter and sends these signals to the main body ECU.

DTC No.	DTC Detection Condition	Suspected Area
B1242	In diagnostic mode, applicable RDA signal cannot be received within 1 second of PRG signal being output from main body ECU.	• Wire harness • Door control receiver • Main body ECU

WIRING DIAGRAM

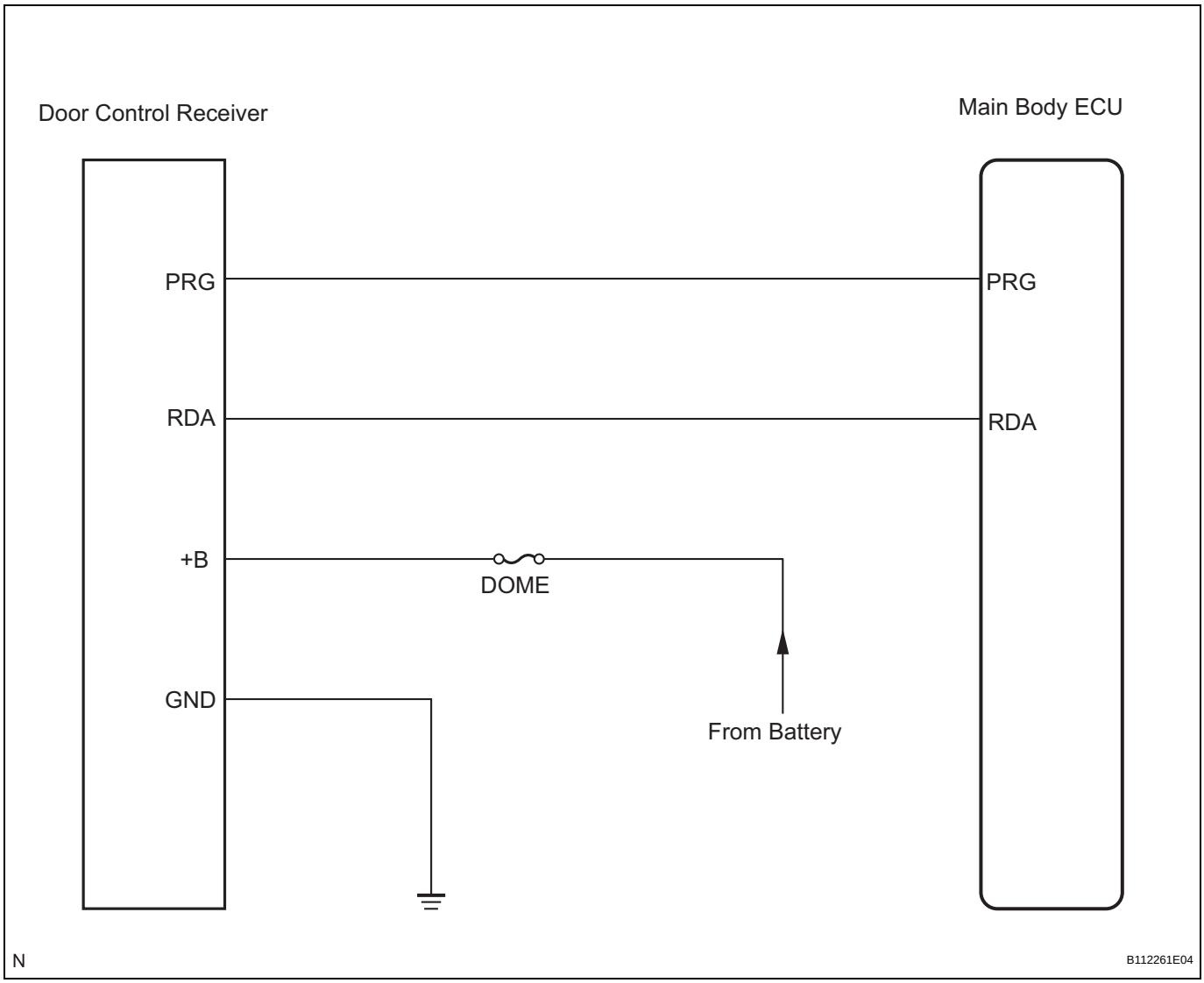

INSPECTION PROCEDURE

1 CHECK HARNESS AND CONNECTOR (MAIN BODY ECU - DOOR CONTROL RECEIVER)

Wire Harness Side:

Main Body ECU Connector

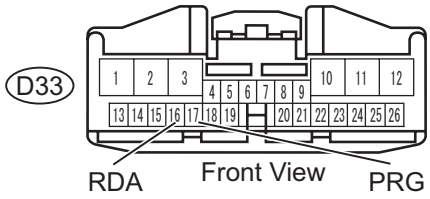

Door Control Receiver Connector

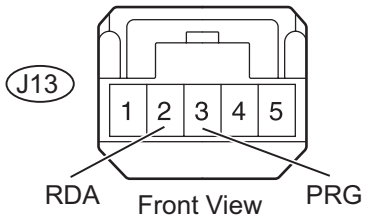

B123827E01

(a) Disconnect the D33 main body ECU connector.
(b) Disconnect the J13 door control receiver connector.
(c) Measure the resistance.

Standard resistance

Tester Connection	Specified Condition
D33-16 (RDA) - J13-2 (RDA)	Below 1 Ω
D33-16 (RDA) or J13-2 (RDA) - Body ground	10 kΩ or higher
D33-17 (PRG) - J13-3 (PRG)	Below 1 Ω
D33-17 (PRG) or J13-3 (PRG) - Body ground	10 kΩ or higher

(d) Reconnect the main body ECU connector.
(e) Reconnect the door control receiver connector.

NG → **REPAIR OR REPLACE HARNESS OR CONNECTOR**

OK

2 INSPECT DOOR CONTROL RECEIVER (+B TERMINAL)

Wire Harness View:

Door Control Receiver

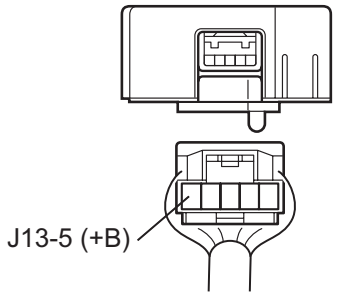

N

B110096E04

(a) Disconnect the J13 door control receiver connector.
(b) Measure the voltage.

Standard voltage

Tester Connection	Condition	Specified Condition
J13-5 (+B) - Body ground	Always	11 to 14 V

(c) Reconnect the door control receiver connector.

NG → **REPAIR OR REPLACE HARNESS OR CONNECTOR (+B CIRCUIT)**

OK

3 INSPECT DOOR CONTROL RECEIVER (GND TERMINAL)

(a) Disconnect the J13 door control receiver connector.

DL

Wire Harness View:

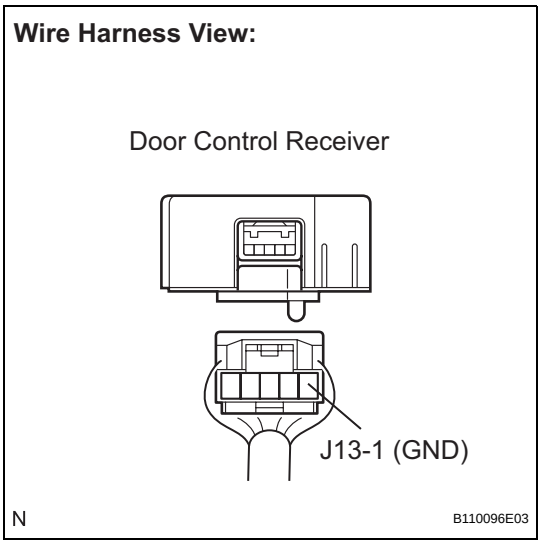

(b) Measure the resistance.
Standard resistance

Tester Connection	Specified Condition
J13-1 (GND) - Body ground	Below 1 Ω

(c) Reconnect the door control receiver connector.

NG → **REPAIR OR REPLACE HARNESS OR CONNECTOR (E CIRCUIT)**

OK

DL

4 REPLACE DOOR CONTROL RECEIVER

(a) Replace the door control receiver.
(b) Perform the REGISTRATION procedures (See page DL-97).
HINT:
If a new or normal functioning door control receiver is available, connect it and check if the wireless door lock function is normal or the DTC is output. If the alternative receiver functions normally, replace the original door control receiver.

NEXT

5 RECHECK DTC

(a) Clear the DTC.
(b) Check if the same DTC is detected.
HINT:
Reinstall the parts, such as sensors and connectors, and restore the vehicle to its previous conditions before rechecking for DTCs.

Result:

Condition	Proceed to
DTC (B1242) is output	A
DTC (B1242) is not output (When troubleshooting in accordance with DTC CHART)	B
DTC (B1242) is not output (When troubleshooting in accordance with PROBLEM SYMPTOMS TABLE)	C

B → **END**

C → **PROCEED TO NEXT CIRCUIT INSPECTION SHOWN IN PROBLEM SYMPTOMS TABLE**

A

REPLACE MAIN BODY ECU

Only Wireless Control Function is Inoperative

DESCRIPTION

The door control receiver receives signals from the transmitter and sends these signals to the main body ECU. The main body ECU then controls all doors by sending lock / unlock signals to each door, and sends hazard flasher relay signals to the turn signal flasher relay (hazard warning lights).

WIRING DIAGRAM

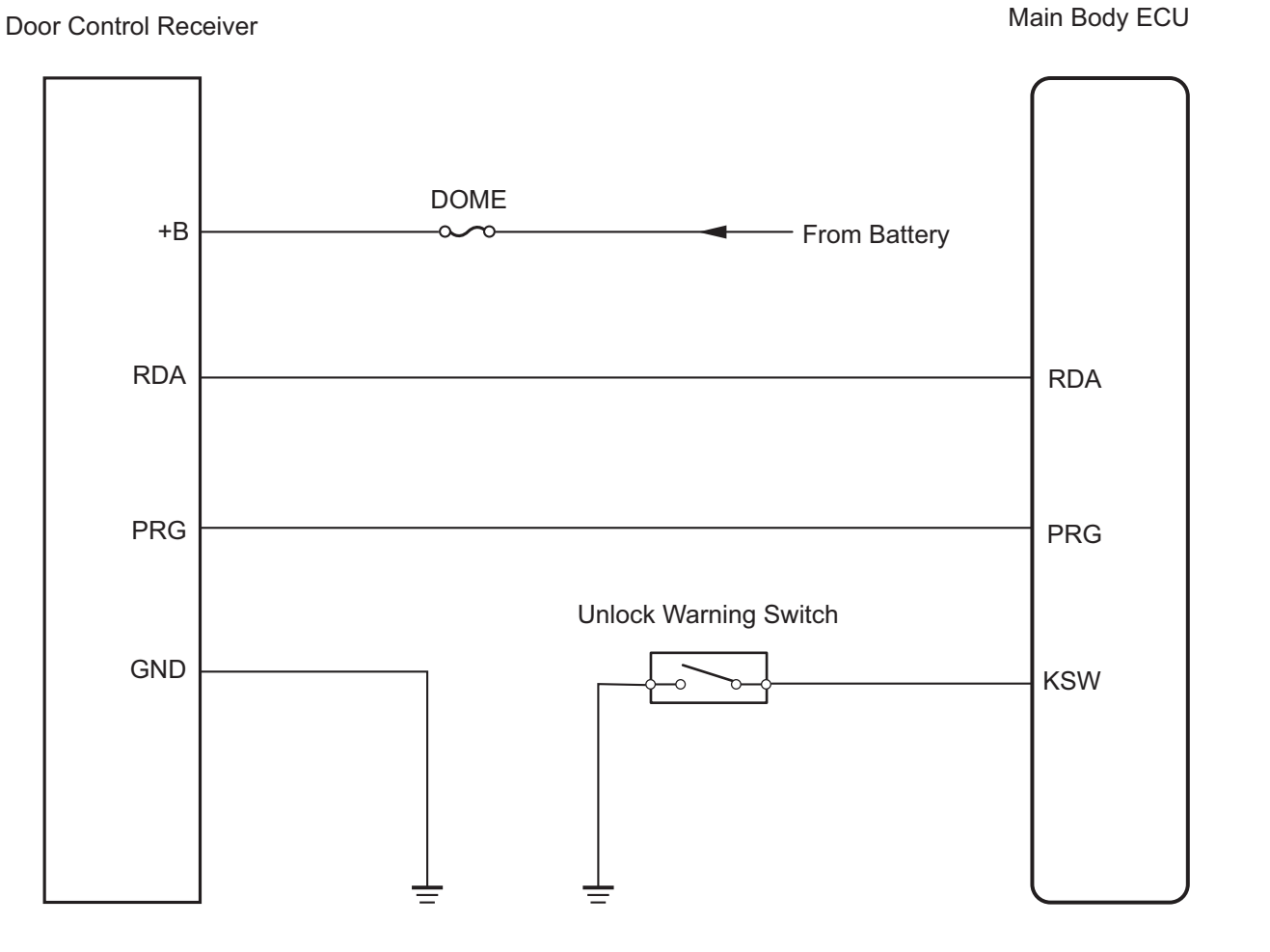

INSPECTION PROCEDURE

1	**CHECK WIRELESS DOOR LOCK CONTROL FUNCTIONS**

OK:

Each function of wireless door lock control system operates normally using transmitter switches (see page DL-64).

OK	**END**

NG

2	CHECK TRANSMITTER LED ILLUMINATION

(a) Check that the transmitter's LED illuminates 3 times when the switch is pressed 3 times.

OK:

Transmitter's LED illuminates 3 times when switch is pressed 3 times.

NG → **Go to step 4**

OK

3	CHECK WIRELESS DOOR LOCK CONTROL FUNCTIONS (STANDARD OPERATION FUNCTION)

HINT:

Use the following standard test procedure to check the transmitter again.

(a) Hold the transmitter approximately 1 m (3.28 ft.) from the driver side door outside handle. The transmitter must be held parallel to the ground and perpendicular to the side of the vehicle.

(b) Press and hold either the LOCK or UNLOCK transmitter switch for 1 second, and check that the doors are locked or unlocked, accordingly.

OK:

Doors can be locked and unlocked with transmitter switches.

NG → **Go to step 5**

OK

REPLACE DOOR CONTROL TRANSMITTER MODULE

4	REPLACE TRANSMITTER BATTERY

(a) After replacing the transmitter battery, check that the doors can be locked and unlocked using the transmitter switches.

OK:

Doors can be locked and unlocked with transmitter.

NG → **REPLACE DOOR CONTROL TRANSMITTER MODULE**

OK

END (TRANSMITTER BATTERY DEFECTIVE)

5	CHECK NO. 1 ROOM LIGHT ASSEMBLY

(a) Check that the No. 1 room light illumination operates normally.
OK:
No. 1 room light illumination operates normally.

NG → **GO TO LIGHTING SYSTEM**

OK

DL

6	SWITCH TO SELF DIAGNOSTIC MODE

(a) Switch to self-diagnostic mode by operating the ignition key cylinder.
(1) Make sure the vehicle is in its initial condition. Then insert the key into the ignition key cylinder and remove it.
(2) Within 5 seconds of removing the key, insert the key into the ignition key cylinder (ignition switch OFF). Then turn the ignition switch ON and OFF.
(3) Within 30 seconds of turning the ignition switch OFF, perform the following operation 9 times: turn the ignition switch ON and OFF.
NOTICE:
If the system cannot enter self-diagnostic mode, the system returns to normal mode.
HINT:
- Turning the ignition switch ON after the above operations have been completed ends self-diagnostic mode.
- Do not lock or unlock doors during self-diagnostic mode.

Interior Light Output:

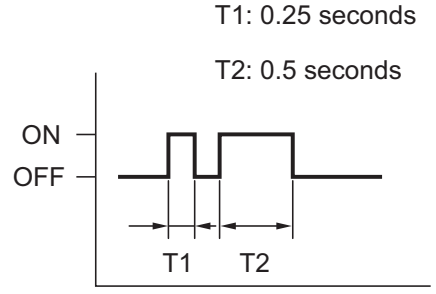

N B110075E07

(b) Check that the system has switched to self-diagnostic mode by checking the No. 1 room light assembly flash pattern.
OK:
Flash pattern is same as illustration on left.

NG → **Go to step 11**

OK

DL

7 CHECK BY SELF DIAGNOSTIC MODE

(a) Inspect the diagnosis outputs when the door control transmitter switch is held down. The diagnosis outputs can be checked by the flash patterns of the No. 1 room light assembly.

Interior Light Output:

Normal Wave:

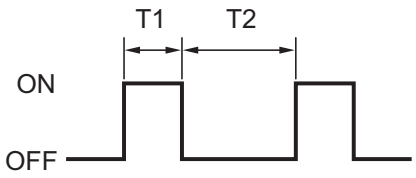

Mismatched Recognition Code:

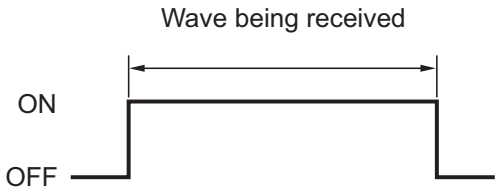

No Diagnosis Output:



T1: 0.25 seconds

T2: 0.50 seconds

B123864E01

Result

Result	Proceed to
Unmatching recognition code is output	A
Normal waves (light flash patterns) for LOCK and UNLOCK switches are output	B
No diagnosis outputs	C

B → REPLACE MAIN BODY ECU

C → Go to step 9

A

8 REGISTER RECOGNITION CODE

(a) Check that the system can be switched to rewrite mode or add mode, and that a recognition code can be registered.
OK:
Recognition code can be registered.

NG → Go to step 15

OK

END

9 CHECK RESPONSE OF DOOR CONTROL RECEIVER

(a) When a new or normally functioning door lock control transmitter switch for the same type vehicle is held down, check that an unmatching recognition code is output.
OK:
Unmatching recognition code is output.

OK → REPLACE DOOR CONTROL TRANSMITTER MODULE

NG

10 REPLACE DOOR CONTROL RECEIVER

(a) After replacing the door control receiver, check that the doors can be locked and unlocked by using the transmitter LOCK and UNLOCK switches.
OK:
Doors can be locked and unlocked with transmitter.

NG → REPLACE MAIN BODY ECU

OK

END

11 CONFIRM PROCEDURES TO ENTER SELF DIAGNOSTIC MODE

Result:

Result	Proceed to
Self-diagnostic mode entry successful	A
Self-diagnostic mode entry unsuccessful	B

B → Go to step 6

A

12 INSPECT UNLOCK WARNING SWITCH ASSEMBLY

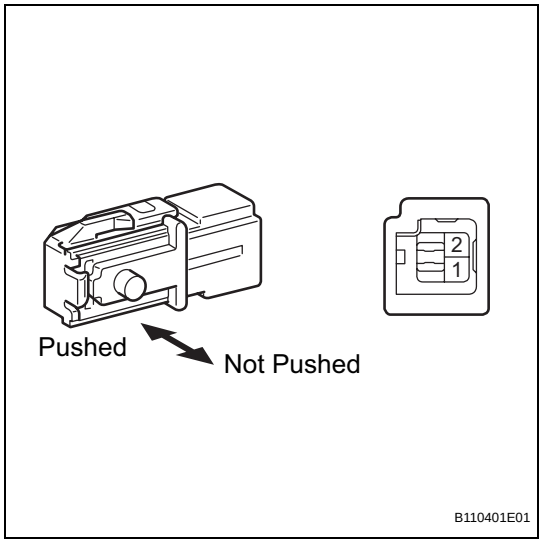

(a) Remove the unlock warning switch.
(b) Measure the resistance.
Standard resistance

Tester Connection	Condition	Specified Condition
1 - 2	Not pushed	10 kΩ or higher
	Pushed	Below 1 Ω

NG → REPLACE UNLOCK WARNING SWITCH ASSEMBLY

OK

13 CHECK HARNESS AND CONNECTOR (DOOR CONTROL RECEIVER - MAIN BODY ECU)

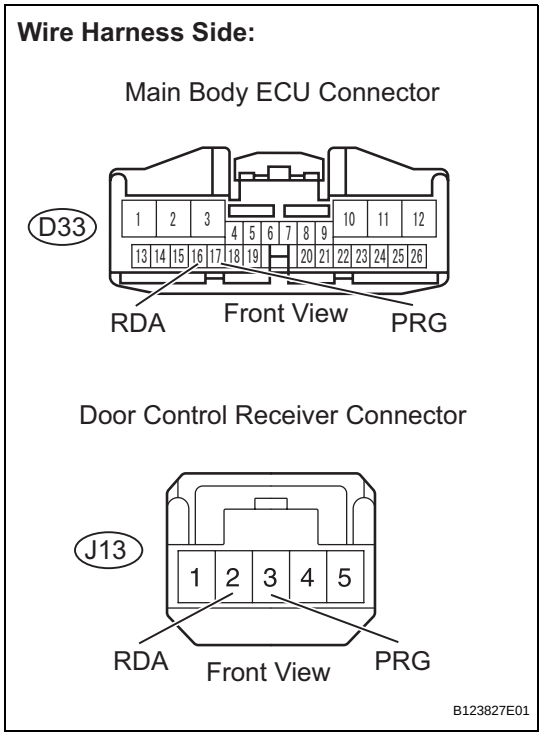

(a) Disconnect the D33 main body ECU connector.
(b) Disconnect the J13 door control receiver connector.
(c) Measure the resistance.
Standard resistance

Tester Connection	Specified Condition
D33-16 (RDA) - J13-2 (RDA)	Below 1 Ω
D33-16 (RDA) - Body ground	10 kΩ or higher
D33-17 (PRG) - J13-3 (PRG)	Below 1 Ω
D33-17 (PRG) - Body ground	10 kΩ or higher

(d) Reconnect the main body ECU connector.
(e) Reconnect the door control receiver connector.

NG → **REPAIR OR REPLACE HARNESS OR CONNECTOR**

OK

14 CHECK DOOR CONTROL RECEIVER (OUTPUT)

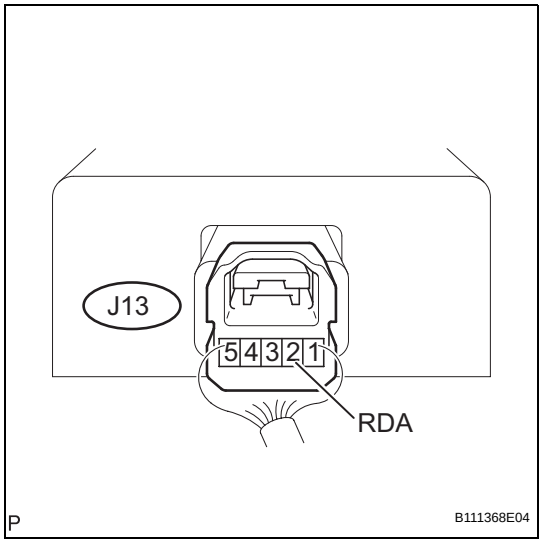

(a) Measure the voltage of the connector.
Standard voltage

Tester Connection	Condition	Specified Condition
J13-2 (RDA) - Body ground	Transmitter switch ON→OFF (No key in ignition key cylinder, all doors closed)	Below 1 V→ 6 to 7 V→ Below 1 V

OK → **REPLACE MAIN BODY ECU**

NG

15 REPLACE DOOR CONTROL TRANSMITTER MODULE

(a) Check that the doors can be locked and unlocked by using the transmitter LOCK and UNLOCK switches.

OK:
Doors can be locked and unlocked with transmitter.

NG → **REPLACE DOOR CONTROL RECEIVER**

OK

END (DOOR CONTROL TRANSMITTER MODULE DEFECTIVE)

No Answer-Back

DESCRIPTION

In this case, wireless control functions are normal but the hazard warning light answer-back function does not operate (main body ECU turn signal flasher relay output may be malfunctioning).

WIRING DIAGRAM

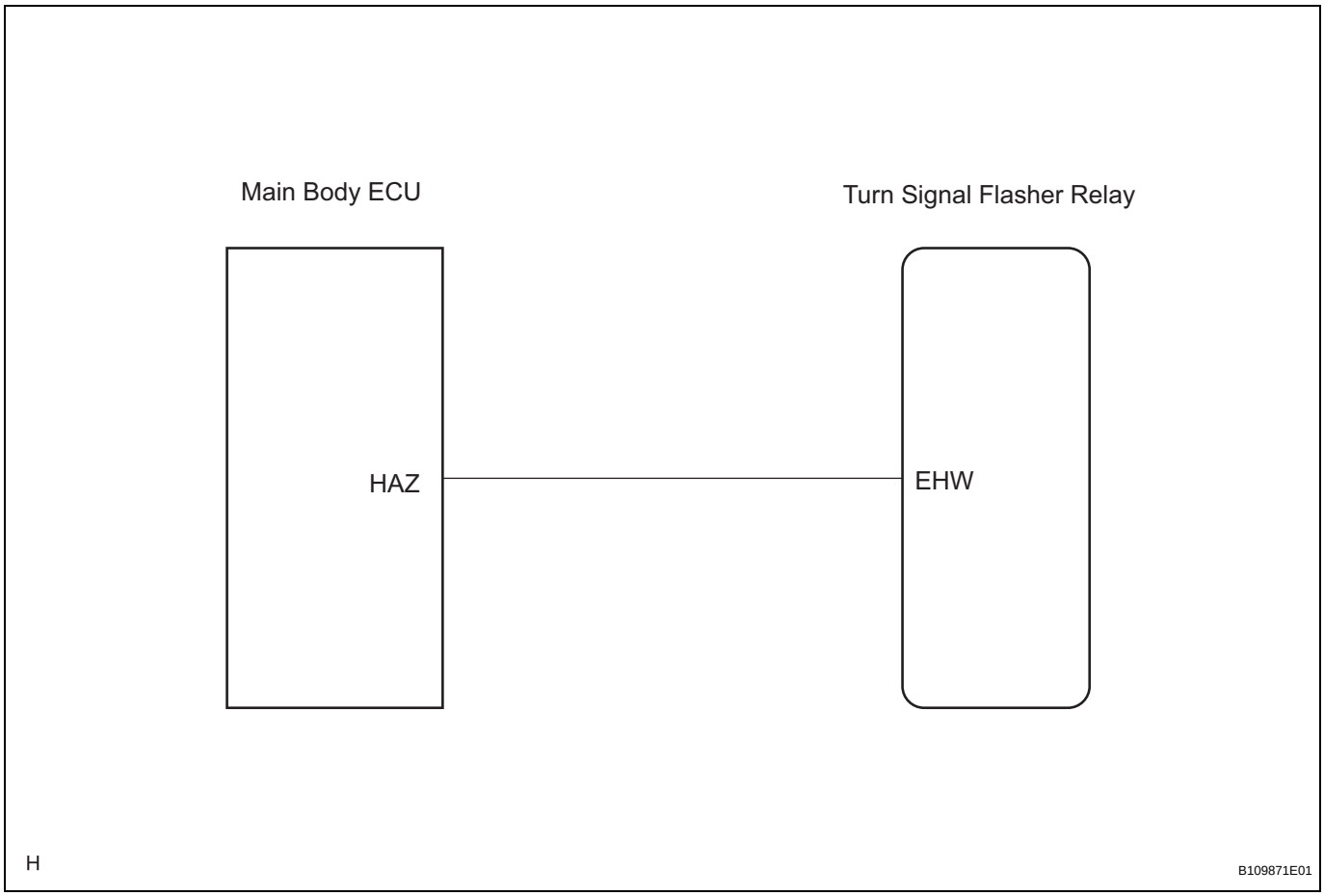

INSPECTION PROCEDURE

1	CHECK WIRELESS DOOR LOCK CONTROL FUNCTIONS

(a) Check the wireless door lock functions by operating the transmitter switches.

Result

Result	Proceed to
Wireless door lock functions are normal but hazard warning light answer-back does not occur	A
Wireless door lock functions are abnormal	B

B → GO TO PROBLEM SYMPTOMS TABLE

A

2	**CHECK HAZARD WARNING LIGHTS**

(a) Check that the hazard warning lights flash when the hazard warning signal switch is pressed.
OK:
Hazard warning lights flash when hazard warning signal switch is pressed.

NG → **GO TO LIGHTING SYSTEM**

OK

REPLACE MAIN BODY ECU

KEY REMINDER WARNING SYSTEM

PARTS LOCATION

HATCHBACK:

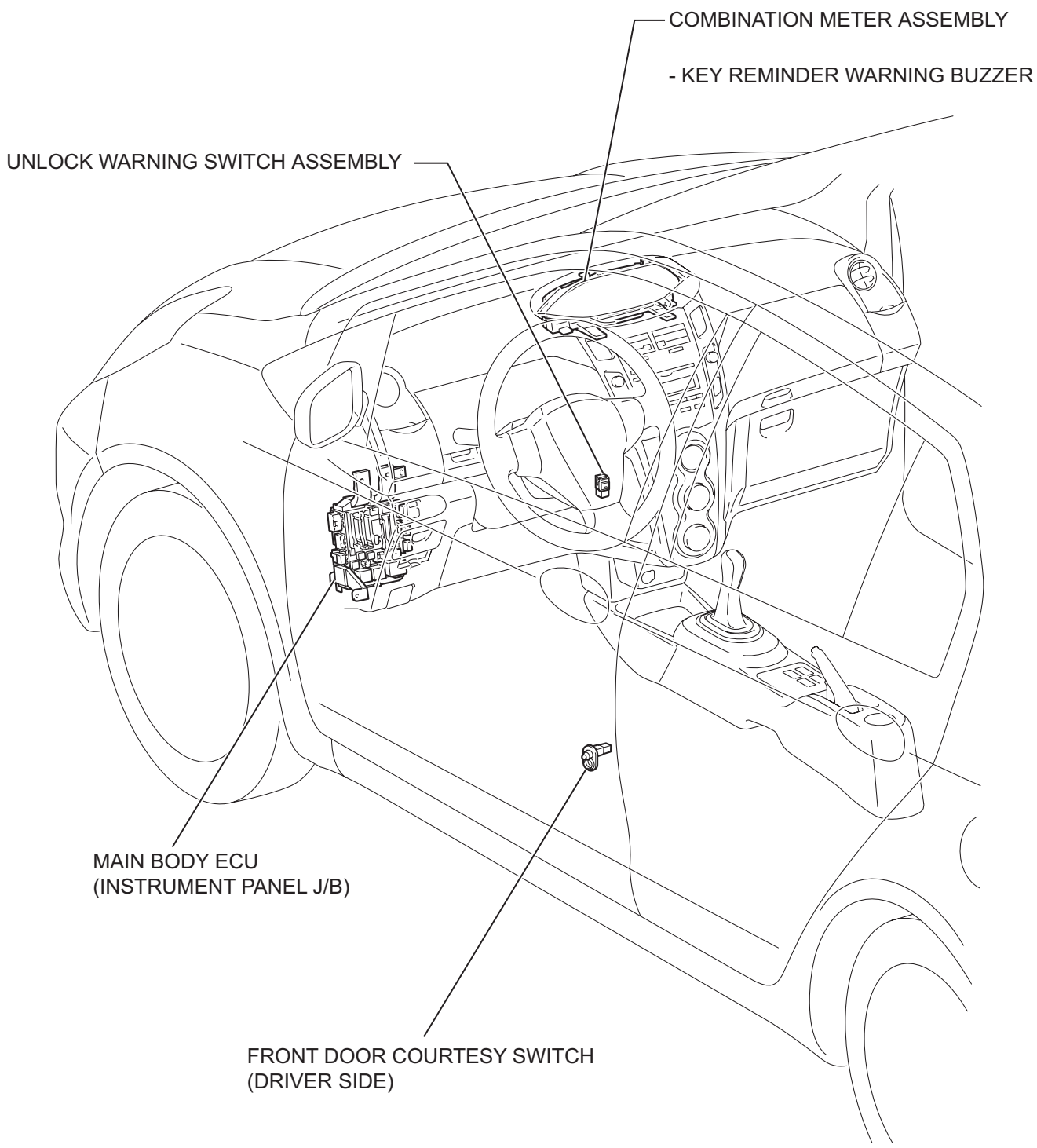

Y

B117137E04

DL

SEDAN:

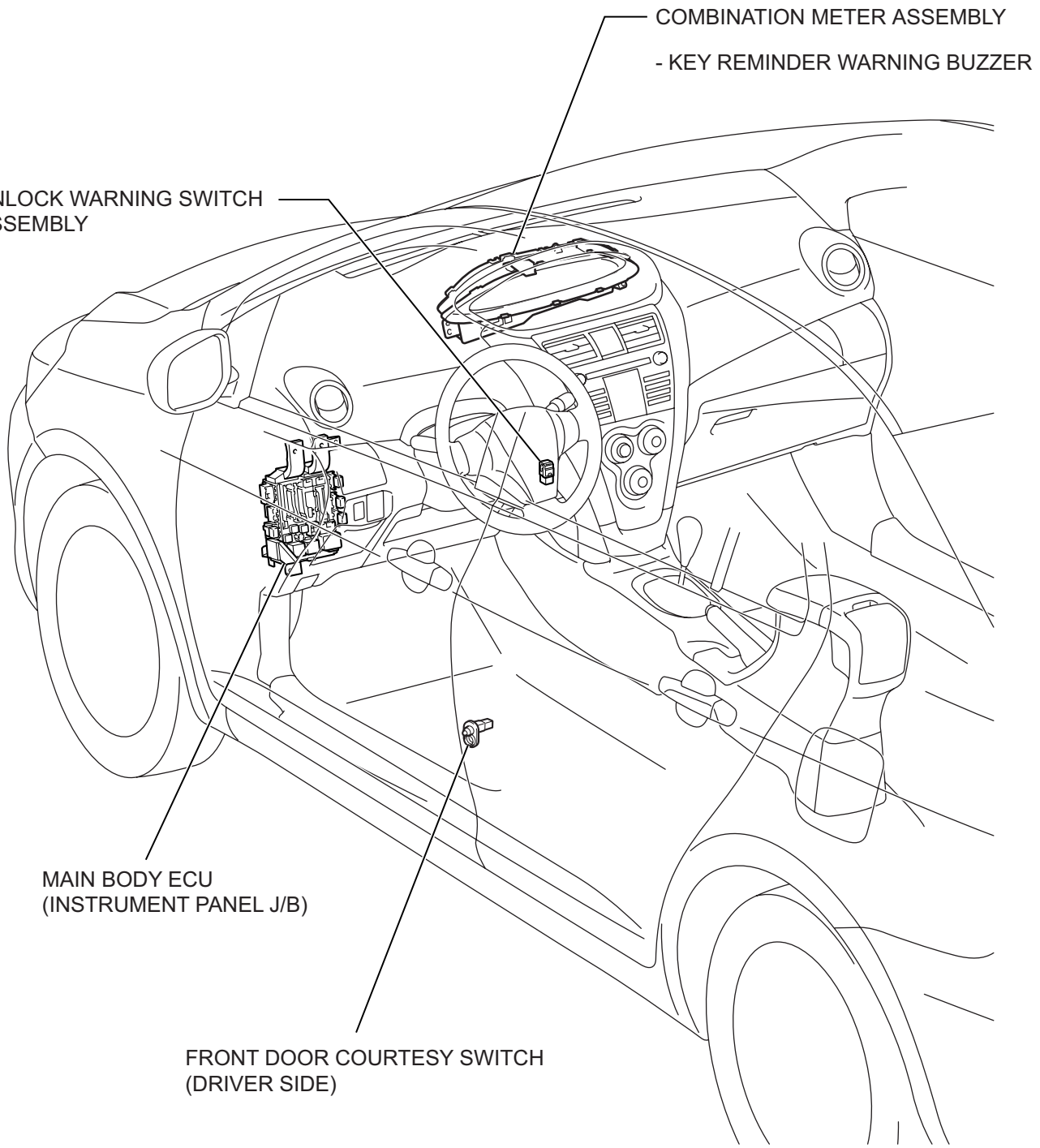

B142256E01

SYSTEM DIAGRAM

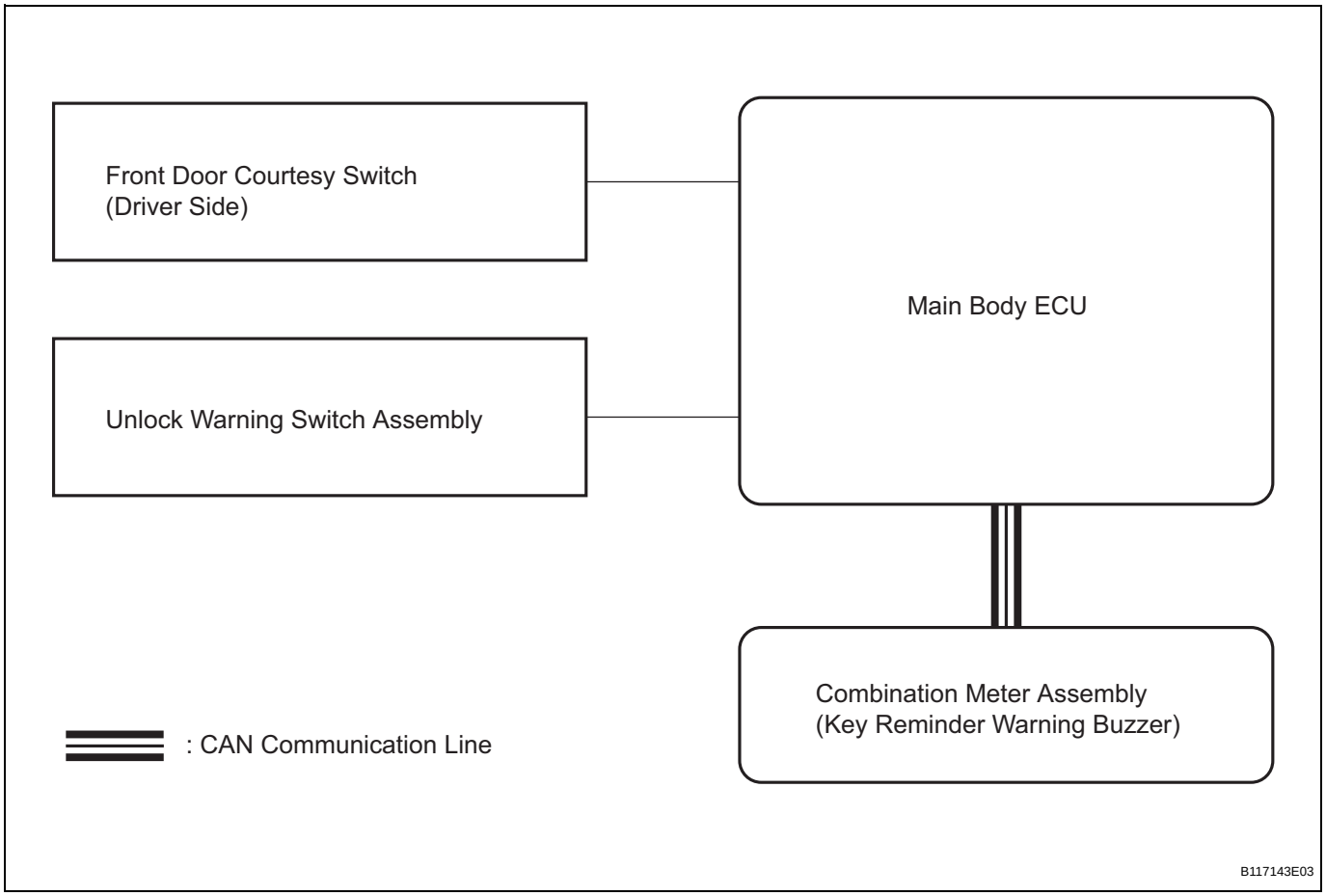

SYSTEM DESCRIPTION

1. KEY REMINDER WARNING SYSTEM DESCRIPTION

(a) When the driver side door is opened with the ignition key in the ACC or LOCK position, this system causes the key reminder warning buzzer to sound in order to warn the driver that the ignition key has not been removed.

HOW TO PROCEED WITH TROUBLESHOOTING

HINT:

- Use these procedures to troubleshoot the key reminder warning system.
- The intelligent tester should be used in steps 3 and 5.

1 VEHICLE BROUGHT TO WORKSHOP

NEXT

2 INSPECT BATTERY VOLTAGE

Standard voltage:
11 to 14 V

HINT:

If the voltage is below 11 V, recharge or replace the battery before proceeding.

NEXT

3 INSPECT COMMUNICATION FUNCTION OF CAN COMMUNICATION SYSTEM

(a) Use the intelligent tester with CAN VIM to check if the CAN communication system is functioning normally.

Result:

Result	Proceed to
DTC is not output	A
DTC is output	B

B → **GO TO CAN COMMUNICATION SYSTEM**

A

4 PROBLEM SYMPTOMS TABLE

Result:

Result	Proceed to
Fault is not listed on problem symptoms table	A
Fault is listed on problem symptoms table	B

B → **Go to step 6**

A

5 OVERALL ANALYSIS AND TROUBLESHOOTING

(a) Operation Check
(See page DL-85)

(b) Terminals of ECU
(See page DL-86)
(c) Data list/Active test
(See page DL-88)

NEXT

6	REPAIR OR REPLACE

NEXT

7	CONFIRMATION TEST

NEXT

DL

END

OPERATION CHECK

1. REMOVE CHECK FUNCTION

(a) Check that the key reminder warning buzzer sounds.

(1) With the driver side door closed, insert the key into the ignition key cylinder and then turn the key to LOCK or ACC.

(2) Check that the buzzer sounds intermittently when the driver side door is open.

(b) Check that the key reminder warning buzzer stops.

(1) Check that the buzzer stops sounding if any of the following operations is performed while the buzzer is sounding:

- Close the driver side door (front door courtesy switch is off).
- Turn the ignition switch ON.
- Remove the key from the ignition key cylinder.

CUSTOMIZE PARAMETERS

HINT:
The following item can be customized.

Meter ECU:

Display (Item)	Default	Function	Setting
KEY REMND SOUND	NORMAL	Changes key reminder warning buzzer interval	FAST /NORMAL / SLOW

NOTICE:

- **When the customer requests the modification of an item, first make sure that the function can be customized.**
- **Be sure to record the current settings before customizing.**
- **When troubleshooting a function, first make sure that the function is not set to OFF.**

PROBLEM SYMPTOMS TABLE

HINT:
Use the table below to help determine the causes of the problem symptom. The potential causes of the symptoms are listed in order of probability in the "Suspected Area" column of the table. Check each symptom by checking the suspected areas in the order they are listed. Replace parts as necessary.

Key reminder warning system

Symptom	Suspected area	See page
Key reminder buzzer does not sound	Unlock warning switch assembly	DL-116
	Front door courtesy switch (Driver side) for hatchback	LI-182
	Front door courtesy switch (Driver side) for sedan	LI-182
	Combination meter assembly (Key reminder warning buzzer)	DL-86
	Main body ECU	DL-86
	CAN communication system	CA-38
	Wire harness	-

TERMINALS OF ECU

1. CHECK COMBINATION METER ASSEMBLY

(a) Using the tester probes, touch the terminals from the back of the vehicle wire harness connectors, and measure the voltages and resistances of each terminal.

Combination Meter Assembly:

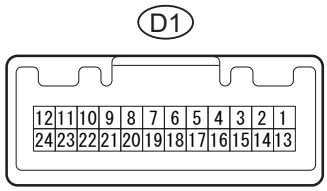

B142255E01

DL

Standard:

Symbols (Terminal No.)	Wiring Color	Terminal Description	Condition	Specified Condition
IG2 (D1-1) - Body ground	B - Body ground	Ignition switch signal	Ignition switch OFF → ON	Below 1 V → 11 to 14 V
ECUB (D1-2) - Body ground	L - Body ground	Battery	Always	11 to 14 V
CANH (D1-20) - Body ground	G - Body ground	CAN communication line	Ignition switch ON	Pulse generation
CANL (D1-21) - Body ground	W - Body ground	CAN communication line	Ignition switch ON	Pulse generation
ET (D1-24) - Body ground	BR - Body ground	Ground	Always	Below 1 Ω

2. CHECK MAIN BODY ECU

(a) Using the tester probes, touch the terminals from the back of the vehicle wire harness connectors, and measure the voltages and resistances of each terminal.

Vehicle Rear Side:

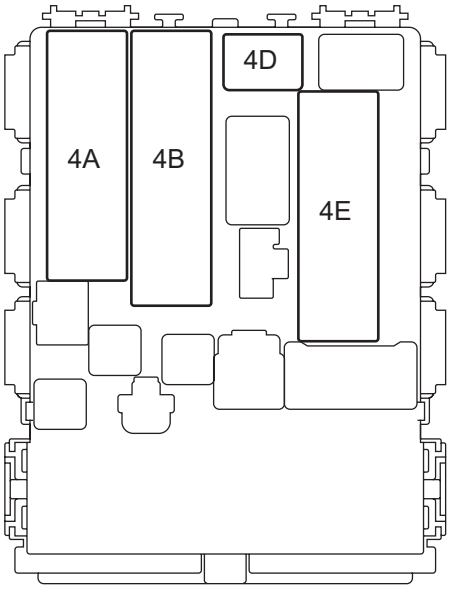

Vehicle Front Side:

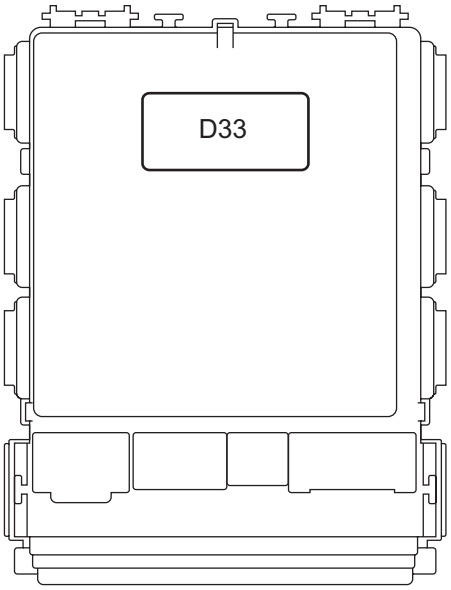

4A

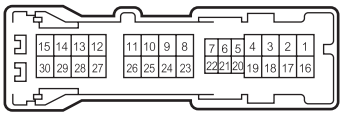

D33

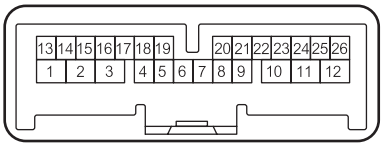

4B

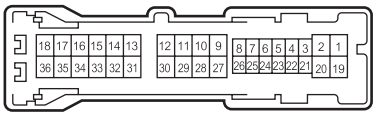

4D

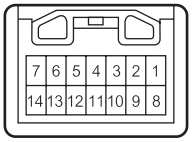

4E

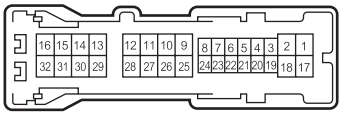

B117140E02

DL

Standard:

Symbols (Terminal No.)	Wiring Color	Terminal Description	Condition	Specified Condition
KSW (4D-7) - Body ground	Y - Body ground	Key unlock warning switch input	Key inserted → Key removed from ignition key cylinder	Below 1 V → 11 to 14 V
GND1 (4E-17) - Body ground	W-B - Body ground	Ground	Always	Below 1 Ω
BECU (4B-30) - Body ground	L - Body ground	Battery	Always	11 to 14 V
DCTY (4A-21) - Body ground	R - Body ground	Driver door courtesy switch input	Driver door closed → open	11 to 14 V → Below 1 V
CANL (D33-22) - Body ground	W - Body ground	CAN communication line	Ignition switch ON	Pulse generation
CANH (D33-23) - Body ground	R - Body ground	CAN communication line	Ignition switch ON	Pulse generation

DATA LIST / ACTIVE TEST

1. READ DATA LIST

HINT:

Using the intelligent tester's DATA LIST allows switch, actuator and other item values to be read without removing any parts. Reading the DATA LIST early in troubleshooting is one way to save time.

(a) Connect the intelligent tester with CAN VIM to the DLC3.

(b) Turn the ignition switch ON.

(c) Read the DATA LIST.

Main Body ECU:

Item	Measurement Item / Display (Range)	Normal Condition	Diagnostic Note
KEY UNLK WRN SW	Unlock warning switch signal /ON or OFF	ON: Key is in ignition key cylinder OFF: No key is in ignition key cylinder	-
D DOR CTY SW	Driver side door courtesy switch signal /ON or OFF	ON: Driver side door is open OFF: Driver side door is closed	-

Key Reminder Buzzer does not Sound

DESCRIPTION

The key reminder warning buzzer sounds when the driver side door is opened while the ignition switch is in the LOCK or ACC positions. The key reminder warning buzzer is activated when the main body ECU sends a key switch signal and driver side courtesy switch signal to the combination meter.

WIRING DIAGRAM

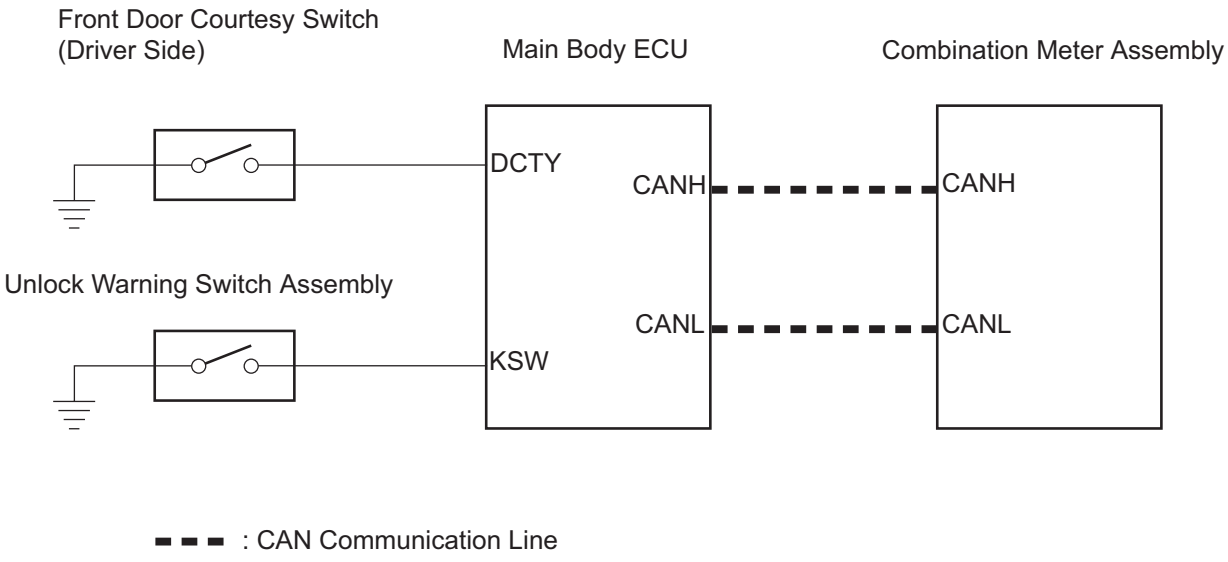

INSPECTION PROCEDURE

HINT:
Since the key reminder warning system has functions that use CAN communication, firstly confirm that there is no malfunction in the communication system by inspecting the CAN communication functions in accordance with How to Proceed with Troubleshooting. Then, conduct the following troubleshooting procedure.

1	READ VALUE USING INTELLIGENT TESTER (KEY UNLOCK WARNING SW)

(a) Check the DATA LIST to ensure proper operation of the door unlock warning switch.

Main Body ECU

Item	Measurement Item / Display (Range)	Normal Condition	Diagnostic Note
KEY UNLK WRN SW	Unlock warning switch signal / ON or OFF	ON: Key is in ignition key cylinder OFF: No key is in ignition key cylinder	-

OK:

The display is as specified in the normal condition column.

NG → Go to step 4

OK

2 READ VALUE USING INTELLIGENT TESTER (D DOOR COURTESY SW)

(a) Check the DATA LIST to ensure proper operation of the front door courtesy light switch.

Main Body ECU

Item	Measurement Item / Display (Range)	Normal Condition	Diagnostic Note
D DOR CTY SW	Driver side door courtesy switch signal / ON or OFF	ON: Driver side door is open OFF: Driver side door is closed	-

OK:

The display is as specified in the normal condition column.

NG → Go to step 6

OK

3 CHECK COMBINATION METER ASSEMBLY (WARNING BUZZER)

(a) Temporarily replace the combination meter assembly with a new or normally functioning one.

(b) Check the key reminder warning system function. (See page DL-85)

OK:

The key reminder warning system functions properly.

NG → REPLACE MAIN BODY ECU

OK

END (COMBINATION METER ASSEMBLY IS FAULTY)

4	INSPECT UNLOCK WARNING SWITCH ASSEMBLY

Component side:

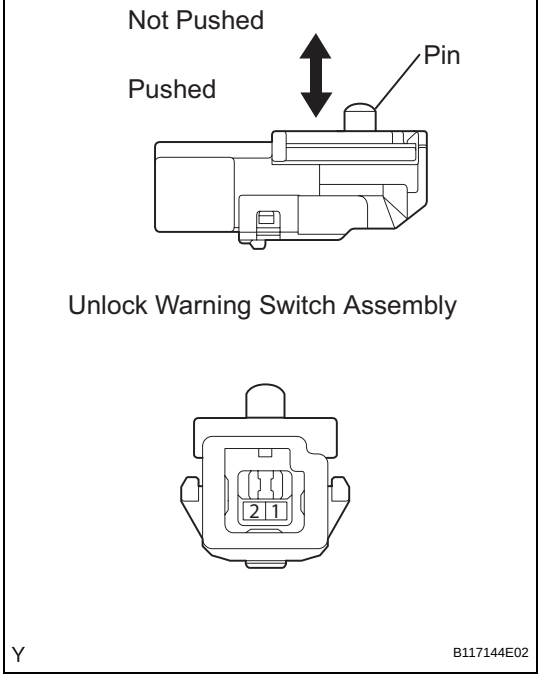

(a) Remove the unlock warning switch assembly.
(b) Measure the resistance.

Standard resistance

Tester Connection	Condition	Specified Condition
1 - 2	Not pushed	10 kΩor higher
1 - 2	Pushed	Below 1 Ω

(c) Reinstall the unlock warning switch assembly.

NG → **REPLACE UNLOCK WARNING SWITCH ASSEMBLY**

OK

5	CHECK WIRE HARNESS AND CONNECTOR (UNLOCK WARNING SWITCH ASSEMBLY - MAIN BODY ECU)

Wire Harness Side:

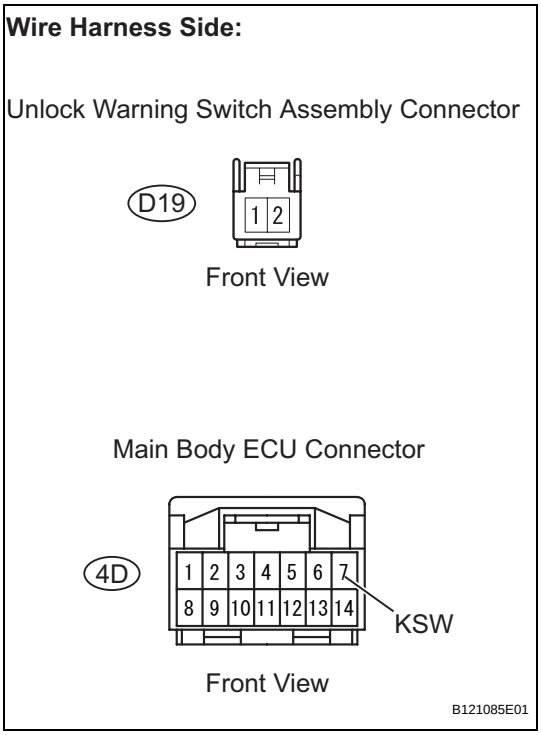

(a) Disconnect the D19 unlock warning switch connector.
(b) Disconnect the 4D main body ECU connector.
(c) Measure the resistance between the wire harness side connectors.

Standard resistance

Tester Connection	Specified Condition
D19-1 - 4D-7 (KSW)	Below 1 Ω
D19-1 or 4D-7 (KSW) - Body ground	10 kΩor higher
D19-2 - Body ground	Below 1 Ω

(d) Reconnect the unlock warning switch and the main body ECU connectors.

NG → **REPAIR OR REPLACE HARNESS OR CONNECTOR**

OK

REPLACE MAIN BODY ECU

6 **INSPECT FRONT DOOR COURTESY SWITCH (DRIVER SIDE)**

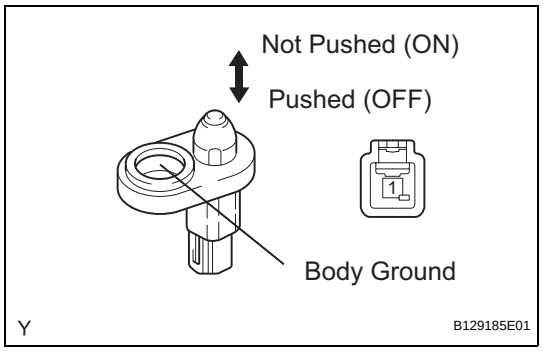

(a) Remove the front door courtesy switch (driver side).
(b) Measure the resistance of the switch.
Standard resistance

Tester Connection	Condition	Specified Condition
1 - Body ground	Not pushed (ON)	Below 1 Ω
1 - Body ground	Pushed (OFF)	10 kΩor higher

(c) Reinstall the front door courtesy switch.

NG → **REPLACE FRONT DOOR COURTESY SWITCH (DRIVER SIDE)**

OK

DL

7	CHECK HARNESS AND CONNECTOR (FRONT DOOR COURTESY SWITCH - MAIN BODY ECU)

Wire Harness Side:

Front Door Courtesy Light Switch Connector (Driver Side)

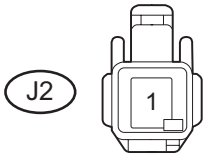

Front View

Main Body ECU Connector

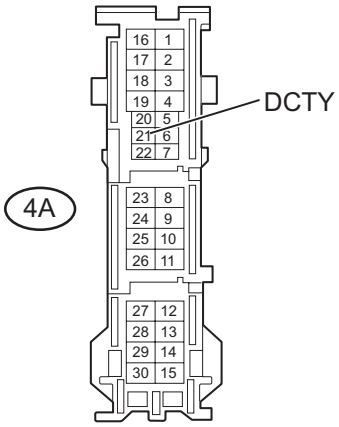

Front View

Y

B112021E02

(a) Disconnect the J2 front door courtesy switch connector.
(b) Disconnect the 4A main body ECU connector.
(c) Measure the resistance of the wire harness side connectors.

Standard resistance

Tester Connection	Specified Condition
J2-1 - 4A-21 (DCTY)	Below 1 Ω
J2-1 or 4A-21 (DCTY) - Body ground	10 kΩor higher

(d) Reconnect the front door courtesy switch and main body ECU connectors.

NG → **REPAIR OR REPLACE HARNESS OR CONNECTOR**

OK

REPLACE MAIN BODY ECU

DL

TRANSMITTER BATTERY

COMPONENTS

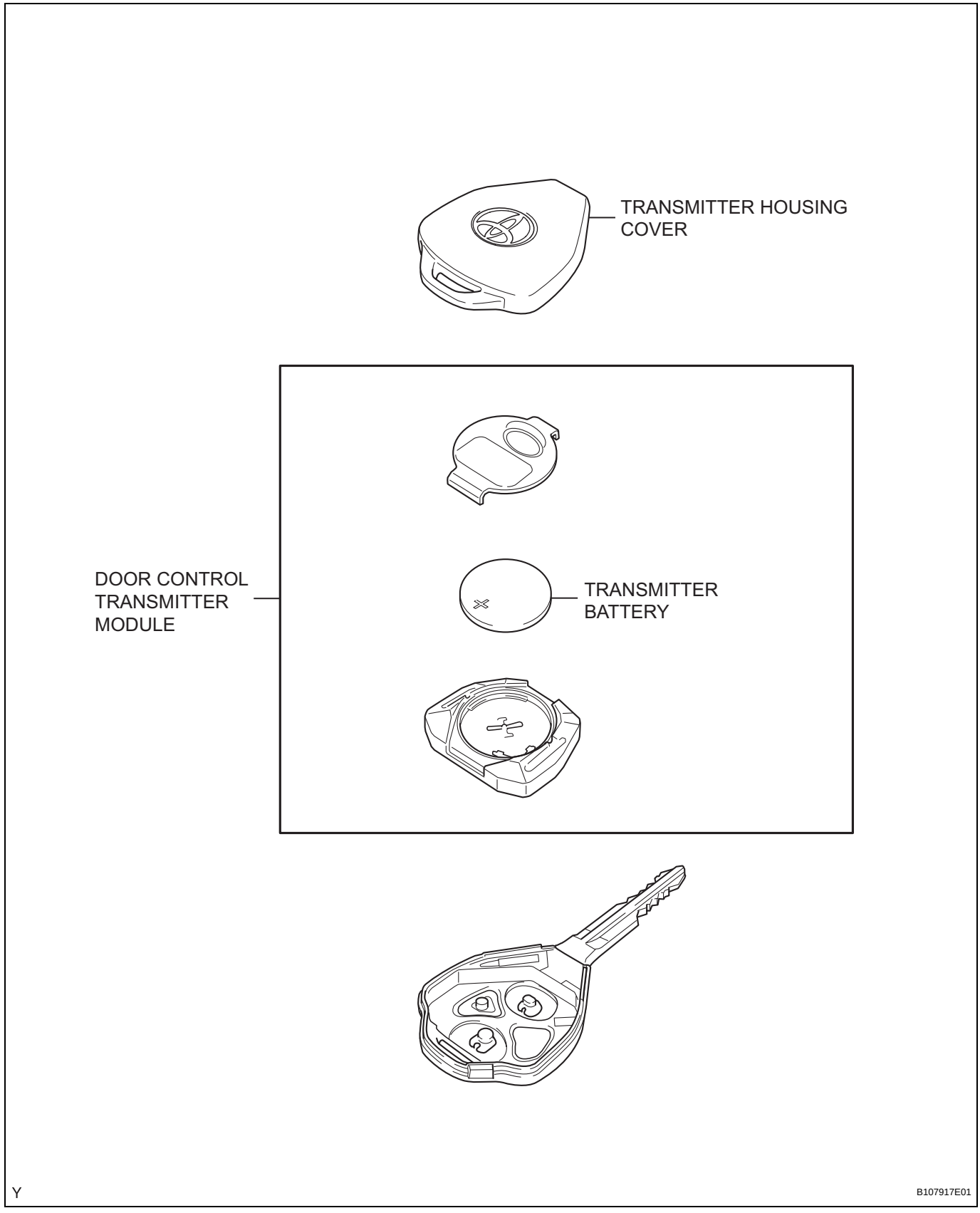

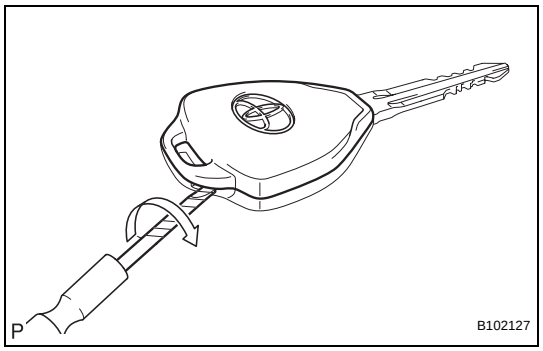

REMOVAL

1. REMOVE TRANSMITTER BATTERY

(a) Remove the transmitter battery.

(1) Using a screwdriver with its tip wrapped in protective tape, pry apart the transmitter housing cover.

NOTICE:

Do not use excessive force when prying apart the housing cover.

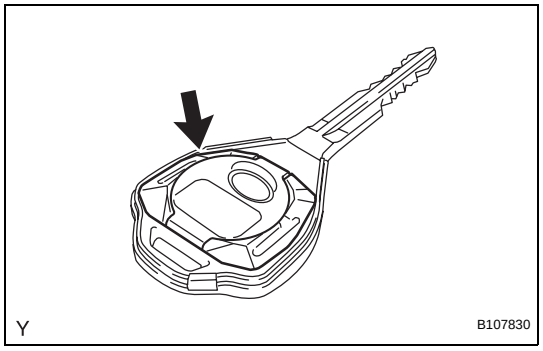

(2) Remove the door control transmitter module from the transmitter housing case.

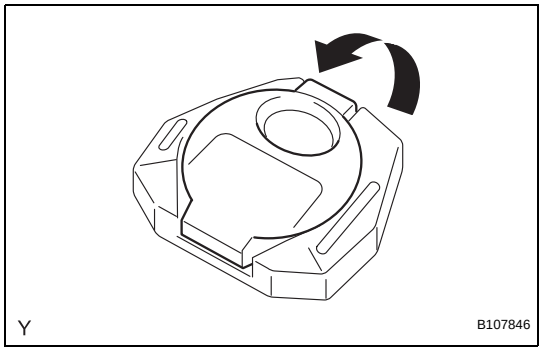

(3) Disengage the hook and remove the transmitter battery cover.

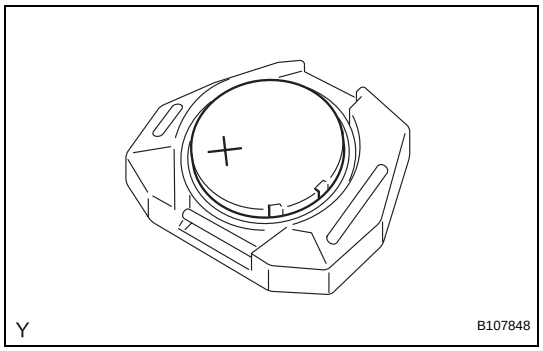

(4) Remove the battery (lithium battery: CR2016).

NOTICE:

- **Do not push the terminals with your finger.**
- **Do not use excessive force when prying up the battery (lithium battery: CR2016) as this may damage the terminals.**
- **Do not touch the battery with wet hands. Water may cause rust.**
- **Do not touch or move any components inside the transmitter as this may interfere with its proper operation.**

DL

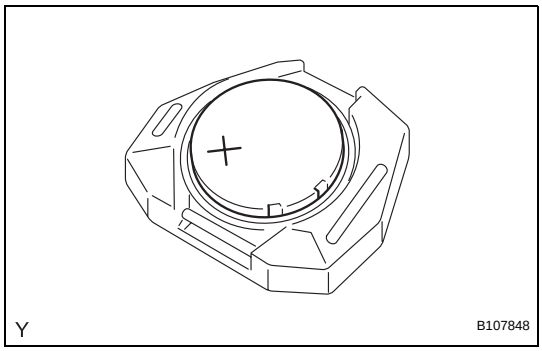

INSTALLATION

1. INSTALL TRANSMITTER BATTERY

(a) Install the transmitter battery.

(1) Install a battery (lithium battery: CR2016) with the positive (+) side up, as shown in the illustration.

NOTICE:

- **Make sure that the positive (+) side and the negative (-) side of the transmitter battery are correctly matched up with the transmitter terminals.**
- **Do not bend the transmitter battery electrode during insertion.**
- **Keep the transmitter cover interior free of dust and oil.**

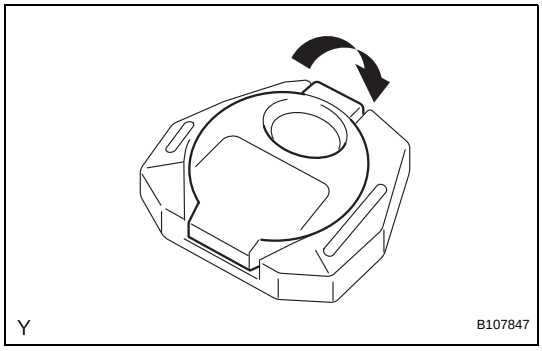

(2) Install the cover securely.

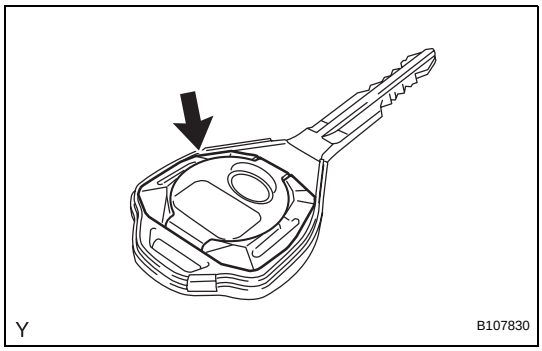

(3) Install the door control transmitter module into the transmitter housing case.

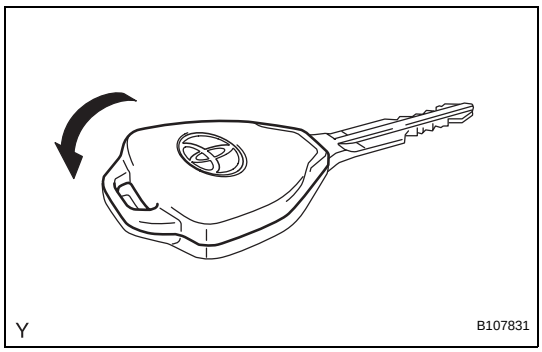

(4) Install the transmitter housing cover onto the transmitter housing case securely.

(5) After installation, press any of the transmitter switches. Check that the LED illuminates.

DOOR CONTROL TRANSMITTER MODULE

COMPONENTS

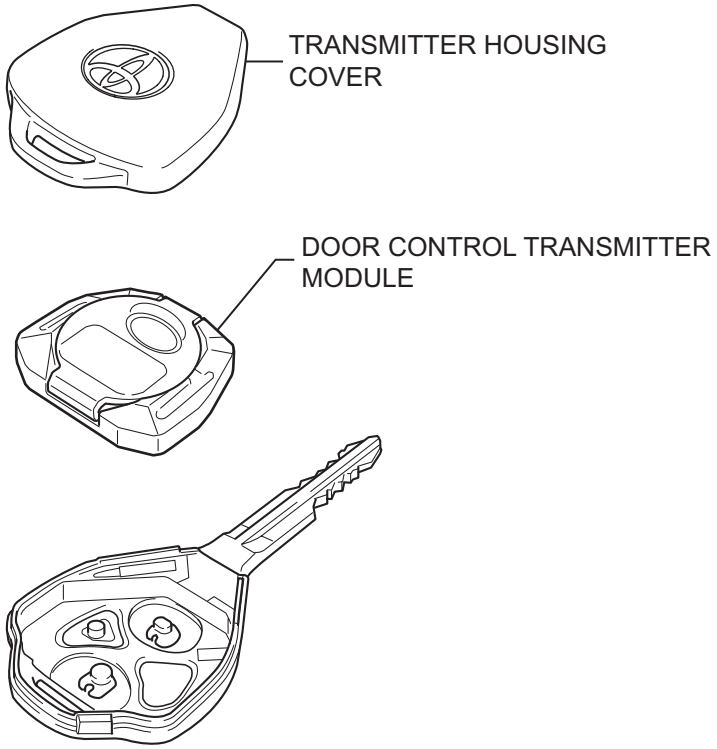

Y

B107918E01

REGISTRATION

1. REGISTER RECOGNITION CODES

HINT:

- Recognition code registration is necessary when the door control transmitter or the door control receiver is replaced with a new one.
- Add Mode is used to register new recognition codes while retaining the previously registered codes. This mode is used when new transmitters are added. If the number of registered codes exceeds 4, the previously registered codes will be erased in order, starting from the first registered code.
- Rewrite Mode is used to erase all the previously registered recognition codes in order to register new recognition codes. This mode is used when the transmitter or the door control receiver is replaced with a new one.
- Confirmation Mode is used to confirm how many recognition codes have already been registered before any additional recognition codes are registered.
- Prohibition Mode is used to erase all the registered codes and disable the wireless door lock function. This mode is used when the transmitters are lost.
- The registration procedure described on the following pages must be performed in order.

(a) Check that the following conditions are met.
- No key in the ignition key cylinder.
- Only driver side door is open.

(b) Insert the key into the ignition key cylinder, and remove it twice within 5 seconds.

(c) Perform the following operations within 40 seconds.
(1) Close and open the driver side door twice.
(2) Insert the key into the ignition key cylinder, then remove it.

(d) Perform the following operations within 40 seconds.
(1) Close and open the driver side door twice.
(2) Insert the key into the ignition key cylinder and close all doors.

(e) Perform the following operations within 40 seconds.
(1) Turn the ignition switch from LOCK to ON and back to LOCK 1 to 5 times at approximately 1 second intervals to select a mode (see the table below).

Number of ON-LOCK operations of ignition switch:

Add Mode ON-LOCK operation: Once

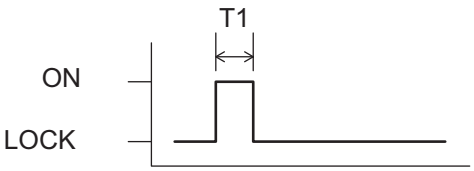

Rewrite Mode ON-LOCK operation: Twice

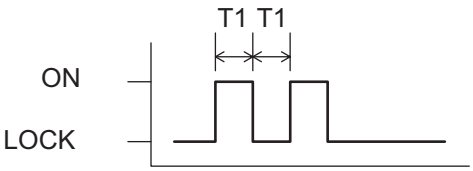

Confirmation Mode ON-LOCK operation: 3 times

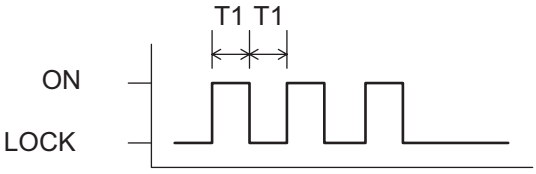

Prohibition Mode ON-LOCK operation: 5 times

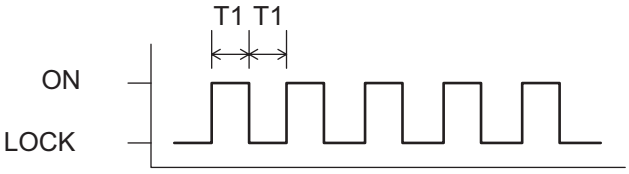

T1: Approximately 1 second

B111914E03

HINT:
If the number of ignition switch ON-LOCK operations is 0, 4, 6 or more, there will be no response (power DOOR LOCK and UNLOCK operation) to show which mode has been selected.

(2) Remove the key from the ignition key cylinder.

DL

(f) The main body ECU automatically performs power door LOCK-UNLOCK operations to indicate which mode has been selected.

Response to mode selection (Power door lock operation):

Add Mode LOCK-UNLOCK operation: Once

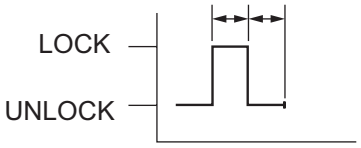

Confirmation Mode LOCK-UNLOCK operation: The number of registered codes (1 to 5 times)

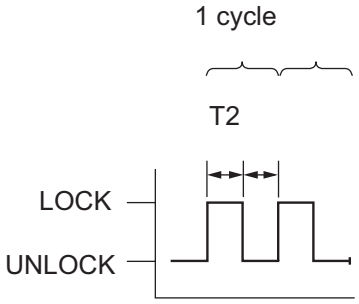

Rewrite Mode LOCK-UNLOCK operation: Twice

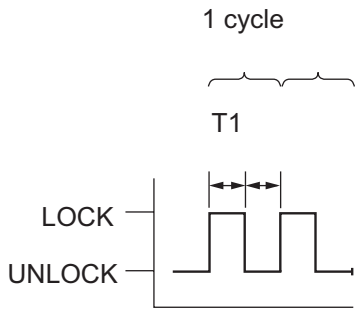

Prohibition Mode LOCK-UNLOCK operation: 5 times

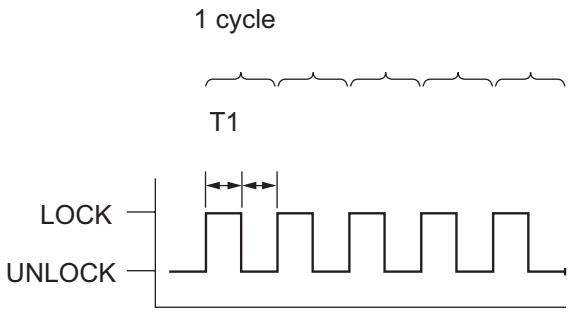

T1: Approximately 1 second T2: Approximately 2 seconds

Y

B106703E01

HINT:

- In Confirmation Mode, LOCK-UNLOCK operation will occur once for each recognition code that has been registered. For example, if 2 recognition codes have been registered, the LOCK-UNLOCK operation will occur twice.
- In Confirmation Mode, if no recognition codes have been registered, LOCK-UNLOCK operation will occur 11 times.
- If Confirmation Mode or Prohibition Mode is selected, the operation ends after the response to the selected mode is completed.

(g) Register a new recognition code (Add Mode or Rewrite Mode) in accordance with the following procedure.
  (1) Within 45 seconds of Add Mode or Rewrite Mode being selected, press the LOCK and UNLOCK switches on the transmitter switch of the key simultaneously for 1.0 to 1.5 seconds. Within 3 seconds of moving your finger away from the switches, press either switch of the key for more than 1.0 second.
  (2) Within 5 seconds of the transmitter switch being released, the LOCK-UNLOCK operation will be automatically performed once if the registration of the recognition code is correctly completed. If the LOCK-UNLOCK operation is performed twice, the registration of the recognition code has failed, so perform the registration procedure from the beginning once again.

Response to registration completion:

LOCK-UNLOCK Occurs Once

Registration of recognition code has been completed.

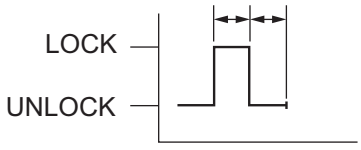

LOCK-UNLOCK Occurs Twice

Registration of recognition code has failed.

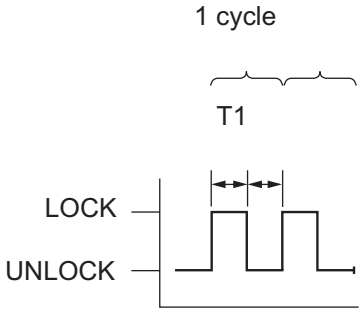

T1: Approximately 1 second

Y

B106704E01

(h) If multiple transmitters need to be registered, repeat the registration of a new recognition code procedure within 45 seconds of the previous registration.
(i) If any of the following conditions is met, the registration mode will end.
  (1) The key is inserted into the ignition key cylinder.
  (2) Any doors are opened.

(3) 45 seconds or more elapse after code registration.

(j) Registration of the recognition codes (Add Mode and Rewrite Mode) is completed.

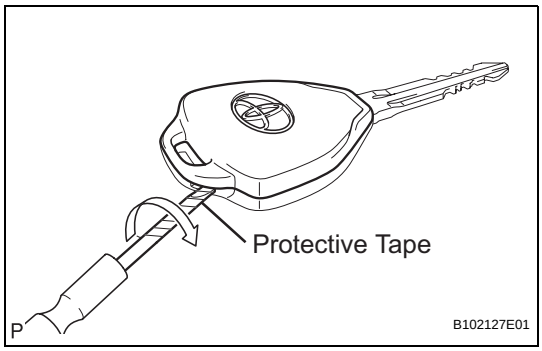

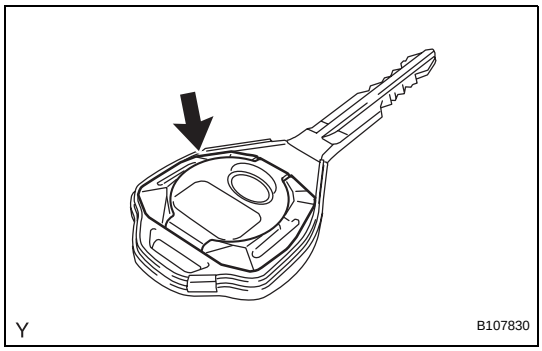

REMOVAL

1. REMOVE DOOR CONTROL TRANSMITTER MODULE

(a) Remove the door control transmitter module.

(1) Using a screwdriver with its tip wrapped in protective tape, pry apart the transmitter housing cover.

NOTICE:
Do not use excessive force when prying apart the housing cover.

(2) Remove the door control transmitter module from the transmitter housing case.

INSPECTION

1. INSPECT DOOR CONTROL TRANSMITTER MODULE

(a) Inspect operation of the transmitter.

(1) Remove the battery (lithium battery) from the transmitter.

(2) Install a new or normal battery (lithium battery).

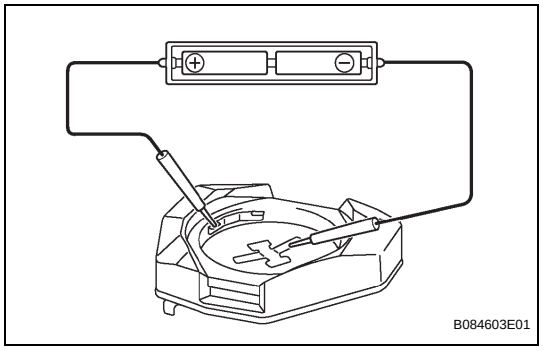

(3) If a new or normal battery is not available, connect 2 new 1.5 V batteries in series. Connect the positive (+) battery electrode to the battery receptacle side terminal, and the negative (-) battery electrode to the bottom terminal, and apply a voltage of 3 V to the transmitter.

(4) In a location that is approximately 1 m (3.28ft.) away from the driver side outside door handle, point the key plate of the transmitter at the vehicle and check operation of the transmitter by pressing the transmitter switches on the transmitter body.

Standard:

The door lock/unlock can be operated via remote control.

The LED illuminates when each switch is pressed.

HINT:

- The minimum operational distance differs depending on the way the transmitter is held and the location.
- Since the transmitter uses faint electric waves, the operational distance might be shortened if noise or a strong electric wave occurs in the area where the frequency is used.

(5) Install the battery (lithium battery).

(b) Inspect the battery capacity.

HINT:

- The capacity of the battery can be checked only when the battery is installed in the transmitter. For a lithium battery used in the transmitter, a voltage of more than 2.5 V is shown on the tester until the energy is completely consumed without the battery installed in the transmitter. Therefore, it is necessary to measure the voltage with the battery installed in the transmitter (a resistance of 1.2 kΩ is applied to the battery) to check the amount of energy left in the battery.
- If the transmitter is faulty, the amount of energy left in the battery might not be checked correctly.

(1) Remove the battery (lithium battery) from the transmitter.

(2) Connect the lead to the negative (-) terminal of the transmitter and install the battery.

DL

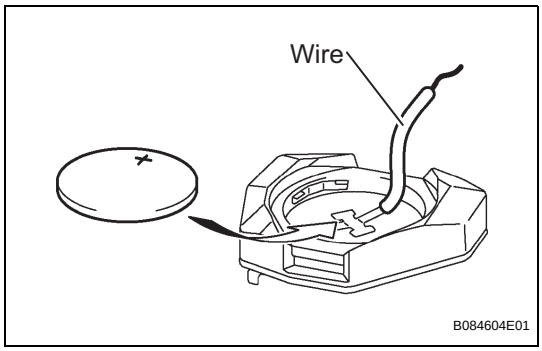

(3) Connect the positive (+) tester probe to the positive (+) side of the battery (lithium battery) and the negative (-) tester probe to the lead respectively.
(4) Press one of the transmitter switches on the transmitter for approximately 1 second.
(5) Press the same or another transmitter switch again and check the voltage.
Standard Voltage:
2.2 V or higher
HINT:
- If the temperature of the battery is low, the inspection cannot be performed correctly. If the result of the test is less than 2.2 V, conduct the test again after leaving the battery in a place with a temperature of 18°C (64°F) for more than 30 minutes.
- The automatic power-off function causes the battery voltage to be 2.5 V or more (a voltage with no resistance applied to the battery) when 0.8 seconds have passed after the switch is pressed. Therefore, read the voltage immediately after the switch is pressed.

(6) Remove the lead.
(7) Set the battery (lithium battery) in the transmitter.

DL

INSTALLATION

1. INSTALL DOOR CONTROL TRANSMITTER MODULE

(a) Install the door control transmitter module.
(1) Install the door control transmitter module into the transmitter housing case.

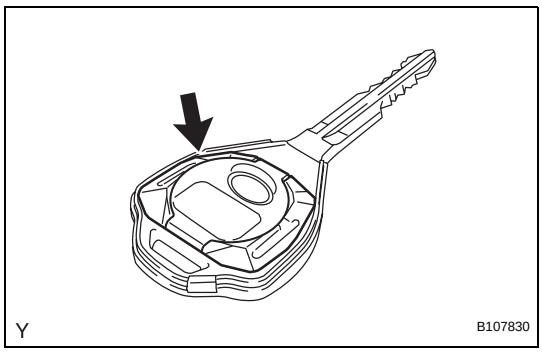

(2) Install the transmitter housing cover onto the transmitter housing case securely.

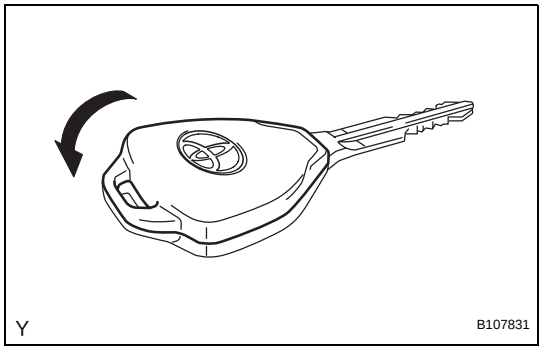

DOOR CONTROL SWITCH (for Sedan)

COMPONENTS

w/o Power Window:

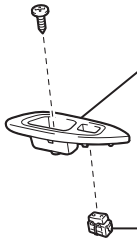

FRONT ARMREST BASE UPPER PANEL

DOOR CONTROL SWITCH

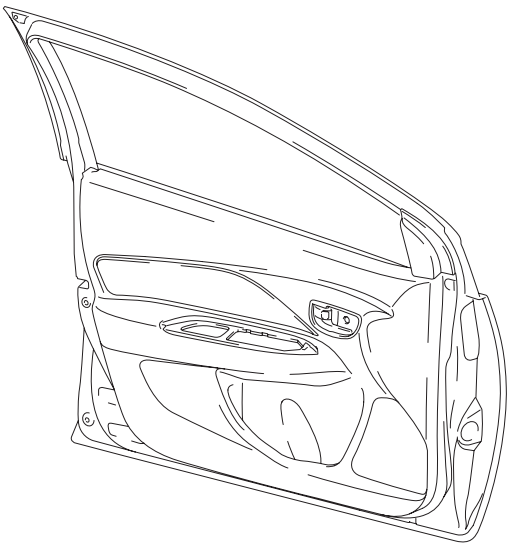

for Driver Side with Power Window:

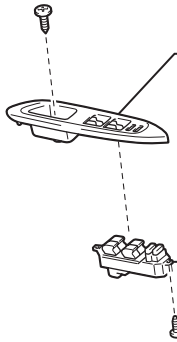

FRONT ARMREST BASE UPPER PANEL

POWER WINDOW REGULATOR MASTER SWITCH ASSEMBLY

for Front Passenger Side with Power Window:

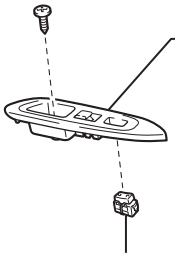

FRONT ARMREST BASE UPPER PANEL

DOOR CONTROL SWITCH

B144409E01

DL

REMOVAL

1. **DISCONNECT CABLE FROM NEGATIVE BATTERY TERMINAL**

2. **REMOVE FRONT ARMREST BASE UPPER PANEL (See page ED-9)**

3. **REMOVE POWER WINDOW REGULATOR MASTER SWITCH ASSEMBLY (w/ Power Window)**
   (a) Remove the 3 screws and the power window regulator master switch.

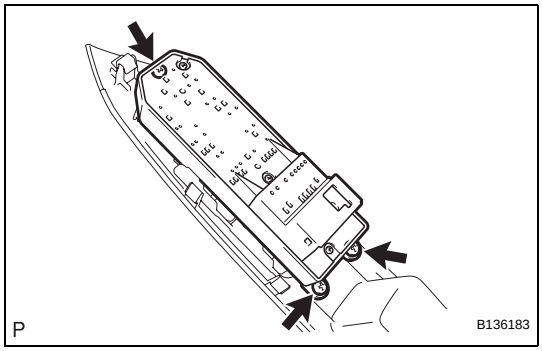

4. **REMOVE DOOR CONTROL SWITCH**
   (a) for Front passenger side with power window:
   Using a screwdriver with its tip wrapped in protective tape, disengage the 2 claws and remove the door control switch.

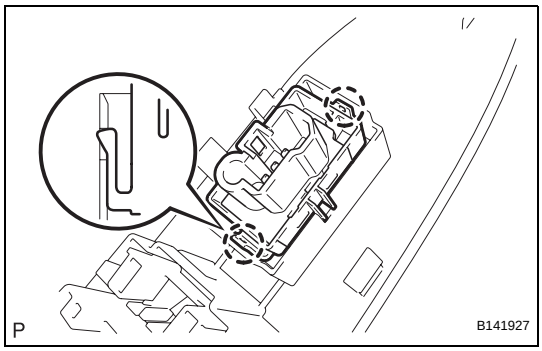

   (b) w/o Power window:
   Using a screwdriver with its tip wrapped in protective tape, disengage the 2 claws and remove the door control switch.

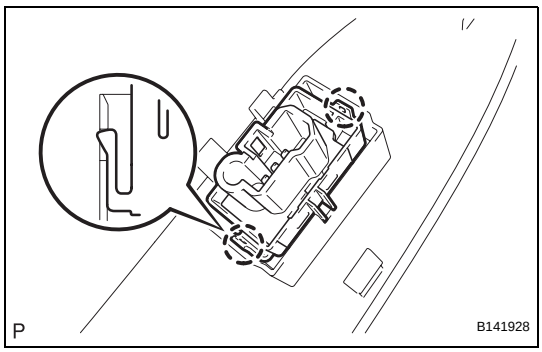

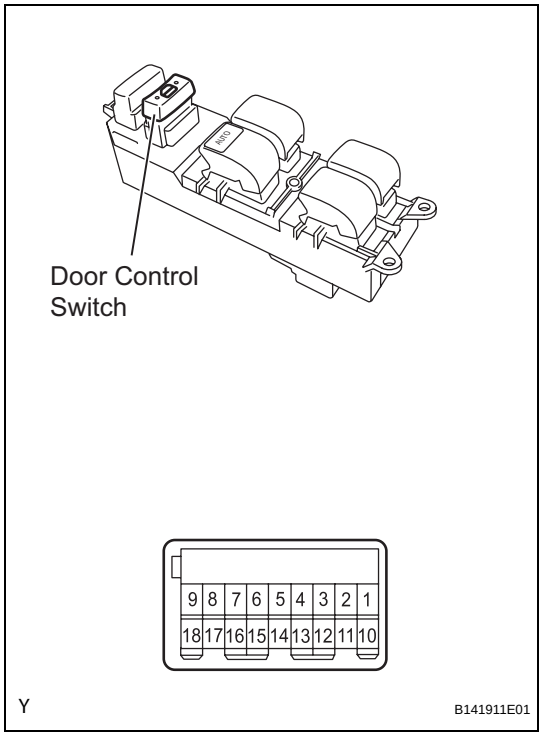

INSPECTION

1. INSPECT POWER WINDOW REGULATOR MASTER SWITCH ASSEMBLY

(a) Check the resistance of the door control switch.

(1) Using an ohmmeter, measure the resistance and check the results in accordance with the value(s) in the table below.

Standard Resistance

Tester Connection	Switch Condition	Specified Condition
1 - 2	LOCK	Below 1 Ω
1 - 2	OFF	10 kΩ or higher
1 - 9	OFF	10 kΩ or higher
1 - 9	UNLOCK	Below 1 Ω

If the result is not as specified, replace the power window regulator master switch.

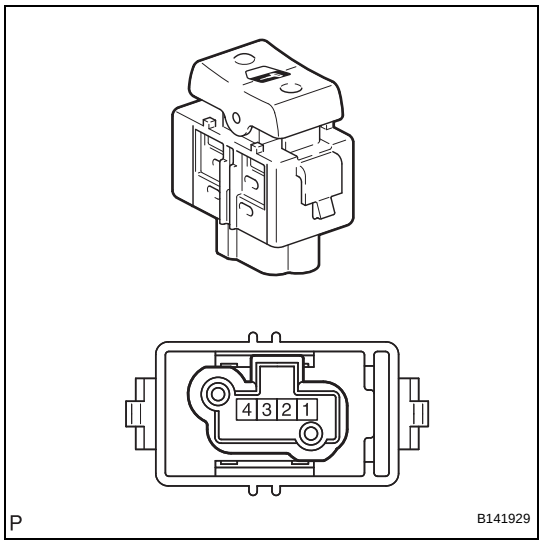

2. INSPECT DOOR CONTROL SWITCH

(a) Check the resistance of the door control switch.

(1) Using an ohmmeter, measure the resistance and check the results in accordance with the value(s) in the table below.

Standard Resistance

Tester Connection	Switch Condition	Specified Condition
3 - 4	LOCK	Below 1 Ω
3 - 4	OFF	10 kΩ or higher
2 - 4	OFF	10 kΩ or higher
2 - 4	UNLOCK	Below 1 Ω

If the result is not as specified, replace the door control switch.

INSTALLATION

1. INSTALL POWER WINDOW REGULATOR MASTER SWITCH ASSEMBLY (w/ Power Window)

(a) Install the power window regulator master switch with the 3 screws.

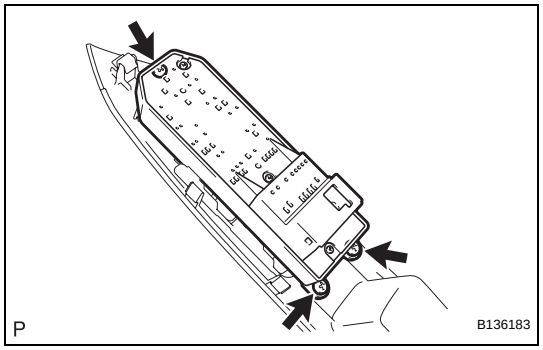

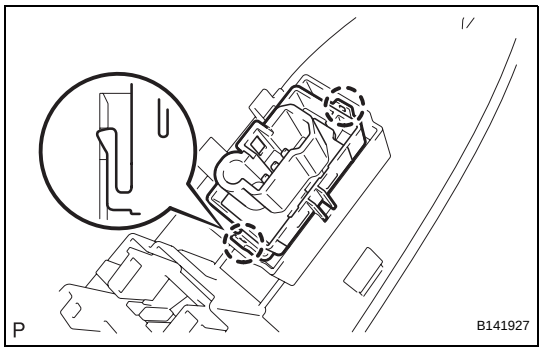

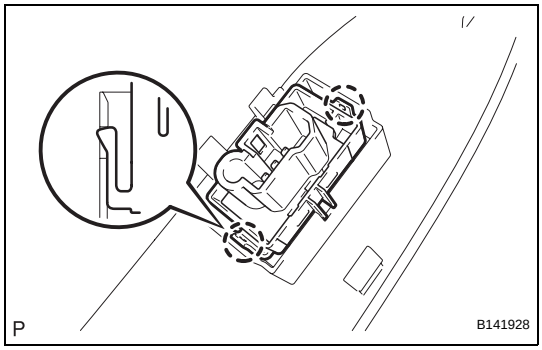

2. INSTALL DOOR CONTROL SWITCH

(a) for Front passenger side with power window:
Engage the 2 claws and install the door control switch.

(b) w/o Power window:
Engage the 2 claws and install the door control switch.

3. INSTALL FRONT ARMREST BASE UPPER PANEL (See page ED-28)

4. CONNECT CABLE TO NEGATIVE BATTERY TERMINAL
Torque: 5.4 N*m (55 kgf*cm, 48 in.*lbf)

DOOR CONTROL SWITCH (for Hatchback Driver Door Side)

COMPONENTS

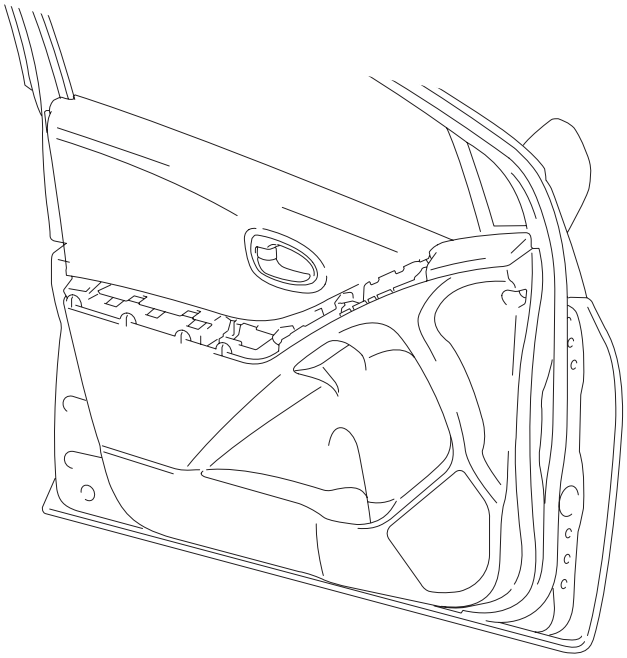

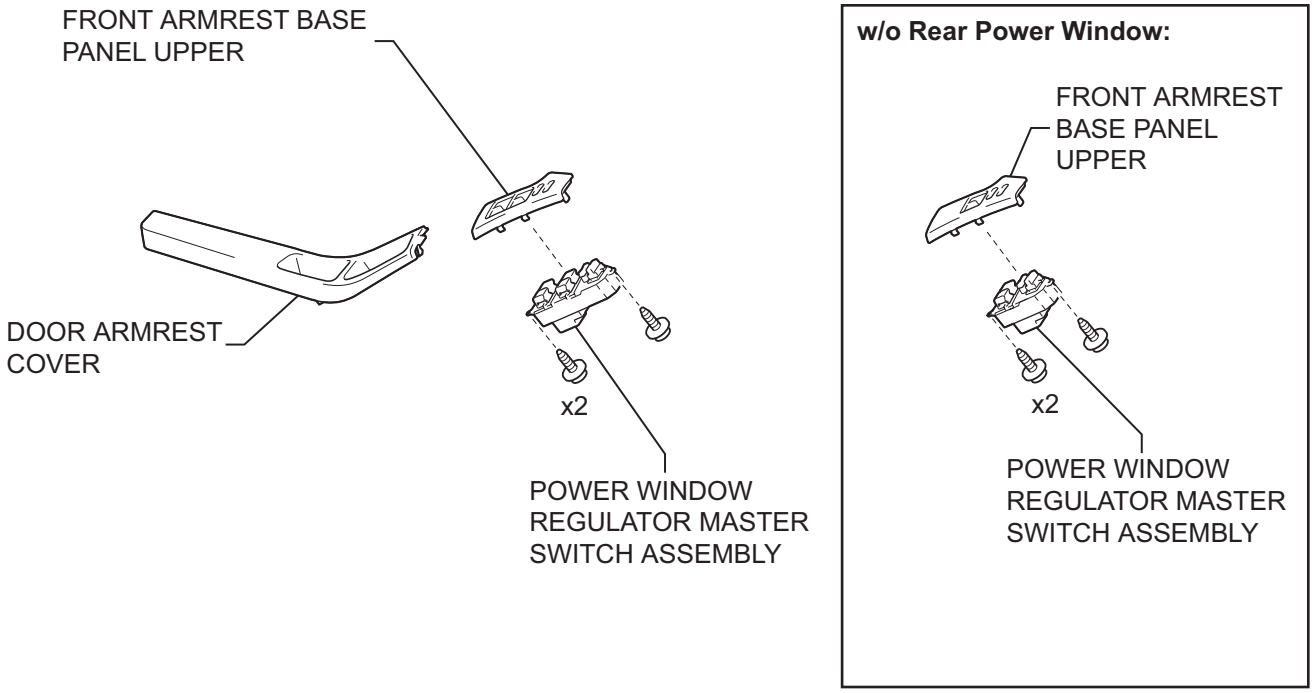

P

B121528E01

REMOVAL

HINT:

- Use the same procedure for both the RH and LH sides.
- The procedure described below is for the LH side.

1. **DISCONNECT CABLE FROM NEGATIVE BATTERY TERMINAL**
2. **REMOVE DOOR ARMREST COVER (See page ED-33)**
3. **REMOVE FRONT ARMREST BASE PANEL UPPER (See page ED-33)**
4. **REMOVE POWER WINDOW REGULATOR MASTER SWITCH ASSEMBLY**
   (a) Remove the 3 screws and the power window regulator master switch.

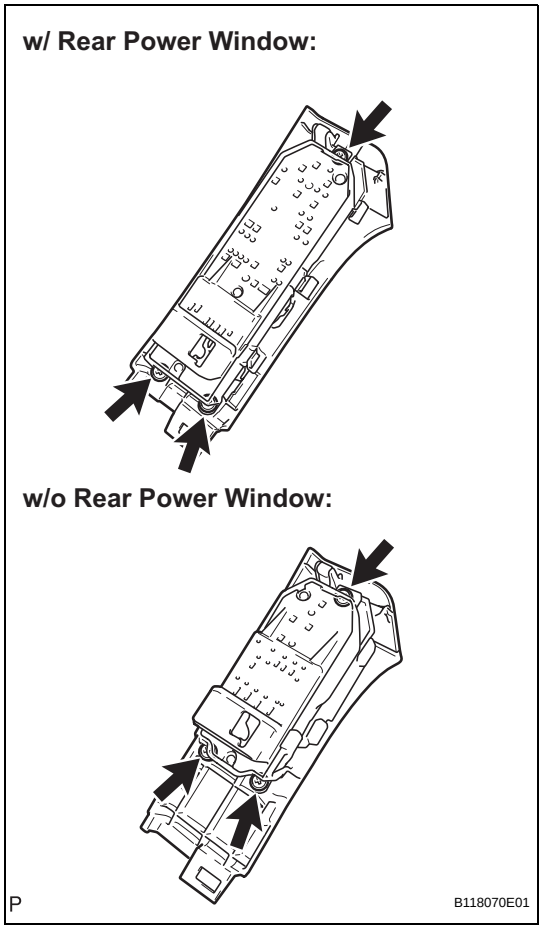

INSPECTION

1. INSPECT POWER WINDOW REGULATOR MASTER SWITCH ASSEMBLY

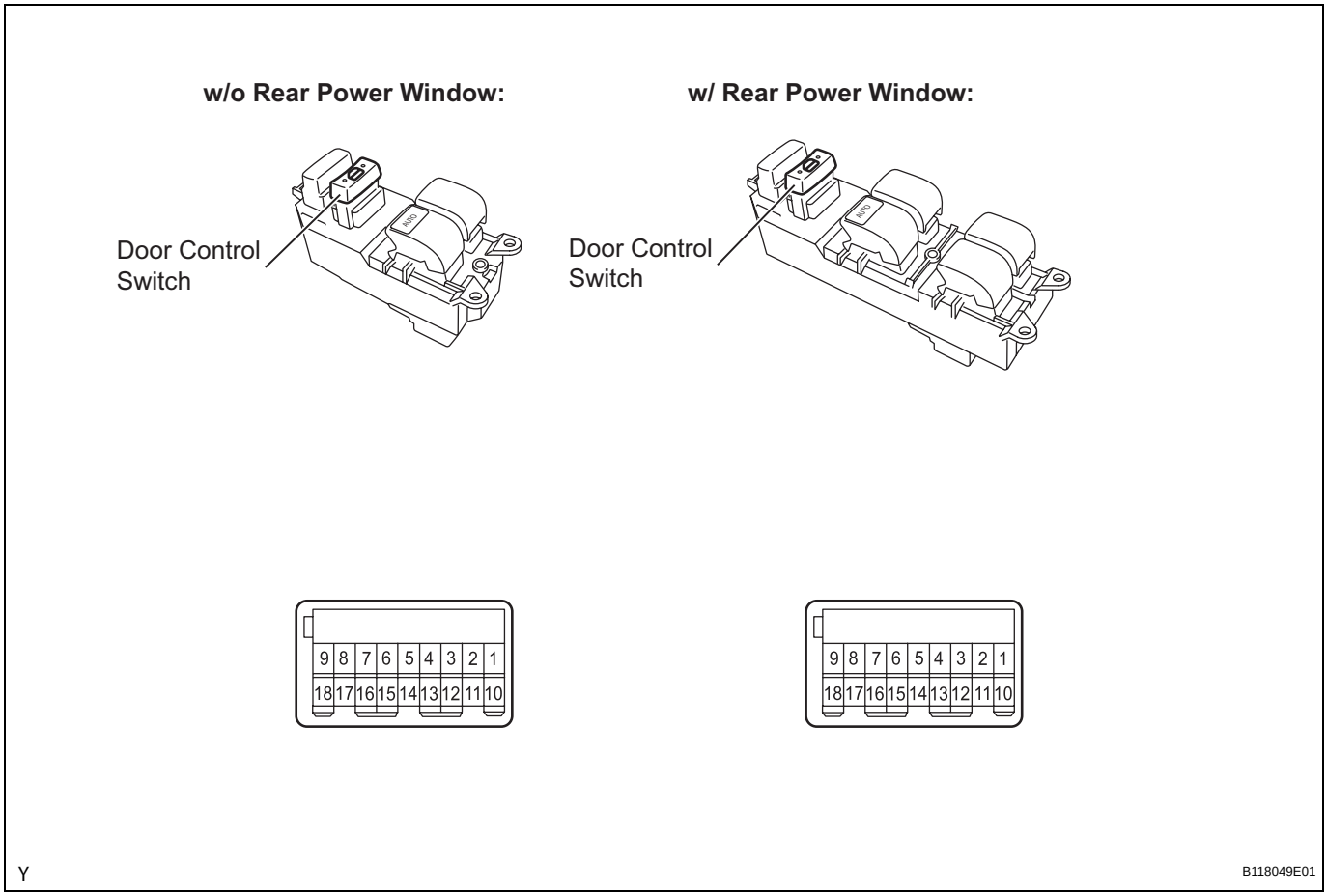

(a) Check the resistance of the door lock switch.

(1) Using an ohmmeter, measure the resistance and check the results in accordance with the value(s) in the table below.

Standard Resistance:
w/ Rear power window

Tester Connection	Switch Condition	Specified Condition
1 - 2	Locked	Below 1 Ω
-	OFF	10 kΩ or higher
1 - 9	Unlocked	Below 1 Ω

If the result is not as specified, replace the power window regulator master switch.

Standard Resistance:
w/o Rear power window

Tester Connection	Switch Condition	Specified Condition
1 - 7	Locked	Below 1 Ω
-	OFF	10 kΩ or higher
7 - 9	Unlocked	Below 1 Ω

If the result is not as specified, replace the power window regulator master switch.

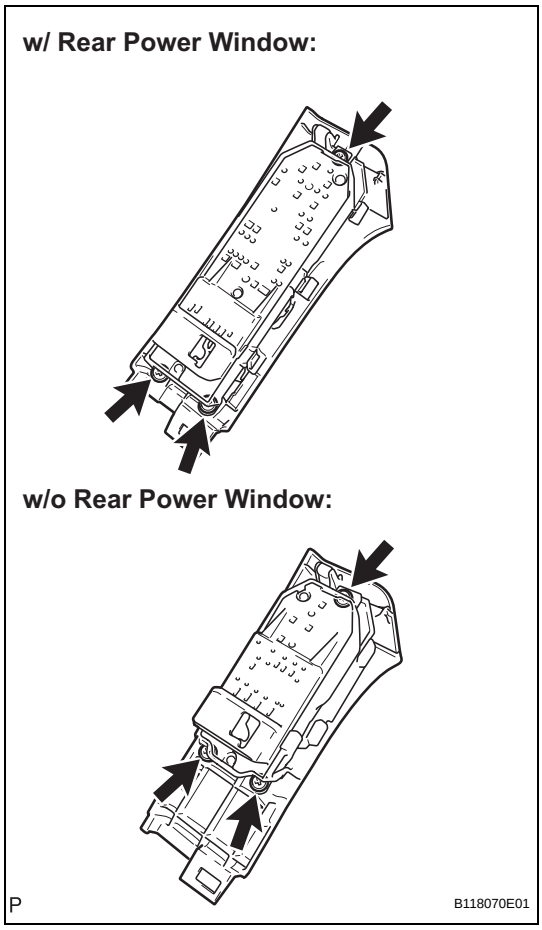

INSTALLATION

1. **INSTALL POWER WINDOW REGULATOR MASTER SWITCH ASSEMBLY**
   (a) Install the power window regulator master switch with the 3 screws.
2. **INSTALL FRONT ARMREST BASE PANEL UPPER (See page ED-53)**
3. **INSTALL DOOR ARMREST COVER (See page ED-53)**
4. **CONNECT CABLE TO NEGATIVE BATTERY TERMINAL**
   Torque: 5.4 N*m (55 kgf*cm, 48 in.*lbf)

DOOR CONTROL SWITCH (for Hatchback Center Consol Side)

COMPONENTS

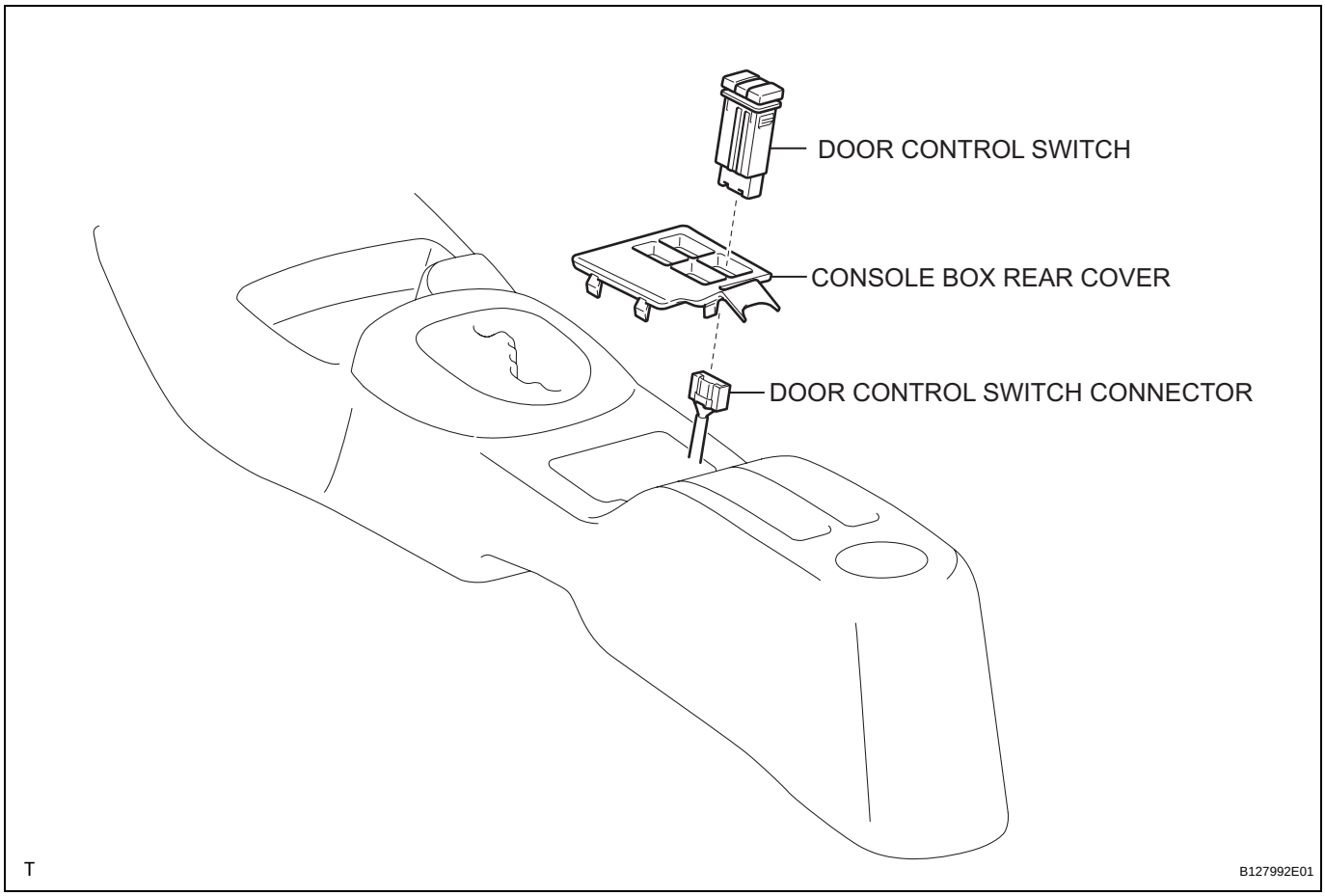

REMOVAL

1. **DISCONNECT CABLE FROM NEGATIVE BATTERY TERMINAL**
2. **REMOVE CONSOLE BOX REAR COVER (See page IP-68)**
3. **REMOVE DOOR CONTROL SWITCH**
   (a) Disengage the 2 claws and remove the door control switch.

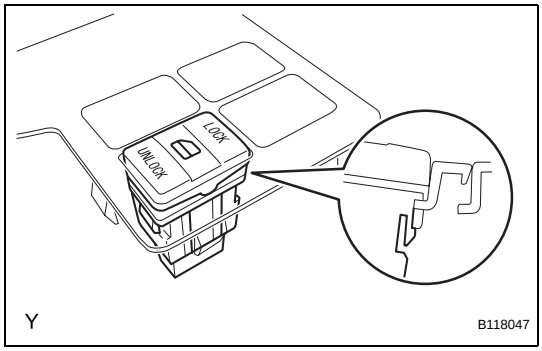

INSPECTION

1. **INSPECT DOOR CONTROL SWITCH**
   (a) Check the resistance.
      (1) Using an ohmmeter, measure the resistance and check the results in accordance with the value(s) in the table below.
      Standard Resistance

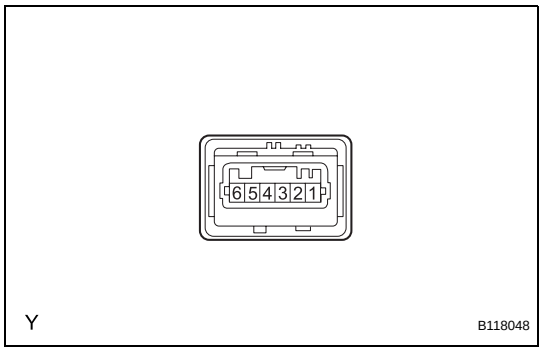

Tester Connection	Condition	Specified Condition
3 - 5	Locked	10 kΩ or higher
3 - 5	Unlocked	Below 1 Ω
4 - 5	Locked	Below 1 Ω
4 - 5	Unlocked	10 kΩ or higher
1 - 6	Illumination Circuit	Below 1 Ω

      If the result is not as specified, replace the door control switch.
   (b) Check the illumination operation.
      (1) Connect the positive (+) battery lead to terminal 6 and the negative (-) battery lead to terminal 1, then check that the illumination comes on.
      Standard:
      Illumination comes on.
      If the illumination does not come on, replace the door control switch.

INSTALLATION

1. **INSTALL DOOR CONTROL SWITCH**
   (a) Engage the 2 claws and install the door control switch.
2. **INSTALL CONSOLE BOX REAR COVER (See page IP-79)**
3. **CONNECT CABLE TO NEGATIVE BATTERY TERMINAL**
   Torque: 5.4 N*m (55 kgf*cm, 48 in.*lbf)

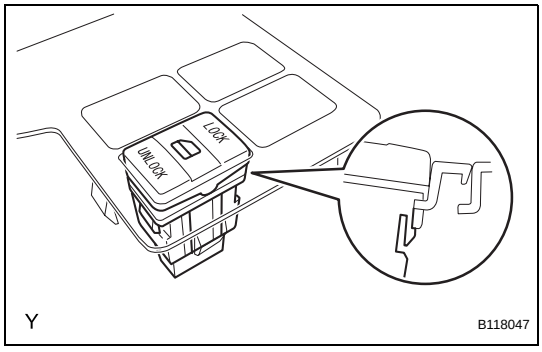

UNLOCK WARNING SWITCH

COMPONENTS

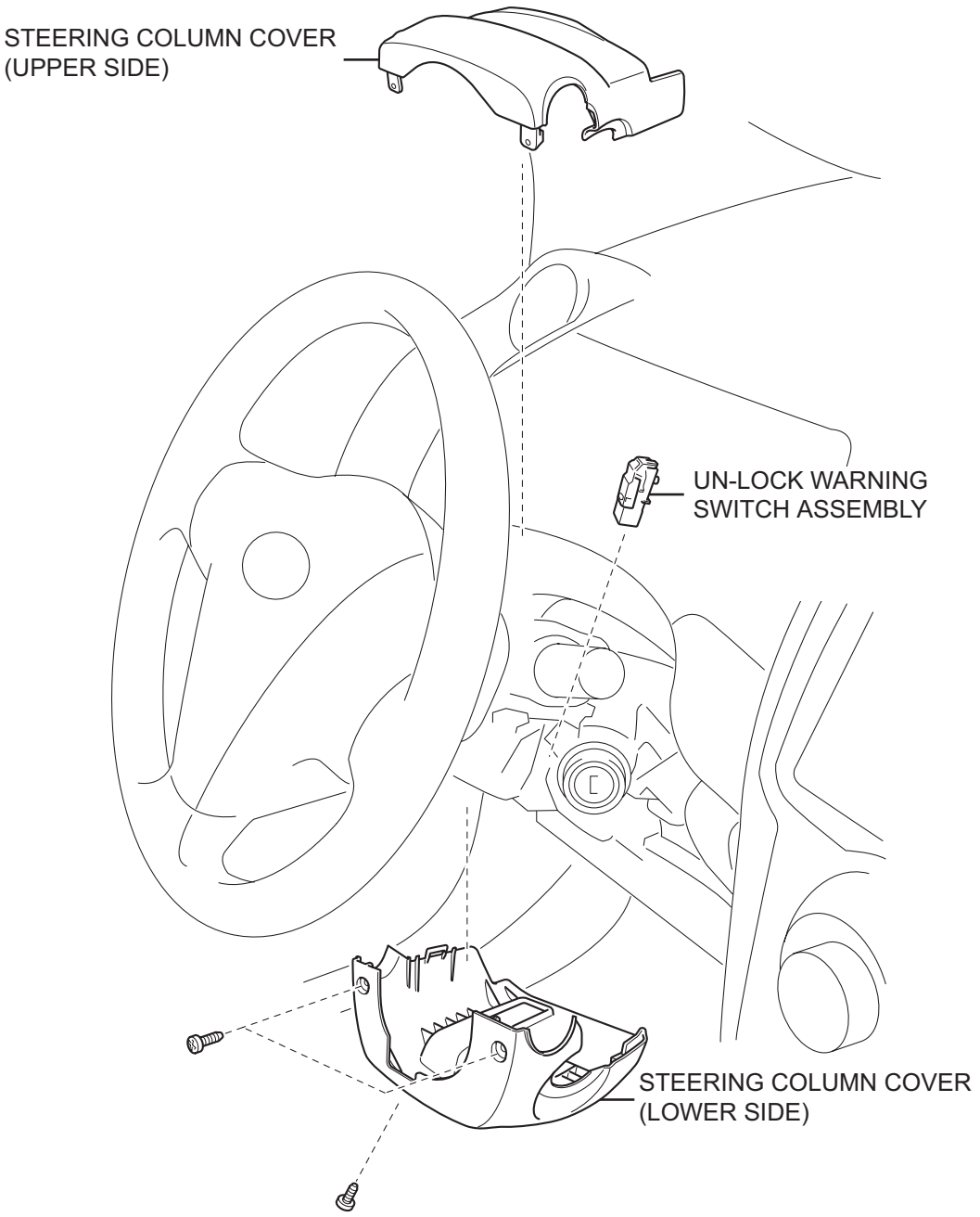

Y

B118082E01

REMOVAL

1. **DISCONNECT CABLE FROM NEGATIVE BATTERY TERMINAL**
2. **REMOVE STEERING COLUMN COVER (See page ST-40)**
3. **REMOVE UN-LOCK WARNING SWITCH ASSEMBLY**
   (a) Insert the key into the ignition key cylinder.
   (b) Disconnect the connector.
   (c) Using a screwdriver with its tip wrapped with protective tape, disengage the 2 claws and remove the unlock warning switch.

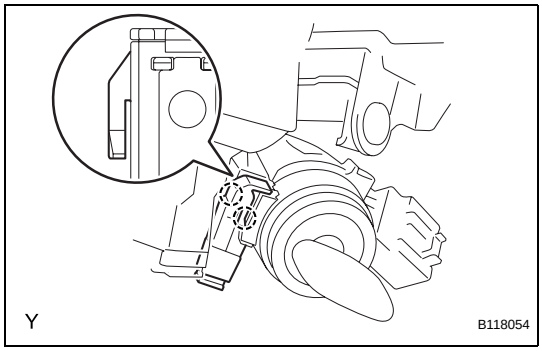

INSPECTION

1. **INSPECT UN-LOCK WARNING SWITCH ASSEMBLY**
   (a) Check the resistance.
      (1) Using an ohmmeter, measure the resistance and check the results in accordance with the value(s) in the table below.
      Standard Resistance

Tester Connection	Condition	Specified Condition
1 - 2	Pin released	10 kΩ or higher
1 - 2	Pin pushed in	Below 1 Ω

If the result is not as specified, replace the unlock warning switch.

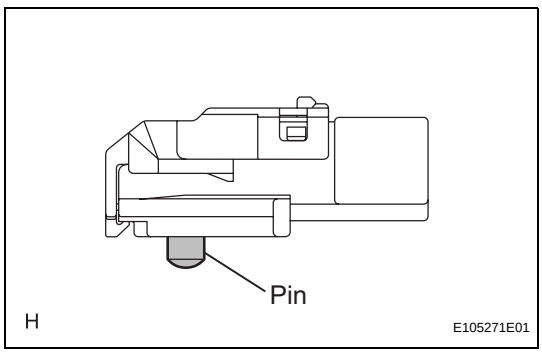

INSTALLATION

1. **INSTALL UN-LOCK WARNING SWITCH ASSEMBLY**
   (a) Engage the 2 claws and install the unlock warning switch.
   (b) Connect the connector.
2. **INSTALL STEERING COLUMN COVER (See page ST-42)**
3. **CONNECT CABLE TO NEGATIVE BATTERY TERMINAL**
   Torque: 5.4 N*m (55 kgf*cm, 48 in.*lbf)

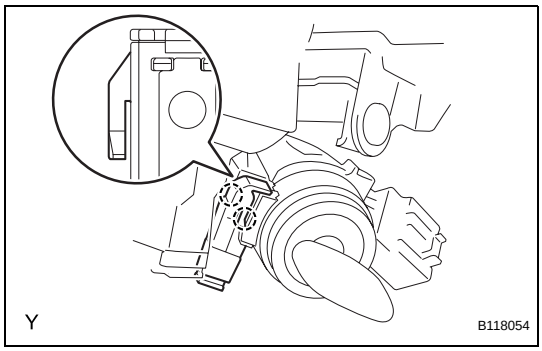

FRONT DOOR LOCK (for Sedan)

COMPONENTS

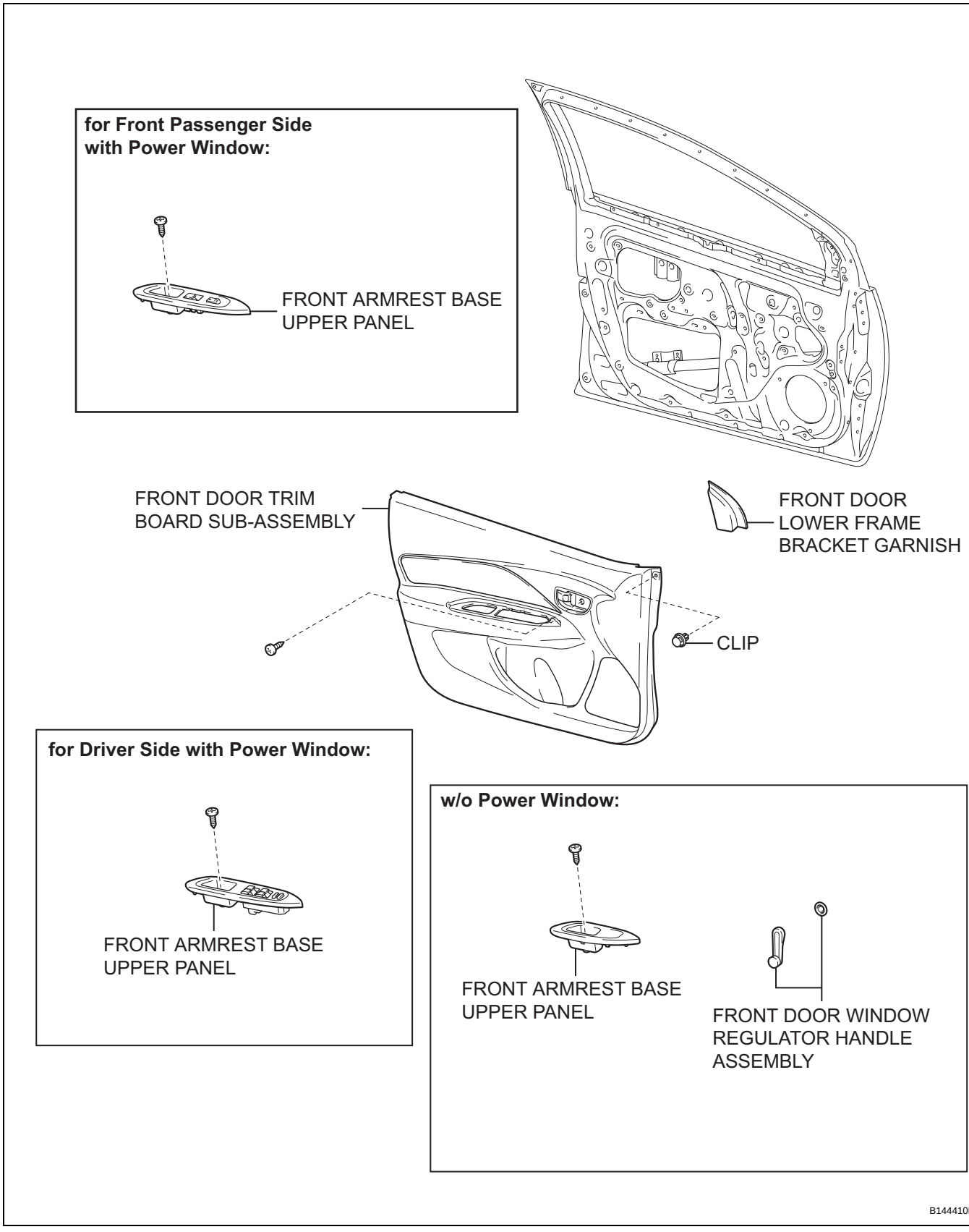

DL

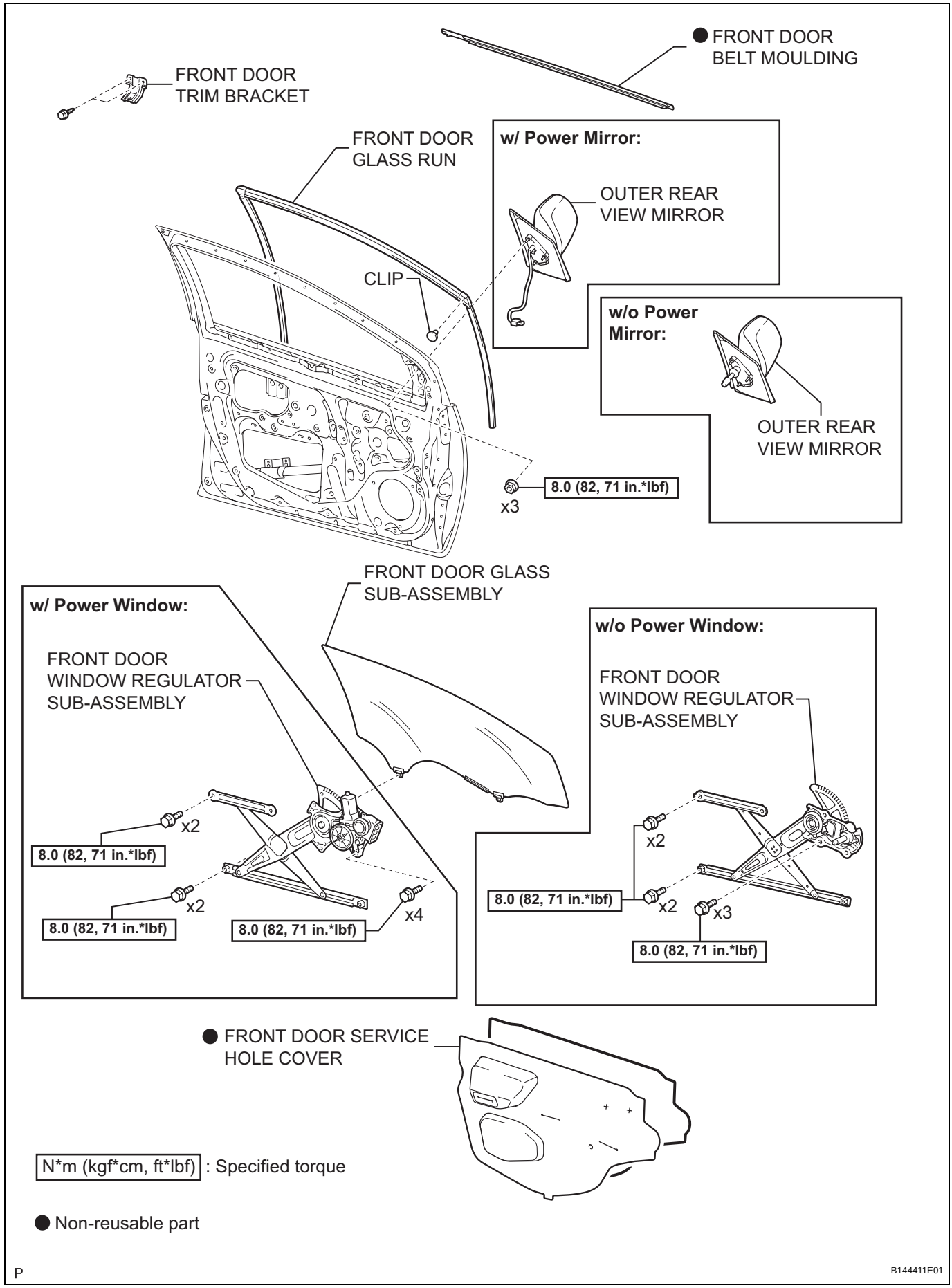

DL

P

B144411E01

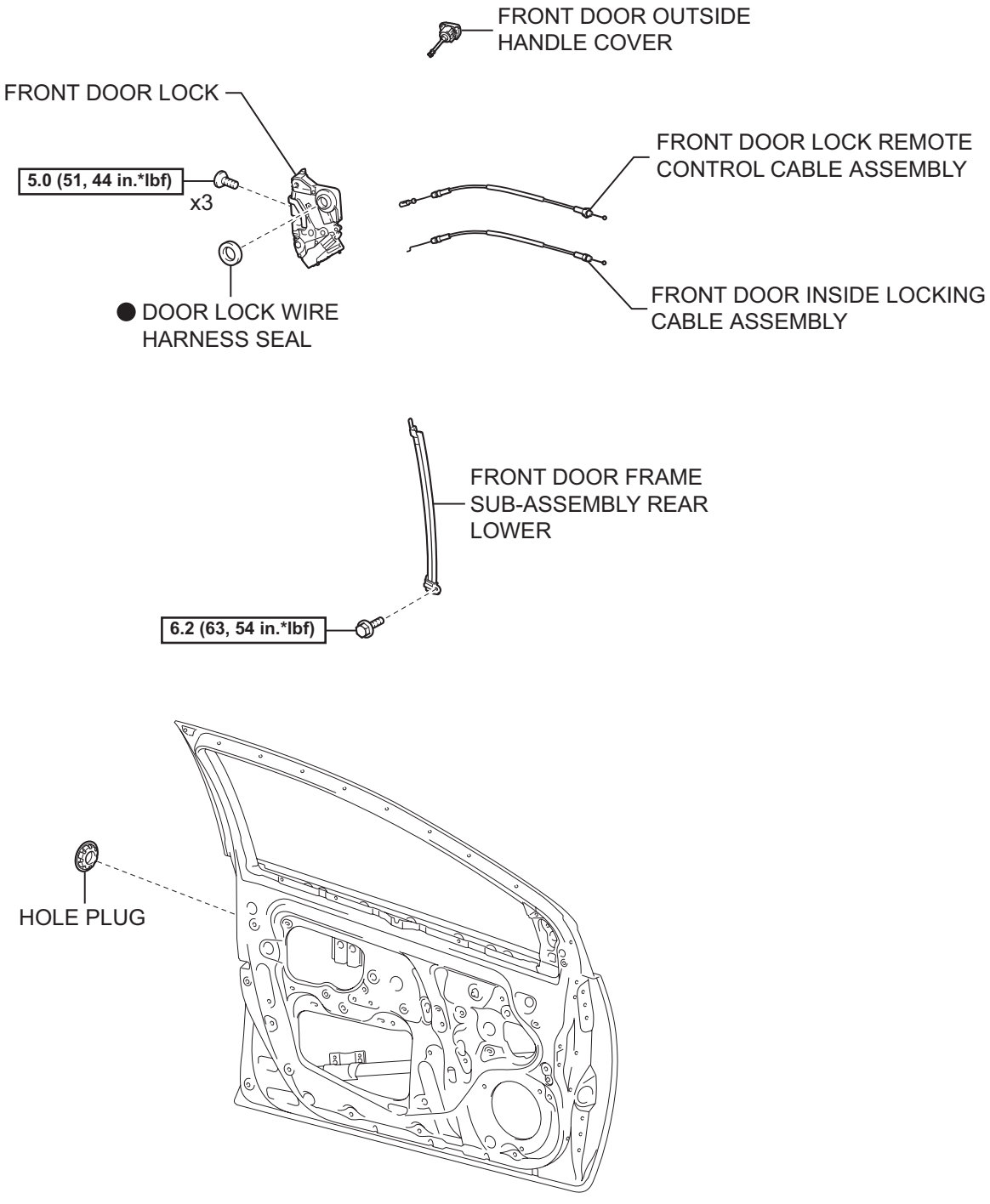

N*m (kgf*cm, ft*lbf) : Specified torque

● Non-reusable part

P

B140694E01

DL

REMOVAL

HINT:
- Use the same procedure for both the RH and LH sides.
- The procedure described below is for the LH side.

1. **DISCONNECT CABLE FROM NEGATIVE BATTERY TERMINAL**
2. **REMOVE FRONT DOOR WINDOW REGULATOR HANDLE ASSEMBLY (w/o Power Window) (See page ED-9)**
3. **REMOVE FRONT DOOR LOWER FRAME BRACKET GARNISH (See page ED-9)**
4. **REMOVE FRONT ARMREST BASE UPPER PANEL (See page ED-9)**
5. **REMOVE FRONT DOOR TRIM BOARD SUB-ASSEMBLY (See page ED-11)**
6. **REMOVE OUTER REAR VIEW MIRROR (See page MI-8)**
7. **REMOVE FRONT DOOR BELT MOULDING (See page ET-85)**
8. **REMOVE FRONT DOOR TRIM BRACKET (See page ED-12)**
9. **REMOVE FRONT DOOR SERVICE HOLE COVER (See page ED-12)**
10. **REMOVE FRONT DOOR GLASS SUB-ASSEMBLY (See page ED-12)**
11. **REMOVE FRONT DOOR WINDOW REGULATOR SUB-ASSEMBLY (See page ED-13)**
12. **REMOVE FRONT DOOR GLASS RUN (See page ED-14)**
13. **REMOVE FRONT DOOR FRAME SUB-ASSEMBLY REAR LOWER (See page ED-14)**
14. **REMOVE FRONT DOOR OUTSIDE HANDLE COVER (See page ED-15)**
15. **REMOVE FRONT DOOR LOCK**
    (a) Using "Torx" socket wrench T30, loosen the 3 screws.
    NOTICE:
    Do not drop or damage the front door lock when removing the screws.
    (b) Move the front door lock downward, remove the outside handle frame link and remove the front door lock.
    HINT:
    Remove the front door lock through the service hole.

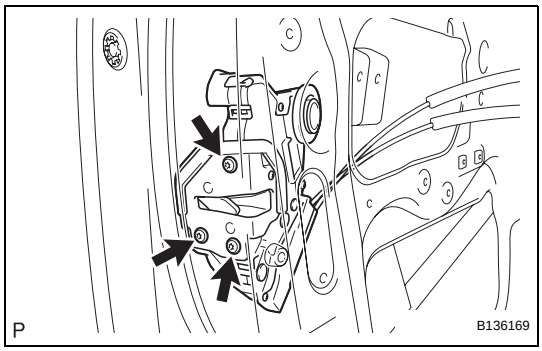

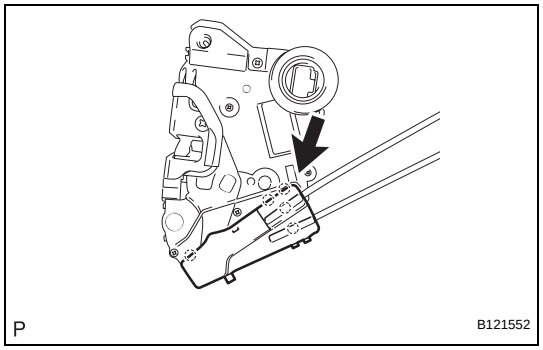

(c) Open the cover.

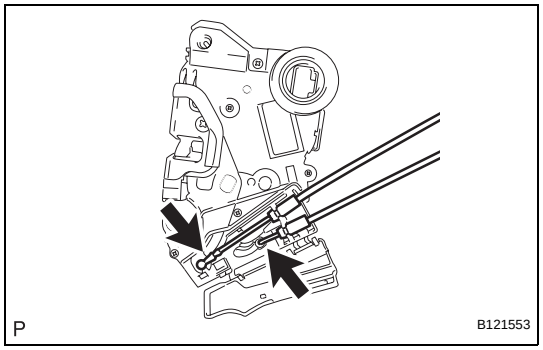

(d) Disconnect the front door lock remote control cable and the front door inside locking cable.
(e) Remove the door lock wire harness seal.

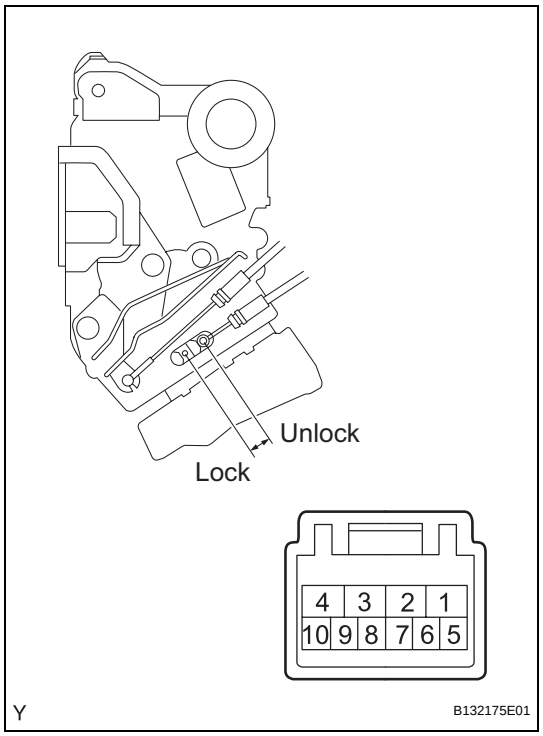

INSPECTION

1. INSPECT FRONT DOOR LOCK ASSEMBLY LH

(a) w/ Power door lock:
Check the operation.
(1) Apply battery voltage to the front door lock and check the operation of the front door lock motor.
Standard

Measurement Condition	Specified Condition
Battery positive (+) → Terminal 4 Battery negative (-) → Terminal 1	Locks
Battery positive (+) → Terminal 1 Battery negative (-) → Terminal 4	Unlocks

If the result is not as specified, replace the front door lock.

(b) Check the resistance of the unlock detection switch.
(1) Using an ohmmeter, measure the resistance and check the results in accordance with the value(s) in the table below.
Standard Resistance

Tester Connection	Door Lock Condition	Specified Condition
7 - 8	Locked	10 kΩ or higher
7 - 8	Unlocked	Below 1 Ω

If the result is not as specified, replace the front door lock.

DL

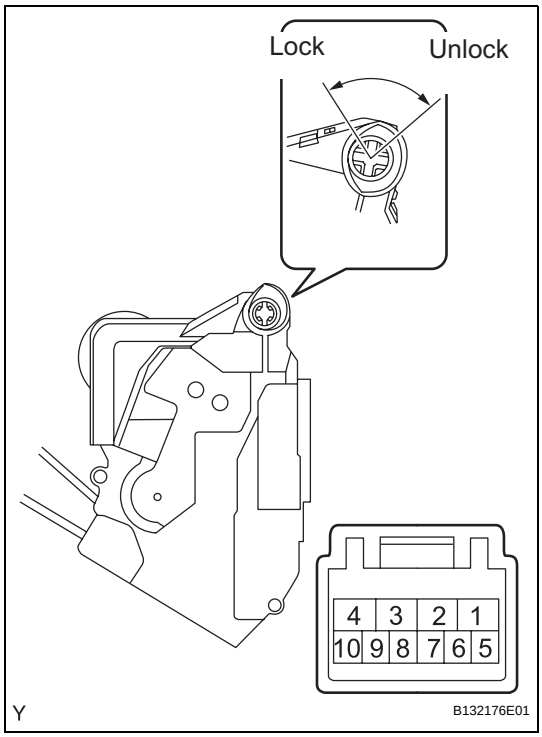

(c) Check the resistance of the door lock and unlock switch.
(1) Using an ohmmeter, measure the resistance and check the results in accordance with the value(s) in the table below.
Standard Resistance

Tester Connection	Door Lock Condition	Specified Condition
7 - 9	Locked	Below 1 Ω
7 - 9	Unlocked	10 kΩ or higher
7 - 10	Locked	10 kΩ or higher
7 - 10	Unlocked	Below 1 Ω

If the result is not as specified, replace the front door lock.

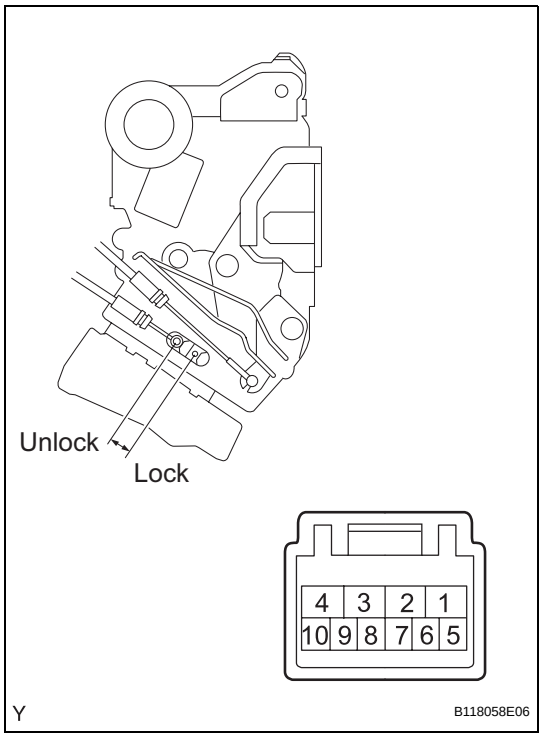

2. INSPECT FRONT DOOR LOCK ASSEMBLY RH

(a) w/ Power door lock:
Check the operation.
(1) Apply battery voltage to the front door lock and check the operation of the front door lock motor.
Standard

Measurement Condition	Specified Condition
Battery positive (+) → Terminal 4 Battery negative (-) → Terminal 1	Locks
Battery positive (+) → Terminal 1 Battery negative (-) → Terminal 4	Unlocks

If the result is not as specified, replace the front door lock.

(b) Check the resistance of the unlock detection switch.
(1) Using an ohmmeter, measure the resistance and check the results in accordance with the value(s) in the table below.
Standard Resistance

Tester Connection	Door Lock Condition	Specified Condition
7 - 8	Locked	10 kΩ or higher
7 - 8	Unlocked	Below 1 Ω

If the result is not as specified, replace the front door lock.

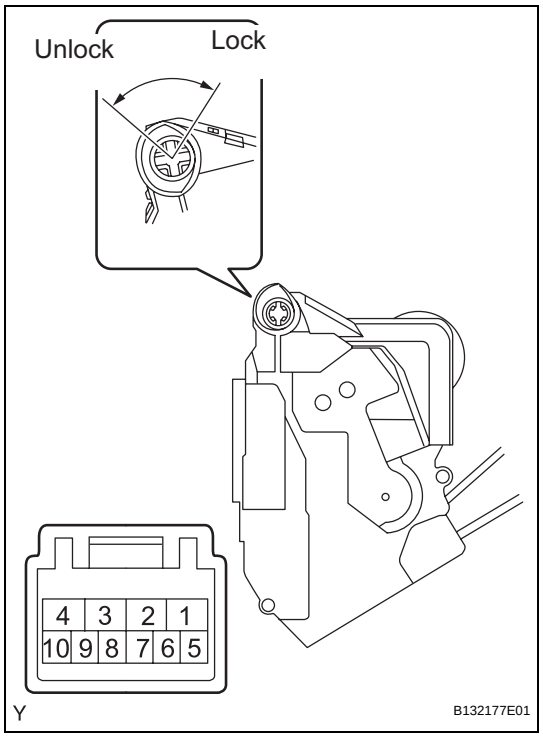

(c) Check the resistance of door lock and unlock switch.

(1) Using an ohmmeter, measure the resistance and check the results in accordance with the value(s) in the table below.

Standard Resistance

Tester Connection	Door Lock Condition	Specified Condition
6 - 8	Locked	Below 1 Ω
6 - 8	Unlocked	10 kΩ or higher
5 - 8	Locked	10 kΩ or higher
5 - 8	Unlocked	Below 1 Ω

If the result is not as specified, replace the front door lock.

DL

INSTALLATION

1. INSTALL FRONT DOOR LOCK

NOTICE:

- **If reusing a door lock that has been removed, replace the packing in the connecting part with new.**
- **Make sure that no grease or dirt adheres to the packing surface in the connecting part.**

(a) Apply MP grease to the sliding and rotating areas of the front door lock.

(b) Connect the front door lock remote control cable and the front door inside locking cable.

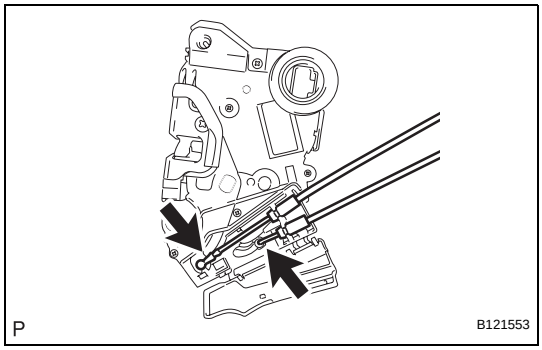

(c) Close the cover.

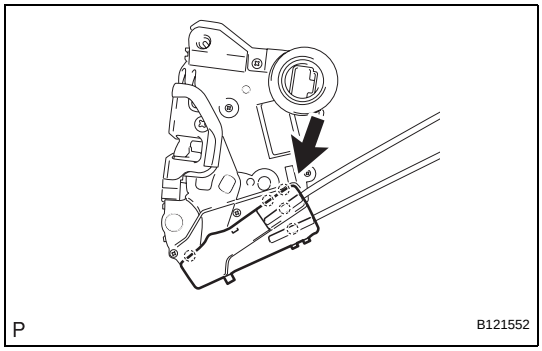

(d) Insert the door lock open rod into the front door lock, then set it to the door panel.

NOTICE:

Make sure that the outside handle link is securely engaged with the door lock.

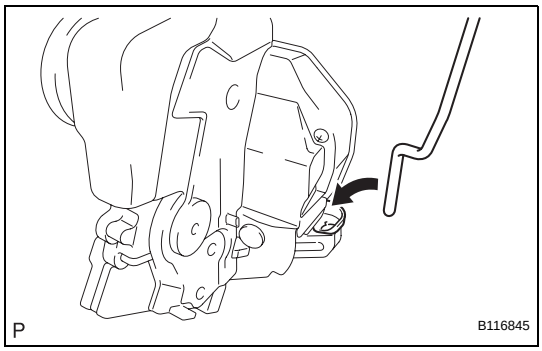

(e) Apply adhesive to the threads of the screws.

Adhesive:

Toyota Genuine Adhesive 1324, Three Bond 1324 or the equivalent.

(f) Using "Torx" socket wrench T30, install the front door lock with the 3 screws.

Torque: 5.0 N*m (51 kgf*cm, 44 in.*lbf)

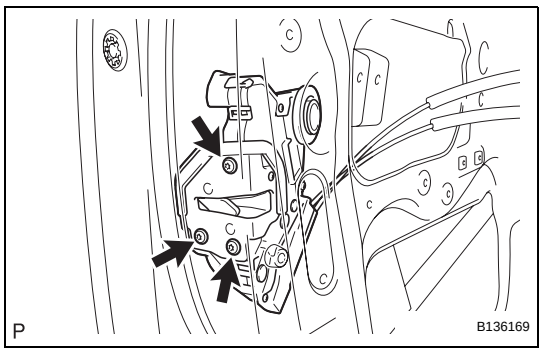

2. INSTALL FRONT DOOR OUTSIDE HANDLE COVER (See page ED-23)

3. INSTALL FRONT DOOR FRAME SUB-ASSEMBLY REAR LOWER (See page ED-23)
4. INSTALL FRONT DOOR GLASS RUN (See page ED-23)
5. INSTALL FRONT DOOR WINDOW REGULATOR SUB-ASSEMBLY (See page ED-24)
6. INSTALL FRONT DOOR GLASS SUB-ASSEMBLY (See page ED-24)
7. INSTALL FRONT DOOR SERVICE HOLE COVER (See page ED-25)
8. INSTALL FRONT DOOR TRIM BRACKET (See page ED-25)
9. INSTALL FRONT DOOR BELT MOULDING (See page ET-86)
10. INSTALL OUTER REAR VIEW MIRROR (See page MI-11)
11. INSTALL FRONT DOOR TRIM BOARD SUB-ASSEMBLY (See page ED-26)
12. INSTALL FRONT ARMREST BASE UPPER PANEL (See page ED-28)
13. INSTALL FRONT DOOR LOWER FRAME BRACKET GARNISH (See page ED-28)
14. INSTALL FRONT DOOR WINDOW REGULATOR HANDLE ASSEMBLY (w/o Power Window) (See page ED-29)
15. CONNECT CABLE TO NEGATIVE BATTERY TERMINAL
    Torque: 5.4 N*m (55 kgf*cm, 48 in.*lbf)

FRONT DOOR LOCK (for Hatchback)

COMPONENTS

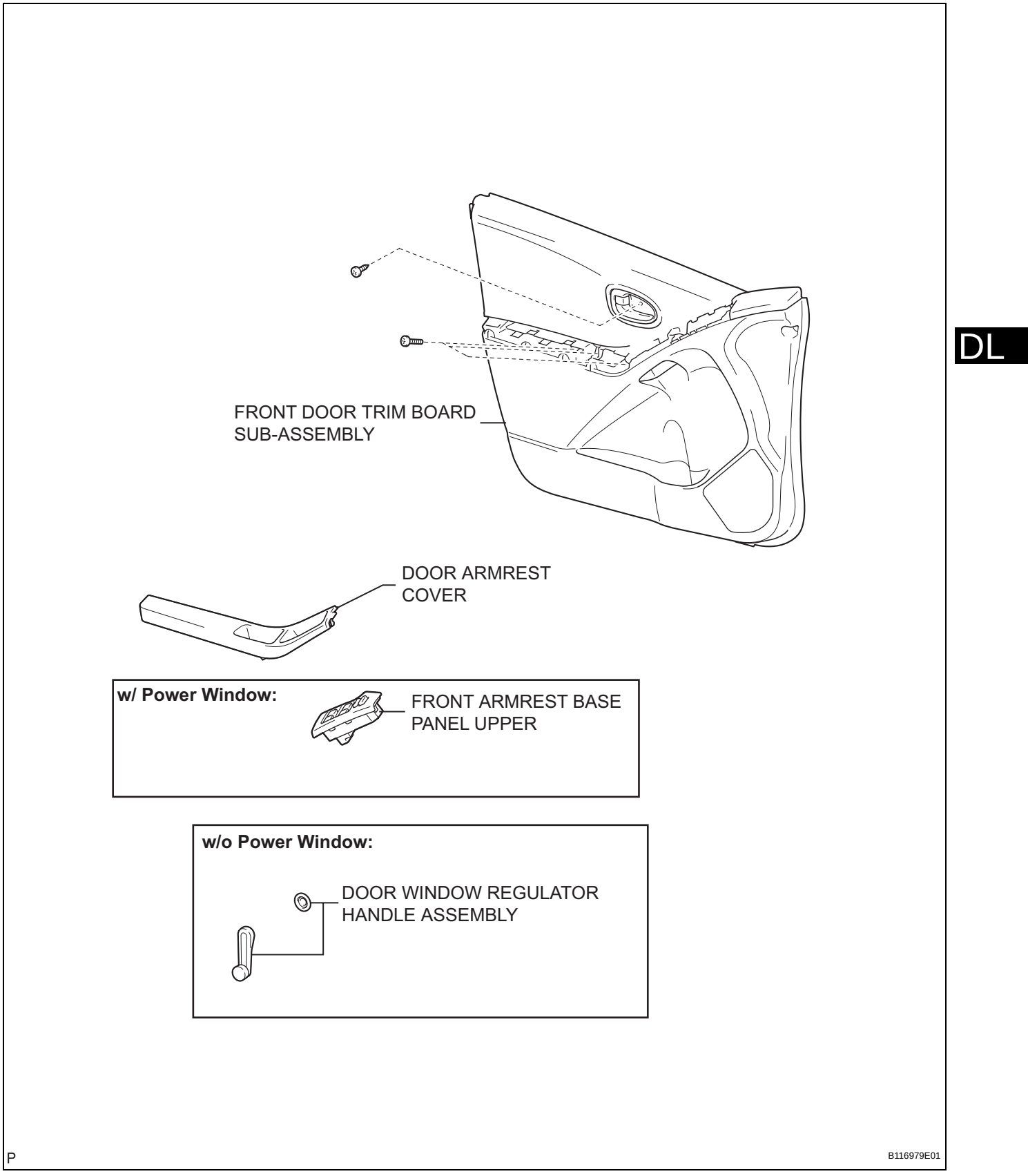

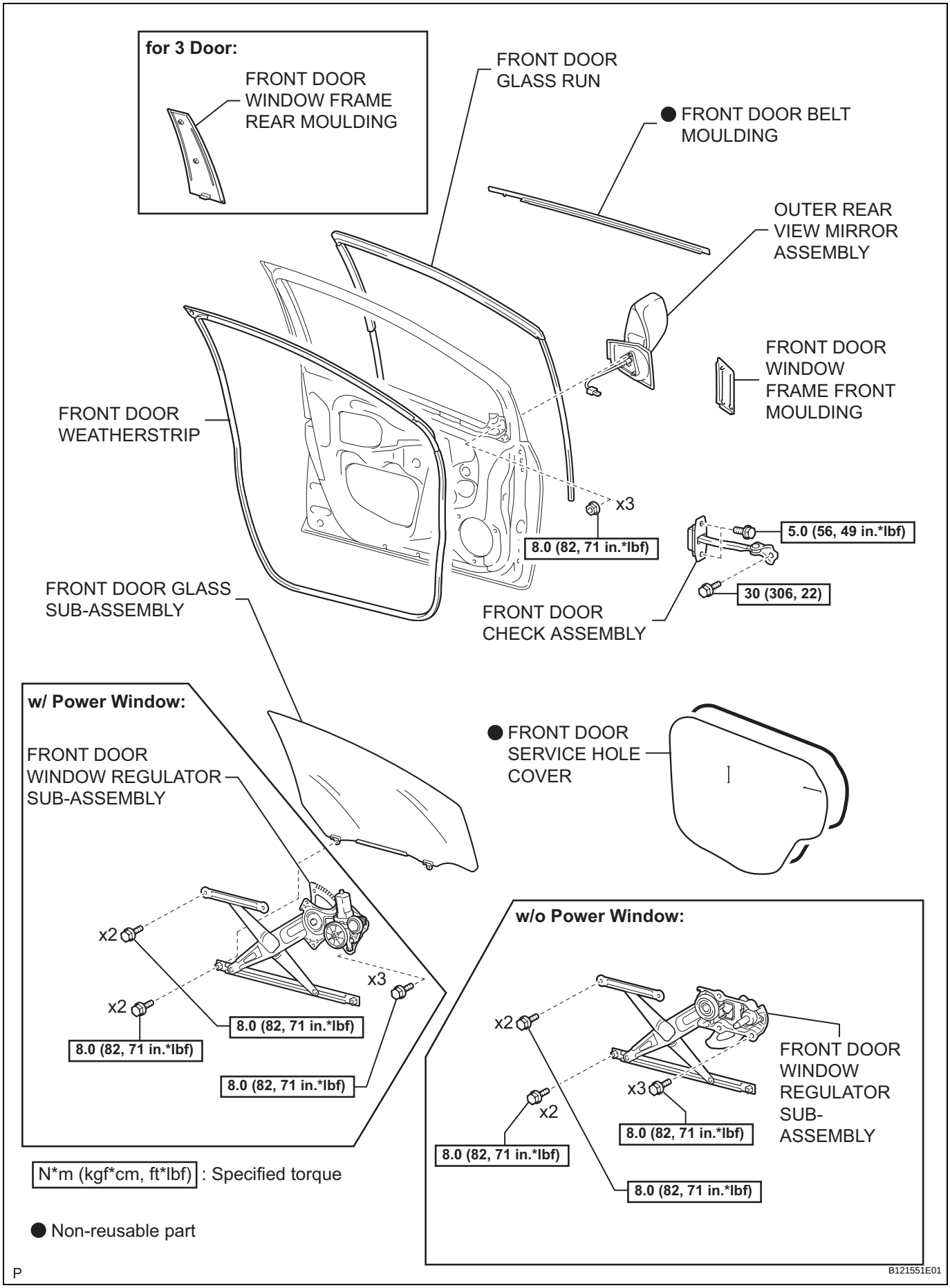
for 3 Door:
FRONT DOOR WINDOW FRAME REAR MOULDING
FRONT DOOR GLASS RUN
● FRONT DOOR BELT MOULDING
OUTER REAR VIEW MIRROR ASSEMBLY
FRONT DOOR WINDOW FRAME FRONT MOULDING
FRONT DOOR WEATHERSTRIP
x3
8.0 (82, 71 in.*lbf)
5.0 (56, 49 in.*lbf)
30 (306, 22)
FRONT DOOR CHECK ASSEMBLY
FRONT DOOR GLASS SUB-ASSEMBLY
w/ Power Window:
FRONT DOOR WINDOW REGULATOR SUB-ASSEMBLY
● FRONT DOOR SERVICE HOLE COVER
x2
x2
x3
8.0 (82, 71 in.*lbf)
8.0 (82, 71 in.*lbf)
8.0 (82, 71 in.*lbf)
w/o Power Window:
x2
x3
x2
8.0 (82, 71 in.*lbf)
8.0 (82, 71 in.*lbf)
FRONT DOOR WINDOW REGULATOR SUB-ASSEMBLY
N*m (kgf*cm, ft*lbf) : Specified torque
● Non-reusable part
P
B121551E01

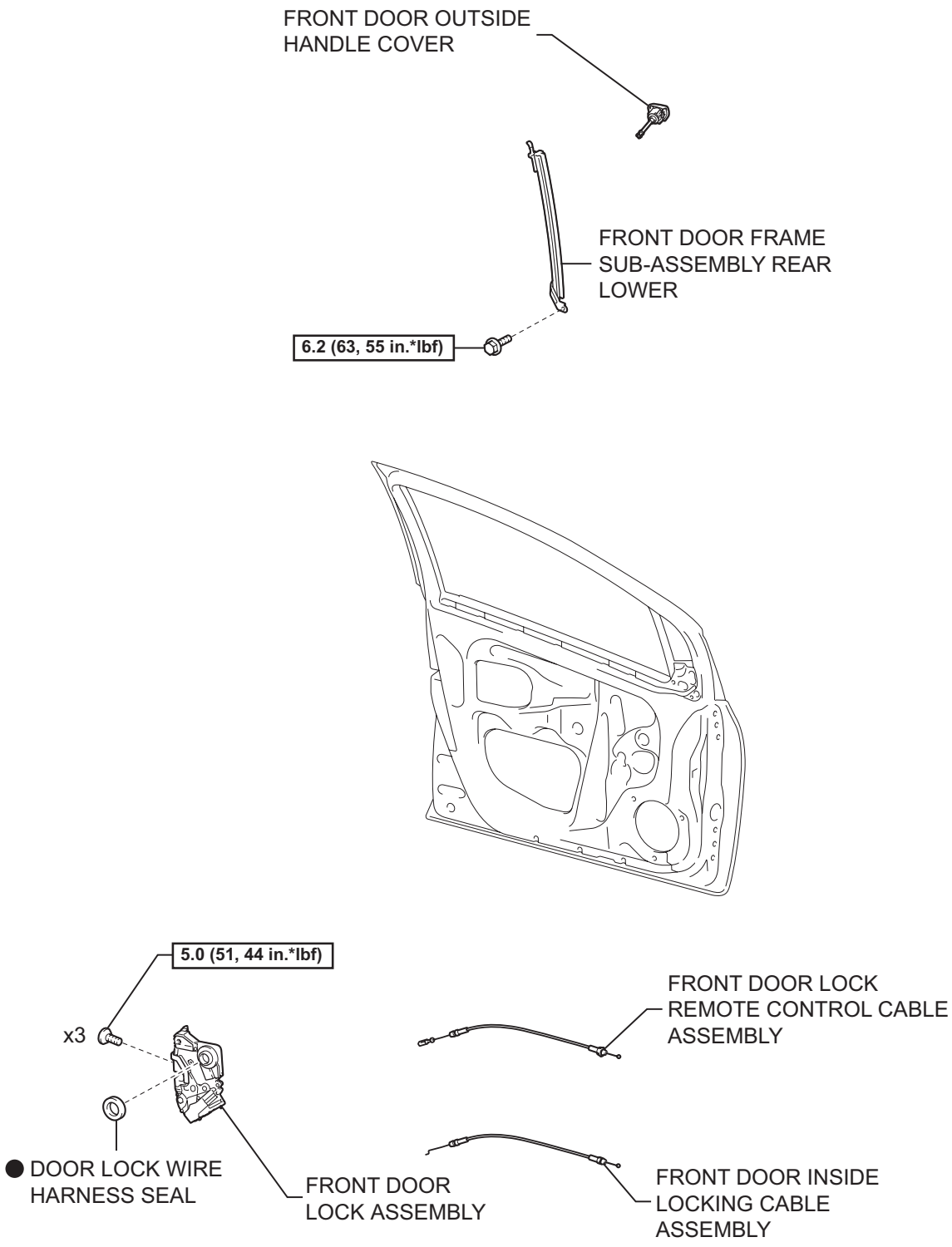

DL

N*m (kgf*cm, ft*lbf) : Specified torque

● Non-reusable part

P

B116981E01

REMOVAL

HINT:

- Use the same procedure for both the RH and LH sides.
- The procedure listed below is for the LH side.

1. **DISCONNECT CABLE FROM NEGATIVE BATTERY TERMINAL**
2. **REMOVE DOOR WINDOW REGULATOR HANDLE ASSEMBLY (w/o Power Window) (See page ED-57)**
3. **REMOVE DOOR ARMREST COVER (See page ED-33)**
4. **REMOVE FRONT ARMREST BASE PANEL UPPER (See page ED-33)**
5. **REMOVE FRONT DOOR TRIM BOARD SUB-ASSEMBLY (See page ED-34)**
6. **REMOVE FRONT DOOR WINDOW FRAME FRONT MOULDING (See page ET-114)**
7. **REMOVE FRONT DOOR WINDOW FRAME REAR MOULDING (for 3 Door) (See page ET-114)**
8. **REMOVE OUTER REAR VIEW MIRROR ASSEMBLY (See page MI-13)**
9. **REMOVE FRONT DOOR BELT MOULDING (See page ET-91)**
10. **REMOVE FRONT DOOR SERVICE HOLE COVER (See page ED-36)**
11. **REMOVE FRONT DOOR GLASS SUB-ASSEMBLY (See page ED-36)**
12. **REMOVE FRONT DOOR GLASS RUN (See page ED-37)**
13. **REMOVE FRONT DOOR WINDOW REGULATOR SUB-ASSEMBLY (w/ Power Window) (See page ED-37)**
14. **REMOVE FRONT DOOR WINDOW REGULATOR SUB-ASSEMBLY (w/o Power Window) (See page ED-60)**
15. **REMOVE FRONT DOOR CHECK ASSEMBLY (See page ED-37)**
16. **REMOVE FRONT DOOR WEATHERSTRIP (See page ED-38)**
17. **REMOVE FRONT DOOR FRAME SUB-ASSEMBLY REAR LOWER (See page ED-38)**
18. **REMOVE FRONT DOOR OUTSIDE HANDLE COVER (See page ED-39)**

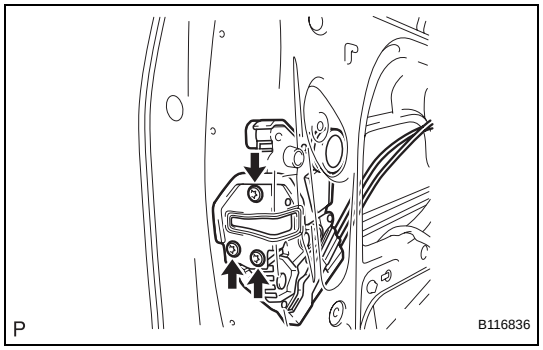

19. REMOVE FRONT DOOR LOCK ASSEMBLY

(a) Using "Torx" socket wrench T30, loosen the 3 screws.

(b) Move the front door lock downward, remove the outside handle frame link and remove the front door lock.

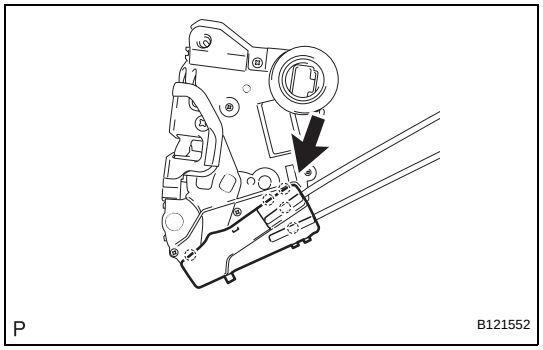

(c) Disengage the 5 claws and open the cover.

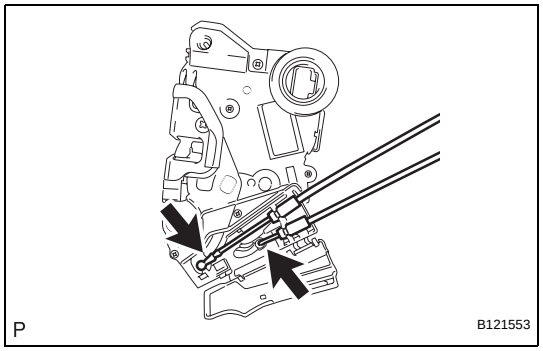

(d) Disconnect the front door lock remote control cable and the front door inside locking cable.

(e) Remove the door lock wire harness seal.

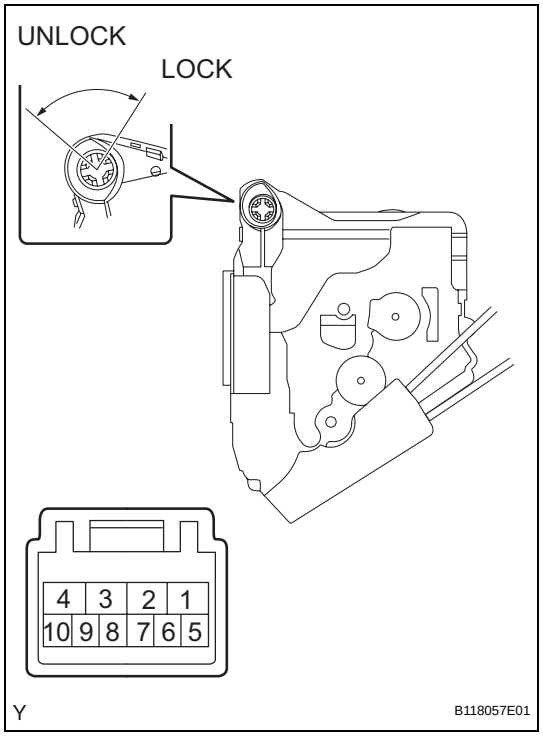

INSPECTION

1. INSPECT FRONT DOOR LOCK ASSEMBLY LH (w/ Theft Deterrent System)

(a) Check the resistance of the unlock detection switch.

(1) Using an ohmmeter, measure the resistance and check the results in accordance with the value(s) in the table below.

Standard Resistance

Tester Connection	Door Lock Condition	Specified Condition
7 - 8	Locked	10 kΩ or higher
7 - 8	Unlocked	Below 1 Ω

If the result is not as specified, replace the front door lock.

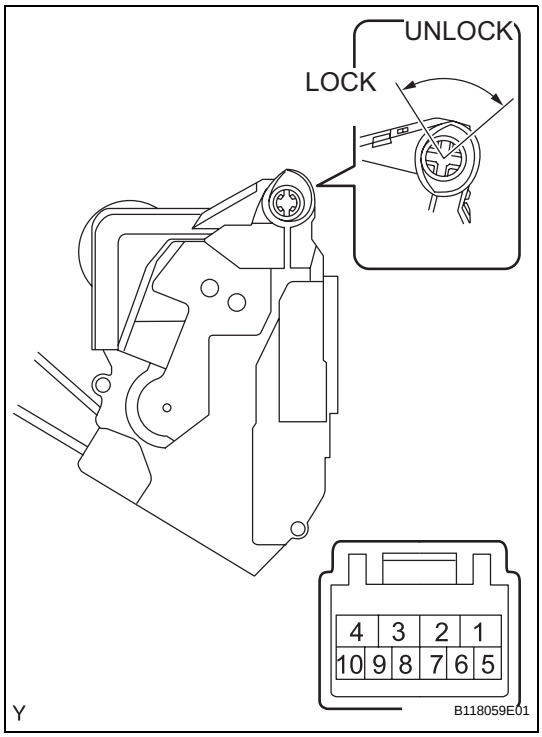

(b) Check the resistance of the door lock and unlock switch.
(1) Using an ohmmeter, measure the resistance and check the results in accordance with the value(s) in the table below.
Standard Resistance

Tester Connection	Door Lock Condition	Specified Condition
7 - 9	Locked	Below 1 Ω
7 - 9	Unlocked	10 kΩ or higher
7 - 10	Locked	10 kΩ or higher
7 - 10	Unlocked	Below 1 Ω

If the result is not as specified, replace the front door lock.

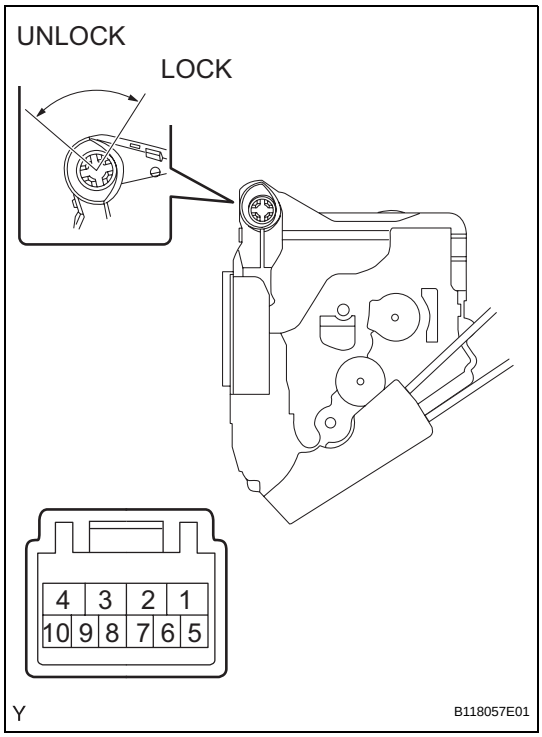

2. INSPECT FRONT DOOR LOCK ASSEMBLY LH (w/o Theft Deterrent System)
(a) Check the operation.
(1) Apply battery voltage to the front door lock and check the operation of the front door lock motor.
Standard

Measurement Condition	Specified Condition
Battery positive (+) → Terminal 4 Battery negative (-) → Terminal 2	Locks
Battery positive (+) → Terminal 2 Battery negative (-) → Terminal 4	Unlocks

If the result is not as specified, replace the front door lock.

(b) Check the resistance of the unlock detection switch.
(1) Using an ohmmeter, measure the resistance and check the results in accordance with the value(s) in the table below.
Standard Resistance

Tester Connection	Door Lock Condition	Specified Condition
7 - 8	Locked	10 kΩ or higher
7 - 8	Unlocked	Below 1 Ω

If the result is not as specified, replace the front door lock.

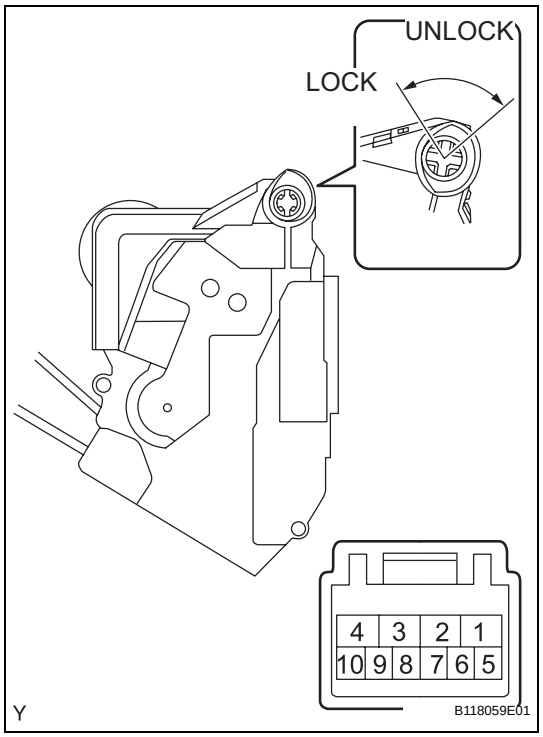

(c) Check the resistance of the door lock and unlock switch.

(1) Using an ohmmeter, measure the resistance and check the results in accordance with the value(s) in the table below.

Standard Resistance

Tester Connection	Door Lock Condition	Specified Condition
7 - 9	Locked	Below 1 Ω
7 - 9	Unlocked	10 kΩ or higher
7 - 10	Locked	10 kΩ or higher
7 - 10	Unlocked	Below 1 Ω

If the result is not as specified, replace the front door lock.

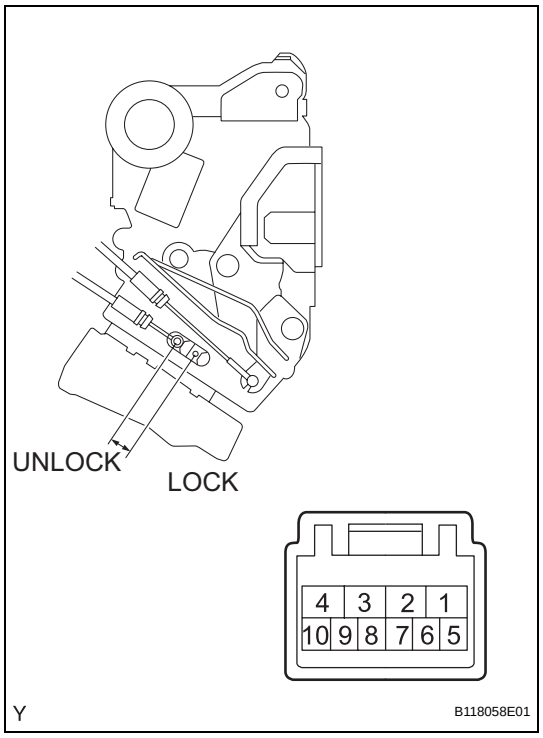

3. INSPECT FRONT DOOR LOCK ASSEMBLY RH (w/ Theft Deterrent System)

(a) Check the resistance of the unlock detection switch.

(1) Using an ohmmeter, measure the resistance and check the results in accordance with the value(s) in the table below.

Standard Resistance

Tester Connection	Door Lock Condition	Specified Condition
7 - 8	Locked	10 kΩ or higher
7 - 8	Unlocked	Below 1 Ω

If the result is not as specified, replace the front door lock.

DL

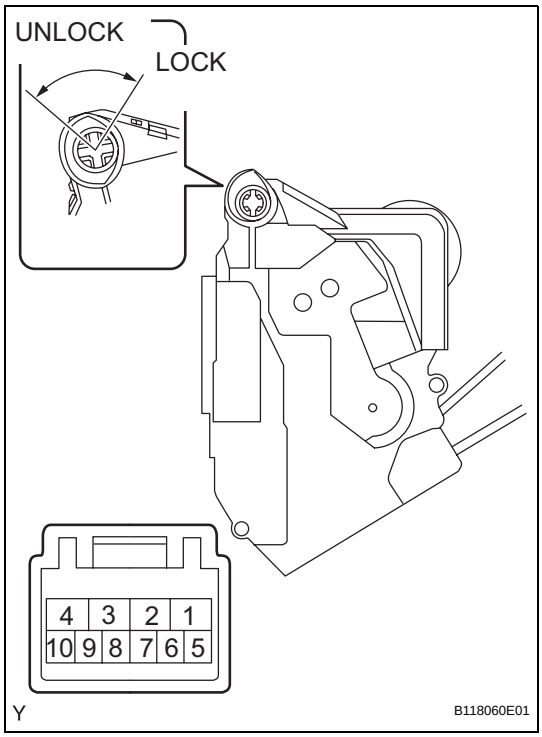

(b) Check the resistance of the door lock and unlock switch.
(1) Using an ohmmeter, measure the resistance and check the results in accordance with the value(s) in the table below.
Standard Resistance

Tester Connection	Door Lock Condition	Specified Condition
6 - 8	Locked	Below 1 Ω
6 - 8	Unlocked	10 kΩ or higher
5 - 8	Locked	10 kΩ or higher
5 - 8	Unlocked	Below 1 Ω

If the result is not as specified, replace the front door lock.

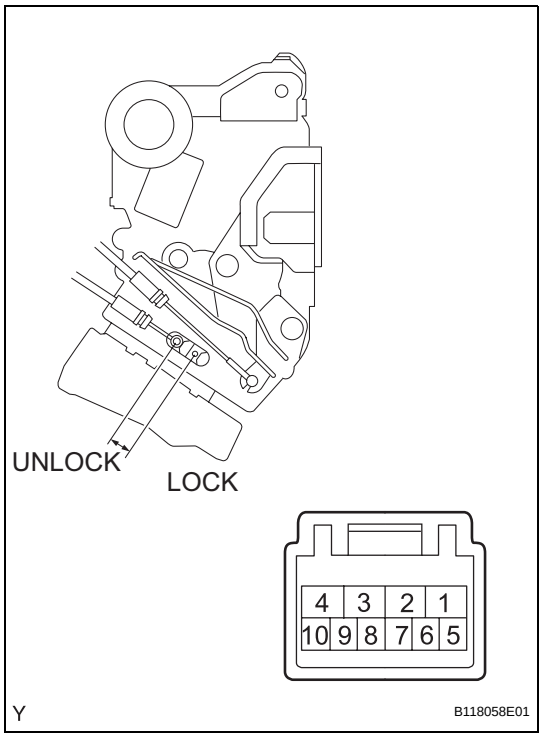

4. INSPECT FRONT DOOR LOCK ASSEMBLY RH (w/o Theft Deterrent System)
(a) Check the operation.
(1) Apply battery voltage to the front door lock and check the operation of the front door lock motor.
Standard

Measurement Condition	Specified Condition
Battery positive (+) → Terminal 3 Battery negative (-) → Terminal 1	Locks
Battery positive (+) → Terminal 1 Battery negative (-) → Terminal 3	Unlocks

If the result is not as specified, replace the front door lock.

(b) Check the resistance of the unlock detection switch.
(1) Using an ohmmeter, measure the resistance and check the results in accordance with the value(s) in the table below.
Standard Resistance

Tester Connection	Door Lock Condition	Specified Condition
6 - 7	Locked	10 kΩ or higher
6 - 7	Unlocked	Below 1 Ω

If the result is not as specified, replace the front door lock.

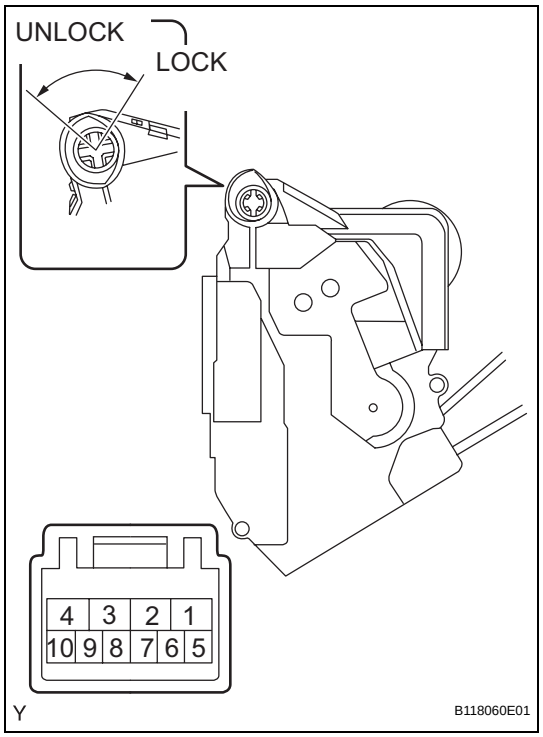

(c) Check the resistance of door lock and unlock switch.

(1) Using an ohmmeter, measure the resistance and check the results in accordance with the value(s) in the table below.

Standard Resistance

Tester Connection	Door Lock Position	Specified Condition
5 - 7	Locked	Below 1 Ω
5 - 7	Unlocked	10 kΩ or higher
4 - 7	Locked	10 kΩ or higher
4 - 7	Unlocked	Below 1 Ω

If the result is not as specified, replace the front door lock.

DL

INSTALLATION

1. INSTALL FRONT DOOR LOCK ASSEMBLY

NOTICE:

- **If reusing a door lock that has been removed, replace the packing in the connecting part with new.**
- **Make sure that no grease and dirt adheres to the packing surface in the connecting part.**

(a) Apply MP grease to the sliding and rotating areas of the front door lock.

(b) Connect the front door lock remote control cable and the front door inside locking cable.

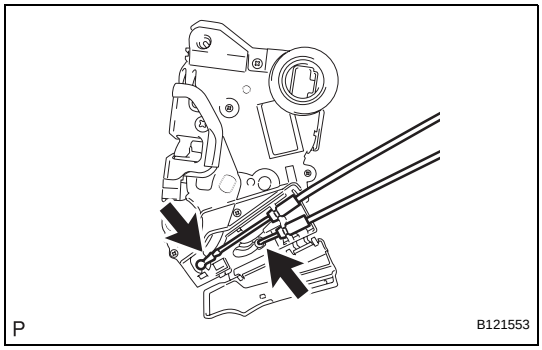

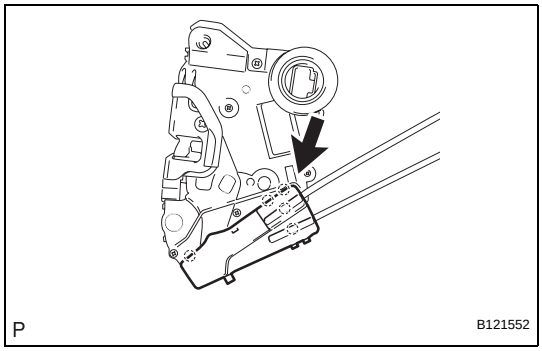

(c) Engage the 5 claws and close the cover.

(d) Insert the door lock open rod into the front door lock, then set it to the door panel.

NOTICE:

Make sure that the outside handle link is securely engaged with the door lock.

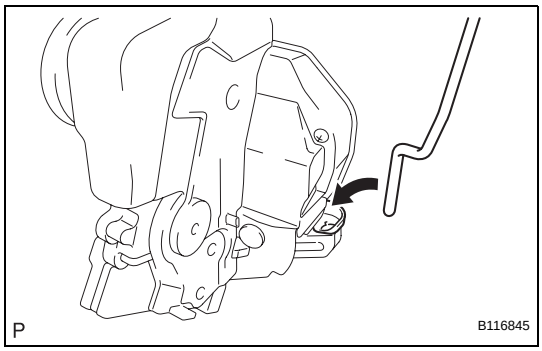

(e) Apply adhesive to the threads of the screws.

Adhesive:

Part No. 08833-00070, THREE BOND 1324 or the equivalent

(f) Using "Torx" socket wrench T30, install the front door lock with the 3 screws.

Torque: 5.0 N*m (51 kgf*cm, 44 in.*lbf)

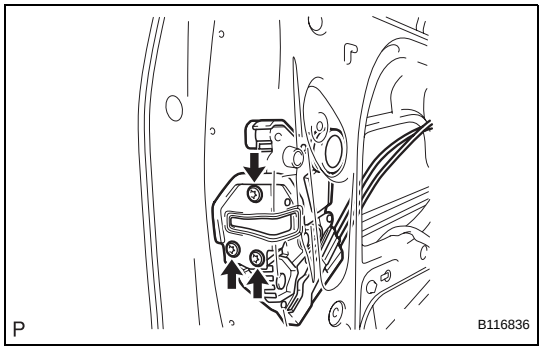

2. INSTALL FRONT DOOR OUTSIDE HANDLE COVER (See page ED-46)

3. INSTALL FRONT DOOR FRAME SUB-ASSEMBLY REAR LOWER (See page ED-47)
4. INSTALL FRONT DOOR WEATHERSTRIP (See page ED-47)
5. INSTALL FRONT DOOR CHECK ASSEMBLY (See page ED-48)
6. INSTALL FRONT DOOR WINDOW REGULATOR SUB-ASSEMBLY (w/ Power Window) (See page ED-48)
7. INSTALL FRONT DOOR WINDOW REGULATOR SUB-ASSEMBLY (w/o Power Window) (See page ED-71)
8. INSTALL FRONT DOOR GLASS RUN (See page ED-49)
9. INSTALL FRONT DOOR GLASS SUB-ASSEMBLY (See page ED-49)
10. INSTALL FRONT DOOR SERVICE HOLE COVER (See page ED-50)
11. INSTALL FRONT DOOR BELT MOULDING (See page ET-92)
12. INSTALL OUTER REAR VIEW MIRROR ASSEMBLY (See page MI-16)
13. INSTALL FRONT DOOR WINDOW FRAME REAR MOULDING (for 3 Door) (See page ET-114)
14. INSTALL FRONT DOOR WINDOW FRAME FRONT MOULDING (See page ET-115)
15. INSTALL FRONT DOOR TRIM BOARD SUB-ASSEMBLY (See page ED-51)
16. INSTALL FRONT ARMREST BASE PANEL UPPER (See page ED-53)
17. INSTALL DOOR ARMREST COVER (See page ED-53)
18. INSTALL DOOR WINDOW REGULATOR HANDLE ASSEMBLY (w/o Power Window) (See page ED-75)
19. CONNECT CABLE TO NEGATIVE BATTERY TERMINAL
    Torque: 5.4 N*m (55 kgf*cm, 48 in.*lbf)

REAR DOOR LOCK (for Sedan)

COMPONENTS

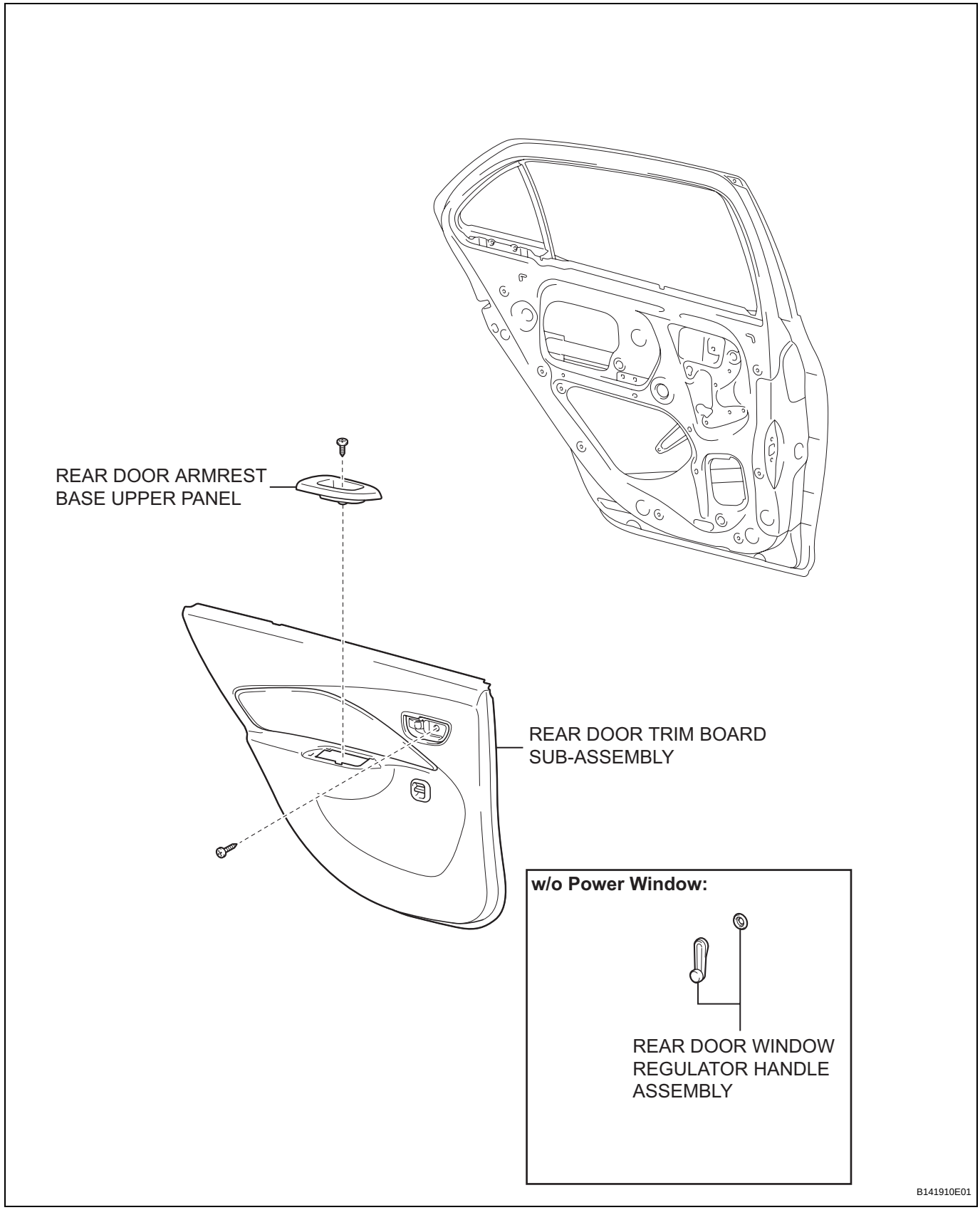

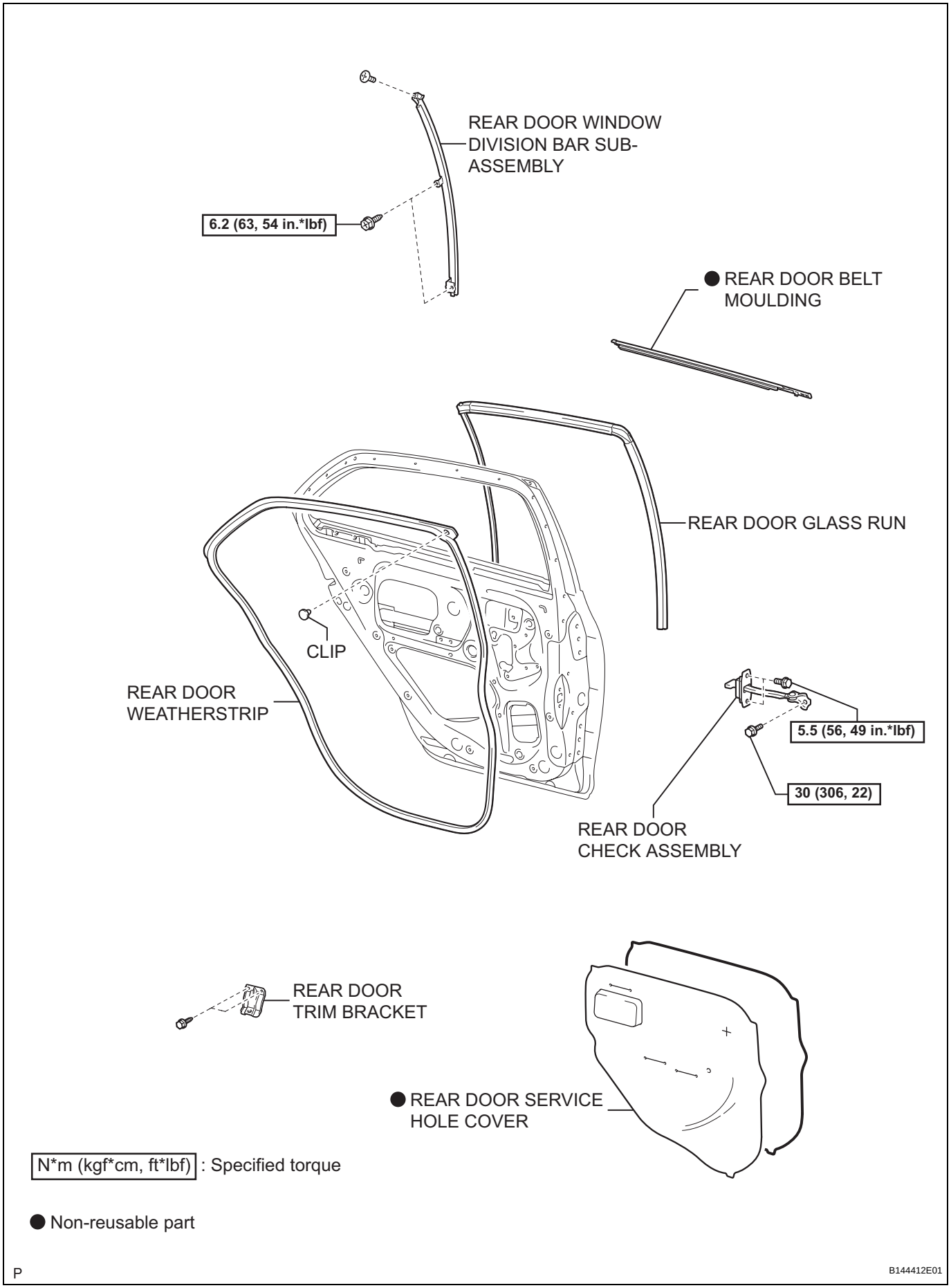
REAR DOOR WINDOW DIVISION BAR SUB-ASSEMBLY
6.2 (63, 54 in.*lbf)
● REAR DOOR BELT MOULDING
REAR DOOR GLASS RUN
CLIP
REAR DOOR WEATHERSTRIP
5.5 (56, 49 in.*lbf)
30 (306, 22)
REAR DOOR CHECK ASSEMBLY
REAR DOOR TRIM BRACKET
● REAR DOOR SERVICE HOLE COVER
N*m (kgf*cm, ft*lbf) : Specified torque
● Non-reusable part
P
B144412E01

DL

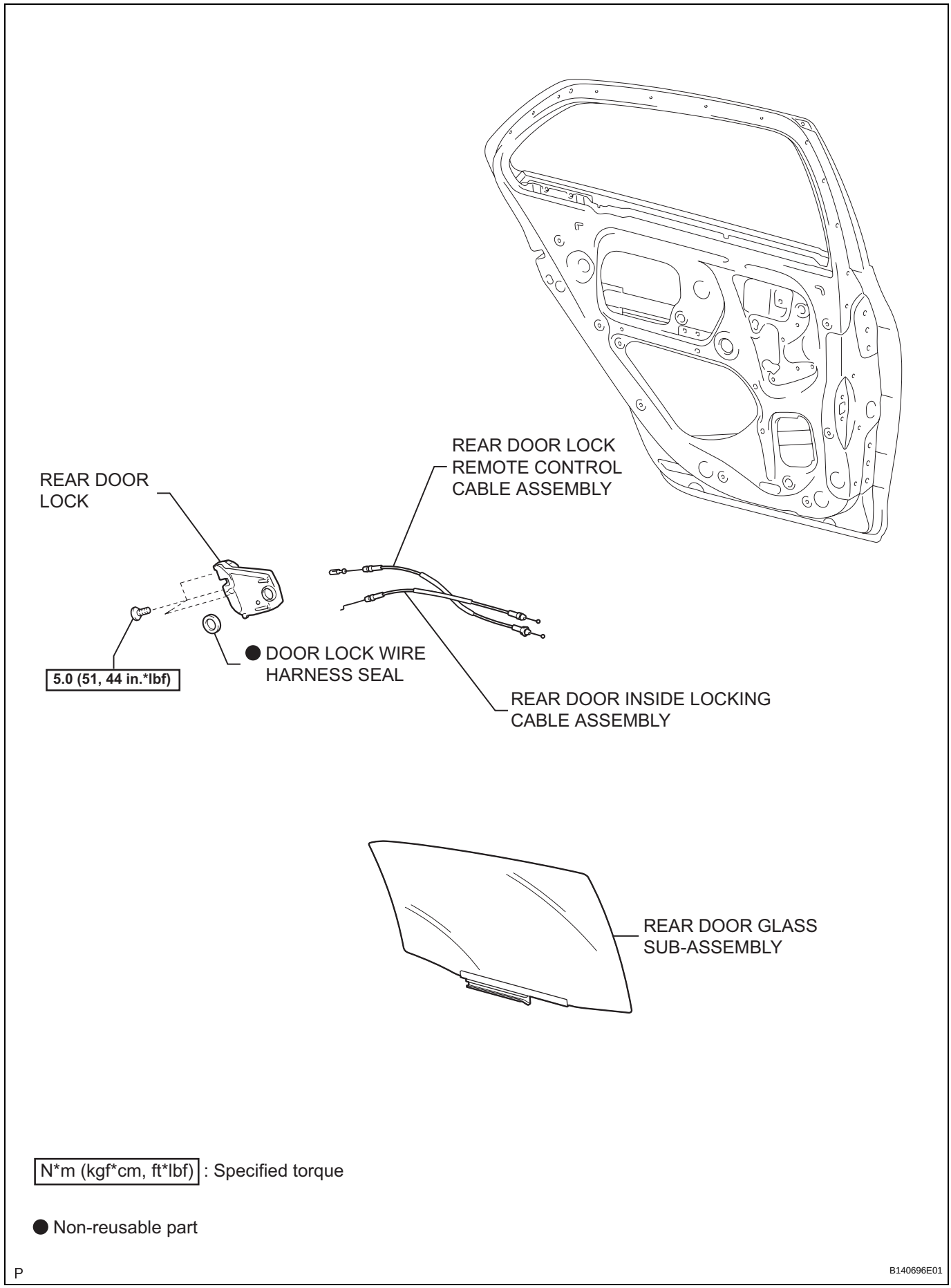
REAR DOOR LOCK REMOTE CONTROL CABLE ASSEMBLY
REAR DOOR LOCK
5.0 (51, 44 in.*lbf)
● DOOR LOCK WIRE HARNESS SEAL
REAR DOOR INSIDE LOCKING CABLE ASSEMBLY
REAR DOOR GLASS SUB-ASSEMBLY
N*m (kgf*cm, ft*lbf) : Specified torque
● Non-reusable part
P
B140696E01

REMOVAL

HINT:

- Use the same procedure for both the RH and LH sides.
- The procedure described below is for the LH side.

1. **DISCONNECT CABLE FROM NEGATIVE BATTERY TERMINAL**
2. **REMOVE REAR DOOR WINDOW REGULATOR HANDLE ASSEMBLY (w/o Power Window) (See page ED-79)**
3. **REMOVE REAR DOOR ARMREST BASE UPPER PANEL (See page ED-79)**
4. **REMOVE REAR DOOR TRIM BOARD SUB-ASSEMBLY (See page ED-79)**
5. **REMOVE REAR DOOR TRIM BRACKET (See page ED-80)**
6. **REMOVE REAR DOOR SERVICE HOLE COVER (See page ED-80)**
7. **REMOVE REAR DOOR CHECK ASSEMBLY (See page ED-81)**
8. **REMOVE REAR DOOR WEATHERSTRIP (See page ED-81)**
9. **REMOVE REAR DOOR BELT MOULDING (See page ET-95)**
10. **REMOVE REAR DOOR GLASS RUN (See page ED-81)**
11. **REMOVE REAR DOOR WINDOW DIVISION BAR SUB-ASSEMBLY (See page ED-81)**
12. **REMOVE REAR DOOR GLASS SUB-ASSEMBLY (See page ED-82)**
13. **REMOVE REAR DOOR LOCK**

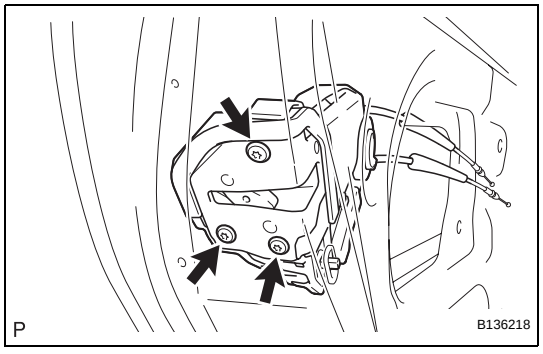

(a) Using "Torx" socket wrench T30, remove the 3 screws.

NOTICE:

Do not drop or damage the rear door lock when removing the screws.

(b) Move the rear door lock downward, remove the outside handle frame release plate and remove the rear door lock.

HINT:

Remove the rear door lock through the service hole.

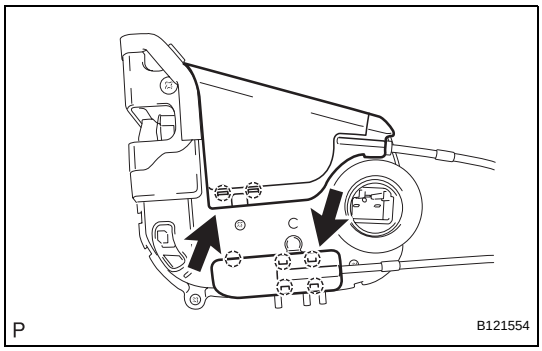

(c) Open the 2 covers.

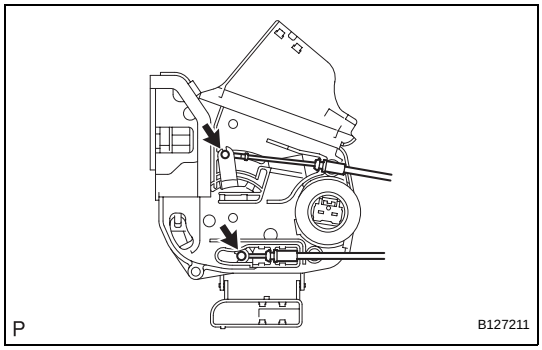

(d) Disconnect the rear door lock remote control cable and rear door inside locking cable.
(e) Remove the door lock wire harness seal.

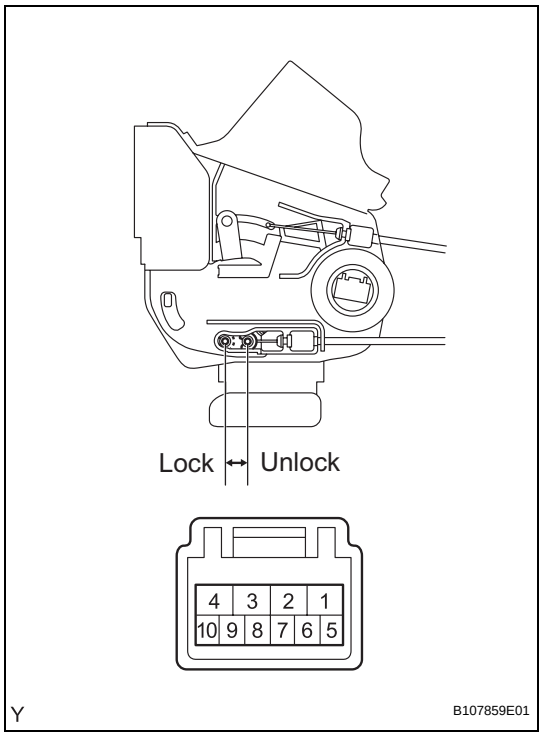

INSPECTION

1. INSPECT REAR DOOR LOCK ASSEMBLY LH

(a) w/ Power door lock:
Check the operation.
(1) Apply battery voltage to the rear door lock and check the operation of the door lock motor.
Standard

Measurement Condition	Specified Condition
Battery positive (+) → Terminal 4 Battery negative (-) → Terminal 1	Locks
Battery positive (+) → Terminal 1 Battery negative (-) → Terminal 4	Unlocks

If the result is not as specified, replace the rear door lock.

(b) Check the resistance of the unlock detection switch.
(1) Using an ohmmeter, measure the resistance and check the results in accordance with the value(s) in the table below.
Standard Resistance

Tester Connection	Door Lock Condition	Specified Condition
6 - 9	Locked	10 kΩ or higher
6 - 9	Unlocked	Below 1 Ω

If the result is not as specified, replace the rear door lock.

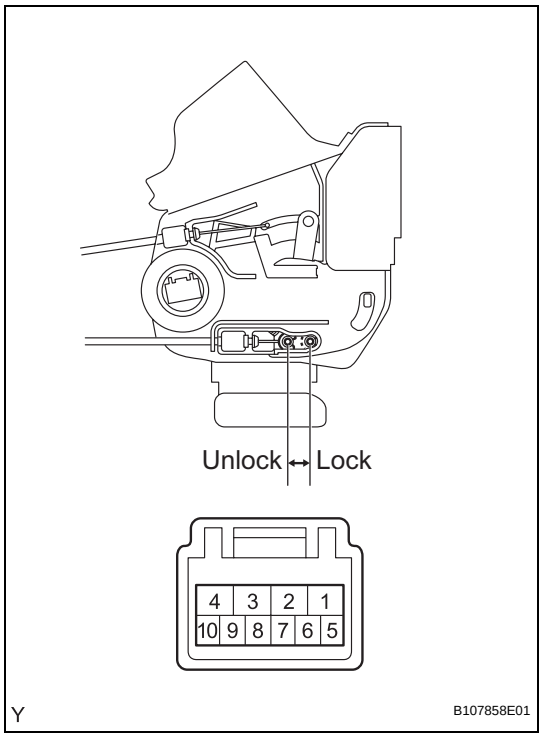

2. INSPECT REAR DOOR LOCK ASSEMBLY RH

(a) w/ Power door lock:
Check the operation.

(1) Apply battery voltage to the rear door lock and check the operation of the door lock motor.
Standard

Measurement Condition	Specified Condition
Battery positive (+) → Terminal 4 Battery negative (-) → Terminal 1	Locks
Battery positive (+) → Terminal 1 Battery negative (-) → Terminal 4	Unlocks

If the result is not as specified, replace the rear door lock.

(b) Check the resistance of the unlock detection switch.

(1) Using an ohmmeter, measure the resistance and check the results in accordance with the value(s) in the table below.
Standard Resistance

Tester Connection	Door Lock Condition	Specified Condition
6 - 9	Locked	10 kΩ or higher
6 - 9	Unlocked	Below 1 Ω

If the result is not as specified, replace the rear door lock.

DL

INSTALLATION

1. **INSTALL REAR DOOR LOCK**
   NOTICE:
   - **If reusing a door lock that has been removed, replace the packing in the connecting part with new.**
   - **Make sure that no grease or dirt adheres to the packing surface in the connecting part.**

   (a) Apply MP grease to the sliding and rotating areas of the front door lock.

   (b) Connect the rear door lock remote control cable and rear door inside locking cable.

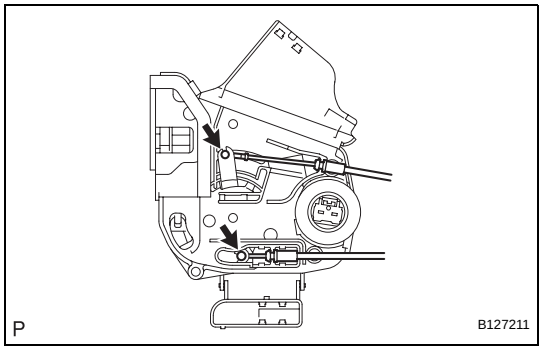

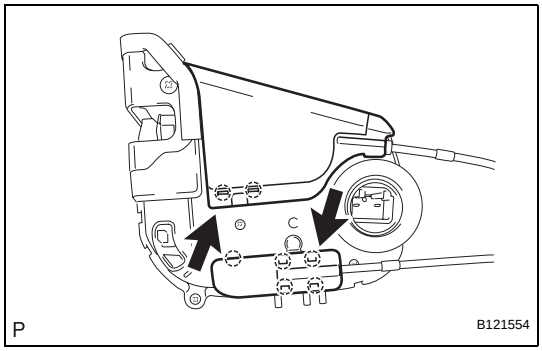

   (c) Close the 2 covers.
   (d) Insert the door lock into the outside handle frame release plate, then set it onto the door panel.
   (e) Make sure that the outside handle frame link is securely engaged with the door lock.
   (f) Apply adhesive to the threads of the screws.
   Adhesive:
   Toyota Genuine Adhesive 1324, Three Bond 1324 or the equivalent.

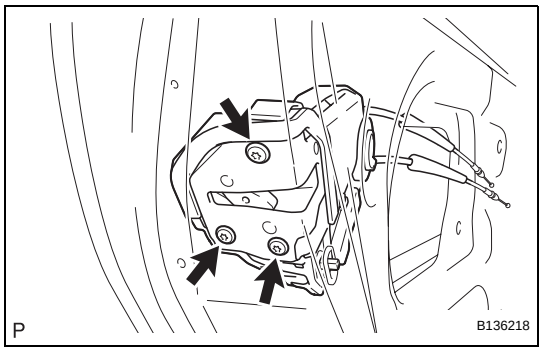

   (g) Using "Torx" socket wrench T30, install the rear door lock with the 3 screws.
   Torque: 5.0 N*m (51 kgf*cm, 44 in.*lbf)

2. **INSTALL REAR DOOR GLASS SUB-ASSEMBLY (See page ED-90)**
3. **INSTALL REAR DOOR WINDOW DIVISION BAR SUB-ASSEMBLY (See page ED-91)**
4. **INSTALL REAR DOOR GLASS RUN (See page ED-91)**
5. **INSTALL REAR DOOR BELT MOULDING (See page ET-95)**
6. **INSTALL REAR DOOR WEATHERSTRIP (See page ED-92)**
7. **INSTALL REAR DOOR CHECK ASSEMBLY (See page ED-92)**
8. **INSTALL REAR DOOR SERVICE HOLE COVER (See page ED-92)**
9. **INSTALL REAR DOOR TRIM BRACKET (See page ED-93)**

10. **INSTALL REAR DOOR TRIM BOARD SUB-ASSEMBLY (See page ED-93)**
11. **INSTALL REAR DOOR ARMREST BASE UPPER PANEL (See page ED-94)**
12. **INSTALL REAR DOOR WINDOW REGULATOR HANDLE ASSEMBLY (w/o Power Window) (See page ED-94)**
13. **CONNECT CABLE TO NEGATIVE BATTERY TERMINAL**
    Torque: 5.4 N*m (55 kgf*cm, 48 in.*lbf)

REAR DOOR LOCK (for Hatchback)

COMPONENTS

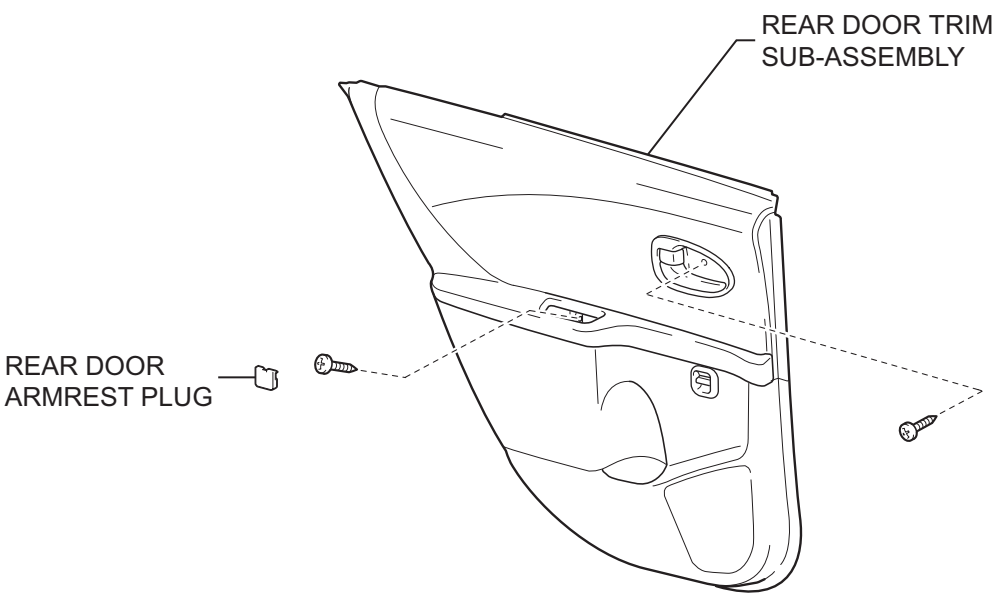

w/o Power Window:

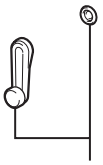

DOOR WINDOW REGULATOR
HANDLE ASSEMBLY

P

B116982E01

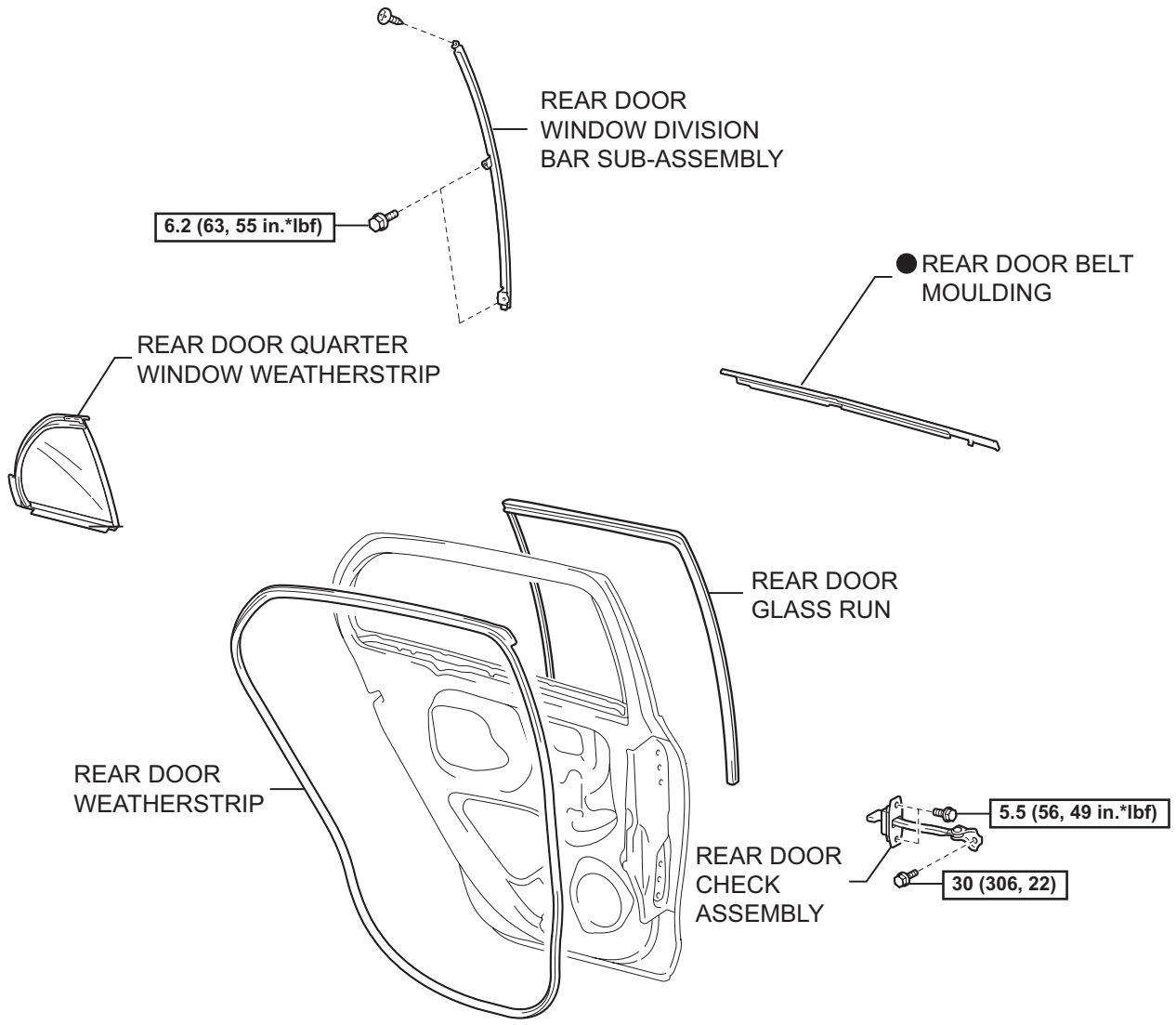

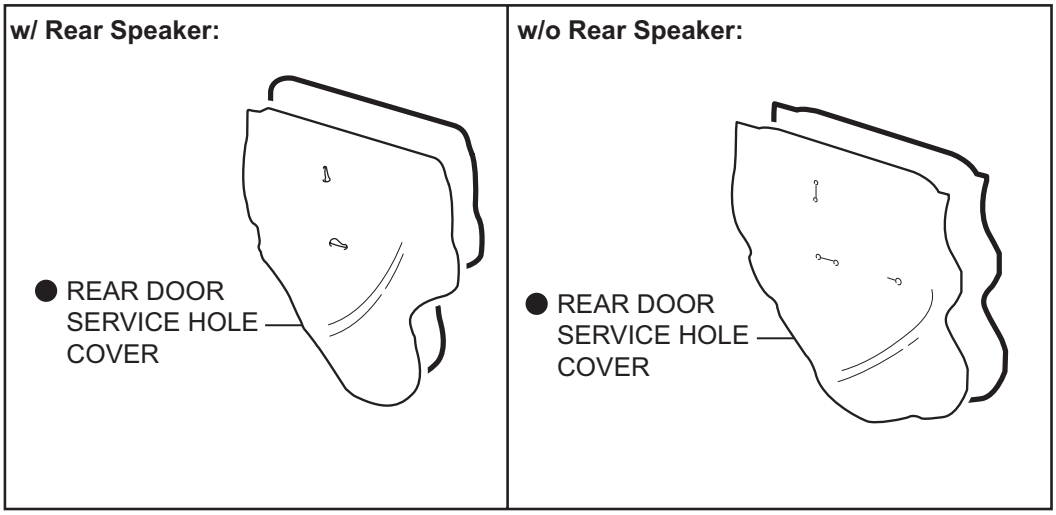

N*m (kgf*cm, ft*lbf) : Specified torque

● Non-reusable part

P

B116983E01

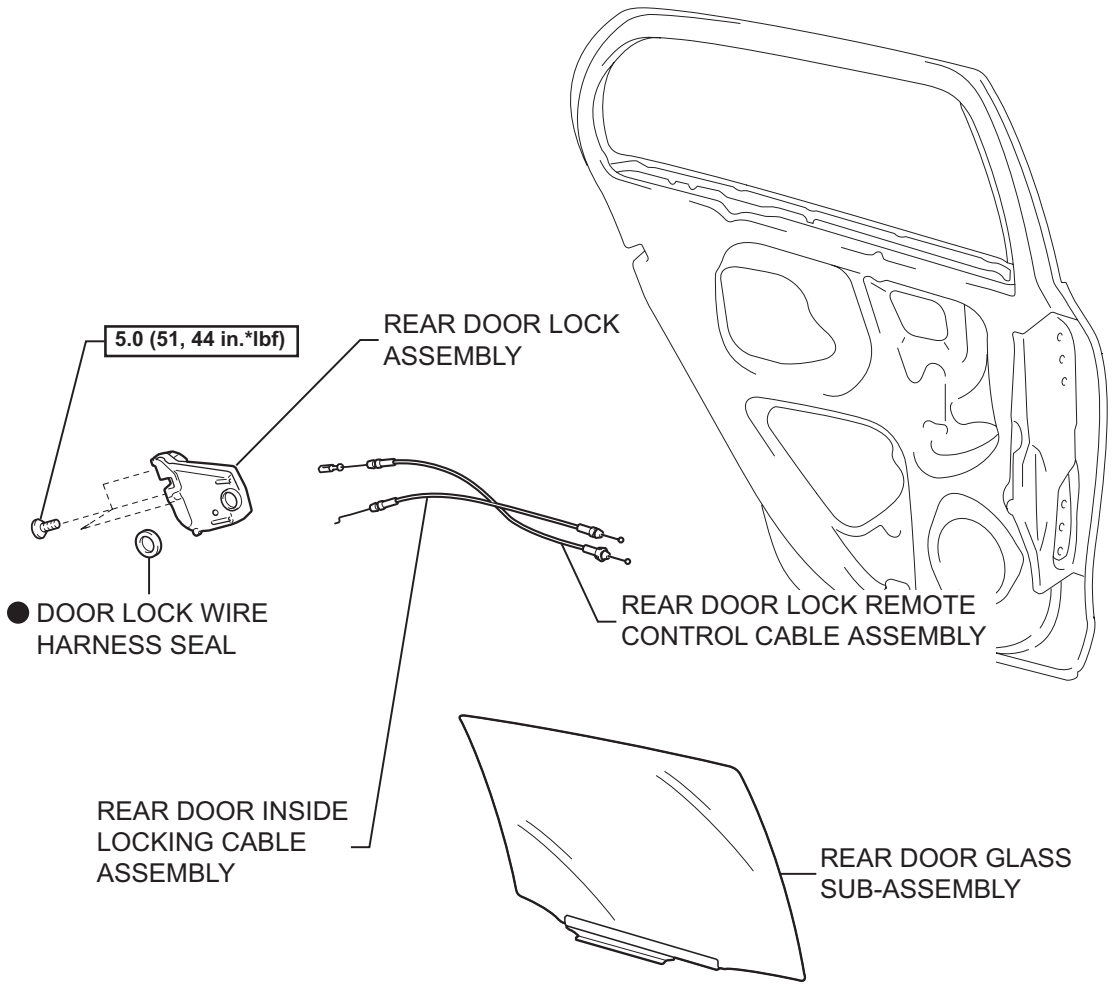

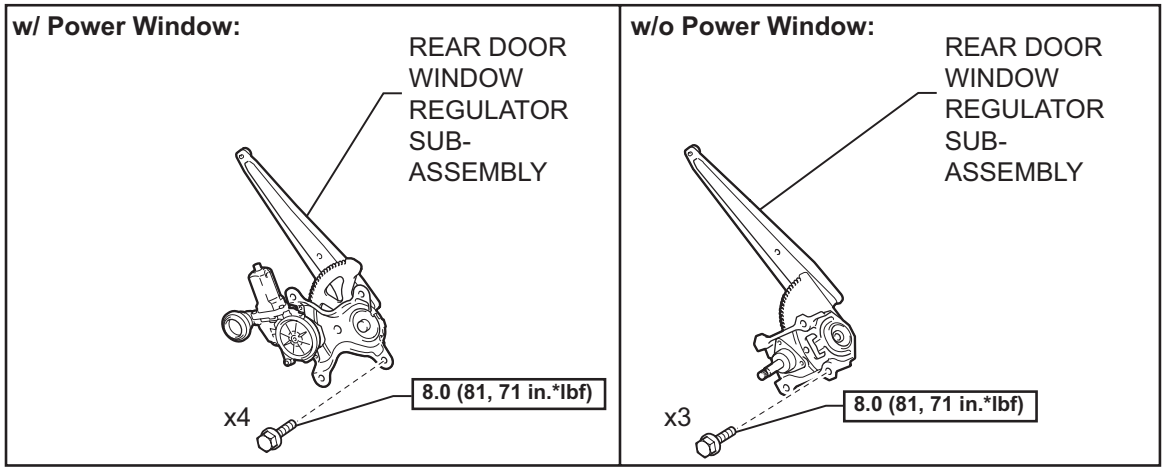

N*m (kgf*cm, ft*lbf) : Specified torque

● Non-reusable part

P

B118030E01

DL

REMOVAL

HINT:

- Use the same procedure for both the RH and LH sides.
- The procedure listed below is for the LH side.

1. **DISCONNECT CABLE FROM NEGATIVE BATTERY TERMINAL**
2. **REMOVE DOOR WINDOW REGULATOR HANDLE ASSEMBLY (w/o Power Window) (See page ED-115)**
3. **REMOVE REAR DOOR TRIM BOARD SUB-ASSEMBLY (See page ED-98)**
4. **REMOVE REAR DOOR SERVICE HOLE COVER (See page ED-99)**
5. **REMOVE REAR DOOR CHECK ASSEMBLY (See page ED-99)**
6. **REMOVE REAR DOOR WEATHERSTRIP (See page ED-100)**
7. **REMOVE REAR DOOR BELT MOULDING (See page ET-97)**
8. **REMOVE REAR DOOR GLASS RUN (See page ED-100)**
9. **REMOVE REAR DOOR WINDOW DIVISION BAR SUB-ASSEMBLY (See page ED-100)**
10. **REMOVE REAR DOOR QUARTER WINDOW WEATHERSTRIP (See page ED-100)**
11. **REMOVE REAR DOOR GLASS SUB-ASSEMBLY (See page ED-101)**
12. **REMOVE REAR DOOR WINDOW REGULATOR SUB-ASSEMBLY (w/ Power Window) (See page ED-101)**
13. **REMOVE REAR DOOR WINDOW REGULATOR SUB-ASSEMBLY (w/o Power Window) (See page ED-118)**
14. **REMOVE REAR DOOR LOCK ASSEMBLY**
    (a) Using "Torx" socket wrench T30, remove the 3 screws.
    (b) Move the rear door lock downward, remove the outside handle frame release plate and remove the rear door lock.

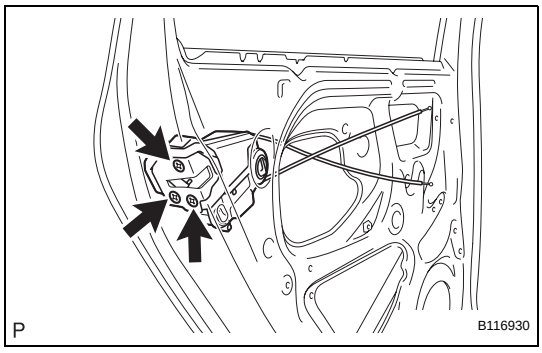

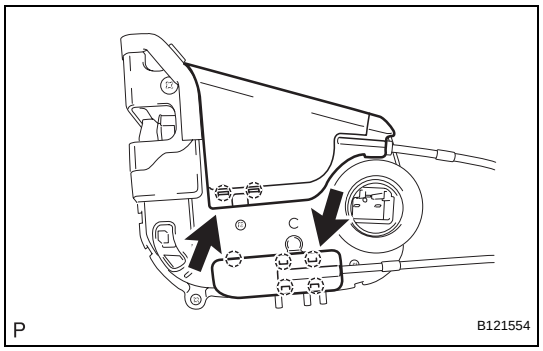

(c) Disengage the 7 claws and open the 2 covers.

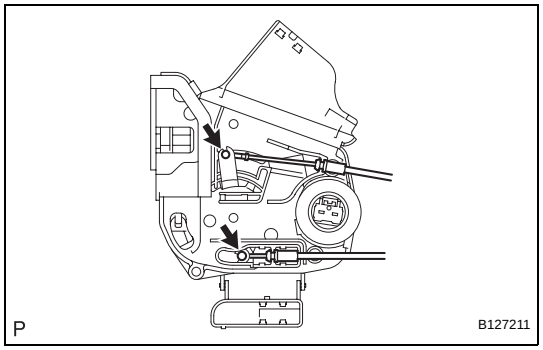

(d) Disconnect the rear door lock remote control cable and the rear door inside locking cable.
(e) Remove the door lock wire harness seal.

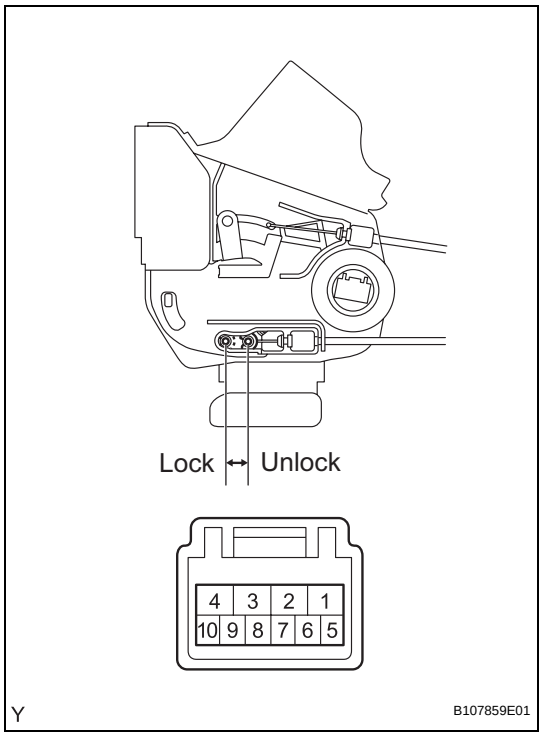

INSPECTION

1. INSPECT REAR DOOR LOCK ASSEMBLY LH

(a) Check the operation.
(1) Apply battery voltage to the rear door lock and check the operation of the door lock motor.
Standard

Measurement Condition	Specified Condition
Battery positive (+) → Terminal 4 Battery negative (-) → Terminal 1	Locks
Battery positive (+) → Terminal 1 Battery negative (-) → Terminal 4	Unlocks

If the result is not as specified, replace the rear door lock.

DL

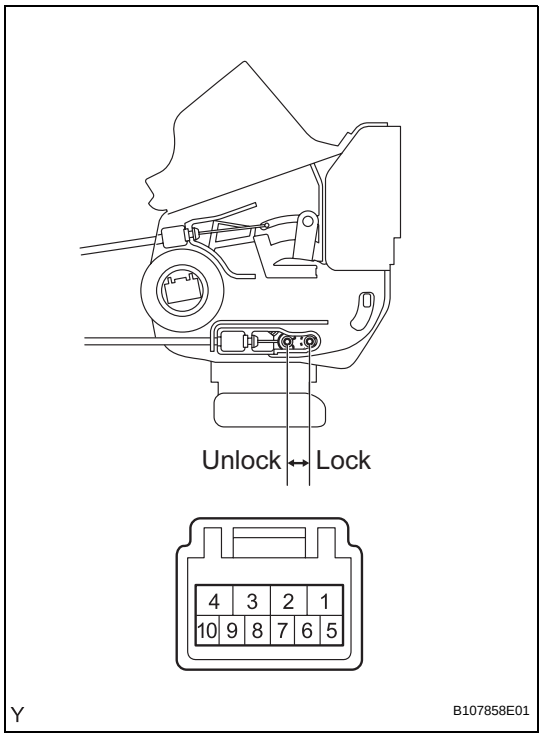

2. INSPECT REAR DOOR LOCK ASSEMBLY RH

(a) Check the operation.

(1) Apply battery voltage to the rear door lock and check the operation of the door lock motor.

Standard

Measurement Condition	Specified Condition
Battery positive (+) → Terminal 4 Battery negative (-) → Terminal 1	**Locks**
Battery positive (+) → Terminal 1 Battery negative (-) → Terminal 4	**Unlocks**

If the result is not as specified, replace the rear door lock.

INSTALLATION

1. **INSTALL REAR DOOR LOCK ASSEMBLY**
   NOTICE:
   - **If reusing a door lock that has been removed, replace the packing in the connecting part with new.**
   - **Make sure that no grease and dirt adheres to the packing surface in the connecting part.**

   (a) Apply MP grease to the sliding and rotating areas of the front door lock.

   (b) Connect the rear door lock remote control cable and the rear door inside locking cable.

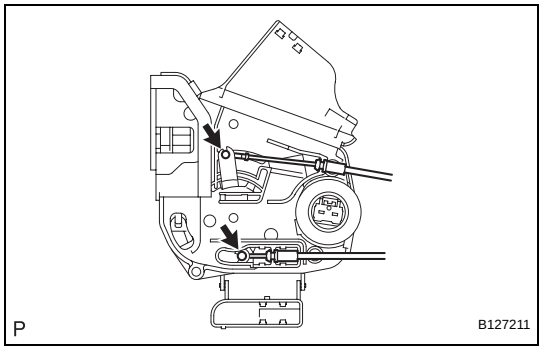

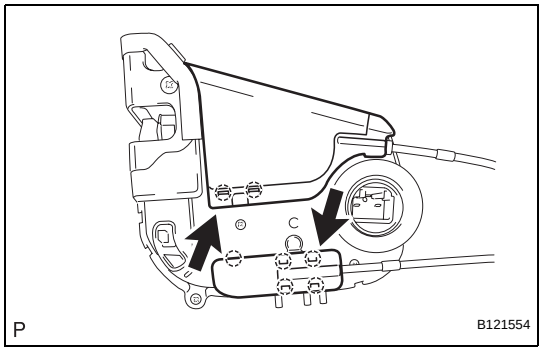

   (c) Engage the 7 claws and close the 2 covers.
   (d) Insert the door lock into the outside handle frame release plate, then set it onto the door panel.
   (e) Make sure that the outside handle frame link is securely engaged with the door lock.
   (f) Apply adhesive to the threads of the screws.
   Adhesive:
   Part No. 08833-00070, THREE BOND 1324 or the equivalent

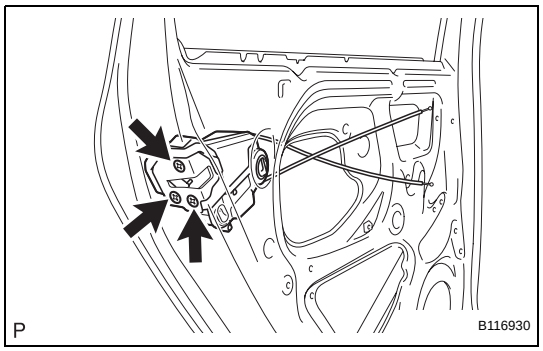

   (g) Using "Torx" socket wrench T30, install the rear door lock with the 3 screws.
   Torque: 5.0 N*m (51 kgf*cm, 44 in.*lbf)

2. **INSTALL REAR DOOR WINDOW REGULATOR SUB-ASSEMBLY (w/ Power Window) (See page ED-108)**
3. **INSTALL REAR DOOR WINDOW REGULATOR SUB-ASSEMBLY (w/o Power Window) (See page ED-124)**
4. **INSTALL REAR DOOR GLASS SUB-ASSEMBLY (See page ED-108)**
5. **INSTALL REAR DOOR QUARTER WINDOW WEATHERSTRIP (See page ED-108)**
6. **INSTALL REAR DOOR WINDOW DIVISION BAR SUB-ASSEMBLY (See page ED-108)**
7. **INSTALL REAR DOOR GLASS RUN (See page ED-109)**
8. **INSTALL REAR DOOR BELT MOULDING (See page ET-97)**

DL

9. **INSTALL REAR DOOR WEATHERSTRIP (See page ED-109)**
10. **INSTALL REAR DOOR CHECK ASSEMBLY (See page ED-109)**
11. **INSTALL REAR DOOR SERVICE HOLE COVER (See page ED-110)**
12. **INSTALL REAR DOOR TRIM BOARD SUB-ASSEMBLY (See page ED-111)**
13. **INSTALL DOOR WINDOW REGULATOR HANDLE ASSEMBLY (w/o Power Window) (See page ED-128)**
14. **CONNECT CABLE TO NEGATIVE BATTERY TERMINAL**
    Torque: 5.4 N*m (55 kgf*cm, 48 in.*lbf)

BACK DOOR LOCK (for Hatchback)

COMPONENTS

w/ Theft Deterrent System:

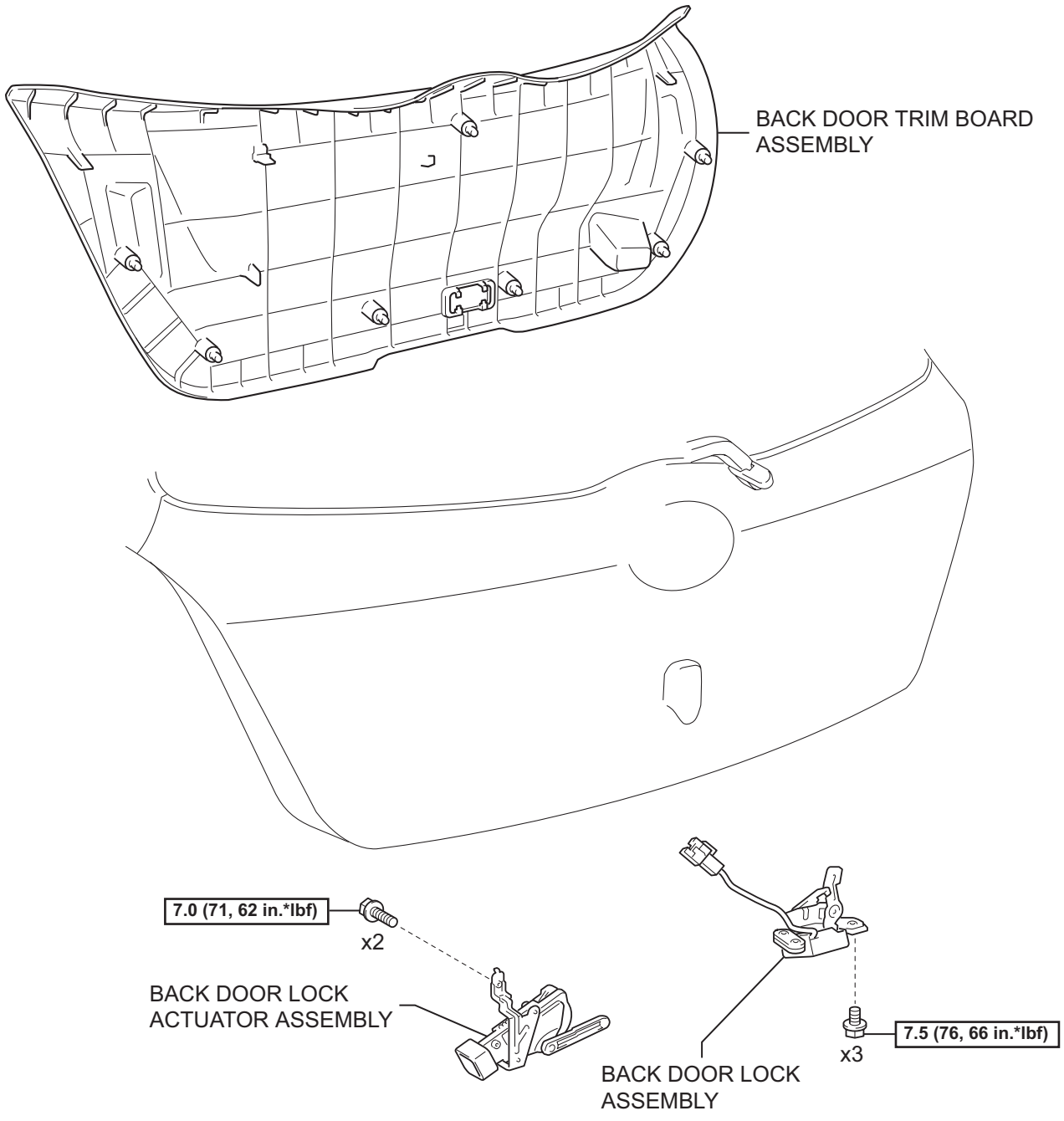

N*m (kgf*cm, ft*lbf) : Specified torque

Y

B121526E01

w/o Theft Deterrent System:

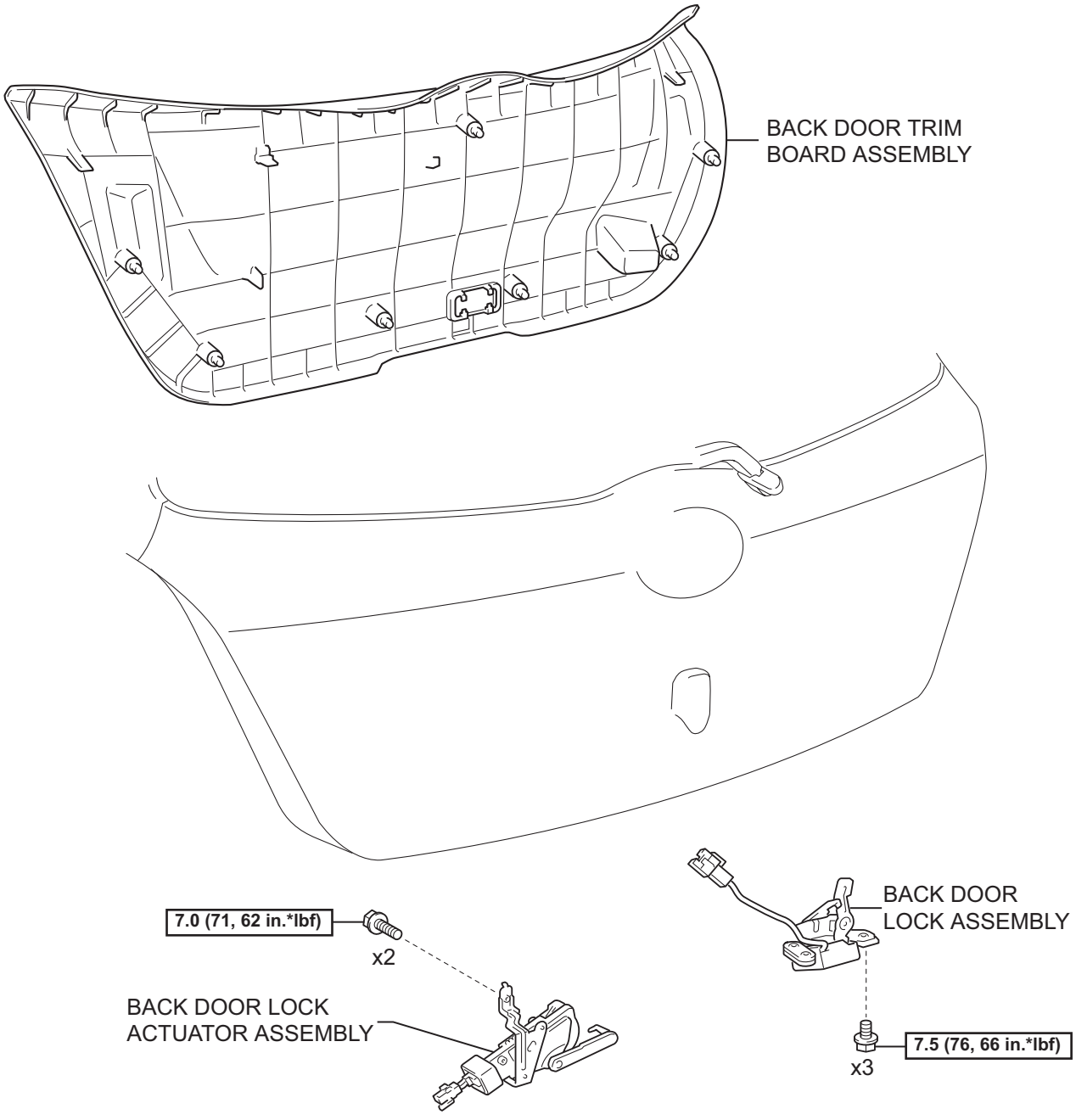

N*m (kgf*cm, ft*lbf) : Specified torque

Y

B118039E02

DL

REMOVAL

1. **DISCONNECT CABLE FROM NEGATIVE BATTERY TERMINAL**
2. **REMOVE BACK DOOR TRIM BOARD ASSEMBLY (See page ED-142)**
3. **REMOVE BACK DOOR LOCK ASSEMBLY**
   (a) Disconnect the connector and the clamp.
   (b) Remove the 3 bolts and the back door lock.

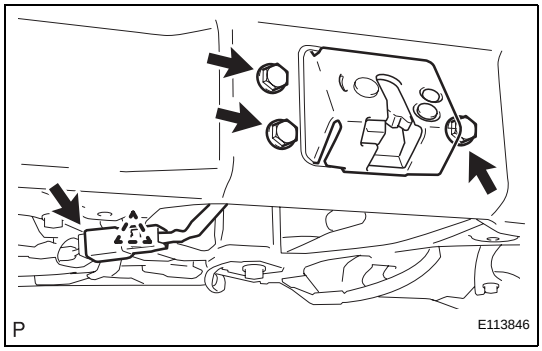

4. **REMOVE BACK DOOR LOCK ACTUATOR ASSEMBLY**
   (a) Disconnect the connector.
   (b) Remove the 2 bolts and the back door lock actuator.

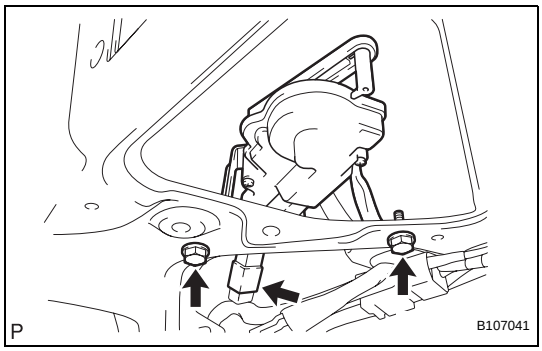

INSPECTION

1. **INSPECT BACK DOOR LOCK ACTUATOR ASSEMBLY (w/ Theft Deterrent System)**
   (a) Check the resistance of the unlock detection switch.
      (1) Using an ohmmeter, measure the resistance and check the results in accordance with the value(s) in the tables below.
      Standard Resistance

Tester Connection	Door Lock Condition	Specified Condition
1 - 2	Unlocked	Below 1 Ω
1 - 2	Locked	10 kΩ or higher

If the result is not as specified, replace the back door lock actuator.

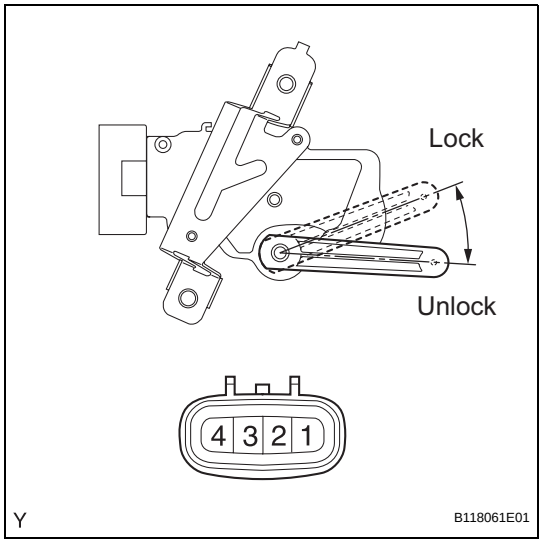

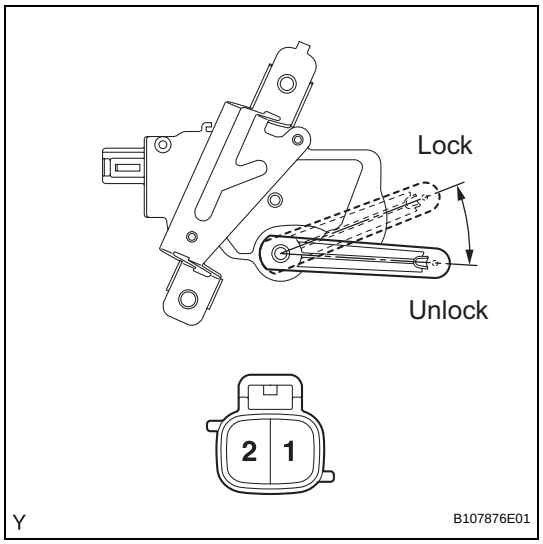

2. INSPECT BACK DOOR LOCK ACTUATOR ASSEMBLY (w/o Theft Deterrent System)

(a) Check the operation.

(1) Apply battery voltage to the back door lock actuator and check the operation of the back door lock motor.

Standard

Measurement Condition	Specified Condition
Battery positive (+) → Terminal 2 Battery negative (-) → Terminal 1	Unlocks
Battery positive (+) → Terminal 1 Battery negative (-) → Terminal 2	Locks

If the result is not as specified, replace the back door lock actuator.

INSTALLATION

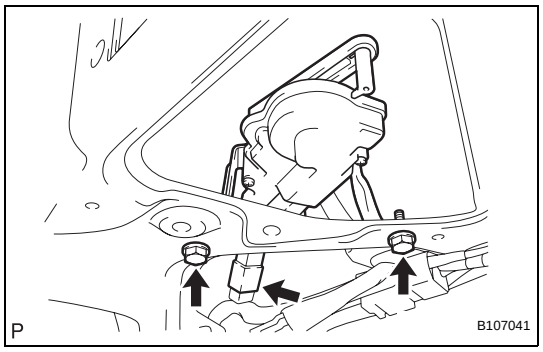

1. INSTALL BACK DOOR LOCK ACTUATOR ASSEMBLY

(a) Install the back door lock actuator with the 2 bolts.
Torque: 7.0 N*m (71 kgf*cm, 62 in.*lbf)

(b) Connect the connector.

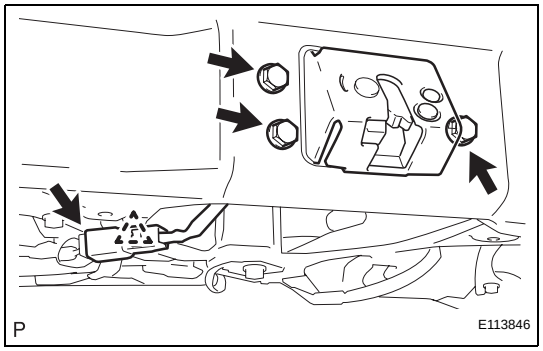

2. INSTALL BACK DOOR LOCK ASSEMBLY

(a) Install the back door lock with the 3 bolts.
Torque: 7.5 N*m (76 kgf*cm, 66 in.*lbf)

(b) Connect the connector and clamp.

3. INSTALL BACK DOOR TRIM BOARD ASSEMBLY (See page ED-146)

4. CONNECT CABLE TO NEGATIVE BATTERY TERMINAL
Torque: 5.4 N*m (55 kgf*cm, 48 in.*lbf)

DL

METER / GAUGE SYSTEM (for Sedan)

PARTS LOCATION

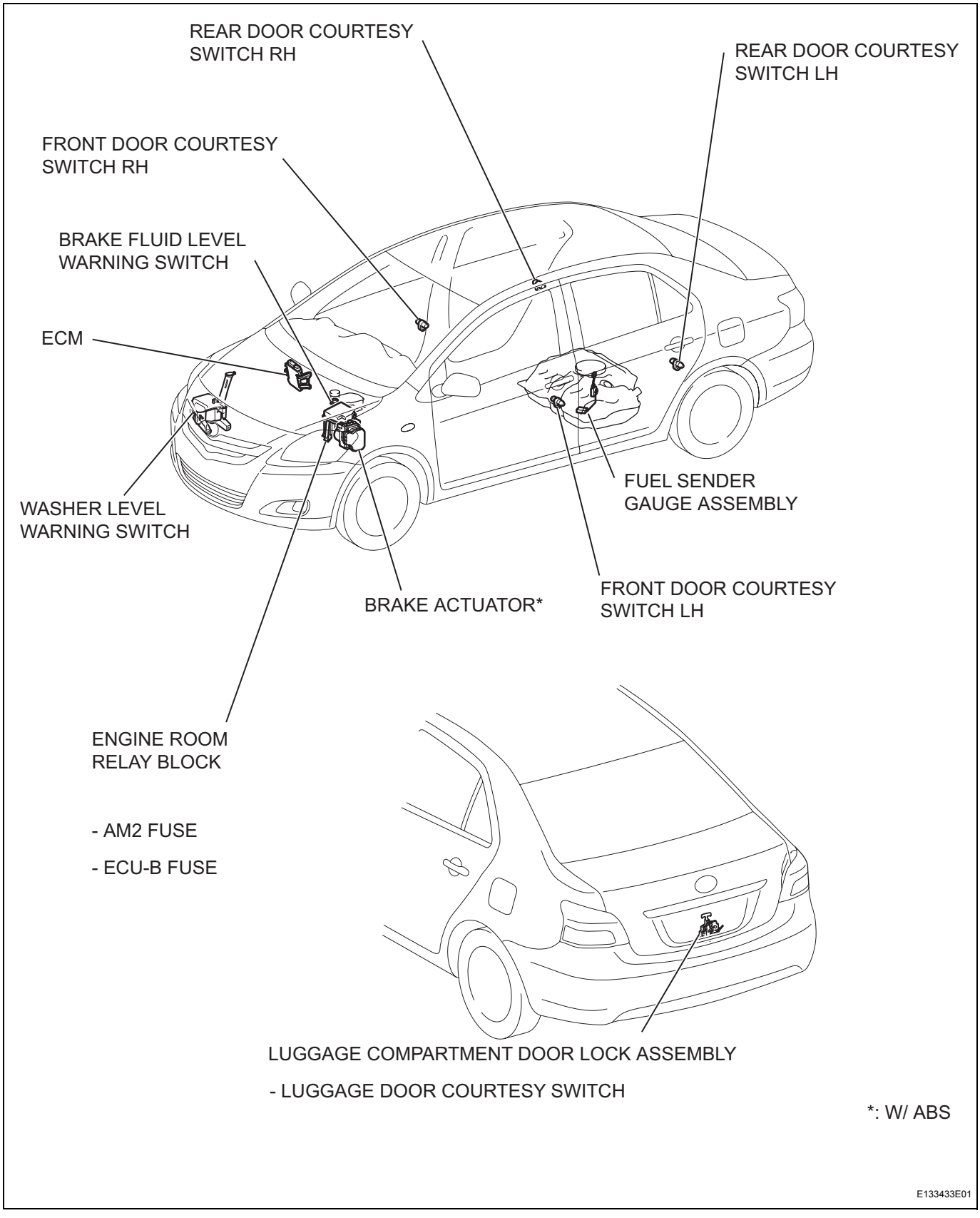

ME

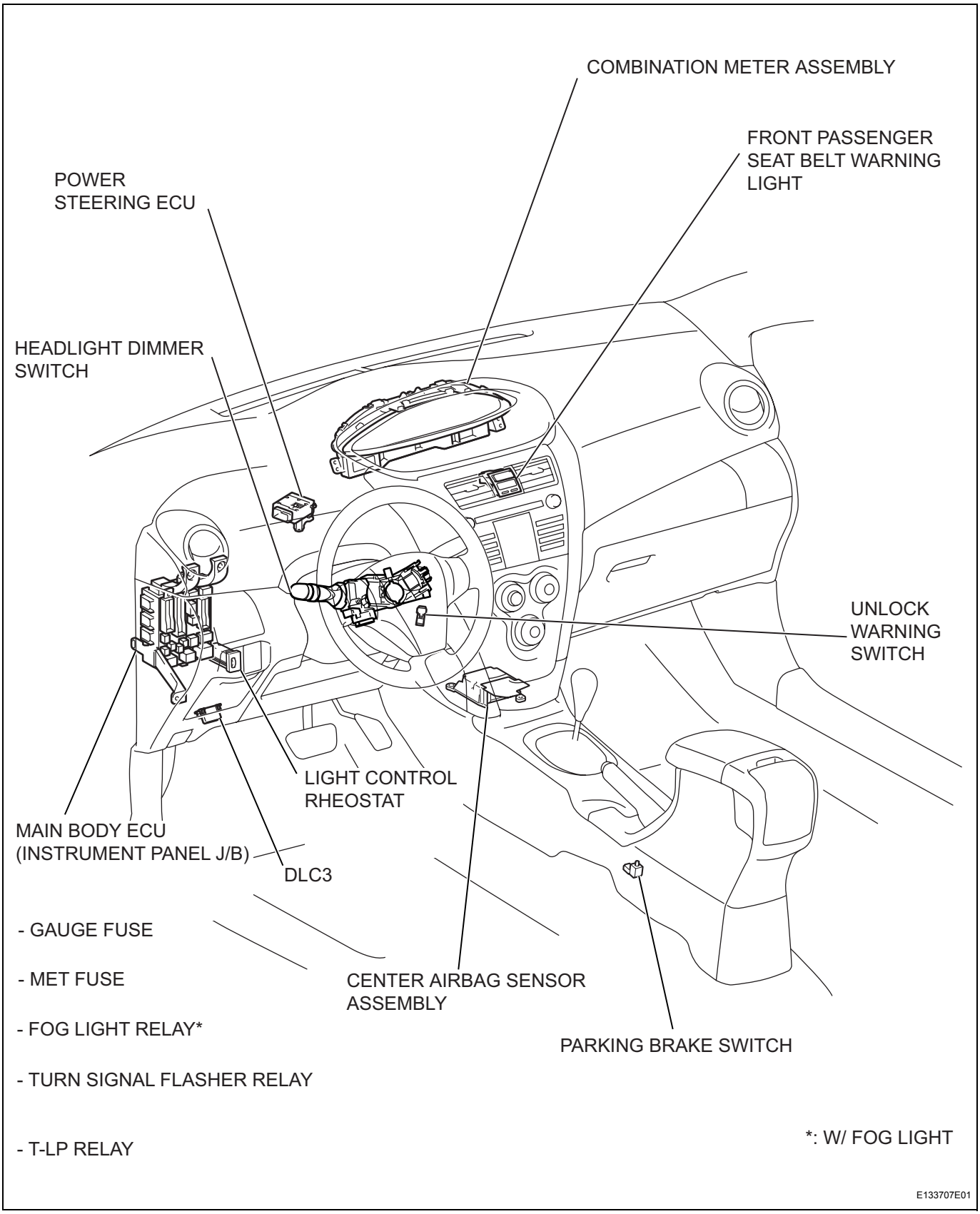
COMBINATION METER ASSEMBLY
FRONT PASSENGER SEAT BELT WARNING LIGHT
POWER STEERING ECU
HEADLIGHT DIMMER SWITCH
UNLOCK WARNING SWITCH
LIGHT CONTROL RHEOSTAT
MAIN BODY ECU (INSTRUMENT PANEL J/B)
DLC3
- GAUGE FUSE
- MET FUSE
- FOG LIGHT RELAY*
- TURN SIGNAL FLASHER RELAY
- T-LP RELAY
CENTER AIRBAG SENSOR ASSEMBLY
PARKING BRAKE SWITCH
*: W/ FOG LIGHT
E133707E01

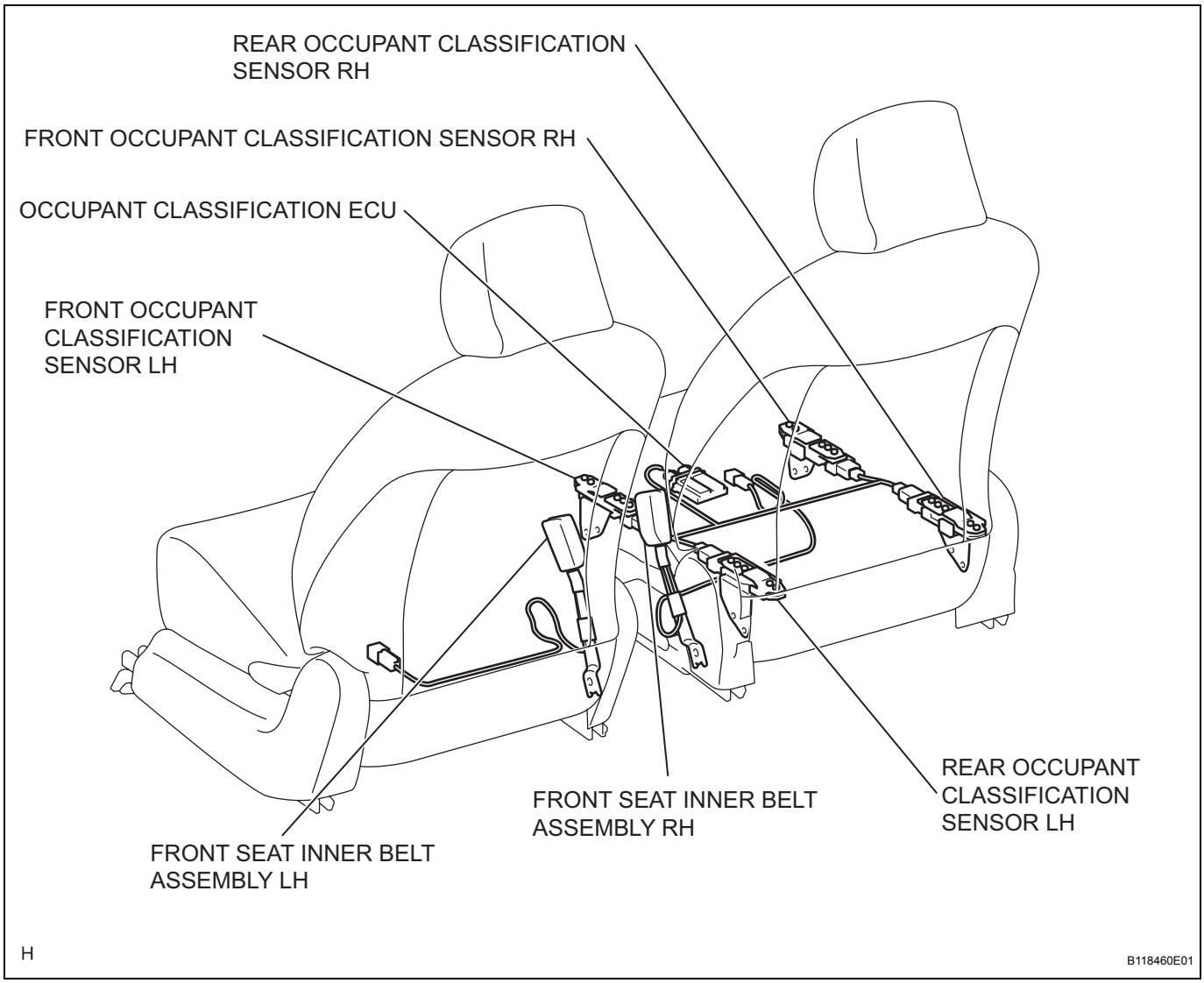
REAR OCCUPANT CLASSIFICATION SENSOR RH
FRONT OCCUPANT CLASSIFICATION SENSOR RH
OCCUPANT CLASSIFICATION ECU
FRONT OCCUPANT CLASSIFICATION SENSOR LH
FRONT SEAT INNER BELT ASSEMBLY LH
FRONT SEAT INNER BELT ASSEMBLY RH
REAR OCCUPANT CLASSIFICATION SENSOR LH
H
B118460E01

ME

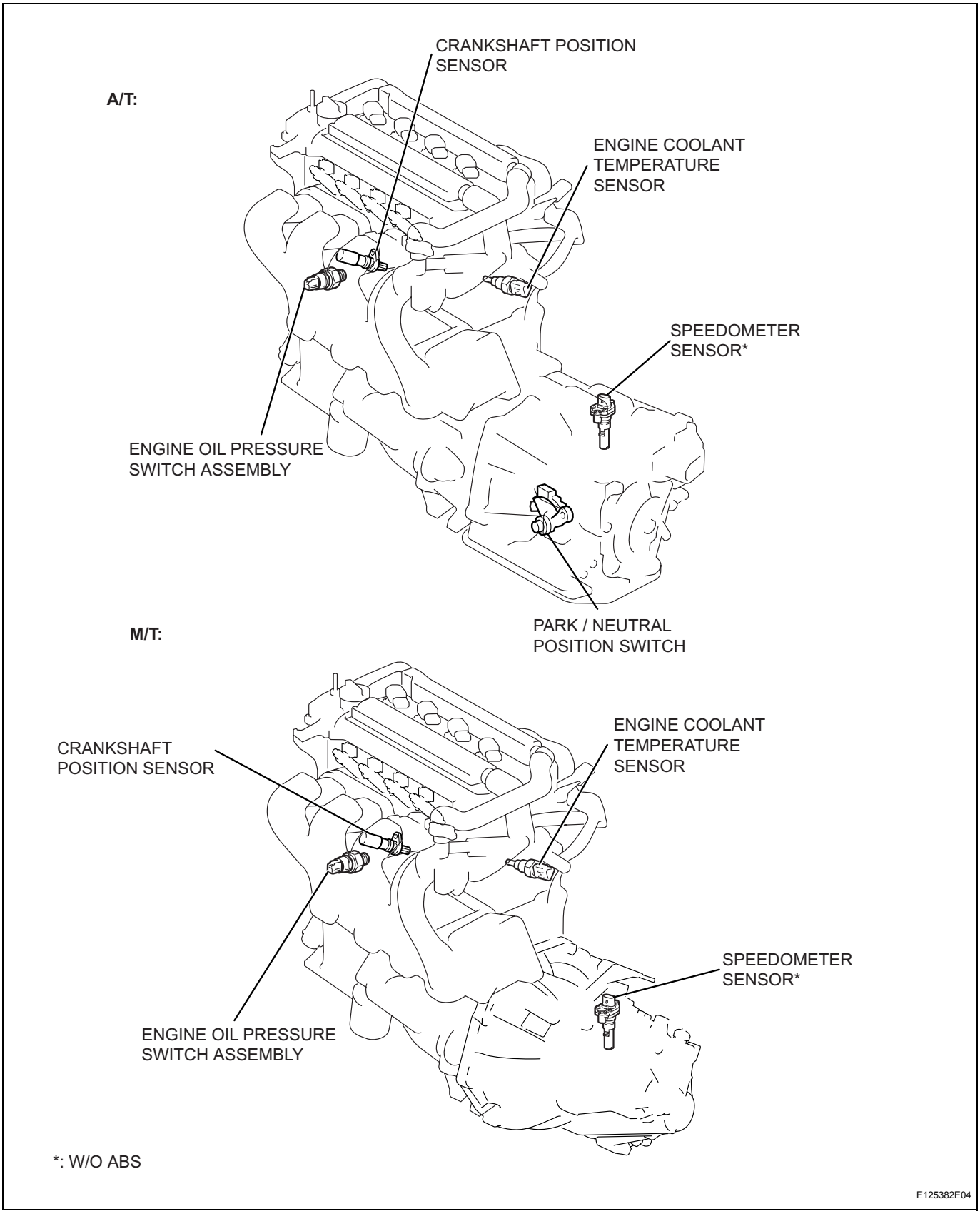
A/T:
CRANKSHAFT POSITION SENSOR
ENGINE COOLANT TEMPERATURE SENSOR
SPEEDOMETER SENSOR*
ENGINE OIL PRESSURE SWITCH ASSEMBLY
PARK / NEUTRAL POSITION SWITCH
M/T:
CRANKSHAFT POSITION SENSOR
ENGINE COOLANT TEMPERATURE SENSOR
SPEEDOMETER SENSOR*
ENGINE OIL PRESSURE SWITCH ASSEMBLY
*: W/O ABS
E125382E04

ME

SYSTEM DIAGRAM

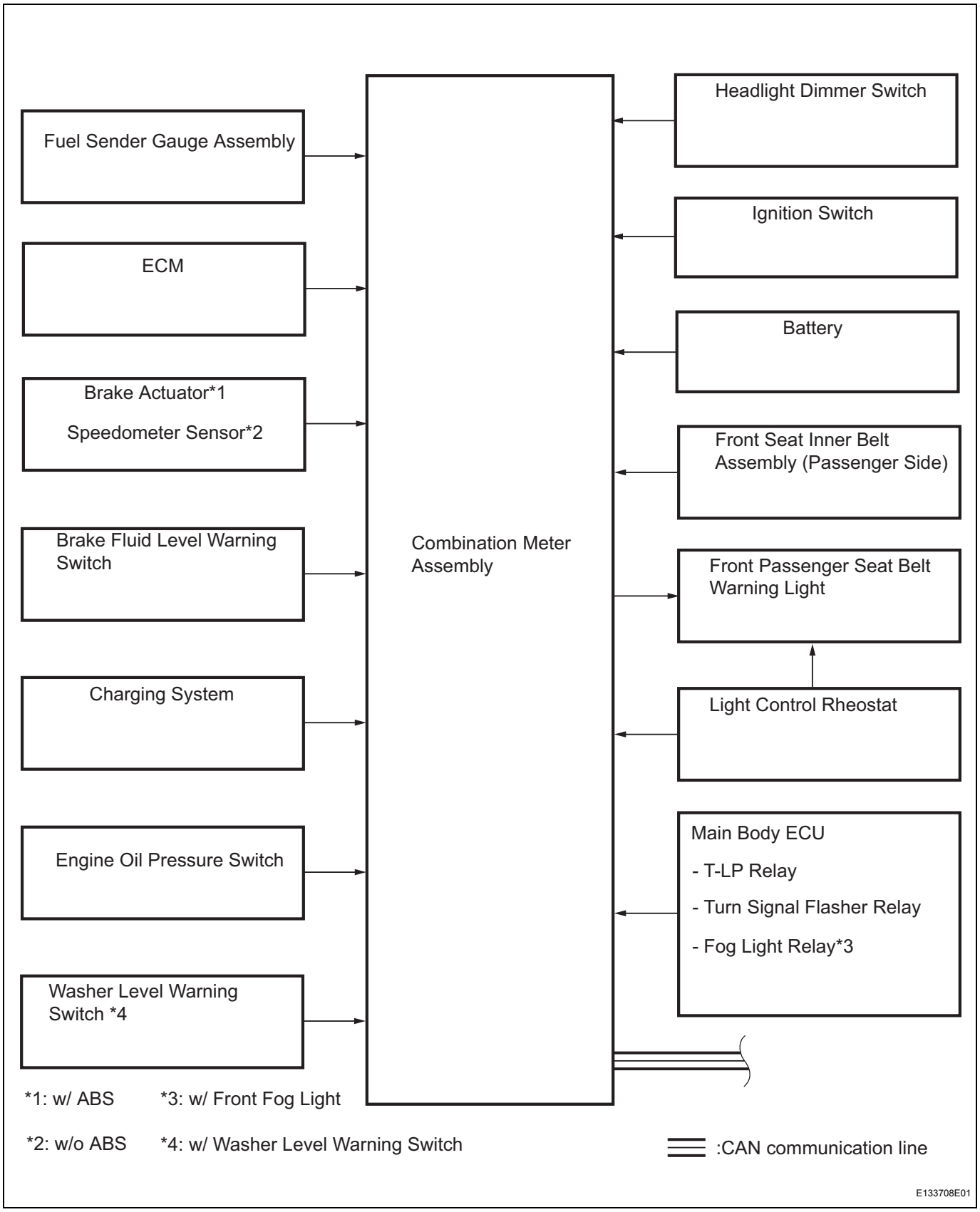

ME

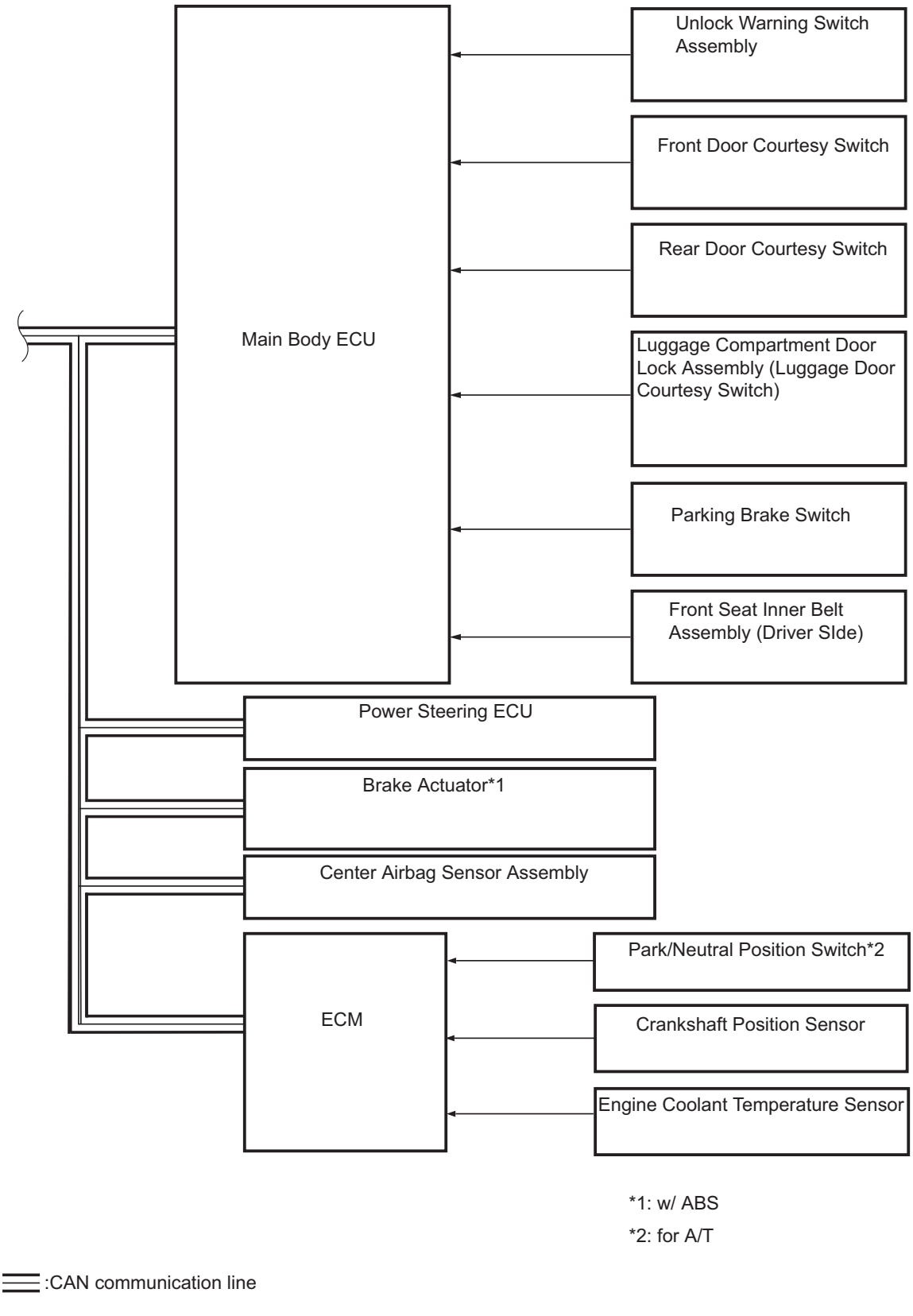
Unlock Warning Switch Assembly
Front Door Courtesy Switch
Rear Door Courtesy Switch
Main Body ECU
Luggage Compartment Door Lock Assembly (Luggage Door Courtesy Switch)
Parking Brake Switch
Front Seat Inner Belt Assembly (Driver SIde)
Power Steering ECU
Brake Actuator*1
Center Airbag Sensor Assembly
ECM
Park/Neutral Position Switch*2
Crankshaft Position Sensor
Engine Coolant Temperature Sensor
*1: w/ ABS
*2: for A/T
:CAN communication line
E126911E02

SYSTEM DESCRIPTION

1. METER GAUGE AND WARNING INDICATOR

GAUGE

Item	Signal Description
Speedometer	w/ ABS: Indicates vehicle speed based on signals received from brake actuator assembly (CAN) w/o ABS: Indicates vehicle speed based on signals received from speedometer sensor (Direct line)
Tachometer*	Indicates engine speed based on signals from ECM (CAN)
ODO / TRIP meter	Calculates accumulated total vehicle travel distance and vehicle travel distance since trip meter knob pressed
Fuel Gauge	Indicates fuel level in accordance with signals received from fuel sender gauge (Direct line)

*: w/ Tachometer

WARNING / INDICATOR

Item	Signal Description
TURN SIGNAL	Receives turn signal from flasher relay (Direct line)
BEAM	Receives beam signal from headlight dimmer switch (Direct line)
FRONT FOG LIGHT*5	Receives front fog light signal from fog light relay (Direct line)
CHARGE	Receives malfunction signal from generator (alternator) (Direct line and CAN)
MIL	Receives malfunction check signal from ECM (Direct line)
Engine coolant temperature warning	Receives engine coolant temperature based on signal from ECM (CAN)
Engine coolant temperature indicator (COOL)	Receives engine coolant temperature based on signal from ECM (CAN)
WASHER*4	Receives washer level malfunction signal from washer level warning switch (Direct line)
DOOR	Illuminates when receiving signal from main body ECU (CAN)
D BELT	Receives driver seat belt signal (unfastened) from center airbag sensor assembly (CAN)
BRAKE	Receives parking brake switch signal from main body ECU (CAN) and fluid level warning signal from brake level switch (Direct line)
OIL PRESSURE	Receives malfunction signal from oil pressure switch (Direct line)
MAINT REQD*1	Blinks when vehicle driven about 4,500 miles after oil exchange. Illuminates when vehicle driven about 5,000 miles after oil exchange.
AIR BAG	Receives malfunction signal from center airbag sensor assembly (CAN)
ABS*3	Receives malfunction signal from skid control ECU (CAN)
HEAD*1	Receives headlight signal from DRL relay (Direct line)
TAIL*2	Receives taillight signal from headlight dimmer switch assembly (Direct line)
P/S	Receives malfunction signal from power steering ECU (CAN)
CRUISE*6	RReceives malfunction check signal from ECM (CAN)

*1: U.S.A. only
*2: Canada only
*3: w/ ABS
*4: w/ washer level warning
*5: w/ Front fog light
*6: w/ Cruise control

Buzzer

Item	Signal Description
Key Reminder	Buzzer ON when ignition switch OFF, key inserted and driver door open.
Light Reminder	Buzzer ON when ignition switch OFF, light control switch in TAIL or HEAD position and driver door open.
Seat Belt Warning	Buzzer ON when vehicle speed exceeds 12.4mph (20km/h) and seat belt unfastened.

HOW TO PROCEED WITH TROUBLESHOOTING

HINT:

- Use these procedures to troubleshoot the combination meter.
- Use an intelligent tester in steps 3 and 5.

1 VEHICLE BROUGHT TO WORKSHOP

NEXT

2 INSPECT BATTERY VOLTAGE

Standard voltage:
11 to 14 V

If the voltage is below 11 V, recharge or replace the battery before proceeding.

NEXT

3 CHECK CAN COMMUNICATION SYSTEM

(a) Use an intelligent tester to check if the CAN communication system is functioning normally.
Result

Result	Proceed to
CAN DTC is not output	A
CAN DTC is output	B

B → **Go to CAN COMMUNICATION SYSTEM**

A

4 PROBLEM SYMPTOMS TABLE

HINT:

Refer to the Problem Symptoms Table (See page ME-10).

Result

Result	Proceed to
Fault is not listed in problem symptoms table	A
Fault is listed in problem symptoms table	B

B → **Go to step 6**

A

5	OVERALL ANALYSIS AND TROUBLESHOOTING

(a) Terminals of ECU (See page ME-12)
(b) Data List/Active Test (See page ME-22)
(c) On-vehicle Inspection (See page ME-24)

NEXT

6	ADJUST, REPAIR OR REPLACE

NEXT

7	CONFIRMATION TEST

NEXT

ME

END

CUSTOMIZE PARAMETERS

1. CUSTOMIZE PARAMETERS (Using the intelligent tester)

HINT:

The following items can be customized.

NOTICE:

- **Record the current settings before custmization.**

Display (Item)	Default	Contents	Setting
KEY REMIND SOUND	SLOW	Changes key reminder buzzer intervals	FAST / NORMAL / SLOW
LIGHT REMIND	ON	Turns light reminder buzzer ON and OFF	ON / OFF
SEAT BELT WARN	D/P ON	Turns seat belt warning buzzer ON and OFF	D/P ON / D ON / P ON / D/P OFF
UNITS BY REGION	Different for every region	Changes drive monitor display units	KM/L JP / KM/L / ML/G US / ML/G UK / KM/G

PROBLEM SYMPTOMS TABLE

HINT:
Use the table below to help determine the causes of the problem symptom. The potential causes of the symptoms are listed in order of probability in the "Suspected Area" column of the table. Check each symptom by checking the suspected area in the order they are listed. Replace parts as necessary.

MALFUNCTION SYSTEM

Symptom	Suspected area	See page
Entire combination meter does not operate	Refer to troubleshooting	ME-33
Operating light control rheostat does not change light brightness	Combination meter assembly	ME-60
	Wire harness or connector	ME-60

METER GAUGES

Symptom	Suspected area	See page
Speedometer malfunction	Refer to troubleshooting	ME-36
Tachometer malfunction*	Refer to troubleshooting	ME-40
Fuel gauge malfunction	Refer to troubleshooting	ME-42
Malfunction in water temperature warning light	Refer to troubleshooting	ME-46
Clock malfunction	Clock assembly	-

*: w/ tachometer

WARNING / INDICATOR LIGHT

Symptom	Suspected area	See page
MIL does not come on	ECM	ES-384
	Combination meter assembly	ME-12
	Wire harness or connector	-
Charge warning light does not come on	CAN communication system	CA-38
	Generator	CH-13
	ECM	ES-26
	Combination meter assembly	ME-12
	Wire harness or connector	-
HEAD indicator does not come on*1	Head light dimmer switch	LI-161
	Combination meter assembly	ME-12
	Wire harness or connector	-
Brake warning light does not come on	CAN communication system	CA-27
	Brake fluid level warning switch	BC-79
	Main body ECU	ME-12
	Parking brake switch	PB-24
	Wire harness or connector	-
	Combination meter assembly	ME-12
ABS warning light does not come on*3	CAN communication system	CA-27
	Skid control ECU	BC-73
	Combination meter assembly	ME-12
Airbag warning light does not come on	CAN communication system	CA-40
	Center airbag sensor assembly	RS-202
	Combination meter assembly	ME-12
Engine oil pressure warning light does not come on	Engine oil pressure switch assembly	ME-162
	Combination meter assembly	ME-12
	Wire harness or connector	-

Symptom	Suspected area	See page
Driver side seat belt warning light does not operate	CAN communication system	CA-9
	Front seat inner belt assembly (Driver side)	SB-34
	Main body ECU	SB-20
	Combination meter assembly	ME-12
	Wire harness or connector	-
Turn indicator light does not come on	Turn signal flasher relay	LI-194
	Combination meter assembly	ME-12
	Wire harness or connector	-
Beam indicator light does not come on	Headlight dimmer switch	LI-161
	Combination meter assembly	ME-12
	Wire harness or connector	-
Washer level warning light does not come on*4	Washer level warning switch	WW-62
	Combination meter assembly	ME-12
	Wire harness or connector	-
Engine coolant temperature warning light does not come on	CAN communication system	CA-9
	ECM	ES-26
	Combination meter assembly	ME-12
Power steering warning light does not come on	CAN communication system	CA-31
	Power steering ECU	PS-53
	Combination meter assembly	ME-12
MAINT REQD indicator light blinks or continues illuminating*1	Resetting procedure	ME-24
	Combination meter assembly	ME-12
	CAN communication system	CA-9
Front fog light indicator light does not come on*5	Fog light relay	LI-198
	Combination meter assembly	ME-12
	Wire harness or connector	-
Open door warning light does not come on	CAN communication system	CA-35
	Door courtesy switch	LI-179
	Main body ECU	ME-12
	Combination meter assembly	ME-12
	Wire harness or connector	-
TAIL indicator light does not come on*2	TL-P relay	LI-53
	Combination meter assembly	ME-12
	Wire harness or connector	-

*1: USA only
*2: Canada only
*3: w/ ABS
*4: w/ Washer level warning
*5: w/ Front fog light

BUZZER

Symptom	Suspected area	See page
No buzzers sound	Combination meter assembly	ME-48
	Wire harness or connector	-
Seat belt warning buzzer does not sound	CAN communication system	CA-40
	Main body ECU	ME-12
	Front seat inner belt assembly	SB-34
	Wire harness or connector	-
	Combination meter assembly	ME-12

Symptom	Suspected area	See page
Light reminder warning buzzer does not sound	Main body ECU	ME-12
	Headlight dimmer switch assembly	LI-161
	Door courtesy switch	LI-179
	Wire harness or connector	-
	Combination meter assembly	ME-12
Key reminder warning buzzer does not sound	Unlock warning switch assembly	DL-89
	Main body ECU	ME-12
	Combination meter assembly	ME-12
	Wire harness or connector	-

TERMINALS OF ECU

1. COMBINATION METER ASSEMBLY

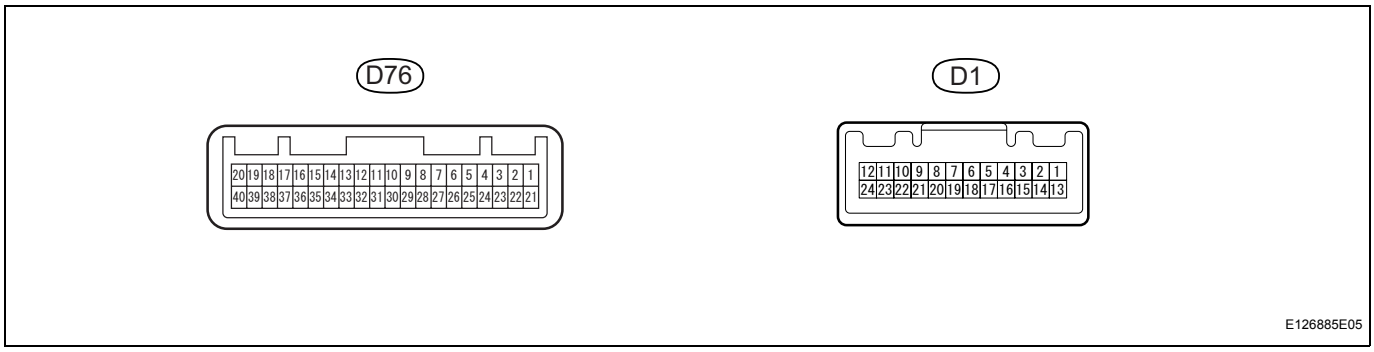

(a) Disconnect the D1 combination meter assembly connector.
(b) Measure the voltage and resistance of the wire harness side connector.

Standard:

Symbols (Terminals No.)	Wiring Color	Terminal Description	Condition	Specified Condition
IG2 (D1-1) - Body ground	B - Body ground	Ignition switch signal	Ignition switch OFF → ON	Below 1 V → 11 to 14 V
ECUB (D1-2) - Body ground	L - Body ground	Battery	Always	11 to 14 V
ET (D1-24) - Body ground	BR - Body ground	Ground	Always	Below 1 Ω

ME

HINT:
If the result is not as specified, there may be a malfunction in the wire harness.

(c) Disconnect the D76 combination meter assembly connector.
(d) Measure the voltage of the wire harness side connector.

Standard voltage:

Symbols (Terminals No.)	Wiring Color	Terminal Description	Condition	Specified Condition
FUEL (D1-3) - Body ground	V - Body ground	Fuel level signal	Ignition switch ON	11 to 14 V
ILL- (D1-7) - Body ground	GR - Body ground	Light control rheostat signal	Ignition switch OFF → ON	Pulse generation (See waveform 1)
ILL+ (D1-14) - Body ground	G - Body ground	Illumination signal	Light control switch OFF → ON	Below 1 V → 11 to 14 V
TC (D1-15) - Body ground	Y - Body ground	Tail cancel switch signal	Tail cancel switch OFF → ON	Below 1 V → 11 to 14 V
+S (D1-16) - Body ground	SB - Body ground	Vehicle speed signal (Output)	Driving at approx. 12 mph (20 km/h)	Pulse generation (See waveform 2)
SI (D1-17) - Body ground	P - Body ground	Vehicle Speed signal (Input)	Driving at approx.12 mph (20 km/h)	Pulse generation (See waveform 2)
CANH (D1-20) - Body ground	G - Body ground	CAN communication line	Ignition switch ON	Pulse generation
CANL (D1-21) - Body ground	W - Body ground	CAN communication line	Ignition switch ON	Pulse generation
CHG- (D76-1) - Body ground	SB *3 or L *4 - Body ground	Charge warning light signal	Ignition switch ON Engine start Charge warning light OFF → ON	11 to 14 V → Below 1 V
SW (D76-2) - Body ground	V - Body ground	Brake fluid level warning light signal	Ignition switch ON Brake fluid level warning light ON → OFF	Below 1 V → 11 to 14 V

Symbols (Terminals No.)	Wiring Color	Terminal Description	Condition	Specified Condition
EFI (D76-4) - Body ground	B - Body ground	MIL signal	Ignition switch ON MIL ON → OFF	Below 1 V → 11 to 14 V
FOG (D76-7)*5 - Body ground	R - Body ground	Front FOG signal	Ignition switch ON Front fog light switch OFF → ON	Below 1 V → 11 to 14 V
B (D76-8) - Body ground	LG - Body ground	Turn signal LH signal	Ignition switch ON Turn signal LH indicator light OFF → ON → OFF	Below 1 V → 11 to 14 V → Below 1 V
PBLT (D76-9) - Body ground	O - Body ground	Seat belt warning light signal (Passenger side)	Ignition switch ON Front passenger seat belt warning light OFF → ON → OFF	Below 1 V → 11 to 14 V → Below 1 V
WLVL (D76-10)*6 - Body ground	W - Body ground	Washer level warning signal	Ignition switch ON Washer level warning light ON → OFF	Below 1 V → 11 to 14 V
BEAM- (D76-11) - Body ground	P - Body ground	HI-BEAM indicator signal (-)	Headlight dimmer switch (Hi-BEAM) Hi → Lo	Below 1 V → 11 to 14 V
S (D76-12) - Body ground	Y - Body ground	Oil pressure signal	OIL / P warning light ON → OFF	Below 1 V → 11 to 14 V
HEAD (D76-13)*1 - Body ground	L - Body ground	HEAD light indicator signal	Light control switch OFF → ON	Below 1 V → 11 to 14 V
BEAM+ (D76-14) - Body ground	GR - Body ground	HI-BEAM indicator signal (+)	BEAM indicator light OFF → ON	Below 1 V → 11 to 14 V
B (D76-15) - Body ground	BR - Body ground	Turn signal RH signal	Turn signal RH indicator light OFF → ON → OFF	Below 1 V → 11 to 14 V → Below 1 V
IND (D76-16)*2 - Body ground	G - Body ground	Taillight indicator signal	Light control switch OFF → ON	Below 1 V → 11 to 14 V
RLCY (D76-20) - Body ground	G - Body ground	Rear door courtesy switch signal (LH)	Rear door (LH) CLOSED→ OPEN	11 to 14 V→Below 1 V
RRCY (D76-21) - Body ground	L - Body ground	Rear door courtesy switch signal (RH)	Rear door (RH) CLOSED→ OPEN	11 to 14 V→Below 1 V
JB ECU (D76-22) - Body ground	Y - Body ground	Rear door courtesy switch signal (LH or RH)	Rear door (LH or RH) CLOSED→ OPEN	11 to 14 V→Below 1 V

ME

HINT:
If the result is not as specified, the combination meter assembly may be malfunctioning
*1: U.S.A. only
*2: Canada only
*3: w/ Daytime running light
*4: w/o Daytime running light
*5: w/ Front fog light
*6: w/ Washer level warning light

(1) Waveform 1: Using an oscilloscope

Terminal Connections	ILL- (D1-7) - Body Ground
Tool Setting	5V / DIV, 50 ms / DIV
Condition	Ignition switch ON

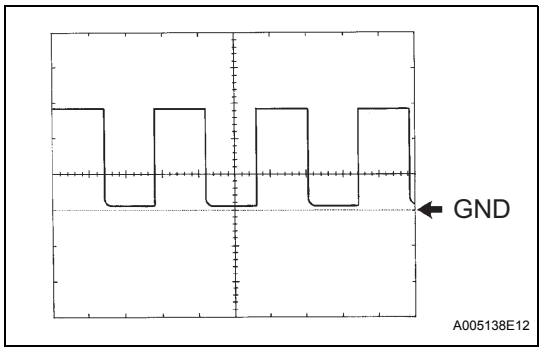

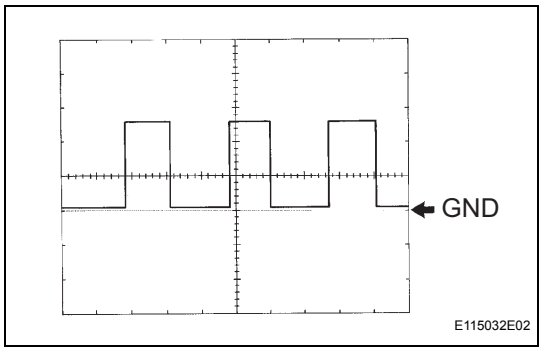

(2) Waveform 2: Using an oscilloscope

Terminal Connections	+S (D1-16) - Body Ground SI (D1-17) - Body Ground
Tool Setting	5V / DIV, 20ms / DIV
Condition	Driving at approximately 12mph (20km/h)

HINT:
As the vehicle speed increases, the cycle of the signal waveform narrows.

2. CHECK MAIN BODY ECU

Main Body ECU (Rear View):

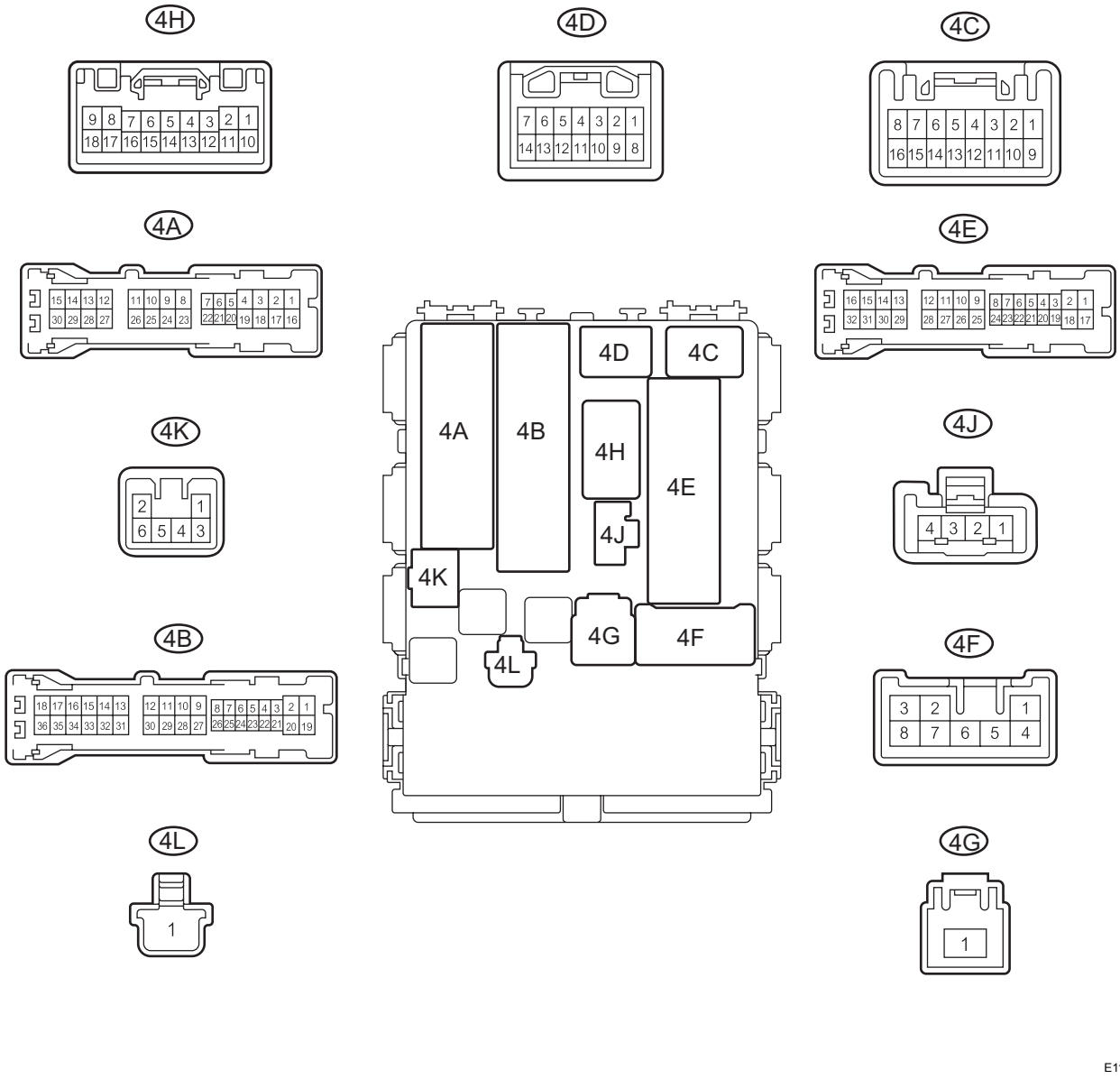

Standard:

Symbols (Terminals No.)	Wiring Color	Terminal Description	Condition	Specified Condition
RRCY (4A-5) - GND1 (4E-17)	G - W-B	Rear door courtesy switch signal (LH)	Rear door (Driver side) CLOSED → OPEN	11 to 14 V → Below 1 V

Symbols (Terminals No.)	Wiring Color	Terminal Description	Condition	Specified Condition
LGCY (4A-7) - GND1 (4E-17)	SB - W-B	Back door courtesy switch signal	Back door CLOSED → OPEN	11 to 14 V → Below 1 V
RRCY (4A-20) - GND1 (4E-17)	L - W-B	Rear door courtesy switch signal (RH)	Rear door (Front passenger side) CLOSED → OPEN	11 to 14 V → Below 1 V
DCTY (4A-21) - GND1 (4E-17)	R - W-B	Front door courtesy switch signal (Driver side)	Driver door CLOSED → OPEN	11 to 14 V → Below 1 V
PCTY (4A-24) - GND1 (4E-17)	L - W-B	Front door courtesy switch signal (Passenger side)	Front passenger door CLOSED → OPEN	11 to 14 V → Below 1 V
PKB (4C-2) - GND1 (4E-17)	Y - W-B	Parking brake signal	Parking brake warning light ON → OFF	Below 1 V → 11 to 14 V
KSW (4D-7) - GND1 (4E-17)	Y - W-B	Key unlock switch condition signal	Key inserted → Removed	Below 1 V → 11 to 14 V
GND1 (4E-17) - Body ground	W-B - Body ground	Ground	Always	Below 1 Ω

Main Body ECU (Front View):

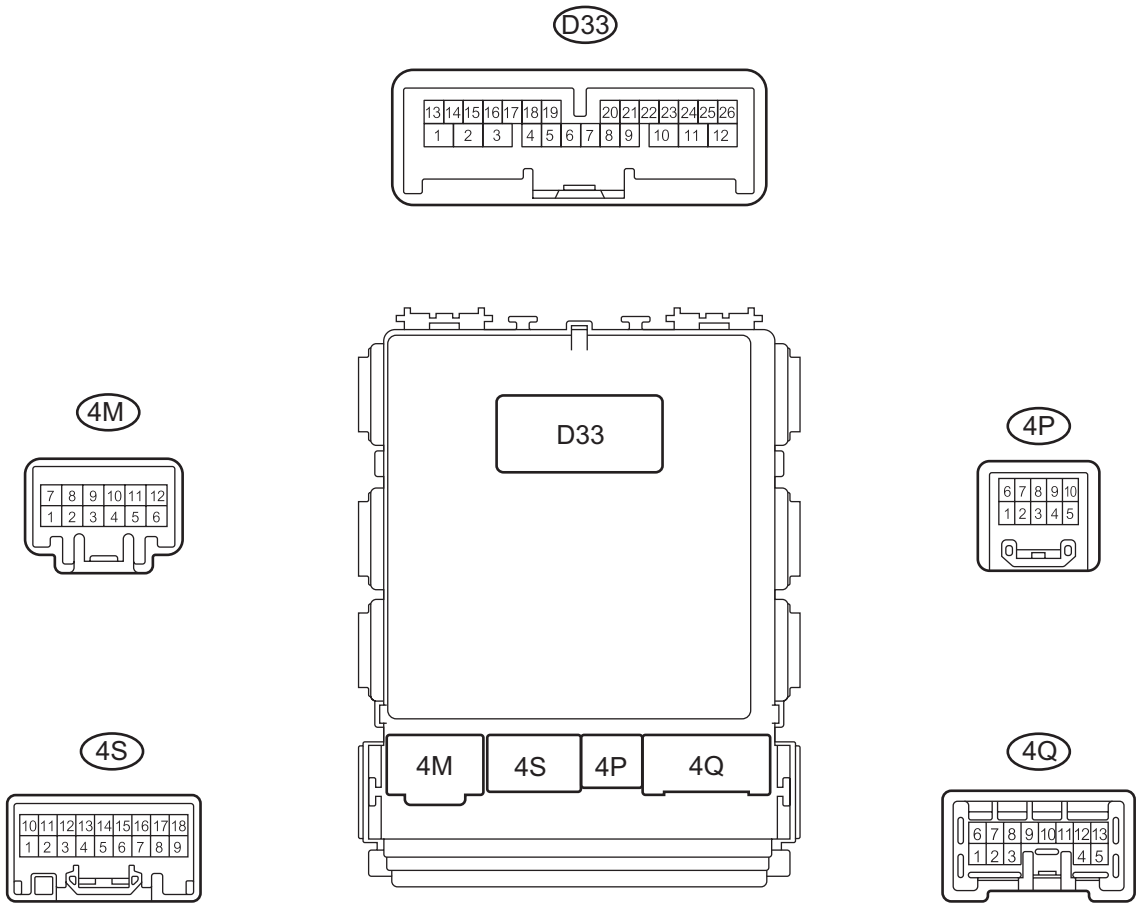

E114511E01

Standard:

Symbols (Terminals No.)	Wiring Color	Terminal Description	Condition	Specified Condition
CANL (D33-22) - Body ground	W - Body ground	CAN communication line	Ignition switch ON	Pulse generation
CANH (D33-23) - Body ground	R - Body ground	CAN communication line	Ignition switch ON	Pulse generation

3. COMBINATION METER INTERNAL CIRCUIT

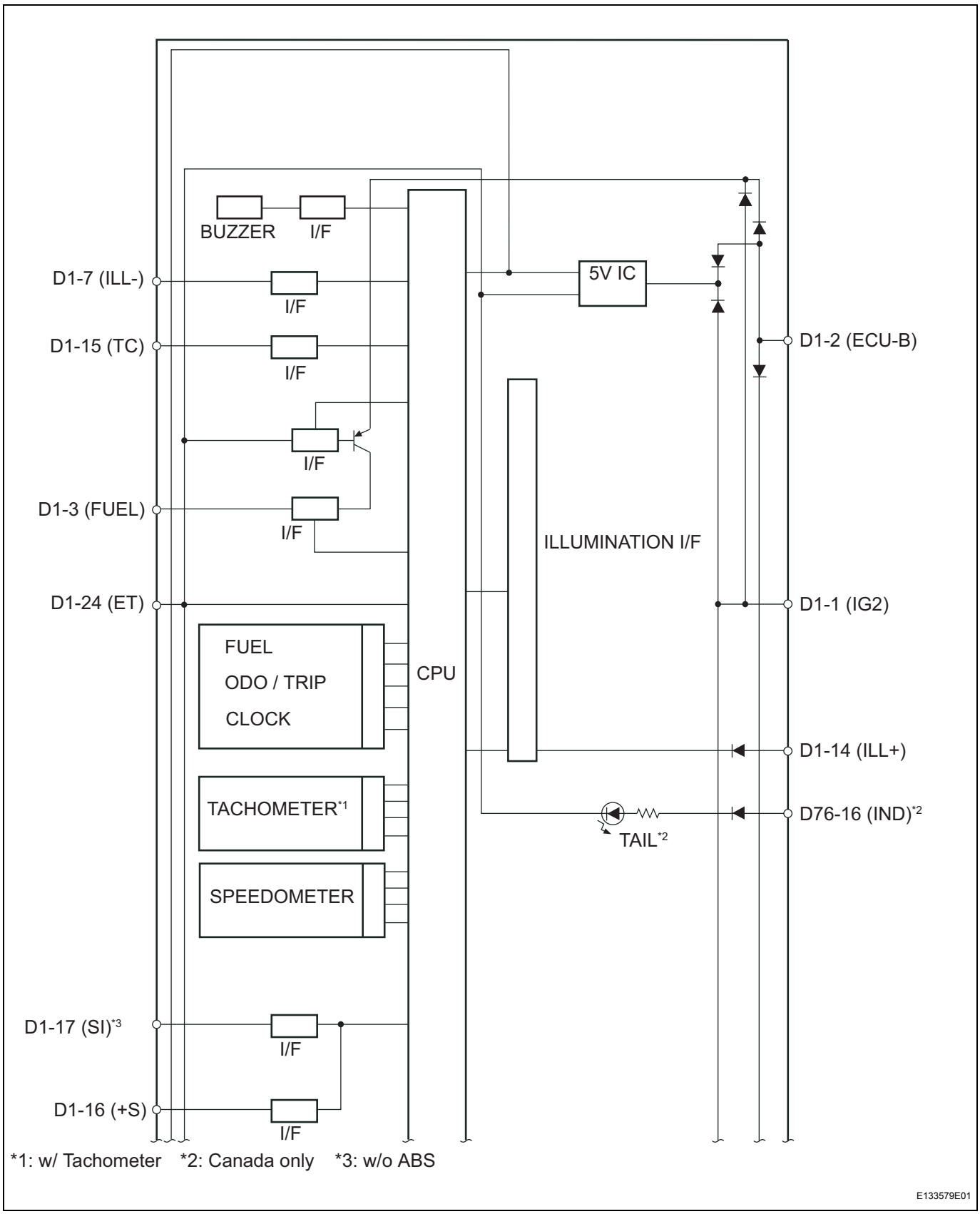

ME

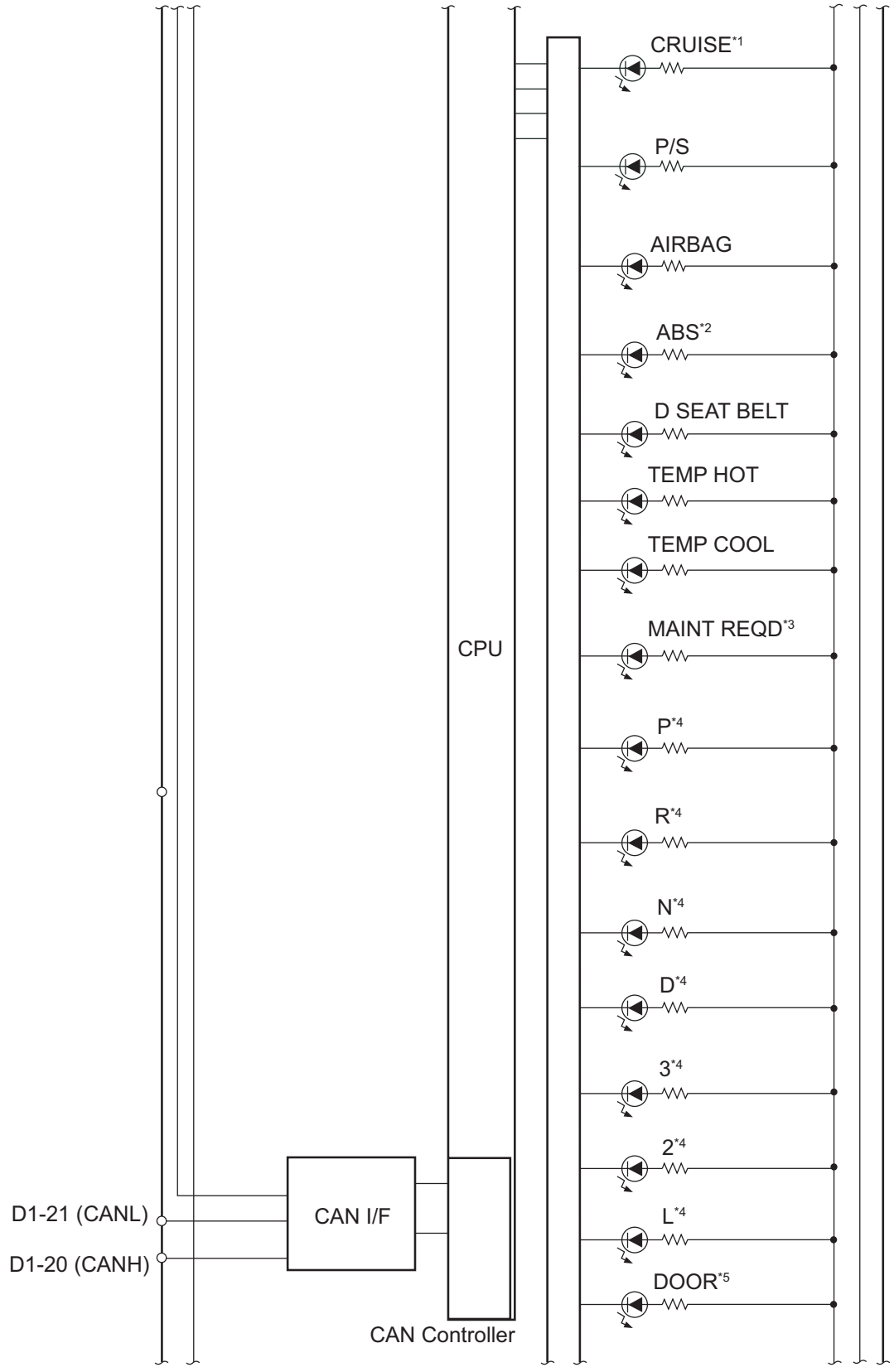

*1: w/ Cruise Control *3: USA only *5: w/o Thachometer

*2: w/ ABS *4: For A/T

E133580E01

ME

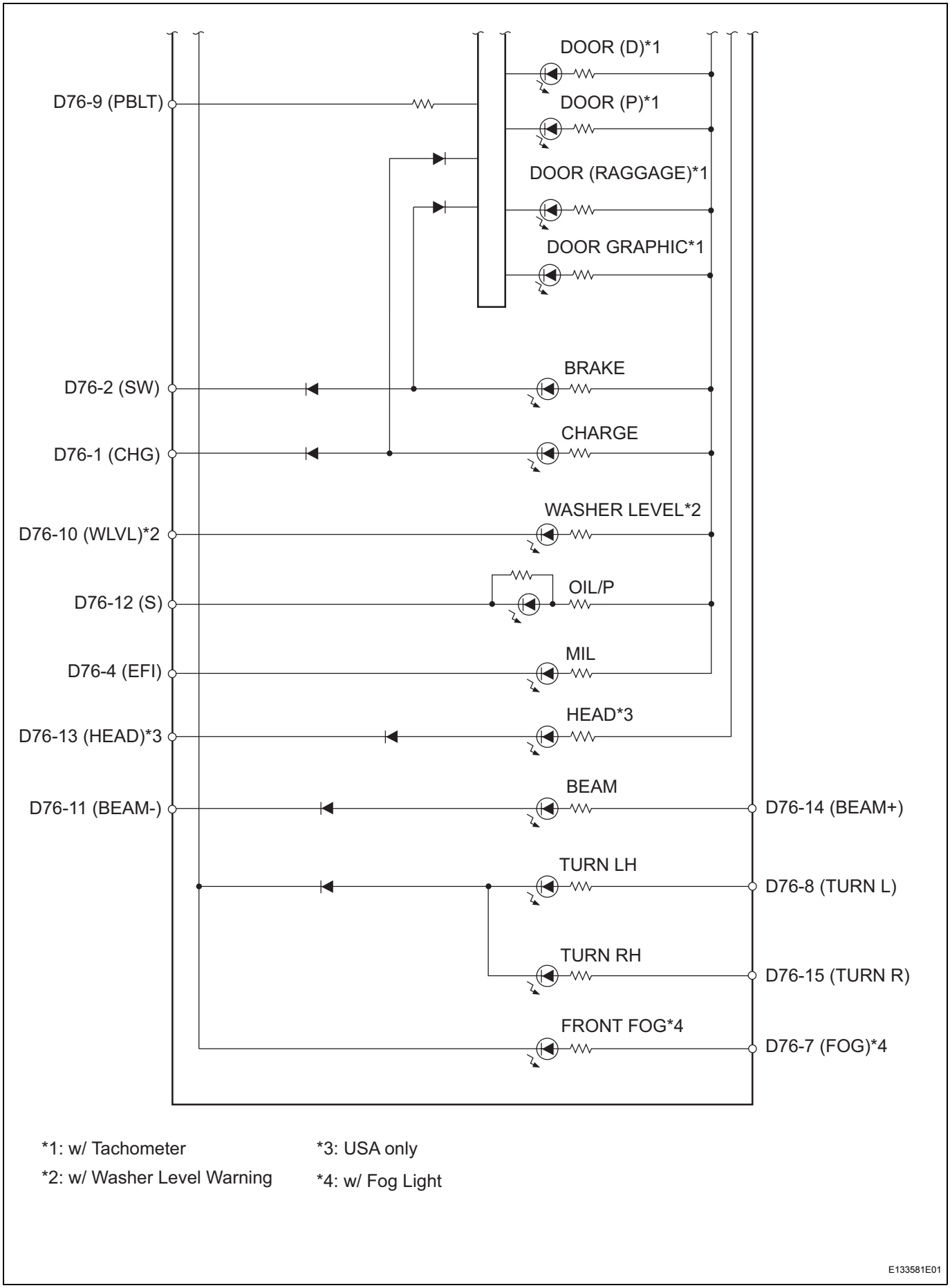

*1: w/ Tachometer
*2: w/ Washer Level Warning
*3: USA only
*4: w/ Fog Light

E133581E01

Connectors

Terminal No.		Wire Harness Side
D1	1	Ignition Switch
	2	Battery
	3	Fuel Sender Gauge Assembly
	7	Light Control Rheostat
	14	Taillight Relay
	15	Light Control Rheostat
	16	ECM, Power Steering ECU
	17	Speedometer Sensor
	20	CAN Communication Line
	21	CAN Communication Line
	24	Body Ground
D76	1	Generator (Alternator)
	2	Brake Fluid Level Warning Switch
	4	ECM
	7	Front Fog Light Relay
	8	Turn Signal Flasher Relay
	9	Passenger Seat Belt Warning Light
	10	Washer Level Warning Switch
	11	Headlight Dimmer Switch
	12	Engine Oil Pressure Switch
	13	Headlight
	14	Headlight Dimmer Switch
	15	Turn Signal Flasher Relay
	16	Taillight Relay

DIAGNOSIS SYSTEM

1. DESCRIPTION

(a) Meter and gauge system data and the Diagnostic Trouble Codes (DTCs) can be read through the Data Link Connector 3 (DLC3) of the vehicle. When the system seems to be malfunctioning, use an intelligent tester with the CAN VIM to check for malfunctions and perform troubleshooting.

2. CHECK DLC3

(a) The ECU uses ISO 15765-4 for communication. The terminal arrangement of the DLC3 complies with SAE J1962 and matches the ISO 15765-4 format.

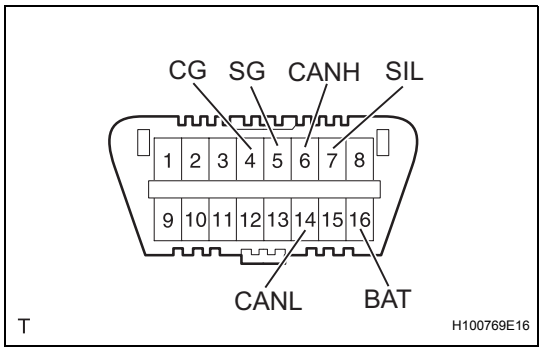

ME

Symbols (Terminal No.)	Terminal Description	Condition	Specified Condition
SIL (7) - SG (5)	Bus " +" line	During transmission	Pulse generation
CG (4) - Body ground	Chassis ground	Always	Below 1 Ω
SG (5) - Body ground	Signal ground	Always	Below 1 Ω
BAT (16) - Body ground	Battery positive	Always	11 to 14 V
CANH (6) - CANL (14)	CAN bus line	Ignition switch OFF*	54 to 69 Ω
CANH (6) - CG (4)	HIGH-level CAN bus line	Ignition switch OFF*	200 Ω or higher
CANL (14) - CG (4)	LOW-level CAN bus line	Ignition switch OFF*	200 Ω or higher
CANH (6) - CG (4)	HIGH-level CAN bus line	Ignition switch OFF*	6 kΩ or higher
CANL (14) - CG (4)	LOW-level CAN bus line	Ignition switch OFF*	6 kΩ or higher

NOTICE:

***: Before measuring the resistance, leave the vehicle as is for at least 1 minute and do not operate the ignition switch, any other switches or the doors.**

If the result is not as specified, the DLC3 may have a malfunction. Repair or replace the harness and connector.

HINT:

Connect the cable of the intelligent tester to the CAN VIM, connect the CAN VIM to the DLC3, turn the ignition switch ON and attempt to use the tester. If the display indicates that a communication error has occurred, there is a problem either with the vehicle or with the tester.

- If communication is normal when the tester is connected to another vehicle, inspect the DLC3 of the original vehicle.
- If communication is still not possible when the tester is connected to another vehicle, the problem is probably in the tester itself. Consult the Service Department listed in the tester's instruction manual.

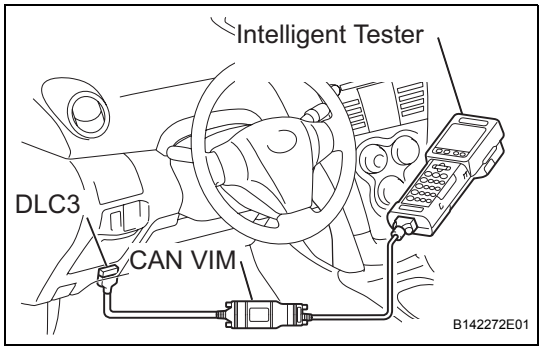

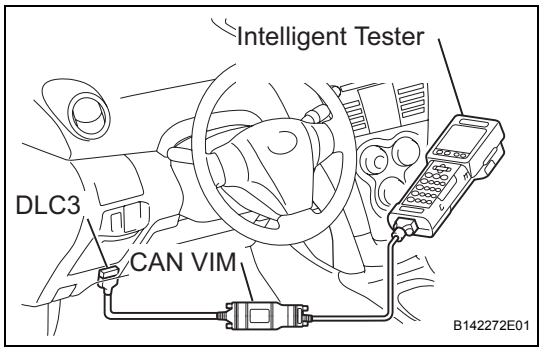

DTC CHECK / CLEAR

1. DTC CHECK

(a) Connect the intelligent tester with CAN VIM to the DLC3.
(b) Turn the ignition switch ON.
(c) Turn the intelligent tester ON.
(d) Select the following menu items: DIAGNOSIS / OBD/MOBD / METER / DTC INFO / CURRENT CODES.
(e) Check the DTC(s) and freeze frame data, and then write them down.
(f) See page ME-23 to check the details of the DTC(s).

2. CLEAR DTC (Using an intelligent tester)

(a) Connect the intelligent tester with CAN VIM to the DLC3.
(b) Turn the ignition switch ON.
(c) Turn the tester ON.
(d) Select the following menu items: DIAGNOSIS / OBD/MOBD / METER / DTC INFO / CLEAR CODES.
(e) Press the YES button to clear the DTC(s).

3. CLEAR THE DTC (Without using an intelligent tester)

(a) Perform either one of the following operations.
(1) Disconnect the negative battery cable for more than 1 minute.
(2) Remove the ECU-B fuse from the engine room relay block located inside the engine compartment for more than 1 minute.

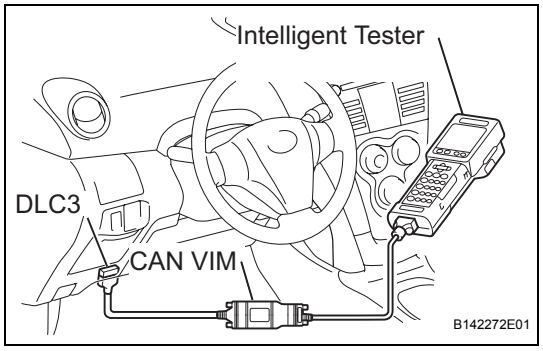

DATA LIST / ACTIVE TEST

1. READ DATA LIST

(a) Connect the intelligent tester with CAN VIM to the DLC3.
HINT:
Using the intelligent tester's DATA LIST allows switch, sensor, actuator and other item values to be read without removing any parts. Reading the DATA LIST early in troubleshooting is one way to save time.
(b) Turn the ignition switch ON.
(c) Read the Data List according to the prompts displayed on the tester.

METER

Item	Measurement Item/Display (Range)	Normal Condition	Diagnostic Note
+B VOLTAGE	Battery voltage Min=0, Max=255, 1LSB=1	10V: 119 / 10.5V: 126 / 11V: 132 / 12V: 145 / 13V: 157 / 14V: 170	-
ODO/TRIP SW	ODO/TRIP change switch/ ON or OFF	ON: Switch is pushed OFF: Switch is released	-
TAIL CANCEL SW	Taillight cancel switch/ ON or OFF	ON: Taillight cancel switch is ON OFF: Taillight cancel switch is OFF	-
TAIL RELAY SW	Taillight relay switch/ ON or OFF	ON: Taillight relay switch is ON OFF: Taillight relay switch is OFF	-

ME

Item	Measurement Item/Display (Range)	Normal Condition	Diagnostic Note
P-BELT BUCKL SW	Front passenger seat belt buckle switch/ ON or OFF	ON: Front passenger seat belt is fastened OFF: Front passenger seat belt is unfastened	-
TIMER SW METER	Timer switch on combination meter/ ON or OFF	ON: Timer switch is ON OFF: Timer switch is OFF	-
SPEED METER	Vehicle speed / Min.: 0 km/h(0mph),Max.: 255km/h(158mph)	Approximately same as actual vehicle speed (When vehicle is driven)	-
TACHO METER(*1)	Engine speed / Min.: 0 rpm, Max.: 12,750 rpm	Approximately same as actual engine speed (When engine is running)	-
COOLANT TEMP	Engine coolant temperature / Min.: 0°C, Max.: 127.5°C	After warming up: 75 to 105°C(167 to 221°F)	-
FUEL GAUGE (A/D)	Fuel input signal / Min.: 0, Max.: 255	Fuel receiver gauge segments No.1 to No.8 illuminate: 14 to 34 No.1 to No.6 (No.7) illuminate: 77 to 109 No.1 to No.4 (No,5) illuminate: 135 to 172 No.1 and No.2 illuminate: 175 to 188 No.1 flashes: 194 to 200	-
OIL MAINTENANCE(*2)	Integrated value for Oil Maintenance / Min.: 0 mile, Max.: 25500 mile	Total accumulated vehicle travel distance for oil maintenance since last reset	-
RHEOSTAT (A/D)	Rheostat value / Min.: 0, Max.: 255	Light control rheostat switch is Dark(0)→Bright(255)	-

*1: w/ Tachometer
*2: U.S.A. only

2. PERFORM ACTIVE TEST

HINT:
Performing the intelligent tester's Active Test allows relays, VSV, actuators and other items to be operated without removing any parts. Performing the Active Test early in troubleshooting is one way to save time. The Data List can be displayed during the Active Test.

(a) Connect the intelligent tester with CAN VIM to the DLC3.
(b) Turn the ignition switch ON.
(c) Perform the Active Test according to the prompts displayed on the tester.

METER

Item	Test Details	Diagnostic Note
SPEED METER	0 / 40 / 80 / 120 mph 0 / 40 / 80 / 120 / 160 / 200 km/h	-
TACHOMETER(*1)	0rpm / 1,000rpm / 2,000rpm / 3,000rpm / 4,000rpm / 5,000rpm / 6,000rpm / 7,000rpm	-
FUEL GAUGE	EMPTY, 1/2, FULL	-
COOLANT TEMP	LOW / NORMAL / HIGH	-
METER DISPLAY1	All / 0 / 1 / 2 / 3 / 4 / 5 / 6	-
METER DISPLAY2	7 / 8 / 9	-
SRS WARN	Airbag warning light OFF / ON	-

Item	Test Details	Diagnostic Note
D-BELT REMIND	Driver seat belt warning light OFF / ON	-
P-BELT REMIND	Front passenger seat belt warning light OFF / ON	-
DOORS ALL OPEN	Door indicator light OFF / ON	-
ABS WARN (*2)	ABS warning light OFF / ON	-
BRAKE WARN	Brake warning light OFF / ON	-
COOLANT HOT	Engine coolant temperature warning light OFF / ON	-
COOLANT COOL	Engine coolant temperature indicator light (COOL) OFF / ON	-
EPS INDIC	EPS indicator ON / OFF	-
OIL MAINTENANCE (*3)	Oil maintenance indicator OFF / ON	-

*1: w/ Tachometer
*2: w/ABS
*3: U.S.A. only

DIAGNOSTIC TROUBLE CODE CHART

DTC No.	Detection Item	See page
U0100	Lost Communication with ECM/PCM "A"	ME-29
U0129	Lost Communication with Skid Control ECU	ME-31

ON-VEHICLE INSPECTION

1. INSPECT SPEEDOMETER

(a) Check the operation.

(1) Using a speedometer tester, inspect the speedometer and confirm that the speedometer readings are within the acceptable range. Also check the odometer operation.

Reference:

km/h (Canada)

Standard Indication	Acceptable Range
20 km/h	17.5 to 21.5 km/h
40 km/h	38 to 42 km/h
60 km/h	58 to 63 km/h
80 km/h	78 to 84 km/h
100 km/h	98.5 to 104.5 km/h
120 km/h	119 to 125 km/h
140 km/h	139 to 146 km/h
160 km/h	159 to 167 km/h
180 km/h	179 to 188 km/h
200 km/h	199 to 209 km/h

mph (U.S.A.)

Standard Indication	Acceptable Range
20 mph	18 to 21 mph
40 mph	38.5 to 42 mph
60 mph	59 to 63 mph
80 mph	79.5 to 84 mph
100 mph	100 to 105 mph
120 mph	121 to 126.5 mph

NOTICE:

Tire wear and excessively high or low tire pressure affect speedometer indications.

(2) Check the deflection of the speedometer indicator.

Reference:

Below 0.3 mph (0.5 km/h)

Combination Meter Assembly Connector:

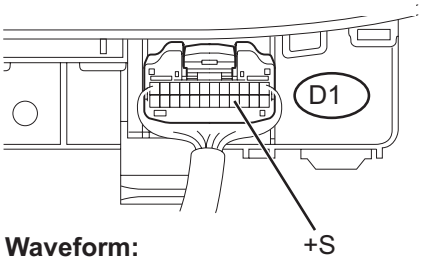

Waveform:

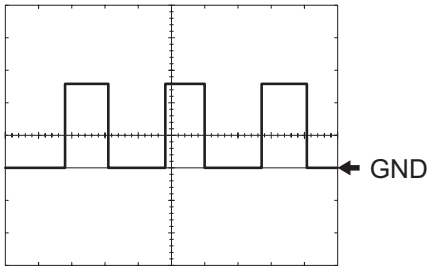

E117125E05

2. INSPECT SPEEDOMETER SENSOR

(a) Check the output signal waveform.

(1) Remove the combination meter assembly, but do not disconnect the connector.

(2) Connect an oscilloscope to terminals D1 - 16 and to the body ground.

(3) Start the engine.

(4) Check the signal waveform according to the condition(s) in the table below.

Item	Contents
Terminal Connection	+S (D1-16) and Body Ground
Tool Setting	5V / DIV, 20ms / DIV
Condition	Driving at approximately 12mph (20km / h)

OK:

As shown in the illustration.

NOTICE:

Waveform is indicated as the vehicle speed increases, the cycle of the signal waveform narrows.

(5) Reinstall the combination meter assembly.

3. INSPECT TACHOMETER (w/ Tachometer)

(a) Check the operation.

(1) Connect the intelligent tester with CAN VIM to the DLC3.

(2) Turn the ignition switch ON and turn the tester ON.

(3) Select the item below from the Data List and read the value displayed on the intelligent tester.

METER

Item	Measurement Item/ Range(Display)	Normal Condition	Diagnostic Note
TACHO METER	Engine speed/Min.: 0 rpm, Max.:12,750 rpm	Approximately same as actual engine speed (When engine is running)	-

(4) Compare the engine speed displayed on the tester with the tachometer reading.

Reference

Standard Indication (r/min)	Acceptable Range [Data in ( ) are for reference]
700 r/min	630 to 770 r/min
1,000 r/min	(900 to 1,100 r/min)
2,000 r/min	(1,850 to 2,150 r/min)
3,000 r/min	2,800 to 3,200 r/min
4,000 r/min	(3,800 to 4,200 r/min)
5,000 r/min	4,800 to 5,200 r/min
6,000 r/min	(5,750 to 6,250 r/min)
7,000 r/min	(6,700 to 7,300 r/min)

ME

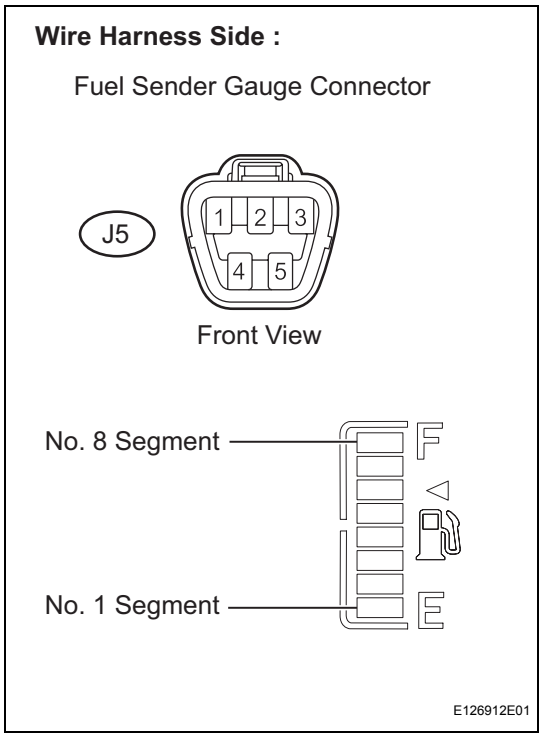

4. INSPECT FUEL RECEIVER GAUGE

(a) Disconnect the J5 fuel sender gauge connector.

(b) Check the fuel receiver gauge operation when the ignition switch is turned to the ON position.

OK:

No. 1 segment flashes.

(c) Connect terminals 2 and 3 on the wire harness side connector of the fuel sender gauge.

(d) Check the fuel receiver gauge operation when the ignition switch is turned from OFF to ON.

OK:

All segments, from No. 1 to No. 8, illuminate.

(e) Reconnect the fuel sender gauge connector.

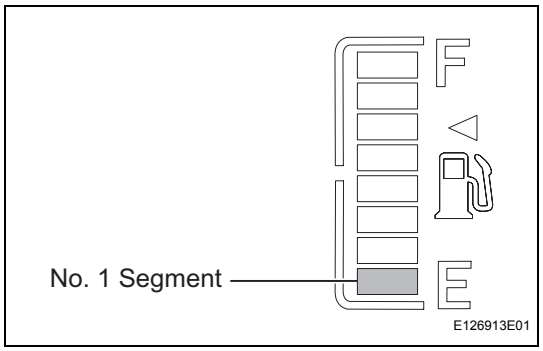

5. INSPECT FUEL LEVEL WARNING LIGHT

(a) Turn the ignition switch to the ON position, and check that the receiver gauge No. 1 segment flashes when the fuel volume is less than 6.3 liters (less than 15 % of the total fuel tank capacity).

OK

Fuel Volume	Flashing Speed (Interval)
1.6 gal (6.3 liters) (Less than 15 % of total fuel tank capacity)	Flashes slowly (1.2 seconds)
1.1 gal (4.2 liters) (Less than 10 % of total fuel tank capacity)	Flashes quickly (0.6 seconds)

6. INSPECT ENGINE OIL PRESSURE WARNING LIGHT

(a) Disconnect the engine oil pressure switch connector.

(b) Turn the ignition switch to the ON position.

(c) Ground the terminal of the wire harness side connector, then check the engine oil pressure warning light.

OK:

Engine oil pressure warning light illuminates.

(d) Reconnect the engine oil pressure switch connector.

7. INSPECT BRAKE WARNING LIGHT

(a) Inspect the parking brake warning light.

(1) Disconnect the parking brake switch connector.

(2) Turn the ignition switch to the ON position.

ME

(3) Ground the terminal of the wire harness side connector, then check the parking brake warning light.
OK:
Brake warning light illuminates.
(4) Reconnect the parking brake switch connector.

(b) Inspect the brake fluid level warning light.
(1) Disconnect the brake fluid level warning switch connector.
(2) Turn the ignition switch to the ON position.
(3) Connect a terminal to the other terminal of the wire harness side connector, then check the brake fluid level warning switch.
OK:
Brake warning light illuminates.
(4) Reconnect the brake fluid level warning switch connector.

8. INSPECT BRAKE FLUID LEVEL WARNING SWITCH

(a) Remove the reservoir tank cap and strainer.
(b) Disconnect the brake fluid level warning switch connector.
(c) Measure the resistance between the terminals.
Standard resistance:
Float inside reservoir tank is in high position (switch OFF): 10 k Ω or higher
(d) Use a syphon or a similar tool to drain fluid out of the reservoir tank.
(e) Measure the resistance between the terminals.
Standard resistance:
Float inside reservoir tank is in low position (switch ON): Below 1 Ω
(f) Pour the fluid back into the reservoir tank.
(g) Reconnect the brake fluid level warning switch connector.
(h) Reinstall the reservoir tank cap and strainer.

9. INSPECT WINDOW WASHER FLUID WARNING LIGHT

(a) Disconnect the connector from the washer level warning switch.
(b) Turn the ignition switch to the ON position.
(c) Ground the terminal of the wire harness side connector, then check the washer level warning light.
OK:
Washer level warning light comes on.

10. INSPECT ENGINE COOLANT TEMPERATURE WARNING LIGHT

(a) Disconnect the engine coolant temperature sensor connector.
(b) Turn the ignition switch to the ON position.

(c) Connect a terminal to the other terminal of the wire harness side connector, then check the engine coolant temperature warning light.
OK:
Engine coolant temperature warning light illuminates.

(d) Reconnect the engine coolant temperature sensor connector.
NOTICE:
DTCs may have been set. Check for DTCs and clear any that have been set.

11. OIL MAINTENANCE INDICATOR RESETTING PROCEDURE (U.S.A. only)

Oil Maintenance Indicator	Condition	Specified State
Blinks	Vehicle has run 4,500 miles since previous setting	Indicator blinks for 15 seconds after ignition switch is turned ON (including 3 seconds for a valve check)
Illuminates	Vehicle has run 5,000 miles since previous setting	Indicator illuminates after ignition switch is turned ON.

(a) Set the window display located inside the combination meter to the Trip A indication.
(b) Turn the ignition switch OFF.
(c) While pressing the ODO/TRIP display change switch (reset switch) (for at least 5 seconds), turn the ignition switch ON.
(d) When the reset procedure has been completed successfully, the MAINT REQD indicator light turns off and the ODO/TRIP meter indicates 0 (zero) and then returns to its regular display.
HINT:
If the reset fails, the MAINT REQD indicator light remains illuminated. Perform the procedure again.

DTC	U0100	Lost Communication with ECM/PCM "A"

DESCRIPTION

The combination meter assembly and the ECM exchange signals through the CAN communication system.

DTC No.	DTC Detecting Conditions	Trouble Areas
U0100	When either of following conditions detected: 1. Vehicle speed 3.1 mph (5 km/h) or more and IG voltage 10.5 V or more 2. No communication with ECM continues for 3 seconds or more (Communication with neither ECM nor skid control ECU for 60 seconds or more)	• CAN communication system • ECM

WIRING DIAGRAM

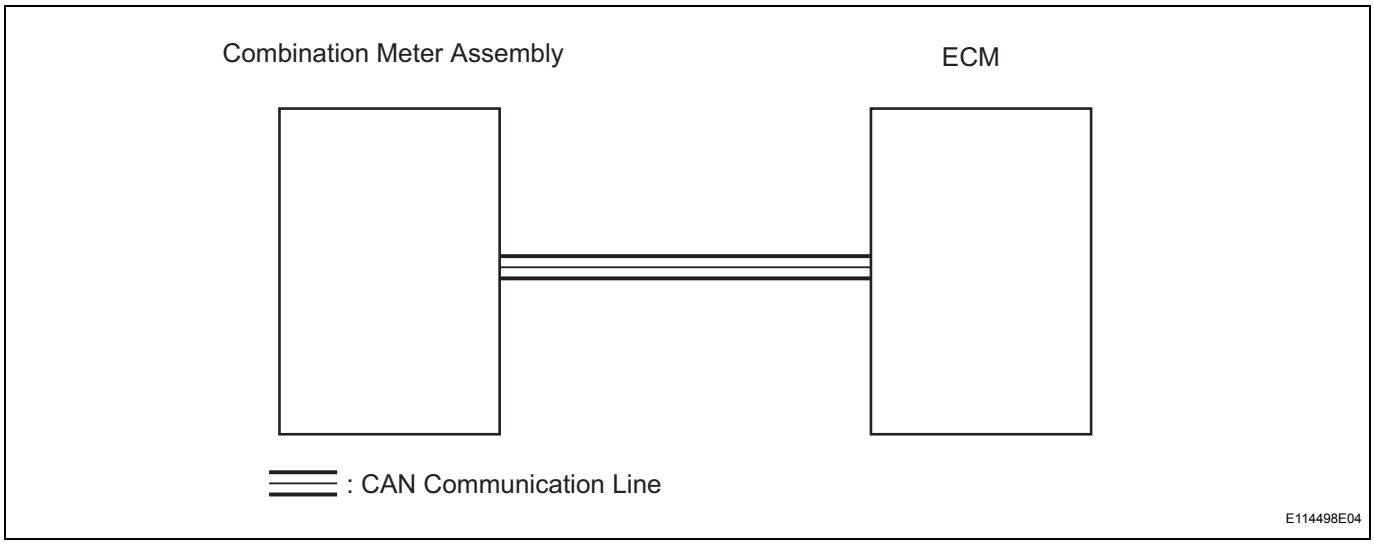

INSPECTION PROCEDURE

1	CONFIRM DTC OUTPUT

(a) Connect the intelligent tester with CAN VIM to the DLC3.
(b) Turn the ignition switch ON and turn the tester ON.
(c) Clear the stored DTCs by selecting the following menu items on the tester: DIAGNOSIS/ OBD/MOBD/ METER/ DTC INFO /CLEAR CODES.
(d) Drive the vehicle at more than 3.1 mph (5 km/h) for at least 60 seconds.
(e) Stop the vehicle.
(f) Check for DTCs.

Result

Result	Proceed to
DTC output	A
DTC not output	B

B	SYSTEM IS OK

A

GO TO CAN COMMUNICATION SYSTEM

DTC	U0129	Lost Communication with Skid Control ECU

DESCRIPTION

The combination meter assembly receives signals from the skid control ECU through the CAN communication system.

DTC No.	DTC Detecting Conditions	Trouble Areas
U0129	When either of following conditions detected: 1. 15 seconds have elapsed since engine started and IG voltage 10.5 V or more 2. No communication with skid control ECU continues for 3 seconds or more (Communication with neither ECM nor skid control ECU for 60 seconds or more)	• Skid control ECU • CAN communication system

WIRING DIAGRAM

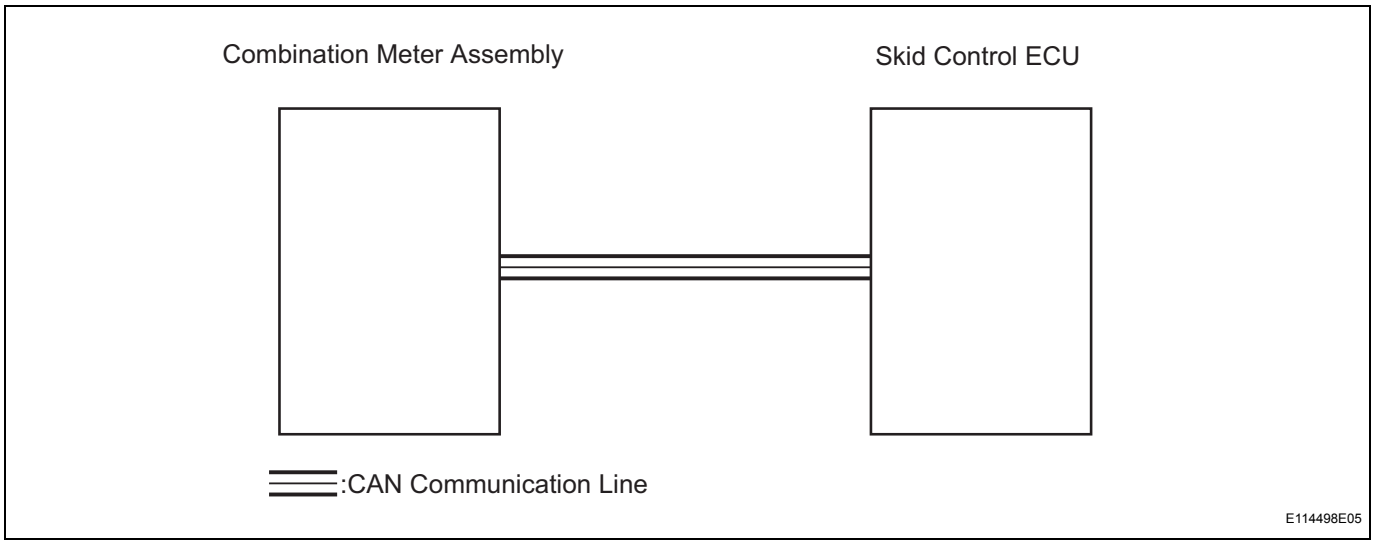

INSPECTION PROCEDURE

1	CONFIRM DTC OUTPUT

(a) Connect the intelligent tester with CAN VIM to the DLC3.
(b) Turn the ignition switch ON and turn the tester ON.
(c) Clear the stored DTCs by selecting the following menu items on the tester: DIAGNOSIS/ OBD/MOBD/ METER/ DTC INFO /CLEAR CODES.
(d) Start the engine and wait for at least 60 seconds.
(e) Check for DTCs.

Result

Result	Proceed to
DTC output	A
DTC not output	B

B	SYSTEM IS OK

A

GO TO CAN COMMUNICATION SYSTEM

Entire Combination Meter does not Operate

DESCRIPTION

This circuit provides power to the combination meter assembly.

WIRING DIAGRAM

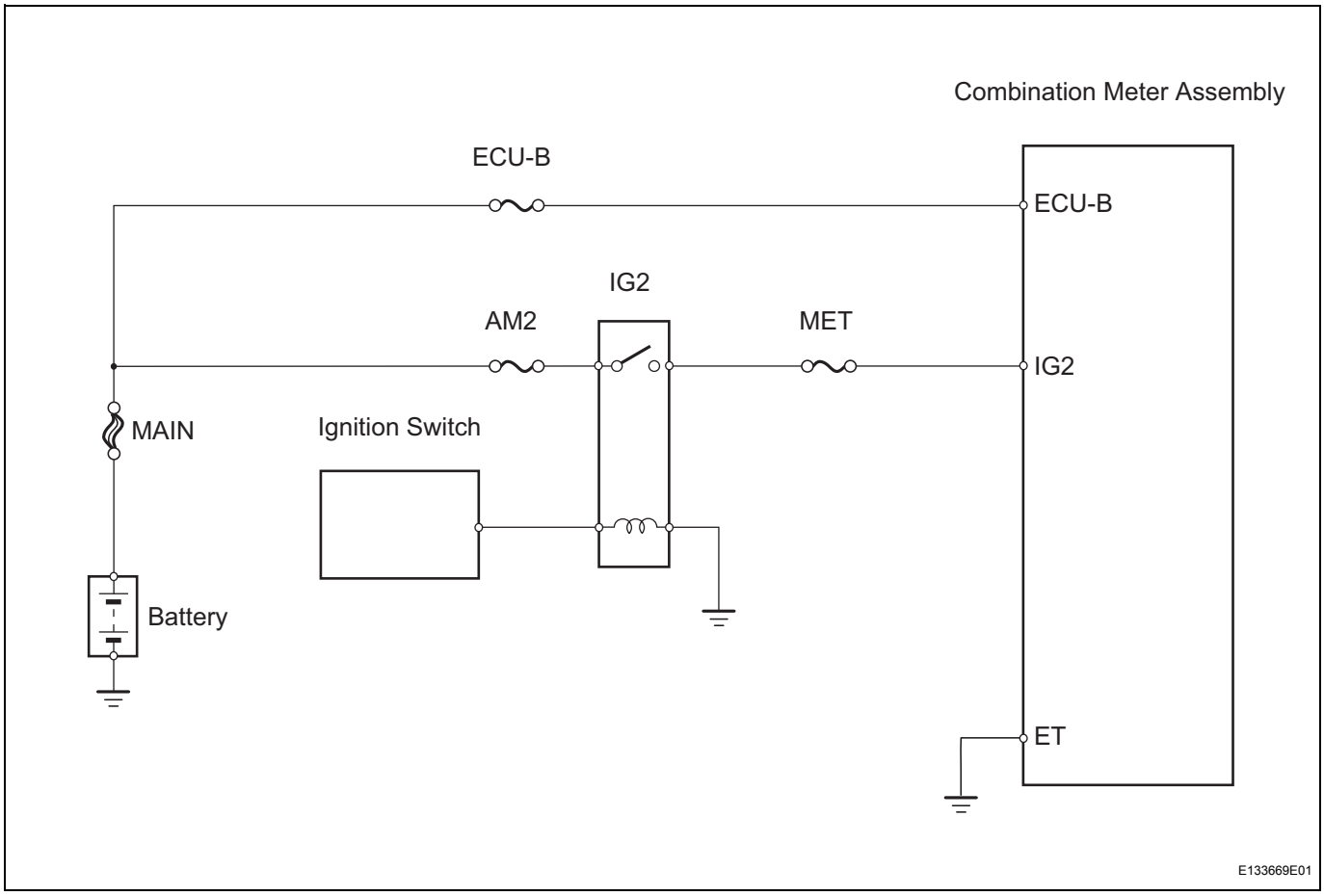

ME

INSPECTION PROCEDURE

1	CHECK FUSE (ECU-B, MET)

Engine Room R/B:

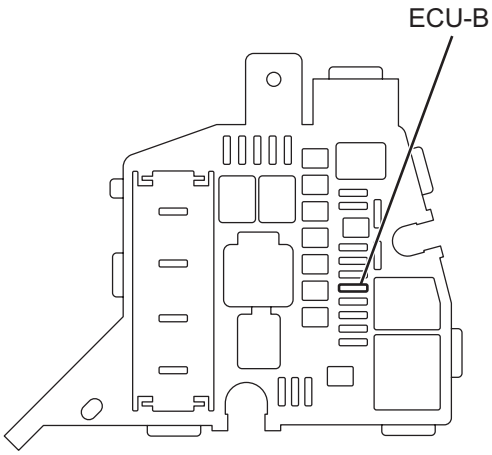

Main Body ECU:

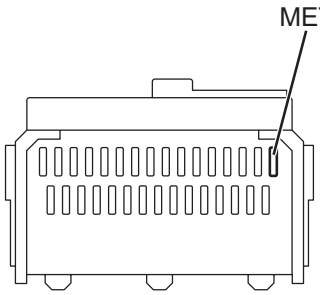

O

E117120E01

(a) Remove the ECU-B fuse from the engine room relay block.
(b) Remove the MET fuse from the main body ECU.
(c) Measure the resistance.
Standard Resistance:
Below 1Ω
(d) Reinstall the fuse.

NG → **CHECK SHORT CIRCUIT IN COMPONENTS AND WIRES CONNECTED TO FUSE**

OK

ME

2	INSPECT COMBINATION METER ASSEMBLY

Wire Harness Side:

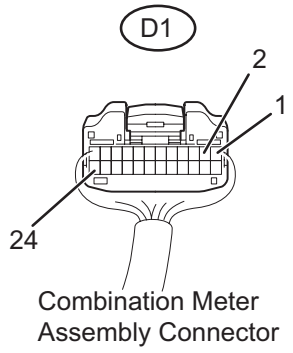

E114496E06

(a) Disconnect the D1 combination meter connector.
(b) Measure the resistance.
Standard resistance

Tester Connection	Condition	Specified Condition
ET (D1-24) - Body ground	Always	Below 1 Ω

(c) Measure the voltage.
Standard voltage

Tester Connection	Condition	Specified Condition
IG2 (D1-1) - Body ground	Ignition switch ON	11 to 14V
ECU-B (D1-2) - Body ground	Always	11 to 14V

(d) Reconnect the combination meter connector.

ME

NG → **REPAIR OR REPLACE HARNESS AND CONNECTOR**

OK

REPLACE COMBINATION METER ASSEMBLY

Speedometer Malfunction

DESCRIPTION

w/o ABS:

The combination meter assembly controls the speedometer in accordance with vehicle speed signals from the speedometer sensor.

w/ ABS:

The combination meter assembly controls the speedometer in accordance with vehicle speed signals from the brake actuator through the CAN communication system.

WIRING DIAGRAM

w/o ABS:

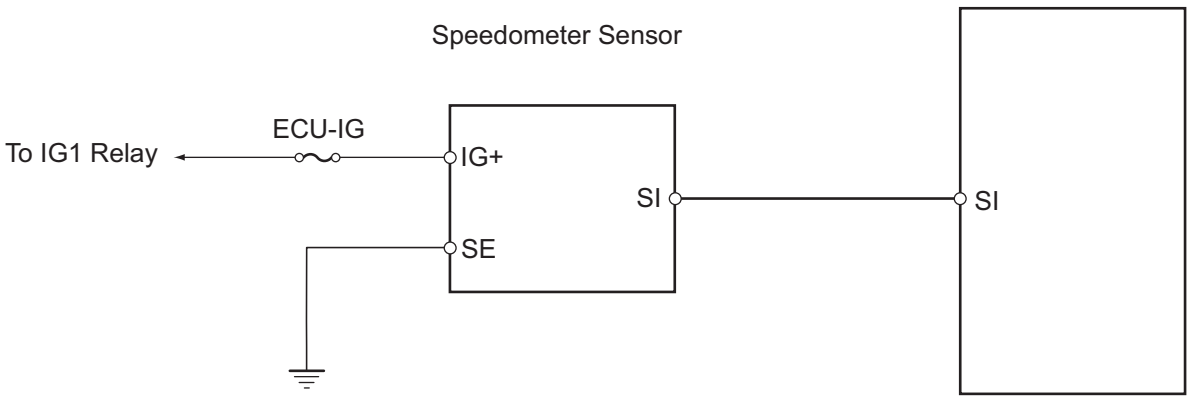

w/ ABS:

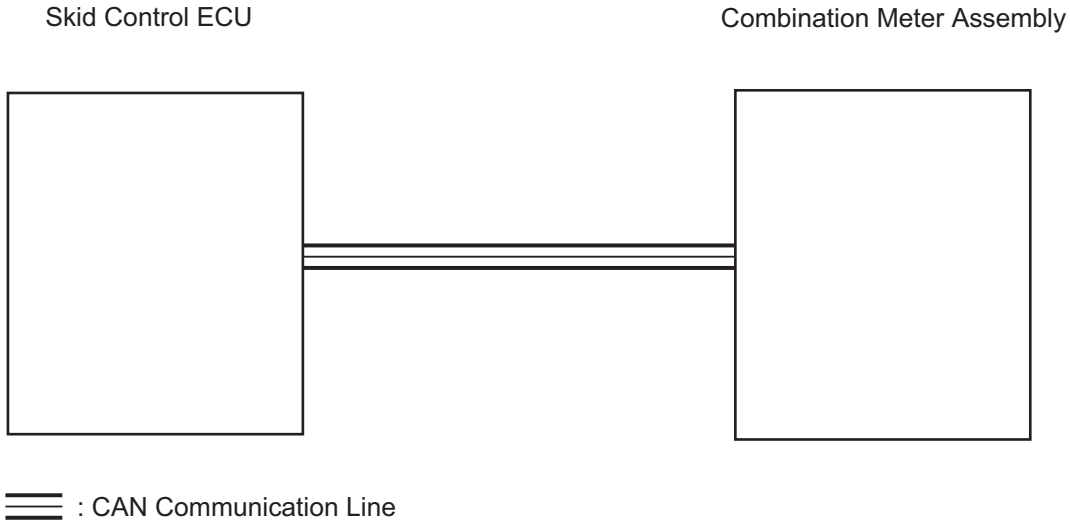

E133670E01

ME

INSPECTION PROCEDURE

HINT:
If DTC U0129 has been stored, troubleshoot the CAN communication system first.

1	PERFORM ACTIVE TEST BY INTELLIGENT TESTER (SPEED METER)

(a) Connect the intelligent tester with CAN VIM to the DLC3.
(b) Turn the ignition switch ON and turn the tester ON.
(c) Enter the following menus : DIAGNOSIS / METER / ACTIVE TEST.

METER

Item	Test Details	Diagnostic Note
SPEED METER	0 / 40(24) / 80(48) / 120(72) / 160(96) / 200(120) / 240(144) km/h (mph)	-

OK:
Vehicle speed displayed on the tester is approximately the same as that of the speedometer reading.

NG → **REPLACE COMBINATION METER ASSEMBLY**

OK

2	CHECK BRAKE CONTROL SYSTEM

(a) Check the brake control system.
Result

Brake Control System	Proceed to
w/ ABS	A
w/o ABS	B

B → **Go to step 4**

A

3	READ VALUE OF INTELLIGENT TESTER (SPEED METER)

(a) Connect the intelligent tester with CAN VIM to the DLC3.
(b) Turn the ignition switch ON and the tester ON.
(c) Select the item below from the Data List, and read the value displayed on the intelligent tester.

METER

Item	Measurement Item / Range(Display)	Normal Condition	Diagnostic Note
SPEED METER	Vehicle speed / Min.: 0 km/h (0mph), Max.: 255 km/h(158mph)	Approximately same as actual vehicle speed (When vehicle is driven)	-

OK:
Vehicle speed displayed on the tester is approximately the same as the actual vehicle speed.

NG → **GO TO BRAKE CONTROL SYSTEM**

OK

REPLACE COMBINATION METER ASSEMBLY

4	INSPECT SPEEDOMETER SENSOR

Component Side:

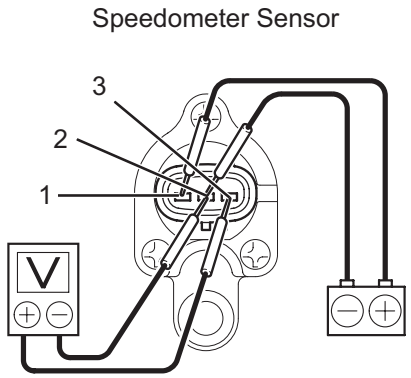

(a) Remove the speedometer sensor.
(b) Connect the positive (+) lead from the battery to terminal 1 and the negative(-) lead to terminal 2.
(c) Connect the positive (+) lead from the tester to terminal 3 and the negative (-) lead to terminal 2.
(d) Rotate the shaft.
(e) Check that the voltage output between terminals 2 and 3 varies between 0V and 11V.
(f) Reinstall the speedometer sensor.

NG → **REPLACE SPEEDOMETER SENSOR**

OK

ME

5	CHECK HARNESS AND CONNECTOR (SPEEDOMETER SENSOR - COMBINATION METER ASSEMBLY)

Wire Harness Side:

Speedometer Sensor Connector

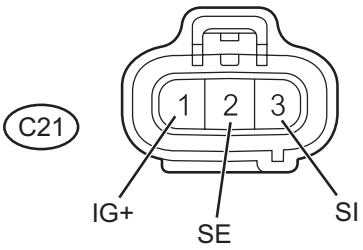

Combination Meter Assembly Connector

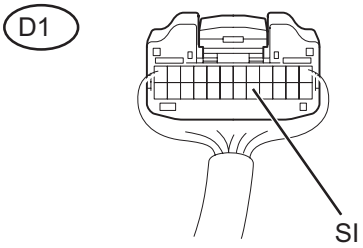

E117013E02

(a) Disconnect the D1 combination meter assembly connector.
(b) Disconnect the C21 speedometer sensor connector.
(c) Measure the resistance
Standard resistance

Tester Connection	Specified Condition
D1-17 (SI) - C21-3 (SI)	Below 1 Ω
C21-2 (SE) - Body ground	Below 1 Ω

(d) Reconnect the combination meter assembly connector.
(e) Measure the voltage
Standard voltage

Tester Connection	Condition	Specified Condition
C21-1 (IG+) - Body ground	Ignition switch ON	11 to 14V

(f) Reconnect the combination meter assembly and speedometer sensor connectors.

NG → **REPAIR OR REPLACE HARNESS OR CONNECTOR**

OK

REPLACE COMBINATION METER ASSEMBLY

ME

Fuel Gauge Malfunction

DESCRIPTION

The combination meter assembly controls the fuel receiver gauge in accordance with the resistance of the fuel sender gauge that varies depending on the fuel remaining amount in the fuel tank.

WIRING DIAGRAM

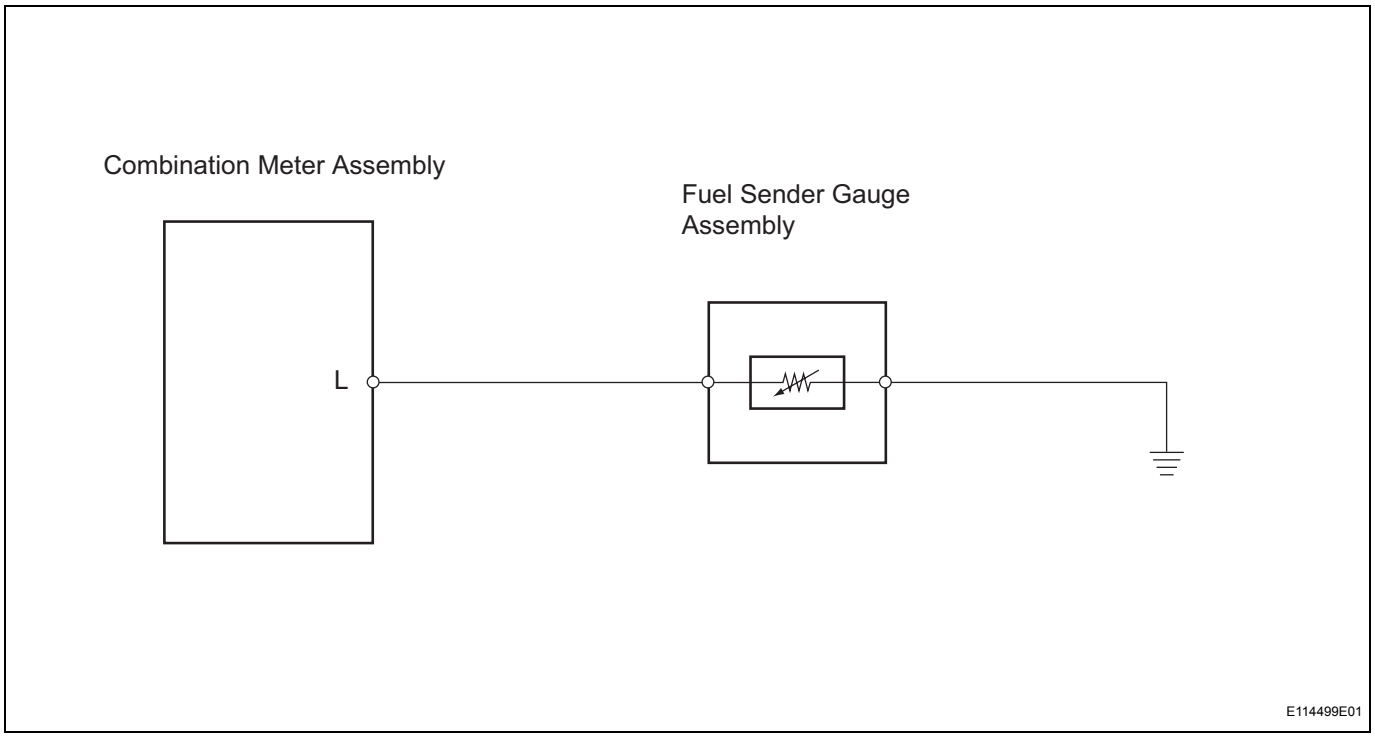

INSPECTION PROCEDURE

1	PERFORM ACTIVE TEST BY INTELLIGENT TESTER (FUEL GAUGE)

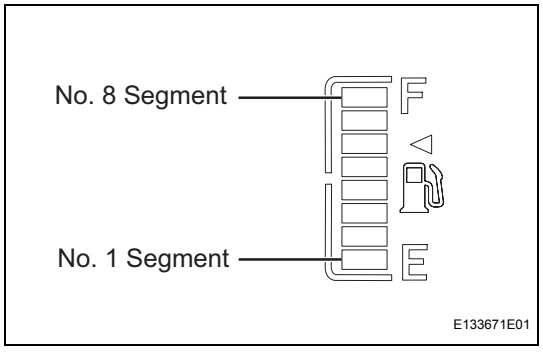

(a) Connect the intelligent tester to the DLC3.
(b) Turn the ignition switch ON and turn the tester ON.
(c) Enter the following menus: DIAGNOSIS / METER / ACTIVE TEST.

METER

Item	Test Details	Diagnostic Note
FUEL GAUGE	EMPTY: Segment No.1 flashes 1/2: Segments No.1 to 4 illuminate FULL: Segments No.1 to 8 illuminate	-

OK:

Fuel receiver gauge segments are illuminated in accordance with the tester instructions.

NG → **REPLACE COMBINATION METER ASSEMBLY**

OK

2 READ VALUE OF INTELLIGENT TESTER (FUEL GAUGE)

(a) Connect the intelligent tester to the DLC3.
(b) Turn the ignition switch ON and turn the tester ON
(c) Select the item below from the Data List, and read the value displayed on the intelligent tester.

METER

Item	Measurement Item/Range (Display)	Normal Condition	Diagnostic Note
FUEL GAUGE (A/D)	Fuel input signal / Min.: 0, Max.: 255	Fuel receiver gauge segments No.1 to No.8 illuminate: 14 to 34 No.1 to No.6 (No7) illuminate: 77 to 109 No.1 to No.4 (No,5) illuminate: 135 to 172 No.1 and No.2 illuminate: 175 to 188 No.1 flashes: 194 to 200	-

OK:
Fuel input signal displayed on the tester is approximately the same as indication.

NG → **REPAIR OR REPLACE HARNESS OR CONNECTOR**

OK

3 CHECK COMBINATION METER ASSEMBLY

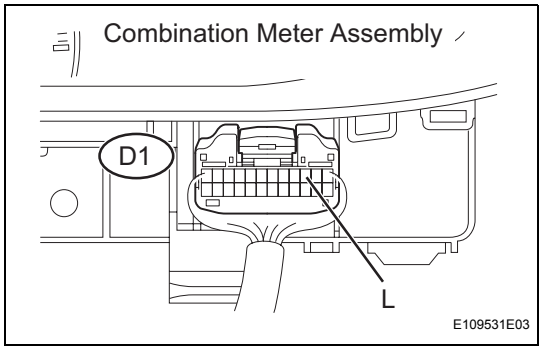

(a) Disconnect the J5 fuel sender gauge assembly connector.
(b) Remove the combination meter assembly with its connectors connected.
(c) Measure the voltage.
Standard voltage

Tester Connection	Condition	Specified Condition
D1-3 (L) - Body ground	Ignition switch ON	11 to 14V

(d) Reconnect the fuel sender gauge assembly connector.
(e) Reinstall the combination meter assembly.

NG → **REPAIR OR REPLACE HARNESS OR CONNECTOR**

OK

4	INSPECT FUEL SENDER GAUGE ASSEMBLY

(a) Remove the fuel sender gauge assembly.

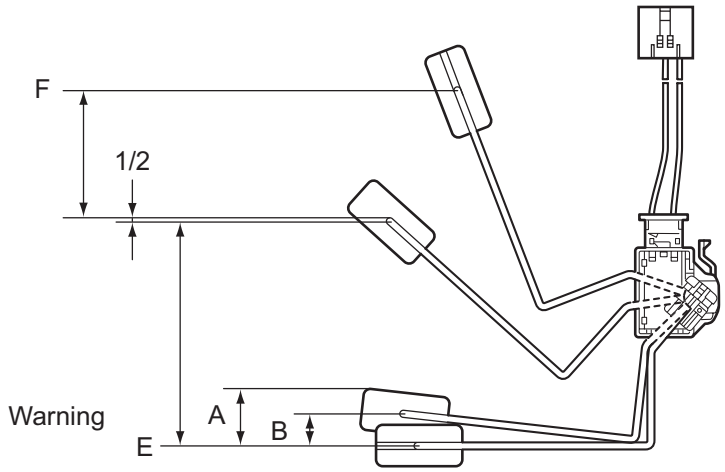

H

E114508E02

(b) Check that the float position is between E and F.

(c) Measure the resistance between terminals 2 and 1 of the fuel sender gauge connector.

Standard resistance

Float Level	Float Positioin (mm (in.))	Specified Condition
F	77.3 (3.04) to 79.3 (3.12)	12.0 Ω to 18.0 Ω
1/2	1.6 (0.05)	208.3 Ω
Warning A	34.8 (1.37)	365.2 Ω
Warning B	25.3 (1.00)	388.2 Ω
E	75.0 (2.95) to 77.0 (3.03)	405.0 Ω to 415.0 Ω

(d) Reinstall the fuel sender gauge assembly.

NG → **REPLACE FUEL SENDER GAUGE ASSEMBLY**

OK

ME

5	CHECK WIRE HARNESS AND CONNECTOR (COMBINATION METER ASSEMBLY - FUEL SENDER GAUGE ASSEMBLY)

Wire Harness Side:

Combination Meter Assembly Connector

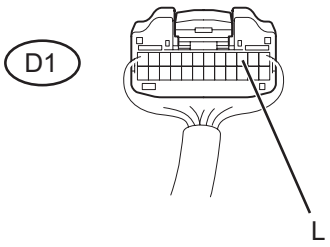

Fuel Sender Gauge Assembly Connector

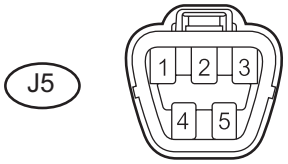

Front View

E117128E06

(a) Disconnect the D1combination meter assembly connector.
(b) Disconnect the J5 fuel sender gauge assembly connector.
(c) Measure the resistance.
Standard resistance

Tester Connection	Specified Condition
D1-3 (L) - J5-2	Below 1Ω
J5-3 - Body ground	Below 1Ω

(d) Reconnect the combination meter assembly and fuel sender gauge assembly connectors.

NG → **REPAIR OR REPLACE HARNESS OR CONNECTOR**

OK

REPLACE COMBINATION METER ASSEMBLY

ME

Malfunction in Water Temperature Warning Light

DESCRIPTION

The combination meter assembly controls both the engine coolant temperature warning light and indicator light in accordance with engine coolant temperature signals from the ECM.
The engine coolant temperature indicator light turns off when the engine coolant temperature exceeds 55°C (131°F) and illuminates when the temperature decreases to below 45°C (113°F).
The engine coolant temperature warning light flashes when the engine coolant temperature reaches 117°C (242.6°F) and illuminates when the temperature exceeds 120°C (248°F). When the temperature decreases to 119.5°C (247.1°F) while the warning light is illuminated, the warning light begins to flashing. In addition, when the temperature decreases to below 116.5°C(241.7°F) the warning light turns off.

WIRING DIAGRAM

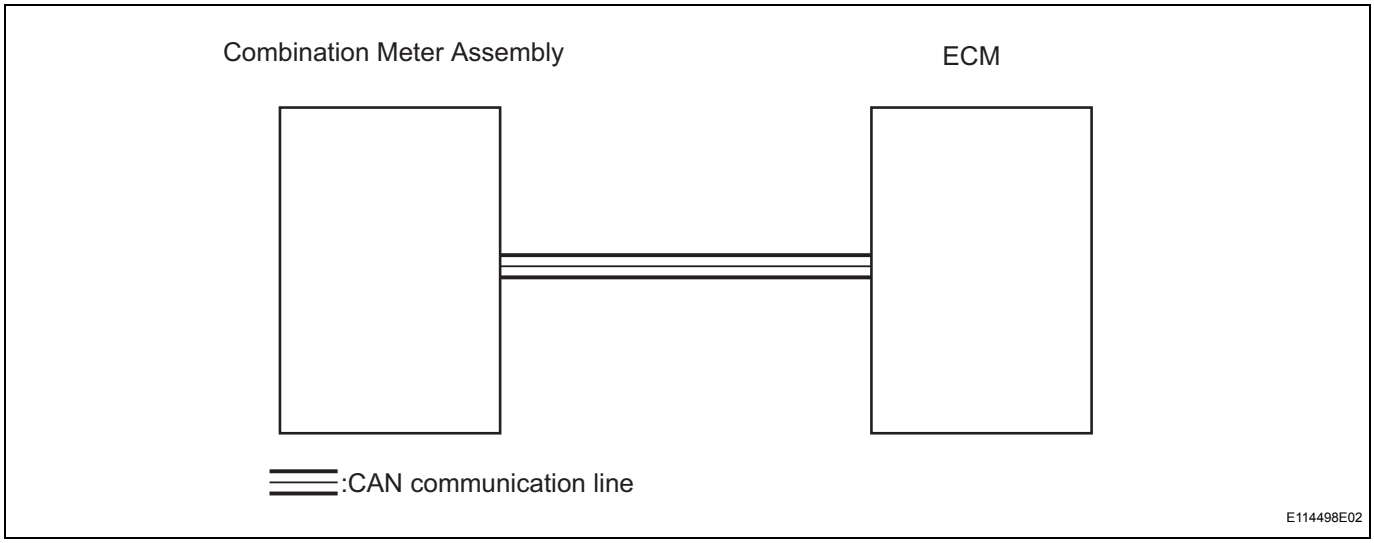

INSPECTION PROCEDURE

HINT:
- If DTC U0100 has been stored, troubleshoot the CAN communication system first.
- If there is an open or short in the engine coolant temperature sensor circuit, an SFI system DTC is output. If output, perform troubleshooting on the SFI system.

1	PERFORM ACTIVE TEST BY INTELLIGENT TESTER (COOLANT HOT)

(a) Connect the intelligent tester with CAN VIM to the DLC3.
(b) Turn the ignition switch ON and turn the tester ON.
(c) Enter the following menus: DIAGNOSIS/ METER/ ACTIVE TEST

METER

Item	Test Details	Diagnostic Note
COOLANT HOT	ON: Engine coolant temperature warning light flashes OFF: Engine coolant temperature warning light turns off	-
COOLANT COOL	ON: Engine coolant temperature indicator light flashes OFF: Engine coolant temperature indicator light turns off	-

Item	Test Details	Diagnostic Note
COOLANT TEMP	HIGH: Engine coolant temperature warning light flashes NORMAL: Engine coolant temperature warning light and indicator light turn off LOW: Engine coolant temperature indicator light illuminates	-

OK:

Both the engine coolant temperature warning light and indicator light are operated in accordance with the tester instructions.

NG → **REPLACE COMBINATION METER ASSEMBLY**

OK

2	READ VALUE OF INTELLIGENT TESTER (COOLANT TEMP)

ME

(a) Connect the intelligent tester with CAN VIM to the DLC3.
(b) Turn the ignition switch ON and turn the tester ON.
(c) Select the item below from the Data List, and read the value displayed on the intelligent tester.

METER

Item	Measurement Item/Range (Display)	Normal Condition	Diagnostic Note
COOLANT TEMP	Engine coolant temperature / Min.: 0°C,Max.: 127.5°C	After warming up: 75 to 105°C (167 to 221°F)	-

HINT:

- If the value is 0°C (32°F), the sensor circuit is open.
- If the value is 127.5°C (262°F), the sensor circuit is shorted.

OK:

Coolant temperature displayed on the tester is between 75°C (167°F) and 105°C (221°F) after warming up.

NG → **GO TO SFI SYSTEM**

OK

REPLACE COMBINATION METER ASSEMBLY

Warning Buzzer does not Sound

DESCRIPTION

The combination meter assembly controls the buzzers in accordance with signals from the center airbag sensor assembly, the main body ECU and the taillight relay.
HINT:
The main body ECU receives signals from the center airbag sensor assembly and transmits them to the combination meter assembly.

WIRING DIAGRAM

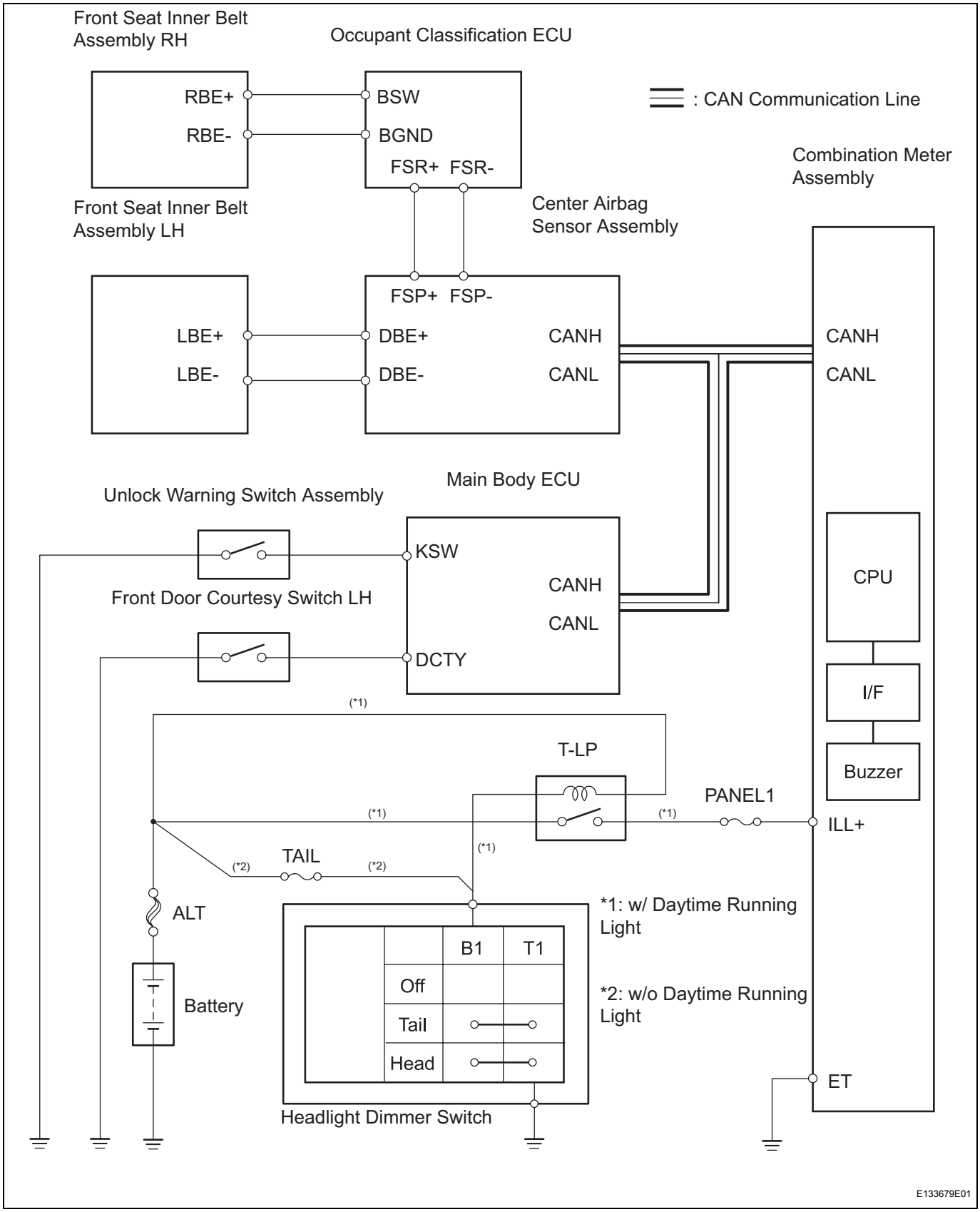

INSPECTION PROCEDURE

1	CHECK BUZZER (SEAT BELT, KEY REMINDER, TAILLIGHT REMINDER)

(a) Check that the seat belt, key reminder and taillight reminder warning buzzers sound.

Result

Result	Proceed to
Seat belt warning buzzer does not sound (where equipped with seat belt warning system)	A
Key reminder warning buzzer does not sound (where equipped with key reminder warning system)	B
Taillight reminder warning buzzer does not sound (Meter illuminations normal)	C
No warning buzzers sound	D

HINT:

- Seat belt warning buzzer on: Ignition switch is ON, driver or front passenger seat belt is unfastened, and vehicle speed is 12.4mph (20 km/h) or more.
- Key reminder warning buzzer on: Ignition switch is OFF, key is in ignition key cylinder, and driver side door is open.
- Taillight reminder warning buzzer on: Ignition switch is OFF, taillight relay switch is ON, and driver side door is open.

ME

B → Go to step 5

C → Go to step 11

D → REPLACE COMBINATION METER ASSEMBLY

A

2	CHECK SUPPLEMENTAL RESTRAINT SYSTEM

(a) Connect the intelligent tester with CAN VIM to the DLC3.
(b) Turn the ignition switch ON and turn the tester ON.
(c) Enter the following menus: DIAGNOSIS / SRS AIRBAG/ DTC INFO.

Result

Result	Proceed to
No SRS DTCs are output	A
SRS DTCs are output	B

B → GO TO SUPPLEMENTAL RESTRAINT SYSTEM

A

3	CHECK OCCUPANT CLASSIFICATION SYSTEM

(a) Connect the intelligent tester with CAN VIM to the DLC3.
(b) Turn the ignition switch ON and turn the tester ON.
(c) Enter the following menus: DIAGNOSIS / OCCUPANT DETECT /DTC INFO.

Result

Result	Proceed to
No occupant classification system DTCs are output	A
Occupant classification system DTCs are output	B

B → **GO TO OCCUPANT CLASSIFICATION SYSTEM**

A

ME

4	CHECK KEY REMINDER FUNCTION

(a) Ignition switch is OFF.
(b) Key is in ignition key cylinder.
(c) Driver side door is open.

OK:

Key reminder warning buzzer ON.

OK → **REPLACE MAIN BODY ECU**

NG

REPLACE COMBINATION METER ASSEMBLY

5	READ VALUE OF INTELLIGENT TESTER (FRONT DOOR COURTESY SWITCH (DRIVER SIDE))

(a) Connect the intelligent tester with CAN VIM to the DLC3.
(b) Turn the ignition switch ON and turn the tester ON.
(c) Select the item below from the Data List, and read the value displayed on the intelligent tester.

MAIN BODY ECU

Item	Measurement Item / Display (Range)	Normal Condition	Diagnostic Note
D DOR CTY SW	Driver side door courtesy switch signal / ON or OFF	ON: Driver door is open OFF: Driver door is closed	-

NG → **Go to step 9**

OK

6	READ VALUE OF INTELLIGENT TESTER (UNLOCK WARNING SWITCH)

(a) Connect the intelligent tester with CAN VIM to the DLC3.
(b) Turn the ignition switch ON and turn the tester ON.
(c) Select the item below from the Data List, and read the value displayed on the intelligent tester.

MAIN BODY ECU

Item	Measurement Item / Display (Range)	Normal Condition	Diagnostic Note
KEY UNLK WRN SW	Unlock warning switch signal / ON or OFF	ON: Key is in ignition key cylinder OFF: No key is in ignition key cylinder	-

OK → REPLACE COMBINATION METER ASSEMBLY

NG

7	INSPECT UNLOCK WARNING SWITCH ASSEMBLY

Component Side:

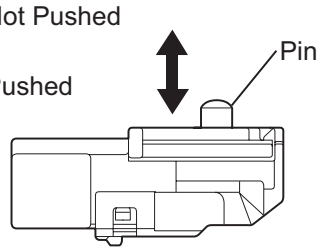

Unlock Warning Switch Assembly

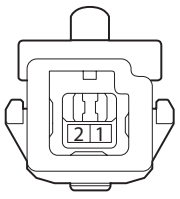

Y B117144E07

(a) Disconnect the D19 unlock warning switch assembly connector.
(b) Remove the unlock warning switch assembly.
(c) Measure the resistance.
Standard resistance

Tester Connection	Condition	Specified Condition
1 - 2	Not pushed	10 kΩ or higher
1 - 2	Pushed	Below 1 Ω

(d) Reconnect the unlock warning switch assembly.

NG → REPLACE UNLOCK WARNING SWITCH ASSEMBLY

OK

8	CHECK HARNESS AND CONNECTOR (UNLOCK WARNING SWITCH ASSEMBLY - MAIN BODY ECU)

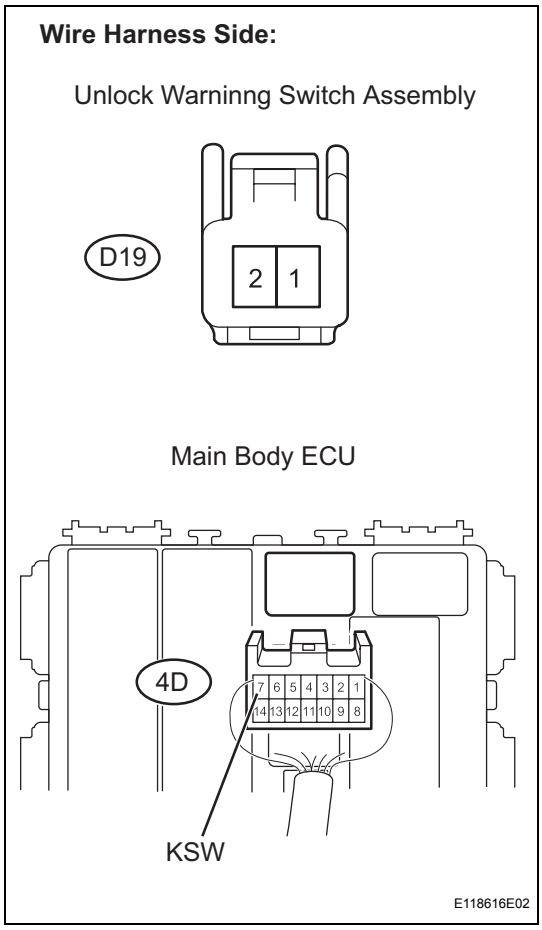

(a) Disconnect the D19 unlock warning switch connector.
(b) Disconnect the 4D main body ECU connector.
(c) Measure the resistance.

Standard resistance

Tester Connection	Specified Condition
D19-1 - 4D-7 (KSW)	Below 1 Ω
D19-2 - Body ground	Below 1 Ω

(d) Reconnect the unlock warning switch connector.
(e) Reconnect the main body ECU connector.

NG → **REPAIR OR REPLACE HARNESS OR CONNECTOR**

OK

REPLACE MAIN BODY ECU

9	INSPECT FRONT DOOR COURTESY SWITCH (DRIVER SIDE)

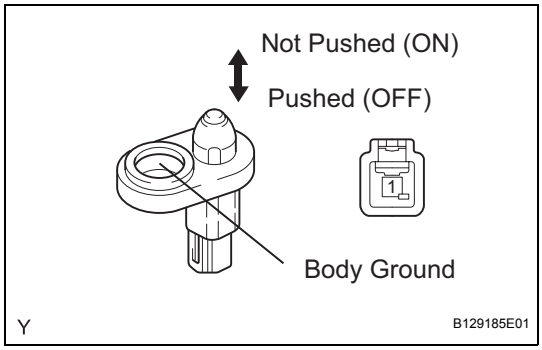

(a) Disconnect the J2 front door courtesy switch connector.
(b) Measure the resistance.

Standard resistance

Tester Connection	Condition	Specified Condition
J2-1 - Body ground	Not pushed (ON)	Below 1 Ω
J2-1 - Body ground	Pushed (OFF)	10 kΩ or higher

(c) Reconnect the front door courtesy switch connector.

NG → **REPLACE FRONT DOOR COURTESY SWITCH (DRIVER SIDE)**

OK

10	CHECK HARNESS AND CONNECTOR (FRONT DOOR COURTESY SWITCH - MAIN BODY ECU)

Wire Harness Side:

Front Door Courtesy Light Switch Connector (Driver Side)

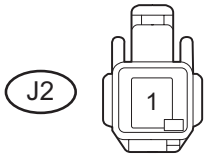

Front View

Main Body ECU Connector

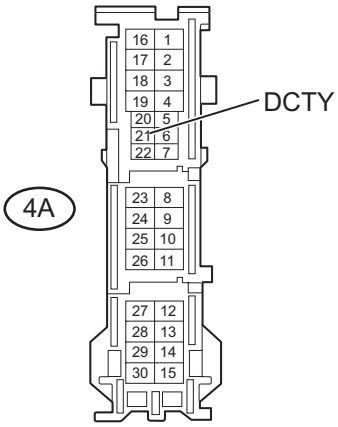

Front View

Y

B112021E02

(a) Disconnect the J2 front door courtesy switch connector.
(b) Disconnect the 4A main body ECU connector.
(c) Measure the resistance.

Standard resistance

Tester Connection	Specified Condition
J2-1 - 4A-21 (DCTY)	Below 1 Ω

(d) Reconnect the front door courtesy switch connector.
(e) Reconnect the main body ECU connector.

NG → **REPAIR OR REPLACE HARNESS OR CONNECTOR**

OK

REPLACE MAIN BODY ECU

11	READ VALUE OF INTELLIGENT TESTER (FRONT DOOR COURTESY SWITCH)

(a) Connect the intelligent tester with CAN VIM to the DLC3.
(b) Turn the ignition switch ON and turn the tester ON.
(c) Select the item below from the Data List, and read the value displayed on the intelligent tester.

ME

MAIN BODY ECU

Item	Measurement Item / Display (Range)	Normal Condition	Diagnostic Note
D DOR CTY SW	Driver door courtesy switch signal / ON or OFF	ON: Driver door is open OFF: Driver door is closed	-

NG → Go to step 12

OK

REPLACE COMBINATION METER ASSEMBLY

12 INSPECT FRONT DOOR COURTESY SWITCH (DRIVER SIDE)

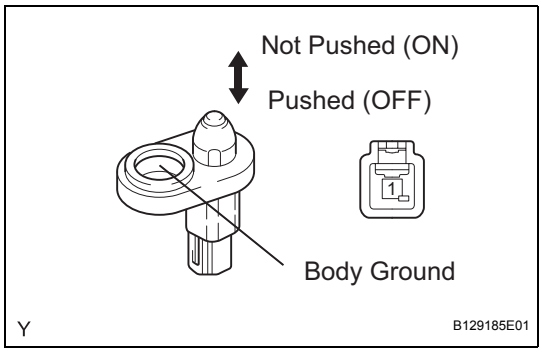

(a) Disconnect the J2 front door courtesy switch assembly connector.
(b) Measure the resistance.
Standard resistance

Tester Connection	Condition	Specified Condition
J2-1 - Body ground	Not pushed (ON)	Below 1 Ω
J2-1 - Body ground	Pushed (OFF)	10kΩ or higher

(c) Reconnect the front door courtesy switch connector.

NG → **REPLACE FRONT DOOR COURTESY SWITCH (DRIVER SIDE)**

OK

13	CHECK HARNESS AND CONNECTOR (FRONT DOOR COURTESY SWITCH - MAIN BODY ECU)

Wire Harness Side:

Front Door Courtesy Switch Connector (Driver Side)

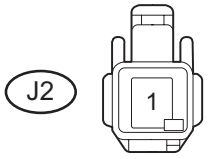

Front View

Main Body ECU Connector

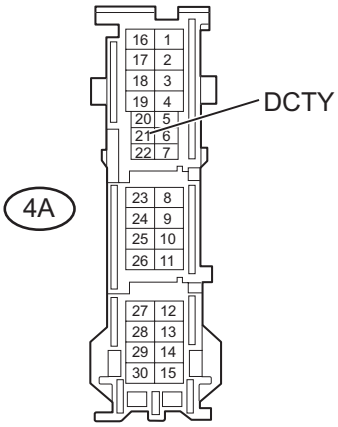

Front View

Y

B112021E08

(a) Disconnect the J2 front door courtesy switch connector.
(b) Disconnect the 4A main body ECU connector.
(c) Measure the resistance.

Standard resistance

Tester Connection	Specified Condition
J2-1 - 4A-21 (DCTY)	Below 1 Ω

(d) Reconnect the front door courtesy switch connector.
(e) Reconnect the main body ECU connector.

NG → **REPLACE FRONT DOOR COURTESY SWITCH (DRIVER SIDE)**

OK

REPLACE MAIN BODY ECU

ME

Driver Side Seat Belt Warning Light does not Operate

DESCRIPTION

When the ignition switch is ON, the center airbag sensor assembly communicates the status of the front seat inner belt assembly LH to the main body ECU using the CAN communication line. The main body ECU receives signals from the center airbag sensor assembly and transmits them to the combination meter assembly. When the seat belt is unfastened, the combination meter assembly flashes the driver seat belt warning light in the combination meter assembly. When the seat belt is fastened, the combination meter assembly stops flashing the front driver seat belt warning light.

WIRING DIAGRAM

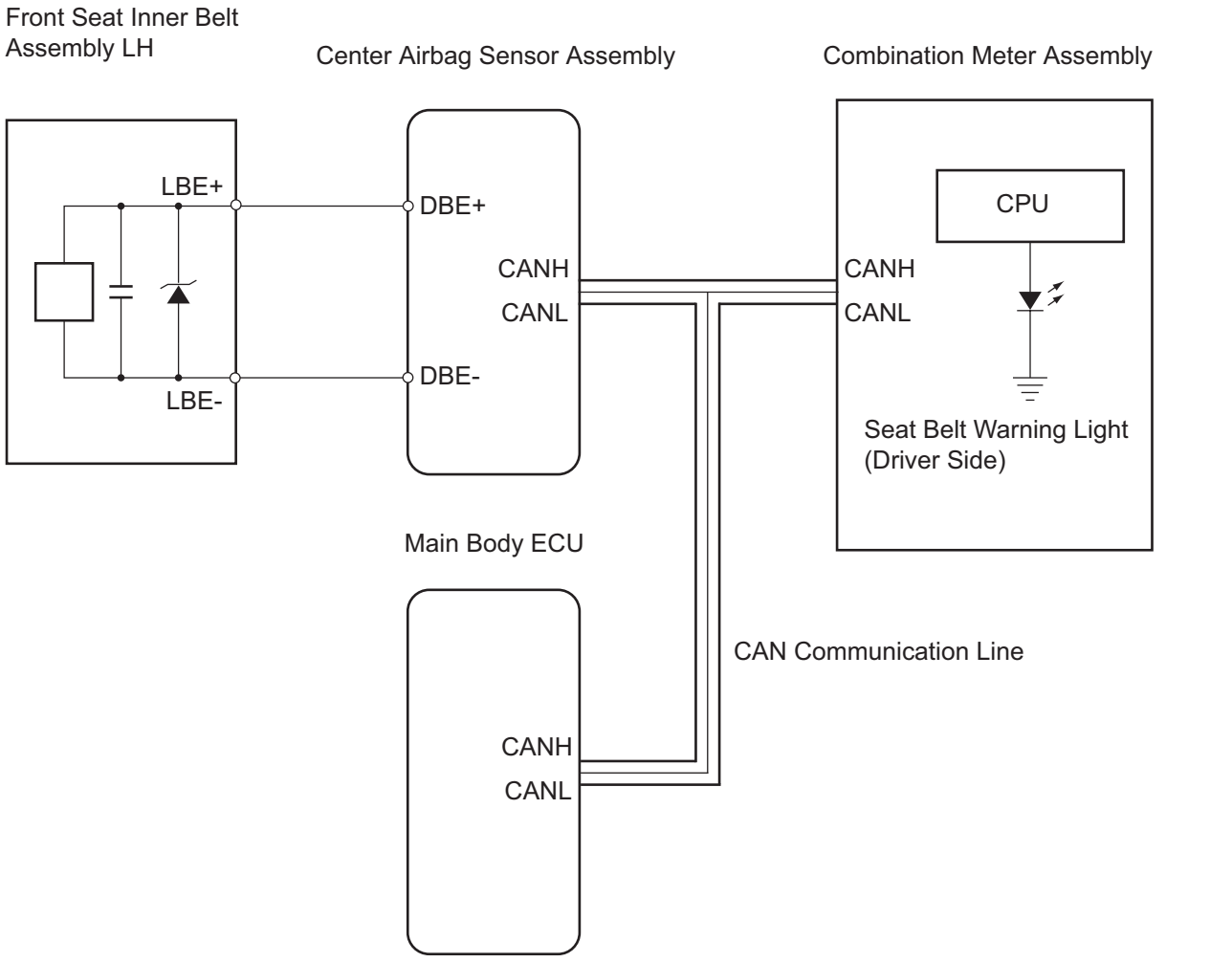

INSPECTION PROCEDURE

1	CHECK SUPPLEMENTAL RESTRAINT SYSTEM

(a) Connect the intelligent tester with the CAN VIM to the DLC3.
(b) Turn the ignition switch ON and turn the tester ON.

(c) Enter the following menus: DIAGNOSIS / SRS AIRBAG/ DTC INFO

Result

Result	Proceed to
No SRS DTCs are output	A
SRS DTCs are output	B

B → **GO TO SUPPLEMENTAL RESTRAINT SYSTEM**

A

2 PERFORM ACTIVE TEST BY INTELLIGENT TESTER (D-BELT REMIND)

(a) Connect the intelligent tester with the CAN VIM to the DLC3.
(b) Turn the ignition switch ON and turn the tester ON.
(c) Enter the following menus: DIAGNOSIS / METER / ACTIVE TEST

Combination Meter Assembly

Item	Test Details	Diagnostic Note
D-BELT REMIND	Front driver seat belt warning light / OFF or ON	Confirm that vehicle is stopped and engine is idling

OK:

Front driver seat belt warning light comes on.

OK → **REPLACE MAIN BODY ECU**

NG

REPLACE COMBINATION METER ASSEMBLY

ME

Front Passenger Side Seat Belt Warning Light Malfunction

DESCRIPTION

Refer to seat belt warning system (See page SB-24).

WIRING DIAGRAM

Refer to seat belt warning system (See page SB-25).

INSPECTION PROCEDURE

Refer to seat belt warning system (See page SB-25).

Operating Light Control Rheostat does not Change Light Brightness

DESCRIPTION

The combination meter assembly controls the combination meter illumination in accordance with the light control signals from the light control rheostat.

WIRING DIAGRAM

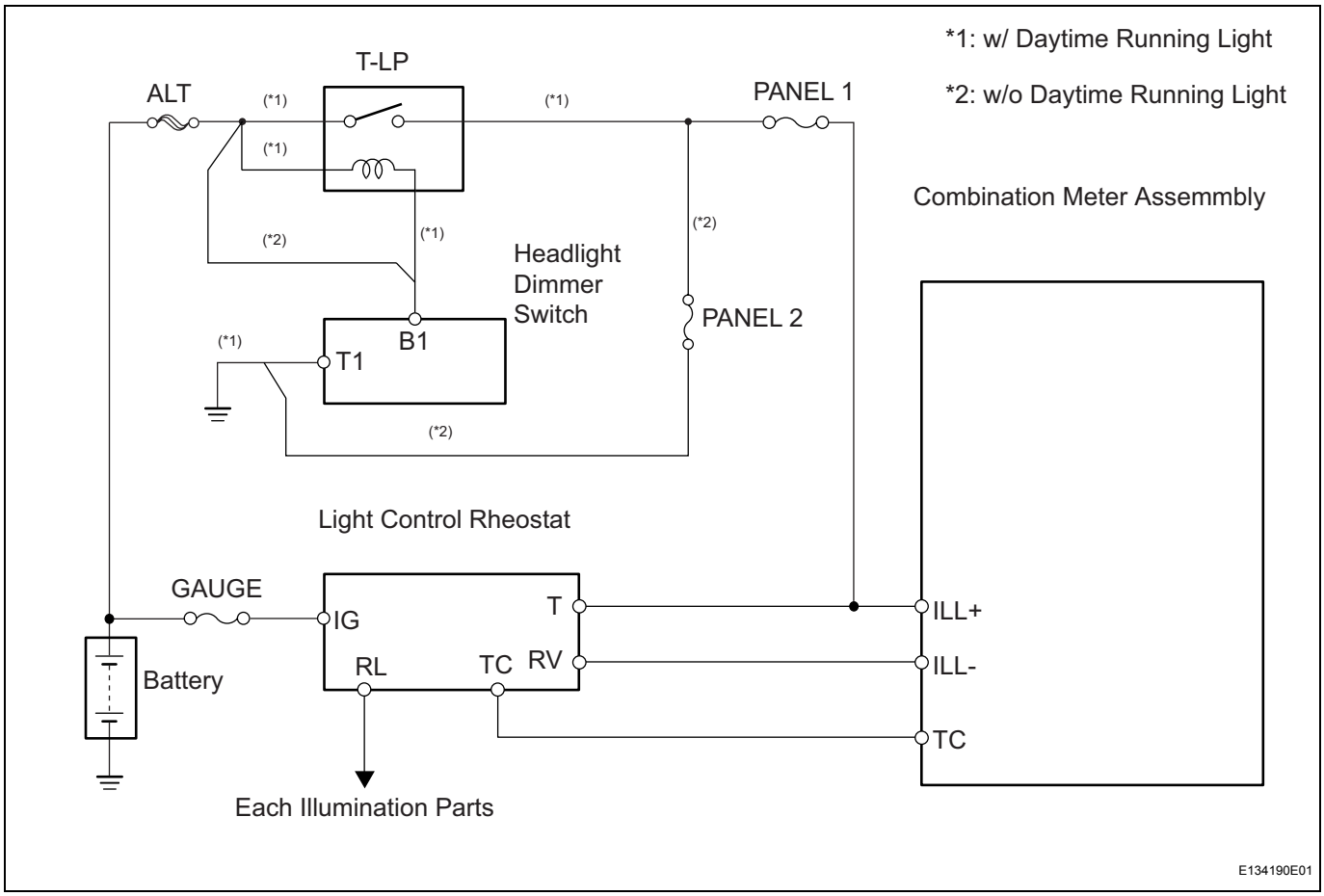

INSPECTION PROCEDURE

1	READ VALUE OF INTELLIGENT TESTER (RHEOSTAT)

(a) Connect the intelligent tester to the DLC3.
(b) Turn the ignition switch ON and turn the tester ON.
(c) Select the item below in the Data List, and read the value displayed on the intelligent tester.

METER

Item	Measurement Item / Range (Display)	Normal Condition	Diagnostic Note
RHEOSTAT (A/D)	Light control rheostat switch / Min.: 0, Max.: 255	Light brightness changes within specified range: Dark (0) to bright (255)	-

OK:
Light brightness can be changed within the specified range by actual operation.

NG → **Go to step 2**

OK

REPLACE COMBINATION METER ASSEMBLY

2 INSPECT FUSE (GAUGE)

(a) Remove the GAUGE fuse from the main body ECU.
(b) Measure the resistance.
OK:
Below 1 Ω
(c) Reinstall the GAUGE fuse.

NG → **REPLACE FUSE**

ME

OK

3 CHECK HARNESS AND CONNECTOR (FUSE (GAUGE) - LIGHT CONTROL RHEOSTAT)

Wire Harness Side:

Light Control Rheostat Connector

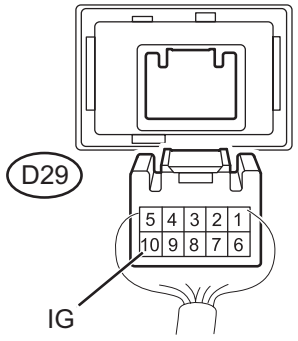

(a) Disconnect the D29 light control rheostat connector.
(b) Measure the voltage.
Standard voltage

Tester Connection	Condition	Specified Condition
D29-10 - Body ground	Ignition switch ON	11 to 14V

(c) Reconnect the light control rheostat connector.

OK → **Go to step 5**

NG

4	CHECK HARNESS AND CONNECTOR (MAIN BODY ECU - LIGHT CONTROL RHEOSTAT)

Wire Harness Side:

Light Control Rheostat Connector

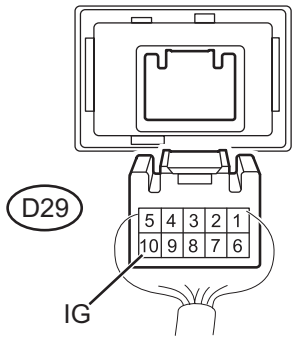

Main Body ECU Connector

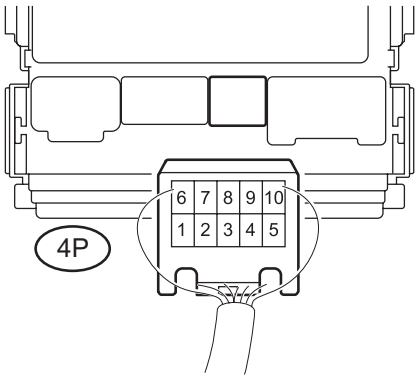

E118619E01

(a) Disconnect the D29 light control rheostat connector.
(b) Disconnect the 4P main body ECU connector.
(c) Measure the resistance.

Standard resistance

Tester	Condition	Specified Condition
D29-10 (IG)- 4P-1	Always	Below 1 Ω

(d) Reconnect the light control rheostat connector.
(e) Reconnect the main body ECU connector.

NG → **REPLACE MAIN BODY ECU**

OK

ME

5	INSPECT LIGHT CONTROL RHEOSTAT

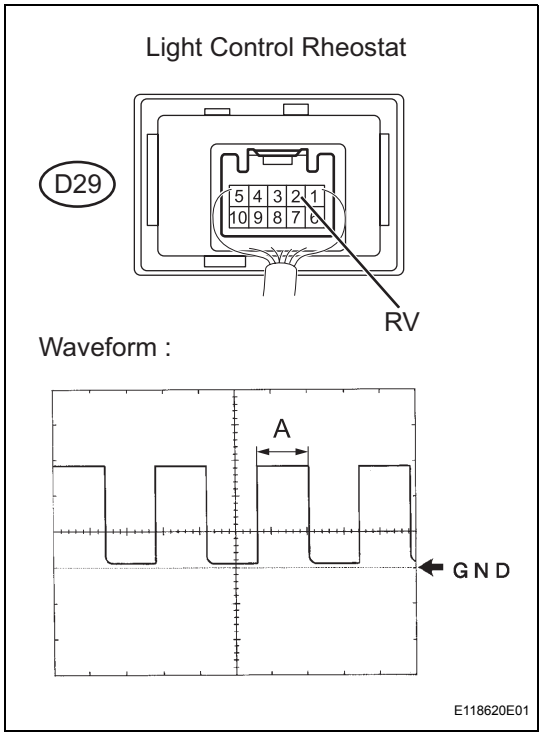

(a) Remove the light control rheostat but without disconnecting the connector.
(b) Turn the ignition switch ON.
(c) Using an oscilloscope, check the signal waveform of the light control rheostat.

Item	Contents
Terminal connection	D29-2 (RV) - Body ground
Tool setting	5V / DIV, 50ms / DIV
Vehicle condition	Ignition switch ON

OK:
Waveform is as shown in the illustration.
HINT:
Duty ratio changes as the illumination dims. (A becomes longer)

(d) Reinstall the light control rheostat.

NG → **REPLACE LIGHT CONTROL RHEOSTAT**

OK

ME

6	**CHECK HARNESS AND CONNECTOR (COMBINATION METER ASSEMBLY -Å@LIGHT CONTROL RHEOSTAT)**

Wire Harness Side:

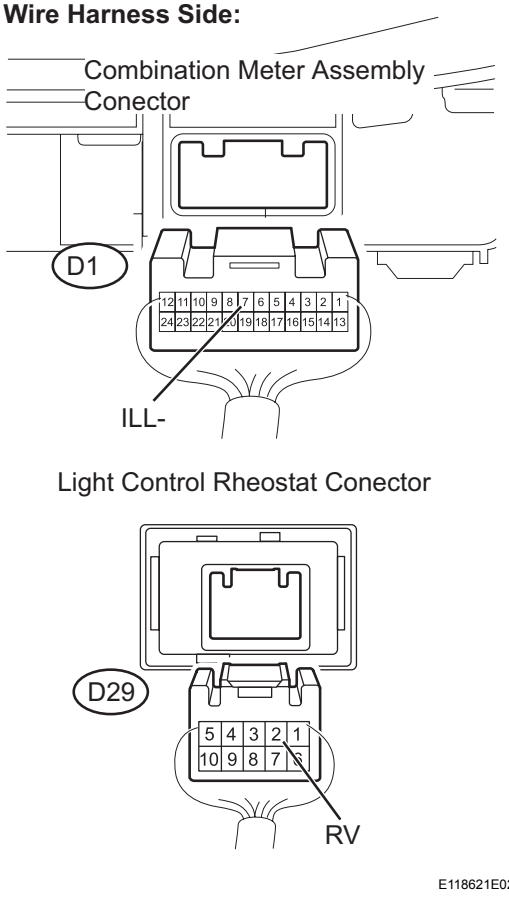

(a) Disconnect the D1 combination meter assembly connector.
(b) Disconnect the D29 light control rheostat connector connector.
(c) Measure the resistance.
Standard resistance

Tester Connection	Specified Condition
D1-7 (ILL-) - D29-2 (RV)	Below 1 Ω

(d) Reconnect the combination meter assembly.
(e) Reconnect the light control rheostat connector.

NG → **REPAIR OR REPLACE HARNESS OR CONNECTOR**

OK

REPLACE COMBINATION METER ASSEMBLY

ME

METER / GAUGE SYSTEM (for Hatchback)

PARTS LOCATION

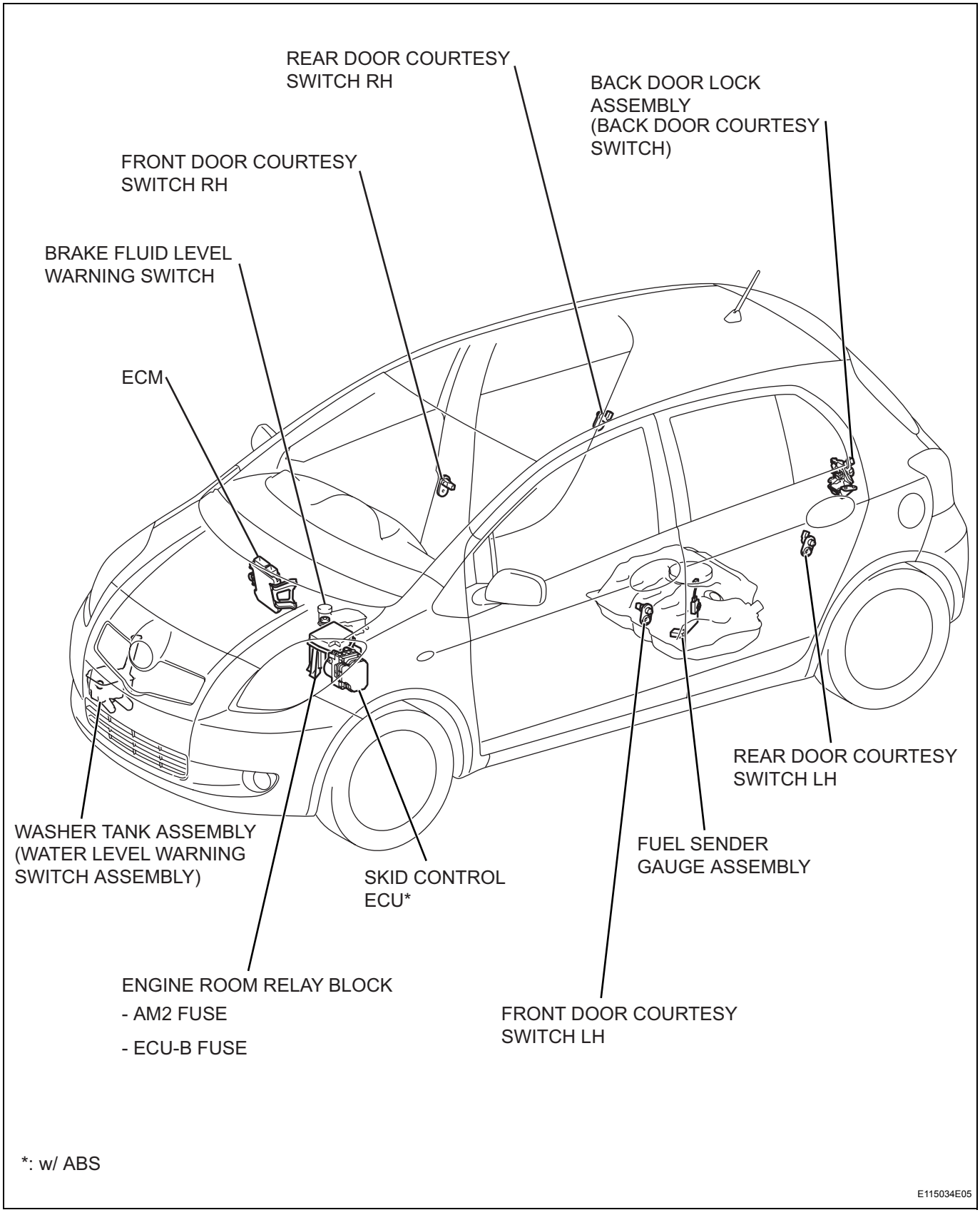

ME

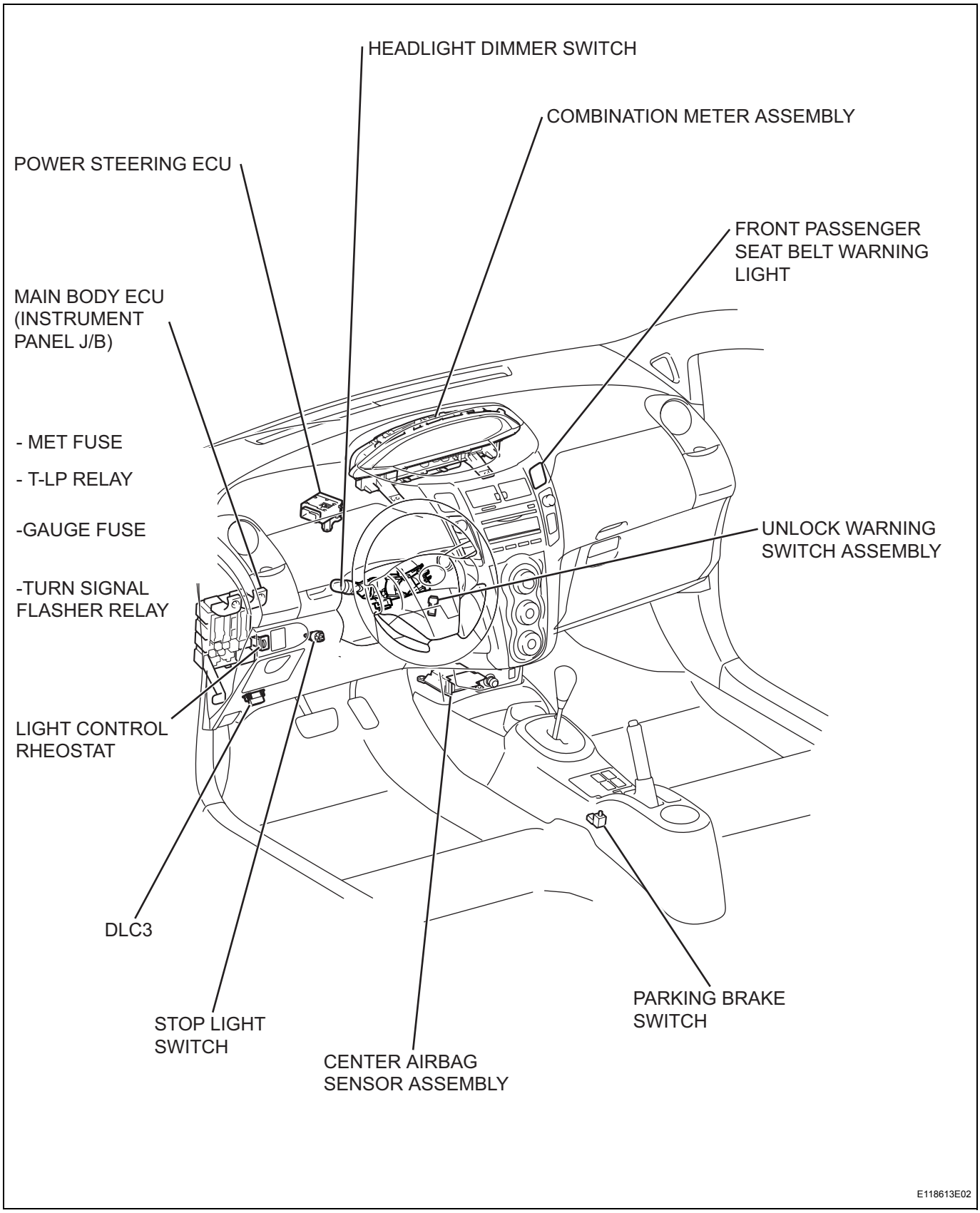
HEADLIGHT DIMMER SWITCH
COMBINATION METER ASSEMBLY
POWER STEERING ECU
FRONT PASSENGER SEAT BELT WARNING LIGHT
MAIN BODY ECU (INSTRUMENT PANEL J/B)
- MET FUSE
- T-LP RELAY
-GAUGE FUSE
UNLOCK WARNING SWITCH ASSEMBLY
-TURN SIGNAL FLASHER RELAY
LIGHT CONTROL RHEOSTAT
DLC3
PARKING BRAKE SWITCH
STOP LIGHT SWITCH
CENTER AIRBAG SENSOR ASSEMBLY
E118613E02

ME

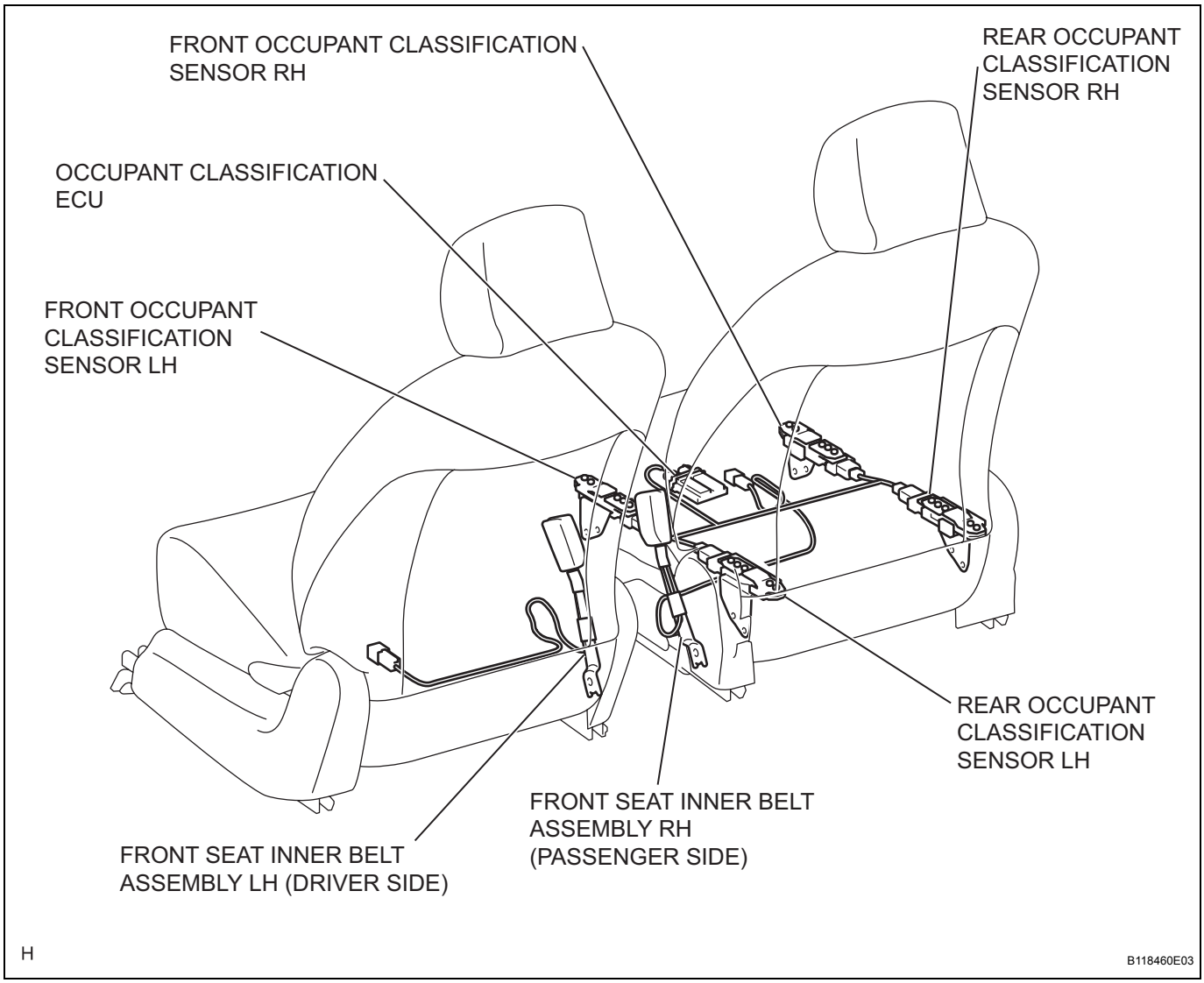
FRONT OCCUPANT CLASSIFICATION SENSOR RH
REAR OCCUPANT CLASSIFICATION SENSOR RH
OCCUPANT CLASSIFICATION ECU
FRONT OCCUPANT CLASSIFICATION SENSOR LH
REAR OCCUPANT CLASSIFICATION SENSOR LH
FRONT SEAT INNER BELT ASSEMBLY RH (PASSENGER SIDE)
FRONT SEAT INNER BELT ASSEMBLY LH (DRIVER SIDE)
H
B118460E03

ME

A/T:

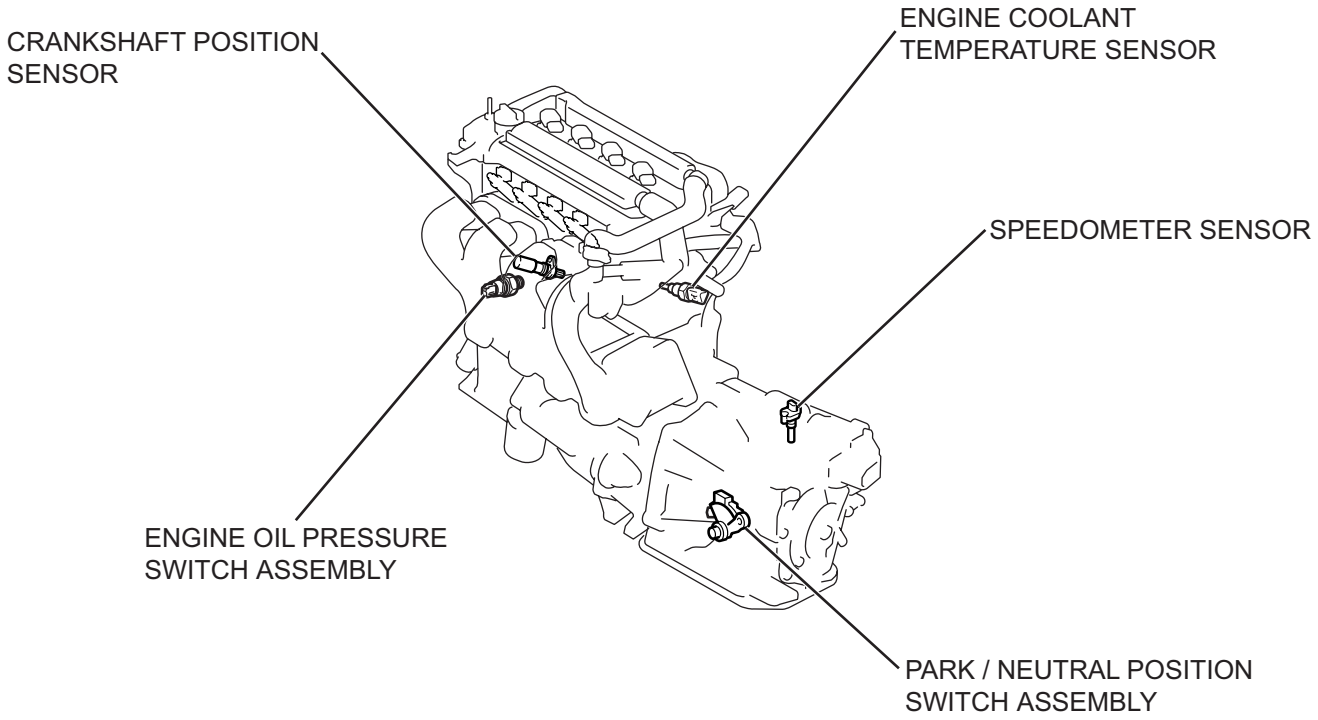

M/T:

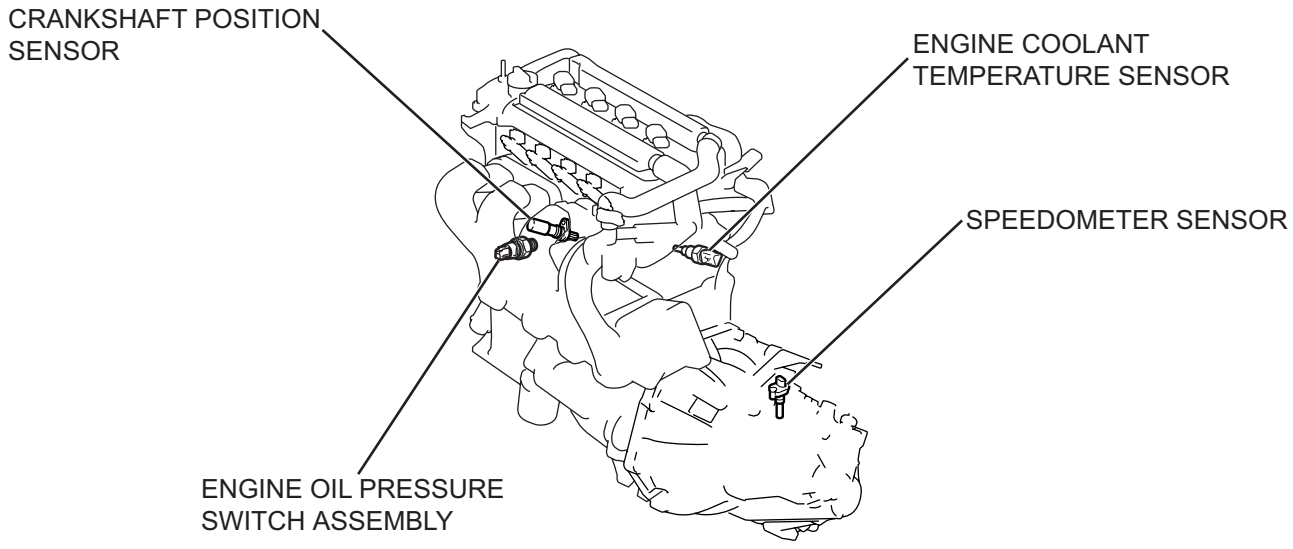

E118612E03

ME

SYSTEM DIAGRAM

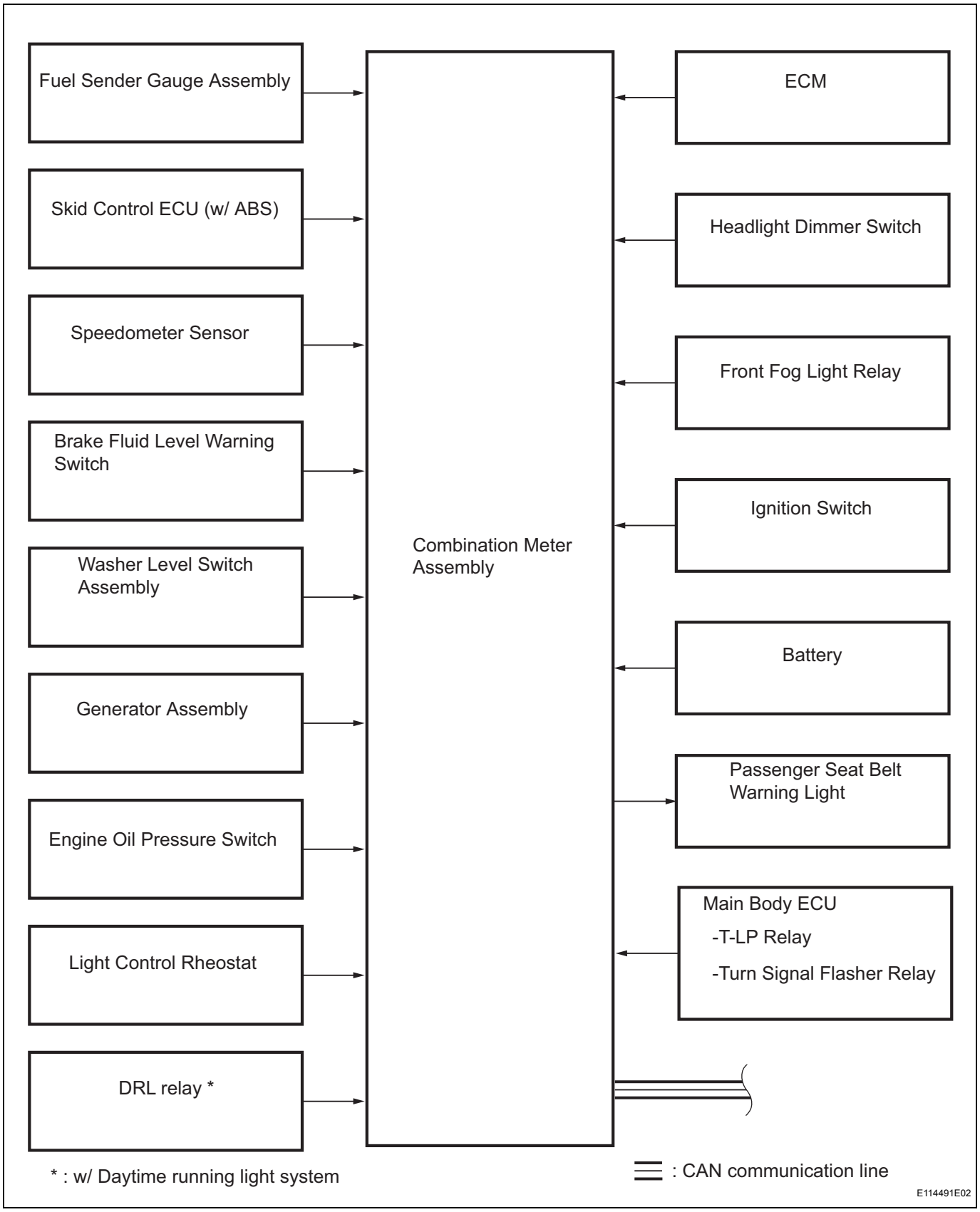

ME

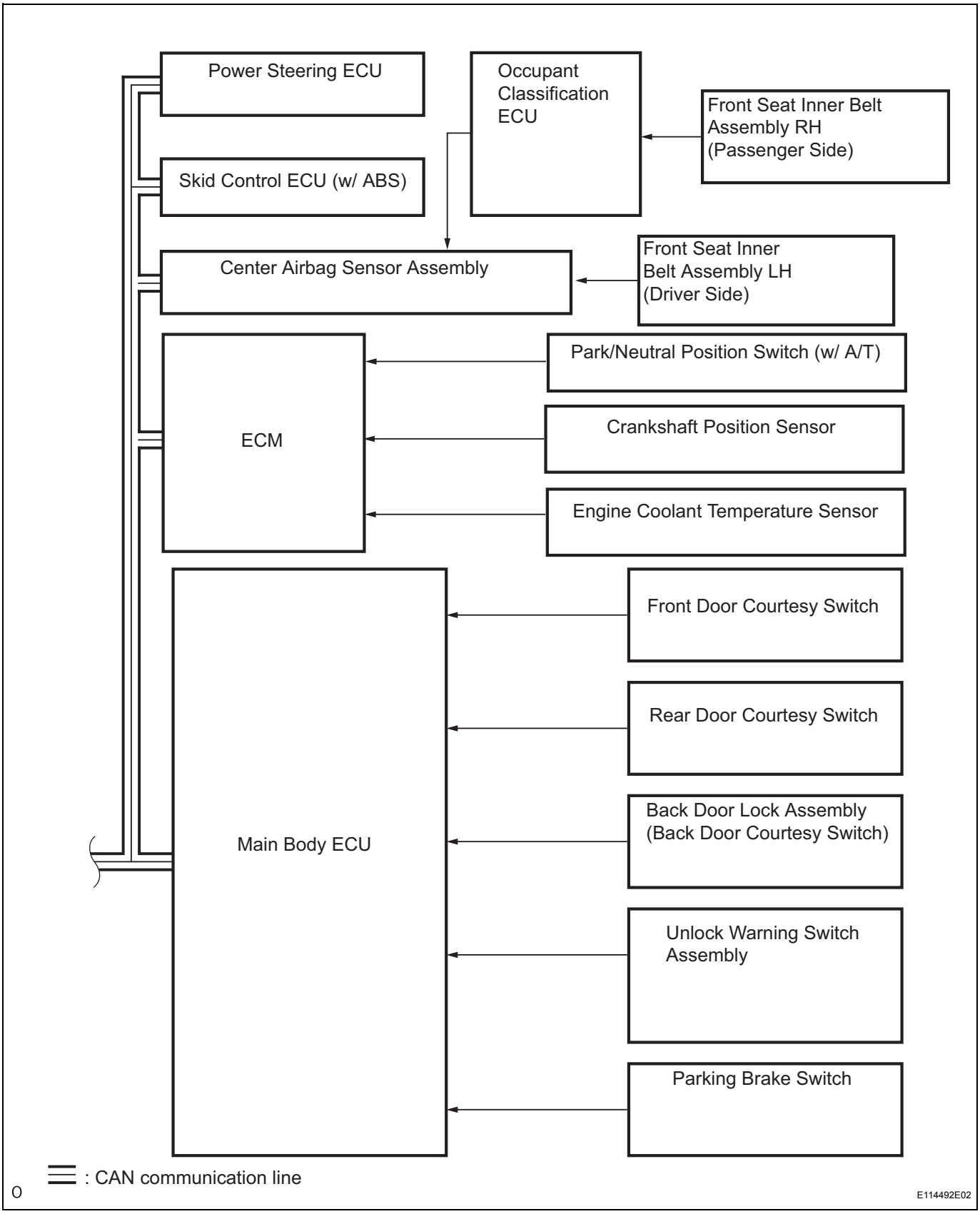
Power Steering ECU
Occupant Classification ECU
Front Seat Inner Belt Assembly RH (Passenger Side)
Skid Control ECU (w/ ABS)
Center Airbag Sensor Assembly
Front Seat Inner Belt Assembly LH (Driver Side)
Park/Neutral Position Switch (w/ A/T)
ECM
Crankshaft Position Sensor
Engine Coolant Temperature Sensor
Front Door Courtesy Switch
Rear Door Courtesy Switch
Main Body ECU
Back Door Lock Assembly (Back Door Courtesy Switch)
Unlock Warning Switch Assembly
Parking Brake Switch
: CAN communication line
E114492E02

SYSTEM DESCRIPTION

1. METER GAUGE AND WARNING INDICATOR

GAUGE

ITEM	Signal Description
Speedometer	Indicates vehicle speed based on signals received from speedometer sensor (Direct line)
Tachometer	Indicates engine speed based on signals from ECM (CAN)
ODO / TRIP meter	Calculates accumulated total vehicle travel distance and vehicle travel distance since strip meter knob pressed
Fuel Gauge	Indicates fuel level in accordance with signals received from fuel sender gauge (Direct line)

WARNING / INDICATOR

ITEM	Signal Description
TURN SIGNAL	Receives turn signal from flasher relay (Direct line)
BEAM	Receives beam signal from headlight dimmer switch (Direct line)
FOG LIGHT	Receives fog light signal from fog light relay (Direct line)
CHARGE	Receives malfunction signal from generator (Direct line and CAN)
MIL	Receives malfunction check signal from ECM (Direct line)
Engine coolant temperature warning	Receives engine coolant temperature based on signal from ECM (CAN)
Engine coolant temperature indicator (COOL)	Receives engine coolant temperature based on signal from ECM (CAN)
WASHER	Receives washer level malfunction signal from washer level warning switch (Direct line)
DOOR	Illuminates when receiving signal from main body ECU (CAN)
D BELT	Receives driver seat belt signal (unfastened) from center airbag sensor assembly (CAN)
BRAKE	Receives parking brake switch signal from main body ECU (CAN) and fluid level warning signal from brake level switch (Direct line)
OIL PRESSURE	Receives malfunction signal from oil pressure switch (Direct line)
MAINT REQD*1	Blinks when vehicle driven about 4,500 miles after oil exchange. Illuminates when vehicle driven about 5,000 miles after oil exchange.
AIR BAG	Receives malfunction signal from center airbag sensor assembly (CAN)
ABS*3	Receives malfunction signal from skid control ECU (CAN)
HEAD*1	Receives headlight signal from DRL relay (Direct line)
TAIL*2	Receives taillight signal from headlight dimmer switch assembly (Direct line)
P/S	Receives malfunction signal from power steering ECU (CAN)
P BELT	Blinks when front passenger seat belt switch ON (unfastened)

*1: U.S.A. only
*2: Canada only
*3: w/ ABS

Buzzer

Item	Signal Description
Key Reminder	Buzzer ON when ignition switch OFF, key inserted and driver door open.
Light Reminder	Buzzer ON when ignition switch OFF, light control switch in TAIL or HEAD position and driver door open.
Seat Belt Warning	Buzzer ON when vehicle speed exceeds 12.4mph (20km/h) and seat belt unfastened.

HOW TO PROCEED WITH TROUBLESHOOTING

HINT:

- Use these procedures to troubleshoot the combination meter.
- Use an intelligent tester in steps 3 and 5.

1 VEHICLE BROUGHT TO WORKSHOP

NEXT

2 INSPECT BATTERY VOLTAGE

Standard voltage:
11 to 14 V

If the voltage is below 11 V, recharge or replace the battery before proceeding.

NEXT

3 CHECK CAN COMMUNICATION SYSTEM

(a) Use an intelligent tester to check if the CAN communication system is functioning normally.
Result

Result	Proceed to
CAN DTC is not output	A
CAN DTC is output	B

B → **Go to CAN COMMUNICATION SYSTEM**

A

4 PROBLEM SYMPTOMS TABLE

HINT:
Refer to the Problem Symptoms Table (See page ME-73).
Result

Result	Proceed to
Fault is not listed in problem symptoms table	A
Fault is listed in problem symptoms table	B

B → **Go to step 6**

A

5	OVERALL ANALYSIS AND TROUBLESHOOTING

(a) Terminals of ECU (See page ME-76)
(b) Data List/Active Test (See page ME-86)
(c) On-vehicle Inspection (See page ME-88)

NEXT

6	ADJUST, REPAIR OR REPLACE

NEXT

7	CONFIRMATION TEST

NEXT

END

CUSTOMIZE PARAMETERS

1. CUSTOMIZE PARAMETERS (Using the intelligent tester)

HINT:

The following items can be customized.

NOTICE:

- **Record the current settings before custmization.**

Display (Item)	Default	Contents	Setting
KEY REMIND SOUND	SLOW	Changes key reminder buzzer intervals	FAST / NORMAL / SLOW
LIGHT REMIND	ON	Turns light reminder buzzer ON and OFF	ON / OFF
SEAT BELT WARN	D/P ON	Turns seat belt warning buzzer ON and OFF	D/P ON / D ON / P ON / D/P OFF
UNITS BY REGION	Different for every region	Changes drive monitor display units	KM/L JP / KM/L / ML/G US / ML/G UK / KM/G

PROBLEM SYMPTOMS TABLE

HINT:
Use the table below to help determine the causes of the problem symptom. The potential causes of the symptoms are listed in order of probability in the "Suspected Area" column of the table. Check each symptom by checking the suspected area in the order they are listed. Replace parts as necessary.

MALFUNCTION SYSTEM

Symptom	Suspected area	See page
Entire combination meter assembly does not operate	Refer to troubleshooting	ME-97
Operating light control rheostat does not change light brightness	Refer to troubleshooting	ME-131

METER GAUGES

Symptom	Suspected area	See page
Speedometer malfunction	Refer to troubleshooting	ME-100
Tachometer malfunction	Refer to troubleshooting	ME-103
Fuel gauge malfunction	Refer to troubleshooting	ME-105
Malfunction in engine coolant temperature warning light	Refer to troubleshooting	ME-110

WARNING/INDICATOR LIGHT

Symptom	Suspected area	See page
MIL	ECM	ES-384
	Combination meter assembly	ME-76
	Wire harness or connector	-
Charge warning light does not come on	Generator	CH-13
	ECM	ES-384
	Combination meter assembly	ME-76
	Wire harness or connector	-
	CAN communication system	CA-9
HEAD indicator does not come on*1	Combination meter assembly	ME-76
	Headlight dimmer switch	LI-161
	Wire harness or connector	-
Brake warning light does not come on	Brake fluid level warning switch	BR-10
	Wire harness or connector	-
	Parking brake switch assembly	PB-24
	Combination meter assembly	ME-76
	Main body ECU	ME-76
	CAN communication system	CA-9
ABS warning light does not come on	Skid control ECU	BC-79
	Combination meter assembly	ME-86
	CAN communication system	CA-9
Airbag waning light does not come on	Center airbag sensor assembly	RS-437
	Combination meter assembly	ME-86
	CAN communication system	CA-9
Engine oil pressure warning light does not come on	Engine oil pressure switch assembly	ME-162
	Wire harness or connector	-
	Combination meter assembly	ME-76

Symptom	Suspected area	See page
Driver side seat belt warning light does not operate	Front seat inner belt assembly LH	SB-40
	Wire harness or connector	-
	Center airbag sensor assembly	RS-437
	Combination meter assembly	ME-86
	CAN communication system	CA-9
Turn indicator light does not come on	Turn signal flasher relay	LI-194
	Wire harness or connector	-
	Combination meter assembly	ME-76
Beam indicator light does not come on	Headlight dimmer switch	LI-161
	Wire harness or connector	-
	Combination meter assembly	ME-76
Washer level warning light does not come on	Washer level warning switch	WW-62
	Wire harness or connector	-
	Combination meter assembly	ME-76
Engine coolant temperature warning light does not come on	ECM	ES-388
	Engine coolant temperature sensor	ES-405
	Combination meter assembly	ME-86
	CAN communication system	CA-9
Power steering warning light does not come on	Power steering ECU	PS-23
	Combination meter assembly	ME-86
	CAN communication system	CA-9
MAINT REQD indicator light blinks or continues illuminating*1	Resetting procedure	ME-92
	Combination meter assembly	ME-86
	CAN communication system	CA-9
Front fog light indicator light does not come on	Front fog light relay	LI-200
	Wire harness or connector	-
	Combination meter assembly	ME-76
Open door warning light does not come on	Door courtesy switch	LI-182
	Wire harness or connector	-
	Main body ECU	ME-76
	Combination meter assembly	ME-86
	CAN communication system	CA-9
TAIL indicator light does not come on*2	T-LP relay	LI-53
	Wire harness or connector	-
	Combination meter assembly	ME-76

*1: U.S.A only
*2: Canada only
*3: w/ ABS

BUZZER

Symptom	Suspected area	See page
No buzzers sound	Wire harness or connector	-
	Combination meter assembly	ME-112
Seat belt warning buzzer does not sound	Front seat inner belt assembly	SB-40
	Wire harness or connector	-
	Combination meter assembly	ME-112
	Center airbag sensor assembly	RS-30
	Occupant classification sensor	RS-219
	CAN communication system	CA-9

Symptom	Suspected area	See page
Light reminder warning buzzer does not sound	Door courtesy switch	LI-182
	Headlight dimmer switch	LI-161
	Wire harness or connector	-
	Main body ECU	ME-86
	Combination meter assembly	ME-112
Key reminder warning buzzer does not sound	Unlock warning switch assembly	DL-89
	Wire harness or connector	-
	Main body ECU	DL-88
	Combination meter assembly	ME-112
	CAN communication system	CA-9

TERMINALS OF ECU

1. COMBINATION METER ASSEMBLY

Combination Meter Assembly:

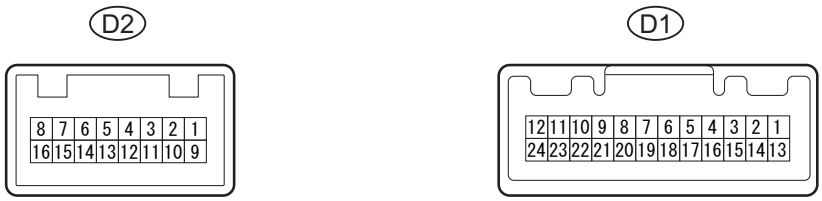

E106913E09

(a) Disconnect the D1 combination meter assembly connector.
(b) Measure the voltage and resistance of the wire harness side connector.

Standard:

Symbols (Terminals No.)	Wiring Color	Terminal Description	Condition	Specified Condition
IG2 (D1-1) - Body ground	B - Body ground	Ignition switch signal	Ignition switch OFF → ON	Below 1 V → 11 to 14 V
ECUB (D1-2) - Body ground	L - Body ground	Battery	Always	11 to 14 V
ET (D1-24) - Body ground	BR - Body ground	Ground	Always	Below 1 Ω

HINT:
If the result is not as specified, there may be a malfunction in the wire harness.

(c) Disconnect the D2 combination meter assembly connector.
(d) Measure the voltage of the wire harness side connector.

Standard voltage:

Symbols (Terminals No.)	Wiring Color	Terminal Description	Condition	Specified Condition
FUEL (D1-3) - Body ground	V - Body ground	Fuel level signal	Ignition switch ON	11 to 14 V
ILL- (D1-7) - Body ground	GR - Body ground	Light control rheostat signal	Ignition switch OFF → ON	Pulse generation (See waveform 1)
ILL+ (D1-14) - Body ground	G - Body ground	Illumination signal	Light control switch OFF → ON	Below 1 V → 11 to 14 V
TC (D1-15) - Body ground	Y - Body ground	Tail cancel switch signal	Tail cancel switch OFF → ON	Below 1 V → 11 to 14 V
+S (D1-16) - Body ground	SB - Body ground	Vehicle speed signal (Output)	Driving at approx. 12 mph (20 km/h)	Pulse generation (See waveform 2)
SI (D1-17) - Body ground	P - Body ground	Vehicle Speed signal (Input)	Driving at approx.12 mph (20 km/h)	Pulse generation (See waveform 2)
CANH (D1-20) - Body ground	G - Body ground	CAN communication line	Ignition switch ON	Pulse generation
CANL (D1-21) - Body ground	W - Body ground	CAN communication line	Ignition switch ON	Pulse generation
CHG- (D2-1) - Body ground	SB *3 or L *4 - Body ground	Charge warning light signal	Ignition switch ON Engine start Charge warning light OFF → ON	Below 1 V → 11 to 14 V
SW (D2-2) - Body ground	V - Body ground	Brake fluid level warning light signal	Ignition switch ON Brake fluid level warning light ON → OFF	Below 1 V → 11 to 14 V

Symbols (Terminals No.)	Wiring Color	Terminal Description	Condition	Specified Condition
EFI (D2-4) - Body ground	B - Body ground	MIL signal	Ignition switch ON MIL ON → OFF	Below 1 V → 11 to 14 V
FOG (D2-7) - Body ground	R - Body ground	Front FOG signal	Ignition switch ON Front fog light switch OFF → ON	Below 1 V → 11 to 14 V
B (D2-8) - Body ground	LG - Body ground	Turn signal LH signal	Ignition switch ON Turn signal LH indicator light OFF → ON → OFF	Below 1 V → 11 to 14 V → Below 1 V
PBLT (D2-9) - Body ground	O - Body ground	Seat belt warning light signal (Passenger side)	Ignition switch ON Front passenger seat belt warning light OFF → ON → OFF	Below 1 V → 11 to 14 V → Below 1 V
WLVL (D2-10) - Body ground	W - Body ground	Washer level warning signal	Ignition switch ON Washer level warning light ON → OFF	Below 1 V → 11 to 14 V
BEAM- (D2-11) - Body ground	P - Body ground	HI-BEAM indicator signal (-)	Headlight dimmer switch (Hi-BEAM) Hi → Lo	Below 1 V → 11 to 14 V
S (D2-12) - Body ground	Y - Body ground	Oil pressure signal	OIL / P warning light ON → OFF	Below 1 V → 11 to 14 V
HEAD (D2-13)*1 - Body ground	L - Body ground	HEAD light indicator signal	Light control switch OFF → ON	Below 1 V → 11 to 14 V
BEAM+ (D2-14) - Body ground	GR - Body ground	HI-BEAM indicator signal (+)	BEAM indicator light OFF → ON	Below 1 V → 11 to 14 V
B (D2-15) - Body ground	BR - Body ground	Turn signal RH signal	Turn signal RH indicator light OFF → ON → OFF	Below 1 V → 11 to 14 V → Below 1 V
IND (D2-16)*2 - Body ground	G - Body ground	Taillight indicator signal	Light control switch OFF → ON	Below 1 V → 11 to 14 V

HINT:
If the result is not as specified, the combination meter assembly may be malfunctioning
*1: U.S.A. only
*2: Canada only
*3: w/ Daytime running light
*4: w/o Daytime running light

(1) Waveform 1: Using an oscilloscope

Terminal Connections	ILL- (D1-7) - Body Ground
Tool Setting	5V / DIV, 50 ms / DIV
Condition	Ignition switch ON

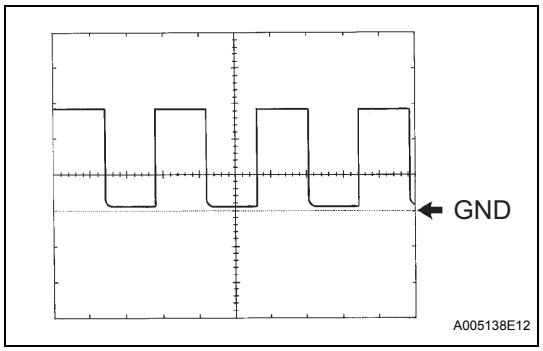

ME

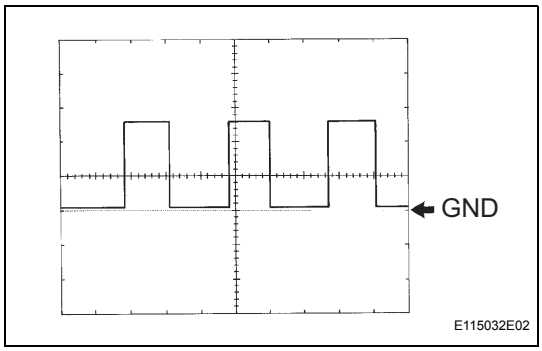

(2) Waveform 2: Using an oscilloscope

Terminal Connections	+S (D1-16) - Body Ground SI (D1-17) - Body Ground
Tool Setting	5V / DIV, 20ms / DIV
Condition	Driving at approximately 12mph (20km/h)

HINT:
As the vehicle speed increases, the cycle of the signal waveform narrows.

2. CHECK MAIN BODY ECU

Main Body ECU (Rear View):

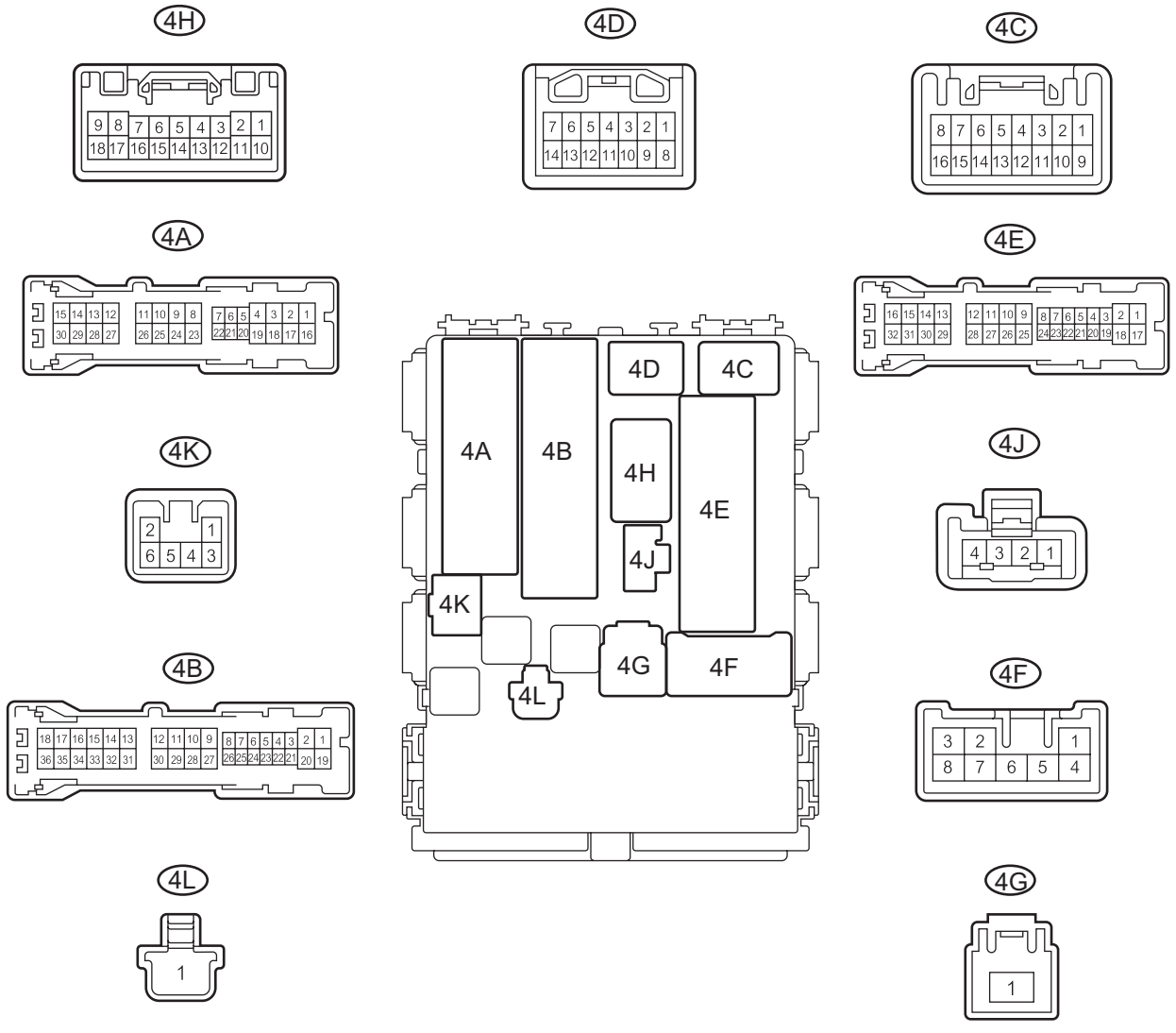

Standard:

Symbols (Terminals No.)	Wiring Color	Terminal Description	Condition	Specified Condition
RRCY (4A-5) - GND1 (4E-17)	G - W-B	Rear door courtesy switch signal (LH)	Rear door (Driver side) CLOSED → OPEN	11 to 14 V → Below 1 V

Symbols (Terminals No.)	Wiring Color	Terminal Description	Condition	Specified Condition
BCTY (4A-7) - GND1 (4E-17)	SB - W-B	Back door courtesy switch signal	Back door CLOSED → OPEN	11 to 14 V → Below 1 V
RRCY (4A-20) - GND1 (4E-17)	L - W-B	Rear door courtesy switch signal (RH)	Rear door (Front passenger side) CLOSED → OPEN	11 to 14 V → Below 1 V
DCTY (4A-21) - GND1 (4E-17)	R - W-B	Front door courtesy switch signal (Driver side)	Driver door CLOSED → OPEN	11 to 14 V → Below 1 V
PCTY (4A-24) - GND1 (4E-17)	L - W-B	Front door courtesy switch signal (Passenger side)	Front passenger door CLOSED → OPEN	11 to 14 V → Below 1 V
PKB (4C-2) - GND1 (4E-17)	Y - W-B	Parking brake signal	Parking brake warning light ON → OFF	Below 1 V → 11 to 14 V
KSW (4D-7) - GND1 (4E-17)	Y - W-B	Key unlock switch condition signal	Key inserted → Removed	Below 1 V → 11 to 14 V
GND1 (4E-17) - Body ground	W-B - Body ground	Ground	Always	Below 1 Ω

Main Body ECU (Front View):

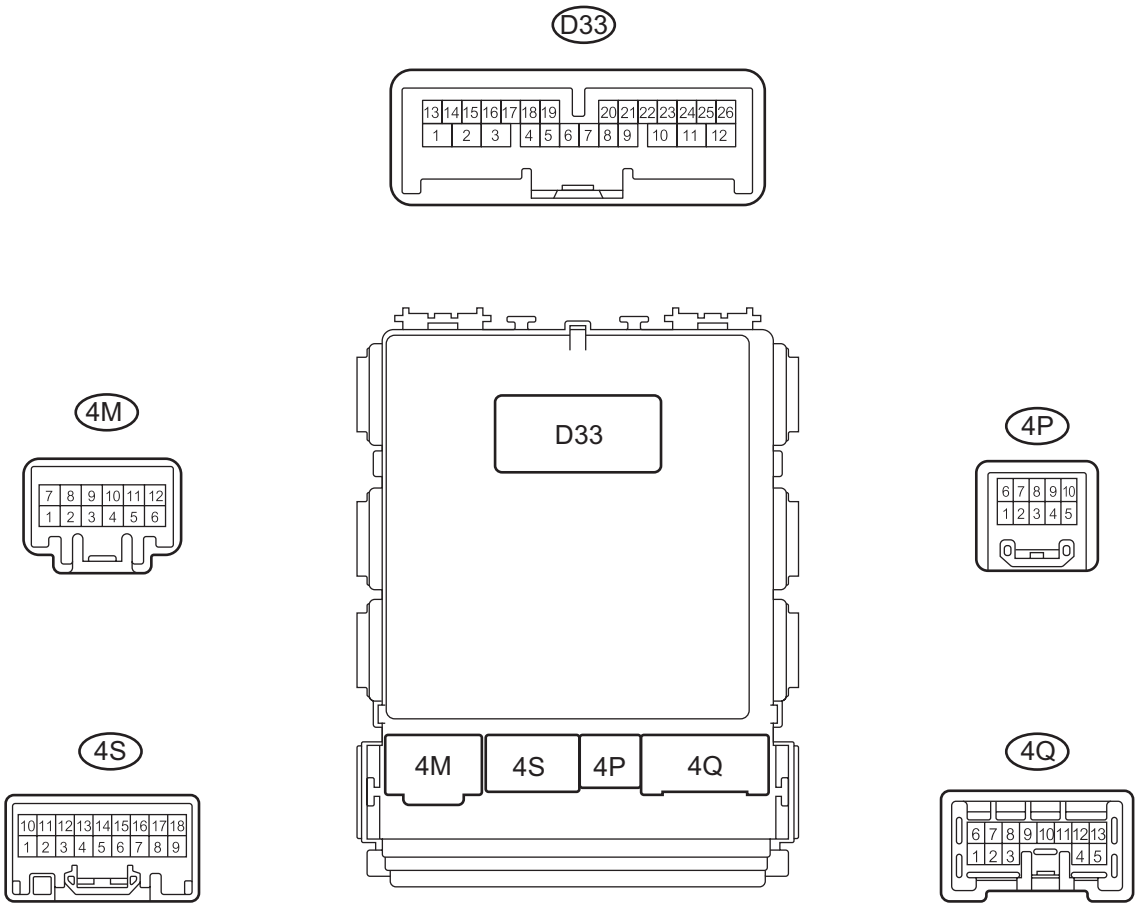

E114511E01

Standard:

Symbols (Terminals No.)	Wiring Color	Terminal Description	Condition	Specified Condition
CANL (D33-22) - Body ground	W - Body ground	CAN communication line	Ignition switch ON	Pulse generation
CANH (D33-23) - Body ground	R - Body ground	CAN communication line	Ignition switch ON	Pulse generation

3. COMBINATION METER INTERNAL CIRCUIT

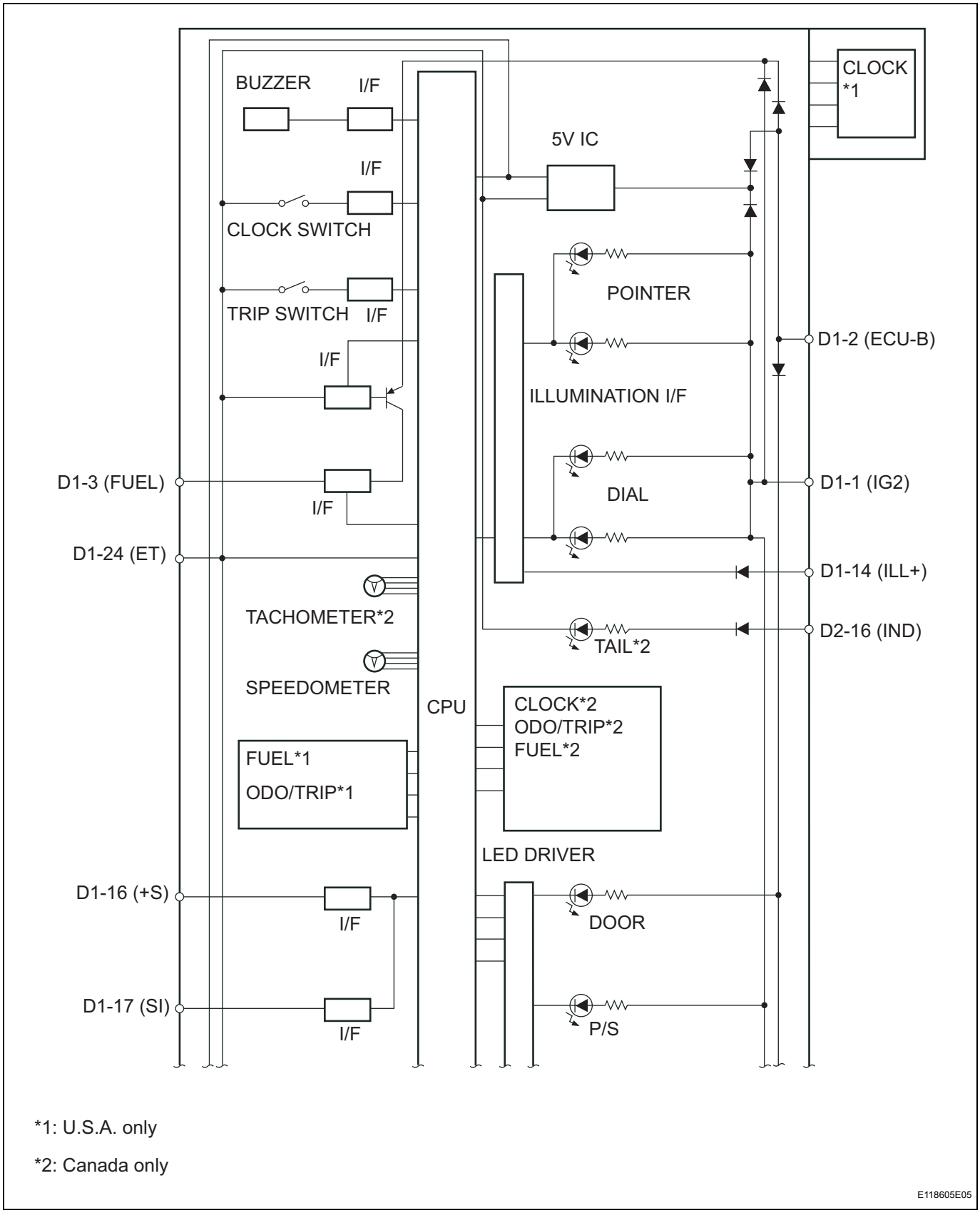

*1: U.S.A. only

*2: Canada only

E118605E05

ME

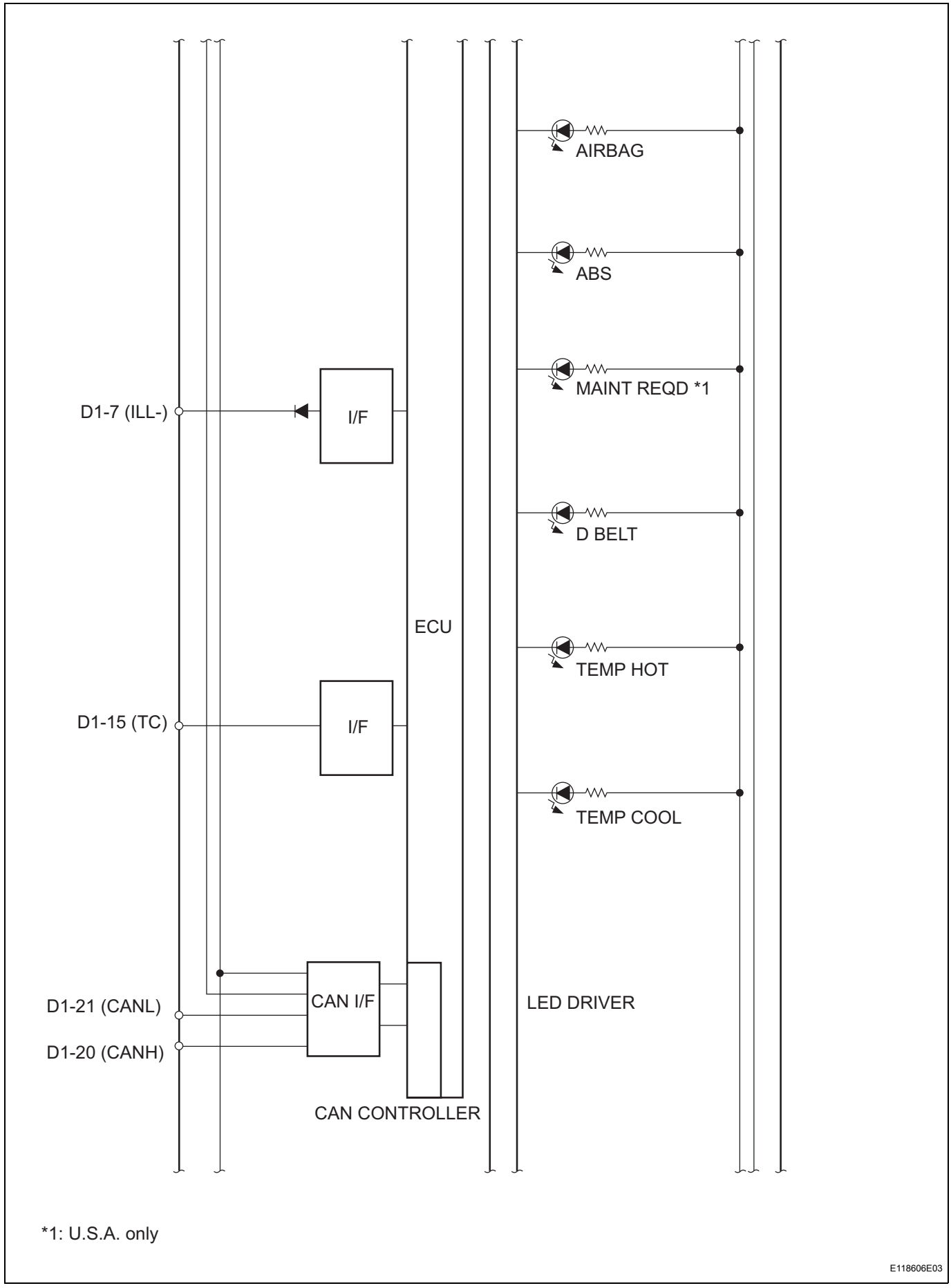

*1: U.S.A. only

E118606E03

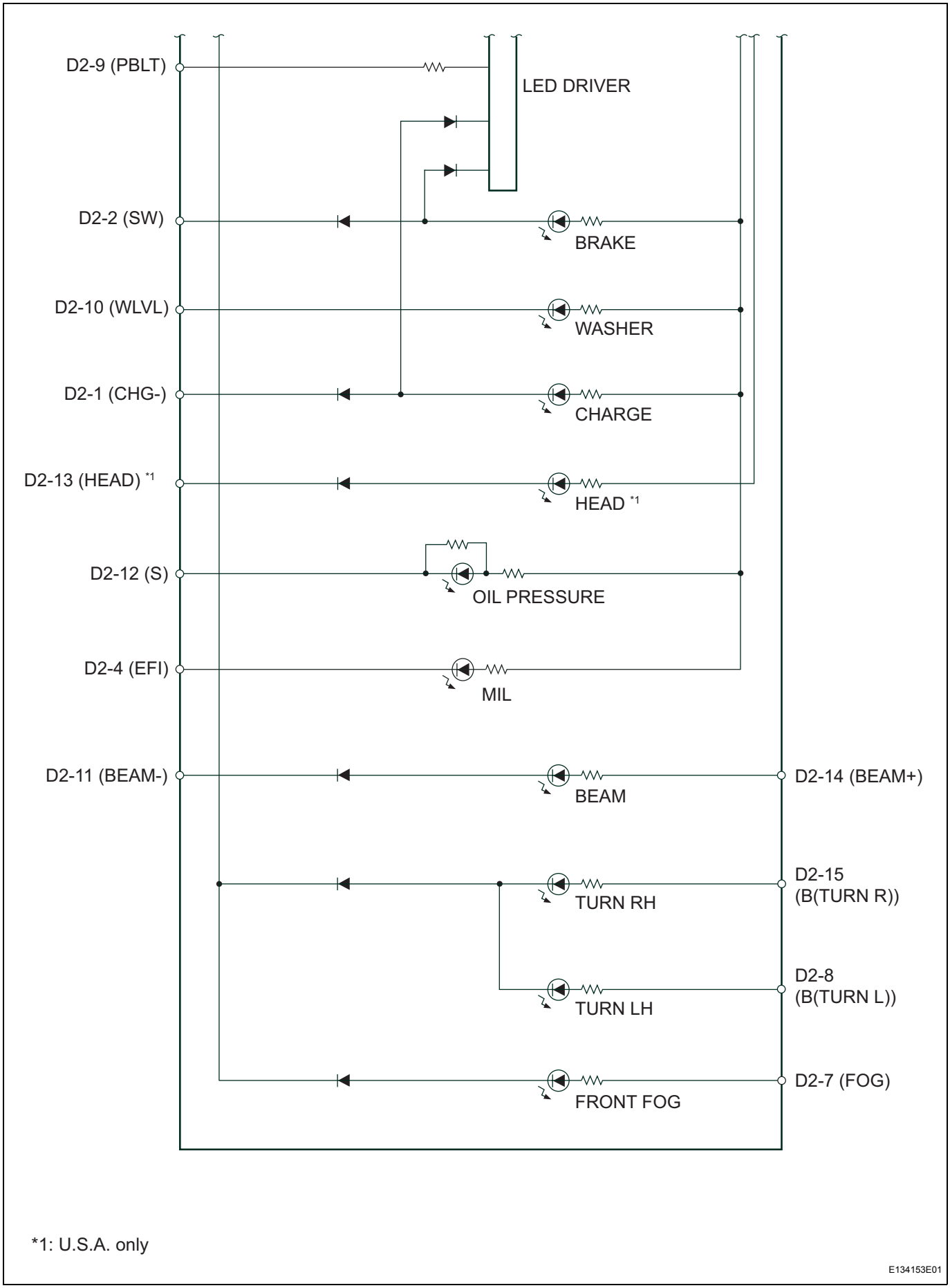

*1: U.S.A. only

E134153E01

ME

Connectors

Terminal No.		Wire Harness Side
D1	1	Ignition Switch
	2	Battery
	3	Fuel Sender Gauge Assembly
	7	Light Control Rheostat
	14	Taillight Relay
	15	Light Control Rheostat
	16	ECM, Power Steering ECU
	17	Speedometer Sensor
	20	CAN Communication Line
	21	CAN Communication Line
	24	Body Ground
D2	1	Generator (Alternator)
	2	Brake Fluid Level Warning Switch
	4	ECM
	7	Front Fog Light Relay
	8	Turn Signal Flasher Relay
	9	Passenger Seat Belt Warning Light
	10	Washer Level Warning Switch
	11	Headlight Dimmer Switch
	12	Engine Oil Pressure Switch
	13	Headlight
	14	Headlight Dimmer Switch
	15	Turn Signal Flasher Relay
	16	Taillight Relay

DIAGNOSIS SYSTEM

1. DESCRIPTION

(a) Meter and gauge system data and the Diagnostic Trouble Codes (DTCs) can be read through the Data Link Connector 3 (DLC3) of the vehicle. When the system seems to be malfunctioning, use an intelligent tester with the CAN VIM to check for malfunctions and perform troubleshooting.

2. CHECK DLC3

(a) The ECU uses ISO 15765-4 for communication. The terminal arrangement of the DLC3 complies with SAE J1962 and matches the ISO 15765-4 format.

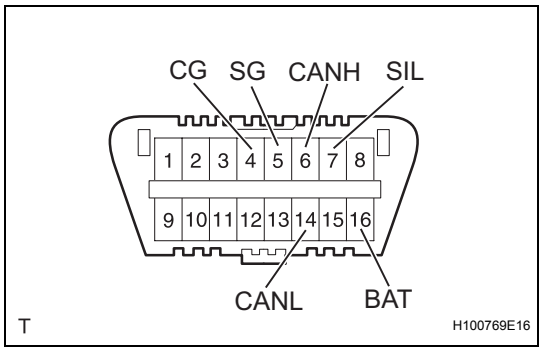

Symbols (Terminal No.)	Terminal Description	Condition	Specified Condition
SIL (7) - SG (5)	Bus " +" line	During transmission	Pulse generation
CG (4) - Body ground	Chassis ground	Always	Below 1 Ω
SG (5) - Body ground	Signal ground	Always	Below 1 Ω
BAT (16) - Body ground	Battery positive	Always	11 to 14 V
CANH (6) - CANL (14)	CAN bus line	Ignition switch OFF*	54 to 69 Ω
CANH (6) - CG (4)	HIGH-level CAN bus line	Ignition switch OFF*	200 Ω or higher
CANL (14) - CG (4)	LOW-level CAN bus line	Ignition switch OFF*	200 Ω or higher
CANH (6) - CG (4)	HIGH-level CAN bus line	Ignition switch OFF*	6 kΩ or higher
CANL (14) - CG (4)	LOW-level CAN bus line	Ignition switch OFF*	6 kΩ or higher

NOTICE:

***: Before measuring the resistance, leave the vehicle as is for at least 1 minute and do not operate the ignition switch, any other switches or the doors.**

If the result is not as specified, the DLC3 may have a malfunction. Repair or replace the harness and connector.

HINT:

Connect the cable of the intelligent tester to the CAN VIM, connect the CAN VIM to the DLC3, turn the ignition switch ON and attempt to use the tester. If the display indicates that a communication error has occurred, there is a problem either with the vehicle or with the tester.

- If communication is normal when the tester is connected to another vehicle, inspect the DLC3 of the original vehicle.
- If communication is still not possible when the tester is connected to another vehicle, the problem is probably in the tester itself. Consult the Service Department listed in the tester's instruction manual.

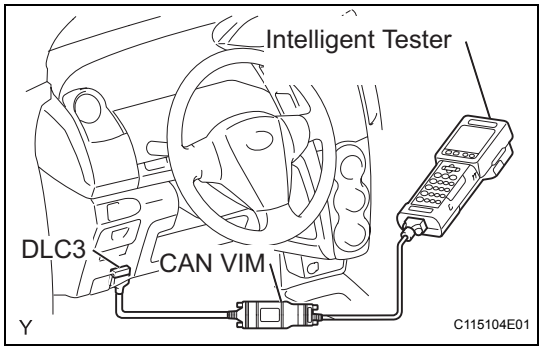

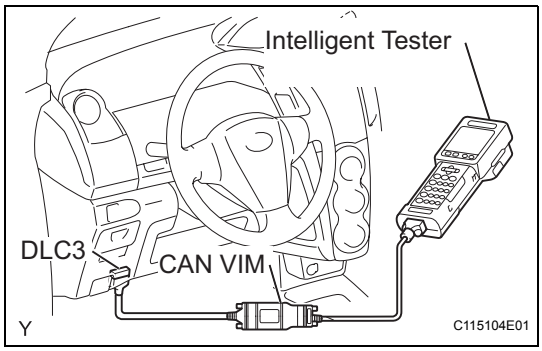

DTC CHECK / CLEAR

1. DTC CHECK

(a) Connect the intelligent tester to the DLC3.
(b) Turn the ignition switch ON.
(c) Turn the intelligent tester ON.
(d) Select the following menu items: DIAGNOSIS / OBD/MOBD / METER / DTC INFO / CURRENT CODES.
(e) Check the DTC(s) and freeze frame data, and then write them down.
(f) See page ME-87 to check the details of the DTC(s).

2. CLEAR DTC (Using an intelligent tester)

(a) Connect the intelligent tester to the DLC3.
(b) Turn the ignition switch ON.
(c) Turn the tester ON.
(d) Select the following menu items: DIAGNOSIS / OBD/MOBD / METER / DTC INFO / CLEAR CODES.
(e) Press the YES button to clear the DTC(s).

3. CLEAR THE DTC (Without using an intelligent tester)

(a) Perform either one of the following operations.
(1) Disconnect the negative battery cable for more than 1 minute.
(2) Remove the ECU-B fuse from the engine room relay block located inside the engine compartment for more than 1 minute.

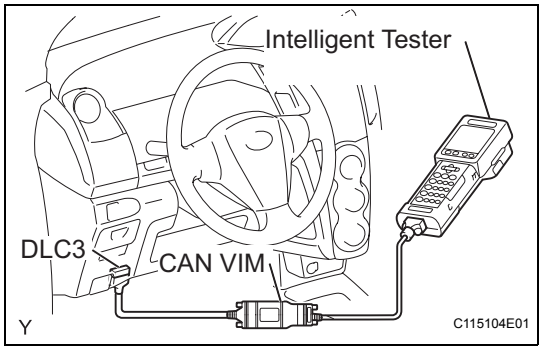

DATA LIST / ACTIVE TEST

1. READ DATA LIST

HINT:
Using the intelligent tester's DATA LIST allows switch, sensor, actuator and other item values to be read without removing any parts. Reading the DATA LIST early in troubleshooting is one way to save time.

(a) Connect the intelligent tester to the DLC3.
(b) Turn the ignition switch ON.
(c) Read the Data List according to the prompts displayed on the tester.

METER

Item	Measurement Item/Display (Range)	Normal Condition	Diagnostic Note
+B VOLTAGE	Battery voltage Min=0, Max=255, 1LSB=1	10V: 119 / 10.5V: 126 / 11V: 132 / 12V: 145 / 13V: 157 / 14V: 170	-
ODO/TRIP SW	ODO/TRIP change switch/ ON or OFF	ON: Switch is pushed OFF: Switch is released	-
TAIL CANCEL SW	Taillight cancel switch/ ON or OFF	ON: Taillight cancel switch is ON OFF: Taillight cancel switch is OFF	-
TAIL RELAY SW	Taillight relay switch/ ON or OFF	ON: Taillight relay switch is ON OFF: Taillight relay switch is OFF	-
P-BELT BUCKL SW	Front passenger seat belt buckle switch/ ON or OFF	ON: Front passenger seat belt is fastened OFF: Front passenger seat belt is unfastened	-

Item	Measurement Item/Display (Range)	Normal Condition	Diagnostic Note
TIMER SW METER	Timer switch on combination meter/ ON or OFF	ON: Timer switch is ON OFF: Timer switch is OFF	-
SPEED METER	Vehicle speed / Min.: 0 km/h(0mph),Max.: 255km/h(158mph)	Approximately same as actual vehicle speed (When vehicle is driven)	-
TACHO METER	Engine speed / Min.: 0 rpm, Max.: 12,750 rpm	Approximately same as actual engine speed (When engine is running)	-
COOLANT TEMP	Engine coolant temperature / Min.: 0°C, Max.: 127.5°C	After warming up: 75 to 105°C(167 to 221°F)	-
FUEL GAUGE (A/D)	Fuel input signal / Min.: 0, Max.: 255	Fuel receiver gauge segments No.1 to No.8 illuminate: 14 to 34 No.1 to No.6 (No.7) illuminate: 77 to 109 No.1 to No.4 (No,5) illuminate: 135 to 172 No.1 and No.2 illuminate: 175 to 188 No.1 flashes: 194 to 200	-
OIL MAINTENANCE(*1)	Integrated value for Oil Maintenance / Min.: 0 mile, Max.: 25500 mile	Total accumulated vehicle travel distance for oil maintenance since last reset	-
RHEOSTAT (A/D)	Rheostat value / Min.: 0, Max.: 255	Light control rheostat switch is Dark(0)→Bright(255)	-

*1: U.S.A. only

2. PERFORM ACTIVE TEST

HINT:

Performing the intelligent tester's Active Test allows relays, VSV, actuators and other items to be operated without removing any parts. Performing the Active Test early in troubleshooting is one way to save time. The Data List can be displayed during the Active Test.

(a) Connect the intelligent tester to the DLC3.
(b) Turn the ignition switch ON.
(c) Perform the Active Test according to the prompts displayed on the tester.

METER

Item	Test Details	Diagnostic Note
SPEED METER	0 / 40 / 80 / 120 mph 0 / 40 / 80 / 120 / 160 / 200 km/h	-
TACHOMETER	0rpm / 1,000rpm / 2,000rpm / 3,000rpm / 4,000rpm / 5,000rpm / 6,000rpm / 7,000rpm	-
FUEL GAUGE	EMPTY, 1/2, FULL	-
COOLANT TEMP	LOW / NORMAL / HIGH	-
METER DISPLAY1	All / 0 / 1 / 2 / 3 / 4 / 5 / 6	-
METER DISPLAY2	7 / 8 / 9	-
SRS WARN	Airbag warning light OFF / ON	-
D-BELT REMIND	Driver seat belt warning light OFF / ON	-
P-BELT REMIND	Front passenger seat belt warning light OFF / ON	-
DOORS ALL OPEN	Door indicator light OFF / ON	-

Item	Test Details	Diagnostic Note
DISCHARGE WARN	Charge warning light OFF / ON	-
ABS WARN (*1)	ABS warning light OFF / ON	-
BRAKE WARN	Brake warning light OFF / ON	-
COOLANT HOT	Engine coolant temperature warning light OFF / ON	-
COOLANT COOL	Engine coolant temperature indicator light (COOL) OFF / ON	-
EPS INDIC	EPS indicator ON / OFF	-
OIL MAINTENANCE (*2)	Oil maintenance indicator OFF / ON	-

*1: w/ABS
*2: U.S.A. only

DIAGNOSTIC TROUBLE CODE CHART

DTC No.	Detection Item	Trouble Area	See page
U0100	Lost Communication with ECM/ PCM "A"	• ECM • CAN communication system	ME-93
U0129	Lost Communication with Skid Control ECU	• Skid Control ECU • CAN communication system	ME-95

ON-VEHICLE INSPECTION

1. INSPECT SPEEDOMETER

(a) Check the operation.

(1) Using a speedometer tester, inspect the speedometer and confirm that the speedometer readings are within the acceptable range. Also check the odometer operation.

Reference:

km/h (Canada)

Standard Indication	Acceptable Range
20 km/h	17.5 to 21.5 km/h
40 km/h	38 to 42 km/h
60 km/h	58 to 63 km/h
80 km/h	78 to 84 km/h
100 km/h	98.5 to 104.5 km/h
120 km/h	119 to 125 km/h
140 km/h	139 to 146 km/h
160 km/h	159 to 167 km/h
180 km/h	179 to 188 km/h
200 km/h	199 to 209 km/h

mph (U.S.A.)

Standard Indication	Acceptable Range
20 mph	18 to 21 mph
40 mph	38.5 to 42 mph
60 mph	59 to 63 mph
80 mph	79.5 to 84 mph
100 mph	100 to 105 mph
120 mph	121 to 126.5 mph

NOTICE:

Tire wear and excessively high or low tire pressure affect speedometer indications.

(2) Check the deflection of the speedometer indicator.

Reference:

Below 0.3 mph (0.5 km/h)

ME

Combination Meter Assembly Connector:

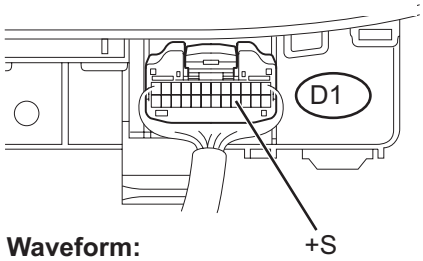

Waveform:

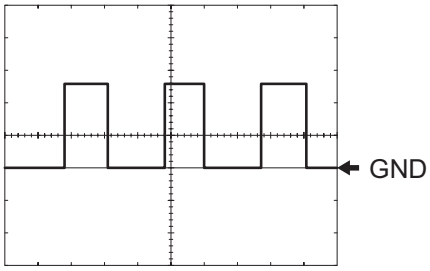

E117125E05

2. INSPECT SPEEDOMETER SENSOR

(a) Check the output signal waveform.

(1) Remove the combination meter assembly, but do not disconnect the connector.

(2) Connect an oscilloscope to terminals D1 - 16 and to the body ground.

(3) Start the engine.

(4) Check the signal waveform according to the condition(s) in the table below.

Item	Contents
Terminal Connection	+S (D1-16) and Body Ground
Tool Setting	5V / DIV, 20ms / DIV
Condition	Driving at approximately 12mph (20km / h)

OK:

As shown in the illustration.

NOTICE:

Waveform is indicated as the vehicle speed increases, the cycle of the signal waveform narrows.

(5) Reinstall the combination meter assembly.

3. INSPECT TACHOMETER

(a) Check the operation.

(1) Connect the intelligent tester to the DLC3.

(2) Turn the ignition switch ON and turn the tester ON.

(3) Select the item below from the Data List and read the value displayed on the intelligent tester.

METER

Item	Measurement Item/ Range(Display)	Normal Condition	Diagnostic Note
TACHO METER	Engine speed/Min.: 0 rpm, Max.:12,750 rpm	Approximately same as actual engine speed (When engine is running)	-

(4) Compare the engine speed displayed on the tester with the tachometer reading.

Reference

Standard Indication (r/min)	Acceptable Range [Data in ( ) are for reference]
700 r/min	630 to 770 r/min
1,000 r/min	(900 to 1,100 r/min)
2,000 r/min	(1,850 to 2,150 r/min)
3,000 r/min	2,800 to 3,200 r/min
4,000 r/min	(3,800 to 4,200 r/min)
5,000 r/min	4,800 to 5,200 r/min
6,000 r/min	(5,750 to 6,250 r/min)
7,000 r/min	(6,700 to 7,300 r/min)

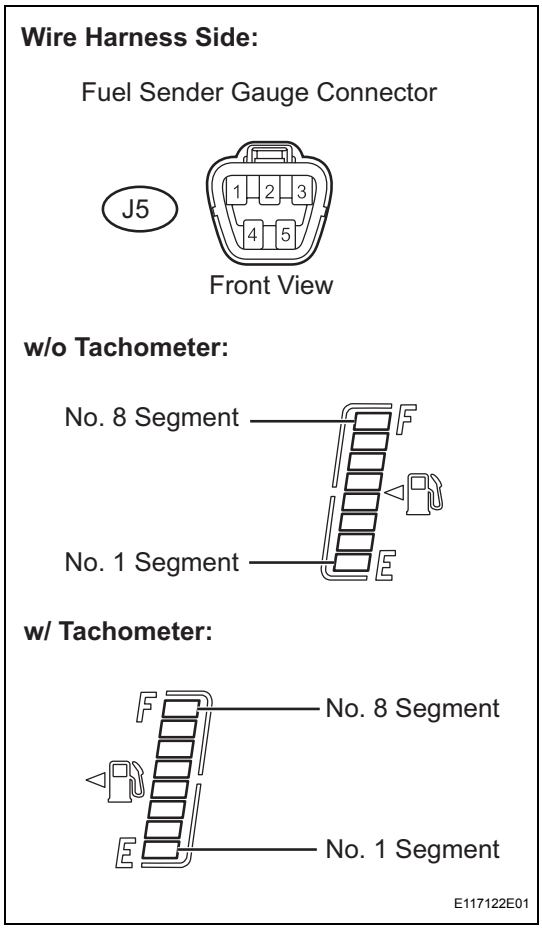

4. INSPECT FUEL RECEIVER GAUGE

(a) Disconnect the J5 fuel sender gauge connector.

(b) Check the fuel receiver gauge operation when the ignition switch is turned to the ON position.

OK:

No. 1 segment flashes.

(c) Connect terminals 2 and 3 on the wire harness side connector of the fuel sender gauge.

(d) Check the fuel receiver gauge operation when the ignition switch is turned from OFF to ON.

OK:

All segments, from No. 1 to No. 8, illuminate.

(e) Reconnect the fuel sender gauge connector.

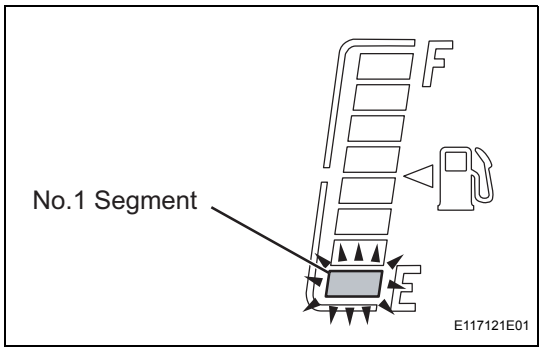

5. INSPECT FUEL LEVEL WARNING LIGHT

(a) Turn the ignition switch to the ON position, and check that the receiver gauge No. 1 segment flashes when the fuel volume is less than 6.3 liters (less than 15 % of the total fuel tank capacity).

OK

Fuel Volume	Flashing Speed (Interval)
1.6 gal (6.3 liters) (Less than 15 % of total fuel tank capacity)	Flashes slowly (1.2 seconds)
1.1 gal (4.2 liters) (Less than 10 % of total fuel tank capacity)	Flashes quickly (0.6 seconds)

6. INSPECT ENGINE OIL PRESSURE WARNING LIGHT

(a) Disconnect the engine oil pressure switch connector.

(b) Turn the ignition switch to the ON position.

(c) Ground the terminal of the wire harness side connector, then check the engine oil pressure warning light.

OK:

Engine oil pressure warning light illuminates.

(d) Reconnect the engine oil pressure switch connector.

7. INSPECT BRAKE WARNING LIGHT

(a) Inspect the parking brake warning light.
  (1) Disconnect the parking brake switch connector.
  (2) Turn the ignition switch to the ON position.
  (3) Ground the terminal of the wire harness side connector, then check the parking brake warning light.
    OK:
      Brake warning light illuminates.
  (4) Reconnect the parking brake switch connector.

(b) Inspect the brake fluid level warning light.
  (1) Disconnect the brake fluid level warning switch connector.
  (2) Turn the ignition switch to the ON position.
  (3) Connect a terminal to the other terminal of the wire harness side connector, then check the brake fluid level warning switch.
    OK:
      Brake warning light illuminates.
  (4) Reconnect the brake fluid level warning switch connector.

ME

8. INSPECT BRAKE FLUID LEVEL WARNING SWITCH

(a) Remove the reservoir tank cap and strainer.
(b) Disconnect the brake fluid level warning switch connector.
(c) Measure the resistance between the terminals.
  Standard resistance:
    Float inside reservoir tank is in high position (switch OFF): 10 k Ω or higher
(d) Use a syphon or a similar tool to drain fluid out of the reservoir tank.
(e) Measure the resistance between the terminals.
  Standard resistance:
    Float inside reservoir tank is in low position (switch ON): Below 1 Ω
(f) Pour the fluid back into the reservoir tank.
(g) Reconnect the brake fluid level warning switch connector.
(h) Reinstall the reservoir tank cap and strainer.

9. INSPECT WINDOW WASHER FLUID WARNING LIGHT

(a) Disconnect the connector from the washer level warning switch.
(b) Turn the ignition switch to the ON position.
(c) Ground the terminal of the wire harness side connector, then check the washer level warning light.
  OK:
    Washer level warning light comes on.

10. INSPECT ENGINE COOLANT TEMPERATURE WARNING LIGHT

(a) Disconnect the engine coolant temperature sensor connector.

(b) Turn the ignition switch to the ON position.
(c) Connect a terminal to the other terminal of the wire harness side connector, then check the engine coolant temperature warning light.
OK:
Engine coolant temperature warning light illuminates.
(d) Reconnect the engine coolant temperature sensor connector.
NOTICE:
DTCs may have been set. Check for DTCs and clear any that have been set.

11. INSPECT ENGINE COOLANT TEMPERATURE WARNING LIGHT

(a) Disconnect the engine coolant temperature sensor connector.
(b) Turn the ignition switch to the ON position.
(c) Connect a terminal to the other terminal of the wire harness side connector, then check the engine coolant temperature coolant indicator light.
OK:
Engine coolant temperature indicator light illuminates.
(d) Reconnect the engine coolant temperature sensor connector.
NOTICE:
DTCs may have been set. Check for DTCs and clear any that have been set.

12. OIL MAINTENANCE INDICATOR RESETTING PROCEDURE (U.S.A. only)

Oil Maintenance Indicator	Condition	Specified State
Blinks	Vehicle has run 4,500 miles since previous setting	Indicator blinks for 15 seconds after ignition switch is turned ON (including 3 seconds for a valve check)
Illuminates	Vehicle has run 5,000 miles since previous setting	Indicator illuminates after ignition switch is turned ON.

(a) Set the window display located inside the combination meter to the Trip A indication.
(b) Turn the ignition switch OFF.
(c) While pressing the ODO/TRIP display change switch (reset switch) (for at least 5 seconds), turn the ignition switch ON.
(d) When the reset procedure has been completed successfully, the MAINT REQD indicator light turns off and the ODO/TRIP meter indicates 0 (zero) and then returns to its regular display.
HINT:
If the reset fails, the MAINT REQD indicator light remains illuminated. Perform the procedure again.

DTC	U0100	Lost Communication with ECM/PCM "A"

DESCRIPTION

The combination meter assembly and the ECM exchange signals through the CAN communication system.

DTC No.	DTC Detecting Conditions	Trouble Areas
U0100	When either of following conditions detected: 1. Vehicle speed 3.1 mph (5 km/h) or more and IG voltage 10.5 V or more 2. No communication with ECM continues for 3 seconds or more (Communication with neither ECM nor skid control ECU for 60 seconds or more)	• CAN communication system • ECM

WIRING DIAGRAM

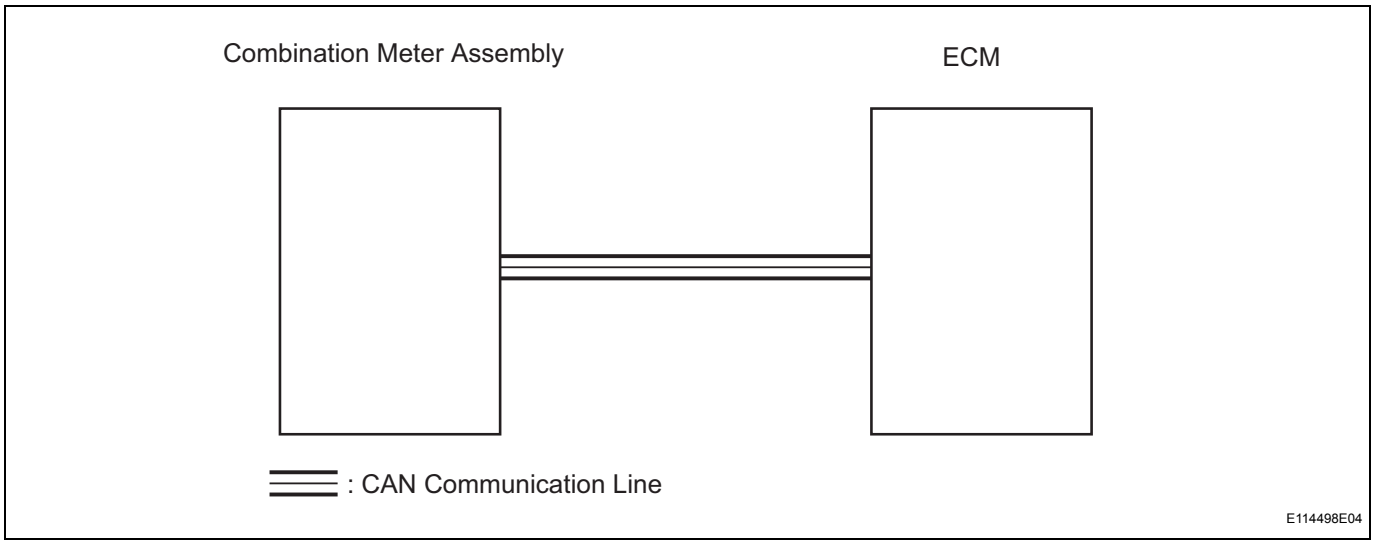

ME

INSPECTION PROCEDURE

1	CONFIRM DTC OUTPUT

(a) Connect the intelligent tester to the DLC3.
(b) Turn the ignition switch ON and turn the tester ON.
(c) Clear the stored DTCs by selecting the following menu items on the tester: DIAGNOSIS/ OBD/MOBD/ METER/ DTC INFO /CLEAR CODES.
(d) Drive the vehicle at more than 3.1 mph (5 km/h) for at least 60 seconds.
(e) Stop the vehicle.
(f) Check for DTCs.

Result

Result	Proceed to
DTC output	A
DTC not output	B

B	SYSTEM IS OK

A

GO TO CAN COMMUNICATION SYSTEM

DTC	U0129	Lost Communication with Skid Control ECU

DESCRIPTION

The combination meter assembly receives signals from the skid control ECU through the CAN communication system.

DTC No.	DTC Detecting Conditions	Trouble Areas
U0129	When either of following conditions detected: 1. 15 seconds have elapsed since engine started and IG voltage 10.5 V or more 2. No communication with skid control ECU continues for 3 seconds or more (Communication with neither ECM nor skid control ECU for 60 seconds or more)	• Skid control ECU • CAN communication system

WIRING DIAGRAM

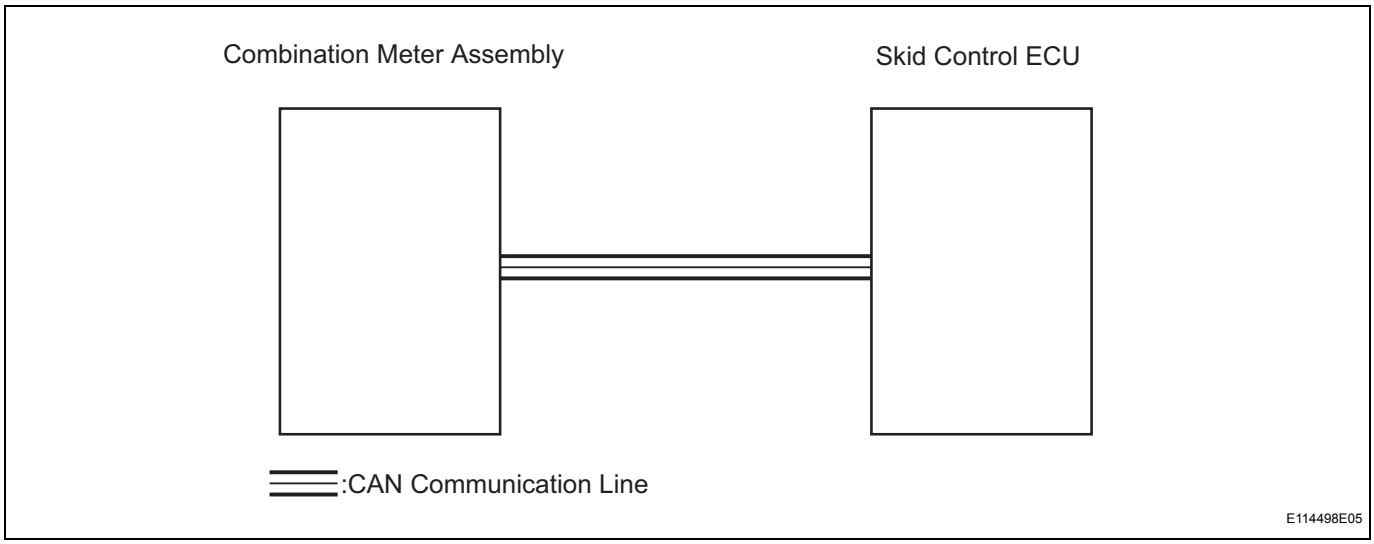

INSPECTION PROCEDURE

1	CONFIRM DTC OUTPUT

(a) Connect the intelligent tester to the DLC3.
(b) Turn the ignition switch ON and turn the tester ON.
(c) Clear the stored DTCs by selecting the following menu items on the tester: DIAGNOSIS/ OBD/MOBD/ METER/ DTC INFO /CLEAR CODES.
(d) Start the engine and wait for at least 60 seconds.
(e) Check for DTCs.

Result

Result	Proceed to
DTC output	A
DTC not output	B

B	SYSTEM IS OK

A

GO TO CAN COMMUNICATION SYSTEM

Entire Combination Meter does not Operate

DESCRIPTION

This circuit provides power to the combination meter assembly.

WIRING DIAGRAM

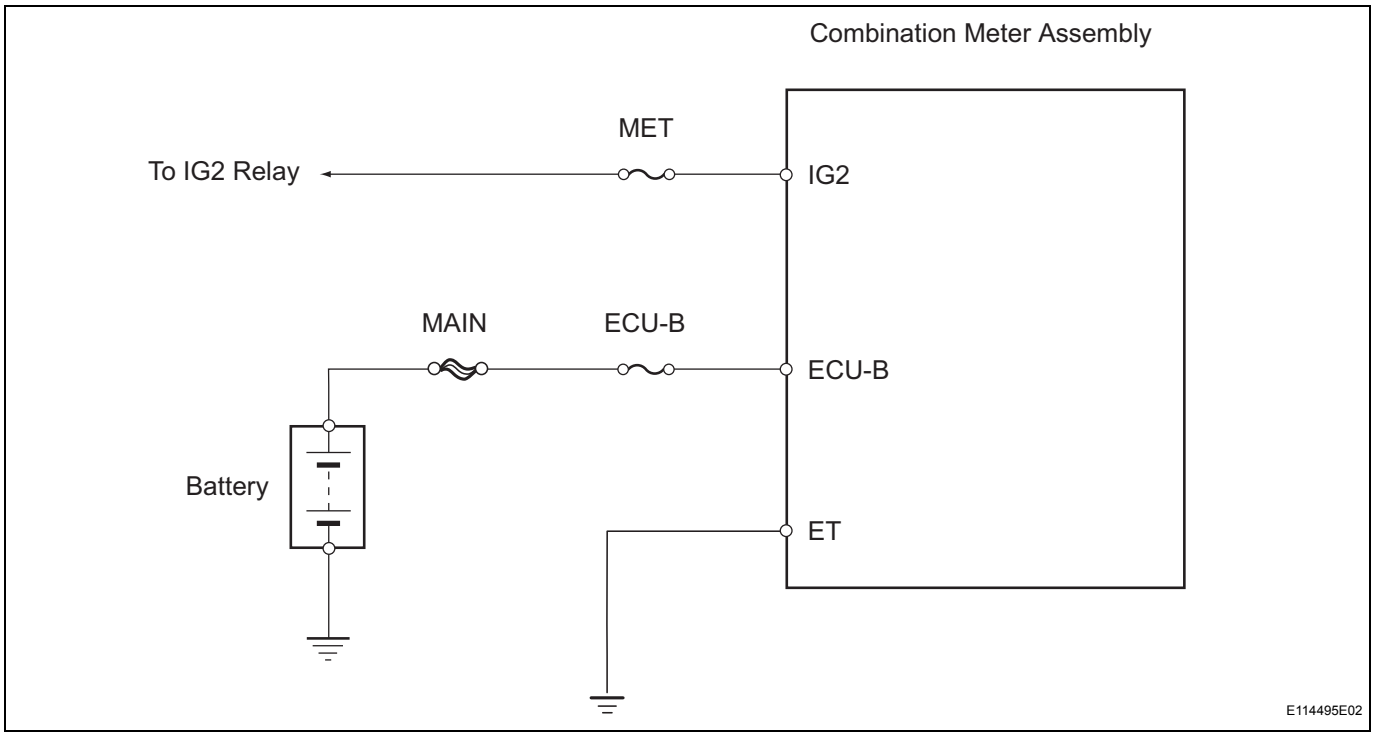

INSPECTION PROCEDURE

1	CHECK FUSE (ECU-B, MET)

Engine Room R/B:

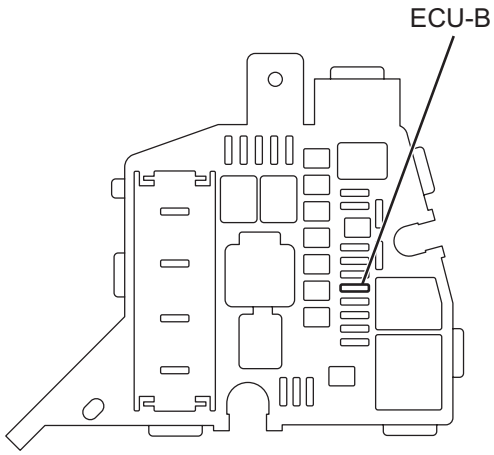

Main Body ECU:

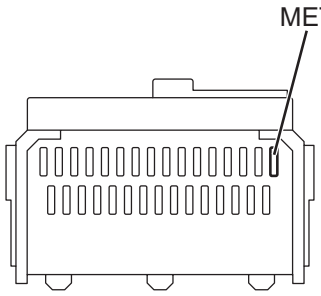

O

E117120E01

(a) Remove the ECU-B fuse from the engine room relay block.
(b) Remove the MET fuse from the main body ECU.
(c) Measure the resistance.
Standard resistance:
Below 1Ω
(d) Reinstall the fuse.

NG → **CHECK SHORT CIRCUIT IN COMPONENTS AND WIRES CONNECTED TO FUSE**

OK

ME

2	INSPECT COMBINATION METER ASSEMBLY

Wire Harness Side:

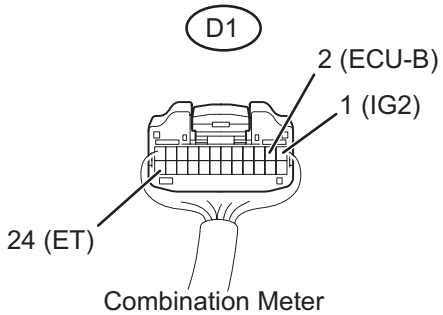

E114496E09

(a) Disconnect the D1 combination meter connector.
(b) Measure the resistance.
Standard resistance

Terminal No.	Condition	Specified Condition
ET (D1-24) - Body ground	Always	Below 1 Ω

(c) Measure the voltage.
Standard voltage

Terminal No.	Condition	Specified Condition
IG2 (D1-1) - Body ground	Ignition switch ON	11 to 14V
ECU-B (D1-2) - Body ground	Always	11 to 14V

(d) Reconnect the combination meter connector.

NG → **REPAIR OR REPLACE HARNESS OR CONNECTOR**

OK

REPLACE COMBINATION METER ASSEMBLY

ME

Speedometer Malfunction

DESCRIPTION

The combination meter assembly controls the speedometer in accordance with vehicle speed signals from the speedometer sensor.

WIRING DIAGRAM

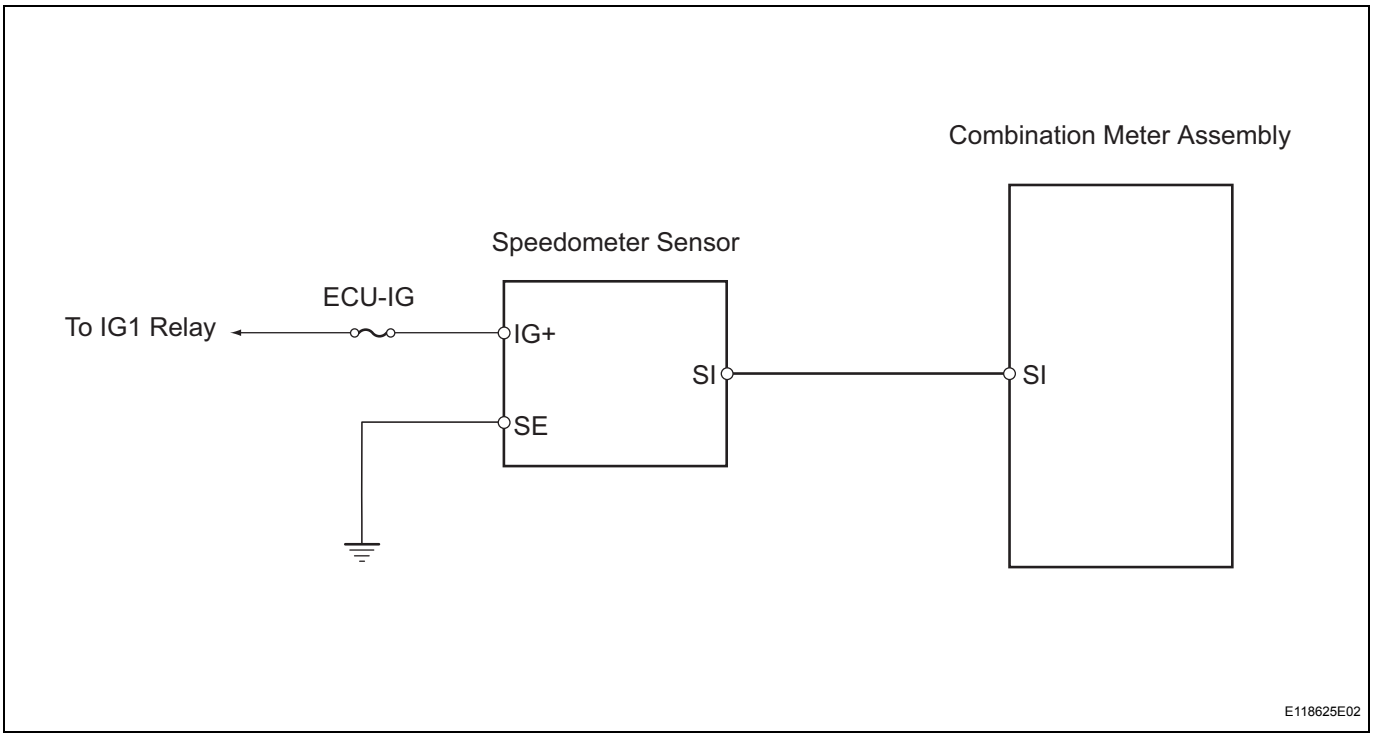

INSPECTION PROCEDURE

1	PERFORM ACTIVE TEST BY INTELLIGENT TESTER (SPEED METER)

(a) Connect the intelligent tester to the DLC3.
(b) Turn the ignition switch ON and turn the tester ON.
(c) Enter the following menus : DIAGNOSIS / METER / ACTIVE TEST.

METER

Item	Test Details	Diagnostic Note
SPEED METER	0 / 40(24) / 80(48) / 120(72) / 160(96) / 200(120) / 240(144) km/h (mph)	-

OK:
Vehicle speed displayed on the tester is approximately the same as that of the speedometer reading.

NG → **REPLACE COMBINATION METER ASSEMBLY**

OK

2	READ VALUE OF INTELLIGENT TESTER (SPEED METER)

(a) Connect the intelligent tester to the DLC3.
(b) Turn the ignition switch ON and the tester ON.
(c) Select the item below from the Data List, and read the value displayed on the intelligent tester.

METER

Item	Measurement Item / Range(Display)	Normal Condition	Diagnostic Note
SPEED METER	Vehicle speed / Min.: 0 km/h (0mph), Max.: 255 km/h(158mph)	Approximately same as actual vehicle speed (When vehicle is driven)	-

OK:
Vehicle speed displayed on the tester is approximately the same as the actual vehicle speed.

NG → **Go to step 3**

OK →

REPLACE COMBINATION METER ASSEMBLY

3	INSPECT SPEEDOMETER

Component Side:

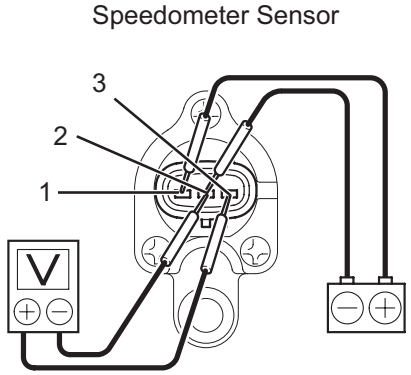

(a) Remove the speedometer sensor.
(b) Connect the positive (+) lead from the battery to terminal 1 and the negative(-) lead to terminal 2.
(c) Connect the positive (+) lead from the tester to terminal 3 and the negative (-) lead to terminal 2.
(d) Rotate the shaft.
(e) Check that the voltage output between terminals 2 and 3 varies between 0V and 11V.
(f) Reinstall the speedometer sensor.

NG → **REPLACE SPEEDOMETER**

OK →

4	CHECK HARNESS AND CONNECTOR (SPEEDOMETER SENSOR - COMBINATION METER ASSEMBLY)

Wire Harness Side:

Speedometer Sensor Connector

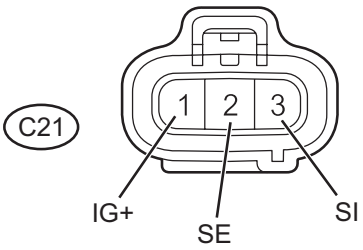

Combination Meter Assembly Connector

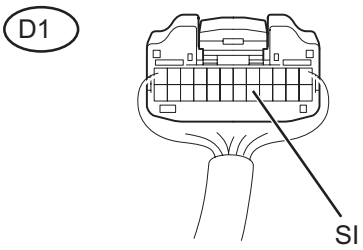

E117013E02

(a) Disconnect the D1 combination meter assembly connector.
(b) Disconnect the C21 speedometer sensor connector.
(c) Measure the resistance
Standard resistance

Tester Connection	Specified Condition
D1-17 (SI) - C21-3 (SI)	Below 1 Ω
C21-2 (SE) - Body ground	Below 1 Ω

(d) Reconnect the combination meter assembly connector.
(e) Measure the voltage
Standard voltage

Tester Connection	Condition	Specified Condition
C21-1 (IG+) - Body ground	Ignition switch ON	11 to 14V

(f) Reconnect the combination meter assembly and speedometer sensor connectors.

NG → **REPAIR OR REPLACE HARNESS OR CONNECTOR**

OK

REPLACE COMBINATION METER ASSEMBLY

ME

Tachometer Malfunction

DESCRIPTION

The combination meter assembly controls the tachometer in accordance with engine speed signals from the ECM through the CAN communication system.

WIRING DIAGRAM

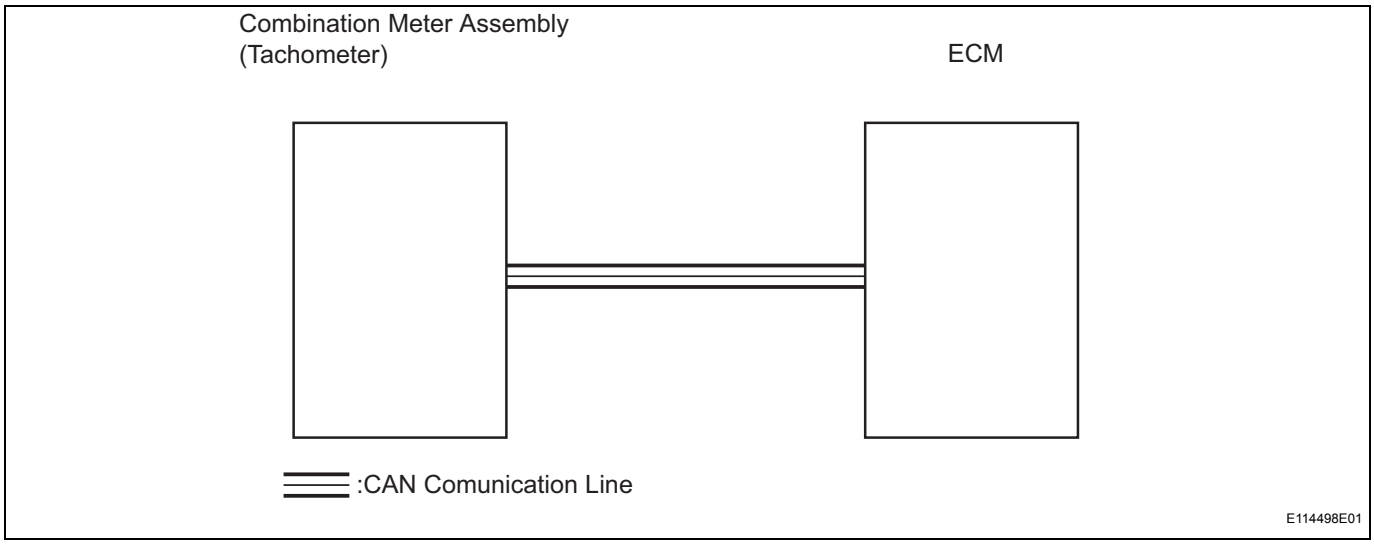

INSPECTION PROCEDURE

HINT:
If DTC U0100 has been stored, troubleshoot the CAN communication system first.

1	PERFORM ACTIVE TEST BY INTELLIGENT TESTER (TACHOMETER)

(a) Connect the intelligent tester to the DLC3.
(b) Turn the ignition switch ON and turn the tester ON.
(c) Enter the following menus: DIAGNOSIS / METER / ACTIVE TEST.

METER

Item	Test Details	Diagnostic Note
TACHOMETER	0 rpm / 1,000 rpm / 2,000 rpm / 3,000 rpm / 4,000 rpm / 5,000 rpm / 6,000 rpm / 7,000 rpm	-

OK:
Engine speed displayed on the tester is approximately the same as that of the tachometer reading.

NG → **REPLACE COMBINATION METER ASSEMBLY**

OK

2	READ VALUE OF INTELLIGENT TESTER (TACHOMETER)

(a) Connect the intelligent tester to the DLC3.

(b) Turn the ignition switch ON and turn the tester ON.
(c) Select the item below from the Data List, and read the value displayed on the intelligent tester.

METER

Item	Measurement Item/Range (Display)	Normal Condition	Diagnostic Note
TACHOMETER	Engine speed/Min.: 0 rpm, Max.: 12,750 rpm	Approximately same as actual engine speed (When engine is running)	-

OK:
Engine speed displayed on the tester is approximately the same as the actual engine speed.

NG → **GO TO SFI SYSTEM**

OK

REPLACE COMBINATION METER ASSEMBLY

Fuel Gauge Malfunction

DESCRIPTION

The combination meter assembly controls the fuel receiver gauge in accordance with the resistance of the fuel sender gauge that varies depending on the fuel remaining amount in the fuel tank.

WIRING DIAGRAM

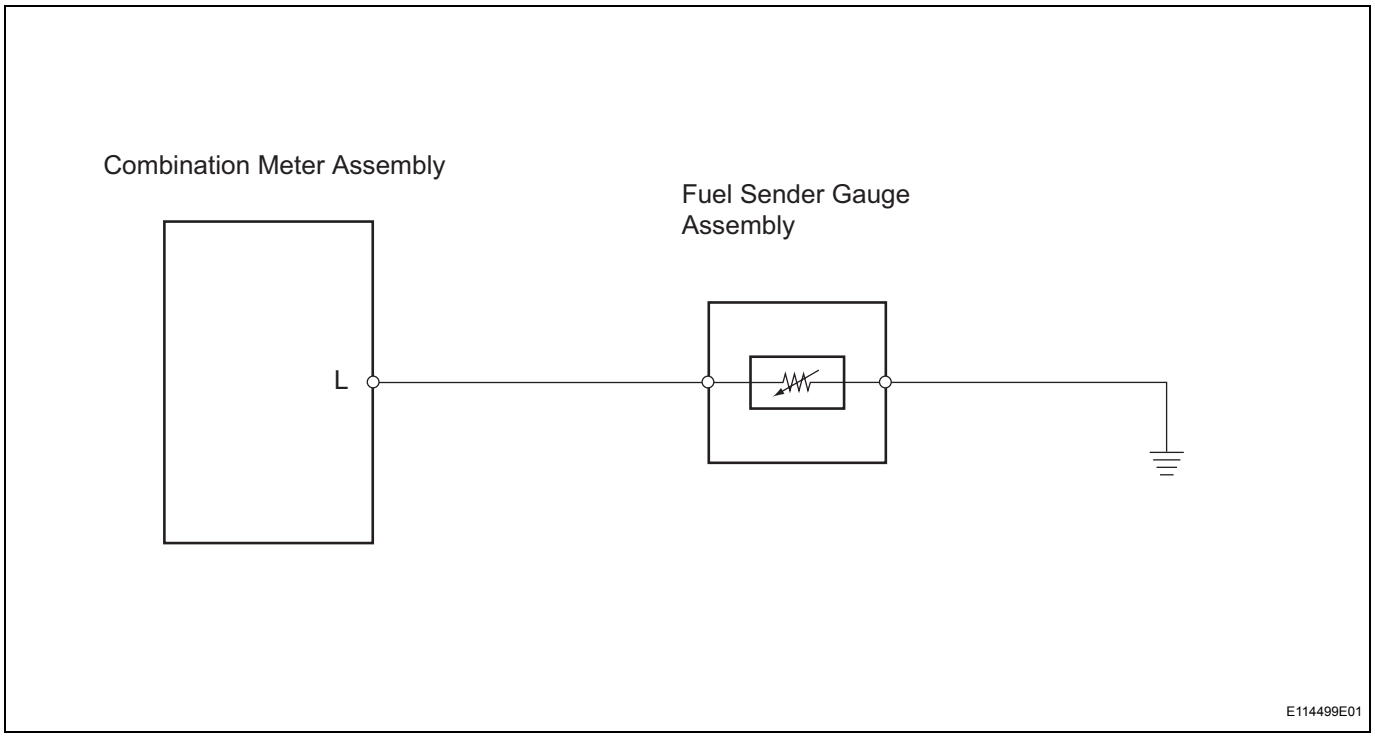

INSPECTION PROCEDURE

1	PERFORM ACTIVE TEST BY INTELLIGENT TESTER (FUEL GAUGE)

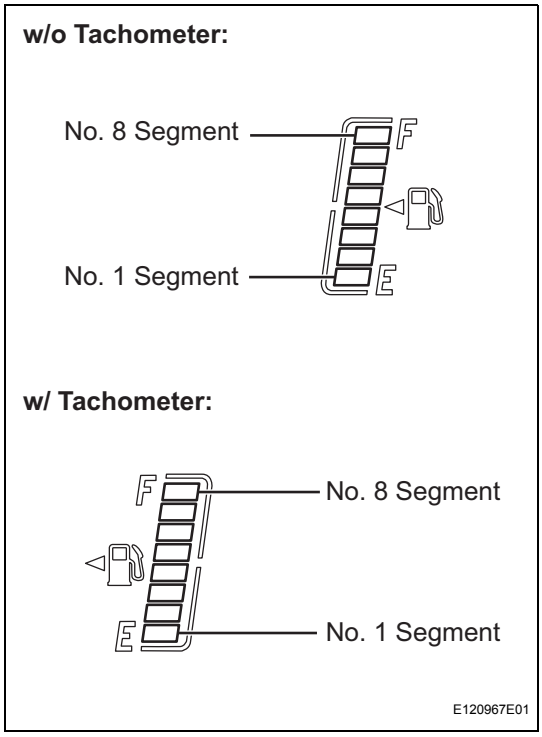

(a) Connect the intelligent tester to the DLC3.
(b) Turn the ignition switch ON and turn the tester ON.
(c) Enter the following menus: DIAGNOSIS / METER / ACTIVE TEST.

METER

Item	Test Details	Diagnostic Note
FUEL GAUGE	EMPTY: Segment No.1 flashes 1/2: Segments No.1 to 4 illuminate FULL: Segments No.1 to 8 illuminate	-

OK:
Fuel receiver gauge segments are illuminated in accordance with the tester instructions.

NG → **REPAIR OR REPLACE HARNESS OR CONNECTOR**

OK

2	READ VALUE OF INTELLIGENT TESTER (FUEL GAUGE)

(a) Connect the intelligent tester to the DLC3.
(b) Turn the ignition switch ON and turn the tester ON
(c) Select the item below from the Data List, and read the value displayed on the intelligent tester.

METER

Item	Measurement Item/Range (Display)	Normal Condition	Diagnostic Note
FUEL GAUGE (A/D)	Fuel input signal / Min.: 0, Max.: 255	Fuel receiver gauge segments No.1 to No.8 illuminate: 14 to 34 No.1 to No.6 (No7) illuminate: 77 to 109 No.1 to No.4 (No,5) illuminate: 135 to 172 No.1 and No.2 illuminate: 175 to 188 No.1 flashes: 194 to 200	-

OK:
Fuel input signal displayed on the tester is approximately the same as indication.

NG → **REPAIR OR REPLACE HARNESS OR CONNECTOR**

OK

ME

3 CHECK COMBINATION METER ASSEMBLY

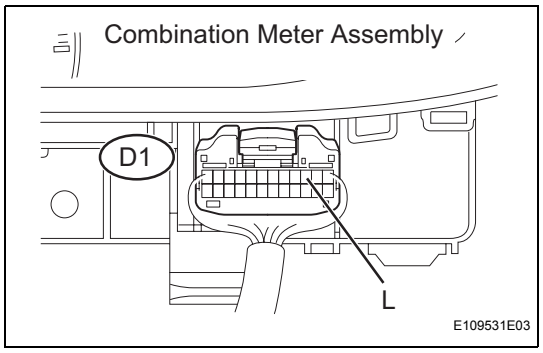

(a) Disconnect the J5 fuel sender gauge assembly connector.
(b) Remove the combination meter assembly with its connectors connected.
(c) Measure the voltage.
Standard voltage

Tester Connection	Condition	Specified Condition
D1-3 (L) - Body ground	Ignition switch ON	11 to 14V

(d) Reconnect the fuel sender gauge assembly connector.
(e) Reinstall the combination meter assembly.

NG → **REPAIR OR REPLACE HARNESS OR CONNECTOR**

OK

4	INSPECT FUEL SENDER GAUGE ASSEMBLY

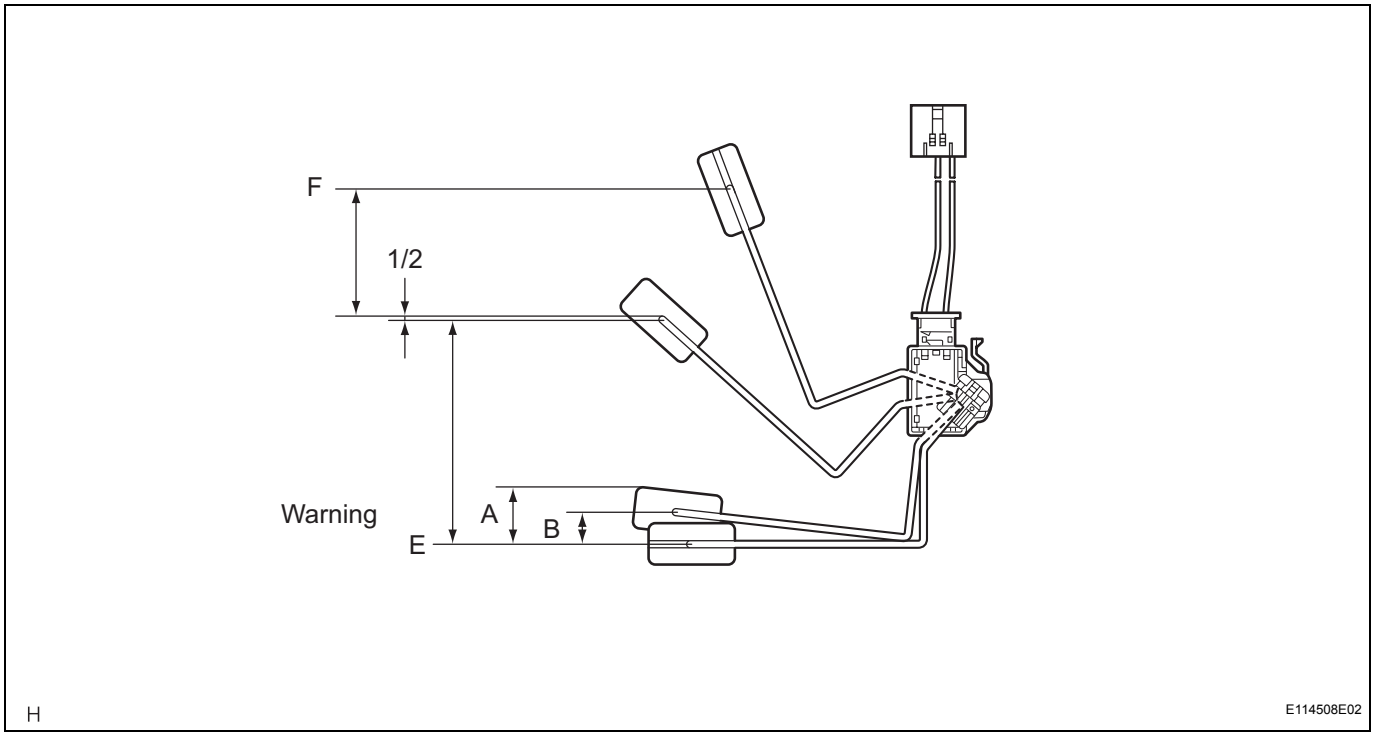

(a) Remove the fuel sender gauge assembly.
(b) Check that the float position is between E and F.
(c) Measure the resistance between terminals 2 and 1 of the fuel sender gauge connector.

Standard resistance

Float Level	Float Positioin (mm (in.))	Specified Condition
F	77.3 (3.04) to 79.3 (3.12)	15 Ω to 18 Ω
1/2	1.6 (0.05)	208.3 Ω
Warning A	34.8 (1.37)	365.2 Ω
Warning B	25.3 (1.00)	388.2 Ω
E	75.0 (2.95) to 77.0 (3.03)	410.0 Ω to 415 Ω

(d) Reinstall the fuel sender gauge assembly.

NG → **REPLACE FUEL SENDER GAUGE ASSEMBLY**

OK

5	CHECK HARNESS AND CONNECTOR (COMBINATION METER ASSEMBLY - FUEL SENDER GAUGE ASSEMBLY)

Wire Harness Side:

Combination Meter Assembly Connector

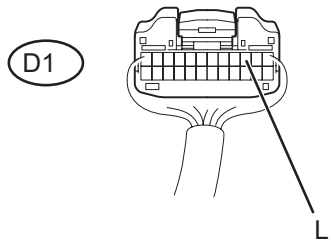

Fuel Sender Gauge Assembly Connector

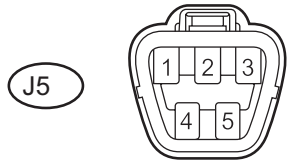

Front View

E117128E02

(a) Disconnect the D1combination meter assembly connector.
(b) Disconnect the J5 fuel sender gauge assembly connector.
(c) Measure the resistance.
Standard resistance

Tester Connection	Specified Condition
D1-3 (L) - J5-2	Below 1Ω
J5-3 - Body ground	Below 1Ω

(d) Reconnect the combination meter assembly and fuel sender gauge assembly connectors.

NG → **REPAIR OR REPLACE HARNESS OR CONNECTOR**

OK

REPLACE COMBINATION METER ASSEMBLY

ME

Malfunction in Water Temperature Warning Light

DESCRIPTION

The combination meter assembly controls both the engine coolant temperature warning light and indicator light in accordance with engine coolant temperature signals from the ECM.
The engine coolant temperature indicator light turns off when the engine coolant temperature exceeds 55°C (131°F) and illuminates when the temperature decreases to below 45°C (113°F).
The engine coolant temperature warning light flashes when the engine coolant temperature reaches 117°C (242.6°F) and illuminates when the temperature exceeds 120°C (248°F). When the temperature decreases to 119.5°C (247.1°F) while the warning light is illuminated, the warning light begins to flashing. In addition, when the temperature decreases to below 116.5°C(241.7°F) the warning light turns off.

WIRING DIAGRAM

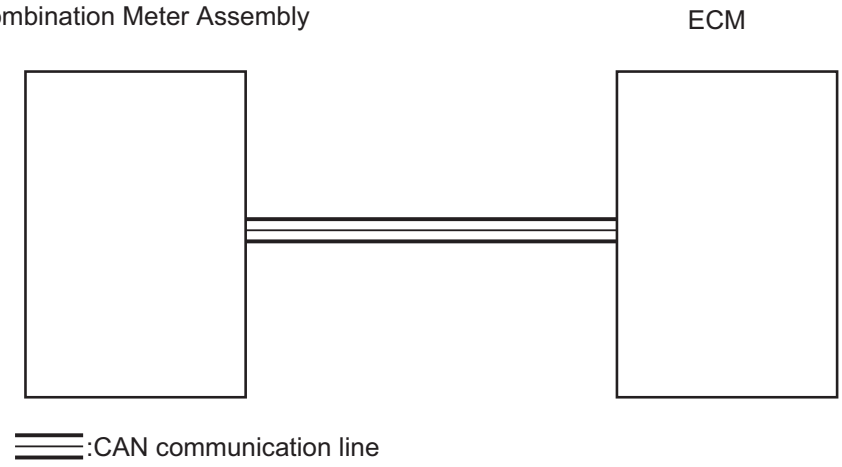

INSPECTION PROCEDURE

HINT:
- If DTC U0100 has been stored, troubleshoot the CAN communication system first.
- If there is an open or short in the engine coolant temperature sensor circuit, an SFI system DTC is output. If output, perform troubleshooting on the SFI system.

1	PERFORM ACTIVE TEST BY INTELLIGENT TESTER (COOLANT HOT)

(a) Connect the intelligent tester to the DLC3.
(b) Turn the ignition switch ON and turn the tester ON.
(c) Enter the following menus: DIAGNOSIS/ METER/ ACTIVE TEST

METER

Item	Test Details	Diagnostic Note
COOLANT HOT	ON: Engine coolant temperature warning light flashes OFF: Engine coolant temperature warning light turns off	-
COOLANT COOL	ON: Engine coolant temperature indicator light flashes OFF: Engine coolant temperature indicator light turns off	-

Item	Test Details	Diagnostic Note
COOLANT TEMP	HIGH: Engine coolant temperature warning light flashes NORMAL: Engine coolant temperature warning light and indicator light turns off LOW: Engine coolant temperature indicator light illuminates	-

OK:

Both the engine coolant temperature warning light and indicator light are operated in accordance with the tester instructions.

NG → **REPLACE COMBINATION METER ASSEMBLY**

OK

2 READ VALUE OF INTELLIGENT TESTER (COOLANT TEMP)

(a) Connect the intelligent tester to the DLC3.
(b) Turn the ignition switch ON and turn the tester ON.
(c) Select the item below from the Data List, and read the value displayed on the intelligent tester.

ME

METER

Item	Measurement Item/Range (Display)	Normal Condition	Diagnostic Note
COOLANT TEMP	Engine coolant temperature / Min.: 0°C,Max.: 127.5°C	After warming up: 75 to 105°C (167 to 221°F)	-

HINT:

- If the value is 0°C (32°F), the sensor circuit is open.
- If the value is 127.5°C (262°F), the sensor circuit is shorted.

OK:

Coolant temperature displayed on the tester is between 75°C (167°F) and 105°C (221°F) after warming up.

NG → **GO TO SFI SYSTEM**

OK

REPLACE COMBINATION METER ASSEMBLY

Warning Buzzer does not Sound

DESCRIPTION

The combination meter assembly controls the buzzers in accordance with signals from the center airbag sensor assembly, the main body ECU and the taillight relay.
HINT:
The main body ECU receives signals from the center airbag sensor assembly and transmits them to the combination meter assembly.

WIRING DIAGRAM

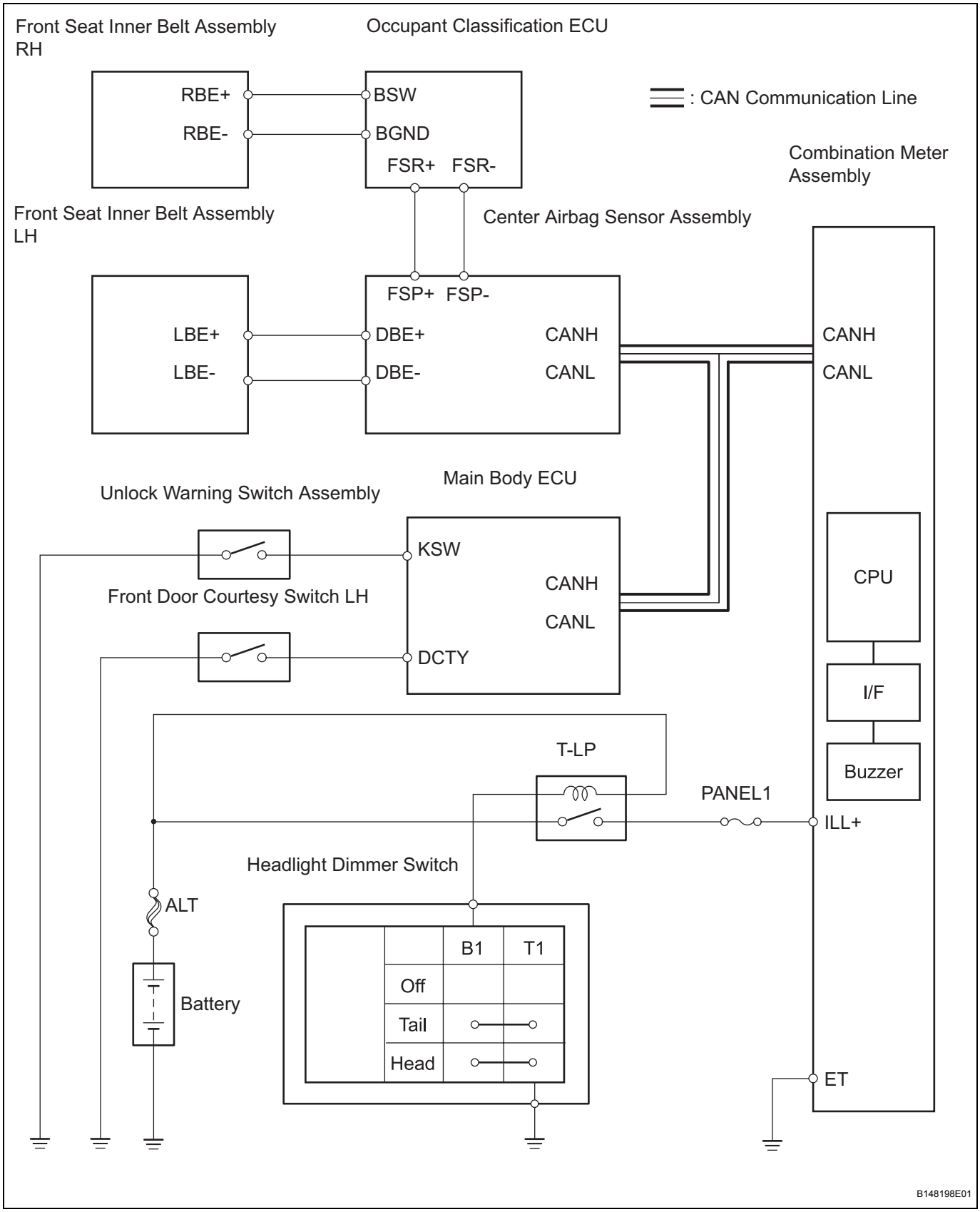

ME

INSPECTION PROCEDURE

1	CHECK BUZZER (SEAT BELT, KEY REMINDER, TAILLIGHT REMINDER)

(a) Check that the seat belt, key reminder and taillight reminder warning buzzers sound.

Result

Result	Proceed to
Seat belt warning buzzer does not sound	A
Key reminder warning buzzer does not sound	B
Taillight reminder warning buzzer does not sound (Meter illuminations normal)	C
No warning buzzers sound	D

HINT:

- Seat belt warning buzzer on: Ignition switch is ON, driver or front passenger seat belt is unfastened, and vehicle speed is 12.4mph (20 km/h) or more.
- Key reminder warning buzzer on: Ignition switch is OFF, key is in ignition key cylinder, and driver side door is open.
- Taillight reminder warning buzzer on: Ignition switch is OFF, taillight relay switch is ON, and driver side door is open.

ME

B → **Go to step 5**

C → **Go to step 11**

D → **REPLACE COMBINATION METER ASSEMBLY**

A

2	CHECK SUPPLEMENTAL RESTRAINT SYSTEM

(a) Connect the intelligent tester to the DLC3.
(b) Turn the ignition switch ON and turn the tester ON.
(c) Enter the following menus: DIAGNOSIS / SRS AIRBAG/ DTC INFO.

Result

Result	Proceed to
No SRS DTCs are output	A
SRS DTCs are output	B

B → **GO TO SUPPLEMENTAL RESTRAINT SYSTEM**

A

3	CHECK OCCUPANT CLASSIFICATION SYSTEM

(a) Connect the intelligent tester to the DLC3.
(b) Turn the ignition switch ON and turn the tester ON.
(c) Enter the following menus: DIAGNOSIS / OCCUPANT DETECT /DTC INFO.

Result

Result	Proceed to
No occupant classification system DTCs are output	A
Occupant classification system DTCs are output	B

B → **GO TO OCCUPANT CLASSIFICATION SYSTEM**

A

4	CHECK KEY REMINDER FUNCTION

(a) Ignition switch is OFF.
(b) Key is in ignition key cylinder.
(c) Driver side door is open.

OK:

Key reminder warning buzzer ON.

OK → **REPLACE MAIN BODY ECU**

NG

REPLACE COMBINATION METER ASSEMBLY

5	READ VALUE OF INTELLIGENT TESTER (FRONT DOOR COURTESY SWITCH (DRIVER SIDE))

(a) Connect the intelligent tester to the DLC3.
(b) Turn the ignition switch ON and turn the tester ON.
(c) Select the item below from the Data List, and read the value displayed on the intelligent tester.

MAIN BODY ECU

Item	Measurement Item / Display (Range)	Normal Condition	Diagnostic Note
D DOR CTY SW	Driver side door courtesy switch signal / ON or OFF	ON: Driver door is open OFF: Driver door is closed	-

NG → **Go to step 9**

OK

6	READ VALUE OF INTELLIGENT TESTER (UNLOCK WARNING SWITCH)

(a) Connect the intelligent tester to the DLC3.
(b) Turn the ignition switch ON and turn the tester ON.
(c) Select the item below from the Data List, and read the value displayed on the intelligent tester.

MAIN BODY ECU

Item	Measurement Item / Display (Range)	Normal Condition	Diagnostic Note
KEY UNLK WRN SW	Unlock warning switch signal / ON or OFF	ON: Key is in ignition key cylinder OFF: No key is in ignition key cylinder	-

OK → **REPLACE COMBINATION METER ASSEMBLY**

NG

ME

7	INSPECT UNLOCK WARNING SWITCH ASSEMBLY

Component Side:

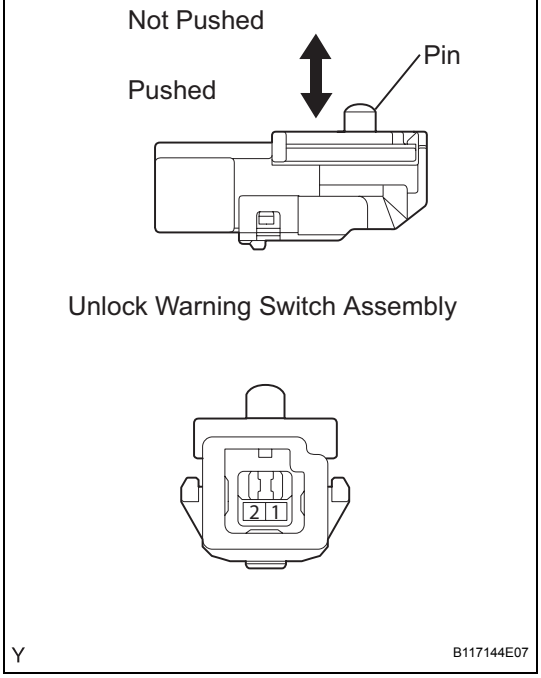

(a) Disconnect the D19 unlock warning switch assembly connector.
(b) Remove the unlock warning switch assembly.
(c) Measure the resistance.
Standard resistance

Tester Connection	Condition	Specified Condition
1 - 2	Not pushed	10 k Ω or higher
1 - 2	Pushed	Below 1 Ω

(d) Reconnect the unlock warning switch assembly.

NG → **REPLACE UNLOCK WARNING SWITCH ASSEMBLY**

OK

8	CHECK HARNESS AND CONNECTOR (UNLOCK WARNING SWITCH ASSEMBLY - MAIN BODY ECU)

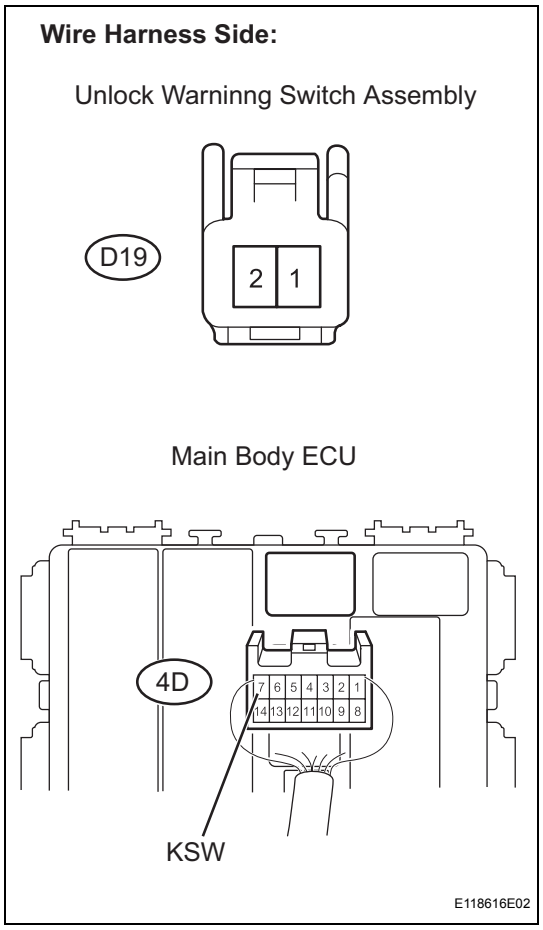

(a) Disconnect the D19 unlock warning switch connector.
(b) Disconnect the 4D main body ECU connector.
(c) Measure the resistance.

Standard resistance

Tester Connection	Specified Condition
D19-1 - 4D-7 (KSW)	Below 1 Ω
D19-2 - Body ground	Below 1 Ω

(d) Reconnect the unlock warning switch connector.
(e) Reconnect the main body ECU connector.

NG → **REPAIR OR REPLACE HARNESS OR CONNECTOR**

OK

REPLACE MAIN BODY ECU

9	INSPECT FRONT DOOR COURTESY SWITCH (DRIVER SIDE)

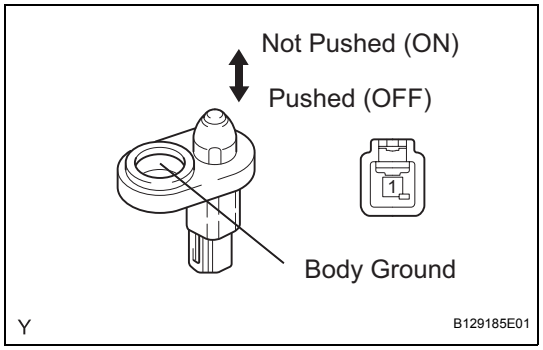

(a) Disconnect the J2 front door courtesy switch connector.
(b) Measure the resistance.

Standard resistance

Tester Connection	Condition	Specified Condition
J2-1 - Body ground	Not pushed (ON)	Below 1 Ω
J2-1 - Body ground	Pushed (OFF)	10 kΩ or higher

(c) Reconnect the front door courtesy switch connector.

NG → **REPLACE FRONT DOOR COURTESY SWITCH (DRIVER SIDE)**

OK

10	CHECK HARNESS AND CONNECTOR (FRONT DOOR COURTESY SWITCH - MAIN BODY ECU)

Wire Harness Side:

Front Door Courtesy Switch Connector (Driver Side)

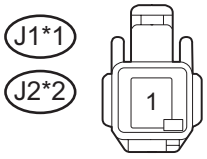

Front View

Main Body ECU Connector

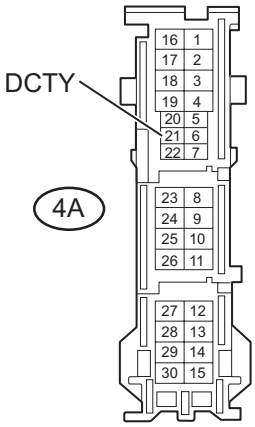

*1: RHD
*2: LHD

Front View

Y

B112021E07

(a) Disconnect the J2 front door courtesy switch connector.
(b) Disconnect the 4A main body ECU connector.
(c) Measure the resistance.

Standard resistance

Tester Connection	Specified Condition
J2-1 - 4A-21 (DCTY)	Below 1 Ω

(d) Reconnect the front door courtesy switch connector.
(e) Reconnect the main body ECU connector.

NG → **REPAIR OR REPLACE HARNESS OR CONNECTOR**

OK

REPLACE MAIN BODY ECU

11	READ VALUE OF INTELLIGENT TESTER (FRONT DOOR COURTESY SWITCH)

(a) Connect the intelligent tester to the DLC3.
(b) Turn the ignition switch ON and turn the tester ON.
(c) Select the item below from the Data List, and read the value displayed on the intelligent tester.

MAIN BODY ECU

Item	Measurement Item / Display (Range)	Normal Condition	Diagnostic Note
D DOR CTY SW	Driver door courtesy switch signal / ON or OFF	ON: Driver door is open OFF: Driver door is closed	-

NG → **Go to step 12**

OK

REPLACE COMBINATION METER ASSEMBLY

12 INSPECT FRONT DOOR COURTESY SWITCH (DRIVER SIDE)

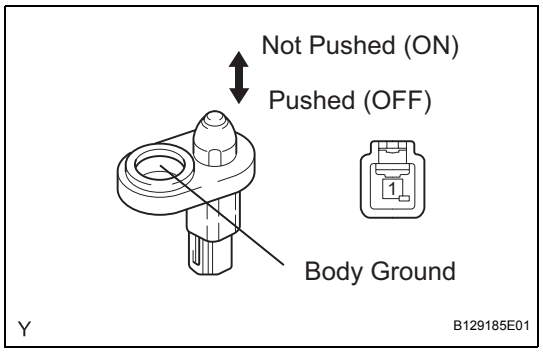

(a) Disconnect the J2 front door courtesy switch assembly connector.

(b) Measure the resistance.

Standard resistance

Tester Connection	Condition	Specified Condition
J2-1 - Body ground	Not pushed (ON)	Below 1 Ω
J2-1 - Body ground	Pushed (OFF)	10kΩ or higher

(c) Reconnect the front door courtesy switch connector.

NG → **REPLACE FRONT DOOR COURTESY SWITCH (DRIVER SIDE)**

OK

ME

13	CHECK HARNESS AND CONNECTOR (FRONT DOOR COURTESY SWITCH - MAIN BODY ECU)

Wire Harness Side:

Front Door Courtesy Switch Connector (Driver Side)

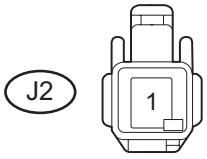

Front View

Main Body ECU Connector

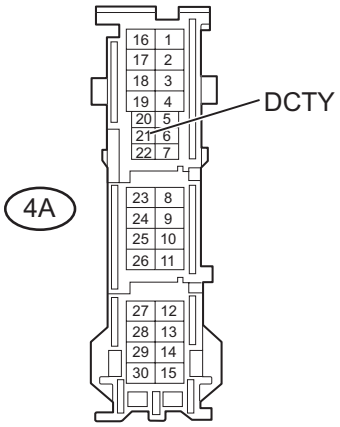

Front View

Y

B112021E08

(a) Disconnect the J2 front door courtesy switch connector.
(b) Disconnect the 4A main body ECU connector.
(c) Measure the resistance.

Standard resistance

Tester Connection	Specified Condition
J2-1 - 4A-21 (DCTY)	Below 1 Ω

(d) Reconnect the front door courtesy switch connector.
(e) Reconnect the main body ECU connector.

NG → **REPAIR OR REPLACE HARNESS OR CONNECTOR**

OK

REPLACE MAIN BODY ECU

Driver Side Seat Belt Warning Light does not Operate

DESCRIPTION

When the ignition switch is ON, the center airbag sensor assembly communicates the status of the front seat inner belt assembly LH to the main body ECU using the CAN communication line. The main body ECU receives signals from the center airbag sensor assembly and transmits them to the combination meter assembly. When the seat belt is unfastened, the combination meter assembly flashes the driver seat belt warning light in the combination meter assembly. When the seat belt is fastened, the combination meter assembly stops flashing the front driver seat belt warning light.

WIRING DIAGRAM

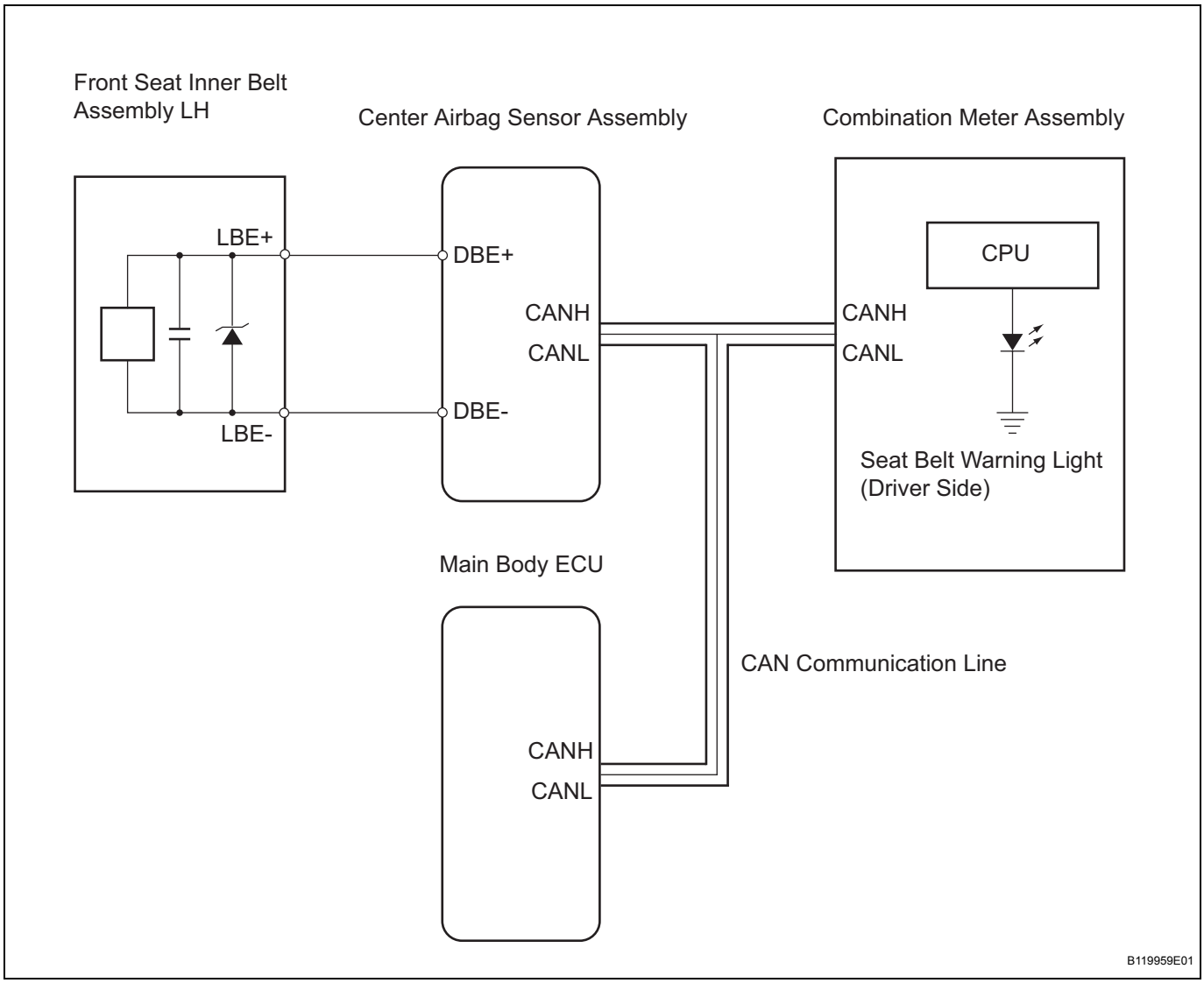

INSPECTION PROCEDURE

1	CHECK SUPPLEMENTAL RESTRAINT SYSTEM

(a) Connect the intelligent tester to the DLC3.
(b) Turn the ignition switch ON and turn the tester ON.

(c) Enter the following menus: DIAGNOSIS / SRS AIRBAG/ DTC INFO

Result

Result	Proceed to
No SRS DTCs are output	A
SRS DTCs are output	B

B → **GO TO SUPPLEMENTAL RESTRAINT SYSTEM**

A

2	PERFORM ACTIVE TEST BY INTELLIGENT TESTER (SEAT BELT WARNING LIGHT FOR DRIVER SIDE)

(a) Connect the intelligent tester to the DLC3.
(b) Turn the ignition switch ON and turn the tester ON.
(c) Enter the following menus: DIAGNOSIS / METER / ACTIVE TEST

ME **METER**

Item	Test Details	Diagnostic Note
D-BELT REMIND	Driver seat belt warning light / OFF or ON	Confirm that vehicle is stopped and engine is idling

OK:

Driver seat belt warning light operates normally.

OK → **REPLACE MAIN BODY ECU**

NG

REPLACE COMBINATION METER ASSEMBLY

Front Passenger Side Seat Belt Warning Light Malfunction

DESCRIPTION

When the ignition switch is ON and the front passenger seat is occupied, the center airbag sensor assembly communicates the status of the front seat inner belt assembly RH to the main body ECU using the CAN communication line. The main body ECU receives signals from the center airbag sensor assembly and transmits them to the combination meter assembly. When the front passenger seat belt is unfastened, the combination meter assembly flashes the front passenger seat belt warning light on the instrument panel finish panel end RH. When the seat belt is fastened, the combination meter assembly stops flashing the front passenger seat belt warning light on the instrument panel finish panel end RH.

WIRING DIAGRAM

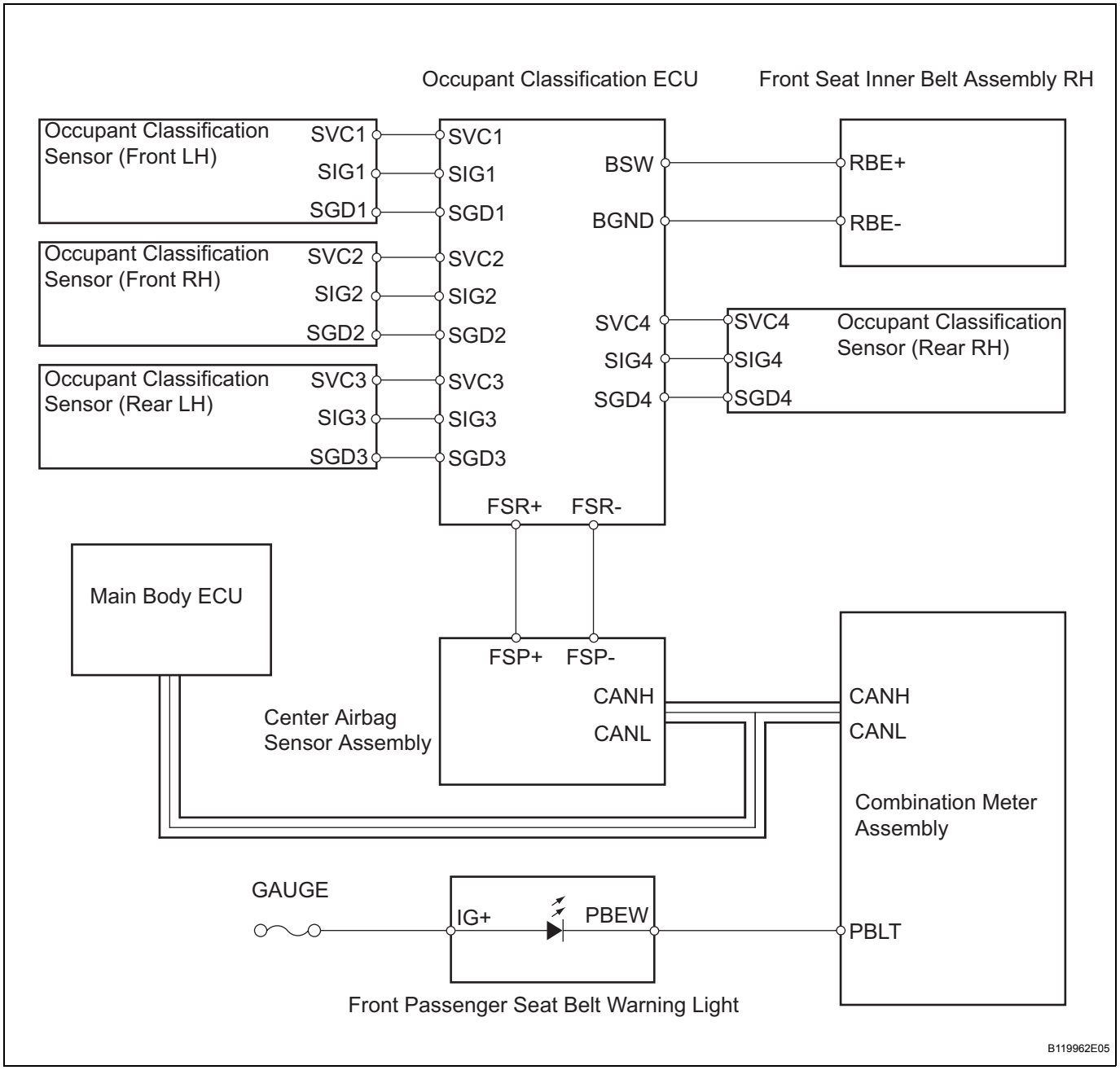

ME

INSPECTION PROCEDURE

1	CHECK SUPPLEMENTAL RESTRAINT SYSTEM

(a) Connect the intelligent tester to the DLC3.
(b) Turn the ignition switch ON and turn the tester ON.
(c) Enter the following menus: DIAGNOSIS / SRS AIRBAG / DTC INFO

Result

Result	Proceed to
No SRS DTCs are output	A
SRS DTCs are output	B

B → GO TO SUPPLEMENTAL RESTRAINT SYSTEM

A

ME

2	CHECK OCCUPANT CLASSIFICATION SYSTEM

(a) Connect the intelligent tester to the DLC3.
(b) Turn the ignition switch ON and turn the tester ON.
(c) Enter the following menus: DIAGNOSIS / OCCUPANT DETECT / DTC INFO

Result

Result	Proceed to
No occupant classification system DTCs are output	A
Occupant classification system DTCs are output	B

B → GO TO OCCUPANT CLASSIFICATION SYSTEM

A

3	READ VALUE OF INTELLIGENT TESTER (P BUCKLE SW)

(a) Connect the intelligent tester to the DLC3.
(b) Turn the ignition switch ON and turn the tester ON.
(c) Enter the following menus: DIAGNOSIS / SRS AIRBAG / DATA LIST

Airbag ECU

Item	Measurement Item / Display (Range)	Normal Condition	Diagnostic Note
P-BELT BUCKL SW	Front passenger seat belt buckle switch / UNSET: Front passenger seat belt is not fastened SET: Front passenger seat belt is fastened NG: Data is not determined	UNSET / SET	-

OK:
Front passenger seat belt warning light operates normally.

OK → **Go to step 7**

NG

4 CHECK FRONT SEAT INNER BELT ASSEMBLY RH (PASSENGER SIDE)

Wire Harness Side:

Front Seat Inner Belt Assembly RH Connector (Passenger Side)

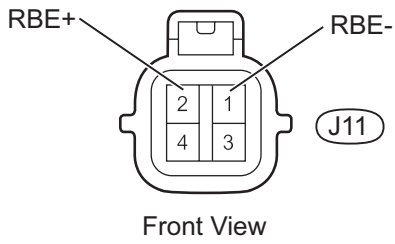

H

B118133E02

(a) Disconnect the J11 front seat inner belt assembly RH (passenger side) connector.
(b) Measure the resistance.
Standard resistance

Tester Connection	Condition	Specified Condition
J11-1 (RBE-) - J11-2 (RBE+)	Tongue plate fastened	10 kΩ or higher
J11-1 (RBE-) - J11-2 (RBE+)	Tongue plate released	Below 1 Ω

(c) Reconnect the front seat belt inner assembly RH (passenger side) connector.

NG → **REPLACE FRONT SEAT INNER BELT ASSEMBLY RH (PASSENGER SIDE)**

OK

ME

5	CHECK HARNESS AND CONNECTOR (ECU - FRONT SEAT INNER BELT ASSEMBLY RH (PASSENGER SIDE))

Wire Harness Side:

Front Seat Inner Belt (Passenger Side) Connector

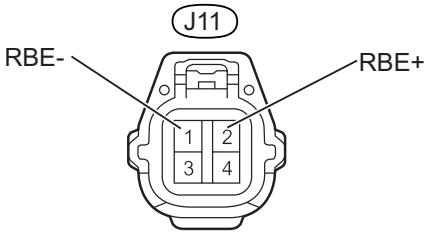

Front View

Occupant Classification ECU Connector

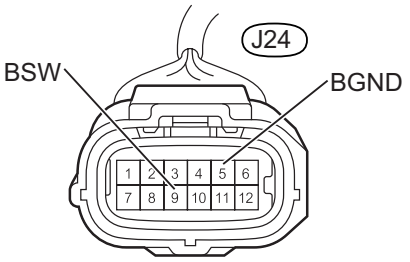

Front View

B119960E02

(a) Disconnect the J24 occupant classification ECU connector.
(b) Disconnect the J11 front seat inner belt connector (passenger side).
(c) Measure the resistance.

Standard resistance

Tester Connection	Specified Condition
J24-9 (BSW) - J11-2 (RBE+)	Below 1 Ω
J24-10 (BGND) - J11-1 (RBE-)	Below 1 Ω

(d) Reconnect the occupant classification ECU connector.
(e) Reconnect the front seat inner belt connector (passenger side).

NG → **REPAIR OR REPLACE HARNESS OR CONNECTOR**

OK

ME

6	CHECK HARNESS AND CONNECTOR (CENTER AIRBAG SENSOR ASSEMBLY - OCCUPANT CLASSIFICATION ECU)

Wire Harness Side:

Center Airbag Sensor Assembly Connector

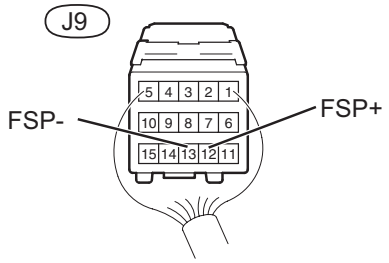

Front View

Occupant Classification ECU Connector



Front View B124231E02

(a) Disconnect the J9 center airbag sensor assembly connector.
(b) Disconnect the J24 occupant classification ECU connector.
(c) Measure the resistance.

Standard resistance

Tester Connection	Specified Condition
J9-13 (FSP-) - J24-4 (FSR-)	Below 1 Ω
J9-12 (FSP+) - J24-8 (FSR+)	Below 1 Ω

(d) Reconnect the center airbag sensor assembly connector.
(e) Reconnect the occupant classification ECU connector.

NG → **REPAIR OR REPLACE HARNESS OR CONNECTOR**

OK

REPLACE OCCUPANT CLASSIFICATION ECU

7	PERFORM ACTIVE TEST BY INTELLIGENT TESTER (P-BELT REMIND)

(a) Connect the intelligent tester to the DLC3.
(b) Turn the ignition switch ON and turn the tester ON.
(c) Enter the following menus: DIAGNOSIS / METER / ACTIVE TEST

METER

Item	Test Details	Diagnostic Note
P-BELT REMIND	Front passenger seat belt warning light / OFF or ON	Ensure that vehicle is stopped and engine is idling

OK → **REPLACE COMBINATION METER ASSEMBLY**

NG

8	INSPECT FUSE

(a) Remove the GAUGE fuse from the main body ECU.
(b) Measure the resistance.

ME

Standard resistance:
Below 1 Ω

(c) Reinstall the GAUGE fuse .

NG → **REPLACE FUSE**

OK

9 INSPECT SEAT BELT WARNING LIGHT (PASSENGER SIDE)

Component Side:

Front Passenger Seat Belt Warning Light Connector

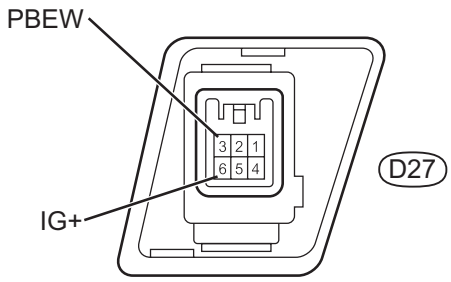

(a) Remove the front passenger seat belt warning light.
(b) Disconnect the D27 front passenger seat belt warning light connector.
(c) Measure the resistance.
Standard resistance

Tester Connection	Specified Condition
D27-3 (PBEW) - D27-6 (IG+)	Below 1 Ω

(d) Reconnect the front passenger seat belt warning light connector.
(e) Reinstall the front passenger seat belt warning light.

NG → **REPLACE SEAT BELT WARNING LIGHT (PASSENGER SIDE)**

OK

ME

10	CHECK HARNESS AND CONNECTOR (FUSE - SEAT BELT WARNING LIGHT)

Wire Harness Side:

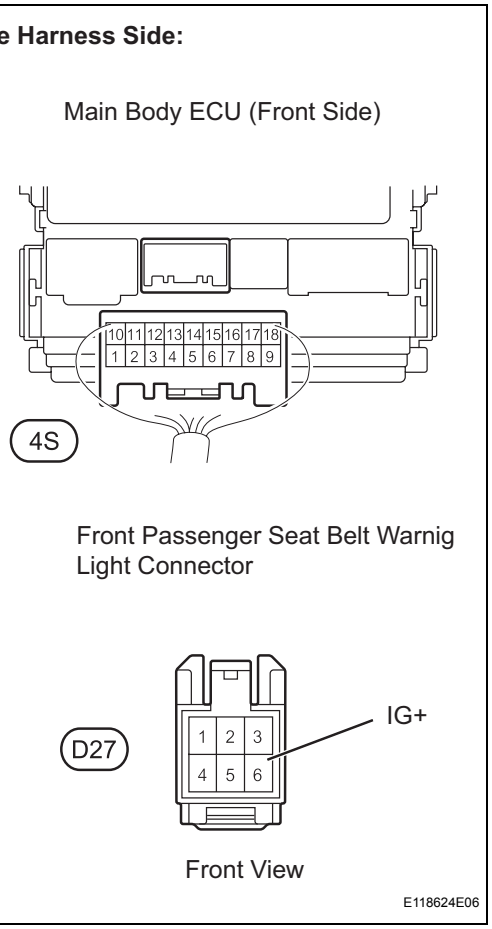

(a) Disconnect the D27 front passenger seat belt warning light connector.
(b) Disconnect the 4S main body ECU front side connector.
(c) Measure the resistance.

Standard resistance

Tester Connection	Specified Condition
4S-15 - D27-6 (IG+)	Below 1 Ω

(d) Reconnect the front passenger seat belt warning light connector.
(e) Reconnect the main body ECU front side connector.

NG → **REPAIR OR REPLACE HARNESS OR CONNECTOR**

OK

ME

11	CHECK HARNESS AND CONNECTOR (SEAT BELT WARNING LIGHT - COMBINATION METER ASSEMBLY)

Wire Harness Side:

Front Passenger Seat Belt Warning Light Connector

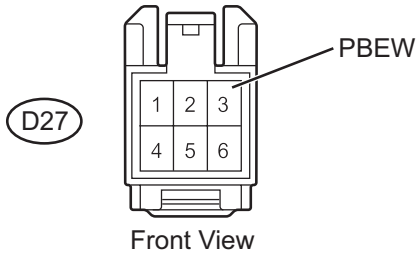

Front View

Combination Meter Assembly

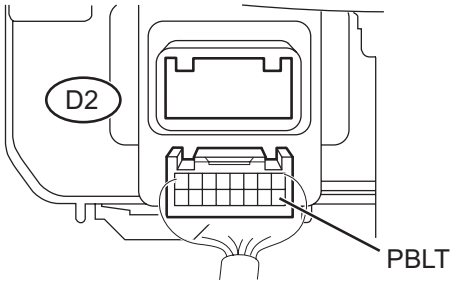

E118617E05

(a) Disconnect the D2 combination meter assembly connector.
(b) Disconnect the D27 front passenger seat belt warning light connector.
(c) Measure the resistance.
Standard resistance

Tester Connection	Specified Condition
D2-9 (PBLT) - D27-3 (PBEW)	Below 1 Ω

(d) Reconnect the combination meter assembly connector.
(e) Reconnect the front passenger seat belt warning light connector.

NG → **REPAIR OR REPLACE HARNESS OR CONNECTOR**

OK

REPLACE MAIN BODY ECU

ME

Operating Light Control Rheostat does not Change Light Brightness

DESCRIPTION

The combination meter assembly controls the combination meter illumination in accordance with the light control signals from the light control rheostat.

WIRING DIAGRAM

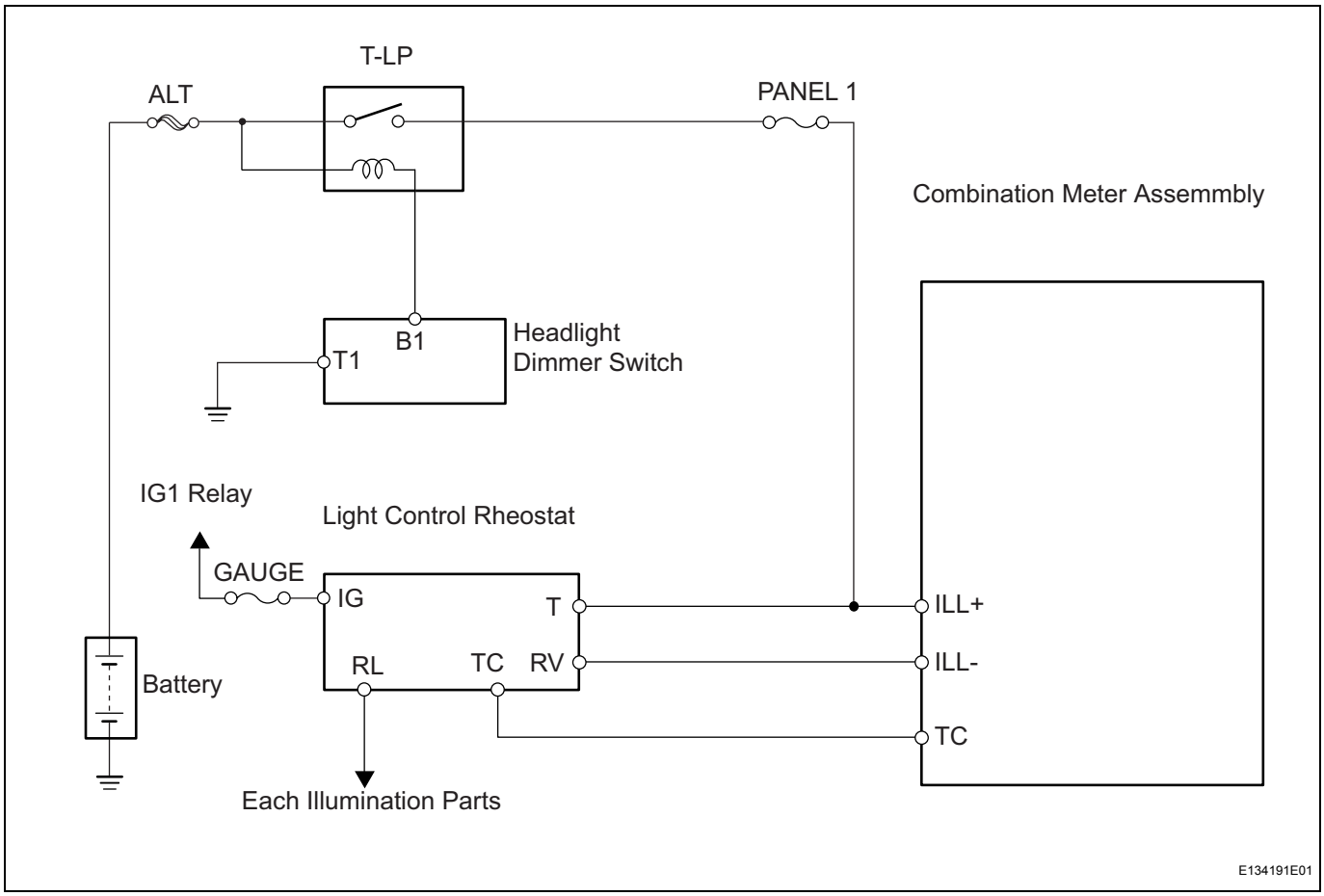

INSPECTION PROCEDURE

1	READ VALUE OF INTELLIGENT TESTER (RHEOSTAT)

(a) Connect the intelligent tester to the DLC3.
(b) Turn the ignition switch ON and turn the tester ON.
(c) Select the item below in the Data List, and read the value displayed on the intelligent tester.

METER

Item	Measurement Item / Range (Display)	Normal Condition	Diagnostic Note
RHEOSTAT (A/D)	Light control rheostat switch / Min.: 0, Max.: 255	Light brightness changes within specified range: Dark (0) to bright (255)	-

OK:
Light brightness can be changed within the specified range by actual operation.

NG → **Go to step 2**

OK

REPLACE COMBINATION METER ASSEMBLY

2	INSPECT FUSE (GAUGE)

(a) Remove the GAUGE fuse from the main body ECU.
(b) Measure the resistance.
Standard resistance:
Below 1 Ω
(c) Reinstall the GAUGE fuse.

NG → **REPLACE FUSE**

ME

OK

3	CHECK HARNESS AND CONNECTOR (FUSE (GAUGE) - LIGHT CONTROL RHEOSTAT)

Wire Harness Side:

Light Control Rheostat Connector

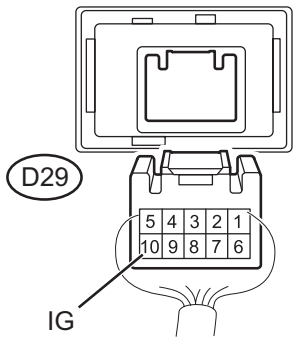

E118618E01

(a) Disconnect the D29 light control rheostat connector.
(b) Measure the voltage.
Standard voltage

Tester Connection	Condition	Specified Condition
D29-10 - Body ground	Ignition switch ON	11 to 14 V

(c) Reconnect the light control rheostat connector.

OK → **Go to step 5**

NG

4	CHECK HARNESS AND CONNECTOR (MAIN BODY ECU - LIGHT CONTROL RHEOSTAT)

Wire Harness Side:

Light Control Rheostat Connector

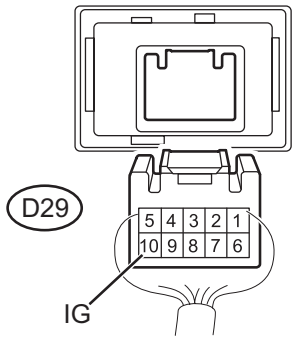

Main Body ECU Connector

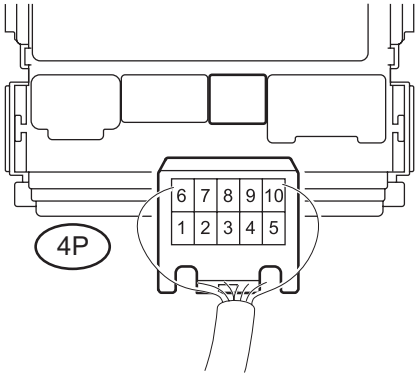

E118619E01

(a) Disconnect the D29 light control rheostat connector.
(b) Disconnect the 4P main body ECU connector.
(c) Measure the resistance.

Standard resistance

Tester	Condition	Specified Condition
D29-10 (IG)- 4P-1	Always	Below 1 Ω

(d) Reconnect the light control rheostat connector.
(e) Reconnect the main body ECU connector.

NG → **REPAIR OR REPLACE HARNESS OR CONNECTOR**

OK

ME

5	INSPECT LIGHT CONTROL RHEOSTAT

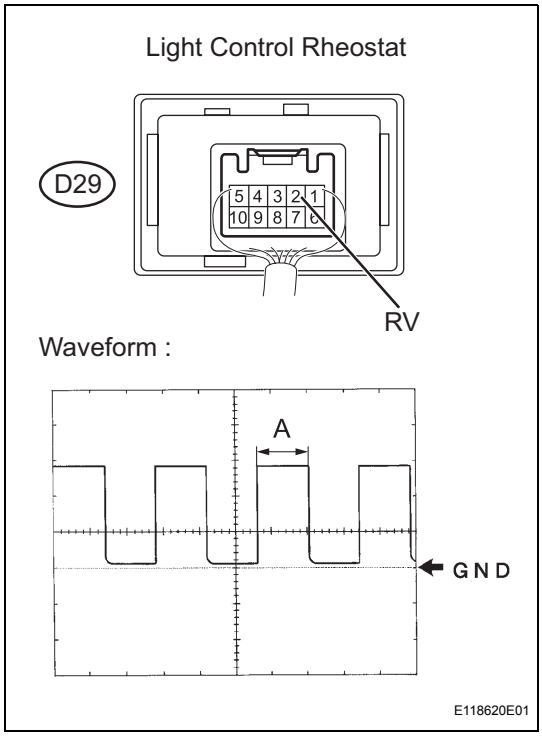

(a) Remove the light control rheostat but without disconnecting the connector.
(b) Turn the ignition switch ON.
(c) Using an oscilloscope, check the signal waveform of the light control rheostat.

Item	Contents
Terminal connection	D29-2 (RV) - Body ground
Tool setting	5V / DIV, 50ms / DIV
Vehicle condition	Ignition switch ON

OK:
Waveform is as shown in the illustration.
HINT:
Duty ratio changes as the illumination dims. (A becomes longer)

(d) Reinstall the light control rheostat.

NG → **REPLACE LIGHT CONTROL RHEOSTAT**

OK

ME

6	CHECK HARNESS AND CONNECTOR (COMBINATION METER ASSEMBLY -Å@LIGHT CONTROL RHEOSTAT)

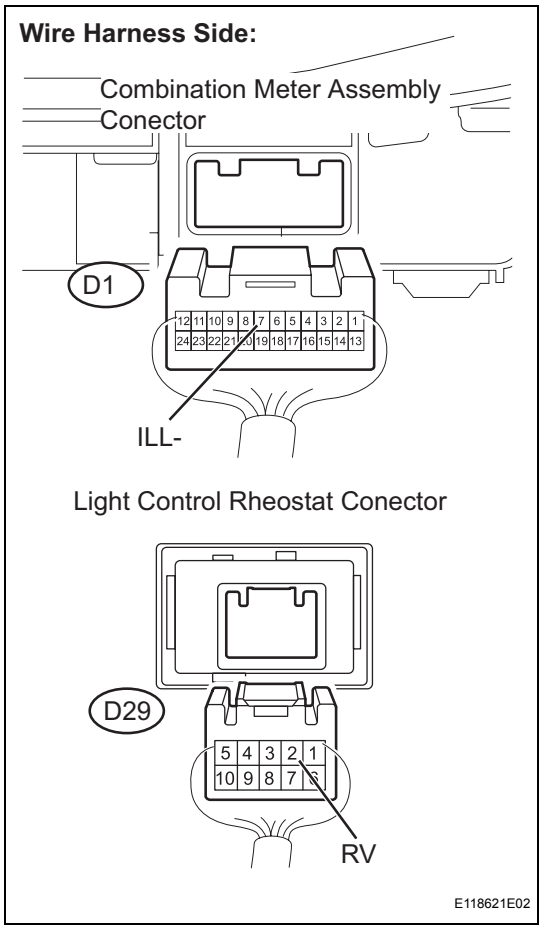

(a) Disconnect the D1 combination meter assembly connector.
(b) Disconnect the D29 light control rheostat connector connector.
(c) Measure the resistance.
Standard resistance

Tester Connection	Specified Condition
D1-7 (ILL-) - D29-2 (RV)	Below 1 Ω

(d) Reconnect the combination meter assembly.
(e) Reconnect the light control rheostat connector.

NG → **REPAIR OR REPLACE HARNESS OR CONNECTOR**

OK

REPLACE COMBINATION METER ASSEMBLY

ME

COMBINATION METER (for Sedan)

COMPONENTS

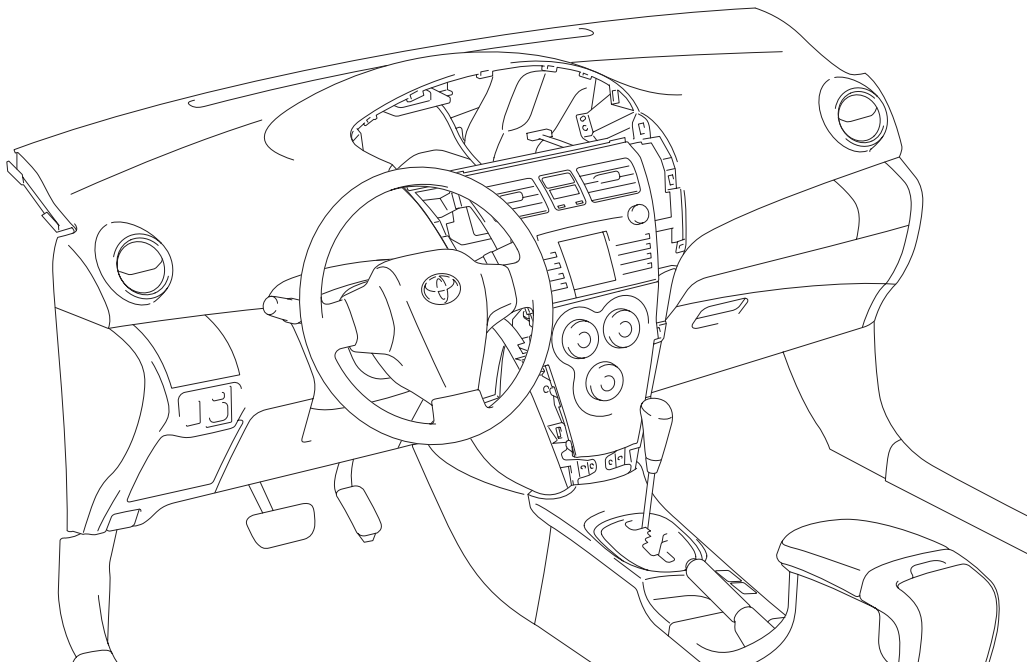

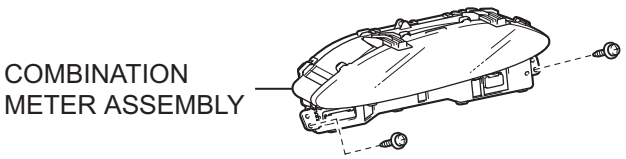



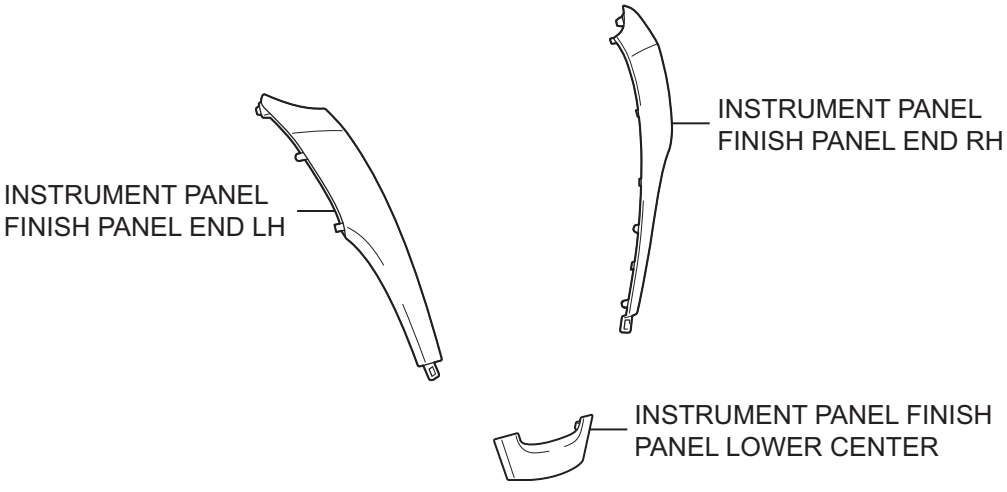

P

E116817E01

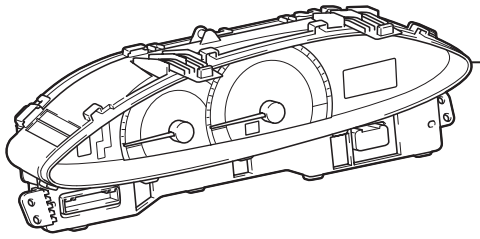

COMBINATION METER

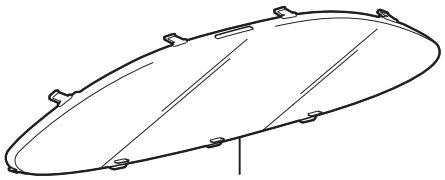

COMBINATION METER GLASS

ME

P

E116818E01

REMOVAL

1. DISCONNECT CABLE FROM NEGATIVE BATTERY TERMINAL

2. REMOVE INSTRUMENT PANEL FINISH PANEL LOWER CENTER

(a) Disengage the 2 claws and 2 clips and remove the instrument panel finish panel lower center.

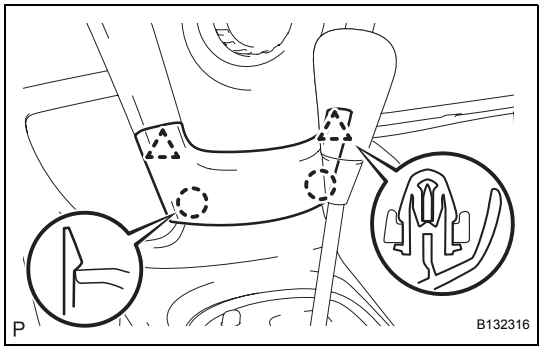

3. REMOVE INSTRUMENT PANEL FINISH PANEL END LH

(a) Disengage the 6 claws and 3 clips and remove the instrument panel finish panel end LH.

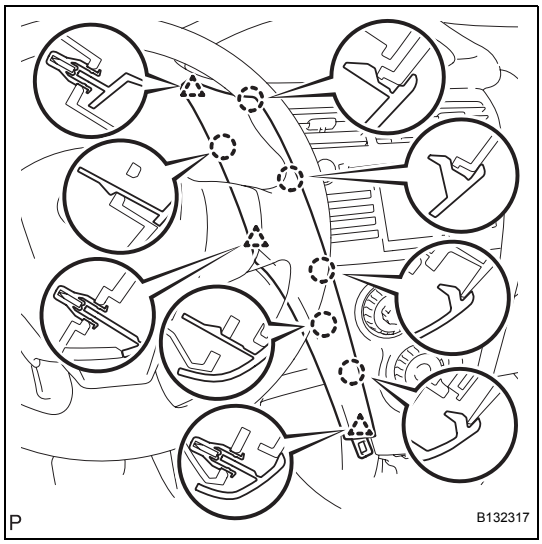

4. REMOVE INSTRUMENT PANEL FINISH PANEL END RH

(a) Disengage the 6 claws and 3 clips and remove the instrument panel finish panel end RH.

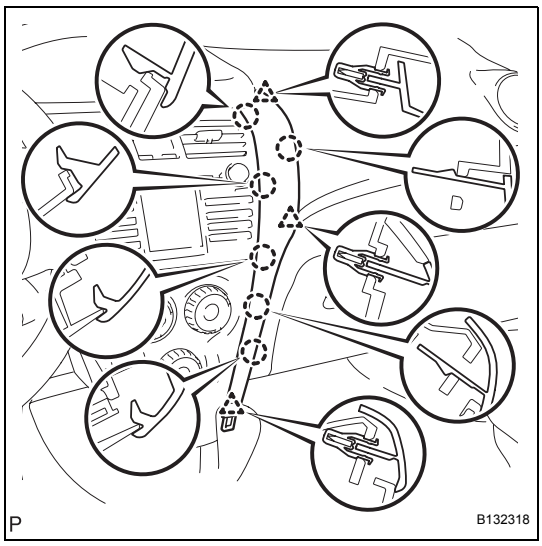

ME

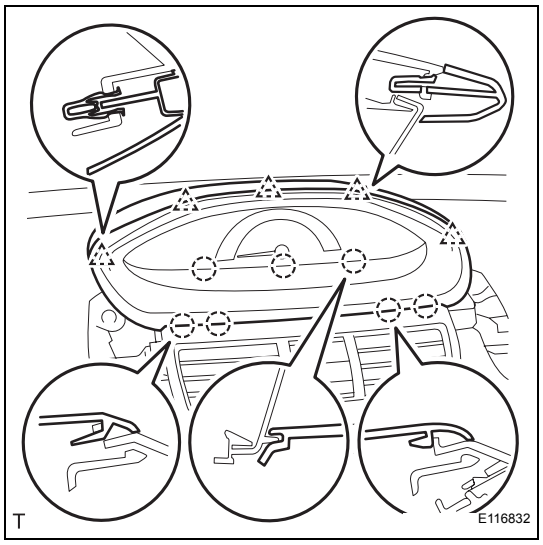

5. REMOVE INSTRUMENT CLUSTER FINISH PANEL

(a) Disengage the 7 claws and 5 clips and remove the instrument cluster finish panel.

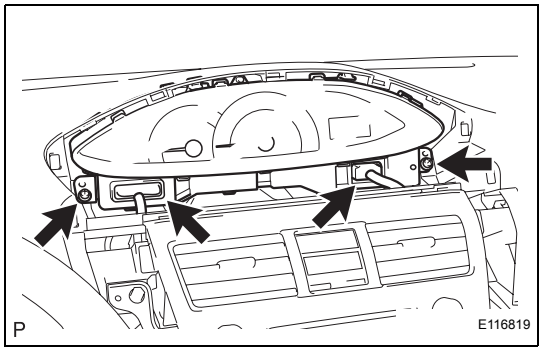

6. REMOVE COMBINATION METER ASSEMBLY

(a) Disconnect the 2 connectors.

(b) Remove the 2 screws and pull the combination meter rearward to remove it.

ME

DISASSEMBLY

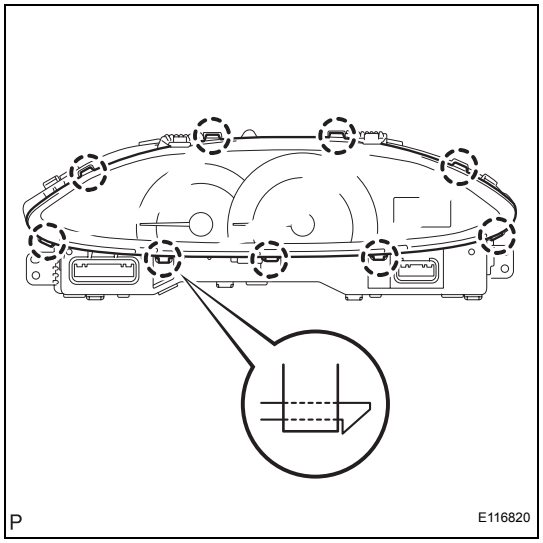

1. REMOVE COMBINATION METER GLASS

(a) Disengage the 9 claws and remove the combination meter glass.

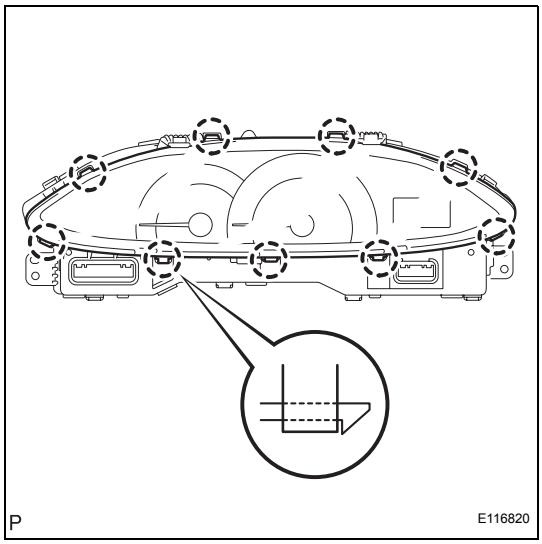

REASSEMBLY

1. INSTALL COMBINATION METER GLASS

(a) Engage the 9 claws and install the combination meter glass.

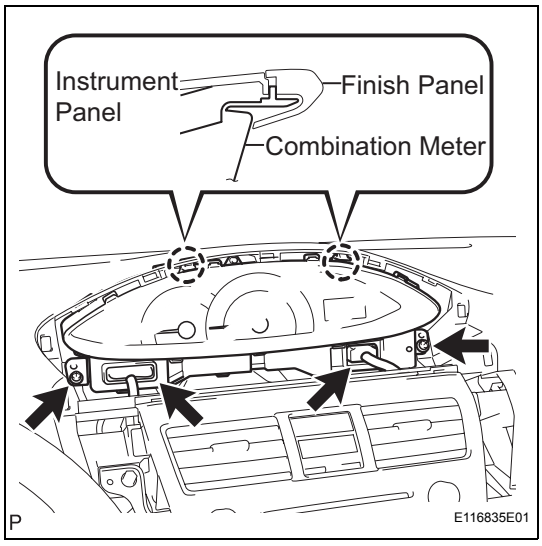

INSTALLATION

1. INSTALL COMBINATION METER ASSEMBLY

(a) Install the combination meter assembly with the 2 screws.

NOTICE:

Install the meter by inserting the ribbed portions of the meter between the instrument panel and meter cluster.

(b) Connect the 2 connectors.

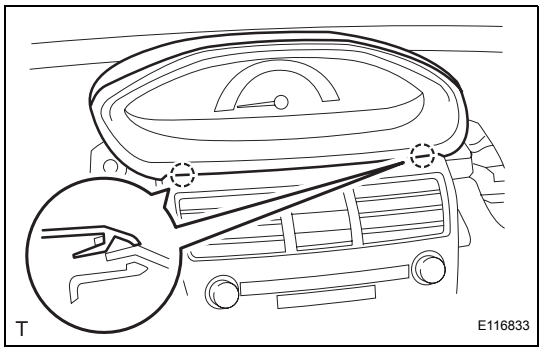

2. INSTALL INSTRUMENT CLUSTER FINISH PANEL

(a) Fit the 2 claws of the instrument cluster finish panel into the upper instrument cluster finish panel center.

ME

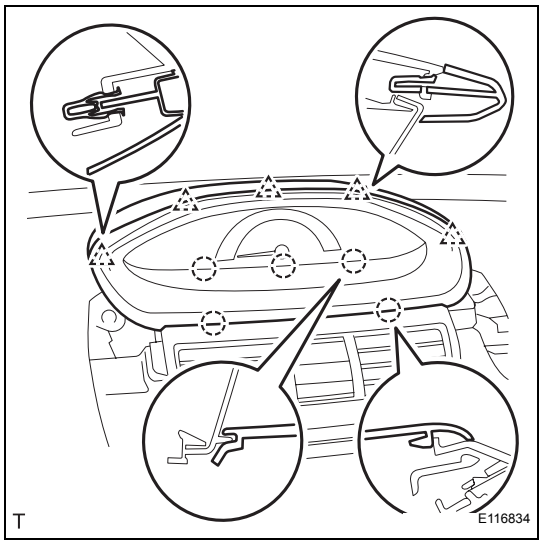

(b) Engage the 5 claws and 5 clips and install the instrument cluster finish panel.

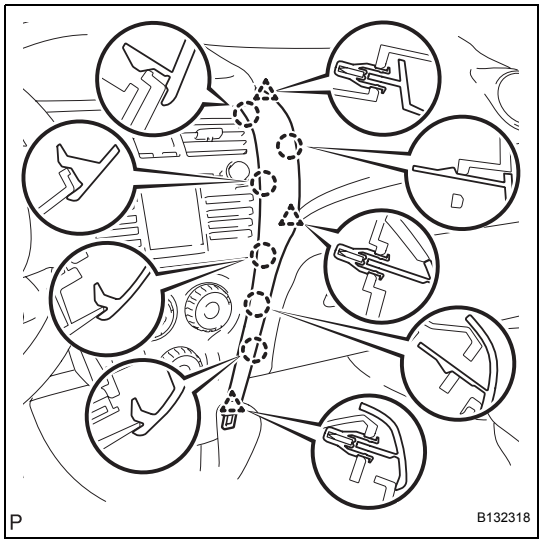

3. INSTALL INSTRUMENT PANEL FINISH PANEL END RH

(a) Engage the 6 claws and 3 clips and install the instrument panel finish panel end RH.

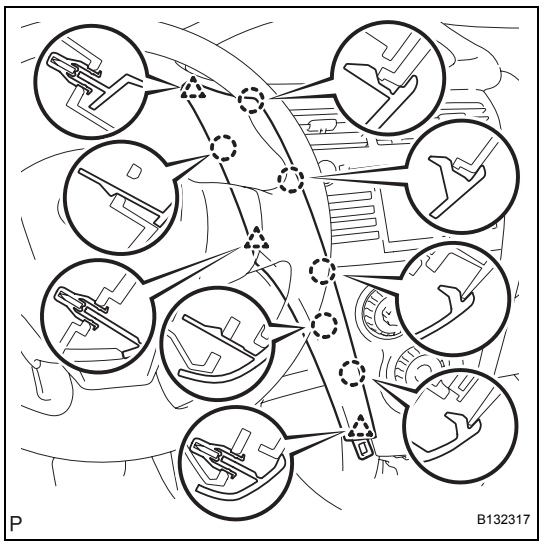

4. INSTALL INSTRUMENT PANEL FINISH PANEL END LH

(a) Engage the 6 claws and 3 clips and install the instrument panel finish panel end LH.

ME

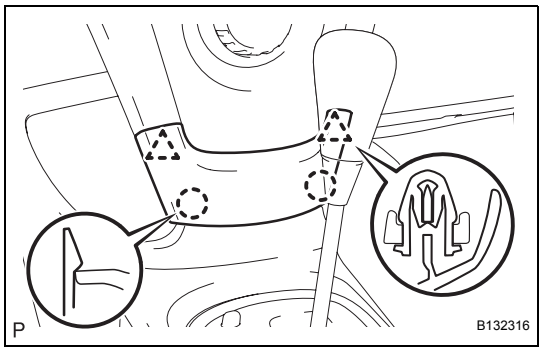

5. INSTALL INSTRUMENT PANEL FINISH PANEL LOWER CENTER

(a) Engage the 2 claws and 2 clips and install the instrument panel finish panel lower center.

6. CONNECT CABLE TO NEGATIVE BATTERY TERMINAL

Torque: 5.4 N*m (55 kgf*cm, 48 in.*lbf)

COMBINATION METER (for Hatchback)

COMPONENTS

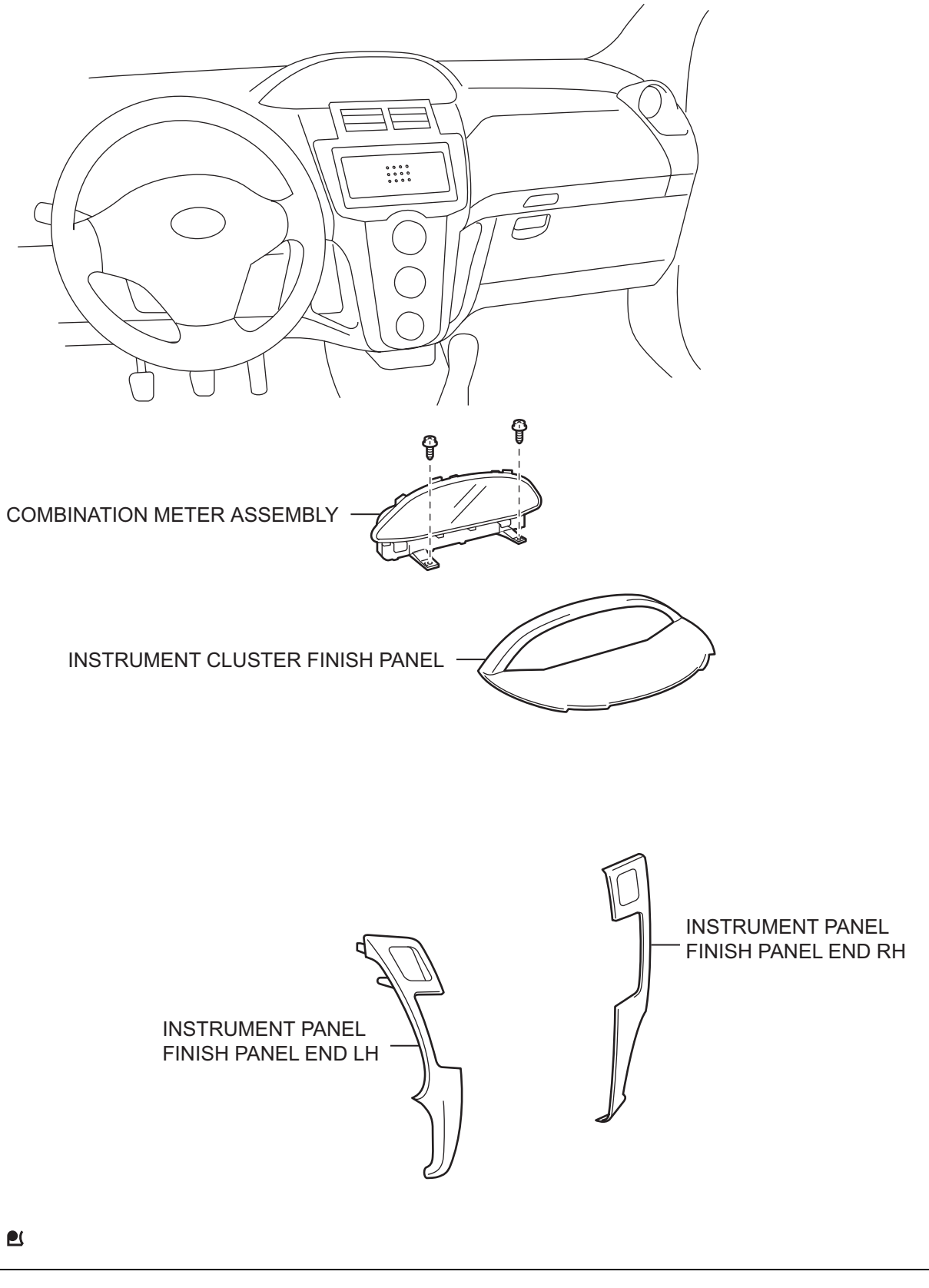

ME

w/o Tachometer:

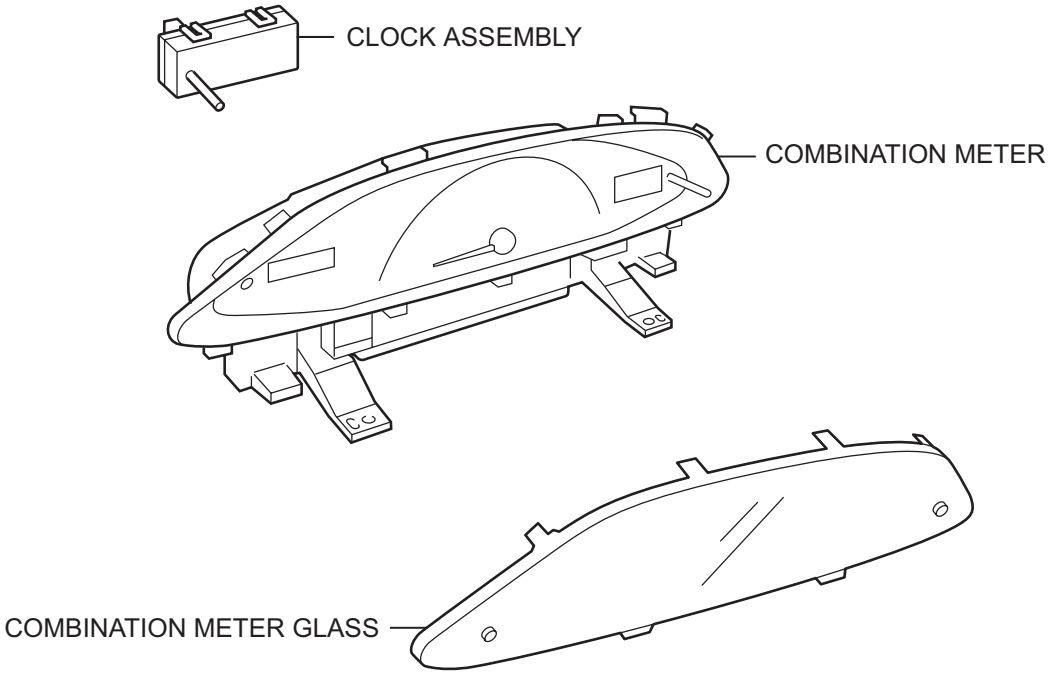

w/ Tachometer:

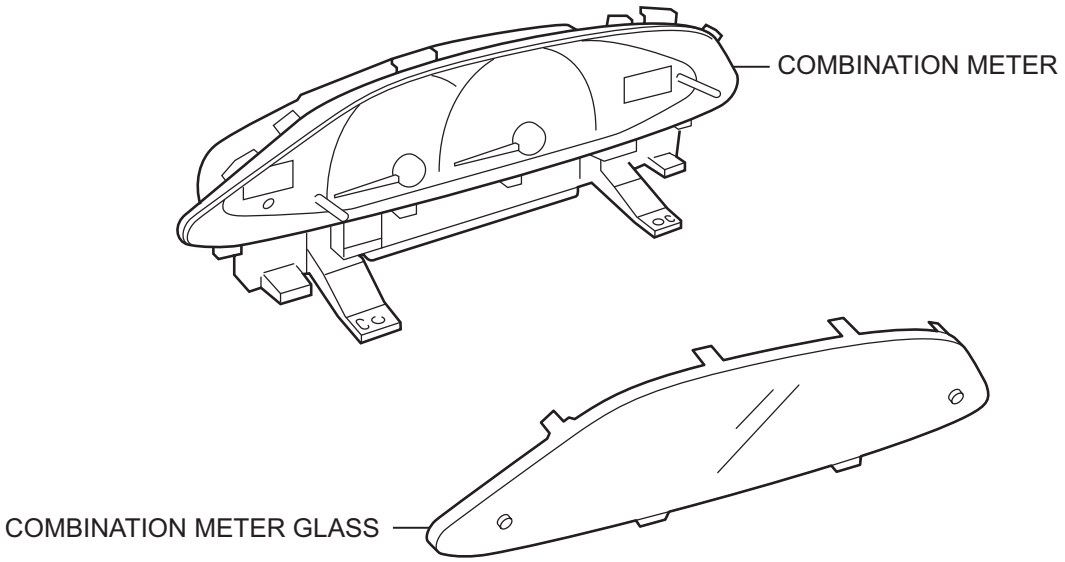

E107805E01

REMOVAL

1. **DISCONNECT CABLE FROM NEGATIVE BATTERY TERMINAL**

2. **REMOVE INSTRUMENT PANEL FINISH PANEL END LH**

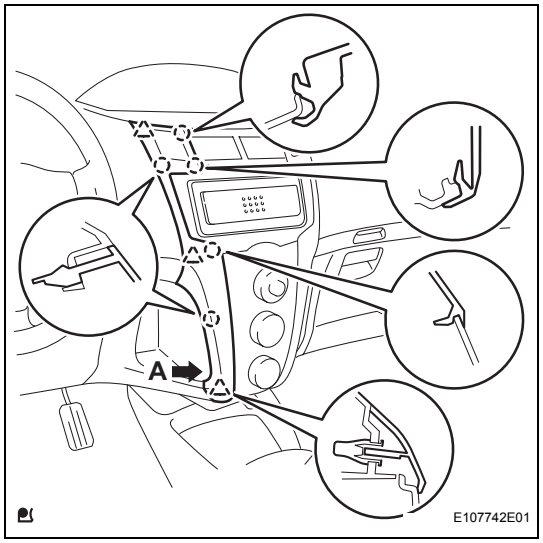

(a) Pull the instrument panel finish panel end LH rearward and disengage the 5 claws and 3 clips.
NOTICE:
To avoid damaging the instrument cluster finish panel center and the air conditioning panel, remove the instrument panel finish panel end without using any tool.
HINT:
Grip portion A of the instrument panel finish panel end and remove the instrument panel finish panel end from the lower side.

(b) Disconnect the connector and remove the instrument panel finish panel end LH.

3. **REMOVE INSTRUMENT PANEL FINISH PANEL END RH**

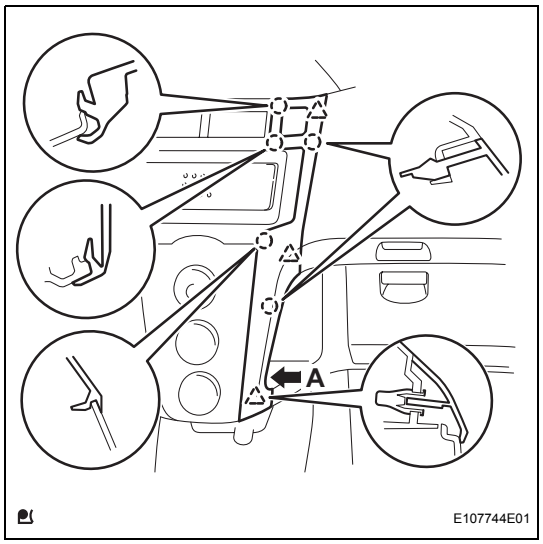

(a) Pull the instrument panel finish panel end RH rearward and disengage the 5 claws and 3 clips.
NOTICE:
To avoid damaging the instrument cluster finish panel center and the air conditioning panel, remove the instrument panel finish panel end without using any tool.
HINT:
Grip portion A of the instrument panel finish panel end and remove the instrument panel finish panel end from the lower side.

(b) Disconnect the connector and remove the instrument panel finish panel end RH.

4. **REMOVE INSTRUMENT CLUSTER FINISH PANEL**
NOTICE:
Follow the procedure below to remove the instrument cluster finish panel. Claw A will break if the instrument cluster finish panel is raised carelessly.

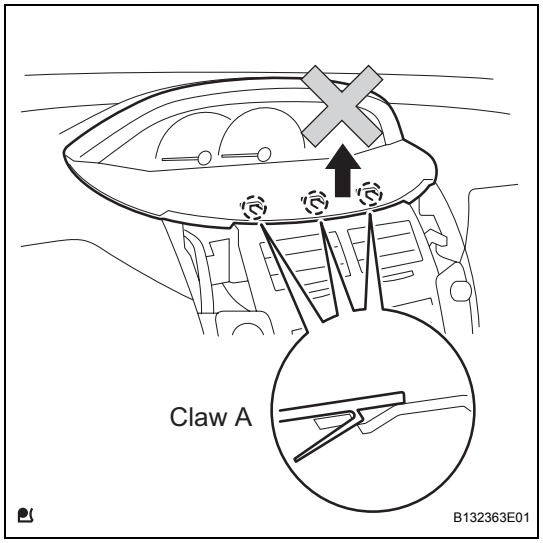

ME

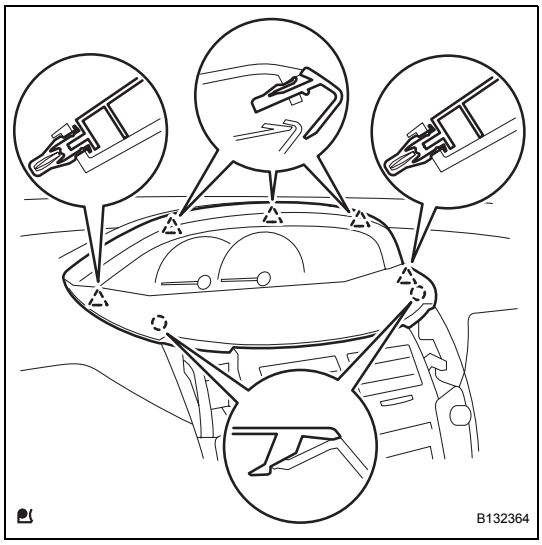

(a) Disengage the 2 claws and 5 clips.

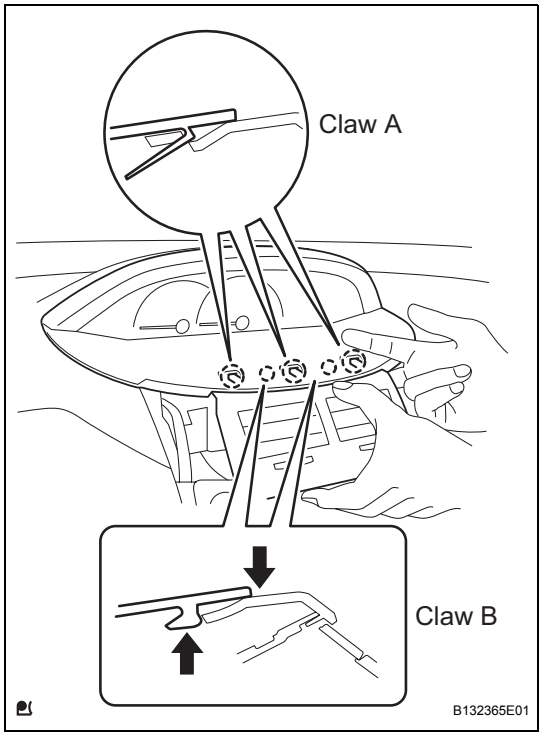

(b) After removing the instrument panel finish panel end, insert your finger into the opening as shown, push the upper portion of the instrument cluster finish panel center and the 2 B claws of the instrument cluster finish panel, and then disengage the claws B.
(c) Disengage the 3 A claws and remove the instrument cluster finish panel.

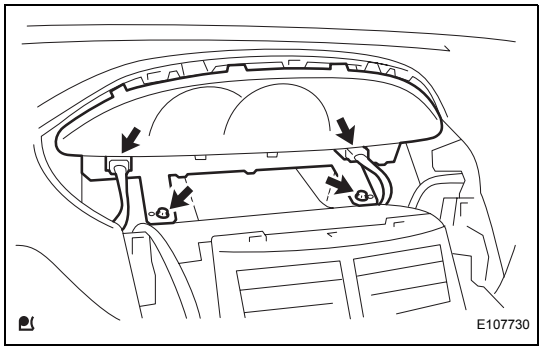

5. REMOVE COMBINATION METER ASSEMBLY

(a) Disconnect the 2 connectors.
(b) Remove the 2 screws and pull the combination meter rearward to remove it.

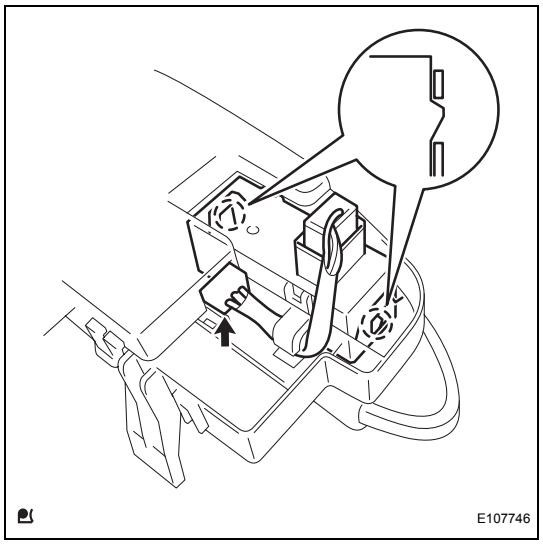

DISASSEMBLY

1. REMOVE CLOCK ASSEMBLY (w/ Tachometer)

(a) Remove the connector.

(b) Disengage the 2 claws and remove the clock assembly.

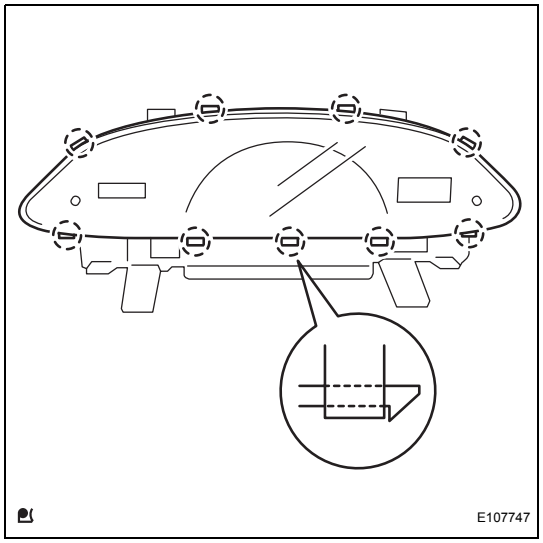

2. REMOVE COMBINATION METER GLASS

(a) Disengage the 9 claws and remove the combination meter glass.

ME

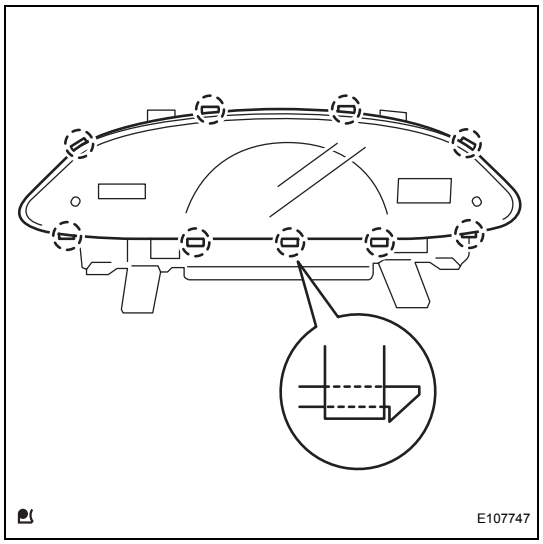

REASSEMBLY

1. INSTALL COMBINATION METER GLASS

(a) Engage the 9 claws and install the combination meter glass.

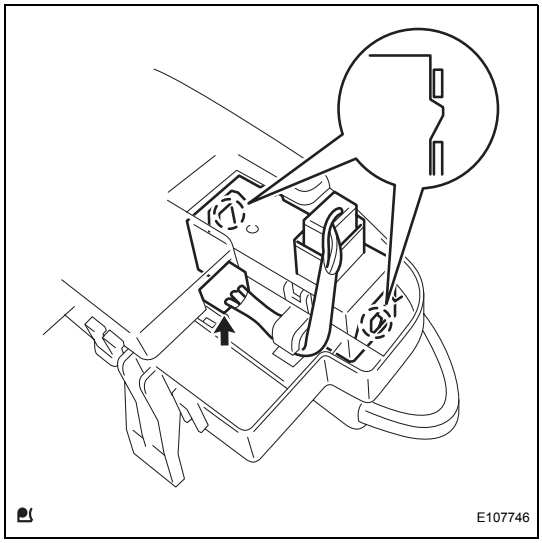

2. INSTALL CLOCK ASSEMBLY (w/ Tachometer)
(a) Engage the 2 claws and install the clock assembly.
(b) Connect the connector.

INSTALLATION

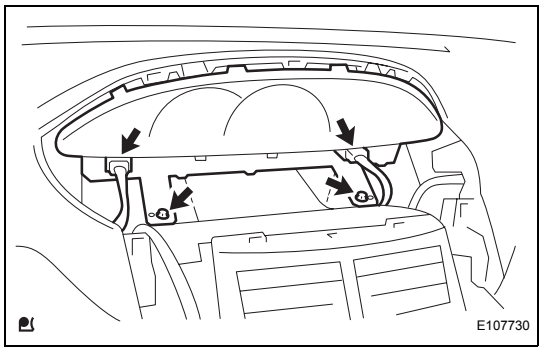

1. INSTALL COMBINATION METER ASSEMBLY
(a) Install the combination meter assembly with the 2 screws.
(b) Connect the 2 connectors.

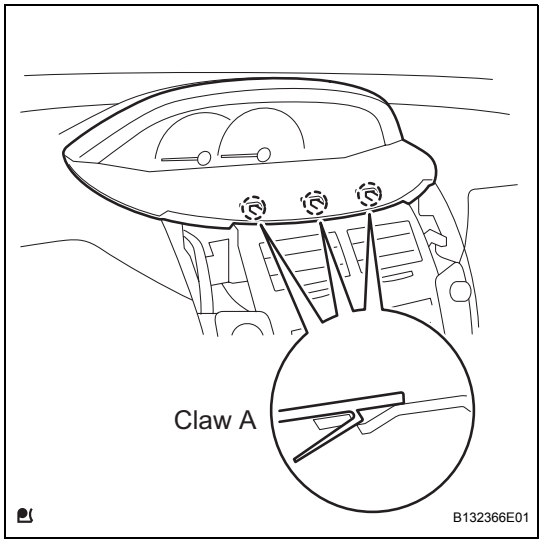

2. INSTALL INSTRUMENT CLUSTER FINISH PANEL
(a) Fit the 3 A claws of the instrument cluster finish panel into the upper instrument cluster finish panel center.

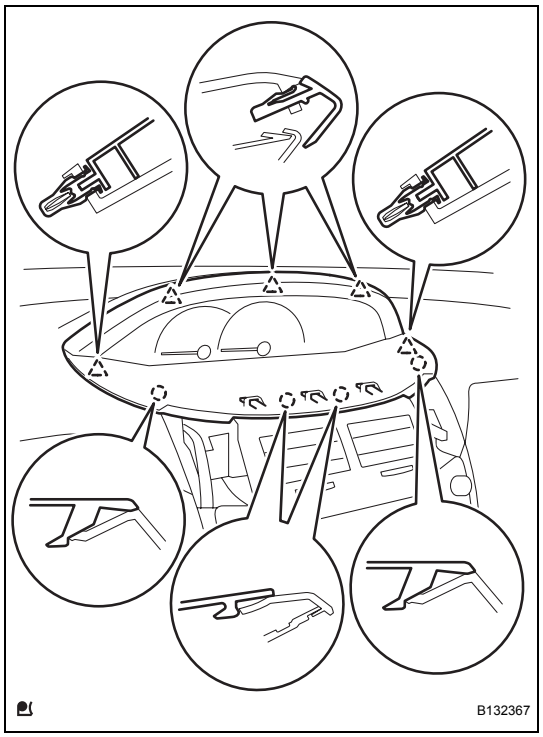

(b) Engage the 4 claws and 5 clips and install the instrument cluster finish panel.

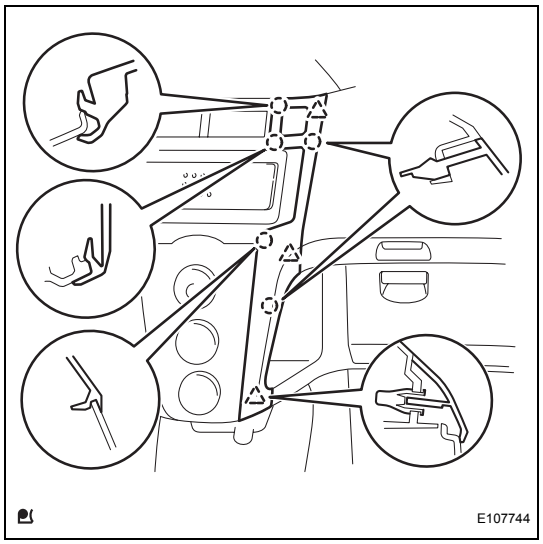

3. INSTALL INSTRUMENT PANEL FINISH PANEL END RH

(a) Connect the connector.
(b) Engage the 5 claws and 3 clips and install the instrument panel finish panel end RH.

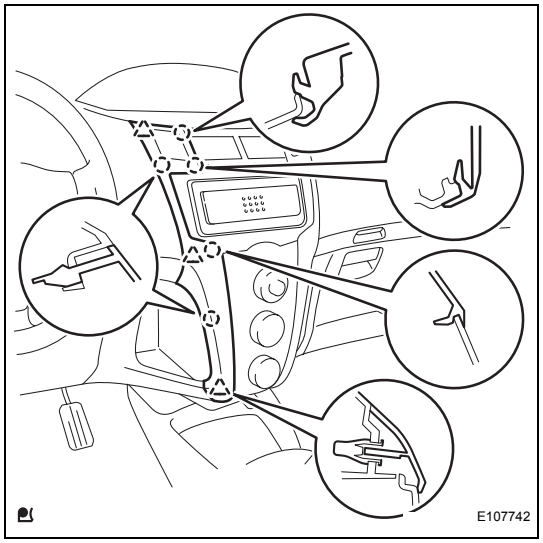

4. INSTALL INSTRUMENT PANEL FINISH PANEL END LH

(a) Connect the connector.
(b) Engage the 5 claws and 3 clips and install the instrument panel finish panel end LH.

5. CONNECT CABLE TO NEGATIVE BATTERY TERMINAL

Torque: 5.4 N*m (55 kgf*cm, 48 in.*lbf)

FUEL SENDER GAUGE ASSEMBLY (for Sedan)

COMPONENTS

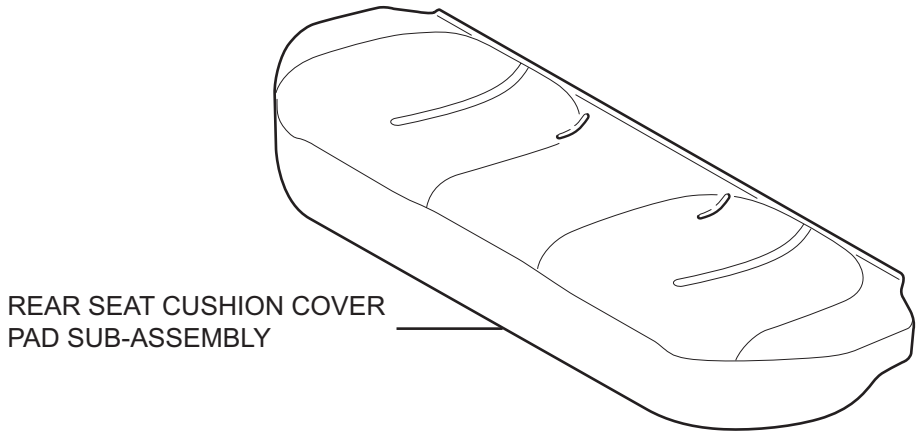

T

A133348E02

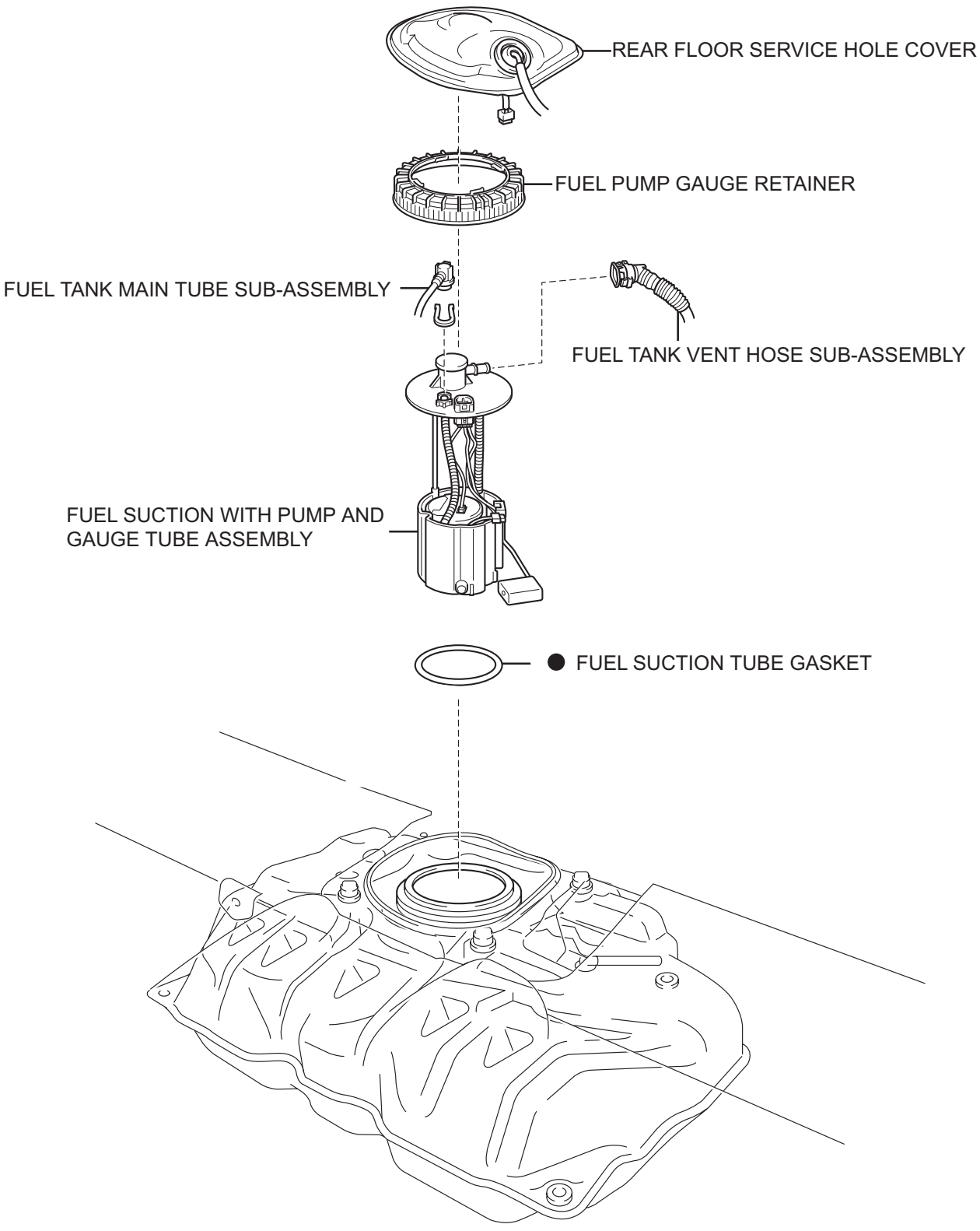

N

A115458E01

ME

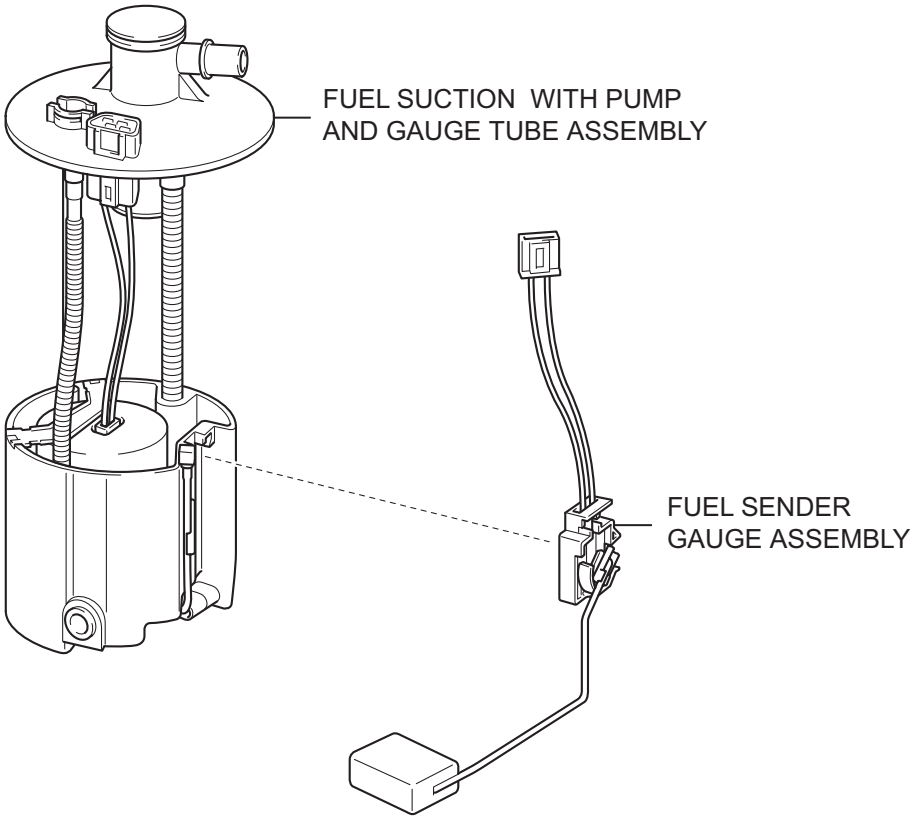

Y

E107807E01

REMOVAL

1. **REMOVE REAR SEAT CUSHION COVER PAD SUB-ASSEMBLY (See page SE-46)**
2. **REMOVE REAR FLOOR SERVICE HOLE COVER (See page FU-26)**
3. **DISCHARGE FUEL SYSTEM PRESSURE (See page FU-26)**
4. **DISCONNECT CABLE FROM NEGATIVE BATTERY TERMINAL**
5. **DISCONNECT FUEL TANK MAIN TUBE SUB-ASSEMBLY (See page FU-27)**
6. **DISCONNECT FUEL TANK VENT HOSE SUB-ASSEMBLY (See page FU-27)**
7. **REMOVE FUEL PUMP GAUGE RETAINER (See page FU-27)**
8. **REMOVE FUEL SUCTION WITH PUMP AND GAUGE TUBE ASSEMBLY (See page FU-27)**
9. **REMOVE FUEL SENDER GAUGE ASSEMBLY**
   (a) Disconnect the fuel sender gauge connector.

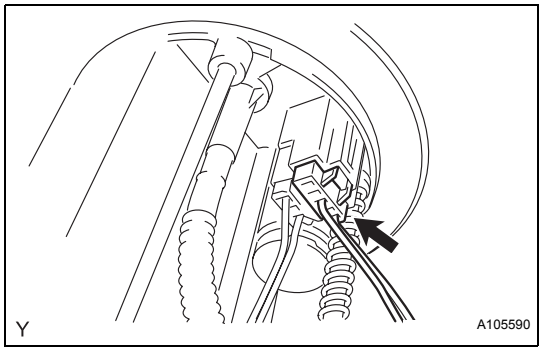

   (b) Unlock the fuel sender gauge, and slide and remove it.

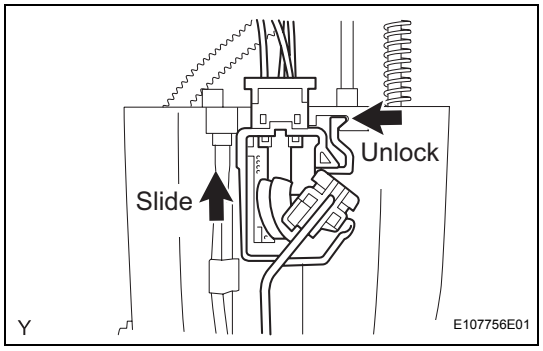

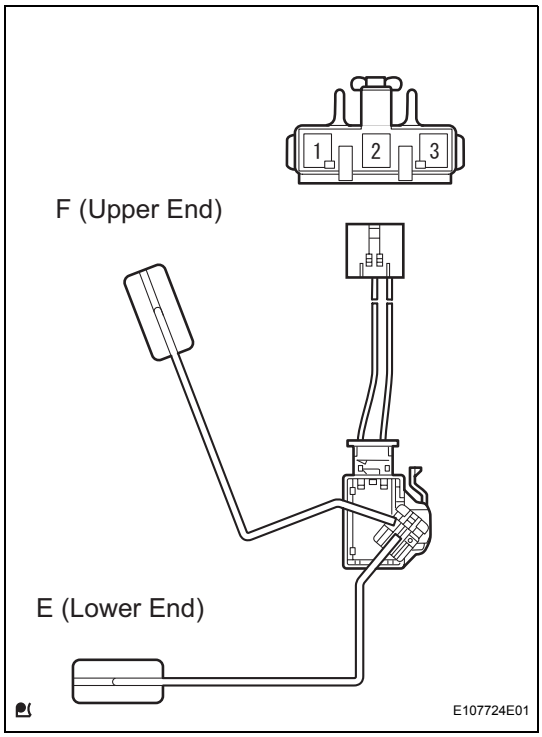

INSPECTION

1. **INSPECT FUEL SENDER GAUGE ASSEMBLY**
   (a) Check the fuel sender gauge resistance.
      (1) Check that the float moves smoothly between the F level (upper end) and E level (lower end).
      (2) Using an ohmmeter, measure the resistance between connector terminals 2 (FS) and 1 (FE) at the upper and lower ends of the float. Check that the resistance varies uniformly.
      Standard resistance

Float Level	Resistance (Ω)
F (Upper End)	12.0 to 18.0
E (Lower End)	405.0 to 415.0

If the result is not as specified, replace the fuel sender gauge assembly.

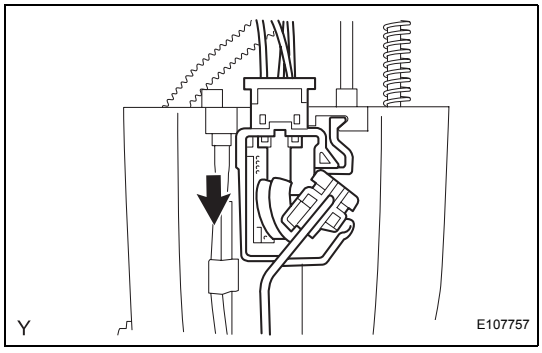

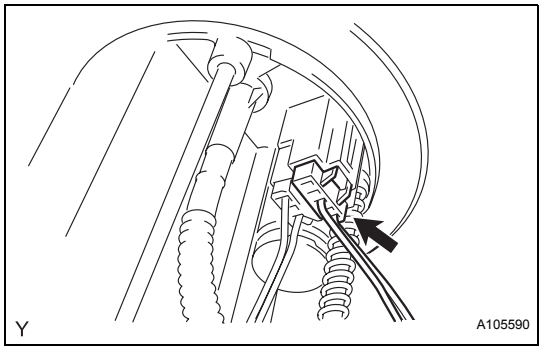

INSTALLATION

1. **INSTALL FUEL SENDER GAUGE ASSEMBLY**
   (a) Install the fuel sender gauge onto the fuel suction with pump and gauge tube.
   (b) Connect the fuel sender gauge connector.
2. **INSTALL FUEL SUCTION WITH PUMP AND GAUGE TUBE ASSEMBLY (See page FU-33)**
3. **INSTALL FUEL PUMP GAUGE RETAINER (See page FU-33)**
4. **CONNECT FUEL TANK VENT HOSE SUB-ASSEMBLY (See page FU-33)**
5. **CONNECT FUEL TANK MAIN TUBE SUB-ASSEMBLY (See page FU-34)**
6. **INSTALL REAR FLOOR SERVICE HOLE COVER (See page FU-34)**
7. **INSTALL REAR SEAT CUSHION COVER PAD SUB-ASSEMBLY (See page SE-53)**
8. **CONNECT CABLE TO NEGATIVE BATTERY TERMINAL**
   Torque: 5.4 N*m (55 kgf*cm, 48 in.*lbf)
9. **CHECK FOR FUEL LEAK (See page FU-7)**

ME

FUEL SENDER GAUGE ASSEMBLY (for Hatchback)

COMPONENTS

for Hold Down Seat Type :

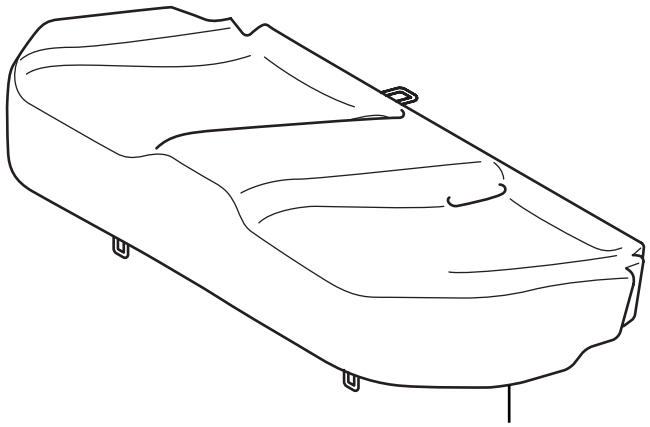

REAR SEAT CUSHION COVER PAD

H

A119203E02

for 60/40 Split Seat Type:

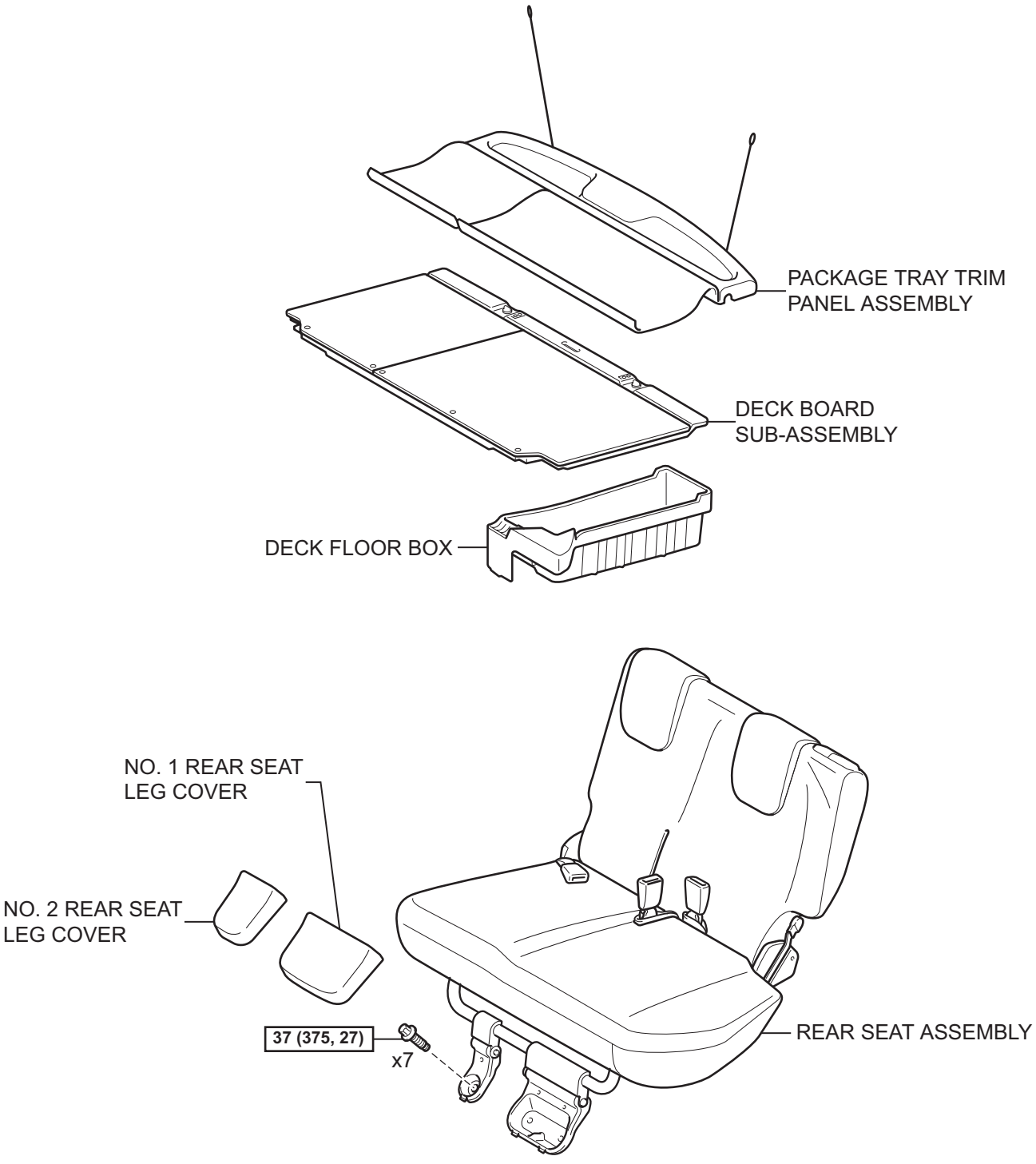

N*m (kgf*cm, ft*lbf) : Specified torque

T

B138682E02

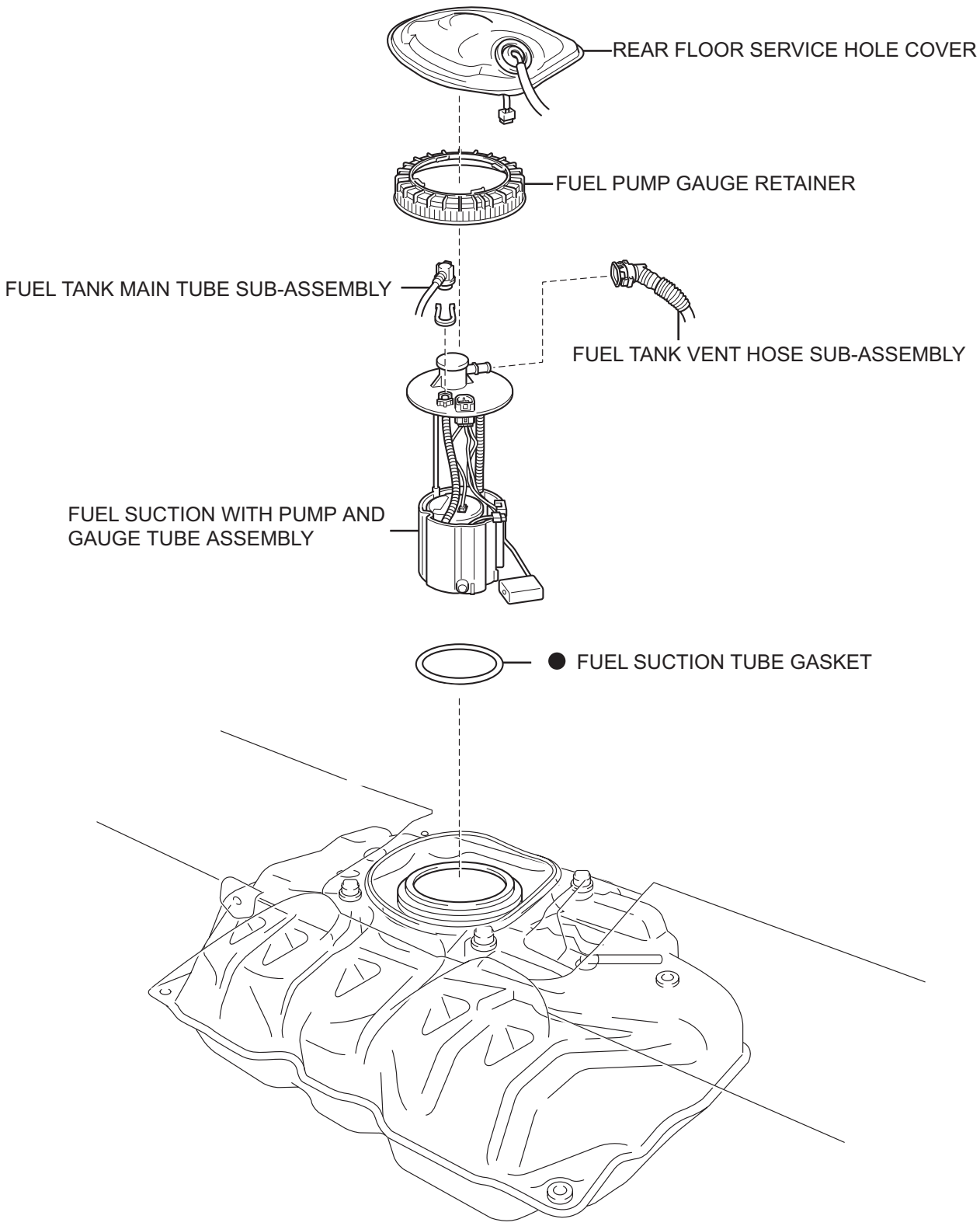

N

A115458E01

ME

ME

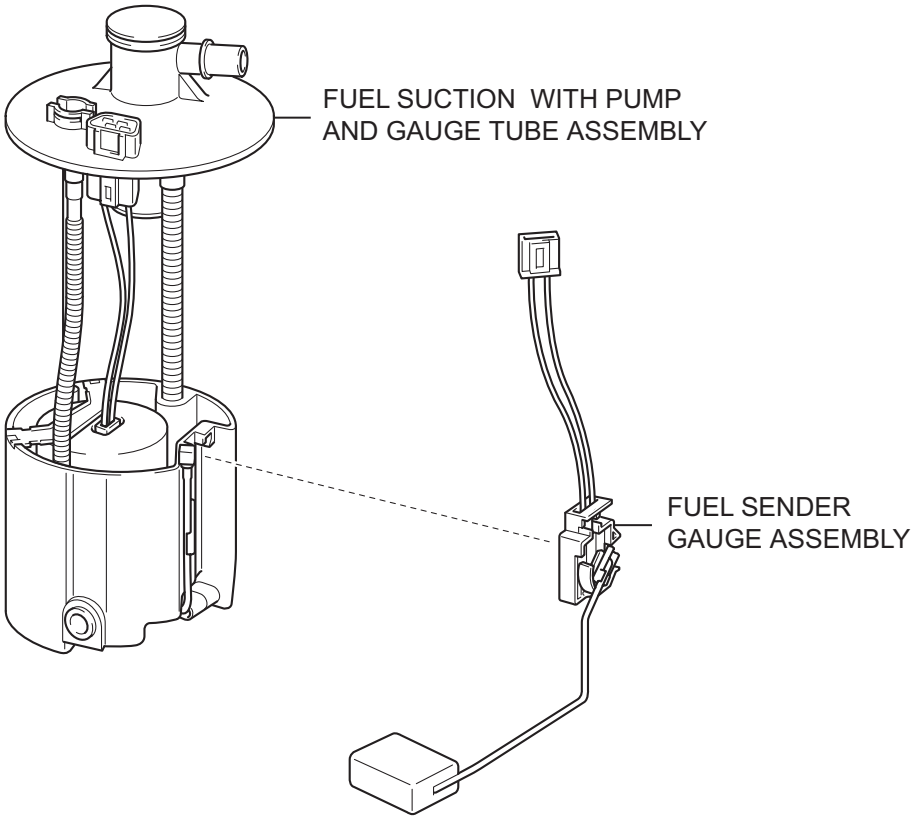

Y

E107807E01

REMOVAL

NOTICE:
Always use "Torx" socket wrench E10 when removing the rear seat.

1. **REMOVE REAR SEAT CUSHION COVER PAD (for Hold Down Seat Type) (See page SE-114)**
2. **REMOVE PACKAGE TRAY TRIM PANEL ASSEMBLY (for 60/40 Split Seat Type) (See page IR-48)**
3. **REMOVE DECK BOARD SUB-ASSEMBLY (for 60/40 Split Seat Type) (See page IR-48)**
4. **REMOVE DECK FLOOR BOX (for 60/40 Split Seat Type) (See page SE-70)**
5. **REMOVE NO. 1 REAR SEAT LEG COVER (for 60/40 Split Seat Type) (See page SE-70)**
6. **REMOVE NO. 2 REAR SEAT LEG COVER (for 60/40 Split Seat Type) (See page SE-70)**
7. **REMOVE REAR SEAT ASSEMBLY (for 60/40 Split Seat Type) (See page SE-71)**
8. **REMOVE REAR FLOOR SERVICE HOLE COVER (See page FU-26)**
9. **DISCHARGE FUEL SYSTEM PRESSURE (See page FU-26)**
10. **DISCONNECT CABLE FROM NEGATIVE BATTERY TERMINAL**
11. **DISCONNECT FUEL TANK MAIN TUBE SUB-ASSEMBLY (See page FU-27)**
12. **DISCONNECT FUEL TANK VENT HOSE SUB-ASSEMBLY (See page FU-27)**
13. **REMOVE FUEL PUMP GAUGE RETAINER (See page FU-27)**
14. **REMOVE FUEL SUCTION WITH PUMP AND GAUGE TUBE ASSEMBLY (See page FU-27)**
15. **REMOVE FUEL SENDER GAUGE ASSEMBLY**
    (a) Disconnect the fuel sender gauge connector.

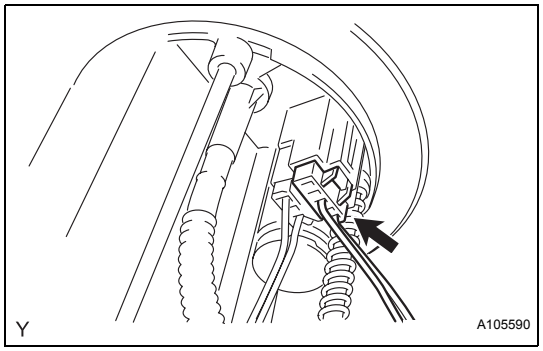

ME

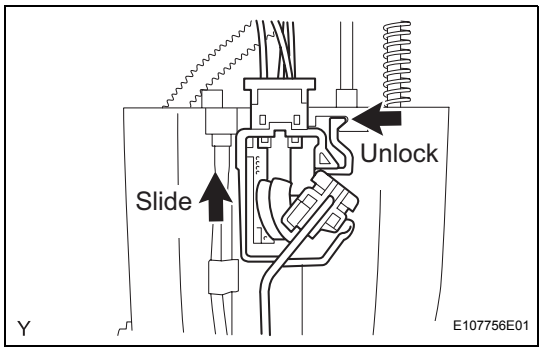

(b) Unlock the fuel sender gauge, and slide and remove it.

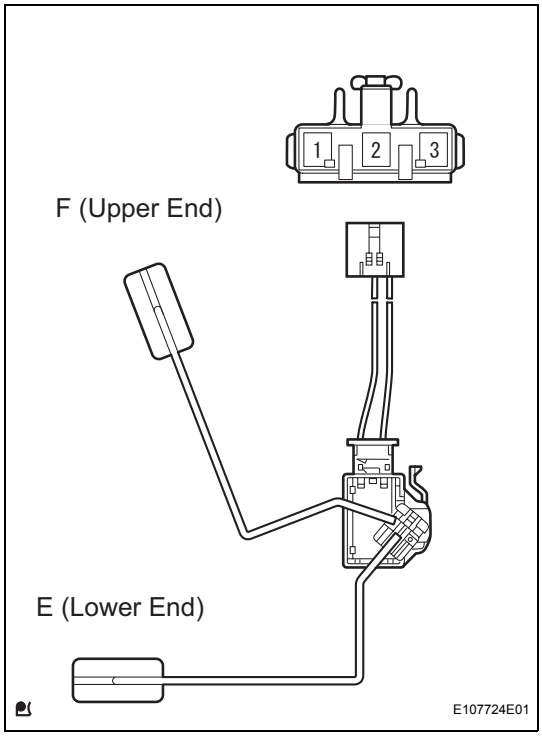

INSPECTION

1. INSPECT FUEL SENDER GAUGE ASSEMBLY

(a) Check the fuel sender gauge resistance.

(1) Check that the float moves smoothly between the F level (upper end) and E level (lower end).

(2) Using an ohmmeter, measure the resistance between connector terminals 2 (FS) and 1 (FE) at the upper and lower ends of the float. Check that the resistance varies uniformly.

Standard resistance

Float Level	Resistance (Ω)
F (Upper End)	12.0 to 18.0
E (Lower End)	405.0 to 415.0

If the result is not as specified, replace the fuel sender gauge assembly.

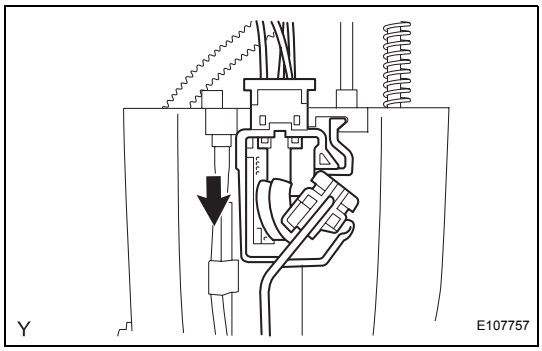

INSTALLATION

1. INSTALL FUEL SENDER GAUGE ASSEMBLY

(a) Install the fuel sender gauge onto the fuel suction with pump and gauge tube.

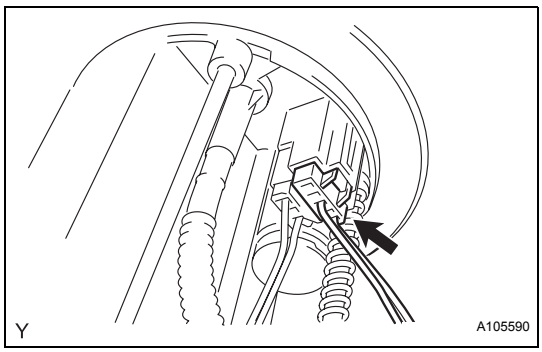

(b) Connect the fuel sender gauge connector.

2. INSTALL FUEL SUCTION WITH PUMP AND GAUGE TUBE ASSEMBLY (See page FU-33)

3. INSTALL FUEL PUMP GAUGE RETAINER (See page FU-33)

4. CONNECT FUEL TANK VENT HOSE SUB-ASSEMBLY (See page FU-33)

5. CONNECT FUEL TANK MAIN TUBE SUB-ASSEMBLY (See page FU-34)

6. INSTALL REAR FLOOR SERVICE HOLE COVER (See page FU-34)
7. INSTALL REAR SEAT ASSEMBLY (for 60/40 Split Seat Type) (See page SE-84)
8. INSTALL NO. 2 REAR SEAT LEG COVER (for 60/40 Split Seat Type) (See page SE-85)
9. INSTALL NO. 1 REAR SEAT LEG COVER (for 60/40 Split Seat Type) (See page SE-85)
10. INSTALL DECK FLOOR BOX (for 60/40 Split Seat Type) (See page SE-85)
11. INSTALL DECK BOARD SUB-ASSEMBLY (for 60/40 Split Seat Type) (See page IR-83)
12. INSTALL PACKAGE TRAY TRIM PANEL ASSEMBLY (for 60/40 Split Seat Type) (See page IR-83)
13. INSTALL REAR SEAT CUSHION COVER PAD (for Hold Down Seat Type) (See page SE-123)
14. CONNECT CABLE TO NEGATIVE BATTERY TERMINAL
    Torque: 5.4 N*m (55 kgf*cm, 48 in.*lbf)
15. CHECK FOR FUEL LEAK (See page FU-7)

ENGINE OIL PRESSURE SWITCH

ON-VEHICLE INSPECTION

1. INSPECT ENGINE OIL PRESSURE SWITCH ASSEMBLY

(a) Disconnect the engine oil pressure switch connector.

(b) Using an ohmmeter, check the resistance between the engine oil pressure switch terminal and body ground.

Standard resistance (Engine stopped):
Below 1 Ω

Standard resistance (Engine idling):
10 kΩ or higher

HINT:
If the value is not as specified, replace the engine oil pressure switch assembly.

LIGHT CONTROL RHEOSTAT (for Sedan)

COMPONENTS

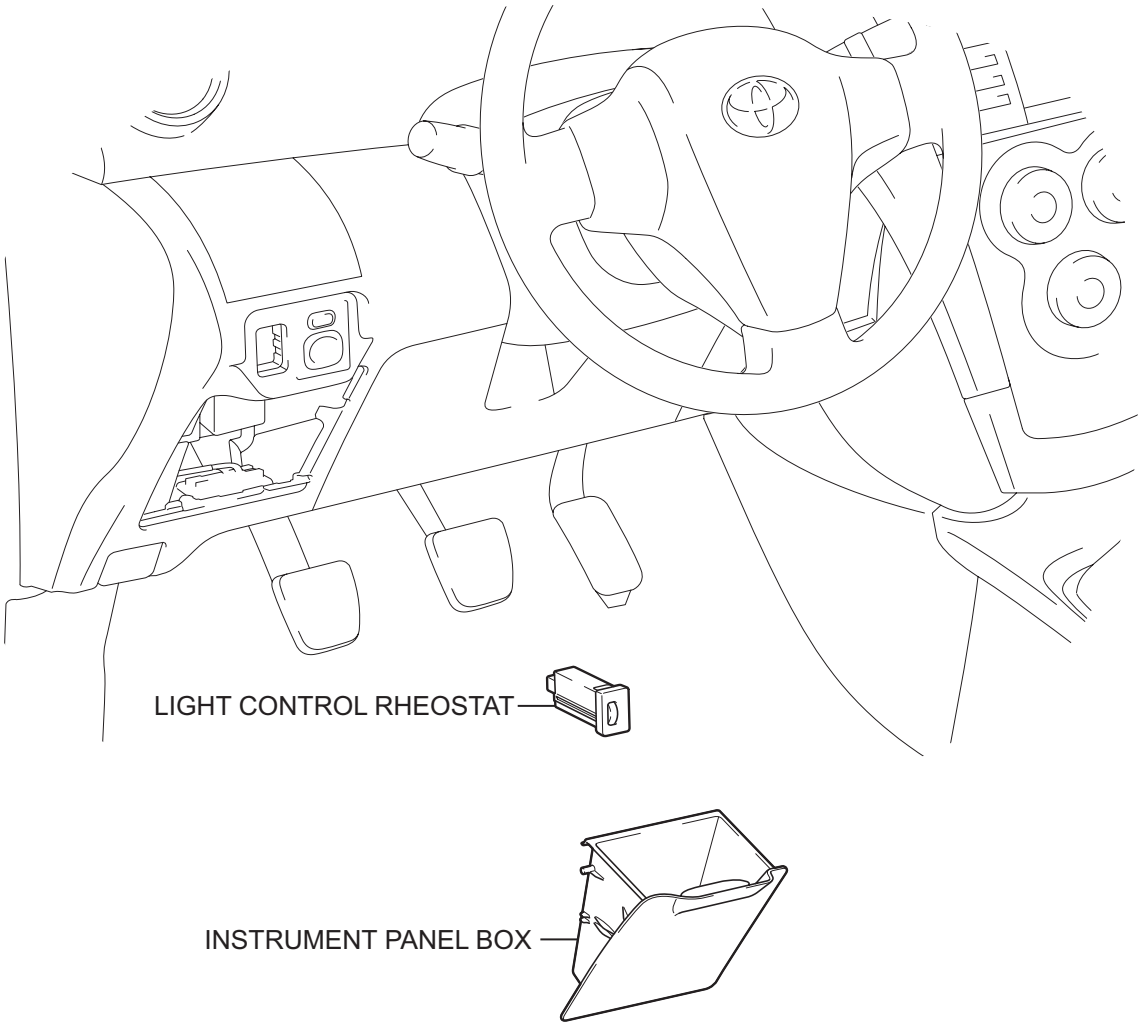

P

E116830E01

ME

REMOVAL

1. **DISCONNECT CABLE FROM NEGATIVE BATTERY TERMINAL**
2. **REMOVE INSTRUMENT PANEL BOX (See page IP-45)**
3. **REMOVE LIGHT CONTROL RHEOSTAT**
   (a) Disconnect the connector.
   (b) Disengage the 2 claws and remove the light control rheostat.

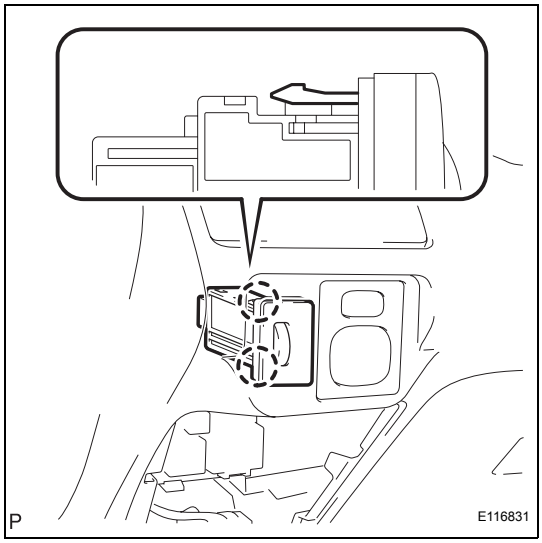

INSTALLATION

1. **INSTALL LIGHT CONTROL RHEOSTAT**
   (a) Engage the 2 claws and install the light control rheostat.
   (b) Connect the connector.
2. **INSTALL INSTRUMENT PANEL BOX (See page IP-45)**
3. **CONNECT CABLE TO NEGATIVE BATTERY TERMINAL**
   Torque: 5.4 N*m (55 kgf*cm, 48 in.*lbf)

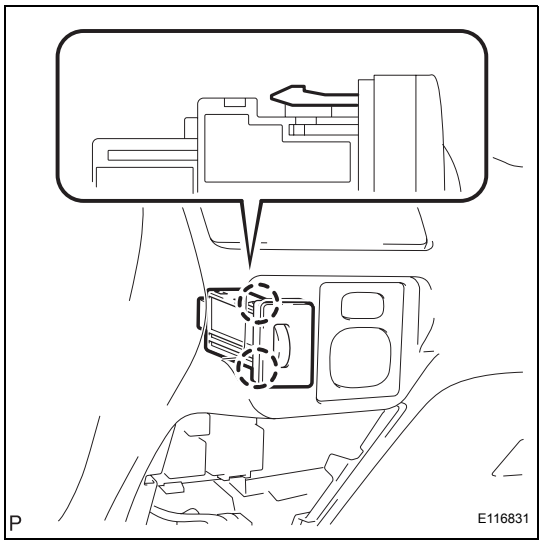

LIGHT CONTROL RHEOSTAT (for Hatchback)

COMPONENTS

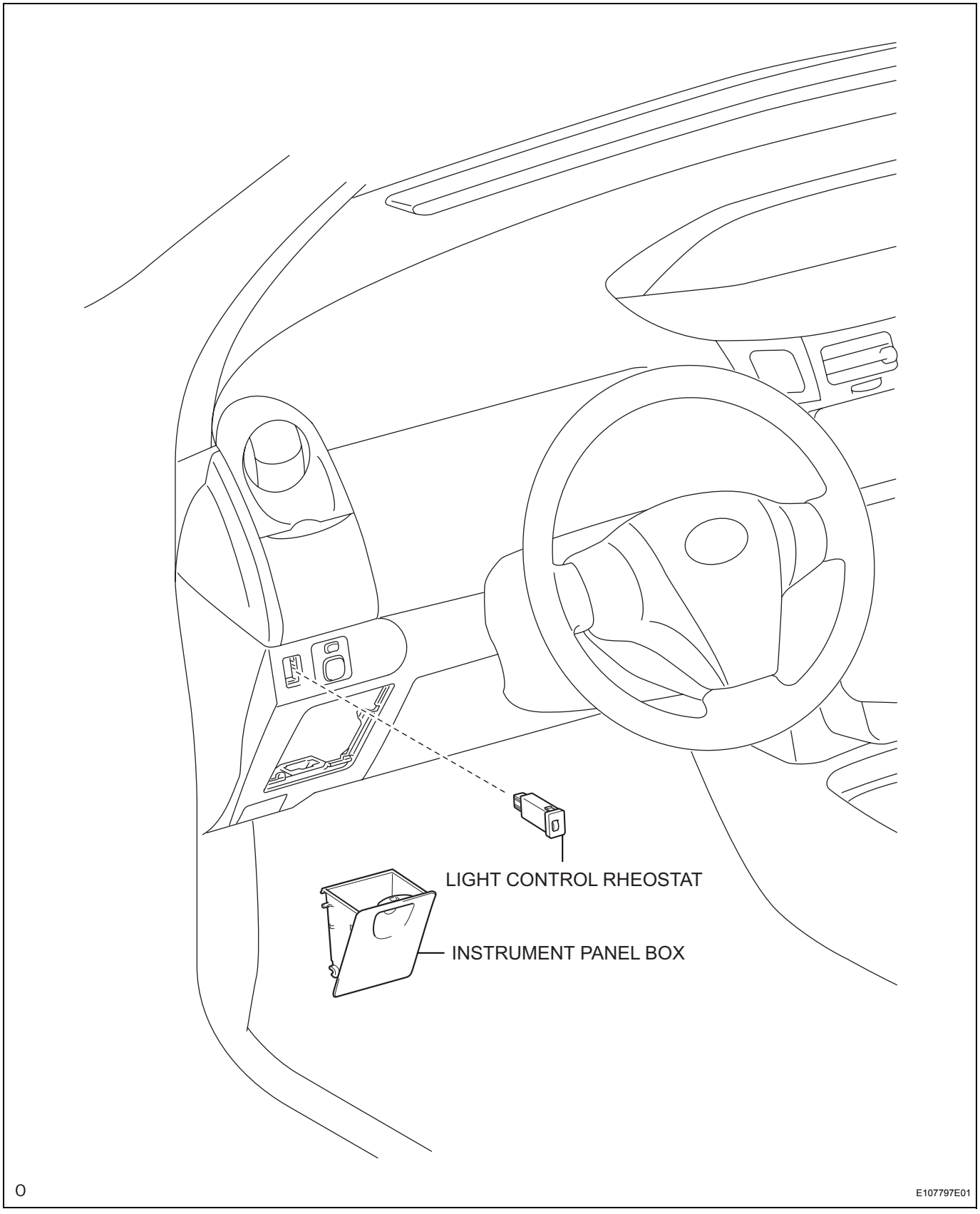

REMOVAL

1. **DISCONNECT CABLE FROM NEGATIVE BATTERY TERMINAL**
2. **REMOVE INSTRUMENT PANEL BOX (See page IP-70)**
3. **REMOVE LIGHT CONTROL RHEOSTAT**
   (a) Disconnect the connector.
   (b) Disengage the 2 claws and remove the light control rheostat.

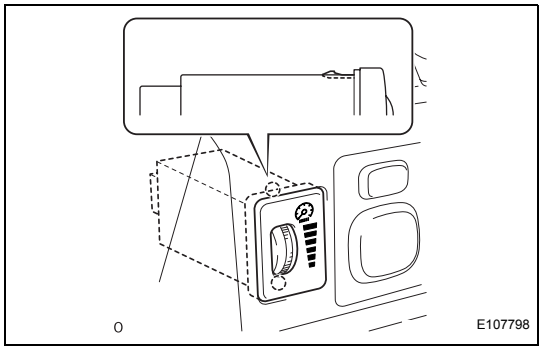

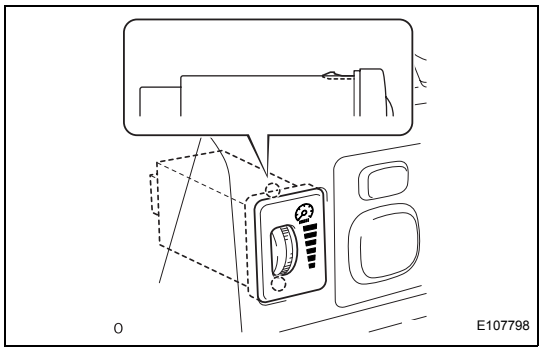

INSTALLATION

1. **INSTALL LIGHT CONTROL RHEOSTAT**
   (a) Engage the 2 claws and install the light control rheostat.
   (b) Connect the connector.
2. **INSTALL INSTRUMENT PANEL BOX (See page IP-78)**
3. **CONNECT CABLE TO NEGATIVE BATTERY TERMINAL**
   Torque: 5.4 N*m (55 kgf*cm, 48 in.*lbf)

ME

AUDIO AND VISUAL SYSTEM

PARTS LOCATION

HATCHBACK

(5-Door Models):

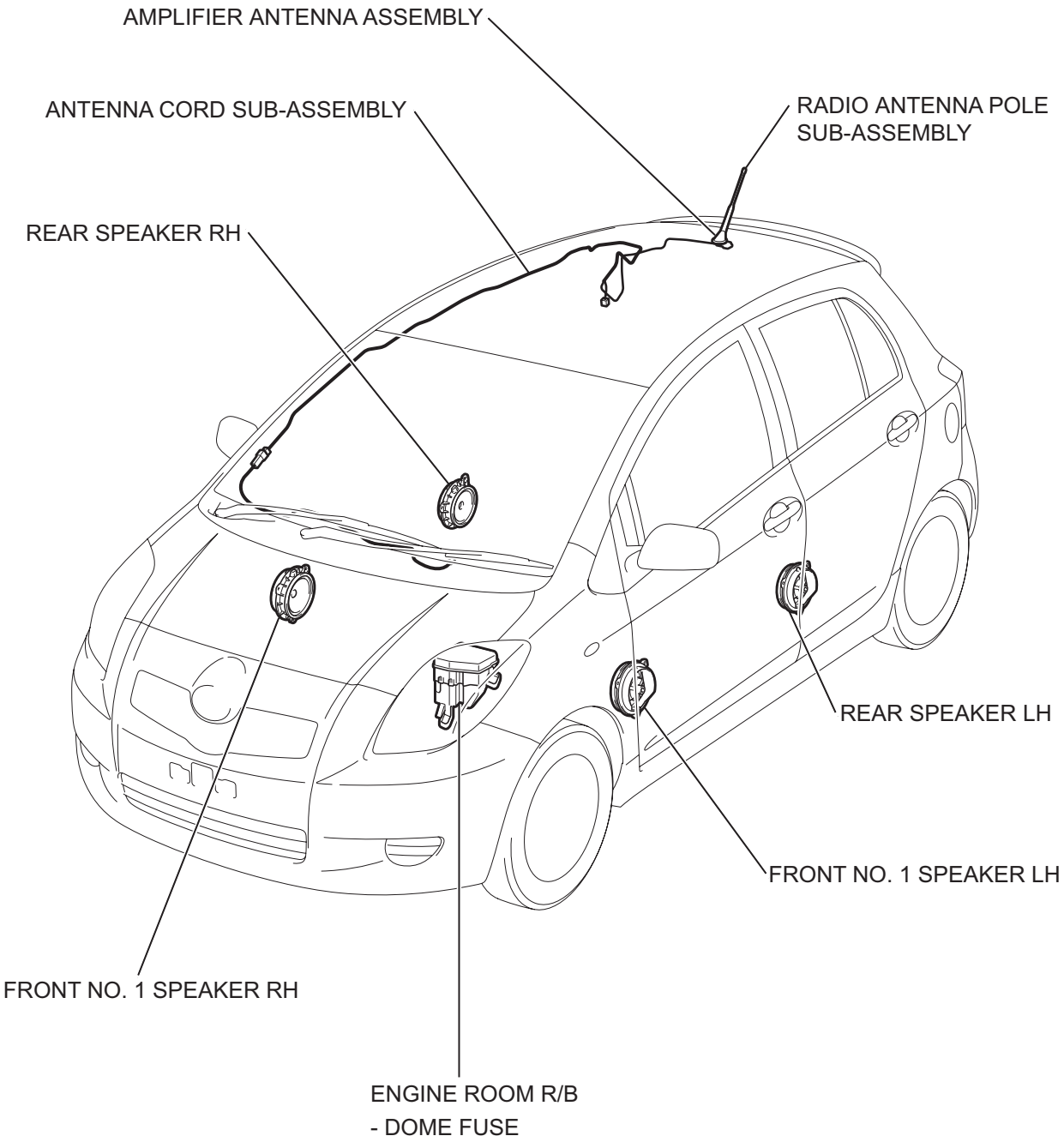

P

C117847E05

AV

HATCHBACK
(3-Door Models):

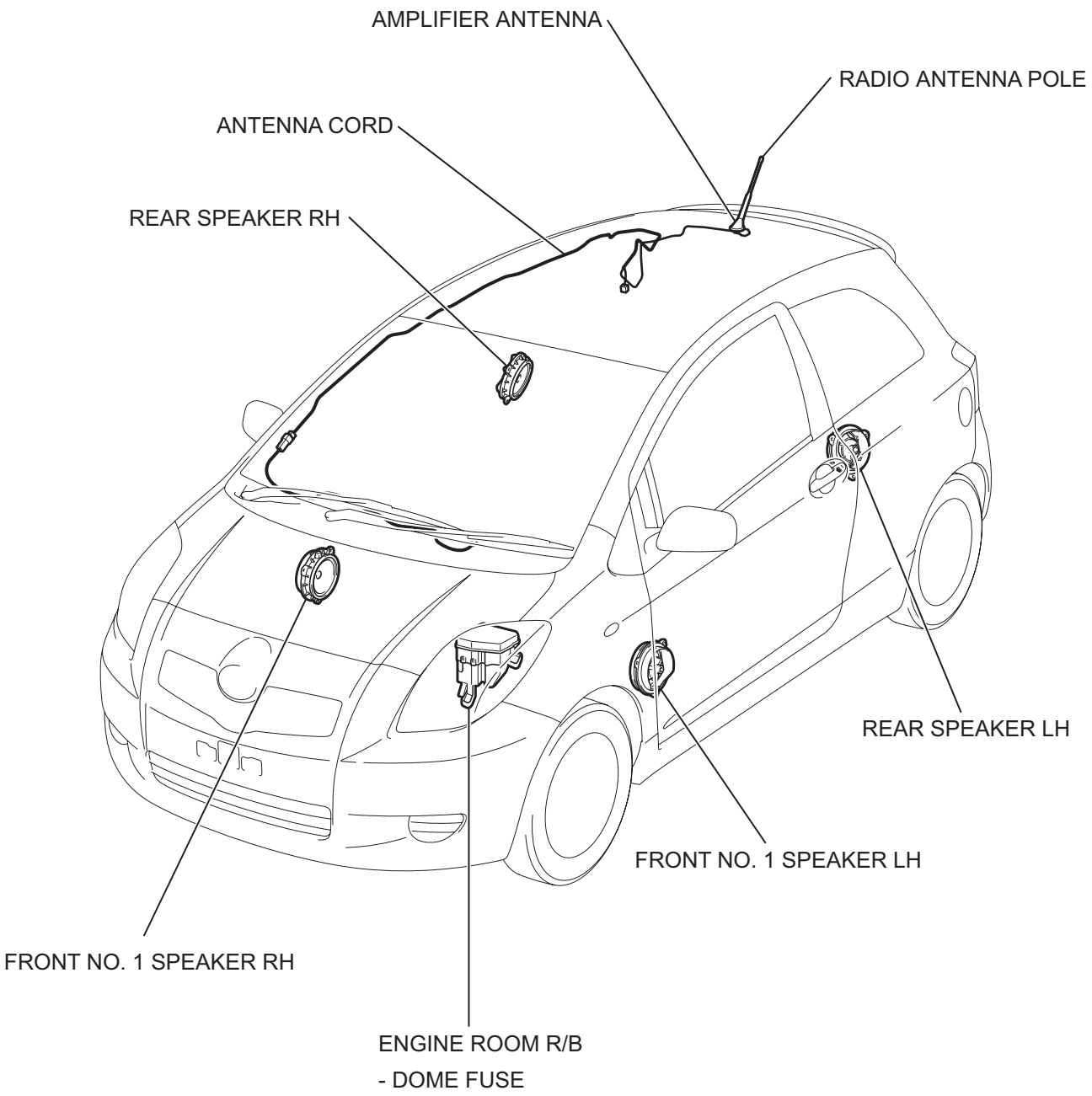

P

E118200E05

HATCHBACK:

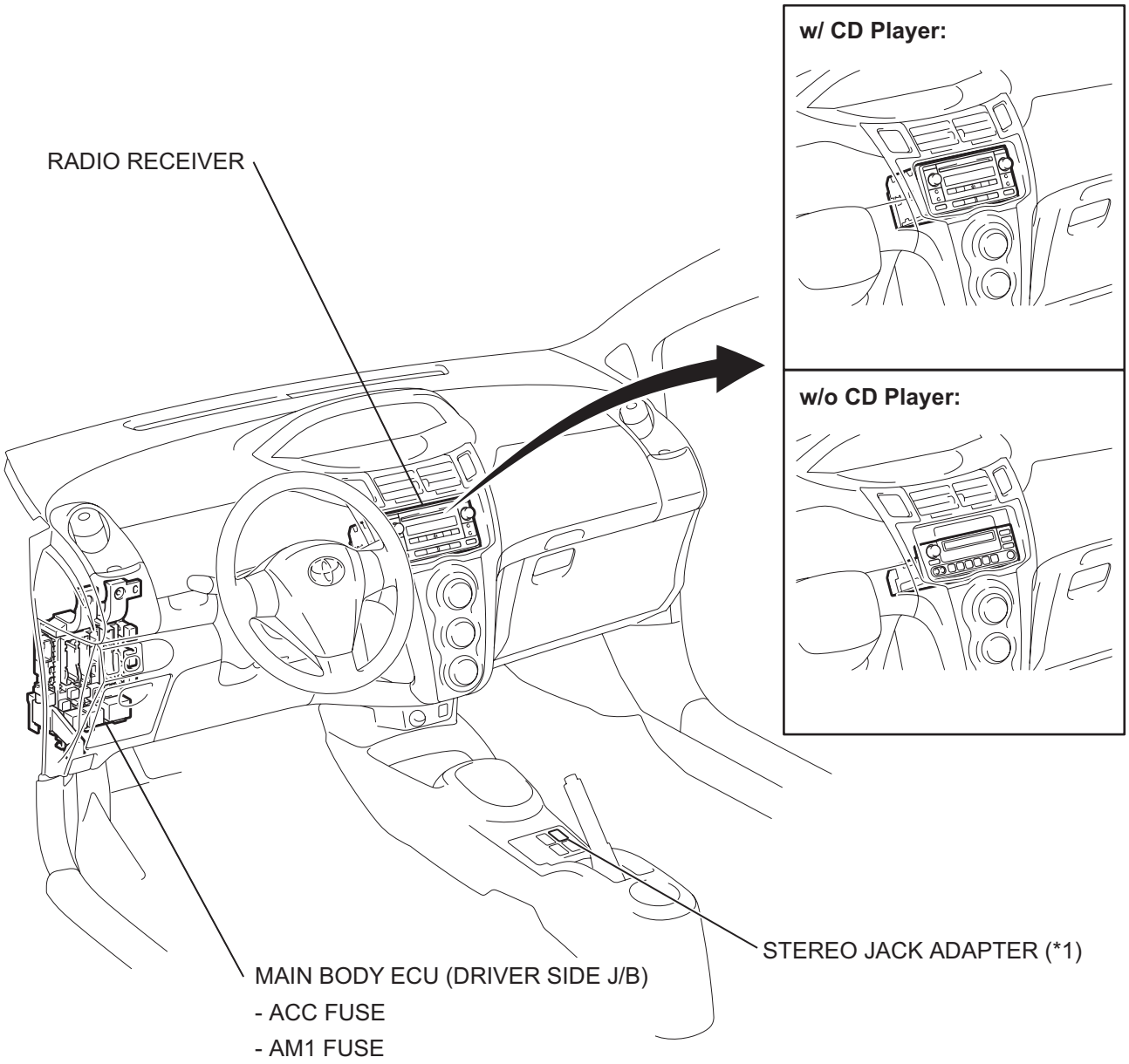

*1: w/ CD Player

P

C117846E03

AV

SEDAN:

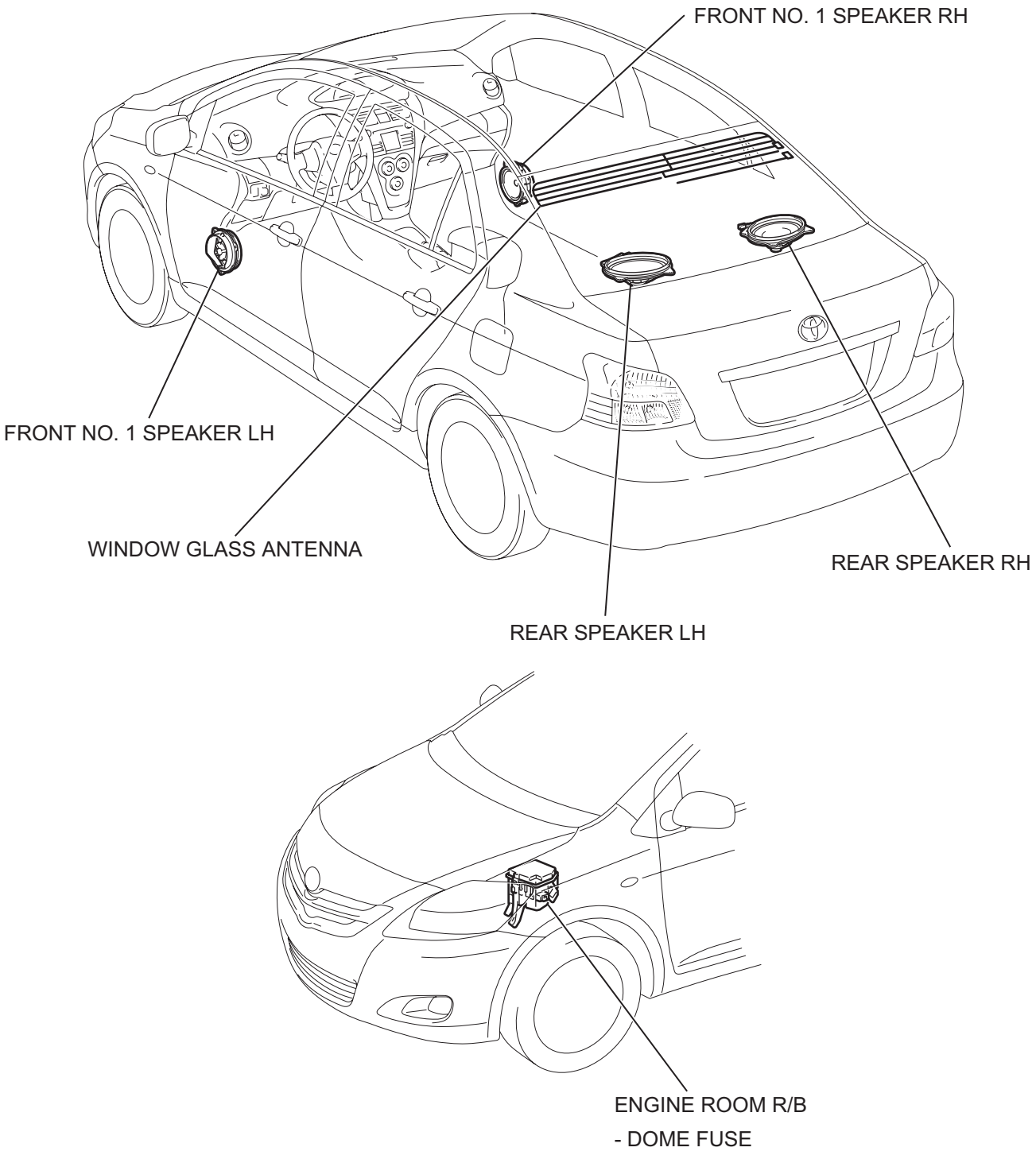

P

C138617E02

SEDAN:

For integrated w/ Panel:	Except integrated w/ Panel:
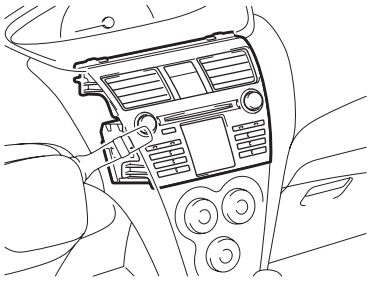	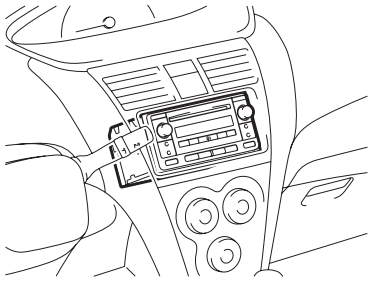

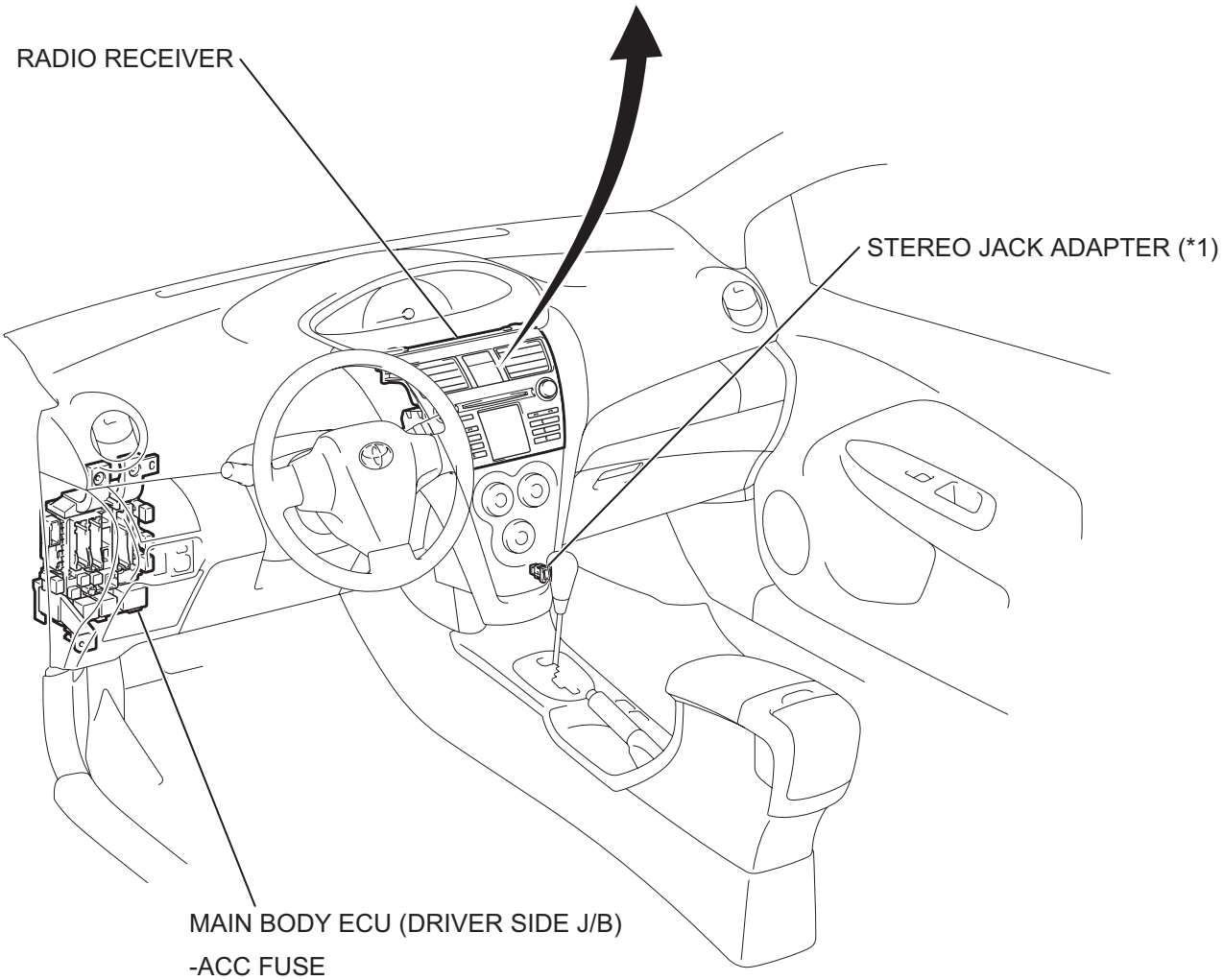

*1: w/ STEREO JACK ADAPTER

P

E132579E01

AV

SYSTEM DIAGRAM

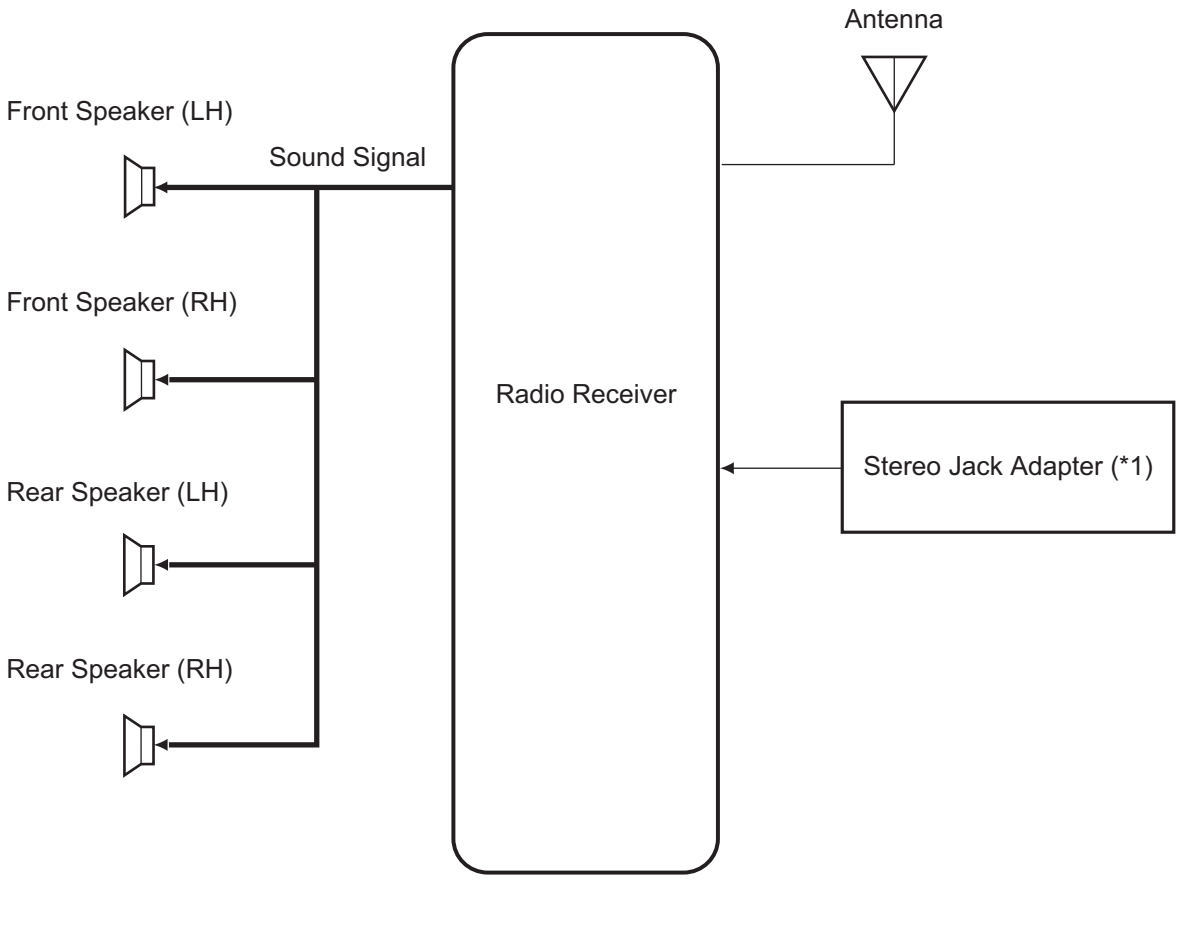

SYSTEM DESCRIPTION

CAUTION:
The CD player uses an invisible laser beam which could cause hazardous radiation exposure. Be sure to operate the player as instructed.

1. CD PLAYER OUTLINE

(a) A CD player uses a laser pickup to read digital signals recorded on CDs. By converting the digital signals to analog, music and other contents can be played.

CAUTION:
Do not look directly at the laser pickup because the CD player uses an invisible laser beam. Be sure to operate the player only as instructed.

NOTICE:
- **Do not disassemble any part of the CD player.**
- **Do not apply oil to the CD player.**
- **Do not insert anything but a CD into the CD player.**

(b) Usable CDs

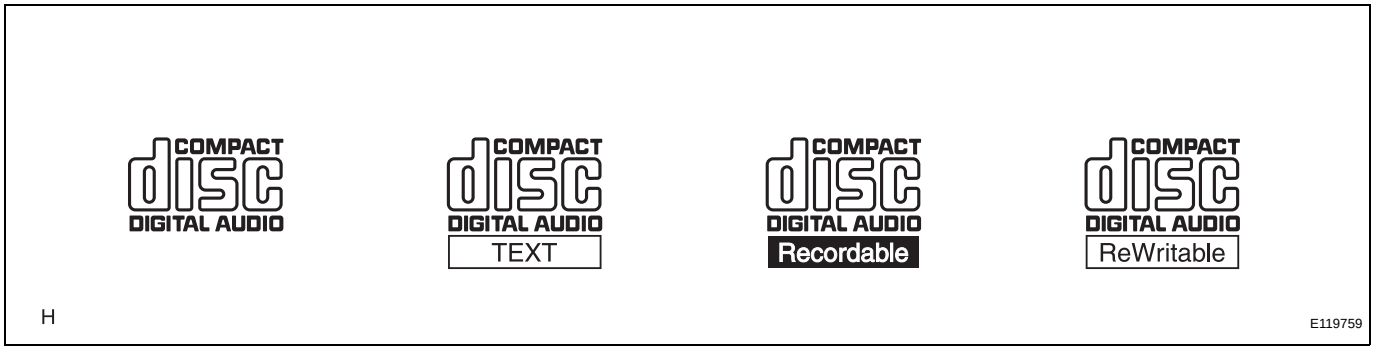

(c) Precautions for use of discs

NOTICE:
- **Copy-protected CDs cannot be played.**
- **Dual discs cannot be played. Playing dual discs may cause malfunctions of the CD player.**
- **CD-Rs and CD-RWs may not be played depending on the recording conditions or characteristics of the discs, or due to damage, dirt, or deterioration caused by leaving the discs in the cabin for a long time.**
- **Unfinalized CD-Rs and CD-RWs cannot be played.**
- **PAL or SECAM color television standard discs cannot be played. (Only NTSC discs can be played.)**
- **Keep the discs away from dirt. Be careful not to damage the discs or leave your fingerprints on them.**
- **Hold discs by the outer edge and center hole with the label side up.**

- **Leaving the disc exposed halfway out of the slot for a long time after pressing the disc eject button may cause deformation of the disc, making the disc unusable.**
- **If discs have adhesive tape, stickers, CDR labels, or any traces of such labels attached, the discs may not be ejected or player malfunctions may result.**
- **Keep the discs away from direct sunlight. (Exposure to direct sunlight may cause deformation of the disc, making the disc unusable.)**
- **Do not use odd-shaped CDs because these may cause player malfunctions.**
- **Do not use discs whose recording portion is transparent or translucent because they may not be inserted, ejected, or played normally.**

HINT:

- When it is cold or it is raining, if the windows mist up, mist and also dew may form in the player. In such a case, the CD may skip or the CD may stop in the middle of play. Ventilate or dehumidify the cabin for a while before using the player.
- The CD may skip if the player experiences strong vibrations when the vehicle is driven on rough road or similar uneven surface(s).

(d) Cleaning

NOTICE:

Do not use a lens cleaner because it may cause a malfunction in the pickup portion of the player.

(1) If dirt is on the disc surface, wipe it clean with a soft dry cloth such as an eyeglass cleaner for plastic lenses from the center to the outside in a radial direction.

NOTICE:

- **Pressing on the disc by hand or rubbing the disc with a hard cloth may scratch the disc surface.**
- **Use of solvent such as a record spray, antistatic agent, alcohol, benzine, and thinner, or a chemical cloth may cause damage to the disc, making the disc unusable.**

2. MP3/WMA OUTLINE

(a) Playable MP3 file standards

Compatible standard	MP3 (MPEG1 LAYER3, MPEG2 LSF LAYER 3)
Compatible sampling frequency	• MPEG1 LAYER3: 32, 44.1, 48 (kHz) • MPEG2 LSF LAYER3: 16, 22.05, 24 (kHz)
Compatible bit rate	• MPEG1 LAYER3: 64, 80, 96, 112, 128, 160, 192, 224, 256, 320 (kbps) • MPEG2 LSF LAYER3: 64, 80, 96, 112, 128, 160 (kbps) • Compatible with VBR
Compatible channel mode	Stereo, joint stereo, dual channel, monaural

(b) Playable WMA file standards

Compatible standard	WMA Ver. 7, 8, and 9
Compatible sampling frequency	32, 44.1, 48 (kHz)
Compatible bit rate	• Ver. 7, 8: CBR48, 64, 80, 96, 128, 160, 192 (kbps) • Ver. 9: CBR48, 64, 80, 96, 128, 160, 192, 256, 320 (kbps) • Compatible with playback of channel 2 only

(c) ID3 tags and WMA tags

(1) Additional textual information called ID3 tags can be input to MP3 files. Information such as song titles and artist names can be stored.
HINT:
This player is compatible with the ID3 tags of ID3 Ver. 1.0 and 1.1, and ID3 Ver. 2.2 and 2.3. (Number of characters complies with ID3 Ver. 1.0 and 1.1.)

(2) Additional textual information called WMA tags can be input to WMA files. Information such as song titles and artist names can be stored.

(d) Usable media

(1) Only CD-ROMs, CD-Rs (CD-Recordable), and CD-RWs (CD-ReWritable) can be used to play MP3/WMA files.
NOTICE:
- **CD-Rs and CD-RWs are more easily affected by a hot and humid environment than discs used for normal audio CDs. For this reason, some CD-Rs and CD-RWs may not be played.**
- **If there are fingerprints or scratches on the disc, the disc may not be played or the CD may skip.**
- **Some CD-Rs and CD-RWs deteriorate if they are left in the cabin for a long time.**
- **Keep CD-Rs and CD-RWs in a storage case that is impenetrable to light.**

(e) Usable media format

(1) Usable media format

Disc format	CD-ROM Mode 1, CD-ROM XA Mode 2 Form1
File format	ISO9660 Level 1 and Level 2 (Juliet and Romeo)

HINT:
- As for MP3/WMA files written in any format other than those above, the contents of the files may not be played normally or the file names or folder names may not be displayed correctly.
- This player is compatible with multi-session discs and can play CD-Rs and CD-RWs on which MP3/WMA files are added. However, only the first session can be played.
- Discs whose first session includes both music data and MP3 or WMA format data cannot be played.

AV

(2) Standard and restrictions

Maximum directory levels	8 levels
Maximum number of characters for a folder name/file name	32 characters
Maximum number of folders	192 (Including empty folders, route folders, and folders that do not contain MP3/WMA files)
Maximum number of files in a disc	255 (Including non-MP3/WMA files)

(f) File names

(1) Only files with an extension of ".mp3" or ".wma" can be recognized and played as MP3 or WMA files.

(2) Save MP3 or WMA files with an extension of ".mp3" or ".wma".

NOTICE:

If saving non-MP3 or non-WMA files with an extension of ".mp3" or ".wma", those files are wrongly recognized as MP3 or WMA files and played. A loud noise may occur and damage to the speakers may result.

HOW TO PROCEED WITH TROUBLESHOOTING

HINT:
In accordance with the following procedures, troubleshoot the audio and visual system.

1 VEHICLE BROUGHT TO WORKSHOP

NEXT

2 INSPECT BATTERY VOLTAGE

Standard voltage:
11 to 14 V
If the voltage is below 11 V, recharge or replace the battery before proceeding.

NEXT

3 BASIC INSPECTION

(a) Turn the ignition switch to ACC.
(b) Check whether the display appears on the radio receiver.

Result	Proceed to
Display appears	A
Display does not appear	B

B → **PROCEED TO PROBLEM SYMPTOMS TABLE**

A

4 PROBLEM SYMPTOMS TABLE

Result	Proceed to
Fault not listed in problem symptoms table	A
Fault listed in problem symptoms table	B

B → **Go to step 6**

A

5 OVERALL ANALYSIS AND TROUBLESHOOTING

(a) Terminals of ECU (See page AV-14)
(b) Inspection (See page AV-159, AV-172)

NEXT

AV

6	**ADJUST, REPAIR OR REPLACE**

NEXT

7	**CONFIRMATION TEST**

NEXT

END

IDENTIFICATION OF NOISE SOURCE

1. Radio Description

(a) Radio frequency band

(1) Radio broadcasts use the radio frequency bands shown in the table below.

Frequency	30 kHz	300 kHz	3 MHz	30 MHz	300 MHz
Designation	LF	MF	HF	VHF	
Radio Wave		AM ⟷		FM ⟷	
Modulation	Amplitude modulation			Frequency modulation	

LF: Low frequency MF: Medium frequency HF: High frequency VHF: Very high frequency

E108734E02

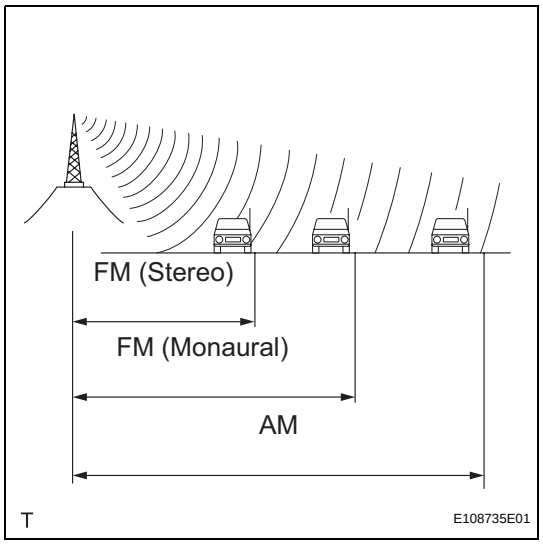

(b) Service area

(1) The service areas of AM and FM broadcasts are vastly different. Sometimes an AM broadcast can be received very clearly but an FM stereo cannot. FM stereo has the smallest service area, and is prone to pick up static and other types of interference such as noise.

(c) Radio reception problems

HINT:

In addition to static, other problems such as "phasing", "multipath", and "fade out" exist. These problems are not caused by electrical noise, but by the radio signal propagation method itself.

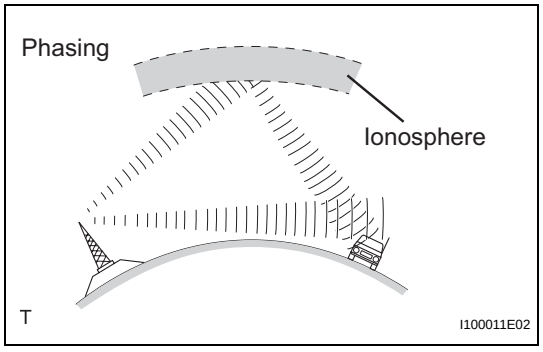

(1) Phasing

AM broadcasts are susceptible to electrical interference and another kind of interference called phasing. Occurring only at night, phasing is the interference created when a vehicle receives 2 radio wave signals from the same transmitter. One signal is reflected off the ionosphere and the other signal is received directly from the transmitter.

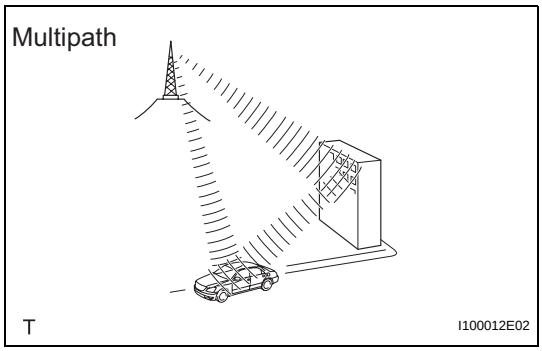

(2) Multipath
Multipath is a type of interference created when a vehicle receives 2 radio wave signals from the same transmitter. One signal is reflected off buildings or mountains and the other signal is received directly from the transmitter.

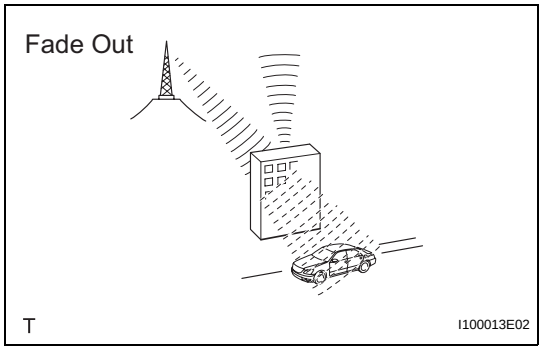

(3) Fade out
Fade out is caused by objects (buildings, mountains, and other such large obstacles) that deflect away part of a signal, resulting in a weaker signal when the object is between the transmitter and vehicle. High frequency radio waves, such as FM broadcasts, are easily deflected by obstructions. Low frequency radio waves, such as AM broadcasts, are much more difficult to deflect.

(d) Noise problem
Technicians must have a clear understanding about each customer's noise complaint. Use the following table to diagnose noise problems.

Radio Frequency	Noise Occurrence Condition	Presumable Cause
AM	Noise occurs in specific area	Foreign noise
AM	Noise occurs when listening to an intermittent broadcast	An identical program transmitted from multiple towers can cause noise where the signals overlap
AM	Noise occurs only at night	Music beat from a distant broadcast
FM	Noise occurs while driving in a specified area	Multipath or phasing noise resulting from a change in FM frequency

HINT:
If the noise does not match the examples above, refer to the descriptions about phasing and multipath.

AV

PROBLEM SYMPTOMS TABLE

HINT:
Use the table below to determine the cause of the problem symptom. The potential causes of the symptom are listed in order of probability in the "Suspected Area" column of the table. Check each symptom by checking the suspected areas in the order they are listed. Replace parts as necessary.

Audio Function

Symptom	Suspected area	See page
Noise occurs	1. Proceed to "Noise Occurs"	AV-16
	2. Radio Receiver	-
Pressing power switch does not turn on system	1. Proceed to "Pressing Power Switch does not Turn on System"	AV-17
	2. Proceed to "Radio Receiver Power Source Circuit"	AV-33
	3. Radio Receiver	-
No sound can be heard from speakers	1. Proceed to "No Sound can be Heard from Speakers"	AV-18
	2. Proceed to "Speaker Circuit"	AV-28
	3. Proceed to "Radio Receiver Power Source Circuit"	AV-33
	4. Radio Receiver	-
Sound quality is bad only when CD is played (volume is too low)	1. Proceed to "Sound Quality is Bad Only when CD is played (Volume is too low)"	AV-19
	2. Proceed to "Speaker Circuit"	AV-28
	3. Radio Receiver	-
CD cannot be ejected	1. Proceed to "CD cannot be ejected"	AV-20
	2. Proceed to "Radio Receiver Power Source Circuit"	AV-33
	3. Radio Receiver	-
CD cannot be inserted or CD is ejected right after insertion	1. Proceed to "CD cannot be Inserted or is Ejected Right After Insertion"	AV-21
	2. Proceed to "Radio Receiver Power Source Circuit"	AV-33
	3. Radio Receiver	-
CD sound skips	1. Proceed to "CD Sound Skips"	AV-23
	2. Radio Receiver	-
Radio broadcast cannot be received (bad reception)	1. Proceed to "Radio Broadcast cannot be Received (Bad Reception)"	AV-25
Poor sound quality in all modes (low volume)	1. Proceed to "Poor Sound Quality in All Modes (Low Volume)"	AV-27
	2. Proceed to "Speaker Circuit"	AV-28
	3. Radio Receiver	-
External device sound cannot be heard or sound quality is bad (stereo jack is used)	1. Proceed to "Sound Signal Circuit between Radio Receiver and Stereo Jack Adapter"	AV-31
	2. Radio Receiver	-

TERMINALS OF ECU

1. CHECK RADIO RECEIVER

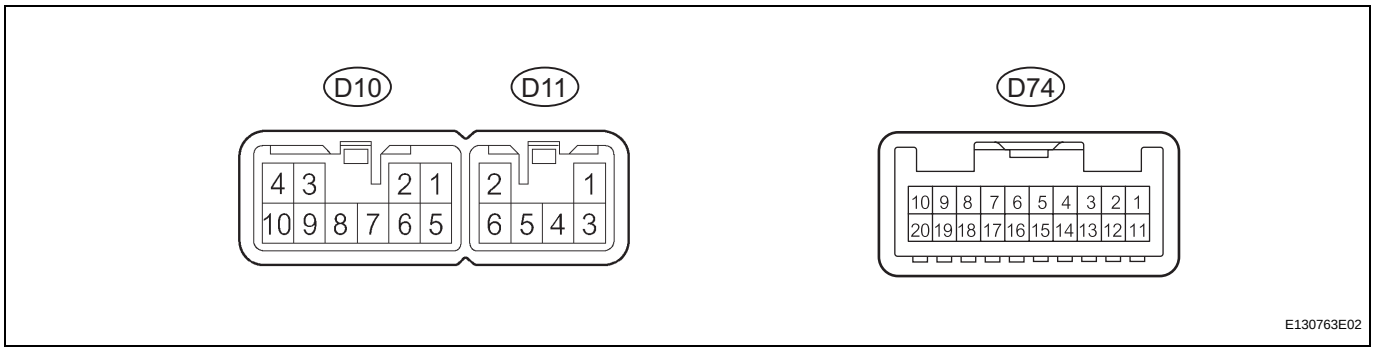

(a) Disconnect the D10 receiver connector.
(b) Measure the resistance and voltage of the wire harness side connector.

Standard:

Symbols (Terminal No.)	Wiring Color	Terminal Description	Condition	Specified Condition
GND (D10-7) - Body ground	W-B - Body ground	Ground	Always	Below 1 Ω
ACC (D10-3) - GND (D10-7)	GR - W-B	ACC power supply	Ignition switch ACC	11 to 14 V
B (D10-4) - GND (D10-7)	L - W-B	Battery power supply	Always	11 to 14 V

AV

HINT:
If the results are not as specified, there may be a malfunction in the wire harness.
(c) Reconnect the D10 receiver connector.
(d) Measure the voltage and resistance of the connector.

Standard:

Symbols (Terminal No.)	Wiring Color	Terminal Description	Condition	Specified Condition
FR+ (D10-1) - GND (D10-7)	GR - W-B	Sound signals (front right)	Audio system operating	Waveform synchronized with sound output
FL+ (D10-2) - GND (D10-7)	P - W-B	Sound signals (front left)	Audio system operating	Waveform synchronized with sound output
FR- (D10-5) - GND (D10-7)	Y - W-B	Sound signals (front right)	Audio system operating	Waveform synchronized with sound output
FL- (D10-6) - GND (D10-7)	V - W-B	Sound signals (front left)	Audio system operating	Waveform synchronized with sound output
RR+ (D11-1) - GND (D10-7)	R - W-B	Sound signals (rear right)	Audio system operating	Waveform synchronized with sound output
RL+ (D11-2) - GND (D10-7)	B - W-B	Sound signals (rear left)	Audio system operating	Waveform synchronized with sound output
RR- (D11-3) - GND (D10-7)	W - W-B	Sound signals (rear right)	Audio system operating	Waveform synchronized with sound output
RL- (D11-6) - GND (D10-7)	Y - W-B	Sound signals (rear left)	Audio system operating	Waveform synchronized with sound output
ANT (D10-8) - GND (D10-7)	B - W-B	Power source of antenna	Radio switch ON (AM or FM)	11 to 14 V
ARI (D74-15) - GND (D10-7)	R - W-B	Sound signal (Right)	External device playing (When stereo jack adapter used)	Waveform synchronized with sound output
ASGN (D74-16) GND (D10-7)	(Shielded) - W-B	Ground (Shielded)	Always	Below 1 Ω

Symbols (Terminal No.)	Wiring Color	Terminal Description	Condition	Specified Condition
ALI (D74-17) - GND (D10-7)	G - W-B	Sound signal (Left)	External device playing (When stereo jack adapter used)	Waveform synchronized with sound output
AUXI (D74-19) - GND (D10-7)	R - W-B	External device connection detection signal	External device connected	Below 1 Ω
SPD (D74-3)	W - W-B	Speed signal	Ignition switch ON, drive wheels turned slowly	Pulse generation

HINT:
If the results are not as specified, there may be a malfunction in the wire harness.

Noise Occurs

INSPECTION PROCEDURE

1	CHECK SPEAKER INSTALLATION

(a) Check that each speaker is securely installed.
OK:
Speakers are installed securely.

HINT:
The radio has a noise prevention function to reduce noise when listening to the radio. If severe noise occurs, check whether the ground at the antenna mounting base and the noise prevention unit are installed and wired correctly.

Condition in Which Noise Occurs	Noise Type
Increases when accelerator pedal is depressed, and stops immediately when engine is stopped	Generator noise
When A/C or heater is operating	Blower motor noise
• When vehicle is rapidly accelerated on unpaved road • When ignition switch is ON	Fuel pump noise
• When horn switch is pressed and released • When horn switch is pressed and held down	Horn noise
Occurs faintly when engine is running, and stops immediately when engine is stopped	Ignition noise
When turn signal is operating	Flasher noise
When window washer is operating	Washer noise
When engine is running, and continues even when engine is stopped	Engine coolant temperature noise
When wipers are operating	Wiper noise
When brake pedal is depressed	Stop light switch noise
Other than above	Static electricity on vehicle

HINT:
- Use the table above to identify the part that is causing the noise. Check the noise filter on the part.
- To save time and avoid a misdiagnosis, first make sure that the noise is not originating from outside the vehicle.
- Troubleshoot noise problems in order of loudness, starting with the loudest noise.
- Setting the radio to a frequency that receives no signal may make recognition of the noise problem easier.

NG → **INSTALL SPEAKER PROPERLY**

OK

IDENTIFY NOISE SOURCE

AV

Pressing Power Switch does not Turn on System

INSPECTION PROCEDURE

1	CHECK WHETHER RAPID TEMPERATURE CHANGE OCCURRED IN CABIN

(a) Check whether or not a rapid temperature change occurred in the cabin.
OK:
Rapid temperature change occurred.
HINT:
Rapid temperature changes create condensation inside the radio receiver, which may cause a short circuit.

NG → **REPLACE RADIO RECEIVER**

OK

PROCEED TO NEXT CIRCUIT INSPECTION SHOWN IN PROBLEM SYMPTOMS TABLE

No Sound can be Heard from Speakers

INSPECTION PROCEDURE

1	CHECK RADIO RECEIVER (VOLUME AND MUTE SWITCH)

(a) Check the radio receiver setting.
  (1) Check that the volume is not set to minimum.
  (2) Check that MUTE is OFF.
  OK:
  Malfunction disappears.

NG → **PROCEED TO NEXT CIRCUIT INSPECTION SHOWN IN PROBLEM SYMPTOMS TABLE**

OK

END

Sound Quality is Bad Only when CD is Played (Volume is Too Low)

INSPECTION PROCEDURE

1	OPERATION USING ANOTHER CD

(a) Replace the CD with a normal one and check if the same problem occurs again.
OK:
Malfunction disappears.

NG → **PROCEED TO NEXT CIRCUIT INSPECTION SHOWN IN PROBLEM SYMPTOMS TABLE**

OK

CD IS FAULTY

CD cannot be Ejected

INSPECTION PROCEDURE

1	CHECK OPERATION

(a) Press the CD EJECT switch of the radio receiver for 2 seconds or more to check whether the CD can be ejected.
OK:
CD is ejected.

NG → **REPLACE RADIO RECEIVER**

OK

2	OPERATION USING ANOTHER CD

(a) Replace the CD with a normal one and check that the CD can be ejected.
OK:
CD is ejected.

NG → **REPLACE RADIO RECEIVER**

OK

CD IS FAULTY

CD cannot be Inserted or is Ejected Right After Insertion

INSPECTION PROCEDURE

1	CHECK CD

(a) Make sure that the CD is a normal audio CD, and that it is not deformed, flawed, stained, burred or otherwise defective.
OK:
Normal audio CD.
HINT:
Translucent or uniquely-shaped CDs cannot be played.

NG → **CD IS FAULTY**

OK

2	CHECK THAT CD HAS BEEN INSERTED PROPERLY

(a) Check whether or not the CD was inserted upside down.
OK:
CD was properly inserted.

NG → **INSERT CD PROPERLY**

OK

3	CLEAN CD

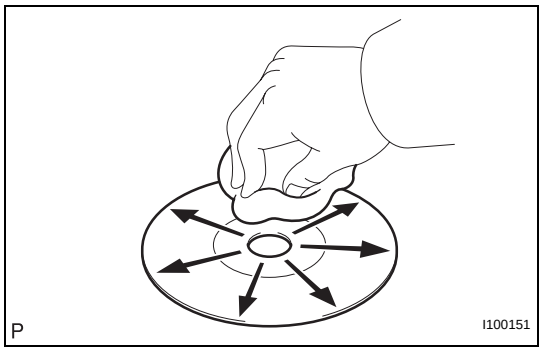

(a) Clean the disc by wiping the CD's dataside radially with a soft cloth.
OK:
Malfunction disappears.
NOTICE:
Do not use a conventional record cleaner or anti-static preservative.

OK → **CD WAS DIRTY**

NG

4	REPLACE CD

(a) Replace the CD with a normal one and check if the same problem occurs again.
OK:
Malfunction disappears.

NG → **REPLACE RADIO RECEIVER**

AV

OK

CD IS FAULTY

CD Sound Skips

INSPECTION PROCEDURE

HINT:
The sound may skip when driving on an unpaved road.

1	CLEAN CD

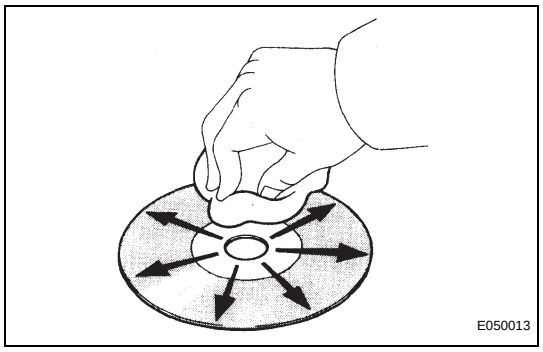

(a) If the disc is dirty, clean the disc by wiping the CD's dataside radially with a soft cloth.
OK:
Malfunction disappears.
NOTICE:
Do not use a conventional record cleaner or anti-static preservative.

OK → **CD WAS DIRTY**

NG

2	OPERATION USING ANOTHER CD

(a) Replace the CD with a normal one and check if the same problem occurs again.
OK:
Malfunction disappears.

OK → **CD IS FAULTY**

NG

3	CHECK RADIO RECEIVER INSTALLATION

(a) Check the installation condition of the radio receiver.
OK:
Installed properly.

NG → **INSTALL RADIO RECEIVER PROPERLY**

OK

4	CHECK WHETHER RAPID TEMPERATURE CHANGE OCCURRED IN CABIN

(a) Check whether or not a rapid temperature change occurred in the cabin.
OK:
Rapid temperature change occurred.
HINT:
Rapid temperature changes create condensation inside the CD player, which may prevent CDs from being played.

AV

NG → **REPLACE RADIO RECEIVER**

OK

CONDENSATION DUE TO TEMPERATURE CHANGE (LET IT SIT FOR A WHILE BEFORE USING)

Radio Broadcast cannot be Received (Bad Reception)

INSPECTION PROCEDURE

1	CHECK WHETHER RAPID TEMPERATURE CHANGE OCCURRED IN CABIN

(a) Check whether the radio auto-search functions properly.
(1) Tune the radio using the auto-search function and check that it operates normally.
OK:
The radio auto-search functions properly.

OK → **END**

NG

2	CHECK OPTIONAL COMPONENTS

(a) Check whether any optional components, such as telephone antenna, are installed.
OK:
Optional component(s) installed.

OK → **EFFECT FROM OPTIONAL COMPONENTS**

NG

3	CHECK ANTENNA FOR NOISE PRODUCTION

(a) With the ignition switch on (ACC), turn on the radio and select the AM mode.
(b) Place the tip of a screwdriver on the antenna and check that noise is heard from the speaker.
OK:
Noise occurs.

OK → **REPLACE ROOF ANTENNA POLE SUB-ASSEMBLY**

NG

4	INSPECT RADIO RECEIVER (ANTENNA)

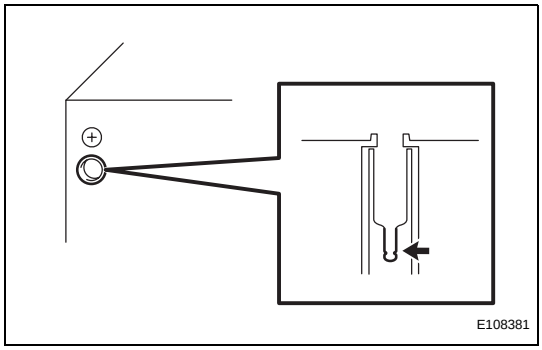

(a) Remove the antenna plug of the radio receiver.
(b) With the radio receiver connector connected, turn the ignition switch to ACC.
(c) Turn on the radio and select the AM mode.
(d) Place a flat-head screwdriver or piece of metal, such as a thin wire, on the antenna jack of the radio receiver. Check that noise is heard from the speakers.
OK:
Noise occurs.

NG → **REPLACE ANTENNA CORD SUB-ASSEMBLY**

OK

REPLACE RADIO RECEIVER

Poor Sound Quality in All Modes (Low Volume)

INSPECTION PROCEDURE

1	**ADJUST SOUND QUALITY**

(a) Operate the radio receiver to adjust the sound quality.
OK:
Sound quality returns to normal.

OK → **SYSTEM IS OK (POOR SOUND QUALITY)**

NG

2	**COMPARE WITH ANOTHER VEHICLE OF SAME MODEL**

(a) Compare the vehicle with another vehicle that has a normally functioning audio system. Check if there is any difference in the sound quality.
OK:
No difference is found.

OK → **SYSTEM IS OK (POOR SOUND QUALITY)**

NG

PROCEED TO NEXT CIRCUIT INSPECTION SHOWN IN PROBLEM SYMPTOMS TABLE

Speaker Circuit

DESCRIPTION

Sound signals that have been amplified by the stereo component amplifier are sent to the speakers from the radio receiver through this circuit. If there is a short in this circuit, the sound cannot be heard from the speakers even though there is no malfunction in the speakers.

WIRING DIAGRAM

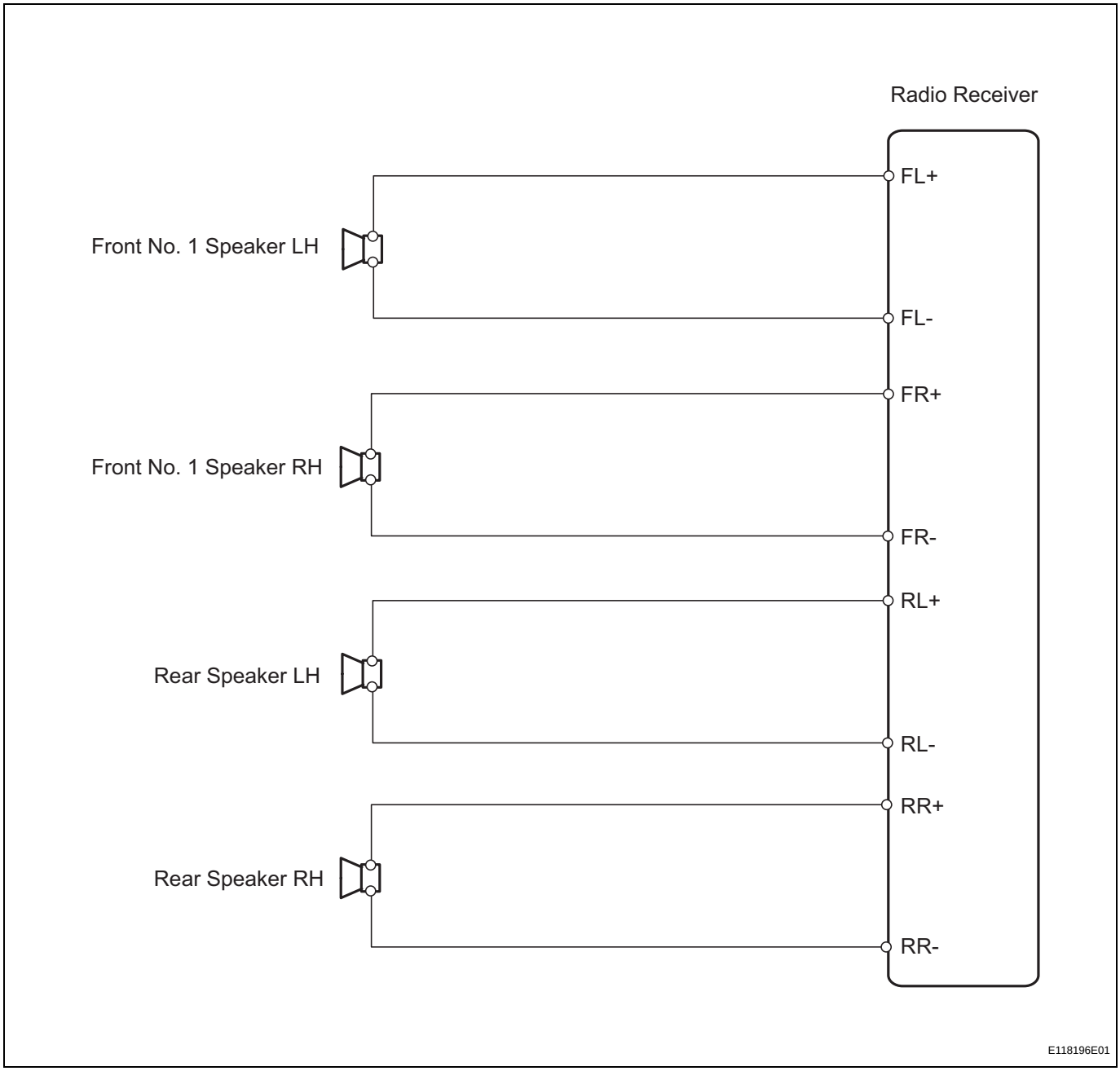

INSPECTION PROCEDURE

1	**CHECK SPEAKER**

(a) Check whether sound is emitted from each speaker.

Result

Result	Proceed to
Front No. 1 speakers have problems	A
Rear speakers have problems	B

B → Go to step 4

A

2 INSPECT FRONT NO. 1 SPEAKERS

(a) Check the left and right front No. 1 speakers (See page AV-163 or AV-159).
OK:
Front No. 1 speakers are normal.

NG → REPLACE FRONT NO. 1 SPEAKER

OK

3 CHECK HARNESS AND CONNECTOR (RADIO RECEIVER - FRONT NO. 1 SPEAKER)

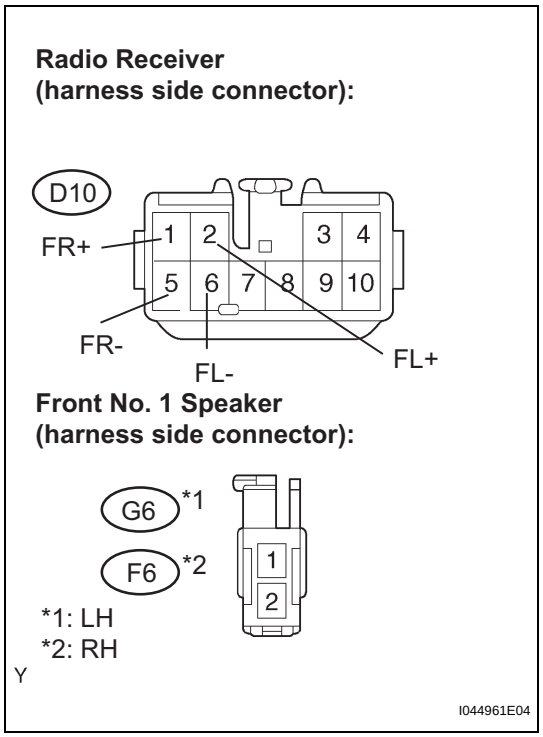

(a) Disconnect the D10 receiver connector.
(b) Disconnect the front No. 1 speaker connector.
(c) Measure the resistance.
Standard resistance

Tester Connection	Specified Condition
D10-2 (FL+) - G6-1	Below 1 Ω
D10-6 (FL-) - G6-2	Below 1 Ω
D10-2 (FL+) - Body ground	10 kΩ or higher
D10-6(FL-) - Body ground	10 kΩ or higher
D10-1 (FR+) - F6-1	Below 1 Ω
D10-5 (FR-) - F6-2	Below 1 Ω
D10-1 (FR+) - Body ground	10 kΩ or higher
D10-1 (FR+) - Body ground	10 kΩ or higher

NG → REPAIR OR REPLACE HARNESS OR CONNECTOR

OK

PROCEED TO NEXT CIRCUIT INSPECTION SHOWN IN PROBLEM SYMPTOMS TABLE

4	INSPECT REAR SPEAKERS

(a) Check the left and right rear speakers (See page AV-172, AV-177 or AV-183).
OK:
Rear speakers are normal.

NG → **REPLACE REAR SPEAKER**

OK

5	CHECK HARNESS AND CONNECTOR (RADIO RECEIVER - REAR SPEAKER)

(a) Disconnect the D11 receiver connector.
(b) Disconnect the rear speaker connectors.
(c) Measure the resistance.

Radio Receiver (harness side connector):

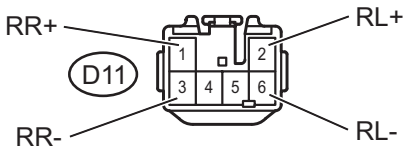

Rear Speaker for Hatchback (harness side connector):

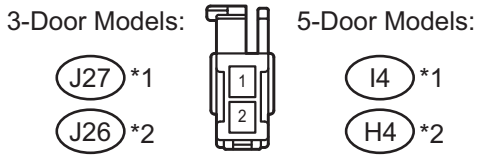

Rear Speaker for Sedan (harness side connector):



E132581E01

Standard resistance (Hatchback 3-Door Models)

Tester Connection	Specified Condition
D11-2 (RL+) - J27-1	Below 1 Ω
D11-6 (RL-) - J27-2	Below 1 Ω
D11-1 (RR+) - J26-1	Below 1 Ω
D11-3 (RR-) - J26-2	Below 1 Ω

Standard resistance (Hatchback 5-Door Models)

Tester Connection	Specified Condition
D11-2 (RL+) - I4-1	Below 1 Ω
D11-6 (RL-) - I4-2	Below 1 Ω
D11-1 (RR+) - H4-1	Below 1 Ω
D11-3 (RR-) - H4-2	Below 1 Ω

Standard resistance (Sedan)

Tester Connection	Specified Condition
D11-2 (RL+) - J39-1	Below 1 Ω
D11-6 (RL-) -J39-2	Below 1 Ω
D11-1 (RR+) - J38-1	Below 1 Ω
D11-3 (RR-) - J38-2	Below 1 Ω

Standard resistance

Tester Connection	Specified Condition
D11-2 (RL+) - Body ground	10 kΩ or higher
D11-6 (RL-) - Body ground	10 kΩ or higher
D11-1 (RR+) - Body ground	10 kΩ or higher
D11-3 (RR-) - Body ground	10 kΩ or higher

NG → **REPAIR OR REPLACE HARNESS OR CONNECTOR**

OK

PROCEED TO NEXT CIRCUIT INSPECTION SHOWN IN PROBLEM SYMPTOMS TABLE

Sound Signal Circuit between Radio Receiver and Stereo Jack Adapter

DESCRIPTION

The stereo jack adapter sends an external device sound signal to the radio receiver through this circuit. The sound signal that has been sent is amplified by the stereo component amplifier, and then is sent to the speakers. If there is an open or short in the circuit, sound cannot be heard from the speakers even if there is no malfunction in the stereo component amplifier, radio receiver, or speakers.

WIRING DIAGRAM

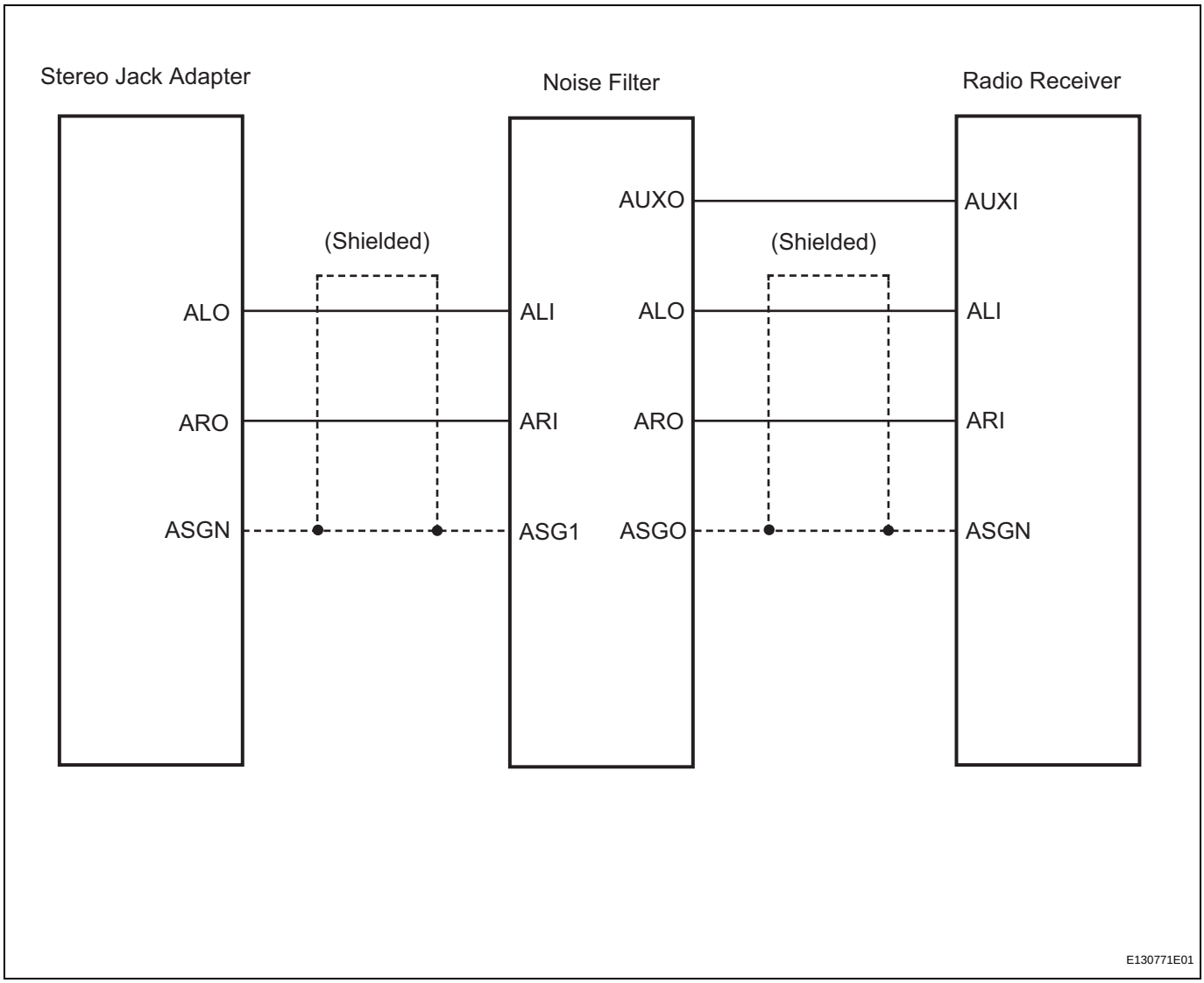

AV

INSPECTION PROCEDURE

1	CHECK HARNESS AND CONNECTOR (RADIO RECEIVER - STEREO JACK ADAPTER)

Radio Receiver (harness side connector):

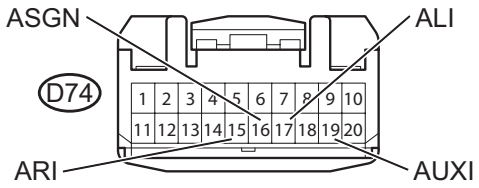

Stereo Jack Adapter (harness side connector):

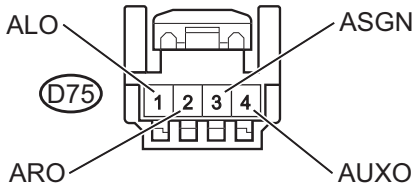

E132582E01

(a) Disconnect the D74 radio receiver connector and D75 stereo jack adapter connector.
(b) Measure the resistance.
Standard resistance

Tester Connection	Specified Condition
AUXI (D74-19) - AUXO (D75-4)	Below 1 Ω
ALI (D74-17) - ALO (D75-1)	Below 1 Ω
ARI (D74-15) - ARO (D75-2)	Below 1 Ω
ASGN (D74-16) - ASGN (D75-3)	Below 1 Ω
AUXI (D74-19) or AUXO (D75-4) - Body ground	10 kΩ or higher
ALI (D74-17) - or ALO (D75-1) - Body ground	10 kΩ or higher
ARI (D74-15) or ARO (D75-2) - Body ground	10 kΩ or higher
ASGN (D74-16) or ASGN (D75-3) - Body ground	10 kΩ or higher

NG → **REPAIR OR REPLACE HARNESS OR CONNECTOR**

OK

PROCEED TO NEXT CIRCUIT INSPECTION SHOWN IN PROBLEM SYMPTOMS TABLE

AV

Radio Receiver Power Source Circuit

DESCRIPTION

This circuit provides power to the radio receiver.

WIRING DIAGRAM

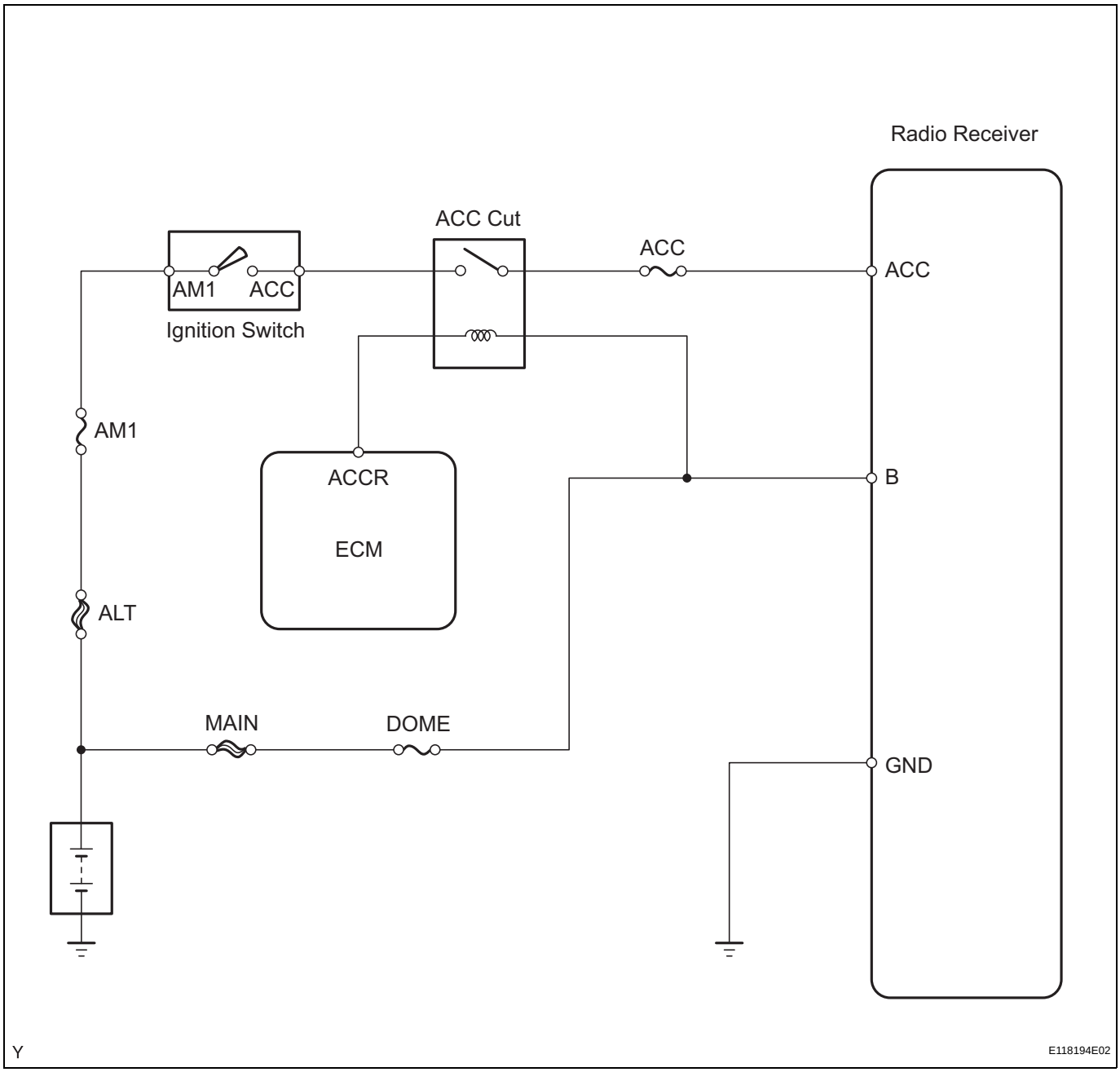

INSPECTION PROCEDURE

1	**INSPECT FUSE (ACC, AM1, DOME)**

(a) Remove the ACC fuse and AM1 fuse from the main body ECU.
(b) Remove the DOME fuse from the engine room R/B.

(c) Measure the resistance of the fuses.
Standard resistance:
Below 1 Ω

NG → **REPLACE FUSE**

OK

2	CHECK HARNESS AND CONNECTOR (RADIO RECEIVER - BATTERY AND BODY GROUND)

Radio Receiver
(harness side connector):

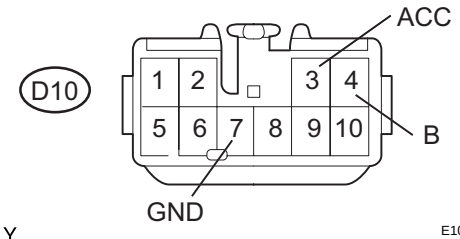

(a) Disconnect the D10 receiver connector.
(b) Measure the voltage.
Standard voltage

Tester Connection	Condition	Specified Condition
D10-4 (B) - Body ground	Always	11 to 14 V
D10-3 (ACC) - Body ground	Ignition switch ACC	11 to 14 V

(c) Measure the resistance.
Standard resistance

Tester Connection	Specified Condition
D10-7 (GND) - Body ground	Below 1 Ω

NG → **REPAIR OR REPLACE HARNESS OR CONNECTOR**

OK

PROCEED TO NEXT CIRCUIT INSPECTION SHOWN IN PROBLEM SYMPTOMS TABLE

AV

RADIO RECEIVER (for Sedan)

COMPONENTS

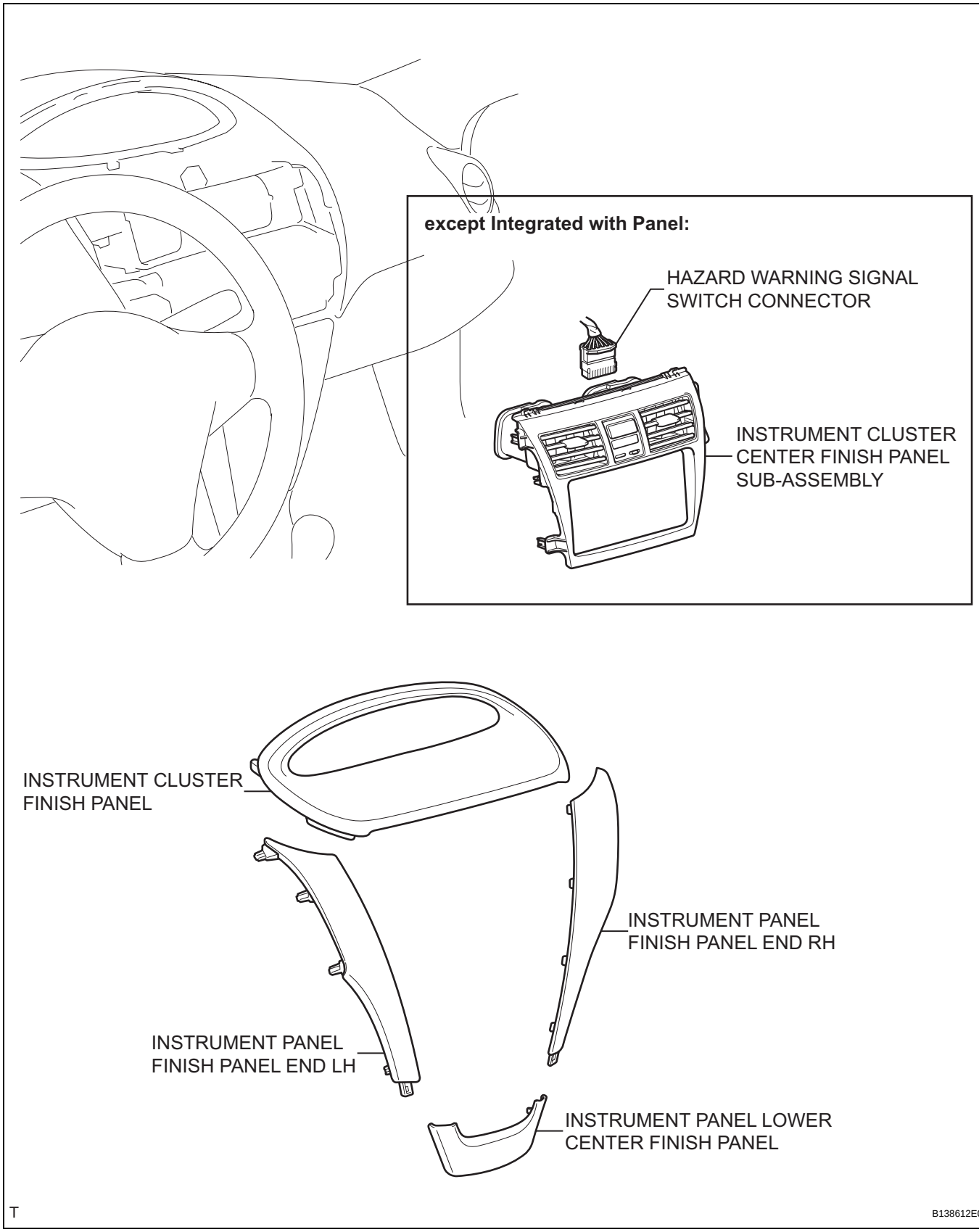

AV

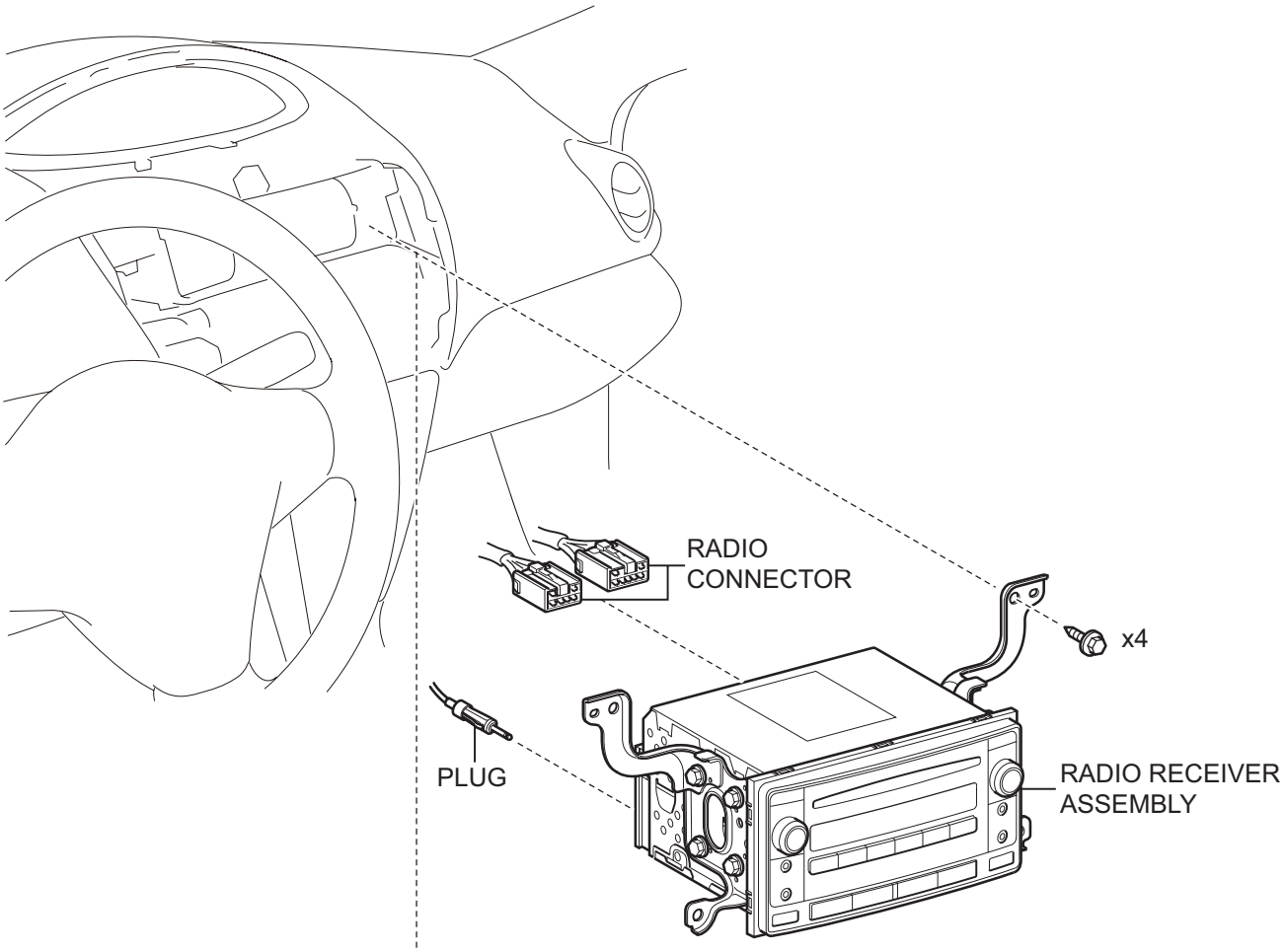

for Integrated with Panel:

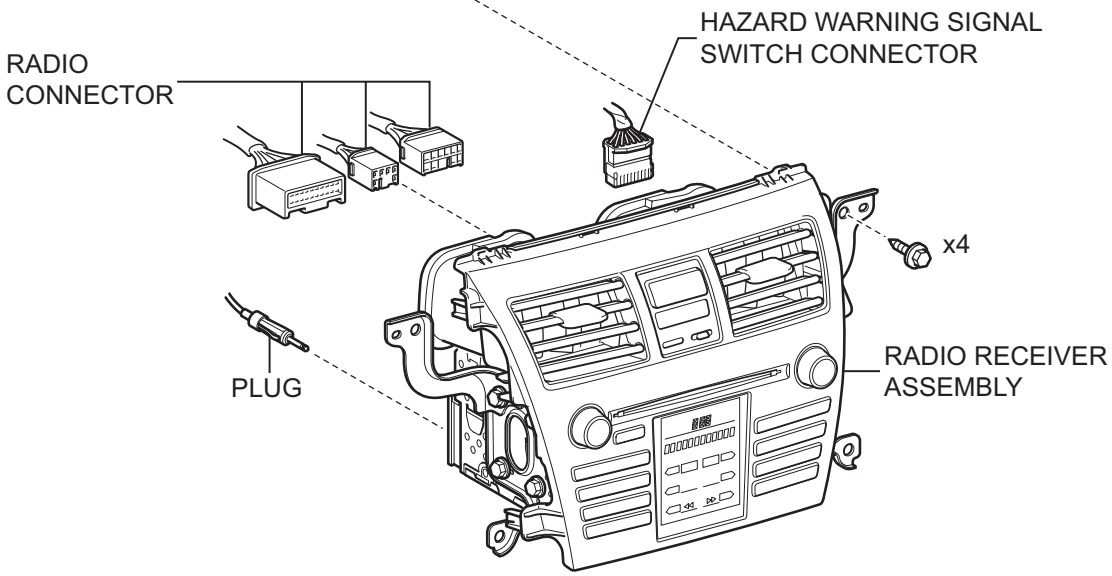

T

B138573E01

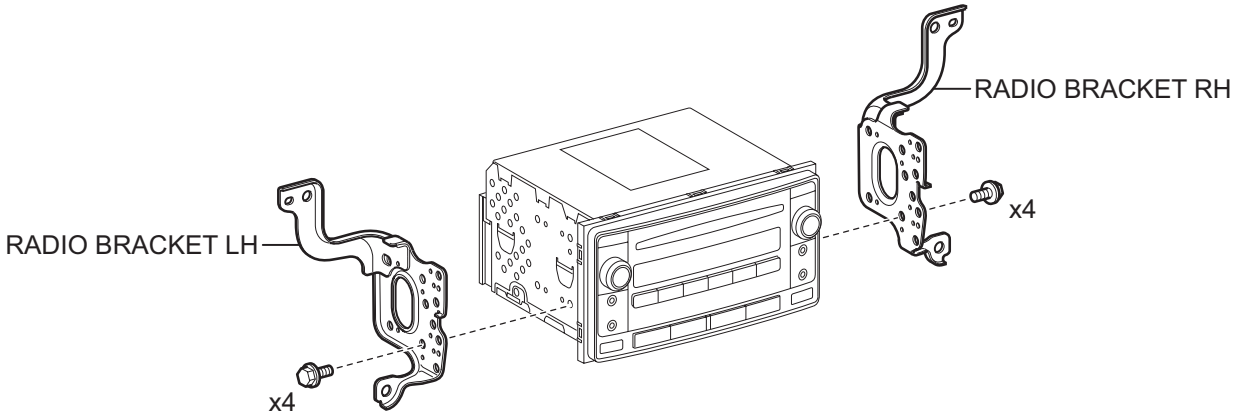

for Integrated with Panel:

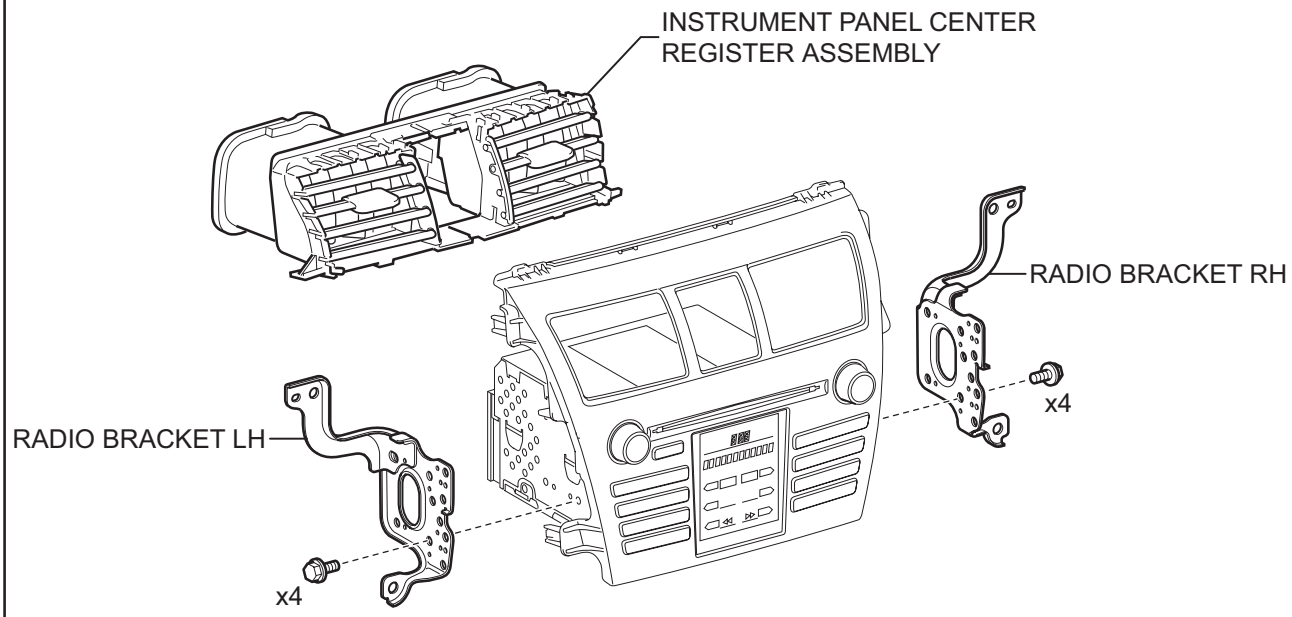

T

B138574E01

AV

AV

REMOVAL

1. **DISCONNECT CABLE FROM NEGATIVE BATTERY TERMINAL**
2. **REMOVE INSTRUMENT PANEL LOWER CENTER FINISH PANEL (See page ME-138)**
3. **REMOVE INSTRUMENT PANEL FINISH PANEL END RH (See page ME-138)**
4. **REMOVE INSTRUMENT PANEL FINISH PANEL END LH (See page ME-138)**
5. **REMOVE INSTRUMENT CLUSTER FINISH PANEL (See page ME-139)**
6. **REMOVE INSTRUMENT CLUSTER CENTER FINISH PANEL SUB-ASSEMBLY (except Integrated with Panel) (See page IP-43)**
7. **REMOVE RADIO RECEIVER ASSEMBLY**
   (a) for Integrated with Panel:
      (1) Disconnect the hazard warning signal switch connector.
      (2) Remove the 4 bolts.

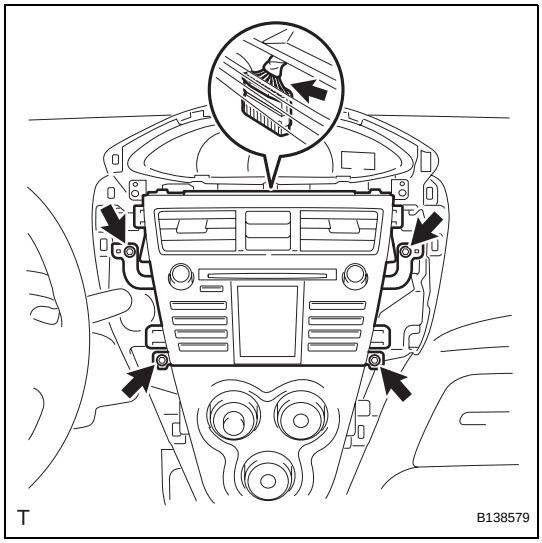

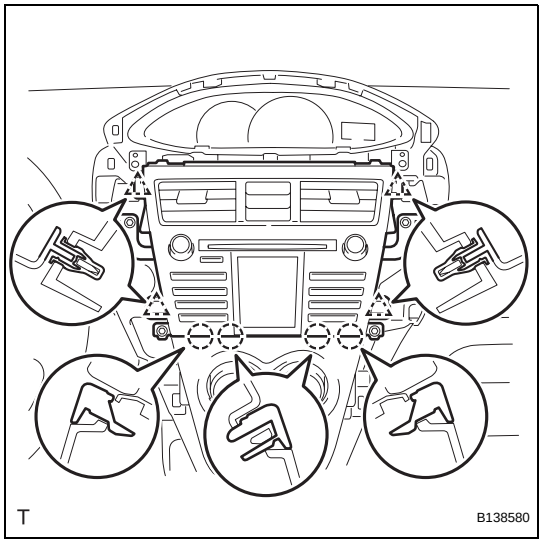

      (3) Disengage the 4 clips and the 4 claws and remove the radio receiver.

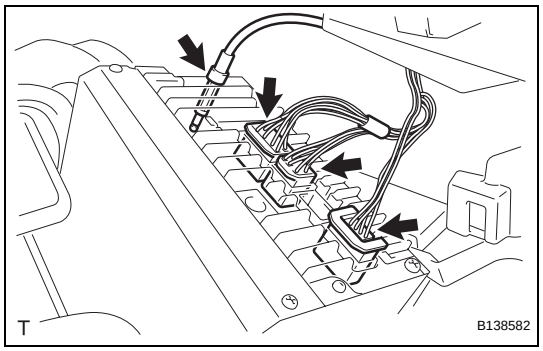

(4) Disconnect the plug.
(5) Disconnect the 3 radio connectors.

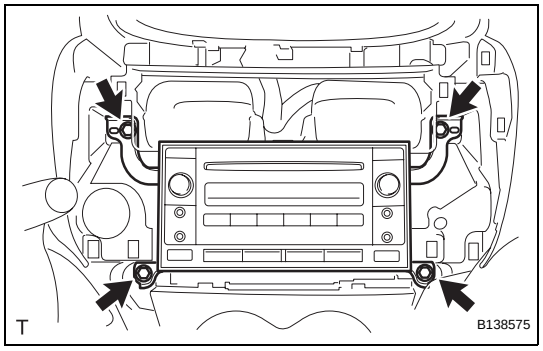

(b) except Integrated with Panel:
(1) Remove the 4 bolts and the radio receiver.

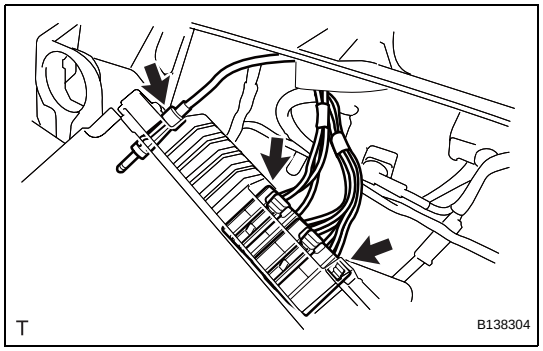

(2) Disconnect the plug.
(3) Disconnect the 2 radio connectors.

DISASSEMBLY

1. **REMOVE INSTRUMENT PANEL CENTER REGISTER ASSEMBLY (for Integrated with Panel) (See page LI-166)**

2. **REMOVE RADIO BRACKET RH**
   (a) for Integrated with Panel:
      (1) Remove the 4 screws and the radio bracket.

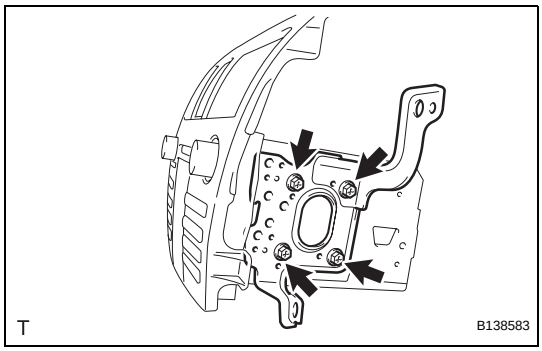

   (b) except Integrated with Panel:
      (1) Remove the 4 screws and the radio bracket.

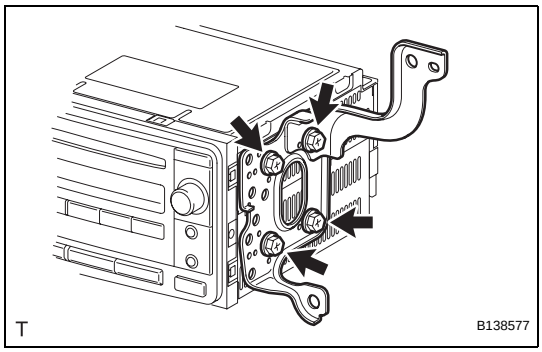

3. **REMOVE RADIO BRACKET LH**
   HINT:
   Use the same procedure as for the RH side.

REASSEMBLY

1. **INSTALL RADIO BRACKET RH**
   (a) for Integrated with Panel:
      (1) Align the 6 bosses of the radio bracket with the hole in the radio receiver and install the radio bracket with the 2 screws.

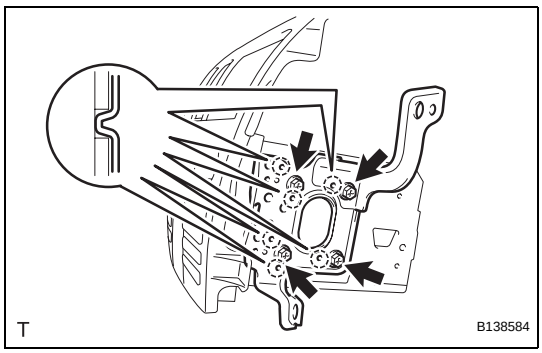

   (b) except Integrated with Panel:
      (1) Align the 6 bosses of the radio bracket with the hole in the radio receiver and install the radio bracket with the 4 screws.

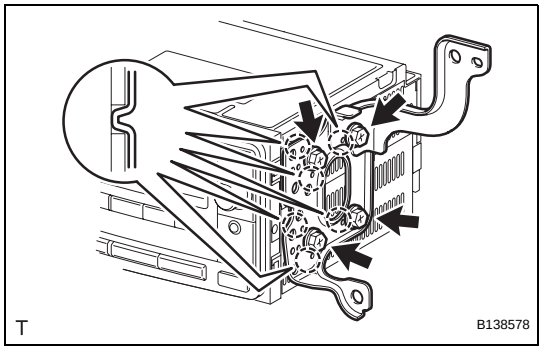

2. **REMOVE RADIO BRACKET LH**
   HINT:
   Use the same procedure as for the RH side.

3. **INSTALL INSTRUMENT PANEL CENTER REGISTER ASSEMBLY (for Integrated with Panel) (See page LI-168)**

AV

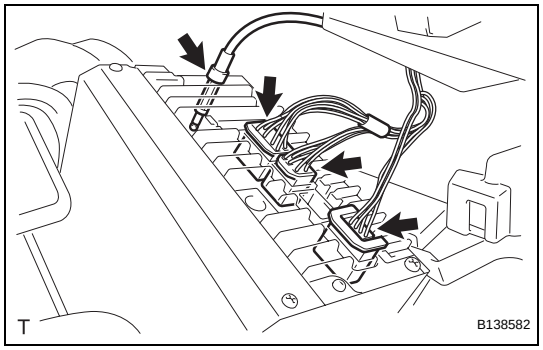

INSTALLATION

1. INSTALL RADIO RECEIVER ASSEMBLY

(a) for Integrated with Panel:

(1) Connect the plug.

(2) Connect the 3 radio connectors.

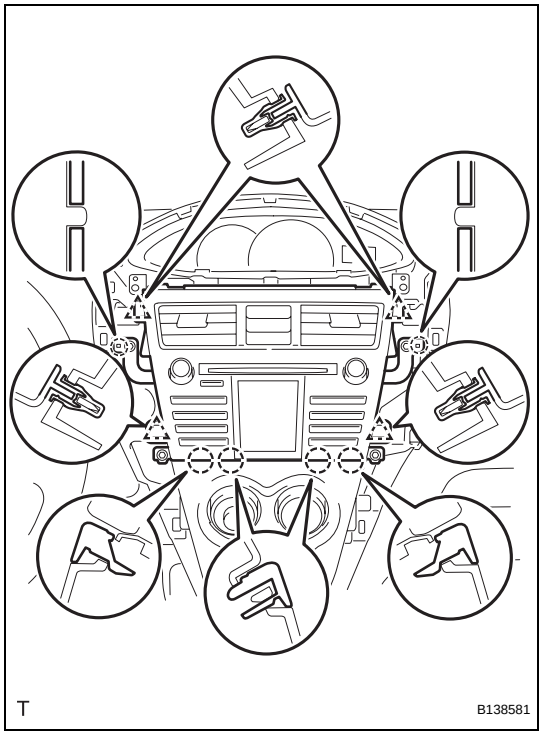

(3) Align the 2 bosses of the instrument panel with the hole in the radio bracket.

(4) Engage the 4 clips and 4 claws and install the radio receiver.

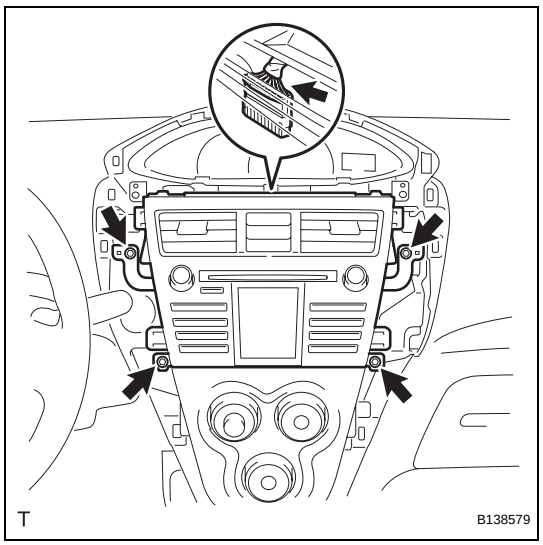

(5) Tighten the 4 bolts.

(6) Connect the hazard warning signal switch connector.

AV

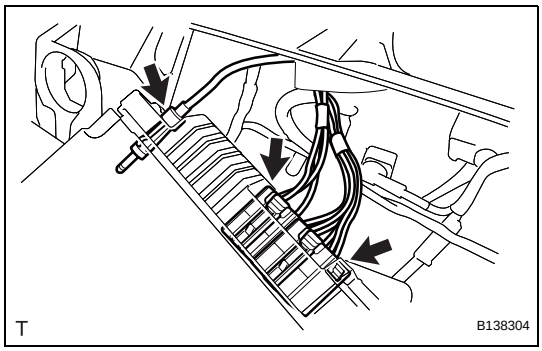

(b) except Integrated with Panel:
(1) Connect the plug.
(2) Connect the 2 radio connectors.

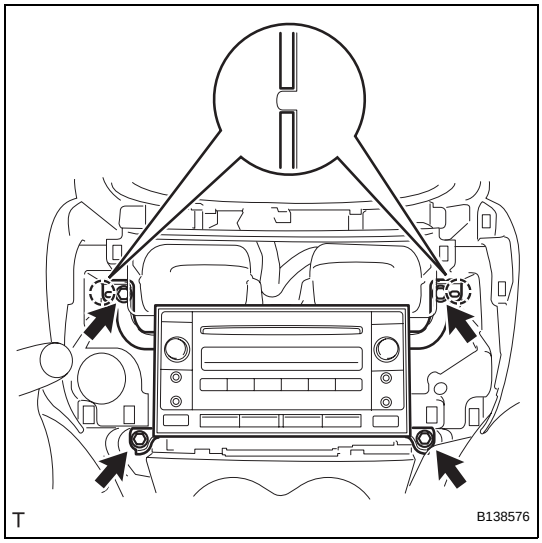

(3) Align the 2 bosses of the instrument panel with the hole in the radio bracket.
(4) Install the radio receiver with the 4 bolts.

2. **INSTALL INSTRUMENT CLUSTER CENTER FINISH PANEL SUB-ASSEMBLY (except Integrated with Panel) (See page IP-56)**
3. **INSTALL INSTRUMENT CLUSTER FINISH PANEL (See page ME-140)**
4. **INSTALL INSTRUMENT PANEL FINISH PANEL END RH (See page ME-141)**
5. **INSTALL INSTRUMENT PANEL FINISH PANEL END LH (See page ME-141)**
6. **INSTALL INSTRUMENT PANEL LOWER CENTER FINISH PANEL (See page ME-142)**
7. **CONNECT CABLE TO NEGATIVE BATTERY TERMINAL**
Torque: 5.4 N*m (55 kgf*cm, 48 in.*lbf)

AV

RADIO RECEIVER (for Hatchback)

COMPONENTS

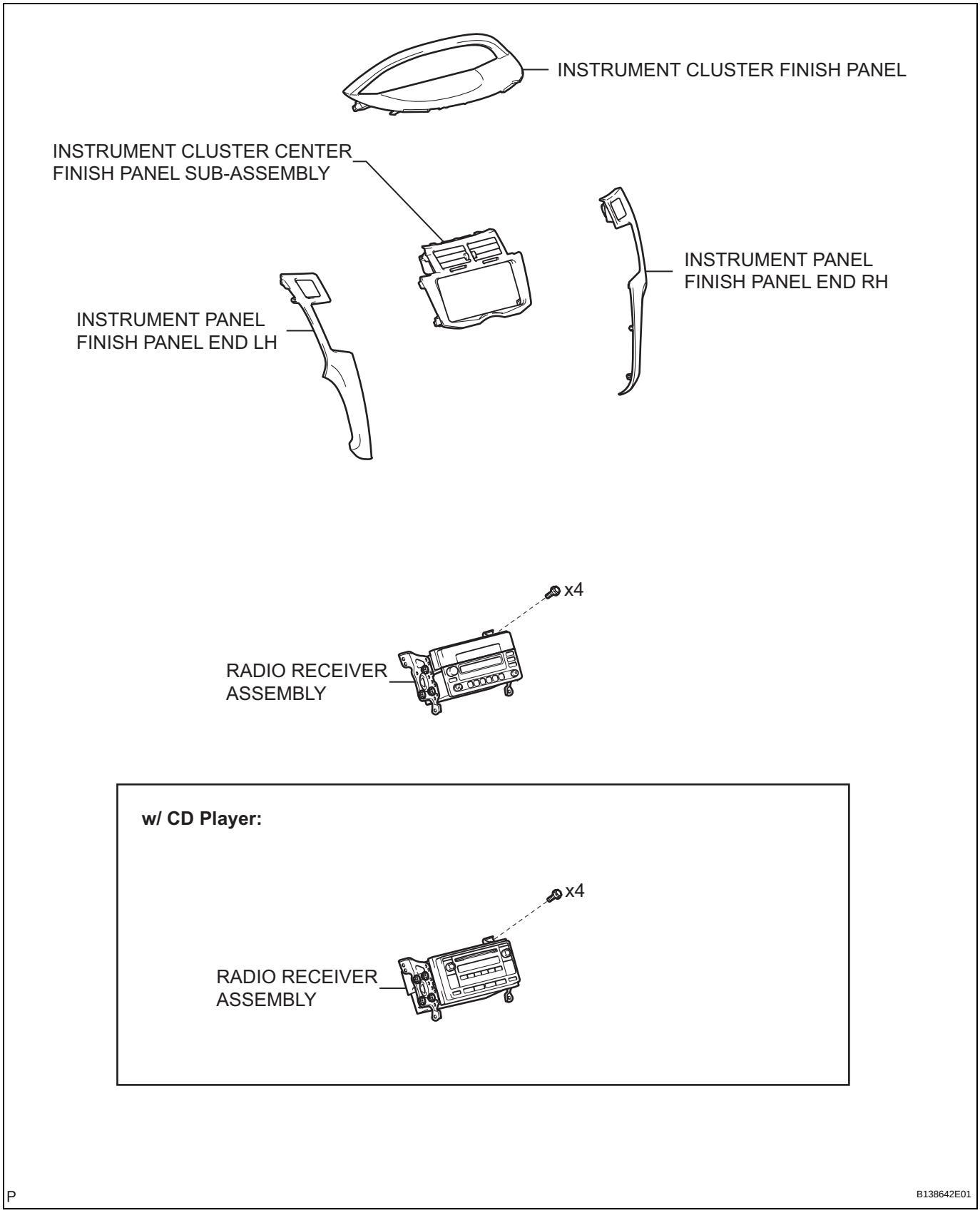

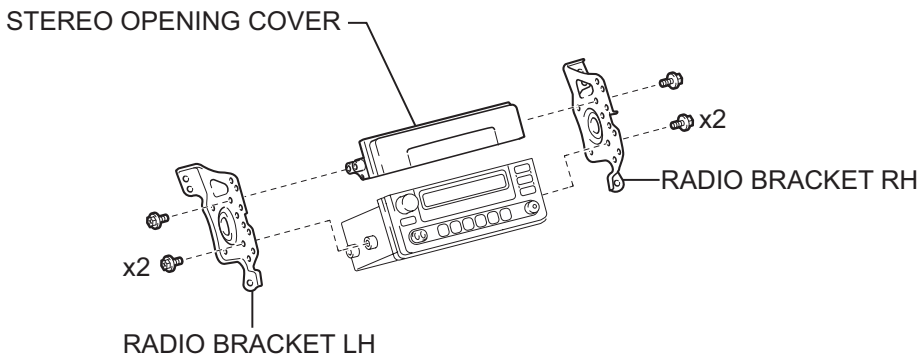

w/ CD Player:

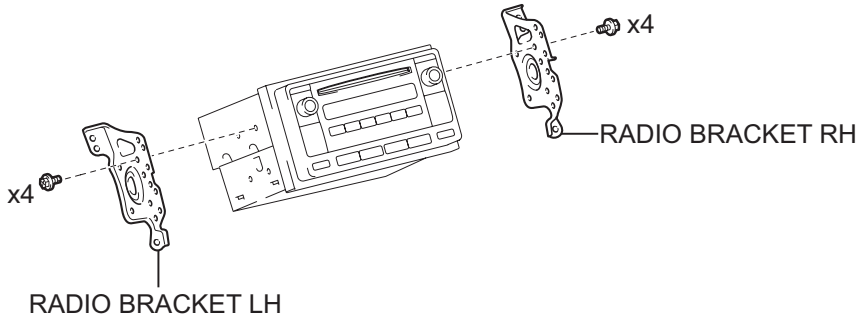

P

B138643E01

REMOVAL

1. **DISCONNECT CABLE FROM NEGATIVE BATTERY TERMINAL**
2. **REMOVE INSTRUMENT PANEL FINISH PANEL END RH (See page ME-145)**
3. **REMOVE INSTRUMENT PANEL FINISH PANEL END LH (See page ME-145)**
4. **REMOVE INSTRUMENT CLUSTER FINISH PANEL (See page ME-145)**
5. **REMOVE INSTRUMENT CLUSTER CENTER FINISH PANEL SUB-ASSEMBLY (See page AC-250)**
6. **REMOVE RADIO RECEIVER ASSEMBLY**
   (a) Remove the 4 screws.
   (b) Disconnect the connectors and remove the radio receiver.

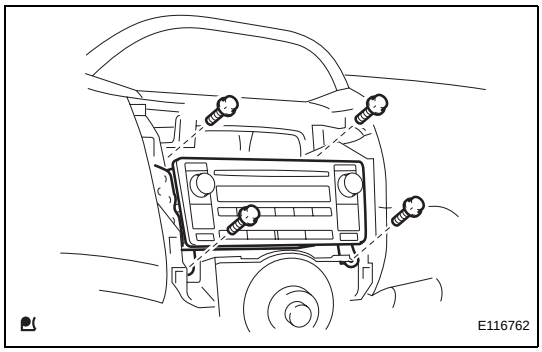

DISASSEMBLY

1. **REMOVE RADIO BRACKET RH**
   (a) w/ CD Player:
      (1) Remove the 4 screws and remove the radio bracket.

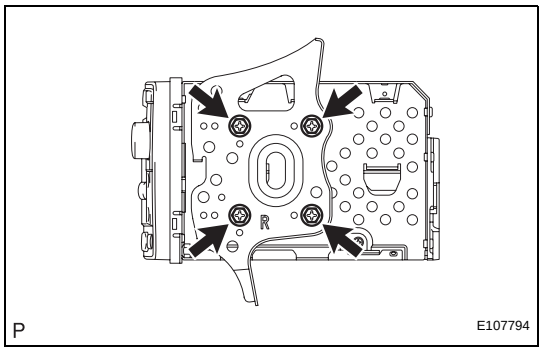

   (b) w/o CD Player:
      (1) Remove the 3 screws and remove the radio bracket.

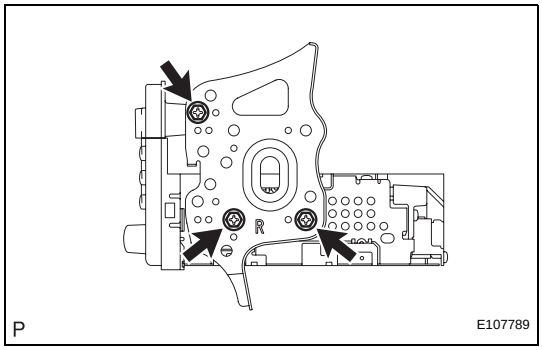

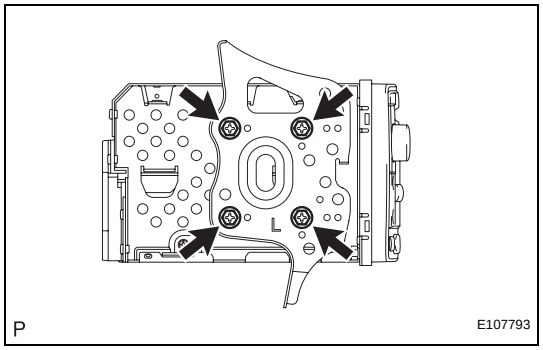

2. REMOVE RADIO BRACKET LH

(a) w/ CD Player:

(1) Remove the 4 screws and remove the radio bracket.

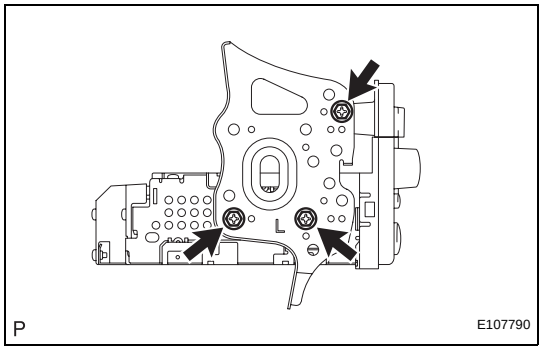

(b) w/o CD Player:

(1) Remove the 3 screws and remove the radio bracket.

REASSEMBLY

1. INSTALL RADIO BRACKET RH

(a) w/ CD Player:

(1) Install the radio bracket with the 4 screws.

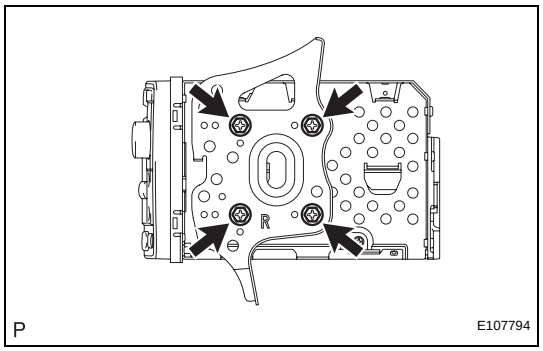

(b) w/o CD Player:

(1) Install the radio bracket with the 3 screws.

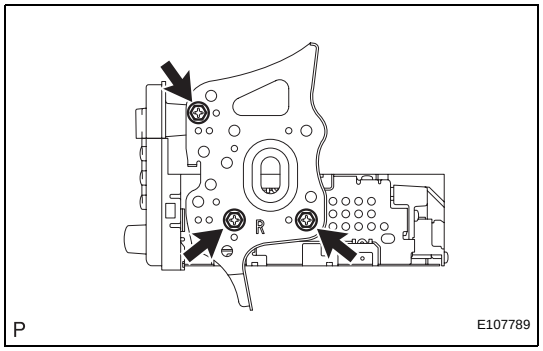

2. INSTALL RADIO BRACKET LH

(a) w/ CD Player:

(1) Install the radio bracket with the 4 screws.

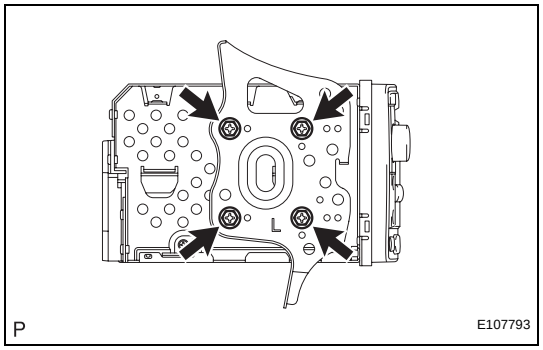

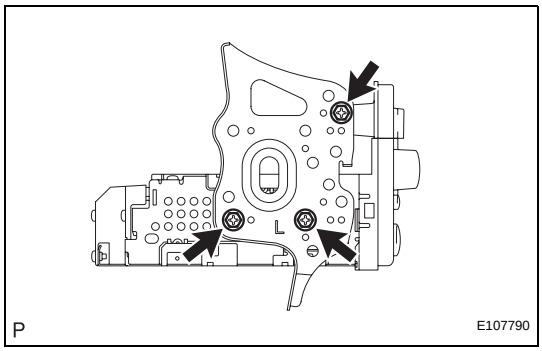

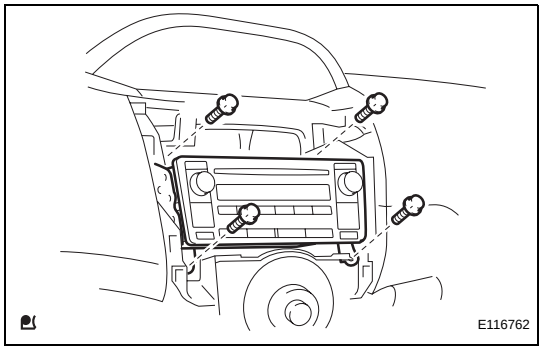

(b) w/o CD Player:
(1) Install the radio bracket with the 3 screws.

INSTALLATION

1. **INSTALL RADIO RECEIVER ASSEMBLY**
   (a) Connect the connectors.
   (b) Install the radio receiver with the 4 screws.
2. **INSTALL INSTRUMENT CLUSTER CENTER FINISH PANEL SUB-ASSEMBLY (See page AC-258)**
3. **INSTALL INSTRUMENT CLUSTER FINISH PANEL (See page ME-148)**
4. **INSTALL INSTRUMENT PANEL FINISH PANEL END RH (See page ME-149)**
5. **INSTALL INSTRUMENT PANEL FINISH PANEL END LH (See page ME-149)**
6. **CONNECT CABLE TO NEGATIVE BATTERY TERMINAL**
   Torque: 5.4 N*m (55 kgf*cm, 48 in.*lbf)

RADIO ANTENNA CORD (for Sedan)

COMPONENTS

for 60/40 Split Seat Type:

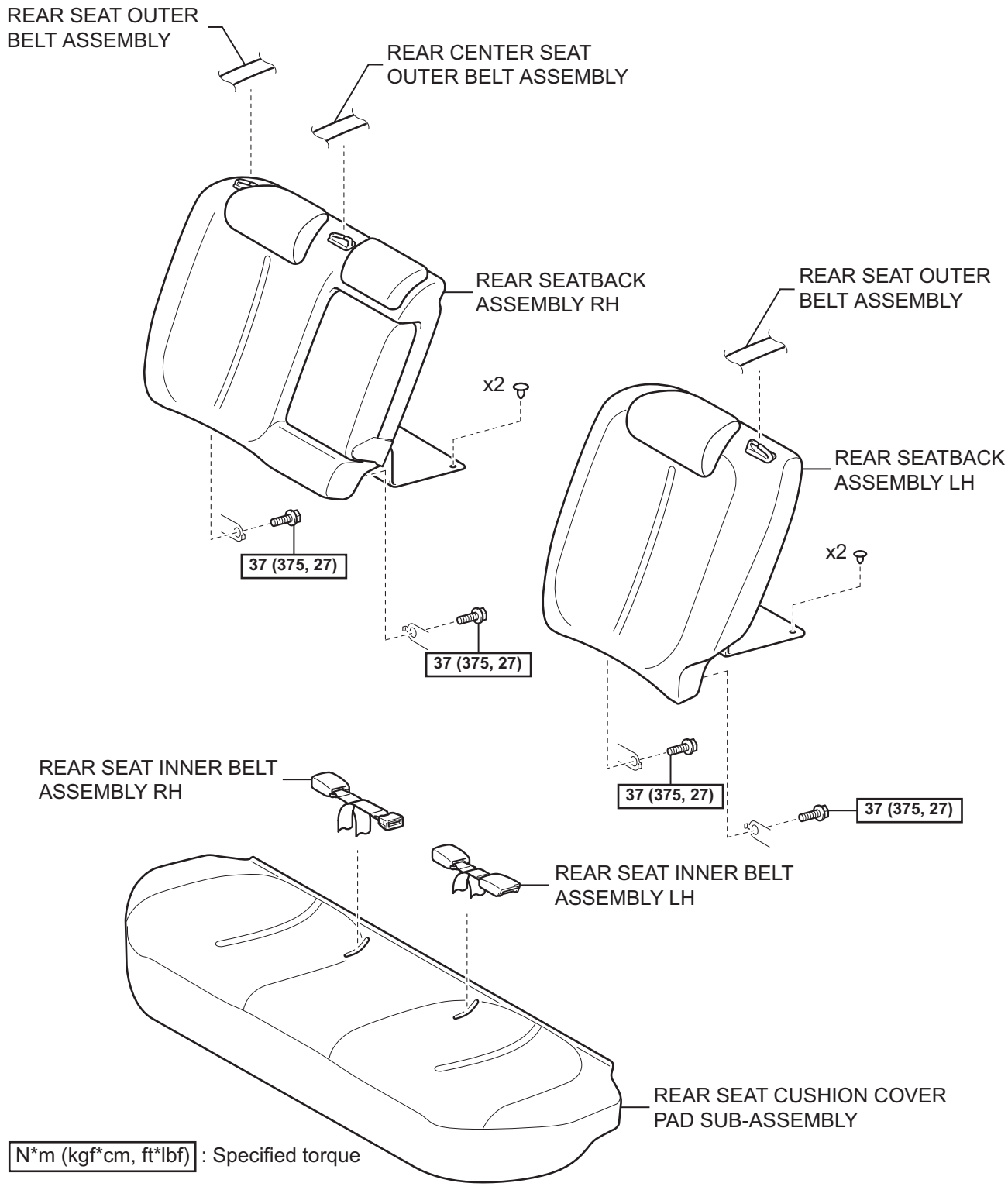

AV

for Fixed Seat Type:

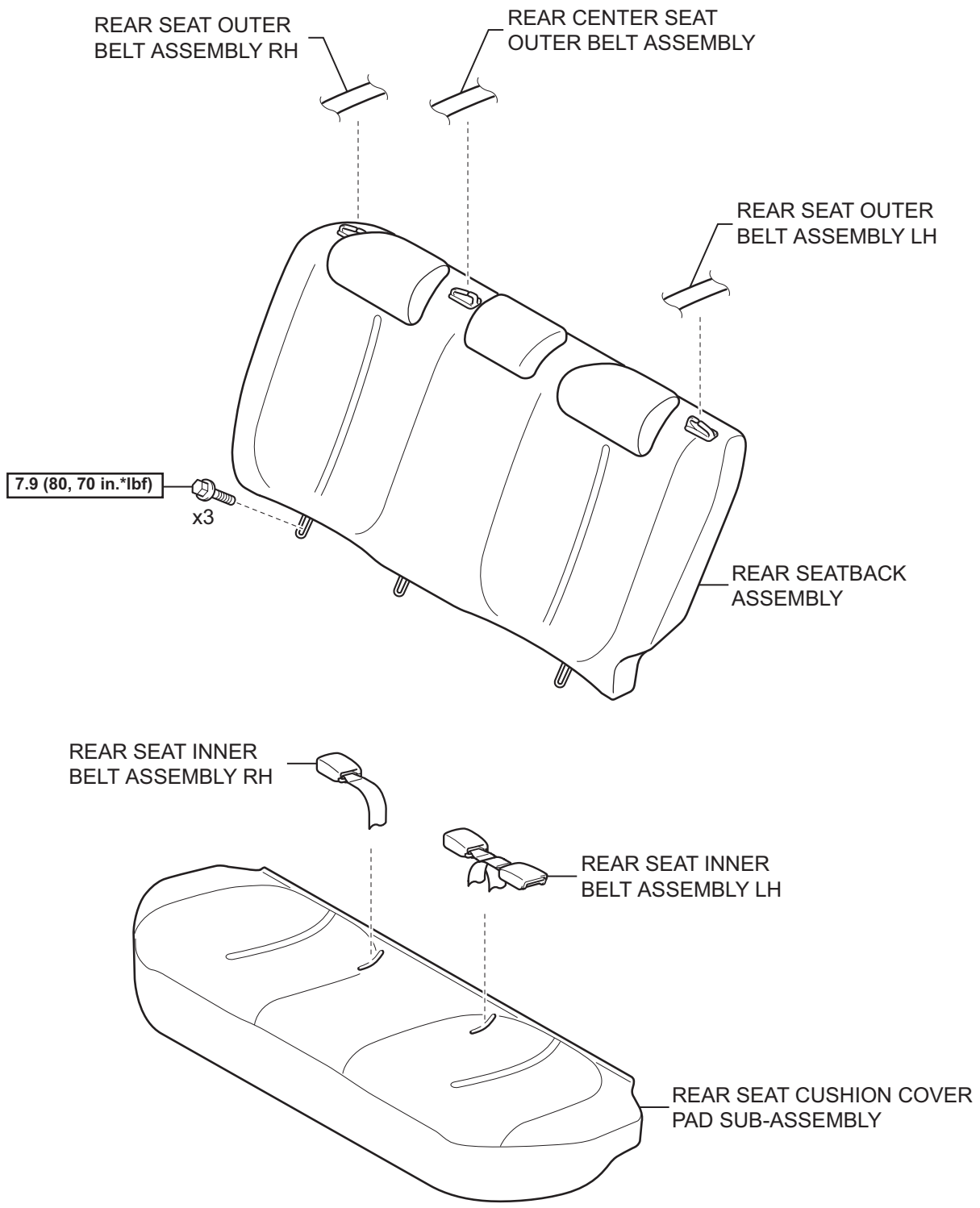

N*m (kgf*cm, ft*lbf) : Specified torque

T

B138611E01

for 60/40 Split Seat Type:

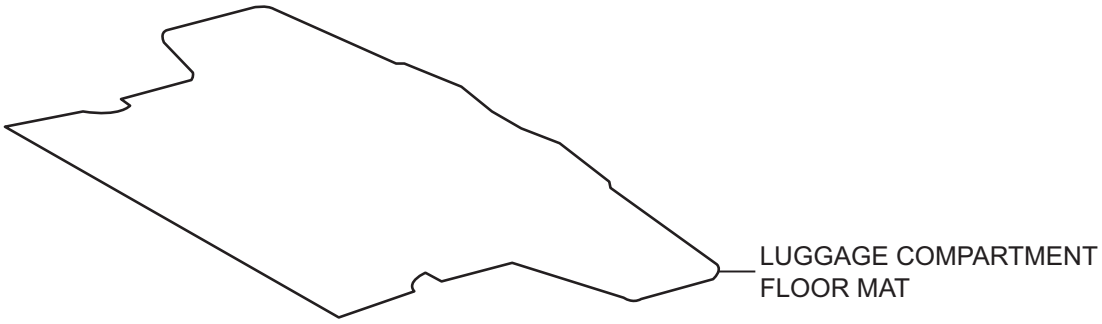

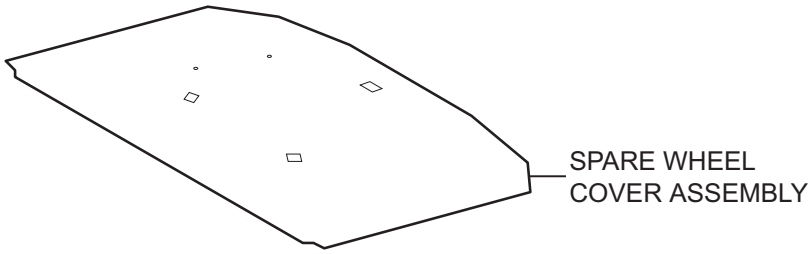

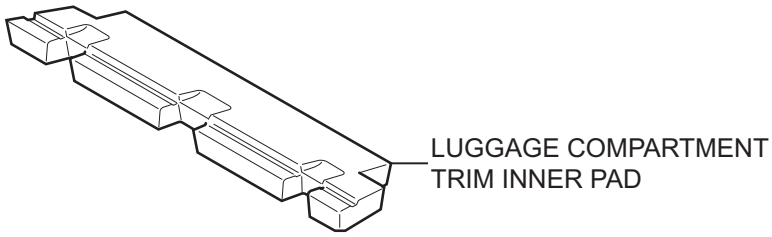

for Grand Tire:

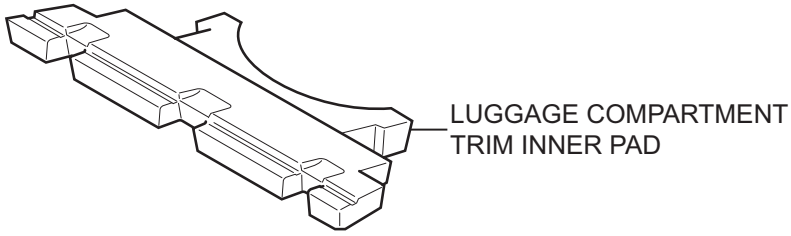

T

B138565E01

AV

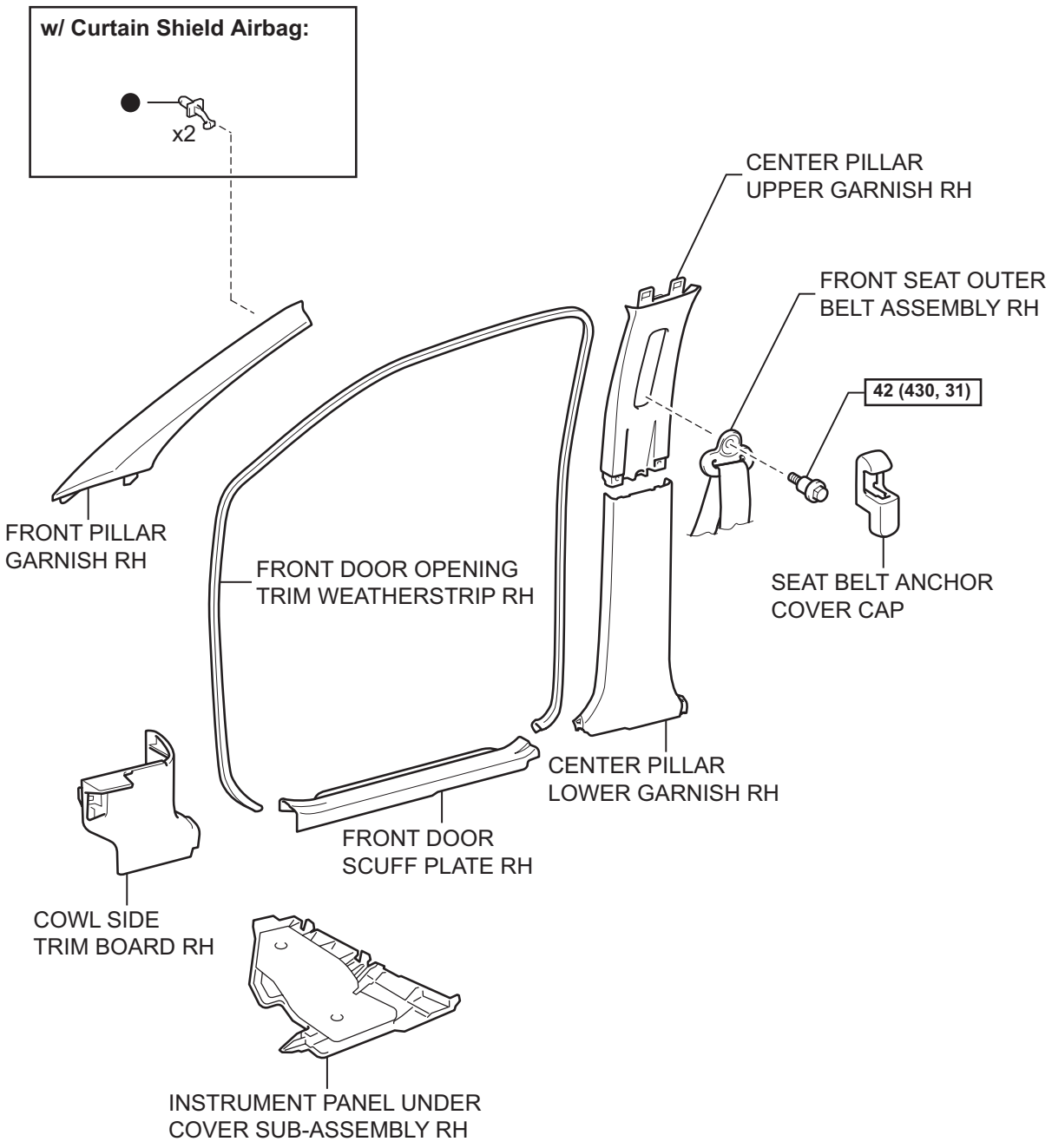

N*m (kgf*cm, ft*lbf) : Specified torque

● Non-reusable part

T

B138593E01

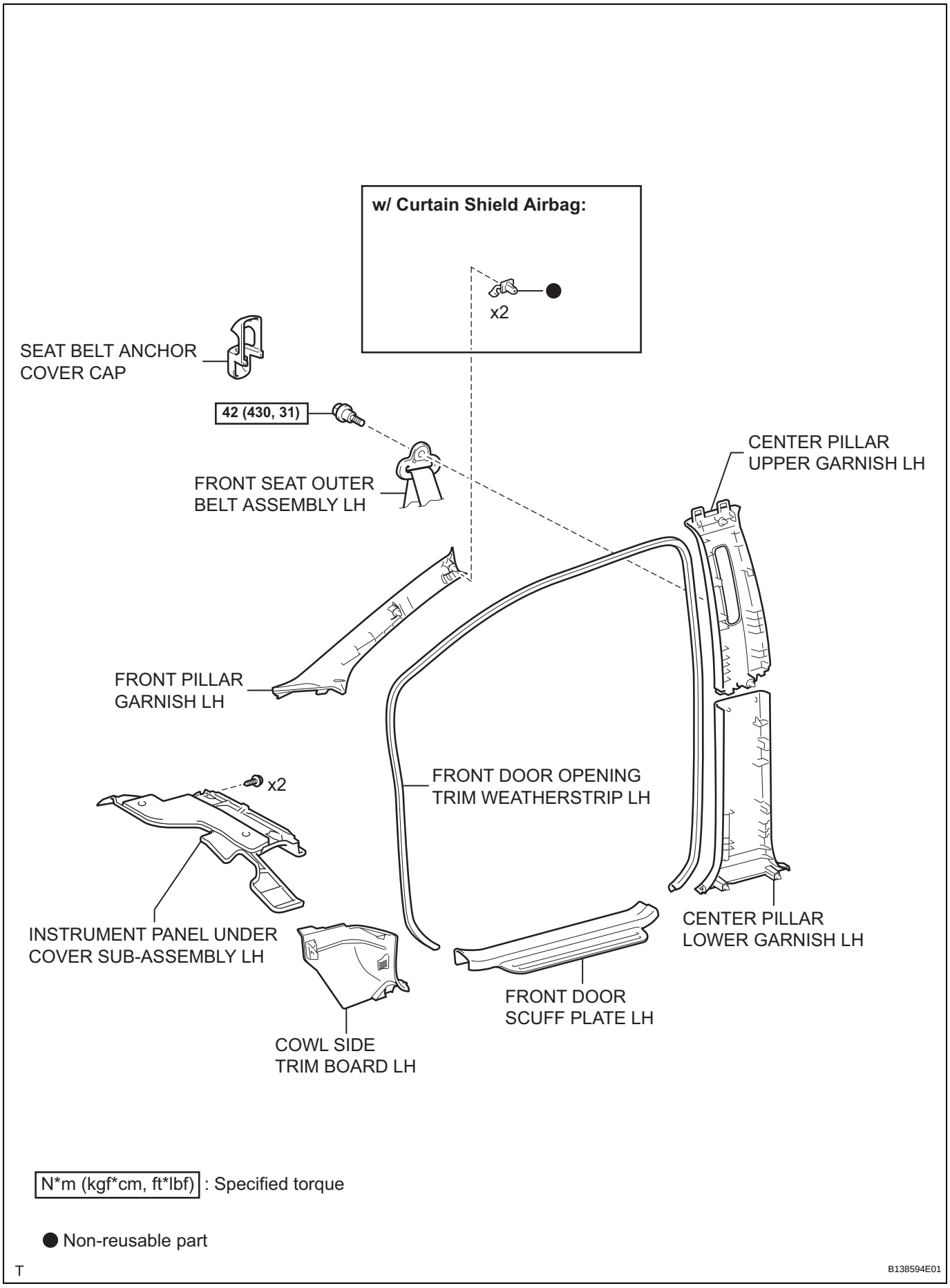
w/ Curtain Shield Airbag:
x2
SEAT BELT ANCHOR COVER CAP
42 (430, 31)
FRONT SEAT OUTER BELT ASSEMBLY LH
CENTER PILLAR UPPER GARNISH LH
FRONT PILLAR GARNISH LH
FRONT DOOR OPENING TRIM WEATHERSTRIP LH
x2
INSTRUMENT PANEL UNDER COVER SUB-ASSEMBLY LH
CENTER PILLAR LOWER GARNISH LH
FRONT DOOR SCUFF PLATE LH
COWL SIDE TRIM BOARD LH
N*m (kgf*cm, ft*lbf) : Specified torque
● Non-reusable part
T
B138594E01

AV

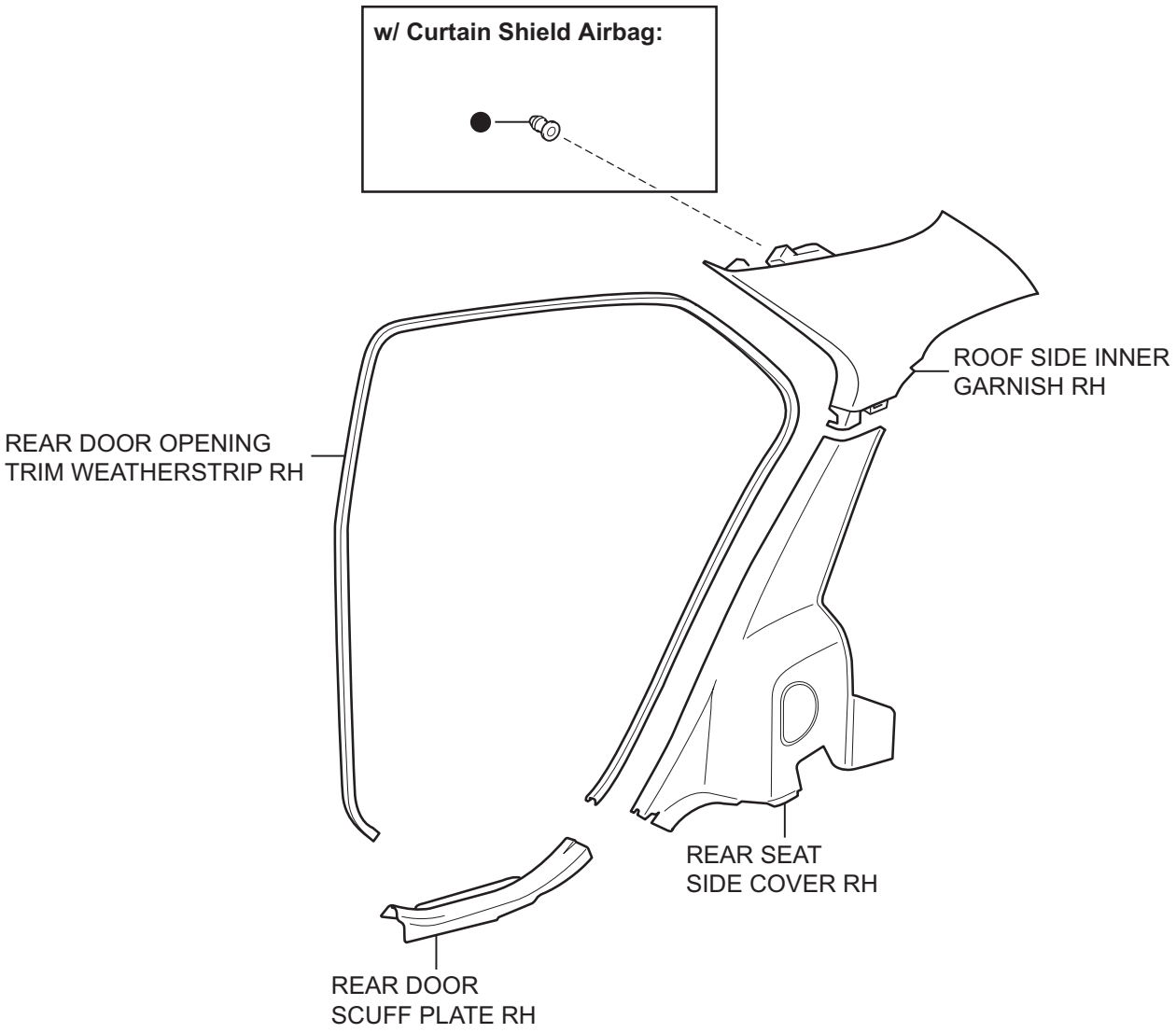

● Non-reusable part

T

B134769E01

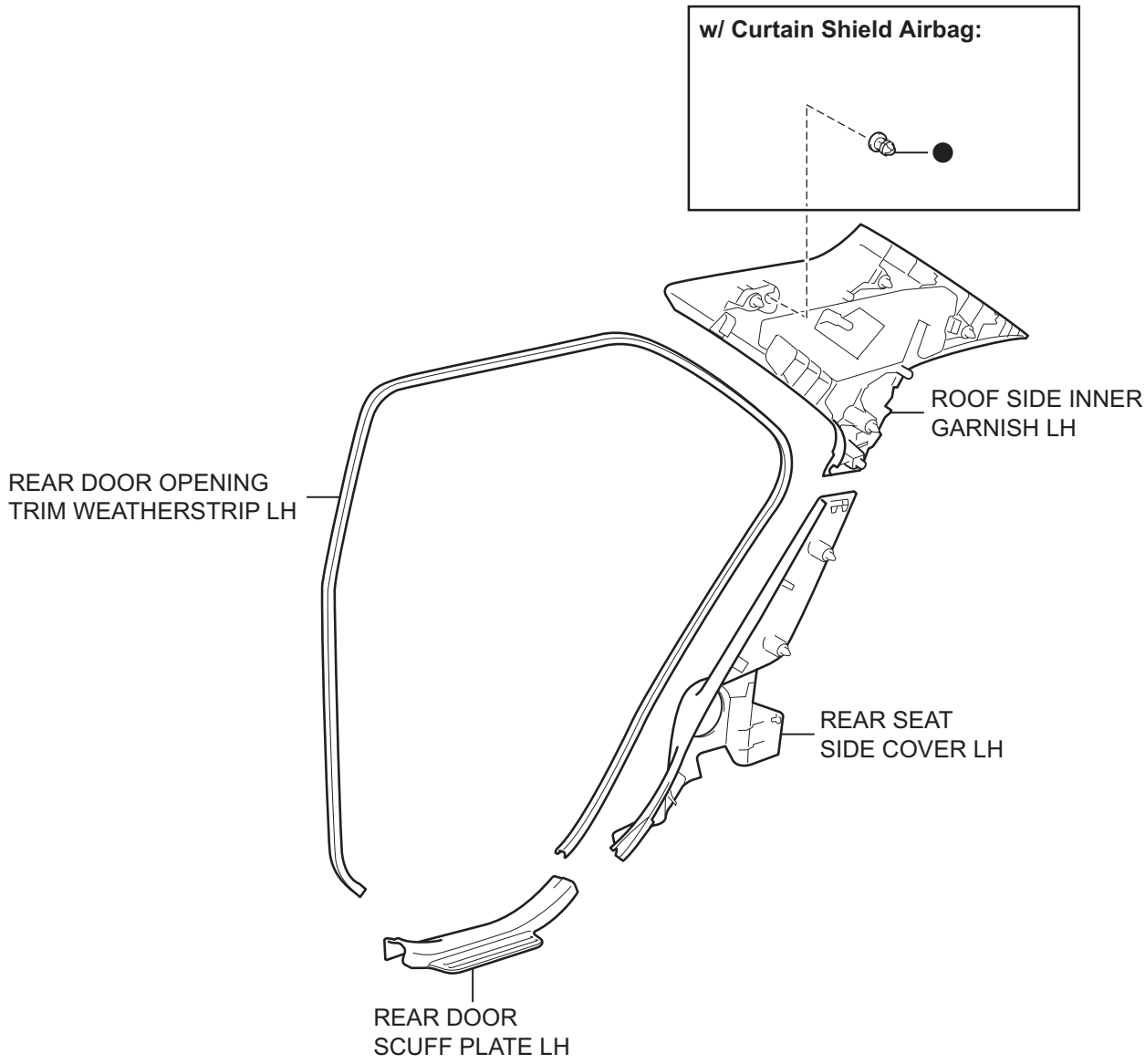

● Non-reusable part

T

B134770E01

AV

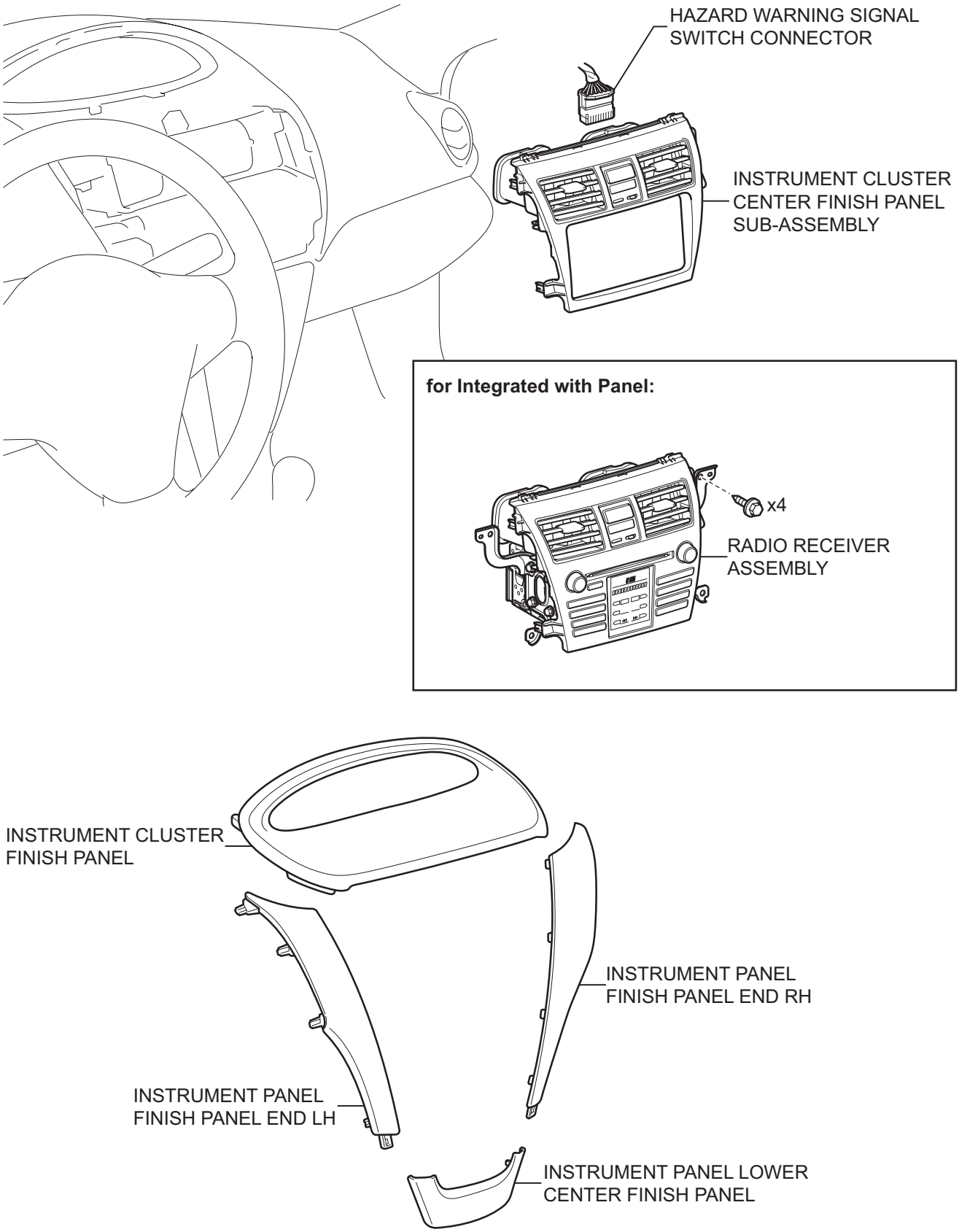

AV

T

B138571E01

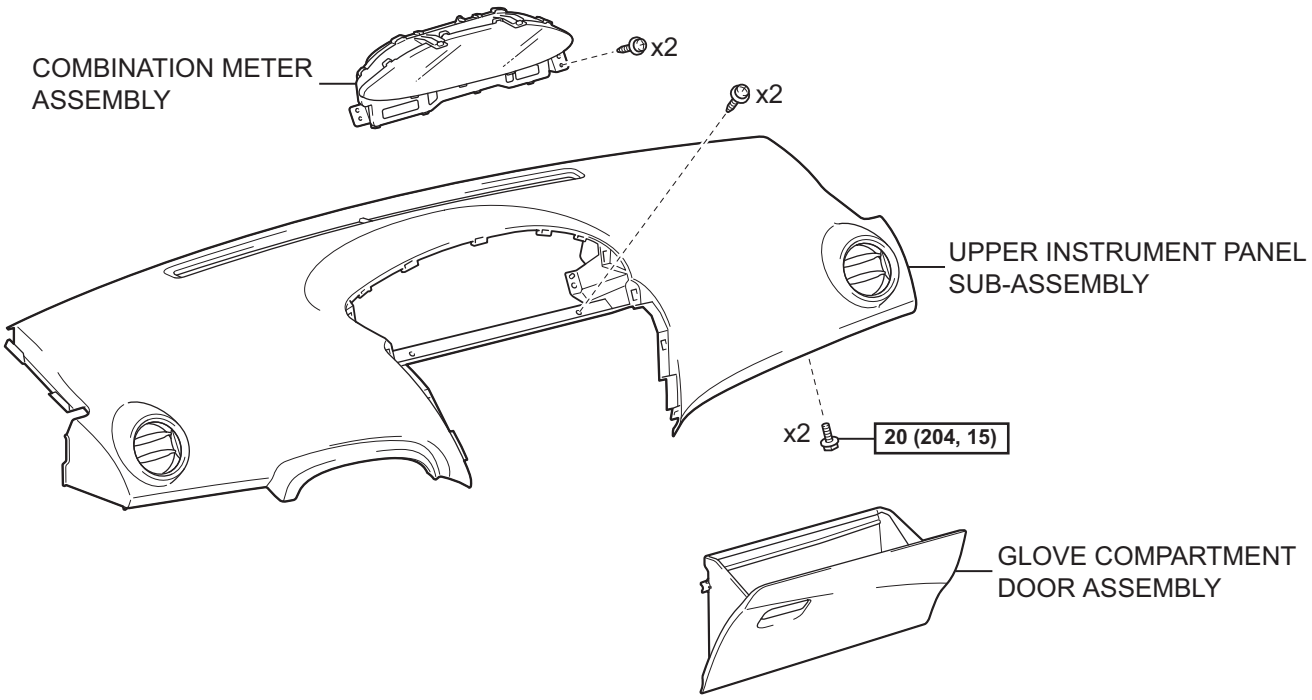

AV

N*m (kgf*cm, ft*lbf) : Specified torque

P

B138613E01

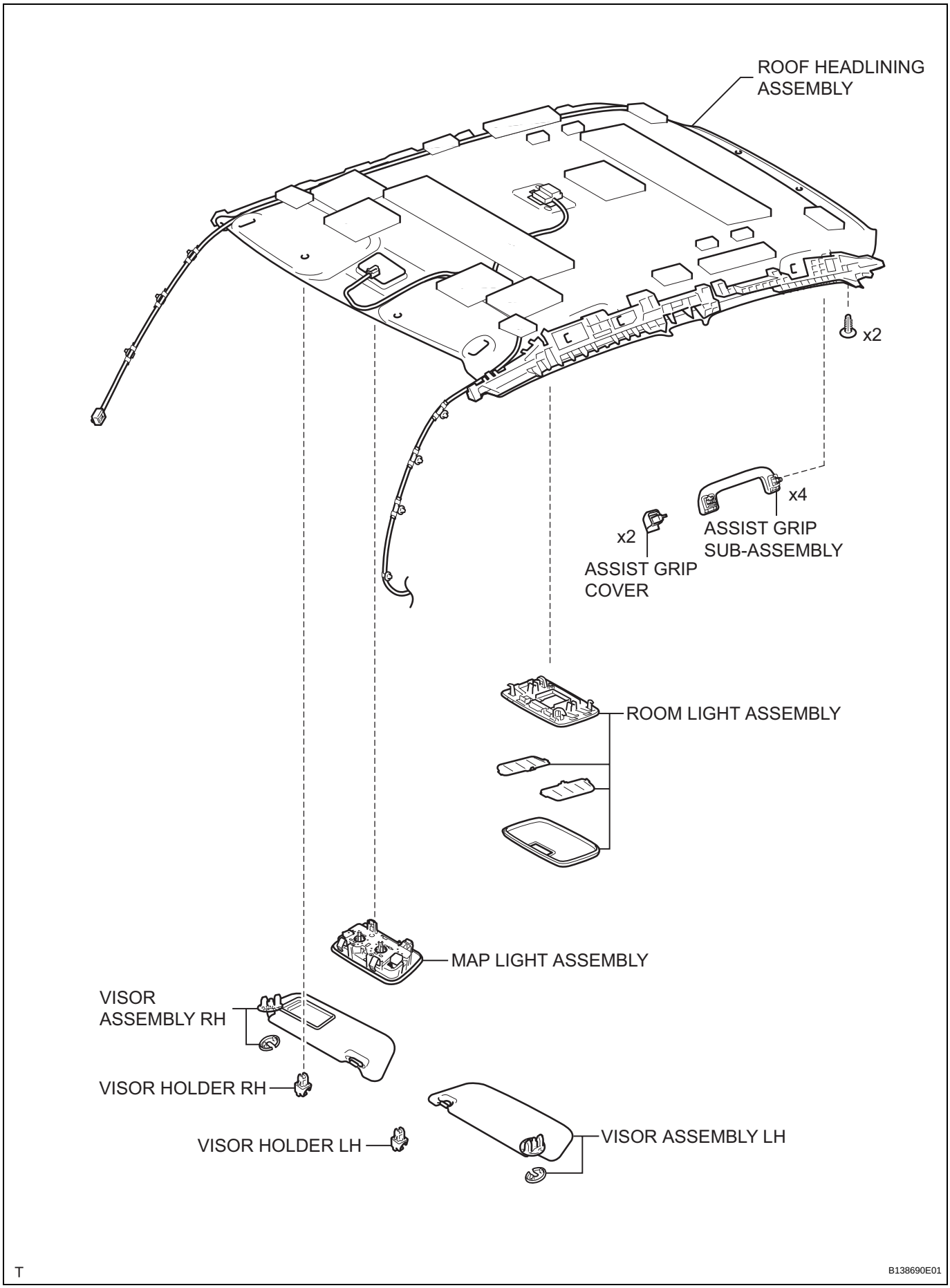
ROOF HEADLINING ASSEMBLY
x2
x4
ASSIST GRIP SUB-ASSEMBLY
x2
ASSIST GRIP COVER
ROOM LIGHT ASSEMBLY
MAP LIGHT ASSEMBLY
VISOR ASSEMBLY RH
VISOR HOLDER RH
VISOR HOLDER LH
VISOR ASSEMBLY LH
T
B138690E01

AV

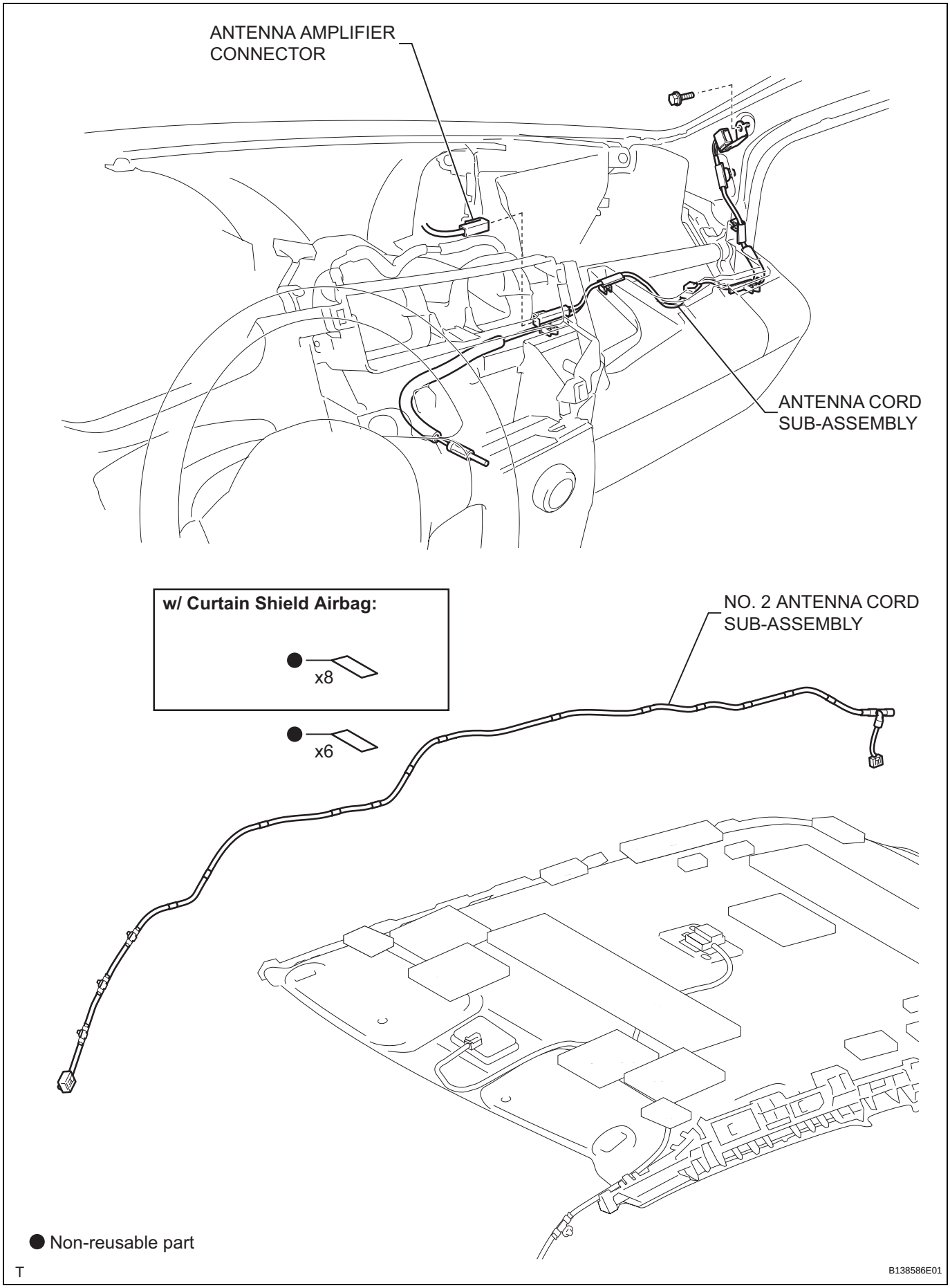
ANTENNA AMPLIFIER CONNECTOR
ANTENNA CORD SUB-ASSEMBLY
w/ Curtain Shield Airbag:
x8
x6
NO. 2 ANTENNA CORD SUB-ASSEMBLY
● Non-reusable part
T
B138586E01

REMOVAL

CAUTION:
Some of these service operations affect the SRS airbag system. Read the precautionary notices concerning the SRS airbag system before servicing (See page RS-1).

1. **DISCONNECT CABLE FROM NEGATIVE BATTERY TERMINAL**
   CAUTION:
   Wait for at least 90 seconds after disconnecting the cable to prevent the airbag from working.
2. **REMOVE REAR SEAT CUSHION COVER PAD SUB-ASSEMBLY**
   (a) for 60/40 Split Seat Type:
   (1) Remove the rear seat cushion cover pad sub-assembly (See page SE-46).
   (b) for Fixed Seat Type:
   (1) Remove the rear seat cushion cover pad sub-assembly (See page SE-106).
3. **REMOVE REAR SEATBACK ASSEMBLY RH (for 60/40 Split Seat Type) (See page SE-57)**
4. **REMOVE REAR SEATBACK ASSEMBLY LH (for 60/40 Split Seat Type) (See page SE-46)**
5. **REMOVE REAR SEATBACK ASSEMBLY (for Fixed Seat Type) (See page SE-106)**
6. **REMOVE LUGGAGE COMPARTMENT FLOOR MAT (for 60/40 Split Seat Type) (See page ED-133)**
7. **REMOVE SPARE WHEEL COVER ASSEMBLY (for 60/40 Split Seat Type) (See page ED-133)**
8. **REMOVE LUGGAGE COMPARTMENT TRIM INNER PAD (for 60/40 Split Seat Type) (See page ED-134)**
9. **REMOVE FRONT DOOR SCUFF PLATE RH (See page IR-14)**
10. **REMOVE FRONT DOOR SCUFF PLATE LH (See page IR-14)**
11. **REMOVE INSTRUMENT PANEL UNDER COVER SUB-ASSEMBLY RH (See page IR-14)**
12. **REMOVE INSTRUMENT PANEL UNDER COVER SUB-ASSEMBLY LH (See page IR-14)**
13. **REMOVE COWL SIDE TRIM BOARD RH (See page IR-15)**
14. **REMOVE COWL SIDE TRIM BOARD LH (See page IR-15)**
15. **REMOVE FRONT DOOR OPENING TRIM WEATHERSTRIP RH (See page IR-15)**
16. **REMOVE FRONT DOOR OPENING TRIM WEATHERSTRIP LH (See page IR-15)**

17. **REMOVE REAR DOOR SCUFF PLATE RH (See page IR-15)**
18. **REMOVE REAR DOOR SCUFF PLATE LH (See page IR-15)**
19. **REMOVE REAR DOOR OPENING TRIM WEATHERSTRIP RH (See page IR-15)**
20. **REMOVE REAR DOOR OPENING TRIM WEATHERSTRIP LH (See page IR-15)**
21. **REMOVE REAR SEAT SIDE COVER RH (See page IR-16)**
22. **REMOVE REAR SEAT SIDE COVER LH (See page IR-16)**
23. **REMOVE ROOF SIDE INNER GARNISH RH (See page IR-16)**
24. **REMOVE ROOF SIDE INNER GARNISH LH (See page IR-16)**
25. **REMOVE CENTER PILLAR LOWER GARNISH RH (See page IR-16)**
26. **REMOVE CENTER PILLAR LOWER GARNISH LH (See page IR-16)**
27. **REMOVE SEAT BELT ANCHOR COVER CAP (See page IR-17)**
28. **REMOVE FRONT SEAT OUTER BELT ASSEMBLY RH (See page IR-17)**
29. **REMOVE FRONT SEAT OUTER BELT ASSEMBLY LH (See page IR-17)**
30. **REMOVE CENTER PILLAR UPPER GARNISH RH (See page IR-17)**
31. **REMOVE CENTER PILLAR UPPER GARNISH LH (See page IR-17)**
32. **REMOVE FRONT PILLAR GARNISH RH (See page IR-18)**
33. **REMOVE FRONT PILLAR GARNISH LH (See page IR-19)**
34. **REMOVE INSTRUMENT PANEL LOWER CENTER FINISH PANEL (See page ME-138)**
35. **REMOVE INSTRUMENT PANEL FINISH PANEL END RH (See page ME-138)**
36. **REMOVE INSTRUMENT PANEL FINISH PANEL END LH (See page ME-138)**
37. **REMOVE INSTRUMENT CLUSTER FINISH PANEL (See page ME-139)**
38. **REMOVE COMBINATION METER ASSEMBLY (See page ME-139)**

39. **REMOVE GLOVE COMPARTMENT DOOR ASSEMBLY (See page IP-6)**

40. **REMOVE UPPER INSTRUMENT PANEL SUB-ASSEMBLY (See page IP-6)**

41. **REMOVE INSTRUMENT CLUSTER CENTER FINISH PANEL SUB-ASSEMBLY (except Integrated with Panel) (See page IP-43)**

42. **REMOVE RADIO RECEIVER ASSEMBLY (See page AV-38)**

43. **REMOVE ANTENNA CORD SUB-ASSEMBLY**
    (a) Remove the bolt, the hook and the bracket.
    (b) Using a clip remover, remove the clamp.
    (c) Disconnect the antenna amplifier connector.
    (d) Remove the 5 clamps and the antenna cord.

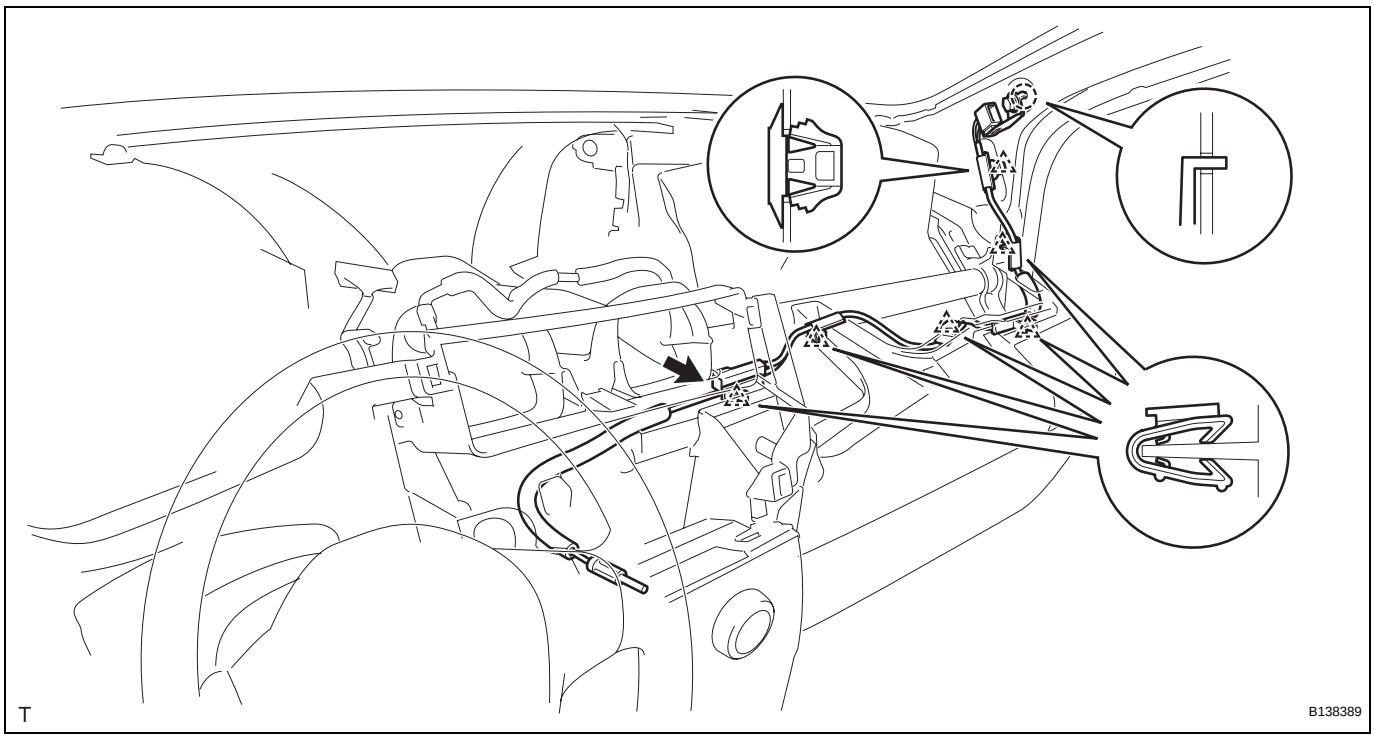

44. **REMOVE ASSIST GRIP COVER (See page IR-21)**

45. **REMOVE ASSIST GRIP SUB-ASSEMBLY (See page IR-21)**

46. **REMOVE VISOR ASSEMBLY RH (See page IR-21)**

47. **REMOVE VISOR ASSEMBLY LH (See page IR-22)**

48. **REMOVE VISOR HOLDER RH (See page IR-22)**

49. **REMOVE VISOR HOLDER LH (See page IR-22)**

50. **REMOVE ROOM LIGHT ASSEMBLY (See page IR-22)**

51. **REMOVE MAP LIGHT ASSEMBLY (See page IR-23)**

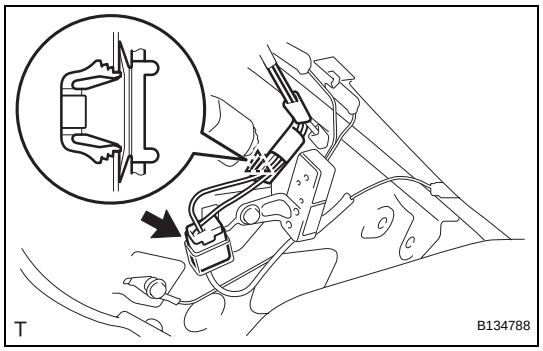

52. REMOVE ROOF HEADLINING ASSEMBLY

(a) Using a clip remover, remove the clamp.

(b) Disconnect the antenna connector.

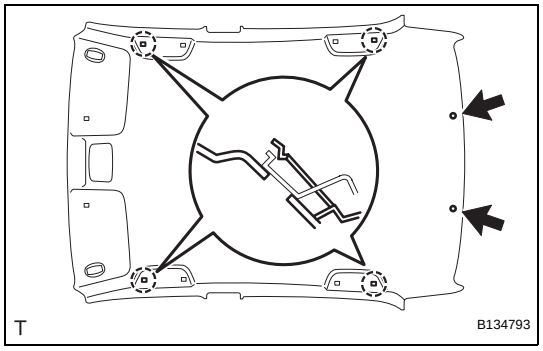

(c) w/ Curtain Shield Airbag:

(1) Using a clip remover, remove the 2 clips.

(2) Disengage the 4 hooks and remove the roof headlining.

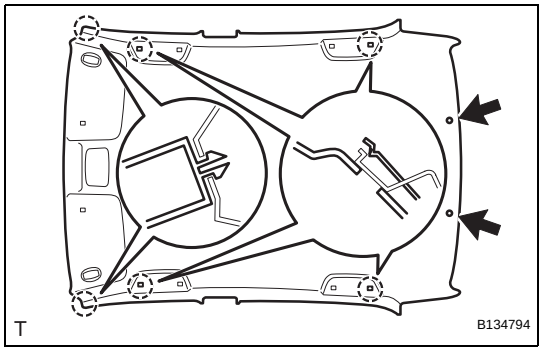

(d) w/o Curtain Shield Airbag:

(1) Using a clip remover, remove the 2 clips.

(2) Disengage the 2 claws and 4 hooks and remove the roof headlining.

53. REMOVE NO. 2 ANTENNA CORD SUB-ASSEMBLY

(a) w/ Curtain Shield Airbag:

(1) Remove the 8 pieces of tape.

(2) Remove the No. 2 antenna cord from the 4 claws of the front and rear side real spacers.

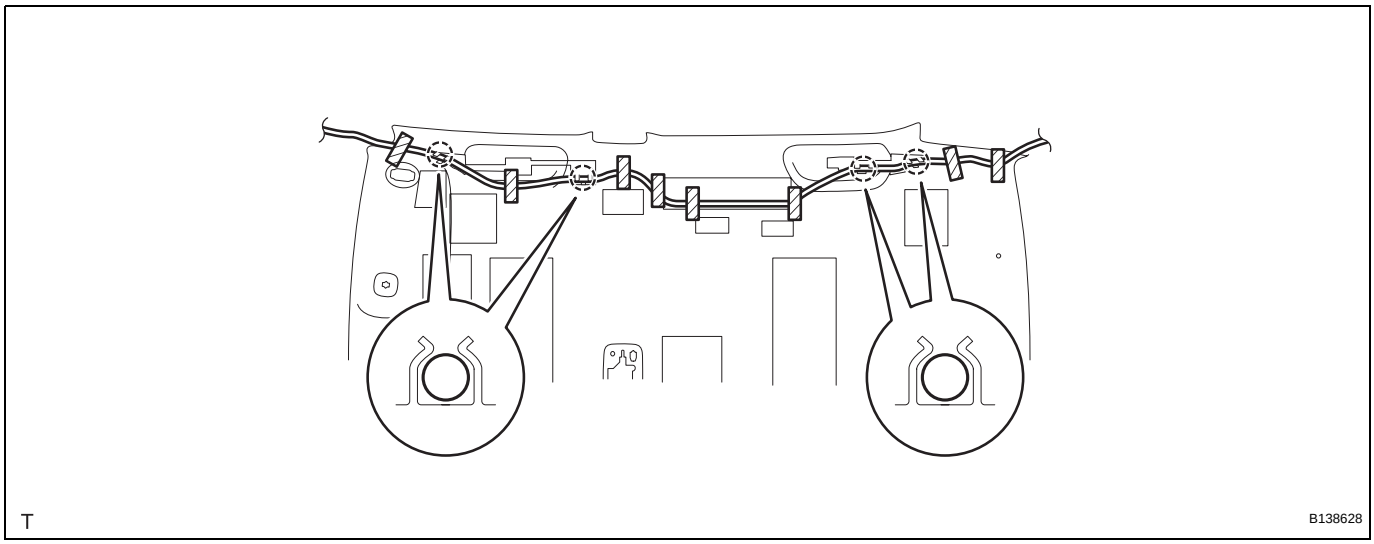

(b) w/ Curtain Shield Airbag:

(1) Remove the 6 pieces of tape.

(2) Remove the No. 2 antenna cord from the 6 claws of the front and rear side real spacers.

AV

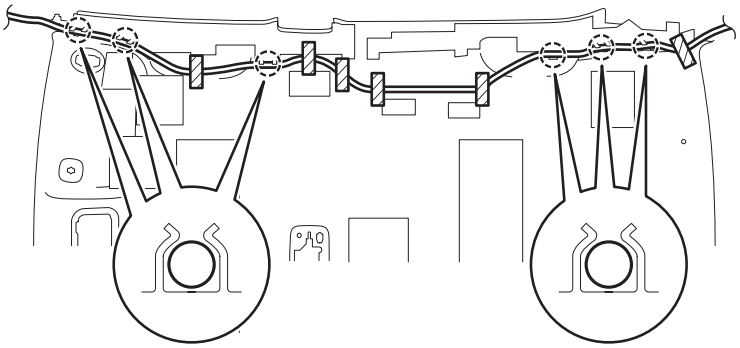

T

B138629

INSTALLATION

CAUTION:
Some of these service operations affect the SRS airbag system. Read the precautionary notices concerning the SRS airbag system before servicing (See page RS-1).

1. INSTALL NO. 2 ANTENNA CORD SUB-ASSEMBLY

(a) w/ Curtain Shield Airbag:

(1) Install the antenna cord positioning tapes into the 4 claws of the front and rear side rail spacers.

(2) Align the antenna cord positioning tapes with the markings on the roof headlining.

(3) Install the antenna cord onto the roof headlining with 8 new pieces of tape.

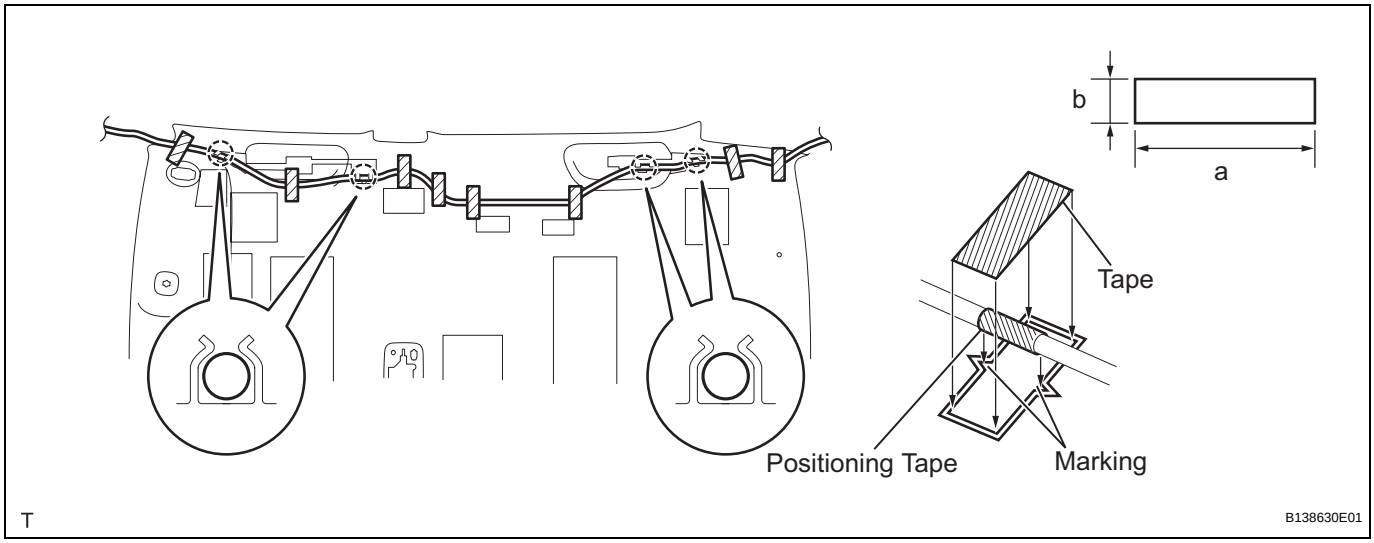

Tape size:

Mark	Measurement
a	80 mm (3.15 in.)
b	20 mm (0.787 in.)

NOTICE:
- **Apply the tape securely in place.**
- **Do not touch the adhesive surface when applying the tape to prevent adhesion failure.**

(b) w/o Curtain Shield Airbag:

(1) Install the antenna cord positioning tapes into the 6 claws of the front and rear side rail spacers.

(2) Align the antenna cord positioning tapes with the markings on the roof headlining.

AV

(3) Install the antenna cord onto the roof headlining with 6 new pieces of tape.

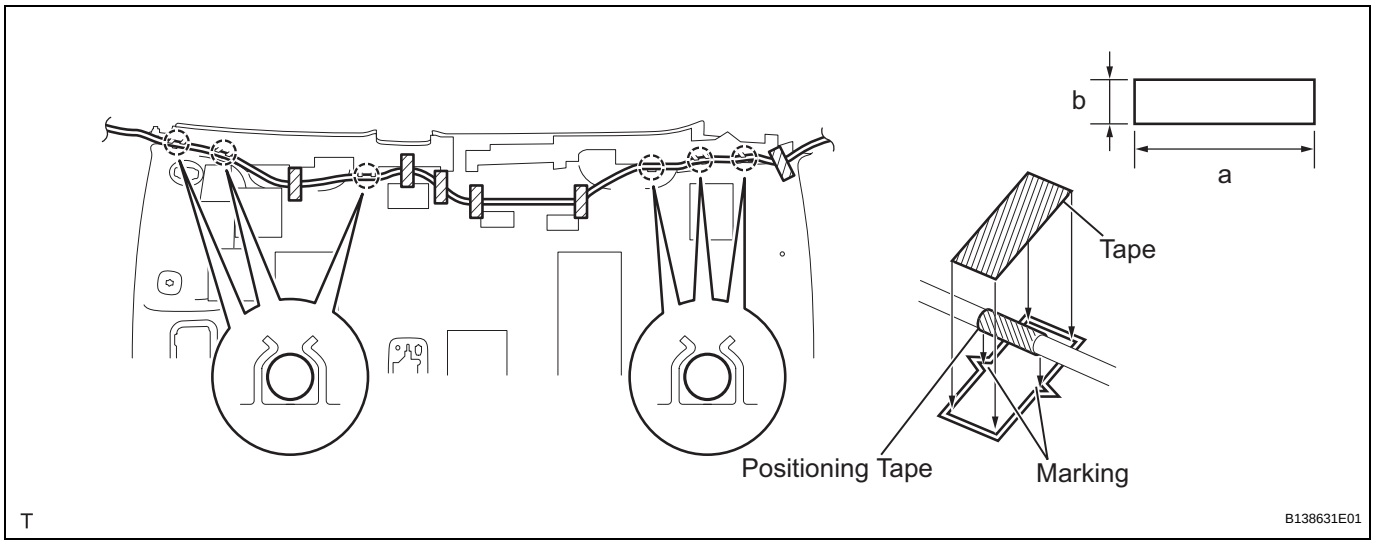

Tape size:

Mark	Measurement
a	80 mm (3.15 in.)
b	20 mm (0.787 in.)

NOTICE:

- **Apply the tape securely in place.**
- **Do not touch the adhesive surface when applying the tape to prevent adhesion failure.**

2. INSTALL ROOF HEADLINING ASSEMBLY

(a) w/ Curtain Shield Airbag:

(1) Engage the 4 hooks and install the roof headlining.

(2) Install the 2 clips.

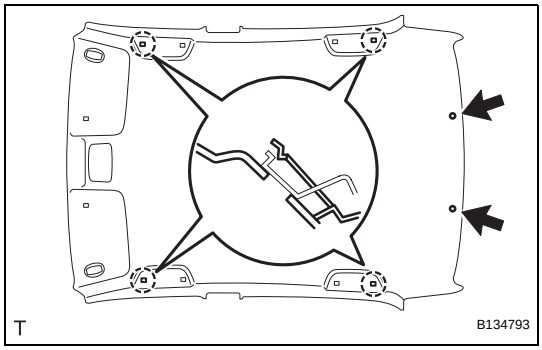

(b) w/o Curtain Shield Airbag:

(1) Engage the 2 claws and 4 hooks and install the roof headlining.

(2) Install the 2 clips.

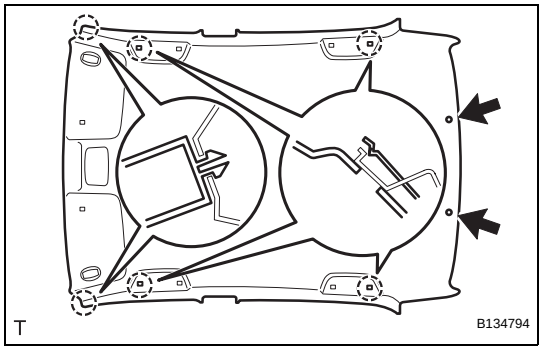

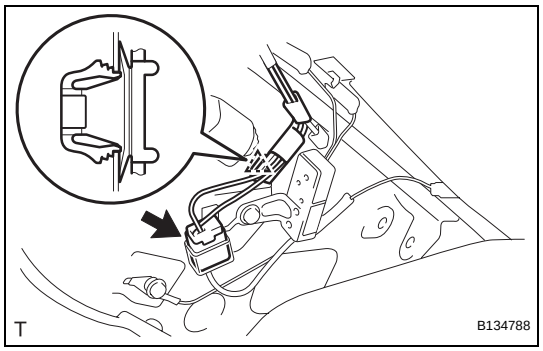

(c) Connect the antenna connector.
(d) Install the clamp.

3. **INSTALL MAP LIGHT ASSEMBLY (See page IR-26)**
4. **INSTALL ROOM LIGHT ASSEMBLY (See page IR-27)**
5. **INSTALL VISOR HOLDER RH (See page IR-28)**
6. **INSTALL VISOR HOLDER LH (See page IR-28)**
7. **INSTALL VISOR ASSEMBLY RH (See page IR-28)**
8. **INSTALL VISOR ASSEMBLY LH (See page IR-28)**
9. **INSTALL ASSIST GRIP SUB-ASSEMBLY (See page IR-28)**
10. **INSTALL ASSIST GRIP COVER (See page IR-29)**
11. **INSTALL ANTENNA CORD SUB-ASSEMBLY**
    (a) Install the antenna cord with the 5 clamps.
    (b) Connect the antenna amplifier connector.
    (c) Insert the hook into the body hole and install the bracket with the bolt.

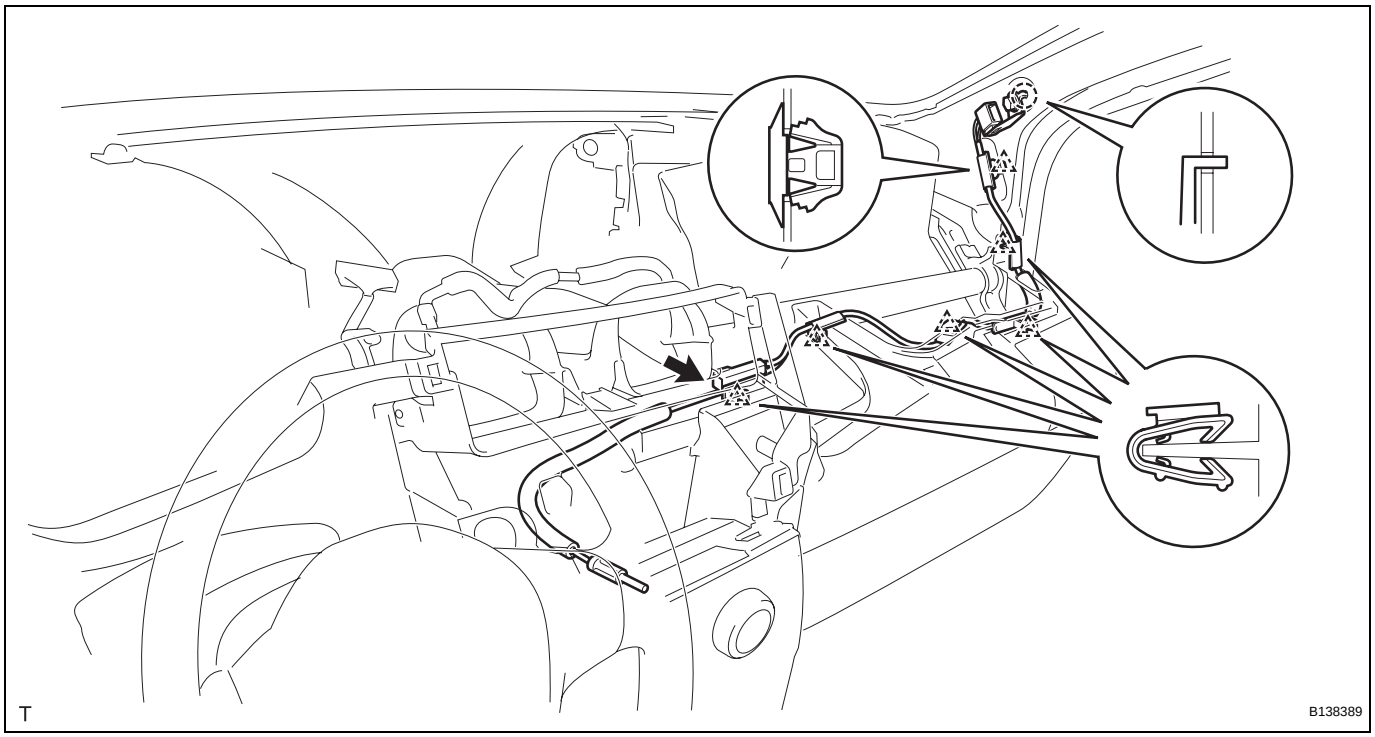

AV

12. **INSTALL RADIO RECEIVER ASSEMBLY (See page AV-40)**
13. **INSTALL INSTRUMENT CLUSTER CENTER FINISH PANEL SUB-ASSEMBLY (except Integrated with Panel) (See page IP-56)**
14. **INSTALL UPPER INSTRUMENT PANEL SUB-ASSEMBLY (See page IP-11)**
15. **INSTALL GLOVE COMPARTMENT DOOR ASSEMBLY (See page IP-13)**

16. **INSTALL COMBINATION METER ASSEMBLY (See page ME-140)**
17. **INSTALL INSTRUMENT CLUSTER FINISH PANEL (See page ME-140)**
18. **INSTALL INSTRUMENT PANEL FINISH PANEL END RH (See page ME-141)**
19. **INSTALL INSTRUMENT PANEL FINISH PANEL END LH (See page ME-141)**
20. **INSTALL INSTRUMENT PANEL LOWER CENTER FINISH PANEL (See page ME-142)**
21. **INSTALL FRONT PILLAR GARNISH RH (See page IR-29)**
22. **INSTALL FRONT PILLAR GARNISH LH (See page IR-30)**
23. **INSTALL CENTER PILLAR UPPER GARNISH RH (See page IR-31)**
24. **INSTALL CENTER PILLAR UPPER GARNISH LH (See page IR-31)**
25. **INSTALL FRONT SEAT OUTER BELT ASSEMBLY RH (See page IR-31)**
26. **INSTALL FRONT SEAT OUTER BELT ASSEMBLY LH (See page IR-31)**
27. **INSTALL SEAT BELT ANCHOR COVER CAP (See page IR-32)**
28. **INSTALL CENTER PILLAR LOWER GARNISH RH (See page IR-16)**
29. **INSTALL CENTER PILLAR LOWER GARNISH LH (See page IR-32)**
30. **INSTALL ROOF SIDE INNER GARNISH RH (See page IR-32)**
31. **INSTALL ROOF SIDE INNER GARNISH LH (See page IR-33)**
32. **INSTALL REAR SEAT SIDE COVER RH (See page IR-33)**
33. **INSTALL REAR SEAT SIDE COVER LH (See page IR-33)**
34. **INSTALL REAR DOOR OPENING TRIM WEATHERSTRIP RH (See page IR-33)**
35. **INSTALL REAR DOOR OPENING TRIM WEATHERSTRIP LH (See page IR-33)**
36. **INSTALL REAR DOOR SCUFF PLATE RH (See page IR-34)**
37. **INSTALL REAR DOOR SCUFF PLATE LH (See page IR-34)**

38. **INSTALL FRONT DOOR OPENING TRIM WEATHERSTRIP RH (See page IR-34)**
39. **INSTALL FRONT DOOR OPENING TRIM WEATHERSTRIP LH (See page IR-34)**
40. **INSTALL COWL SIDE TRIM BOARD RH (See page IR-34)**
41. **INSTALL COWL SIDE TRIM BOARD LH (See page IR-34)**
42. **INSTALL INSTRUMENT PANEL UNDER COVER SUB-ASSEMBLY RH (See page IR-35)**
43. **INSTALL INSTRUMENT PANEL UNDER COVER SUB-ASSEMBLY LH (See page IR-35)**
44. **INSTALL FRONT DOOR SCUFF PLATE RH (See page IR-35)**
45. **INSTALL FRONT DOOR SCUFF PLATE LH (See page IR-35)**
46. **INSTALL LUGGAGE COMPARTMENT TRIM INNER PAD (for 60/40 Split Seat Type) (See page ED-136)**
47. **INSTALL SPARE WHEEL COVER ASSEMBLY (for 60/40 Split Seat Type) (See page ED-137)**
48. **INSTALL LUGGAGE COMPARTMENT FLOOR MAT (for 60/40 Split Seat Type) (See page ED-137)**
49. **INSTALL REAR SEATBACK ASSEMBLY RH (for 60/40 Split Seat Type) (See page SE-65)**
50. **INSTALL REAR SEATBACK ASSEMBLY LH (for 60/40 Split Seat Type) (See page SE-52)**
51. **INSTALL REAR SEATBACK ASSEMBLY (for Fixed Seat Type) (See page SE-108)**
52. **INSTALL REAR SEAT CUSHION COVER PAD SUB-ASSEMBLY**
    (a) for 60/40 Split Seat Type:
        (1) Install the rear seat cushion cover pad sub-assembly (See page SE-53).
    (b) for Fixed Seat Type:
        (1) Install the rear seat cushion cover pad sub-assembly (See page SE-109).
53. **CONNECT CABLE TO NEGATIVE BATTERY TERMINAL**
    Torque: 5.4 N*m (55 kgf*cm, 48 in.*lbf)
54. **INSPECT SRS WARNING LIGHT**
    (See page RS-31)

AV

RADIO ANTENNA CORD (for Hatchback 5 Door)

COMPONENTS

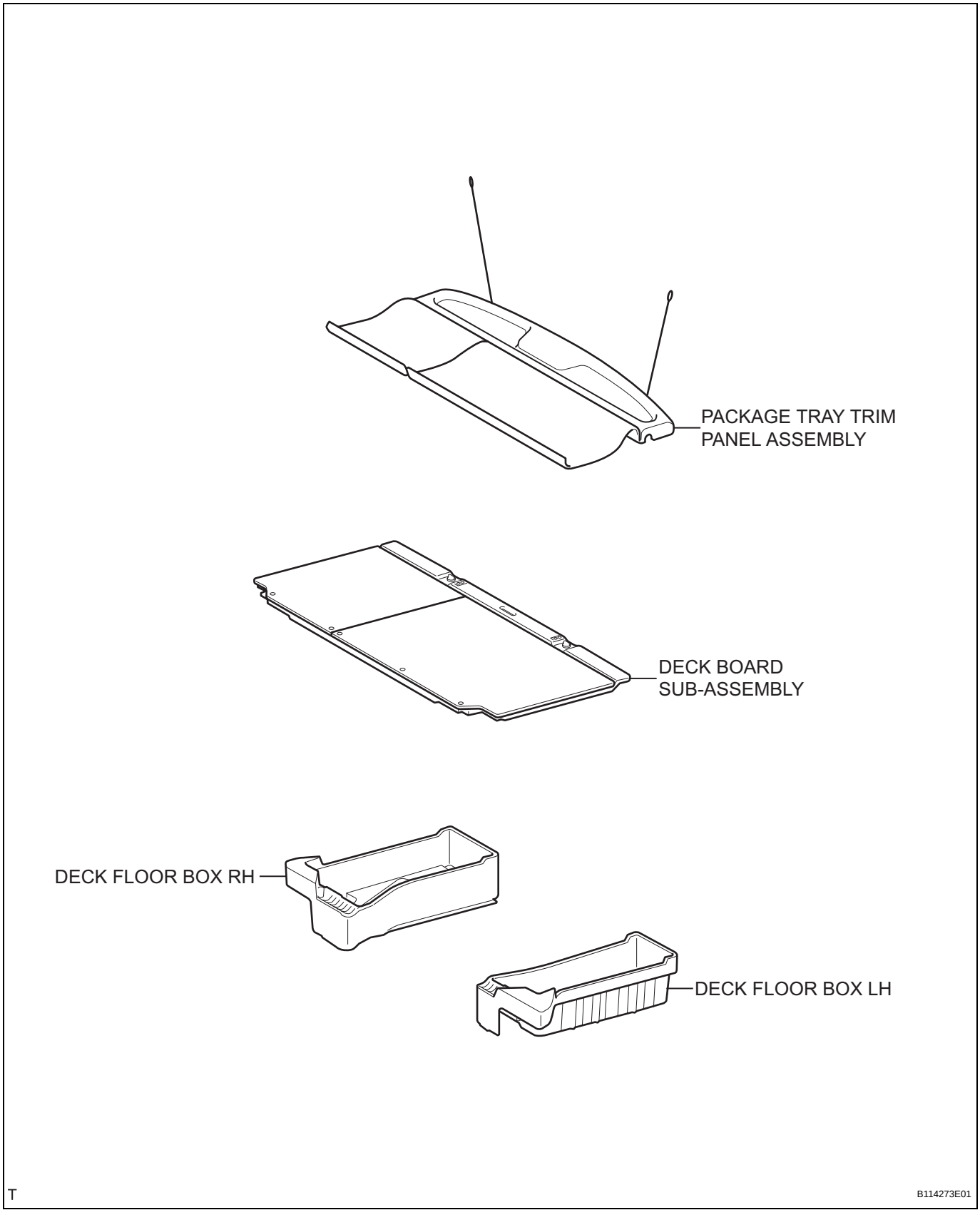

AV

for 60/40 Split Seat Type:

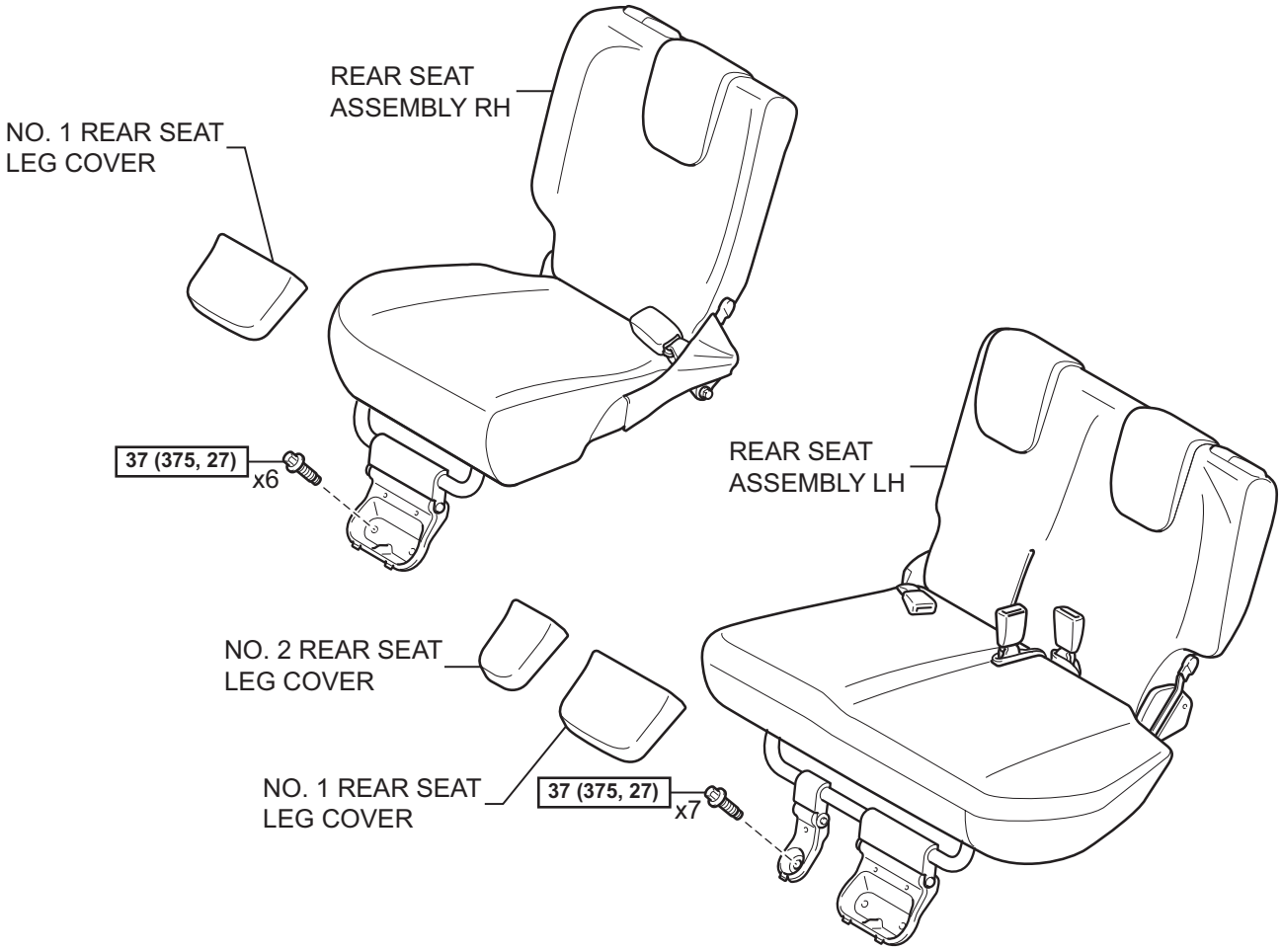

for Hold Down Seat Type:

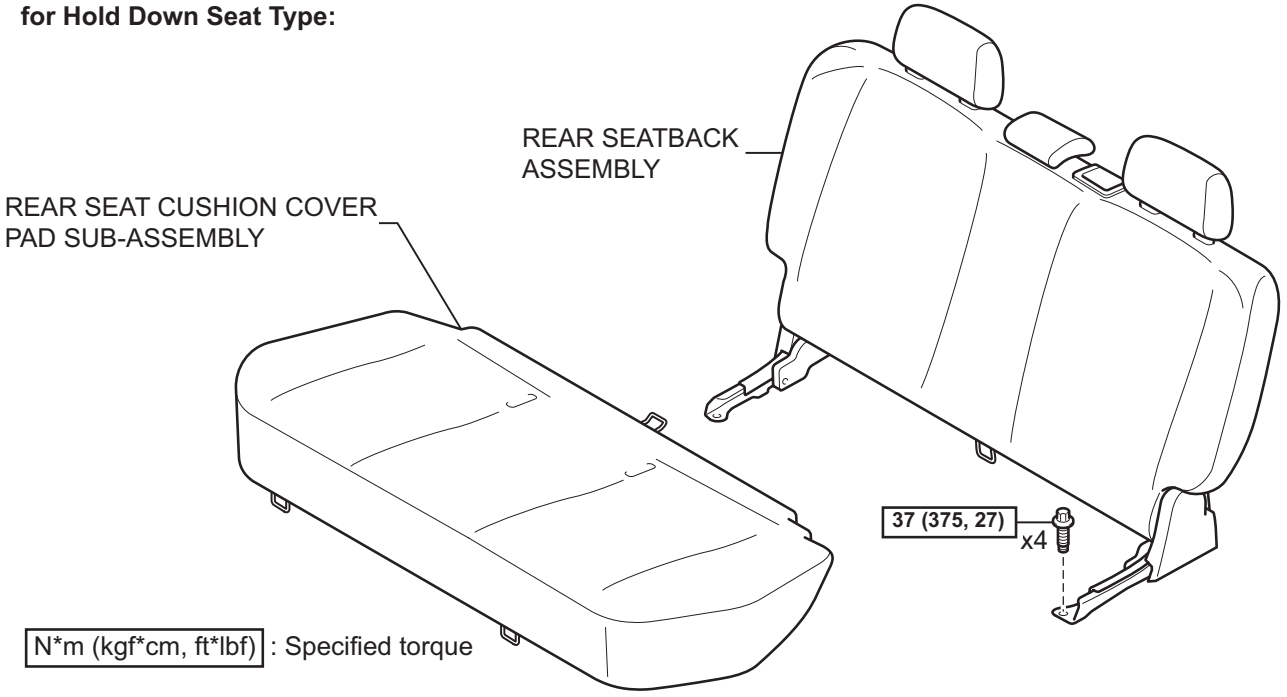

T

B121713E03

AV

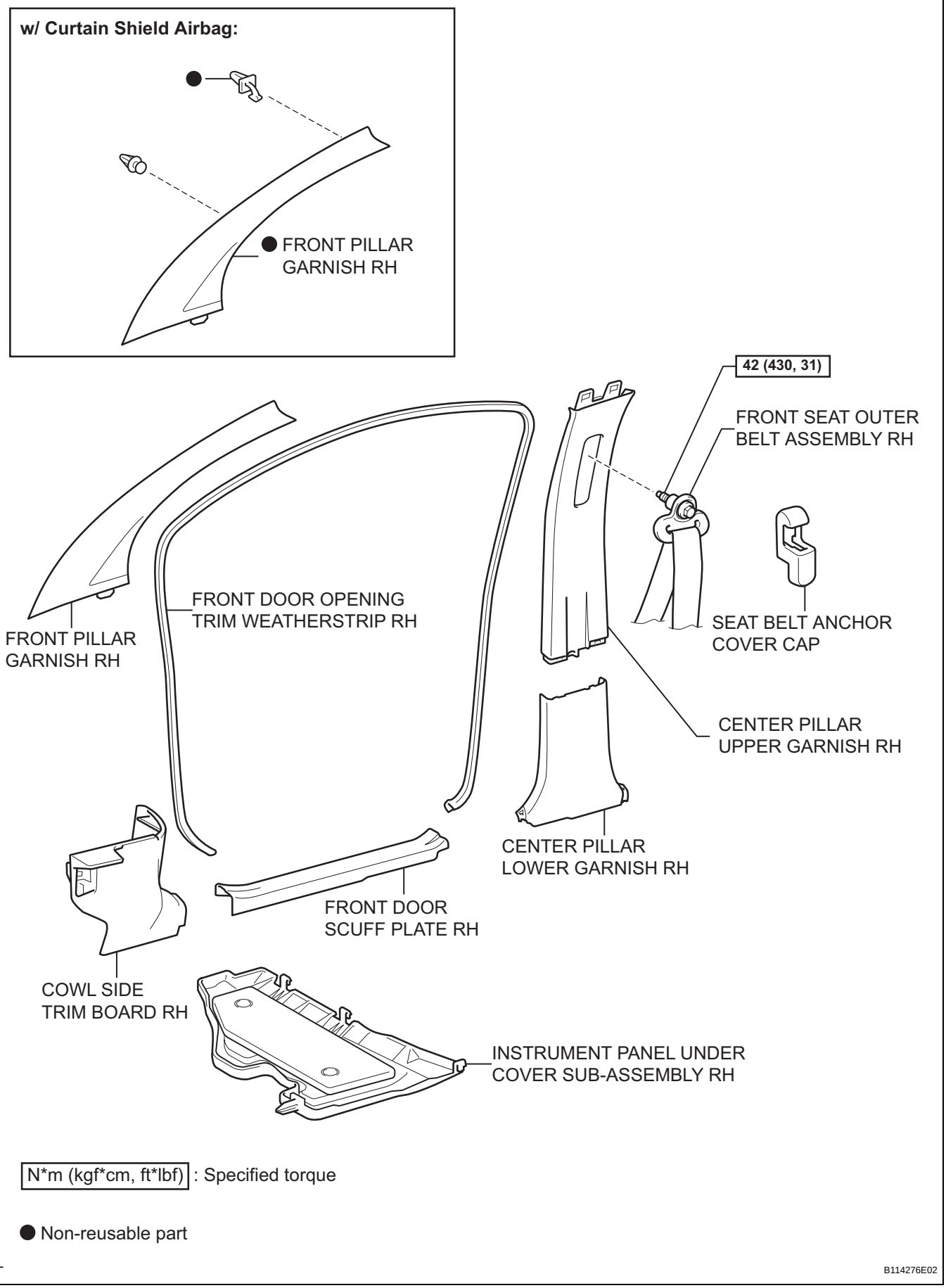
w/ Curtain Shield Airbag:
FRONT PILLAR GARNISH RH
42 (430, 31)
FRONT SEAT OUTER BELT ASSEMBLY RH
SEAT BELT ANCHOR COVER CAP
FRONT PILLAR GARNISH RH
FRONT DOOR OPENING TRIM WEATHERSTRIP RH
CENTER PILLAR UPPER GARNISH RH
CENTER PILLAR LOWER GARNISH RH
FRONT DOOR SCUFF PLATE RH
COWL SIDE TRIM BOARD RH
INSTRUMENT PANEL UNDER COVER SUB-ASSEMBLY RH
N*m (kgf*cm, ft*lbf) : Specified torque
● Non-reusable part
T
B114276E02

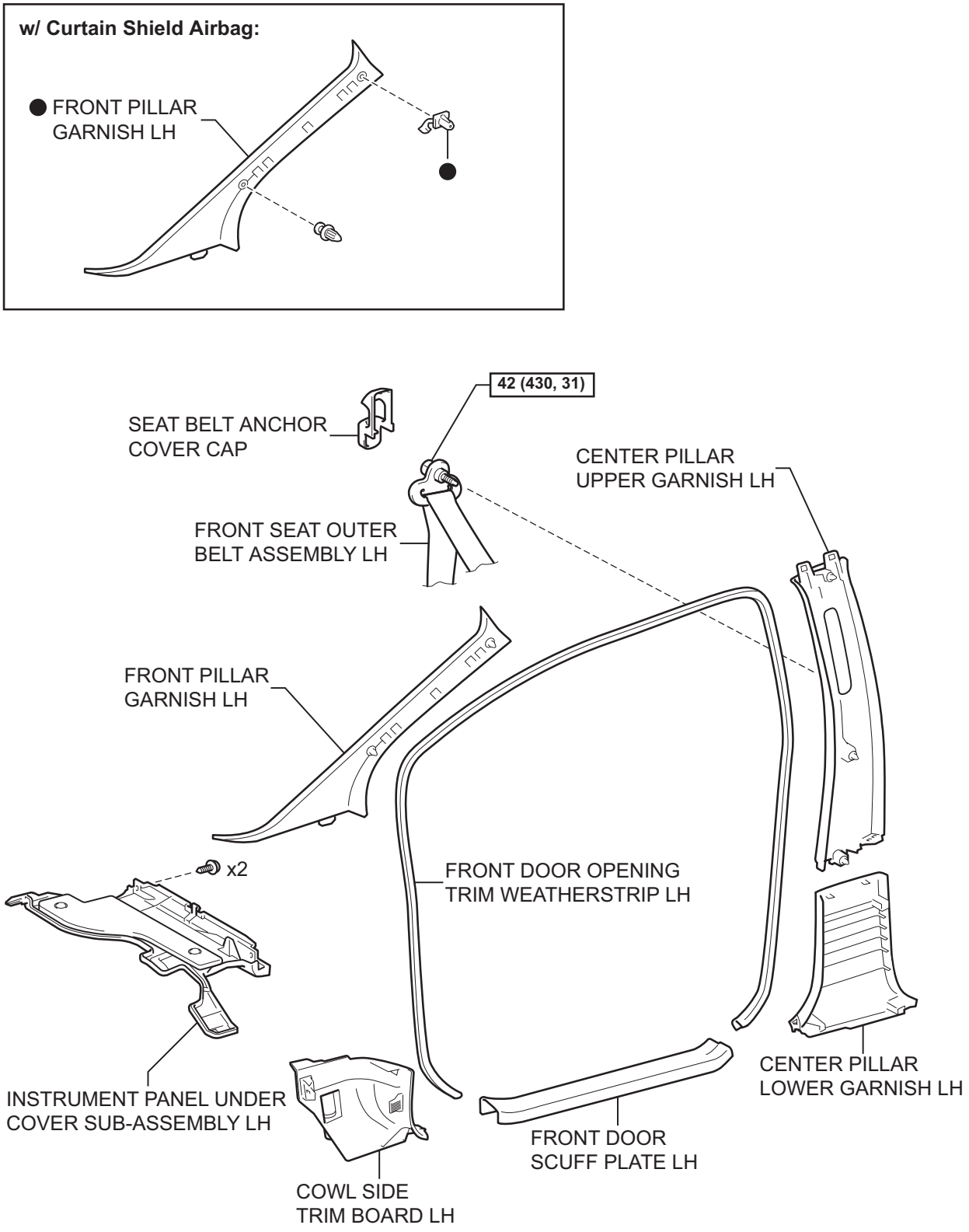

N*m (kgf*cm, ft*lbf) : Specified torque

● Non-reusable part

T

B114277E02

AV

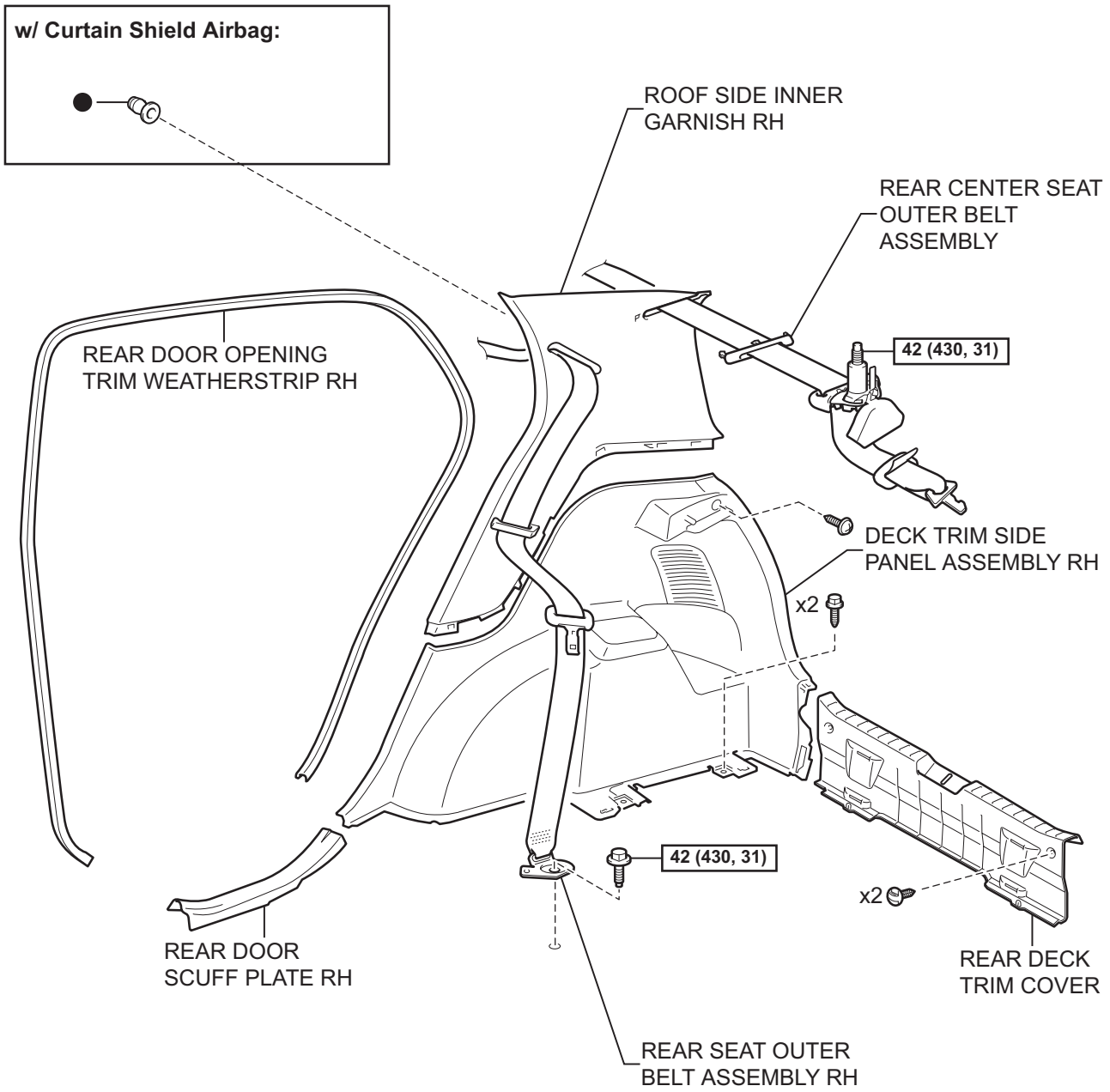

N*m (kgf*cm, ft*lbf) : Specified torque

● Non-reusable part

T

B114274E07

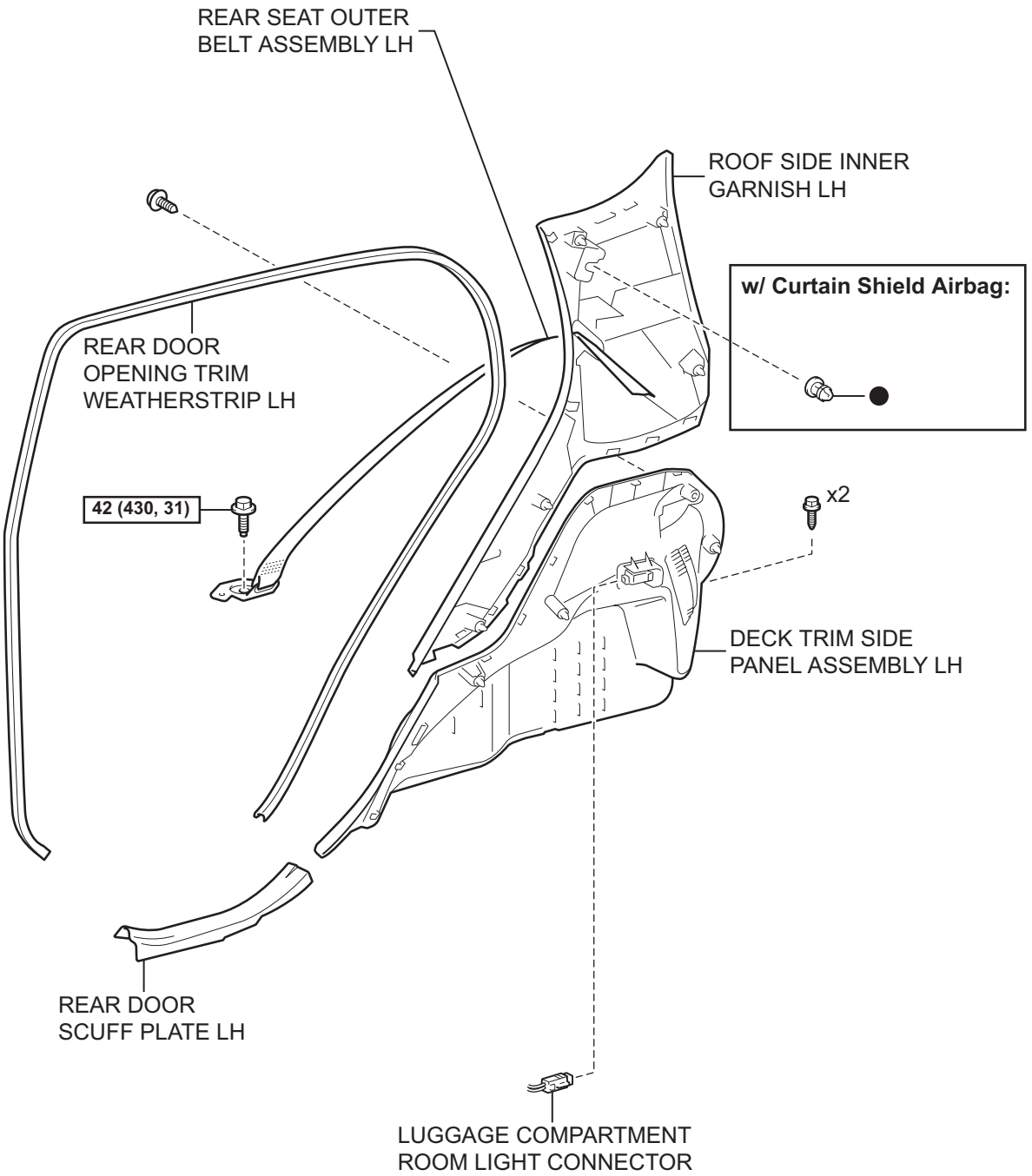

N*m (kgf*cm, ft*lbf) : Specified torque

● Non-reusable part

T

B114275E11

AV

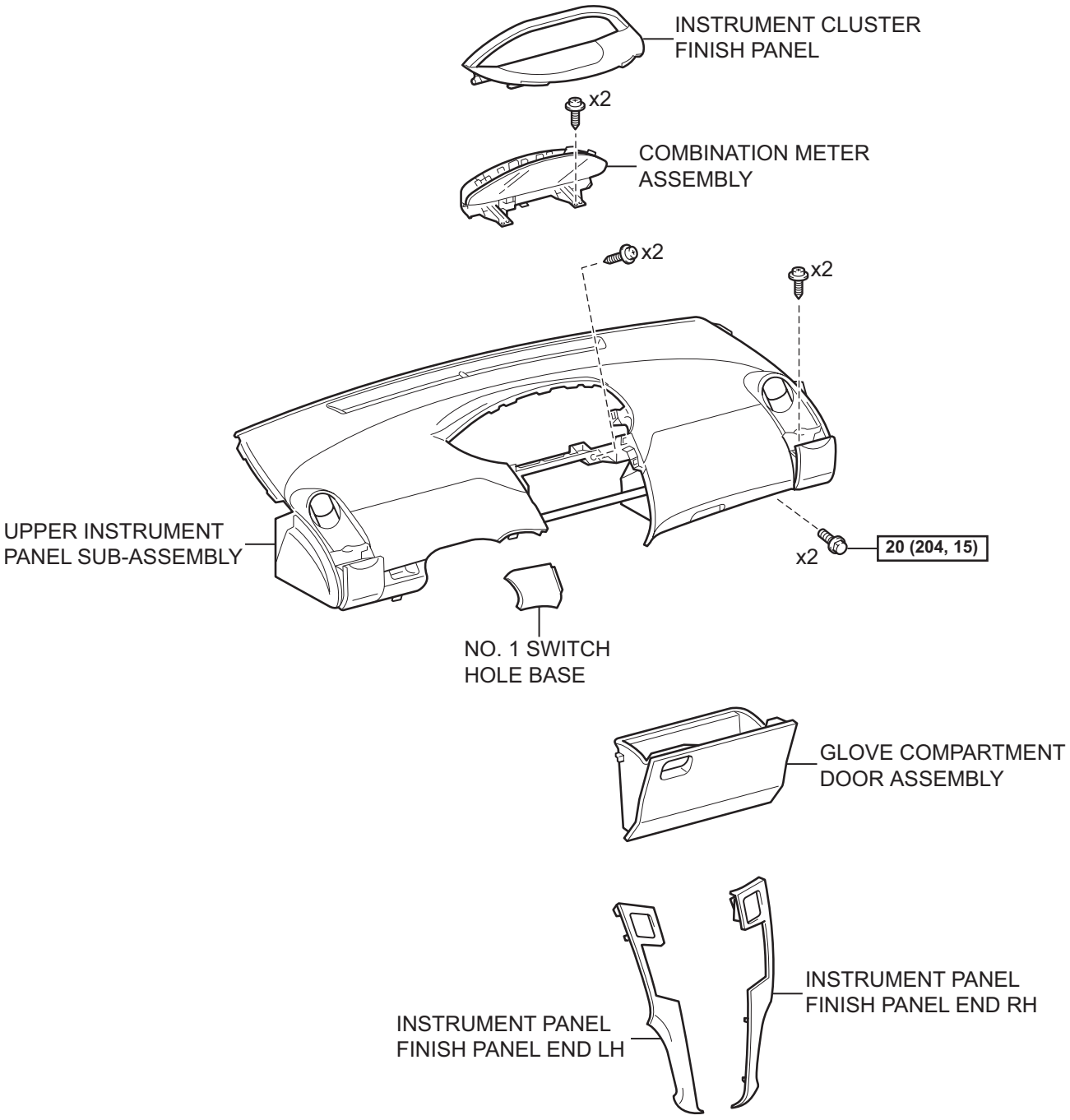

N*m (kgf*cm, ft*lbf) : Specified torque

T

B138684E01

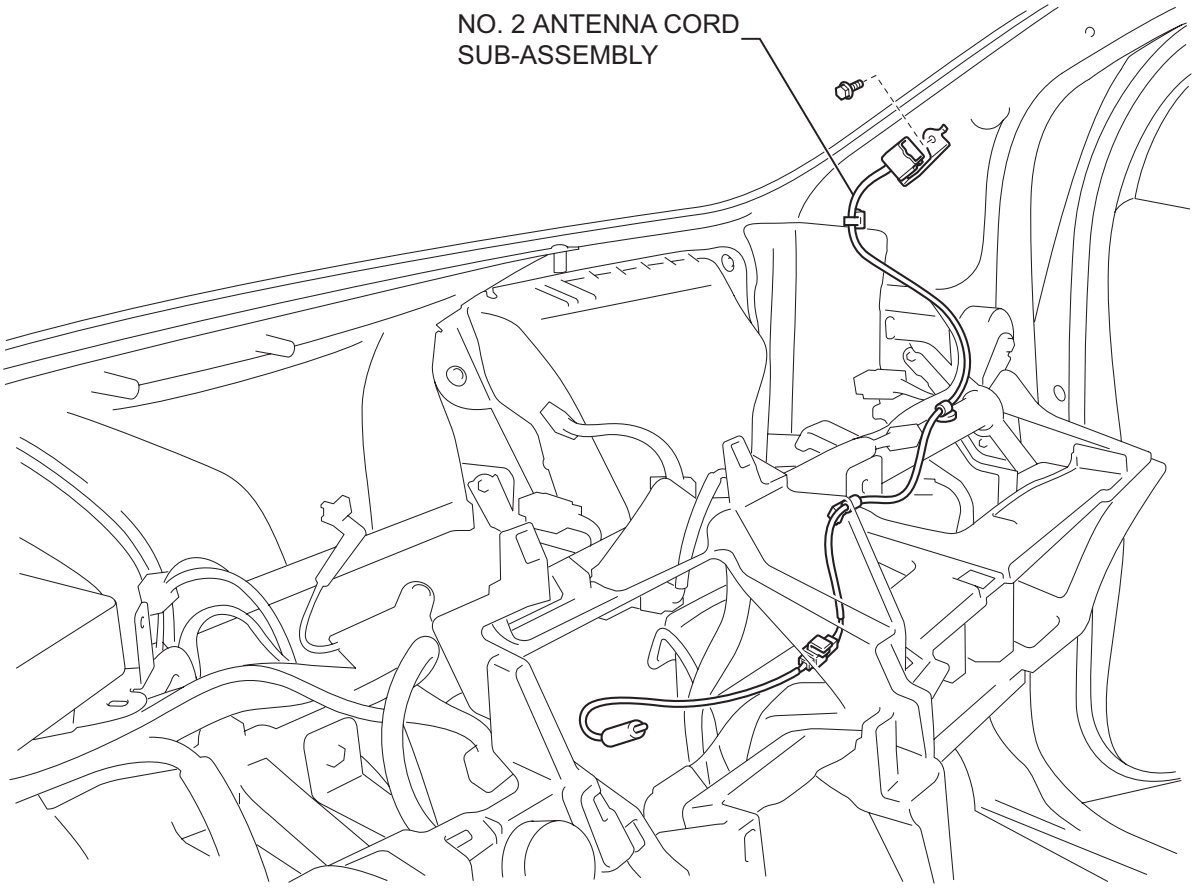

Y

B138685E01

w/ Curtain Shield Airbag:

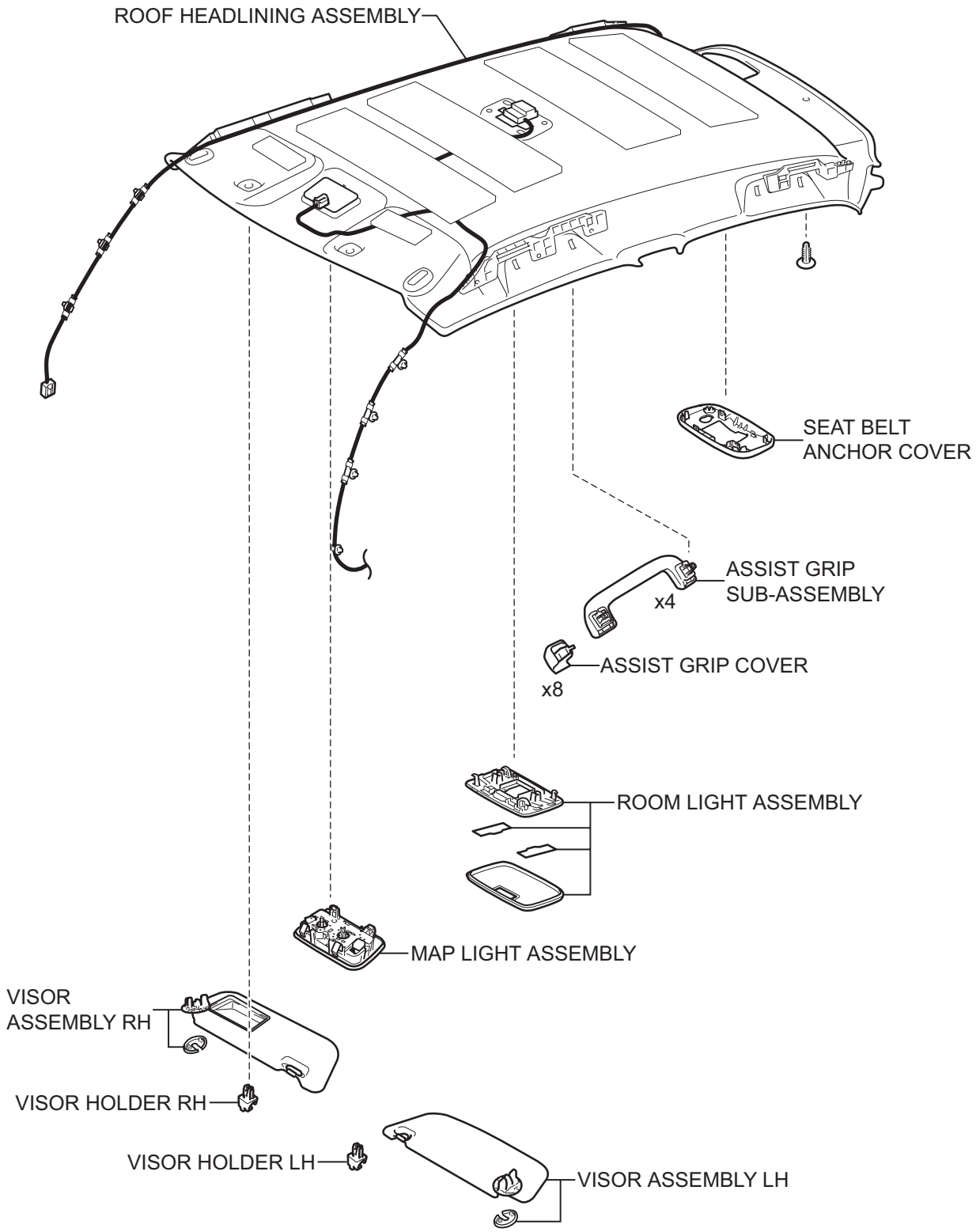

AV

T

B138686E01

w/o Curtain Shield Airbag:

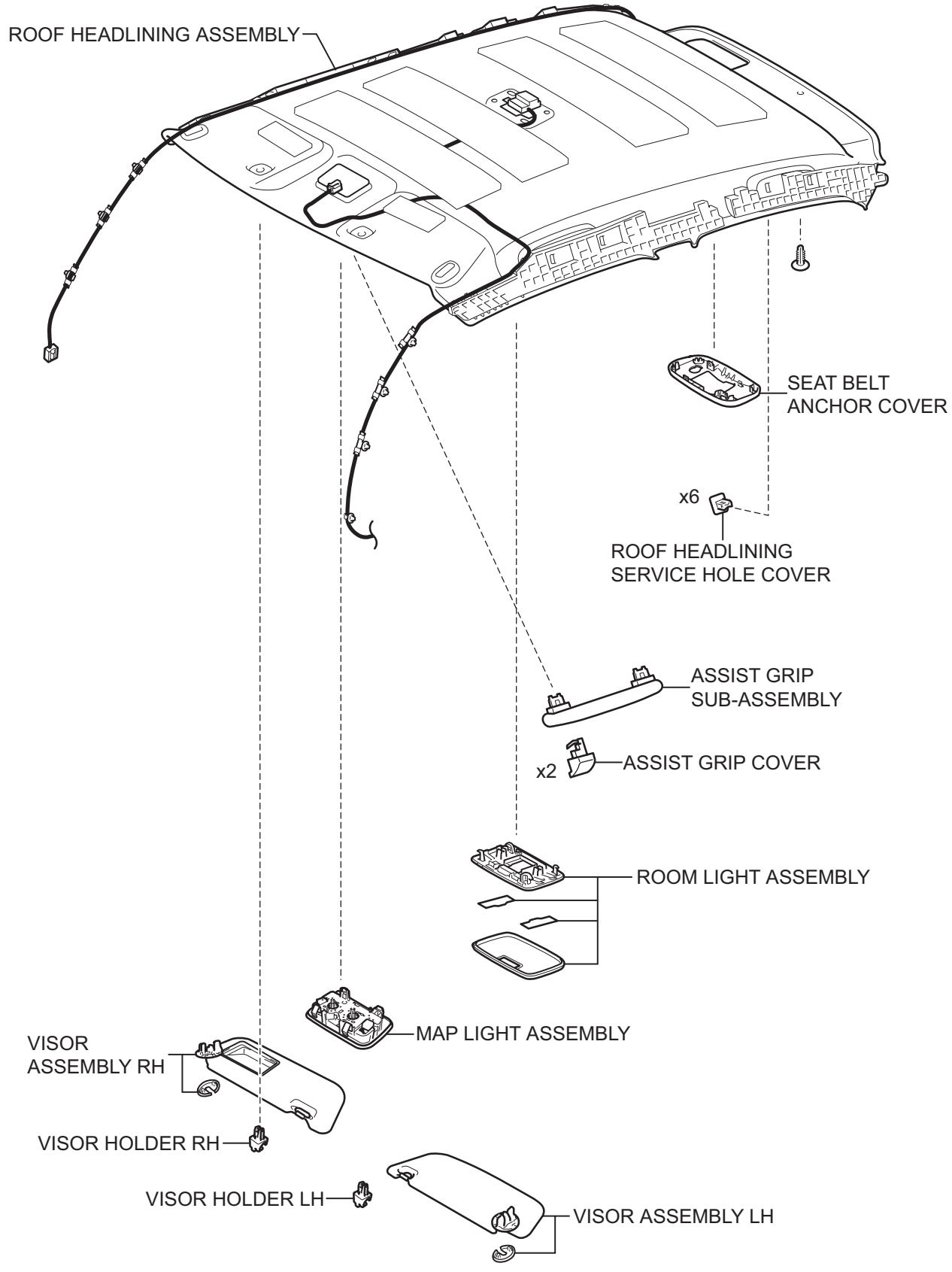

T

B138687E01

AV

w/ Curtain Shield Airbag:

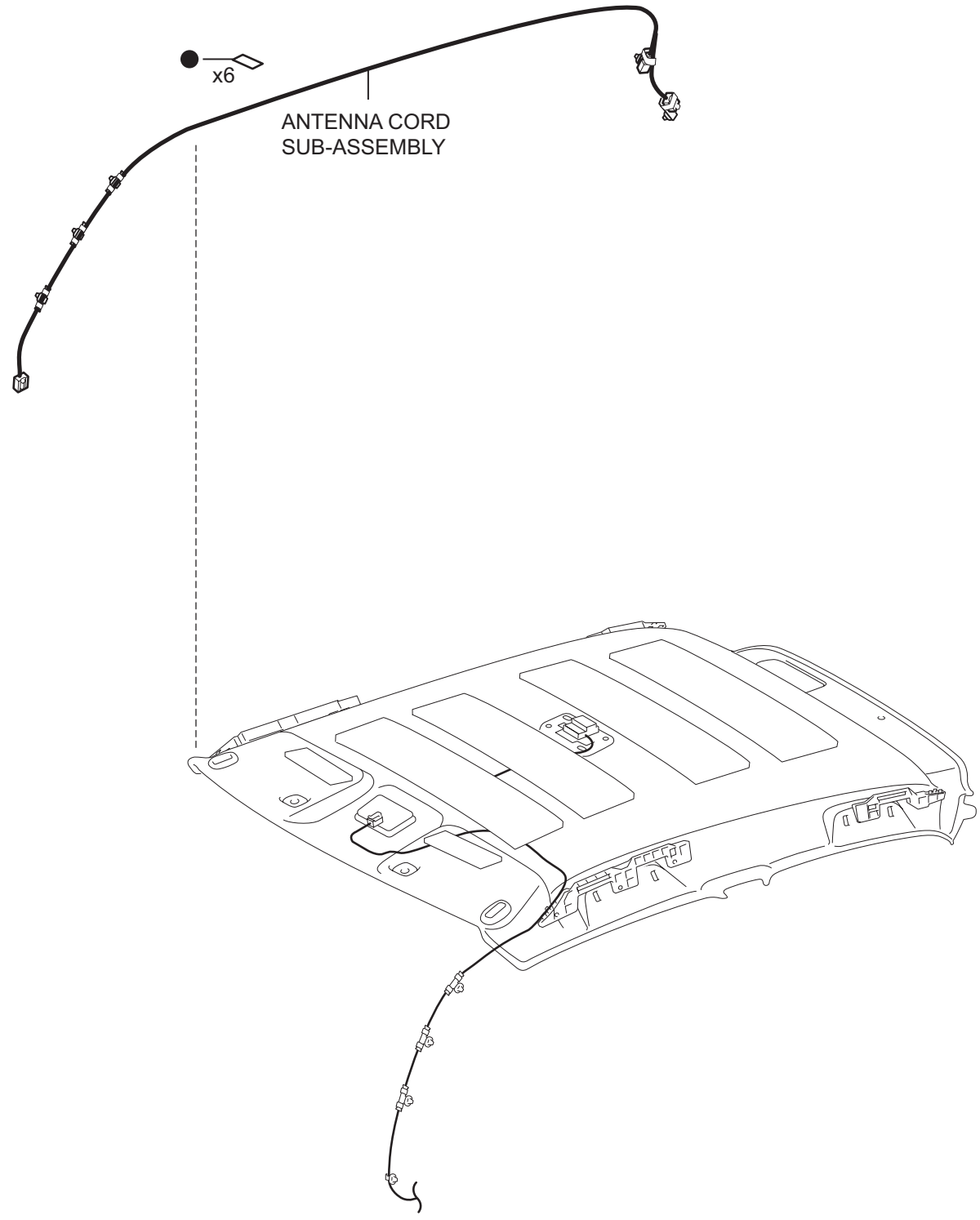

● Non-reusable part

T

B138688E01

w/o Curtain Shield Airbag:

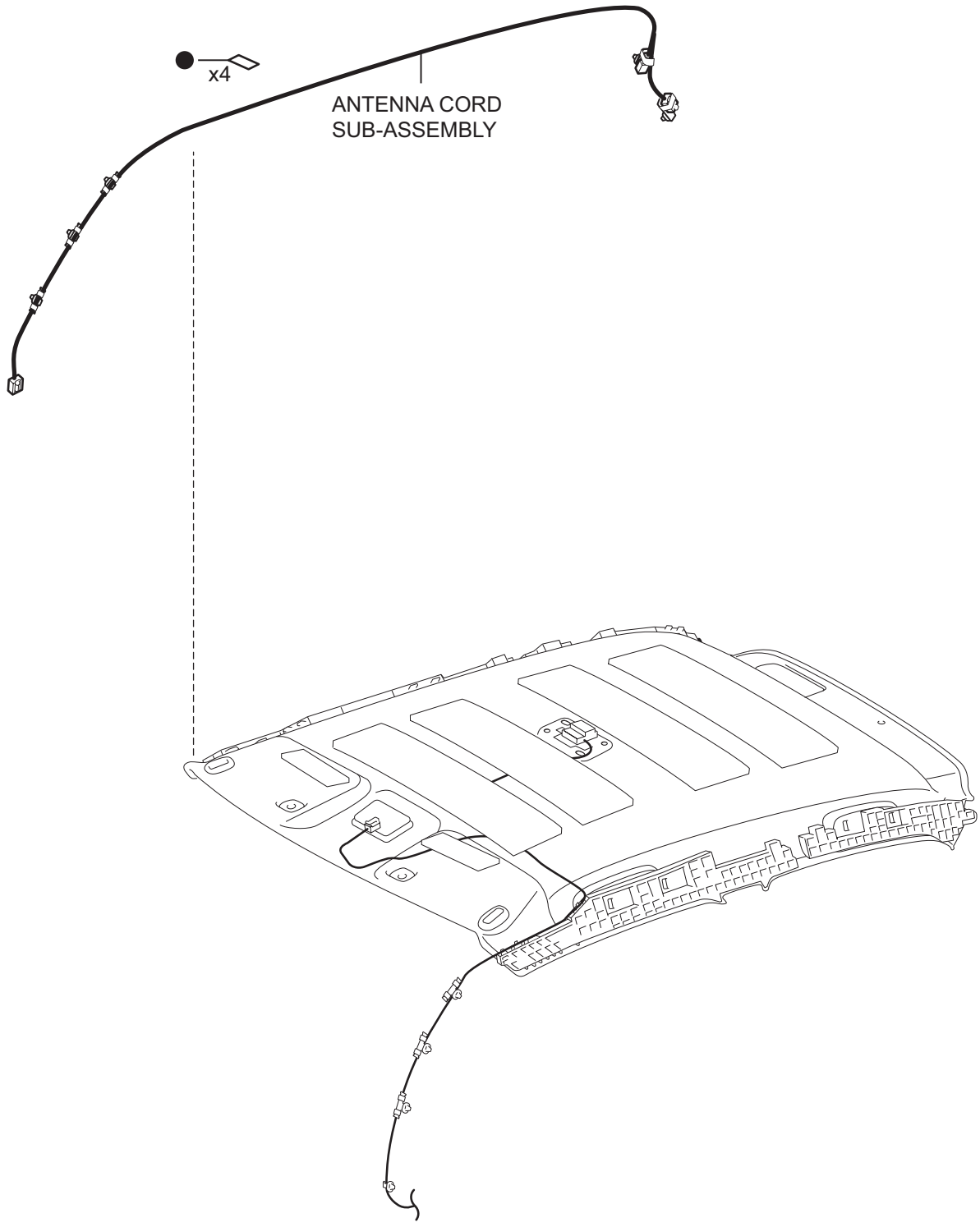

● Non-reusable part

T

B138689E01

REMOVAL

CAUTION:
Some of these service operations affect the SRS airbag system. Read the precautionary notices concerning the SRS airbag system before servicing (See page RS-1).
NOTICE:
Always use "Torx" socket wrench E10 when removing the rear seat.

1. **DISCONNECT CABLE FROM NEGATIVE BATTERY TERMINAL**
   CAUTION:
   Wait for at least 90 seconds after disconnecting the cable to prevent the airbag from working
2. **REMOVE DECK BOARD SUB-ASSEMBLY (See page IR-48)**
3. **REMOVE DECK FLOOR BOX RH (See page IR-48)**
4. **REMOVE DECK FLOOR BOX LH (See page IR-48)**
5. **REMOVE NO. 1 REAR SEAT LEG COVER (for 60/40 Split Seat Type)**
   (a) for RH Side:
   (1) Remove the No. 1 rear seat leg cover (See page SE-89).
   (b) for LH Side:
   (1) Remove the No. 1 rear seat leg cover (See page SE-70).
6. **REMOVE NO. 2 REAR SEAT LEG COVER (for 60/40 Split Seat Type) (See page SE-70)**
7. **REMOVE REAR SEAT ASSEMBLY RH (for 60/40 Split Seat Type) (See page SE-89)**
8. **REMOVE REAR SEAT ASSEMBLY LH (for 60/40 Split Seat Type) (See page SE-71)**
9. **REMOVE REAR SEAT CUSHION COVER PAD SUB-ASSEMBLY (for Hold Down Seat Type) (See page SE-114)**
10. **REMOVE REAR SEATBACK ASSEMBLY (for Hold Down Seat Type) (See page SE-115)**
11. **REMOVE REAR DECK TRIM COVER (See page IR-49)**
12. **REMOVE FRONT DOOR SCUFF PLATE RH (See page IR-49)**
13. **REMOVE FRONT DOOR SCUFF PLATE LH (See page IR-49)**
14. **REMOVE INSTRUMENT PANEL UNDER COVER SUB-ASSEMBLY RH (See page IR-50)**
15. **REMOVE INSTRUMENT PANEL UNDER COVER SUB-ASSEMBLY LH (See page IR-50)**

16. **REMOVE COWL SIDE TRIM BOARD RH (See page IR-50)**
17. **REMOVE COWL SIDE TRIM BOARD LH (See page IR-50)**
18. **REMOVE FRONT DOOR OPENING TRIM WEATHERSTRIP RH (See page IR-50)**
19. **REMOVE FRONT DOOR OPENING TRIM WEATHERSTRIP LH (See page IR-50)**
20. **REMOVE REAR DOOR SCUFF PLATE RH (See page IR-51)**
21. **REMOVE REAR DOOR SCUFF PLATE LH (See page IR-51)**
22. **REMOVE REAR DOOR OPENING TRIM WEATHERSTRIP RH (See page IR-51)**
23. **REMOVE REAR DOOR OPENING TRIM WEATHERSTRIP LH (See page IR-51)**
24. **REMOVE REAR SEAT OUTER BELT ASSEMBLY RH (See page IR-51)**
25. **REMOVE REAR SEAT OUTER BELT ASSEMBLY LH (See page IR-51)**
26. **REMOVE DECK TRIM SIDE PANEL ASSEMBLY RH (See page IR-52)**
27. **REMOVE DECK TRIM SIDE PANEL ASSEMBLY LH (See page IR-52)**
28. **REMOVE REAR CENTER SEAT OUTER BELT ASSEMBLY (See page IR-52)**
29. **REMOVE ROOF SIDE INNER GARNISH RH (See page IR-53)**
30. **REMOVE ROOF SIDE INNER GARNISH LH (See page IR-54)**
31. **REMOVE SEAT BELT ANCHOR COVER CAP (See page IR-54)**
32. **REMOVE FRONT SEAT OUTER BELT ASSEMBLY RH (See page IR-55)**
33. **REMOVE FRONT SEAT OUTER BELT ASSEMBLY LH (See page IR-55)**
34. **REMOVE CENTER PILLAR LOWER GARNISH RH (See page IR-55)**
35. **REMOVE CENTER PILLAR LOWER GARNISH LH (See page IR-55)**
36. **REMOVE CENTER PILLAR UPPER GARNISH RH (See page IR-55)**
37. **REMOVE CENTER PILLAR UPPER GARNISH LH (See page IR-55)**

38. **REMOVE SEAT BELT ANCHOR COVER (See page SB-159)**
39. **REMOVE ROOF HEADLINING SERVICE HOLE COVER (w/o Curtain Shield Airbag) (See page IR-55)**
40. **REMOVE ASSIST GRIP COVER (See page IR-55)**
41. **REMOVE ASSIST GRIP SUB-ASSEMBLY (See page IR-56)**
42. **REMOVE VISOR ASSEMBLY RH (See page IR-56)**
43. **REMOVE VISOR ASSEMBLY LH (See page IR-56)**
44. **REMOVE VISOR HOLDER RH (See page IR-56)**
45. **REMOVE VISOR HOLDER LH (See page IR-56)**
46. **REMOVE ROOM LIGHT ASSEMBLY (See page IR-57)**
47. **REMOVE MAP LIGHT ASSEMBLY (See page IR-58)**
48. **REMOVE FRONT PILLAR GARNISH RH (See page IR-58)**
49. **REMOVE FRONT PILLAR GARNISH LH (See page IR-59)**
50. **REMOVE INSTRUMENT PANEL FINISH PANEL END RH (See page ME-145)**
51. **REMOVE INSTRUMENT PANEL FINISH PANEL END LH (See page ME-145)**
52. **REMOVE INSTRUMENT CLUSTER FINISH PANEL (See page ME-145)**
53. **REMOVE COMBINATION METER ASSEMBLY (See page ME-146)**
54. **REMOVE GLOVE COMPARTMENT DOOR ASSEMBLY (See page IP-20)**
55. **REMOVE NO. 1 SWITCH HOLE BASE (See page IP-20)**
56. **REMOVE UPPER INSTRUMENT PANEL SUB-ASSEMBLY (See page IP-21)**
57. **REMOVE NO. 2 ANTENNA CORD SUB-ASSEMBLY**
    (a) Remove the bolt and the bracket.
    (b) Disconnect the connector.
    (c) Disconnect the plug.
    (d) Using a clip remover, remove the clamp.

AV

(e) Remove the 3 clamps and the No. 2 antenna cord.

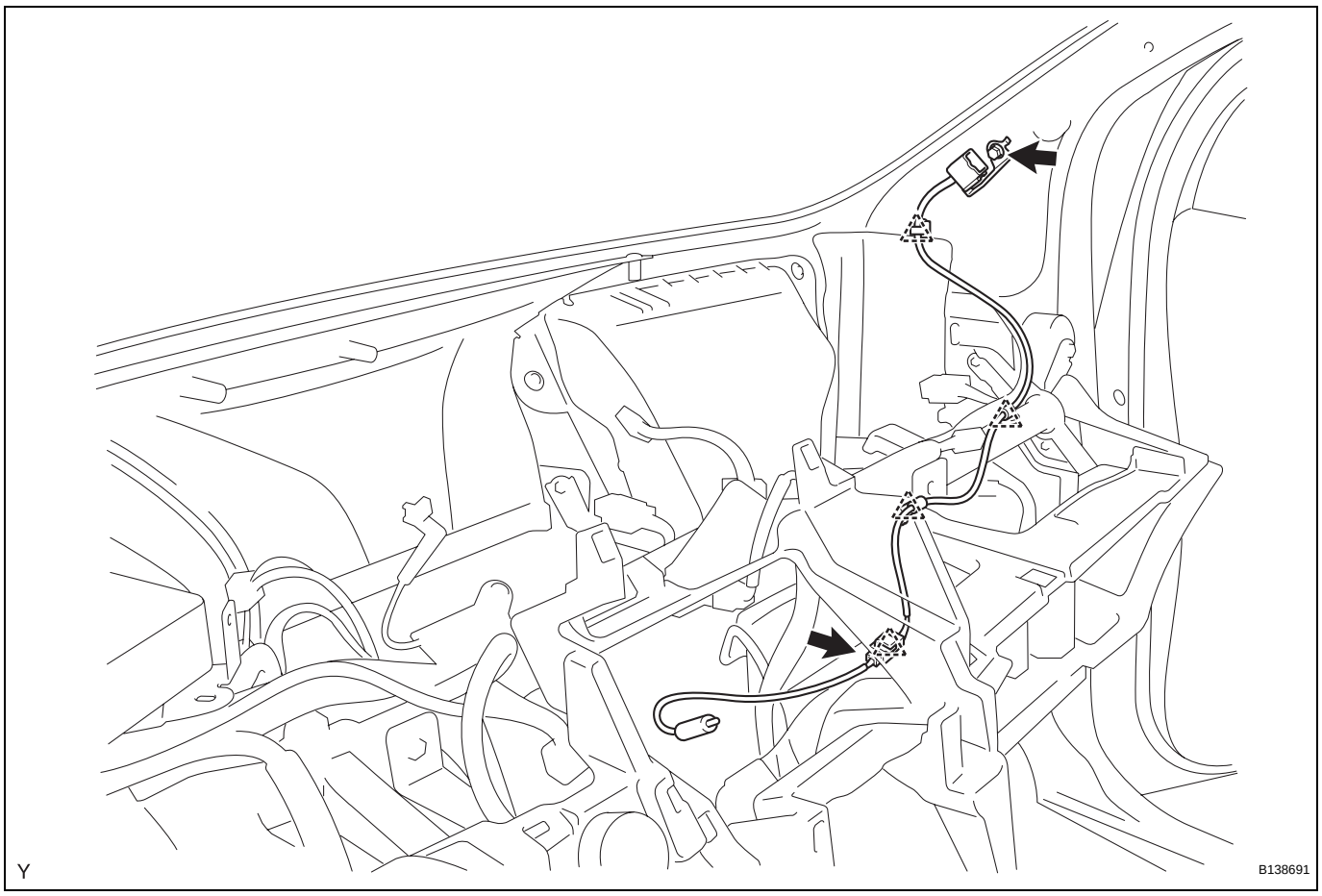

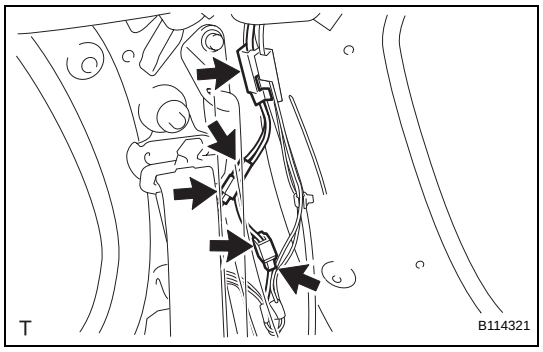

58. REMOVE ROOF HEADLINING ASSEMBLY

(a) Remove the antenna cord from the antenna cord clamp.
(b) Disconnect the 2 connectors.
(c) Using a clip remover, remove the 2 connectors.
(d) w/ Curtain Shield Airbag:
  (1) Using a clip remover, remove the clip.

(2) Disengage the 4 hooks.

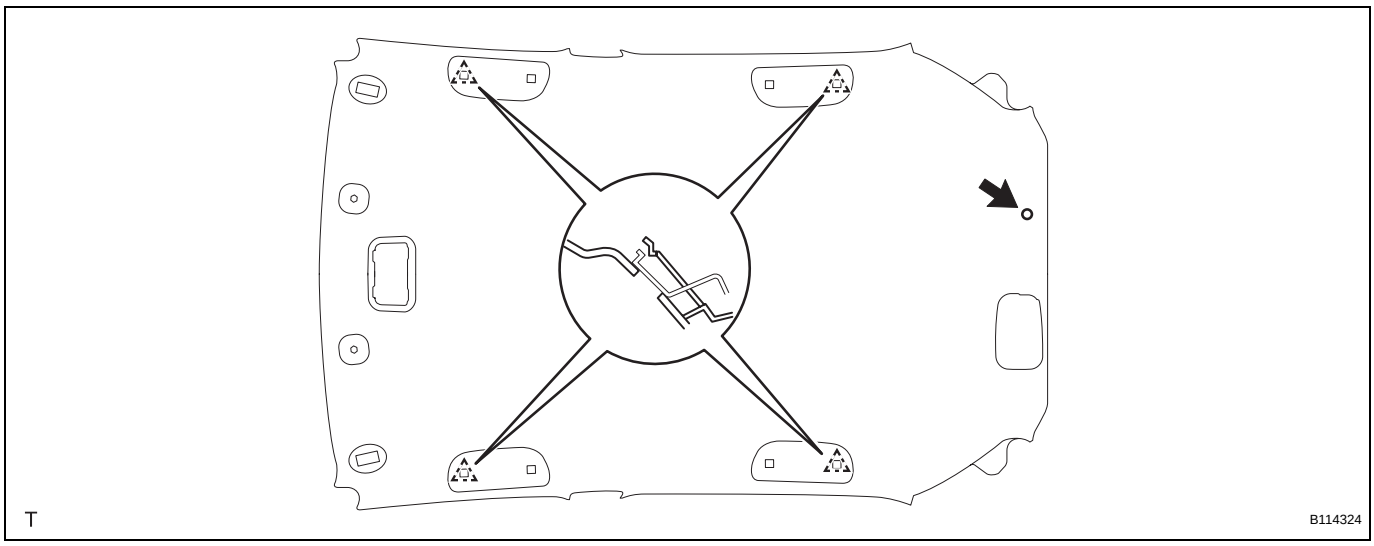

(e) w/o Curtain Shield Airbag:
(1) Using a clip remover, remove the clip.
(2) Disengage the 2 claws and 4 hooks.

AV

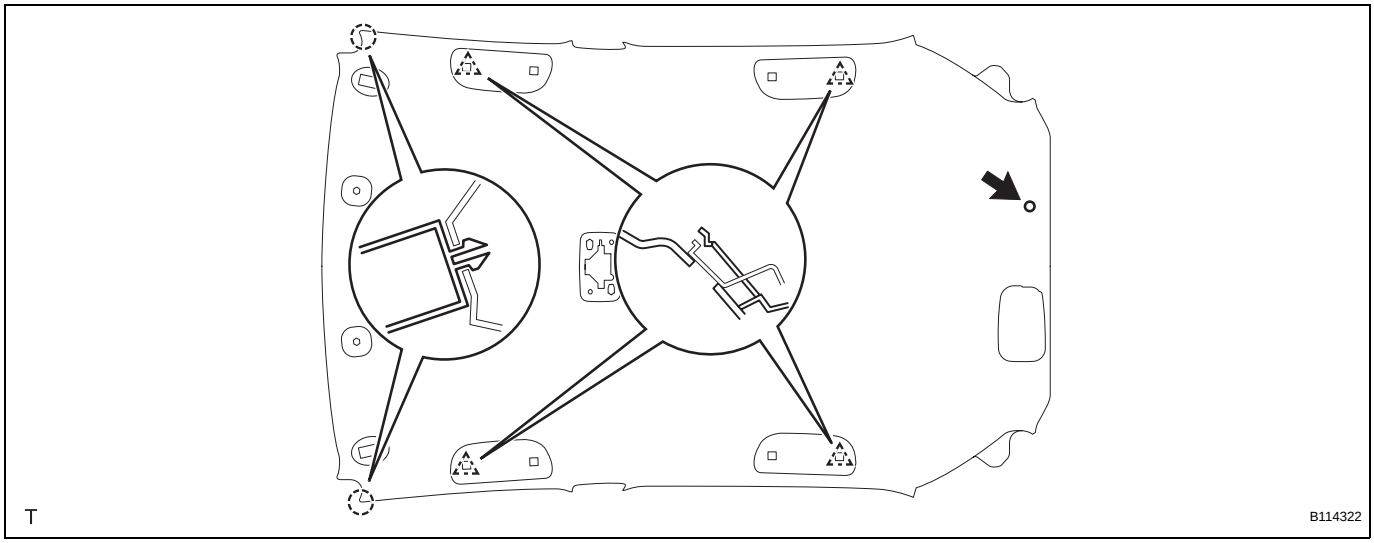

59. REMOVE ANTENNA CORD SUB-ASSEMBLY

(a) w/ Curtain Shield Airbag:
(1) Remove the 6 pieces of tape.
(2) Remove the antenna cord from the cutout of the roof headlining.

(3) Remove the antenna cord from the 3 claws of the front and rear side rail spacers.

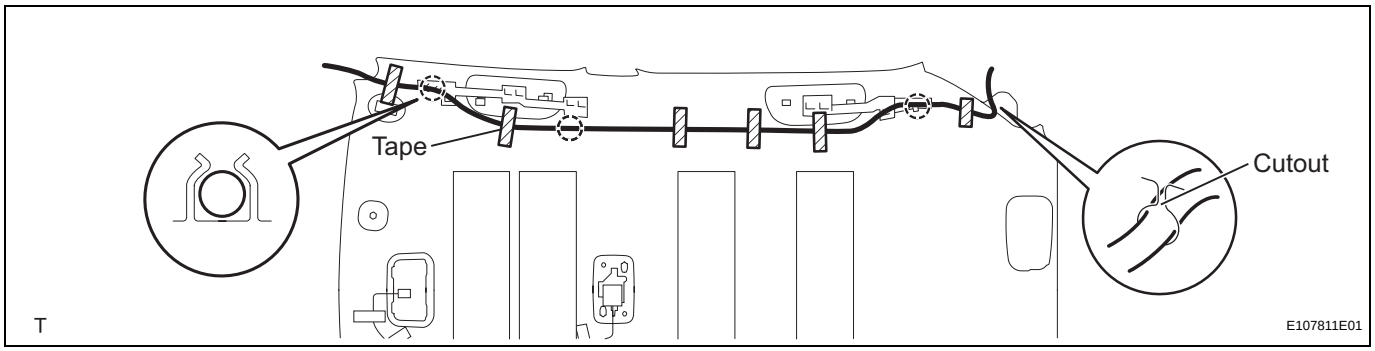

(b) w/o Curtain Shield Airbag:

(1) Remove the 4 pieces of tape.

(2) Remove the antenna cord from the cutout of the roof headlining.

(3) Remove the antenna cord from the 5 claws of the front and rear side rail spacers.

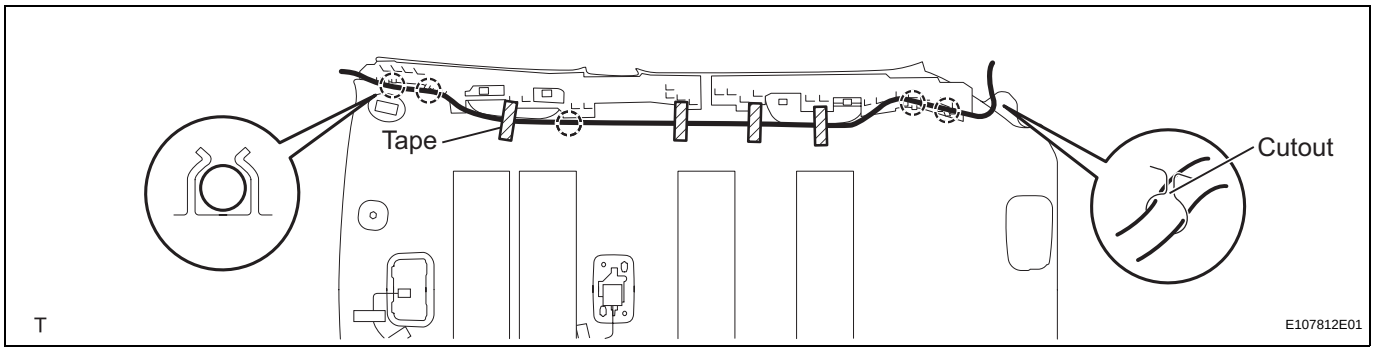

INSTALLATION

CAUTION:
Some of these service operations affect the SRS airbag system. Read the precautionary notices concerning the SRS airbag system before servicing (See page RS-1).
NOTICE:
Always use "Torx" socket wrench E10 when installing the rear seat.

1. INSTALL ANTENNA CORD SUB-ASSEMBLY

(a) w/ Curtain Shield Airbag:

(1) Install the part of the antenna cord marked with red positioning tape into claw A of the front side rail spacer.

(2) Install the antenna cord positioning tapes into the 2 claws of the front and rear side rail spacers.

(3) Insert the antenna cord positioning tape into the cutout of the roof headlining.

(4) Align the antenna cord positioning tapes with the markings of the roof headlining.

(5) Install the antenna cord onto the roof headlining with 6 new pieces of tape.

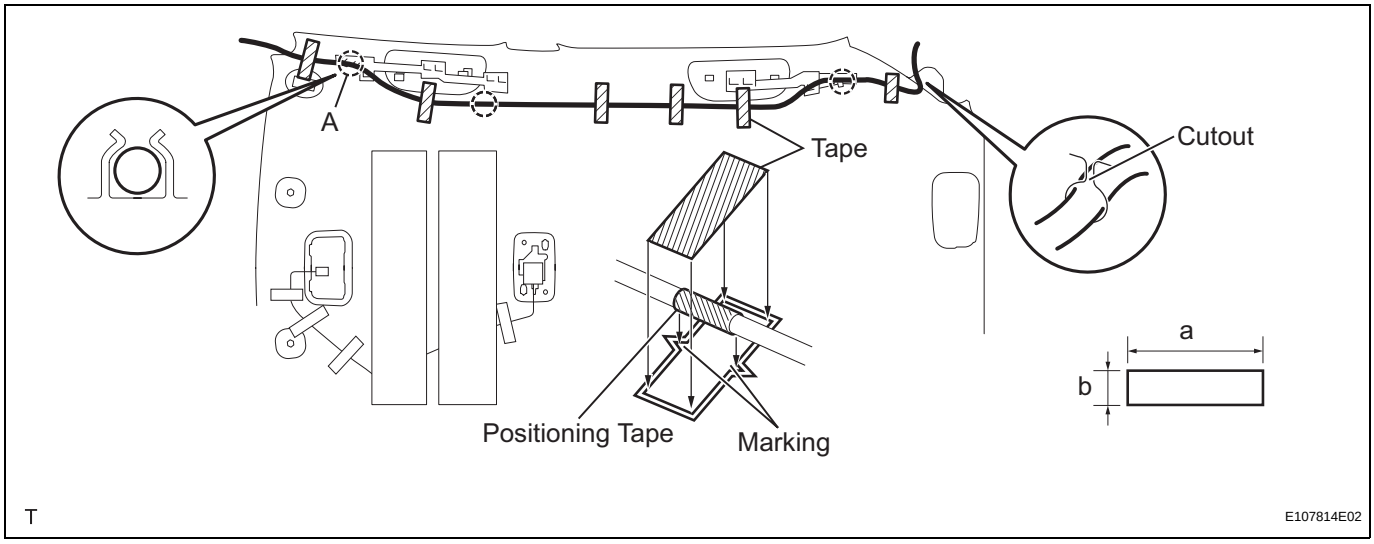

Tape size:

Mark	Measurement
a	80 mm (3.15 in.)
b	20 mm (0.787 in.)

NOTICE:
- **Apply the tape securely in place.**
- **Do not touch the adhesive surface when applying the tape to prevent adhesion failure.**

(b) w/o Curtain Shield Airbag:

(1) Install the part of the antenna cord marked with red positioning tape into claw A of the front side rail spacer.

(2) Install the antenna cord positioning tapes into the 4 claws of the front and rear side rail spacers.
(3) Insert the antenna cord positioning tape into the cutout of the roof headlining.
(4) Align the antenna cord positioning tapes with the markings of the roof headlining.
(5) Install the antenna cord onto the roof headlining with 4 new pieces of tape.

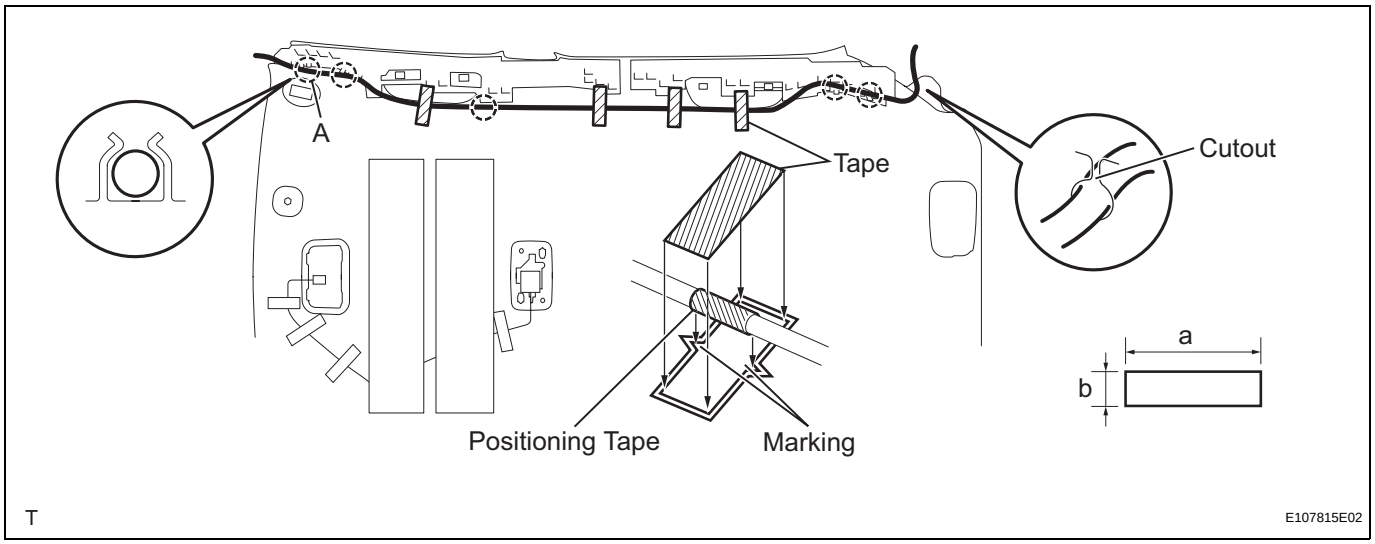

Tape size:

Mark	Measurement
a	80 mm (3.15 in.)
b	20 mm (0.787 in.)

NOTICE:
- **Apply the tape securely in place.**
- **Do not touch the adhesive surface when applying the tape to prevent adhesion failure.**

2. INSTALL ROOF HEADLINING ASSEMBLY

(a) w/ Curtain Shield Airbag:
(1) Engage the 4 hooks and install the roof headlining.

AV

(2) Install the clip.

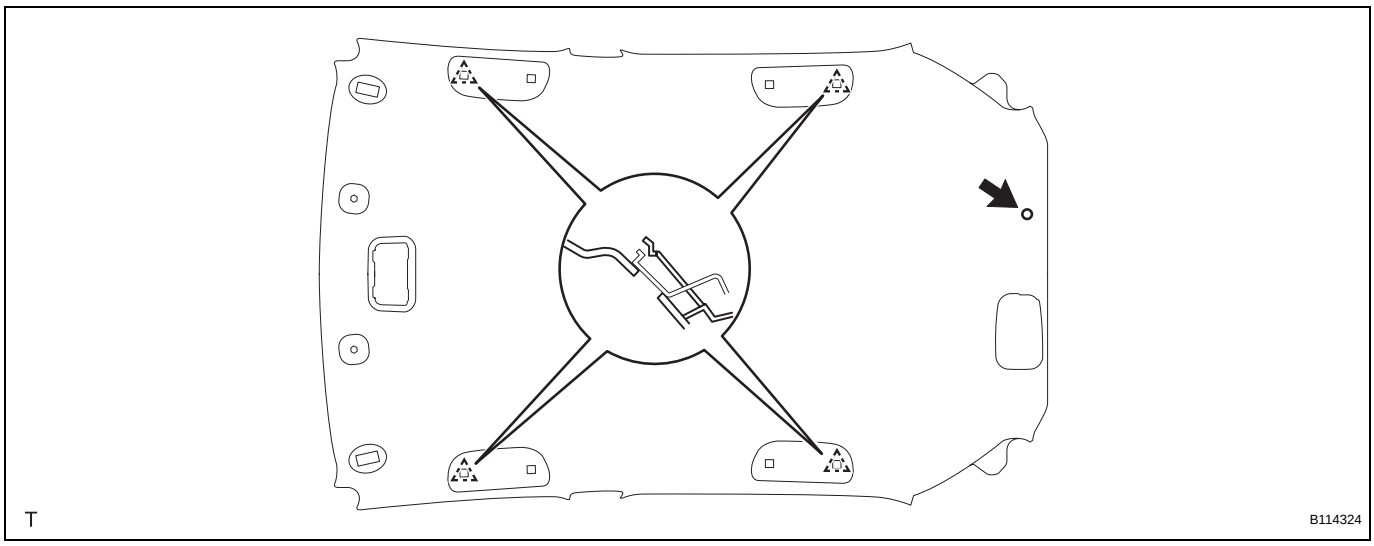

(b) w/o Curtain Shield Airbag:
(1) Engage the 2 claws and the 4 hooks and install the roof headlining.
(2) Install the clip.

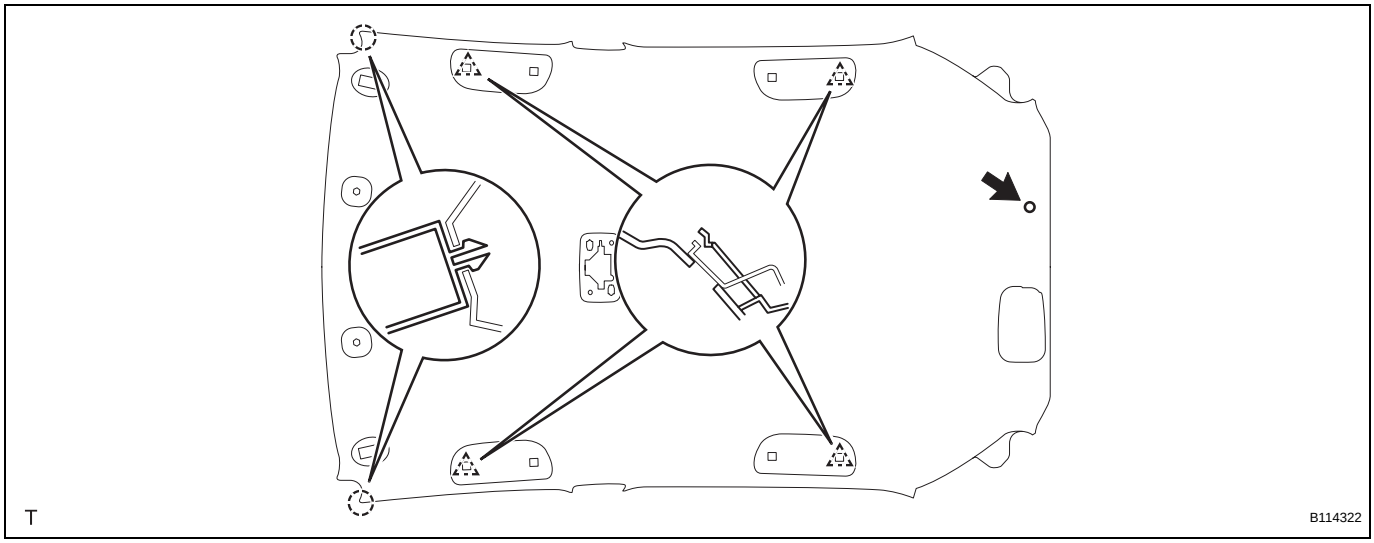

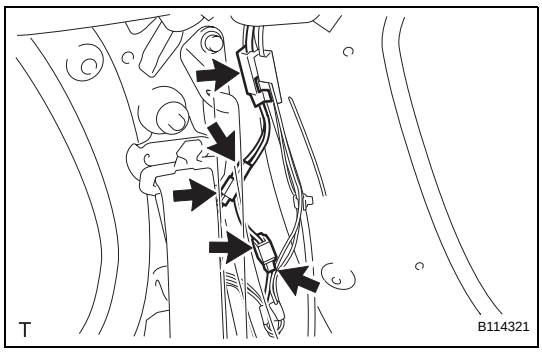

(c) Install the 2 connectors.
(d) Connect the 2 connectors.
(e) Install the antenna cord onto the antenna cord clamp.

3. INSTALL NO. 2 ANTENNA CORD SUB-ASSEMBLY
(a) Install the No. 2 antenna cord with the 4 clamps.
(b) Connect the plug.
(c) Connect the connector.

(d) Install the bracket with the bolt.

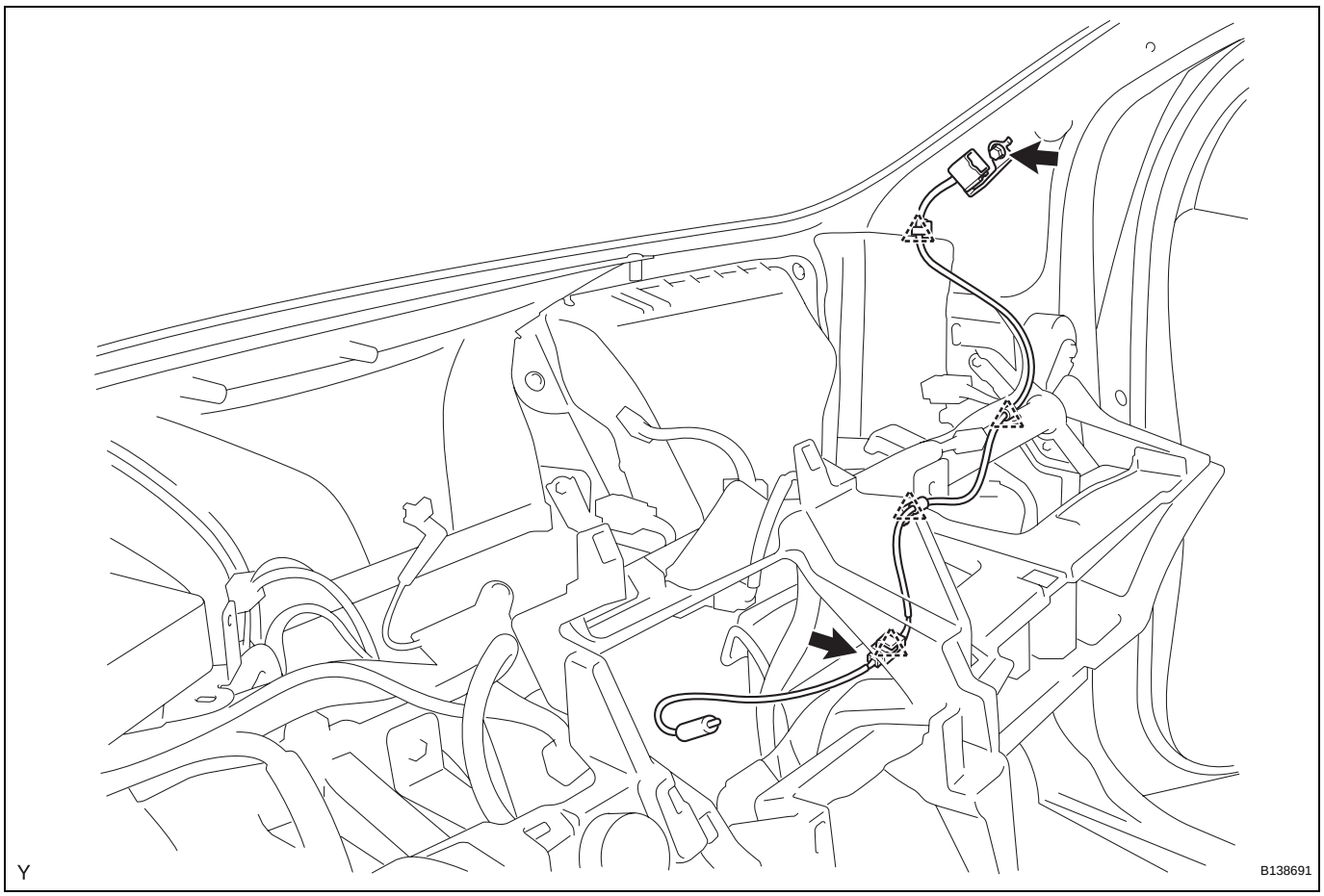

4. **INSTALL UPPER INSTRUMENT PANEL SUB-ASSEMBLY (See page IP-29)**
5. **INSTALL NO. 1 SWITCH HOLE BASE (See page IP-32)**
6. **INSTALL GLOVE COMPARTMENT DOOR ASSEMBLY (See page IP-32)**
7. **INSTALL COMBINATION METER ASSEMBLY (See page ME-148)**
8. **INSTALL INSTRUMENT CLUSTER FINISH PANEL (See page ME-148)**
9. **INSTALL INSTRUMENT PANEL FINISH PANEL END RH (See page ME-149)**
10. **INSTALL INSTRUMENT PANEL FINISH PANEL END LH (See page ME-149)**
11. **INSTALL FRONT PILLAR GARNISH RH (See page IR-71)**
12. **INSTALL FRONT PILLAR GARNISH LH (See page IR-72)**
13. **INSTALL MAP LIGHT ASSEMBLY (See page IR-73)**
14. **INSTALL ROOM LIGHT ASSEMBLY (See page IR-74)**

15. INSTALL VISOR HOLDER RH (See page IR-75)
16. INSTALL VISOR HOLDER LH (See page IR-75)
17. INSTALL VISOR ASSEMBLY RH (See page IR-75)
18. INSTALL VISOR ASSEMBLY LH (See page IR-75)
19. INSTALL ROOF HEADLINING SERVICE HOLE COVER (w/o Curtain Shield Airbag) (See page IR-76)
20. INSTALL ASSIST GRIP SUB-ASSEMBLY (See page IR-75)
21. INSTALL ASSIST GRIP COVER (See page IR-75)
22. INSTALL SEAT BELT ANCHOR COVER (See page SB-160)
23. INSTALL CENTER PILLAR UPPER GARNISH RH (See page IR-76)
24. INSTALL CENTER PILLAR UPPER GARNISH LH (See page IR-76)
25. INSTALL CENTER PILLAR LOWER GARNISH RH (See page IR-76)
26. INSTALL CENTER PILLAR LOWER GARNISH LH (See page IR-76)
27. INSTALL FRONT SEAT OUTER BELT ASSEMBLY RH (See page IR-76)
28. INSTALL FRONT SEAT OUTER BELT ASSEMBLY LH (See page IR-76)
29. INSTALL SEAT BELT ANCHOR COVER CAP (See page IR-76)
30. INSTALL ROOF SIDE INNER GARNISH RH (See page IR-77)
31. INSTALL ROOF SIDE INNER GARNISH LH (See page IR-77)
32. INSTALL REAR CENTER SEAT OUTER BELT ASSEMBLY (See page IR-78)
33. INSTALL DECK TRIM SIDE PANEL ASSEMBLY RH (See page IR-79)
34. INSTALL DECK TRIM SIDE PANEL ASSEMBLY LH (See page IR-79)
35. INSTALL REAR SEAT OUTER BELT ASSEMBLY RH (See page IR-79)
36. INSTALL REAR SEAT OUTER BELT ASSEMBLY LH (See page IR-80)
37. INSTALL REAR DOOR OPENING TRIM WEATHERSTRIP RH (See page IR-80)
38. INSTALL REAR DOOR OPENING TRIM WEATHERSTRIP LH (See page IR-80)

39. **INSTALL REAR DOOR SCUFF PLATE RH (See page IR-80)**
40. **INSTALL REAR DOOR SCUFF PLATE LH (See page IR-80)**
41. **INSTALL FRONT DOOR OPENING TRIM WEATHERSTRIP RH (See page IR-81)**
42. **INSTALL FRONT DOOR OPENING TRIM WEATHERSTRIP LH (See page IR-81)**
43. **INSTALL COWL SIDE TRIM BOARD RH (See page IR-81)**
44. **INSTALL COWL SIDE TRIM BOARD LH (See page IR-81)**
45. **INSTALL INSTRUMENT PANEL UNDER COVER SUB-ASSEMBLY RH (See page IR-81)**
46. **INSTALL INSTRUMENT PANEL UNDER COVER SUB-ASSEMBLY LH (See page IR-82)**
47. **INSTALL FRONT DOOR SCUFF PLATE RH (See page IR-82)**
48. **INSTALL FRONT DOOR SCUFF PLATE LH (See page IR-82)**
49. **INSTALL REAR DECK TRIM COVER (See page IR-82)**
50. **INSTALL REAR SEAT ASSEMBLY RH (for 60/40 Split Seat Type) (See page SE-102)**
51. **INSTALL REAR SEAT ASSEMBLY LH (for 60/40 Split Seat Type) (See page SE-84)**
52. **INSTALL NO. 1 REAR SEAT LEG COVER (for 60/40 Split Seat Type)**
    (a) for RH Side:
        (1) Remove the No. 1 rear seat leg cover (See page SE-103).
    (b) for LH Side:
        (1) Remove the No. 1 rear seat leg cover (See page SE-85).
53. **INSTALL NO. 2 REAR SEAT LEG COVER (for 60/40 Split Seat Type) (See page SE-85)**
54. **INSTALL REAR SEATBACK ASSEMBLY (for Hold Down Seat Type) (See page SE-122)**
55. **INSTALL REAR SEAT CUSHION COVER PAD SUB-ASSEMBLY (for Hold Down Seat Type) (See page SE-123)**
56. **INSTALL DECK FLOOR BOX RH (See page IR-83)**
57. **INSTALL DECK FLOOR BOX LH (See page IR-83)**
58. **INSTALL DECK BOARD SUB-ASSEMBLY (See page IR-83)**

59. **INSTALL PACKAGE TRAY TRIM PANEL ASSEMBLY (See page IR-83)**

60. **CONNECT CABLE TO NEGATIVE BATTERY TERMINAL**
Torque: 5.4 N*m (55 kgf*cm, 48 in.*lbf)

61. **CHECK SRS WARNING LIGHT**
(See page RS-31)

RADIO ANTENNA CORD (for Hatchback 3 Door)

COMPONENTS

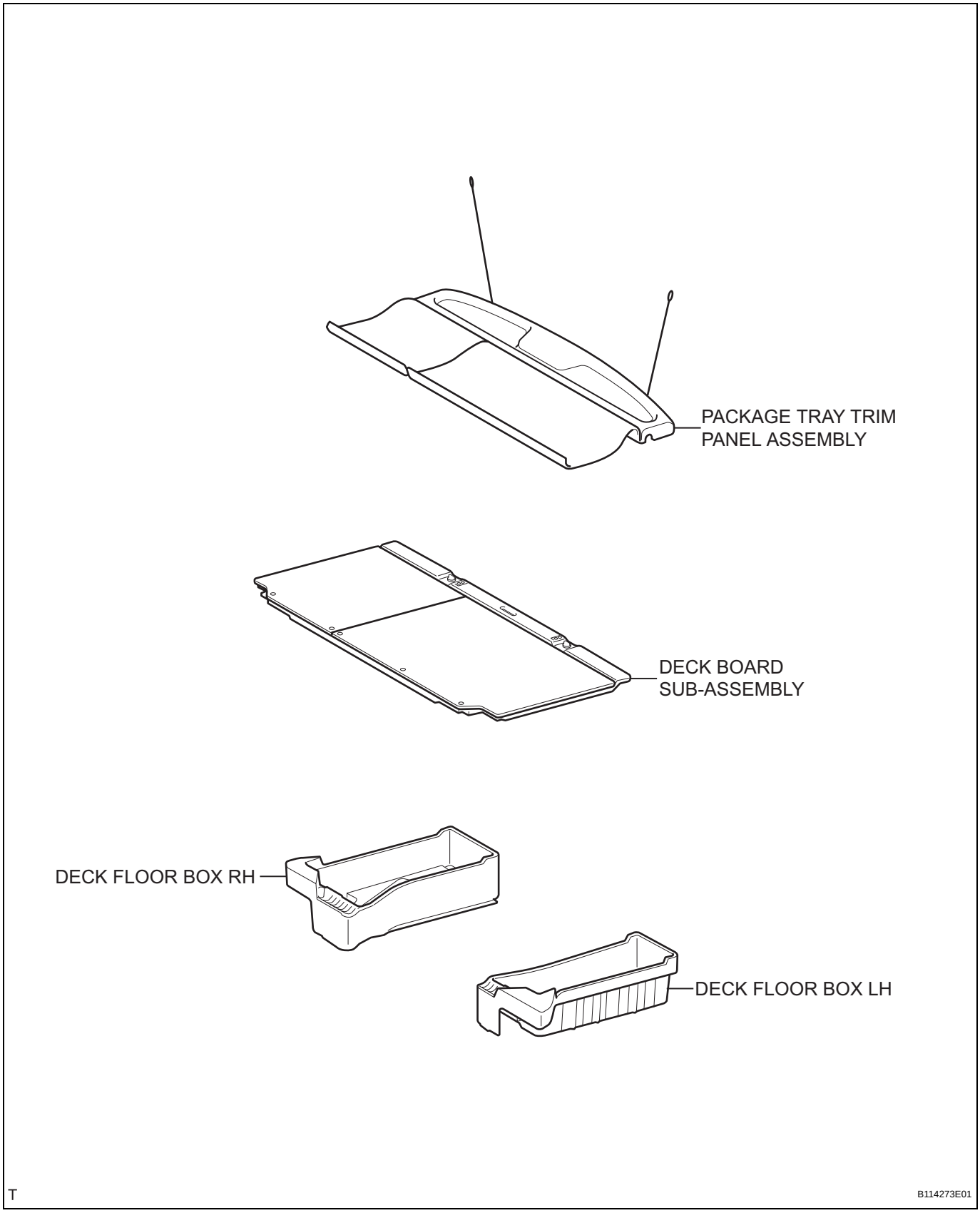

for 60/40 Split Seat Type:

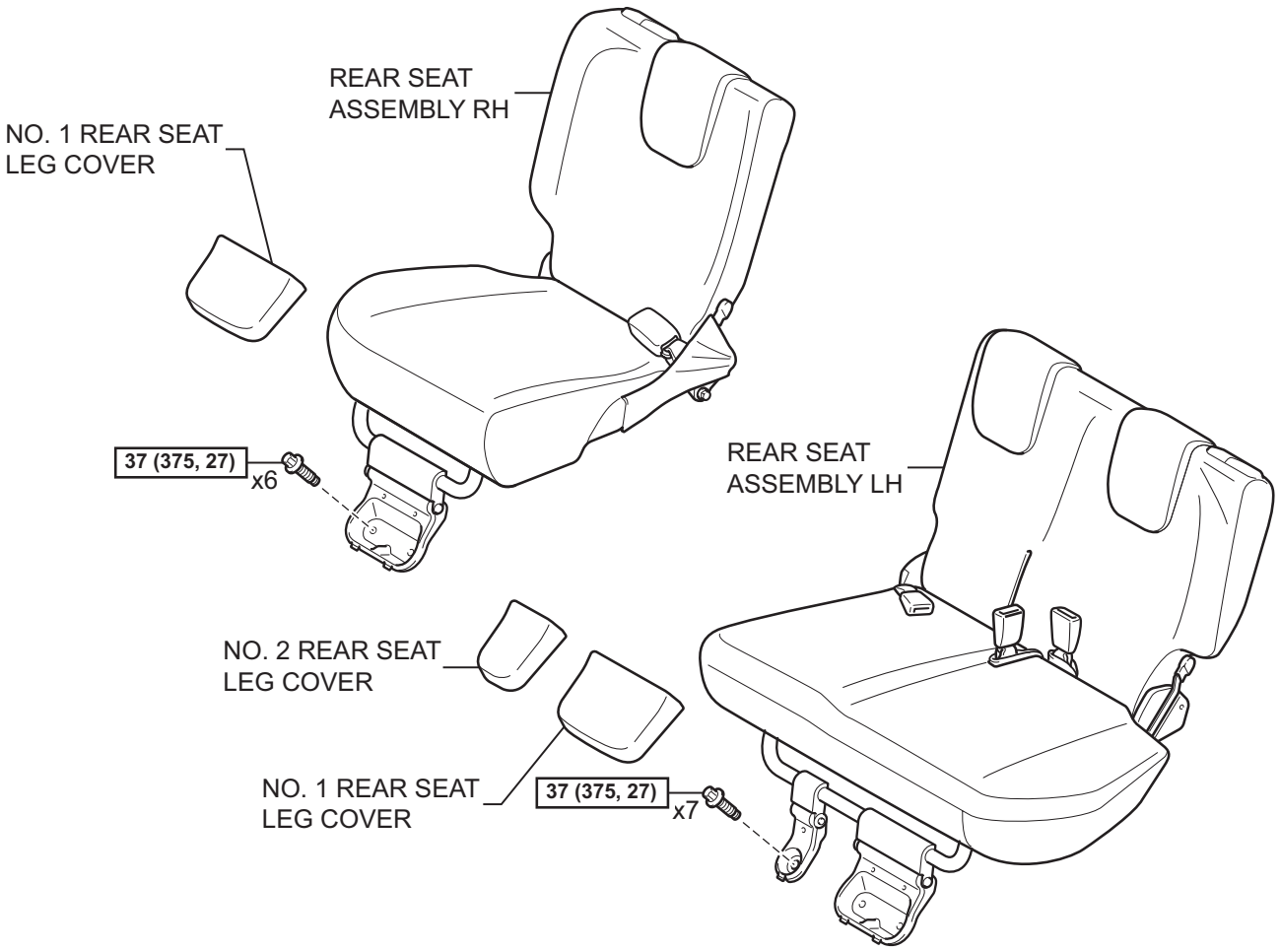

for Hold Down Seat Type:

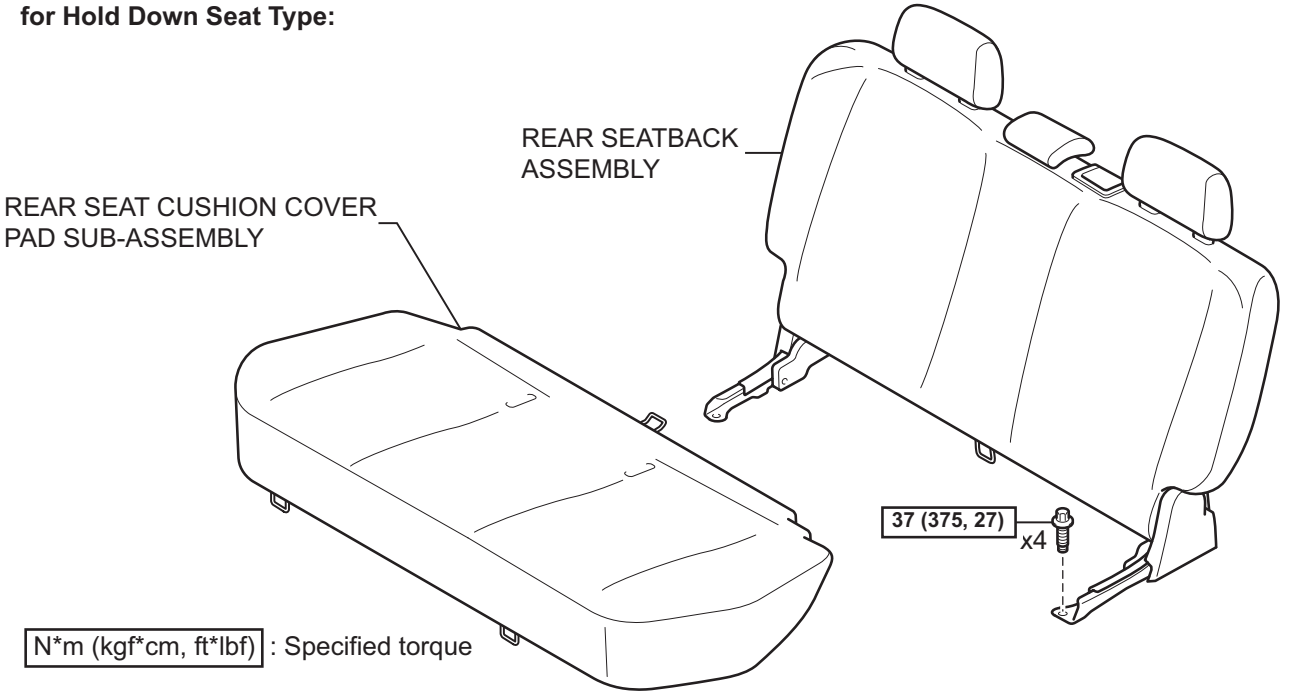

T

B121713E03

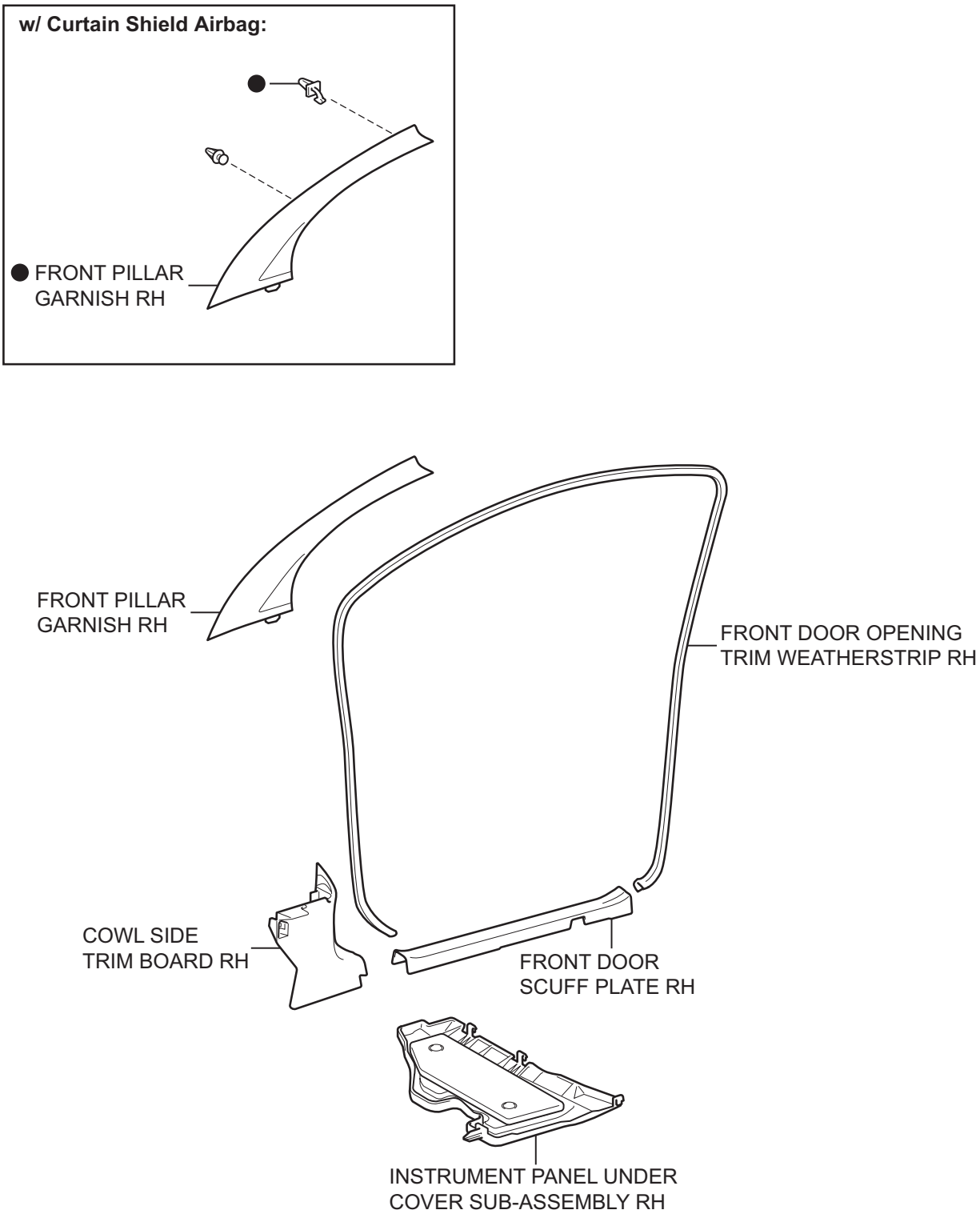

AV

● Non-reusable part

T

B114488E02

w/ Curtain Shield Airbag:

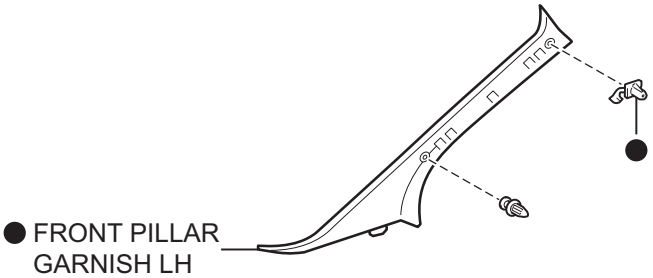

● FRONT PILLAR GARNISH LH

AV

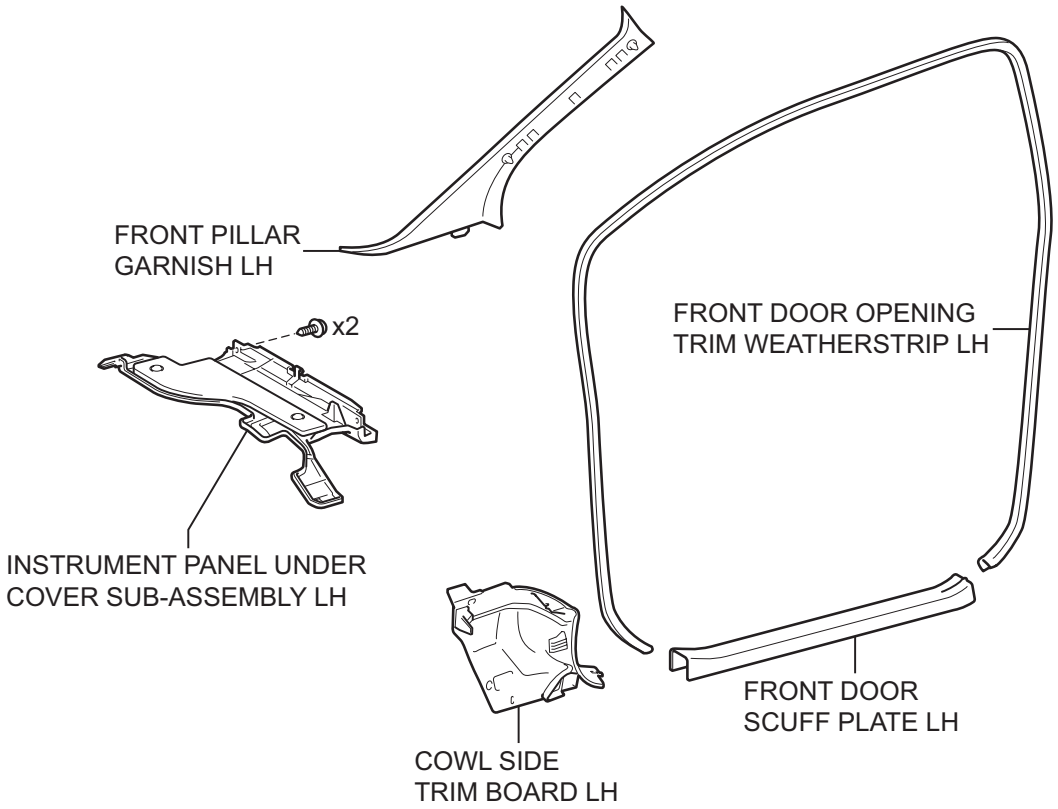

● Non-reusable part

T

B114489E02

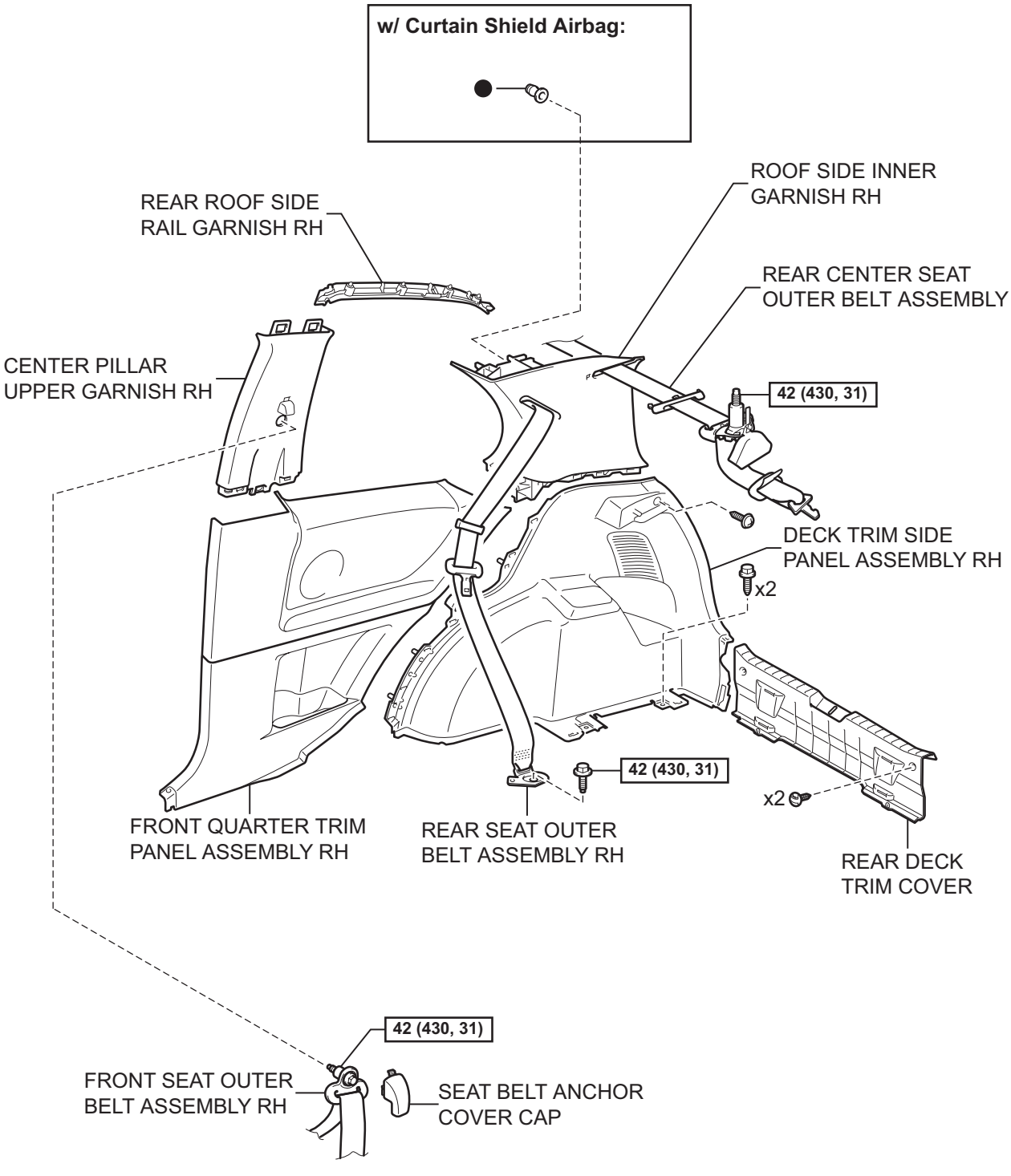

N*m (kgf*cm, ft*lbf) : Specified torque

● Non-reusable part

T

B117699E06

AV

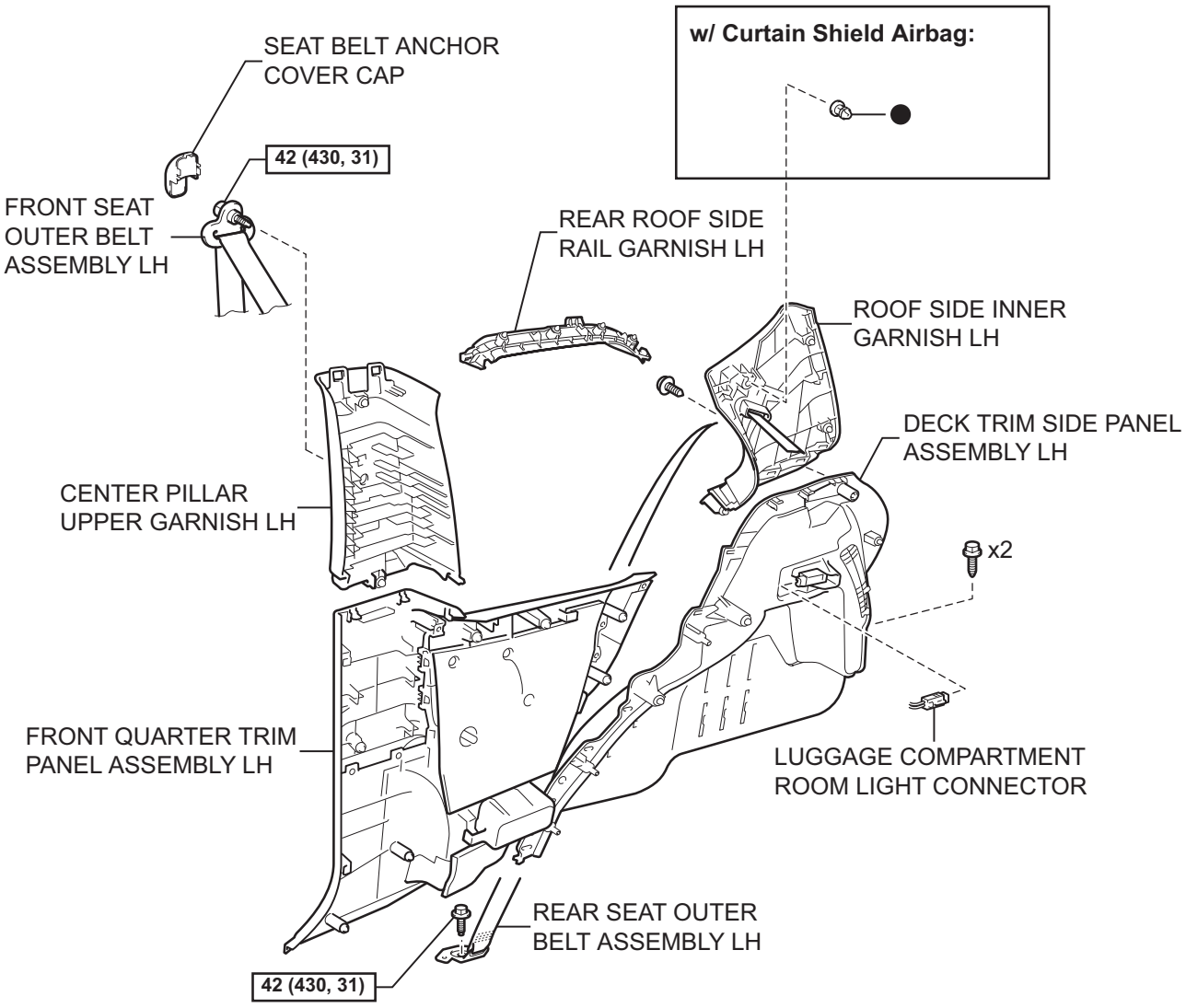

AV

N*m (kgf*cm, ft*lbf) : Specified torque

● Non-reusable part

T

B117700E07

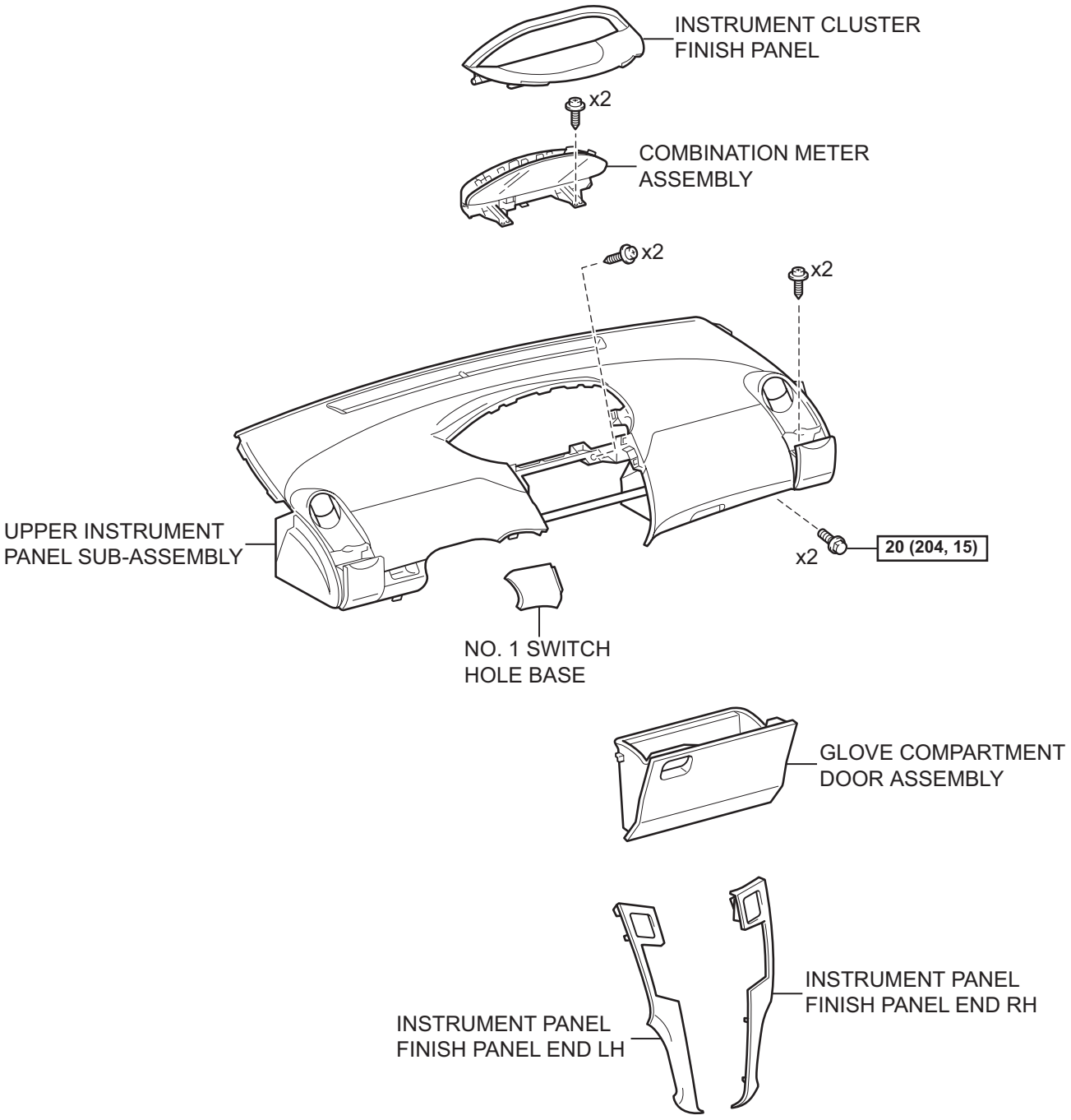

N*m (kgf*cm, ft*lbf) : Specified torque

T

B138684E01

AV

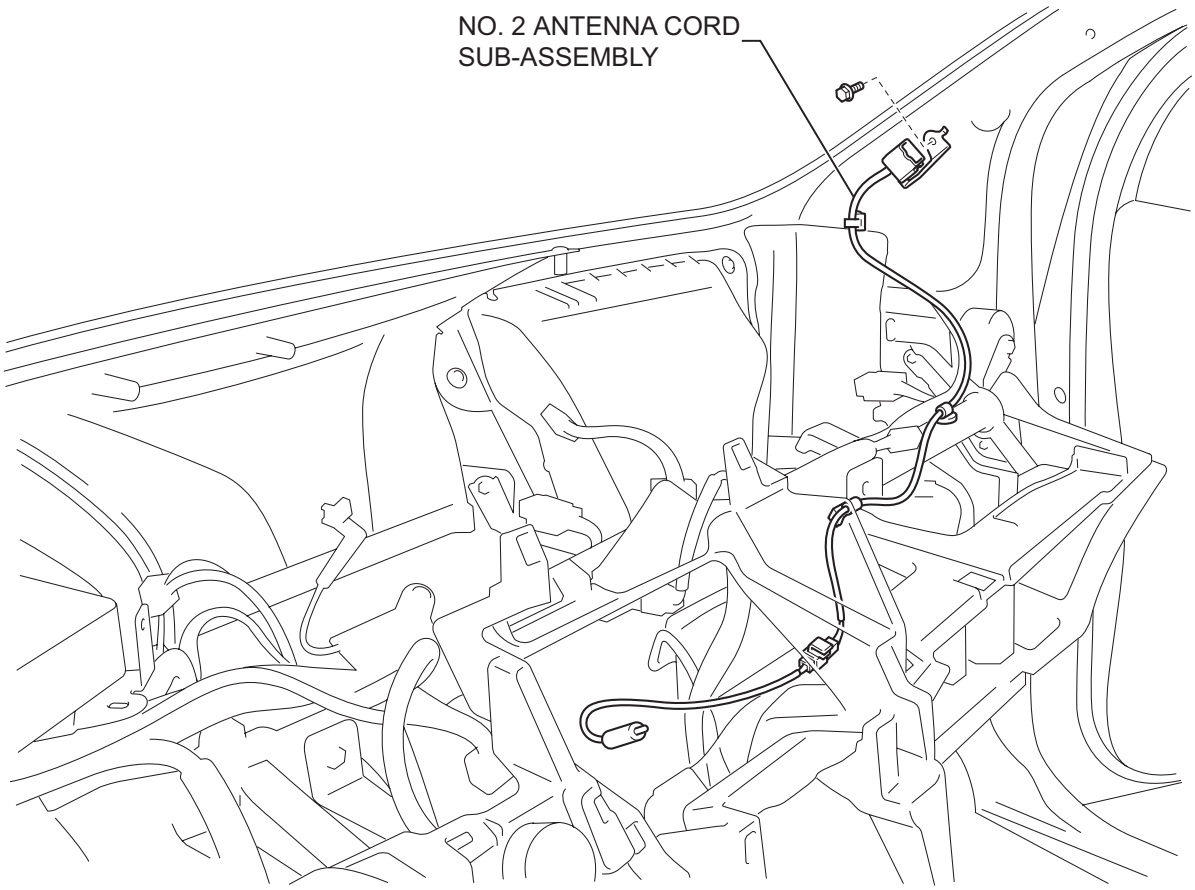

Y

B138685E01

w/ Curtain Shield Airbag:

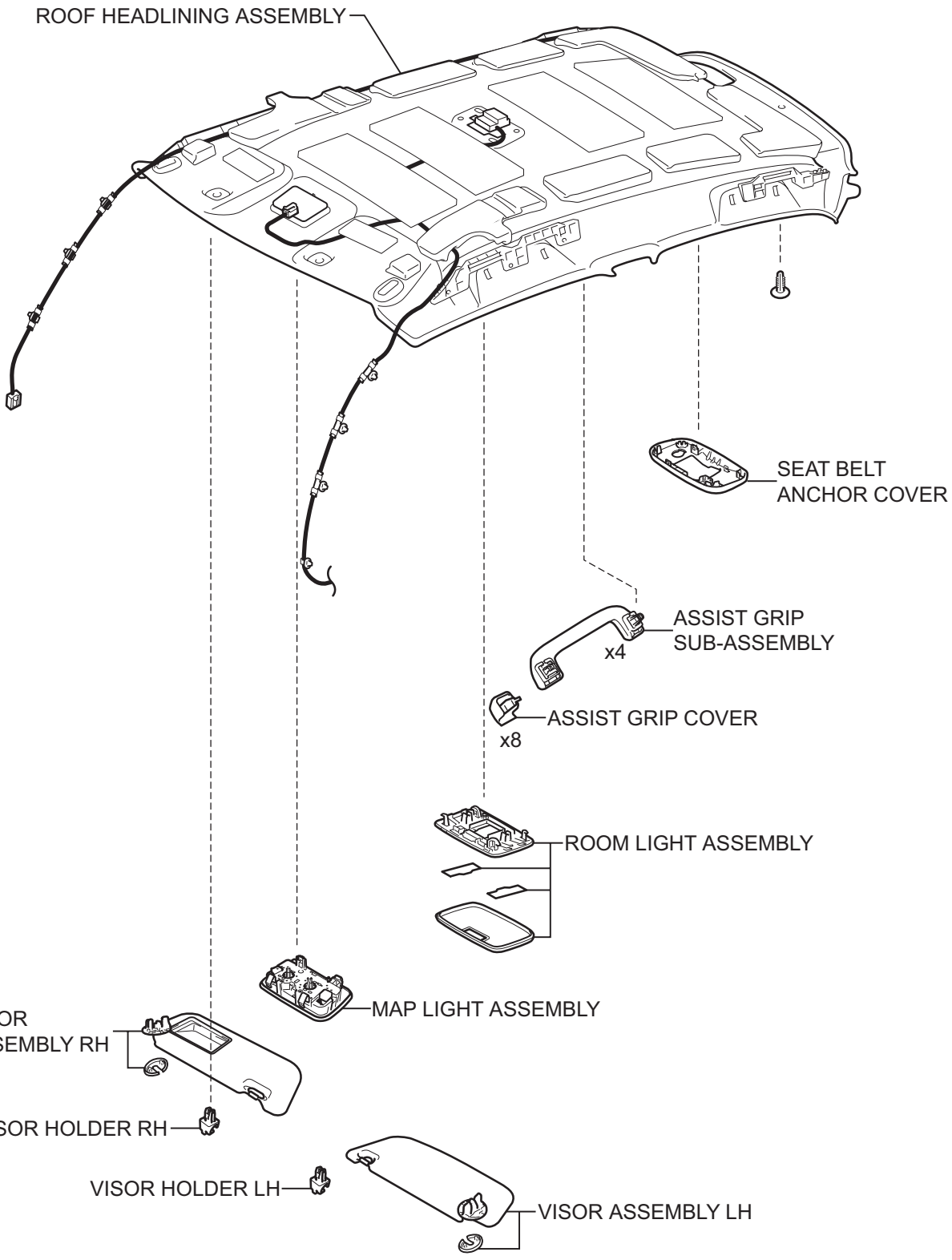

T

B138692E01

AV

w/o Curtain Shield Airbag:

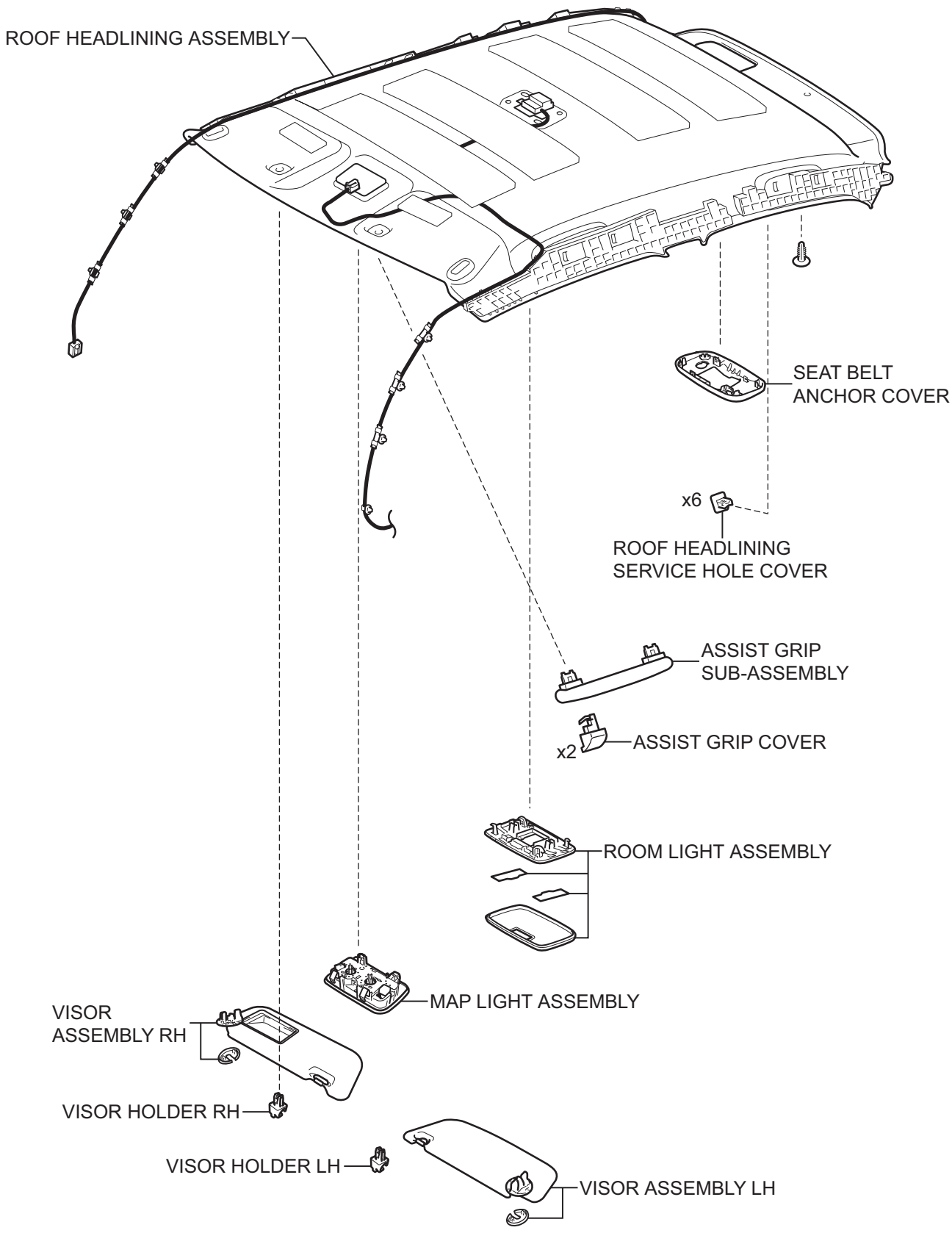

AV

T

B138693E01

w/ Curtain Shield Airbag:

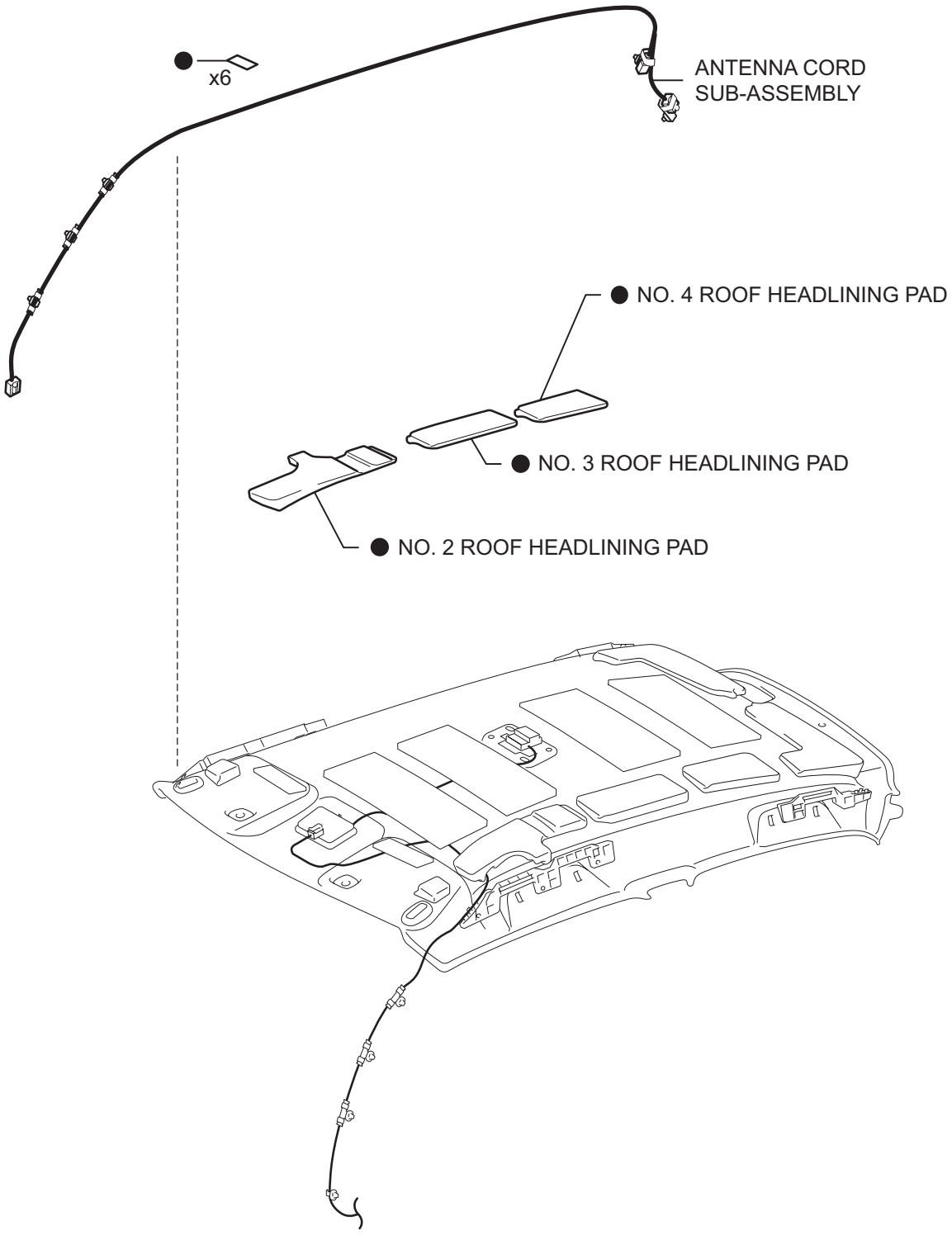

● Non-reusable part

T

B138694E01

w/o Curtain Shield Airbag:

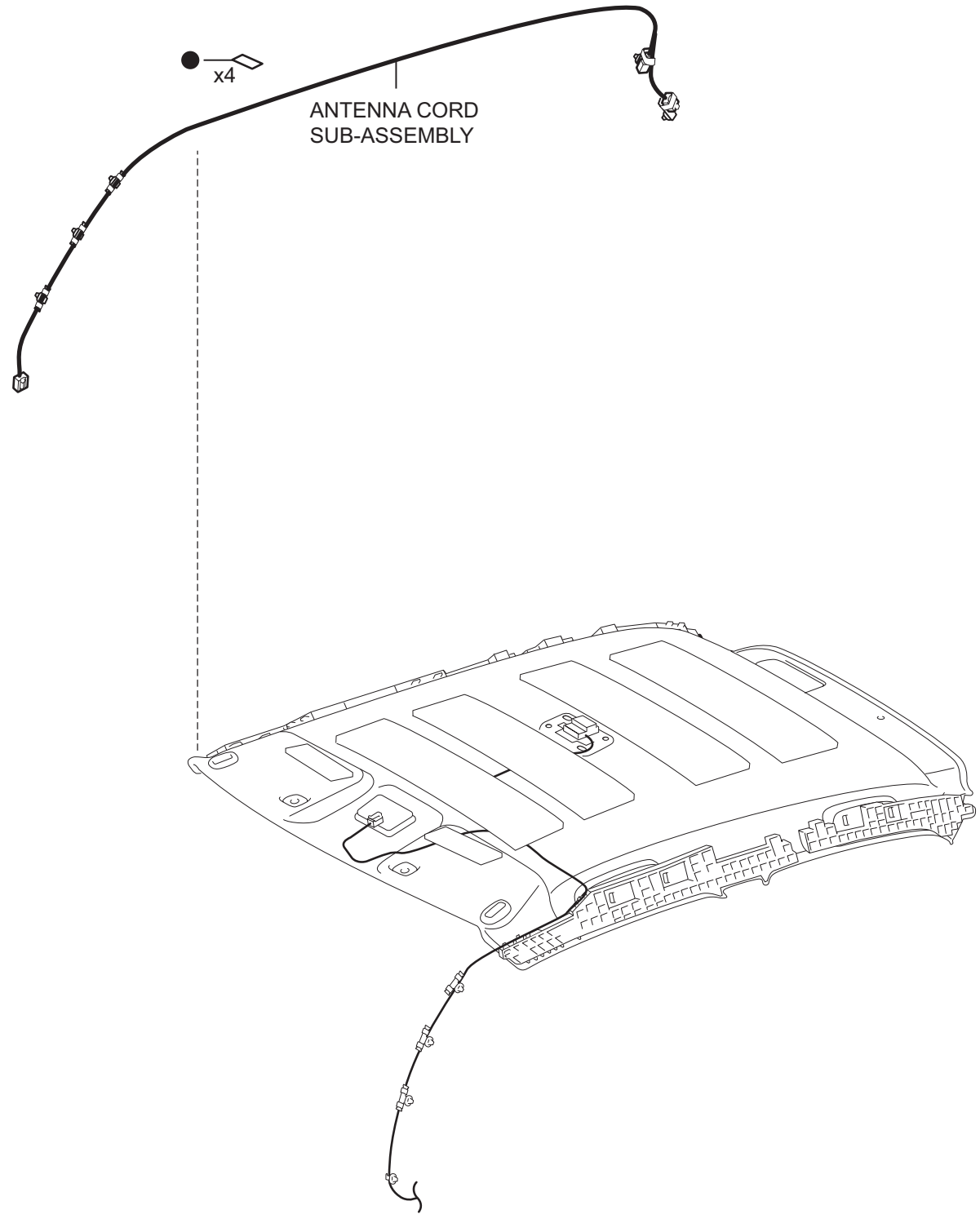

AV

● Non-reusable part

T

B138695E01

REMOVAL

CAUTION:
Some of these service operations affect the SRS airbag system. Read the precautionary notices concerning the SRS airbag system before servicing (See page RS-1).
NOTICE:
Always use "Torx" socket wrench E10 when removing the rear seat.

1. **DISCONNECT CABLE FROM NEGATIVE BATTERY TERMINAL**
   CAUTION:
   Wait for at least 90 seconds after disconnecting the cable to prevent the airbag from working.
2. **REMOVE PACKAGE TRAY TRIM PANEL ASSEMBLY (See page IR-48)**
3. **REMOVE DECK BOARD SUB-ASSEMBLY (See page IR-48)**
4. **REMOVE DECK FLOOR BOX RH (See page IR-48)**
5. **REMOVE DECK FLOOR BOX LH (See page IR-48)**
6. **REMOVE NO. 1 REAR SEAT LEG COVER (for 60/40 Split Seat Type)**
   (a) for RH Side:
      (1) Remove the No. 1 rear seat leg cover (See page SE-89).
   (b) for LH Side:
      (1) Remove the No. 1 rear seat leg cover (See page SE-70).
7. **REMOVE NO. 2 REAR SEAT LEG COVER (for 60/40 Split Seat Type) (See page SE-70)**
8. **REMOVE REAR SEAT ASSEMBLY RH (for 60/40 Split Seat Type) (See page SE-89)**
9. **REMOVE REAR SEAT ASSEMBLY LH (for 60/40 Split Seat Type) (See page SE-71)**
10. **REMOVE REAR SEAT CUSHION COVER PAD SUB-ASSEMBLY (for Hold Down Seat Type) (See page SE-114)**
11. **REMOVE REAR SEATBACK ASSEMBLY (for Hold Down Seat Type) (See page SE-115)**
12. **REMOVE FRONT DOOR SCUFF PLATE RH (See page IR-97)**
13. **REMOVE FRONT DOOR SCUFF PLATE LH (See page IR-97)**
14. **REMOVE INSTRUMENT PANEL UNDER COVER SUB-ASSEMBLY RH (See page IR-50)**
15. **REMOVE INSTRUMENT PANEL UNDER COVER SUB-ASSEMBLY LH (See page IR-50)**

16. REMOVE COWL SIDE TRIM BOARD RH (See page IR-50)
17. REMOVE COWL SIDE TRIM BOARD LH (See page IR-50)
18. REMOVE FRONT DOOR OPENING TRIM WEATHERSTRIP RH (See page IR-97)
19. REMOVE FRONT DOOR OPENING TRIM WEATHERSTRIP LH (See page IR-97)
20. REMOVE FRONT QUARTER TRIM PANEL ASSEMBLY RH (See page IR-97)
21. REMOVE FRONT QUARTER TRIM PANEL ASSEMBLY LH (See page IR-97)
22. REMOVE REAR DECK TRIM COVER (See page IR-49)
23. REMOVE REAR SEAT OUTER BELT ASSEMBLY RH (See page IR-98)
24. REMOVE REAR SEAT OUTER BELT ASSEMBLY LH (See page IR-98)
25. REMOVE DECK TRIM SIDE PANEL ASSEMBLY RH (See page IR-98)
26. REMOVE DECK TRIM SIDE PANEL ASSEMBLY LH (See page IR-98)
27. REMOVE SEAT BELT ANCHOR COVER CAP (See page IR-99)
28. REMOVE FRONT SEAT OUTER BELT ASSEMBLY RH (See page IR-99)
29. REMOVE FRONT SEAT OUTER BELT ASSEMBLY LH (See page IR-99)
30. REMOVE CENTER PILLAR UPPER GARNISH RH (See page IR-99)
31. REMOVE CENTER PILLAR UPPER GARNISH LH (See page IR-99)
32. REMOVE REAR CENTER SEAT OUTER BELT ASSEMBLY (See page IR-52)
33. REMOVE ROOF SIDE INNER GARNISH RH (See page IR-99)
34. REMOVE ROOF SIDE INNER GARNISH LH (See page IR-100)
35. REMOVE REAR ROOF SIDE RAIL GARNISH RH (See page IR-100)
36. REMOVE REAR ROOF SIDE RAIL GARNISH LH (See page IR-100)
37. REMOVE SEAT BELT ANCHOR COVER (See page SB-159)

38. **REMOVE ROOF HEADLINING SERVICE HOLE COVER (w/o Curtain Shield Airbag) (See page IR-55)**
39. **REMOVE ASSIST GRIP COVER (See page IR-55)**
40. **REMOVE ASSIST GRIP SUB-ASSEMBLY (See page IR-56)**
41. **REMOVE VISOR ASSEMBLY RH (See page IR-56)**
42. **REMOVE VISOR ASSEMBLY LH (See page IR-56)**
43. **REMOVE VISOR HOLDER RH (See page IR-56)**
44. **REMOVE VISOR HOLDER LH (See page IR-56)**
45. **REMOVE ROOM LIGHT ASSEMBLY (See page IR-57)**
46. **REMOVE MAP LIGHT ASSEMBLY (See page IR-58)**
47. **REMOVE FRONT PILLAR GARNISH RH (See page IR-58)**
48. **REMOVE FRONT PILLAR GARNISH LH (See page IR-59)**
49. **REMOVE INSTRUMENT PANEL FINISH PANEL END RH (See page ME-145)**
50. **REMOVE INSTRUMENT PANEL FINISH PANEL END LH (See page ME-145)**
51. **REMOVE INSTRUMENT CLUSTER FINISH PANEL (See page ME-145)**
52. **REMOVE COMBINATION METER ASSEMBLY (See page ME-146)**
53. **REMOVE GLOVE COMPARTMENT DOOR ASSEMBLY (See page IP-20)**
54. **REMOVE NO. 1 SWITCH HOLE BASE (See page IP-20)**
55. **REMOVE UPPER INSTRUMENT PANEL SUB-ASSEMBLY (See page IP-21)**
56. **REMOVE NO. 2 ANTENNA CORD SUB-ASSEMBLY (See page AV-82)**
57. **REMOVE ROOF HEADLINING ASSEMBLY**
    (a) Remove the antenna cord from the antenna cord clamp.
    (b) Disconnect the 2 connectors.
    (c) Using a clip remover, remove the 2 connectors.
    (d) w/ Curtain Shield Airbag:
        (1) Using a clip remover, remove the clip.

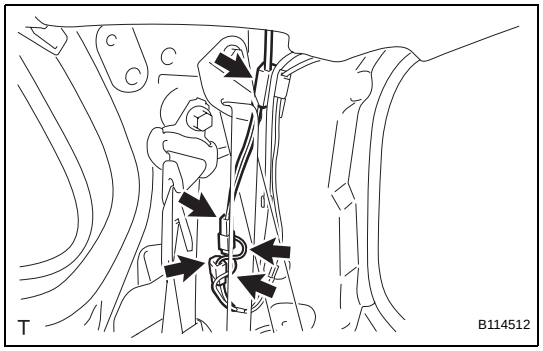

AV

(2) Disengage the 4 hooks.

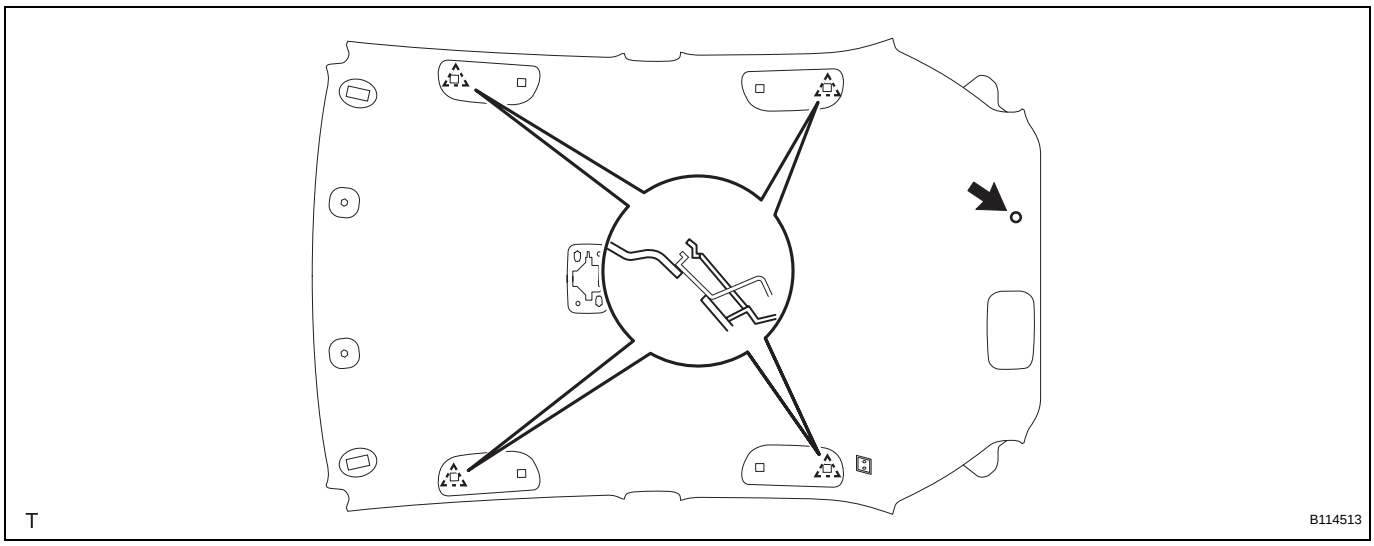

(e) w/o Curtain Shield Airbag:
(1) Using a clip remover, remove the clip.
(2) Disengage the 2 claws and the 4 hooks.

AV

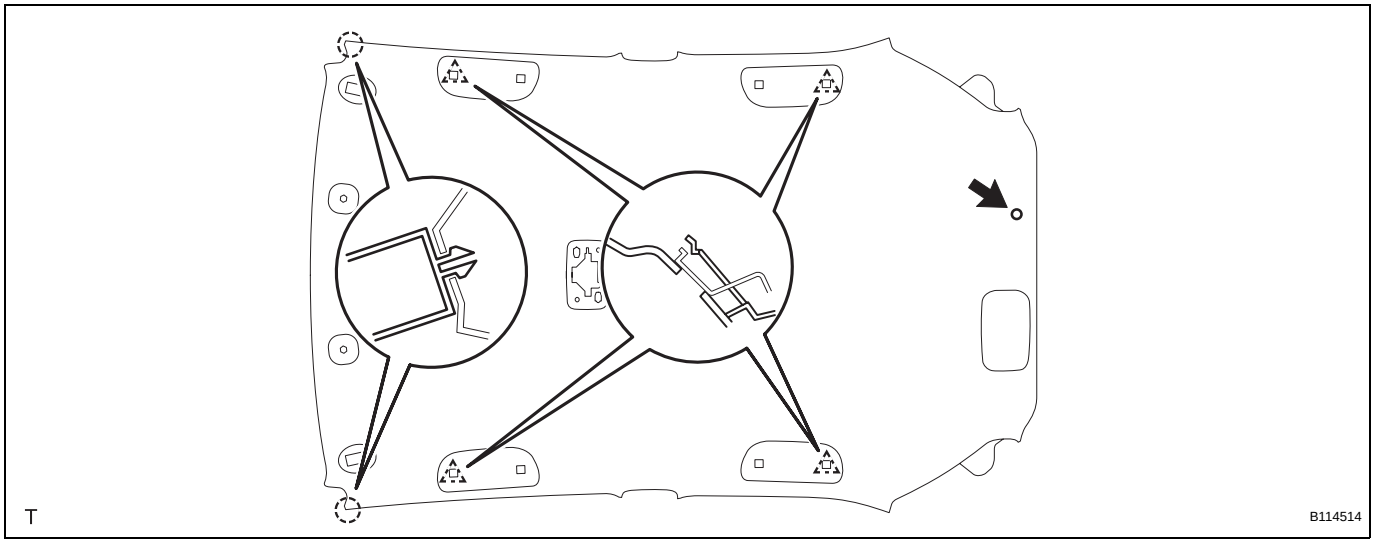

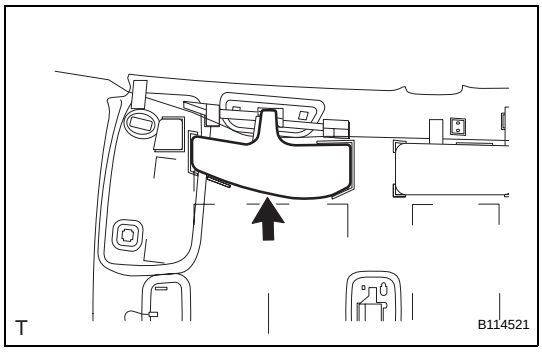

58. REMOVE NO. 2 ROOF HEADLINING PAD (w/ Curtain Shield Airbag)

(a) Remove the No. 2 roof headlining pad.

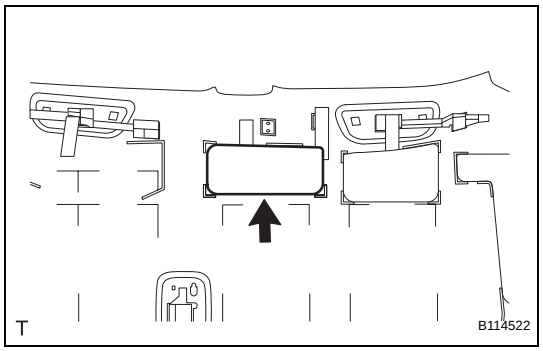

59. REMOVE NO. 3 ROOF HEADLINING PAD (w/ Curtain Shield Airbag)

(a) Remove the No. 3 roof headlining pad.

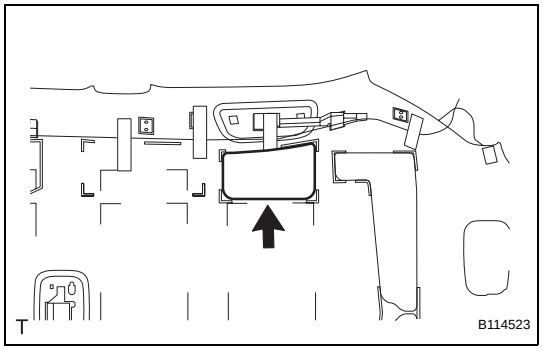

60. REMOVE NO. 4 ROOF HEADLINING PAD (w/ Curtain Shield Airbag)

(a) Remove the No. 4 roof headlining pad.

61. REMOVE ANTENNA CORD SUB-ASSEMBLY

(a) w/ Curtain Shield Airbag:

(1) Remove the 6 pieces of tape.

(2) Remove the antenna cord from the cutout of the roof headlining.

(3) Remove the antenna cord from the 3 claws of the front and rear side rail spacers.

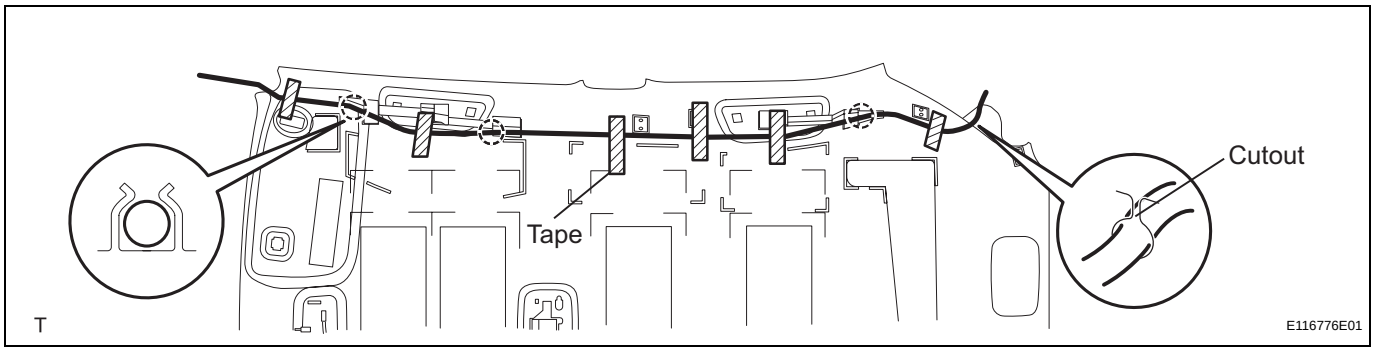

(b) w/o Curtain Shield Airbag:

(1) Remove the 4 pieces of tape.

(2) Remove the antenna cord from the cutout of the roof headlining.

(3) Remove the antenna cord from the 5 claws of the front and rear side rail spacers.

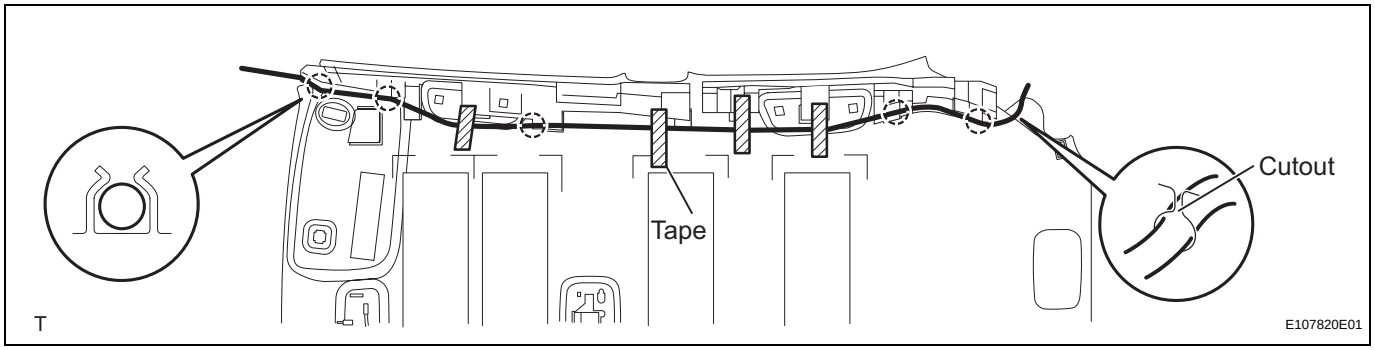

AV

INSTALLATION

CAUTION:
Some of these service operations affect the SRS airbag system. Read the precautionary notices concerning the SRS airbag system before servicing (See page RS-1).
NOTICE:
Always use "Torx" socket wrench E10 when installing the rear seat.

1. INSTALL ANTENNA CORD SUB-ASSEMBLY

(a) w/ Curtain Shield Airbag:

(1) Install the part of the antenna cord marked with red positioning tape into claw A of the front side rail spacer.

(2) Install the antenna cord positioning tapes into the 2 claws of the front and rear side rail spacers.

(3) Insert the antenna cord positioning tape into the cutout of the roof headlining.

(4) Align the locating tapes on the antenna cord with the markings on the roof headlining.

(5) Install the antenna cord onto the roof headlining with 6 new pieces of tape.

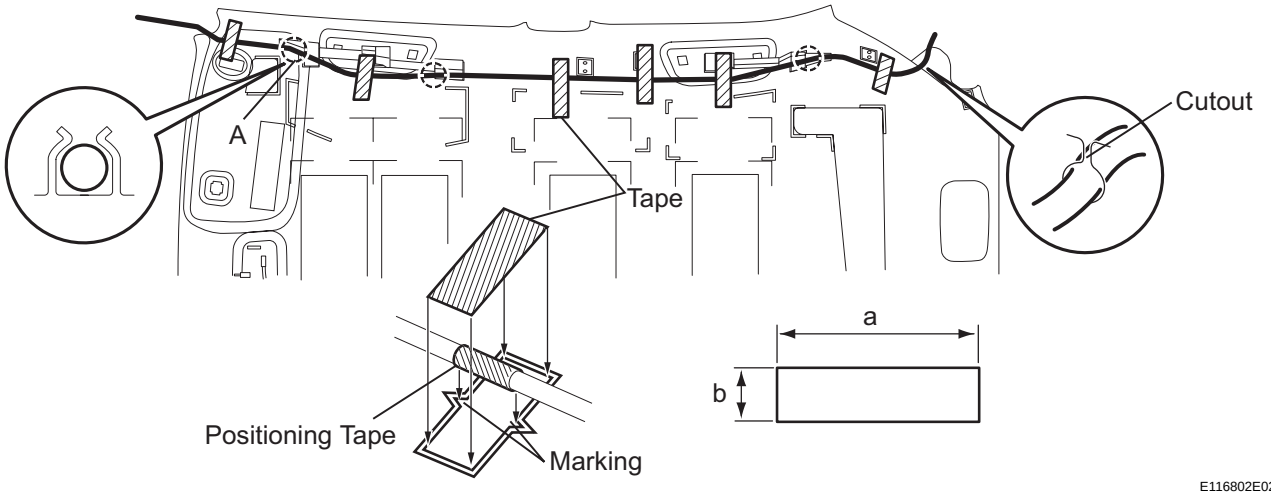

Tape size:

Mark	Measurement
a	80 mm (3.15 in.)
b	20 mm (0.787 in.)

NOTICE:
- **Apply the tape securely in place.**
- **Do not touch the adhesive surface when applying the tape to prevent adhesion failure.**

(b) w/o Curtain Shield Airbag:

(1) Install the part of the antenna cord marked with red positioning tape into claw A of the front side rail spacer.

(2) Install the antenna cord positioning tapes into the 4 claws of the front and rear side rail spacers.
(3) Insert the antenna cord positioning tape into the cutout of the roof headlining.
(4) Align the locating tapes on the antenna cord with the markings on the roof headlining.
(5) Install the antenna cord onto the roof headlining with 4 new pieces of tape.

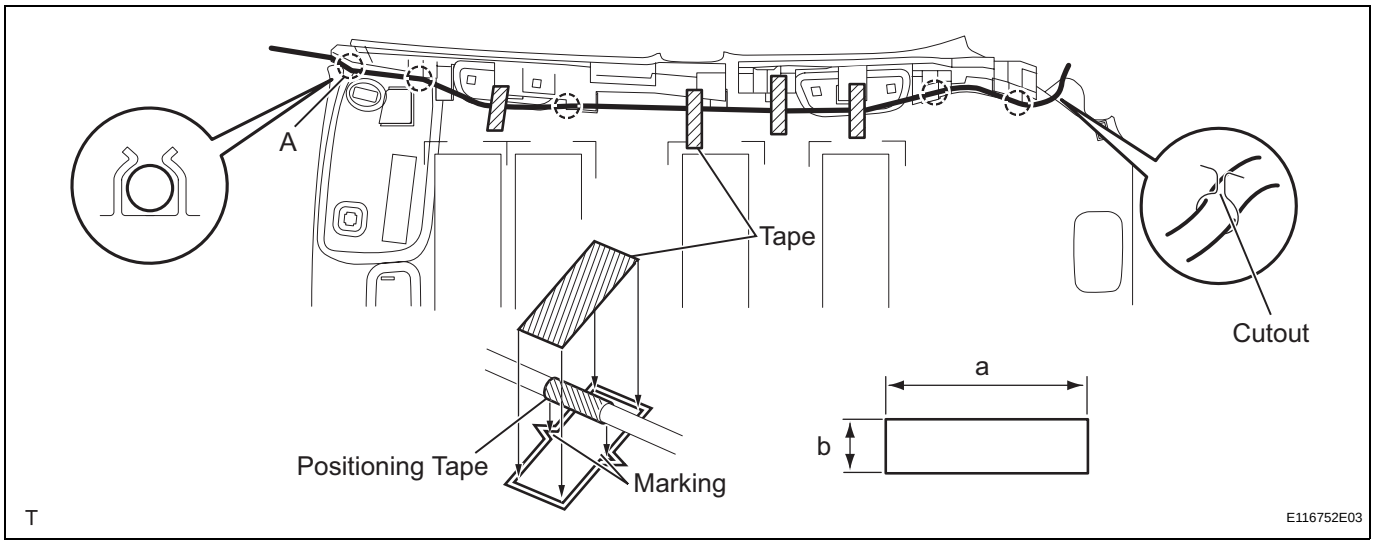

Tape size:

Mark	Measurement
a	80 mm (3.15 in.)
b	20 mm (0.787 in.)

NOTICE:
- **Apply the tape securely in place.**
- **Do not touch the adhesive surface when applying the tape to prevent adhesion failure.**

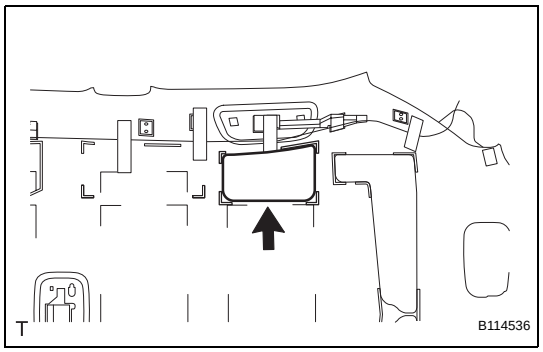

2. INSTALL NO. 4 ROOF HEADLINING PAD (w/ Curtain Shield Airbag)

(a) Align a new No. 4 roof headlining pad with the markings of the roof headlining and install it onto the roof headlining.

AV

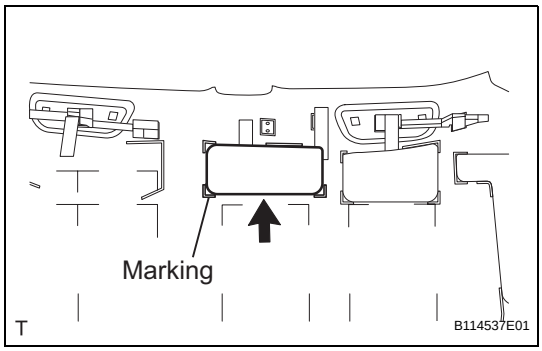

3. INSTALL NO. 3 ROOF HEADLINING PAD (w/ Curtain Shield Airbag)

(a) Align a new No. 3 roof headlining pad with the markings of the roof headlining and install it onto the roof headlining.

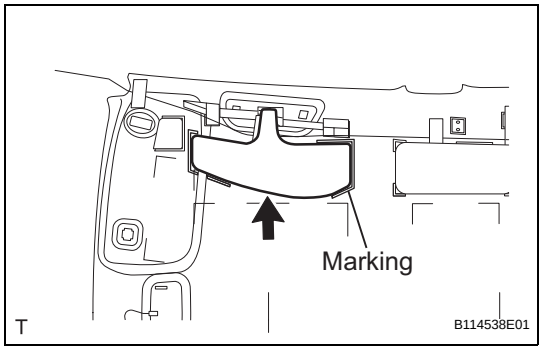

4. INSTALL NO. 2 ROOF HEADLINING PAD (w/ Curtain Shield Airbag)

(a) Align a new No. 2 roof headlining pad with the markings of the roof headlining and install it onto the roof headlining.

5. INSTALL ROOF HEADLINING ASSEMBLY

(a) w/ Curtain Shield Airbag:

(1) Engage the 4 hooks and install the roof headlining.

(2) Install the clip.

AV

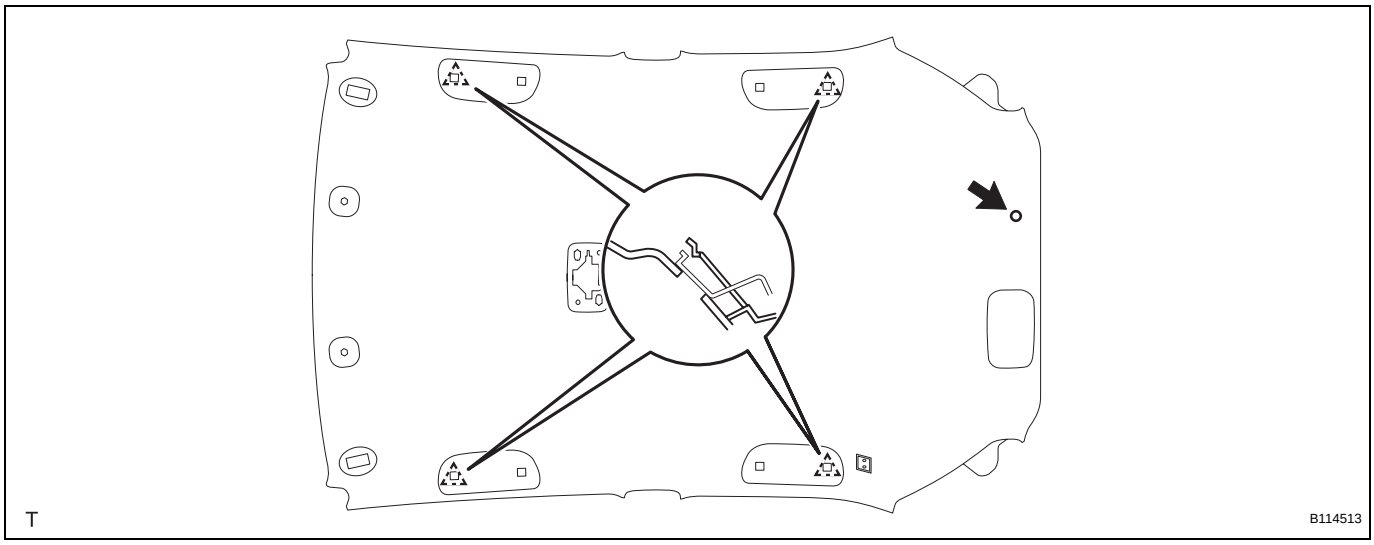

(b) w/o Curtain Shield Airbag:

(1) Engage the 2 claws and the 4 hooks and install the roof headlining.

(2) Install the clip.

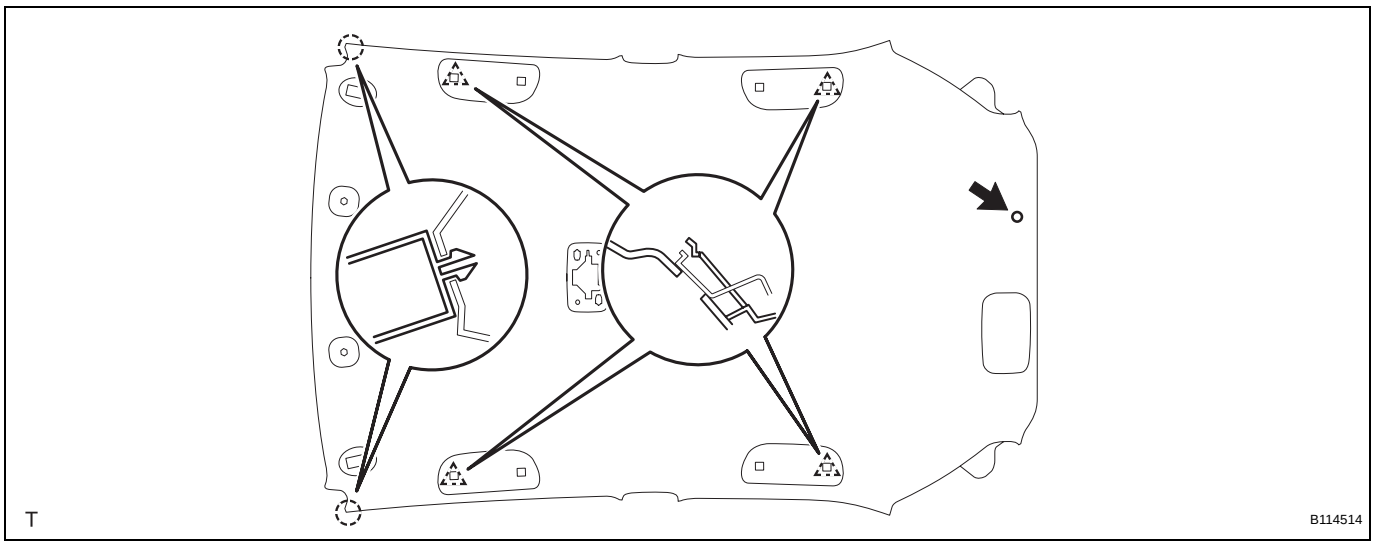

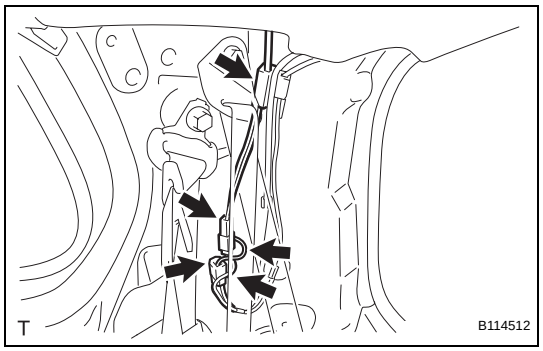

(c) Install the 2 connectors.
(d) Connect the 2 connectors.
(e) Install the antenna cord onto the antenna cord clamp.

6. **INSTALL NO. 2 ANTENNA CORD SUB-ASSEMBLY (See page AV-88)**
7. **INSTALL UPPER INSTRUMENT PANEL SUB-ASSEMBLY (See page IP-29)**
8. **INSTALL NO. 1 SWITCH HOLE BASE (See page IP-32)**
9. **INSTALL GLOVE COMPARTMENT DOOR ASSEMBLY (See page IP-32)**
10. **INSTALL COMBINATION METER ASSEMBLY (See page ME-148)**
11. **INSTALL INSTRUMENT CLUSTER FINISH PANEL (See page ME-148)**
12. **INSTALL INSTRUMENT PANEL FINISH PANEL END RH (See page ME-149)**
13. **INSTALL INSTRUMENT PANEL FINISH PANEL END LH (See page ME-149)**
14. **INSTALL FRONT PILLAR GARNISH RH (See page IR-71)**
15. **INSTALL FRONT PILLAR GARNISH LH (See page IR-72)**
16. **INSTALL MAP LIGHT ASSEMBLY (See page IR-73)**
17. **INSTALL ROOM LIGHT ASSEMBLY (See page IR-74)**
18. **INSTALL VISOR HOLDER RH (See page IR-75)**
19. **INSTALL VISOR HOLDER LH (See page IR-75)**
20. **INSTALL VISOR ASSEMBLY RH (See page IR-75)**
21. **INSTALL VISOR ASSEMBLY LH (See page IR-75)**

22. INSTALL ASSIST GRIP SUB-ASSEMBLY (See page IR-75)
23. INSTALL ASSIST GRIP COVER (See page IR-75)
24. INSTALL ROOF HEADLINING SERVICE HOLE COVER (w/o Curtain Shield Airbag) (See page IR-76)
25. INSTALL SEAT BELT ANCHOR COVER (See page SB-160)
26. INSTALL REAR ROOF SIDE RAIL GARNISH RH (See page IR-115)
27. INSTALL REAR ROOF SIDE RAIL GARNISH LH (See page IR-115)
28. INSTALL ROOF SIDE INNER GARNISH RH (See page IR-115)
29. INSTALL ROOF SIDE INNER GARNISH LH (See page IR-116)
30. INSTALL REAR CENTER SEAT OUTER BELT ASSEMBLY (See page IR-78)
31. INSTALL CENTER PILLAR UPPER GARNISH RH (See page IR-116)
32. INSTALL CENTER PILLAR UPPER GARNISH LH (See page IR-116)
33. INSTALL FRONT SEAT OUTER BELT ASSEMBLY RH (See page IR-117)
34. INSTALL FRONT SEAT OUTER BELT ASSEMBLY LH (See page IR-117)
35. INSTALL SEAT BELT ANCHOR COVER CAP (See page IR-117)
36. INSTALL DECK TRIM SIDE PANEL ASSEMBLY RH (See page IR-117)
37. INSTALL DECK TRIM SIDE PANEL ASSEMBLY LH (See page IR-118)
38. INSTALL REAR SEAT OUTER BELT ASSEMBLY RH (See page IR-118)
39. INSTALL REAR SEAT OUTER BELT ASSEMBLY LH (See page IR-118)
40. INSTALL REAR DECK TRIM COVER (See page IR-82)
41. INSTALL FRONT QUARTER TRIM PANEL ASSEMBLY RH (See page IR-118)
42. INSTALL FRONT QUARTER TRIM PANEL ASSEMBLY LH (See page IR-119)
43. INSTALL FRONT DOOR OPENING TRIM WEATHERSTRIP RH (See page IR-119)
44. INSTALL FRONT DOOR OPENING TRIM WEATHERSTRIP LH (See page IR-119)

45. **INSTALL COWL SIDE TRIM BOARD RH (See page IR-81)**
46. **INSTALL COWL SIDE TRIM BOARD LH (See page IR-81)**
47. **INSTALL INSTRUMENT PANEL UNDER COVER SUB-ASSEMBLY RH (See page IR-81)**
48. **INSTALL INSTRUMENT PANEL UNDER COVER SUB-ASSEMBLY LH (See page IR-82)**
49. **INSTALL FRONT DOOR SCUFF PLATE RH (See page IR-119)**
50. **INSTALL FRONT DOOR SCUFF PLATE LH (See page IR-119)**
51. **INSTALL REAR SEAT ASSEMBLY RH (for 60/40 Slide Reclining Hold Down Seat Type) (See page SE-102)**
52. **INSTALL REAR SEAT ASSEMBLY LH (for 60/40 Split Seat Type) (See page SE-84)**
53. **INSTALL NO. 2 REAR SEAT LEG COVER (for 60/40 Split Seat Type) (See page SE-85)**
54. **INSTALL NO. 1 REAR SEAT LEG COVER (for 60/40 Split Seat Type)**
    (a) for RH Side:
        (1) Install the No. 1 rear seat leg cover (See page SE-103).
    (b) for LH Side:
        (1) Install the No. 1 rear seat leg cover (See page SE-85).
55. **INSTALL REAR SEATBACK ASSEMBLY (for Hold Down Seat Type) (See page SE-123)**
56. **INSTALL REAR SEAT CUSHION COVER PAD SUB-ASSEMBLY (for Hold Down Seat Type) (See page SE-122)**
57. **INSTALL DECK FLOOR BOX RH (See page IR-83)**
58. **INSTALL DECK FLOOR BOX LH (See page IR-83)**
59. **INSTALL DECK BOARD SUB-ASSEMBLY (See page IR-83)**
60. **INSTALL PACKAGE TRAY TRIM PANEL ASSEMBLY (See page IR-83)**
61. **CONNECT CABLE TO NEGATIVE BATTERY TERMINAL**
    Torque: 5.4 N*m (55 kgf*cm, 48 in.*lbf)
62. **CHECK SRS WARNING LIGHT**
    (See page RS-31)

AV

RADIO ANTENNA POLE (for Hatchback)

COMPONENTS

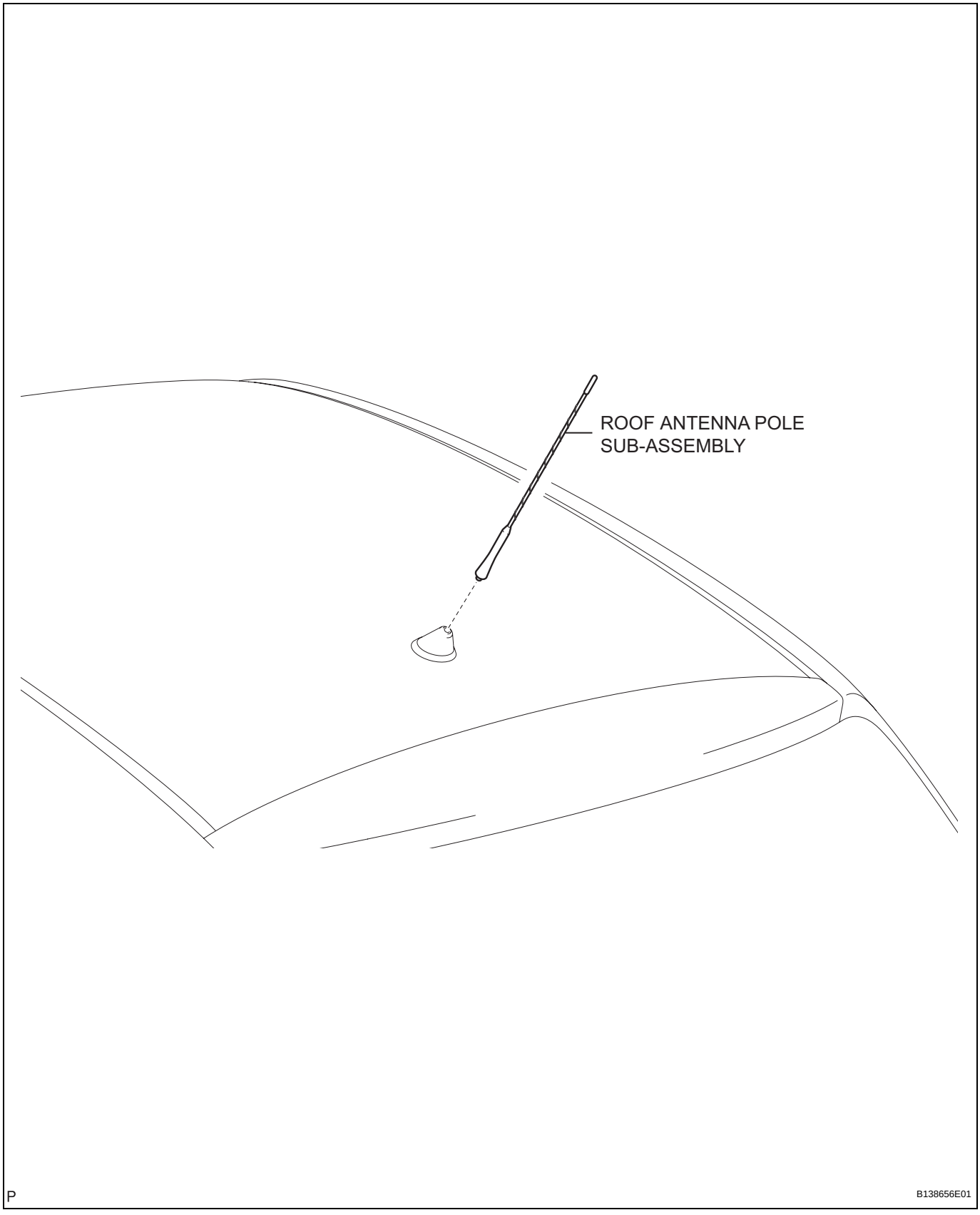

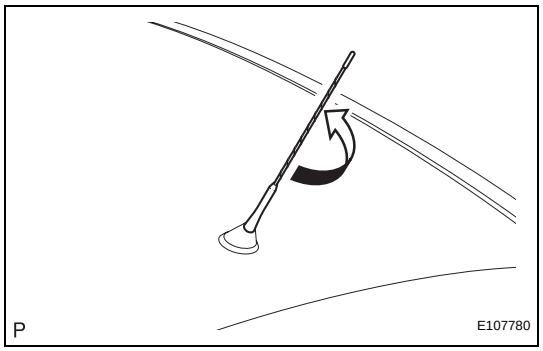

REMOVAL

1. REMOVE ROOF ANTENNA POLE SUB-ASSEMBLY

(a) Remove the roof antenna pole by turning it in the direction of the arrow shown in the illustration.

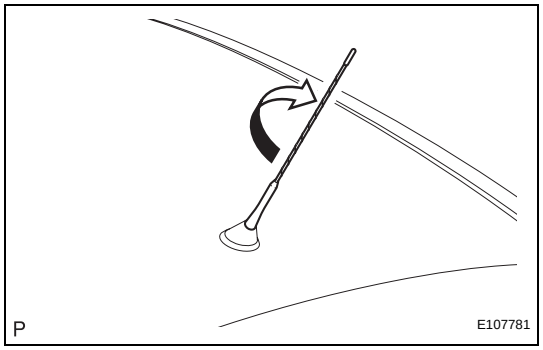

INSTALLATION

1. INSTALL ROOF ANTENNA POLE SUB-ASSEMBLY

(a) Install the roof antenna pole by turning it in the direction of the arrow shown in the illustration.

AMPLIFIER ANTENNA (for Sedan)

COMPONENTS

for 60/40 Split Seat Type:

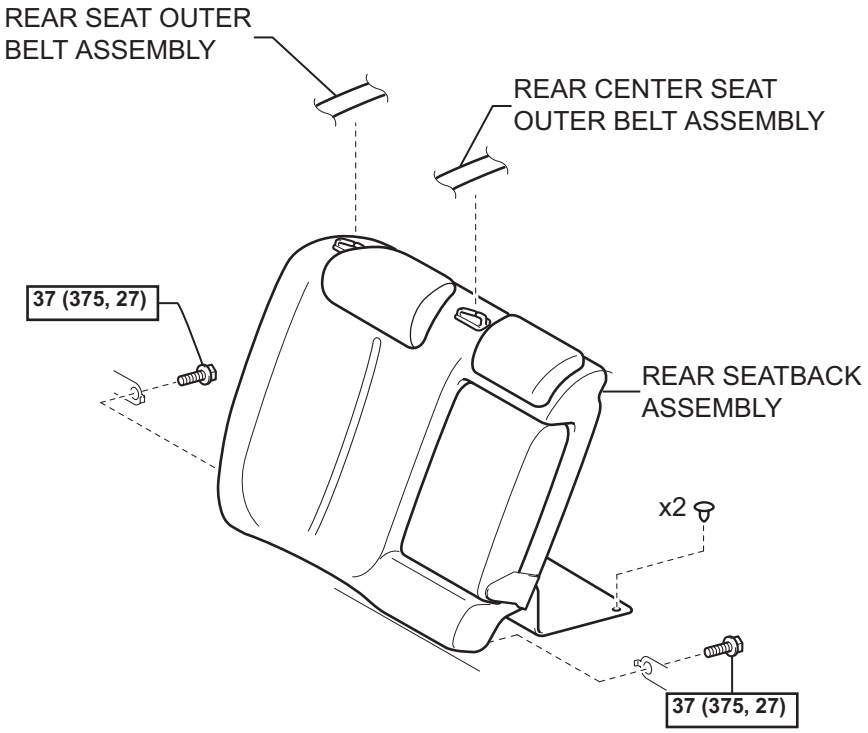

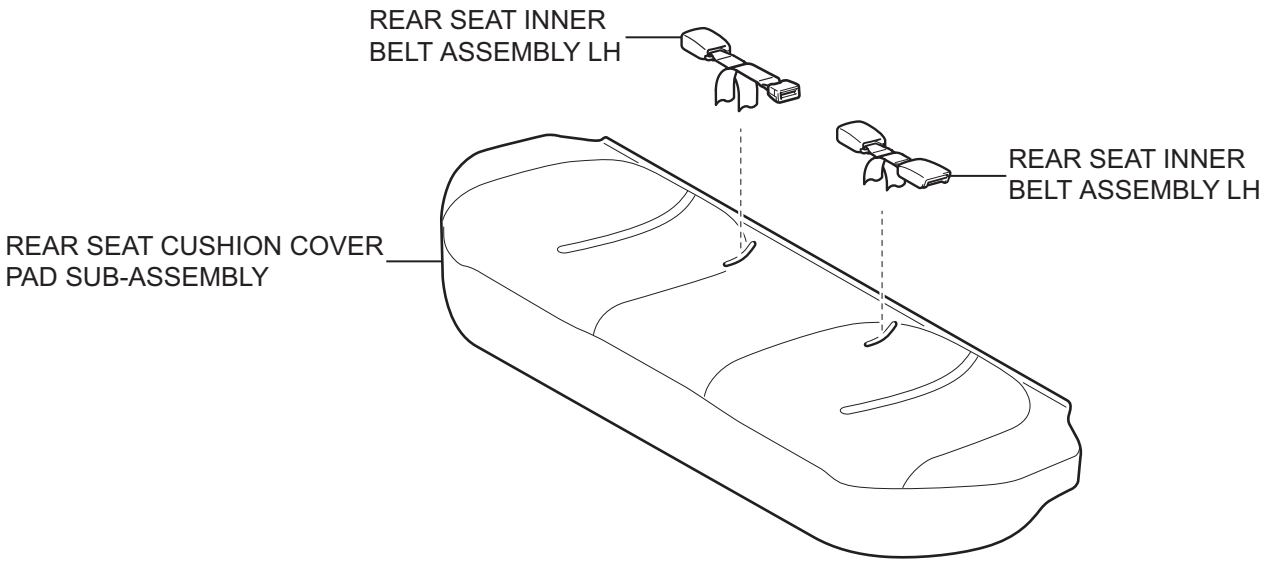

N*m (kgf*cm, ft*lbf) : Specified torque

T

B134942E04

AV

for Fixed Seat Type:

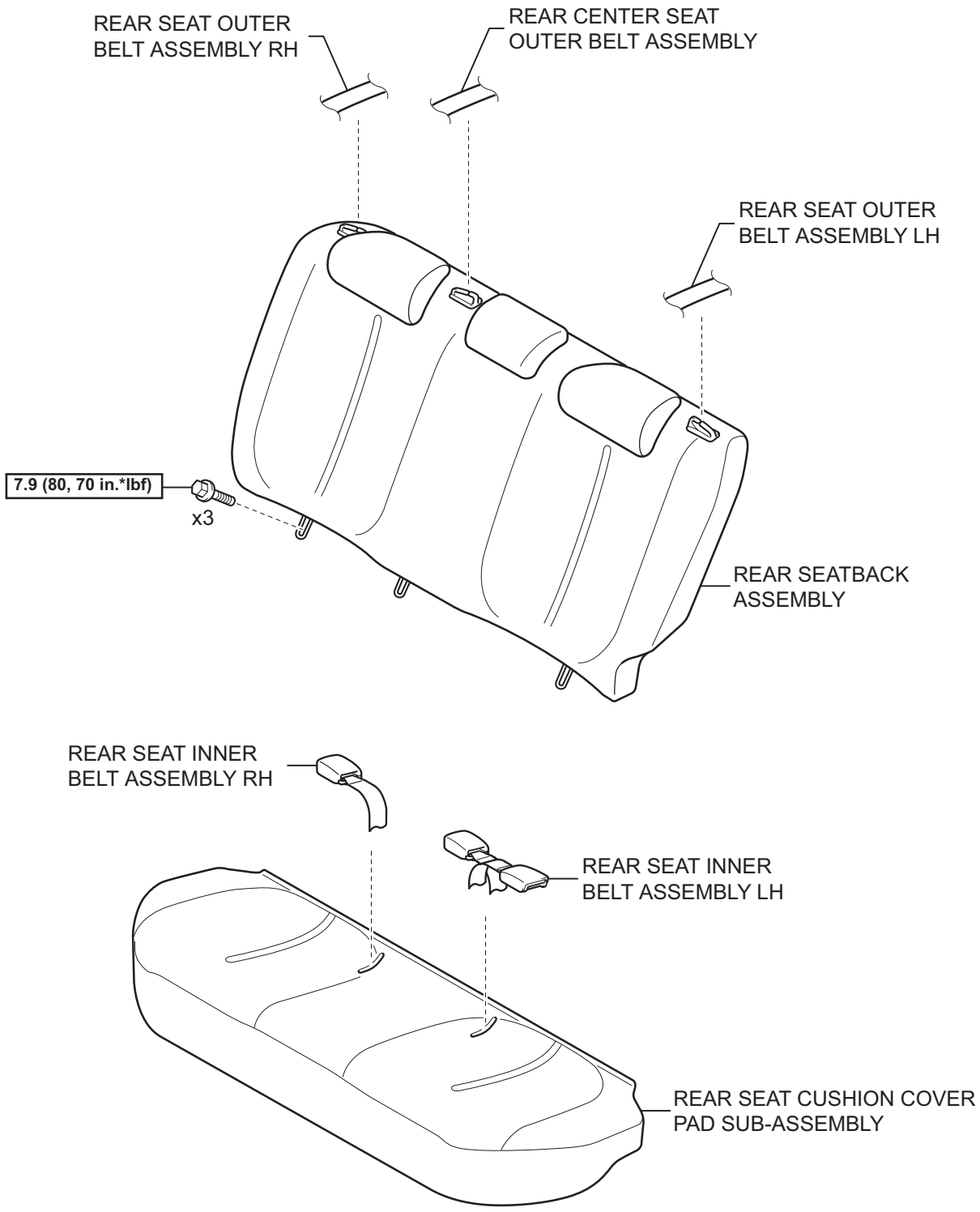

N*m (kgf*cm, ft*lbf) : Specified torque

T

B138611E01

AV

for 60/40 Split Seat Type:

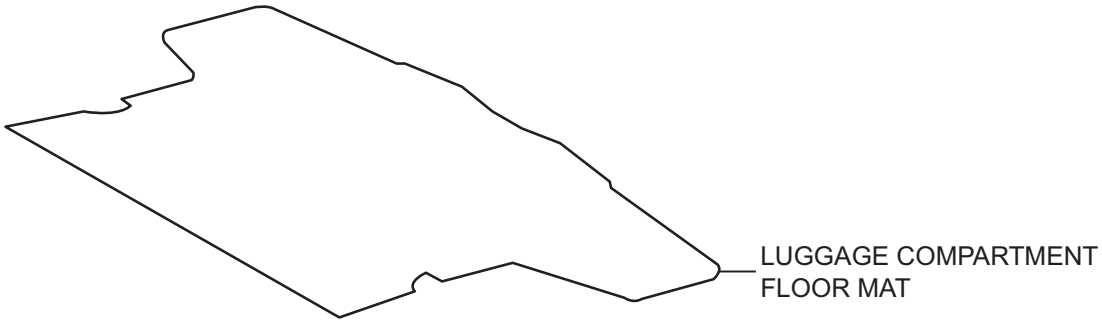

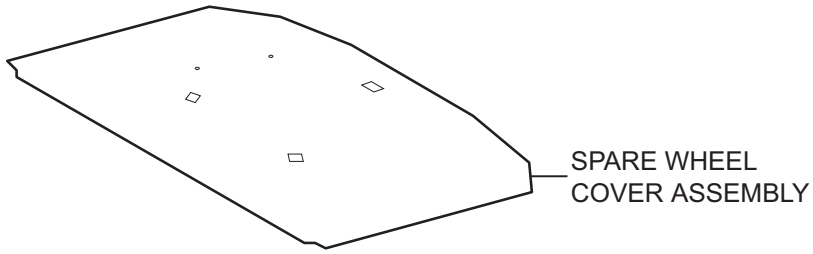

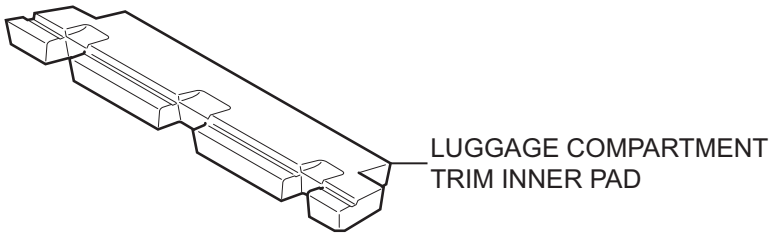

for Grand Tire:

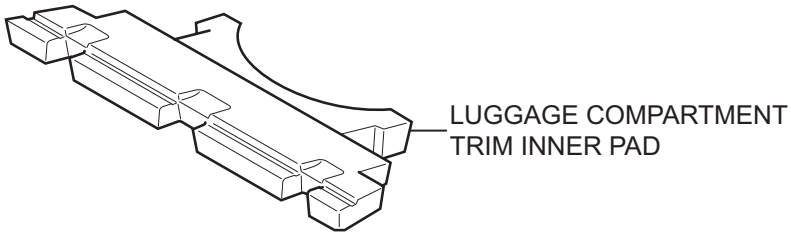

T

B138565E01

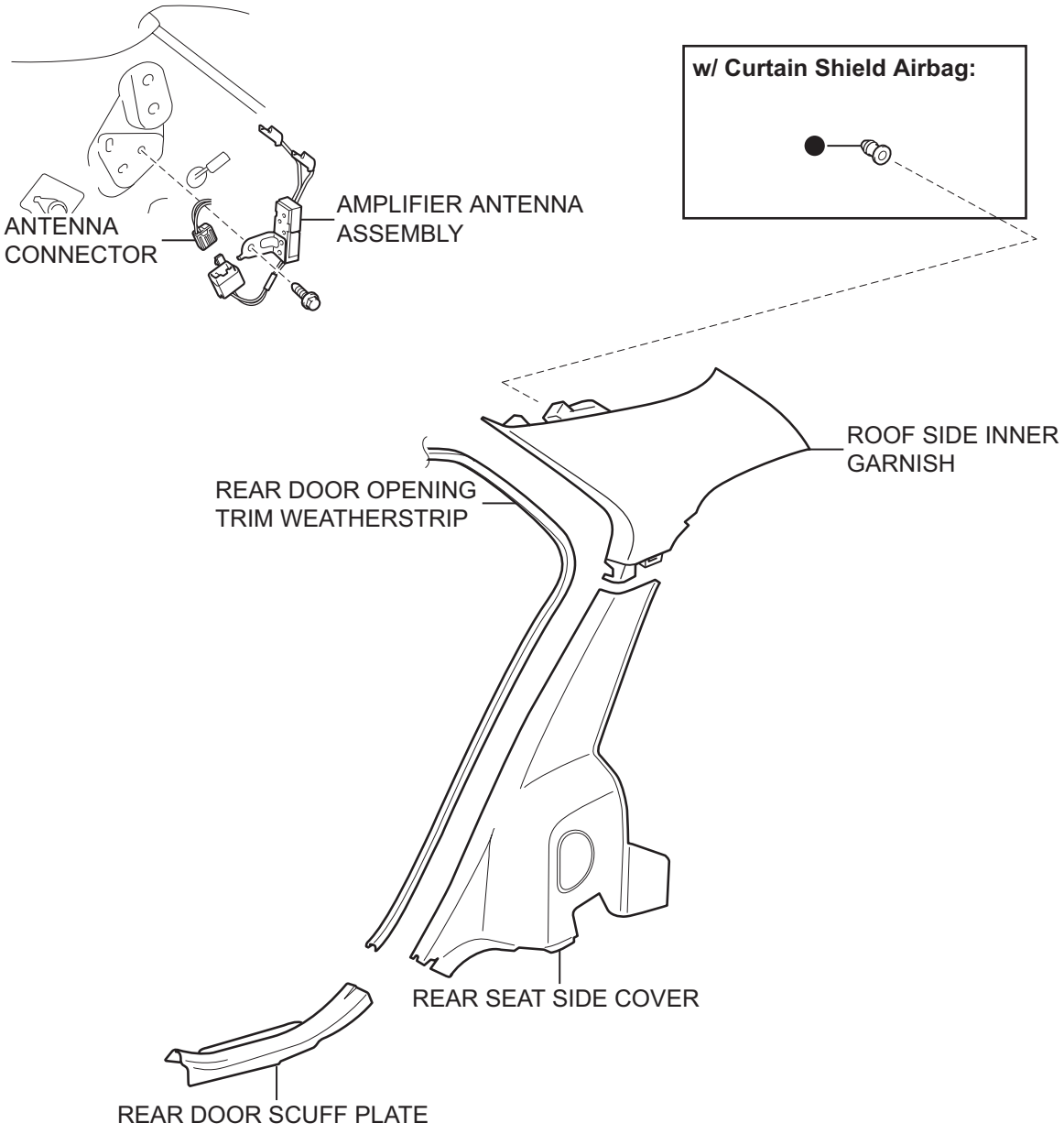

● Non-reusable part

T

B134977E01

AV

AV

REMOVAL

1. **DISCONNECT CABLE FROM NEGATIVE BATTERY TERMINAL**
2. **REMOVE REAR SEAT CUSHION COVER PAD SUB-ASSEMBLY**
   (a) for 60/40 Split Seat Type:
      (1) Remove the rear seat cushion cover pad sub-assembly (See page SE-46).
   (b) for Fixed Seat Type:
      (1) Remove the rear seat cushion cover pad sub-assembly (See page SE-106).
3. **REMOVE REAR SEATBACK ASSEMBLY**
   (a) for 60/40 Split Seat Type:
      (1) Remove the rear seatback assembly (See page SE-57).
   (b) for Fixed Seat Type:
      (1) Remove the rear seatback assembly (See page SE-106).
4. **REMOVE LUGGAGE COMPARTMENT FLOOR MAT (for 60/40 Split Seat Type) (See page ED-133)**
5. **REMOVE SPARE WHEEL COVER ASSEMBLY (for 60/40 Split Seat Type) (See page ED-133)**
6. **REMOVE LUGGAGE COMPARTMENT TRIM INNER PAD (for 60/40 Split Seat Type) (See page ED-134)**
7. **REMOVE REAR DOOR SCUFF PLATE (See page IR-15)**
8. **REMOVE REAR DOOR OPENING TRIM WEATHERSTRIP (See page AV-173)**
9. **REMOVE REAR SEAT SIDE COVER (See page IR-16)**
10. **REMOVE ROOF SIDE INNER GARNISH (See page IR-16)**
11. **REMOVE AMPLIFIER ANTENNA ASSEMBLY**
    (a) Disconnect the antenna cord connector.
    (b) Disconnect the 2 amplifier antenna connectors.
    (c) Disengage the clamp.
    (d) Remove the bolt and the amplifier antenna.

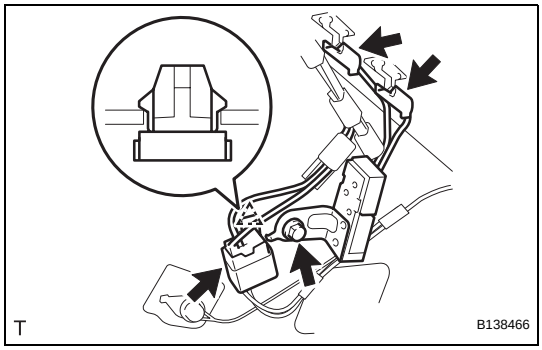

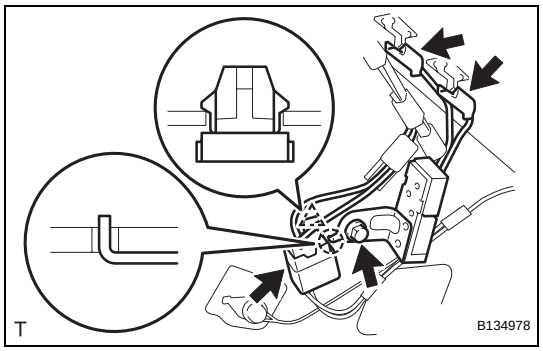

INSTALLATION

1. **INSTALL AMPLIFIER ANTENNA ASSEMBLY**
   (a) Insert the hook into the body hole and install the amplifier antenna with the bolt.
   (b) Engage the clamp.
   (c) Connect the 2 amplifier antenna connectors.
   (d) Connect the antenna cord connector.
2. **INSTALL ROOF SIDE INNER GARNISH (See page IR-32)**
3. **INSTALL REAR SEAT SIDE COVER (See page IR-33)**
4. **INSTALL REAR DOOR OPENING TRIM WEATHERSTRIP (See page AV-175)**
5. **INSTALL REAR DOOR SCUFF PLATE (See page IR-34)**
6. **INSTALL LUGGAGE COMPARTMENT TRIM INNER PAD (for 60/40 Split Seat Type) (See page ED-136)**
7. **INSTALL SPARE WHEEL COVER ASSEMBLY (for 60/40 Split Seat Type) (See page ED-137)**
8. **INSTALL LUGGAGE COMPARTMENT FLOOR MAT (for 60/40 Split Seat Type) (See page ED-137)**
9. **INSTALL REAR SEATBACK ASSEMBLY**
   (a) for 60/40 Split Seat Type:
      (1) Install the rear seatback assembly (See page SE-65).
   (b) for Fixed Seat Type:
      (1) Install the rear seatback assembly (See page SE-108).
10. **INSTALL REAR SEAT CUSHION COVER PAD SUB-ASSEMBLY**
    (a) for 60/40 Split Seat Type:
       (1) Install the rear seat cushion cover pad sub-assembly (See page SE-53).
    (b) for Fixed Seat Type:
       (1) Install the rear seat cushion cover pad sub-assembly (See page SE-109).
11. **CONNECT CABLE TO NEGATIVE BATTERY TERMINAL**
    Torque: 5.4 N*m (55 kgf*cm, 48 in.*lbf)

AMPLIFIER ANTENNA (for Hatchback 5 Door)

COMPONENTS

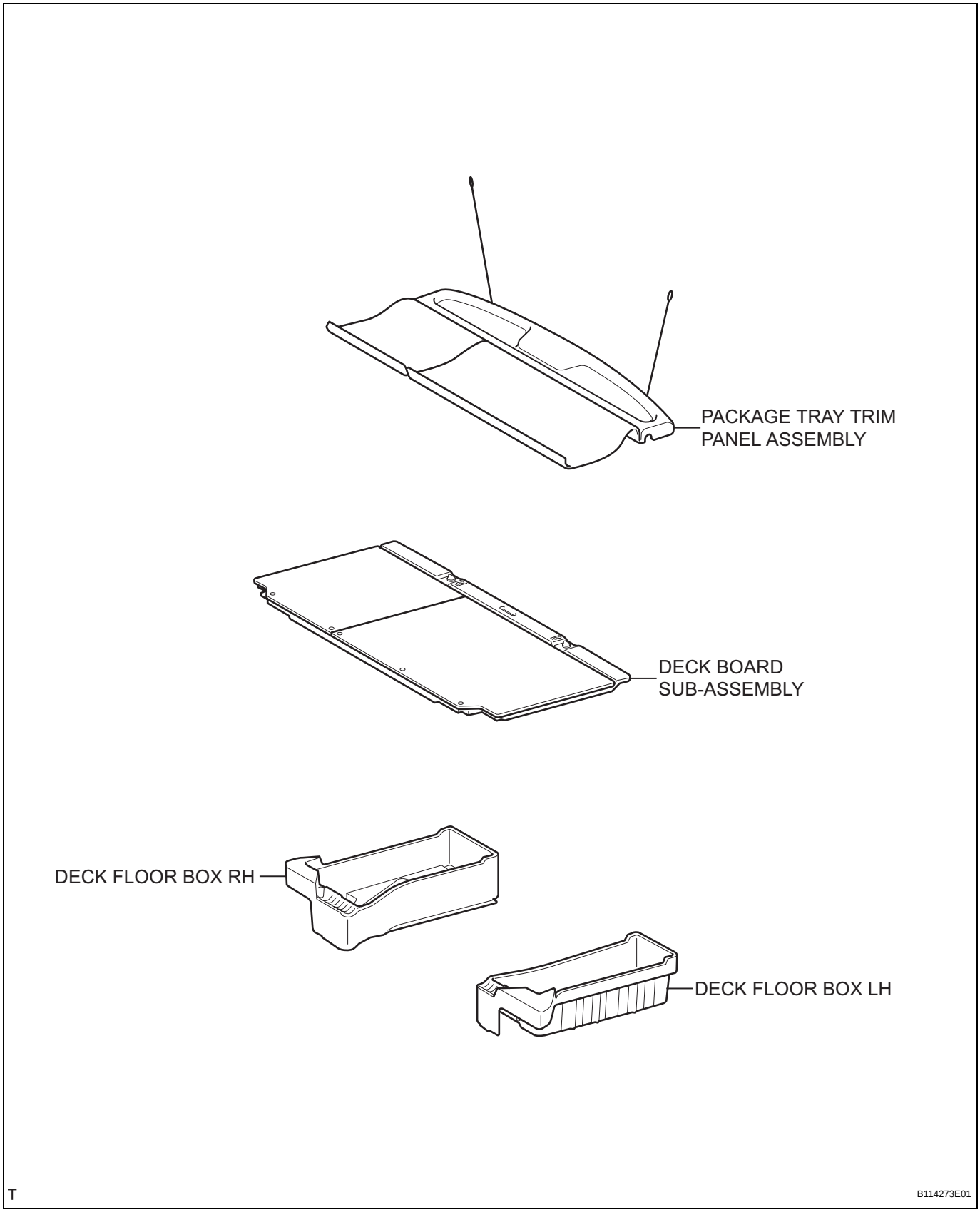

for 60/40 Split Seat Type:

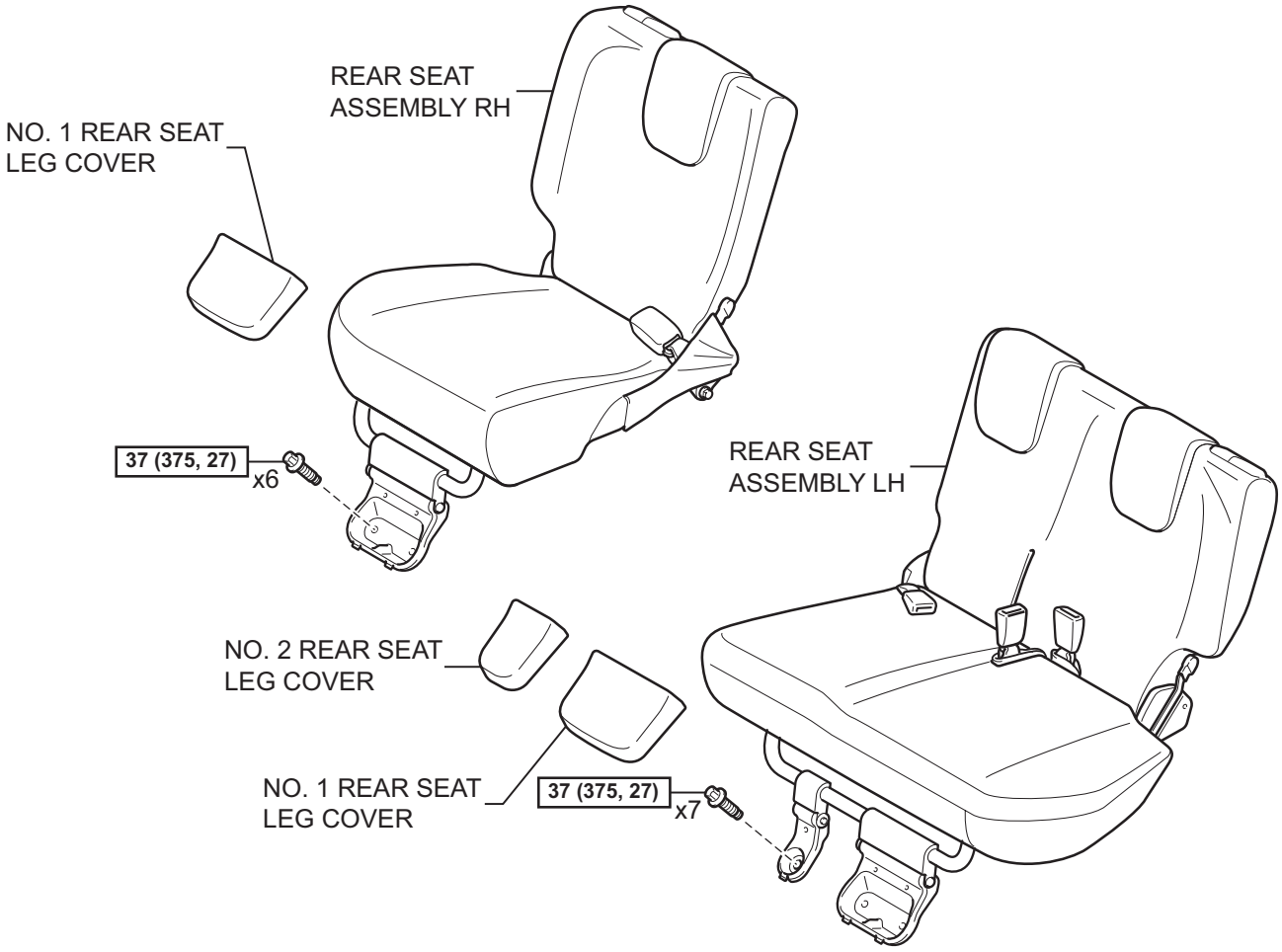

for Hold Down Seat Type:

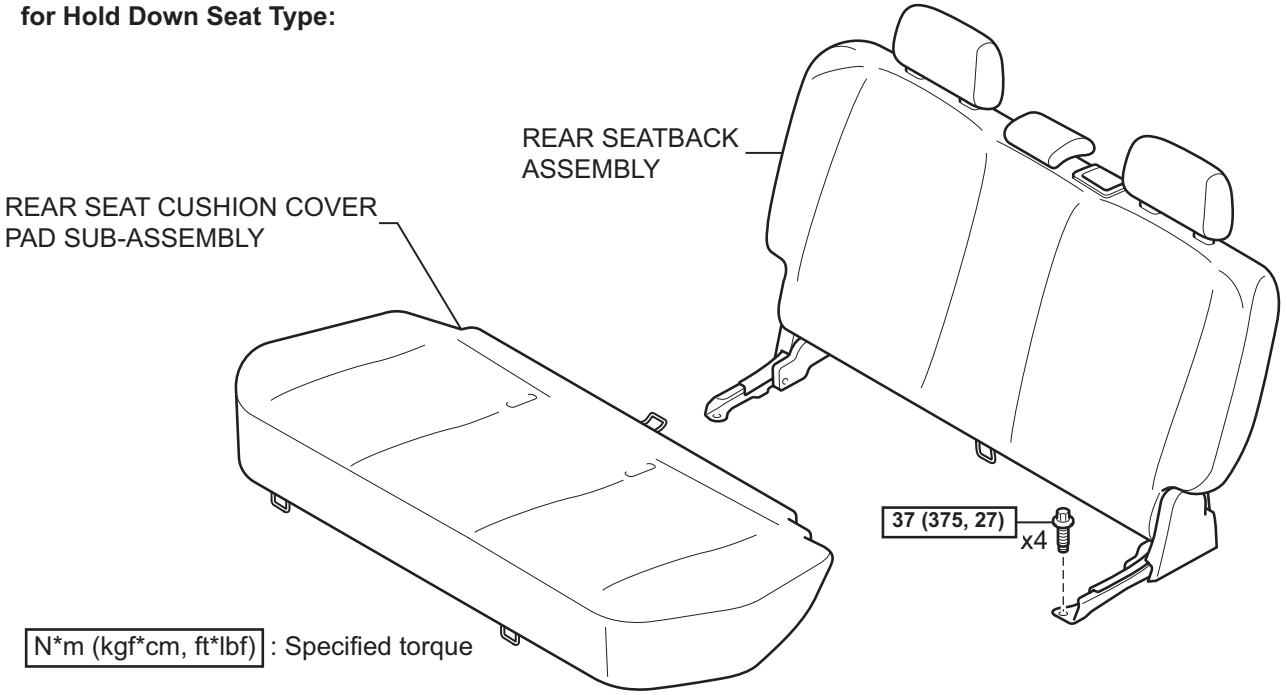

T

B121713E03

AV

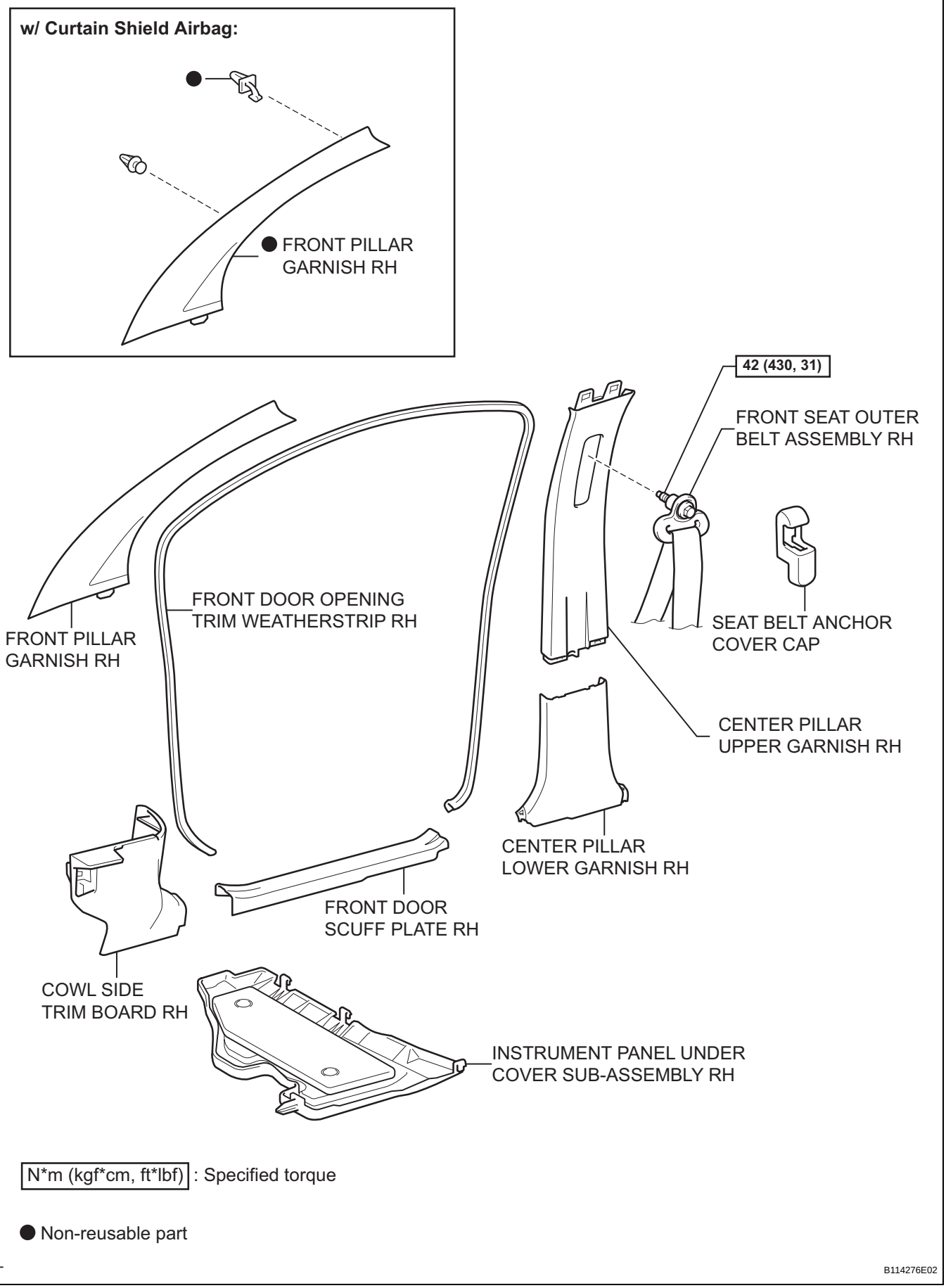

AV

N*m (kgf*cm, ft*lbf) : Specified torque

● Non-reusable part

T

B114276E02

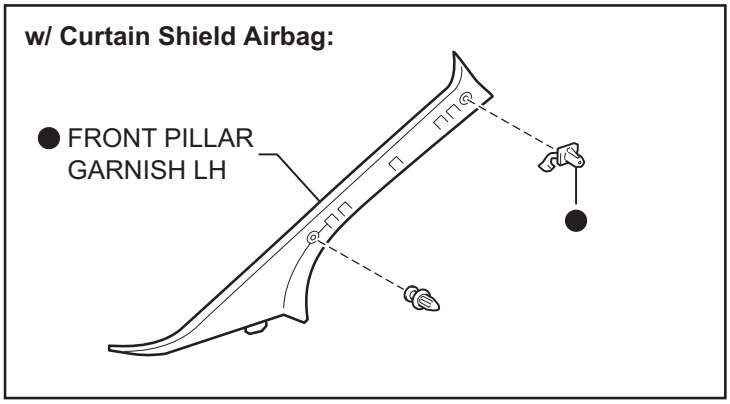

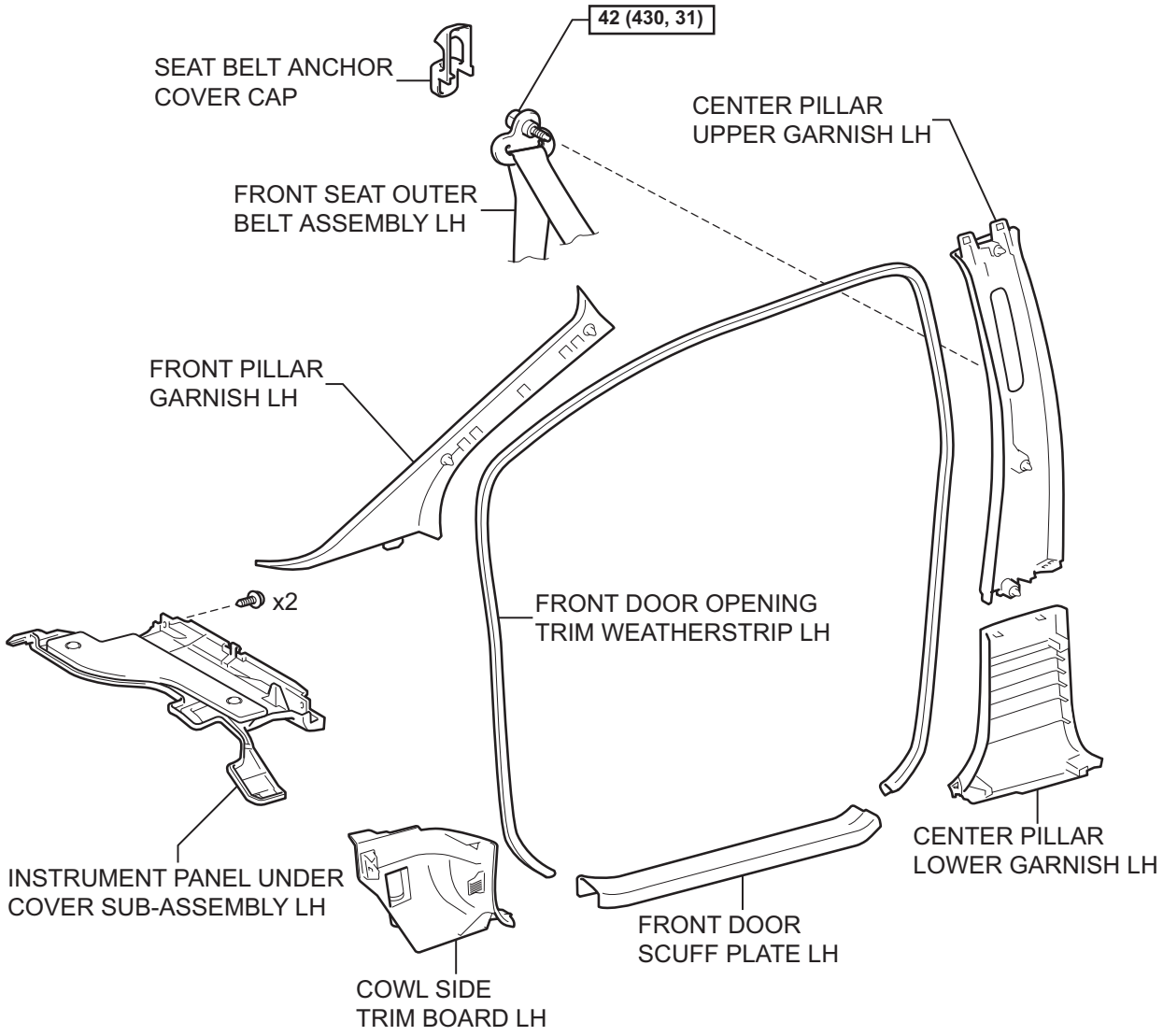

N*m (kgf*cm, ft*lbf) : Specified torque

● Non-reusable part

T

B114277E02

AV

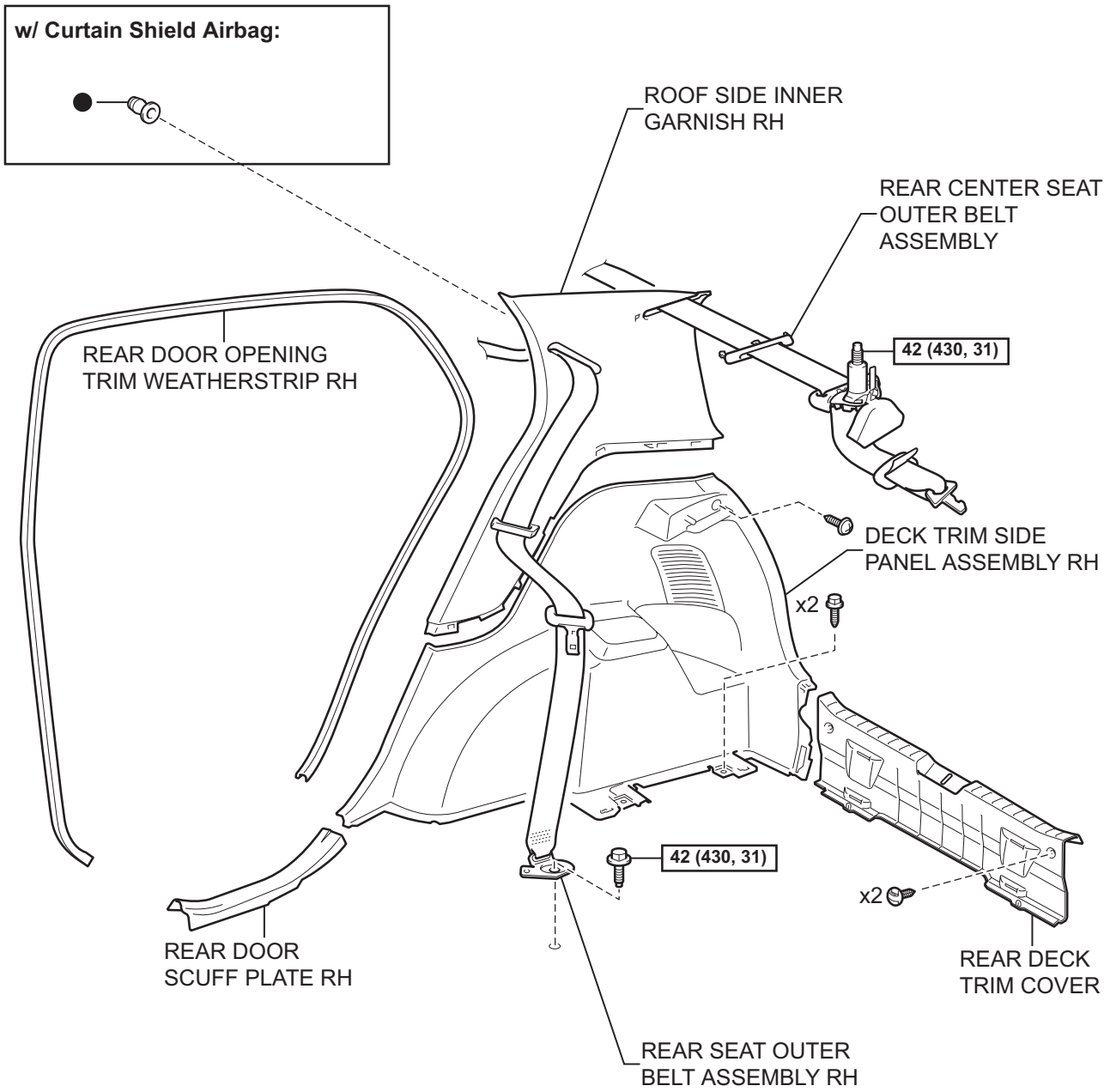

AV

N*m (kgf*cm, ft*lbf) : Specified torque

● Non-reusable part

T

B114274E07

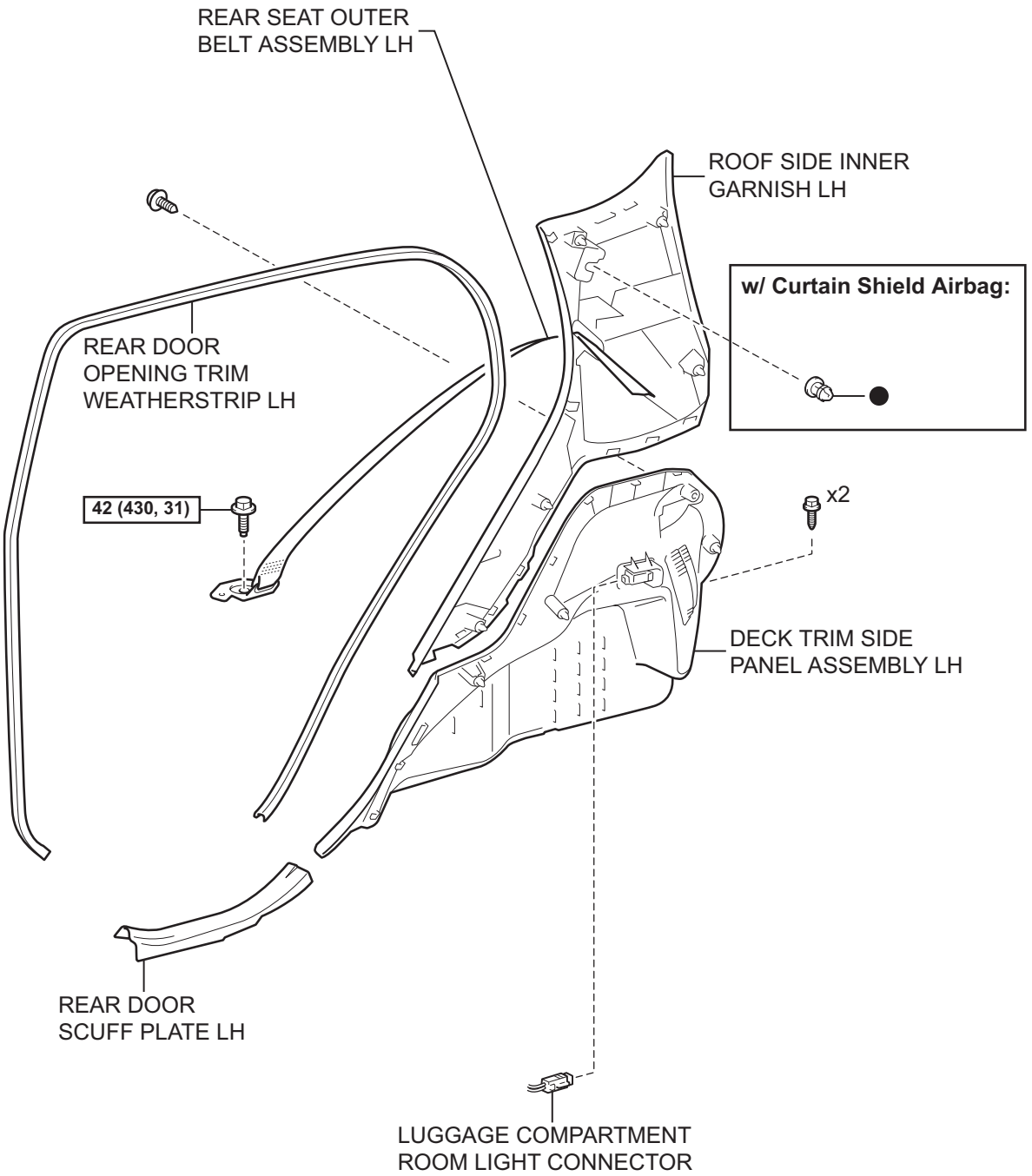

N*m (kgf*cm, ft*lbf) : Specified torque

● Non-reusable part

T

B114275E11

AV

w/ Curtain Shield Airbag:

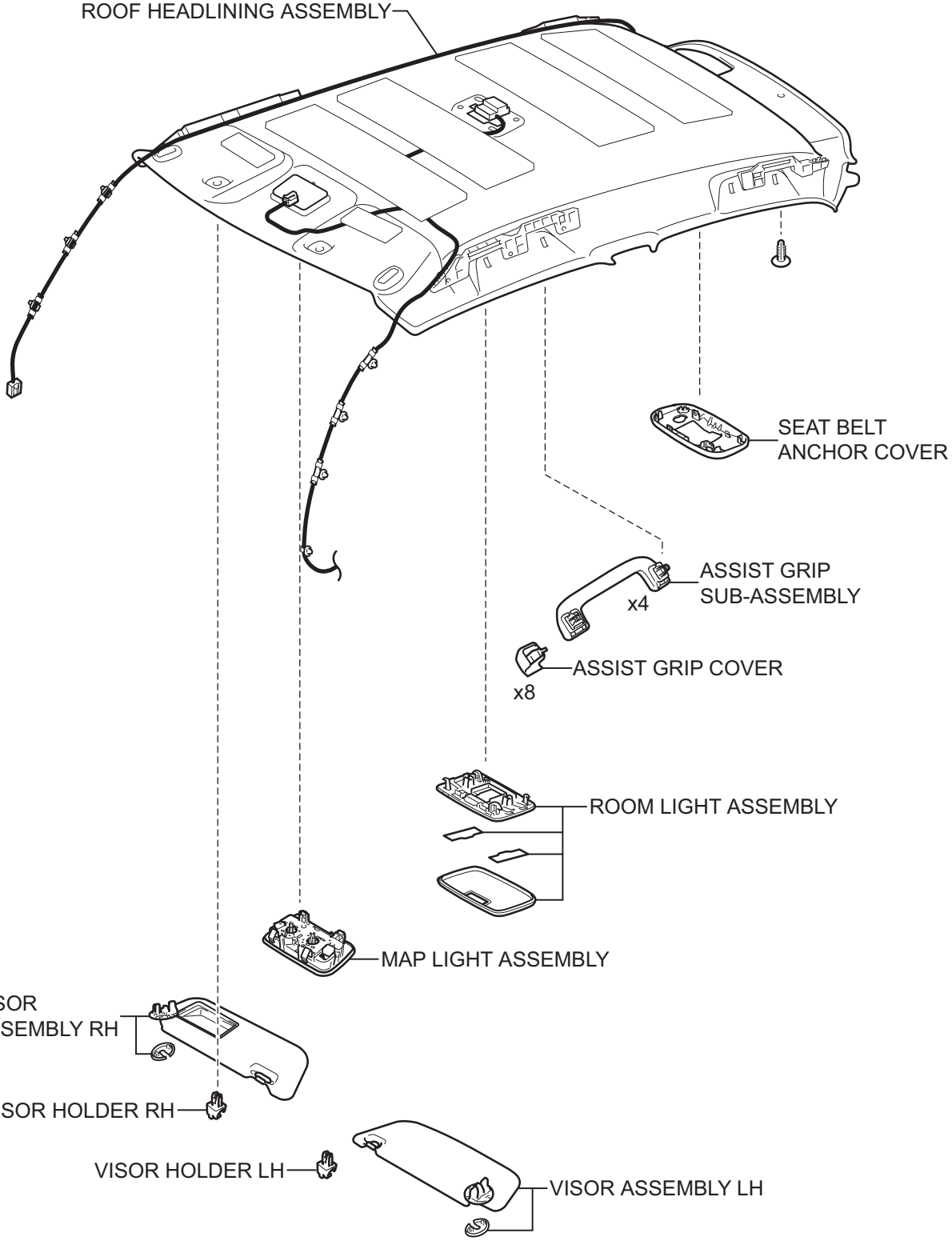

AV

T

B138686E01

w/o Curtain Shield Airbag:

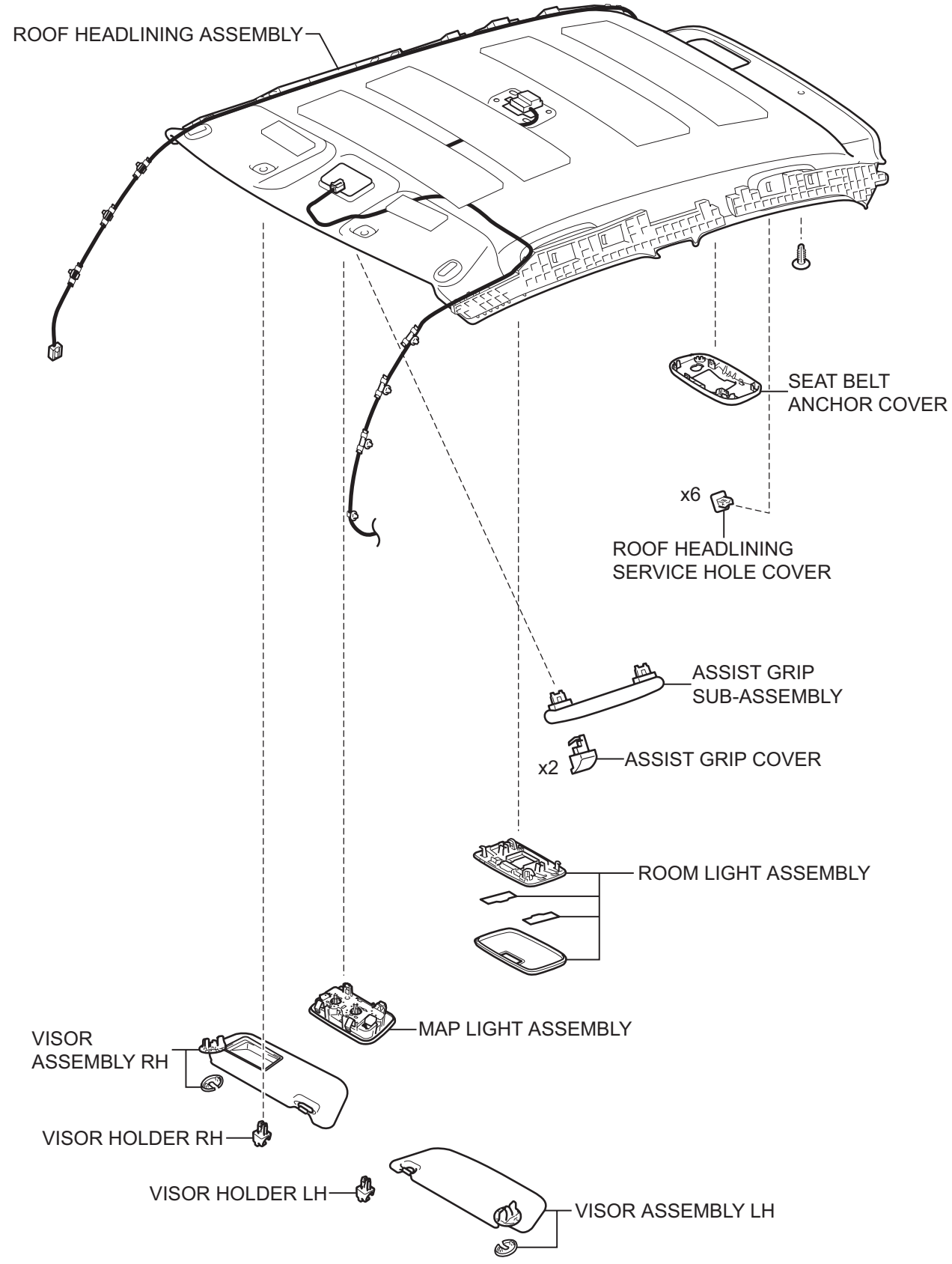

T

B138687E01

AV

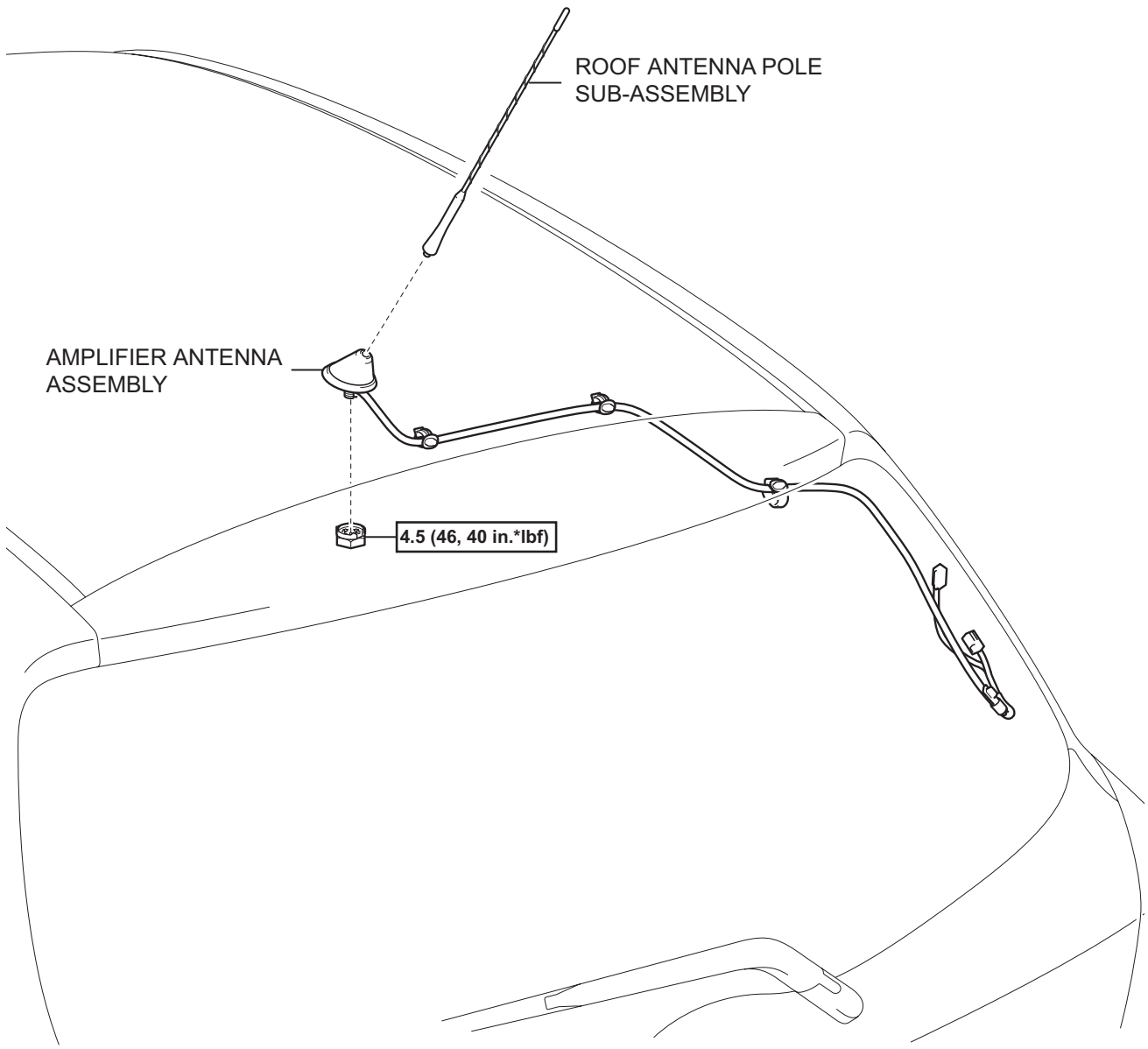

AV

N*m (kgf*cm, ft.*lbf) : Specified torque

P

E107782E01

REMOVAL

CAUTION:
Some of these service operations affect the SRS airbag system. Read the precautionary notices concerning the SRS airbag system before servicing (See page RS-1).
NOTICE:
Always use "Torx" socket wrench E10 when removing the rear seat.

1. **DISCONNECT CABLE FROM NEGATIVE BATTERY TERMINAL**
2. **REMOVE PACKAGE TRAY TRIM PANEL ASSEMBLY (See page IR-48)**
3. **REMOVE DECK BOARD SUB-ASSEMBLY (See page IR-48)**
4. **REMOVE DECK FLOOR BOX RH (See page IR-48)**
5. **REMOVE DECK FLOOR BOX LH (See page IR-48)**
6. **REMOVE NO. 1 REAR SEAT LEG COVER (for 60/40 Split Seat Type)**
   (a) for RH Side:
      (1) Remove the No. 1 rear seat leg cover (See page SE-89).
   (b) for LH Side:
      (1) Remove the No. 1 rear seat leg cover (See page SE-70).
7. **REMOVE NO. 2 REAR SEAT LEG COVER (for 60/40 Split Seat Type) (See page SE-70)**
8. **REMOVE REAR SEAT ASSEMBLY RH (for 60/40 Split Seat Type) (See page SE-89)**
9. **REMOVE REAR SEAT ASSEMBLY LH (for 60/40 Split Seat Type) (See page SE-71)**
10. **REMOVE REAR SEAT CUSHION COVER PAD SUB-ASSEMBLY (for Hold Down Seat Type) (See page SE-114)**
11. **REMOVE REAR SEATBACK ASSEMBLY (for Hold Down Seat Type) (See page SE-115)**
12. **REMOVE REAR DECK TRIM COVER (See page IR-49)**
13. **REMOVE FRONT DOOR SCUFF PLATE RH (See page IR-49)**
14. **REMOVE FRONT DOOR SCUFF PLATE LH (See page IR-49)**
15. **REMOVE INSTRUMENT PANEL UNDER COVER SUB-ASSEMBLY RH (See page IR-50)**
16. **REMOVE INSTRUMENT PANEL UNDER COVER SUB-ASSEMBLY LH (See page IR-50)**
17. **REMOVE COWL SIDE TRIM BOARD RH (See page IR-50)**

18. **REMOVE COWL SIDE TRIM BOARD LH (See page IR-50)**
19. **REMOVE FRONT DOOR OPENING TRIM WEATHERSTRIP RH (See page IR-50)**
20. **REMOVE FRONT DOOR OPENING TRIM WEATHERSTRIP LH (See page IR-50)**
21. **REMOVE REAR DOOR SCUFF PLATE RH (See page IR-51)**
22. **REMOVE REAR DOOR SCUFF PLATE LH (See page IR-51)**
23. **REMOVE REAR DOOR OPENING TRIM WEATHERSTRIP RH (See page IR-51)**
24. **REMOVE REAR DOOR OPENING TRIM WEATHERSTRIP LH (See page IR-51)**
25. **REMOVE REAR SEAT OUTER BELT ASSEMBLY RH (See page IR-51)**
26. **REMOVE REAR SEAT OUTER BELT ASSEMBLY LH (See page IR-51)**
27. **REMOVE DECK TRIM SIDE PANEL ASSEMBLY RH (See page IR-52)**
28. **REMOVE DECK TRIM SIDE PANEL ASSEMBLY LH (See page IR-52)**
29. **REMOVE REAR CENTER SEAT OUTER BELT ASSEMBLY (See page IR-52)**
30. **REMOVE ROOF SIDE INNER GARNISH RH (See page IR-53)**
31. **REMOVE ROOF SIDE INNER GARNISH LH (See page IR-54)**
32. **REMOVE SEAT BELT ANCHOR COVER CAP (See page IR-54)**
33. **REMOVE FRONT SEAT OUTER BELT ASSEMBLY RH (See page IR-55)**
34. **REMOVE FRONT SEAT OUTER BELT ASSEMBLY LH (See page IR-55)**
35. **REMOVE CENTER PILLAR LOWER GARNISH RH (See page IR-55)**
36. **REMOVE CENTER PILLAR LOWER GARNISH LH (See page IR-55)**
37. **REMOVE CENTER PILLAR UPPER GARNISH RH (See page IR-55)**
38. **REMOVE CENTER PILLAR UPPER GARNISH LH (See page IR-55)**
39. **REMOVE SEAT BELT ANCHOR COVER (See page SB-159)**

40. **REMOVE ROOF HEADLINING SERVICE HOLE COVER (w/o Curtain Shield Airbag) (See page IR-55)**
41. **REMOVE ASSIST GRIP COVER (See page IR-55)**
42. **REMOVE ASSIST GRIP SUB-ASSEMBLY (See page IR-56)**
43. **REMOVE VISOR ASSEMBLY RH (See page IR-56)**
44. **REMOVE VISOR ASSEMBLY LH (See page IR-56)**
45. **REMOVE VISOR HOLDER RH (See page IR-56)**
46. **REMOVE VISOR HOLDER LH (See page IR-56)**
47. **REMOVE ROOM LIGHT ASSEMBLY (See page IR-57)**
48. **REMOVE MAP LIGHT ASSEMBLY (See page IR-58)**
49. **REMOVE FRONT PILLAR GARNISH RH (See page IR-58)**
50. **REMOVE FRONT PILLAR GARNISH LH (See page IR-59)**
51. **REMOVE ROOF HEADLINING ASSEMBLY (See page AV-83)**
52. **REMOVE ROOF ANTENNA POLE SUB-ASSEMBLY (See page AV-117)**
53. **REMOVE AMPLIFIER ANTENNA ASSEMBLY**
    (a) Disengage the 5 clamps.
    (b) Remove the antenna nut.

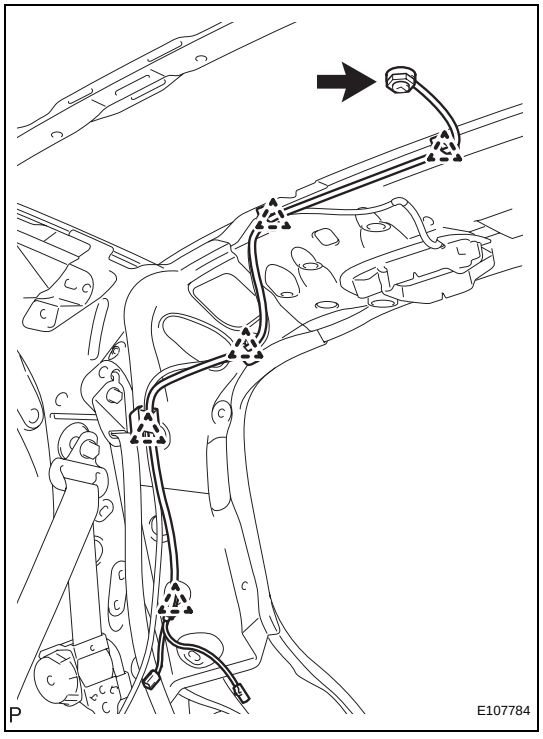

AV

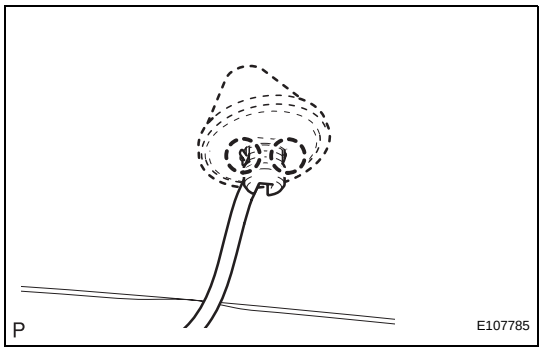

(c) Disengage the 2 claws and remove the amplifier antenna.

INSTALLATION

CAUTION:
Some of these service operations affect the SRS airbag system. Read the precautionary notices concerning the SRS airbag system before servicing (See page RS-1).
NOTICE:
Always use "Torx" socket wrench E10 when installing the rear seat.

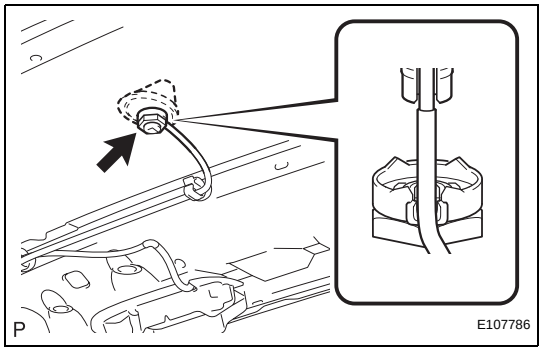

1. **INSTALL AMPLIFIER ANTENNA ASSEMBLY**
   (a) Set the amplifier antenna into the hole in the roof, and place the amplifier antenna cord in the cutout of the amplifier antenna.
   (b) Install the amplifier antenna with the antenna nut.
   Torque: 4.5 N*m (46 kgf*cm, 40 in.*lbf)

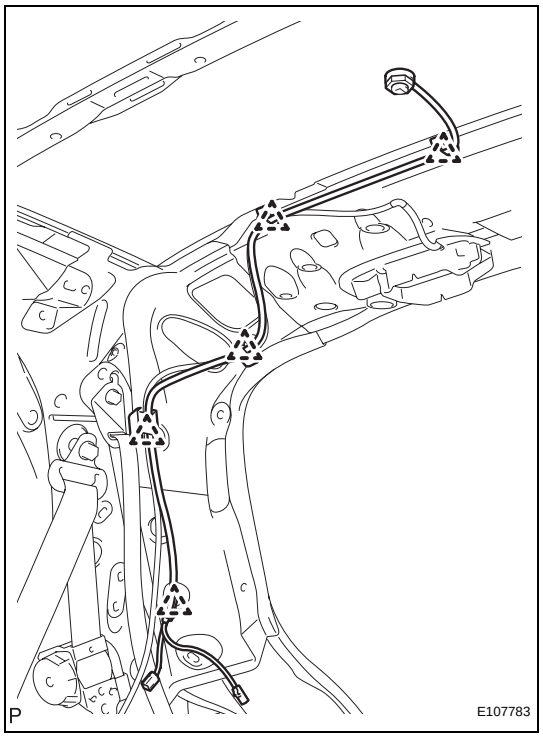

   (c) Engage the 5 clamps.

2. **INSTALL ROOF ANTENNA POLE SUB-ASSEMBLY (See page AV-117)**
3. **INSTALL ROOF HEADLINING ASSEMBLY (See page AV-87)**
4. **INSTALL FRONT PILLAR GARNISH RH (See page IR-71)**
5. **INSTALL FRONT PILLAR GARNISH LH (See page IR-72)**
6. **INSTALL MAP LIGHT ASSEMBLY (See page IR-73)**
7. **INSTALL ROOM LIGHT ASSEMBLY (See page IR-74)**
8. **INSTALL VISOR HOLDER RH (See page IR-75)**
9. **INSTALL VISOR HOLDER LH (See page IR-75)**
10. **INSTALL VISOR ASSEMBLY RH (See page IR-75)**
11. **INSTALL VISOR ASSEMBLY LH (See page IR-75)**
12. **INSTALL ROOF HEADLINING SERVICE HOLE COVER (w/o Curtain Shield Airbag) (See page IR-76)**
13. **INSTALL ASSIST GRIP SUB-ASSEMBLY (See page IR-75)**
14. **INSTALL ASSIST GRIP COVER (See page IR-75)**
15. **INSTALL SEAT BELT ANCHOR COVER (See page SB-160)**
16. **INSTALL CENTER PILLAR UPPER GARNISH RH (See page IR-76)**
17. **INSTALL CENTER PILLAR UPPER GARNISH LH (See page IR-76)**

18. **INSTALL CENTER PILLAR LOWER GARNISH RH (See page IR-76)**
19. **INSTALL CENTER PILLAR LOWER GARNISH LH (See page IR-76)**
20. **INSTALL FRONT SEAT OUTER BELT ASSEMBLY RH (See page IR-76)**
21. **INSTALL FRONT SEAT OUTER BELT ASSEMBLY LH (See page IR-76)**
22. **INSTALL SEAT BELT ANCHOR COVER CAP (See page IR-76)**
23. **INSTALL ROOF SIDE INNER GARNISH RH (See page IR-77)**
24. **INSTALL ROOF SIDE INNER GARNISH LH (See page IR-77)**
25. **INSTALL REAR CENTER SEAT OUTER BELT ASSEMBLY (See page IR-78)**
26. **INSTALL DECK TRIM SIDE PANEL ASSEMBLY RH (See page IR-79)**
27. **INSTALL DECK TRIM SIDE PANEL ASSEMBLY LH (See page IR-79)**
28. **INSTALL REAR SEAT OUTER BELT ASSEMBLY RH (See page IR-79)**
29. **INSTALL REAR SEAT OUTER BELT ASSEMBLY LH (See page IR-80)**
30. **INSTALL REAR DOOR OPENING TRIM WEATHERSTRIP RH (See page IR-80)**
31. **INSTALL REAR DOOR OPENING TRIM WEATHERSTRIP LH (See page IR-80)**
32. **INSTALL REAR DOOR SCUFF PLATE RH (See page IR-80)**
33. **INSTALL REAR DOOR SCUFF PLATE LH (See page IR-80)**
34. **INSTALL FRONT DOOR OPENING TRIM WEATHERSTRIP RH (See page IR-81)**
35. **INSTALL FRONT DOOR OPENING TRIM WEATHERSTRIP LH (See page IR-81)**
36. **INSTALL COWL SIDE TRIM BOARD RH (See page IR-81)**
37. **INSTALL COWL SIDE TRIM BOARD LH (See page IR-81)**
38. **INSTALL INSTRUMENT PANEL UNDER COVER SUB-ASSEMBLY RH (See page IR-81)**
39. **INSTALL INSTRUMENT PANEL UNDER COVER SUB-ASSEMBLY LH (See page IR-82)**

40. **INSTALL FRONT DOOR SCUFF PLATE RH (See page IR-82)**
41. **INSTALL FRONT DOOR SCUFF PLATE LH (See page IR-82)**
42. **INSTALL REAR DECK TRIM COVER (See page IR-82)**
43. **INSTALL REAR SEAT ASSEMBLY RH (for 60/40 Split Seat Type) (See page SE-102)**
44. **INSTALL REAR SEAT ASSEMBLY LH (for 60/40 Split Seat Type) (See page SE-84)**
45. **INSTALL NO. 2 REAR SEAT LEG COVER (for 60/40 Split Seat Type) (See page SE-85)**
46. **INSTALL NO. 1 REAR SEAT LEG COVER (for 60/40 Split Seat Type)**
    (a) for RH Side:
        (1) Remove the No. 1 rear seat leg cover (See page SE-103).
    (b) for LH Side:
        (1) Remove the No. 1 rear seat leg cover (See page SE-85).
47. **INSTALL REAR SEATBACK ASSEMBLY (for Hold Down Seat Type) (See page SE-122)**
48. **INSTALL REAR SEAT CUSHION COVER PAD SUB-ASSEMBLY (for Hold Down Seat Type) (See page SE-123)**
49. **INSTALL DECK FLOOR BOX RH (See page IR-83)**
50. **INSTALL DECK FLOOR BOX LH (See page IR-83)**
51. **INSTALL DECK BOARD SUB-ASSEMBLY (See page IR-83)**
52. **INSTALL PACKAGE TRAY TRIM PANEL ASSEMBLY (See page IR-83)**
53. **CONNECT CABLE TO NEGATIVE BATTERY TERMINAL**
    Torque: 5.4 N*m (55 kgf*cm, 48 in.*lbf)

AMPLIFIER ANTENNA (for Hatchback 3 Door)

COMPONENTS

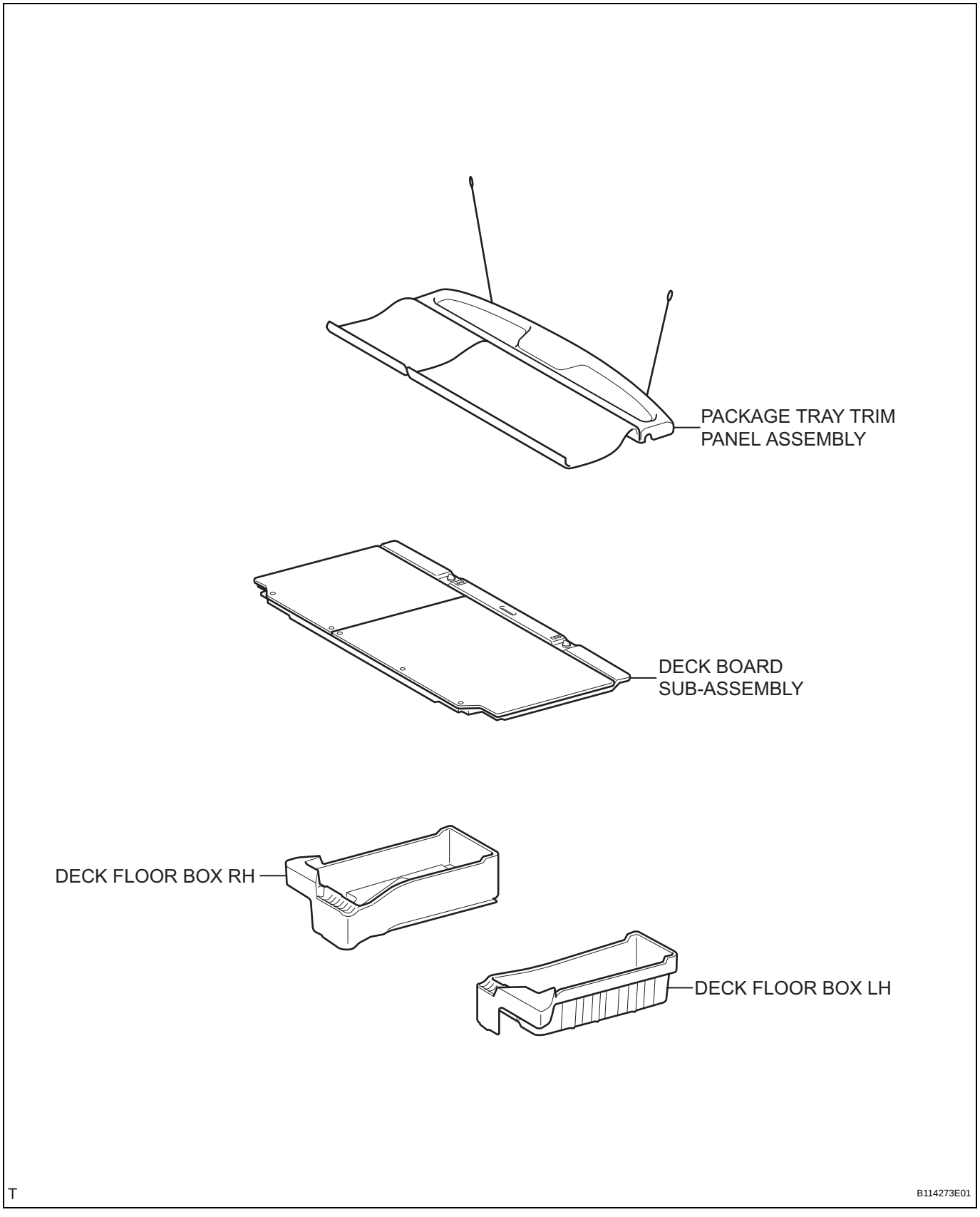

for 60/40 Split Seat Type:

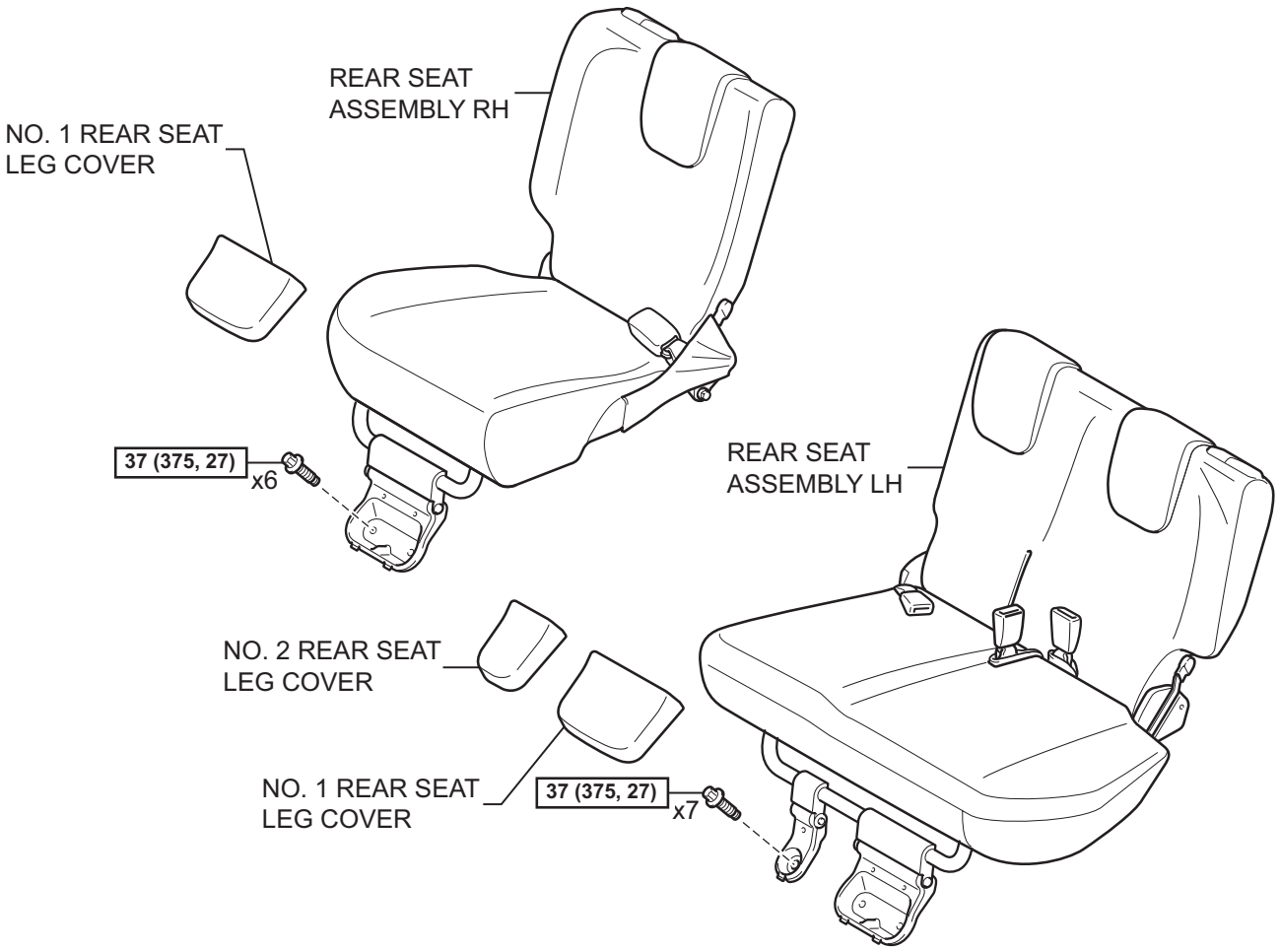

for Hold Down Seat Type:

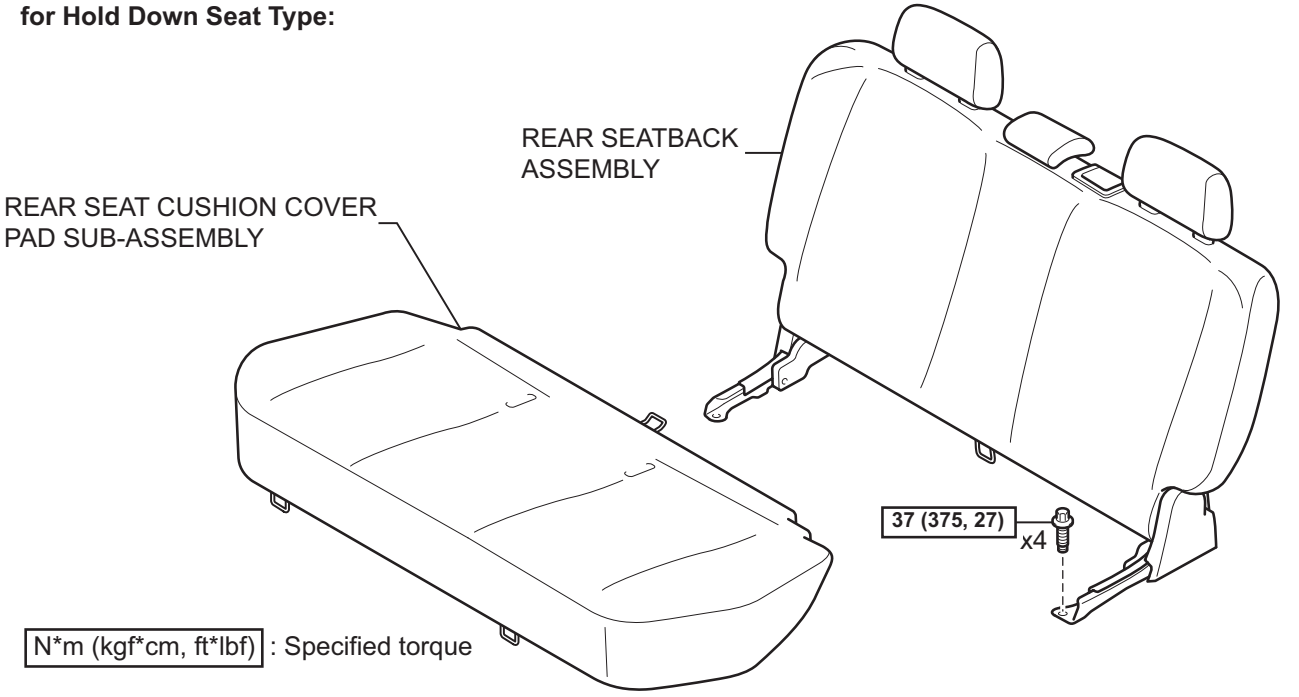

T

B121713E03

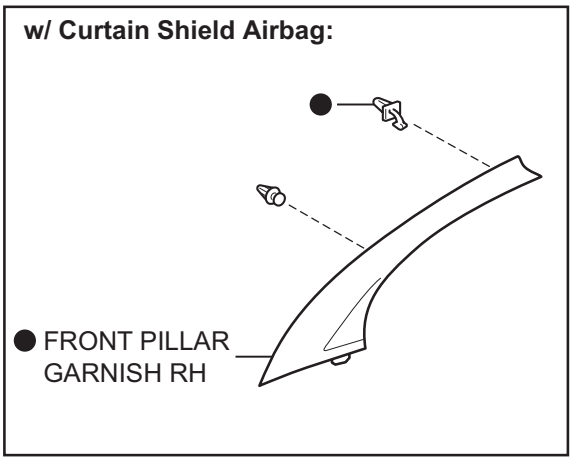

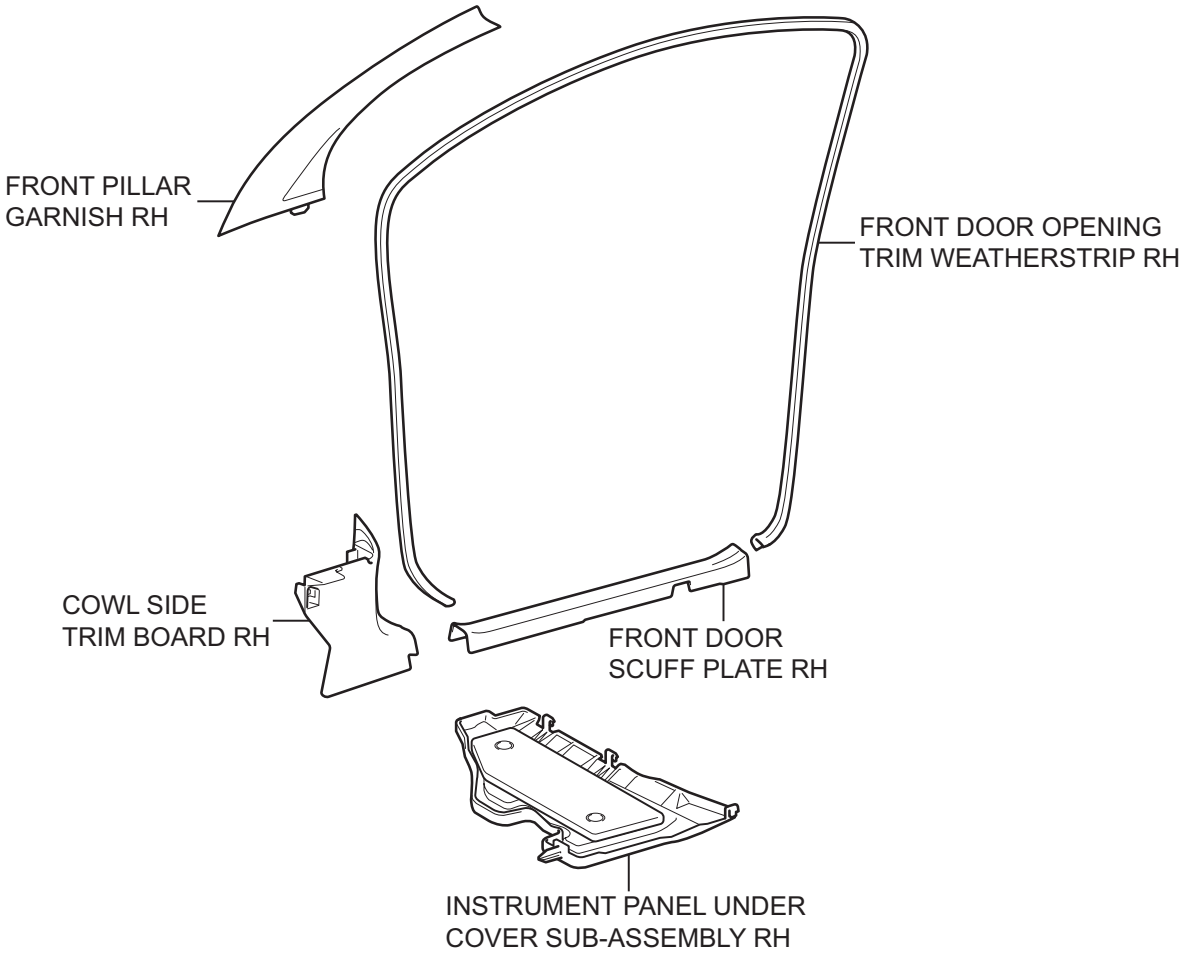

● Non-reusable part

T

B114488E02

AV

w/ Curtain Shield Airbag:

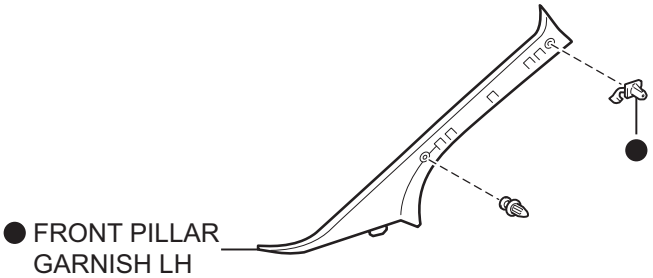

● FRONT PILLAR GARNISH LH

AV

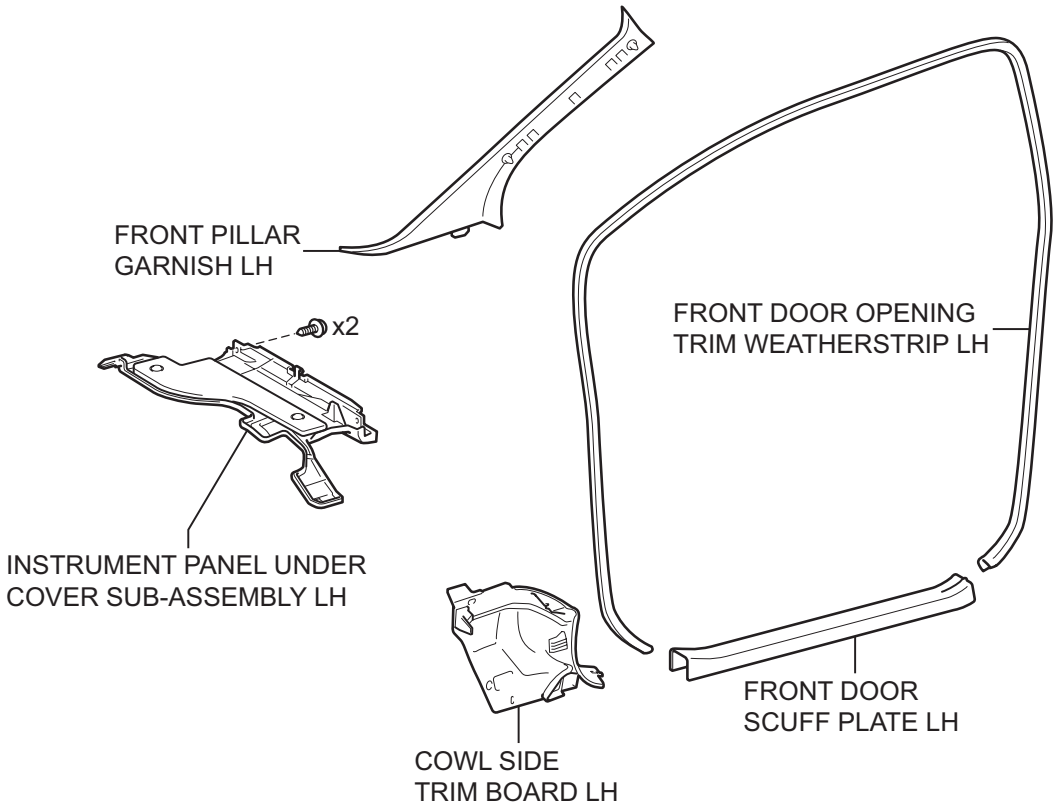

● Non-reusable part

T

B114489E02

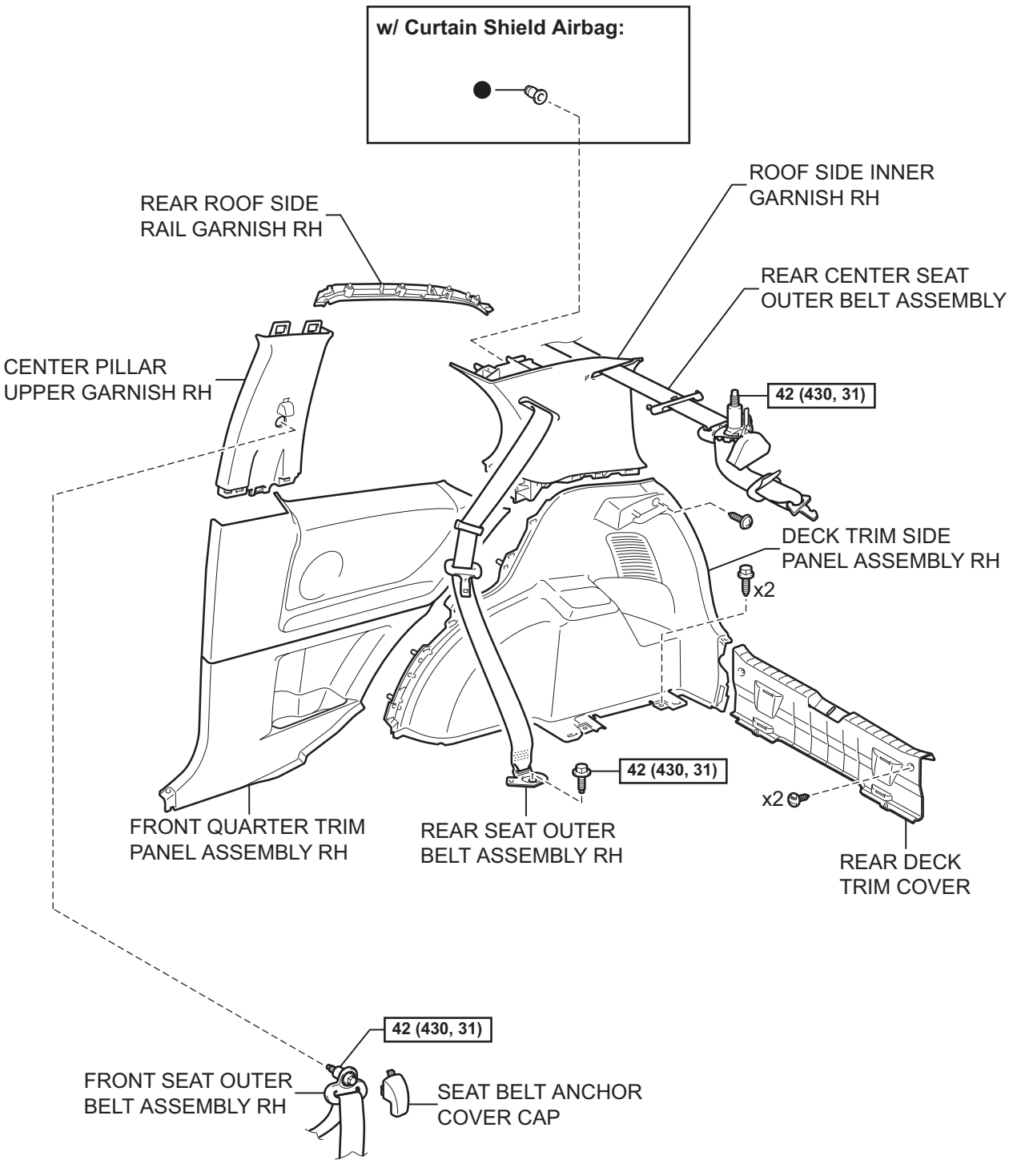

N*m (kgf*cm, ft*lbf) : Specified torque

● Non-reusable part

T

B117699E06

AV

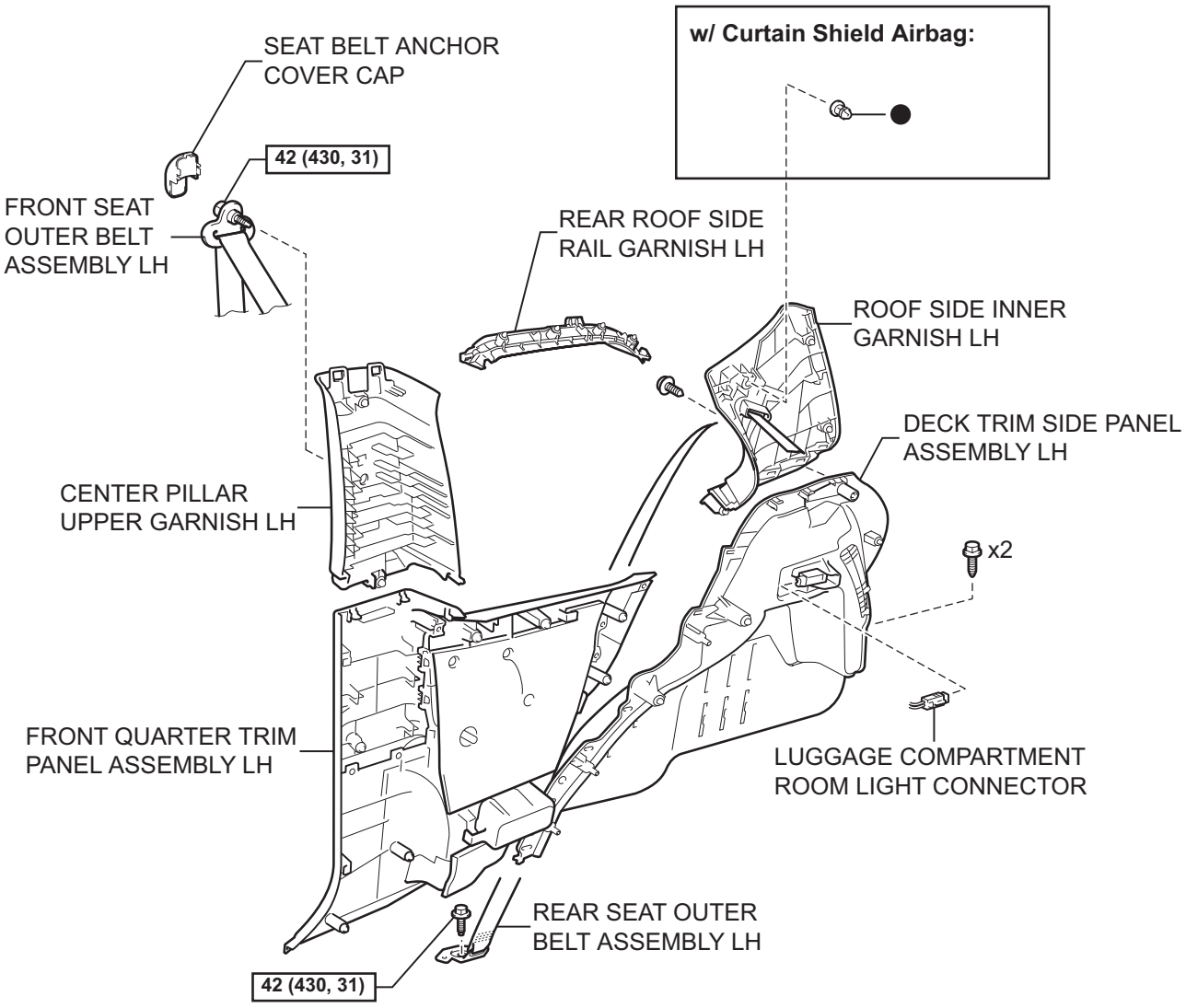

AV

N*m (kgf*cm, ft*lbf) : Specified torque

● Non-reusable part

T

B117700E07

w/ Curtain Shield Airbag:

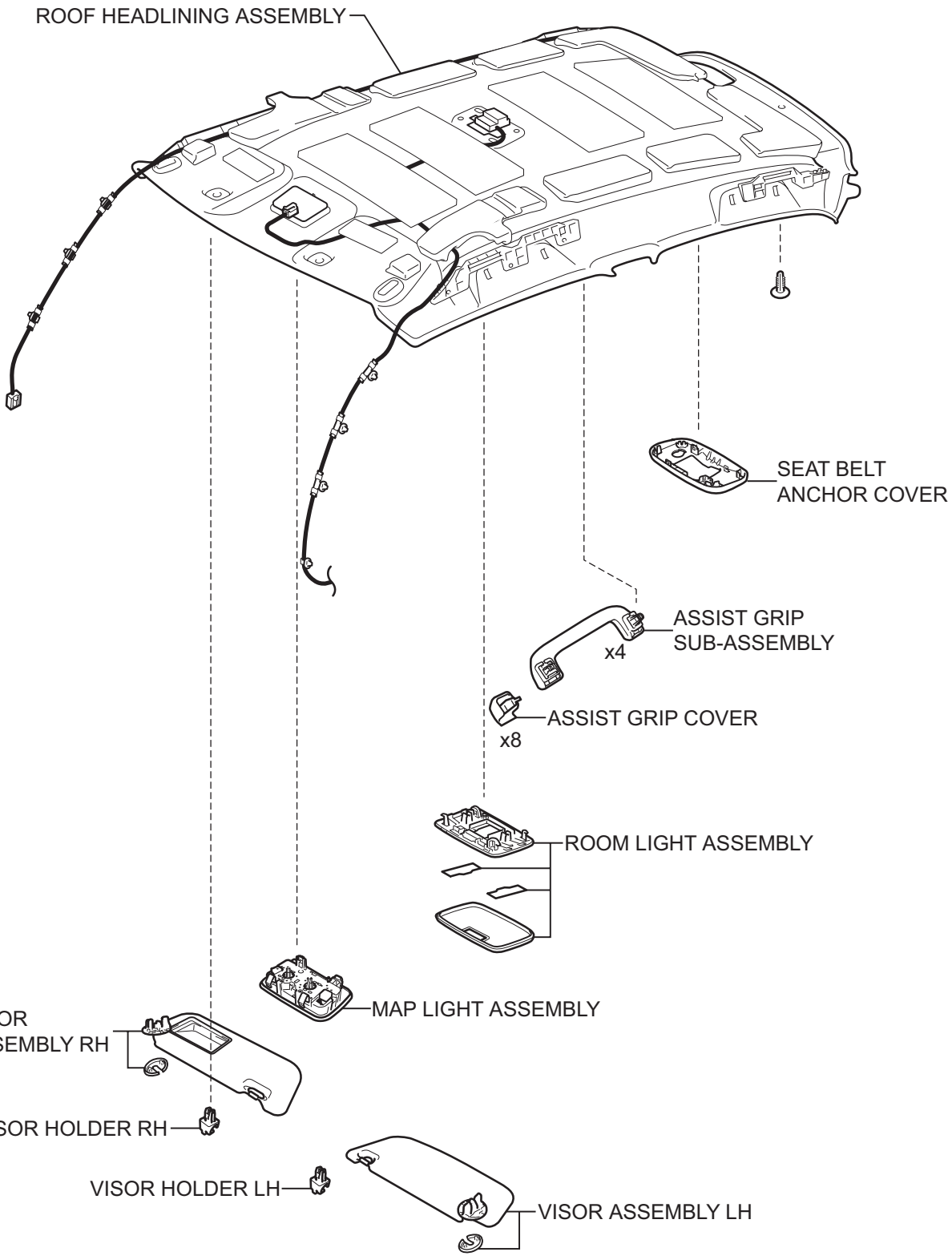

T

B138692E01

AV

w/o Curtain Shield Airbag:

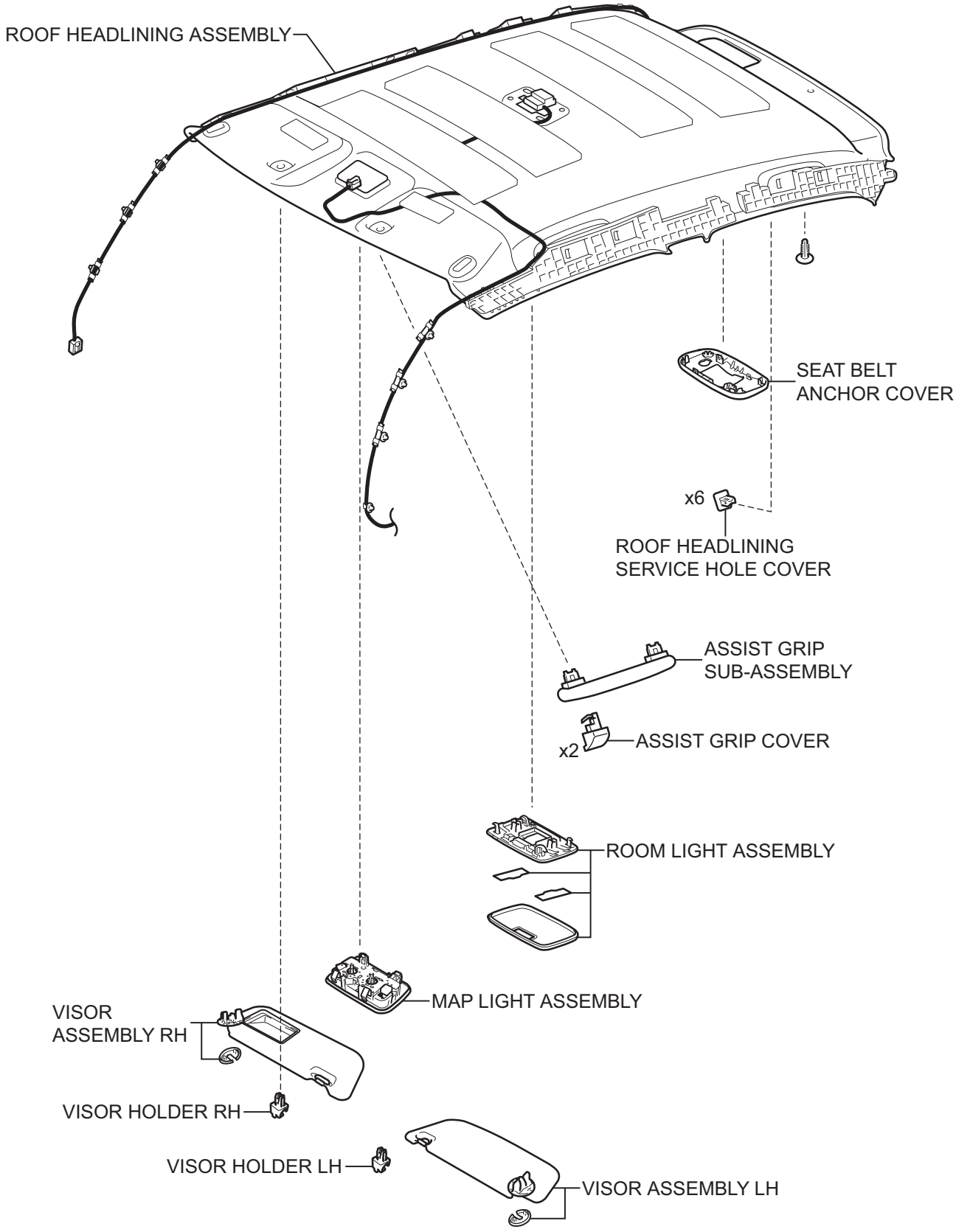

T

B138693E01

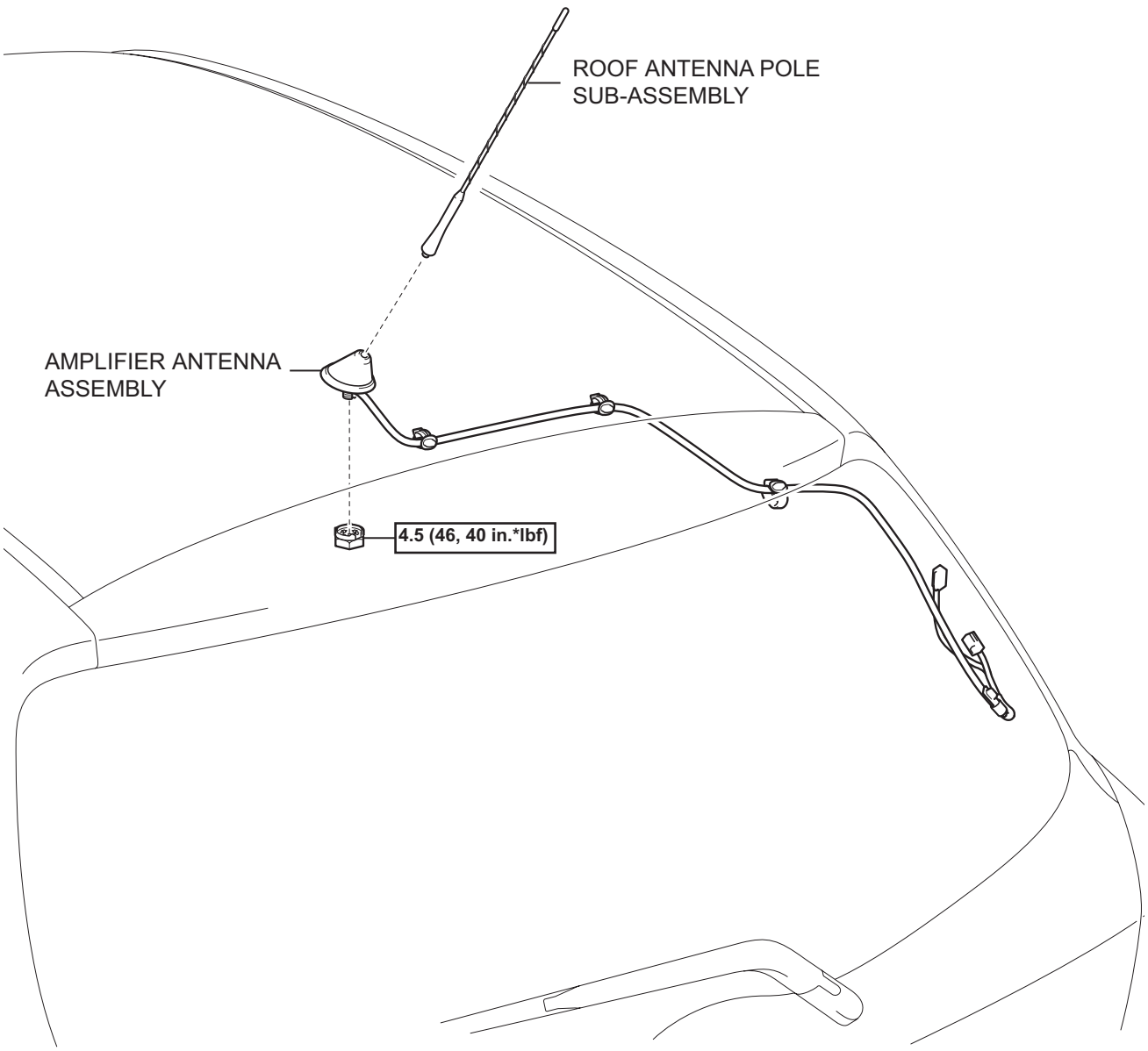

N*m (kgf*cm, ft.*lbf) : Specified torque

P

E107782E02

AV

REMOVAL

CAUTION:
Some of these service operations affect the SRS airbag system. Read the precautionary notices concerning the SRS airbag system before servicing (See page RS-1).
NOTICE:
Always use "Torx" socket wrench E10 when removing the rear seat.

1. **DISCONNECT CABLE FROM NEGATIVE BATTERY TERMINAL**
2. **REMOVE PACKAGE TRAY TRIM PANEL ASSEMBLY (See page IR-48)**
3. **REMOVE DECK BOARD SUB-ASSEMBLY (See page IR-48)**
4. **REMOVE DECK FLOOR BOX RH (See page IR-48)**
5. **REMOVE DECK FLOOR BOX LH (See page IR-48)**
6. **REMOVE NO. 1 REAR SEAT LEG COVER (for 60/40 Split Seat Type)**
   (a) for RH Side:
      (1) Remove the No. 1 rear seat leg cover (See page SE-89).
   (b) for LH Side:
      (1) Remove the No. 1 rear seat leg cover (See page SE-70).
7. **REMOVE NO. 2 REAR SEAT LEG COVER (for 60/40 Split Seat Type) (See page SE-70)**
8. **REMOVE REAR SEAT ASSEMBLY RH (for 60/40 Split Seat Type) (See page SE-89)**
9. **REMOVE REAR SEAT ASSEMBLY LH (for 60/40 Split Seat Type) (See page SE-71)**
10. **REMOVE REAR SEAT CUSHION COVER PAD SUB-ASSEMBLY (for Hold Down Seat Type) (See page SE-114)**
11. **REMOVE REAR SEATBACK ASSEMBLY (for Hold Down Seat Type) (See page SE-115)**
12. **REMOVE FRONT DOOR SCUFF PLATE RH (See page IR-97)**
13. **REMOVE FRONT DOOR SCUFF PLATE LH (See page IR-97)**
14. **REMOVE INSTRUMENT PANEL UNDER COVER SUB-ASSEMBLY RH (See page IR-50)**
15. **REMOVE INSTRUMENT PANEL UNDER COVER SUB-ASSEMBLY LH (See page IR-50)**
16. **REMOVE COWL SIDE TRIM BOARD RH (See page IR-50)**

17. REMOVE COWL SIDE TRIM BOARD LH (See page IR-50)
18. REMOVE FRONT DOOR OPENING TRIM WEATHERSTRIP RH (See page IR-97)
19. REMOVE FRONT DOOR OPENING TRIM WEATHERSTRIP LH (See page IR-97)
20. REMOVE FRONT QUARTER TRIM PANEL ASSEMBLY RH (See page IR-97)
21. REMOVE FRONT QUARTER TRIM PANEL ASSEMBLY LH (See page IR-97)
22. REMOVE REAR DECK TRIM COVER (See page IR-49)
23. REMOVE REAR SEAT OUTER BELT ASSEMBLY RH (See page IR-98)
24. REMOVE REAR SEAT OUTER BELT ASSEMBLY LH (See page IR-98)
25. REMOVE DECK TRIM SIDE PANEL ASSEMBLY RH (See page IR-98)
26. REMOVE DECK TRIM SIDE PANEL ASSEMBLY LH (See page IR-98)
27. REMOVE SEAT BELT ANCHOR COVER CAP (See page IR-99)
28. REMOVE FRONT SEAT OUTER BELT ASSEMBLY RH (See page IR-99)
29. REMOVE FRONT SEAT OUTER BELT ASSEMBLY LH (See page IR-99)
30. REMOVE CENTER PILLAR UPPER GARNISH RH (See page IR-99)
31. REMOVE CENTER PILLAR UPPER GARNISH LH (See page IR-99)
32. REMOVE REAR CENTER SEAT OUTER BELT ASSEMBLY (See page IR-52)
33. REMOVE ROOF SIDE INNER GARNISH RH (See page IR-99)
34. REMOVE ROOF SIDE INNER GARNISH LH (See page IR-100)
35. REMOVE REAR ROOF SIDE RAIL GARNISH RH (See page IR-100)
36. REMOVE REAR ROOF SIDE RAIL GARNISH LH (See page IR-100)
37. REMOVE SEAT BELT ANCHOR COVER (See page SB-159)
38. REMOVE ROOF HEADLINING SERVICE HOLE COVER (w/o Curtain Shield Airbag) (See page IR-55)
39. REMOVE ASSIST GRIP COVER (See page IR-55)

40. **REMOVE ASSIST GRIP SUB-ASSEMBLY (See page IR-56)**
41. **REMOVE VISOR ASSEMBLY RH (See page IR-56)**
42. **REMOVE VISOR ASSEMBLY LH (See page IR-56)**
43. **REMOVE VISOR HOLDER RH (See page IR-56)**
44. **REMOVE VISOR HOLDER LH (See page IR-56)**
45. **REMOVE ROOM LIGHT ASSEMBLY (See page IR-57)**
46. **REMOVE MAP LIGHT ASSEMBLY (See page IR-58)**
47. **REMOVE FRONT PILLAR GARNISH RH (See page IR-58)**
48. **REMOVE FRONT PILLAR GARNISH LH (See page IR-59)**
49. **REMOVE ROOF HEADLINING ASSEMBLY (See page AV-107)**
50. **REMOVE ROOF ANTENNA POLE SUB-ASSEMBLY (See page AV-117)**
51. **REMOVE AMPLIFIER ANTENNA ASSEMBLY (See page AV-135)**

INSTALLATION

CAUTION:
Some of these service operations affect the SRS airbag system. Read the precautionary notices concerning the SRS airbag system before servicing (See page RS-1).
NOTICE:
Always use "Torx" socket wrench E10 when installing the rear seat.

1. **INSTALL AMPLIFIER ANTENNA ASSEMBLY (See page AV-136)**
2. **INSTALL ROOF ANTENNA POLE SUB-ASSEMBLY (See page AV-117)**
3. **INSTALL ROOF HEADLINING ASSEMBLY (See page AV-112)**
4. **INSTALL FRONT PILLAR GARNISH RH (See page IR-71)**
5. **INSTALL FRONT PILLAR GARNISH LH (See page IR-72)**
6. **INSTALL MAP LIGHT ASSEMBLY (See page IR-73)**
7. **INSTALL ROOM LIGHT ASSEMBLY (See page IR-74)**
8. **INSTALL VISOR HOLDER RH (See page IR-75)**
9. **INSTALL VISOR HOLDER LH (See page IR-75)**
10. **INSTALL VISOR ASSEMBLY RH (See page IR-75)**
11. **INSTALL VISOR ASSEMBLY LH (See page IR-75)**
12. **INSTALL ASSIST GRIP SUB-ASSEMBLY (See page IR-75)**
13. **INSTALL ASSIST GRIP COVER (See page IR-75)**
14. **INSTALL ROOF HEADLINING SERVICE HOLE COVER (w/o Curtain Shield Airbag) (See page IR-76)**
15. **INSTALL SEAT BELT ANCHOR COVER (See page SB-160)**
16. **INSTALL REAR ROOF SIDE RAIL GARNISH RH (See page IR-115)**
17. **INSTALL REAR ROOF SIDE RAIL GARNISH LH (See page IR-115)**
18. **INSTALL ROOF SIDE INNER GARNISH RH (See page IR-115)**
19. **INSTALL ROOF SIDE INNER GARNISH LH (See page IR-116)**
20. **INSTALL REAR CENTER SEAT OUTER BELT ASSEMBLY (See page IR-78)**
21. **INSTALL CENTER PILLAR UPPER GARNISH RH (See page IR-116)**

22. INSTALL CENTER PILLAR UPPER GARNISH LH (See page IR-116)
23. INSTALL FRONT SEAT OUTER BELT ASSEMBLY RH (See page IR-117)
24. INSTALL FRONT SEAT OUTER BELT ASSEMBLY LH (See page IR-117)
25. INSTALL SEAT BELT ANCHOR COVER CAP (See page IR-117)
26. INSTALL DECK TRIM SIDE PANEL ASSEMBLY RH (See page IR-117)
27. INSTALL DECK TRIM SIDE PANEL ASSEMBLY LH (See page IR-118)
28. INSTALL REAR SEAT OUTER BELT ASSEMBLY RH (See page IR-118)
29. INSTALL REAR SEAT OUTER BELT ASSEMBLY LH (See page IR-118)
30. INSTALL REAR DECK TRIM COVER (See page IR-82)
31. INSTALL FRONT QUARTER TRIM PANEL ASSEMBLY RH (See page IR-118)
32. INSTALL FRONT QUARTER TRIM PANEL ASSEMBLY LH (See page IR-119)
33. INSTALL FRONT DOOR OPENING TRIM WEATHERSTRIP RH (See page IR-119)
34. INSTALL FRONT DOOR OPENING TRIM WEATHERSTRIP LH (See page IR-119)
35. INSTALL COWL SIDE TRIM BOARD RH (See page IR-81)
36. INSTALL COWL SIDE TRIM BOARD LH (See page IR-81)
37. INSTALL INSTRUMENT PANEL UNDER COVER SUB-ASSEMBLY RH (See page IR-81)
38. INSTALL INSTRUMENT PANEL UNDER COVER SUB-ASSEMBLY LH (See page IR-82)
39. INSTALL FRONT DOOR SCUFF PLATE RH (See page IR-119)
40. INSTALL FRONT DOOR SCUFF PLATE LH (See page IR-119)
41. INSTALL REAR SEAT ASSEMBLY RH (for 60/40 Slide Reclining Hold Down Seat Type) (See page SE-102)
42. INSTALL REAR SEAT ASSEMBLY LH (for 60/40 Split Seat Type) (See page SE-84)
43. INSTALL NO. 2 REAR SEAT LEG COVER (for 60/40 Split Seat Type) (See page SE-85)

44. **INSTALL NO. 1 REAR SEAT LEG COVER (for 60/40 Split Seat Type)**
    (a) for RH Side:
        (1) Install the No. 1 rear seat leg cover (See page SE-103).
    (b) for LH Side:
        (1) Install the No. 1 rear seat leg cover (See page SE-85).
45. **INSTALL REAR SEATBACK ASSEMBLY (for Hold Down Seat Type) (See page SE-123)**
46. **INSTALL REAR SEAT CUSHION COVER PAD SUB-ASSEMBLY (for Hold Down Seat Type) (See page SE-122)**
47. **INSTALL DECK FLOOR BOX RH (See page IR-83)**
48. **INSTALL DECK FLOOR BOX LH (See page IR-83)**
49. **INSTALL DECK BOARD SUB-ASSEMBLY (See page IR-83)**
50. **INSTALL PACKAGE TRAY TRIM PANEL ASSEMBLY (See page IR-83)**
51. **CONNECT CABLE TO NEGATIVE BATTERY TERMINAL**
    Torque: 5.4 N*m (55 kgf*cm, 48 in.*lbf)

STEREO JACK ADAPTER ASSEMBLY (for Sedan)

COMPONENTS

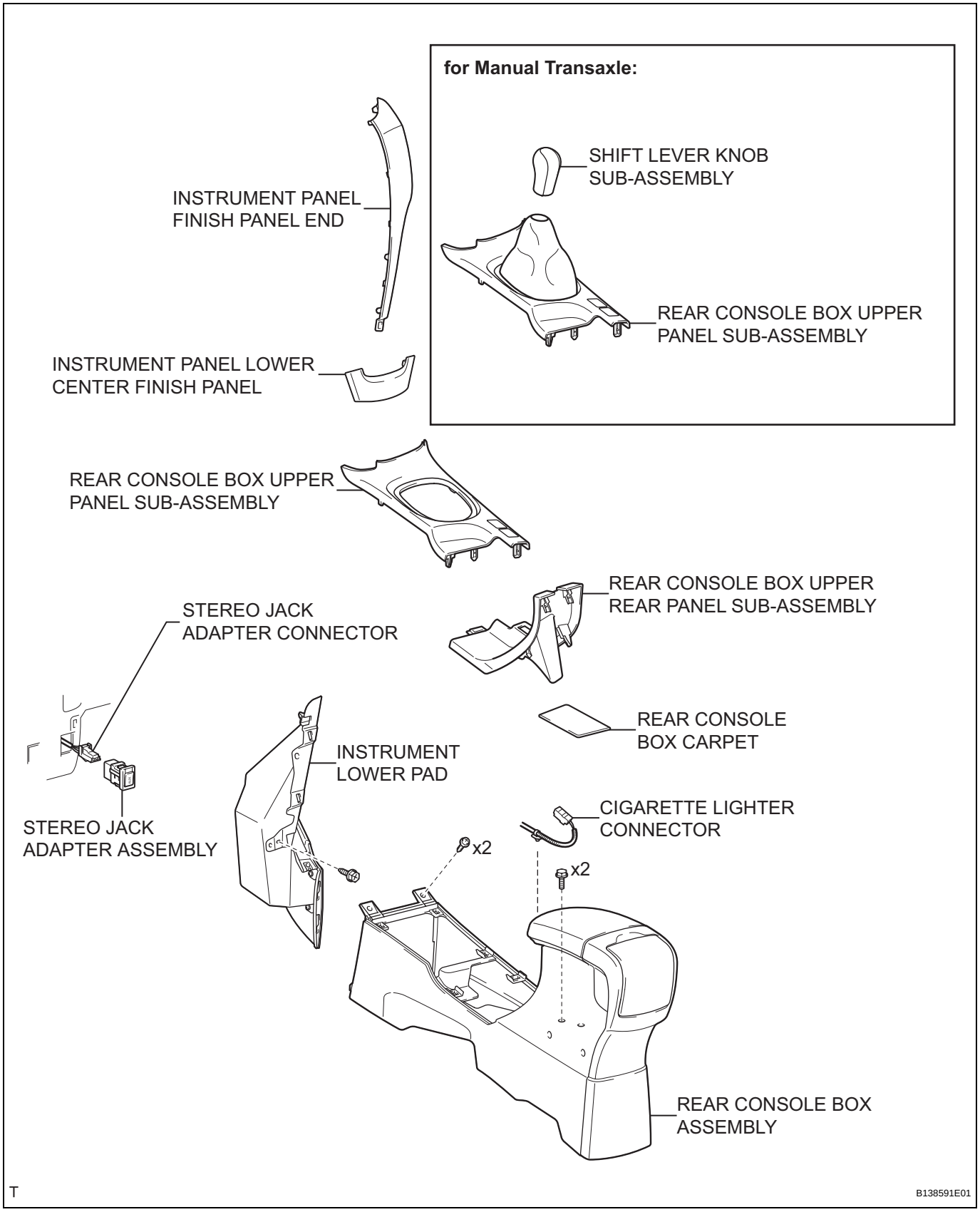

AV

AV

REMOVAL

1. **DISCONNECT CABLE FROM NEGATIVE BATTERY TERMINAL**
2. **REMOVE INSTRUMENT PANEL LOWER CENTER FINISH PANEL (See page ME-138)**
3. **REMOVE SHIFT LEVER KNOB SUB-ASSEMBLY (for Manual Transaxle) (See page IP-84)**
4. **REMOVE REAR CONSOLE BOX UPPER PANEL SUB-ASSEMBLY (See page IP-84)**
5. **REMOVE REAR CONSOLE BOX UPPER REAR PANEL SUB-ASSEMBLY (See page IP-84)**
6. **REMOVE REAR CONSOLE BOX CARPET (See page IP-85)**
7. **REMOVE REAR CONSOLE BOX ASSEMBLY (See page IP-85)**
8. **REMOVE INSTRUMENT PANEL FINISH PANEL END (See page ME-138)**
9. **REMOVE INSTRUMENT LOWER PAD (See page IP-45)**
10. **REMOVE STEREO JACK ADAPTER ASSEMBLY**
    (a) Disengage the 2 claws and remove the stereo jack adapter.
    (b) Disconnect the stereo jack adapter connector.

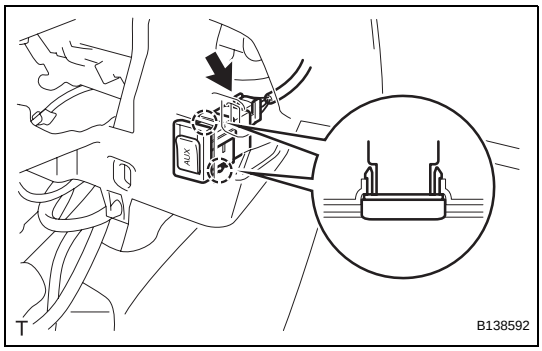

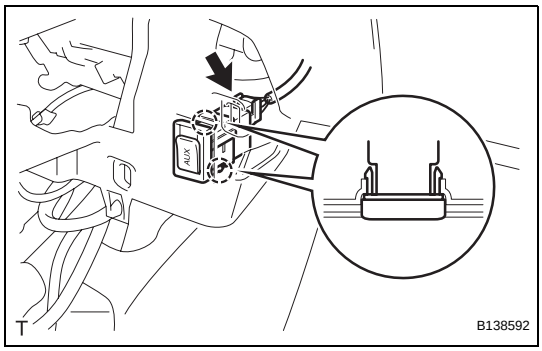

INSTALLATION

1. **INSTALL STEREO JACK ADAPTER ASSEMBLY**
    (a) Connect the stereo jack adapter connector.
    (b) Engage the 2 claws and install the stereo jack adapter.
2. **INSTALL INSTRUMENT LOWER PAD (See page IP-54)**
3. **INSTALL INSTRUMENT PANEL FINISH PANEL END (See page ME-141)**
4. **INSTALL REAR CONSOLE BOX ASSEMBLY (See page IP-88)**
5. **INSTALL REAR CONSOLE BOX CARPET (See page IP-88)**
6. **INSTALL REAR CONSOLE BOX UPPER REAR PANEL SUB-ASSEMBLY (See page IP-89)**
7. **INSTALL REAR CONSOLE BOX UPPER PANEL SUB-ASSEMBLY (See page IP-89)**

8. **INSTALL SHIFT LEVER KNOB SUB-ASSEMBLY (See page IP-89)**
9. **INSTALL INSTRUMENT PANEL LOWER CENTER FINISH PANEL (See page ME-142)**
10. **CONNECT CABLE TO NEGATIVE BATTERY TERMINAL**
    Torque: 5.4 N*m (55 kgf*cm, 48 in.*lbf)

WINDOW GLASS ANTENNA WIRE (for Sedan)

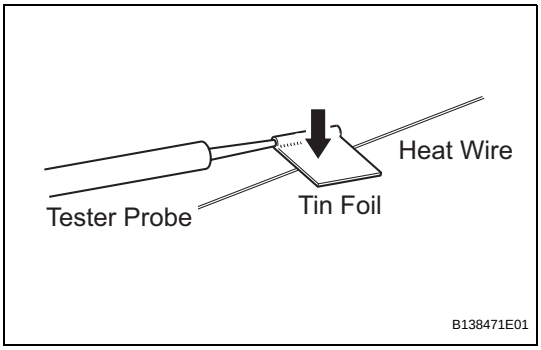

REPAIR

1. INSPECT WINDOW GLASS ANTENNA WIRE

NOTICE:

When cleaning the glass, use a soft, dry cloth, and wipe the glass in the direction of the wire. Do not to damage the wires. Do not use detergents or glass cleaners which contain any abrasive ingredients. When measuring the voltage, wind a piece of tin foil around the top of the negative probe and press the foil against wire by your finger, as shown in the illustration.

(a) Inspect the continuity, at the center of each antenna wire, as shown in the illustration.

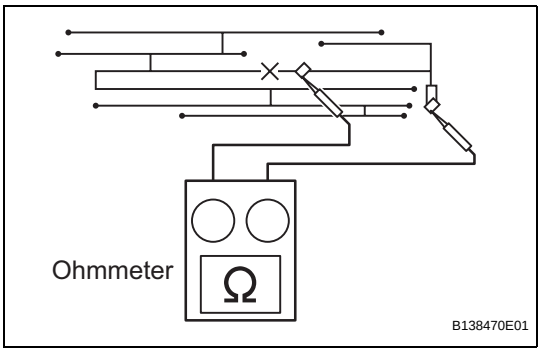

2. REPAIR WINDOW GLASS ANTENNA WIRE

(a) Clean the broken wire tips with grease, wax or silicone remover.

(b) Place the masking tape along both sides of the wire to be repaired.

(c) Thoroughly mix the repair agent (Dupont paste No. 4817).

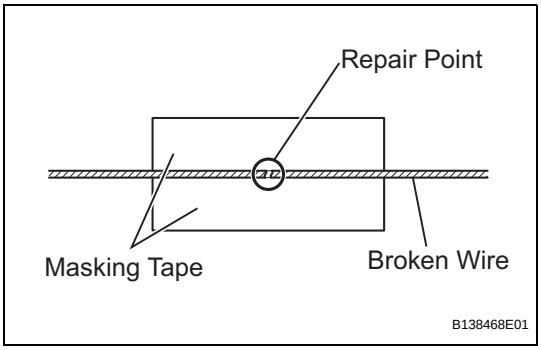

(d) Using a fine tip brush, apply a small amount of the agent to the wire.

(e) After a few minutes, remove the masking tape.

(f) Do not repair the defogger wire after for at least 24 hours after the removal of the masking tape.

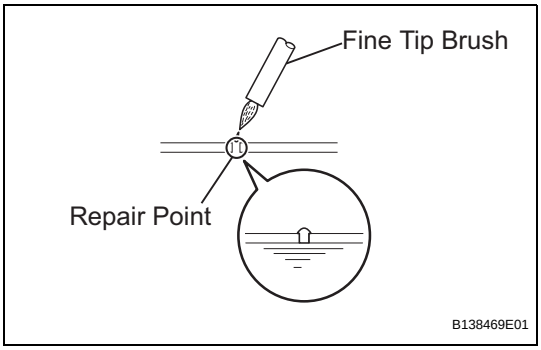

AV

FRONT NO. 1 SPEAKER (for Sedan)

COMPONENTS

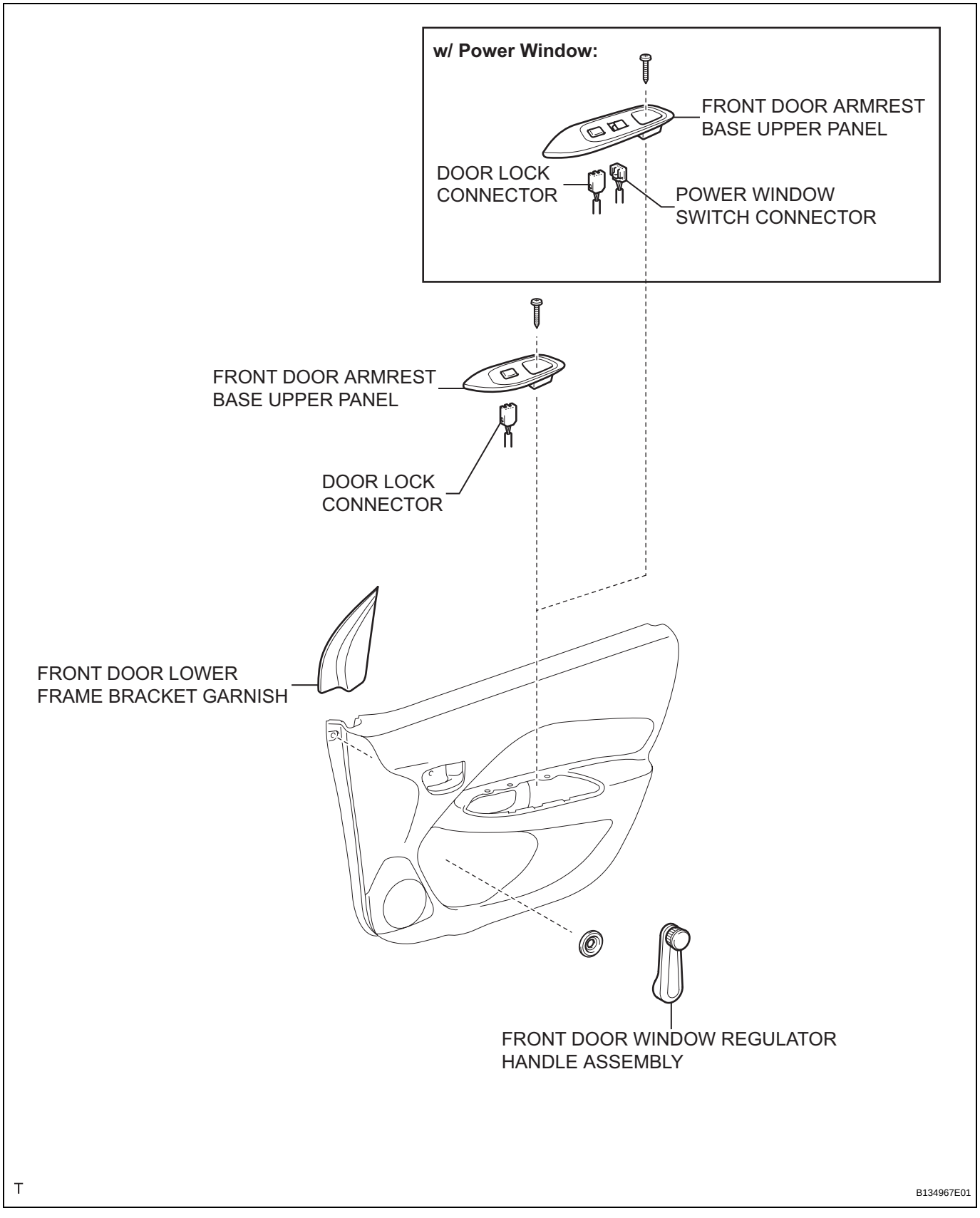

AV

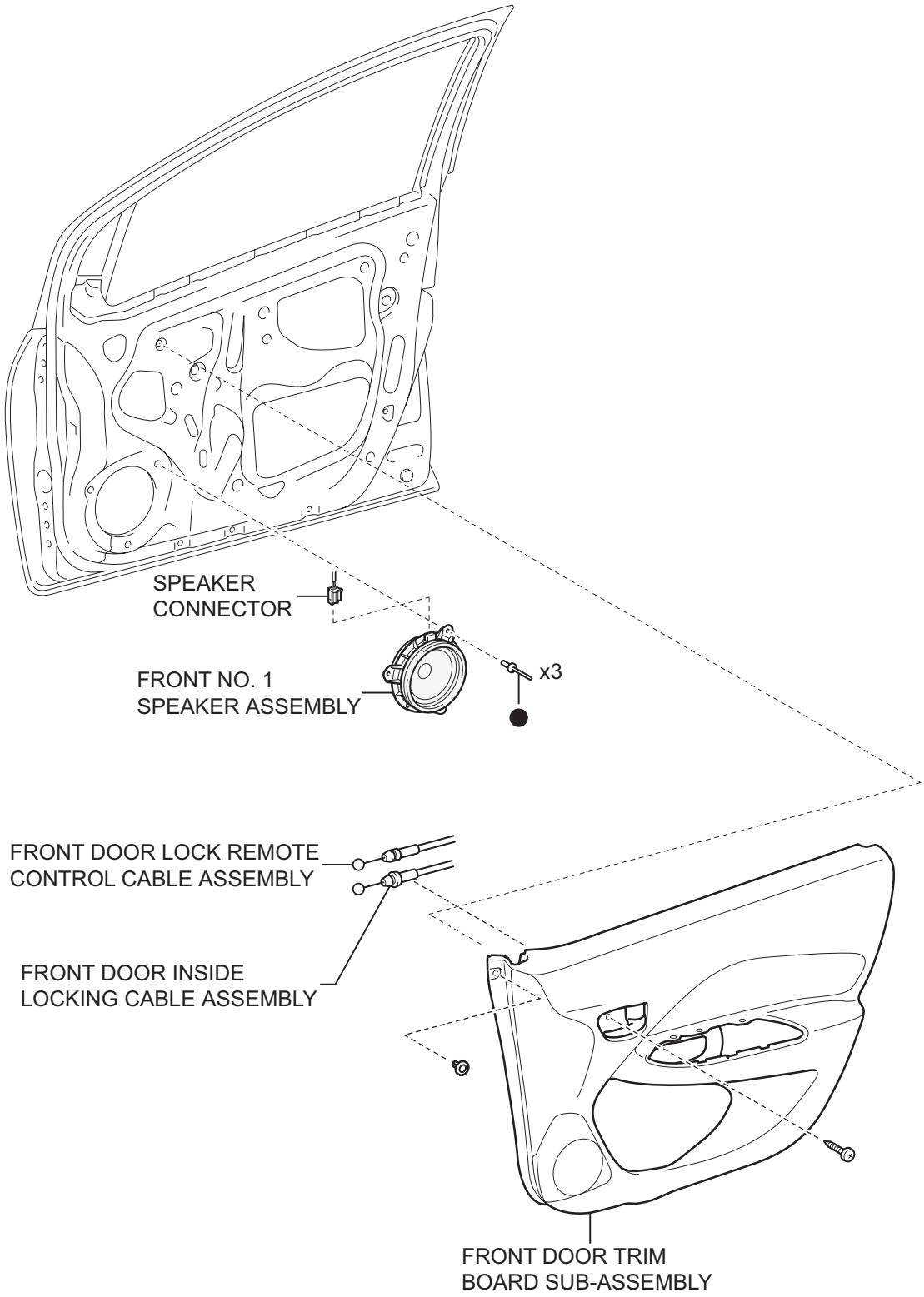

● Non-reusable part

T

B134968E01

ON-VEHICLE INSPECTION

1. INSPECT FRONT NO. 1 SPEAKER ASSEMBLY

HINT:

Remove interior parts so that the front No. 1 speaker can be seen.

(a) Check the installation.

OK:

The speaker is securely installed.

If the result is not as specified, reinstall the front No. 1 speaker.

(b) Visually check the speaker.

OK:

The cone paper of the speaker is not torn.

If the result is not as specified, replace the front No. 1 speaker.

(c) Check the resistance.

(1) Disconnect the speaker connector.

(2) Using an ohmmeter, measure the resistance between the terminals.

Standard resistance

Tester Connection	Specified Condition
1 - 2	Approximately 4 Ω

If the result is not as specified, replace the front No. 1 speaker.

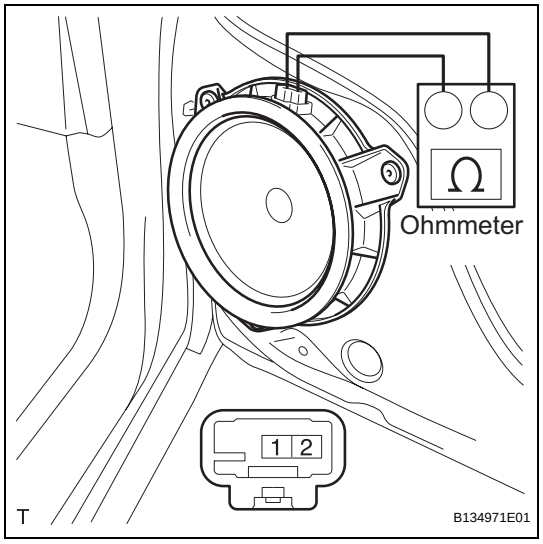

AV

REMOVAL

HINT:
The procedure described below is for the RH side. Use the same procedure for both the RH and LH sides, unless otherwise specified.

1. **DISCONNECT CABLE FROM NEGATIVE BATTERY TERMINAL**
2. **REMOVE FRONT DOOR WINDOW REGULATOR HANDLE ASSEMBLY (w/o Power Window) (See page ED-9)**
3. **REMOVE FRONT DOOR LOWER FRAME BRACKET GARNISH (See page ED-9)**
4. **REMOVE FRONT DOOR ARMREST BASE UPPER PANEL (See page ED-9)**
5. **REMOVE FRONT DOOR TRIM BOARD SUB-ASSEMBLY (See page ED-11)**
6. **REMOVE FRONT NO. 1 SPEAKER ASSEMBLY**
   (a) Disconnect the speaker connector.

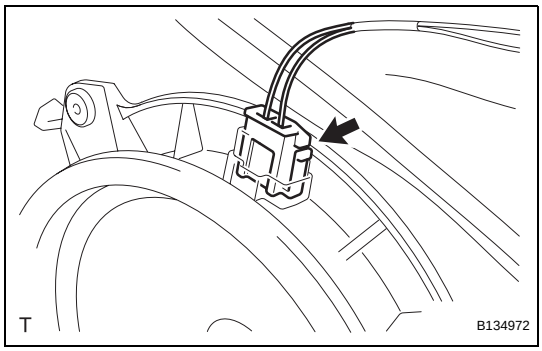

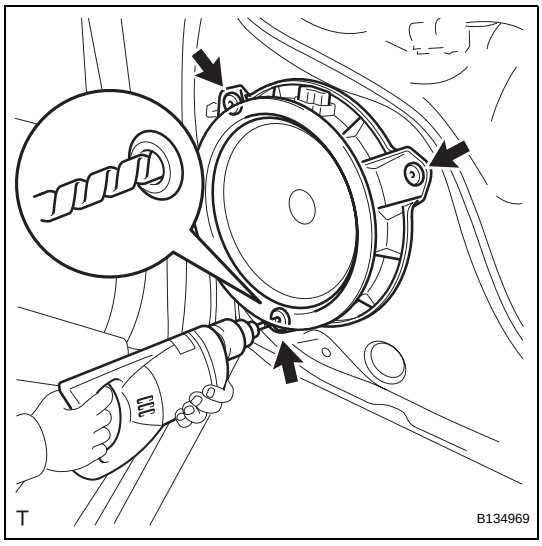

   (b) Drill out the 3 rivet heads using a drill with a bit diameter of less than 4 mm (0.16 in.), and remove the front No.1 speaker.
   (c) Operate the drill around the rivet head circumference and cut out the flange.
   CAUTION:
   Be careful. The cut rivet is very hot.
   NOTICE:
   Do not drill the rivet at an angle as this will cause damage to the drill and drill hole. Line up the drill and rivet, and carefully drill the rivet head straight out.
   (d) After drilling out the flange, continue drilling to push out the shards on the drill.
   (e) Using a vacuum cleaner, remove the rivet fragments and shavings from the inside of the door.

INSTALLATION

HINT:
The procedure described below is for the RH side. Use the same procedure for both the RH and LH sides, unless otherwise specified.

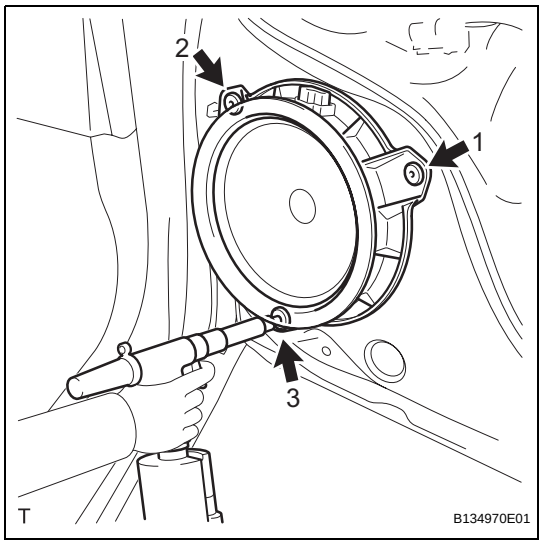

1. INSTALL FRONT NO. 1 SPEAKER ASSEMBLY

(a) Using an air riveter or hand riveter, install the front No. 1 speaker with 3 new strike rivets.
HINT:
Install the new strike rivets in the order shown in the illustration.

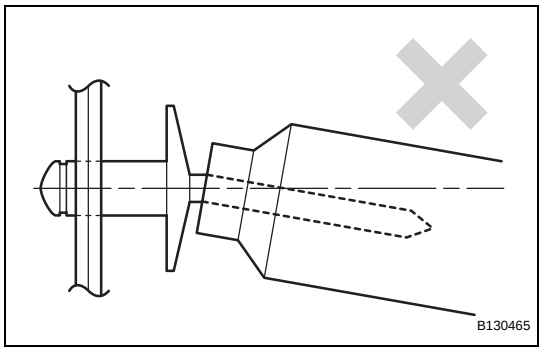

NOTICE:

- **Do not pry the rivet with the riveter, as this will cause damage to the riveter and mandrel.**

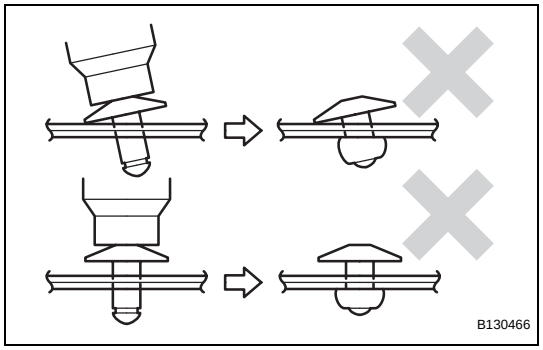

- **Confirm that the rivets are seated properly against the speaker.**
- **Do not tilt the riveter when installing the rivet onto the speaker.**
- **Do not leave any space between the rivet head and speaker.**

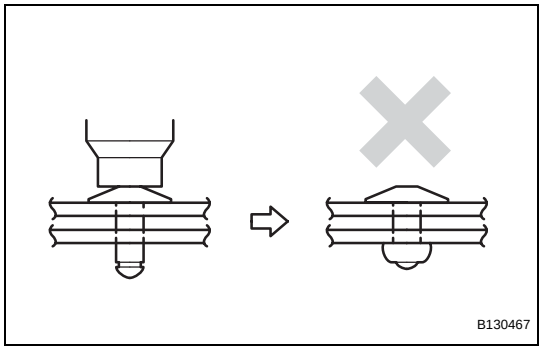

- **Do not leave any space between the speaker and door. Firmly hold the 2 items together while installing the rivet.**

AV

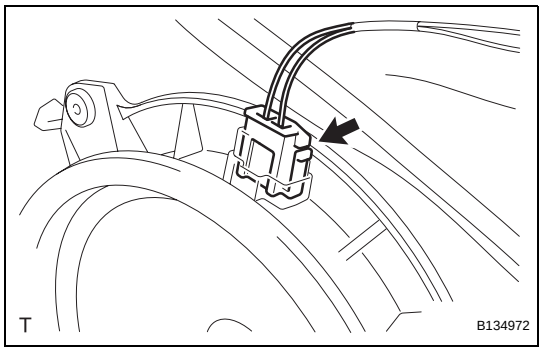

(b) Connect the speaker connector.

2. **INSTALL FRONT DOOR TRIM BOARD SUB-ASSEMBLY (See page ED-26)**
3. **INSTALL FRONT DOOR ARMREST BASE UPPER PANEL (See page ED-28)**
4. **INSTALL FRONT DOOR LOWER FRAME BRACKET GARNISH (See page ED-28)**
5. **INSTALL FRONT DOOR WINDOW REGULATOR HANDLE ASSEMBLY (w/o Power Window) (See page ED-29)**
6. **CONNECT CABLE TO NEGATIVE BATTERY TERMINAL**
   Torque: 5.4 N*m (55 kgf*cm, 48 in.*lbf)

FRONT NO. 1 SPEAKER (for Hatchback)

COMPONENTS

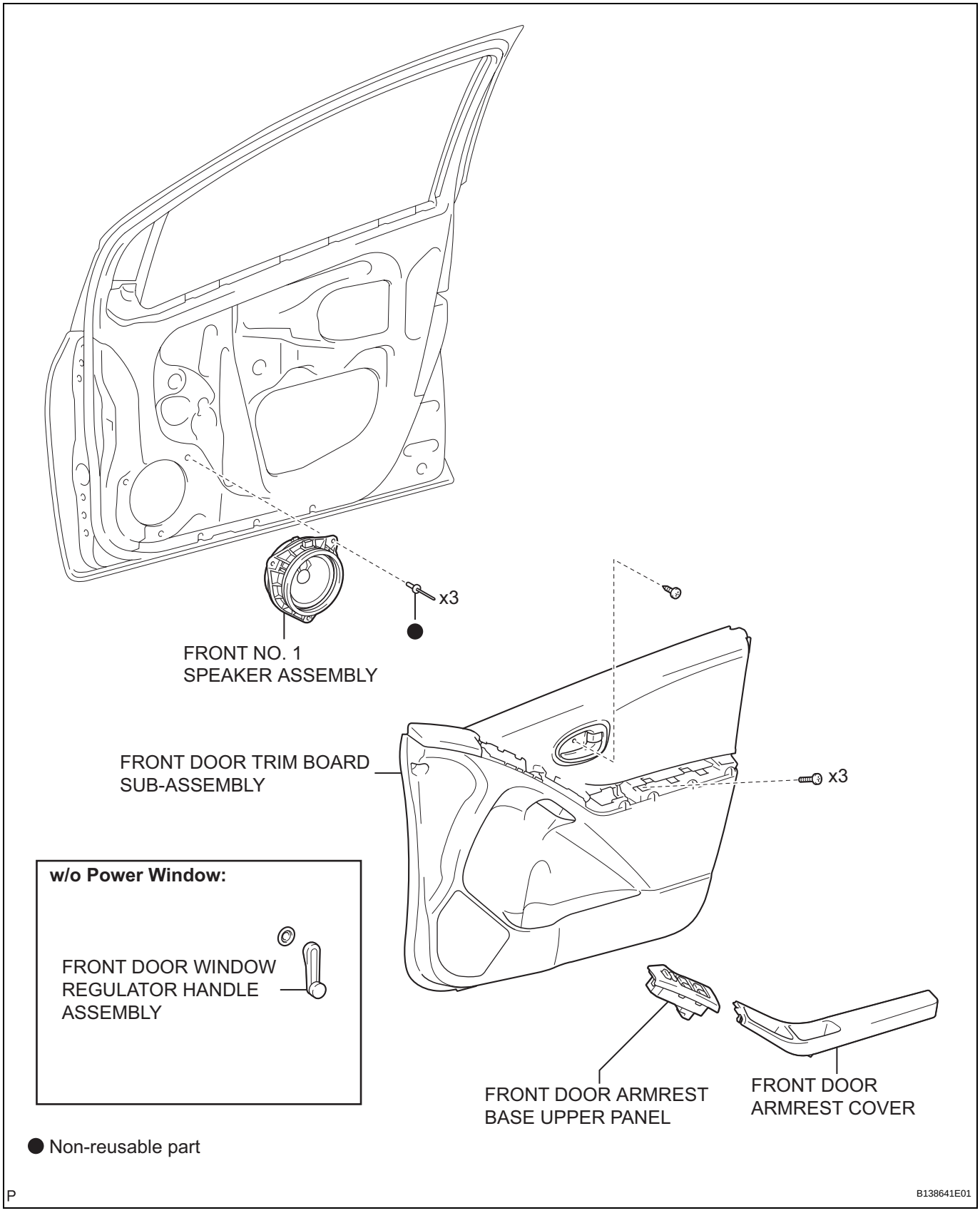

ON-VEHICLE INSPECTION

1. INSPECT FRONT NO. 1 SPEAKER

HINT:

Remove interior parts so that the front No. 1 speaker can be seen.

(a) Check the speaker installation.

OK:

The speaker is securely installed.

If the result is not as specified, reinstall the front No. 1 speaker.

(b) Visually check the speaker.

OK:

The cone paper of the speaker is not torn.

If the result is not as specified, replace the front No. 1 speaker.

(c) Check the speaker resistance.

(1) Disconnect the speaker connector.

(2) Using an ohmmeter, measure the resistance between the terminals.

Standard resistance

Tester Connection	Specified Condition
1 - 2	Approximately 4 Ω

If the result is not as specified, replace the front No. 1 speaker.

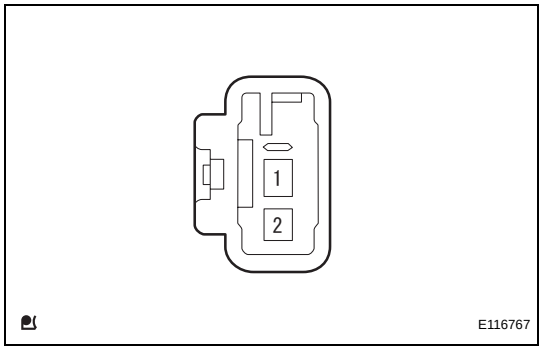

AV

REMOVAL

HINT:
The procedure described below is for the LH sides. Use the same procedure for both the RH and LH side, unless otherwise specified.

1. **DISCONNECT CABLE FROM NEGATIVE BATTERY TERMINAL**

2. **REMOVE FRONT DOOR WINDOW REGULATOR HANDLE ASSEMBLY (w/o Power Window) (See page ED-57)**

3. **REMOVE FRONT DOOR ARMREST COVER (See page ED-33)**

4. **REMOVE FRONT DOOR ARMREST BASE UPPER PANEL**
   (a) w/ Power Window:
      (1) Remove the front door armrest base upper panel (See page ED-33).
   (b) w/o Power Window:
      (1) Remove the front door armrest base upper panel (See page ED-57).

5. **REMOVE FRONT DOOR TRIM BOARD SUB-ASSEMBLY**
   (a) w/ Power Window:
      (1) Remove the front door trim board sub-assembly (See page ED-34).
   (b) w/o Power Window:
      (1) Remove the front door trim board sub-assembly (See page ED-58).

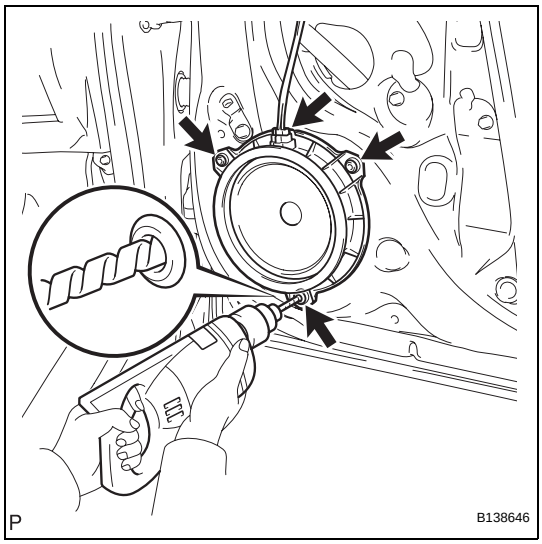

6. **REMOVE FRONT NO. 1 SPEAKER ASSEMBLY**
   (a) Disconnect the speaker connector.
   (b) Drill out the 3 rivet heads using a drill with a bit diameter of less than 4 mm (0.16 in.), and remove the front No.1 speaker assembly from the front door panel.
   (c) Operate the drill around the rivet head circumference and cut out the flange.
   CAUTION:
   Be careful. The cut rivet is very hot.
   NOTICE:
   Do not drill the rivet at an angle as this will cause damage to the drill and drill hole. Line up the drill and rivet, and carefully drill the rivet head straight out.
   (d) After drilling out the flange, continue drilling to push out the shards on the drill.
   (e) Using a vacuum cleaner, remove the rivet fragments and shavings from the inside of the door.

INSTALLATION

HINT:
The procedure described below is for the LH side. Use the same procedure for both the RH and LH sides, unless otherwise specified.

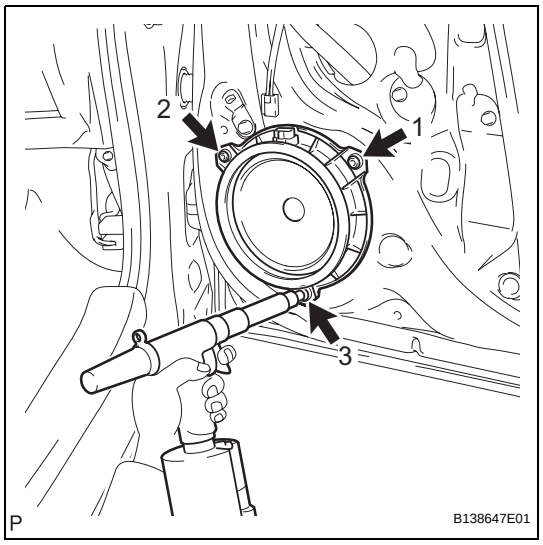

1. INSTALL FRONT NO. 1 SPEAKER ASSEMBLY

(a) Using an air riveter or hand riveter, install the front No.1 speaker assembly onto the front door panel with 3 new strike rivets.
HINT:
Install the new strike rivets in the order shown in the illustration.

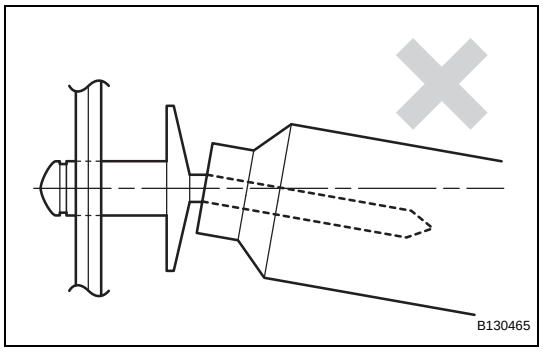

NOTICE:

- **Do not pry the rivet with the riveter, as this will cause damage to the riveter and mandrel.**

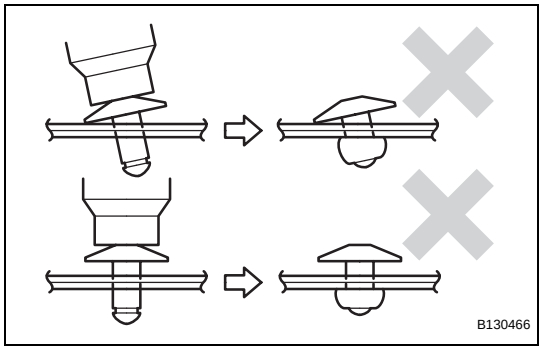

- **Confirm that the rivets are seated properly against the speaker.**
- **Do not tilt the riveter when installing the rivet onto the speaker.**
- **Do not leave any space between the rivet head and speaker.**

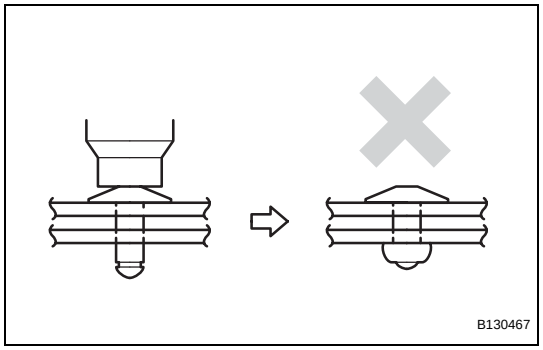

- **Do not leave any space between the speaker and door. Firmly hold the 2 items together while installing the rivet.**

AV

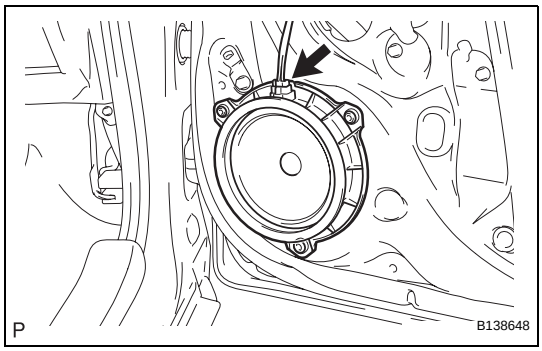

(b) Connect the speaker connector.

2. **INSTALL FRONT DOOR TRIM BOARD SUB-ASSEMBLY**
   (a) w/ Power Window:
      (1) Install the front door trim board sub-assembly (See page ED-51).
   (b) w/o Power Window:
      (1) Install the front door trim board sub-assembly (See page ED-74).

3. **INSTALL FRONT DOOR ARMREST BASE UPPER PANEL**
   (a) w/ Power Window:
      (1) Install the front door armrest base upper panel (See page ED-53).
   (b) w/o Power Window:
      (1) Install the front door armrest base upper panel (See page ED-74).

4. **INSTALL FRONT DOOR ARMREST COVER (See page ED-53)**

5. **INSTALL FRONT DOOR WINDOW REGULATOR HANDLE ASSEMBLY (w/o Power Window) (See page ED-75)**

6. **CONNECT CABLE TO NEGATIVE BATTERY TERMINAL**
   Torque: 5.4 N*m (55 kgf*cm, 48 in.*lbf)

REAR SPEAKER (for Sedan)

COMPONENTS

for 60/40 Split Seat Type:

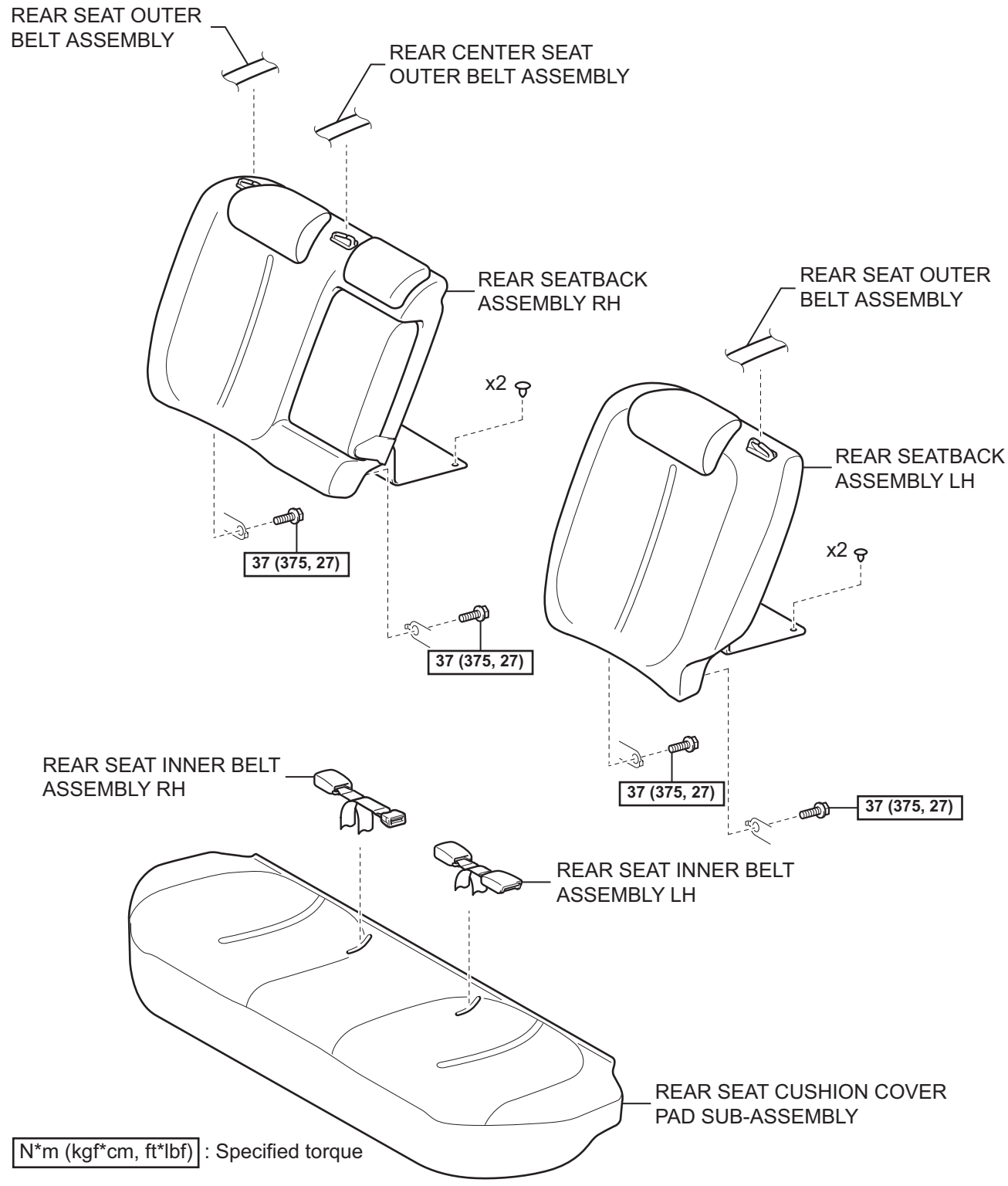

AV

for Fixed Seat Type:

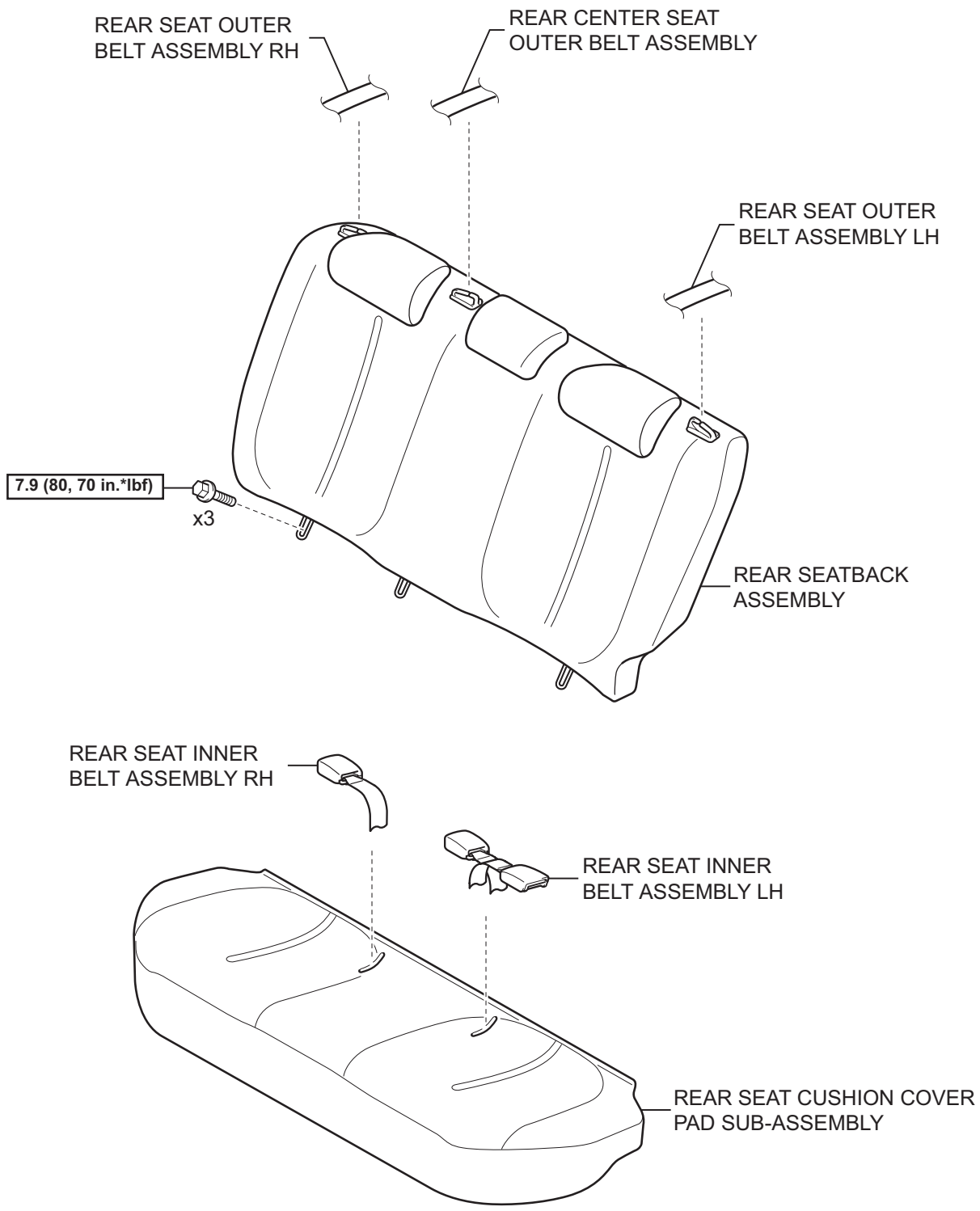

N*m (kgf*cm, ft*lbf) : Specified torque

T

B138441E06

for 60/40 Split Seat Type:

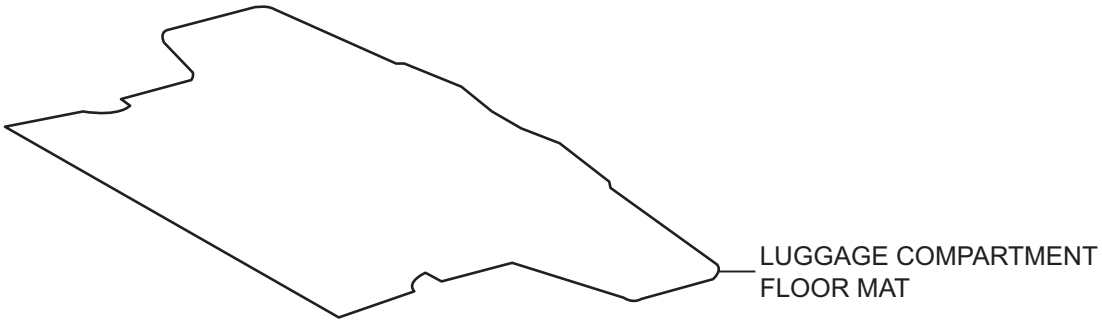

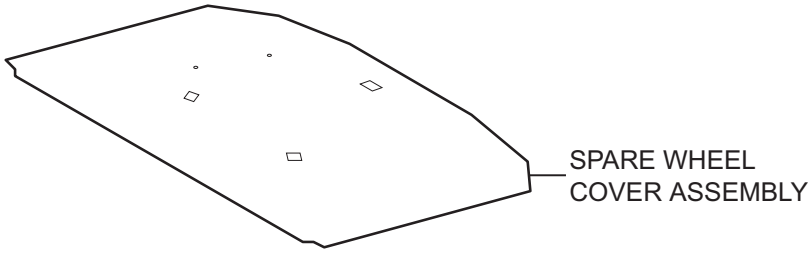

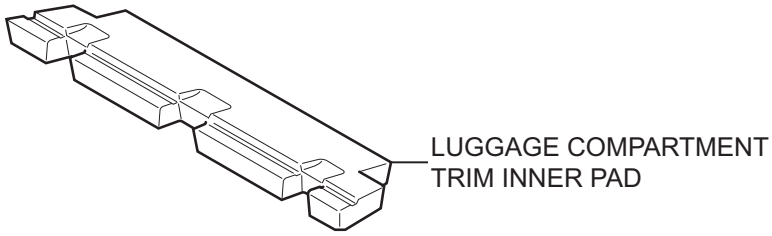

for Grand Tire:

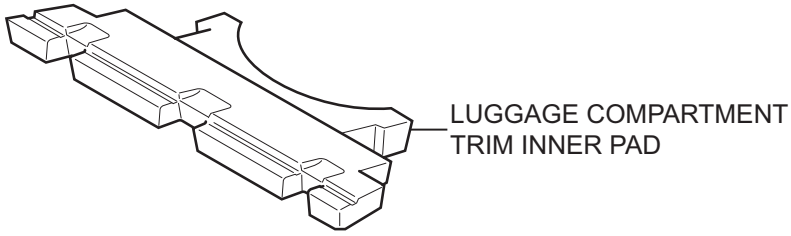

T

B138565E01

AV

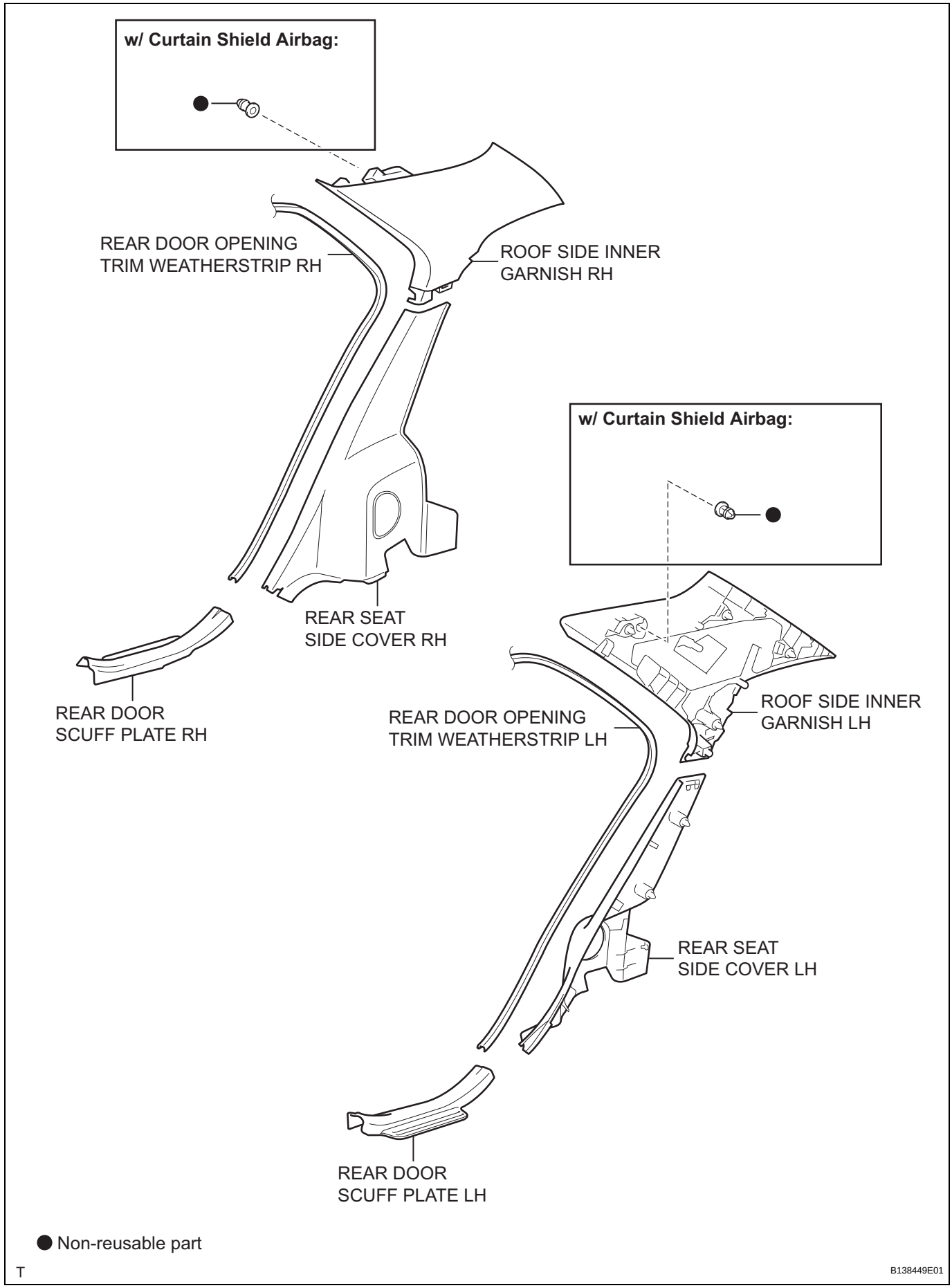
w/ Curtain Shield Airbag:
REAR DOOR OPENING TRIM WEATHERSTRIP RH
ROOF SIDE INNER GARNISH RH
REAR SEAT SIDE COVER RH
REAR DOOR SCUFF PLATE RH
w/ Curtain Shield Airbag:
ROOF SIDE INNER GARNISH LH
REAR DOOR OPENING TRIM WEATHERSTRIP LH
REAR SEAT SIDE COVER LH
REAR DOOR SCUFF PLATE LH
● Non-reusable part
T
B138449E01

AV

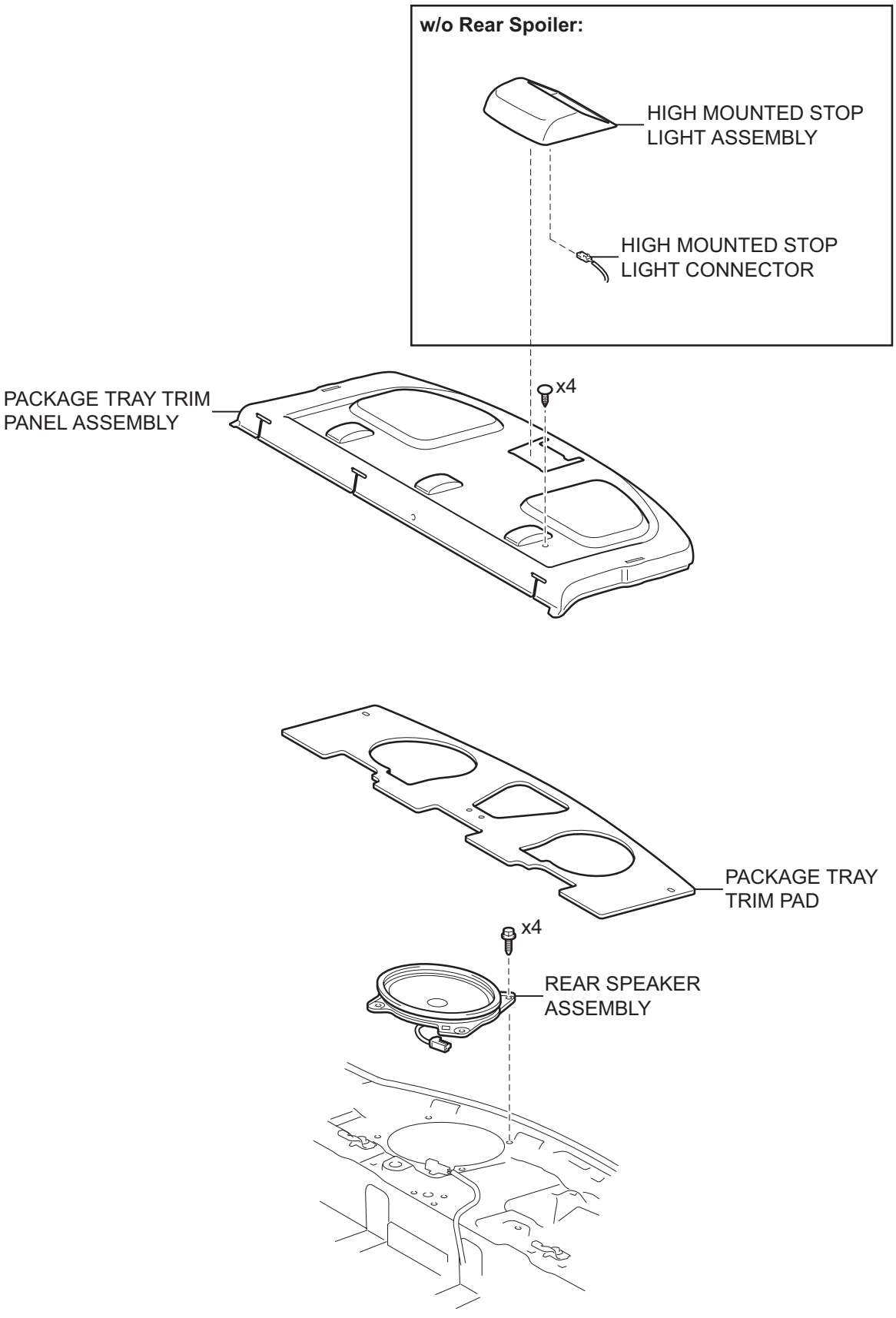
w/o Rear Spoiler:
HIGH MOUNTED STOP LIGHT ASSEMBLY
HIGH MOUNTED STOP LIGHT CONNECTOR
PACKAGE TRAY TRIM PANEL ASSEMBLY
x4
PACKAGE TRAY TRIM PAD
x4
REAR SPEAKER ASSEMBLY
T
B138640E01

AV

ON-VEHICLE INSPECTION

1. REAR SPEAKER ASSEMBLY

HINT:

Remove interior parts so that the rear speaker can be seen.

(a) Check the installation.

OK:

The speaker is securely installed.

If the result is not as specified, reinstall the rear speaker.

(b) Visually check the speaker.

OK:

The cone paper of the speaker is not torn.

If the result is not as specified, replace the rear speaker.

(c) Check the resistance.

(1) Disconnect the speaker connector.

(2) Using an ohmmeter, measure the resistance between the terminals.

Standard resistance

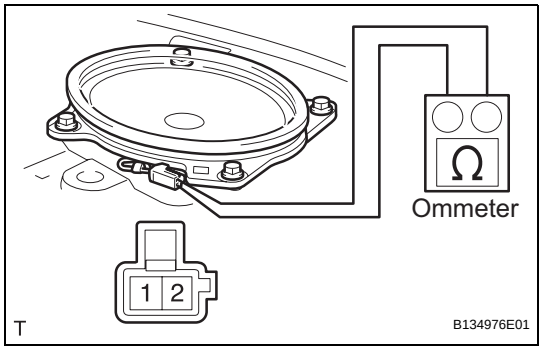

Tester Connection	Specified Condition
1 - 2	Approximately 4 Ω

If the result is not as specified, replace the rear speaker.

AV

REMOVAL

HINT:
The procedure described below is for the RH side. Use the same procedure for both the RH and LH sides, unless otherwise specified.

1. **DISCONNECT CABLE FROM NEGATIVE BATTERY TERMINAL**
2. **REMOVE REAR SEAT CUSHION COVER PAD SUB-ASSEMBLY**
   (a) for 60/40 Split Seat Type:
      (1) Remove the rear seat cushion cover pad sub-assembly (See page SE-46).
   (b) for Fixed Seat Type:
      (1) Remove the rear seat cushion cover pad sub-assembly (See page SE-106).
3. **REMOVE REAR SEATBACK ASSEMBLY RH (for 60/40 Split Seat Type) (See page SE-57)**
4. **REMOVE REAR SEATBACK ASSEMBLY LH (for 60/40 Split Seat Type) (See page SE-46)**
5. **REMOVE REAR SEATBACK ASSEMBLY (for Fixed Seat Type) (See page SE-106)**
6. **REMOVE LUGGAGE COMPARTMENT FLOOR MAT (for 60/40 Split Seat Type) (See page ED-133)**
7. **REMOVE SPARE WHEEL COVER ASSEMBLY (for 60/40 Split Seat Type) (See page ED-133)**
8. **REMOVE LUGGAGE COMPARTMENT TRIM INNER PAD (for 60/40 Split Seat Type) (See page ED-134)**
9. **REMOVE REAR DOOR SCUFF PLATE RH (See page IR-15)**
10. **REMOVE REAR DOOR SCUFF PLATE LH (See page IR-15)**
11. **REMOVE REAR DOOR OPENING TRIM WEATHERSTRIP RH**
    (a) Remove the rear door opening trim weatherstrip to the extent that the rear seat side cover and the roof side inner garnish.

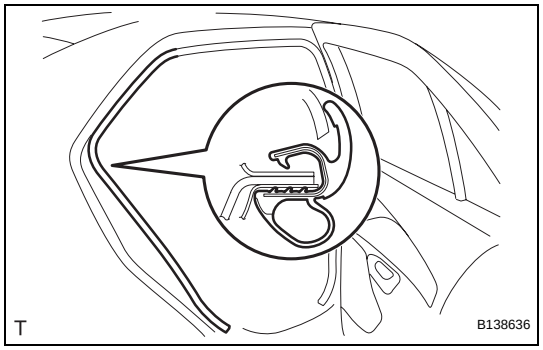

12. **REMOVE REAR DOOR OPENING TRIM WEATHERSTRIP LH**
    HINT:
    Use the same procedure as for the RH side.
13. **REMOVE REAR SEAT SIDE COVER RH (See page IR-16)**
14. **REMOVE REAR SEAT SIDE COVER LH (See page IR-16)**
15. **REMOVE ROOF SIDE INNER GARNISH RH (See page IR-16)**

AV

16. REMOVE ROOF SIDE INNER GARNISH LH (See page IR-16)

17. REMOVE HIGH MOUNTED STOP LIGHT ASSEMBLY (w/o Rear Spoiler) (See page LI-141)

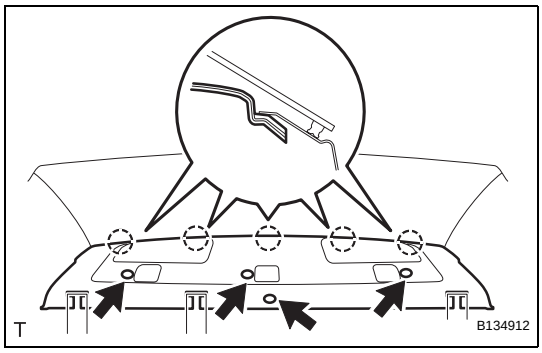

18. REMOVE PACKAGE TRAY TRIM PANEL ASSEMBLY

(a) Using a clip remover, remove the 4 clips.

(b) Disengage the 5 claws and remove the package tray trim panel.

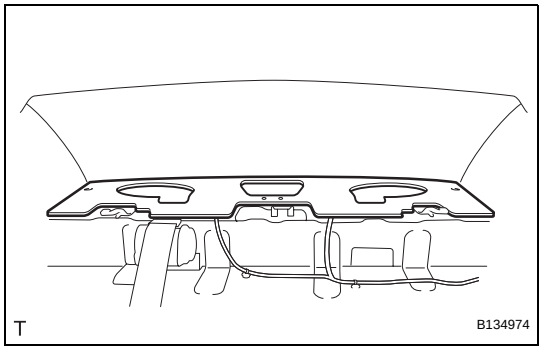

19. REMOVE PACKAGE TRAY TRIM PAD

(a) Remove the pack age tray trim pad.

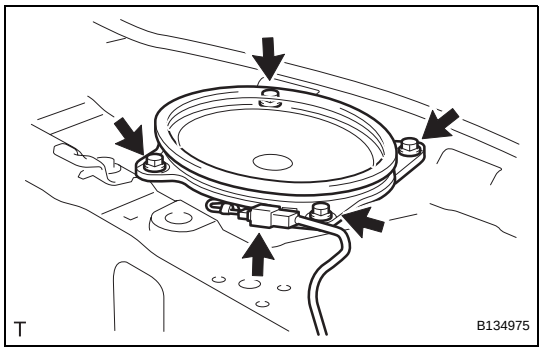

20. REMOVE REAR SPEAKER ASSEMBLY

(a) Disconnect the speaker connector.

(b) Remove the 4 bolts and the rear speaker.

AV

INSTALLATION

HINT:
The procedure described below is for the RH side. Use the same procedure for both the RH and LH sides, unless otherwise specified.

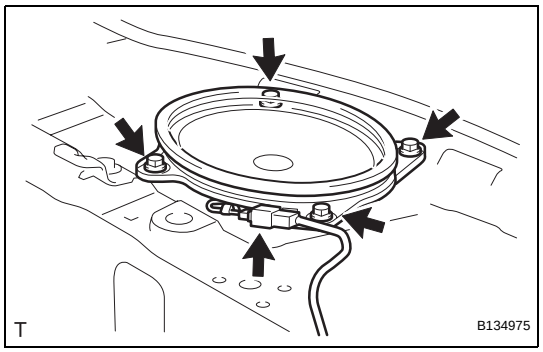

1. INSTALL REAR SPEAKER ASSEMBLY
(a) Install the rear speaker with the 4 bolts.
(b) Connect the speaker connector.

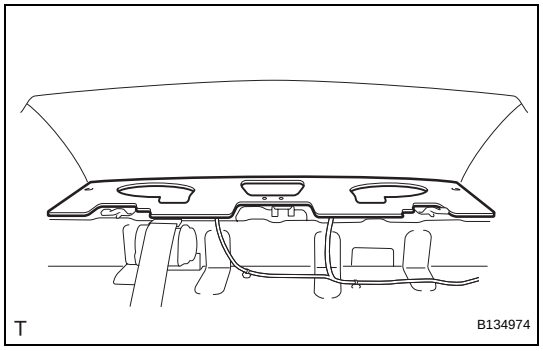

2. INSTALL PACKAGE TRAY TRIM PAD
(a) Install the package tray trim pad.

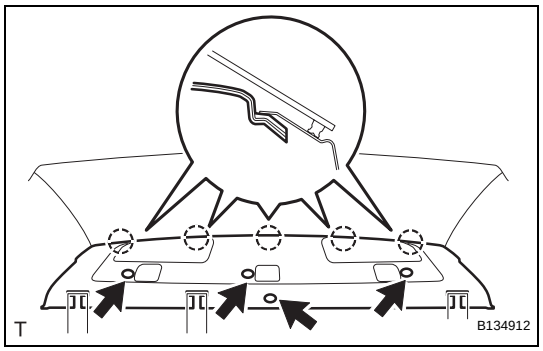

3. INSTALL PACKAGE TRAY TRIM PANEL ASSEMBLY
(a) Engage the 5 claws and install the package tray trim.
(b) Install the 4 clips.

4. INSTALL HIGH MOUNTED STOP LIGHT ASSEMBLY (w/o Rear Spoiler) (See page LI-142)

5. INSTALL ROOF SIDE INNER GARNISH RH (See page IR-32)

6. INSTALL ROOF SIDE INNER GARNISH LH (See page IR-33)

7. INSTALL REAR SEAT SIDE COVER RH (See page IR-33)

8. INSTALL REAR SEAT SIDE COVER LH (See page IR-33)

AV

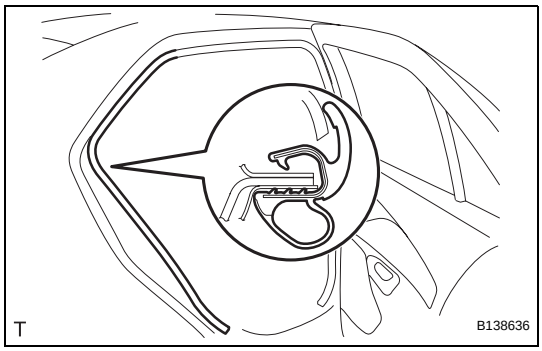

9. **INSTALL REAR DOOR OPENING TRIM WEATHERSTRIP RH**
   (a) Install the rear door opening trim weatherstrip.

10. **INSTALL REAR DOOR OPENING TRIM WEATHERSTRIP LH**
    HINT:
    Use the same procedure as for the RH side.

11. **INSTALL REAR DOOR SCUFF PLATE RH (See page IR-34)**

12. **INSTALL REAR DOOR SCUFF PLATE LH (See page IR-34)**

13. **INSTALL LUGGAGE COMPARTMENT TRIM INNER PAD (for 60/40 Split Seat Type) (See page ED-136)**

14. **INSTALL SPARE WHEEL COVER ASSEMBLY (for 60/40 Split Seat Type) (See page ED-137)**

15. **INSTALL LUGGAGE COMPARTMENT FLOOR MAT (for 60/40 Split Seat Type) (See page ED-137)**

16. **INSTALL REAR SEATBACK ASSEMBLY RH (for 60/40 Split Seat Type) (See page SE-65)**

17. **INSTALL REAR SEATBACK ASSEMBLY LH (for 60/40 Split Seat Type) (See page SE-52)**

18. **INSTALL REAR SEATBACK ASSEMBLY (for Fixed Seat Type) (See page SE-108)**

19. **INSTALL REAR SEAT CUSHION COVER PAD SUB-ASSEMBLY**
    (a) for 60/40 Split Seat Type:
        (1) Install the rear seat cushion cover pad sub-assembly (See page SE-53).
    (b) for Fixed Seat Type:
        (1) Install the rear seat cushion cover pad sub-assembly (See page SE-109).

20. **CONNECT CABLE TO NEGATIVE BATTERY TERMINAL**
    Torque: 5.4 N*m (55 kgf*cm, 48 in.*lbf)

AV

REAR SPEAKER (for Hatchback 5 Door)

COMPONENTS

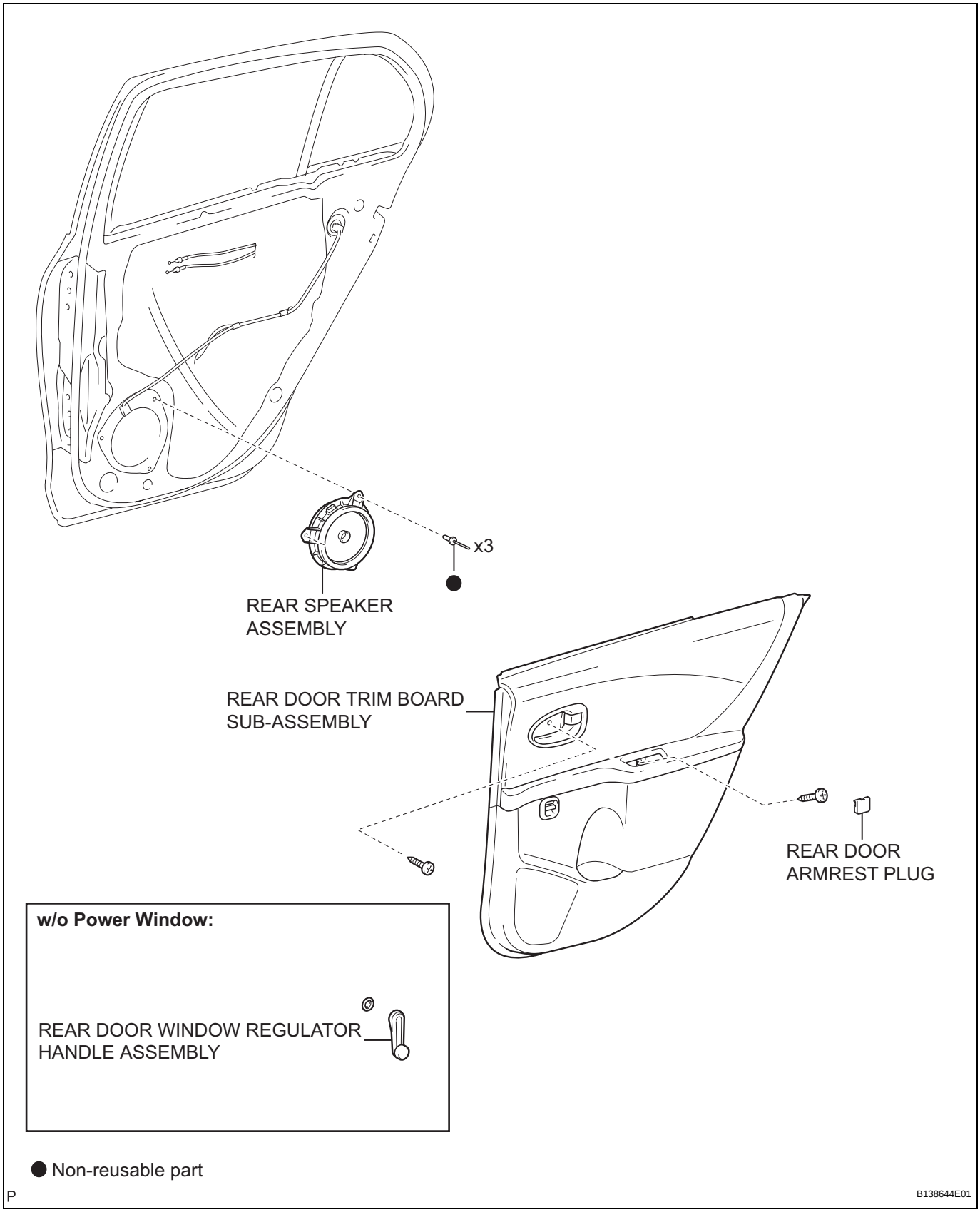

ON-VEHICLE INSPECTION

1. INSPECT REAR SPEAKER ASSEMBLY

HINT:

Remove interior parts so that the rear speaker can be seen.

(a) Check the speaker installation.

OK:

The speaker is securely installed.

If the result is not as specified, reinstall the rear speaker.

(b) Visually check the speaker.

OK:

The cone paper of the speaker is not torn.

If the result is not as specified, replace the rear speaker.

(c) Check the speaker resistance.

(1) Disconnect the speaker connector.

(2) Using an ohmmeter, measure the resistance between the terminals.

Standard resistance

Tester Connection	Specified Condition
1 - 2	Approximately 4 Ω

If the result is not as specified, replace the rear speaker.

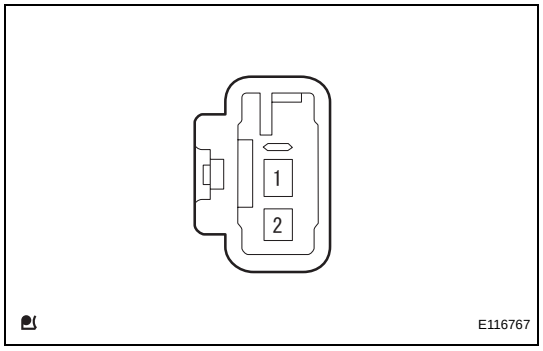

AV

REMOVAL

HINT:
The procedure described below is for the LH side. Use the same procedure for both the RH and LH sides, unless otherwise specified.

1. **DISCONNECT CABLE FROM NEGATIVE BATTERY TERMINAL**

2. **REMOVE REAR DOOR WINDOW REGULATOR HANDLE ASSEMBLY (w/o Power Window) (See page ED-115)**

3. **REMOVE REAR DOOR TRIM BOARD SUB-ASSEMBLY**
   (a) w/ Power Window:
      (1) Remove the rear door trim board sub-assembly (See page ED-98).
   (b) w/o Power Window:
      (1) Remove the rear door trim board sub-assembly (See page ED-115).

4. **REMOVE REAR SPEAKER ASSEMBLY**
   (a) Disconnect the speaker connector.
   (b) Drill out the 3 rivet heads using a drill with a bit diameter of less than 4 mm (0.16 in.), and remove the rear speaker assembly from the rear door panel.
   (c) Operate the drill around the rivet head circumference and cut out the flange.
   CAUTION:
   Be careful. The cut rivet is very hot.
   NOTICE:
   Do not drill the rivet at an angle as this will cause damage to the drill and drill hole. Line up the drill and rivet, and carefully drill the rivet head straight out.
   (d) After drilling out the flange, continue drilling to push out the shards on the drill.
   (e) Using a vacuum cleaner, remove the rivet fragments and shavings from the inside of the door.

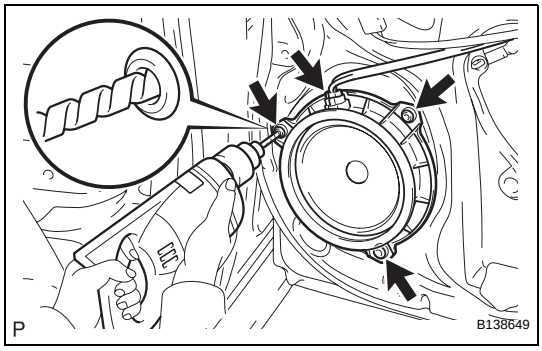

AV

INSTALLATION

HINT:
The procedure described below is for the LH side. Use the same procedure for both the RH and LH sides, unless otherwise specified.

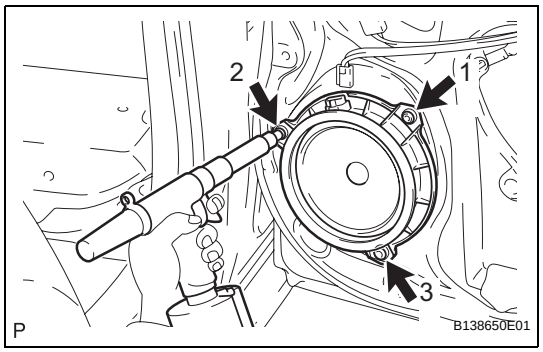

1. INSTALL REAR SPEAKER ASSEMBLY

(a) Using an air riveter or hand riveter, install the rear speaker assembly onto the front door panel with 3 new strike rivets.
HINT:
Install the new strike rivets in the order shown in the illustration.

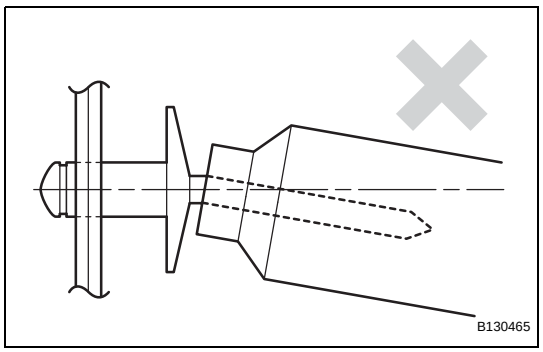

NOTICE:

- **Do not pry the rivet with the riveter, as this will cause damage to the riveter and mandrel.**

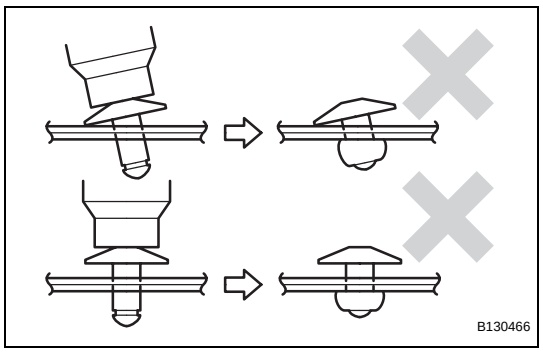

- **Confirm that the rivets are seated properly against the speaker.**
- **Do not tilt the riveter when installing the rivet onto the speaker.**
- **Do not leave any space between the rivet head and speaker.**

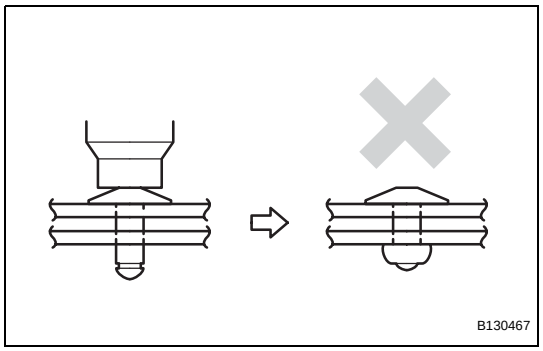

- **Do not leave any space between the speaker and door. Firmly hold the 2 items together while installing the rivet.**

AV

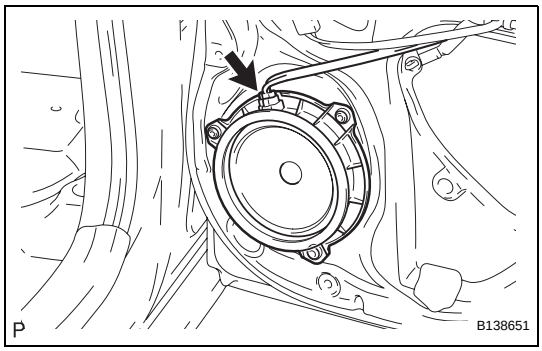

(b) Connect the speaker connector.

2. **INSTALL REAR DOOR TRIM BOARD SUB-ASSEMBLY**
   (a) w/ Power Window:
      (1) Install the rear door trim board sub-assembly (See page ED-111).
   (b) w/o Power Window:
      (1) Install the rear door trim board sub-assembly (See page ED-127).

3. **INSTALL REAR DOOR WINDOW REGULATOR HANDLE ASSEMBLY (w/o Power Window) (See page ED-128)**

4. **CONNECT CABLE TO NEGATIVE BATTERY TERMINAL**
   Torque: 5.4 N*m (55 kgf*cm, 48 in.*lbf)

REAR SPEAKER (for Hatchback 3 Door)

COMPONENTS

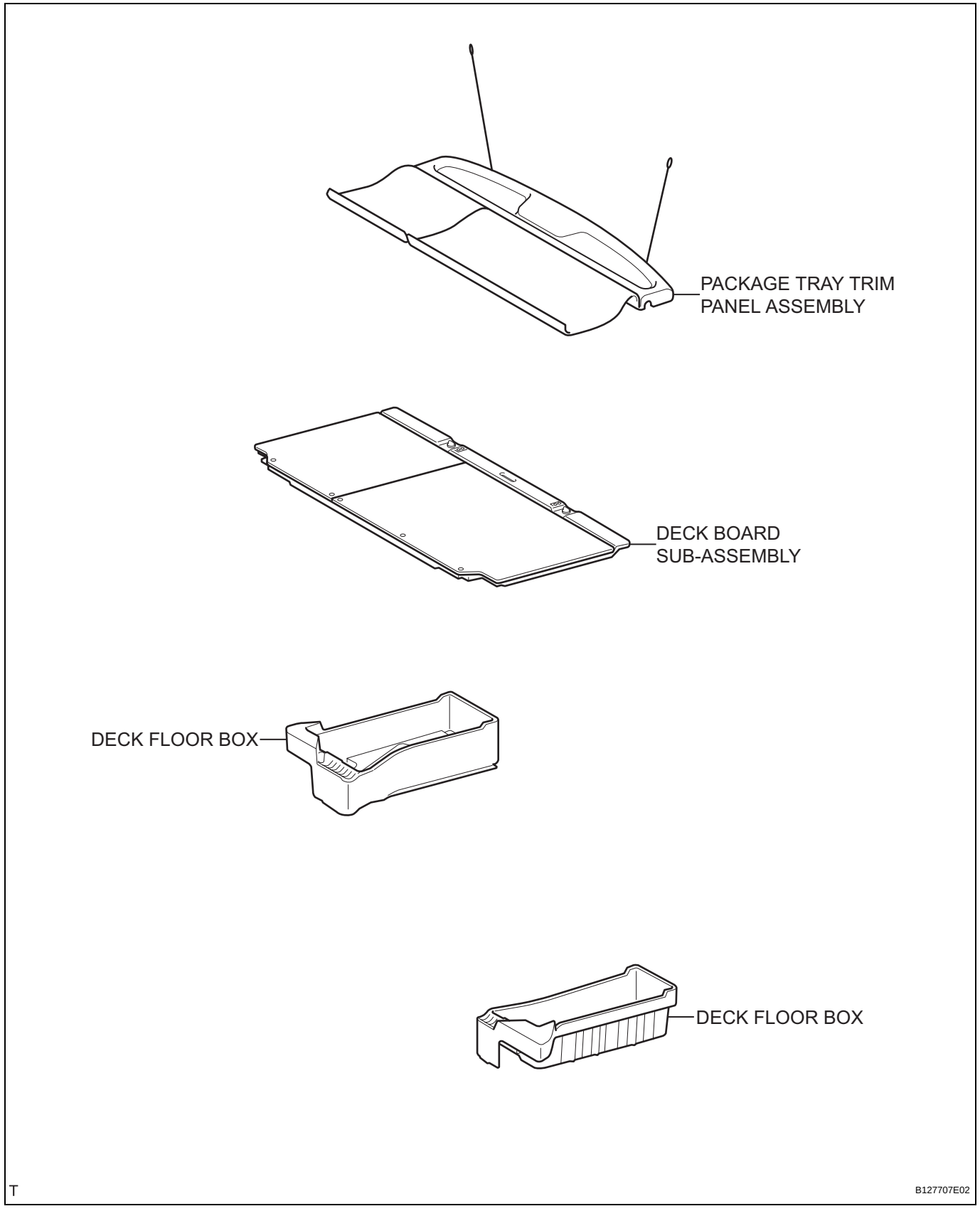

for 60/40 Split Seat Type:

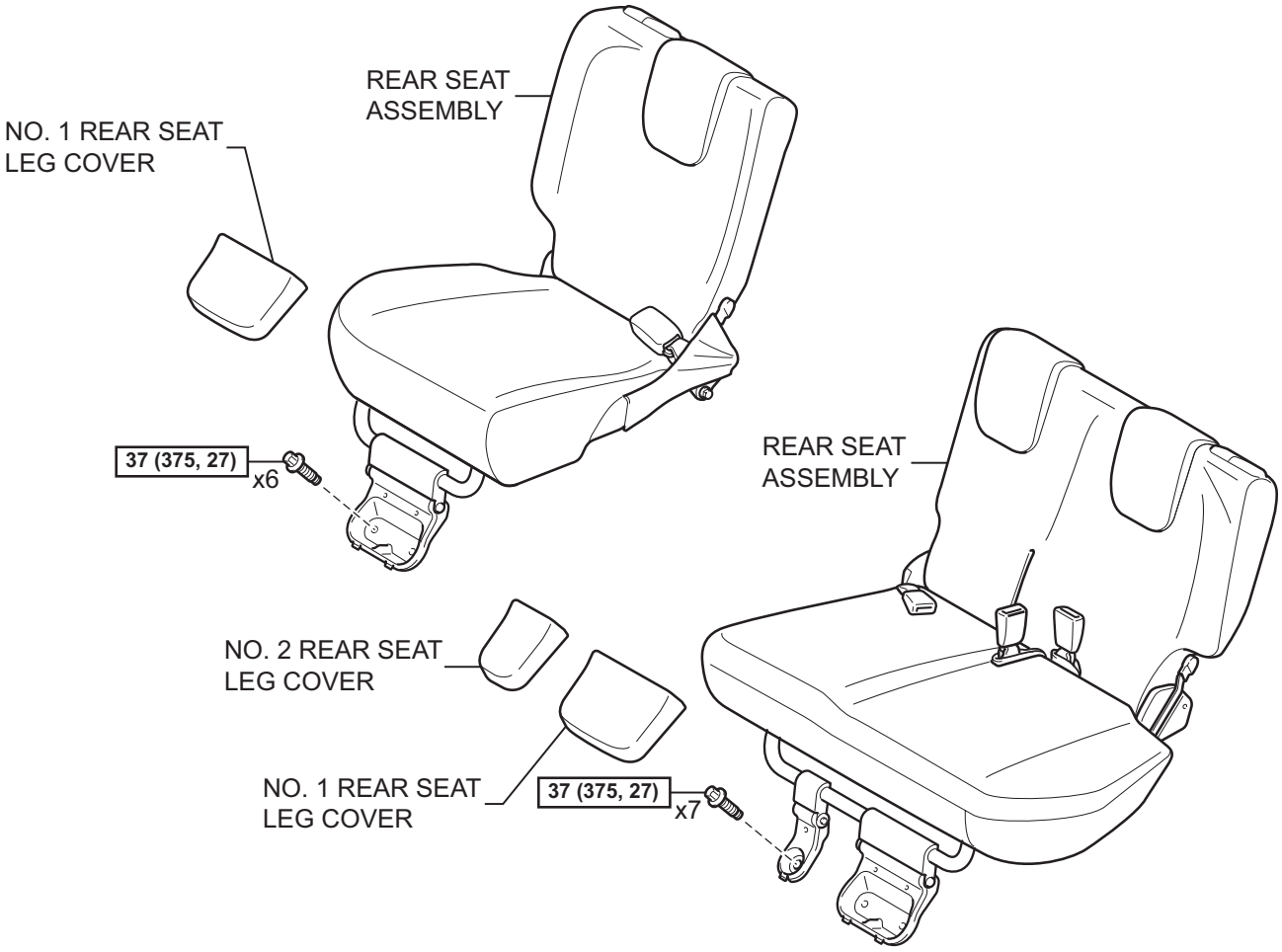

for Hold Down Seat Type:

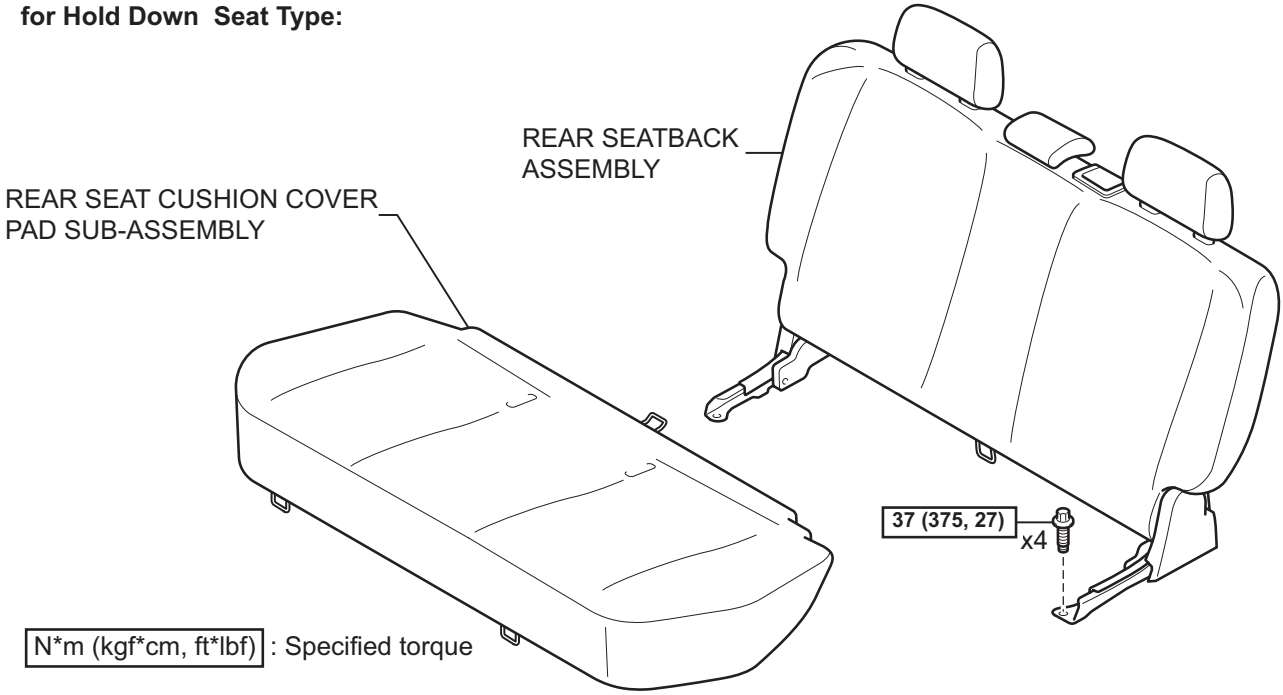

T

B121713E05

AV

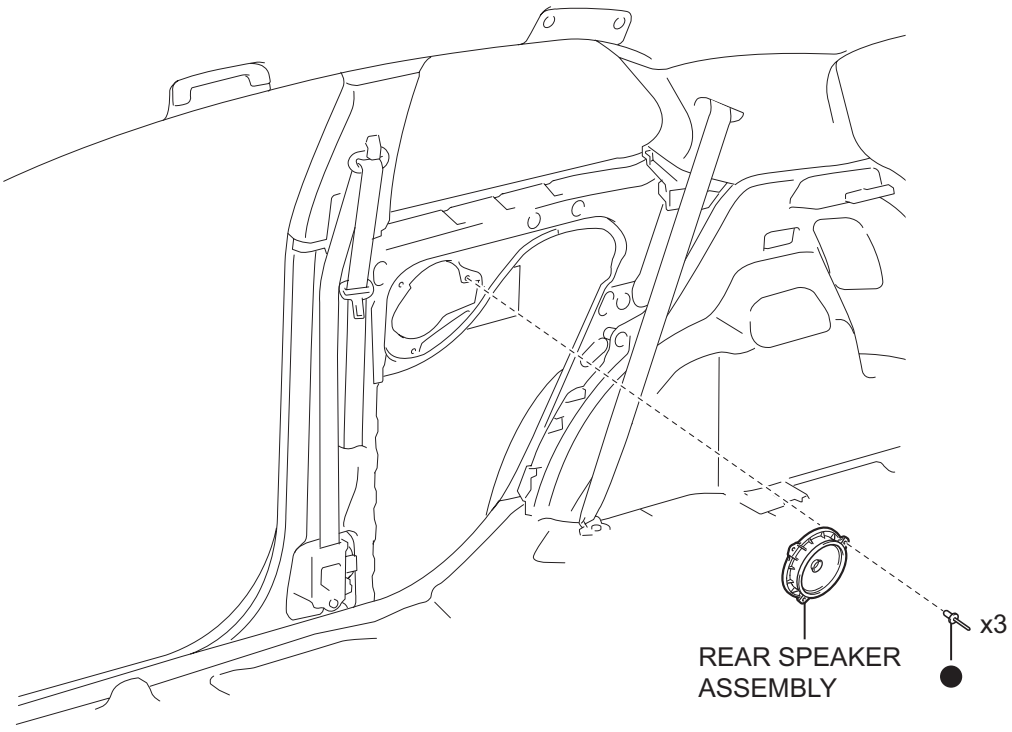

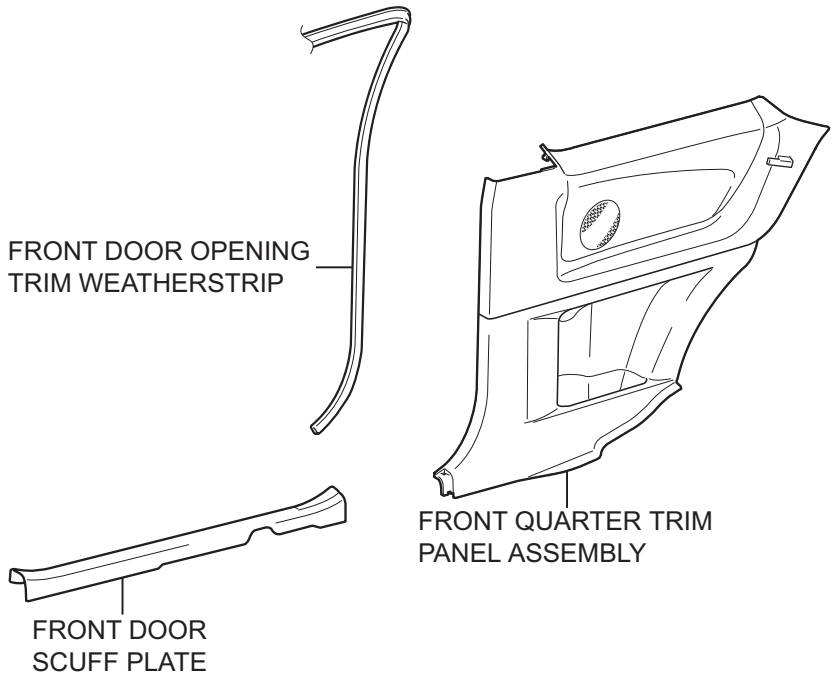

● Non-reusable part

P

B138645E01

ON-VEHICLE INSPECTION

1. INSPECT REAR SPEAKER ASSEMBLY

HINT:

Remove interior parts so that the rear speaker can be seen.

(a) Check the speaker installation.

OK:

The speaker is securely installed.

If the result is not as specified, reinstall the rear speaker.

(b) Visually check the speaker.

OK:

The cone paper of the speaker is not torn.

If the result is not as specified, replace the rear speaker.

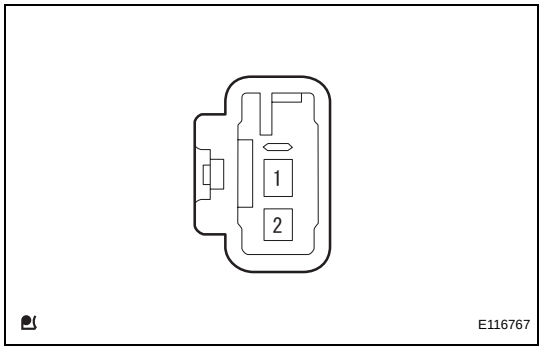

(c) Check the speaker resistance.

(1) Disconnect the rear speaker connector.

(2) Using an ohmmeter, measure the resistance between the terminals.

Standard resistance

Tester Connection	Specified Condition
1 - 2	Approximately 4 Ω

If the result is not as specified, replace the rear speaker.

AV

REMOVAL

NOTICE:
Always use "Torx" socket wrench E10 when removing the rear seat.
HINT:
The procedure described below is for the LH side. Use the same procedure for both the RH and LH sides, unless otherwise specified.

1. **DISCONNECT CABLE FROM NEGATIVE BATTERY TERMINAL**
2. **REMOVE PACKAGE TRAY TRIM PANEL ASSEMBLY (See page IR-48)**
3. **REMOVE DECK BOARD SUB-ASSEMBLY (See page IR-48)**
4. **REMOVE DECK FLOOR BOX**
   (a) for RH Side:
      (1) Remove the deck floor box (See page IR-48).
   (b) for LH Side:
      (1) Remove the deck floor box.
      HINT:
      Use the same procedure as for the RH side.
5. **REMOVE NO. 1 REAR SEAT LEG COVER (for 60/40 Split Seat Type)**
   (a) for RH Side:
      (1) Remove the No. 1 rear seat leg cover (See pageSE-89).
   (b) for LH Side:
      (1) Remove the No. 1 rear seat leg cover (See pageSE-70).
6. **REMOVE NO. 2 REAR SEAT LEG COVER (for 60/40 Split Seat Type LH Side) (See page SE-70)**
7. **REMOVE REAR SEAT ASSEMBLY (for 60/40 Split Seat Type)**
   (a) for RH Side:
      (1) Remove the rear seat assembly (See pageSE-89)
   (b) for LH Side:
      (1) Remove the rear seat assembly (See pageSE-71)
8. **REMOVE REAR SEAT CUSHION COVER PAD SUB-ASSEMBLY (for Hold Down Seat Type) (See page SE-114)**
9. **REMOVE REAR SEATBACK ASSEMBLY (for Hold Down Seat Type) (See page SE-115)**
10. **REMOVE FRONT DOOR SCUFF PLATE (See page IR-97)**
11. **SEPARATE FRONT DOOR OPENING TRIM WEATHERSTRIP (See page SB-76)**

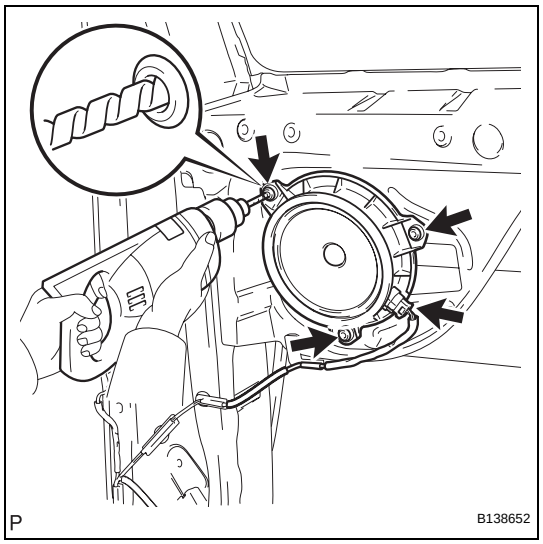

12. REMOVE FRONT QUARTER TRIM PANEL ASSEMBLY (See page IR-97)

13. REMOVE REAR SPEAKER ASSEMBLY

(a) Disconnect the speaker connector.

(b) Drill out the 3 rivet heads using a drill with a bit diameter of less than 4 mm (0.16 in.), and remove the rear speaker assembly from the quarter panel.

(c) Operate the drill around the rivet head circumference and cut out the flange.

CAUTION:
Be careful. The cut rivet is very hot.
NOTICE:
Do not drill the rivet at an angle as this will cause damage to the drill and drill hole. Line up the drill and rivet, and carefully drill the rivet head straight out.

(d) After drilling out the flange, continue drilling to push out the shards on the drill.

(e) Using a vacuum cleaner, remove the rivet fragments and shavings from the inside of the quarter panel.

INSTALLATION

NOTICE:
Always use "Torx" socket wrench E10 when installing the rear seat.
HINT:
The procedure described below is for the LH side. Use the same procedure for both the RH and LH sides, unless otherwise specified.

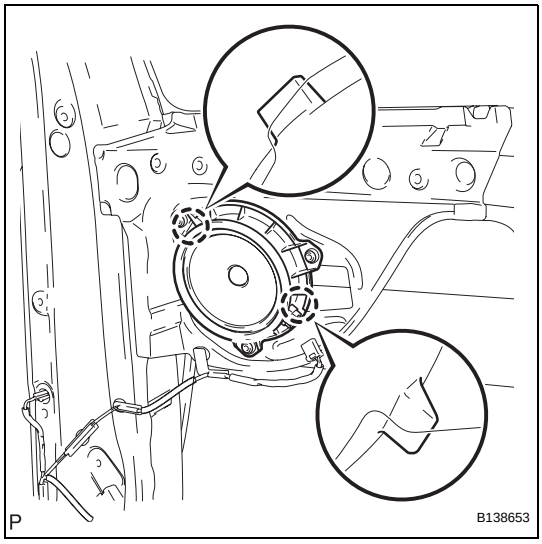

1. INSTALL REAR SPEAKER ASSEMBLY

(a) Engage the 2 claws of the speaker with the body and provisionally install the speaker.

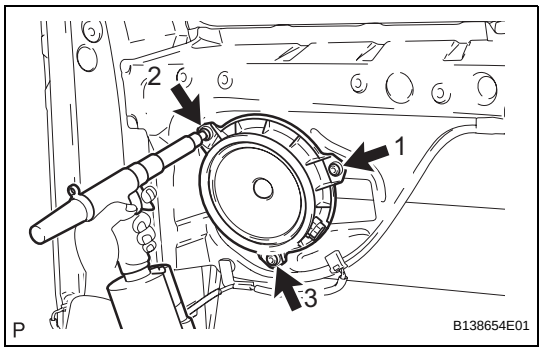

(b) Using an air riveter or hand riveter, install the rear speaker assembly onto the quarter panel with 3 new strike rivets.
HINT:
Install the new strike rivets in order as shown in the illustration.

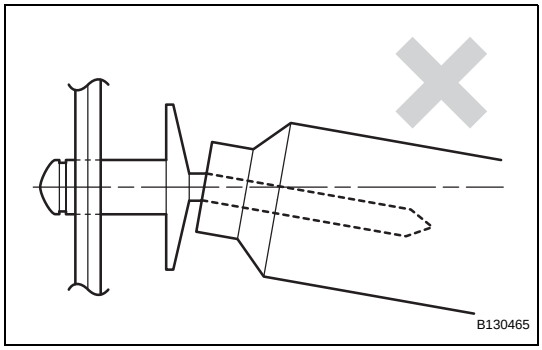

NOTICE:
- **Do not pry the rivet with the riveter, as this will cause damage to the riveter and mandrel.**

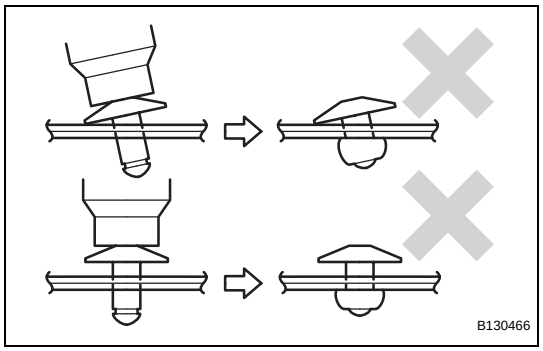

- **Confirm that the rivets are seated properly against the speaker.**
- **Do not tilt the riveter when installing the rivet onto the speaker.**
- **Do not leave any space between the rivet head and speaker.**

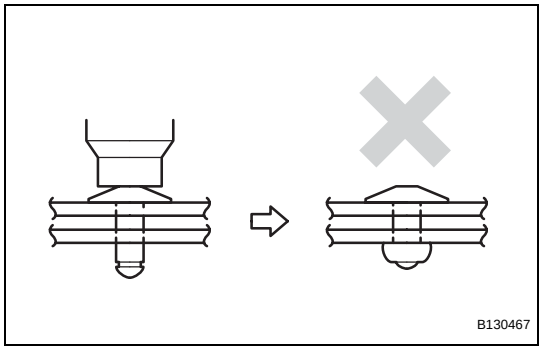

- **Do not leave any space between the speaker and door. Firmly hold the 2 items together while installing the rivet.**

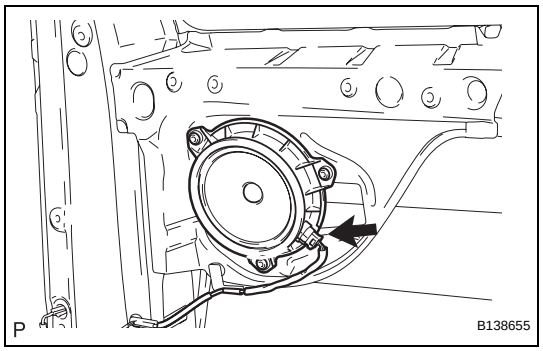

(c) Connect the speaker connector.

2. **INSTALL FRONT QUARTER TRIM PANEL ASSEMBLY (See page IR-118)**
3. **INSTALL FRONT DOOR OPENING TRIM WEATHERSTRIP (See page SB-80)**
4. **INSTALL FRONT DOOR SCUFF PLATE (See page IR-119)**
5. **INSTALL REAR SEAT ASSEMBLY (for 60/40 Split Seat Type)**
   (a) for RH Side:
      (1) Install the rear seat assembly (See page SE-102).
   (b) for LH Side:
      (1) Install the rear seat assembly (See page SE-84).
6. **INSTALL NO. 2 REAR SEAT LEG COVER (for 60/40 Split Seat Type) (See page SE-85)**
7. **INSTALL NO. 1 REAR SEAT LEG COVER (for 60/40 Split Seat Type)**
   (a) for RH Side:
      (1) Install the No. 1 rear seat leg cover (See page SE-103).
   (b) for LH Side:
      (1) Install the No. 1 rear seat leg cover (See page SE-85).
8. **INSTALL REAR SEATBACK ASSEMBLY (for Hold Down Seat Type) (See page SE-122)**

AV

9. **INSTALL REAR SEAT CUSHION COVER PAD SUB-ASSEMBLY (for Hold Down Seat Type) (See page SE-123)**

10. **INSTALL DECK FLOOR BOX**
    (a) for RH Side:
        (1) Install the deck floor box (See page IR-83).
    (b) for LH Side:
        (1) Install the deck floor box.
            HINT:
            Use the same procedure as for the RH side.

11. **INSTALL DECK BOARD SUB-ASSEMBLY (See page IR-83)**

12. **INSTALL PACKAGE TRAY TRIM PANEL ASSEMBLY (See page IR-83)**

13. **CONNECT CABLE TO NEGATIVE BATTERY TERMINAL**
    Torque: 5.4 N*m (55 kgf*cm, 48 in.*lbf)

HORN SYSTEM

PARTS LOCATION

HATCHBACK:

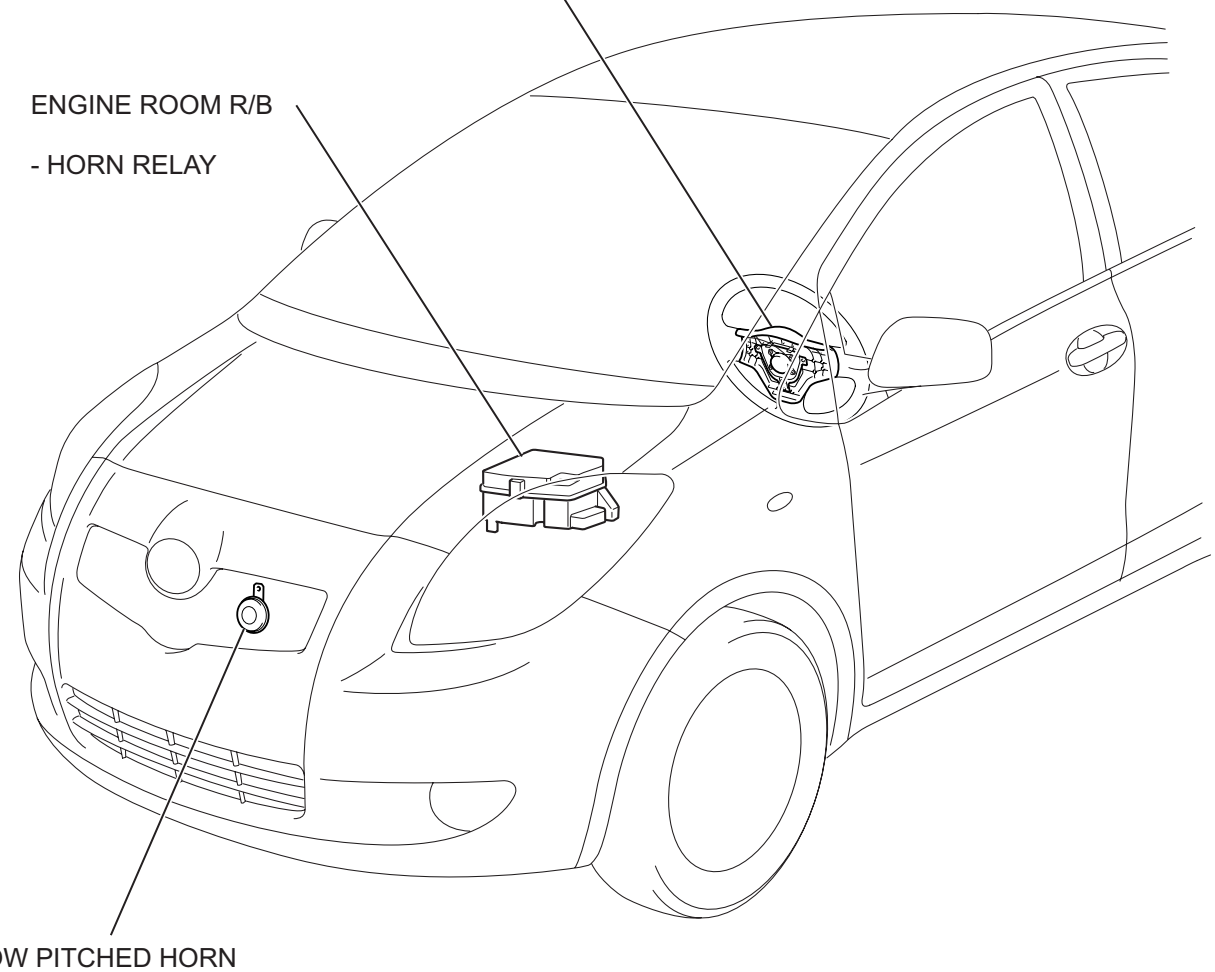

Y

B117145E03

SEDAN:

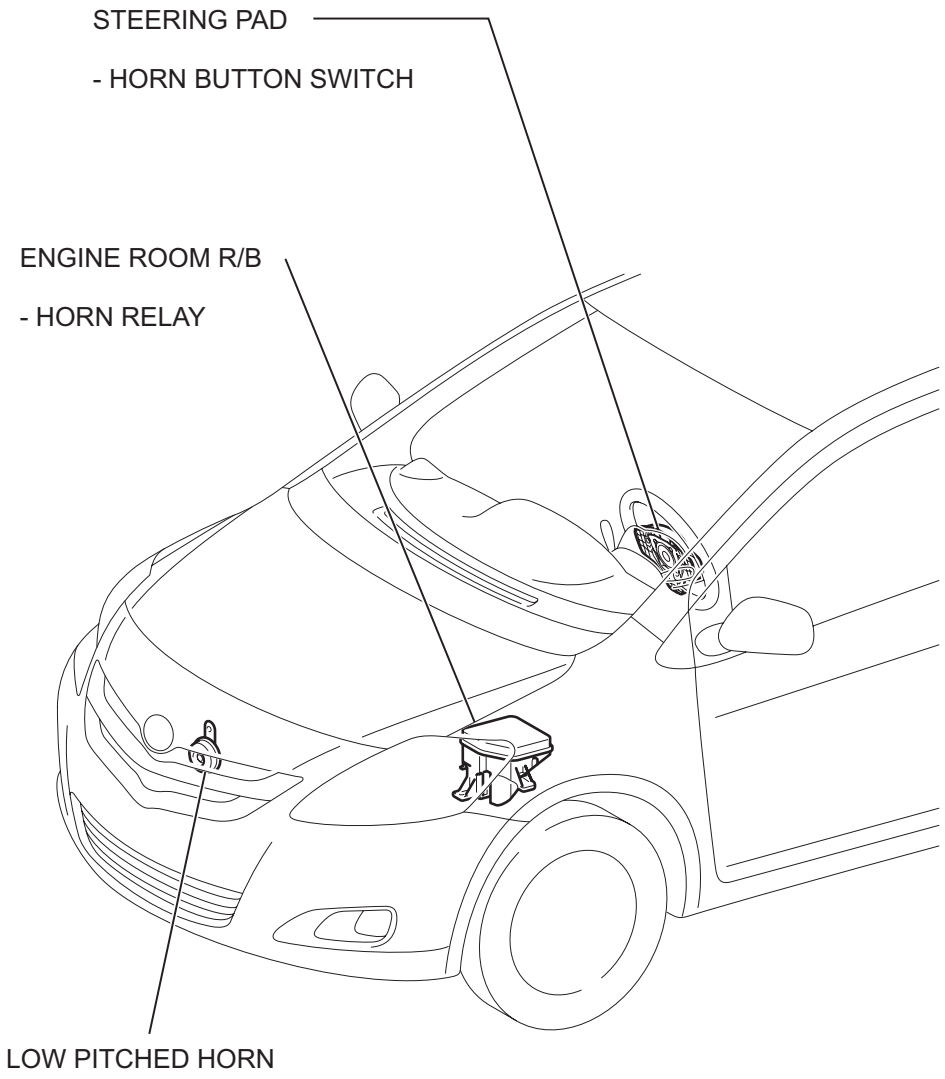

T

B142261E01

SYSTEM DIAGRAM

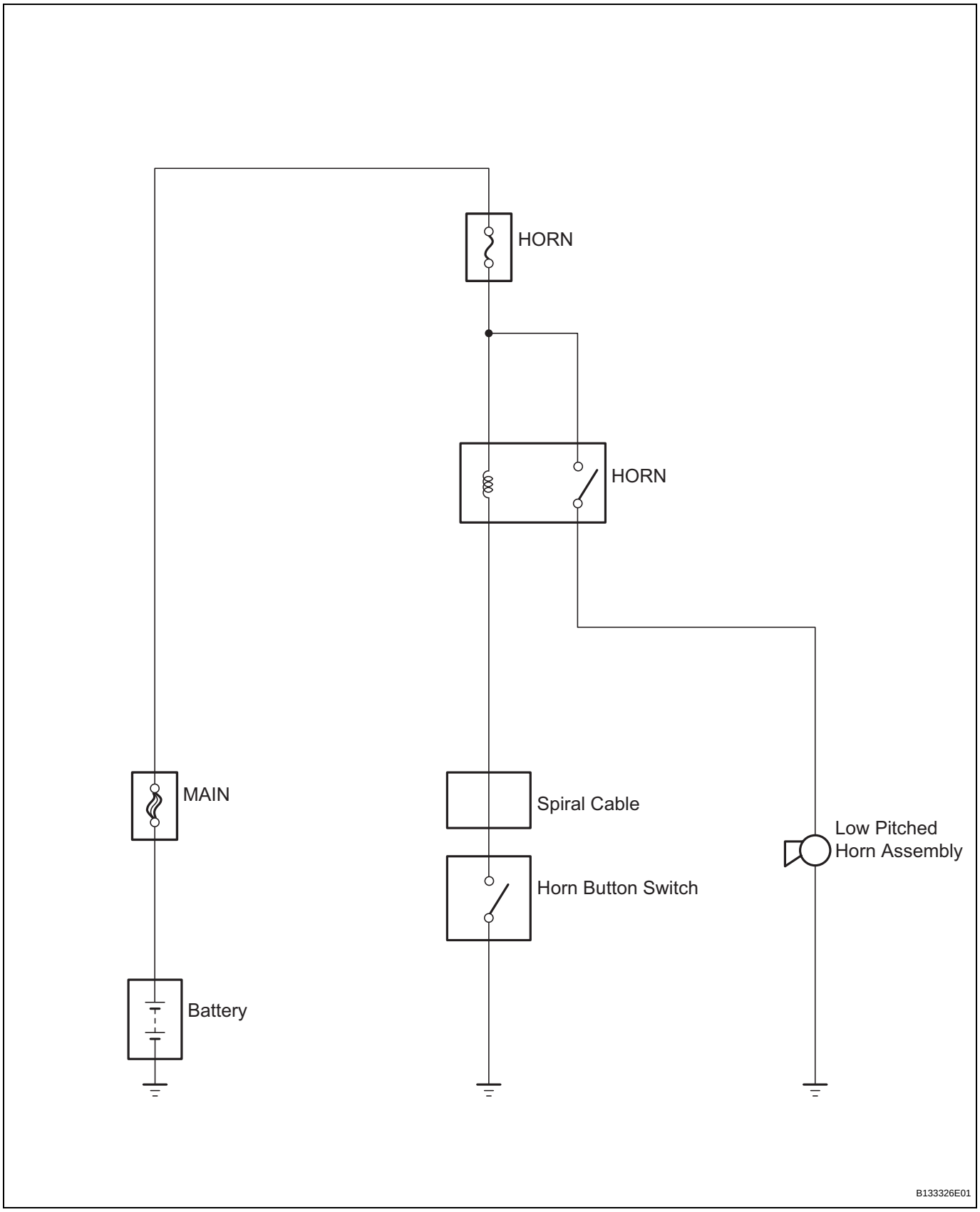

PROBLEM SYMPTOMS TABLE

HINT:
Use the table below to help determine the causes of the problem symptom. The potential causes of the symptoms are listed in order of probability in the "Suspected Area" column of the table. Check each symptom by checking the suspected areas in the order they are listed. Replace parts as necessary.

Horn system

Symptom	Suspected area	See page
Horn does not sound	HORN fuse	HO-1
	Horn relay (for hatchback)	HO-11
	Horn relay (for sedan)	HO-7
	Low pitched horn (for hatchback)	HO-16
	Low pitched horn (for sedan)	HO-14
	Steering pad (Horn button switch)	-
	Wire harness	-

HORN RELAY (for Sedan)

COMPONENTS

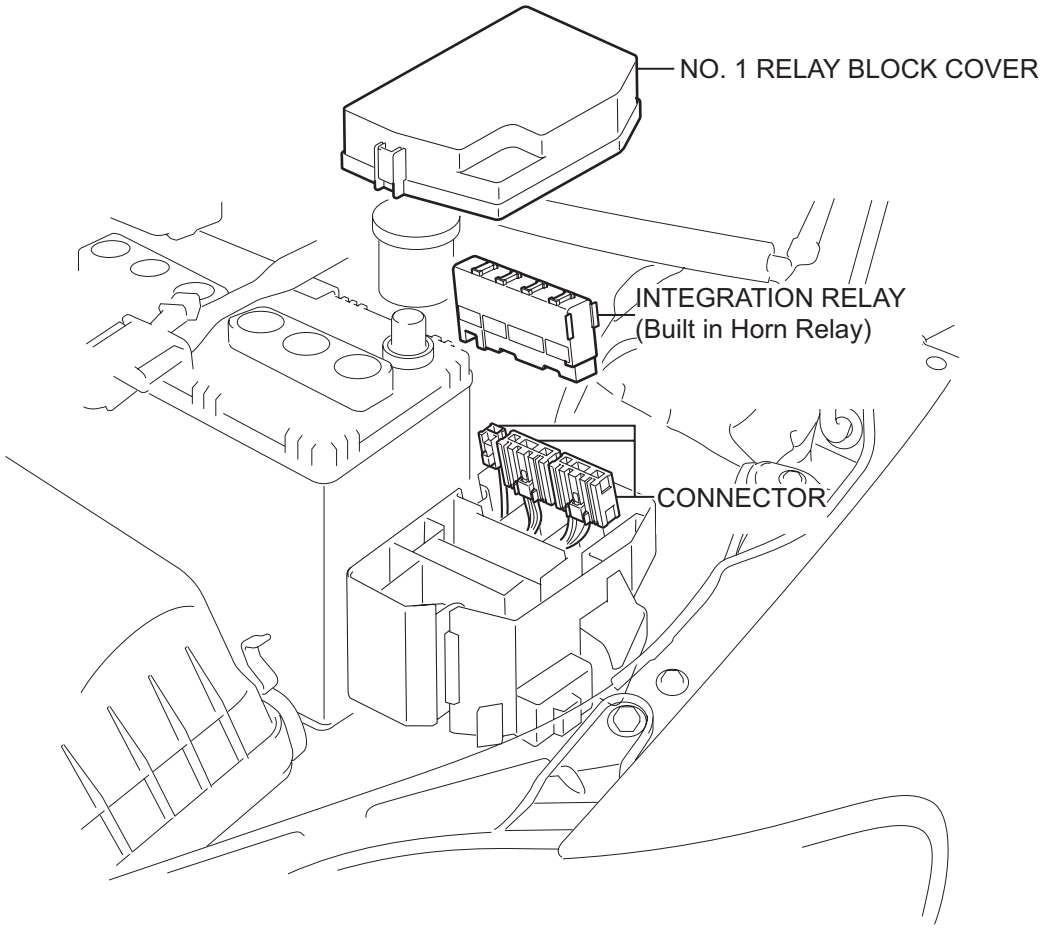

T

B135209E01

REMOVAL

1. DISCONNECT CABLE FROM NEGATIVE BATTERY TERMINAL

2. REMOVE NO. 1 RELAY BLOCK COVER

(a) Disengage the 3 claws and remove the No. 1 relay block cover.

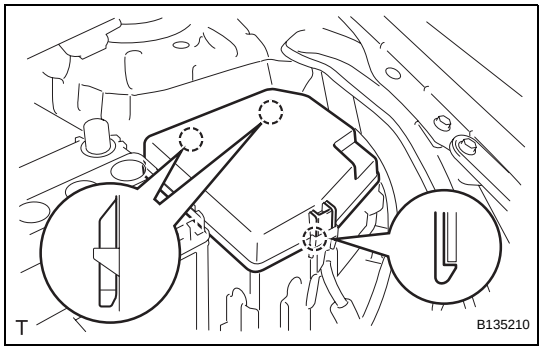

3. REMOVE INTEGRATION RELAY (Built in Horn Relay)

(a) Using a screwdriver with its tip wrapped in protective tape, disengage the 2 claws and remove the integration relay.

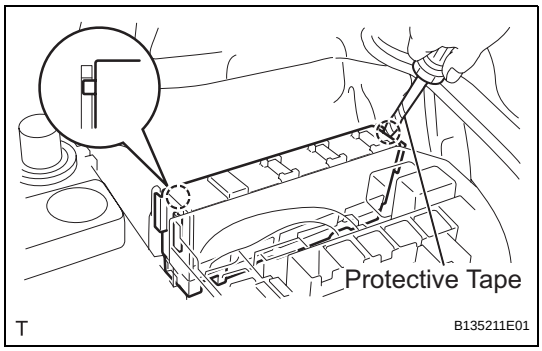

(b) Disconnect the 3 connectors.

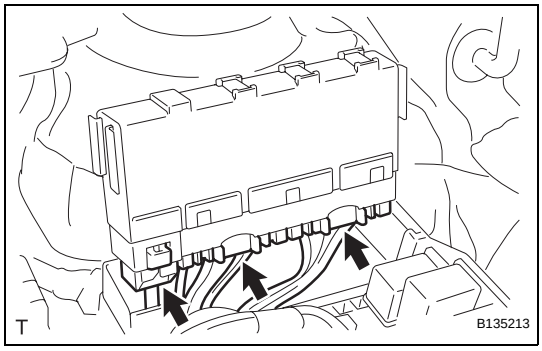

HO

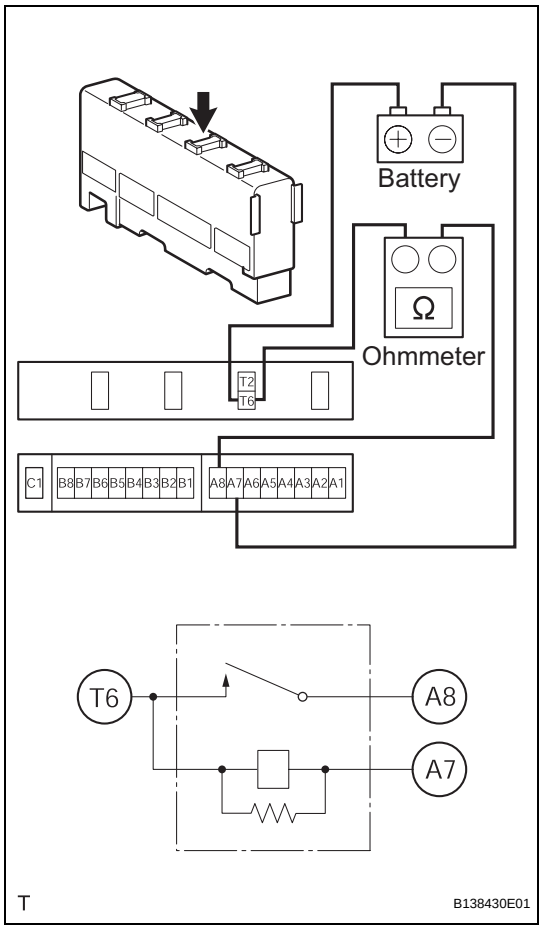

INSPECTION

1. INSPECT INTEGRATION RELAY (Built in Horn Relay)

(a) Check the resistance.

(1) Remove the horn fuse.

(2) Using an ohmmeter, measure the resistance between the terminals.

Standard resistance

Tester Connection	Specified Condition
A8 - T6	10 kΩ or higher
	Below 1 Ω (Battery voltage applied to terminals A7 and T6)

If the result is not as specified, replace the integration relay.

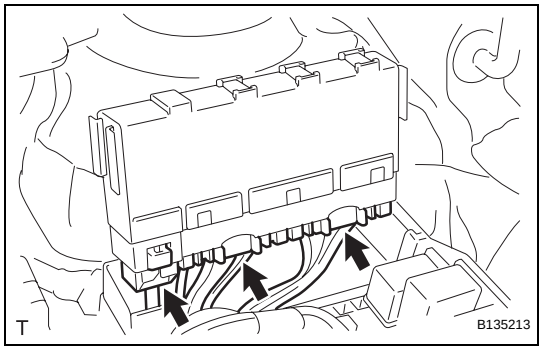

INSTALLATION

1. INSTALL INTEGRATION RELAY (Built in Horn Relay)

(a) Connect the 3 connectors.

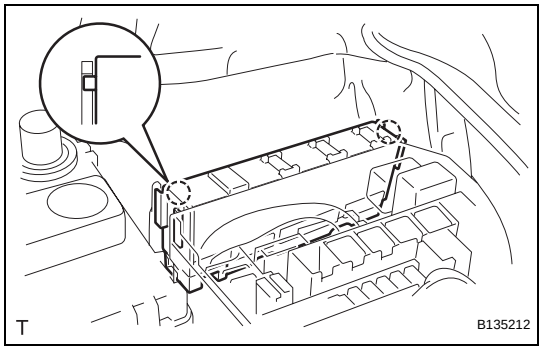

(b) Engage the 2 claws and install the integration relay.

HO

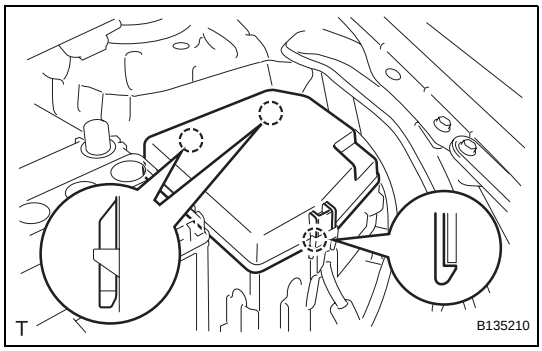

2. INSTALL NO. 1 RELAY BLOCK COVER

(a) Engage the 3 claws and install the No. 1 relay block cover.

3. CONNECT CABLE TO NEGATIVE BATTERY TERMINAL

Torque: 5.4 N*m (55 kgf*cm, 48 in.*lbf)

HORN RELAY (for Hatchback)

COMPONENTS

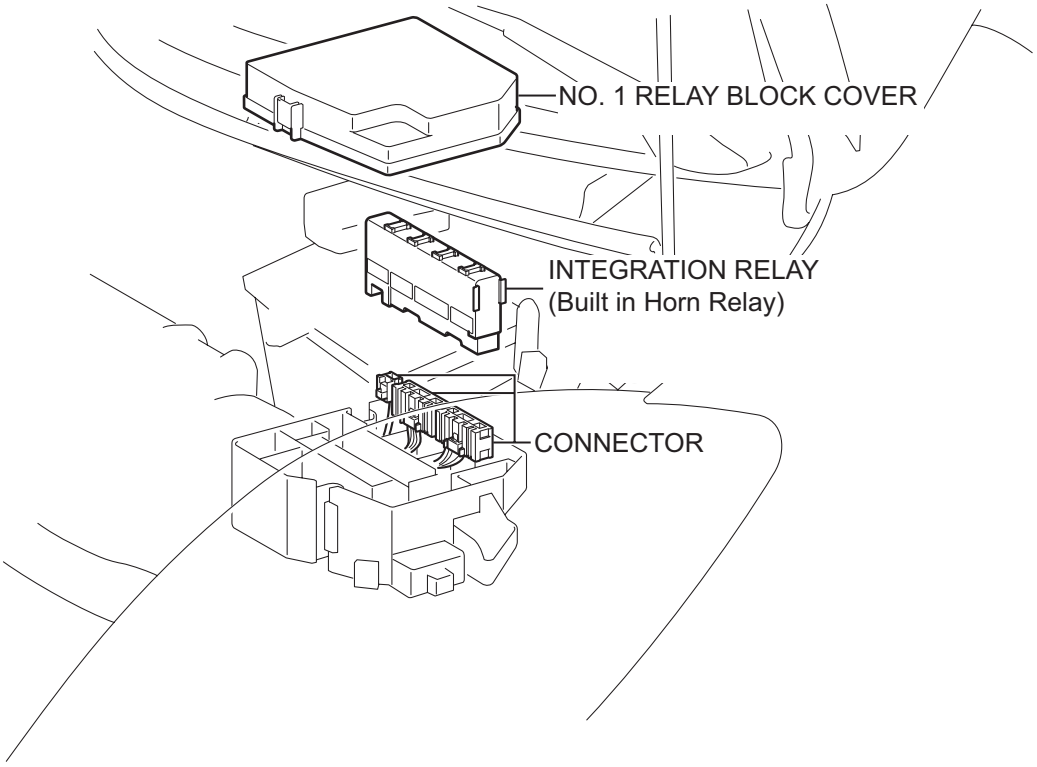

T

B138539E01

REMOVAL

1. DISCONNECT CABLE FROM NEGATIVE BATTERY TERMINAL

2. REMOVE NO. 1 RELAY BLOCK COVER

(a) Disengage the 3 claws and remove the No. 1 relay block cover.

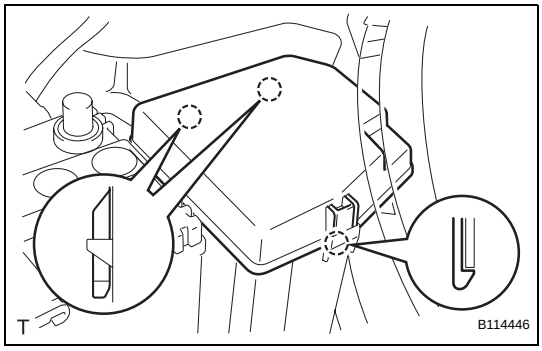

3. REMOVE INTEGRATION RELAY (Built in Horn Relay)

(a) Using a screwdriver with its tip wrapped in protective tape, disengage the 2 claws and remove the integration relay.

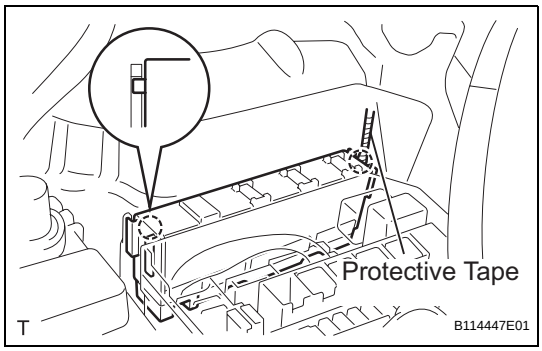

(b) Disconnect the 3 connectors.

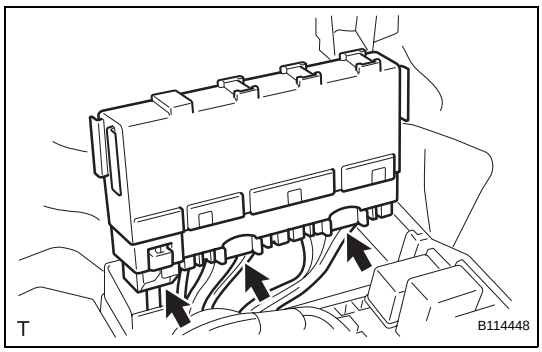

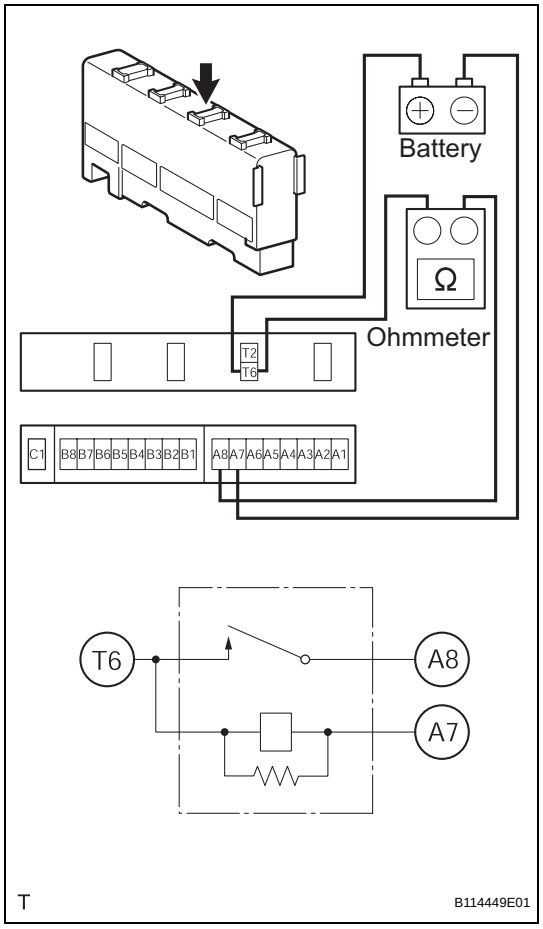

INSPECTION

1. INSPECT INTEGRATION RELAY (Built in Horn Relay)

(a) Check the resistance.

(1) Remove the horn fuse.

(2) Using an ohmmeter, measure the resistance between the terminals.

Standard resistance

Tester Connection	Specified Condition
A8 - T6	10 kΩ or higher
	Below 1 Ω (Battery voltage applied to terminals A7 and T6)

If the result is not as specified, replace the integration relay.

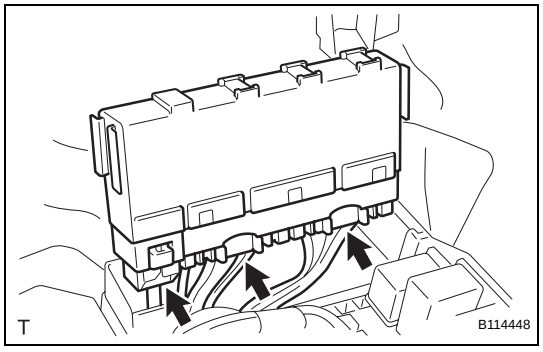

INSTALLATION

1. INSTALL INTEGRATION RELAY (Built in Horn Relay)

(a) Connect the 3 connectors.

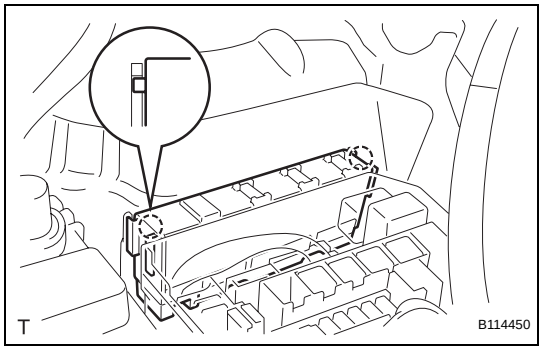

(b) Engage the 2 claws and install the integration relay.

HO

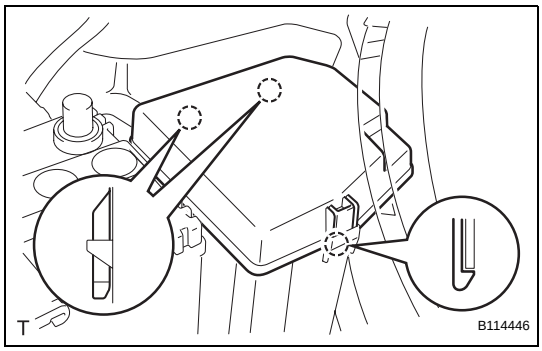

2. INSTALL NO. 1 RELAY BLOCK COVER

(a) Engage the 3 claws and install the No. 1 relay block cover.

3. CONNECT CABLE TO NEGATIVE BATTERY TERMINAL

Torque: 5.4 N*m (55 kgf*cm, 48 in.*lbf)

LOW PITCHED HORN (for Sedan)

COMPONENTS

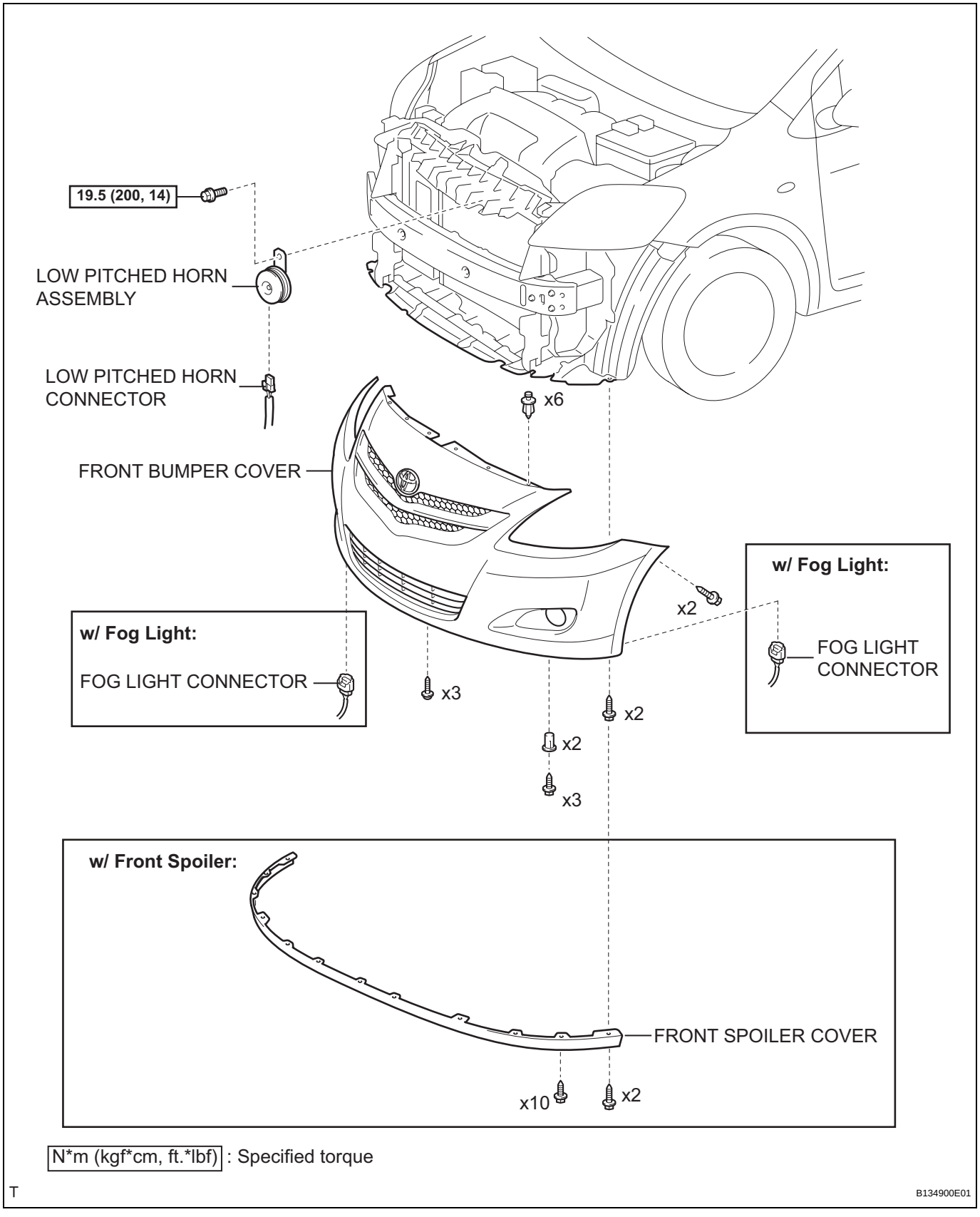

HO

REMOVAL

1. **DISCONNECT CABLE FROM NEGATIVE BATTERY TERMINAL**
2. **REMOVE FRONT SPOILER COVER (w/ Front Spoiler) (See page ET-6)**
3. **REMOVE FRONT BUMPER COVER (See page ET-55)**
4. **REMOVE LOW PITCHED HORN ASSEMBLY**
   (a) Disconnect the low pitched horn connector.
   (b) Remove the bolt and the low pitched horn.

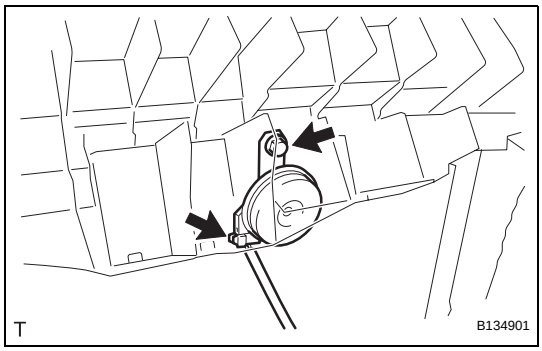

INSPECTION

1. **INSPECT LOW PITCHED HORN ASSEMBLY**
   (a) Check the operation.
      (1) Apply battery voltage to the terminal and the bracket, and check that the horn sounds.
      Standard

Measurement Condition	Standard
Battery positive - Terminal 1 (IG+) Battery negative - Horn bracket	Horn sounds

If the result is not as specified, replace the low pitched horn.

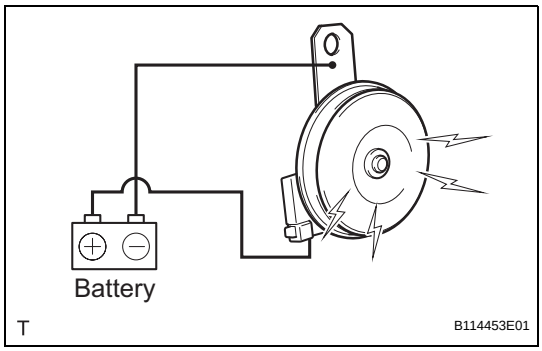

INSTALLATION

1. **INSTALL LOW PITCHED HORN ASSEMBLY**
   (a) Install the low pitched horn with the bolt.
   Torque: 19.5 N*m (200 kgf*cm, 14 ft.*lbf)
   NOTICE:
   Do not place the low pitched horn over the stopper of the body.
   (b) Connect the low pitched horn connector.
2. **INSTALL FRONT BUMPER COVER (See page ET-61)**
3. **INSTALL FRONT SPOILER COVER (w/ Front Spoiler) (See page ET-19)**
4. **CONNECT CABLE TO NEGATIVE BATTERY TERMINAL**
   Torque: 5.4 N*m (55 kgf*cm, 48 in.*lbf)

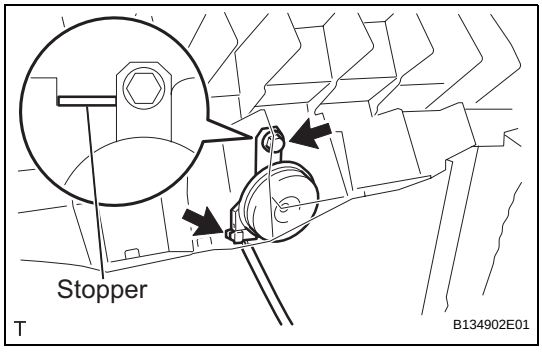

LOW PITCHED HORN (for Hatchback)

COMPONENTS

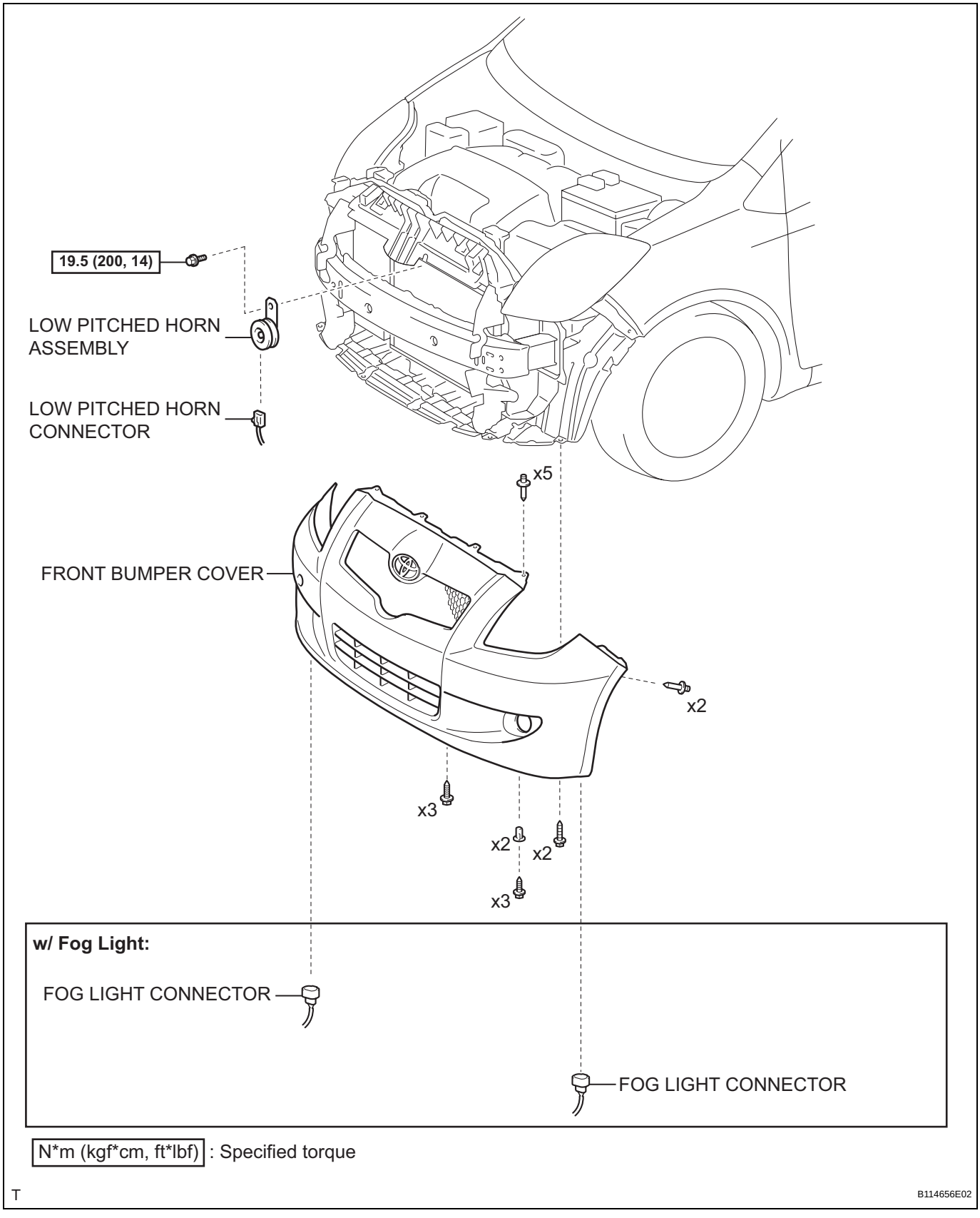

N*m (kgf*cm, ft*lbf) : Specified torque

T

B114656E02

HO

REMOVAL

1. **DISCONNECT CABLE FROM NEGATIVE BATTERY TERMINAL**
2. **REMOVE FRONT BUMPER COVER (See page ET-66)**
3. **REMOVE LOW PITCHED HORN ASSEMBLY**
   (a) Disconnect the low pitched horn connector.
   (b) Remove the bolt and the low pitched horn.

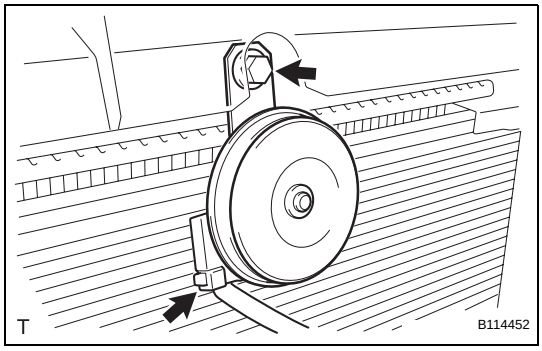

INSPECTION

1. **INSPECT LOW PITCHED HORN ASSEMBLY**
   (a) Check the operation.
      (1) Apply battery voltage to the terminal and bracket, and check that the horn sounds.
      Standard

Condition	Standard
Positive battery - Terminal 1 (IG+) Negative battery - Horn bracket	Horn sounds

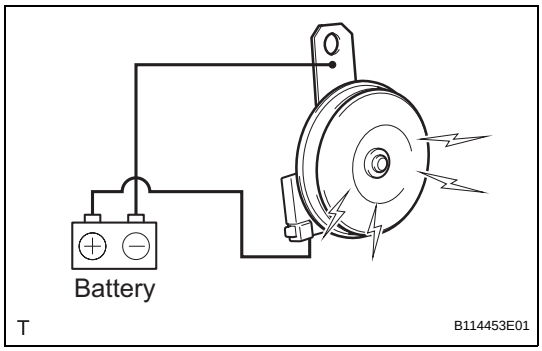

If the result is not as specified, replace the low pitched horn.

INSTALLATION

1. **INSTALL LOW PITCHED HORN ASSEMBLY**
   (a) Install the low pitched horn with the bolt.
   Torque: 19.5 N*m (200 kgf*cm, 14 ft.*lbf)
   (b) Connect the low pitched horn connector.
2. **INSTALL FRONT BUMPER COVER (See page ET-73)**
3. **CONNECT CABLE TO NEGATIVE BATTERY TERMINAL**
   Torque: 5.4 N*m (55 kgf*cm, 48 in.*lbf)

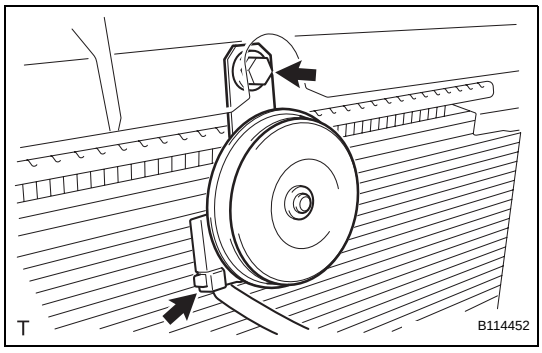

HO

POWER WINDOW CONTROL SYSTEM

PARTS LOCATION

HATCHBACK:

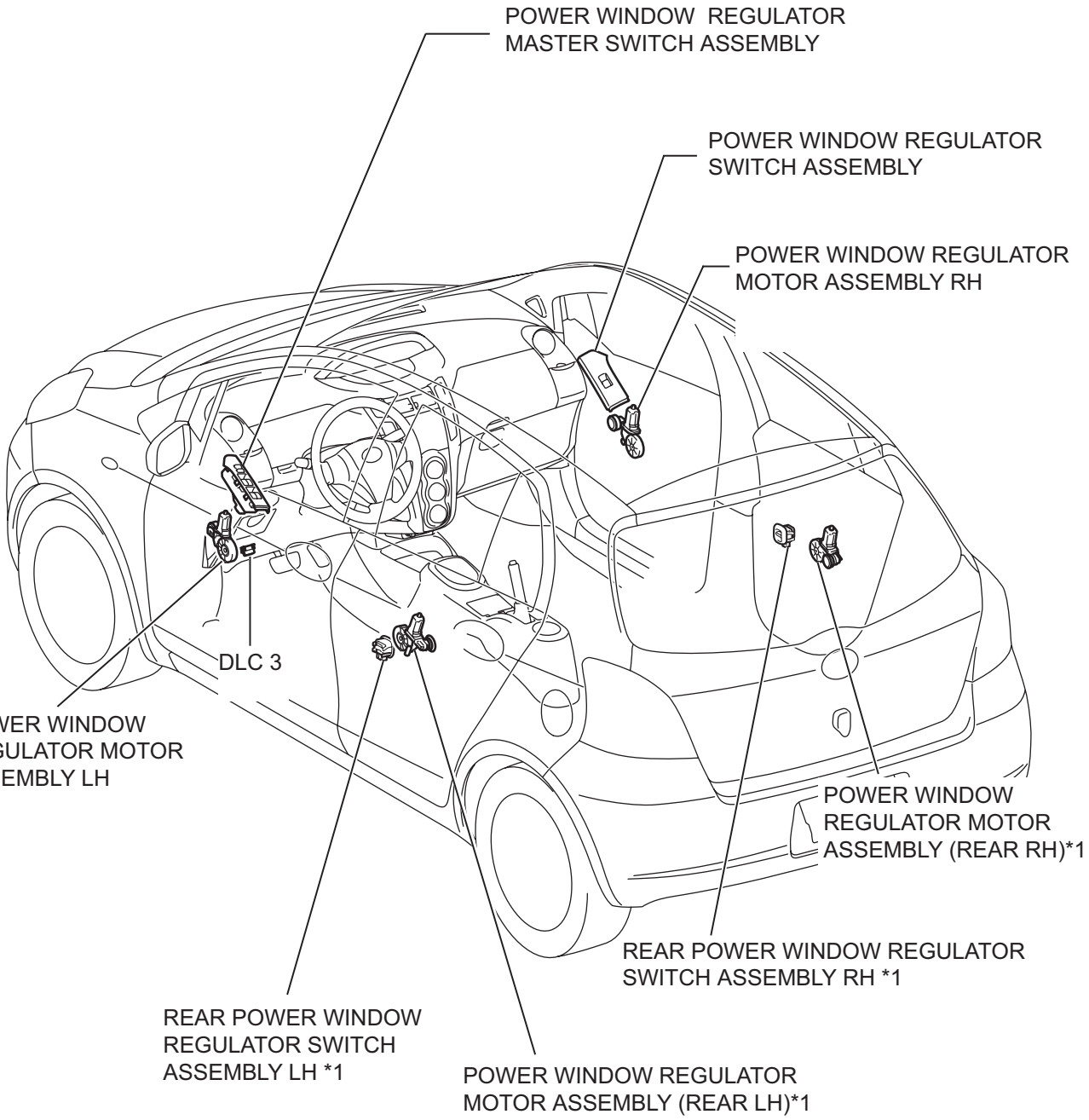

*1: 5 DOOR

H

B143857E01

WS

HATCHBACK:

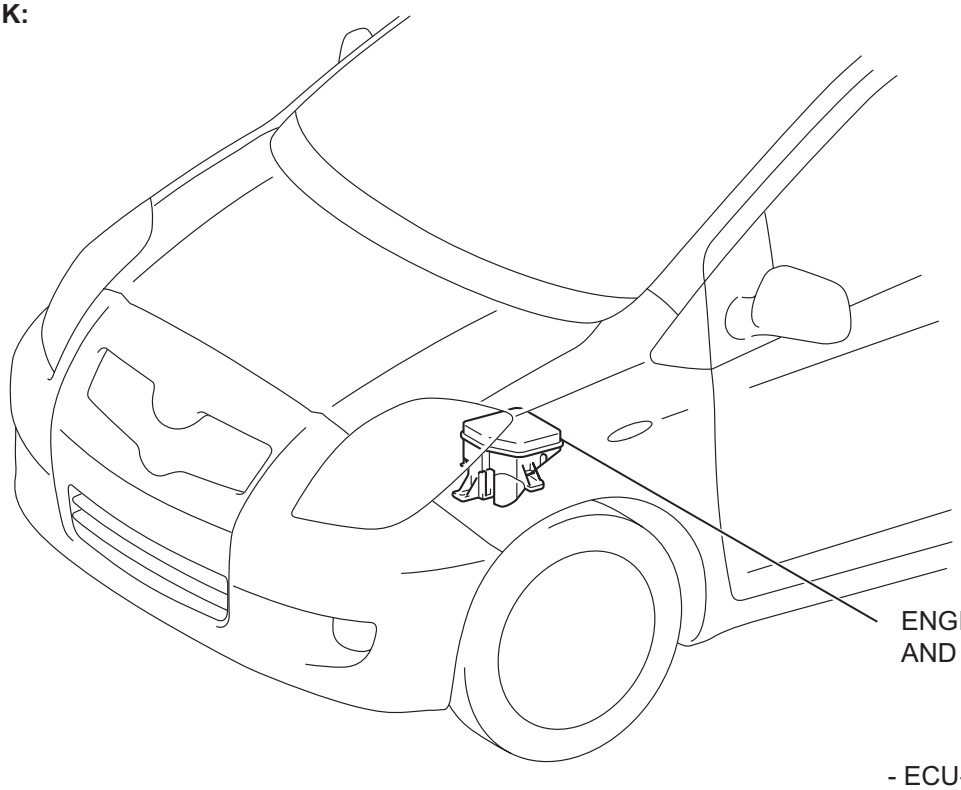

ENGINE ROOM R/B AND J/B

- ECU-B FUSE

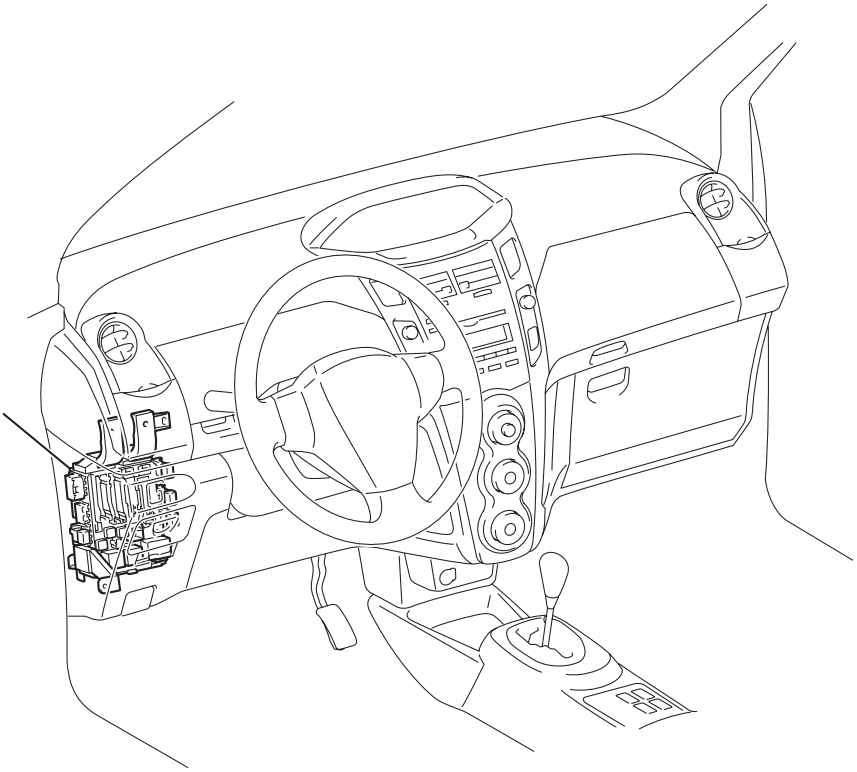

MAIN BODY ECU (INSTRUMENT PANEL J/B)

- PWR RELAY
- POWER FUSE
- ECU-IG FUSE

Y

B116309E02

SEDAN:

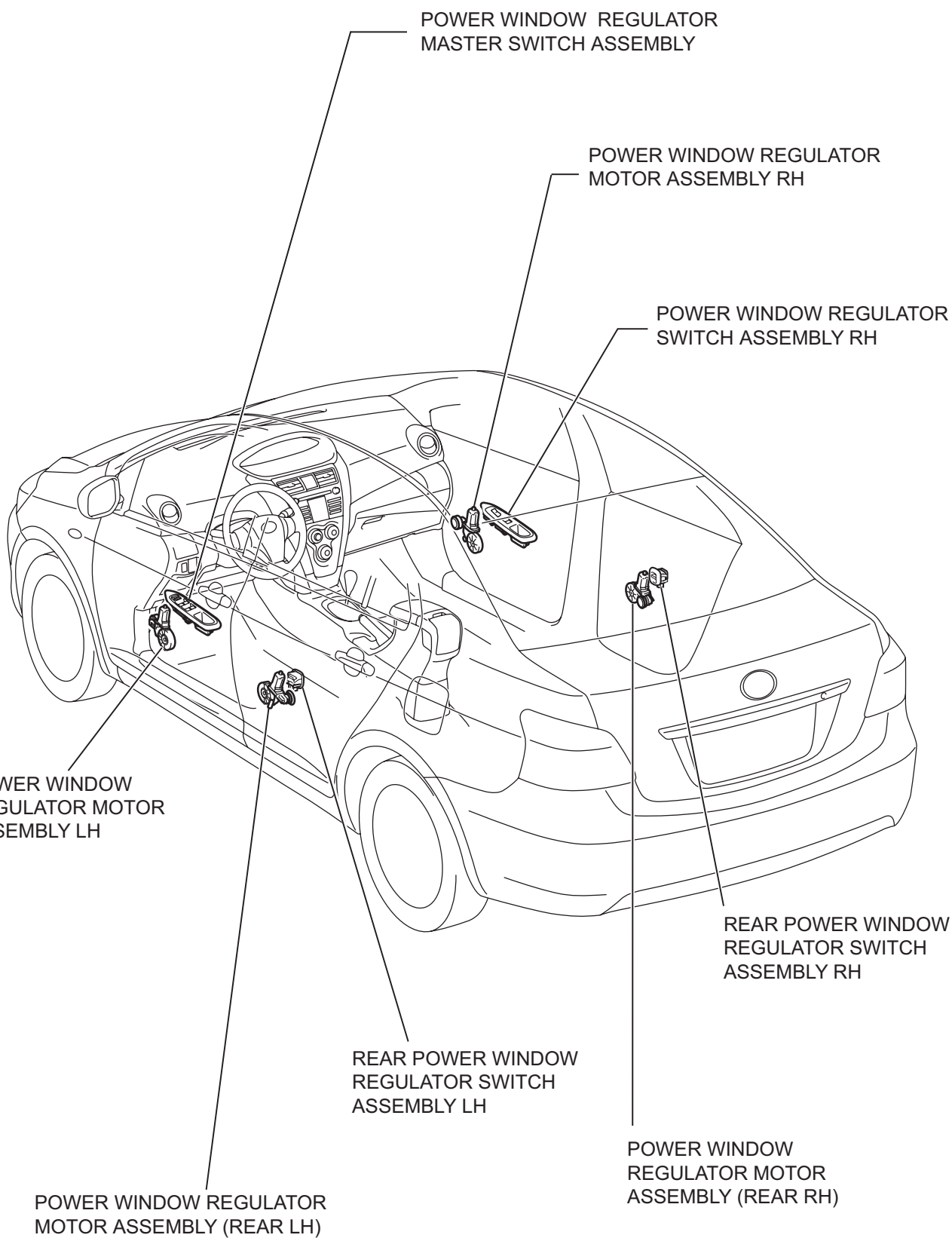

H

B143858E01

WS

SEDAN:

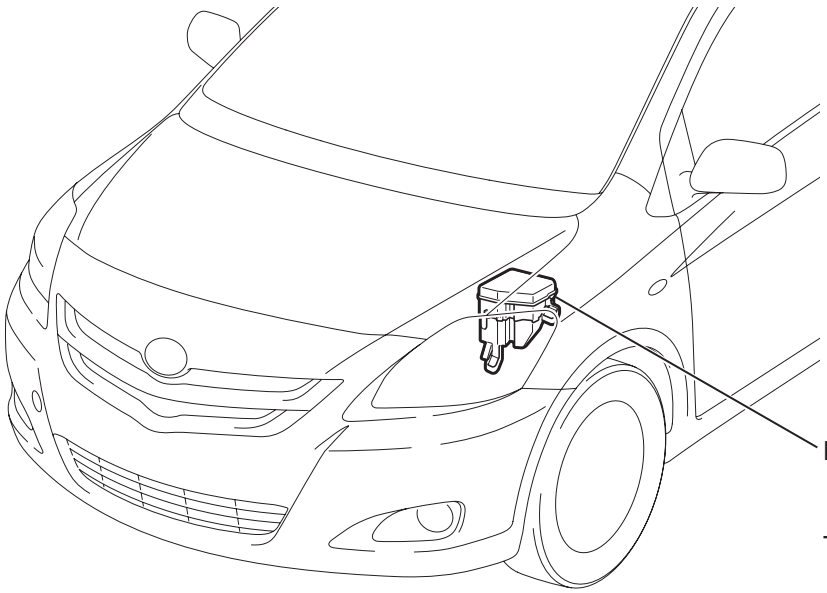

ENGINE ROOM R/B AND J/B

- ECU-B FUSE

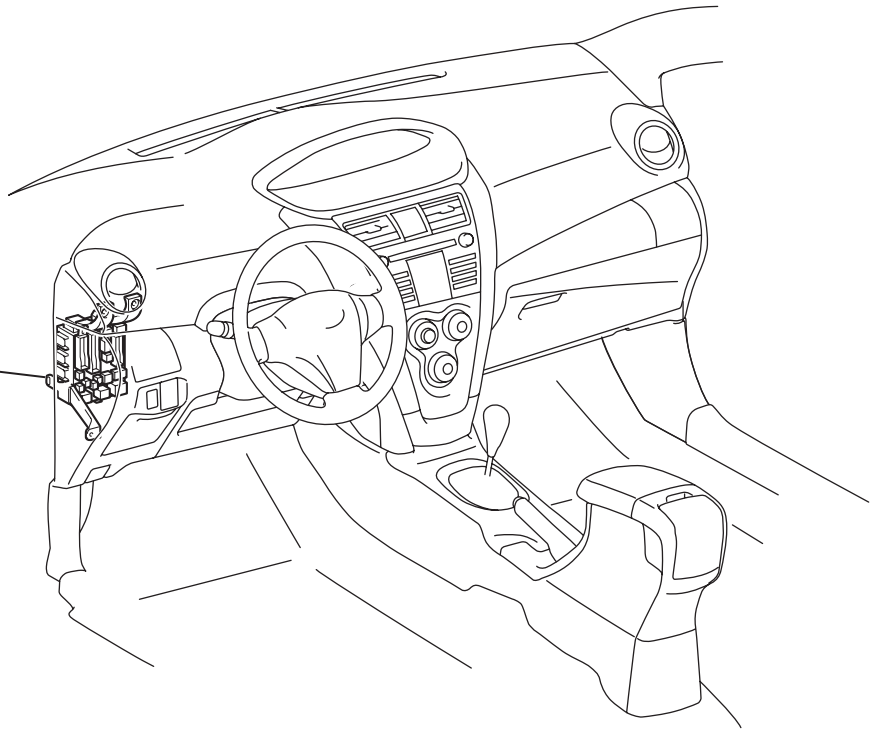

MAIN BODY ECU (INSTRUMENT PANEL J/B)

- PWR RELAY
- POWER FUSE
- ECU-IG FUSE

H

B142252E02

SYSTEM DIAGRAM

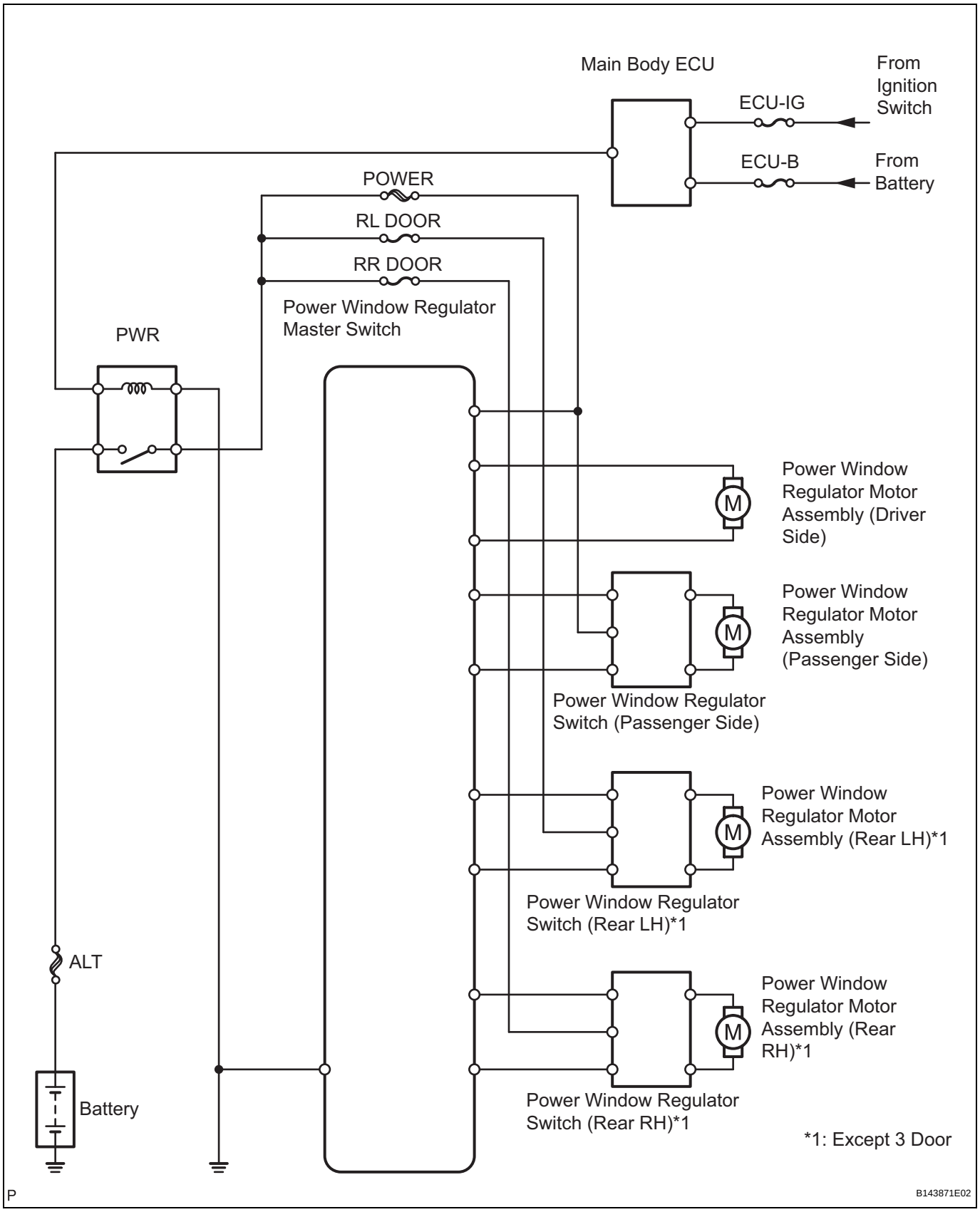

WS

SYSTEM DESCRIPTION

1. POWER WINDOW CONTROL SYSTEM DESCRIPTION

The power window control system controls the power window UP / DOWN function using the regulator motors.
3 Door:
The main controls of this system are: the power window regulator master switch, which is built into the driver side door, and the power window regulator switch, which is built into the passenger side door. Pressing the regulator switch or either of the switches on the master switch transmits an UP / DOWN signal to the corresponding power window regulator motor.
Except 3 door:
The main controls of this system are: the power window regulator master switch, which is built into the driver side door, and the power window regulator switches, which are built into the passenger side door and rear doors. Pressing the regulator switch or any of the switches on the master switch transmits an UP / DOWN signal to the corresponding power window regulator motor.

2. FUNCTION OF MAIN COMPONENT

Component	Outline
Power Window Regulator Master Switch Assembly	• Controls window operations for all windows • When window lock switch is set to lock position, window operation is only possible with master switch
Power Window Regulator Switch Assembly	• 3 Door: Located on passenger side door • Except 3 door: Located on passenger side door and rear doors • Each regulator switch controls window operations for its respective window
Power Window Regulator Motor Assembly	• Receives switch signals and changes signals into motor activation to change window position

3. SYSTEM FUNCTION

The power window control system has the following functions.

Function	Outline
Manual UP / DOWN function	• Driver side power window: Function that raises window while power window switch is pulled up, and lowers window while pushed halfway down (window stops as soon as switch is released) • Other power windows: Function that raises window while power window switch is pulled up, and lowers window while pushed down (window stops as soon as switch is released)
AUTO DOWN function	Function that enables window of driver side door to be fully opened by one full push downward on power window switch
Remote UP / DOWN function	3 Door: Function that allows power window master switch to control manual UP / DOWN operation of passenger side power window Except 3 door: Function that allows power window master switch to control manual UP / DOWN operation of passenger side power window and rear power windows

Function	Outline
Window lock function	• 3 Door: Function where passenger side power window operation is disabled when window lock switch of master switch is pressed Passenger side power window can be operated when window lock switch is pressed again • Except 3 door: Function where passenger side power window and rear power window operation is disabled when window lock switch of master switch is pressed Passenger side power window and rear power windows can be operated when window lock switch is pressed again

HOW TO PROCEED WITH TROUBLESHOOTING

HINT:

- Use these procedures to troubleshoot the power window control system.

1 VEHICLE BROUGHT TO WORKSHOP

NEXT

2 INSPECT BATTERY VOLTAGE

Standard voltage:
11 to 14 V

If the voltage is below 11 V, recharge or replace the battery before proceeding.

NEXT

3 PROBLEM SYMPTOMS TABLE

Result

Result	Proceed to
Fault is not listed in problem symptoms table	A
Fault is listed in problem symptoms table	B

B → **Go to step 5**

A

4 OVERALL ANALYSIS AND TROUBLESHOOTING

(a) Terminals of ECU (See page WS-9)
(b) On-vehicle Inspection (See page WS-12)

NEXT

5 REPAIR OR REPLACE

NEXT

6 CONFIRMATION TEST

NEXT

END

PROBLEM SYMPTOMS TABLE

HINT:

- Use the table below to help determine the cause of the problem symptom. The potential causes of the symptoms are listed in order of probability in the "Suspected Area" column of the table. Check each symptom by checking the suspected areas in the order they are listed. Replace parts as necessary.
- Inspect the fuses and relays related to the system before inspecting the suspected areas below.

Power window control system

Symptom	Suspected area	See page
Remote Up / Down Function does not Operate	Power window regulator master switch assembly	WS-50
	Wire harness	WS-15
Driver Side Power Window does not Operate with Power Window Master Switch	Power window regulator master switch assembly	WS-50
	Power window regulator motor assembly (driver side)	WS-67
	Wire harness	WS-17
Front Passenger Side Power Window does not Operate with Front Passenger Side Power Window Switch	Power window regulator switch assembly (passenger side)	WS-57
	Power window regulator motor assembly (passenger side)	WS-67
	Wire harness	WS-22
Rear Power Window LH does not Operate with Rear Power Window Switch LH*	Power window regulator switch assembly (rear LH)*	WS-62
	Power window regulator motor assembly (rear LH)*	WS-74
	Wire harness	WS-28
Rear Power Window RH does not Operate with Rear Power Window Switch RH*	Power window regulator switch assembly (rear RH)*	WS-62
	Power window regulator motor assembly (rear RH)*	WS-74
	Wire harness	WS-34
Power Windows do not Operate at All	ECU-B & POWER fuse	-
	ECU-IG fuse	-
	Power relay	WS-43
	IG1 relay	WS-40
	Power window regulator master switch assembly	WS-50
	Wire harness	WS-40

*: Except 3 door

TERMINALS OF ECU

1. CHECK POWER WINDOW REGULATOR MASTER SWITCH (EXCEPT 3 DOOR)

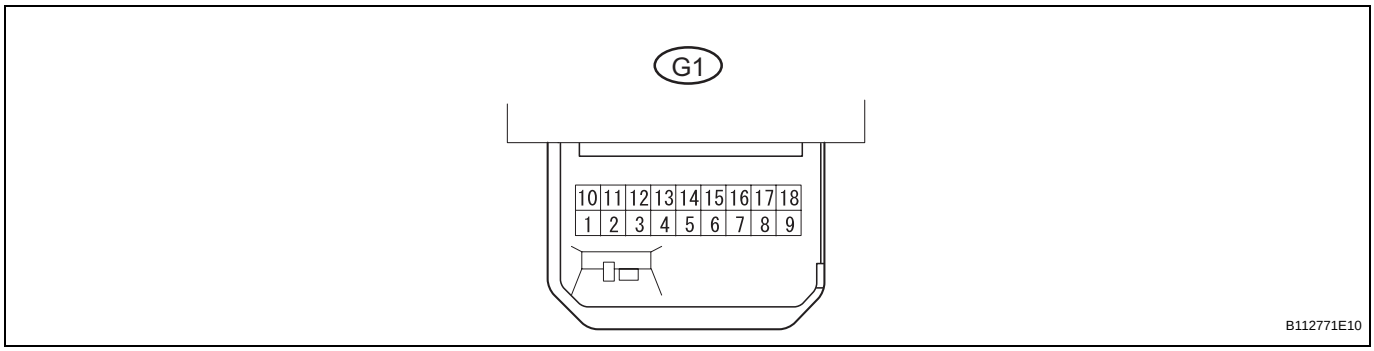

(a) Disconnect the G1 power window regulator master switch connector.
(b) Measure the voltage and resistance of the wire harness side connector.

Standard:

Except 3 door

Symbols (Terminal No.)	Wiring Color	Terminal Description	Condition	Specified Condition
B (G1-6) - Body ground	GR - Body ground	Ignition power supply	Ignition switch OFF	Below 1 V
B (G1-6) - Body ground	GR - Body ground	Ignition power supply	Ignition switch ON	11 to 14 V
E (G1-1) - Body ground	W-B - Body ground	Ground	Always	Below 1 Ω

If the result is not as specified, there may be a malfunction on the wire harness side.

(c) Reconnect the G1 power window regulator master switch connector.
(d) Measure the voltage of the connector.

Standard voltage:

Except 3 door

Symbols (Terminal No.)	Wiring Color	Terminal Description	Condition	Specified Condition
U (G1-3) - E (G1-1)	R- W-B	Power window motor UP output (driver side)	Ignition switch ON, driver side power window switch OFF → UP (manual operation)	Below 1 V → 11 to 14 V
D (G1-4) - E (G1-1)	G - W-B	Power window motor DOWN output (driver side)	Ignition switch ON, driver side power window switch OFF → DOWN (manual operation)	Below 1 V → 11 to 14 V
D (G1-4) - E (G1-1)	G - W-B	Power window motor DOWN output (driver side)	Ignition switch ON, driver side power window fully closed → driver side power window switch DOWN (AUTO operation) → driver side power window fully open	Below 1 V → 11 to 14 V → Below 1 V
U (G1-16) - E (G1-1)	W - W-B	Power window motor UP output (passenger side)	Ignition switch ON, passenger side power window switch OFF → UP	Below 1 V → 11 to 14 V
D (G1-15) - E (G1-1)	P - W-B	Power window motor DOWN output (passenger side)	Ignition switch ON, passenger side power window switch OFF → DOWN	Below 1 V → 11 to 14 V
U (G1-12) - E (G1-1)	Y - W-B	Power window motor UP output (rear LH)	Ignition switch ON, rear LH side power window switch OFF → UP	Below 1 V → 11 to 14 V

WS

Symbols (Terminal No.)	Wiring Color	Terminal Description	Condition	Specified Condition
D (G1-13) - E (G1-1)	B - W-B	Power window motor DOWN output (rear LH)	Ignition switch ON, rear LH side power window switch OFF → DOWN	Below 1 V → 11 to 14 V
U (G1-10) - E (G1-1)	R - W-B	Power window motor UP output (rear RH)	Ignition switch ON, rear RH side power window switch OFF → UP	Below 1 V → 11 to 14 V
D (G1-18) - E (G1-1)	G - W-B	Power window motor DOWN output (rear RH)	Ignition switch ON, rear RH side power window switch OFF → DOWN	Below 1 V → 11 to 14 V

If the result is not as specified, the master switch may have a malfunction.

(e) Check the AUTO light illumination.
   (1) After turning the ignition switch ON, check that the AUTO light illuminates (green).

2. CHECK POWER WINDOW REGULATOR MASTER SWITCH (3 DOOR)

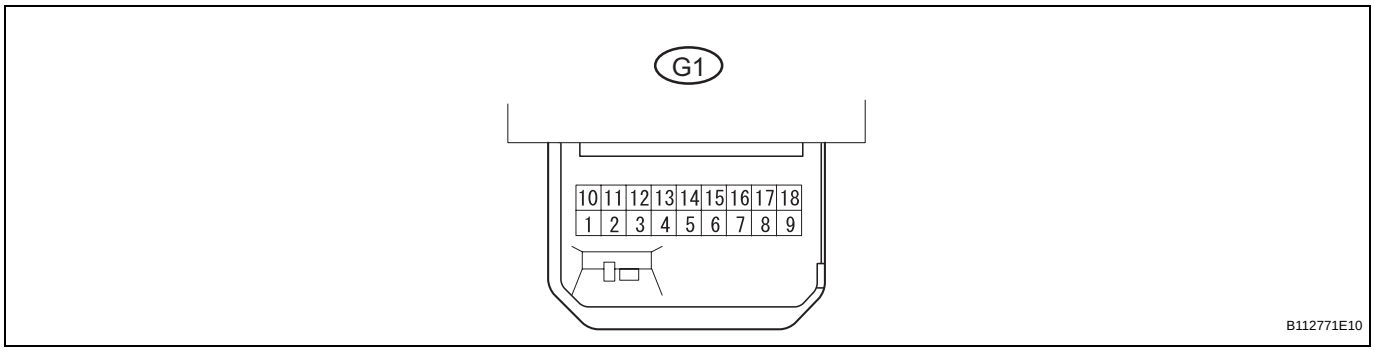

(a) Disconnect the G1 power window regulator master switch connector.
(b) Measure the voltage and resistance of the wire harness side connector.

Standard:

3 Door

Symbols (Terminal No.)	Wiring Color	Terminal Description	Condition	Specified Condition
B (G1-15) - Body ground	GR - Body ground	Ignition power supply	Ignition switch OFF	Below 1 V
B (G1-15) - Body ground	GR - Body ground	Ignition power supply	Ignition switch ON	11 to 14 V
E (G1-7) - Body ground	W-B - Body ground	Ground	Always	Below 1 Ω

If the result is not as specified, there may be a malfunction on the wire harness side.

(c) Reconnect the G1 power window regulator master switch connector.
(d) Measure the voltage of the connector.

Standard voltage:

3 Door

Symbols (Terminal No.)	Wiring Color	Terminal Description	Condition	Specified Condition
U (G1-10) - E (G1-7)	R - W-B	Power window motor UP output (driver side)	Ignition switch ON, driver side power window switch OFF → UP (manual operation)	Below 1 V → 11 to 14 V
D (G1-12) - E (G1-7)	G - W-B	Power window motor DOWN output (driver side)	Ignition switch ON, driver side power window switch OFF → DOWN (manual operation)	Below 1 V → 11 to 14 V

Symbols (Terminal No.)	Wiring Color	Terminal Description	Condition	Specified Condition
D (G1-12) - E (G1-7)	G - W-B	Power window motor DOWN output (driver side)	Ignition switch ON, driver side power window fully closed → driver side power window switch DOWN (AUTO operation) → driver side power window fully open	Below 1 V → 11 to 14 V → Below 1 V
U (G1-16) - E (G1-7)	W - W-B	Power window motor UP output (passenger side)	Ignition switch ON, passenger side power window switch OFF → UP	Below 1 V → 11 to 14 V
D (G1-18) - E (G1-7)	P - W-B	Power window motor DOWN output (passenger side)	Ignition switch ON, passenger side power window switch OFF → DOWN	Below 1 V → 11 to 14 V

If the result is not as specified, the master switch may have a malfunction.

(e) Check the AUTO light illumination.
   (1) After turning the ignition switch ON, check that the AUTO light illuminates (green).

3. CHECK POWER WINDOW SWITCH (PASSENGER SIDE)

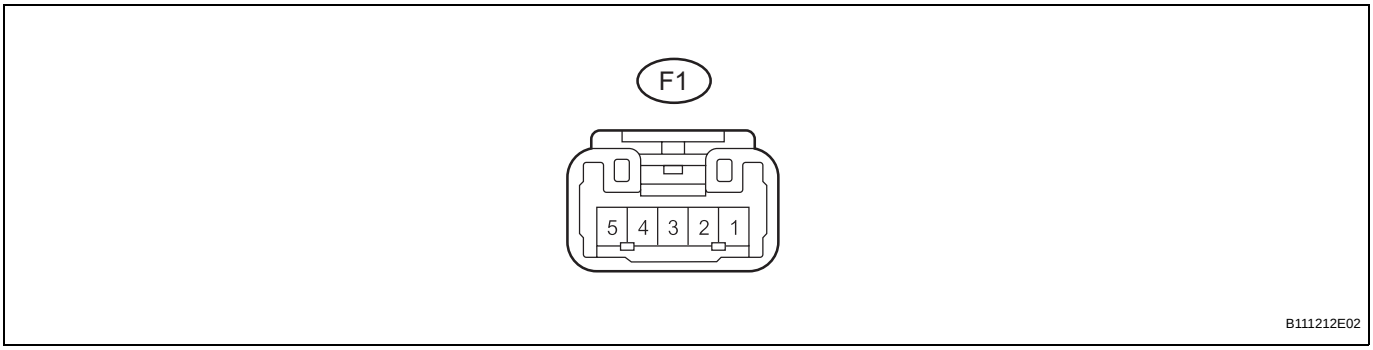

(a) Disconnect the F1 power window switch connector.
(b) Measure the voltage of the wire harness side connector.

Standard voltage:

Symbols (Terminal No.)	Wiring Color	Terminal Description	Condition	Specified Condition
B (F1-3) - Body ground	L - Body ground	Ignition power supply	Ignition switch OFF	Below 1 V
B (F1-3) - Body ground	L - Body ground	Ignition power supply	Ignition switch ON	11 to 14 V
D (F1-1) - Body ground	G - Body ground	Power window motor DOWN output	Ignition switch ON, power window switch OFF → DOWN	Below 1 V → 11 to 14 V
SD (F1-2) - Body ground	P - Body ground	Power window motor DOWN input (Remote)	Ignition switch ON, power window master switch OFF → DOWN (Remote)	Below 1 V → 11 to 14 V
U (F1-4) - Body ground	R - Body ground	Power window motor UP output	Ignition switch ON, power window switch OFF → UP	Below 1 V → 11 to 14 V
SU (F1-5) - Body ground	W - Body ground	Power window motor UP input (Remote)	Ignition switch ON, power window master switch OFF → UP (Remote)	Below 1 V → 11 to 14 V

If the result is not as specified, there may be a malfunction on the wire harness side.

(c) Reconnect the F1 power window switch connector.

4. CHECK POWER WINDOW SWITCH (REAR DOOR SIDE)

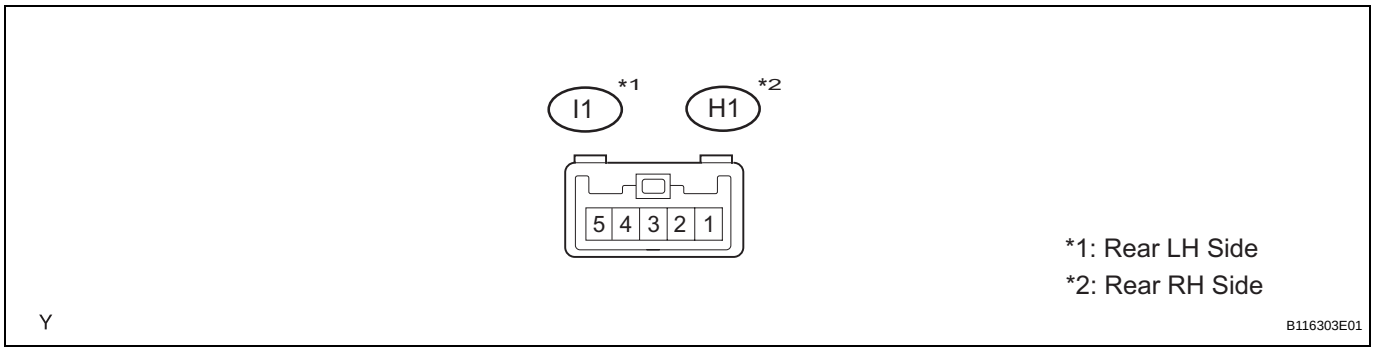

(a) Disconnect the I1 and H1 power window switch connectors.
(b) Measure the voltage of the wire harness side connector.

Standard voltage:

Symbols (Terminal No.)	Wiring Color	Terminal Description	Condition	Specified Condition
B (3) - Body ground	SB - Body ground	Ignition power supply	Ignition switch OFF	Below 1 V
B (3) - Body ground	SB - Body ground	Ignition power supply	Ignition switch ON	11 to 14 V
U (4) - Body ground	Y - Body ground	Power window motor UP output	Ignition switch ON, power window switch OFF → UP	Below 1 V → 11 to 14 V
D (2) - Body ground	B - Body ground	Power window motor DOWN output	Ignition switch ON, power window switch OFF → DOWN	Below 1 V → 11 to 14 V
SU (5) - Body ground	R - Body ground	Power window motor UP intput (Remote)	Ignition switch ON, power window master switch OFF → UP (Remote)	Below 1 V → 11 to 14 V
SD (1) - Body ground	G - Body ground	Power window motor DOWN input (Remote)	Ignition switch ON, power window master switch OFF → DOWN (Remote)	Below 1 V → 11 to 14 V

If the result is not as specified, there may be a malfunction on the wire harness side.
(c) Reconnect the I1 and H1 power window switch connectors.

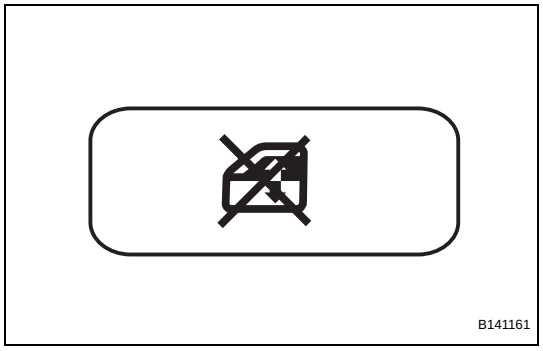

ON-VEHICLE INSPECTION

1. CHECK POWER WINDOW REGULATOR MASTER SWITCH (WINDOW LOCK SWITCH)

(a) 3 Door:
Check that the passenger side power window cannot be operated when the window lock switch of the power window regulator master switch is pressed.
Except 3 door:
Check that the passenger side power window and rear windows cannot be operated when the window lock switch of the power window regulator master switch is pressed.
(b) 3 Door:
Check that the passenger side power window can be operated when the window lock switch is pressed again.
Except 3 door:

Check that the passenger side power window and rear windows can be operated when the window lock switch is pressed again.

2. CHECK MANUAL UP / DOWN FUNCTION

(a) Check that the driver side power window operates as follows:

OK:

Condition	Master Switch	Switch Operation	Power Window
Ignition switch ON	Driver side	Pulled up	UP (closes)
Ignition switch ON	Driver side	Pushed halfway down	DOWN (opens)

(b) Check that the passenger side power window operates as follows:

OK:

Condition	Regulator Switch	Switch Operation	Power Window
• Ignition switch ON • Window lock switch OFF	Passenger side	Pulled up	UP (closes)
• Ignition switch ON • Window lock switch OFF	Passenger side	Pushed down	DOWN (opens)

(c) Except 3 door:
Check that the rear LH power window operates as follows:

OK:

Condition	Regulator Switch	Switch Operation	Power Window
• Ignition switch ON • Window lock switch OFF	Rear LH	Pulled up	UP (closes)
• Ignition switch ON • Window lock switch OFF	Rear LH	Pushed down	DOWN (opens)

(d) Except 3 door:
Check that the rear RH power window operates as follows:

OK:

Condition	Regulator Switch	Switch Operation	Power Window
• Ignition switch ON • Window lock switch OFF	Rear RH	Pulled up	UP (closes)
• Ignition switch ON • Window lock switch OFF	Rear RH	Pushed down	DOWN (opens)

3. CHECK AUTO DOWN FUNCTION

(a) Check that the driver side power window operates as follows:

OK:

Condition	Master Switch	Switch Operation	Power Window
Ignition switch ON	Driver side	Fully pushed down	AUTO DOWN (fully opens)

4. CHECK REMOTE UP / DOWN FUNCTION

(a) Check that the passenger side power window operates as follows:

OK:

Condition	Master Switch	Switch Operation	Power Window
• Ignition switch ON • Window lock switch OFF	Passenger side	Pulled up	UP (closes)
• Ignition switch ON • Window lock switch OFF	Passenger side	Pushed down	DOWN (opens)

(b) Except 3 door:
Check that the rear LH power window operates as follows:

OK:

Condition	Master Switch	Switch Operation	Power Window
• Ignition switch ON • Window lock switch OFF	Rear LH	Pulled up	UP (closes)
• Ignition switch ON • Window lock switch OFF	Rear LH	Pushed down	DOWN (opens)

(c) Except 3 door:
Check that the rear RH power window operates as follows:

OK:

Condition	Master Switch	Switch Operation	Power Window
• Ignition switch ON • Window lock switch OFF	Rear RH	Pulled up	UP (closes)
• Ignition switch ON • Window lock switch OFF	Rear RH	Pushed down	DOWN (opens)

5. CHECK PTC OPERATION

HINT:
PTC operation is a function that prevents overloading of the power window regulator by stopping the motor. PTC operation activates when the power window regulator switch is operated for a predetermined amount of time.

(a) Pull up and hold the power window regulator switch for more than 90 seconds. Then release the switch.
(b) Check that pressing the switch does not move the window.
(c) Wait until 60 seconds have passed since the switch was released in the first step. Check that pressing the switch results in normal window movement.

Remote Up / Down Function does not Operate

DESCRIPTION

3 Door:
With the ignition switch ON, the power window regulator master switch transmits remote switch signals to the regulator switch of the passenger door power window. Then, the regulator switch drives the passenger power window regulator motor.
Except 3 door:
With the ignition switch ON, the power window regulator master switch transmits remote switch signals to the regulator switches of the passenger door power window and rear door power windows. Then, each regulator switch drives its respective power window regulator motor.

WIRING DIAGRAM

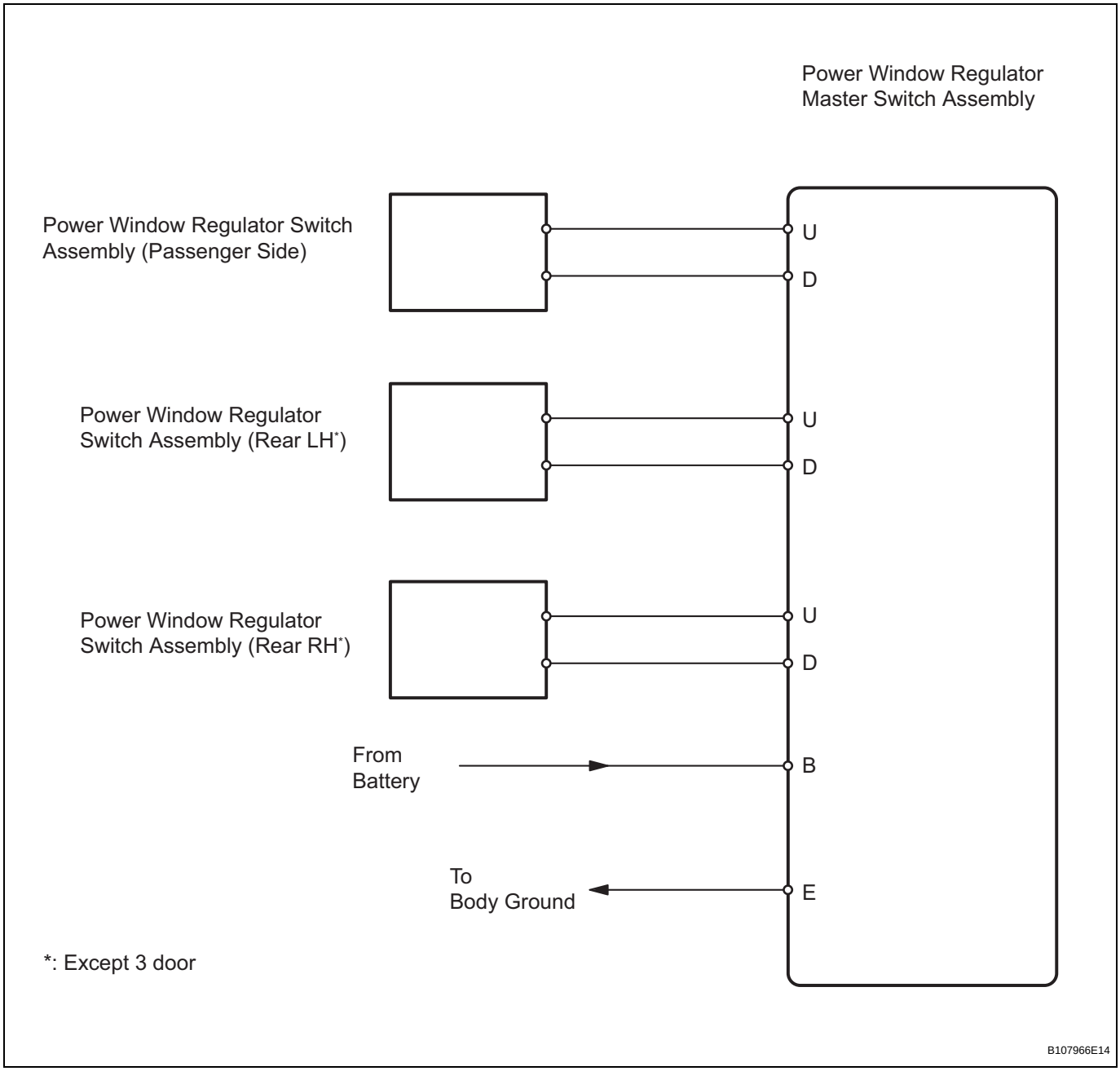

INSPECTION PROCEDURE

1	CHECK POWER WINDOW REGULATOR MASTER SWITCH ASSEMBLY

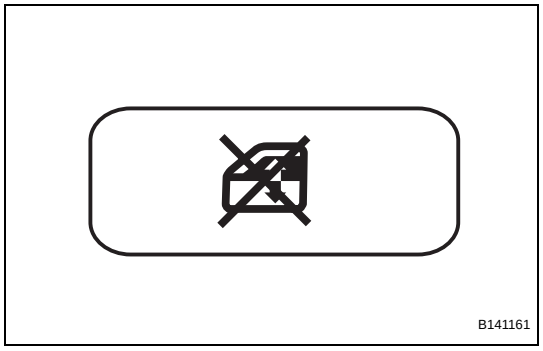

(a) Turn the window lock switch OFF and operate the switches on the master switch. Check that the remote UP / DOWN function operates normally.
OK:
Remote UP / DOWN function operates normally.

NG → **Go to step 2**

OK

END

2	CHECK MANUAL UP / DOWN FUNCTION

(a) 3 Door:
Check that the passenger door power window manual UP / DOWN function operates normally.
Except 3 door:
Check that the passenger door power window and rear door power window manual UP / DOWN function operates normally.
OK:
Manual UP / DOWN function operates normally.

NG → **OTHER PROBLEM**

OK

REPLACE POWER WINDOW REGULATOR MASTER SWITCH ASSEMBLY

WS

Driver Side Power Window does not Operate with Power Window Master Switch

DESCRIPTION

If the manual UP / DOWN and AUTO DOWN functions do not operate, a malfunction may exist in the power window regulator master switch, power window regulator motor or wire harness.

WIRING DIAGRAM

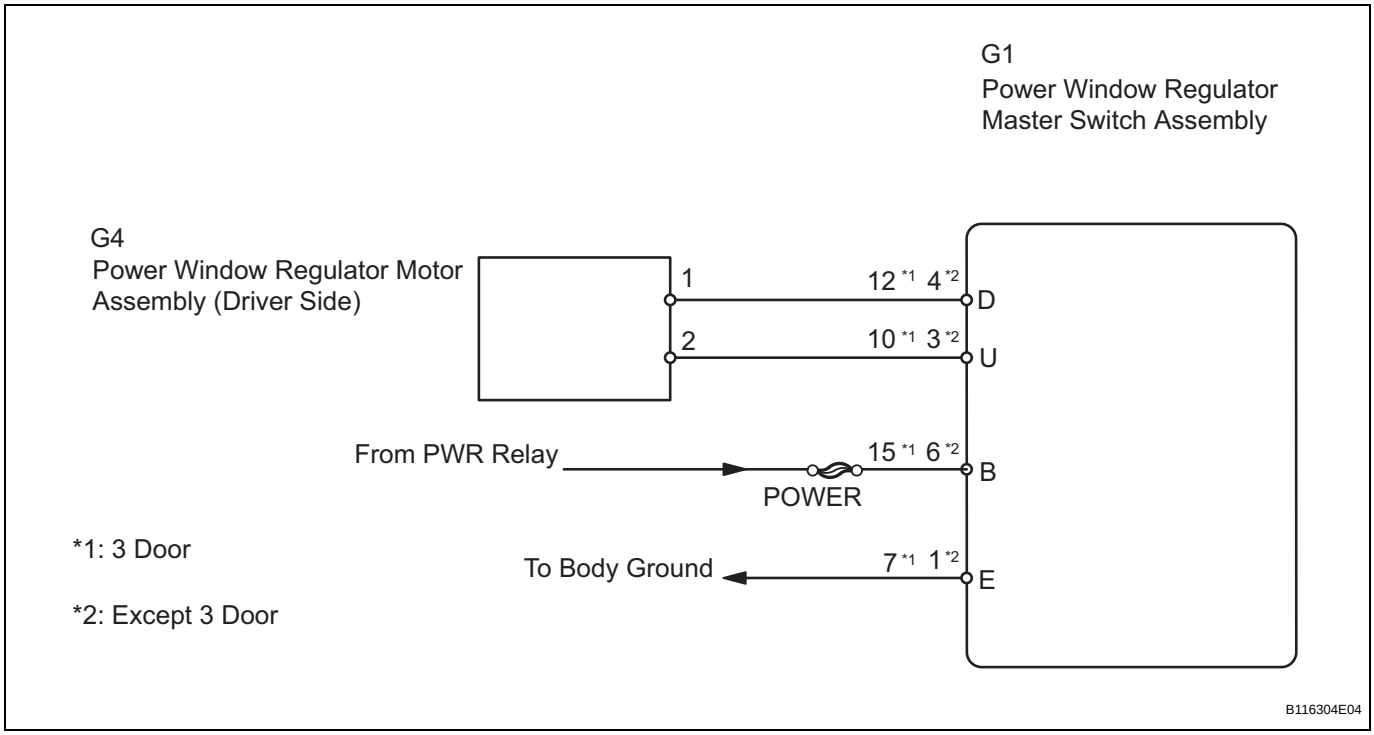

INSPECTION PROCEDURE

1	**INSPECT POWER WINDOW REGULATOR MASTER SWITCH ASSEMBLY (DRIVER SWITCH)**

Power Window Regulator Master Switch:

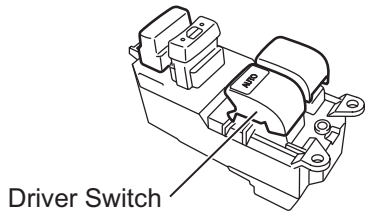

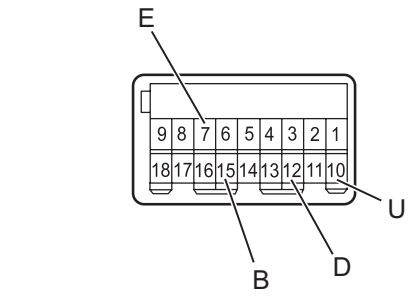

(a) 3 Door:
Inspect the driver switch.
(1) Remove the power window regulator master switch assembly.
(2) Measure the resistance of the switch when the switch is operated.

Standard resistance

Window Lock Switch Condition	Power Window Switch Condition	Tester Connection	Specified Condition
Always (ON / OFF)	UP	7 (E) - 12 (D) 10 (U) - 15 (B)	Below 1 Ω
Always (ON / OFF)	OFF	7 (E) - 10 (U) 7 (E) - 12 (D)	Below 1 Ω
Always (ON / OFF)	DOWN	7 (E) - 10 (U) 12 (D) - 15 (B)	Below 1 Ω
Always (ON / OFF)	AUTO DOWN	7 (E) - 10 (U) 12 (D) - 15 (B)	Below 1 Ω

(3) Reinstall the power window regulator master switch assembly.

WS

Power Window Regulator Master Switch:

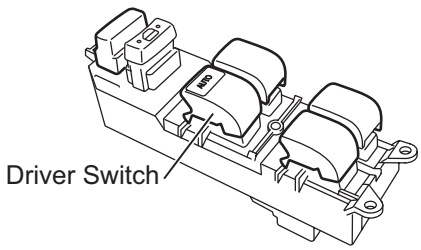

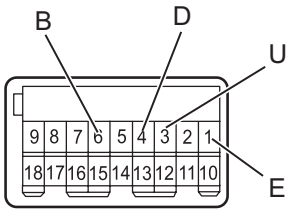

B107909E09

(b) Except 3 door:
Inspect the driver switch.
(1) Remove the power window regulator master switch assembly.
(2) Measure the resistance of the switch when the switch is operated.

WS

Standard resistance

Window Lock Switch Condition	Power Window Switch Condition	Tester Connection	Specified Condition
Always (ON / OFF)	UP	1 (E) - 4 (D) 3 (U) - 6 (B)	Below 1 Ω
Always (ON / OFF)	OFF	1 (E) - 3 (U) 1 (E) - 4 (D)	Below 1 Ω
Always (ON / OFF)	DOWN	1 (E) - 3 (U) 6 (B) - 4 (D)	Below 1 Ω
Always (ON / OFF)	AUTO DOWN	1 (E) - 3 (U) 6 (B) - 4 (D)	Below 1 Ω

(3) Reinstall the power window regulator master switch assembly.

NG → **REPLACE POWER WINDOW REGULATOR MASTER SWITCH ASSEMBLY**

OK

2	CHECK HARNESS AND CONNECTOR (MASTER SWITCH - MOTOR (DRIVER SIDE))

(a) Disconnect the G1 power window regulator master switch assembly connector.

Wire Harness Side:

Power Window Regulator Master Switch Assembly Connector

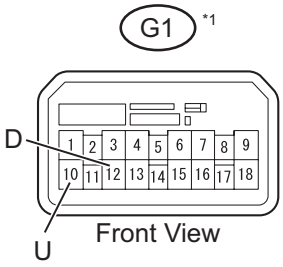

Power Window Regulator Master Switch Assembly Connector

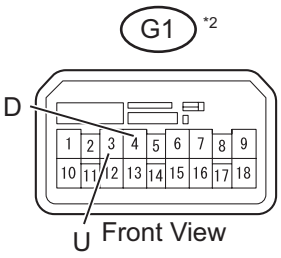

*1: 3 Door

*2: Except 3 Door

Power Window Regulator Motor Assembly Connector (Driver Side)



B116226E04

(b) Disconnect the G4 power window regulator motor assembly connector.

(c) Measure the resistance of the wire harness side connectors.

Standard resistance:

3 Door

Tester Connection	Specified Condition
G1-12 (D) - G4-1	Below 1 Ω
G1-10 (U) - G4-2	Below 1 Ω
G1-12 (D) or G4-1 - Body ground	10 kΩ or higher
G1-10 (U) or G4-2 - Body ground	10 kΩ or higher

Except 3 door

Tester Connection	Specified Condition
G1-4 (D) - G4-1	Below 1 Ω
G1-3 (U) - G4-2	Below 1 Ω
G1-4 (D) or G4-1 - Body ground	10 kΩ or higher
G1-3 (U) or G4-2 - Body ground	10 kΩ or higher

(d) Reconnect the G1 power window regulator master switch assembly connector.

(e) Reconnect the G4 power window regulator motor assembly connector.

NG → **REPAIR OR REPLACE HARNESS OR CONNECTOR**

OK

WS

3	INSPECT POWER WINDOW REGULATOR MOTOR ASSEMBLY (DRIVER SIDE)

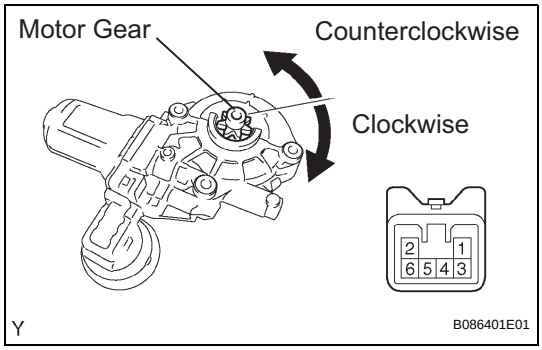

(a) Remove the power window regulator motor assembly.
(b) Apply battery voltage to connector terminals 1 and 2.
NOTICE:
Do not apply battery voltage to any terminals except terminals 1 and 2.
(c) Check that the motor gear rotates smoothly as follows.
OK

Measurement Condition	Specified Condition
Battery positive (+) → 1 Battery negative (-) → 2	Motor gear rotates counterclockwise
Battery positive (+) → 2 Battery negative (-) → 1	Motor gear rotates clockwise

(d) Reinstall the power window regulator motor assembly

NG → **REPLACE POWER WINDOW REGULATOR MOTOR ASSEMBLY (DRIVER SIDE)**

OK

GO TO POWER WINDOWS DO NOT OPERATE AT ALL

Front Passenger Side Power Window does not Operate with Front Passenger Side Power Window Switch

DESCRIPTION

If the passenger side manual UP / DOWN function does not operate, a malfunction may exist in the power window regulator motor, power window regulator switch, power window regulator master switch or wire harness.

WIRING DIAGRAM

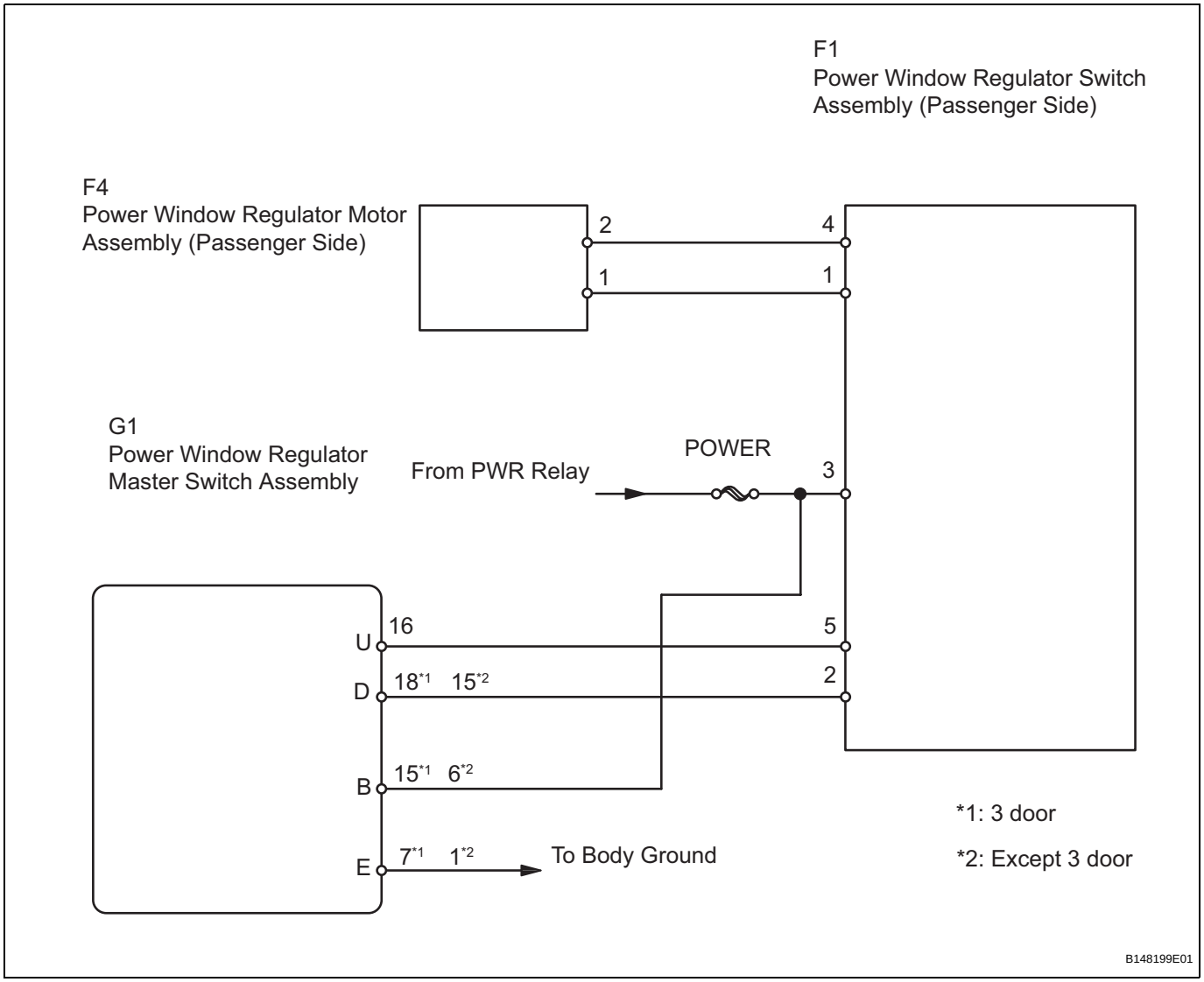

INSPECTION PROCEDURE

1	CHECK POWER WINDOW REGULATOR SWITCH ASSEMBLY (PASSENGER SIDE) (POWER SOURCE)

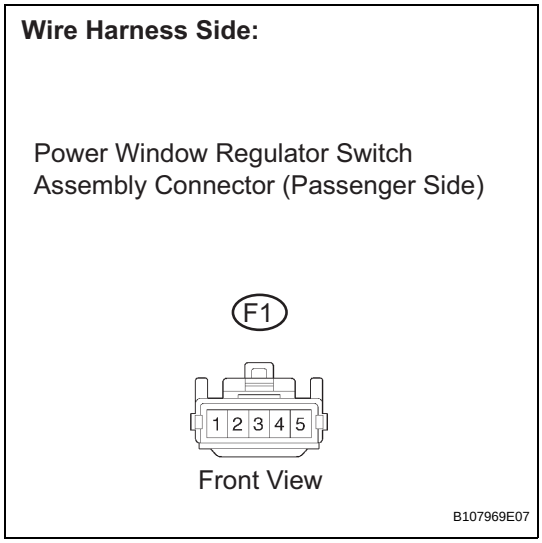

(a) Disconnect the F1 power window regulator switch assembly connector.
(b) Measure the voltage of the wire harness side connector.
Standard voltage

Tester Connection	Condition	Specified Condition
F1-3 - Body ground	Ignition switch ON	11 to 14 V

(c) Reconnect the F1 power window regulator switch assembly connector.

NG → **REPAIR OR REPLACE HARNESS OR CONNECTOR**

OK

2	INSPECT POWER WINDOW REGULATOR SWITCH ASSEMBLY (PASSENGER SIDE)

WS

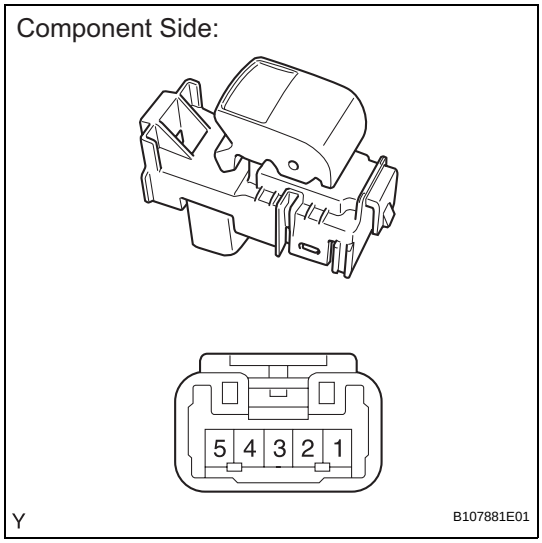

(a) Remove the power window regulator switch assembly.
(b) Measure the resistance of the switch when the switch is operated.
Standard resistance

Tester Connection	Switch Condition	Specified Condition
3 - 4 2 - 1	UP	Below 1 Ω
5 - 4 2 - 1	OFF	Below 1 Ω
5 - 4 3 - 1	DOWN	Below 1 Ω

(c) Reinstall the power window regulator switch assembly.

NG → **REPLACE POWER WINDOW REGULATOR SWITCH ASSEMBLY (PASSENGER SIDE)**

OK

3	CHECK HARNESS AND CONNECTOR (SWITCH (PASSENGER SIDE) - MOTOR (PASSENGER SIDE))

(a) Disconnect the F1 power window regulator switch assembly connector.

Wire Harness Side:

Power Window Regulator Switch Assembly
Connector (Passenger Side)

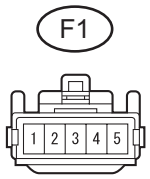

Front View

Power Window Regulator Motor Assembly
Connector (Passenger Side)

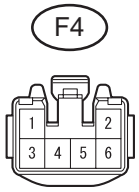

Front View

B111941E03

(b) Disconnect the F4 power window regulator motor assembly connector.
(c) Measure the resistance of the wire harness side connectors.

Standard resistance

Tester Connection	Specified Condition
F1-1 - F4-1	Below 1 Ω
F1-4 - F4-2	Below 1 Ω
F1-1 or F4-1 - Body ground	10 kΩ or higher
F1-4 or F4-2 - Body ground	10 kΩ or higher

(d) Reconnect the F1 power window regulator switch assembly connector.
(e) Reconnect the F4 power window regulator motor assembly connector.

NG → **REPAIR OR REPLACE HARNESS OR CONNECTOR**

OK

4 INSPECT POWER WINDOW REGULATOR MOTOR ASSEMBLY (PASSENGER SIDE)

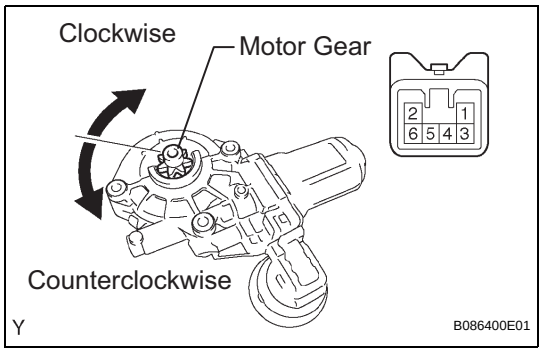

(a) Remove the power window regulator motor assembly.
(b) Apply battery voltage to connector terminals 1 and 2.

NOTICE:
Do not apply battery voltage to any terminals except terminals 1 and 2.

(c) Check that the motor gear rotates smoothly as follows.

OK

Measurement Condition	Specified Condition
Battery positive (+) → 1 Battery negative (-) → 2	Motor gear rotates clockwise
Battery positive (+) → 2 Battery negative (-) → 1	Motor gear rotates counterclockwise

(d) Reinstall the power window regulator motor assembly.

WS

NG → **REPLACE POWER WINDOW REGULATOR MOTOR ASSEMBLY (PASSENGER SIDE)**

OK

5	CHECK HARNESS AND CONNECTOR (MASTER SWITCH - SWITCH (PASSENGER SIDE))

(a) Disconnect the G1 power window regulator master switch assembly connector.

Wire Harness Side:

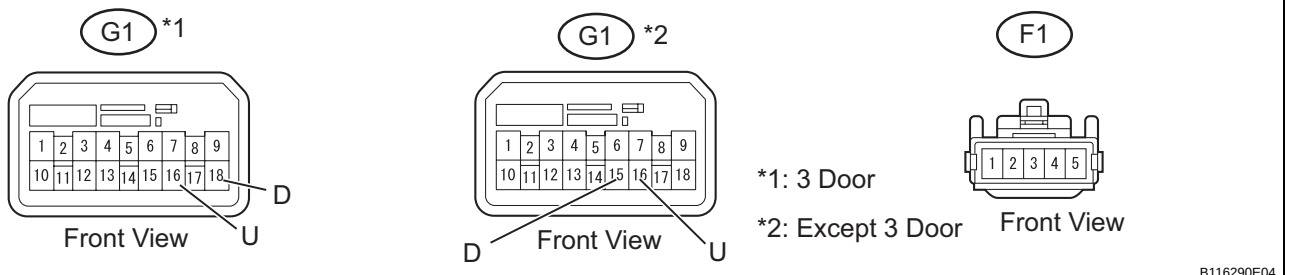

(b) Disconnect the F1 power window regulator switch assembly connector.

(c) Measure the resistance of the wire harness side connectors.

Standard resistance:

3 Door

Tester Connection	Specified Condition
G1-16 (U) - F1-5	Below 1 Ω
G1-18 (D) - F1-2	Below 1 Ω
G1-16 (U) or F1-5 - Body ground	10 kΩ or higher
G1-18 (D) or F1-2 - Body ground	10 kΩ or higher

Except 3 door

Tester Connection	Specified Condition
G1-16 (U) - F1-5	Below 1 Ω
G1-15 (D) - F1-2	Below 1 Ω
G1-16 (U) or F1-5 - Body ground	10 kΩ or higher
G1-15 (D) or F1-2 - Body ground	10 kΩ or higher

(d) Reconnect the G1 power window regulator master switch assembly connector.

(e) Reconnect the F1 power window regulator switch assembly connector.

NG → **REPAIR OR REPLACE HARNESS OR CONNECTOR**

OK

6	**INSPECT POWER WINDOW REGULATOR MASTER SWITCH ASSEMBLY (FRONT PASSENGER SWITCH)**

Power Window Regulator Master Switch:

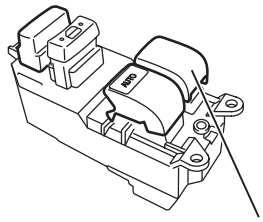

Front Passenger Switch

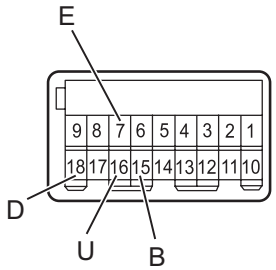

Y

B118051E04

(a) 3 Door:
Inspect the front passenger switch.
(1) Remove the power window regulator master switch.
(2) Measure the resistance of the switch when the switch is operated.

Standard resistance

Window Lock Switch Condition	Power Window Switch Condition	Tester Connection	Specified Condition
OFF	UP	7 (E) - 18 (D) 16 (U) - 15 (B)	Below 1 Ω
OFF	OFF	7 (E) - 16 (U) 7 (E) - 18 (D)	Below 1 Ω
OFF	DOWN	7 (E) - 16 (U) 15 (B) - 18 (D)	Below 1 Ω
ON	UP	7 (E) - 18 (D)	10 kΩ or higher
		16 (U) - 15 (B)	Below 1 Ω
ON	OFF	16 (U) - 18 (D)	Below 1 Ω
ON	DOWN	7 (E) - 16 (U)	10 kΩ or higher
		15 (B) - 18 (D)	Below 1 Ω

(3) Reinstall the power window master switch.

WS

Power Window Regulator Master Switch:

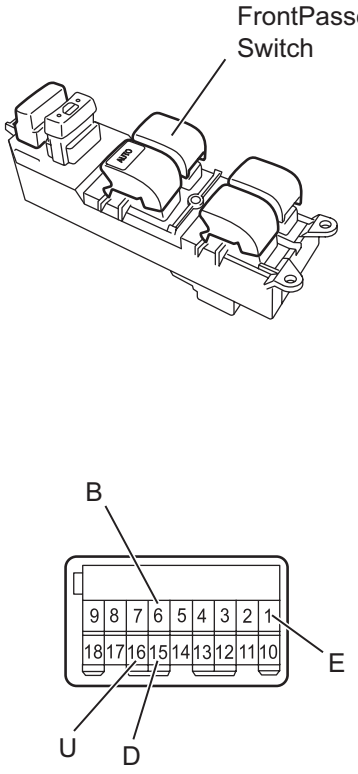

(b) Except 3 door:
Inspect the front passenger switch.
(1) Remove the power window regulator master switch.
(2) Measure the resistance of the switch when the switch is operated.

WS

Standard resistance

Window Lock Switch Condition	Power Window Switch Condition	Tester Connection	Specified Condition
OFF	UP	1 (E) - 15 (D) 6 (B) - 16 (U)	Below 1 Ω
OFF	OFF	1 (E) - 16 (U) 1 (E) - 15 (D)	Below 1 Ω
OFF	DOWN	1 (E) - 16 (U) 6 (B) - 15 (D)	Below 1 Ω
ON	UP	1 (E) - 15 (D)	10 kΩ or higher
		6 (B) - 16 (U)	Below 1 Ω
ON	OFF	15 (D) - 16 (U)	Below 1 Ω
ON	DOWN	1 (E) - 16 (U)	10 kΩ or higher
		6 (B) - 15 (D)	Below 1 Ω

(3) Reinstall the power window regulator master switch.

NG → **REPLACE POWER WINDOW REGULATOR MASTER SWITCH ASSEMBLY**

OK

GO TO POWER WINDOWS DO NOT OPERATE AT ALL

Rear Power Window LH does not Operate with Rear Power Window Switch LH

DESCRIPTION

If the rear LH side manual UP / DOWN function does not operate, a malfunction may exist in the power window regulator motor, power window regulator switch, power window regulator master switch or wire harness.

WIRING DIAGRAM

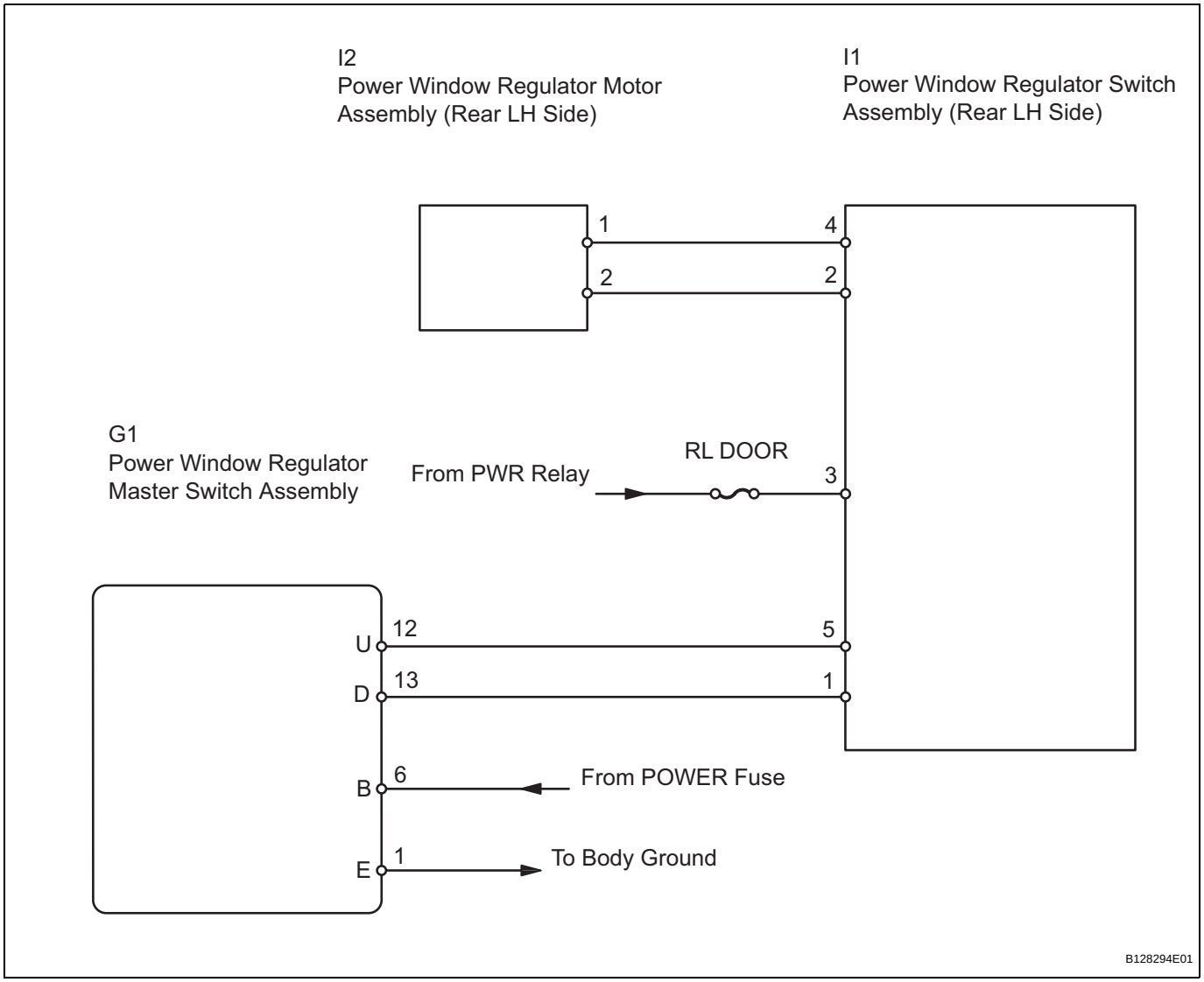

INSPECTION PROCEDURE

1	CHECK POWER WINDOW REGULATOR SWITCH ASSEMBLY (REAR LH) (POWER SOURCE)

Wire Harness Side:

Power Window Regulator Switch Assembly Connector (Rear LH)

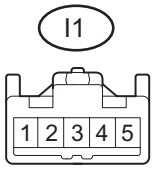

Front View

Y

B116300E01

(a) Disconnect the I1 power window regulator switch assembly connector.
(b) Measure the voltage of the wire harness side connector.
Standard voltage

Tester Connection	Condition	Specified Condition
I1-3 - Body ground	Ignition switch ON	11 to 14 V

(c) Reconnect the I1 power window regulator switch assembly connector.

NG → **REPAIR OR REPLACE HARNESS OR CONNECTOR**

OK

2	INSPECT POWER WINDOW REGULATOR SWITCH ASSEMBLY (REAR LH)

WS

Component Side:

Power Window Regulator Switch Assembly

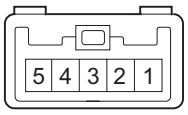

Y

B116301E02

(a) Remove the power window regulator switch assembly.
(b) Measure the resistance of the switch when the switch is operated.
Standard resistance

Tester Connection	Switch Condition	Specified Condition
1 - 2 3 - 4	UP	Below 1 Ω
4 - 5 1 - 2	OFF	Below 1 Ω
2 - 3 4 - 5	DOWN	Below 1 Ω

(c) Reinstall the power window regulator switch assembly.

NG → **REPLACE POWER WINDOW REGULATOR SWITCH ASSEMBLY (REAR LH)**

OK

3	CHECK HARNESS AND CONNECTOR (SWITCH (REAR LH) - MOTOR (REAR LH))

(a) Disconnect the I1 power window regulator switch assembly connector.

Wire Harness Side:

Power Window Regulator Switch Assembly Connector (Rear LH)

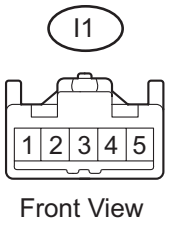

Front View

Power Window Regulator Motor Assembly Connector (Rear LH)

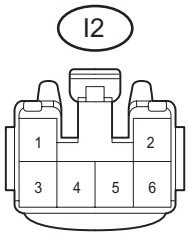

Front View

B116306E03

(b) Disconnect the I2 power window regulator motor assembly connector.
(c) Measure the resistance of the wire harness side connectors.

Standard resistance

Tester Connection	Specified Condition
I1-4 - I2-1	Below 1 Ω
I1-2 - I2-2	Below 1 Ω
I1-4 or I2-1 - Body ground	10 kΩ or higher
I1-2 or I2-2 - Body ground	10 kΩ or higher

(d) Reconnect the I1 power window regulator switch assembly connector.
(e) Reconnect the I2 power window regulator motor assembly connector.

NG → **REPAIR OR REPLACE HARNESS OR CONNECTOR**

OK

4 INSPECT POWER WINDOW REGULATOR MOTOR ASSEMBLY (REAR LH)

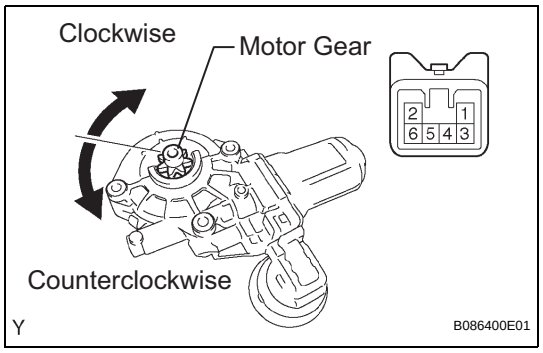

(a) Remove the power window regulator motor assembly.
(b) Apply battery voltage to connector terminals 1 and 2.
(c) Check that the motor gear rotates smoothly as follows.

OK

Measurement Condition	Specified Condition
Battery positive (+) → 1 Battery negative (-) → 2	Motor gear rotates clockwise
Battery positive (+) → 2 Battery negative (-) → 1	Motor gear rotates counterclockwise

(d) Reinstall the power window regulator motor assembly.

NG → **REPLACE POWER WINDOW REGULATOR MOTOR ASSEMBLY (REAR LH)**

WS

OK

5	CHECK HARNESS AND CONNECTOR (MASTER SWITCH - SWITCH (REAR LH))

(a) Disconnect the G1 power window regulator master switch assembly connector.

Wire Harness Side:

Power Window Regulator Master Switch Assembly Connector

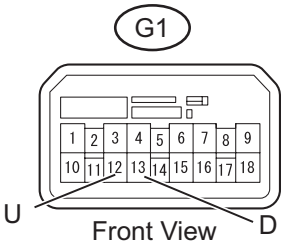

Power Window Regulator Switch Assembly Connector (Rear LH)

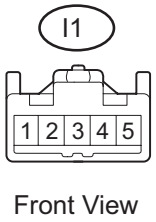

B116307E06

(b) Disconnect the I1 power widow regulator switch assembly connector.

(c) Measure the resistance of the wire harness side connectors.

Standard resistance

Tester Connection	Specified Condition
G1-12 (U) - I1-5	Below 1 Ω
G1-13 (D) - I1-1	Below 1 Ω
G1-12 (U) or I1-5 - Body ground	10 kΩ or higher
G1-13 (D) or I1-1 - Body ground	10 kΩ or higher

(d) Reconnect the G1 power window regulator master switch assembly connector.

(e) Reconnect the I1 power window regulator switch assembly connector.

NG → **REPAIR OR REPLACE HARNESS OR CONNECTOR**

OK

WS

6	INSPECT POWER WINDOW REGULATOR MASTER SWITCH ASSEMBLY (REAR LH SWITCH)

Power Window Regulator Master Switch:

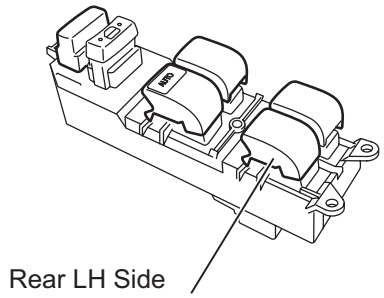

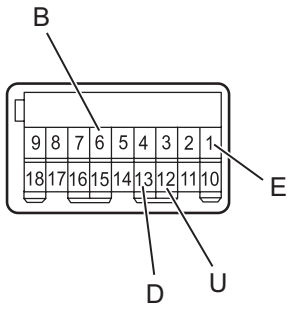

B107909E11

(a) Inspect the rear LH switch.
  (1) Remove the power window regulator master switch assembly.
  (2) Measure the resistance of the switch when the switch is operated.

Standard resistance

Window Lock Switch Condition	Power Window Switch Condition	Tester Connection	Specified Condition
OFF	UP	1 (E) - 13 (D) 6 (B) - 12 (U)	Below 1 Ω
OFF	OFF	1 (E) - 12 (U) 1 (E) - 13 (D)	Below 1 Ω
OFF	DOWN	1 (E) - 12 (U) 6 (B) - 13 (D)	Below 1 Ω
ON	UP	1 (E) - 13 (D)	10 kΩ or higher
		6 (B) - 12 (U)	Below 1 Ω
ON	OFF	12 (U) - 13 (D)	Below 1 Ω
ON	DOWN	1 (E) - 12 (U)	10 kΩ or higher
		6 (B) - 13 (D)	Below 1 Ω

(b) Reinstall the power window regulator master switch assembly.

NG → **REPLACE POWER WINDOW REGULATOR MASTER SWITCH ASSEMBLY**

WS

OK

GO TO POWER WINDOWS DO NOT OPERATE AT ALL

Rear Power Window RH does not Operate with Rear Power Window Switch RH

DESCRIPTION

If the rear RH side manual UP / DOWN function does not operate, a malfunction may exist in the power window regulator motor, power window regulator switch, power window regulator master switch or wire harness.

WIRING DIAGRAM

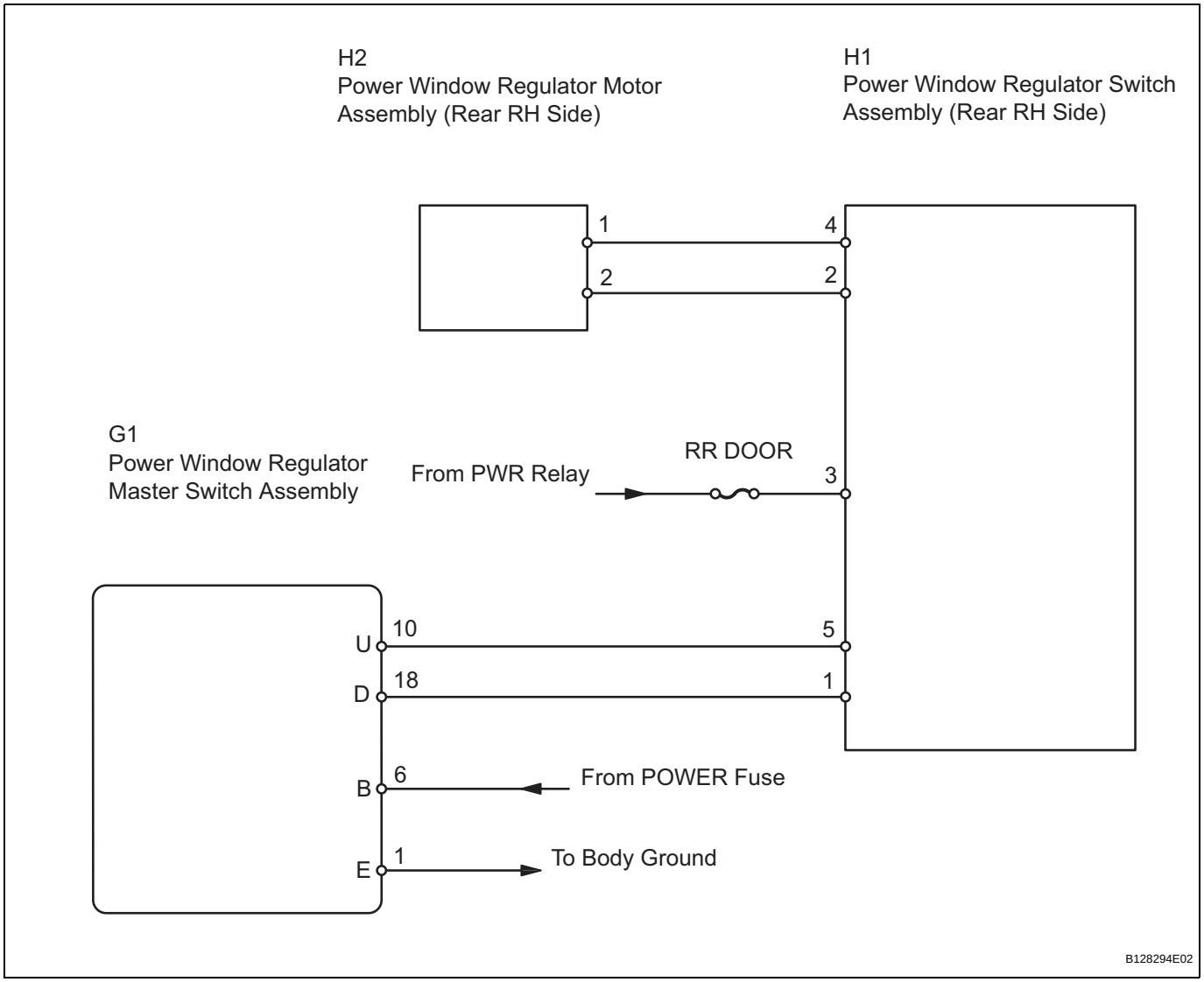

INSPECTION PROCEDURE

1	CHECK POWER WINDOW REGULATOR SWITCH ASSEMBLY (REAR RH) (POWER SOURCE)

Wire Harness Side:

Power Window Regulator Switch Assembly Connector (Rear RH)

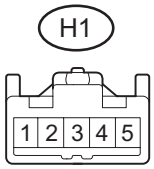

Front View

Y

B116300E03

(a) Disconnect the H1 power window regulator switch assembly connector.
(b) Measure the voltage of the wire harness side connector.
Standard voltage

Tester Connection	Condition	Specified Condition
H1-3 - Body ground	Ignition switch ON	11 to 14 V

(c) Reconnect the H1 power window regulator switch assembly connector.

NG → **REPAIR OR REPLACE HARNESS OR CONNECTOR**

OK

2	INSPECT POWER WINDOW REGULATOR SWITCH ASSEMBLY (REAR RH)

WS

Component Side:

Power Window Regulator Switch Assembly

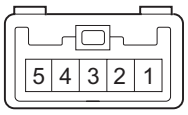

Y

B116301E02

(a) Remove the power window regulator switch assembly.
(b) Measure the resistance of the switch when the switch is operated.
Standard resistance

Tester Connection	Switch Condition	Specified Condition
1 - 2 3 - 4	UP	Below 1 Ω
1 - 2 4 - 5	OFF	Below 1 Ω
2 - 3 4 - 5	DOWN	Below 1 Ω

(c) Reinstall the power window regulator switch assembly.

NG → **REPLACE POWER WINDOW REGULATOR SWITCH ASSEMBLY (REAR RH)**

OK

3	CHECK HARNESS AND CONNECTOR (SWITCH (REAR RH) - MOTOR (REAR RH))

(a) Disconnect the H1 power window regulator switch assembly connector.

Wire Harness Side:

Power Window Regulator Switch Assembly Connector (Rear RH)

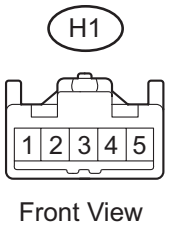

Front View

Power Window Regulator Motor Assembly Connector (Rear RH)

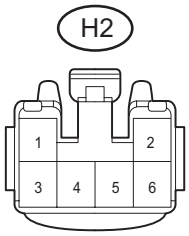

Front View

B116306E02

(b) Disconnect the H2 power window regulator motor assembly connector.
(c) Measure the resistance of the wire harness side connectors.

Standard resistance

Tester Connection	Specified Condition
H1-4 - H2-1	Below 1 Ω
H1-2 - H2-2	Below 1 Ω
H1-4 or H2-1 - Body ground	10 kΩ or higher
H1-2 or H2-2 - Body ground	10 kΩ or higher

(d) Reconnect the H1 power window regulator switch assembly connector.
(e) Reconnect the H2 power window regulator motor assembly connector.

NG → **REPAIR OR REPLACE HARNESS OR CONNECTOR**

OK

4 INSPECT POWER WINDOW REGULATOR MOTOR ASSEMBLY (REAR RH)

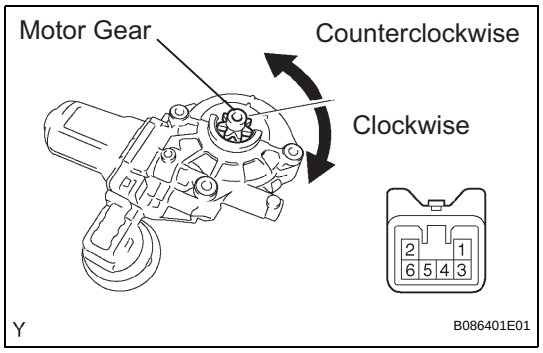

(a) Remove the power window regulator motor assembly.
(b) Apply battery voltage to connector terminals 1 and 2.
(c) Check that the motor gear rotates smoothly as follows.

OK

Measurement Condition	Specified Condition
Battery positive (+) → 1 Battery negative (-) → 2	Motor gear rotates counterclockwise
Battery positive (+) → 2 Battery negative (-) → 1	Motor gear rotates clockwise

(d) Reinstall the power window regulator motor assembly .

NG → **REPLACE POWER WINDOW REGULATOR MOTOR ASSEMBLY (REAR RH)**

WS

OK

5	CHECK HARNESS AND CONNECTOR (MASTER SWITCH - SWITCH (REAR RH))

(a) Disconnect the G1 power window regulator master switch assembly connector.

Wire Harness Side:

Power Window Regulator Master Switch Assembly Connector

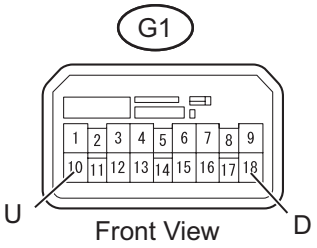

Power Window Regulator Switch Assembly Connector (Rear RH)

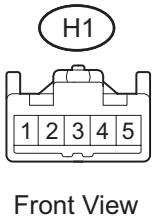

B116307E08

(b) Disconnect the H1 power window regulator switch assembly connector.

(c) Measure the resistance of the wire harness side connectors.

Standard resistance

Tester Connection	Specified Condition
G1-10 (U) - H1-5	Below 1 Ω
G1-18 (D) - H1-1	Below 1 Ω
G1-10 (U) or H1-5 - Body ground	10 kΩ or higher
G1-18 (D) or H1-1 - Body ground	10 kΩ or higher

(d) Reconnect the G1 power window regulator master switch assembly connector.

(e) Reconnect the H1 power window regulator switch assembly connector.

NG → **REPAIR OR REPLACE HARNESS OR CONNECTOR**

OK

WS

6	INSPECT POWER WINDOW REGULATOR MASTER SWITCH ASSEMBLY (REAR RH SWITCH)

Power Window Regulator Master Switch:

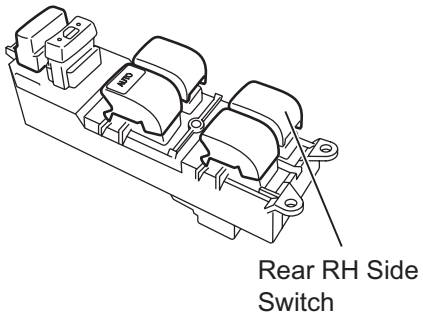

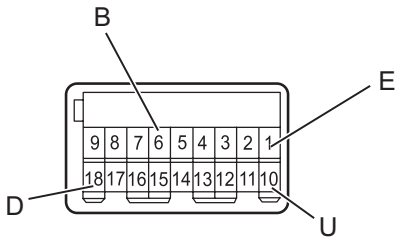

B107909E12

(a) Inspect the rear RH switch.
  (1) Remove the power window regulator master switch assembly.
  (2) Measure the resistance of the switch when the switch is operated.

Standard resistance

Window Lock Switch Condition	Power Window Switch Condition	Tester Connection	Specified Condition
OFF	UP	1 (E) - 18 (D) 6 (B) - 10 (U)	Below 1 Ω
OFF	OFF	1 (E) - 10 (U) 1 (E) - 18 (D)	Below 1 Ω
OFF	DOWN	1 (E) - 10 (U) 6 (B) - 18 (D)	Below 1 Ω
ON	UP	1 (E) - 18 (D)	10 kΩ or higher
		6 (B) - 10 (U)	Below 1 Ω
ON	OFF	10 (U) - 18 (D)	Below 1 Ω
ON	DOWN	1 (E) - 10 (U)	10 kΩ or higher
		6 (B) - 18 (D)	Below 1 Ω

(3) Reinstall the power window regulator master switch assembly.

NG → **REPLACE POWER WINDOW REGULATOR MASTER SWITCH ASSEMBLY**

OK

GO TO POWER WINDOWS DO NOT OPERATE AT ALL

Power Windows do not Operate at All

DESCRIPTION

If none of the power windows operates, the power window regulator master switch may have no power or may be malfunctioning.

WIRING DIAGRAM

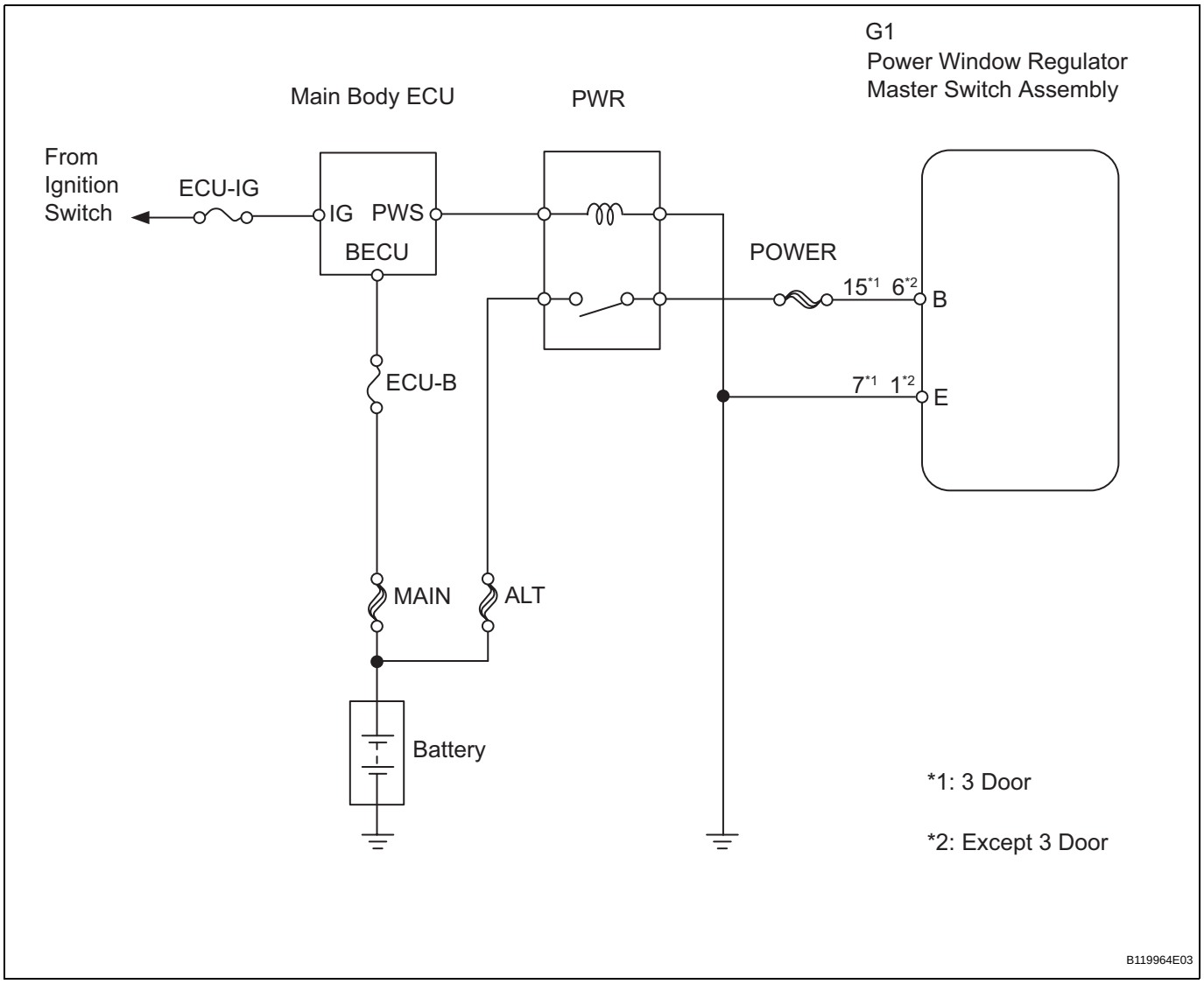

WS

INSPECTION PROCEDURE

1	INSPECT FUSES (ECU-B, ECU-IG)

Engine Room R/B:

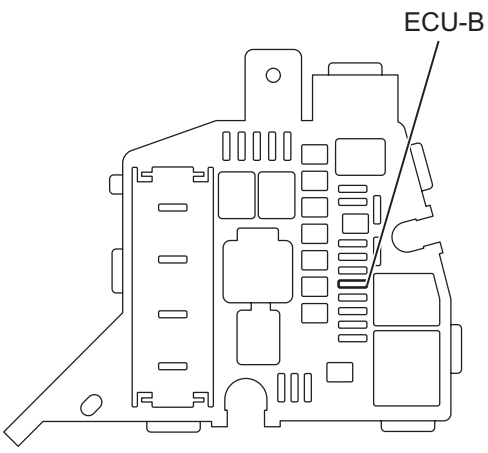

Main Body ECU:

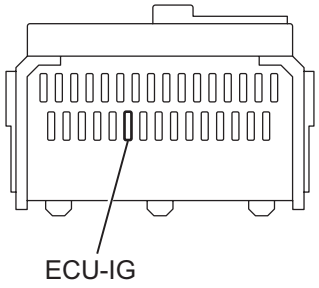

0

B128295E01

(a) Remove the ECU-B fuse from the engine room relay block.
(b) Remove the ECU-IG fuse from the main body ECU.
(c) Measure the resistance.
Standard resistance:
Below 1Ω
(d) Reinstall the fuses.

NG → **REPLACE FUSE**

OK

WS

2 INSPECT MAIN BODY ECU (PWR RELAY)

Components Side:

Main Body ECU (Rear View)

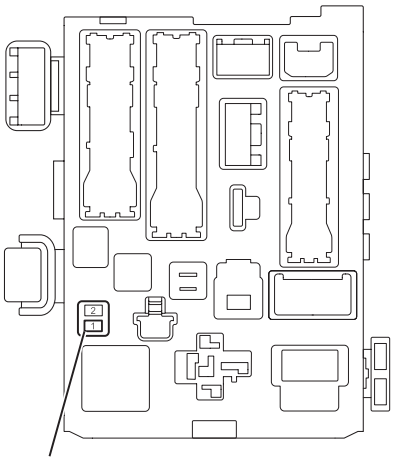

B119965E01

(a) Remove the POWER fuse from the main body ECU.
(b) Turn the ignition switch to ON.
(c) Measure the voltage between the POWER fuse terminal of the main body ECU and body ground.

Standard voltage

Tester Connections	Ignition Switch Conditions	Specified Conditions
POWER fuse terminal (1) - Body ground	ON	11 to 14 V

(d) Reinstall the POWER fuse .

NG → **REPLACE MAIN BODY ECU (PWR RELAY)**

OK

3 CHECK HARNESS AND CONNECTOR (POWER WINDOW MASTER SWITCH - BATTERY AND BODY GROUND)

Wire Harness Side:

Power Window Regulator Master Switch

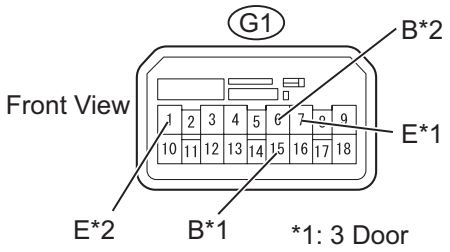

B119966E05

(a) Disconnect the G1 power window regulator master switch assembly connector.
(b) Measure the voltage of the wire harness side connector.

Standard voltage:
3 Door

Tester Connection	Condition	Specified Condition
G1-15 (B)- Body ground	Ignition switch ON	11 to 14 V

Standard voltage:
Except 3 door

Tester Connection	Condition	Specified Condition
G1-6 (B)- Body ground	Ignition switch ON	11 to 14 V

(c) Measure the resistance of the wire harness side connector.

Standard resistance:
3 Door

Tester Connection	Specified Condition
G1-7 (E)- Body ground	Below 1 Ω

Standard resistance:
Except 3 door

WS

Tester Connection	Specified Condition
G1-1 (E)- Body ground	Below 1 Ω

(d) Reconnect the G1 power window regulator master switch assembly connector.

NG → **REPAIR OR REPLACE HARNESS OR CONNECTOR**

OK

REPLACE POWER WINDOW REGULATOR MASTER SWITCH ASSEMBLY

POWER WINDOW MASTER SWITCH (for Sedan)

COMPONENTS

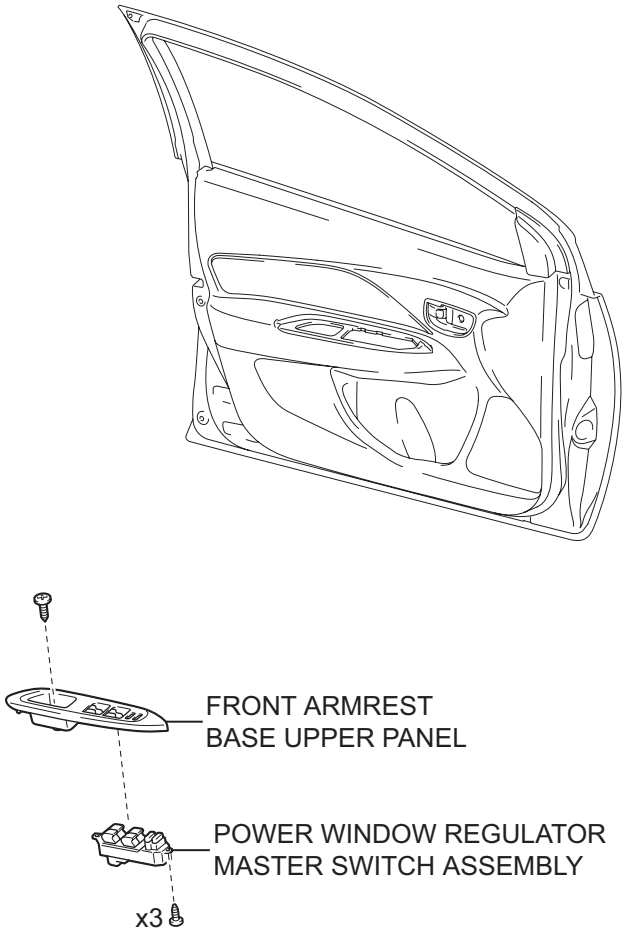

REMOVAL

1. **DISCONNECT CABLE FROM NEGATIVE BATTERY TERMINAL**
2. **REMOVE FRONT ARMREST BASE UPPER PANEL (See page ED-9)**
3. **REMOVE POWER WINDOW REGULATOR MASTER SWITCH ASSEMBLY**
   (a) Remove the 3 screws and the power window regulator master switch.

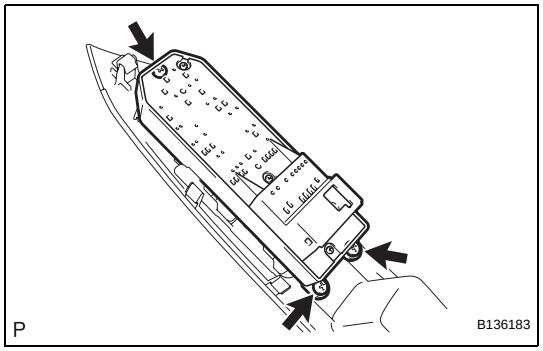

INSPECTION

1. **INSPECT POWER WINDOW REGULATOR MASTER SWITCH ASSEMBLY**
   (a) Check the resistance.
      (1) Using an ohmmeter, measure the resistance and check the results in accordance with the value(s) in the tables below.
      Standard Resistance:
      Driver switch

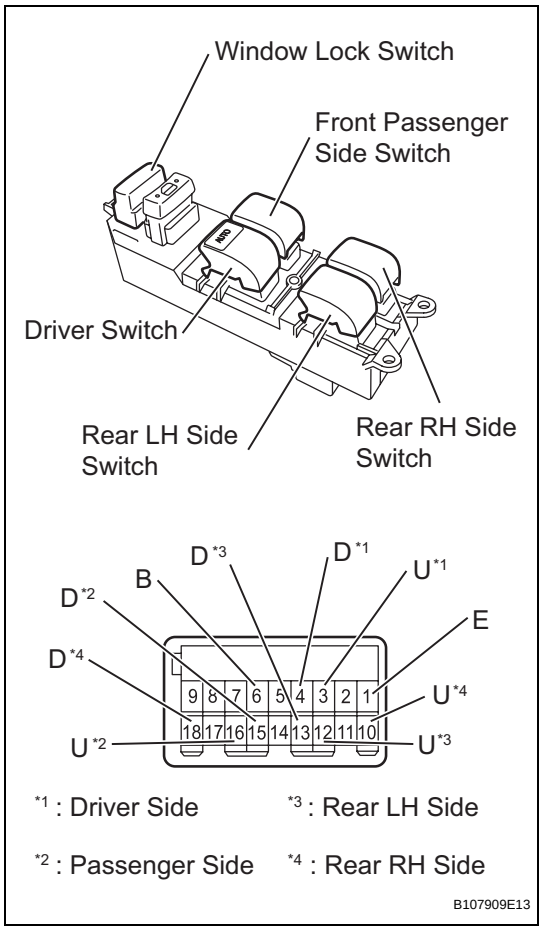

Window Lock Switch Condition	Power Window Switch Condition	Tester Connection	Specified Condition
Always (ON / OFF)	UP	3 (U) - 6 (B) 1 (E) - 4 (D)	Below 1 Ω
Always (ON / OFF)	OFF	1 (E) - 3 (U) 1 (E) - 4 (D)	Below 1 Ω
Always (ON / OFF)	DOWN MANUAL	4 (D) - 6 (B) 1 (E) - 3 (U)	Below 1 Ω
Always (ON / OFF)	DOWN AUTO	1 (E) - 3 (U) 4 (D) - 6 (B)	Below 1 Ω

WS

If the result is not as specified, replace the power window regulator master switch.

Standard Resistance:

Passenger side switch

Window Lock Switch Condition	Power Window Switch Condition	Tester Connection	Specified Condition
OFF	UP	6 (B) - 16 (U) 1 (E) - 15 (D)	Below 1 Ω
OFF	OFF	1 (E) - 16 (U) 1 (E) - 15 (D)	Below 1 Ω
OFF	DOWN	6 (B) - 15 (D) 1 (E) - 16 (U)	Below 1 Ω
ON	UP	6 (B) - 16 (U)	Below 1 Ω
ON	UP	1 (E) - 15 (D)	10 kΩ or higher
ON	OFF	15 (D) - 16 (U)	Below 1 Ω
ON	DOWN	6 (B) - 15 (D)	Below 1 Ω
ON	DOWN	1 (E) - 16 (U)	10 kΩ or higher

If the result is not as specified, replace the power window regulator master switch.

Standard Resistance:

Rear LH side switch

Window Lock Switch Condition	Power Window Switch Condition	Tester Connection	Specified Condition
OFF	UP	6 (B) - 12 (U) 1 (E) - 13 (D)	Below 1 Ω
OFF	OFF	1 (E) - 12 (U) 1 (E) - 13 (D)	Below 1 Ω
OFF	DOWN	6 (B) - 13 (D) 1 (E) - 12 (U)	Below 1 Ω
ON	UP	6 (B) - 12 (U)	Below 1 Ω
ON	UP	1 (E) - 13 (D)	10 kΩ or higher
ON	OFF	12 (U) - 13 (D)	Below 1 Ω
ON	DOWN	6 (B) - 13 (D)	Below 1 Ω
ON	DOWN	1 (E) - 12 (U)	10 kΩ or higher

If the result is not as specified, replace the power window regulator master switch.

Standard Resistance:

Rear RH side switch

Window Lock Switch Condition	Power Window Switch Condition	Tester Connection	Specified Condition
OFF	UP	6 (B) - 10 (U) 1 (E) - 18 (D)	Below 1 Ω
OFF	OFF	1 (E) - 10 (U) 1 (E) - 18 (D)	Below 1 Ω
OFF	DOWN	6 (B) - 18 (D) 1 (E) - 10 (U)	Below 1 Ω
ON	UP	6 (B) - 10 (U)	Below 1 Ω
ON	UP	1 (E) - 18 (D)	10 kΩ or higher
ON	OFF	10 (U) - 18 (D)	Below 1 Ω
ON	DOWN	6 (B) - 18 (D)	Below 1 Ω
ON	DOWN	1 (E) - 10 (U)	10 kΩ or higher

If the result is not as specified, replace the power window regulator master switch.

(b) Check the illumination operation.
(1) Apply battery voltage to the power window regulator master switch and check that the illumination comes on.
Standard

Measurement Condition	Specified Condition
Battery positive (+) → Terminal 6 (B) Battery negative (-) → Terminal 1 (E)	Illumination comes on

If the result is not as specified, replace the power window regulator master switch.

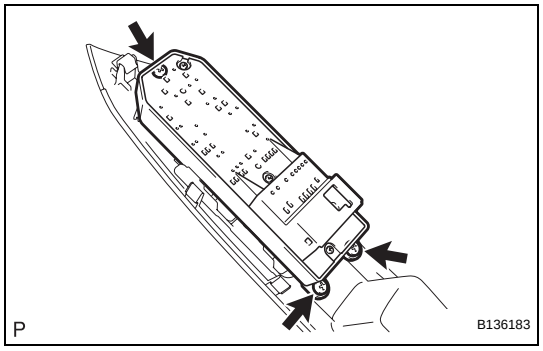

INSTALLATION

1. **INSTALL POWER WINDOW REGULATOR MASTER SWITCH ASSEMBLY**
   (a) Install the power window regulator master switch with the 3 screws.

2. **INSTALL FRONT ARMREST BASE UPPER PANEL (See page ED-28)**

3. **CONNECT CABLE TO NEGATIVE BATTERY TERMINAL**
   Torque: 5.4 N*m (55 kgf*cm, 48 in.*lbf)

POWER WINDOW MASTER SWITCH (for Hatchback)

COMPONENTS

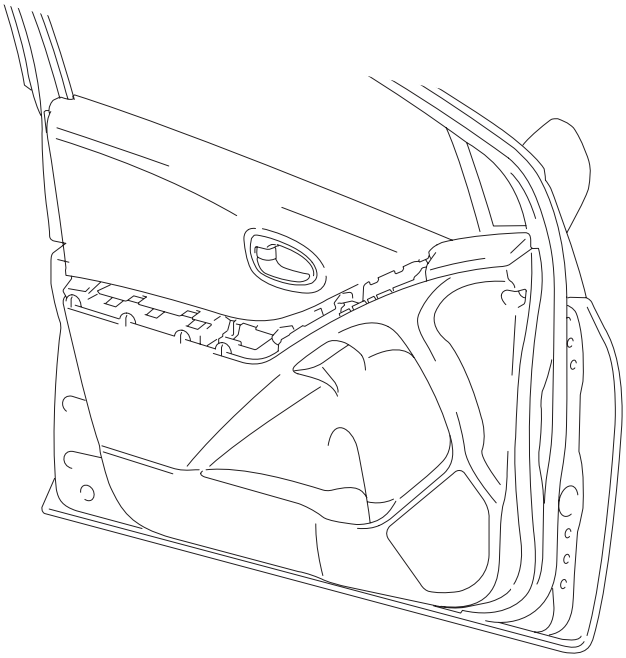

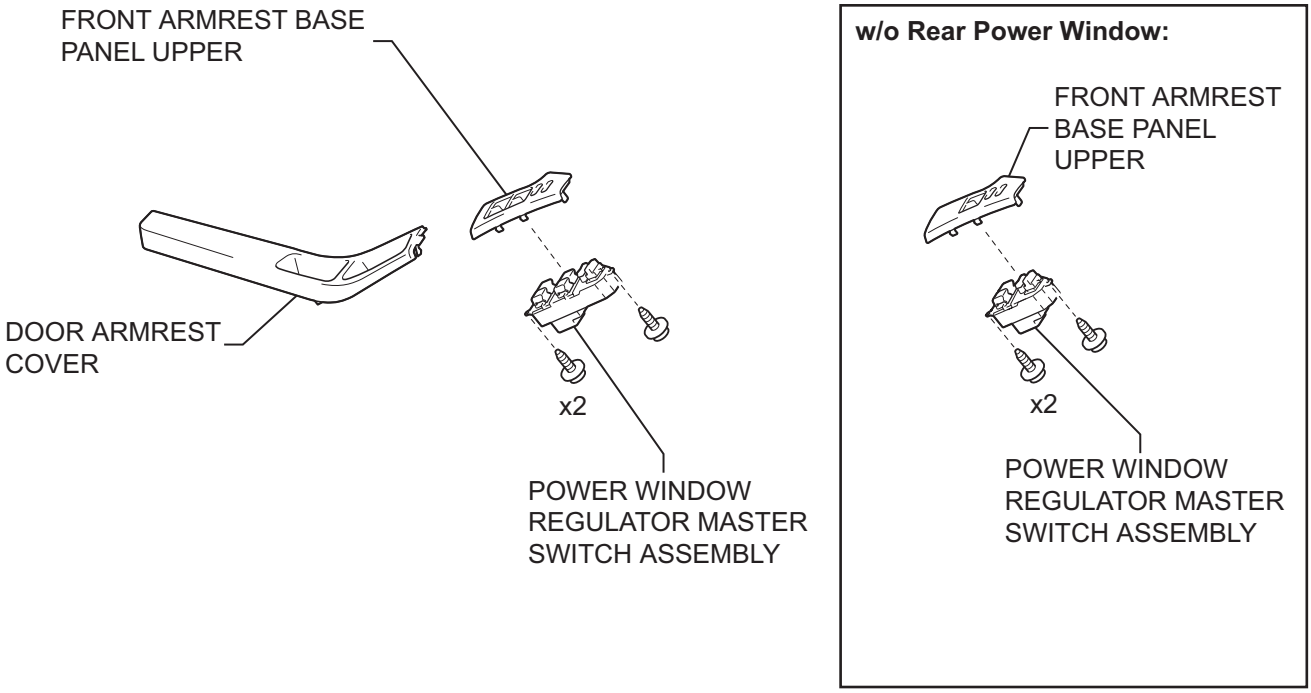

P

B121528E01

REMOVAL

HINT:

- Use the same procedure for both the RH and LH sides.
- The procedure described below is for the LH side.

1. **DISCONNECT CABLE FROM NEGATIVE BATTERY TERMINAL**
2. **REMOVE DOOR ARMREST COVER (See page ED-33)**
3. **REMOVE FRONT ARMREST BASE PANEL UPPER (See page ED-33)**
4. **REMOVE POWER WINDOW REGULATOR MASTER SWITCH ASSEMBLY**
   (a) Remove the 3 screws and the power window regulator master switch.

w/ Rear Power Window:

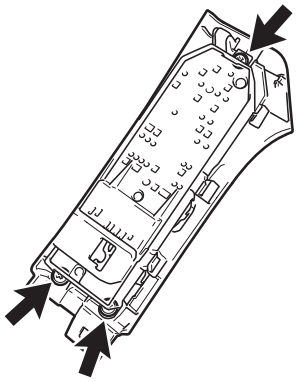

w/o Rear Power Window:

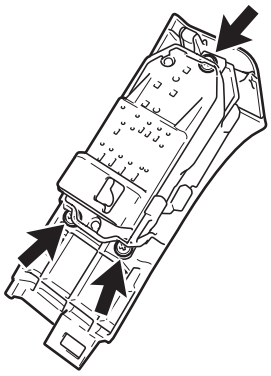

P B118070E01

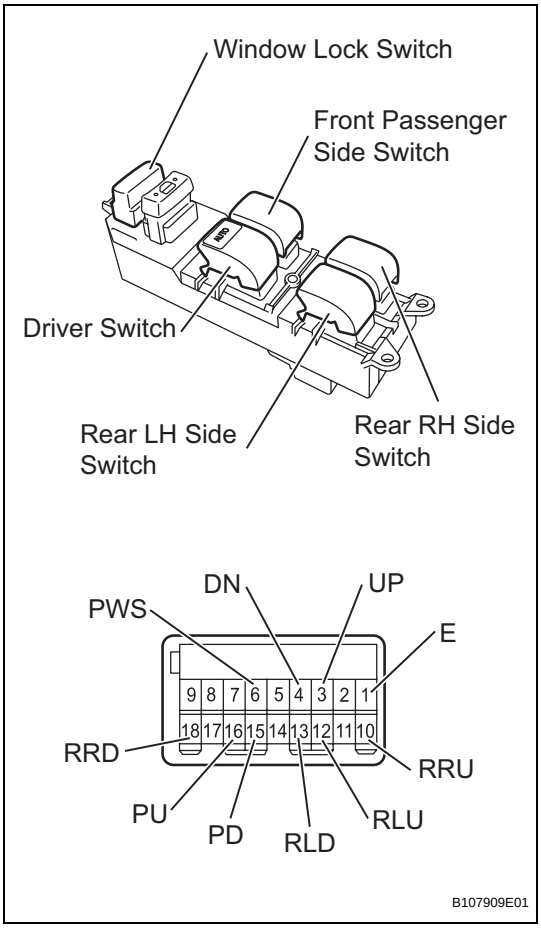

INSPECTION

1. INSPECT POWER WINDOW REGULATOR MASTER SWITCH ASSEMBLY

(a) w/ Rear power window:
Check the resistance.

(1) Using an ohmmeter, measure the resistance and check the result in accordance with the value(s) in the tables below.

Standard Resistance:
Driver switch

Window Lock Switch Condition	Power Window Switch Condition	Tester Connection	Specified Condition
Always (ON / OFF)	UP	3 (UP) - 6 (PWS) 1 (E) - 4 (DN)	Below 1 Ω
Always (ON / OFF)	OFF	1 (E) - 3 (UP) 1 (E) - 4 (DN)	Below 1 Ω
Always (ON / OFF)	DOWN MANUAL	4 (DN) - 6 (PWS) 1 (E) - 3 (UP)	Below 1 Ω
Always (ON / OFF)	DOWN AUTO	1 (E) - 3 (UP) 4 (DN) - 6 (PWS)	Below 1 Ω

If the result is not as specified, replace the power window regulator master switch.

Standard Resistance:
Passenger side switch

Window Lock Switch Condition	Power Window Switch Condition	Tester Connection	Specified Condition
OFF	UP	6 (PWS) - 16 (PU) 1 (E) - 15 (PD)	Below 1 Ω
OFF	OFF	1 (E) - 16 (PU) 1 (E) - 15 (PD)	Below 1 Ω
OFF	DOWN	6 (PWS) - 15 (PD) 1 (E) - 16 (PU)	Below 1 Ω
ON	UP	6 (PWS) - 16 (PU)	Below 1 Ω
ON	UP	1 (E) - 15 (PD)	10 kΩ or higher
ON	OFF	15 (PD) - 16 (PU)	Below 1 Ω
ON	DOWN	6 (PWS) - 15 (PD)	Below 1 Ω
ON	DOWN	1 (E) - 15 (PD)	10 kΩ or higher

WS

If the result is not as specified, replace the power window regulator master switch.

Standard Resistance:

Rear LH side switch

Window Lock Switch Condition	Power Window Switch Condition	Tester Connection	Specified Condition
OFF	UP	6 (PWS) - 12 (RLU) 1 (E) - 13 (RLD)	Below 1 Ω
OFF	OFF	1 (E) - 12 (RLU) 1 (E) - 13 (RLD)	Below 1 Ω
OFF	DOWN	6 (PWS) - 13 (RLD) 1 (E) - 12 (RLU)	Below 1 Ω
ON	UP	6 (PWS) - 12 (RLU)	Below 1 Ω
ON	UP	1 (E) - 13 (RLD)	10 kΩ or higher
ON	OFF	12 (RLU) - 13 (RLD)	Below 1 Ω
ON	DOWN	6 (PWS) - 13 (RLD)	Below 1 Ω
ON	DOWN	1 (E) - 12 (RLU)	10 kΩ or higher

If the result is not as specified, replace the power window regulator master switch.

Standard Resistance:

Rear RH side switch

Window Lock Switch Condition	Power Window Switch Condition	Tester Connection	Specified Condition
OFF	UP	6 (PWS) - 10 (RRU) 1 (E) - 18 (RRD)	Below 1 Ω
OFF	OFF	1 (E) - 10 (RRU) 1 (E) - 18 (RRD)	Below 1 Ω
OFF	DOWN	6 (PWS) - 18 (RRD) 1 (E) - 10 (RRU)	Below 1 Ω
ON	UP	6 (PWS) - 10 (RRU)	Below 1 Ω
ON	UP	1 (E) - 18 (RRD)	10 kΩ or higher
ON	OFF	10 (RRU) - 18 (RRD)	Below 1 Ω
ON	DOWN	6 (PWS) - 18 (RRD)	Below 1 Ω
ON	DOWN	1 (E) - 10 (RRU)	10 kΩ or higher

If the result is not as specified, replace the power window regulator master switch.

(b) w/ Rear power window:

Check the illumination operation.

(1) Apply battery voltage to the power window regulator master switch and check that the illumination comes on.

Standard

Measurement Condition	Specified Condition
Battery positive (+) → Terminal 6 (PWS) Battery negative (-) → Terminal 1 (E)	Illumination comes on

If the result is not as specified, replace the power window regulator master switch.

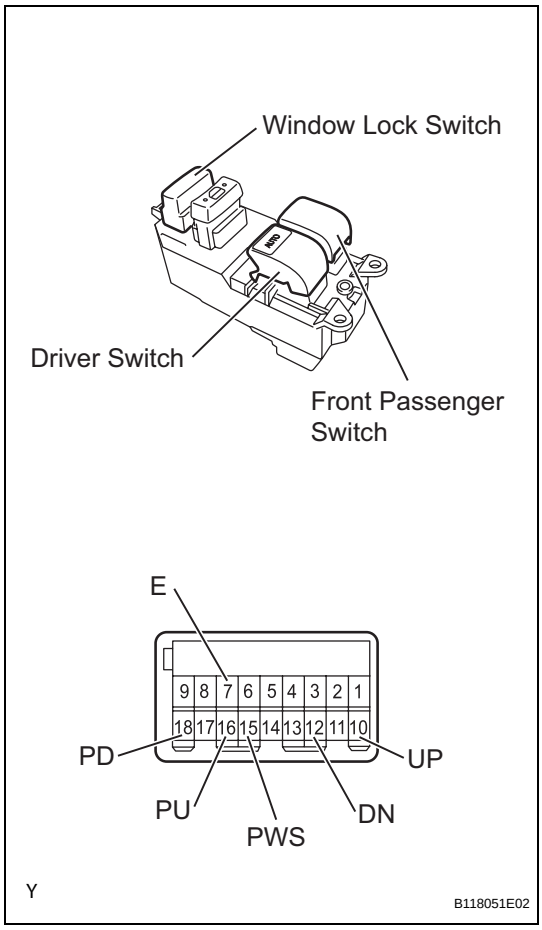

(c) w/o Rear power window:
Check the resistance.
(1) Using an ohmmeter, measure the resistance and check the result in accordance with the value(s) in the tables below.
Standard Resistance:
Driver switch

Window Lock Switch Condition	Power Window Switch Condition	Tester Connection	Specified Condition
Always (ON / OFF)	UP	15 (PWS) - 10 (UP) 7 (E) - 12 (DN)	Below 1 Ω
Always (ON / OFF)	OFF	7 (E) - 10 (UP) 7 (E) - 12 (DN)	Below 1 Ω
Always (ON / OFF)	DOWN MANUAL	12 (DN) - 15 (PWS) 7 (E) - 10 (UP)	Below 1 Ω
Always (ON / OFF)	DOWN AUTO	12 (DN) - 15 (PWS) 7 (E) - 10 (UP)	Below 1 Ω

If the result is not as specified, replace the power window regulator master switch.
Standard Resistance:
Passenger side switch

Window Lock Switch Condition	Power Window Switch Condition	Tester Connection	Specified Condition
OFF	UP	15 (PWS) - 16 (PU) 7 (E) - 18 (PD)	Below 1 Ω
OFF	OFF	7 (E) - 16 (PU) 7 (E) - 18 (PD)	Below 1 Ω
OFF	DOWN	15 (PWS) - 18 (PD) 7 (E) - 16 (PU)	Below 1 Ω
ON	UP	15 (PWS) - 16 (PU)	Below 1 Ω
ON	UP	7 (E) - 18 (PD)	10 kΩ or higher
ON	OFF	16 (PU) - 18 (PD)	Below 1 Ω
ON	DOWN	15 (PWS) - 18 (PD)	Below 1 Ω
ON	DOWN	7 (E) - 16 (PU)	10 kΩ or higher

WS

If the result is not as specified, replace the power window regulator master switch.

(d) w/o Rear power window:
Check the illumination operation.
(1) Apply battery voltage to the power window regulator master switch and check that the illumination comes on.
Standard

Measurement Condition	Specified Condition
Battery positive (+) → Terminal 15 (PWS) Battery negative (-) → Terminal 7 (E)	Illumination comes on

If the result is not as specified, replace the power window regulator master switch.

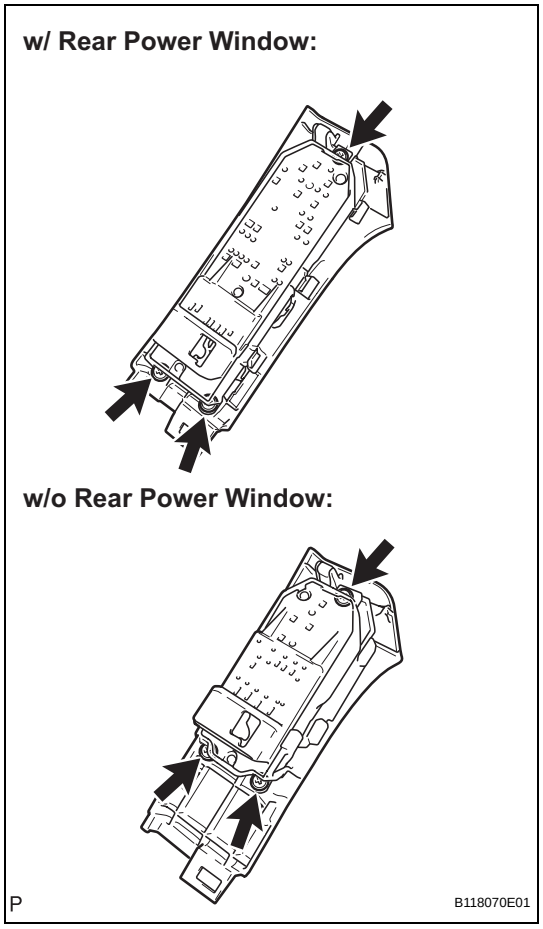

INSTALLATION

1. **INSTALL POWER WINDOW REGULATOR MASTER SWITCH ASSEMBLY**
   (a) Install the power window regulator master switch with the 3 screws.
2. **INSTALL FRONT ARMREST BASE PANEL UPPER (See page ED-53)**
3. **INSTALL DOOR ARMREST COVER (See page ED-53)**
4. **CONNECT CABLE TO NEGATIVE BATTERY TERMINAL**
   Torque: 5.4 N*m (55 kgf*cm, 48 in.*lbf)

FRONT PASSENGER SIDE POWER WINDOW SWITCH (for Sedan)

COMPONENTS

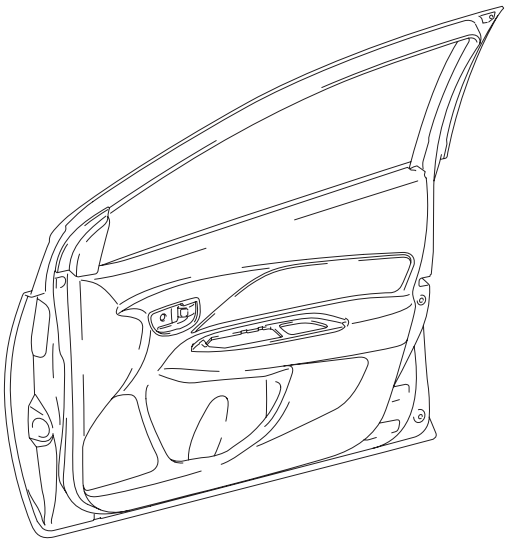

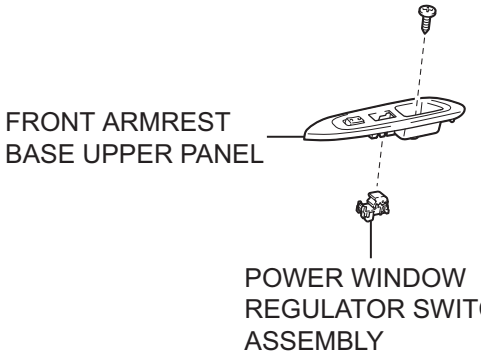

B144413E01

WS

REMOVAL

1. **DISCONNECT CABLE FROM NEGATIVE BATTERY TERMINAL**
2. **REMOVE FRONT ARMREST BASE UPPER PANEL (See page ED-9)**
3. **REMOVE POWER WINDOW REGULATOR SWITCH ASSEMBLY**
   (a) Using a screwdriver with its tip wrapped in protective tape, disengage the 2 claws and remove the power window regulator switch.

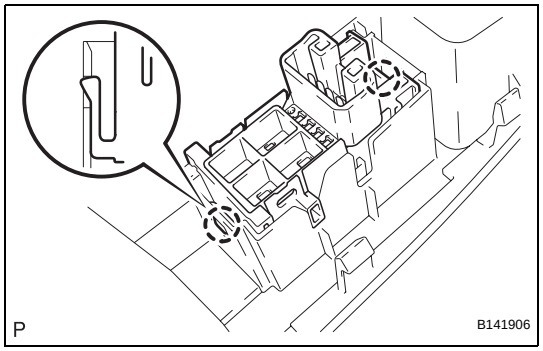

INSPECTION

1. **INSPECT POWER WINDOW REGULATOR SWITCH ASSEMBLY**
   (a) Check the resistance.
      (1) Using an ohmmeter, measure the resistance and check the results in accordance with the value(s) in the table below.
      Standard Resistance

Tester Connection	Switch Connection	Specified Condition
1 - 2 3 - 4	UP	Below 1 Ω
1 - 2 4 - 5	OFF	Below 1 Ω
1 - 3 4 - 5	DOWN	Below 1 Ω

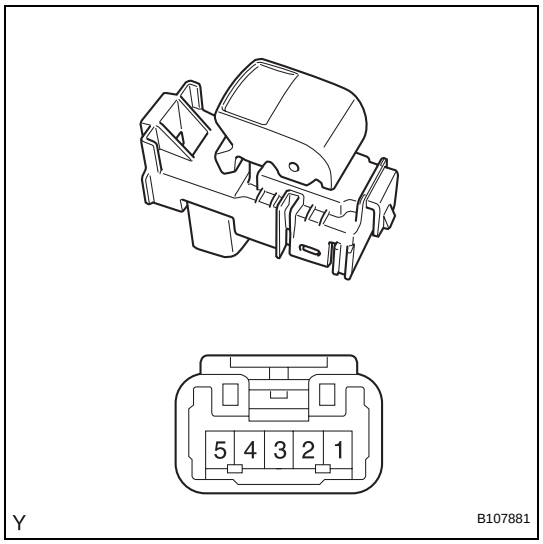

If the result is not as specified, replace the power window regulator switch.

INSTALLATION

1. **INSTALL POWER WINDOW REGULATOR SWITCH ASSEMBLY**
   (a) Engage the 2 claws and install the power window regulator switch.
2. **INSTALL FRONT ARMREST BASE UPPER PANEL (See page ED-28)**
3. **CONNECT CABLE TO NEGATIVE BATTERY TERMINAL**
   Torque: 5.4 N*m (55 kgf*cm, 48 in.*lbf)

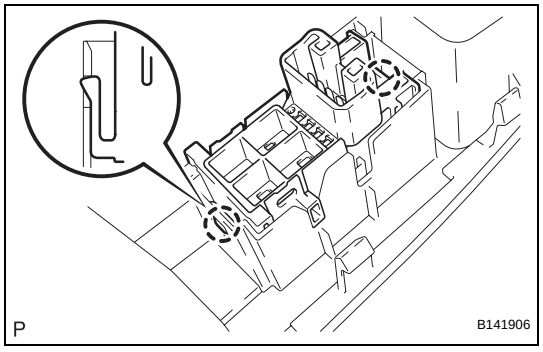

WS

FRONT PASSENGER SIDE POWER WINDOW SWITCH (for Hatchback)

COMPONENTS

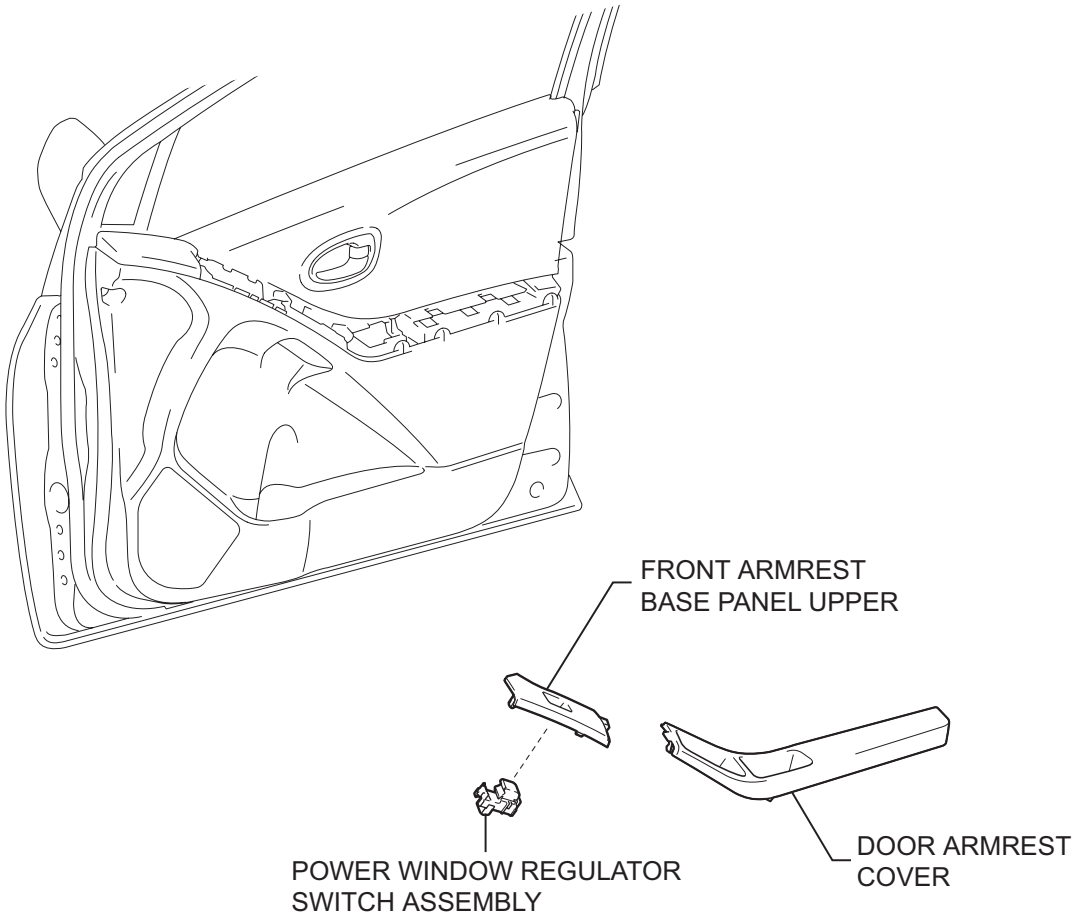

P

B121529E01

REMOVAL

1. **DISCONNECT CABLE FROM NEGATIVE BATTERY TERMINAL**

2. **REMOVE DOOR ARMREST COVER**
   HINT:
   Use the same procedure as for the LH side (see page ED-33).

3. **REMOVE FRONT ARMREST BASE PANEL UPPER**
   (a) Using a screwdriver with its tip wrapped in protective tape, disengage the 5 claws and clip and remove the front armrest base panel upper.
   (b) Disconnect the connector.

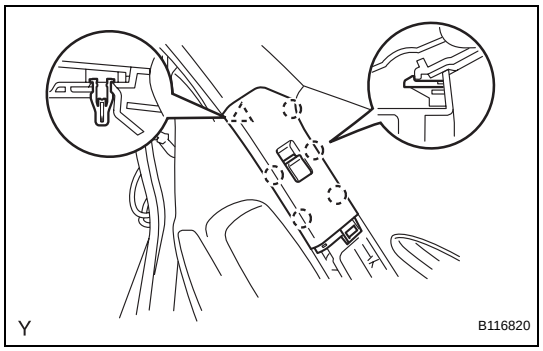

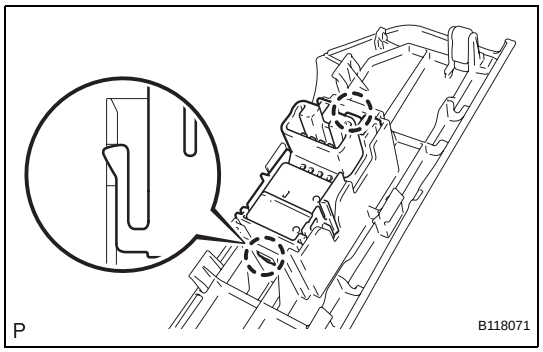

4. **REMOVE POWER WINDOW REGULATOR SWITCH ASSEMBLY**
   (a) Disengage the 2 claws and remove the power window regulator switch.

INSPECTION

1. **INSPECT POWER WINDOW REGULATOR SWITCH ASSEMBLY**
   (a) Check the resistance.
      (1) Using an ohmmeter, measure the resistance and check the result in accordance with the value(s) in the table below.
      Standard Resistance

Tester Connection	Switch Connection	Specified Condition
1 - 2 3 - 4	UP	Below 1 Ω
1 - 2 4 - 5	OFF	Below 1 Ω
1 - 3 4 - 5	DOWN	Below 1 Ω

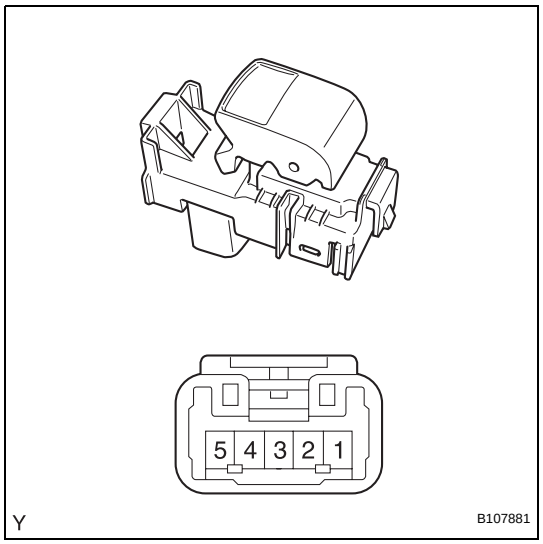

If the result is not as specified, replace the power window regulator switch.

WS

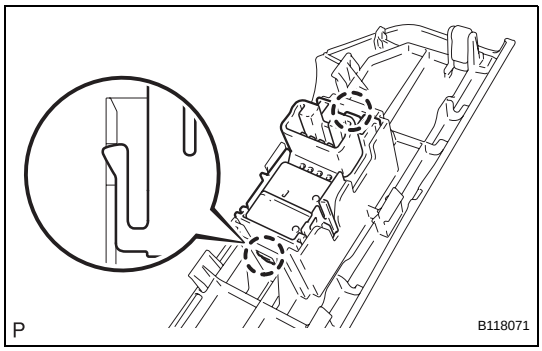

INSTALLATION

1. INSTALL POWER WINDOW REGULATOR SWITCH ASSEMBLY

(a) Engage the 2 claws and install the power window regulator switch.

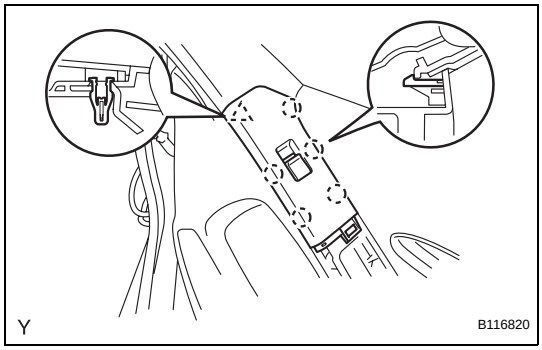

2. INSTALL FRONT ARMREST BASE PANEL UPPER

(a) Connect the connector.

(b) Engage the 5 claws and clip and install the front armrest base panel upper.

3. INSTALL DOOR ARMREST COVER

HINT:

Use the same procedure as for the LH side (see page ED-53).

4. CONNECT CABLE TO NEGATIVE BATTERY TERMINAL

Torque: 5.4 N*m (55 kgf*cm, 48 in.*lbf)

REAR POWER WINDOW SWITCH (for Sedan)

COMPONENTS

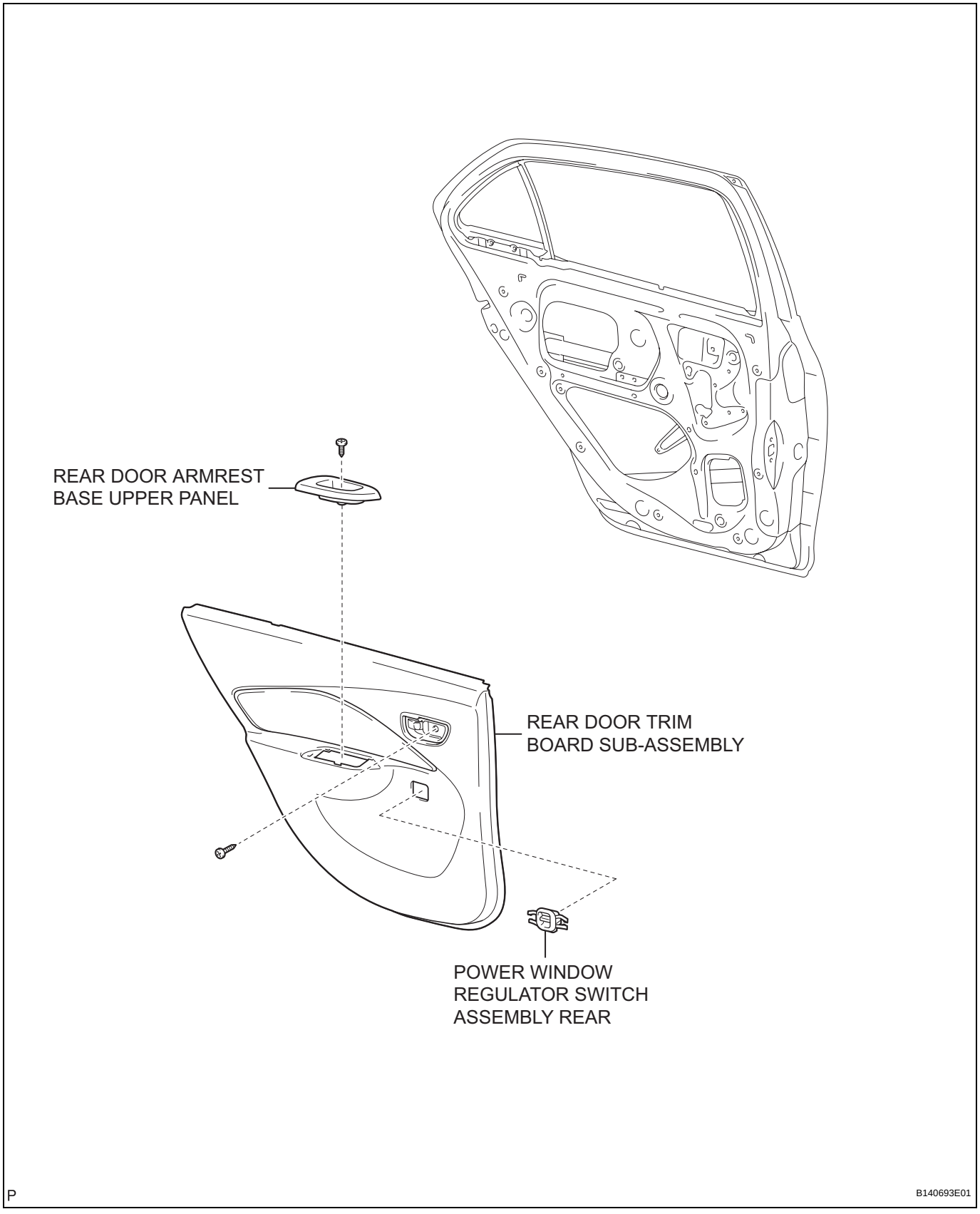

REMOVAL

1. **DISCONNECT CABLE FROM NEGATIVE BATTERY TERMINAL**
2. **REMOVE REAR DOOR ARMREST BASE UPPER PANEL (See page ED-79)**
3. **REMOVE REAR DOOR TRIM BOARD SUB-ASSEMBLY (See page ED-79)**
4. **REMOVE POWER WINDOW REGULATOR SWITCH ASSEMBLY REAR**
   (a) Disengage the set plate and remove the power window regulator switch.

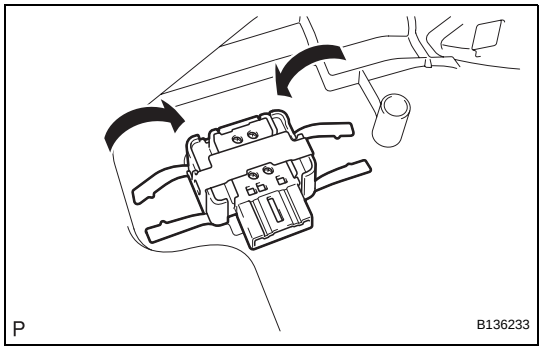

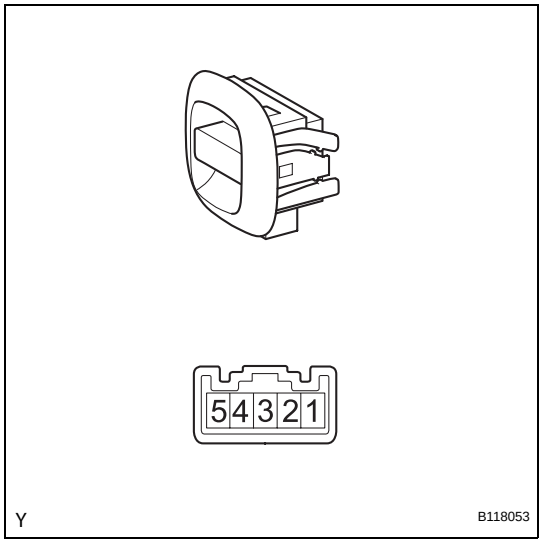

INSPECTION

1. **INSPECT POWER WINDOW REGULATOR SWITCH ASSEMBLY REAR**
   (a) Check the resistance.
      (1) Using an ohmmeter, measure the resistance and check the results in accordance with the value(s) in the table below.
      Standard Resistance

Tester Connection	Switch Connection	Specified Condition
1 - 2 3 - 4	UP	Below 1 Ω
1 - 2 4 - 5	OFF	Below 1 Ω
2 - 3 4 - 5	DOWN	Below 1 Ω

If the result is not as specified, replace the power window regulator switch.

INSTALLATION

1. **INSTALL POWER WINDOW REGULATOR SWITCH ASSEMBLY REAR**
   (a) Engage the set plate and install the power window regulator switch.
2. **INSTALL REAR DOOR TRIM BOARD SUB-ASSEMBLY (See page ED-93)**
3. **INSTALL REAR DOOR ARMREST BASE UPPER PANEL (See page ED-94)**
4. **CONNECT CABLE TO NEGATIVE BATTERY TERMINAL**
   Torque: 5.4 N*m (55 kgf*cm, 48 in.*lbf)

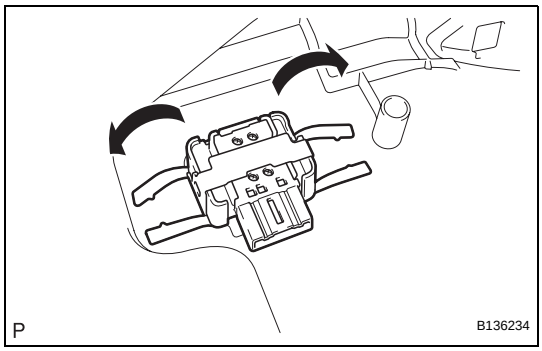

WS

REAR POWER WINDOW SWITCH (for Hatchback)

COMPONENTS

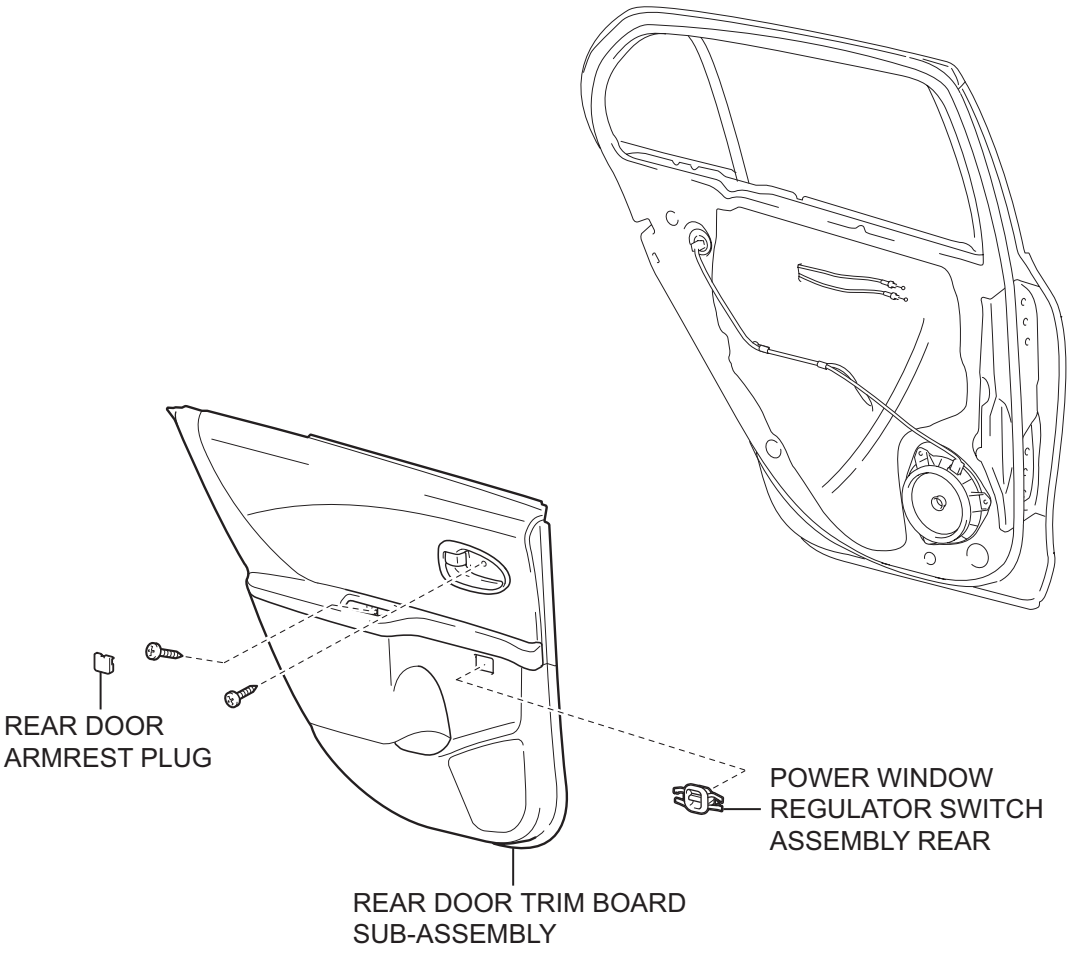

P

B121527E01

REMOVAL

HINT:

- Use the same procedure for both the RH and LH sides.
- The procedure described below is for the LH side.

1. **DISCONNECT CABLE FROM NEGATIVE BATTERY TERMINAL**
2. **REMOVE REAR DOOR TRIM BOARD SUB-ASSEMBLY (See page ED-98)**
3. **REMOVE POWER WINDOW REGULATOR SWITCH ASSEMBLY REAR**
   (a) Disengage the set plate and remove the power window regulator switch.

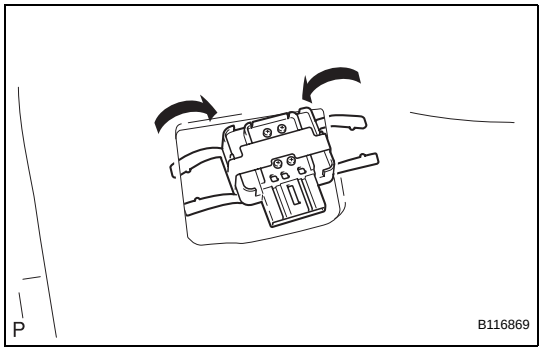

INSPECTION

1. **INSPECT POWER WINDOW REGULATOR SWITCH ASSEMBLY REAR**
   (a) Check the resistance.
      (1) Using an ohmmeter, measure the resistance and check the results in accordance with the value(s) in the table below.
      Standard Resistance

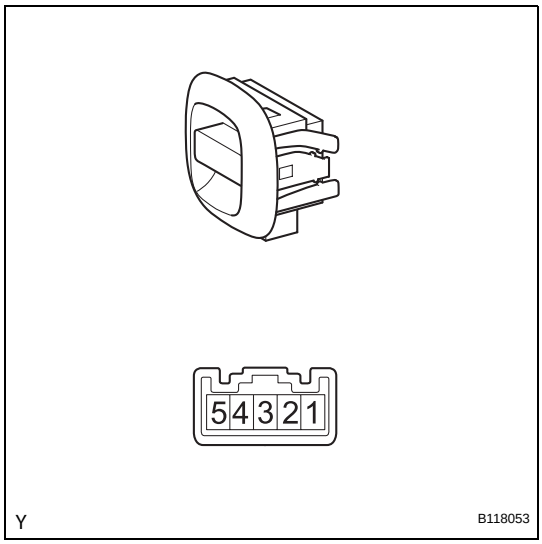

Tester Connection	Switch Connection	Specified Condition
1 - 2 3 - 4	UP	Below 1 Ω
1 - 2 4 - 5	OFF	Below 1 Ω
2 - 3 4 - 5	DOWN	Below 1 Ω

If the result is not as specified, replace the power window regulator switch.

INSTALLATION

1. **INSTALL POWER WINDOW REGULATOR SWITCH ASSEMBLY REAR**
   (a) Engage the set plate and install the power window regulator switch.
2. **INSTALL REAR DOOR TRIM BOARD SUB-ASSEMBLY (See page ED-111)**
3. **CONNECT CABLE TO NEGATIVE BATTERY TERMINAL**
   Torque: 5.4 N*m (55 kgf*cm, 48 in.*lbf)

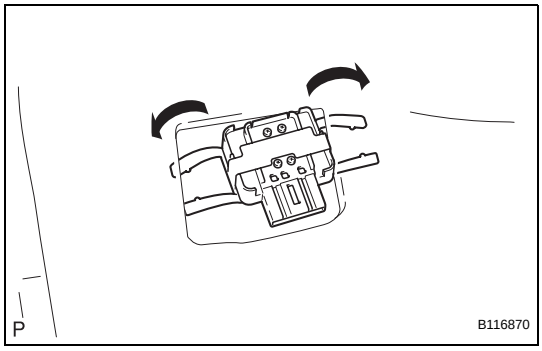

WS

POWER WINDOW REGULATOR MOTOR (for Hatchback Front Side)

COMPONENTS

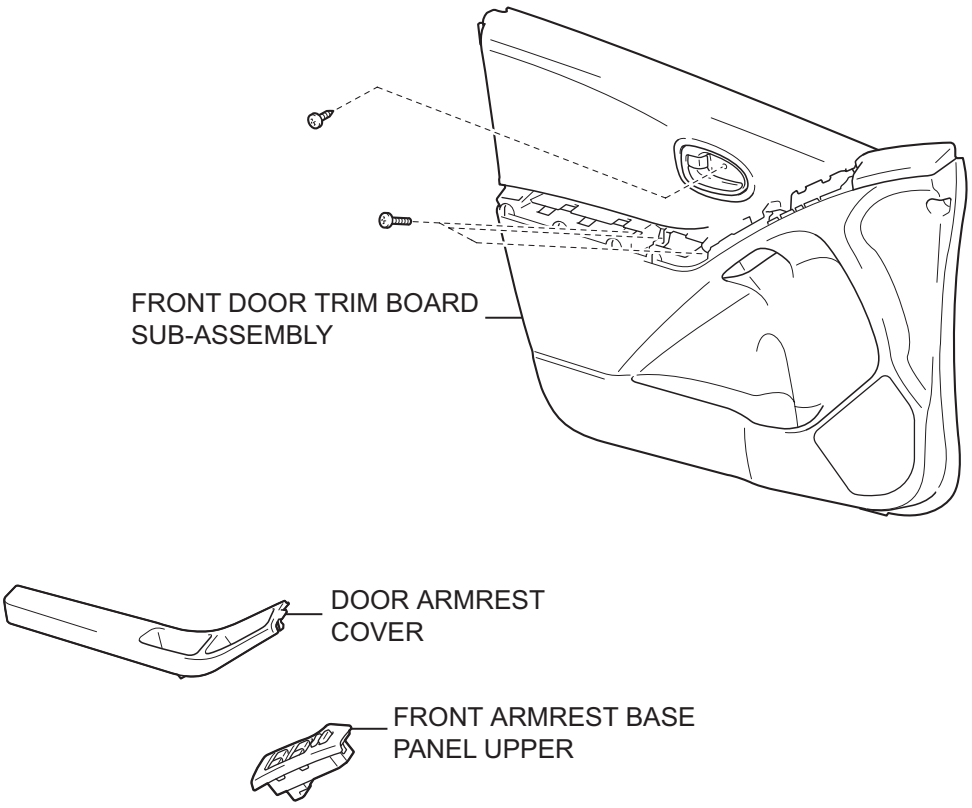

P

B118034E01

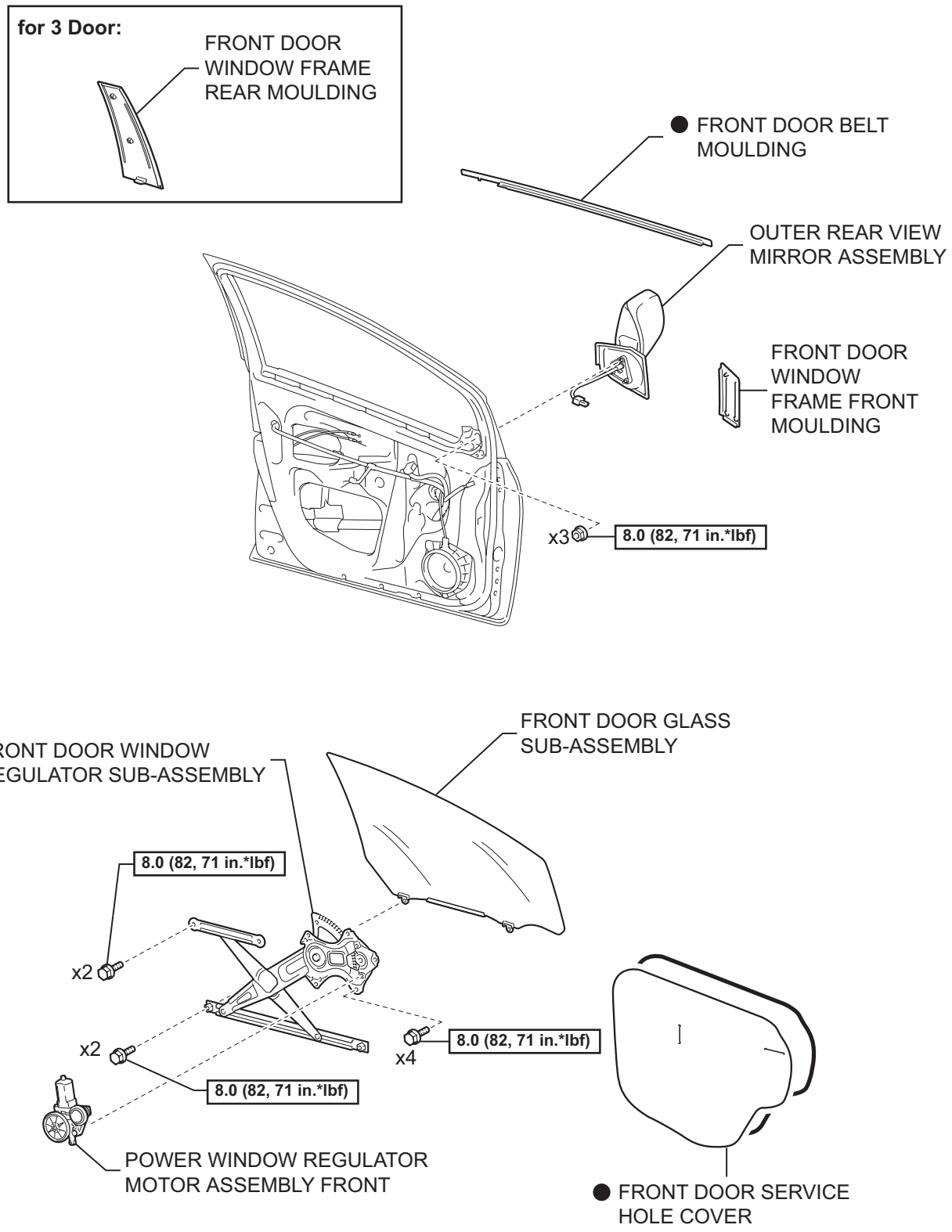

WS

N*m (kgf*cm, ft*lbf) : Specified torque

● Non-reusable part

P

B127212E01

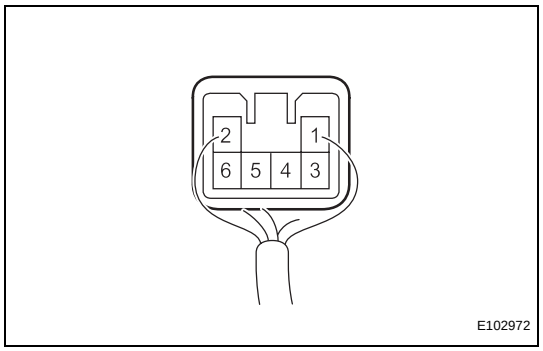

ON-VEHICLE INSPECTION

1. INSPECT POWER WINDOW REGULATOR MOTOR ASSEMBLY LH FRONT

(a) Inspect the operation of the PTC inside the power window regulator motor.

NOTICE:

The work must be performed with the power window regulator and door glass installed on the vehicle.

(1) Connect an electrical tester DC 400 A probe to the wire harness of terminal 1.

NOTICE:

Match the arrow mark of the probe with the direction of the current flow.

(2) Fully close the door glass by pressing the power window UP switch. Wait for approximately 60 seconds.

(3) Continue to press the power window UP switch and measure how long it takes for the electrical current to change from a range of 16 to 28 A to approximately 1 A (Inspection of current shut-off).

Standard:

4 to 90 seconds

(4) Check that the door glass moves downward when the power window DOWN switch is pressed.

If the result is not as specified, replace the power window regulator motor.

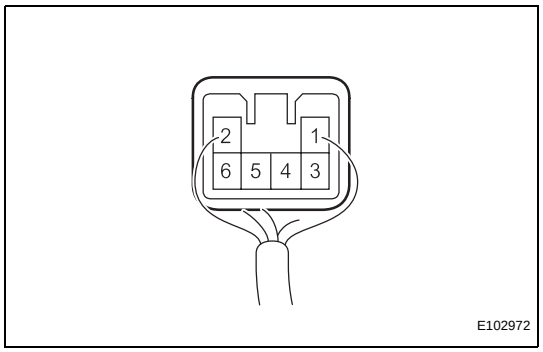

2. INSPECT POWER WINDOW REGULATOR MOTOR ASSEMBLY RH FRONT

(a) Inspect the operation of the PTC inside the power window regulator motor.

NOTICE:

The work must be performed with the power window regulator and door glass installed on the vehicle.

(1) Connect an electrical tester DC 400 A probe to the wire harness of terminal 2.

NOTICE:

Match the arrow mark of the probe with the direction of the current flow.

(2) Fully close the door glass by pressing the power window UP switch. Wait for approximately 60 seconds.

(3) Continue to press the power window UP switch and measure how long it takes for the electrical current to change from a range of 16 to 28 A to approximately 1 A (Inspection of current shut-off).

Standard:

4 to 90 seconds

(4) Check that the door glass moves downward when the power window DOWN switch is pressed.
If the result is not as specified, replace the power window regulator motor.

REMOVAL

HINT:

- Use the same procedure for both the RH and LH sides.
- The procedure described below is for the LH side.

1. **DISCONNECT CABLE FROM NEGATIVE BATTERY TERMINAL**
2. **REMOVE DOOR ARMREST COVER (See page ED-33)**
3. **REMOVE FRONT ARMREST BASE PANEL UPPER (See page ED-33)**
4. **REMOVE FRONT DOOR TRIM BOARD SUB-ASSEMBLY (See page ED-34)**
5. **REMOVE FRONT DOOR WINDOW FRAME FRONT MOULDING (See page ET-114)**
6. **REMOVE FRONT DOOR WINDOW FRAME REAR MOULDING (for 3 Door) (See page ET-114)**
7. **REMOVE OUTER REAR VIEW MIRROR ASSEMBLY (See page MI-13)**
8. **REMOVE FRONT DOOR BELT MOULDING (See page ET-91)**
9. **REMOVE FRONT DOOR SERVICE HOLE COVER (See page ED-36)**
10. **REMOVE FRONT DOOR GLASS SUB-ASSEMBLY (See page ED-36)**
11. **REMOVE FRONT DOOR WINDOW REGULATOR SUB-ASSEMBLY (See page ED-37)**
12. **REMOVE POWER WINDOW REGULATOR MOTOR ASSEMBLY FRONT**
    (a) Using "Torx" socket wrench T25, remove the 3 screws and the power window regulator motor.

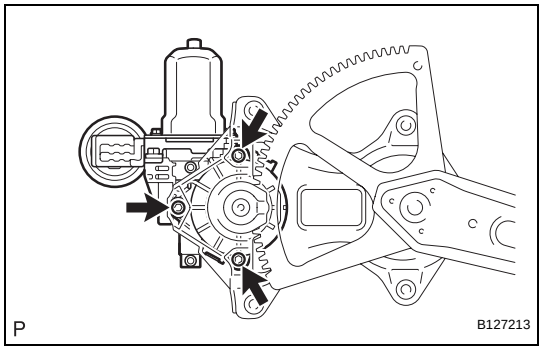

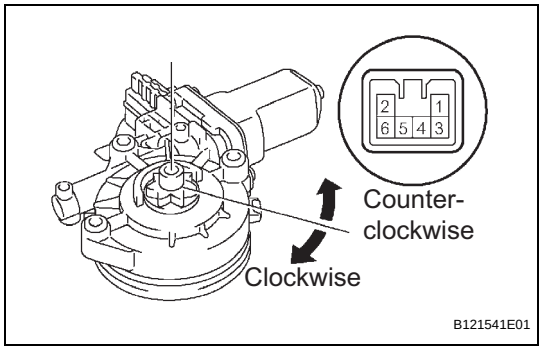

INSPECTION

1. **INSPECT POWER WINDOW REGULATOR MOTOR ASSEMBLY LH FRONT**
   (a) Check the operation of the regulator motor.
      (1) Apply battery voltage to the regulator motor and check the operation of the regulator motor.
      Standard

Measurement condition	Specified Condition
Battery positive (+) → Terminal 2 Battery negative (-) → Terminal 1	Motor gear rotates clockwise
Battery positive (+) → Terminal 1 Battery negative (-) → Terminal 2	Motor gear rotates counterclockwise

WS

If the result is not as specified, replace the power window regulator motor.

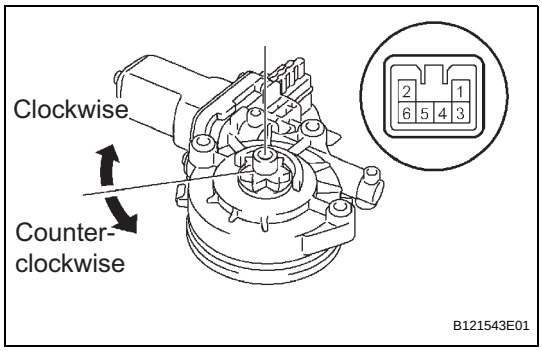

2. **INSPECT POWER WINDOW REGULATOR MOTOR ASSEMBLY RH FRONT**
   (a) Check the operation of the regulator motor.
      (1) Apply battery voltage to the regulator motor and check the operation of the regulator motor.
      Standard

Measurement Condition	Specified Condition
Battery position (+) → Terminal 1 Battery negative (-) → Terminal 2	Motor gear rotates clockwise
Battery position (+) → Terminal 2 Battery negative (-) → Terminal 1	Motor gear rotates counterclockwise

If the result is not as specified, replace the power window regulator motor.

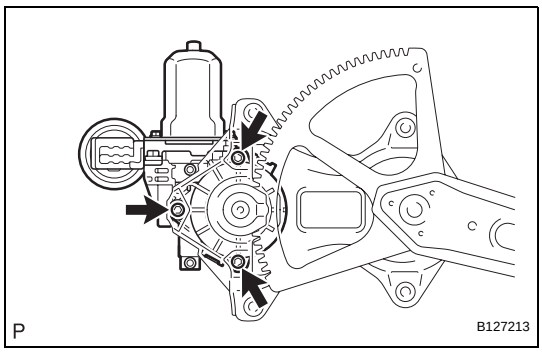

INSTALLATION

1. **INSTALL POWER WINDOW REGULATOR MOTOR ASSEMBLY FRONT**
   (a) Apply MP grease to the sliding and rotating areas of the regulator motor.
   (b) Using "Torx" socket wrench T25, install the power window regulator motor assembly front with the 3 screws.
   Torque: 5.4 N*m (55 kgf*cm, 48 in.*lbf)
2. **INSTALL FRONT DOOR WINDOW REGULATOR SUB-ASSEMBLY (See page ED-48)**
3. **INSTALL FRONT DOOR GLASS SUB-ASSEMBLY (See page ED-49)**
4. **INSTALL FRONT DOOR SERVICE HOLE COVER (See page ED-50)**
5. **INSTALL FRONT DOOR BELT MOULDING (See page ET-92)**
6. **INSTALL OUTER REAR VIEW MIRROR ASSEMBLY (See page MI-16)**
7. **INSTALL FRONT DOOR WINDOW FRAME REAR MOULDING (for 3 Door) (See page ET-114)**
8. **INSTALL FRONT DOOR WINDOW FRAME FRONT MOULDING (See page ET-115)**
9. **INSTALL FRONT DOOR TRIM BOARD SUB-ASSEMBLY (See page ED-51)**
10. **INSTALL FRONT ARMREST BASE PANEL UPPER (See page ED-53)**
11. **INSTALL DOOR ARMREST COVER (See page ED-53)**
12. **CONNECT CABLE TO NEGATIVE BATTERY TERMINAL**
    Torque: 5.4 N*m (55 kgf*cm, 48 in.*lbf)

POWER WINDOW REGULATOR MOTOR (for Hatchback Rear Side)

COMPONENTS

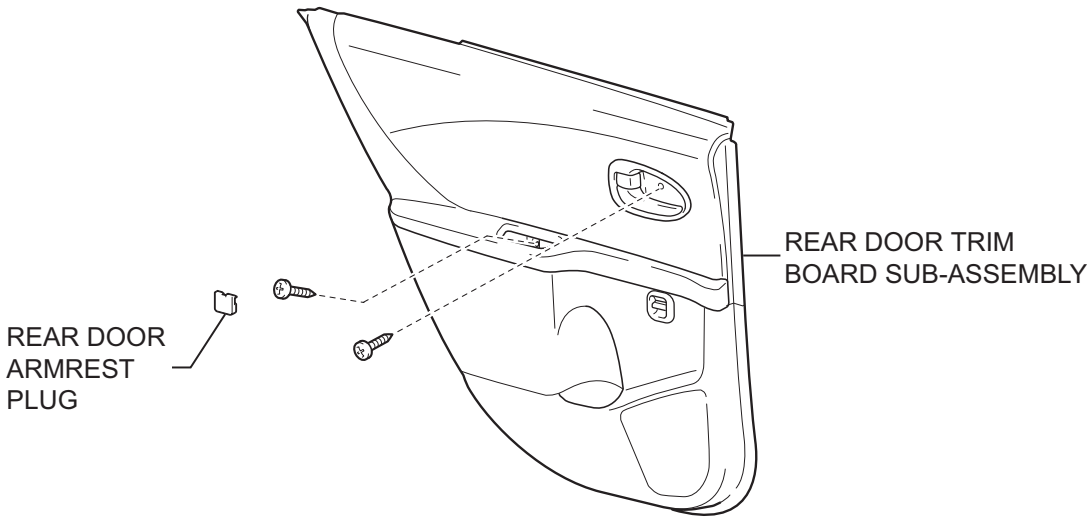

P

B118035E01

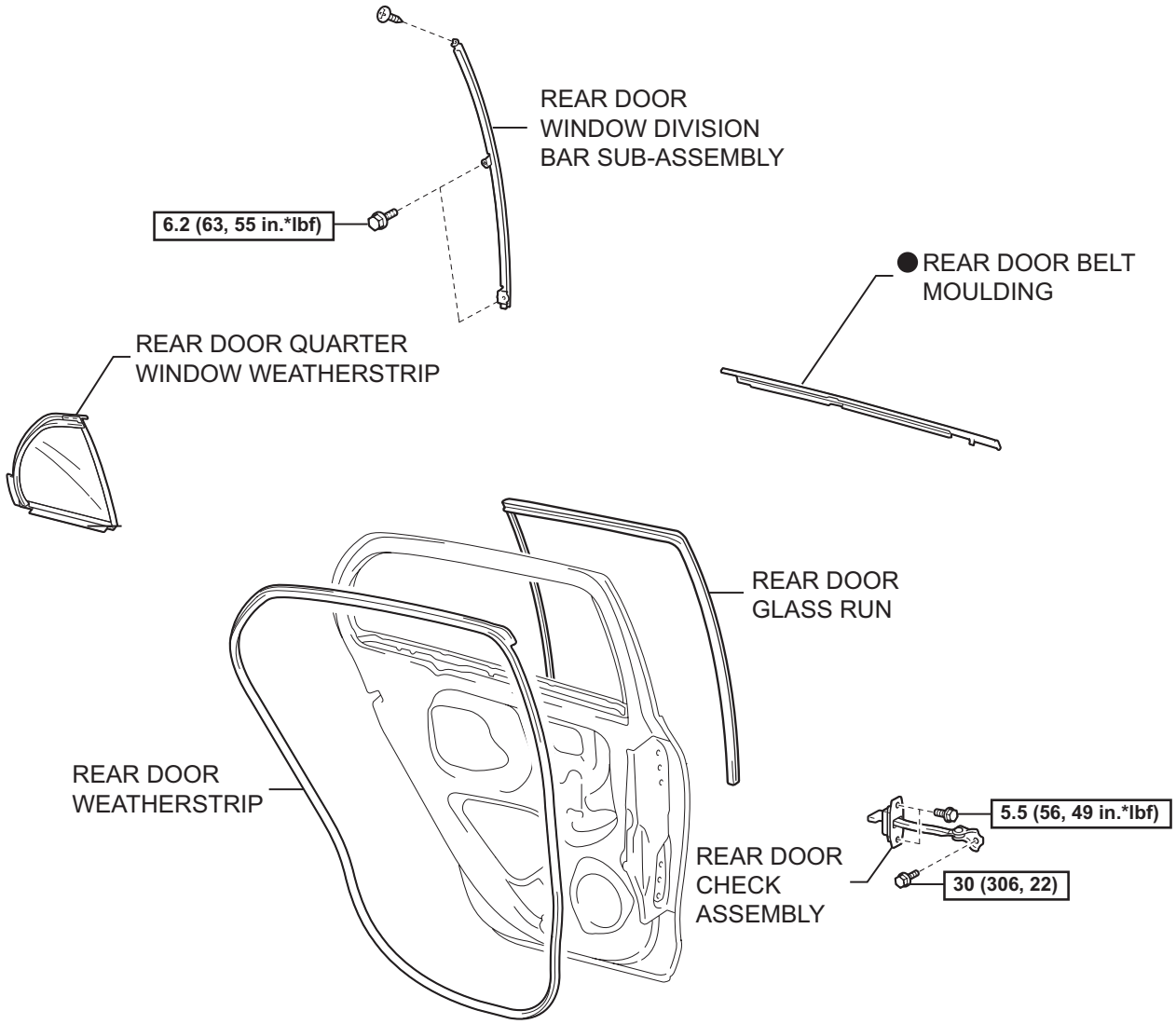

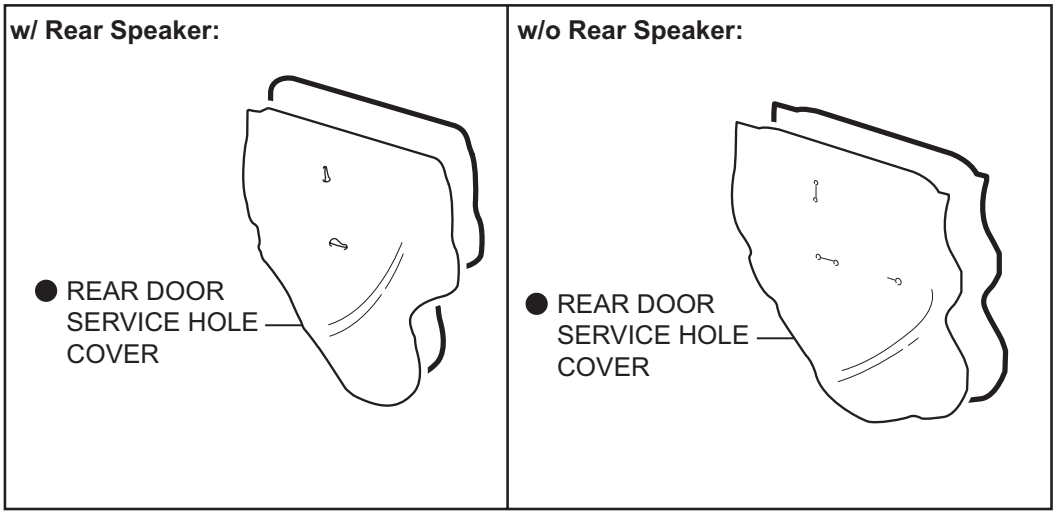

N*m (kgf*cm, ft*lbf) : Specified torque

● Non-reusable part

P

B116983E01

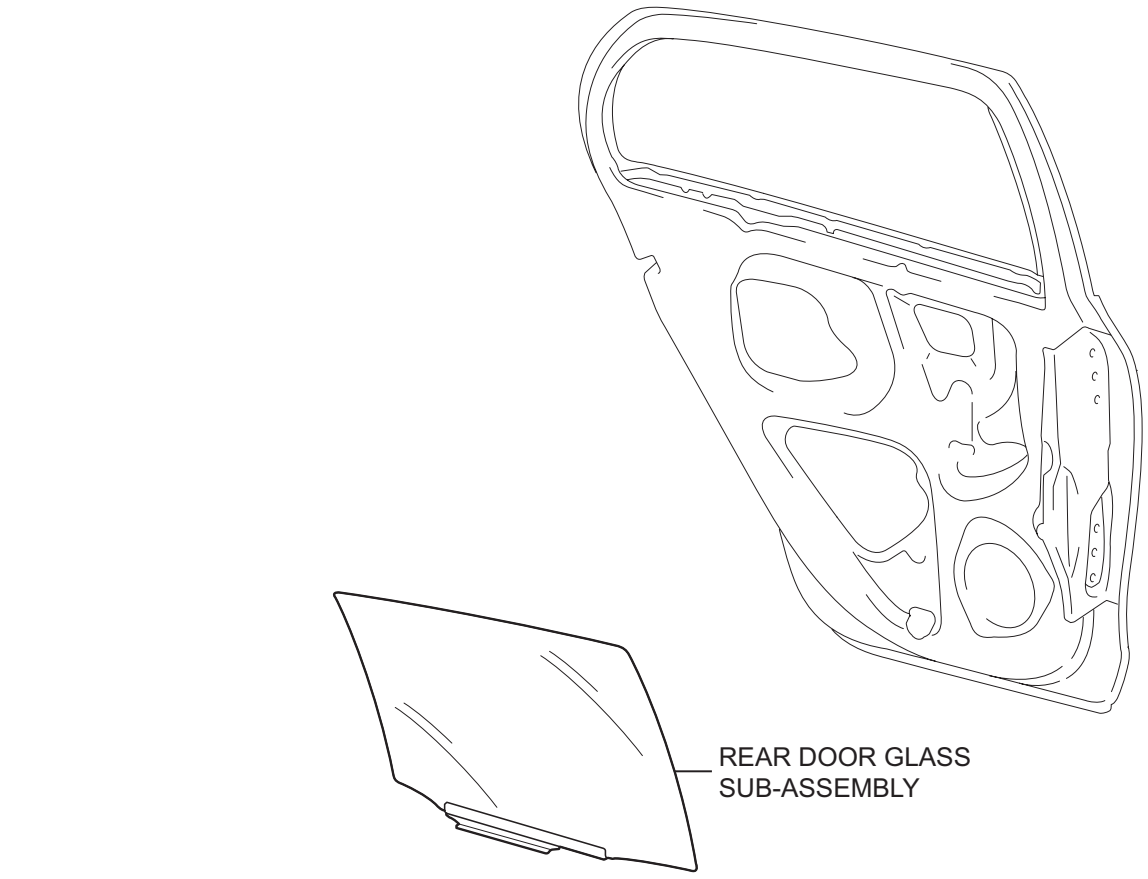

WS

N*m (kgf*cm, ft*lbf) : Specified torque

P

B118036E01

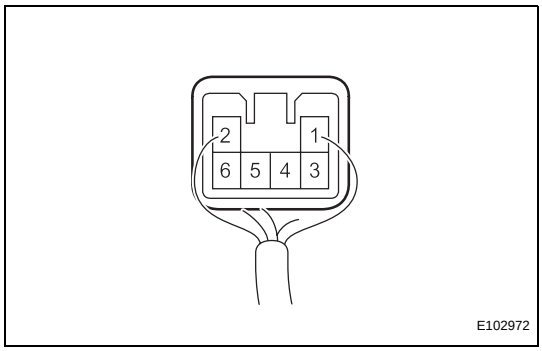

ON-VEHICLE INSPECTION

1. INSPECT POWER WINDOW REGULATOR MOTOR ASSEMBLY LH REAR

(a) Inspect the operation of the PTC inside the power window regulator motor.

NOTICE:

The work must be performed with the power window regulator and door glass installed on the vehicle.

(1) Connect an electrical tester DC 400 A probe to the wire harness of terminal 1.

NOTICE:

Match the arrow mark of the probe with the direction of the current flow.

(2) Fully close the door glass by pressing the power window UP switch. Wait for approximately 60 seconds.

(3) Continue to press the power window UP switch and measure how long it takes for the electrical current to change from a range of 16 to 28 A to approximately 1 A (Inspection of current shut-off).

Standard:

4 to 90 seconds

(4) Check that the door glass moves downward when the power window DOWN switch is pressed.

If the result is not as specified, replace the power window regulator motor.

WS

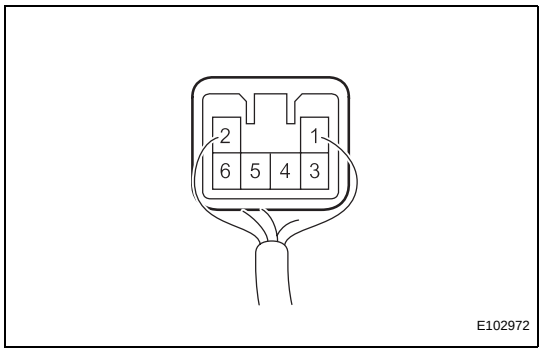

2. INSPECT POWER WINDOW REGULATOR MOTOR ASSEMBLY RH FRONT

(a) Inspect the operation of the PTC inside the power window regulator motor.

NOTICE:

The work must be performed with the power window regulator and door glass installed on the vehicle.

(1) Connect an electrical tester DC 400 A probe to the wire harness of terminal 2.

NOTICE:

Match the arrow mark of the probe with the direction of the current flow.

(2) Fully close the door glass by pressing the power window UP switch. Wait for approximately 60 seconds.

(3) Continue to press the power window UP switch and measure how long it takes for the electrical current to change from a range of 16 to 28 A to approximately 1 A (Inspection of current shut-off).

Standard:

4 to 90 seconds

(4) Check that the door glass moves downward when the power window DOWN switch is pressed.
If the result is not as specified, replace the power window regulator motor.

REMOVAL

HINT:
- Use the same procedure for both the RH and LH sides.
- The procedure described below is for the LH side.

1. **DISCONNECT CABLE FROM NEGATIVE BATTERY TERMINAL**
2. **REMOVE REAR DOOR TRIM BOARD SUB-ASSEMBLY (See page ED-98)**
3. **REMOVE REAR DOOR SERVICE HOLE COVER (See page ED-99)**
4. **REMOVE REAR DOOR CHECK ASSEMBLY (See page ED-99)**
5. **REMOVE REAR DOOR WEATHERSTRIP (See page ED-100)**
6. **REMOVE REAR DOOR BELT MOULDING (See page ET-97)**
7. **REMOVE REAR DOOR GLASS RUN (See page ED-100)**
8. **REMOVE REAR DOOR WINDOW DIVISION BAR SUB-ASSEMBLY (See page ED-100)**
9. **REMOVE REAR DOOR QUARTER WINDOW WEATHERSTRIP (See page ED-100)**
10. **REMOVE REAR DOOR GLASS SUB-ASSEMBLY (See page ED-101)**
11. **REMOVE REAR DOOR WINDOW REGULATOR SUB-ASSEMBLY (See page ED-101)**
12. **REMOVE POWER WINDOW REGULATOR MOTOR ASSEMBLY REAR**
    (a) Using "Torx" socket wrench T25, remove the 3 screws and the power window regulator motor.

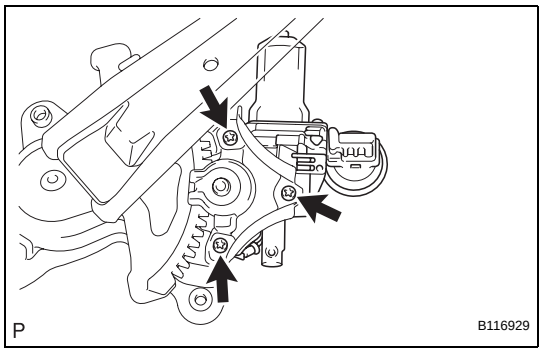

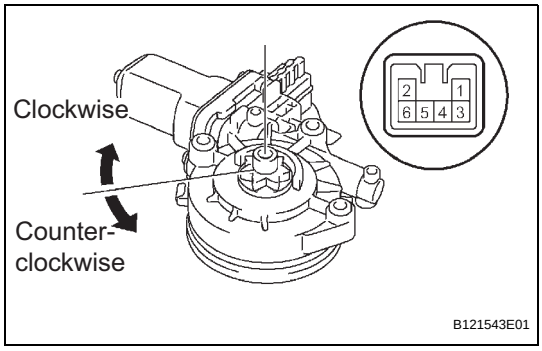

INSPECTION

1. **INSPECT POWER WINDOW REGULATOR MOTOR ASSEMBLY LH REAR**
   (a) Check the operation of the regulator motor.
      (1) Apply battery voltage to the regulator motor and check the operation of the regulator motor.
      Standard

Measurement Condition	Specified Condition
Battery positive (+) → Terminal 1 Battery negative (-) → Terminal 2	Motor gear rotates clockwise

Measurement Condition	Specified Condition
Battery positive (+) → Terminal 2 Battery negative (-) → Terminal 1	Motor gear rotates counterclockwise

If the result is not as specified, replace the power window regulator motor.

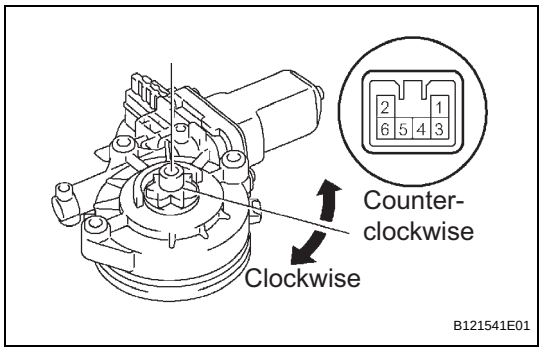

2. INSPECT POWER WINDOW REGULATOR MOTOR ASSEMBLY RH REAR

(a) Check the operation of the regulator motor.

(1) Apply battery voltage to the regulator motor and check the operation of the regulator motor.

Standard

Measurement Condition	Specified Condition
Battery positive (+) → Terminal 2 Battery negative (-) → Terminal 1	Motor gear rotates clockwise
Battery positive (+) → Terminal 1 Battery negative (-) → Terminal 2	Motor gear rotates counterclockwise

If the result is not as specified, replace the power window regulator motor.

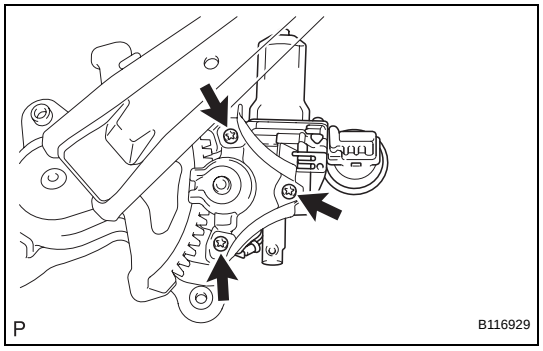

INSTALLATION

1. INSTALL POWER WINDOW REGULATOR MOTOR ASSEMBLY REAR

(a) Apply MP grease to the sliding and rotating areas of the regulator motor.

(b) Using "Torx" socket wrench T25, install the power window regulator motor with the 3 screws.

Torque: 5.4 N*m (55 kgf*cm, 48 in.*lbf)

2. INSTALL REAR DOOR WINDOW REGULATOR SUB-ASSEMBLY (See page ED-108)

3. INSTALL REAR DOOR GLASS SUB-ASSEMBLY (See page ED-108)

4. INSTALL REAR DOOR QUARTER WINDOW WEATHERSTRIP (See page ED-108)

5. INSTALL REAR DOOR WINDOW DIVISION BAR SUB-ASSEMBLY (See page ED-108)

6. INSTALL REAR DOOR GLASS RUN (See page ED-109)

7. INSTALL REAR DOOR BELT MOULDING (See page ET-97)

8. INSTALL REAR DOOR WEATHERSTRIP (See page ED-109)

9. INSTALL REAR DOOR CHECK ASSEMBLY (See page ED-109)

10. INSTALL REAR DOOR SERVICE HOLE COVER (See page ED-110)

11. INSTALL REAR DOOR TRIM BOARD SUB-ASSEMBLY (See page ED-111)

12. CONNECT CABLE TO NEGATIVE BATTERY TERMINAL
Torque: 5.4 N*m (55 kgf*cm, 48 in.*lbf)

POWER WINDOW REGULATOR MOTOR (for Sedan Front Side)

COMPONENTS

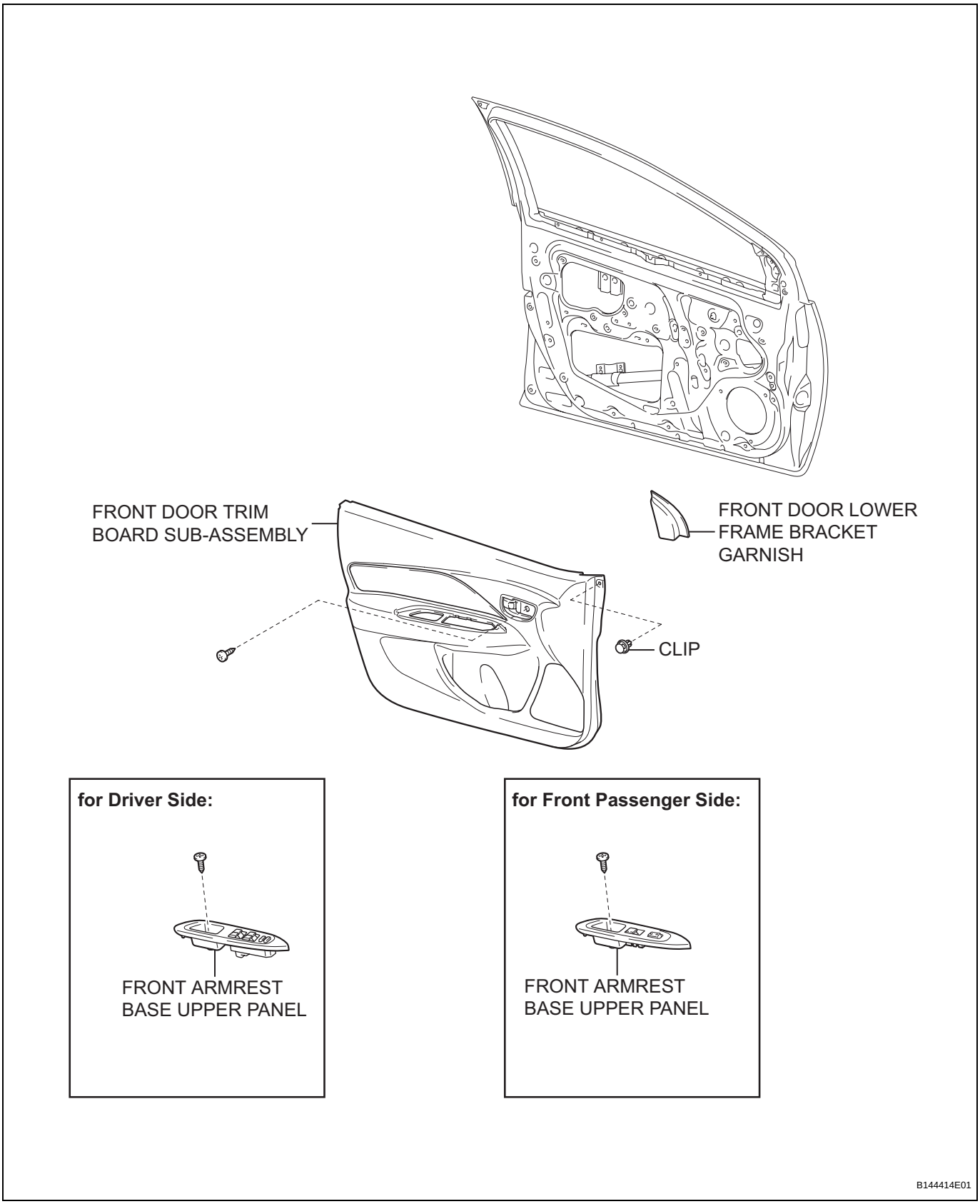

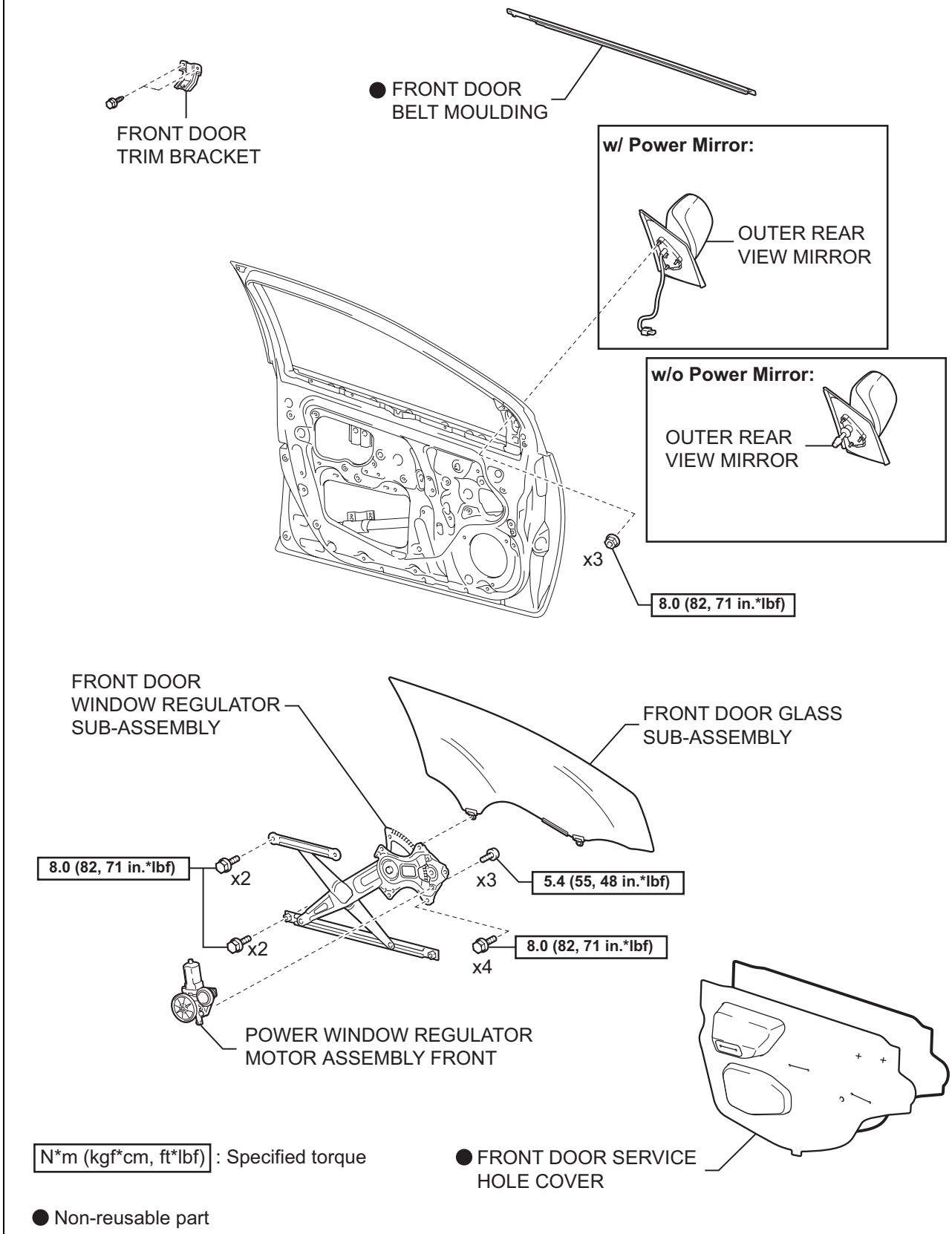

WS

P

B144415E01

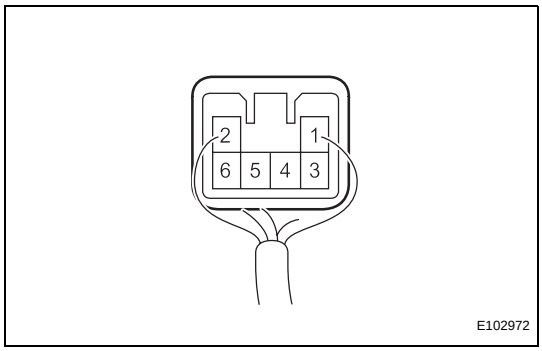

ON-VEHICLE INSPECTION

1. INSPECT POWER WINDOW REGULATOR MOTOR ASSEMBLY LH FRONT

(a) Inspect the operation of the PTC inside the power window regulator motor.

NOTICE:

The work must be performed with the power window regulator and door glass installed on the vehicle.

(1) Connect an electrical tester DC 400 A probe to the wire harness of terminal 1.

NOTICE:

Match the arrow mark of the probe with the direction of the current flow.

(2) Fully close the door glass by pressing the power window UP switch. Wait for approximately 60 seconds.

(3) Continue to press the power window UP switch and measure how long it takes for the electrical current to change from a range of 16 to 28 A to approximately 1 A (Inspection of current shut-off).

Standard:

4 to 90 seconds

(4) Check that the door glass moves downward when the power window DOWN switch is pressed.

If the result is not as specified, replace the power window regulator motor.

WS

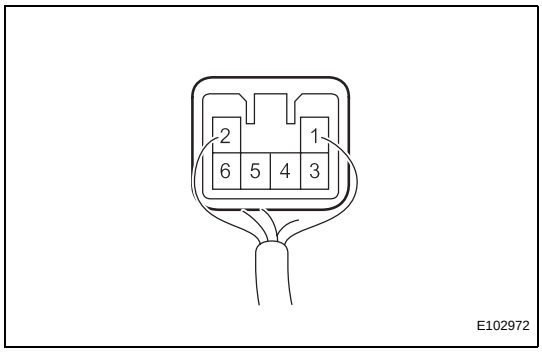

2. INSPECT POWER WINDOW REGULATOR MOTOR ASSEMBLY RH FRONT

(a) Inspect the operation of the PTC inside the power window regulator motor.

NOTICE:

The work must be performed with the power window regulator and door glass installed on the vehicle.

(1) Connect an electrical tester DC 400 A probe to the wire harness of terminal 2.

NOTICE:

Match the arrow mark of the probe with the direction of the current flow.

(2) Fully close the door glass by pressing the power window UP switch. Wait for approximately 60 seconds.

(3) Continue to press the power window UP switch and measure how long it takes for the electrical current to change from a range of 16 to 28 A to approximately 1 A (Inspection of current shut-off).

Standard:

4 to 90 seconds

(4) Check that the door glass moves downward when the power window DOWN switch is pressed.
If the result is not as specified, replace the power window regulator motor.

REMOVAL

HINT:

- Use the same procedure for both the RH and LH sides.
- The procedure described below is for the LH side.

1. **DISCONNECT CABLE FROM NEGATIVE BATTERY TERMINAL**
2. **REMOVE FRONT DOOR LOWER FRAME BRACKET GARNISH (See page ED-9)**
3. **REMOVE FRONT ARMREST BASE UPPER PANEL (See page ED-9)**
4. **REMOVE FRONT DOOR TRIM BOARD SUB-ASSEMBLY (See page ED-11)**
5. **REMOVE OUTER REAR VIEW MIRROR (See page MI-8)**
6. **REMOVE FRONT DOOR BELT MOULDING (See page ET-85)**
7. **REMOVE FRONT DOOR TRIM BRACKET (See page ED-12)**
8. **REMOVE FRONT DOOR SERVICE HOLE COVER (See page ED-12)**
9. **REMOVE FRONT DOOR GLASS SUB-ASSEMBLY (See page ED-12)**
10. **REMOVE FRONT DOOR WINDOW REGULATOR SUB-ASSEMBLY (See page ED-13)**
11. **REMOVE POWER WINDOW REGULATOR MOTOR ASSEMBLY FRONT**
    (a) Using "Torx" socket wrench T25, remove the 3 screws and power window regulator motor.

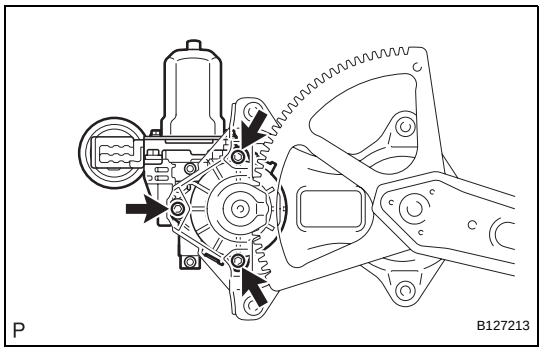

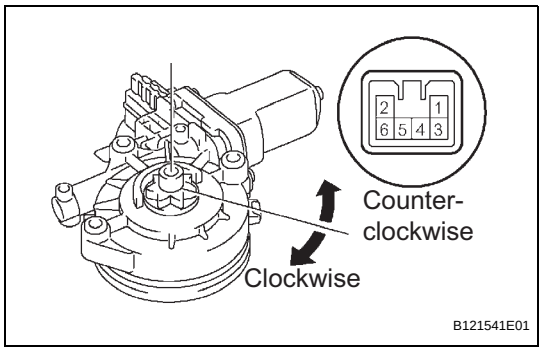

INSPECTION

1. **INSPECT POWER WINDOW REGULATOR MOTOR ASSEMBLY LH FRONT**
   (a) Check the operation of the regulator motor.
      (1) Apply battery voltage to the regulator motor and check the operation of the regulator motor.
      Standard

Measurement condition	Specified Condition
Battery positive (+) → Terminal 2 Battery negative (-) → Terminal 1	Motor gear rotates clockwise
Battery positive (+) → Terminal 1 Battery negative (-) → Terminal 2	Motor gear rotates counterclockwise

If the result is not as specified, replace the power window regulator motor.

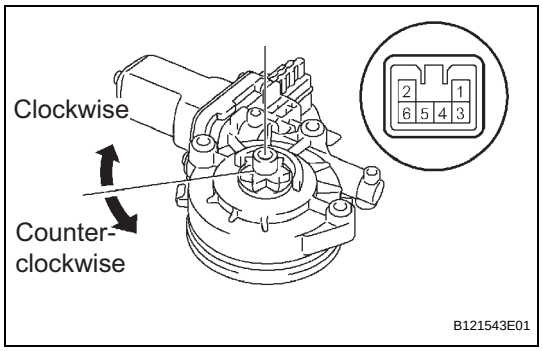

2. INSPECT POWER WINDOW REGULATOR MOTOR ASSEMBLY RH FRONT

(a) Check the operation of the regulator motor.

(1) Apply battery voltage to the regulator motor and check the operation of the regulator motor.

Standard

Measurement Condition	Specified Condition
Battery positive (+) → Terminal 1 Battery negative (-) → Terminal 2	Motor gear rotates clockwise
Battery positive (+) → Terminal 2 Battery negative (-) → Terminal 1	Motor gear rotates counterclockwise

If the result is not as specified, replace the power window regulator motor.

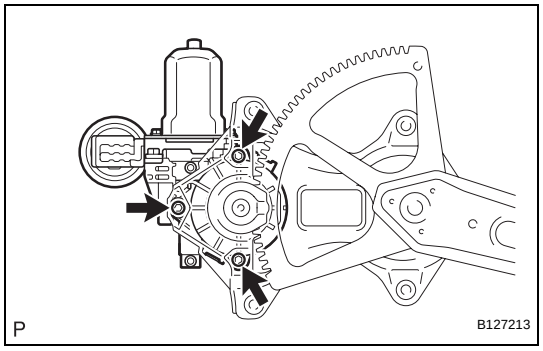

INSTALLATION

1. INSTALL POWER WINDOW REGULATOR MOTOR ASSEMBLY FRONT

(a) Apply MP grease to the sliding and rotating areas of the regulator motor.

(b) Using "Torx" socket wrench T25, install the power window regulator motor assembly front with the 3 screws.

Torque: 5.4 N*m (55 kgf*cm, 48 in.*lbf)

2. INSTALL FRONT DOOR WINDOW REGULATOR SUB-ASSEMBLY (See page ED-24)

3. INSTALL FRONT DOOR GLASS SUB-ASSEMBLY (See page ED-24)

4. INSTALL FRONT DOOR SERVICE HOLE COVER (See page ED-25)

5. INSTALL FRONT DOOR TRIM BRACKET (See page ED-25)

6. INSTALL FRONT DOOR BELT MOULDING (See page ET-86)

7. INSTALL OUTER REAR VIEW MIRROR (See page MI-11)

8. INSTALL FRONT DOOR TRIM BOARD SUB-ASSEMBLY (See page ED-26)

9. INSTALL FRONT ARMREST BASE UPPER PANEL (See page ED-28)

10. INSTALL FRONT DOOR LOWER FRAME BRACKET GARNISH (See page ED-28)

11. CONNECT CABLE TO NEGATIVE BATTERY TERMINAL
Torque: 5.4 N*m (55 kgf*cm, 48 in.*lbf)

POWER WINDOW REGULATOR MOTOR (for Sedan Rear Side)

COMPONENTS

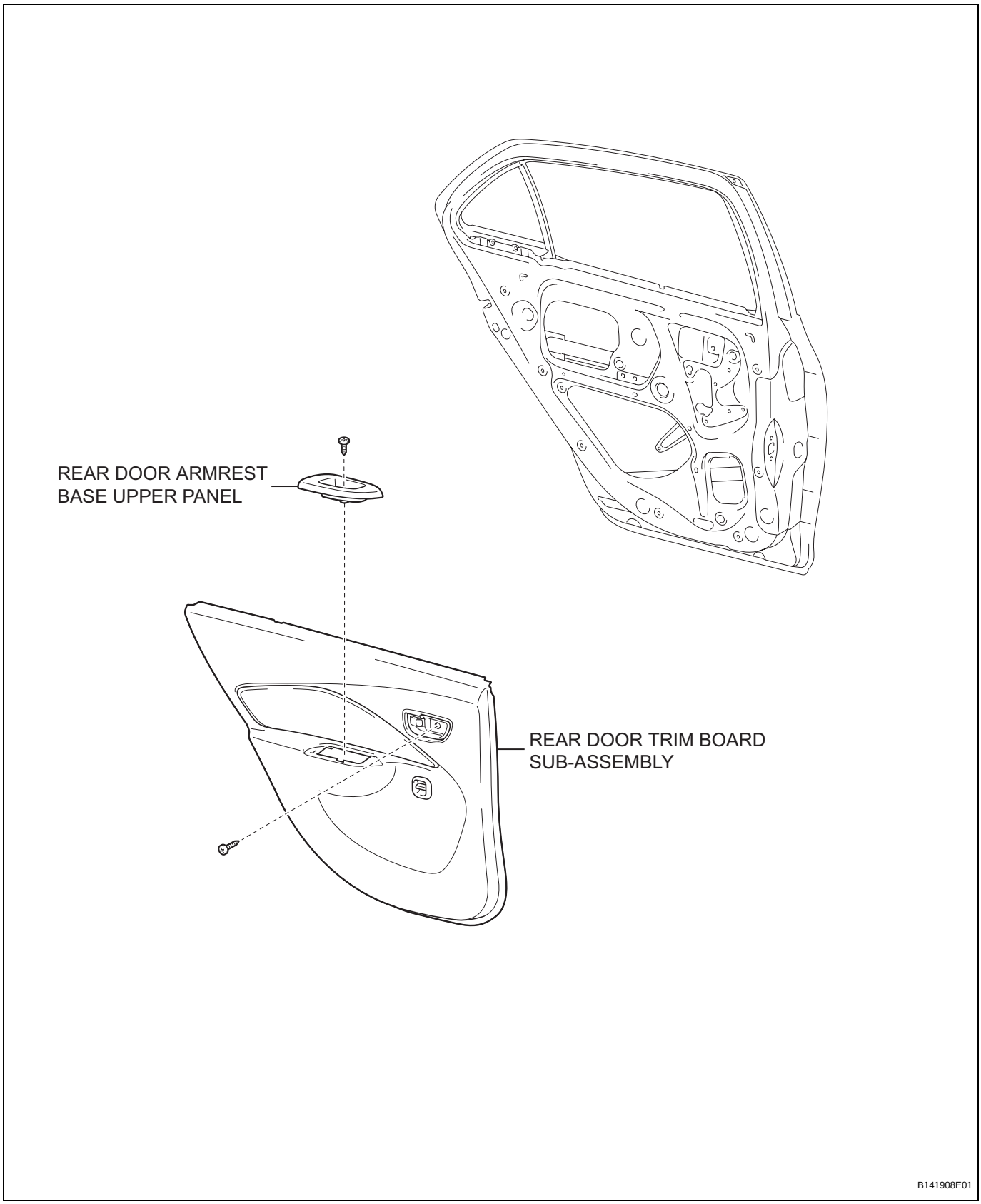

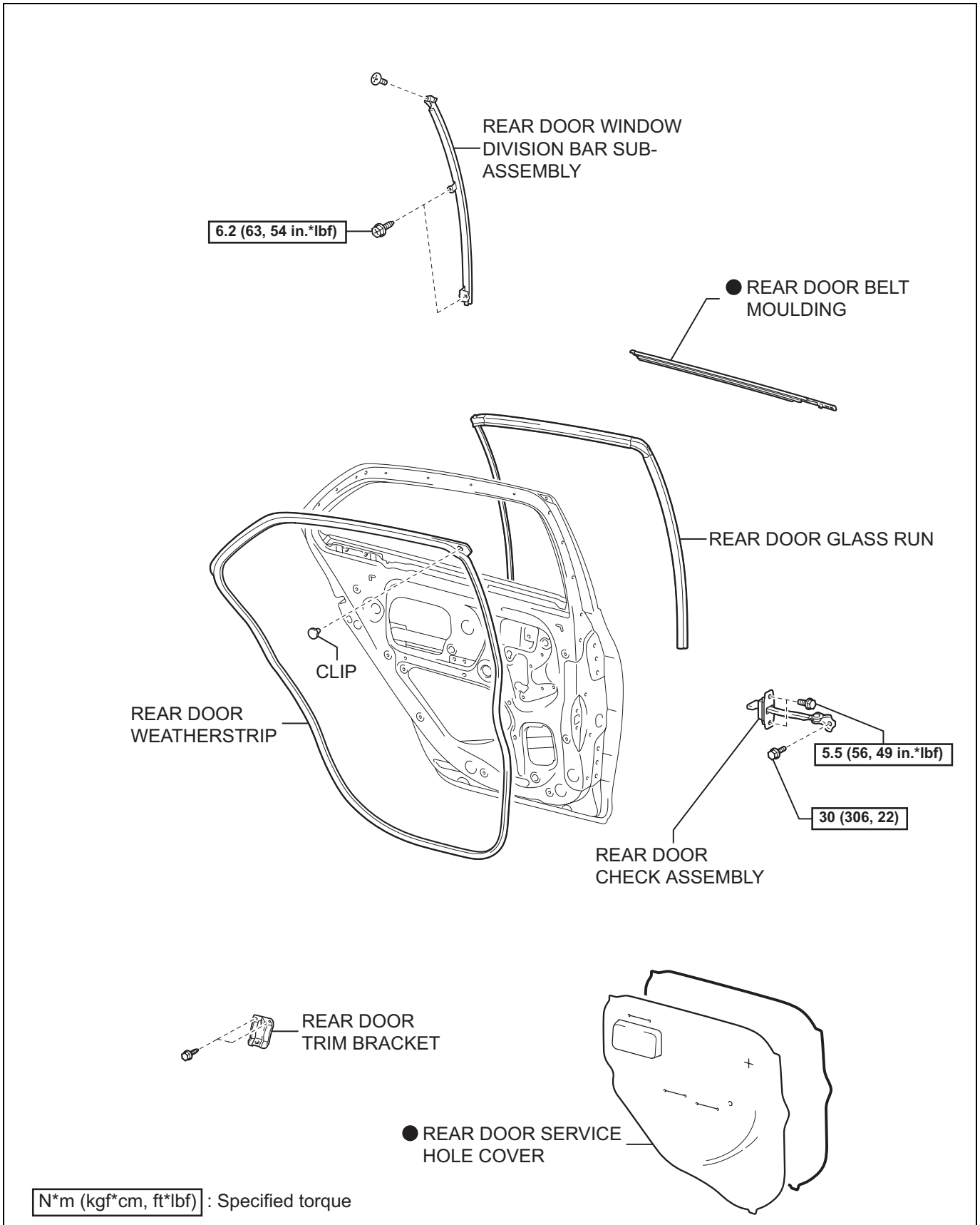
REAR DOOR WINDOW DIVISION BAR SUB-ASSEMBLY
6.2 (63, 54 in.*lbf)
● REAR DOOR BELT MOULDING
REAR DOOR GLASS RUN
CLIP
REAR DOOR WEATHERSTRIP
5.5 (56, 49 in.*lbf)
30 (306, 22)
REAR DOOR CHECK ASSEMBLY
REAR DOOR TRIM BRACKET
● REAR DOOR SERVICE HOLE COVER
N*m (kgf*cm, ft*lbf) : Specified torque
● Non-reusable part
P
B144412E01

WS

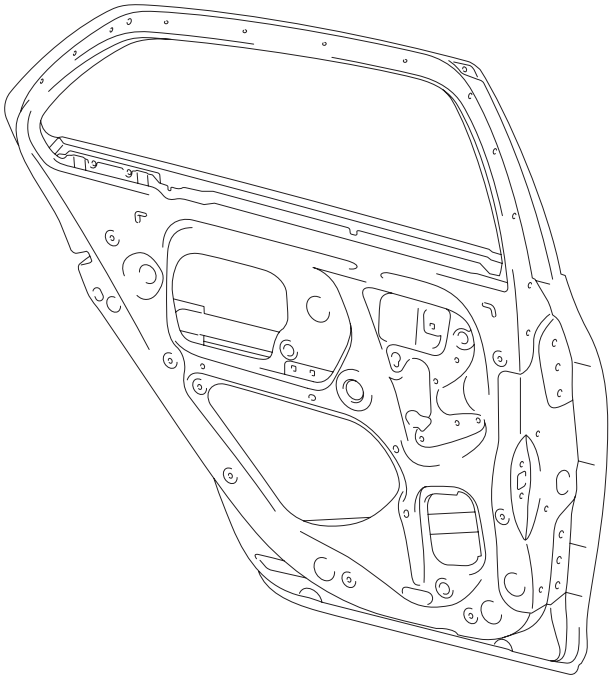

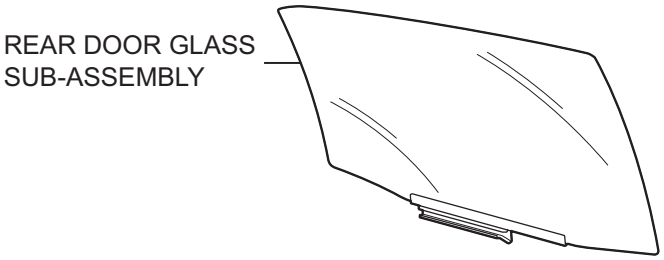

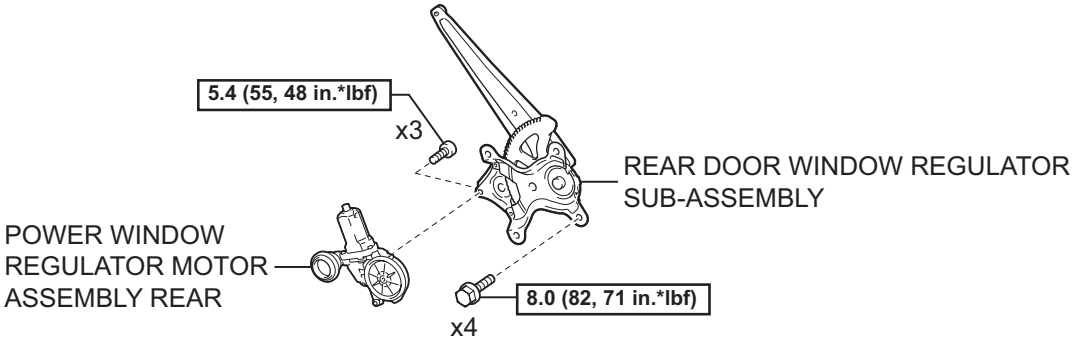

N*m (kgf*cm, ft*lbf) : Specified torque

P

B140697E01

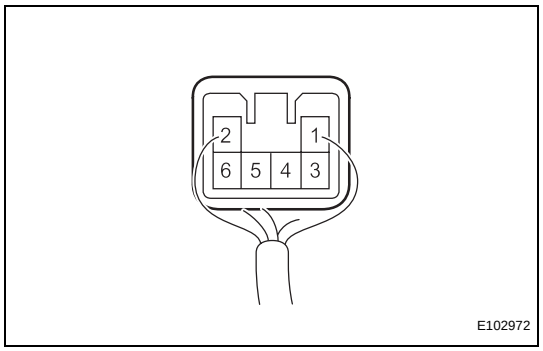

ON-VEHICLE INSPECTION

1. INSPECT POWER WINDOW REGULATOR MOTOR ASSEMBLY LH REAR

(a) Inspect the operation of the PTC inside the power window regulator motor.

NOTICE:

The work must be performed with the power window regulator and door glass installed on the vehicle.

(1) Connect an electrical tester DC 400 A probe to the wire harness of terminal 1.

NOTICE:

Match the arrow mark of the probe with the direction of the current flow.

(2) Fully close the door glass by pressing the power window UP switch. Wait for approximately 60 seconds.

(3) Continue to press the power window UP switch and measure how long it takes for the electrical current to change from a range of 16 to 28 A to approximately 1 A (Inspection of current shut-off).

Standard:

4 to 90 seconds

(4) Check that the door glass moves downward when the power window DOWN switch is pressed.

If the result is not as specified, replace the power window regulator motor.

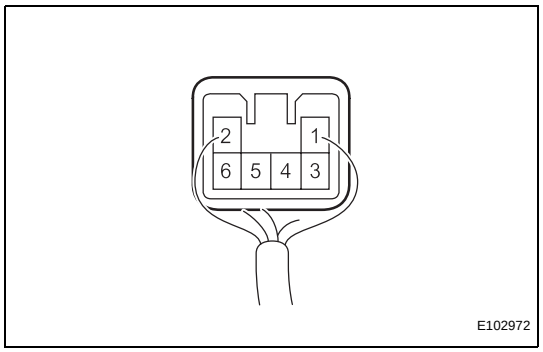

2. INSPECT POWER WINDOW REGULATOR MOTOR ASSEMBLY RH REAR

(a) Inspect the operation of the PTC inside the power window regulator motor.

NOTICE:

The work must be performed with the power window regulator and door glass installed on the vehicle.

(1) Connect an electrical tester DC 400 A probe to the wire harness of terminal 2.

NOTICE:

Match the arrow mark of the probe with the direction of the current flow.

(2) Fully close the door glass by pressing the power window UP switch. Wait for approximately 60 seconds.

(3) Continue to press the power window UP switch and measure how long it takes for the electrical current to change from a range of 16 to 28 A to approximately 1 A (Inspection of current shut-off).

Standard:

4 to 90 seconds

(4) Check that the door glass moves downward when the power window DOWN switch is pressed.
If the result is not as specified, replace the power window regulator motor.

REMOVAL

HINT:

- Use the same procedure for both the RH and LH sides.
- The procedure described below is for the LH side.

1. **DISCONNECT CABLE FROM NEGATIVE BATTERY TERMINAL**
2. **REMOVE REAR DOOR ARMREST BASE UPPER PANEL (See page ED-79)**
3. **REMOVE REAR DOOR TRIM BOARD SUB-ASSEMBLY (See page ED-79)**
4. **REMOVE REAR DOOR TRIM BRACKET (See page ED-80)**
5. **REMOVE REAR DOOR SERVICE HOLE COVER (See page ED-80)**
6. **REMOVE REAR DOOR CHECK ASSEMBLY (See page ED-81)**
7. **REMOVE REAR DOOR WEATHERSTRIP (See page ED-81)**
8. **REMOVE REAR DOOR BELT MOULDING (See page ET-95)**
9. **REMOVE REAR DOOR GLASS RUN (See page ED-81)**
10. **REMOVE REAR DOOR WINDOW DIVISION BAR SUB-ASSEMBLY (See page ED-81)**
11. **REMOVE REAR DOOR GLASS SUB-ASSEMBLY (See page ED-82)**
12. **REMOVE REAR DOOR WINDOW REGULATOR SUB-ASSEMBLY (See page ED-82)**
13. **REMOVE POWER WINDOW REGULATOR MOTOR ASSEMBLY REAR**
    (a) Using "Torx" socket wrench T25, remove the 3 screws and power window regulator motor.

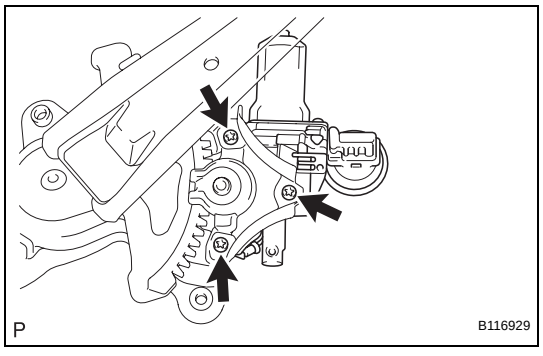

WS

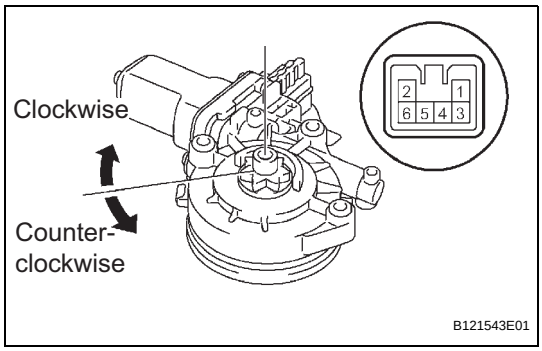

INSPECTION

1. **INSPECT POWER WINDOW REGULATOR MOTOR ASSEMBLY LH REAR**
   (a) Check the operation of the regulator motor.
   (1) Apply battery voltage to the regulator motor and check the operation of the regulator motor.
   Standard

Measurement Condition	Specified Condition
Battery positive (+) → Terminal 1 Battery negative (-) → Terminal 2	Motor gear rotates clockwise
Battery positive (+) → Terminal 2 Battery negative (-) → Terminal 1	Motor gear rotates counterclockwise

If the result is not as specified, replace the power window regulator motor.

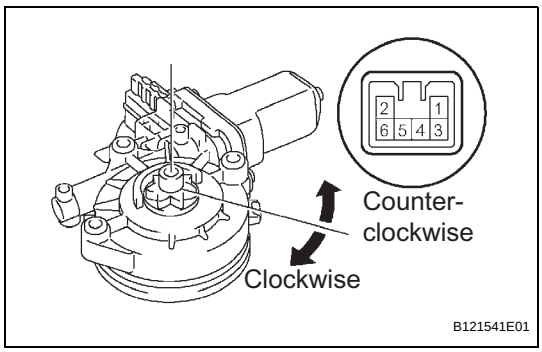

2. **INSPECT POWER WINDOW REGULATOR MOTOR ASSEMBLY RH REAR**
   (a) Check the operation of the regulator motor.
   (1) Apply battery voltage to the regulator motor and check the operation of the regulator motor.
   Standard

Measurement Condition	Specified Condition
Battery positive (+) → Terminal 2 Battery negative (-) → Terminal 1	Motor gear rotates clockwise
Battery positive (+) → Terminal 1 Battery negative (-) → Terminal 2	Motor gear rotates counterclockwise

If the result is not as specified, replace the power window regulator motor.

WS

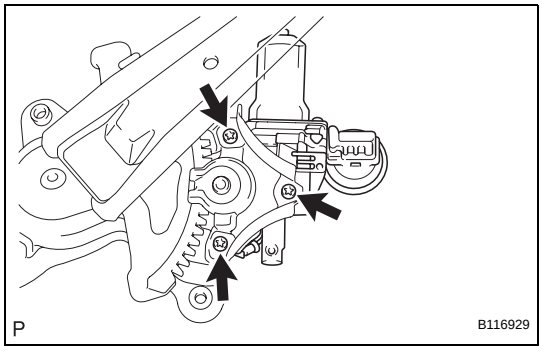

INSTALLATION

1. **INSTALL POWER WINDOW REGULATOR MOTOR ASSEMBLY REAR**
   (a) Apply MP grease to the sliding and rotating areas of the regulator motor.
   (b) Using "Torx" socket wrench T25, install the power window regulator motor with the 3 screws.
   Torque: 5.4 N*m (55 kgf*cm, 48 in.*lbf)
2. **INSTALL REAR DOOR WINDOW REGULATOR SUB-ASSEMBLY (See page ED-89)**
3. **INSTALL REAR DOOR GLASS SUB-ASSEMBLY (See page ED-90)**
4. **INSTALL REAR DOOR WINDOW DIVISION BAR SUB-ASSEMBLY (See page ED-91)**
5. **INSTALL REAR DOOR GLASS RUN (See page ED-91)**
6. **INSTALL REAR DOOR BELT MOULDING (See page ET-95)**
7. **INSTALL REAR DOOR WEATHERSTRIP (See page ED-92)**
8. **INSTALL REAR DOOR CHECK ASSEMBLY (See page ED-92)**

9. **INSTALL REAR DOOR SERVICE HOLE COVER (See page ED-92)**
10. **INSTALL REAR DOOR TRIM BRACKET (See page ED-93)**
11. **INSTALL REAR DOOR TRIM BOARD SUB-ASSEMBLY (See page ED-93)**
12. **INSTALL REAR DOOR ARMREST BASE UPPER PANEL (See page ED-94)**
13. **CONNECT CABLE TO NEGATIVE BATTERY TERMINAL**
    Torque: 5.4 N*m (55 kgf*cm, 48 in.*lbf)

WINDSHIELD GLASS (for Sedan)

COMPONENTS

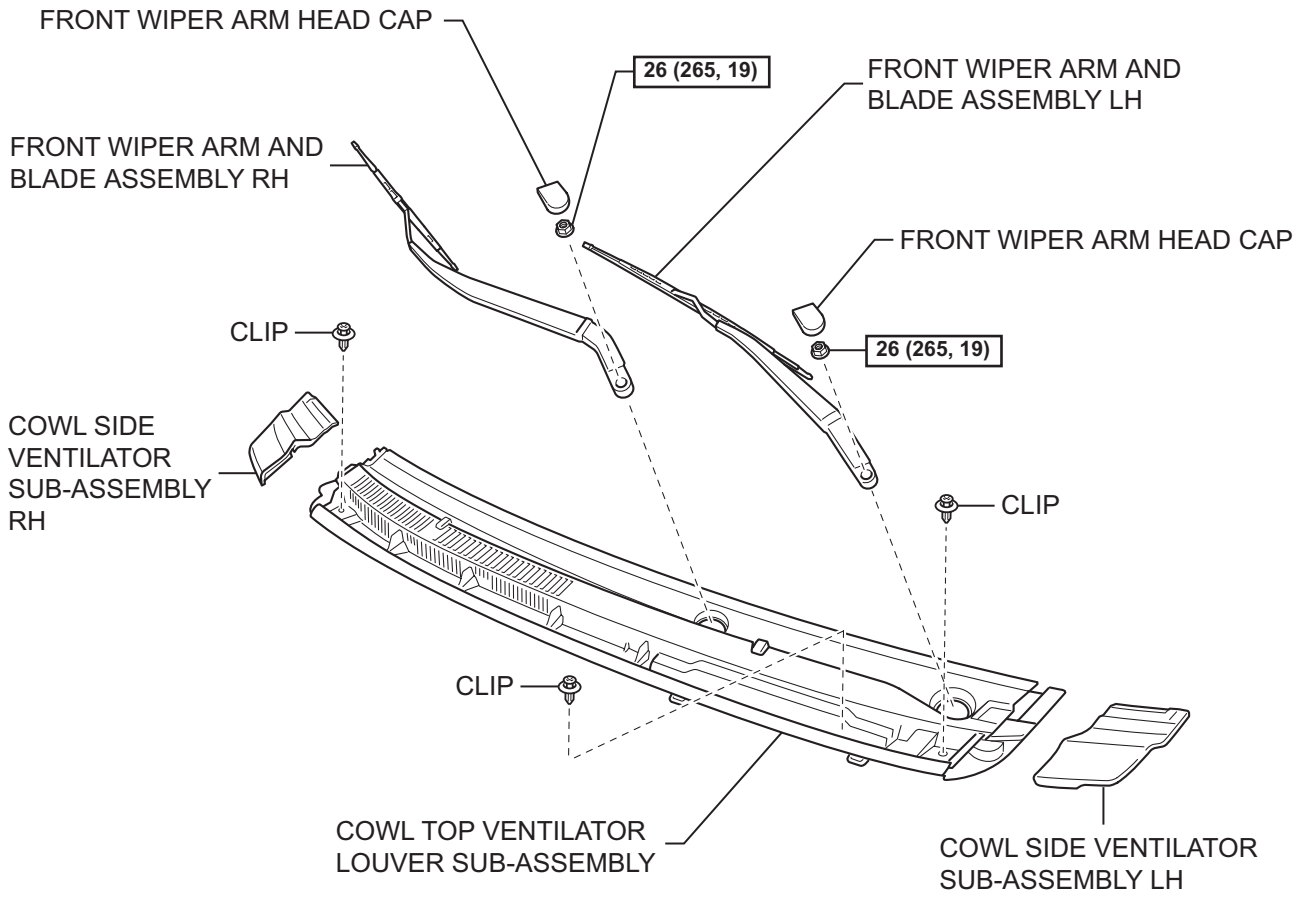

N*m (kgf*cm, ft*lbf) : Specified torque

Y

B144214E01

WS

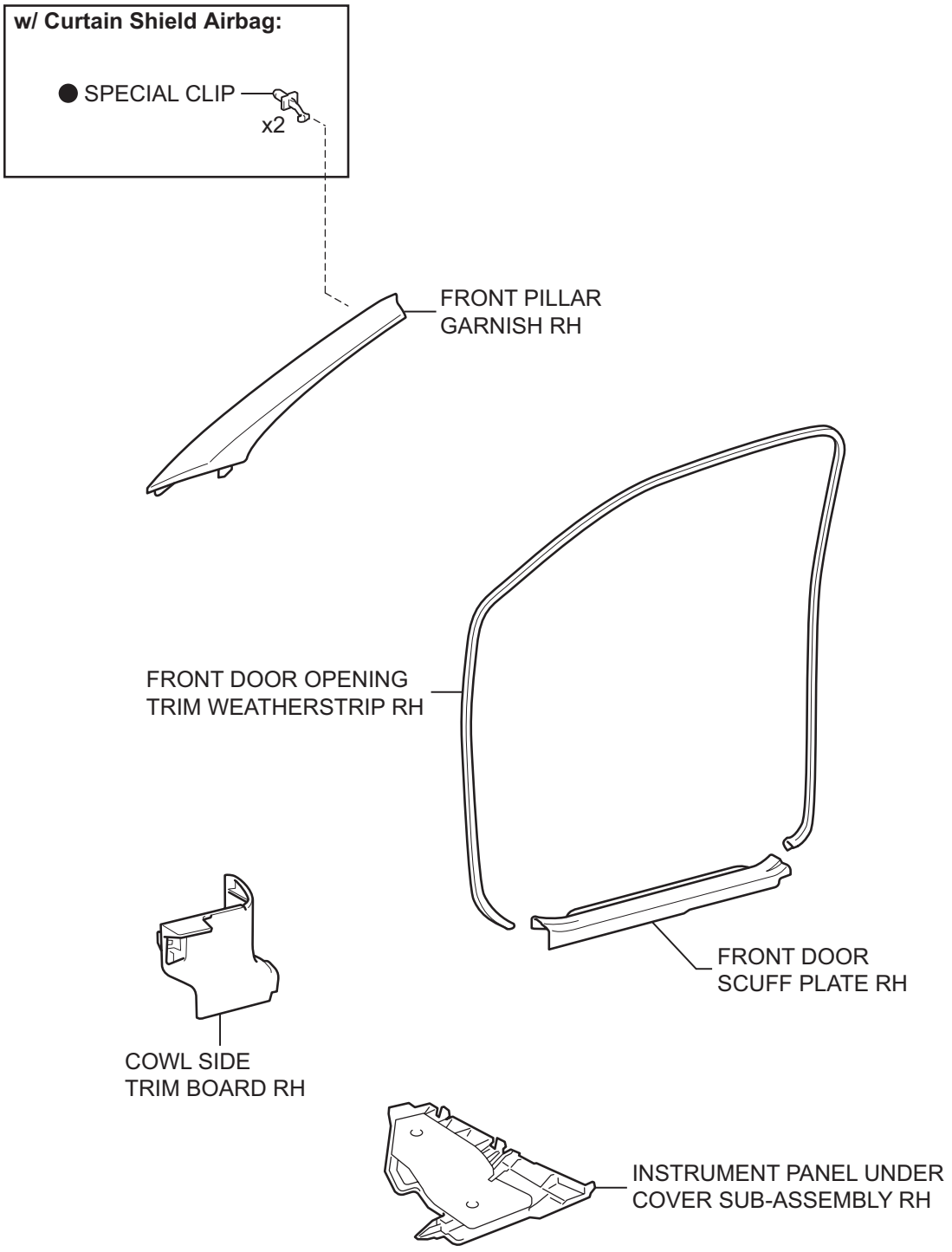

● Non-reusable part

T

B147525E01

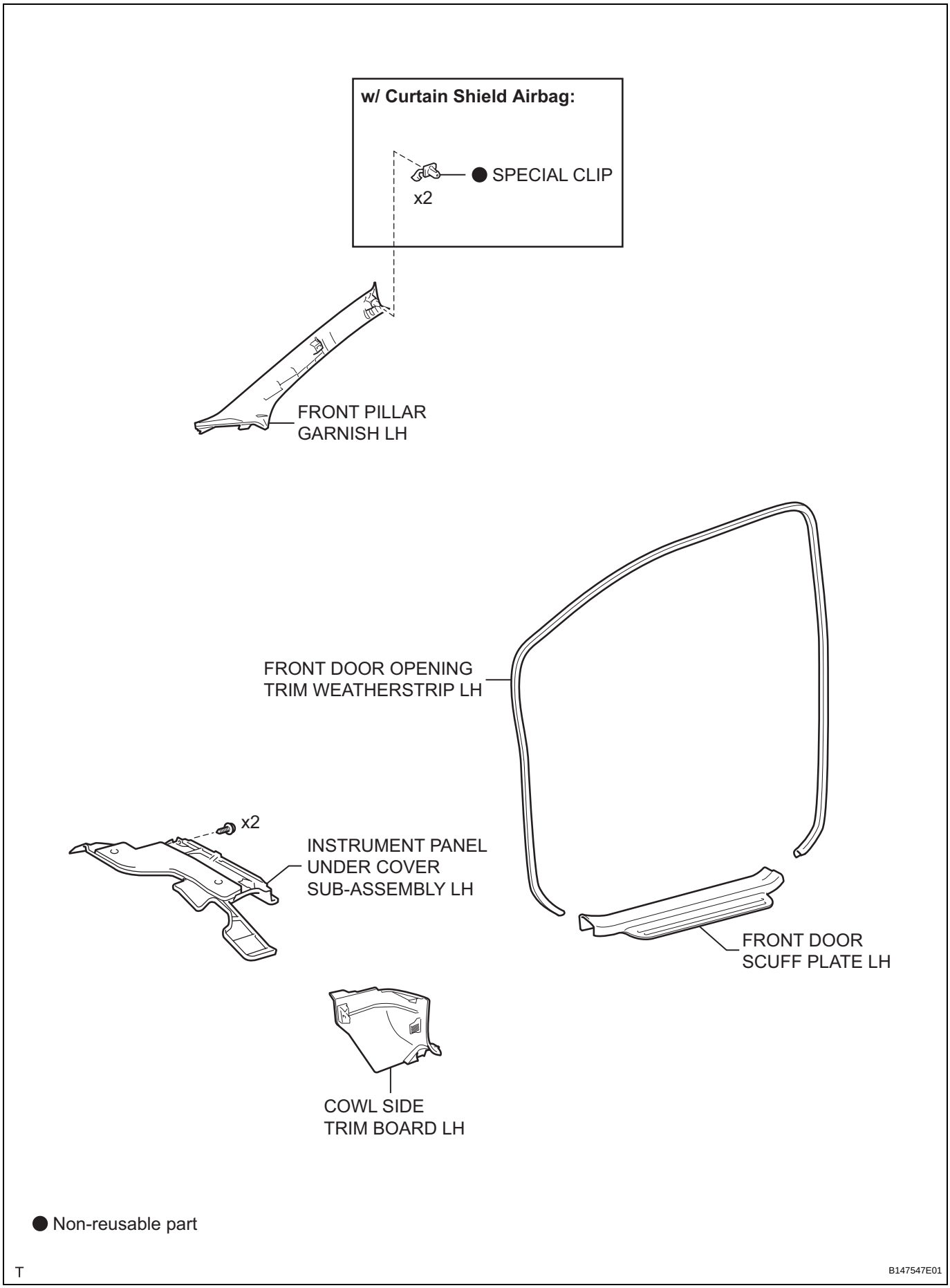
w/ Curtain Shield Airbag:
● SPECIAL CLIP
x2
FRONT PILLAR GARNISH LH
FRONT DOOR OPENING TRIM WEATHERSTRIP LH
x2
INSTRUMENT PANEL UNDER COVER SUB-ASSEMBLY LH
FRONT DOOR SCUFF PLATE LH
COWL SIDE TRIM BOARD LH
● Non-reusable part
T
B147547E01

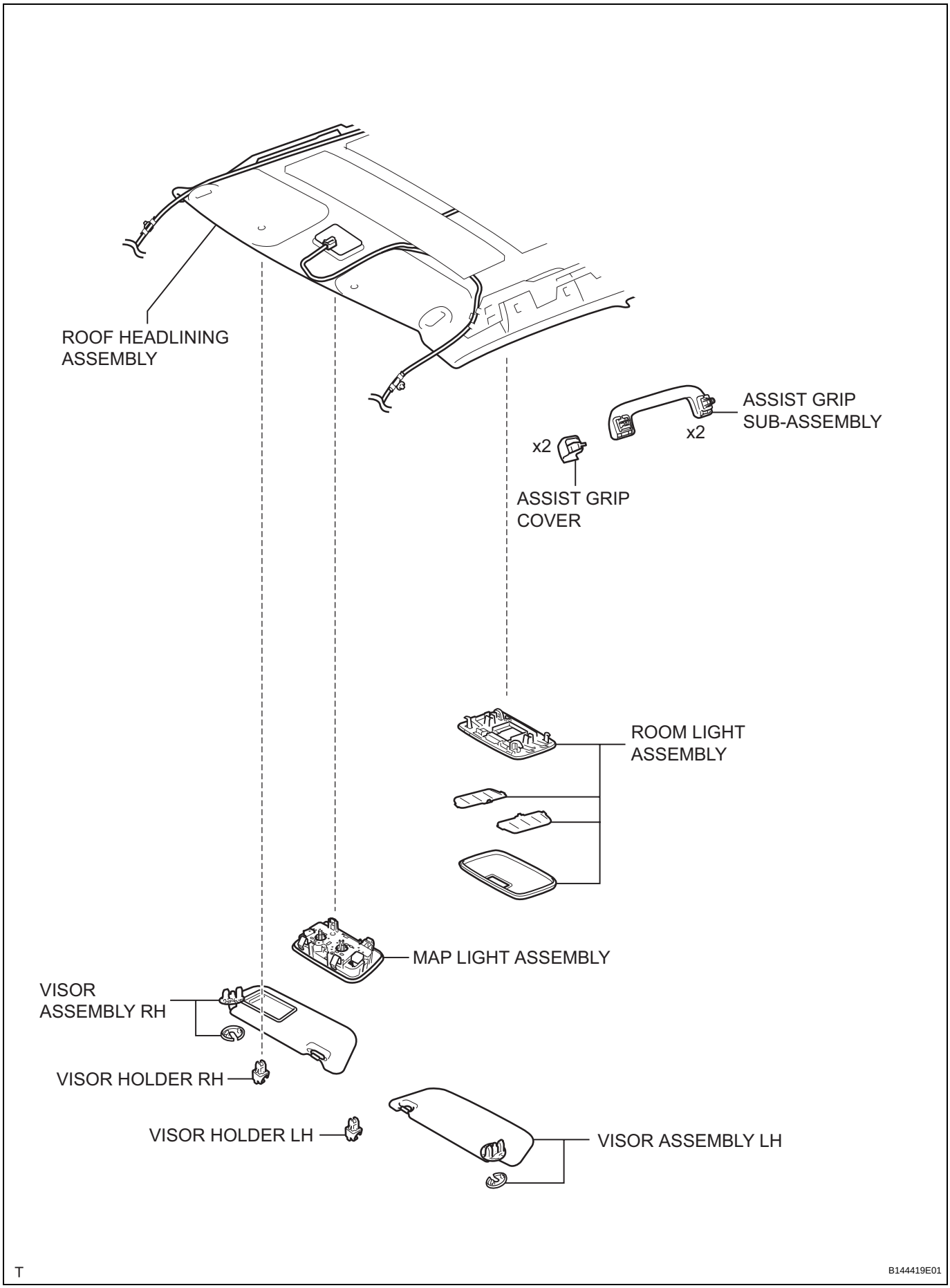
ROOF HEADLINING ASSEMBLY
ASSIST GRIP SUB-ASSEMBLY
x2
x2
ASSIST GRIP COVER
ROOM LIGHT ASSEMBLY
MAP LIGHT ASSEMBLY
VISOR ASSEMBLY RH
VISOR HOLDER RH
VISOR HOLDER LH
VISOR ASSEMBLY LH
T
B144419E01

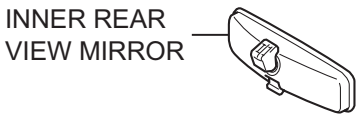

2 Piece Type:

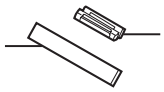

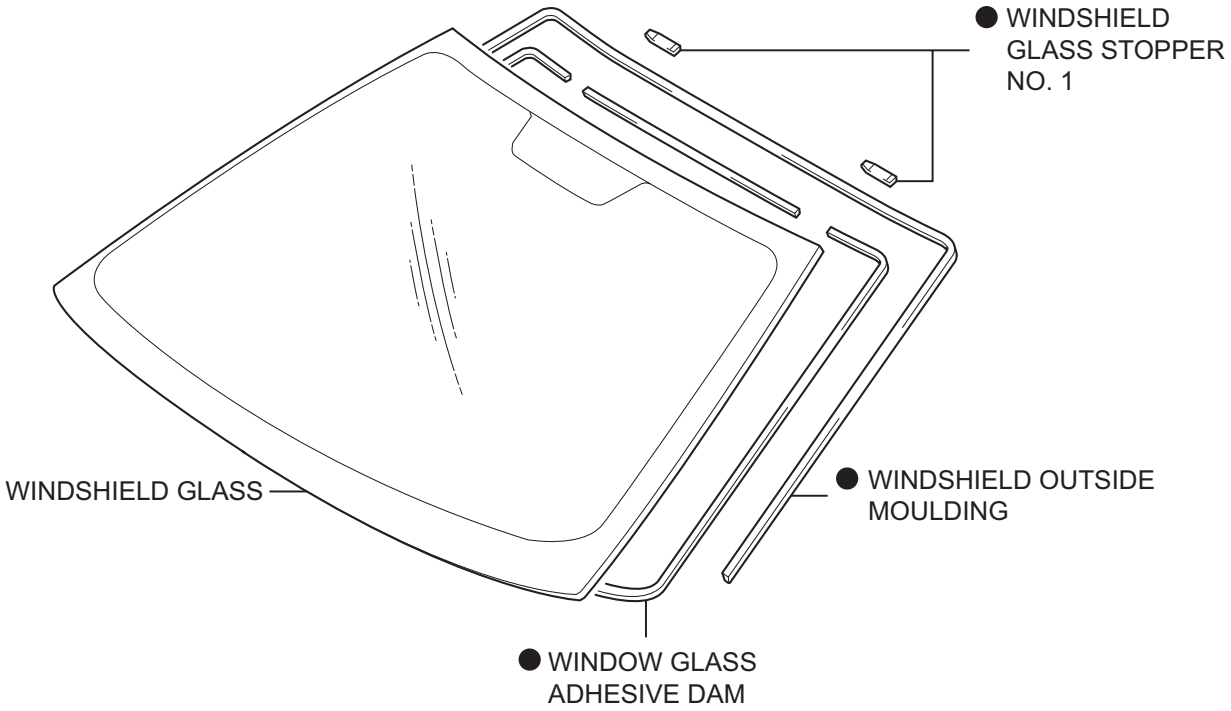

WS

● Non-reusable part

Y

B136267E01

REMOVAL

CAUTION:
Some of these service operations affect the SRS airbag system. Read the precautionary notices concerning the SRS airbag system before servicing (see page RS-1).

1. **DISCONNECT CABLE FROM NEGATIVE BATTERY TERMINAL**
   Wait for at least 90 seconds after disconnecting the cable to prevent the airbag from working.
2. **REMOVE FRONT WIPER ARM HEAD CAP (See page WW-9)**
3. **REMOVE FRONT WIPER ARM AND BLADE ASSEMBLY LH (See page WW-9)**
4. **REMOVE FRONT WIPER ARM AND BLADE ASSEMBLY RH (See page WW-9)**
5. **REMOVE COWL SIDE VENTILATOR SUB-ASSEMBLY LH (See page WW-10)**
6. **REMOVE COWL SIDE VENTILATOR SUB-ASSEMBLY RH (See page WW-10)**
7. **REMOVE COWL TOP VENTILATOR LOUVER SUB-ASSEMBLY (See page WW-10)**
8. **REMOVE FRONT DOOR SCUFF PLATE RH (See page IR-14)**
9. **REMOVE FRONT DOOR SCUFF PLATE LH (See page IR-14)**
10. **REMOVE INSTRUMENT PANEL UNDER COVER SUB-ASSEMBLY RH (See page IR-14)**
11. **REMOVE INSTRUMENT PANEL UNDER COVER SUB-ASSEMBLY LH (See page IR-14)**
12. **REMOVE COWL SIDE TRIM BOARD RH (See page IR-15)**
13. **REMOVE COWL SIDE TRIM BOARD LH (See page IR-15)**
14. **REMOVE FRONT DOOR OPENING TRIM WEATHERSTRIP RH (See page IR-15)**
15. **REMOVE FRONT DOOR OPENING TRIM WEATHERSTRIP LH (See page IR-15)**
16. **REMOVE FRONT PILLAR GARNISH RH (See page IR-18)**
17. **REMOVE FRONT PILLAR GARNISH LH (See page IR-19)**
18. **REMOVE ASSIST GRIP COVER (See page IR-21)**
19. **REMOVE ASSIST GRIP SUB-ASSEMBLY (See page IR-21)**
20. **REMOVE VISOR ASSEMBLY RH (See page IR-22)**

21. **REMOVE VISOR ASSEMBLY LH (See page IR-22)**
22. **REMOVE VISOR HOLDER RH (See page IR-22)**
23. **REMOVE VISOR HOLDER LH (See page IR-22)**
24. **REMOVE ROOM LIGHT ASSEMBLY (See page IR-22)**
25. **REMOVE MAP LIGHT ASSEMBLY (See page IR-23)**
26. **REMOVE INNER REAR VIEW MIRROR (See page MI-5)**
27. **REMOVE ROOF HEADLINING ASSEMBLY**
    HINT:
    It is not necessary to remove the roof headlining completely. Slightly lower the front section of the roof headlining.

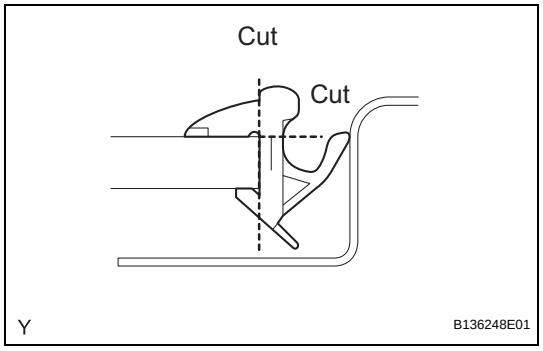

28. **REMOVE WINDSHIELD OUTSIDE MOULDING**
    (a) Using a knife, cut off the windshield outside moulding, as shown in the illustration.
    NOTICE:
    Do not damage the vehicle body with the knife.
    (b) Remove the windshield outside moulding.
    HINT:
    Make a partial cut in the windshield outside moulding. Then pull and remove it by hand.

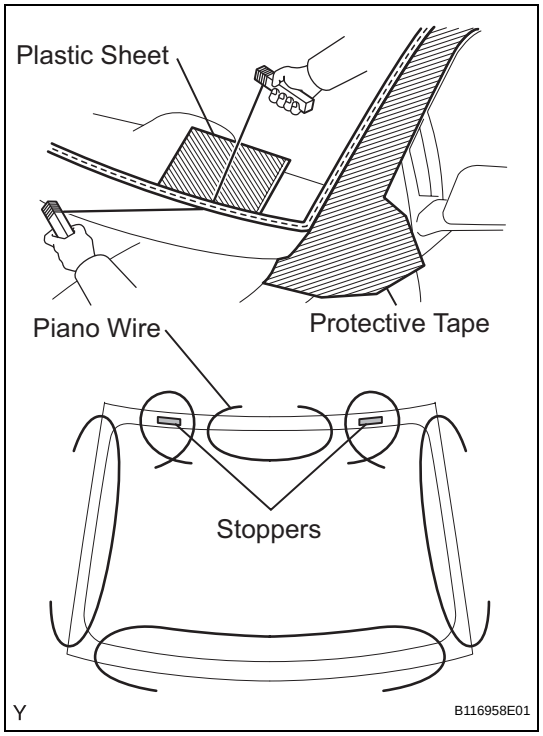

29. **REMOVE WINDSHIELD GLASS**
    (a) Apply protective tape to the outer circumference of the windshield glass, as shown in the illustration.
    (b) From the interior, insert piano wires between the vehicle body and the windshield glass, as shown in the illustration.
    (c) Tie objects that can serve as handles (for example, wooden blocks) to all wire ends.
    NOTICE:
    - **When separating the windshield glass from the vehicle, do not damage the vehicle's paintwork or exterior/interior ornaments.**
    - **To prevent the safety pad from being scratched when removing the windshield glass, place a plastic sheet between the piano wire and safety pad.**

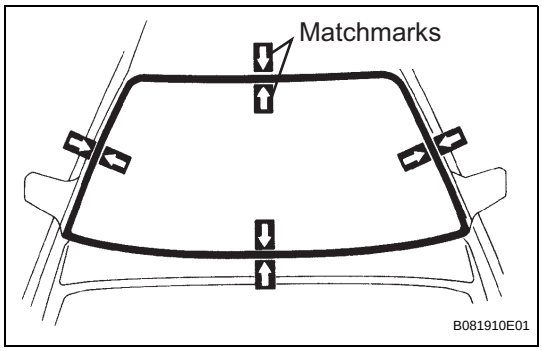

(d) Place matchmarks on the windshield glass and vehicle body in the locations indicated in the illustration.
HINT:
Matchmarks do not need to be placed unless the windshield glass is going to be reused.

(e) Cut through the adhesive by pulling the piano wire around the windshield glass.

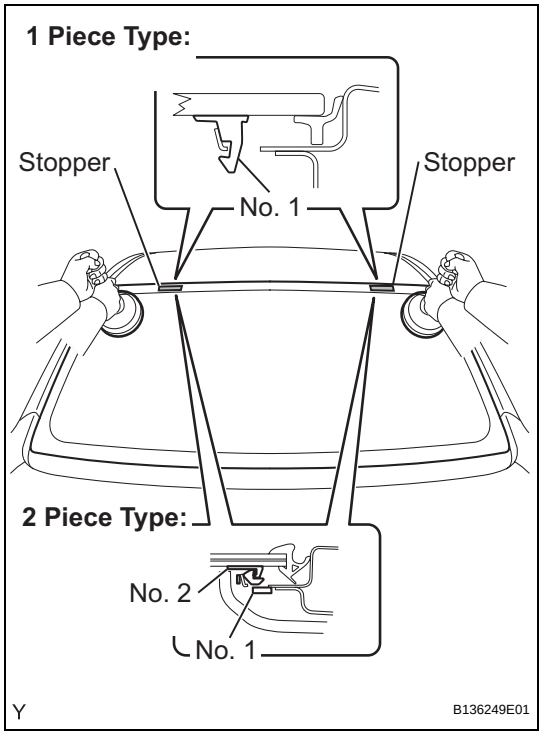

(f) Disengage the 2 stoppers.

(g) Using suction cups, remove the windshield glass.
NOTICE:
Leave as much adhesive on the vehicle body as possible when removing the windshield glass.

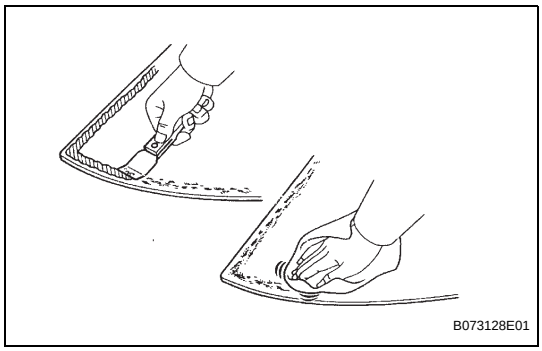

INSTALLATION

1. CLEAN WINDSHIELD GLASS

(a) Using a scraper, remove the stoppers, dam and adhesive from the windshield glass.

(b) Clean the outer circumference of the windshield glass with a non-residue solvent.
NOTICE:
- **Do not touch the windshield glass surface after cleaning it.**
- **Even if using a new windshield glass, clean the windshield glass with a non-residue solvent.**

WS

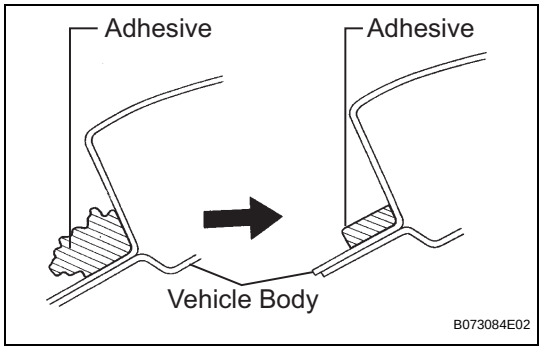

2. CLEAN VEHICLE BODY

(a) Clean and shape the contact surface of the vehicle body.

(1) Using a knife, cut away any rough adhesive on the contact surface of the vehicle body to ensure the appropriate surface shape.

NOTICE:

Do not damage the vehicle body.

HINT:

Leave as much adhesive on the vehicle body as possible.

(2) Clean the contact surface of the vehicle body with a shop rag or piece of cloth saturated with cleaner.

HINT:

Clean the vehicle body even if all the adhesive has been removed.

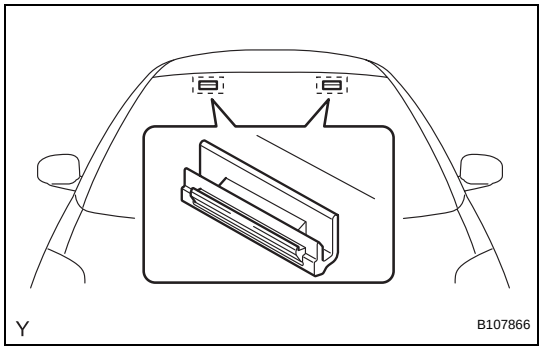

3. INSTALL WINDSHIELD GLASS STOPPER NO. 1

(a) Install 2 new stoppers onto the vehicle body, as shown in the illustration.

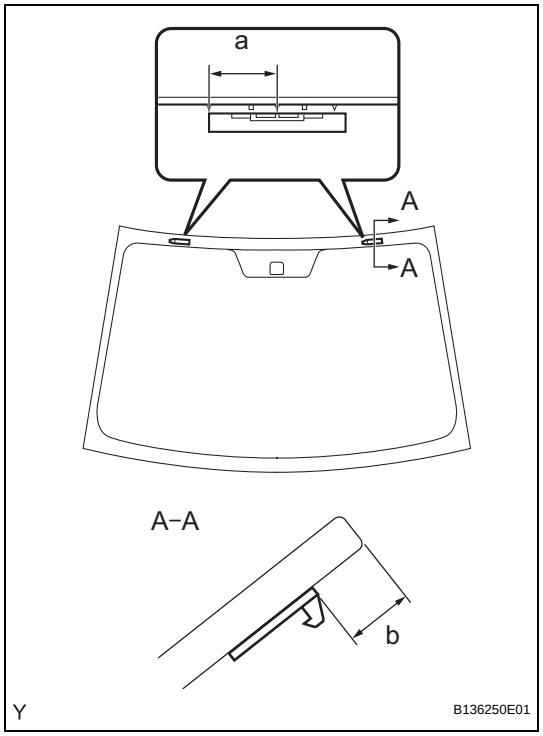

4. INSTALL WINDSHIELD GLASS STOPPER NO. 2

(a) Apply Primer G to the installation parts of the stoppers.

NOTICE:

- **Allow the primer to dry for 3 minutes or more.**
- **Throw away any leftover Primer G.**
- **Do not apply too much Primer G.**

(b) Install 2 new stoppers onto the windshield glass, as shown in the illustration.

Specification

Area	Measurement
a	40 mm (1.57 in.)
b	14.5 mm (0.571 in.)

5. INSTALL WINDOW GLASS ADHESIVE DAM

(a) Apply Primer G to the installation part of a new dam, as shown in the illustration.

NOTICE:

- **Allow the primer to dry for 3 minutes or more.**
- **Throw away any leftover Primer G.**
- **Do not apply too much Primer G.**

WS

(b) Install the new dam with double-sided tape as shown in the illustration.

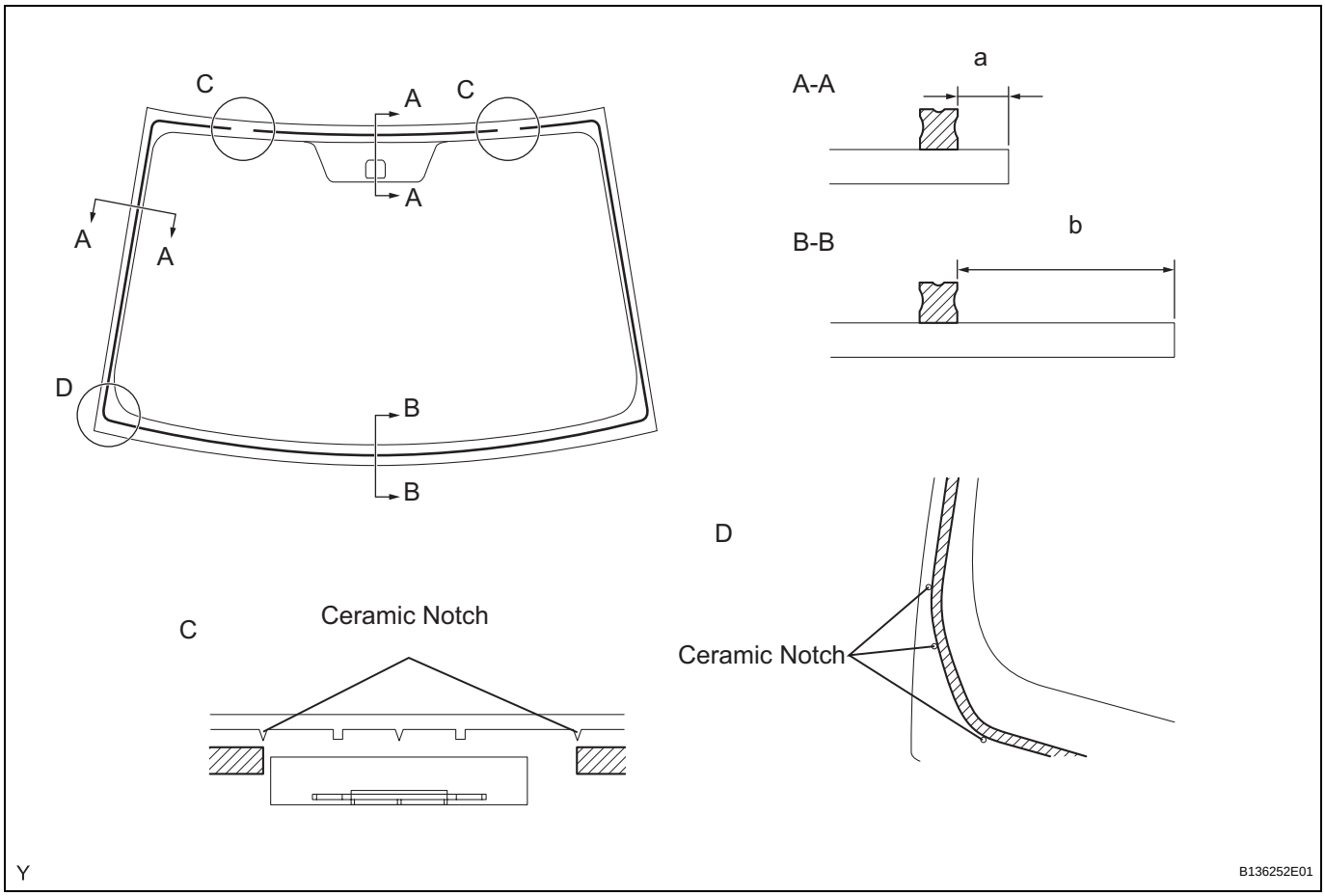

WS

Specification

Area	Measurement
a	7.0 mm (0.276 in.)
b	29.4 mm (1.157 in.)

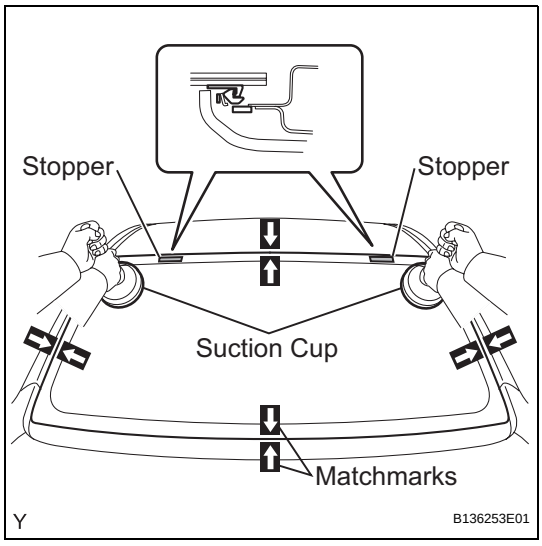

6. INSTALL WINDSHIELD GLASS

(a) Position the windshield glass.

(1) Using suction cups, place the windshield glass in the correct position.

(2) Check that the entire contact surface of the windshield glass rim is perfectly even.

(3) Place matchmarks on the windshield glass and vehicle body.

NOTICE:

Check that the stoppers are correctly attached to the vehicle body.

HINT:

When reusing a windshield glass, check and correct the matchmark positions.

(4) Using suction cups, remove the windshield glass.

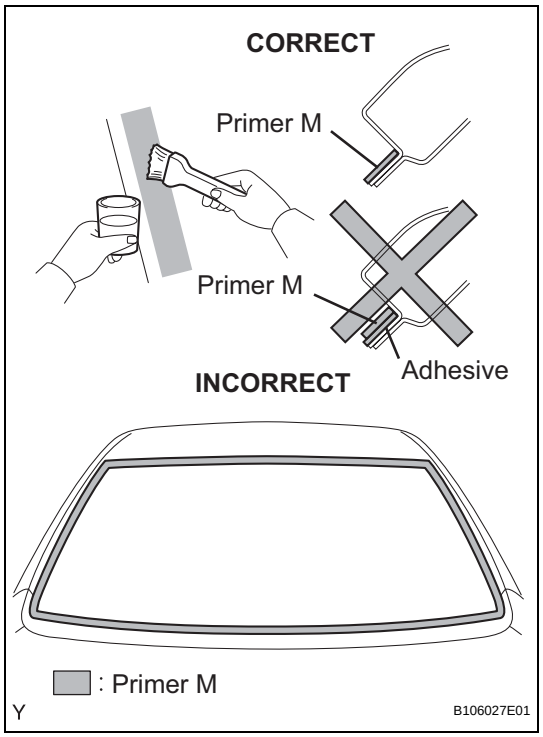

(b) Using a brush, apply Primer M to the exposed part of the vehicle body.
NOTICE:
- **Allow the primer to dry for 3 minutes or more.**
- **Do not apply Primer M to the adhesive.**
- **Throw away any leftover Primer M.**
- **Do not apply too much Primer M.**

(c) Using a brush or sponge, apply Primer G to the edge of the windshield glass and the contact surface.

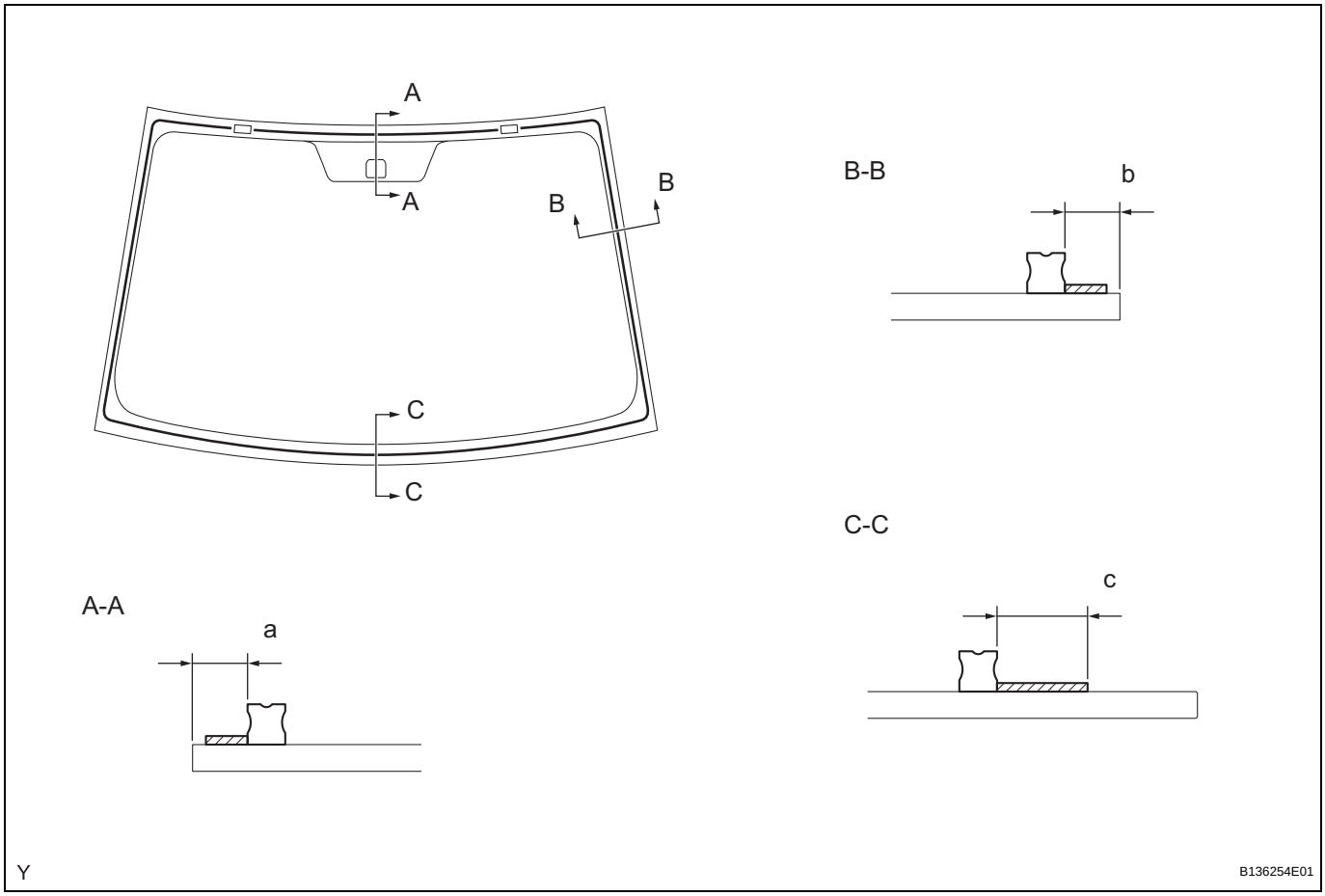

WS

Specification

Area	Measurement
a	7.0 mm (0.276 in.)
b	7.0 mm (0.276 in.)
c	16 mm (0.630 in.)

NOTICE:
- **Allow the primer to dry for 3 minutes or more.**
- **Throw away any leftover Primer G.**
- **Do not apply too much Primer G.**

HINT:
If Primer G is applied to any areas other than those specified, wipe off the primer with a clean shop rag or piece of cloth before it dries.

(d) Apply adhesive.

Adhesive:

Toyota Genuine Windshield Glass Adhesive or the equivalent.

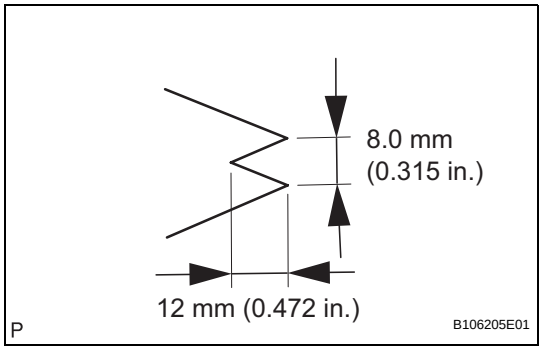

(1) Cut the tip off the cartridge nozzle, as shown in the illustration.
HINT:
After cutting off the tip, use all the adhesive within the times indicated in the table below.

Usage time frame

Temperature	Usage Time Frame
35°C (95°F)	15 minutes
20°C (68°F)	1 hour 40 minutes
5°C (41°F)	8 hours

(2) Load the sealer gun with the cartridge.

(3) Apply adhesive to the windshield glass, as shown in the illustration.

WS

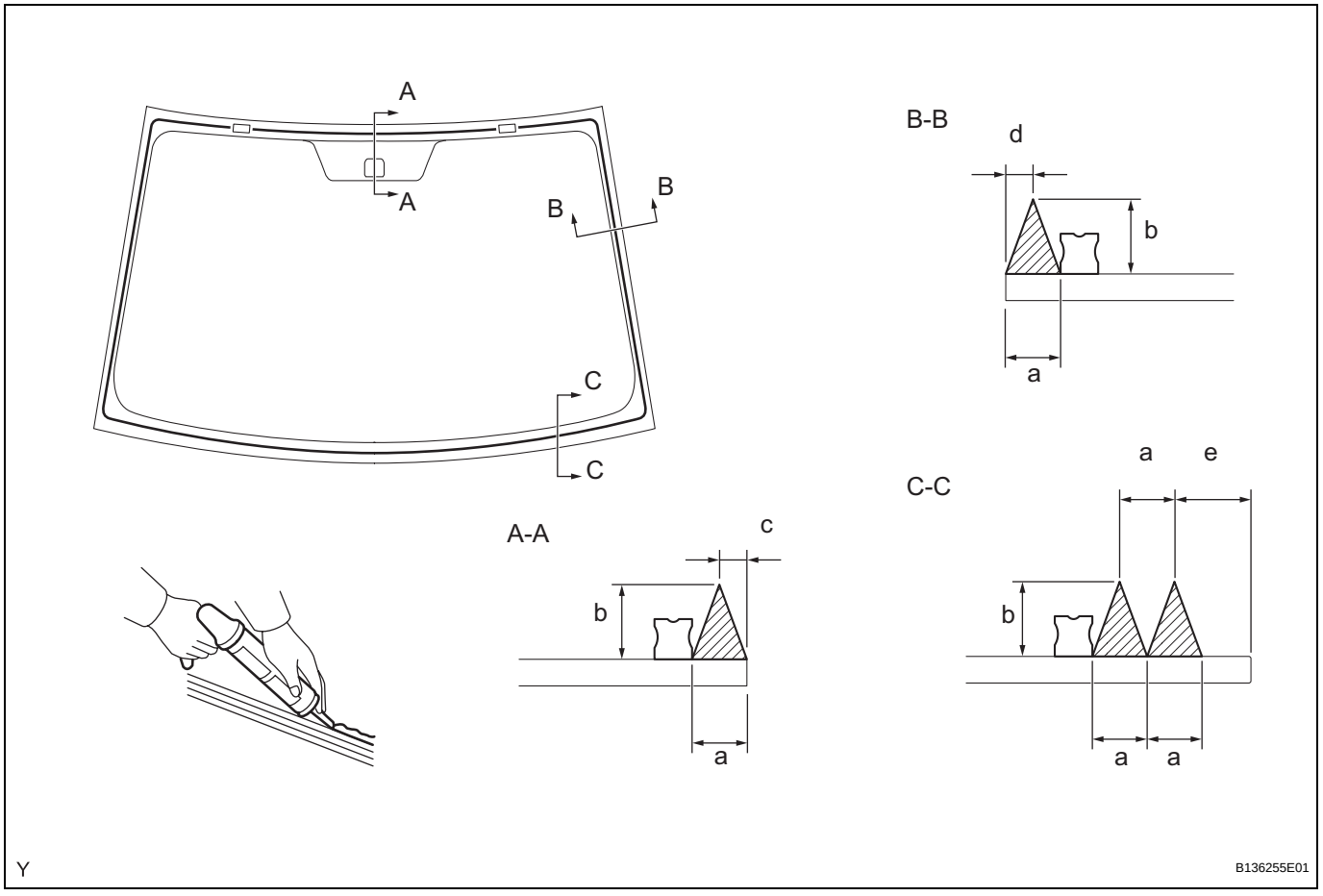

Specification

Area	Measurement
a	8 mm (0.315 in.)
b	12 mm (0.472 in.)
c	3 mm (0.118 in.)
d	3 mm (0.118 in.)
e	17.4 mm (0.685 in.)

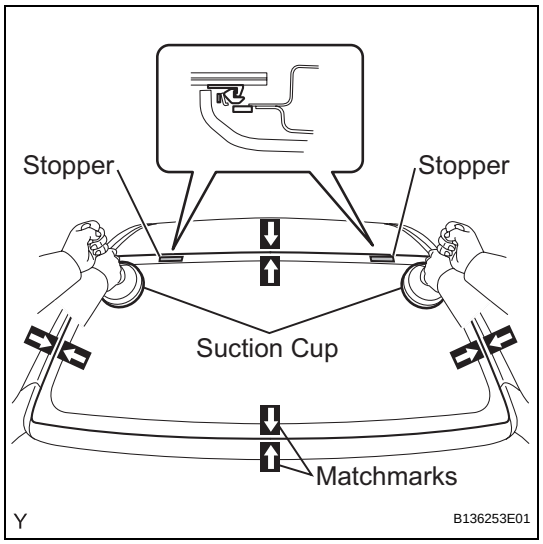

(e) Install the windshield glass onto the vehicle body.

(1) Using suction cups, position the windshield glass so that the matchmarks are aligned. Gently press it in along the rim.

NOTICE:

- **Allow the primer to dry for 3 minutes or more.**
- **Check that the stoppers are attached to the vehicle body correctly.**
- **Check that there is a small gap between the vehicle body and the windshield glass.**

(2) Gently press the front surface of the windshield glass to ensure that the windshield glass is securely fitted to the vehicle body.

NOTICE:

Open and close the door gently to prevent the window glass from becoming loose due to the air pressure when the door is closed.

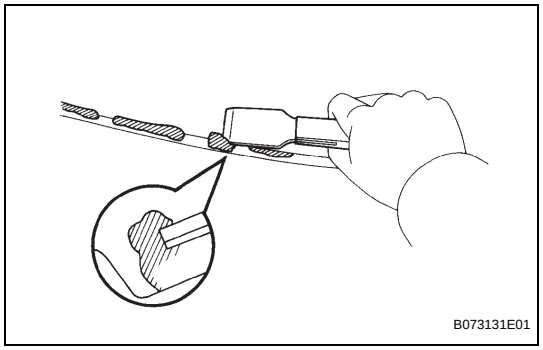

(3) Using a scraper, remove any excessive or protruding adhesive.

HINT:

Apply adhesive to the windshield glass rim.

NOTICE:

Do not drive the vehicle within the time indicated in the table below.

Minimum time

Temperature	Minimum time prior to driving vehicle
35°C (95°F)	1 hour 30 minutes
20°C (68°F)	5 hours
5°C (41°F)	24 hours

7. INSTALL WINDSHIELD OUTSIDE MOULDING

NOTICE:

After the installation of the window glass, install the moulding before the adhesive hardens.

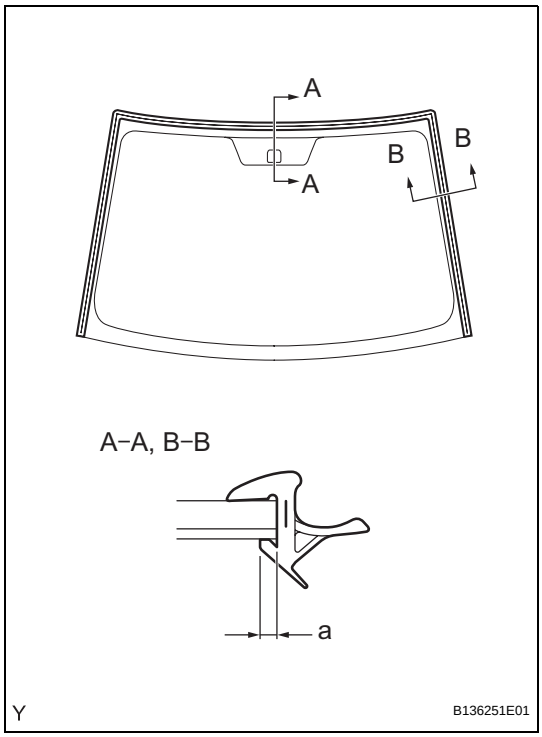

(a) Using a brush or sponge, coat the edge of the glass and the contact surface with Primer G.

NOTICE:

- **Allow the primer coating to dry for 3 minutes or more.**
- **Do not coat the adhesive with Primer G.**
- **Throw away any leftover Primer G.**

(b) Install a new moulding onto the windshield glass, as shown in the illustration.

Specification

Area	Measurement
a	2 mm (0.0787 in.)

NOTICE:
Make sure that the moulding is securely installed.

8. CHECK FOR LEAKAGE AND REPAIR

(a) Conduct a leak test by applying water to the adhesive portions after the adhesive has completely hardened.

(b) Seal any leaks with auto glass sealer.

9. INSTALL ROOF HEADLINING ASSEMBLY

10. INSTALL INNER REAR VIEW MIRROR (See page MI-6)

11. INSTALL MAP LIGHT ASSEMBLY (See page LI-148)

12. INSTALL ROOM LIGHT ASSEMBLY (See page LI-151)

13. INSTALL VISOR HOLDER RH (See page IR-28)

14. INSTALL VISOR HOLDER LH (See page IR-28)

15. INSTALL VISOR ASSEMBLY RH (See page IR-28)

16. INSTALL VISOR ASSEMBLY LH (See page IR-28)

17. INSTALL ASSIST GRIP SUB-ASSEMBLY (See page IR-28)

18. INSTALL ASSIST GRIP COVER (See page IR-29)

19. INSTALL FRONT PILLAR GARNISH RH (See page IR-29)

20. INSTALL FRONT PILLAR GARNISH LH (See page IR-30)

21. INSTALL FRONT DOOR OPENING TRIM WEATHERSTRIP RH (See page IR-34)

22. INSTALL FRONT DOOR OPENING TRIM WEATHERSTRIP LH (See page IR-33)

23. INSTALL COWL SIDE TRIM BOARD RH (See page IR-34)

24. INSTALL COWL SIDE TRIM BOARD LH (See page IR-34)

25. **INSTALL INSTRUMENT PANEL UNDER COVER SUB-ASSEMBLY RH (See page IR-35)**
26. **INSTALL INSTRUMENT PANEL UNDER COVER SUB-ASSEMBLY LH (See page IR-35)**
27. **INSTALL FRONT DOOR SCUFF PLATE RH (See page IR-35)**
28. **INSTALL FRONT DOOR SCUFF PLATE LH (See page IR-35)**
29. **INSTALL COWL TOP VENTILATOR LOUVER SUB-ASSEMBLY (See page WW-12)**
30. **INSTALL COWL SIDE VENTILATOR SUB-ASSEMBLY LH (See page WW-13)**
31. **INSTALL COWL SIDE VENTILATOR SUB-ASSEMBLY RH (See page WW-13)**
32. **INSTALL FRONT WIPER ARM AND BLADE ASSEMBLY LH (See page WW-13)**
33. **INSTALL FRONT WIPER ARM AND BLADE ASSEMBLY RH (See page WW-14)**
34. **INSTALL FRONT WIPER ARM HEAD CAP (See page WW-15)**
35. **CONNECT CABLE TO NEGATIVE BATTERY TERMINAL**
    Torque: 5.4 N*m (55 kgf*cm, 48 in.*lbf)
36. **INSPECT SRS WARNING LIGHT**
    (See page RS-31)

WINDSHIELD GLASS (for Hatchback)

COMPONENTS

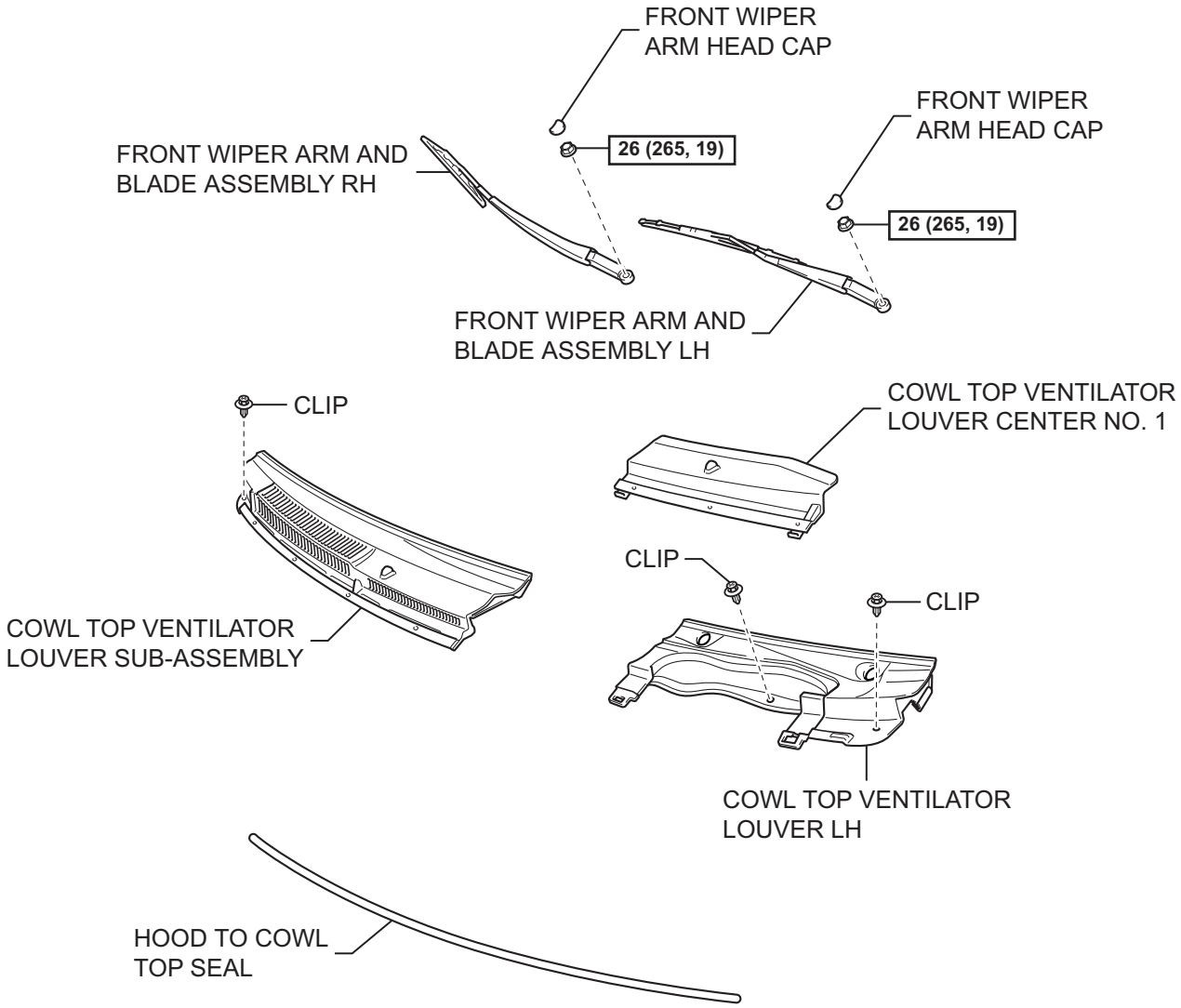

WS

N*m (kgf*cm, ft*lbf) : Specified torque

Y

B121548E01

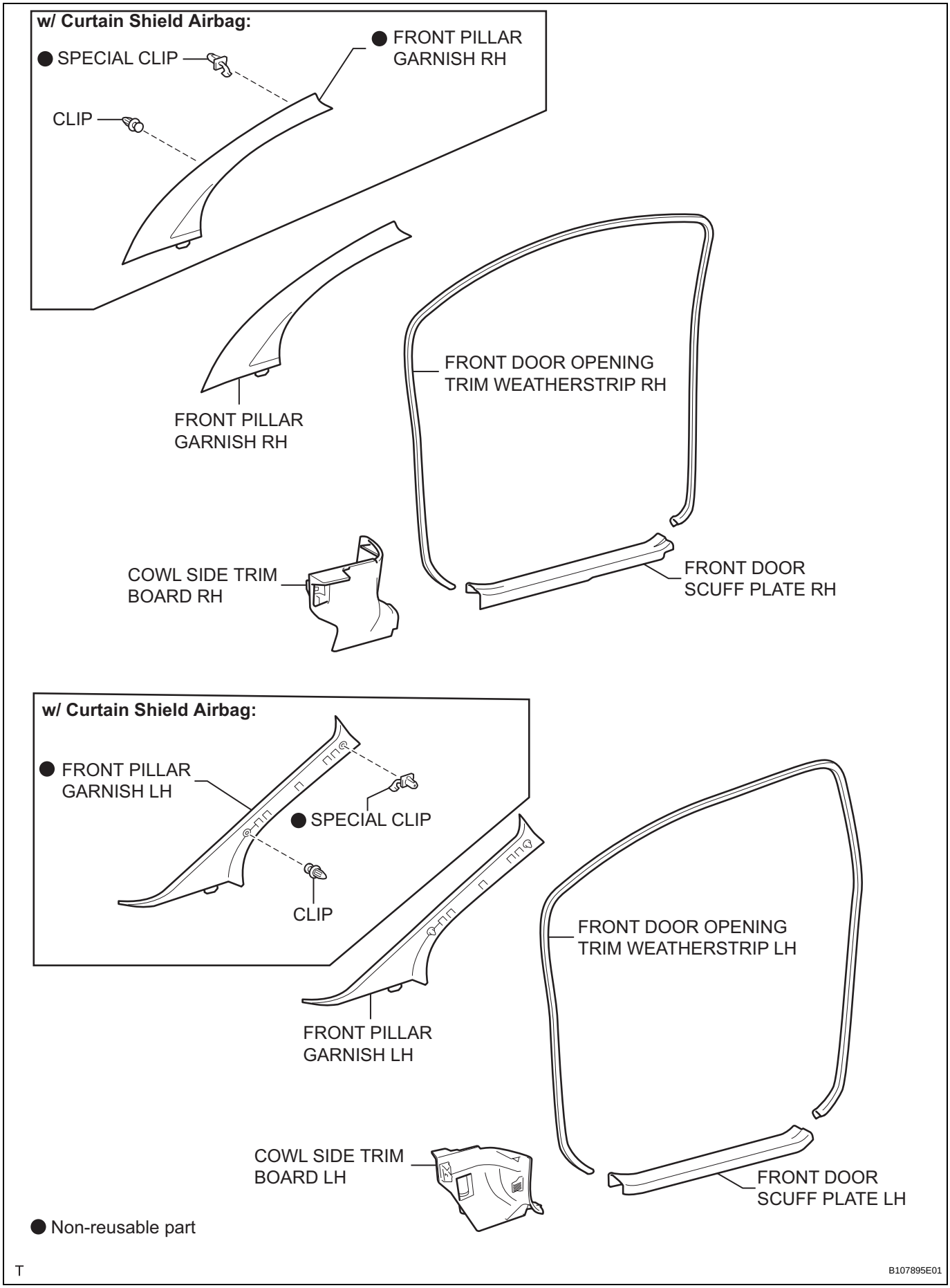
w/ Curtain Shield Airbag:
● SPECIAL CLIP
CLIP
● FRONT PILLAR GARNISH RH
FRONT PILLAR GARNISH RH
FRONT DOOR OPENING TRIM WEATHERSTRIP RH
COWL SIDE TRIM BOARD RH
FRONT DOOR SCUFF PLATE RH
w/ Curtain Shield Airbag:
● FRONT PILLAR GARNISH LH
● SPECIAL CLIP
CLIP
FRONT PILLAR GARNISH LH
FRONT DOOR OPENING TRIM WEATHERSTRIP LH
COWL SIDE TRIM BOARD LH
FRONT DOOR SCUFF PLATE LH
● Non-reusable part
T
B107895E01

WS

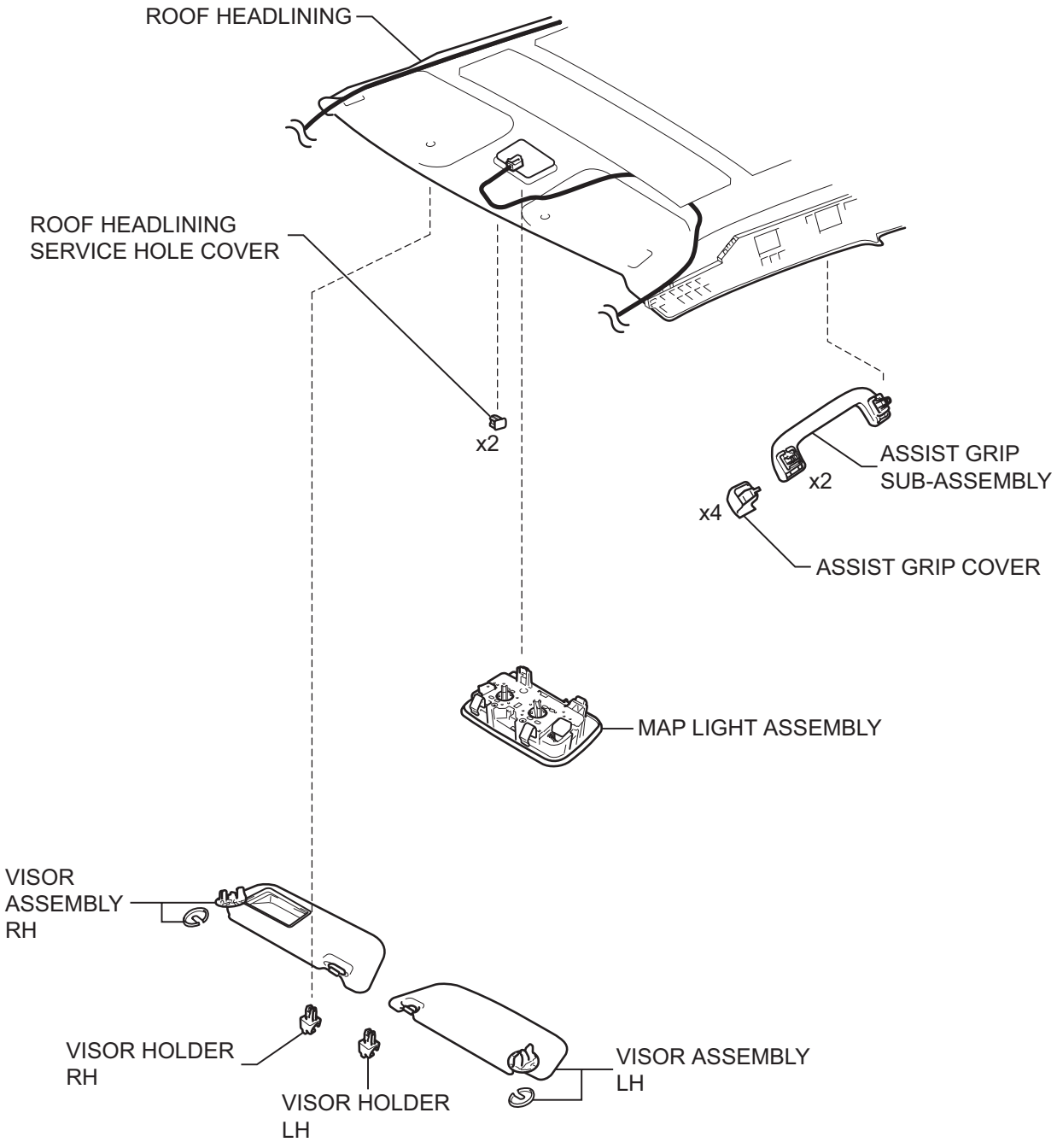

WS

T

B121546E01

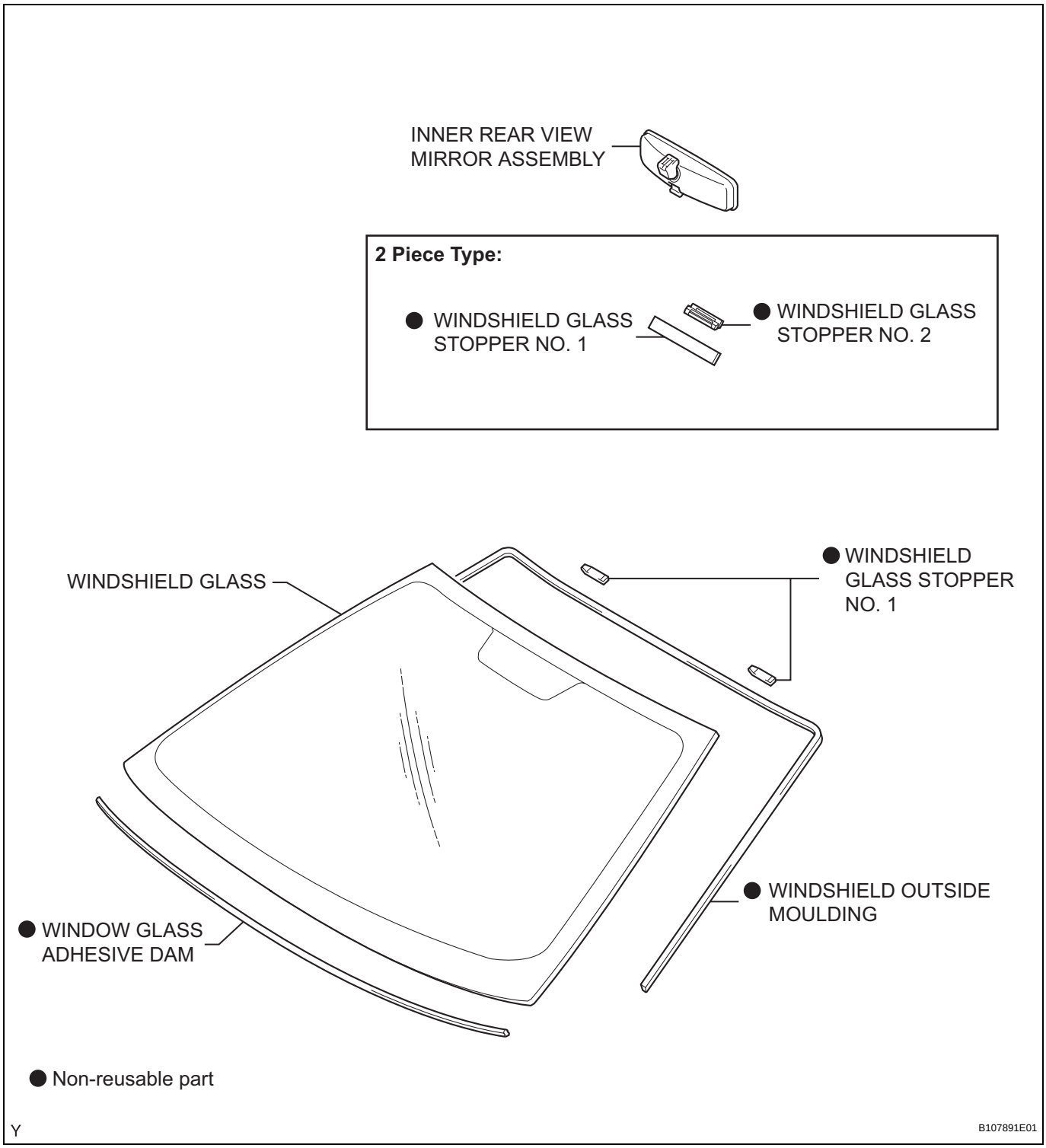
INNER REAR VIEW MIRROR ASSEMBLY
2 Piece Type:
● WINDSHIELD GLASS STOPPER NO. 1
● WINDSHIELD GLASS STOPPER NO. 2
WINDSHIELD GLASS
● WINDSHIELD GLASS STOPPER NO. 1
● WINDOW GLASS ADHESIVE DAM
● WINDSHIELD OUTSIDE MOULDING
● Non-reusable part
Y
B107891E01

WS

REMOVAL

CAUTION:
Some of these service operations affect the SRS airbag system. Read the precautionary notices concerning the SRS airbag system before servicing (see page RS-1).
NOTICE:
Always use "Torx" socket wrench E10 when removing the rear seat.

1. **DISCONNECT CABLE FROM NEGATIVE BATTERY TERMINAL**
   Wait for at least 90 seconds after disconnecting the cable to prevent the airbag from working.
2. **REMOVE FRONT WIPER ARM HEAD CAP (See page WW-17)**
3. **REMOVE FRONT WIPER ARM AND BLADE ASSEMBLY LH (See page WW-17)**
4. **REMOVE FRONT WIPER ARM AND BLADE ASSEMBLY RH (See page WW-17)**
5. **REMOVE HOOD TO COWL TOP SEAL (See page WW-18)**
6. **REMOVE COWL TOP VENTILATOR LOUVER SUB-ASSEMBLY (See page WW-18)**
7. **REMOVE COWL TOP VENTILATOR LOUVER LH (See page WW-18)**
8. **REMOVE FRONT DOOR SCUFF PLATE RH (See page IR-49)**
9. **REMOVE FRONT DOOR SCUFF PLATE LH (See page IR-49)**
10. **REMOVE COWL SIDE TRIM BOARD RH (See page IR-50)**
11. **REMOVE COWL SIDE TRIM BOARD LH (See page IR-50)**
12. **REMOVE FRONT DOOR OPENING TRIM WEATHERSTRIP RH (See page IR-50)**
13. **REMOVE FRONT DOOR OPENING TRIM WEATHERSTRIP LH (See page IR-50)**
14. **REMOVE ROOF HEADLINING SERVICE HOLE COVER (w/o Curtain Shield Airbag) (See page IR-55)**
15. **REMOVE ASSIST GRIP SUB-ASSEMBLY (See page IR-56)**
16. **REMOVE VISOR ASSEMBLY RH (See page IR-56)**
17. **REMOVE VISOR ASSEMBLY LH (See page IR-56)**
18. **REMOVE VISOR HOLDER RH (See page IR-56)**
19. **REMOVE VISOR HOLDER LH (See page IR-56)**
20. **REMOVE MAP LIGHT ASSEMBLY (See page LI-147)**

21. REMOVE FRONT PILLAR GARNISH RH (See page IR-58)

22. REMOVE FRONT PILLAR GARNISH LH (See page IR-59)

23. REMOVE ROOF HEADLINING

HINT:
It is not necessary to remove the roof headlining completely. Slightly lower the front section of the roof headlining.

24. REMOVE INNER REAR VIEW MIRROR ASSEMBLY (See page MI-5)

25. REMOVE WINDSHIELD OUTSIDE MOULDING

(a) Using a knife, cut off the windshield outside moulding, as shown in the illustration.
NOTICE:
Do not damage the vehicle body with the knife.

(b) Remove the windshield outside moulding.
HINT:
Make a partial cut in the windshield outside moulding. Then pull and remove it by hand.

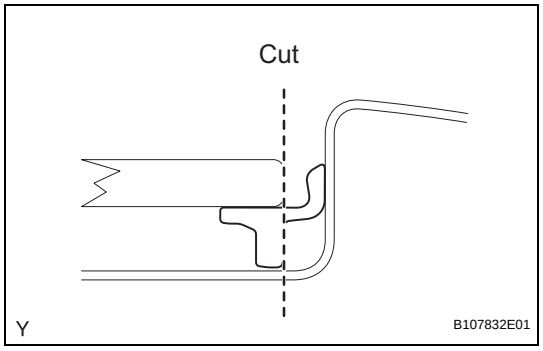

26. REMOVE WINDSHIELD GLASS

(a) Apply protective tape to the outer circumference of the windshield glass, as shown in the illustration.

(b) From the interior, insert piano wires between the vehicle body and the windshield glass, as shown in the illustration.

(c) Tie objects that can serve as handles (for example, wooden blocks) to all wire ends.
NOTICE:
- **When separating the windshield glass from the vehicle, do not damage the vehicle's paintwork or exterior/interior ornaments.**
- **To prevent the safety pad from being scratched when removing the windshield glass, place a plastic sheet between the piano wire and safety pad.**

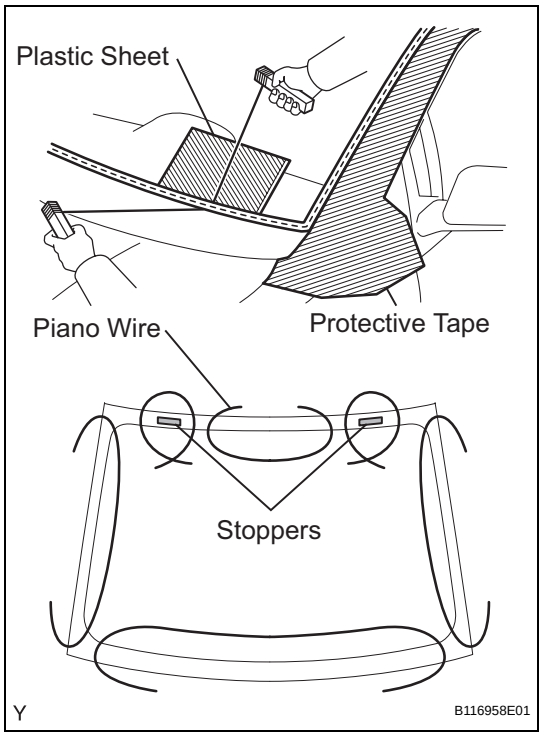

WS

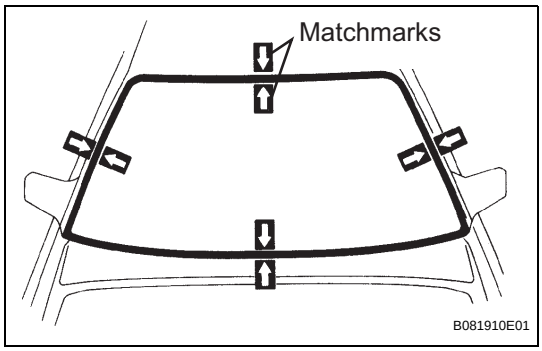

(d) Place matchmarks on the windshield glass and vehicle body in the locations indicated in the illustration.
HINT:
Matchmarks do not need to be placed unless the windshield glass is going to be reused.

(e) Cut through the adhesive by pulling the piano wire around the windshield glass.

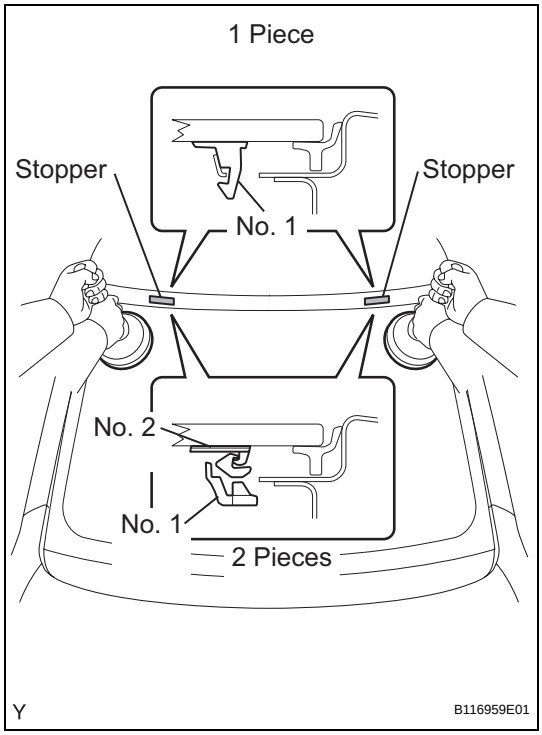

(f) Disengage the 2 stoppers.

(g) Using suction cups, remove the windshield glass.
NOTICE:
Leave as much adhesive on the vehicle body as possible when removing the windshield glass.

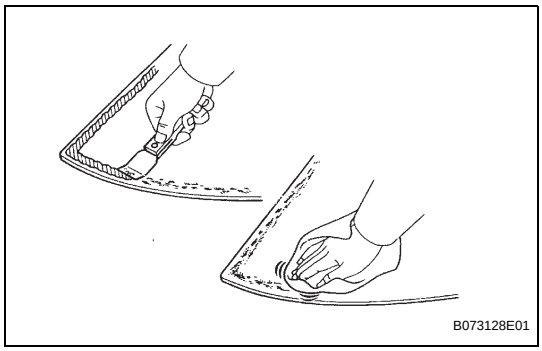

INSTALLATION

1. CLEAN WINDSHIELD GLASS

(a) Using a scraper, remove the damaged stoppers, dam and adhesive from the windshield glass.

(b) Clean the outer circumference of the windshield glass with a non-residue solvent.
NOTICE:
- **Do not touch the windshield glass surface after cleaning it.**
- **Even if using a new windshield glass, clean the windshield glass with a non-residue solvent.**

WS

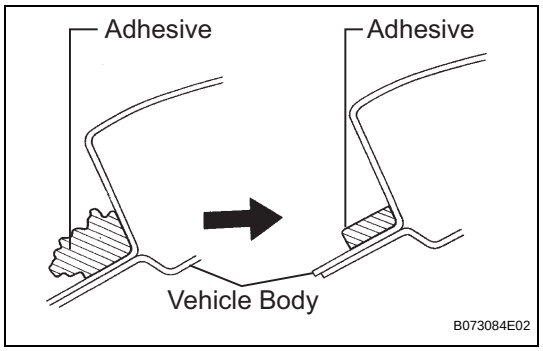

2. CLEAN VEHICLE BODY

(a) Clean and shape the contact surface of the vehicle body.

(1) Using a knife, cut away any rough adhesive on the contact surface of the vehicle body to ensure the appropriate surface shape.

NOTICE:

Do not damage the vehicle body.

HINT:

Leave as much adhesive on the vehicle body as possible.

(2) Clean the contact surface of the vehicle body with a shop rag or piece of cloth saturated with cleaner.

HINT:

Clean the vehicle body even if all the adhesive has been removed.

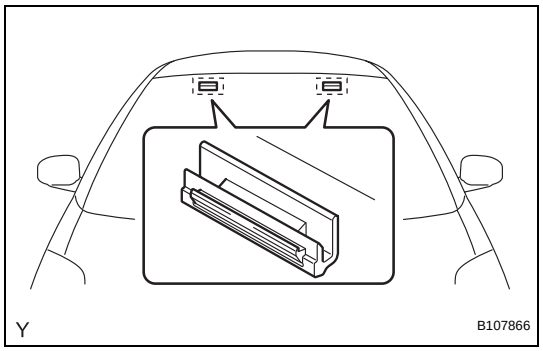

3. INSTALL WINDSHIELD GLASS STOPPER NO. 1

(a) Install 2 new stoppers onto the vehicle body, as shown in the illustration.

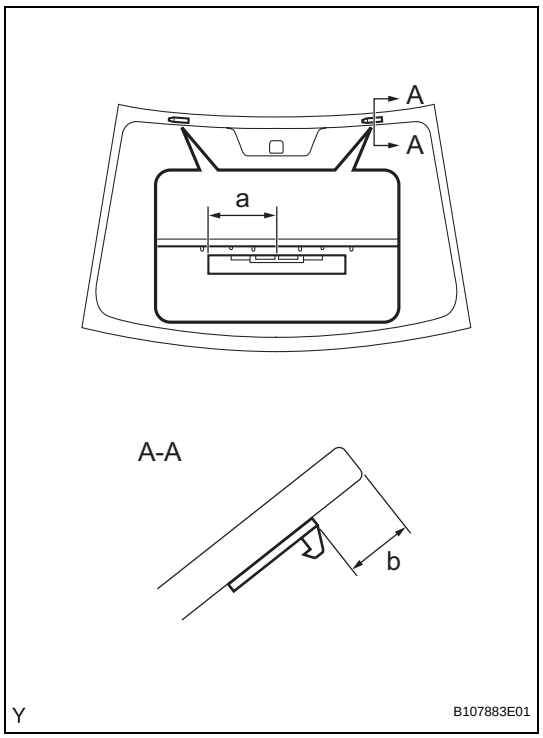

4. INSTALL WINDSHIELD GLASS STOPPER NO. 2

(a) Apply Primer G to the installation parts of the stoppers.

NOTICE:

- **Allow the primer to dry for 3 minutes or more.**
- **Throw away any leftover Primer G.**
- **Do not apply too much Primer G.**

(b) Install 2 new stoppers onto the windshield glass, as shown in the illustration.

Specification

Area	Measurement
a	40 mm (1.57 in.)
b	14.5 mm (0.571 in.)

WS

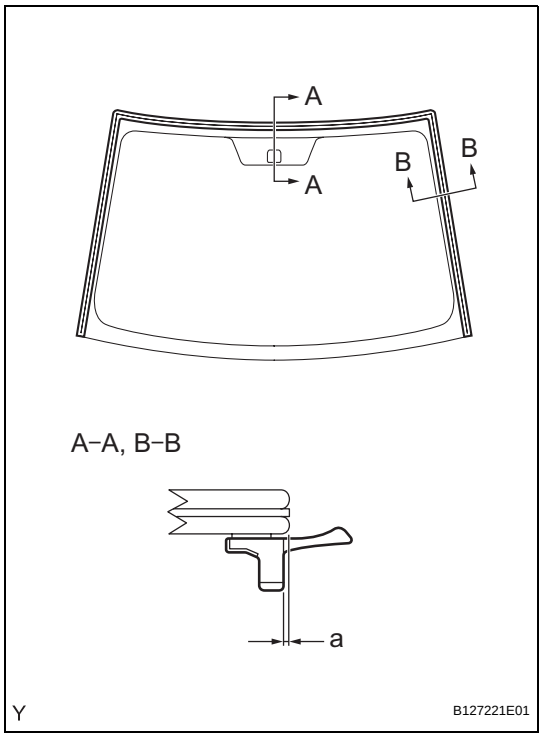

5. INSTALL WINDSHIELD OUTSIDE MOULDING

(a) Using a brush or sponge, coat the edge of the glass and the contact surface with Primer G.

NOTICE:

- **Allow the primer coating to dry for 3 minutes or more.**
- **Do not coat the adhesive with Primer G.**
- **Throw away any leftover Primer G.**

(b) Install the moulding onto the windshield glass, as shown in the illustration.

Specification

Area	Measurement
a	0.1 mm (0.004 in.)

6. INSTALL WINDOW GLASS ADHESIVE DAM

(a) Apply Primer G to the installation part of a new dam, as shown in the illustration.

NOTICE:

- **Allow the primer to dry for 3 minutes or more.**
- **Throw away any leftover Primer G.**
- **Do not apply too much Primer G.**

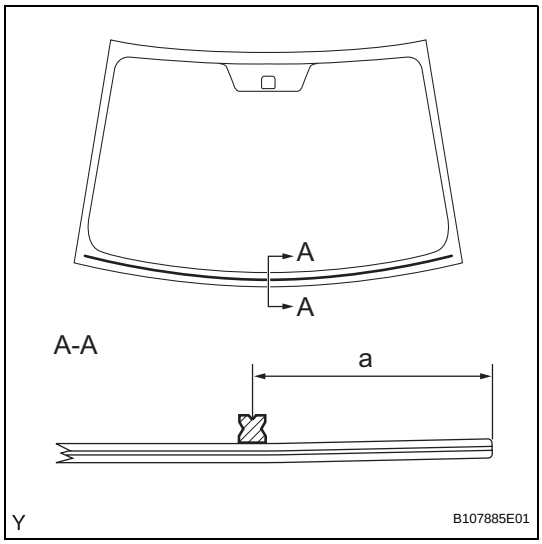

(b) Install the new dam with double-sided tape as shown in the illustration.

Specification

Area	Measurement
a	32 mm (1.26 in.)

WS

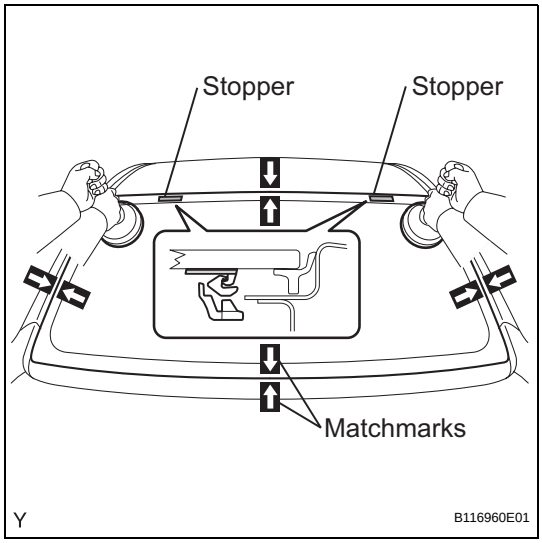

7. INSTALL WINDSHIELD GLASS

(a) Position the windshield glass.

(1) Using suction cups, place the windshield glass in the correct position.

(2) Check that the entire contact surface of the windshield glass rim is perfectly even.

(3) Place matchmarks on the windshield glass and vehicle body.

NOTICE:

Check that the stoppers are correctly attached to the vehicle body.

HINT:

When reusing a windshield glass, check and correct the matchmark positions.

(4) Using suction cups, remove the windshield glass.

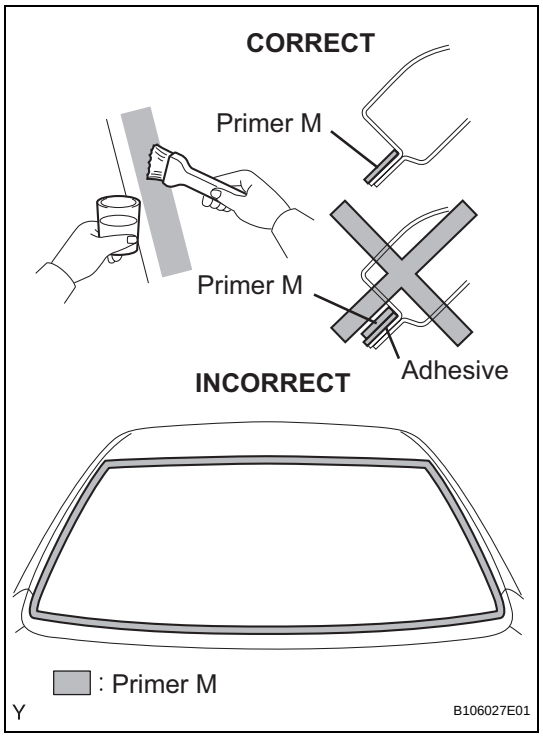

(b) Using a brush, apply Primer M to the exposed part of the vehicle body.

NOTICE:

- **Allow the primer to dry for 3 minutes or more.**
- **Do not apply Primer M to the adhesive.**
- **Throw away any leftover Primer M.**
- **Do not apply too much Primer M.**

(c) Using a brush or sponge, apply Primer G to the edge of the windshield glass and the contact surface.

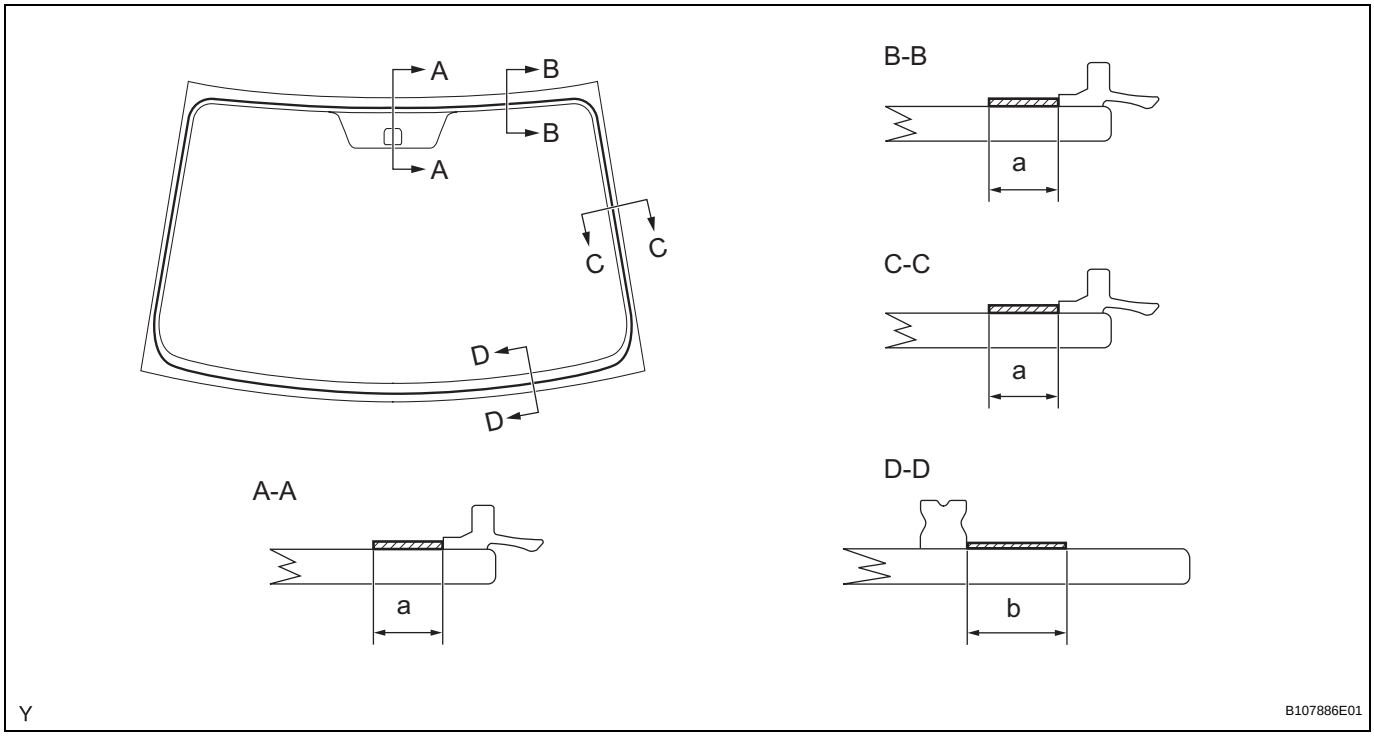

Specification

Area	Measurement
a	8.0 mm (0.315 in.)
b	19 mm (0.748 in.)

NOTICE:

- **Allow the primer to dry for 3 minutes or more.**
- **Throw away any leftover Primer G.**
- **Do not apply too much Primer G.**

WS

HINT:
If Primer G is applied to any areas other than those specified, wipe off the primer with a clean shop rag or piece of cloth before it dries.

(d) Apply adhesive.
Adhesive:
Part No. 08850-00801 or the equivalent

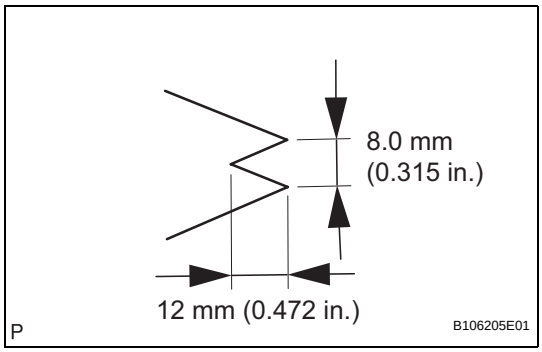

(1) Cut the tip off the cartridge nozzle, as shown in the illustration.
HINT:
After cutting off the tip, use all adhesive within the times indicated in the table below.
Usage Time Frame

Temperature	Usage Time Frame
35°C (95°F)	15 minutes
20°C (68°F)	1 hour 40 minutes
5°C (41°F)	8 hours

(2) Load the sealer gun with the cartridge.
(3) Apply adhesive to the windshield glass, as shown in the illustration.

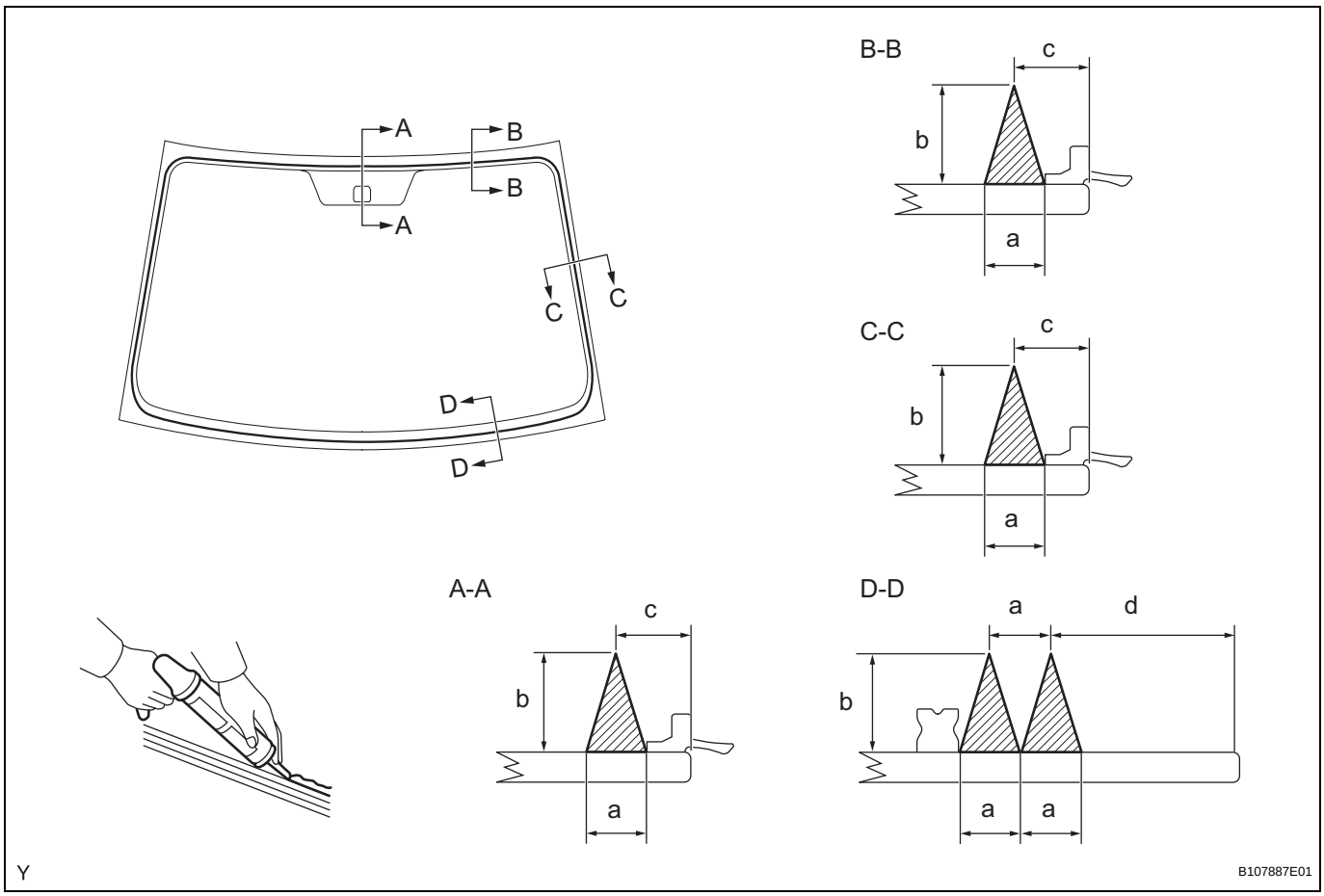

WS

Specification

Area	Measurement
a	8 mm (0.315 in.)
b	12 mm (0.472 in.)
c	10 mm (0.394 in.)

Area	Measurement
d	17.5 mm (0.689 in.)

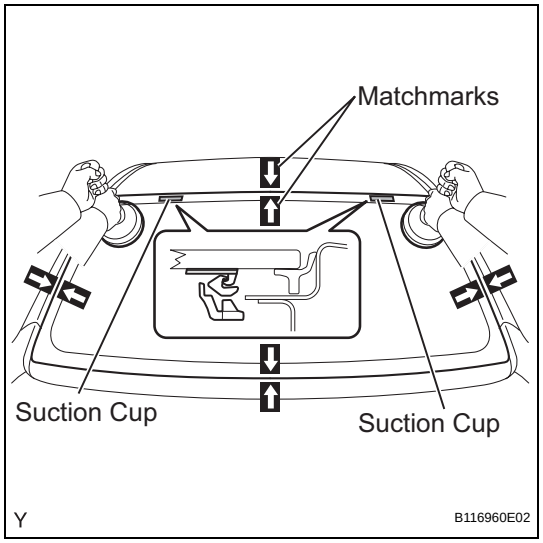

(e) Install the windshield glass onto the vehicle body.
(1) Using suction cups, position the windshield glass so that the matchmarks are aligned. Gently press it in along the rim.
NOTICE:
- **Allow the primer to dry for 3 minutes or more.**
- **Check that the stoppers are attached to the vehicle body correctly.**
- **Check that there is a small gap between the vehicle body and the windshield glass.**

(2) Gently press the front surface of the windshield glass to ensure that the windshield glass is securely fitted to the vehicle body.

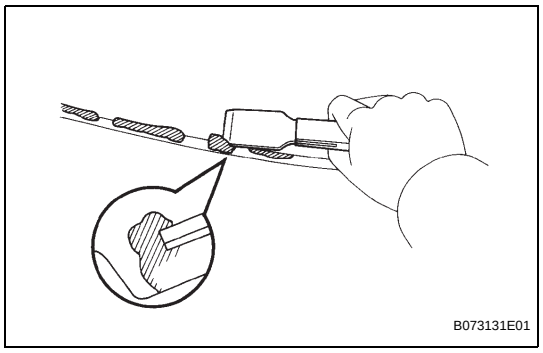

(3) Using a scraper, remove any excessive or protruding adhesive.
HINT:
Apply adhesive to the windshield glass rim.
NOTICE:
Do not to drive the vehicle within the time indicated in the table below.
Minimum Time

Temperature	Minimum time prior to driving vehicle
35°C (95°F)	1 hour 30 minutes
20°C (68°F)	5 hours
5°C (41°F)	24 hours

8. CHECK FOR LEAKAGE AND REPAIR
(a) Conduct a leak test after the adhesive has completely hardened.
(b) Seal any leaks with auto glass sealer.

9. INSTALL INNER REAR VIEW MIRROR ASSEMBLY (See page MI-6)

10. INSTALL ROOF HEADLINING

11. INSTALL FRONT PILLAR GARNISH RH (See page IR-71)

12. INSTALL FRONT PILLAR GARNISH LH (See page IR-72)

13. INSTALL MAP LIGHT ASSEMBLY (See page LI-148)

14. INSTALL VISOR HOLDER RH (See page IR-75)

15. INSTALL VISOR HOLDER LH (See page IR-75)

16. INSTALL VISOR ASSEMBLY RH (See page IR-75)

17. INSTALL VISOR ASSEMBLY LH (See page IR-75)

18. **INSTALL ASSIST GRIP SUB-ASSEMBLY (See page IR-75)**
19. **INSTALL ROOF HEADLINING SERVICE HOLE COVER (w/o Curtain Shield Airbag) (See page IR-76)**
20. **INSTALL FRONT DOOR OPENING TRIM WEATHERSTRIP RH (See page IR-81)**
21. **INSTALL FRONT DOOR OPENING TRIM WEATHERSTRIP LH (See page IR-81)**
22. **INSTALL COWL SIDE TRIM BOARD RH (See page IR-81)**
23. **INSTALL COWL SIDE TRIM BOARD LH (See page IR-81)**
24. **INSTALL FRONT DOOR SCUFF PLATE RH (See page IR-82)**
25. **INSTALL FRONT DOOR SCUFF PLATE LH (See page IR-82)**
26. **INSTALL COWL TOP VENTILATOR LOUVER LH (See page WW-21)**
27. **INSTALL COWL TOP VENTILATOR LOUVER SUB-ASSEMBLY (See page WW-21)**
28. **INSTALL HOOD TO COWL TOP SEAL (See page WW-22)**
29. **INSTALL FRONT WIPER ARM AND BLADE ASSEMBLY LH (See page WW-22)**
30. **INSTALL FRONT WIPER ARM AND BLADE ASSEMBLY RH (See page WW-23)**
31. **INSTALL FRONT WIPER ARM HEAD CAP (See page WW-23)**
32. **CONNECT CABLE TO NEGATIVE BATTERY TERMINAL**
    Torque: 5.4 N*m (55 kgf*cm, 48 in.*lbf)
33. **INSPECT SRS WARNING LIGHT**
    (See page RS-31).

BACK WINDOW GLASS (for Sedan)

COMPONENTS

for 60/40 Split Seat Type:

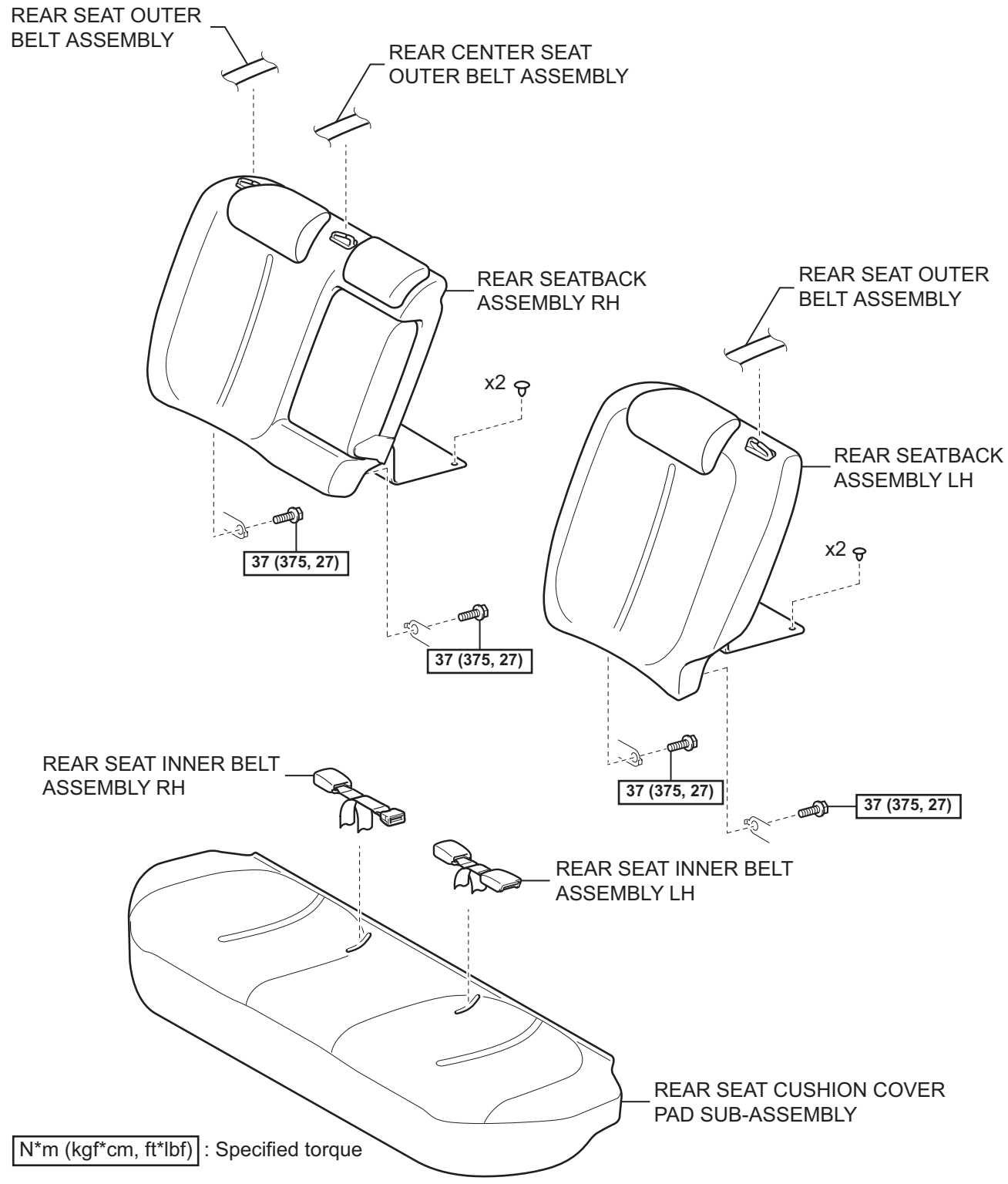

WS

for Fixed Seat Type:

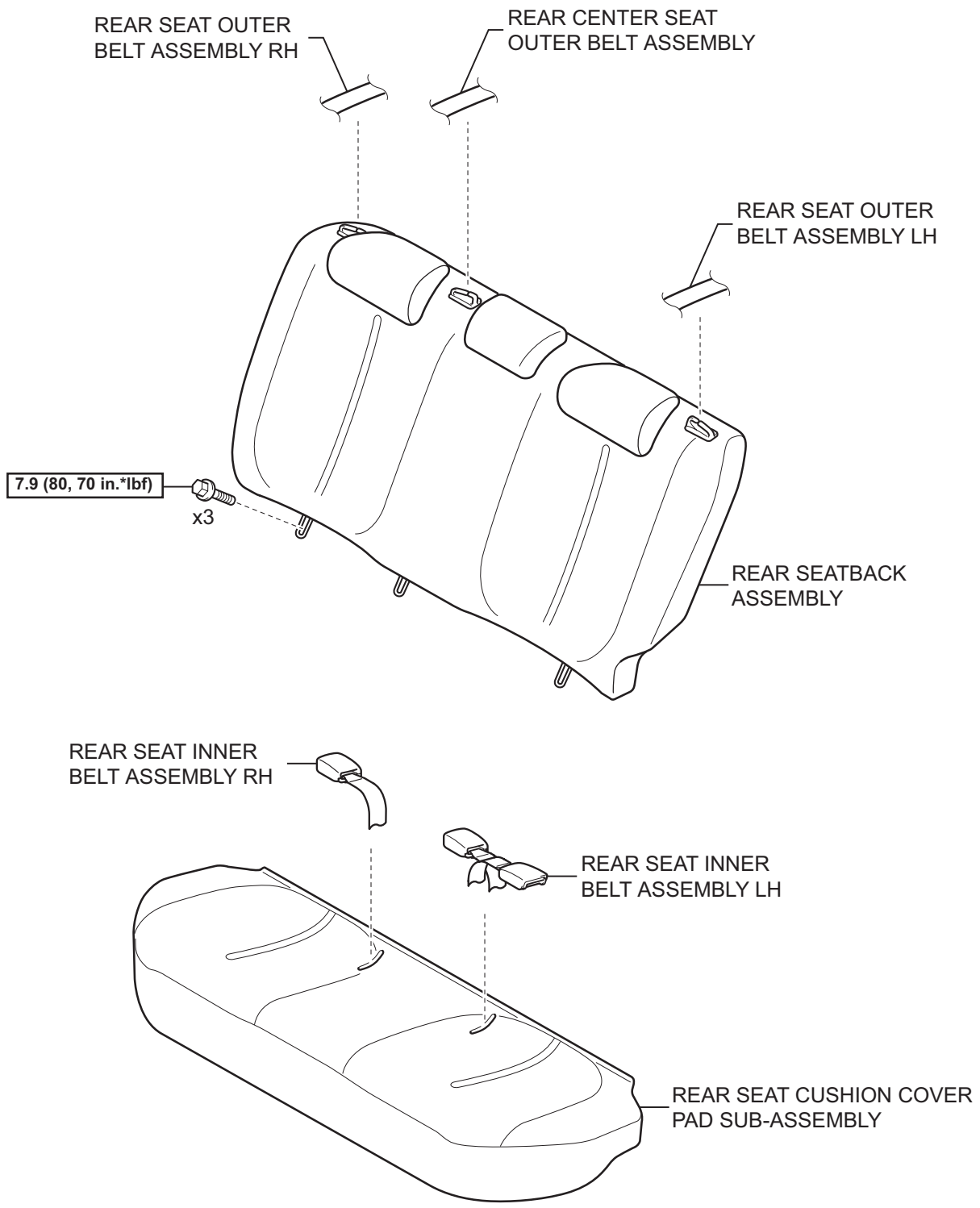

N*m (kgf*cm, ft*lbf) : Specified torque

T

B138441E06

WS

for 60/40 Split Seat Type:

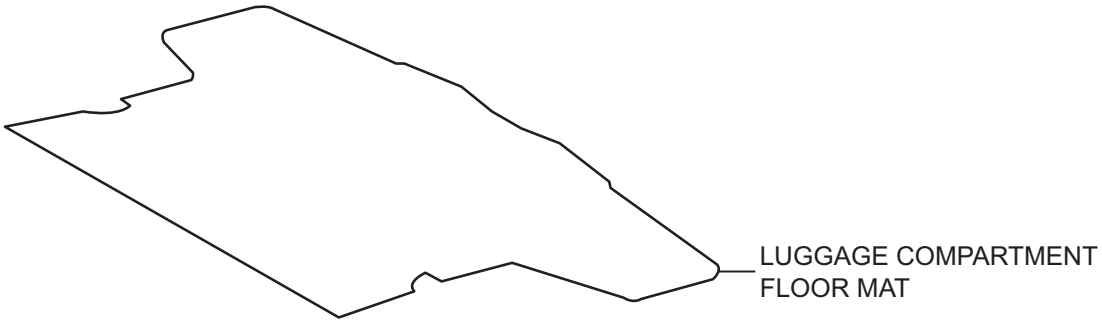

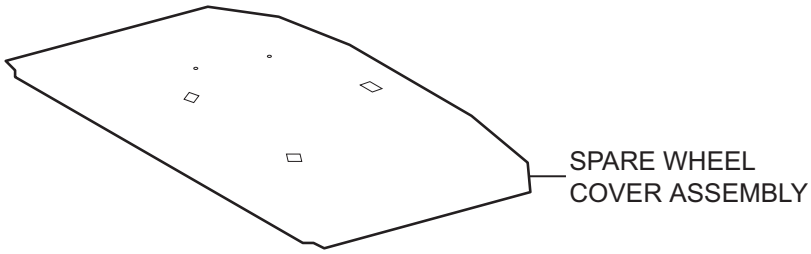

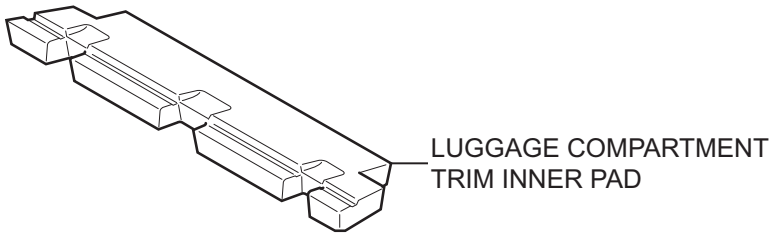

for Grand Tire:

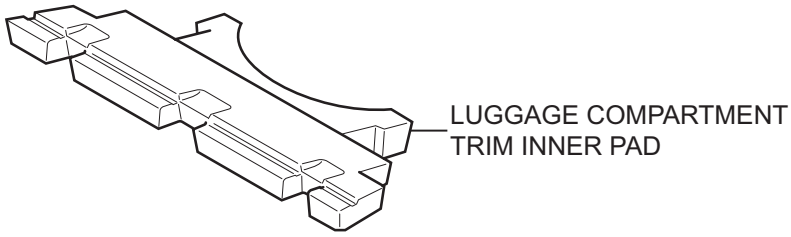

T

B138565E01

WS

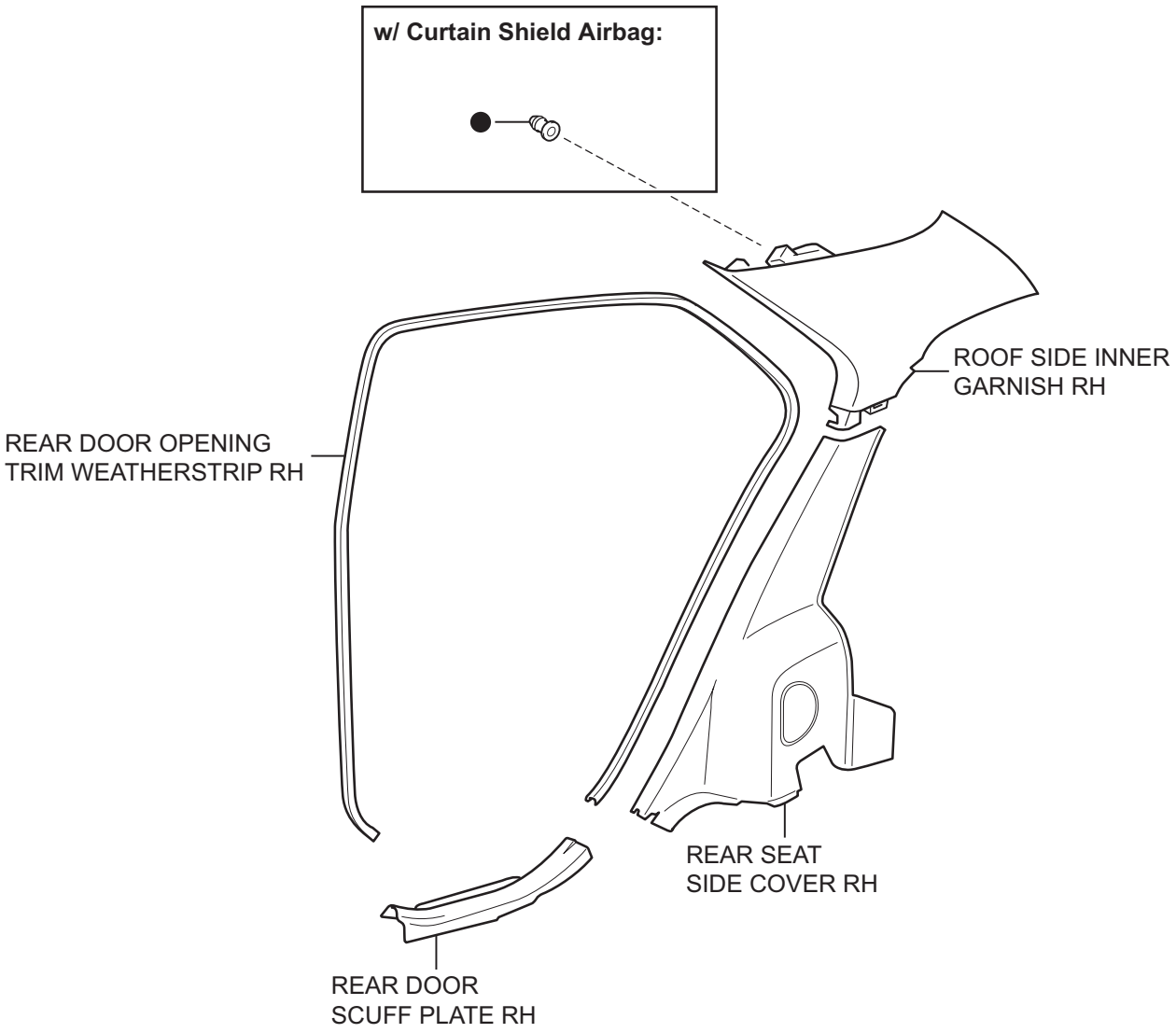

WS

● Non-reusable part

T

B134769E01

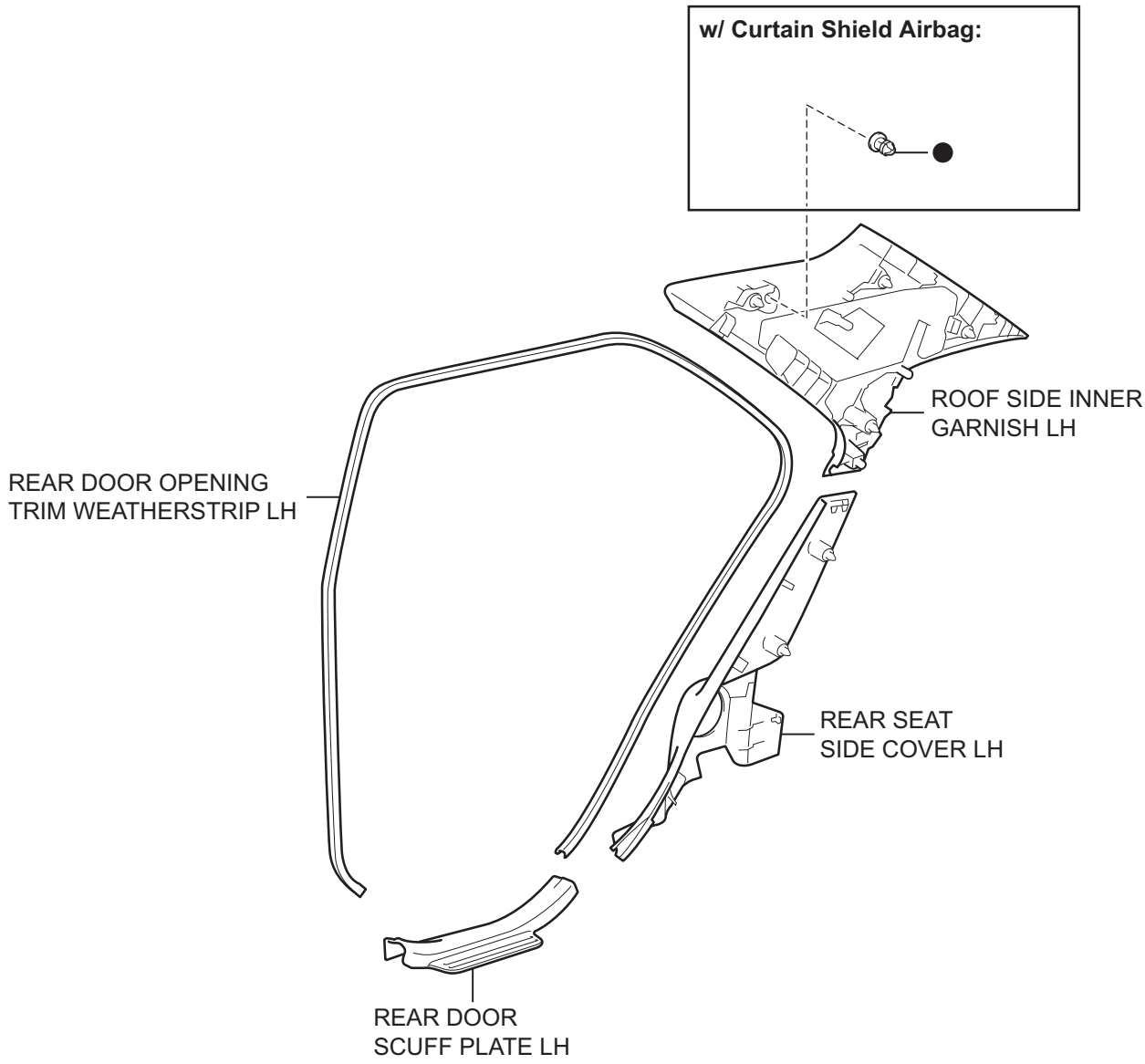

● Non-reusable part

T

B134770E01

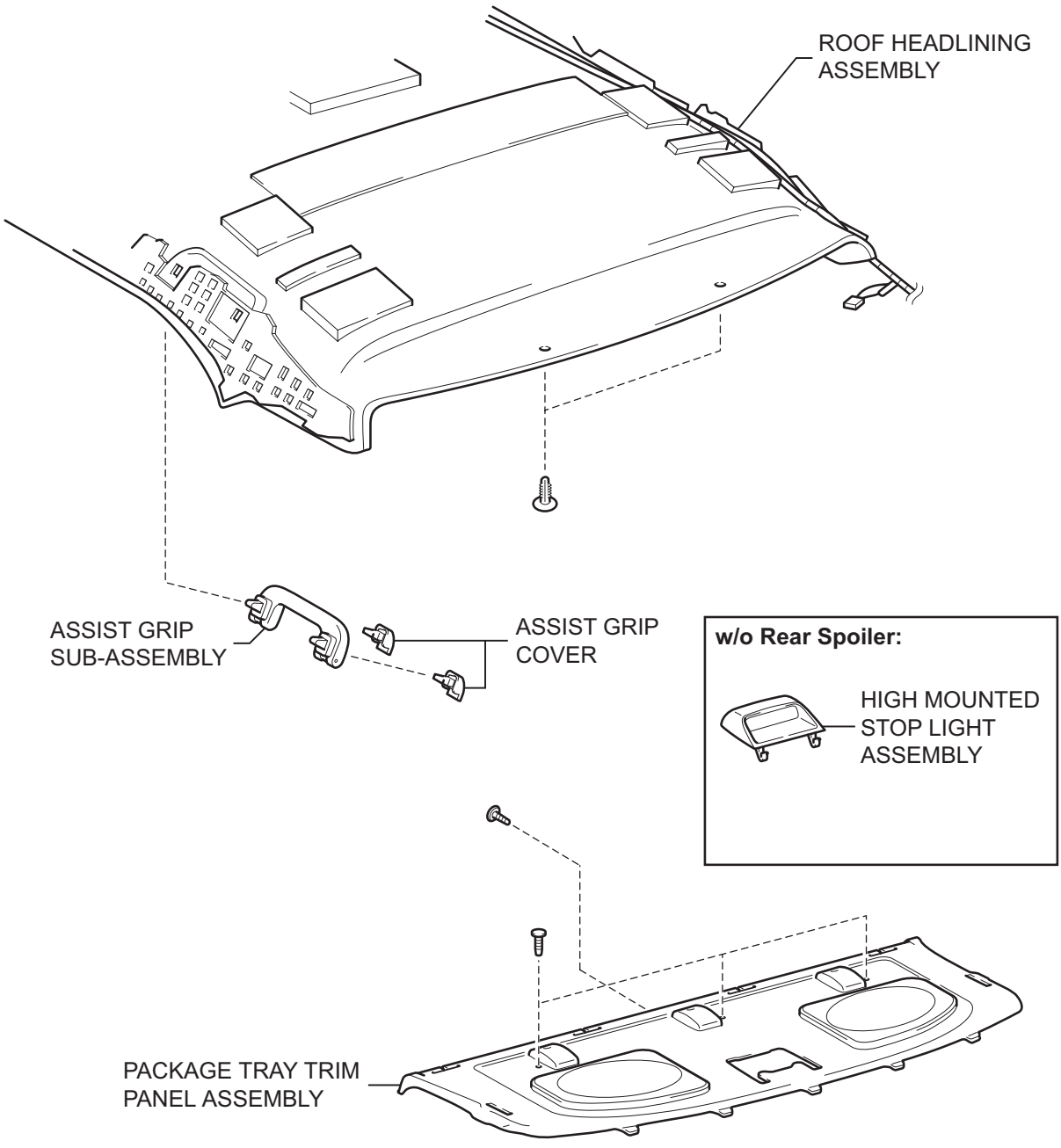

WS

T

B141920E02

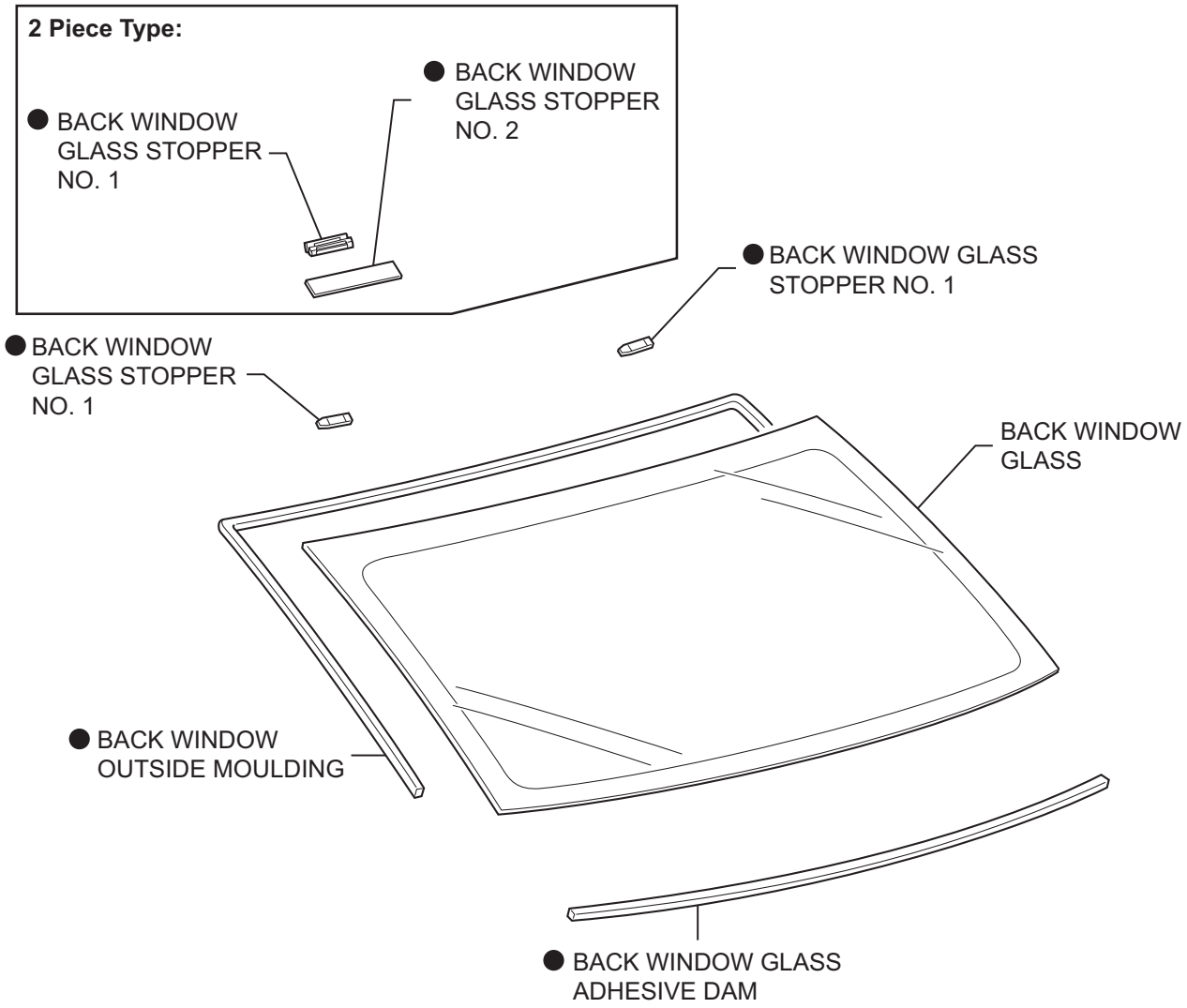

● Non-reusable part

Y

B136268E01

WS

REMOVAL

CAUTION:
Some of these service operations affect the SRS airbag system. Read the precautionary notices concerning the SRS airbag system before servicing (see page RS-1).
NOTICE:
Always use "Torx" socket wrench E10 when removing the rear seat.

1. **DISCONNECT CABLE FROM NEGATIVE BATTERY TERMINAL**
   Wait for at least 90 seconds after disconnecting the cable to prevent the airbag from working.
2. **REMOVE REAR SEAT CUSHION COVER PAD SUB-ASSEMBLY (See page IR-13)**
3. **REMOVE REAR SEATBACK ASSEMBLY RH (for 60/40 Split Seat Type) (See page SE-57)**
4. **REMOVE REAR SEATBACK ASSEMBLY LH (for 60/40 Split Seat Type) (See page SE-46)**
5. **REMOVE REAR SEATBACK ASSEMBLY (for Fixed Seat Type) (See page SE-106)**
6. **REMOVE SPARE WHEEL COVER ASSEMBLY (for 60/40 Split Seat Type) (See page ED-133)**
7. **REMOVE LUGGAGE COMPARTMENT FLOOR MAT (for 60/40 Split Seat Type) (See page ED-134)**
8. **REMOVE LUGGAGE COMPARTMENT TRIM INNER PAD (for 60/40 Split Seat Type) (See page ED-134)**
9. **REMOVE REAR DOOR SCUFF PLATE RH (See page IR-15)**
10. **REMOVE REAR DOOR SCUFF PLATE LH (See page IR-15)**
11. **REMOVE REAR DOOR OPENING TRIM WEATHERSTRIP RH (See page IR-15)**
12. **REMOVE REAR DOOR OPENING TRIM WEATHERSTRIP LH (See page IR-15)**
13. **REMOVE REAR SEAT SIDE COVER RH (See page IR-16)**
14. **REMOVE REAR SEAT SIDE COVER LH (See page IR-16)**
15. **REMOVE ROOF SIDE INNER GARNISH RH (See page IR-16)**
16. **REMOVE ROOF SIDE INNER GARNISH LH (See page IR-16)**
17. **REMOVE ASSIST GRIP COVER (See page IR-21)**
18. **REMOVE ASSIST GRIP SUB-ASSEMBLY (See page IR-21)**

19. REMOVE HIGH MOUNTED STOP LIGHT ASSEMBLY (w/o Rear Spoiler) (See page LI-141)

20. REMOVE PACKAGE TRAY TRIM PANEL ASSEMBLY (See page AV-173)

21. REMOVE ROOF HEADLINING ASSEMBLY

HINT:
It is not necessary to remove the roof headlining completely. Slightly lower the rear section of the roof headlining.

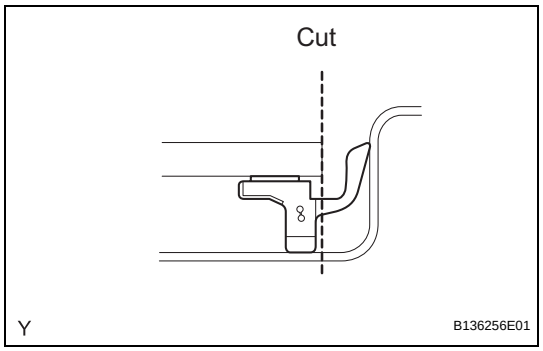

22. REMOVE BACK WINDOW OUTSIDE MOULDING

(a) Using a knife, cut off the back window outside moulding, as shown in the illustration.
NOTICE:
Do not damage the vehicle body with the knife.

(b) Remove the back window outside moulding.
HINT:
Make a partial cut in the back window outside moulding. Then pull and remove it by hand.

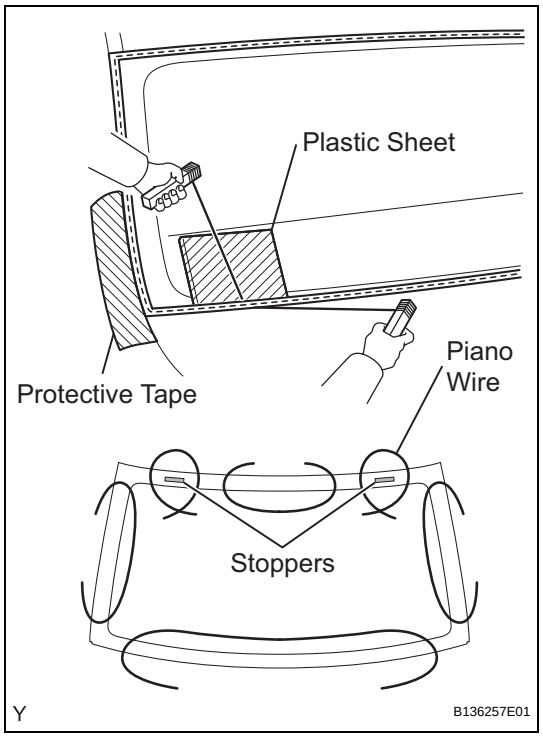

23. REMOVE BACK WINDOW GLASS

(a) Apply protective tape to the outer circumference of the back window glass, as shown in the illustration.

(b) From the interior, insert piano wires between the vehicle body and the back window glass, as shown in the illustration.

(c) Tie objects that can serve as handles (for example, wooden blocks) to all wire ends.
NOTICE:
- **When separating the back window glass from the vehicle, do not damage the vehicle's paintwork or exterior/interior ornaments.**
- **To prevent the safety pad from being scratched when removing the back window glass, place a plastic sheet between the piano wire and safety pad.**

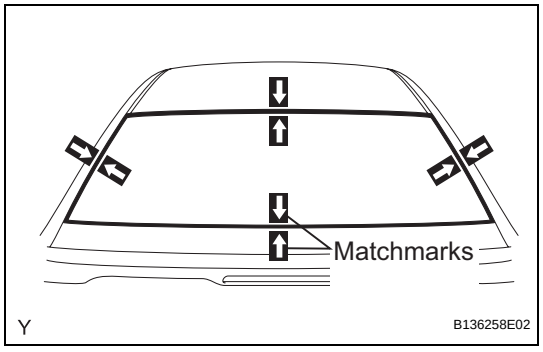

(d) Place matchmarks on the back window glass and vehicle body in the locations indicated in the illustration.
HINT:
Matchmarks do not need to be placed unless the back window glass is going to be reused.

(e) Cut through the adhesive by pulling the piano wire around the back window glass.

WS

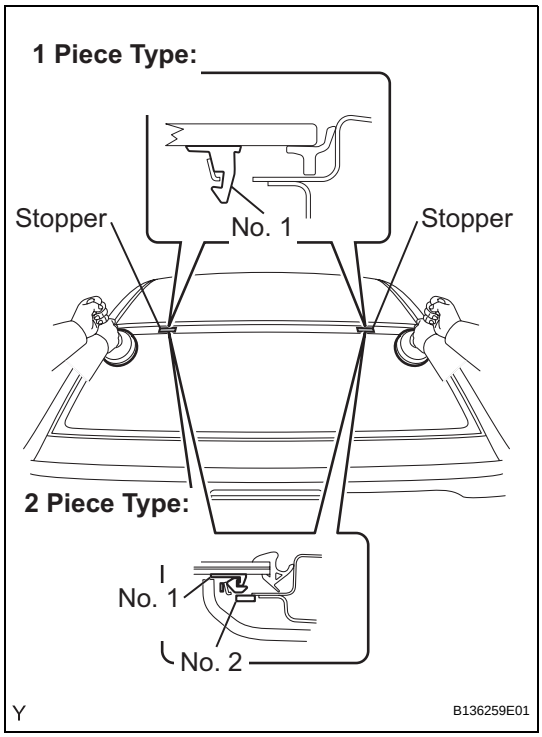

(f) Disengage the 2 stoppers.
(g) Using suction cups, remove the back window glass.
NOTICE:
Leave as much adhesive on the vehicle body as possible when removing the back window glass.

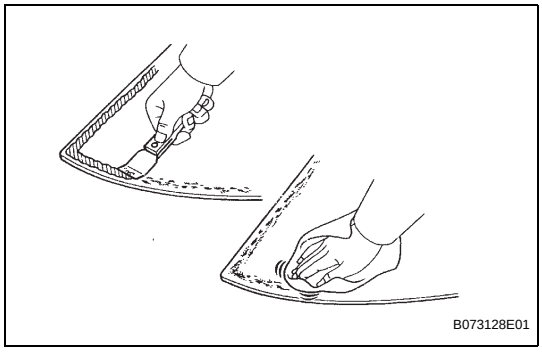

INSTALLATION

1. CLEAN BACK WINDOW GLASS

(a) Using a scraper, remove the stoppers, dam and adhesive from the back window glass.
(b) Clean the outer circumference of the back window glass with a non-residue solvent.
NOTICE:
- **Do not touch the back window glass surface after cleaning it.**
- **Even if using a new back window glass, clean the back window glass with a non-residue solvent.**

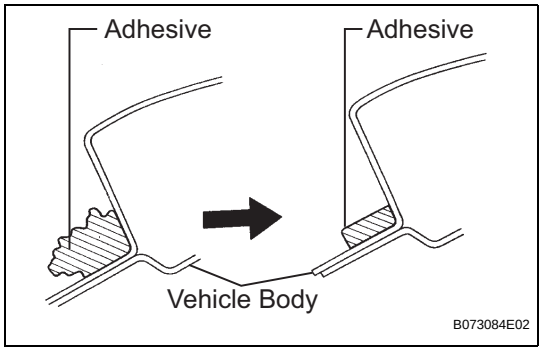

2. CLEAN VEHICLE BODY

(a) Clean and shape the contact surface of the vehicle body.
(1) Using a knife, cut away any rough adhesive on the contact surface of the vehicle body to ensure the appropriate surface shape.
NOTICE:
Do not damage the vehicle body.
HINT:
Leave as much adhesive on the vehicle body as possible.
(2) Clean the contact surface of the vehicle body with a shop rag or piece of cloth saturated with cleaner.
HINT:
Clean the vehicle body even if all the adhesive has been removed.

WS

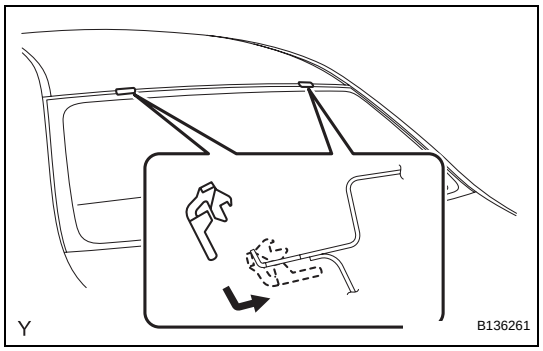

3. INSTALL BACK WINDOW GLASS STOPPER NO. 1

(a) Install 2 new stoppers onto the vehicle body, as shown in the illustration.

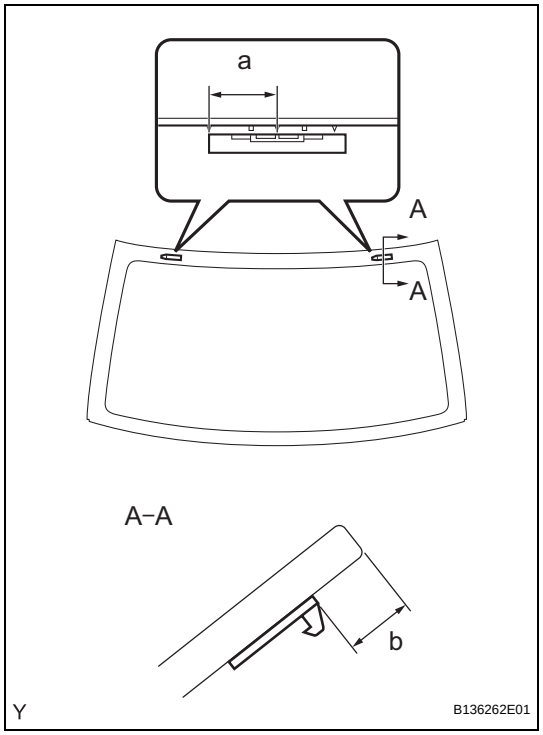

4. INSTALL BACK WINDOW GLASS STOPPER NO. 2

(a) Apply Primer G to the installation parts of the stoppers.

NOTICE:

- **Allow the primer to dry for 3 minutes or more.**
- **Throw away any leftover Primer G.**
- **Do not apply too much Primer G.**

(b) Install 2 new stoppers onto the windshield glass, as shown in the illustration.

Specification

Area	Measurement
a	40 mm (1.57 in.)
b	14.9 mm (0.587 in.)

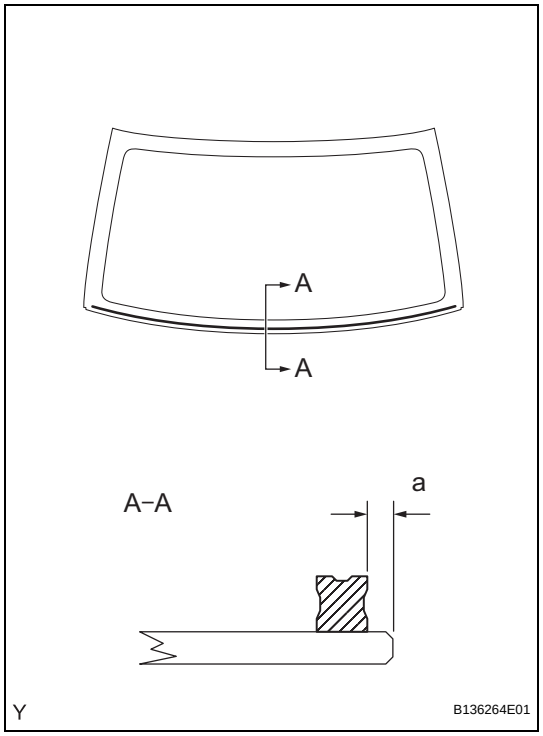

5. INSTALL BACK WINDOW GLASS ADHESIVE DAM

(a) Apply Primer G to the installation part of a new dam, as shown in the illustration.

NOTICE:

- **Allow the primer to dry for 3 minutes or more.**
- **Throw away any leftover Primer G.**
- **Do not apply too much Primer G.**

(b) Install the new dam with double-sided tape as shown in the illustration.

Specification

Area	Measurement
a	4.0 mm (0.157 in.)

WS

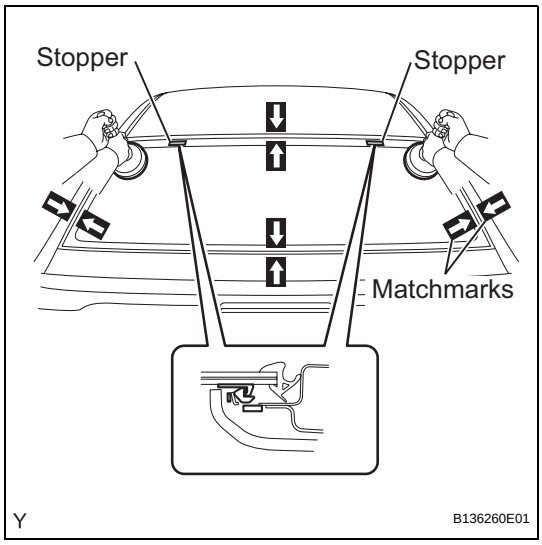

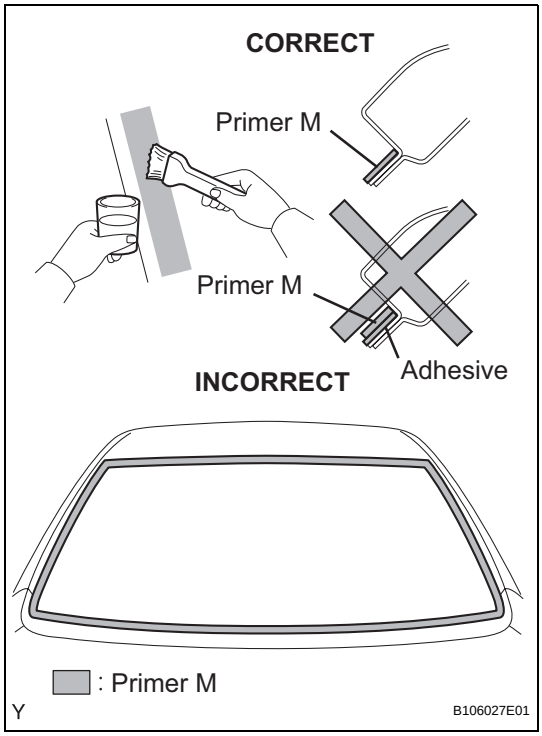

6. INSTALL BACK WINDOW GLASS

(a) Position the back window glass.

(1) Using suction cups, place the back window glass in the correct position.

(2) Check that the entire contact surface of the back window glass rim is perfectly even.

(3) Place matchmarks on the back window glass and vehicle body.

NOTICE:

Check that the stoppers are correctly attached to the vehicle body.

HINT:

When reusing the back window glass, check and correct the matchmark positions.

(4) Using suction cups, remove the back window glass.

(b) Using a brush, apply Primer M to the exposed part of the vehicle body.

NOTICE:

- **Allow the primer to dry for 3 minutes or more.**
- **Do not apply Primer M to the adhesive.**
- **Throw away any leftover Primer M.**
- **Do not apply too much Primer M.**

WS

(c) Using a brush or sponge, apply Primer G to the edge of the back window glass and the contact surface.

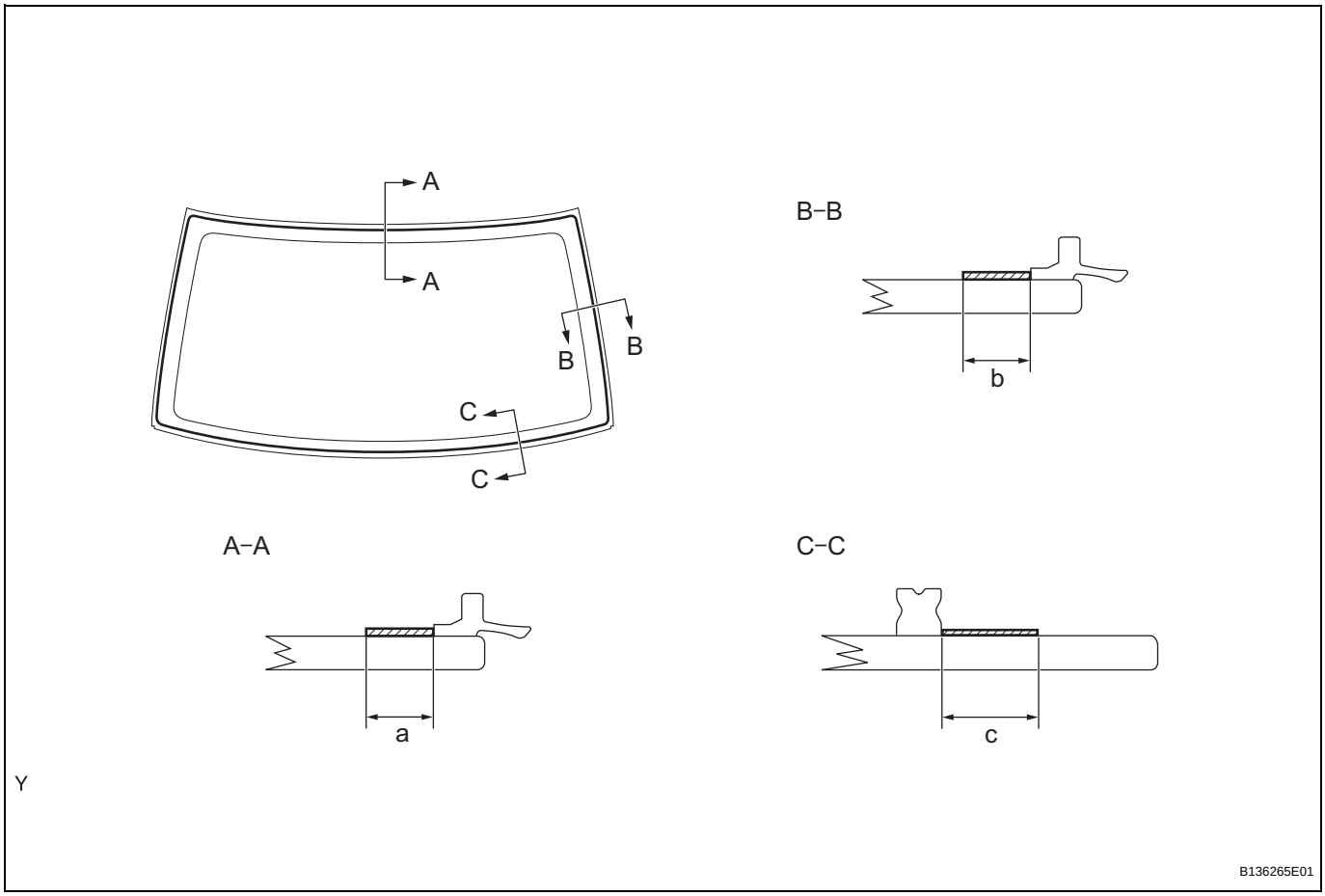

Specification

Area	Measurement
a	11 mm (0.433 in.)
b	11 mm (0.433 in.)
c	11 mm (0.433 in.)

NOTICE:

- **Allow the primer to dry for 3 minutes or more.**
- **Throw away any leftover Primer G.**
- **Do not apply too much Primer G.**

HINT:

If Primer G is applied to any areas other than those specified, wipe off the primer with a clean shop rag or piece of cloth before it dries.

(d) Apply adhesive.

Adhesive:

Toyota Genuine Windshield Glass Adhesive or the equivalent.

WS

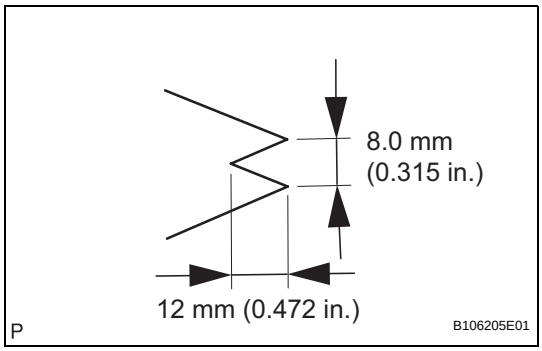

(1) Cut the tip off the cartridge nozzle, as shown in the illustration.
HINT:
After cutting off the tip, use all the adhesive within the times indicated in the table below.

Usage time frame

Temperature	Usage Time Frame
35°C (95°F)	15 minutes
20°C (68°F)	1 hour 40 minutes
5°C (41°F)	8 hours

(2) Load the sealer gun with the cartridge.
(3) Apply adhesive to the back window glass, as shown in the illustration.

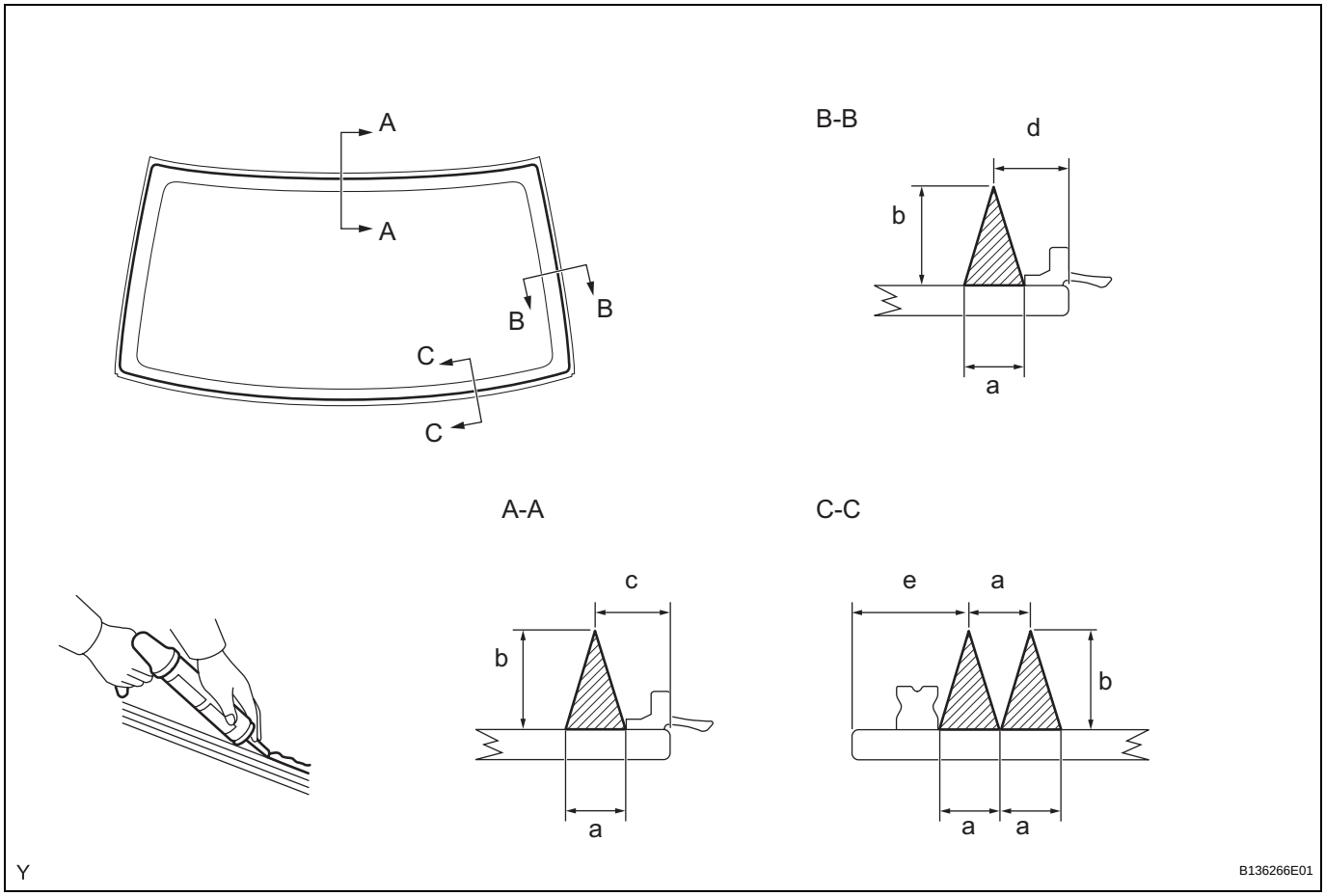

WS

Specification

Area	Measurement
a	8 mm (0.315 in.)
b	12 mm (0.472 in.)
c	9.3 mm (0.366 in.)
d	9.4 mm (0.370 in.)
e	13 mm (0.512 in.)

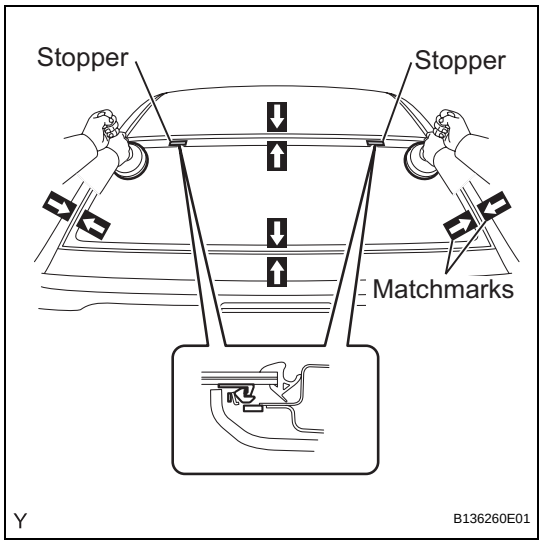

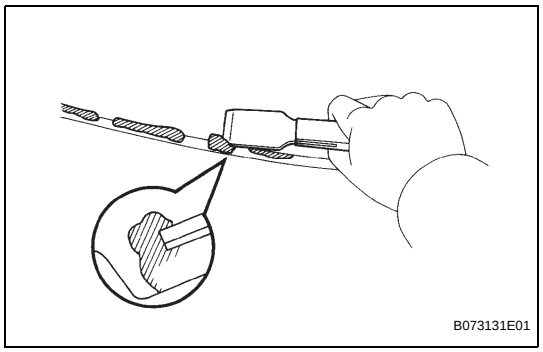

(e) Install the back window glass onto the vehicle body.

(1) Using suction cups, position the back window glass so that the matchmarks are aligned. Gently press it in along the rim.

NOTICE:

- **Allow the primer to dry for 3 minutes or more.**
- **Check that the stoppers are attached to the vehicle body correctly.**
- **Check that there is a small gap between the vehicle body and the back window glass.**

(2) Gently press the front surface of the back window glass to ensure that the back window glass is securely fitted to the vehicle body.

NOTICE:

Open and close the door gently to prevent the window glass from becoming loose due to the air pressure when the door is closed.

(3) Using a scraper, remove any excessive or protruding adhesive.

HINT:

Apply adhesive to the back window glass rim.

NOTICE:

Do not to drive the vehicle within the time indicated in the table below.

Minimum time

Temperature	Minimum time prior to driving vehicle
35°C (95°F)	1 hour 30 minutes
20°C (68°F)	5 hours
5°C (41°F)	24 hours

7. INSTALL BACK WINDOW OUTSIDE MOULDING

NOTICE:

After the installation of the window glass, install the moulding before the adhesive hardens.

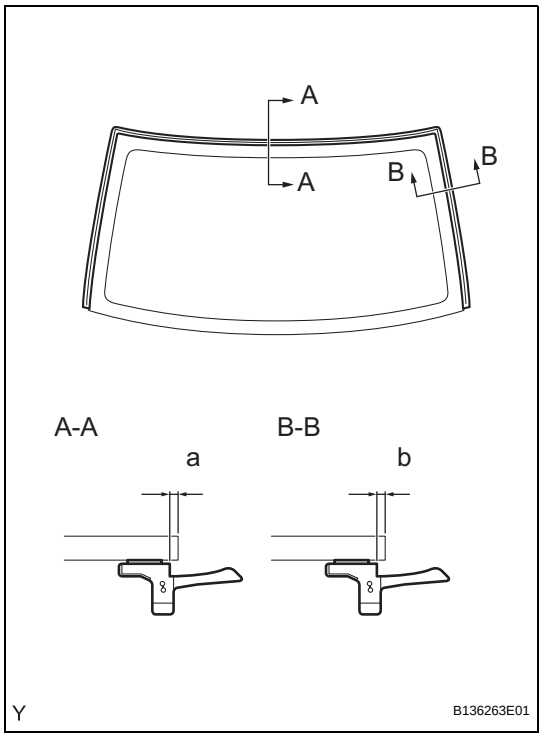

(a) Using a brush or sponge, coat the edge of the glass and the contact surface with Primer G.

NOTICE:

- **Allow the primer coating to dry for 3 minutes or more.**
- **Do not coat the adhesive with Primer G.**
- **Throw away any leftover Primer G.**

(b) Install a new moulding onto the back window glass, as shown in the illustration.

Specification

Area	Measurement
a	1.9 mm (0.075 in.)
b	1.0 mm (0.039 in.)

NOTICE:
Make sure that the moulding is securely installed.

8. CHECK FOR LEAKAGE AND REPAIR

(a) Conduct a leak test by applying water to the adhesive portions after the adhesive has completely hardened.

(b) Seal any leaks with auto glass sealer.

9. INSTALL ROOF HEADLINING ASSEMBLY

10. INSTALL PACKAGE TRAY TRIM PANEL ASSEMBLY (See page AV-174)

11. INSTALL HIGH MOUNTED STOP LIGHT ASSEMBLY (w/o Rear Spoiler) (See page LI-142)

12. INSTALL ASSIST GRIP SUB-ASSEMBLY (See page IR-28)

13. INSTALL ASSIST GRIP COVER (See page IR-29)

14. INSTALL ROOF SIDE INNER GARNISH RH (See page IR-32)

15. INSTALL ROOF SIDE INNER GARNISH LH (See page IR-33)

16. INSTALL REAR SEAT SIDE COVER RH (See page IR-33)

17. INSTALL REAR SEAT SIDE COVER LH (See page IR-33)

18. INSTALL REAR DOOR OPENING TRIM WEATHERSTRIP RH (See page IR-33)

19. INSTALL REAR DOOR OPENING TRIM WEATHERSTRIP LH (See page IR-33)

20. INSTALL REAR DOOR SCUFF PLATE RH (See page IR-34)

21. INSTALL REAR DOOR SCUFF PLATE LH (See page IR-34)

22. **INSTALL LUGGAGE COMPARTMENT TRIM INNER PAD (for 60/40 Split Seat Type) (See page ED-136)**
23. **INSTALL SPARE WHEEL COVER ASSEMBLY (for 60/40 Split Seat Type) (See page ED-137)**
24. **INSTALL LUGGAGE COMPARTMENT FLOOR MAT (for 60/40 Split Seat Type) (See page ED-137)**
25. **INSTALL REAR SEATBACK ASSEMBLY RH (for 60/40 Split Seat Type) (See page SE-65)**
26. **INSTALL REAR SEATBACK ASSEMBLY LH (for 60/40 Split Seat Type) (See page SE-52)**
27. **INSTALL REAR SEATBACK ASSEMBLY (for Fixed Seat Type) (See page SE-108)**
28. **INSTALL REAR SEAT CUSHION COVER PAD SUB-ASSEMBLY (See page IR-36)**
29. **CONNECT CABLE TO NEGATIVE BATTERY TERMINAL**
    Torque: 5.4 N*m (55 kgf*cm, 48 in.*lbf)
30. **INSPECT SRS WARNING LIGHT**
    (See page RS-31)

BACK DOOR GLASS (for Hatchback)

COMPONENTS

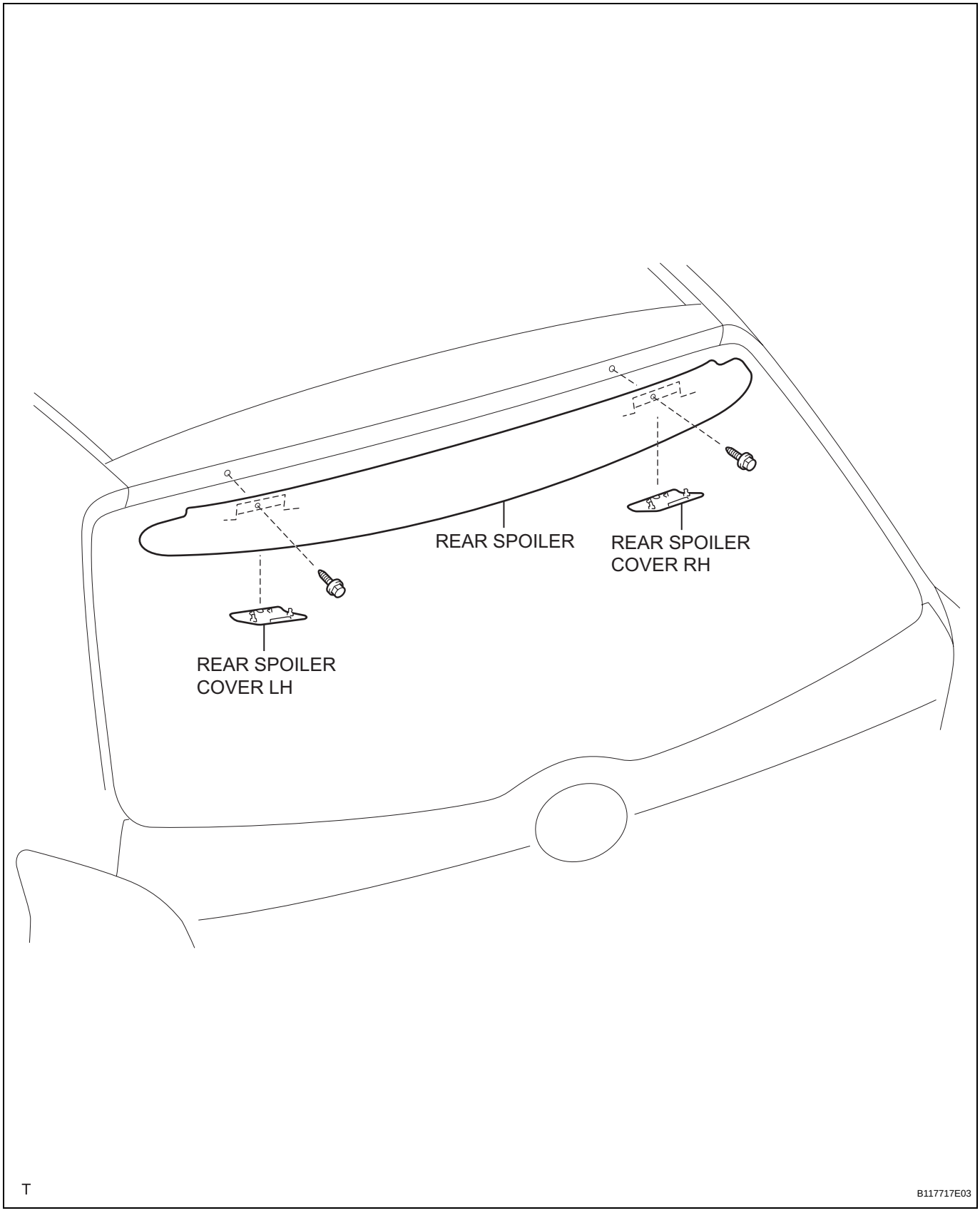

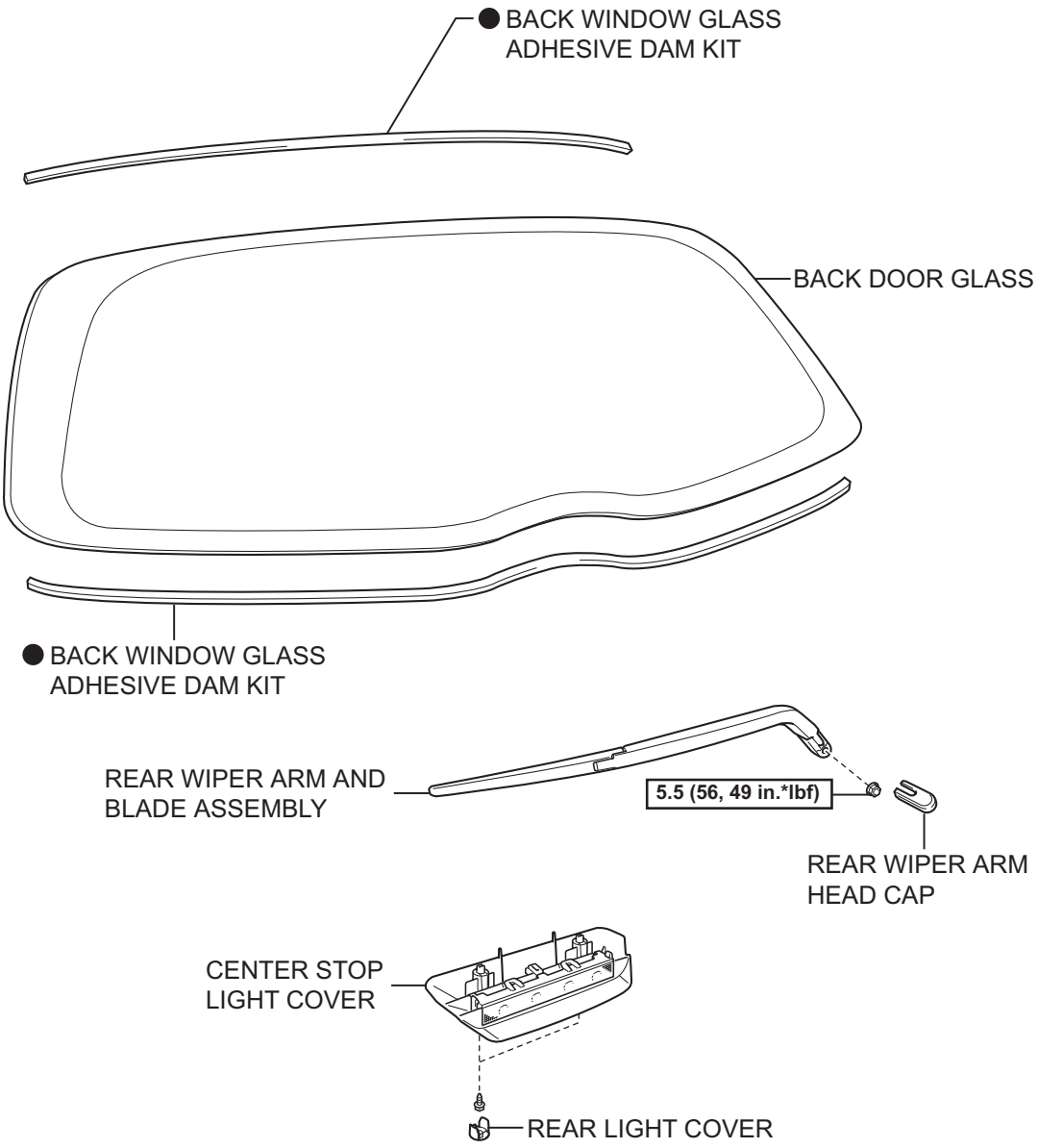

WS

N*m (kgf*cm, ft*lbf) : Specified torque

● Non-reusable part

Y

B127214E01

REMOVAL

1. **DISCONNECT CABLE FROM NEGATIVE BATTERY TERMINAL**
2. **REMOVE REAR SPOILER COVER LH (See page ET-81)**
3. **REMOVE REAR SPOILER COVER RH (See page ET-81)**
4. **REMOVE REAR SPOILER (See page ET-81)**
5. **REMOVE CENTER STOP LIGHT COVER (See page LI-144)**
6. **REMOVE REAR WIPER ARM AND BLADE ASSEMBLY (See page WW-28)**
7. **REMOVE BACK DOOR GLASS**
   (a) Apply protective tape to the outer circumference of the back door glass, as shown in the illustration.
   (b) From the interior, insert piano wires between the vehicle body and back door glass, as shown in the illustration.
   (c) Tie objects that can serve as handles (for example, wooden blocks) to all wire ends.
   NOTICE:
   When separating the back door glass from the vehicle, do not damage the vehicle's paint or exterior/interior ornaments.
   (d) Cut through the adhesive by pulling the piano wire around the back door glass.

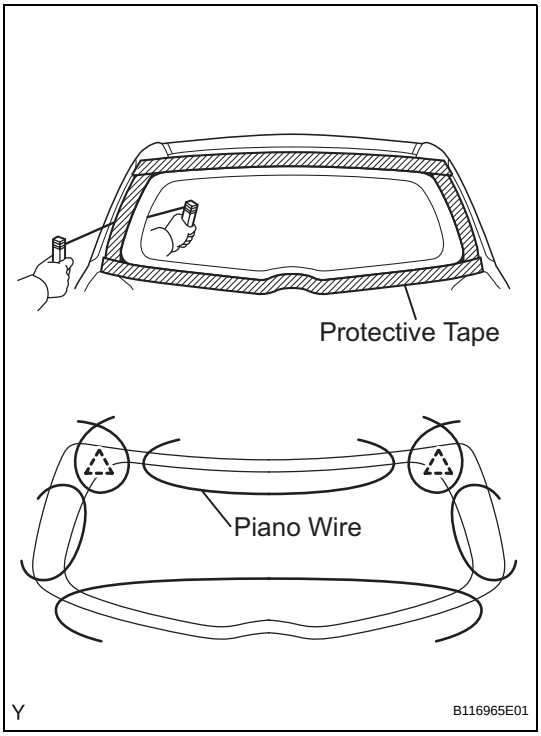

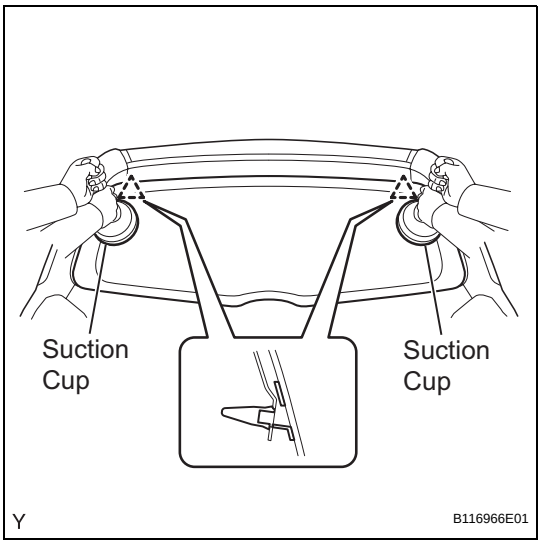

   (e) Disengage the 2 clips.
   (f) Using suction cups, remove the back door glass.
   NOTICE:
   Leave as much adhesive on the vehicle body as possible when removing the back door glass.

WS

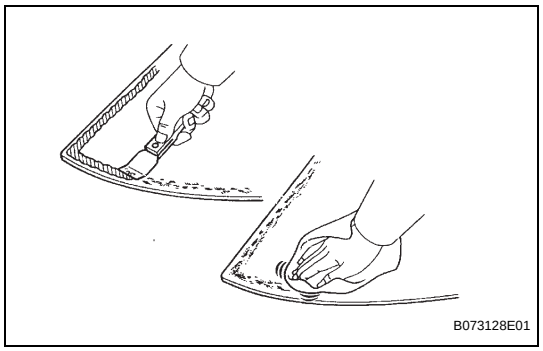

INSTALLATION

1. CLEAN BACK DOOR GLASS

(a) Using a scraper, remove the clips, dam and adhesive sticking to the back door glass.

(b) Clean the outer circumference of the back door glass with a non-residue solvent.

NOTICE:

- **Do not touch the back door glass surface after cleaning it.**
- **Even if using a new back door glass, clean the back door glass with a non-residue solvent.**

HINT:

Since the pin is for positioning the glass, there is no need to replace it with a new one when reusing the glass, even if damaged.

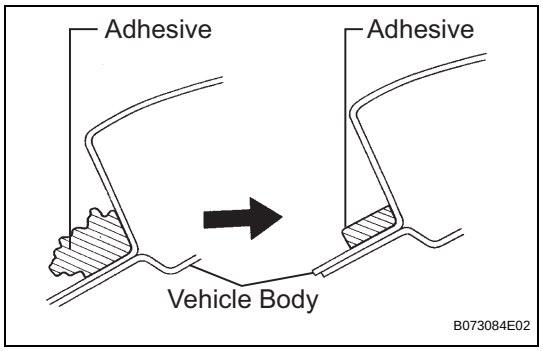

2. CLEAN VEHICLE BODY

(a) Clean and shape the contact surface of the vehicle body.

(1) Using a knife, cut away any rough adhesive on the contact surface of the vehicle body to ensure the appropriate surface shape.

NOTICE:

Do not damage the vehicle body.

HINT:

Leave as much adhesive on the vehicle body as possible.

(2) Clean the contact surface of the vehicle body with a shop rag or piece of cloth saturated with cleaner.

HINT:

Clean the vehicle body even if all the adhesive has been removed.

3. INSTALL BACK WINDOW GLASS ADHESIVE DAM KIT

(a) Apply Primer G to the glass where the dams will be installed.

NOTICE:

- **Allow the primer to dry for 3 minutes or more.**
- **Throw away any leftover Primer G.**
- **Do not apply too much Primer G.**

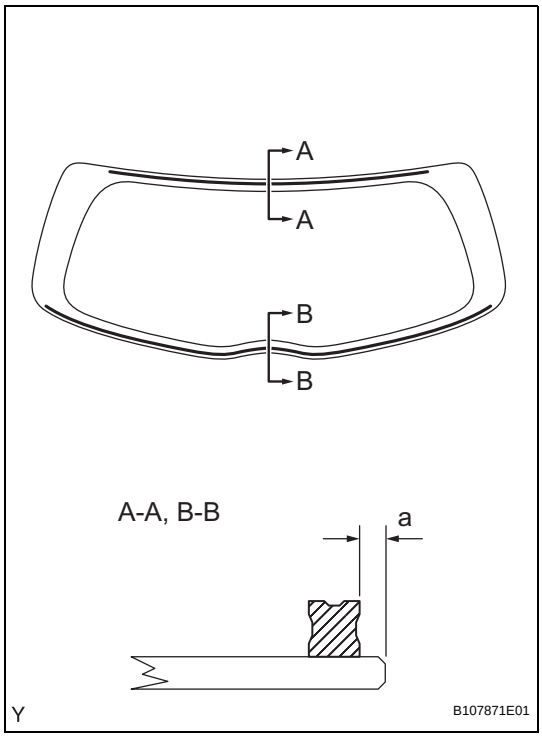

(b) Install 2 new back door glass adhesive dams as shown in the illustration.

Specification

Area	Measurement
a	4.2 mm (0.165 in.)

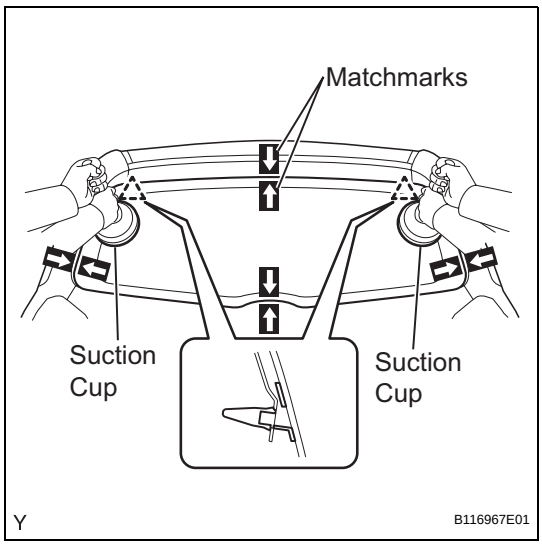

4. INSTALL BACK DOOR GLASS

(a) Position the back door glass.

(1) Using suction cups, place the back door glass in the correct position.

(2) Check that the whole contact surface of the back door glass rim is perfectly even.

(3) Place matchmarks on the back door glass and vehicle body.

NOTICE:

Check that the stoppers are attached to the vehicle body correctly.

HINT:

When reusing the back door glass, check and correct the matchmark positions.

(4) Using suction cups, remove the back door glass.

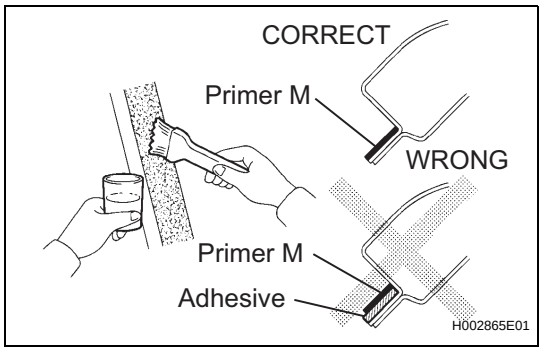

(b) Using a brush, apply Primer M to the exposed part of the vehicle body.

NOTICE:

- **Allow the primer to dry for 3 minutes or more.**
- **Do not apply Primer M to the adhesive.**
- **Throw away any leftover Primer M.**
- **Do not apply too much Primer M.**

WS

(c) Using a brush or sponge, apply Primer G to the edge of the back door glass and contact surface.

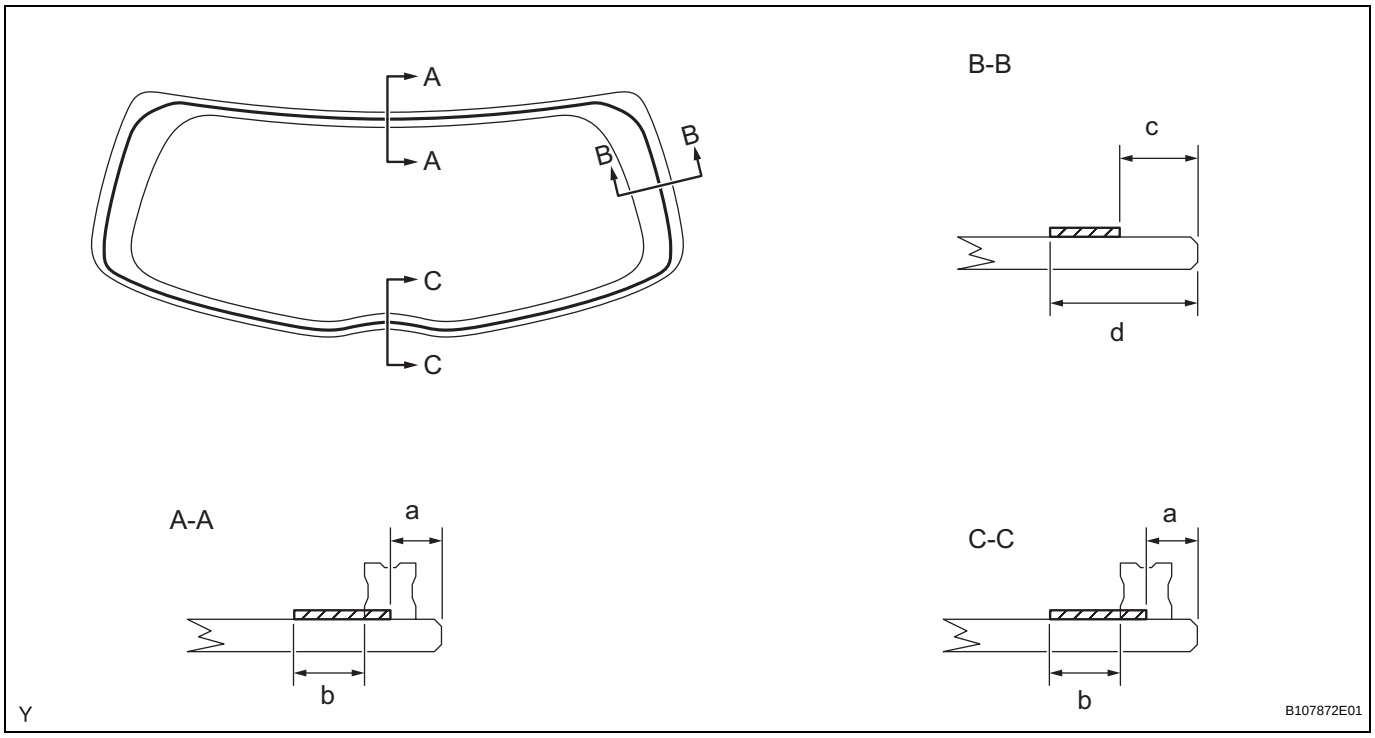

NOTICE:

- **Allow the primer to dry for 3 minutes or more.**
- **Throw away any leftover Primer G.**
- **Do not apply too much Primer G.**

HINT:

If Primer G is applied to any areas other than those specified, wipe off the primer with a clean shop rag or piece of cloth before it dries.

Specification

Area	Measurement
a	6.9 mm (0.272 in.)
b	11.0 mm (0.433 in.)
c	26.7 mm (1.051 in.)
d	40.7 mm (1.602 in.)

(d) Apply adhesive.

Adhesive:

Part No. 08850-00801 or the equivalent

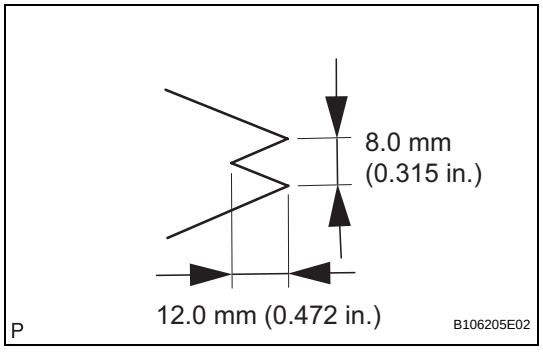

(1) Cut off the tip of the cartridge nozzle, as shown in the illustration.

HINT:

After cutting off the tip, use all adhesive within the time indicated in the table below.

Usage time frame

Temperature	Usage Time Frame
35°C (95°F)	15 minutes
20°C (68°F)	1 hour 40 minutes
5°C (41°F)	8 hours

(2) Load the sealer gun with the cartridge.

WS

(3) Apply adhesive to the back door glass, as shown in the illustration.

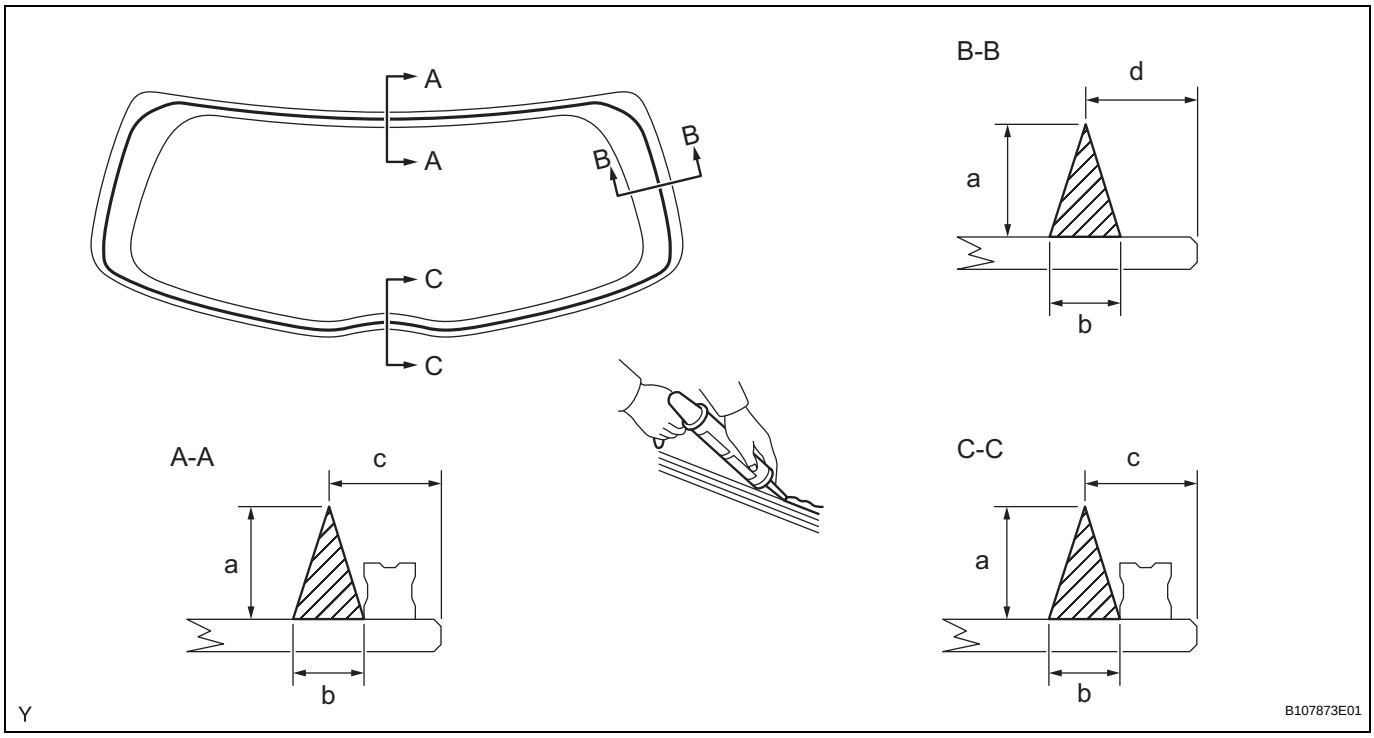

Specification

Area	Measurement
a	12.0 mm (0.472 in.)
b	8.0 mm (0.315 in.)
c	13.5 mm (0.532 in.)
d	33.7 mm (1.327 in.)

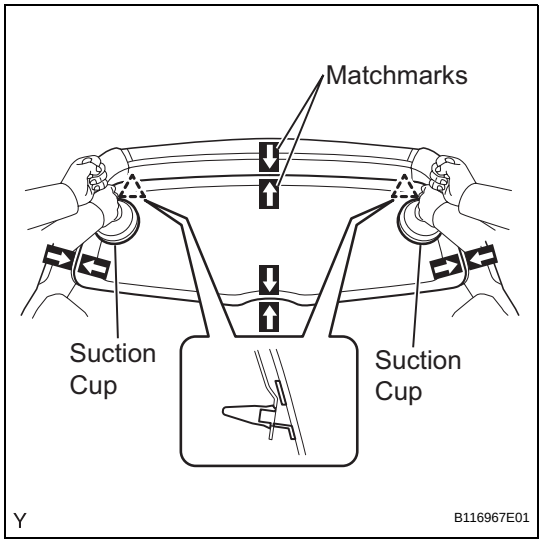

(e) Install the back door glass onto the vehicle body.

(1) Using suction cups, position the back door glass so that the matchmarks are aligned. Press it in gently along the rim.

NOTICE:

- **Allow the primer to dry for 3 minutes or more.**
- **Check that the stoppers are attached to the vehicle body correctly.**
- **Check that the vehicle body and back door glass have a small gap between them.**

(2) Gently press the front surface of the back door glass to ensure that the back door glass is securely fitted to the vehicle body.

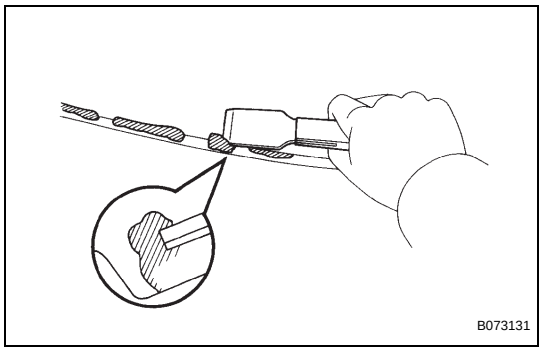

(3) Using a scraper, remove any excessive or protruding adhesive.
HINT:
Apply adhesive onto the back door glass rim.
NOTICE:
Do not to drive the vehicle within the time indicated in the table below.
Minimum time

Temperature	Minimum time prior to driving vehicle
35°C (95°F)	1 hour 30 minutes
20°C (68°F)	5 hours
5°C (41°F)	24 hours

5. CHECK FOR LEAKAGE AND REPAIR
(a) Conduct a leak test after the adhesive has completely hardened.
(b) Seal any leakage with auto glass sealer.

6. INSTALL REAR WIPER ARM AND BLADE ASSEMBLY (See page WW-30)

7. INSTALL CENTER STOP LIGHT COVER (See page LI-145)

8. INSTALL REAR SPOILER (See page ET-81)

9. INSTALL REAR SPOILER COVER LH (See page ET-82)

10. INSTALL REAR SPOILER COVER RH (See page ET-82)

11. CONNECT CABLE TO NEGATIVE BATTERY TERMINAL
Torque: 5.4 N*m (55 kgf*cm, 48 in.*lbf)

WINDOW DEFOGGER SYSTEM

PARTS LOCATION

HATCHBACK:

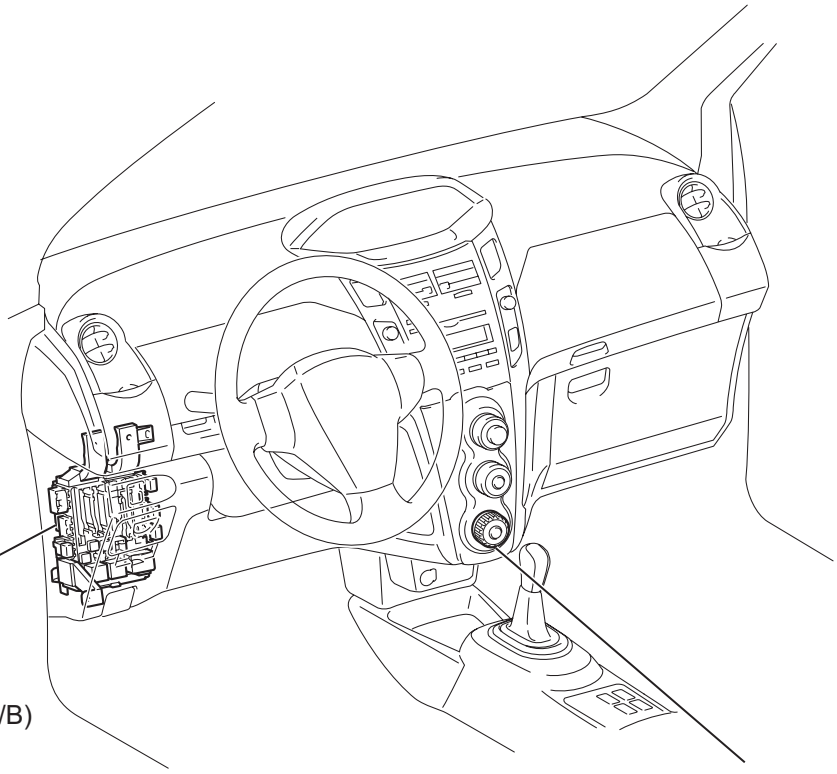

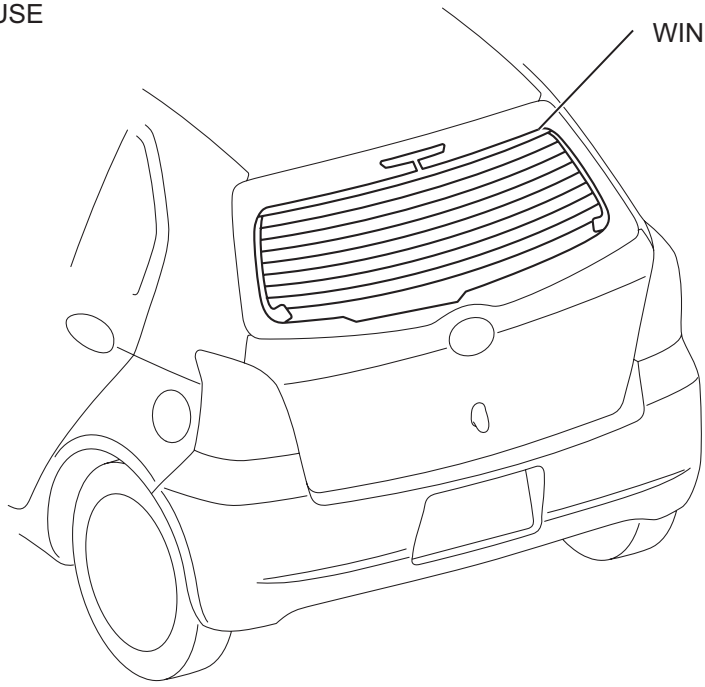

Y

B142257E01

SEDAN:

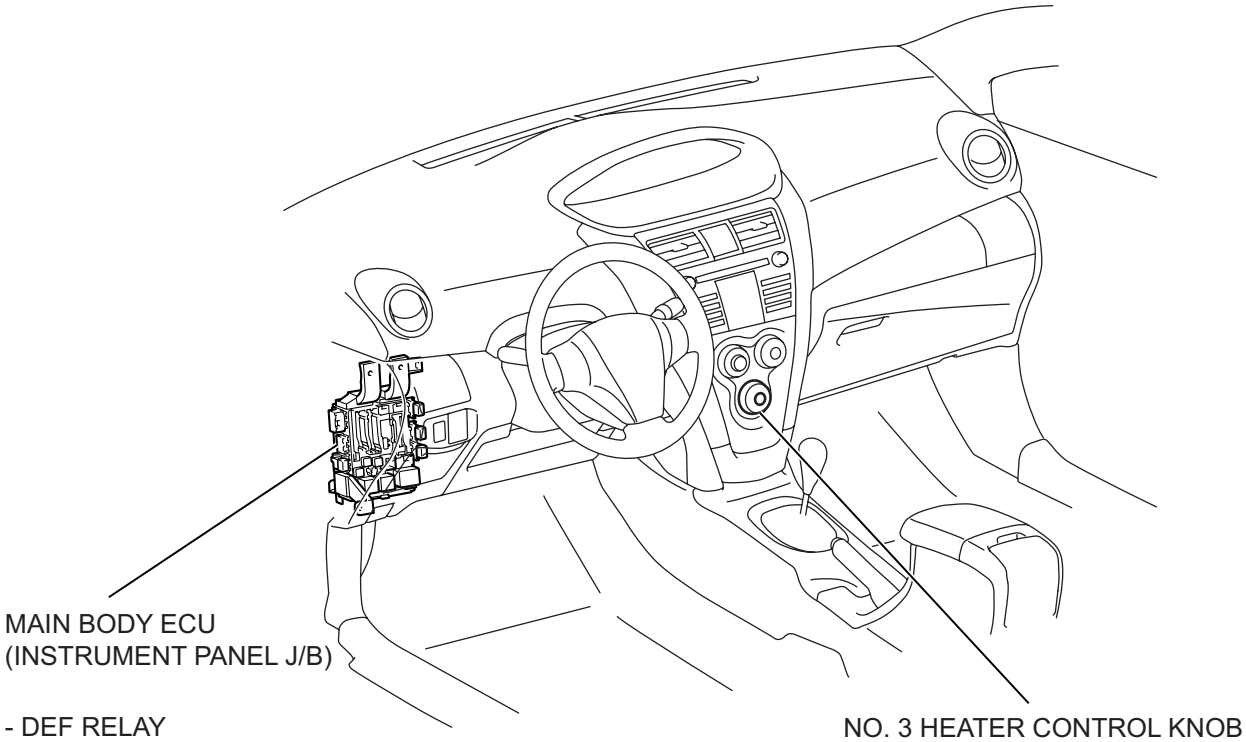

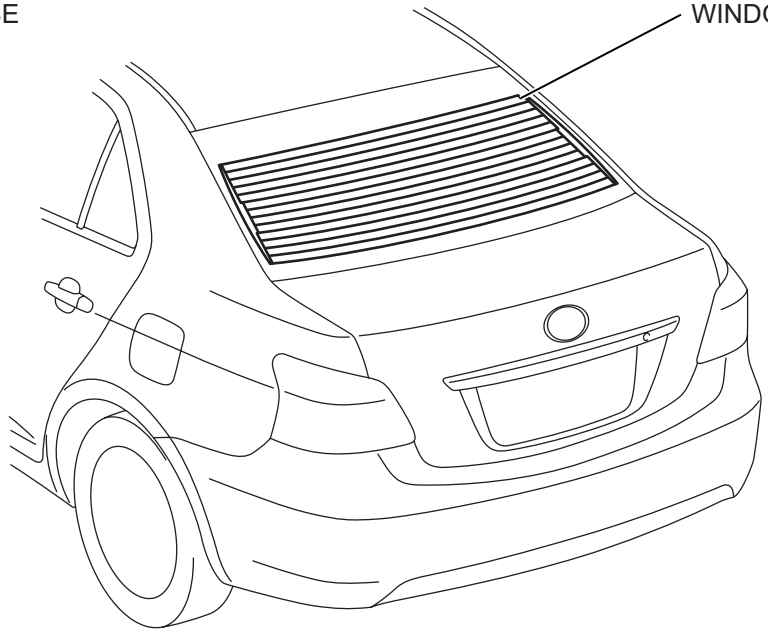

H

B142258E01

WS

SYSTEM DIAGRAM

Hatchback:

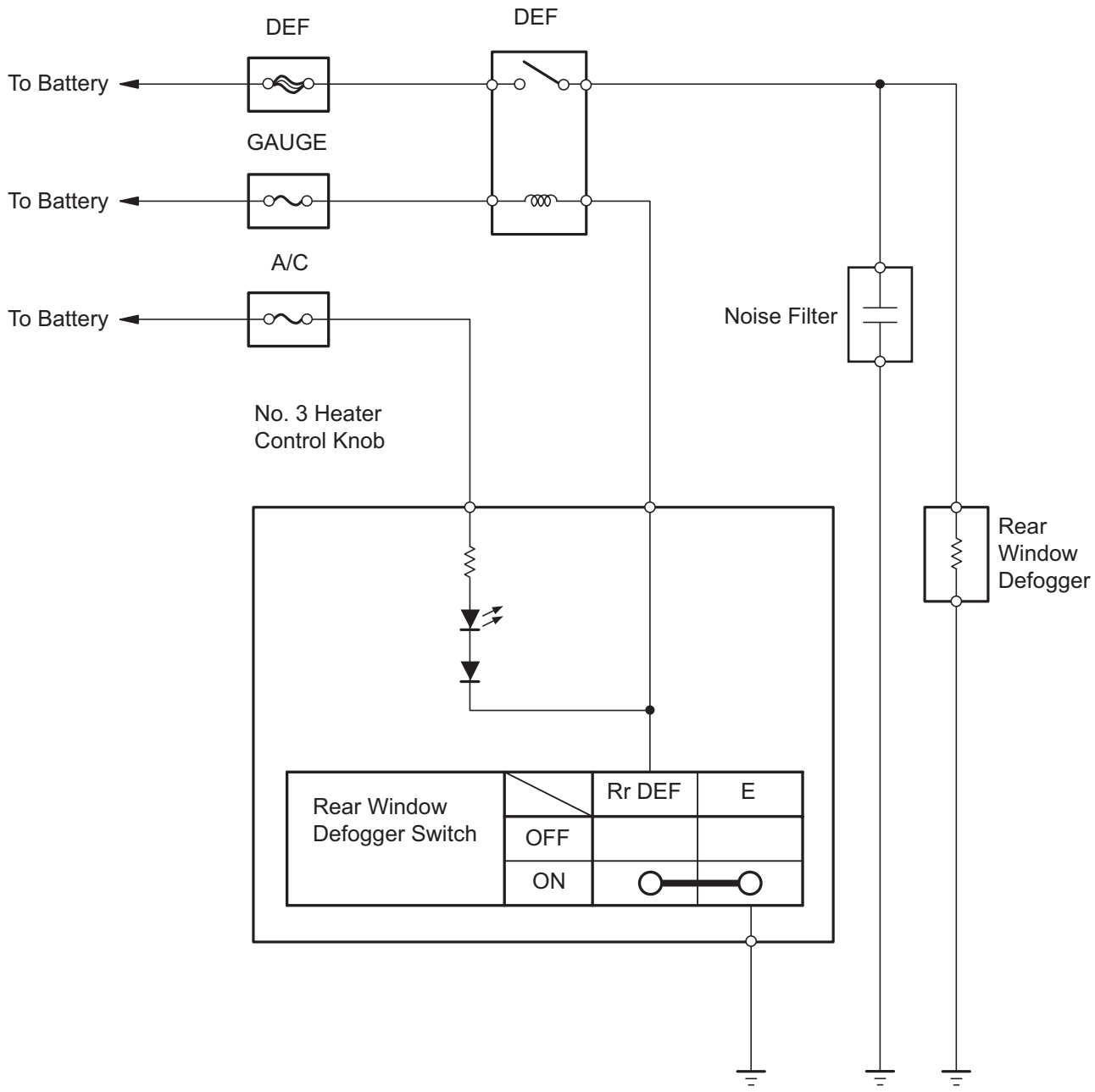

Sedan:

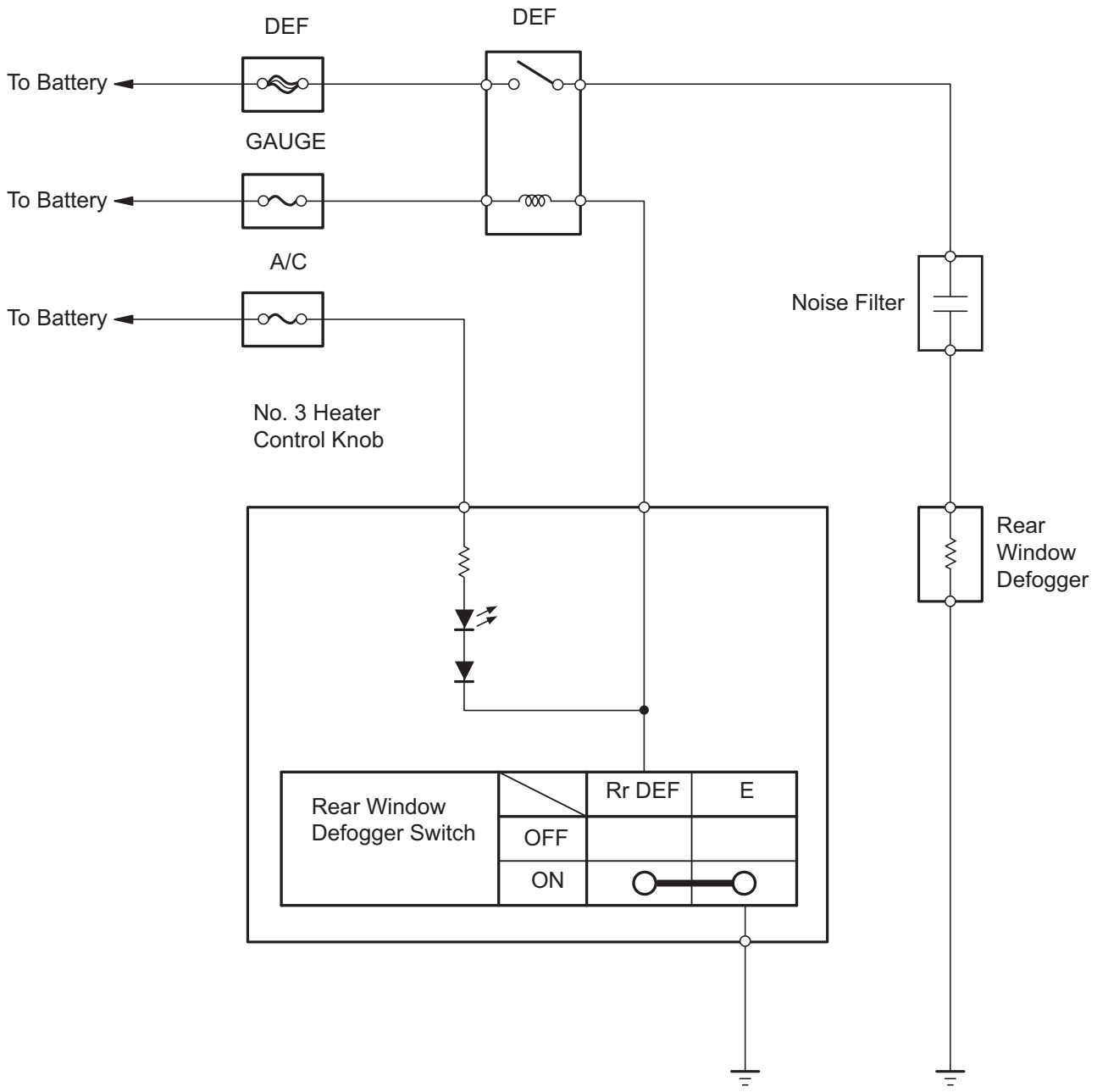
DEF
DEF
To Battery
GAUGE
To Battery
A/C
To Battery
Noise Filter
No. 3 Heater
Control Knob
Rear
Window
Defogger
Rear Window
Defogger Switch
Rr DEF
E
OFF
ON
B141589E02

PROBLEM SYMPTOMS TABLE

HINT:
Use the table below to help determine the causes of the problem symptom. The potential causes of the symptoms are listed in order of probability in the "Suspected Area" column of the table. Check each symptom by checking the suspected areas in the order they are listed. Replace parts as necessary.

Window defogger system

Symptom	Suspected area	See page
Rear window defogger does not operate (indicator ON)	DEF fuse	WS-142
	GAUGE fuse	WS-142
	Back door glass (defogger wire)	WS-148
	Main body ECU (DEF relay)	WS-147
	Wire harness	-
Rear window defogger does not operate (indicator OFF)	A/C fuse	WS-142
	No. 3 heater control knob (rear defogger switch)	AC-255
	Wire harness	-

Components Side:

Main Body ECU (Vehicle Front Side)

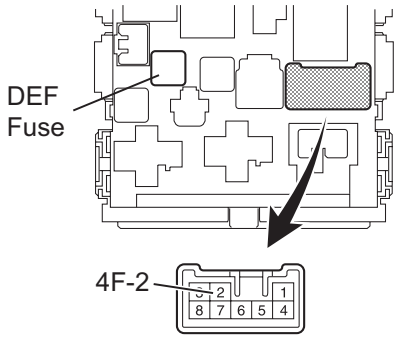

Main Body ECU (Vehicle Rear Side)

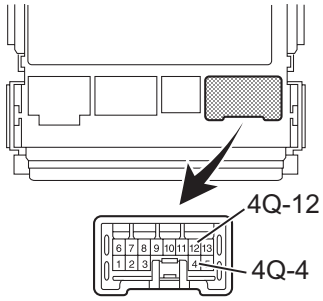

P B121544E01

DEFOGGER RELAY

ON-VEHICLE INSPECTION

1. INSPECT MAIN BODY ECU (DEFOGGER RELAY)

(a) Remove the DEF fuse.

(b) Using an ohmmeter, measure the resistance between the terminals of the DEF fuse.
Standard Resistance:
Below 1 Ω

(c) Install the DEF fuse.

(d) Using an ohmmeter, measure the resistance between terminals 4Q-12 and 4Q-4 of the main body ECU connector.
Standard Resistance:
Below 1 Ω

(e) Turn the ignition switch ON.

(f) Turn the defogger switch ON.

(g) Using a voltmeter, measure the voltage between terminal 4F-2 of the main body ECU connector and body ground.
Standard Voltage:
10 to 14 V

WINDOW DEFOGGER WIRE

ON-VEHICLE INSPECTION

1. INSPECT BACK DOOR GLASS (DEFOGGER WIRE)

(a) Turn the ignition switch ON.

(b) Turn the defogger switch ON.

(c) Check the voltage.

(1) Using a voltmeter, measure the voltage at the center of each defogger wire as shown in the illustration.

Standard

Voltage	Condition
Approximately 5 V	Wire not broken
Approximately 10 or 0 V	Wire broken

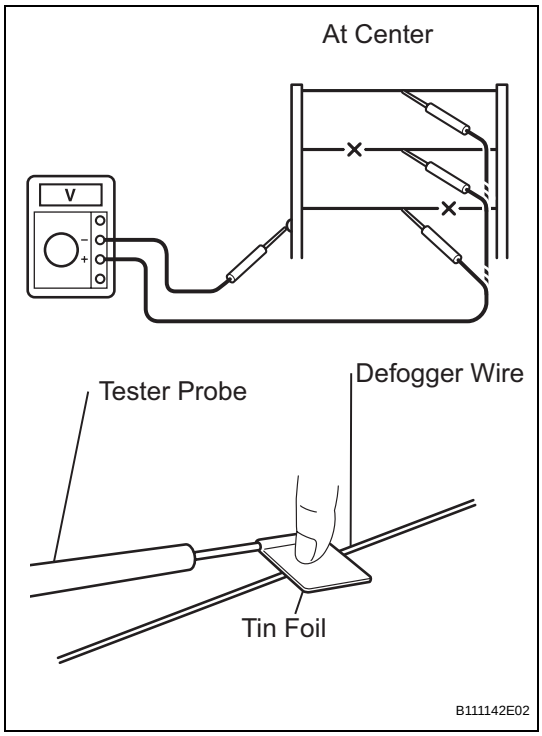

NOTICE:

When measuring the voltage, wrap a piece of tin foil around the tip of the negative tester probe and press the foil against the wire with your finger, as shown in the illustration.

HINT:

If there is approximately 10 V, the wire may be faulty between the center of the wire and the battery. If there is no voltage, the wire may be faulty between the center of the wire and the ground.

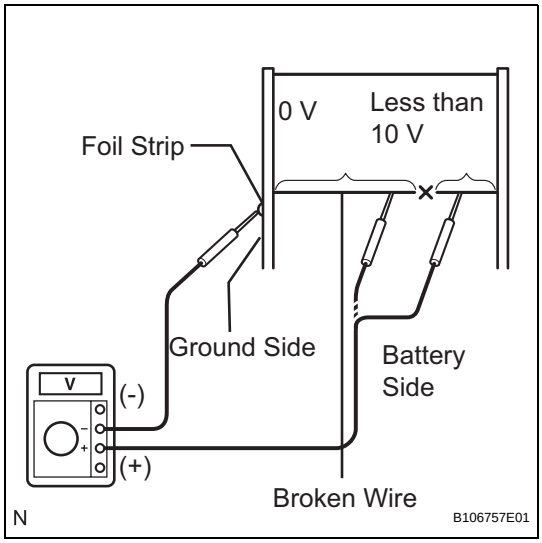

(d) Place the positive (+) voltmeter probe against the defogger wire on the battery side.

(e) Place the foil strip on the negative (-) voltmeter probe against the wire on the ground side.

(f) Slide the positive (+) probe from the battery side to the ground side.

(g) The point where the voltage drops from approximately 10 V to 0 V is where the defogger wire is broken.

HINT:

If the defogger wire is not broken, the voltmeter should indicate 0 V at the positive (+) end of the defogger wire but the indicated voltage gradually increases to approximately 12 V as the meter probe moves toward the other end.

2. INSPECT REAR WINDOW DEFOGGER

(a) Check the operation.

(b) Check that the indicator illuminates and the rear window defogger becomes warm when the rear defogger switch is pressed.

(c) Check that the indicator turns off and the rear window defogger operation terminates after approximately 15 minutes.

WS

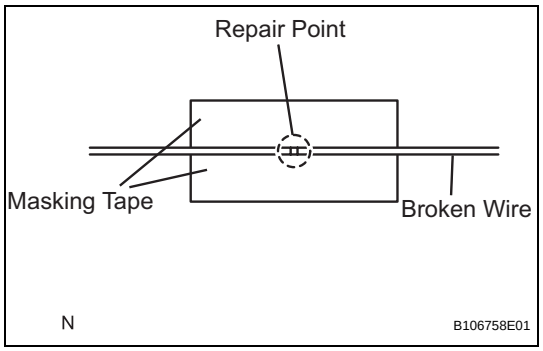

REPAIR

1. IF NECESSARY, REPAIR DEFOGGER WIRE

(a) Clean the broken wire tips with grease, wax and silicone remover.

(b) Place masking tape along both sides of the wire.

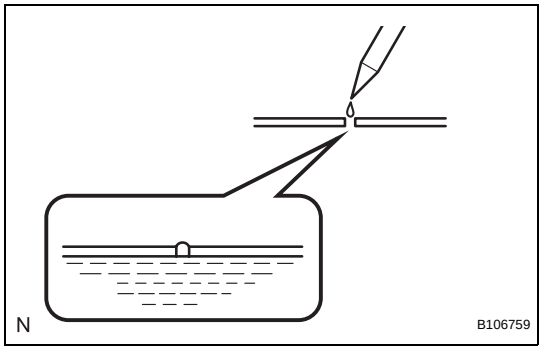

(c) Thoroughly stir the repair agent (Dupont paste No. 4817 or the equivalent).

(d) Using a fine tip brush, apply a small amount of the agent to the wire.

(e) After a few minutes, remove the masking tape.

NOTICE:

Do not repair the defogger wire again for at least 24 hours.

WS

QUARTER WINDOW GLASS (for 3 Door)

COMPONENTS

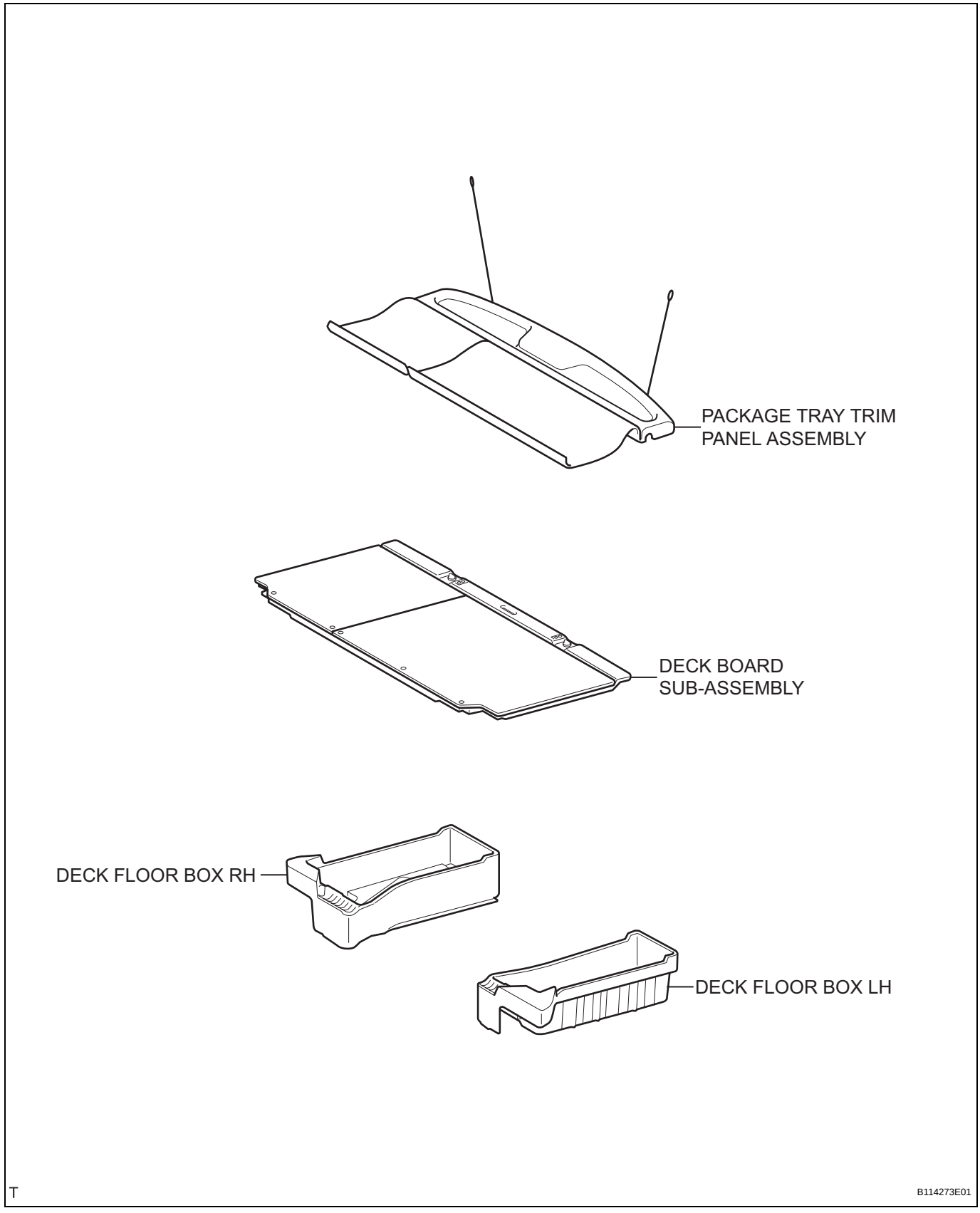

for 60/40 Slide Reclining Hold Down Seat Type:

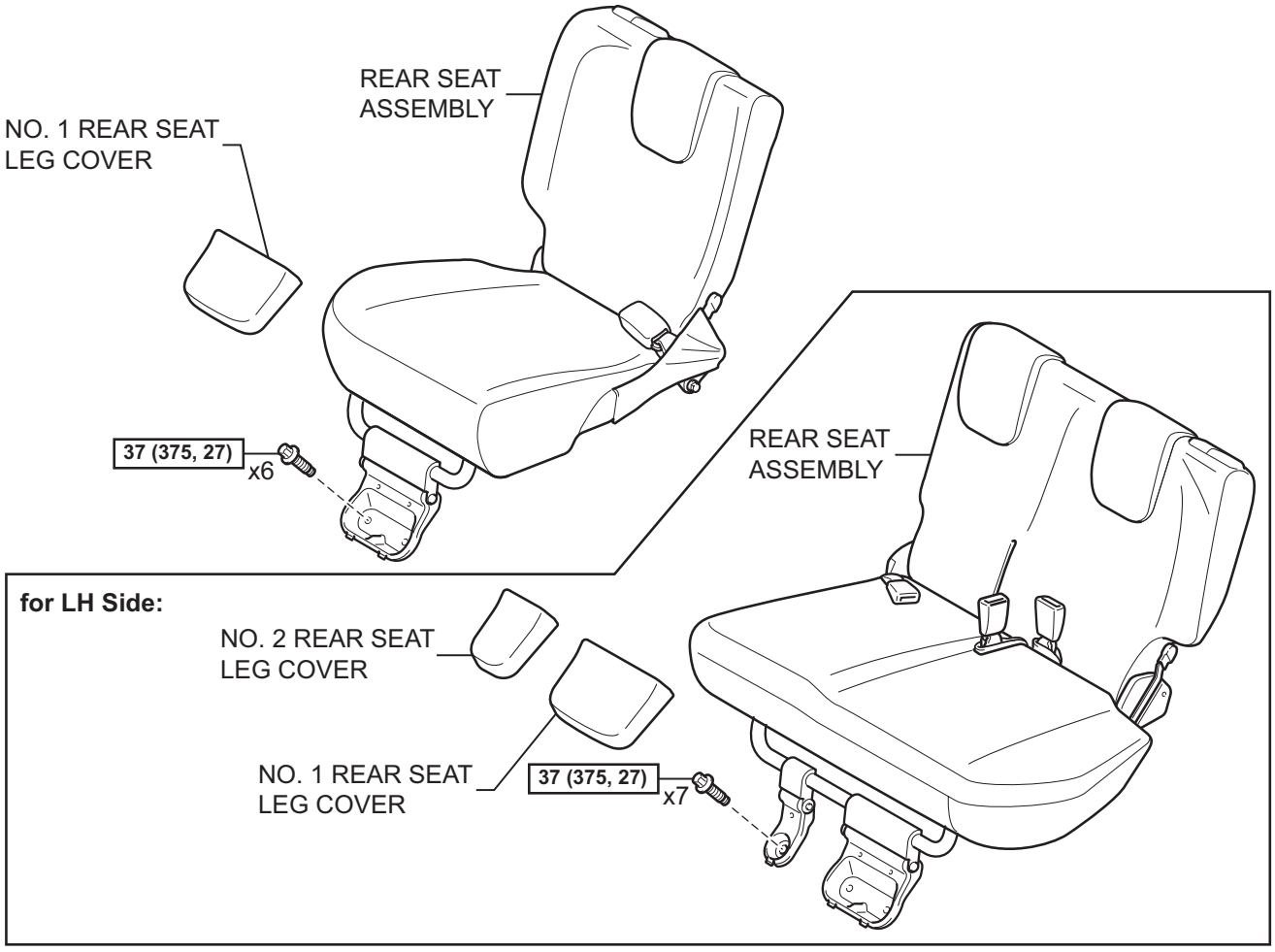

for Bench Reclining Hold Down Seat Type:

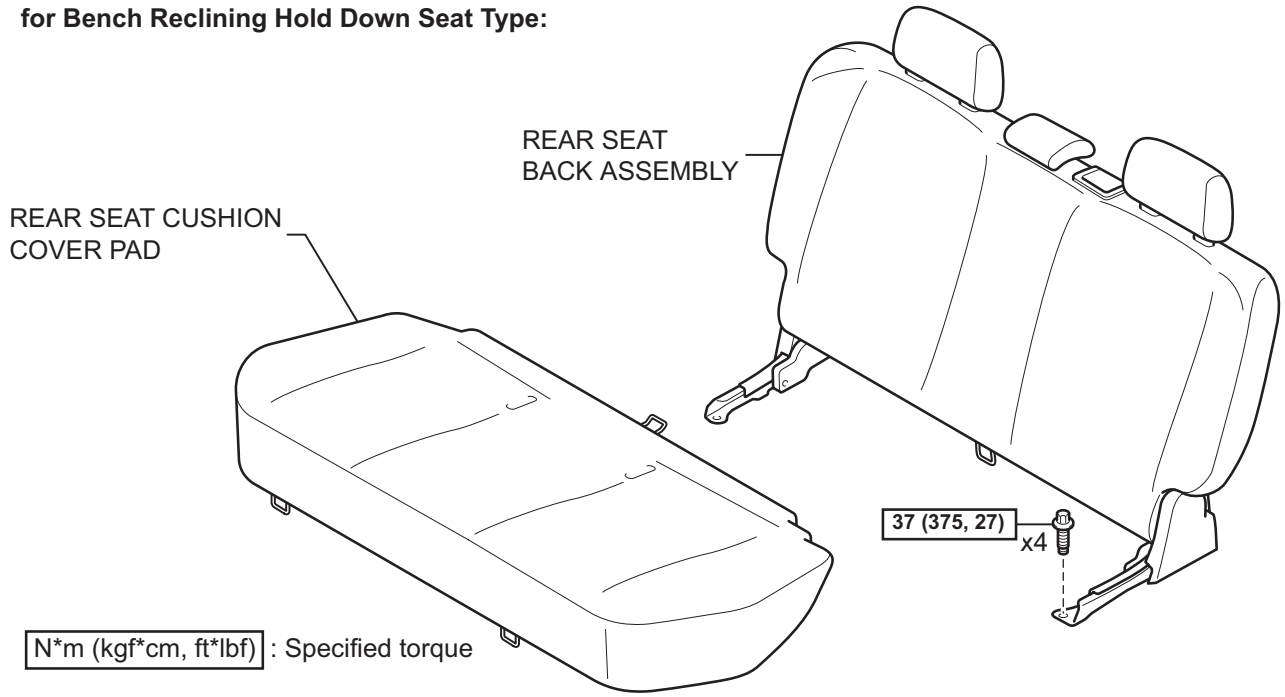

T

B121713E01

WS

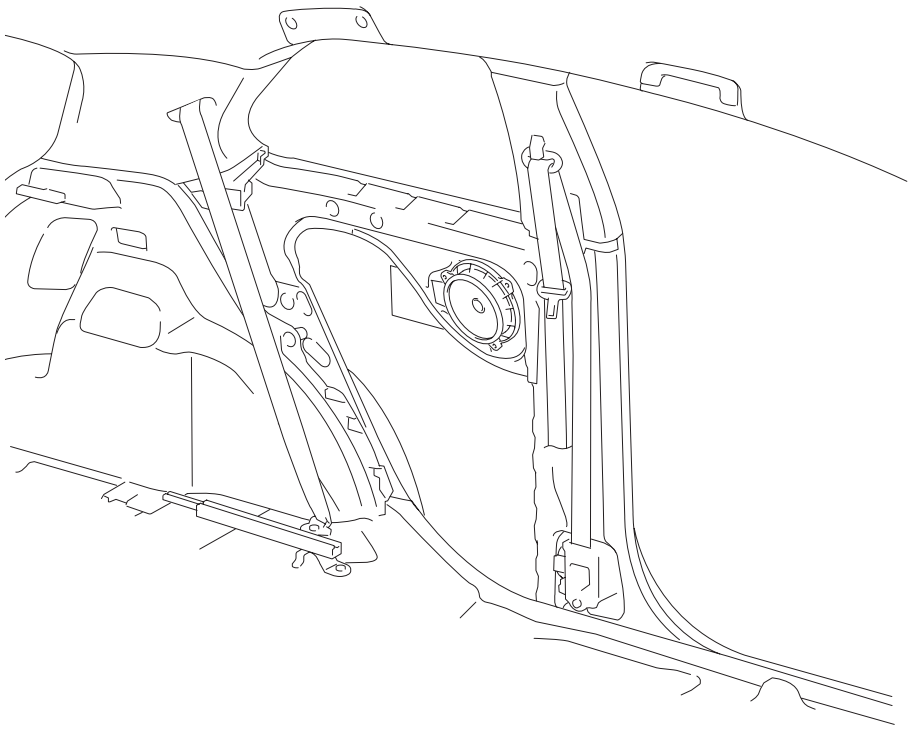

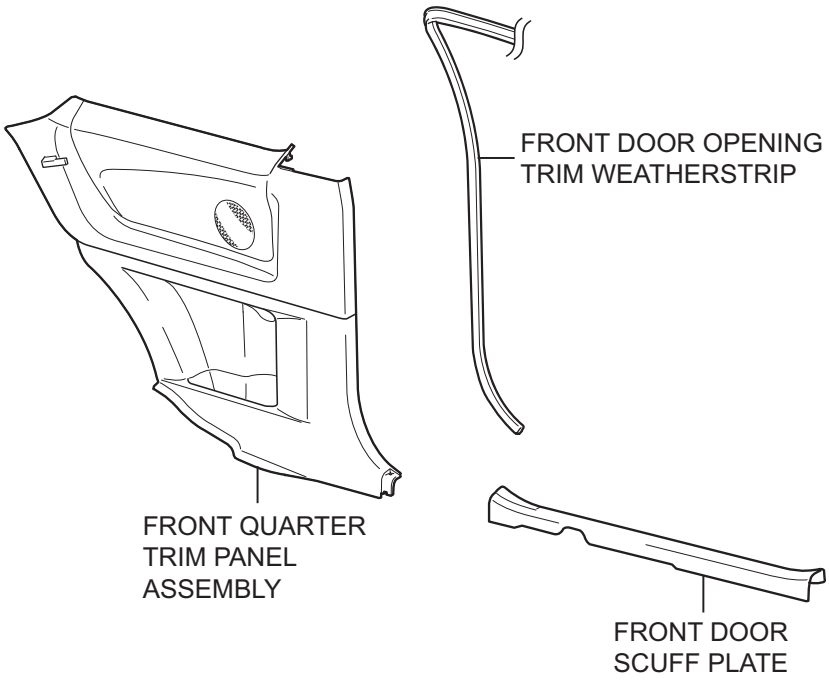

P

B128441E02

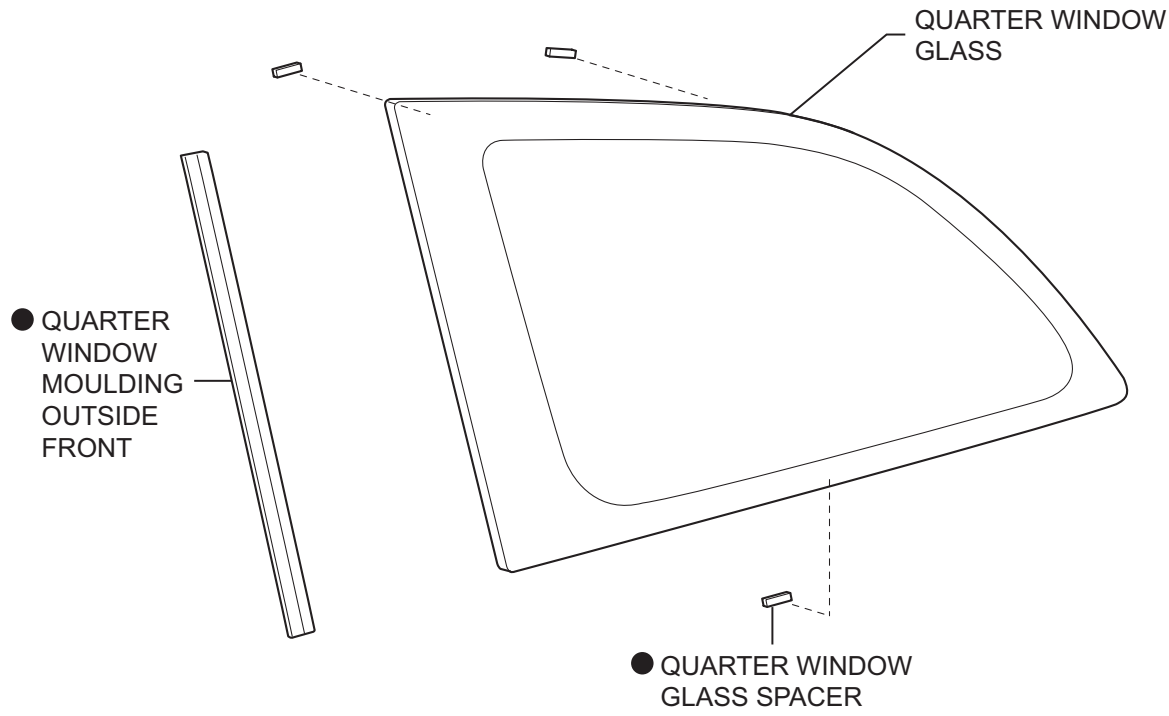

● Non-reusable part

B118084E01

REMOVAL

NOTICE:
Always use "Torx" socket wrench E10 when removing the rear seat.
HINT:
- Use the same procedure for both the RH and LH sides.
- The procedure described below is for the LH side.

1. **DISCONNECT CABLE FROM NEGATIVE BATTERY TERMINAL**
   Wait for at least 90 seconds after disconnecting the cable to prevent the airbag from working.
2. **REMOVE PACKAGE TRAY TRIM PANEL ASSEMBLY (See page IR-48)**
3. **REMOVE DECK BOARD SUB-ASSEMBLY (See page IR-48)**
4. **REMOVE DECK FLOOR BOX RH (See page IR-48)**
5. **REMOVE DECK FLOOR BOX LH (See page IR-48)**
6. **REMOVE NO. 1 REAR SEAT LEG COVER (for 60/40 Slide Reclining Hold Down Seat Type)**
   (a) for RH Side:
   (1) Remove the No. 1 rear seat leg cover (see page SE-89).
   (b) for LH Side:
   (1) Remove the No. 1 rear seat leg cover (see page SE-70).
7. **REMOVE NO. 2 REAR SEAT LEG COVER (for 60/40 Slide Reclining Hold Down Seat Type LH Side) (See page SE-70)**
8. **REMOVE REAR SEAT ASSEMBLY (for 60/40 Slide Reclining Hold Down Seat Type)**
   (a) for RH Side:
   (1) Remove the rear seat assembly (see page SE-89).
   (b) for LH Side:
   (1) Remove the rear seat assembly (see page SE-71).
9. **REMOVE REAR SEAT CUSHION COVER PAD (for Bench Reclining Hold Down Seat Type) (See page SE-114)**
10. **REMOVE REAR SEAT BACK ASSEMBLY (for Bench Reclining Hold Down Seat Type) (See page SE-115)**
11. **REMOVE FRONT DOOR SCUFF PLATE**
    HINT:
    Use the same procedure as for the RH side (see page AV-184).

WS

12. SEPARATE FRONT DOOR OPENING TRIM WEATHERSTRIP

HINT:

Use the same procedure as for the RH side (see page AV-184).

13. REMOVE FRONT QUARTER TRIM PANEL ASSEMBLY

HINT:

Use the same procedure as for the RH side (see page AV-184).

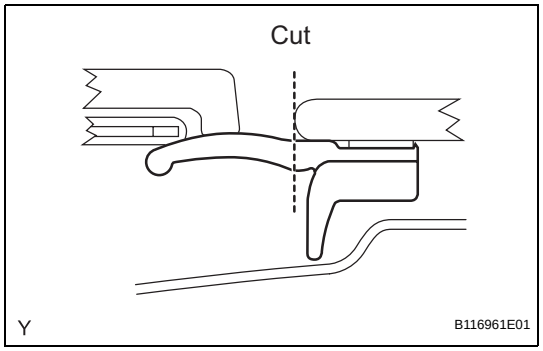

14. REMOVE QUARTER WINDOW MOULDING OUTSIDE FRONT

(a) Using a knife, cut off the quarter window moulding outside front.

NOTICE:

Do not damage the vehicle body with the knife.

HINT:

Make a partial cut in the quarter window moulding outside front. Then pull and remove it by hand.

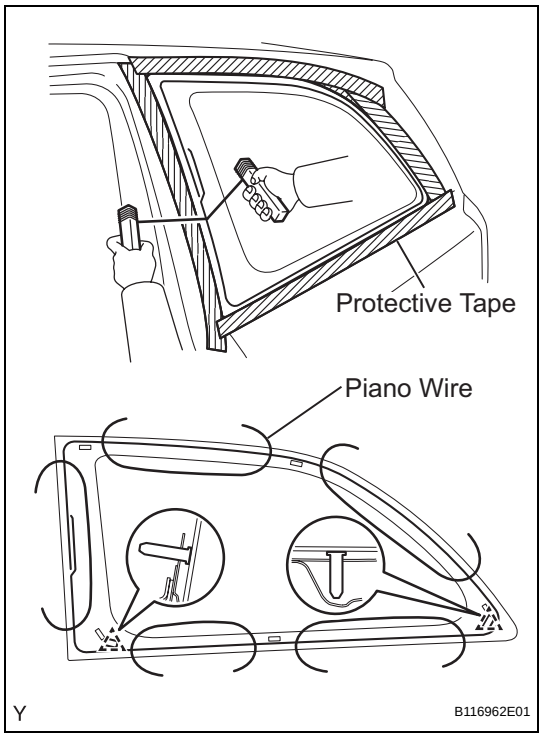

15. REMOVE QUARTER WINDOW GLASS

(a) Apply protective tape to the outer circumference of the quarter window, as shown in the illustration.

(b) From the interior, insert piano wires between the vehicle body and quarter window, as shown in the illustration.

(c) Tie objects that can serve as handles (for example, wooden blocks) to all wire ends.

NOTICE:

When separating the quarter window from the vehicle, do not damage the vehicle's paintwork or exterior/interior ornaments.

(d) Cut through the adhesive by pulling the piano wire around the quarter window.

WS

INSTALLATION

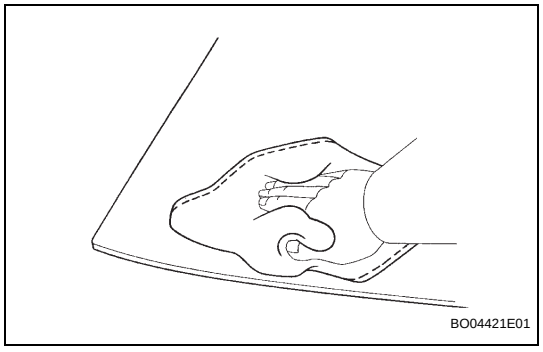

1. CLEAN QUARTER WINDOW GLASS

(a) Clean the outer circumference of the glass with a non-residue solvent.

NOTICE:

- **Do not touch the glass surface after cleaning it.**
- **Even if using a new glass, clean the glass with a non-residue solvent.**

HINT:
Since the pin is for positioning the glass, there is no need to replace it with a new one when reusing the glass, even if damaged.

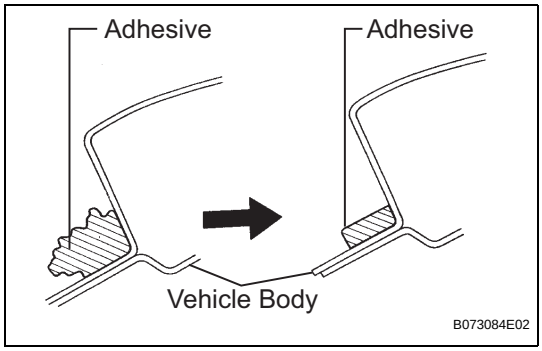

2. CLEAN VEHICLE BODY

(a) Clean and shape the contact surface of the vehicle body.

(1) Using a knife, cut away any rough adhesive on the contact surface of the vehicle body to ensure the appropriate surface shape.

NOTICE:
Do not damage the vehicle body.

HINT:
Leave as much adhesive on the vehicle body as possible.

(2) Clean the contact surface of the vehicle body with a shop rag or piece of cloth saturated with cleaner.

HINT:
Clean the vehicle body even if all the adhesive has been removed.

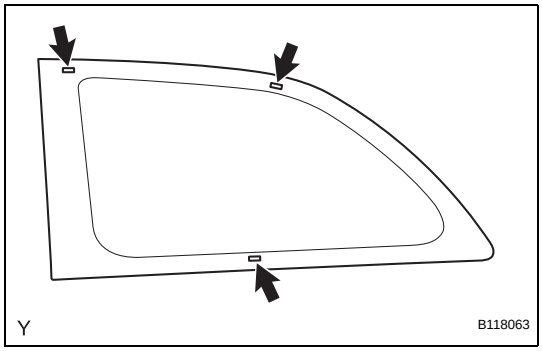

3. INSTALL QUARTER WINDOW GLASS SPACER

(a) Coat the installation parts of the spacers with Primer G.

(b) Install 3 new spacers onto the glass, as shown in the illustration.

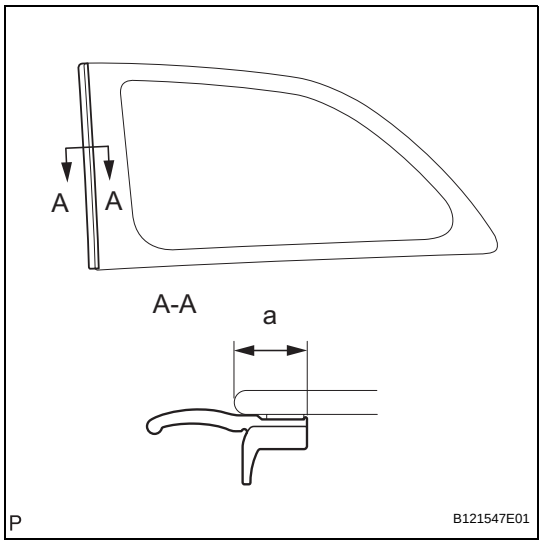

4. INSTALL QUARTER WINDOW MOULDING OUTSIDE FRONT

(a) Using a brush or sponge, apply Primer G to the edge of the quarter window and contact surface.

NOTICE:
- **Allow the primer to dry for 3 minutes or more.**
- **Throw away any leftover Primer G.**
- **Do not apply too much Primer G.**

HINT:
If Primer G is applied to any areas other than those specified, wipe off the primer with a clean shop rag or piece of cloth before it dries.

(b) Install the quarter window moulding outside front, as shown in the illustration.

Specification

Area	Measurement
a	9.5 mm (0.374 in.)

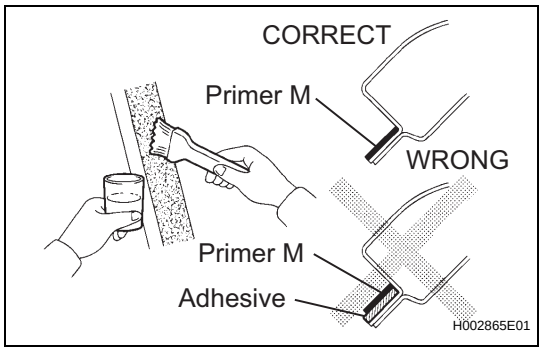

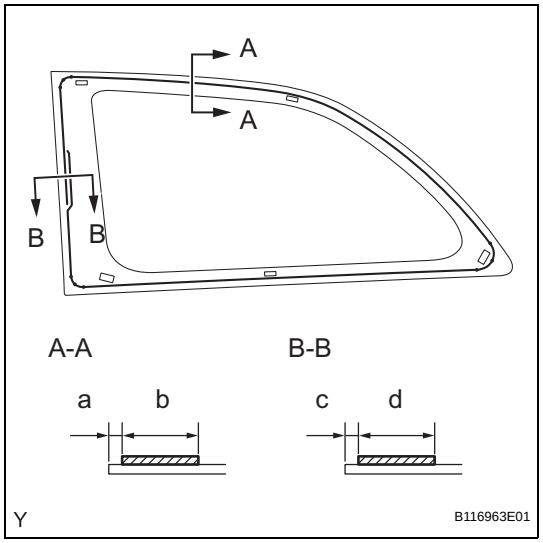

5. INSTALL QUARTER WINDOW GLASS

(a) Using a brush, apply Primer M to the exposed part of the vehicle body.

NOTICE:

- **Allow the primer to dry for 3 minutes or more.**
- **Do not apply Primer M to the adhesive.**
- **Throw away any leftover Primer M.**
- **Do not apply too much Primer M.**

(b) Using a brush or sponge, apply Primer G to the edge of the quarter window and contact surface.

Specification

Area	Measurement
a	6.0 mm (0.236 in.)
b	14 mm (0.551 in.)
c	7.5 mm (0.295 in.)
d	22 mm (0.866 in.)

NOTICE:

- **Allow the primer to dry for 3 minutes or more.**
- **Throw away any leftover Primer G.**
- **Do not apply too much Primer G.**

HINT:

If Primer G is applied to any areas other than those specified, wipe off the primer with a clean shop rag or piece of cloth before it dries.

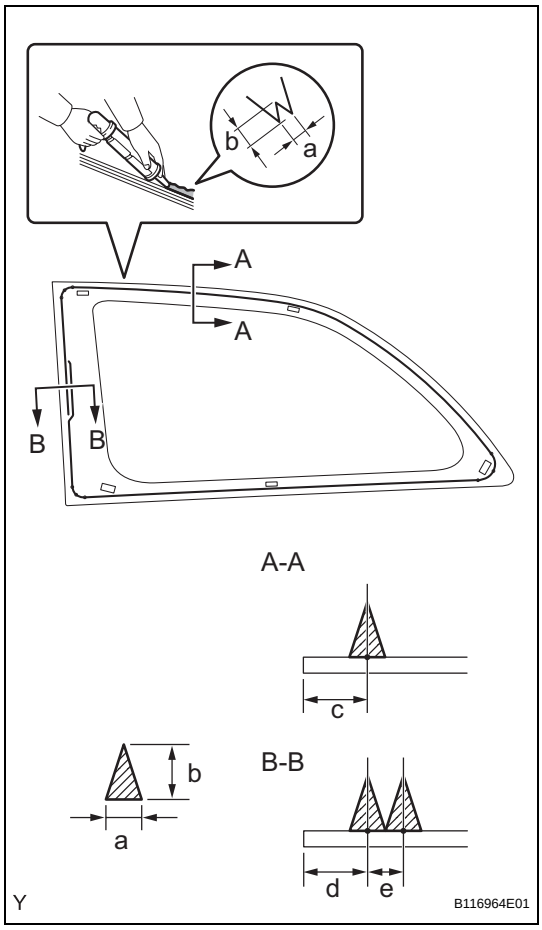

(c) Apply adhesive.

Adhesive:

Part No. 08850-00801 or the equivalent

(1) Cut the tip off the cartridge nozzle, as shown in the illustration.

HINT:

After cutting off the tip, use all adhesive within the time indicated in the table below.

Usage Time Frame

Temperature	Usage Time Frame
35°C (95°F)	15 minutes
20°C (68°F)	1 hour 40 minutes
5°C (41°F)	8 hours

(2) Load the sealer gun with the cartridge.

(3) Apply adhesive to the quarter window as shown in the illustration.

Specification

Area	Measurement
a	8 mm (0.315 in.)
b	12 mm (0.472 in.)
c	13 mm (0.512 in.)
d	14.5 mm (0.571 in.)
e	8 mm (0.315 in.)

(d) Install the quarter window glass to the body.

(1) Hold the quarter window glass in place securely with protective tape or the equivalent until the adhesive hardens.

NOTICE:

- **Allow the primer coating to dry for 3 minutes or more.**
- **Check that the pins are attached to the body correctly.**
- **Check the clearance between the body and glass.**

(2) Lightly press the front surface of the glass to ensure a close fit.

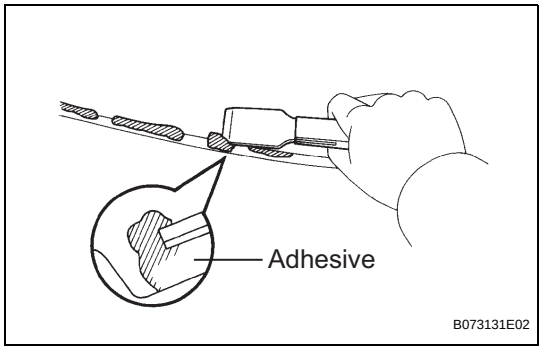

(3) Using a scraper, remove any excessive or protruding adhesive.

HINT:

Apply adhesive to the quarter window glass rim.

NOTICE:

Do not to drive the vehicle within the time indicated in the table below.

Minimum time

Temperature	Minimum time prior to driving vehicle
35°C (95°F)	1 hour 30 minutes
20°C (68°F)	5 hours
5°C (41°F)	24 hours

WS

6. **CHECK FOR LEAKAGE AND REPAIR**
   (a) Conduct a leak test after the adhesive has completely hardened.
   (b) Seal any leakage with auto glass sealer.

7. **INSTALL FRONT QUARTER TRIM PANEL ASSEMBLY**
   HINT:
   Use the same procedure as for the RH side (see page AV-186).

8. **INSTALL FRONT DOOR OPENING TRIM WEATHERSTRIP**
   HINT:
   Use the same procedure as for the RH side (see page AV-186).

9. **INSTALL FRONT DOOR SCUFF PLATE**
   HINT:
   Use the same procedure as for the RH side (see page AV-186).

10. **INSTALL REAR SEAT ASSEMBLY (for 60/40 Slide Reclining Hold Down Seat Type)**
    (a) for RH Side:
       (1) Install the rear seat assembly (see page SE-102).
    (b) for LH Side:
       (1) Install the rear seat assembly (see page SE-84).

11. **INSTALL NO. 2 REAR SEAT LEG COVER (for 60/40 Slide Reclining Hold Down Seat Type LH Side) (See page SE-85)**

12. **INSTALL NO. 1 REAR SEAT LEG COVER (for 60/40 Slide Reclining Hold Down Seat Type)**
    (a) for RH Side:
       (1) Install the No. 1 rear seat leg cover (see page SE-103).
    (b) for LH Side:
       (1) Install the No. 1 rear seat leg cover (see page SE-85).

13. **INSTALL REAR SEAT BACK ASSEMBLY (for Bench Reclining Hold Down Seat Type) (See page SE-122)**

14. **INSTALL REAR SEAT CUSHION COVER PAD (for Bench Reclining Hold Down Seat Type) (See page SE-123)**

15. **INSTALL DECK FLOOR BOX RH (See page IR-83)**

16. **INSTALL DECK FLOOR BOX LH (See page IR-83)**

17. **INSTALL DECK BOARD SUB-ASSEMBLY (See page IR-83)**

18. **INSTALL PACKAGE TRAY TRIM PANEL ASSEMBLY (See page IR-83)**

19. CONNECT CABLE TO NEGATIVE BATTERY TERMINAL
Torque: 5.4 N*m (55 kgf*cm, 48 in.*lbf)

POWER MIRROR CONTROL SYSTEM

PARTS LOCATION

HATCHBACK:

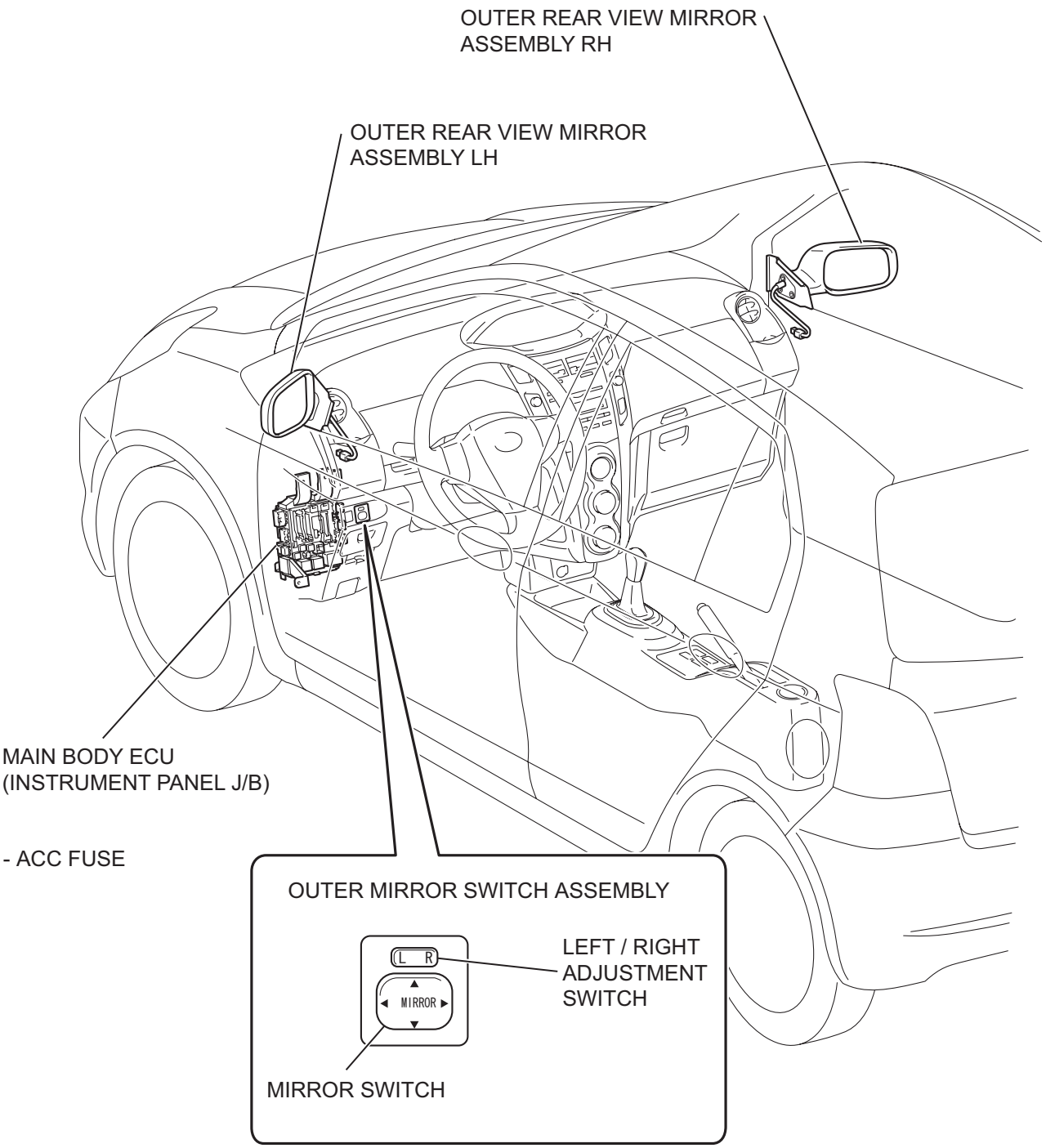

Y

B117148E04

MI

SEDAN:

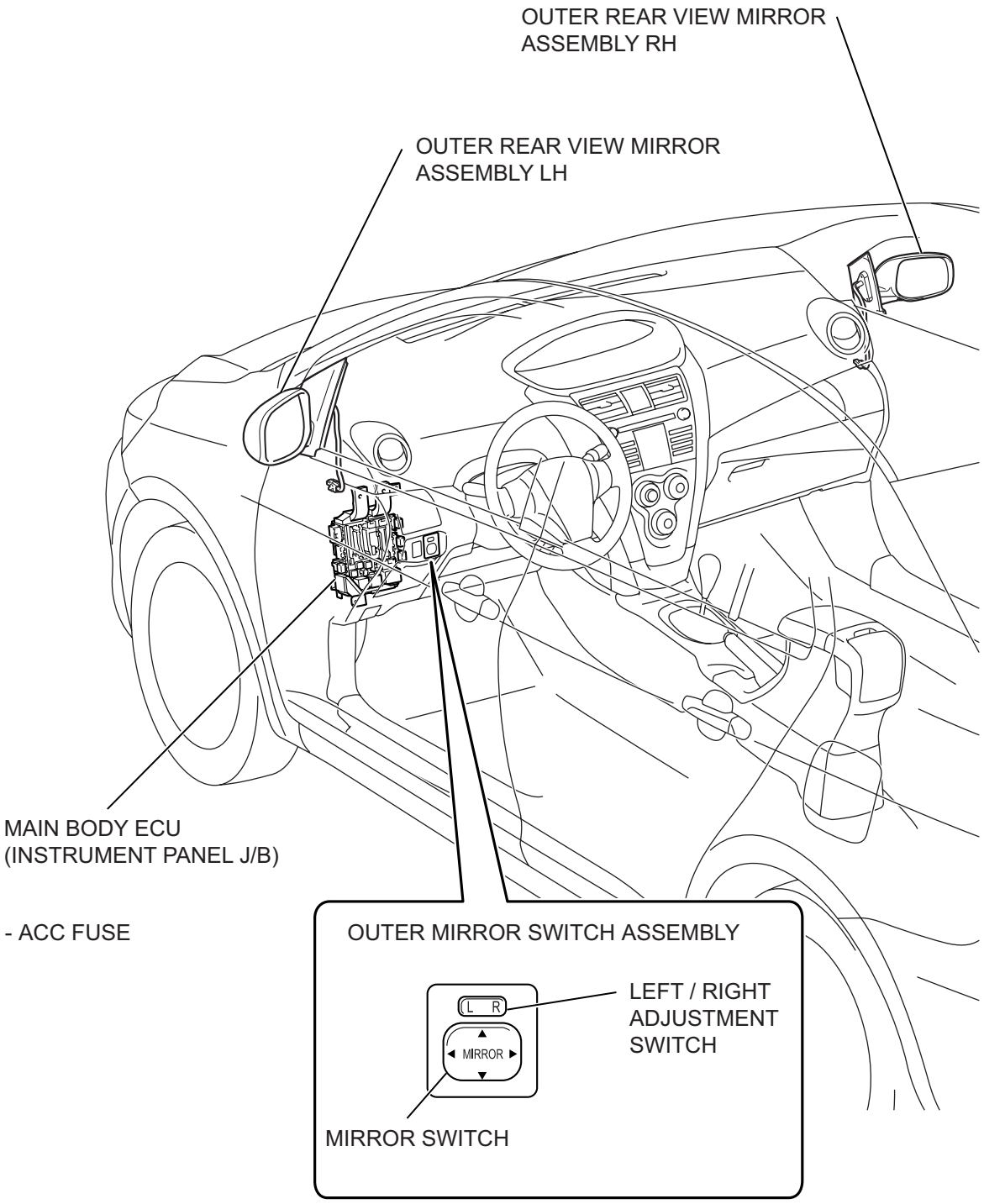

B142260E01

MI

SYSTEM DIAGRAM

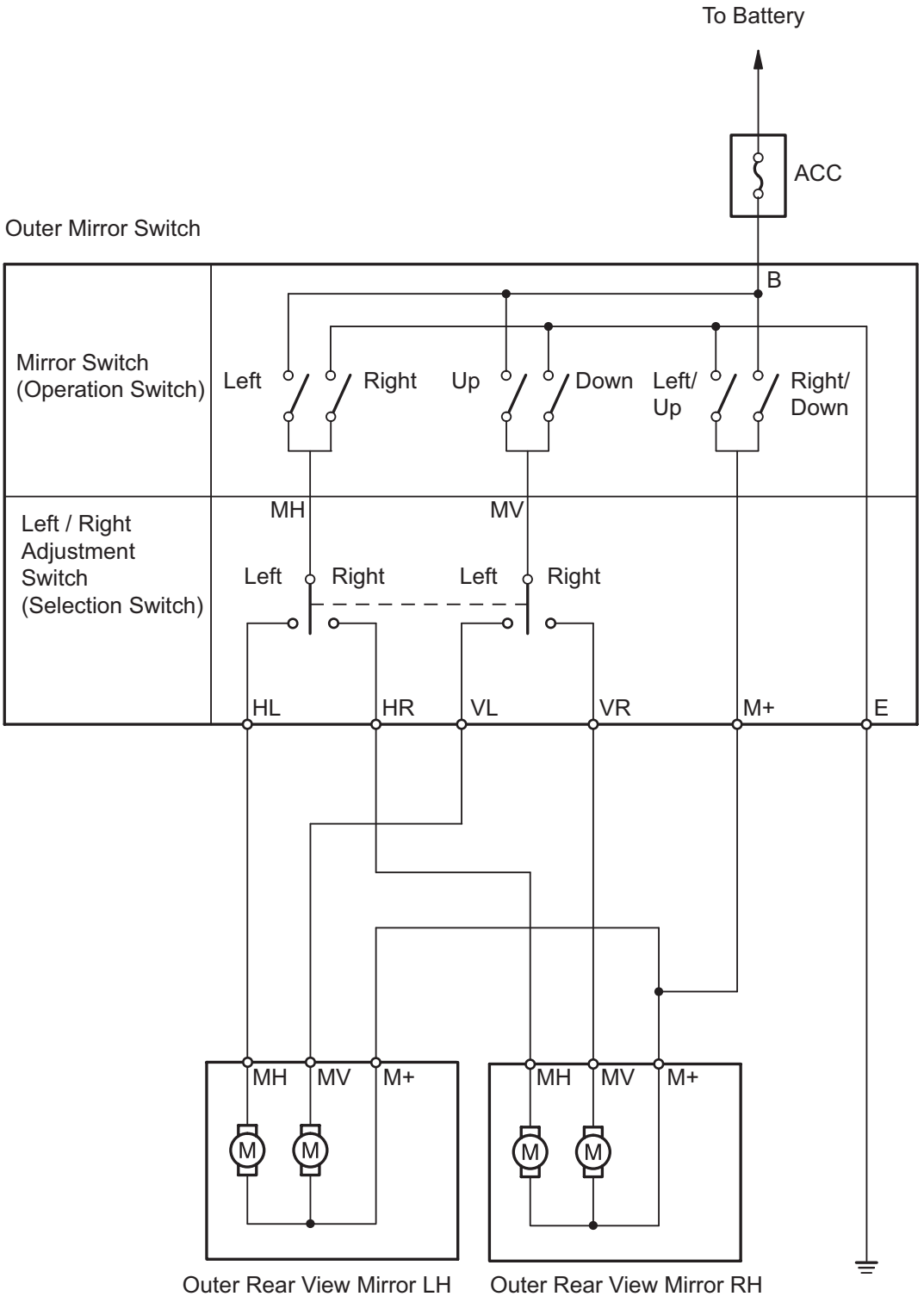

MI

PROBLEM SYMPTOMS TABLE

HINT:
Use the table below to help determine the causes of the problem symptom. The potential causes of the symptoms are listed in order of probability in the "Suspected Area" column of the table. Check each symptom by checking the suspected areas in the order they are listed. Replace parts as necessary.

Power mirror control system

Symptom	Suspected area	See page
Mirror does not operate	ACC fuse	MI-1
	Outer mirror switch assembly (for hatchback)	MI-21
	Outer mirror switch assembly (for sedan)	MI-18
	Outer rear view mirror assembly (for hatchback)	MI-14
	Outer rear view mirror assembly (for sedan)	MI-9
	Wire harness	-
Mirror operates abnormally	Outer mirror switch assembly (for hatchback)	MI-21
	Outer mirror switch assembly (for sedan)	MI-18
	Outer rear view mirror assembly (for hatchback)	MI-14
	Outer rear view mirror assembly (for sedan)	MI-9
	Wire harness	-

INNER REAR VIEW MIRROR

COMPONENTS

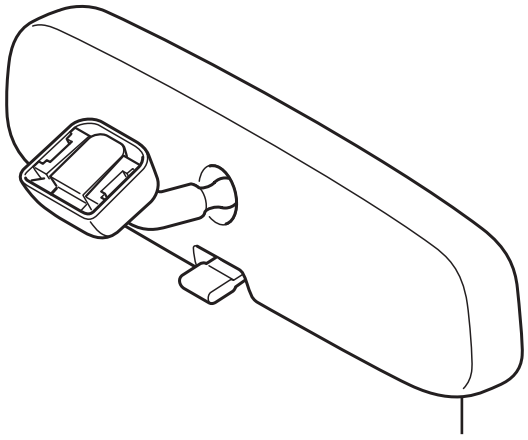

INNER REAR VIEW
MIRROR ASSEMBLY

G

B101911E01

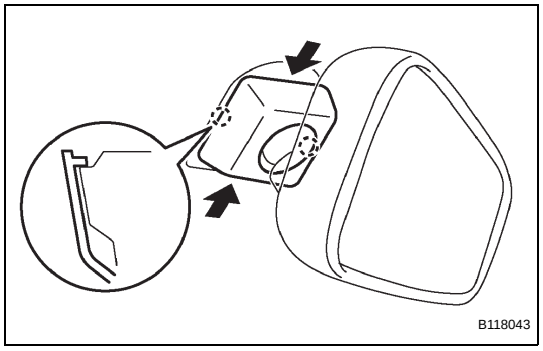

B118043

REMOVAL

1. REMOVE INNER REAR VIEW MIRROR ASSEMBLY

(a) Pinch the cover, disengage the 2 claws and remove the cover.

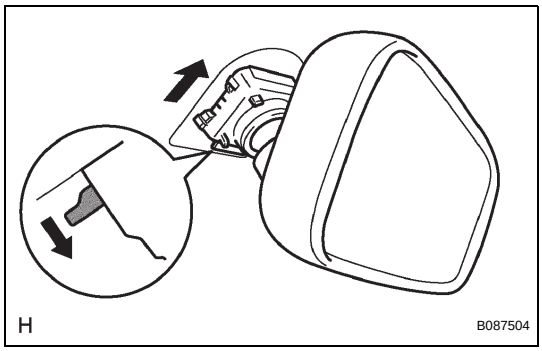

(b) Push the lever, and slide and remove the inner rear view mirror.

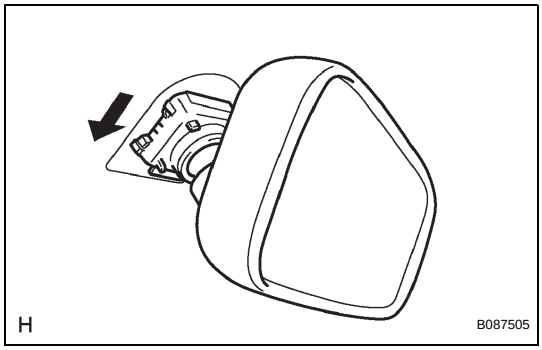

INSTALLATION

1. INSTALL INNER REAR VIEW MIRROR ASSEMBLY

(a) Slide and install the inner rear view mirror.

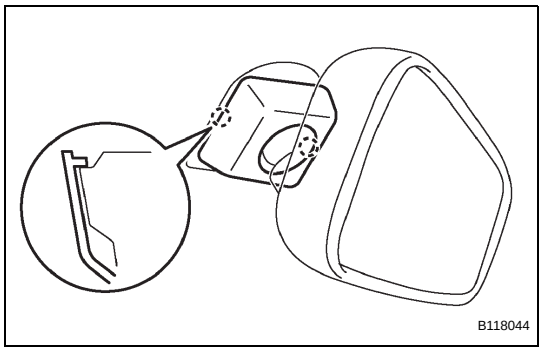

(b) Engage the 2 claws and install the cover.

OUTER REAR VIEW MIRROR (for Sedan)

COMPONENTS

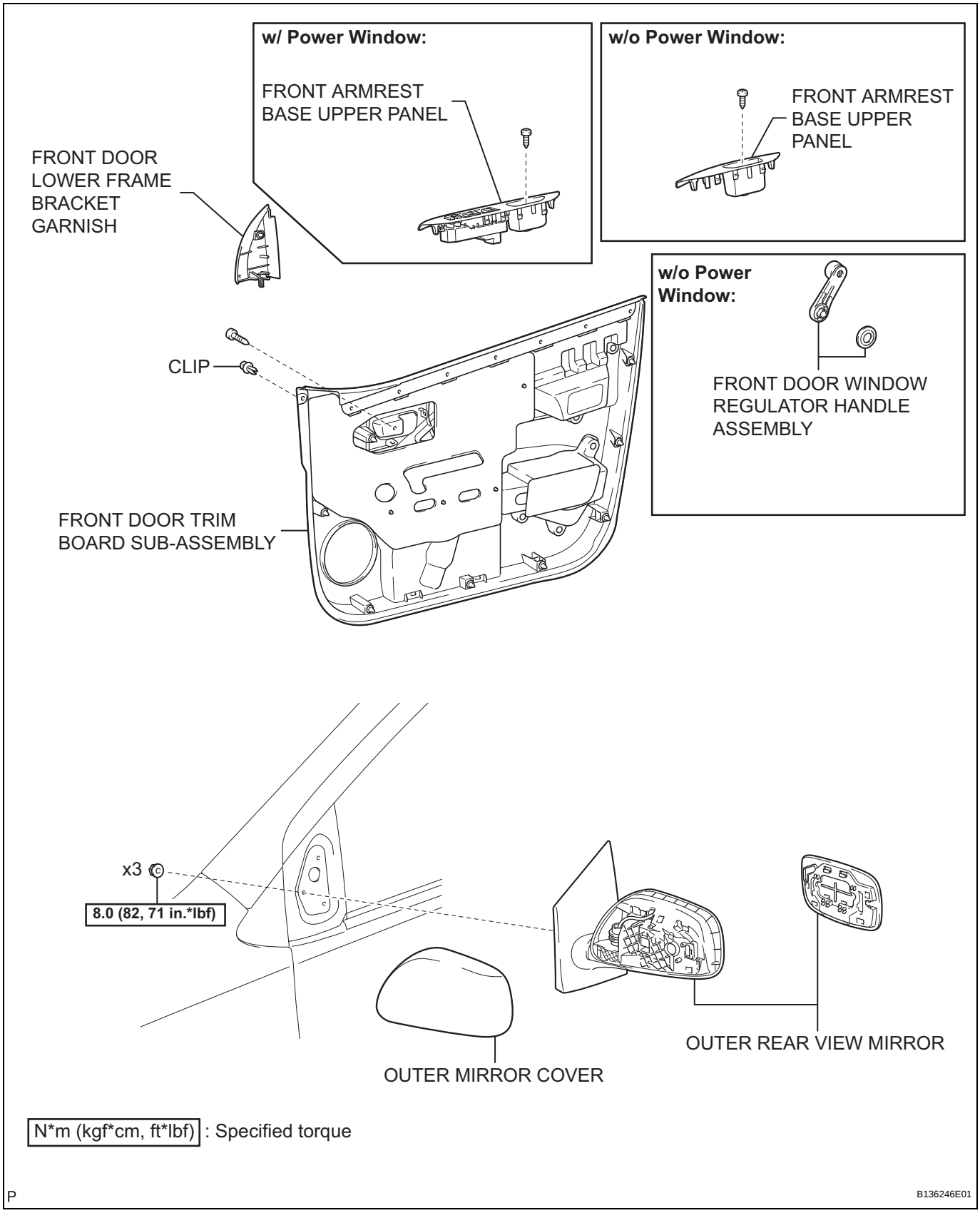

N*m (kgf*cm, ft*lbf) : Specified torque

P

B136246E01

MI

REMOVAL

HINT:

- Use the same procedure for both the RH and LH sides.
- The procedure described below is for the LH side.

1. **REMOVE CABLE FROM NEGATIVE BATTERY TERMINAL**
2. **REMOVE FRONT DOOR WINDOW REGULATOR HANDLE ASSEMBLY (w/o Power Window) (See page ED-9)**
3. **REMOVE FRONT ARMREST BASE UPPER PANEL (See page ED-9)**
4. **REMOVE FRONT DOOR LOWER FRAME BRACKET GARNISH (See page ED-9)**
5. **REMOVE FRONT DOOR TRIM BOARD SUB-ASSEMBLY (See page ED-11)**
6. **REMOVE OUTER REAR VIEW MIRROR**
   (a) w/ Power mirror:
   Disconnect the connector.
   (b) Remove the 3 nuts, disengage the claw and remove the outer rear view mirror.

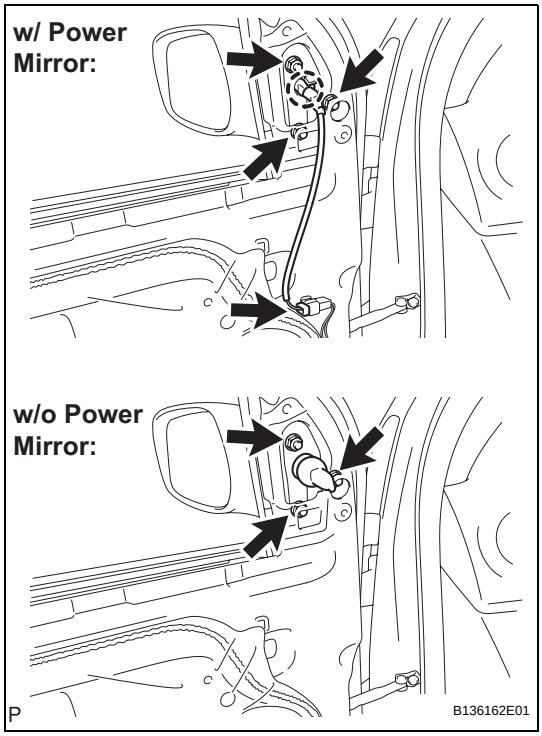

MI

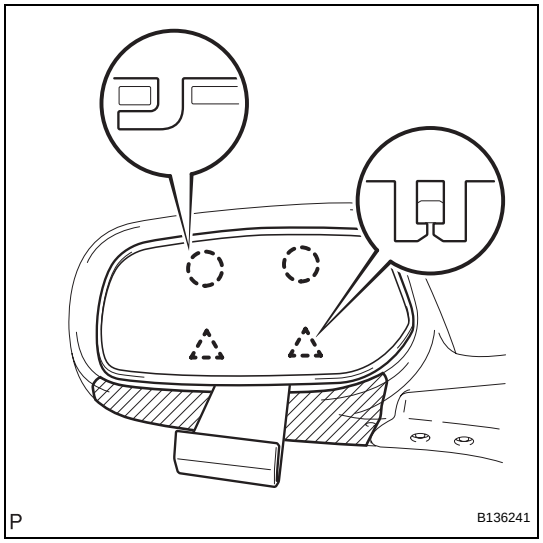

7. REMOVE OUTER MIRROR COVER

(a) Apply protective tape to the lower part of the mirror body.

(b) Press down the upper part of the mirror and tilt the mirror.

(c) Insert a moulding remover into the 2 clip installation positions on the lower part of the mirror to disengage the 2 clips.

(d) Remove the mirror by pulling it downward.

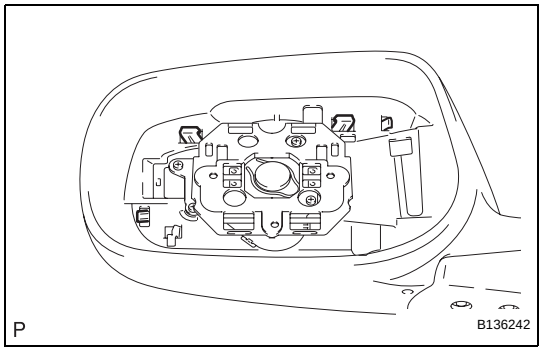

(e) Disengage the 4 claws from the inside of the mirror body.

(f) Push the upper part of the mirror cover forward to tilt it, and then disengage the claw on the lower part to remove the outer mirror cover.

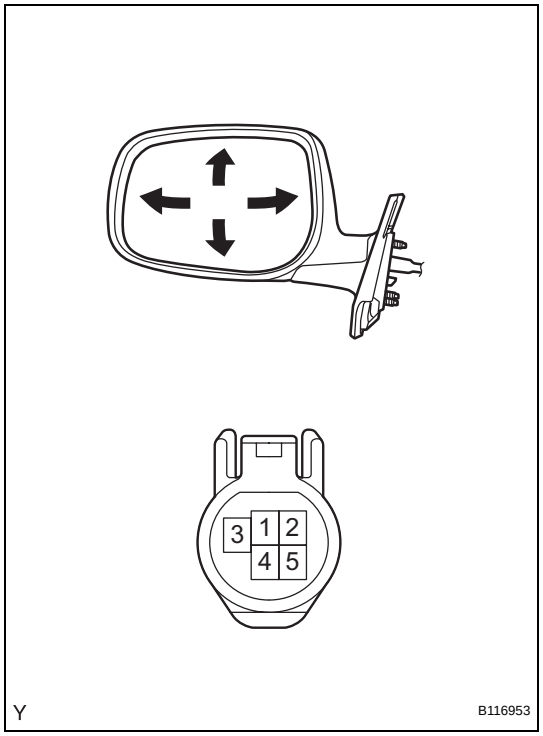

INSPECTION

1. INSPECT OUTER REAR VIEW MIRROR ASSEMBLY LH

(a) Check the operation.

(1) Apply battery voltage to the outer rear view mirror and check the operation of the outer rear view mirror.

Standard

Measurement Condition	Mirror Assembly Operation
Battery positive (+) - Terminal 5 (MV) Battery negative (-) - Terminal 4 (COM)	Turns upward
Battery positive (+) - Terminal 4 (COM) Battery negative (-) - Terminal 5 (MV)	Turns downward
Battery positive (+) - Terminal 3 (MH) Battery negative (-) - Terminal 4 (COM)	Turns left
Battery positive (+) - Terminal 4 (COM) Battery negative (-) - Terminal 3 (MH)	Turns right

If the result is not as specified, replace the outer rear view mirror.

MI

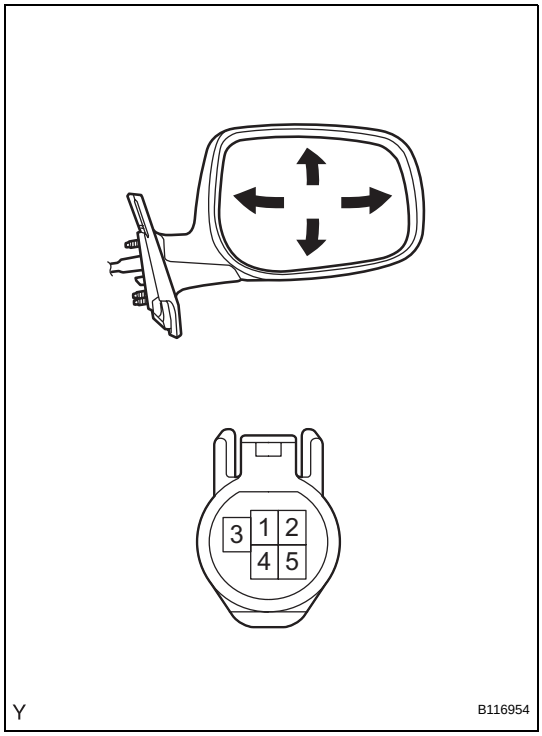

2. INSPECT OUTER REAR VIEW MIRROR ASSEMBLY RH

(a) Check the operation.

(1) Apply battery voltage to the outer rear view mirror and check the operation of the outer rear view mirror.

Standard

Measurement Condition	Mirror Assembly Operation
Battery positive (+) - Terminal 5 (MV) Battery negative (-) - Terminal 4 (COM)	Turns upward
Battery positive (+) - Terminal 4 (COM) Battery negative (-) - Terminal 5 (MV)	Turns downward
Battery positive (+) - Terminal 3 (MH) Battery negative (-) - Terminal 4 (COM)	Turns left
Battery positive (+) - Terminal 4 (COM) Battery negative (-) - Terminal 3 (MH)	Turns right

If the result is not as specified, replace the outer rear view mirror.

INSTALLATION

1. INSTALL OUTER MIRROR COVER

(a) Engage the claw on the lower part of the mirror cover.

(b) Engage the claw on the upper part of the mirror cover.

(c) After installing the outer mirror cover, check that there are no gaps between the cover and the mirror body.

NOTICE:

If there is a gap between the cover and the mirror body, it may cause noise during driving.

(d) Engage the 2 claws of the outer rear view mirror.

(e) Engage the 2 clips and install the mirror.

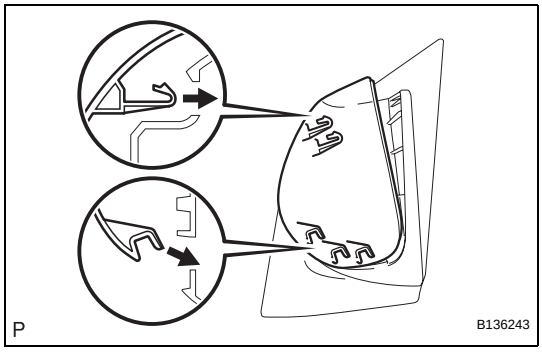

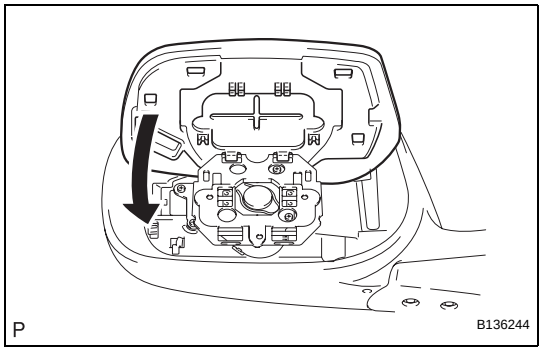

MI

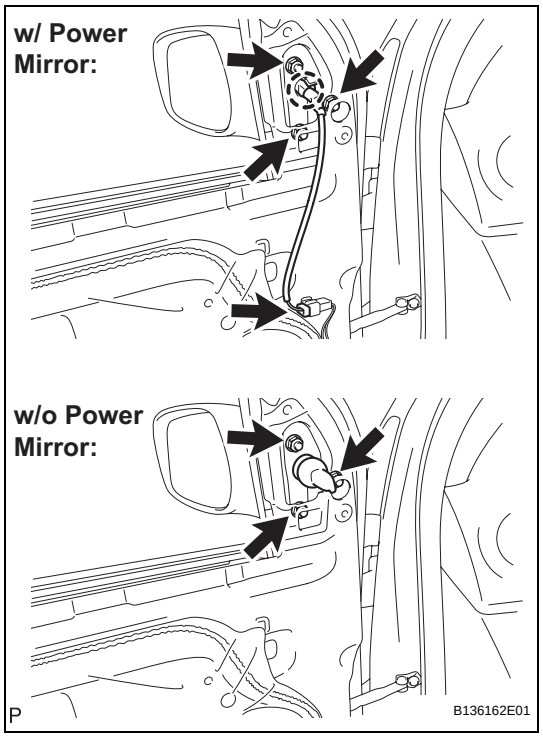

2. **INSTALL OUTER REAR VIEW MIRROR**
   (a) Engage the claw and install the outer rear view mirror with the 3 nuts.
   Torque: 8.0 N*m (82 kgf*cm, 71 in.*lbf)
   (b) w/ Power mirror:
   Connect the connector.
3. **INSTALL FRONT DOOR TRIM BOARD SUB-ASSEMBLY (See page ED-26)**
4. **INSTALL FRONT DOOR LOWER FRAME BRACKET GARNISH (See page ED-28)**
5. **INSTALL FRONT ARMREST BASE UPPER PANEL (See page ED-28)**
6. **INSTALL FRONT DOOR WINDOW REGULATOR HANDLE ASSEMBLY (w/o Power Window) (See page ED-29)**
7. **CONNECT CABLE TO NEGATIVE BATTERY TERMINAL**
   Torque: 5.4 N*m (55 kgf*cm, 48 in.*lbf)

OUTER REAR VIEW MIRROR (for Hatchback)

COMPONENTS

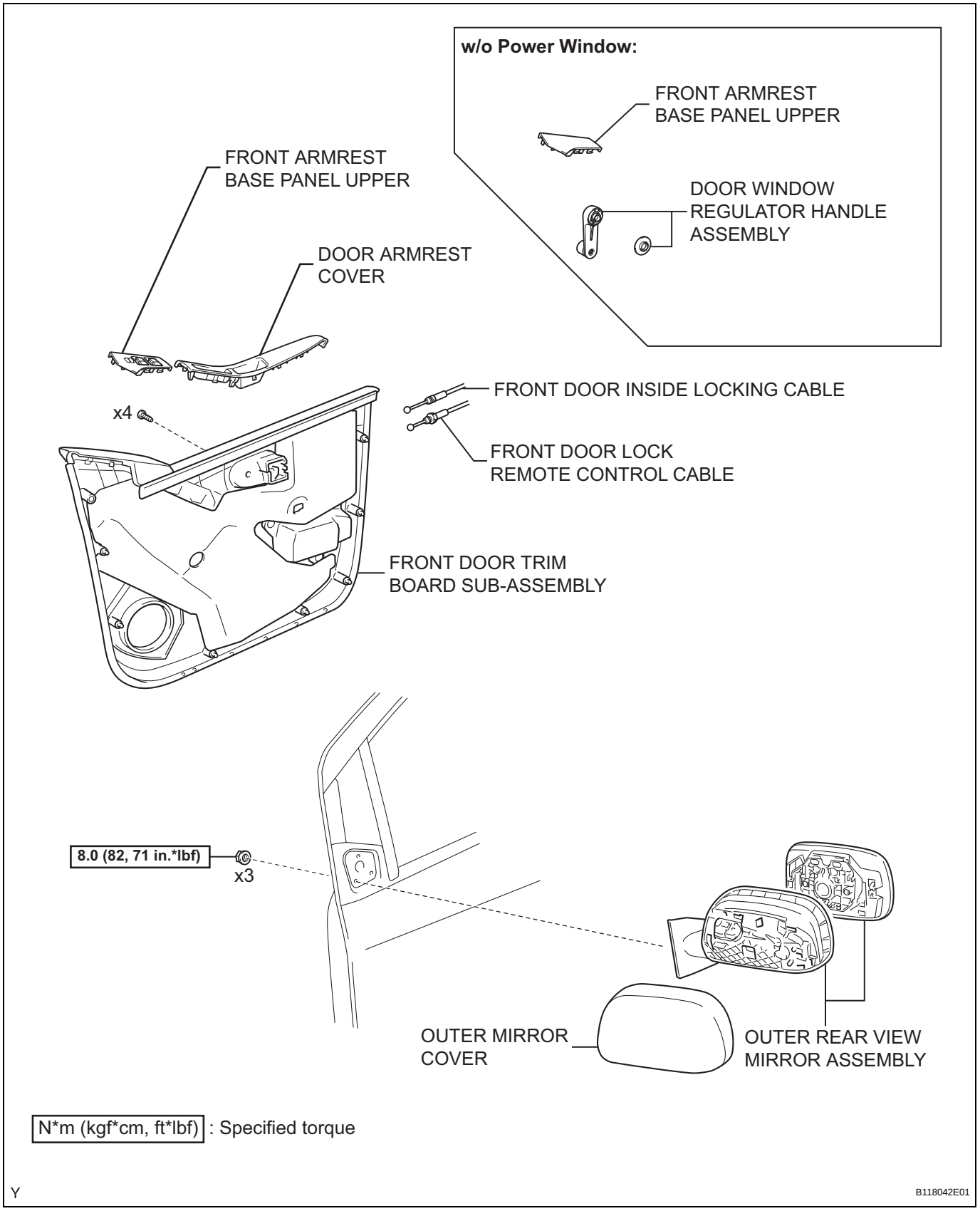

MI

REMOVAL

HINT:

- Use the same procedure for both the RH and LH sides.
- The procedure described below is for the LH side.

1. **DISCONNECT CABLE FROM NEGATIVE BATTERY TERMINAL**
2. **REMOVE DOOR WINDOW REGULATOR HANDLE ASSEMBLY (w/o Power Window) (See page ED-57)**
3. **REMOVE DOOR ARMREST COVER (See page ED-33)**
4. **REMOVE FRONT ARMREST BASE PANEL UPPER (w/ Power Window) (See page ED-33)**
5. **REMOVE FRONT ARMREST BASE PANEL UPPER (w/o Power Window) (See page ED-57)**
6. **REMOVE FRONT DOOR TRIM BOARD SUB-ASSEMBLY (See page ED-34)**
7. **REMOVE OUTER REAR VIEW MIRROR ASSEMBLY**
   (a) w/ Power mirror:
   Disconnect the connector.
   (b) Remove the 3 nuts, disengage the claw and remove the outer rear view mirror.

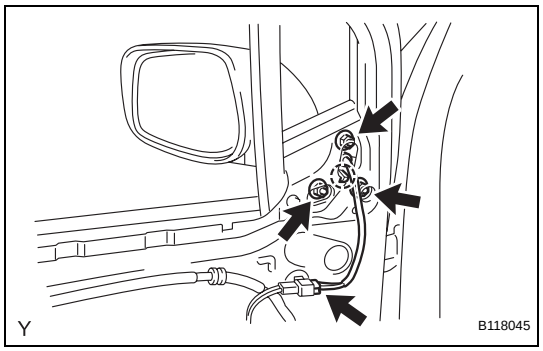

8. **REMOVE OUTER MIRROR COVER**
   (a) Apply protective tape to the lower part of the mirror body.
   (b) Press down the upper part of the mirror and tilt the mirror.
   (c) Insert a moulding remover into the 2 clip installation positions on the lower part of the mirror to disengage the 2 clips.
   (d) Remove the mirror by pulling it downward.

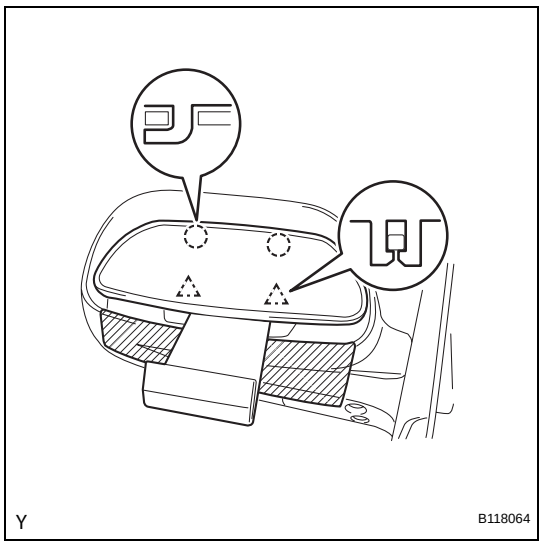

MI

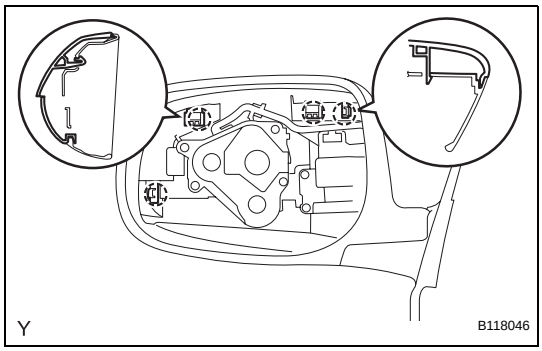

(e) Disengage the 4 claws from the inside of the mirror body.

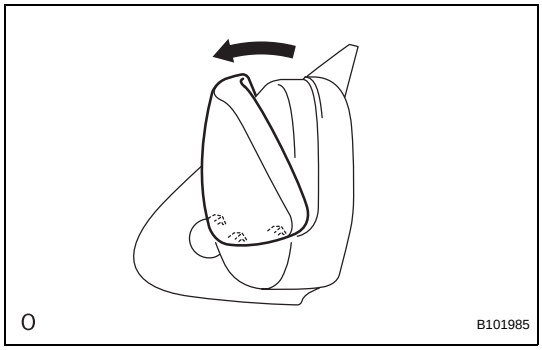

(f) Push the upper part of the mirror cover forward to tilt it, and then disengage the claw on the lower part to remove the outer mirror cover.

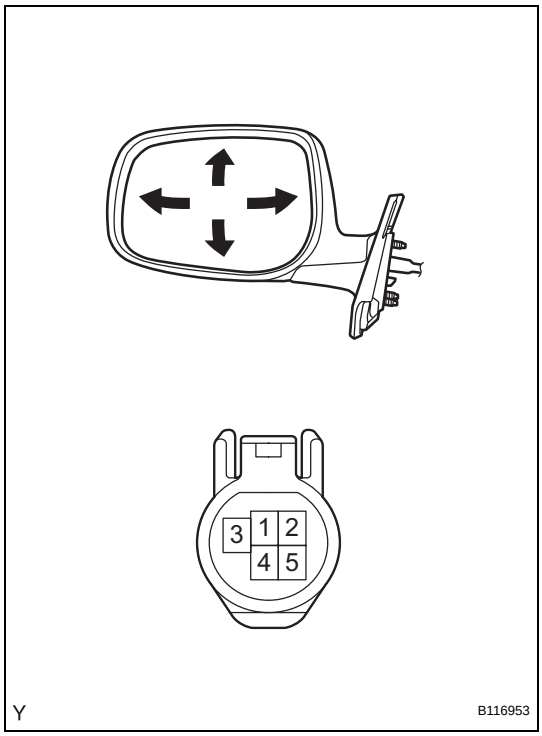

INSPECTION

1. INSPECT OUTER REAR VIEW MIRROR ASSEMBLY LH

(a) Check the operation.

(1) Apply battery voltage to the outer rear view mirror and check the operation of the outer rear view mirror.

Standard

Measurement Condition	Mirror Assembly Operation
Battery positive (+) - Terminal 5 (MV) Battery negative (-) - Terminal 4 (COM)	Turns upward
Battery positive (+) - Terminal 4 (COM) Battery negative (-) - Terminal 5 (MV)	Turns downward
Battery positive (+) - Terminal 3 (MH) Battery negative (-) - Terminal 4 (COM)	Turns left
Battery positive (+) - Terminal 4 (COM) Battery negative (-) - Terminal 3 (MH)	Turns right

If the result is not as specified, replace the outer rear view mirror.

MI

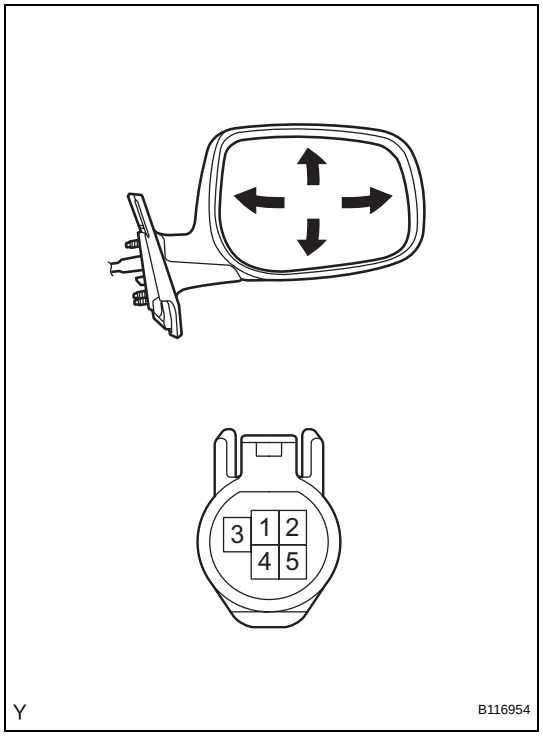

2. INSPECT OUTER REAR VIEW MIRROR ASSEMBLY RH

(a) Check the operation.

(1) Apply battery voltage to the outer rear view mirror and check the operation of the outer rear view mirror.

Standard

Measurement Condition	Mirror Assembly Operation
Battery positive (+) - Terminal 5 (MV) Battery negative (-) - Terminal 4 (COM)	Turns upward
Battery positive (+) - Terminal 4 (COM) Battery negative (-) - Terminal 5 (MV)	Turns downward
Battery positive (+) - Terminal 3 (MH) Battery negative (-) - Terminal 4 (COM)	Turns left
Battery positive (+) - Terminal 4 (COM) Battery negative (-) - Terminal 3 (MH)	Turns right

If the result is not as specified, replace the outer rear view mirror.

INSTALLATION

1. INSTALL OUTER MIRROR COVER

(a) Engage the claw on the lower part of the mirror cover.

(b) Engage the claw on the upper part of the mirror cover and install it.

(c) After installing the outer mirror cover, check that there are no gaps between the cover and the mirror body.

NOTICE:

If there is a gap between the cover and the mirror body, it may cause noise during driving.

(d) Engage the 2 claws of the outer rear view mirror.

(e) Engage the 2 clips and install the mirror.

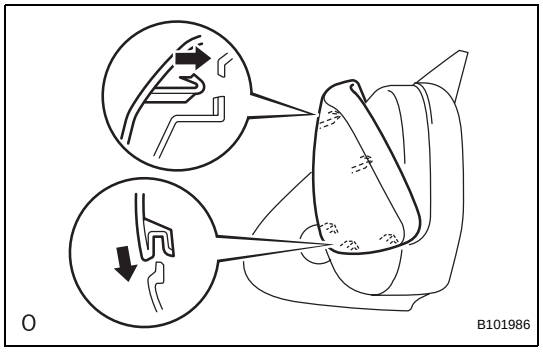

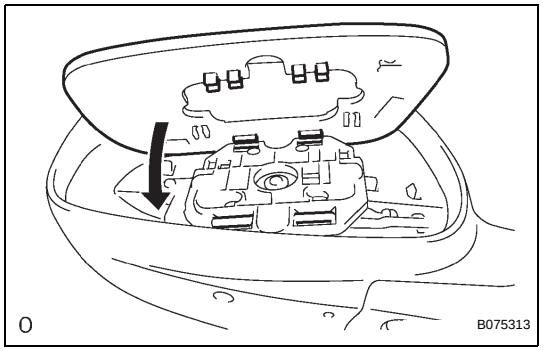

MI

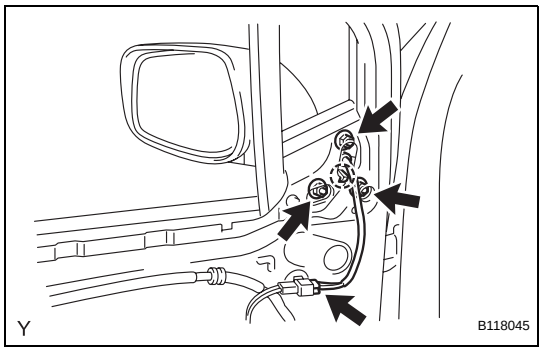

2. INSTALL OUTER REAR VIEW MIRROR ASSEMBLY

(a) Engage the claw, then install the outer rear view mirror with the 3 nuts.
Torque: 8.0 N*m (82 kgf*cm, 71 in.*lbf)

(b) w/ Power mirror:
Connect the connector.

3. INSTALL FRONT DOOR TRIM BOARD SUB-ASSEMBLY (See page ED-51)

4. INSTALL FRONT ARMREST BASE PANEL UPPER (w/ Power Window) (See page ED-53)

5. INSTALL FRONT ARMREST BASE PANEL UPPER (w/ o Power Window) (See page ED-74)

6. INSTALL DOOR ARMREST COVER (See page ED-53)

7. INSTALL DOOR WINDOW REGULATOR HANDLE ASSEMBLY (w/o Power Window) (See page ED-75)

8. CONNECT CABLE TO NEGATIVE BATTERY TERMINAL
Torque: 5.4 N*m (55 kgf*cm, 48 in.*lbf)

OUTER MIRROR SWITCH (for Sedan)

COMPONENTS

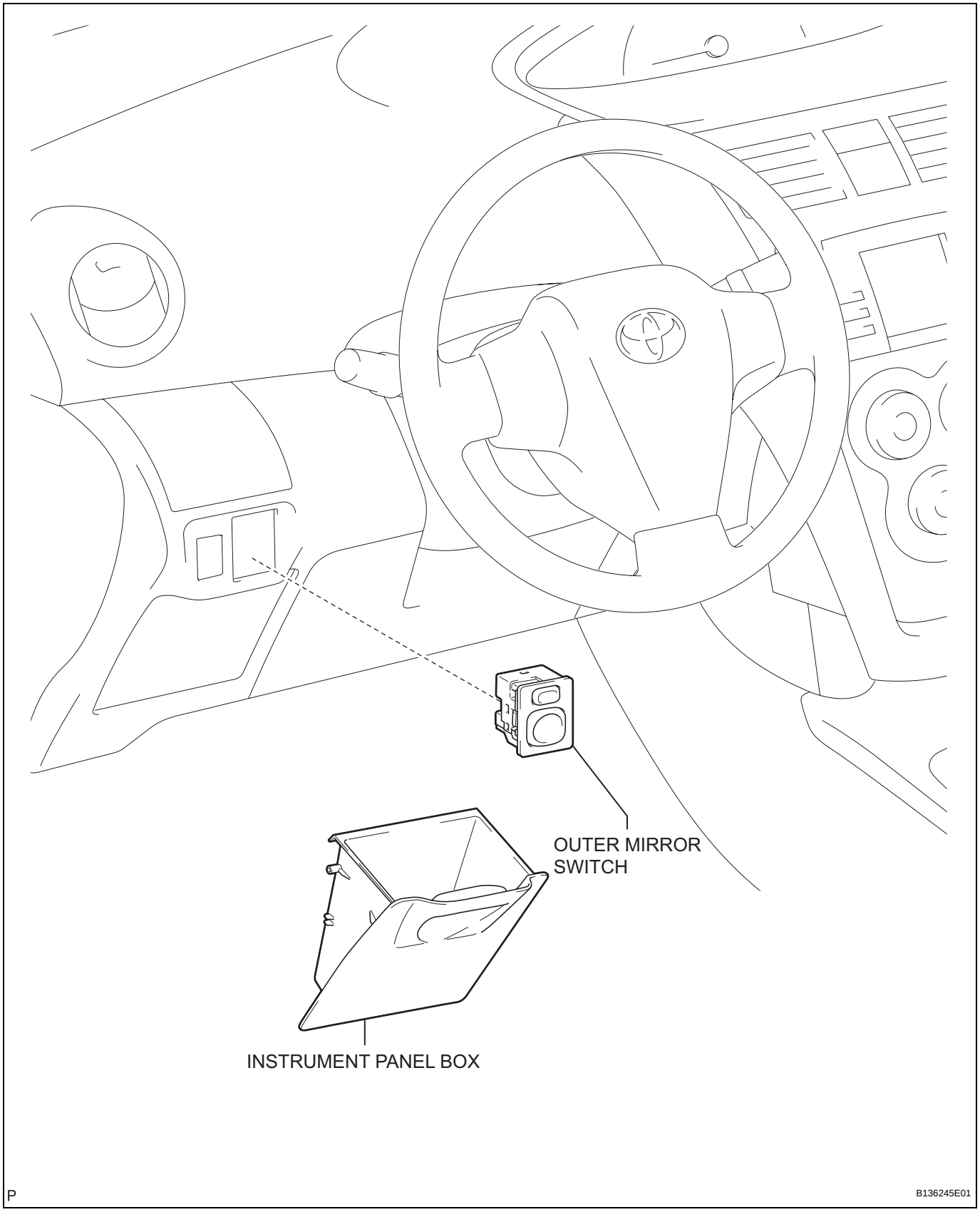

REMOVAL

1. **DISCONNECT CABLE FROM NEGATIVE BATTERY TERMINAL**
2. **REMOVE INSTRUMENT PANEL BOX (See page IP-45)**
3. **REMOVE OUTER MIRROR SWITCH**
   (a) Disconnect the connector.
   (b) Disengage the 2 claws and remove the outer mirror switch.

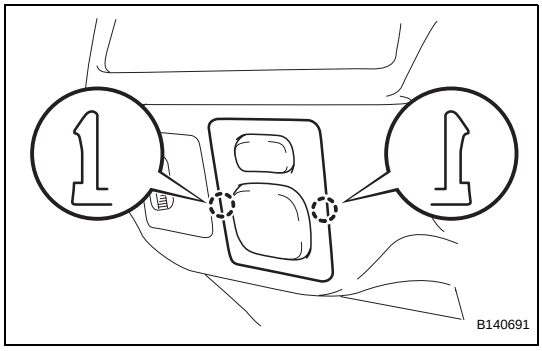

INSPECTION

1. **INSPECT OUTER MIRROR SWITCH**
   (a) Check the resistance.
      (1) Select L on the left/right adjustment switch.
      (2) Using an ohmmeter, measure the resistance and check the results in accordance with the value(s) in the table below.
      Standard Resistance

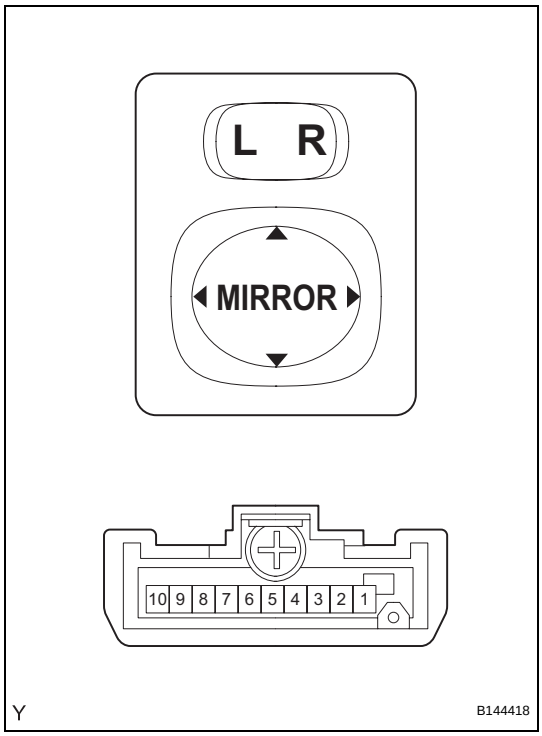

Tester Connection	Condition	Specified Condition
-	OFF	10 kΩ or higher
4 (VL) - 8 (B) 6 (M+) - 7 (E)	UP	Below 1 Ω
4 (VL) - 7 (E) 6 (M+) - 8 (B)	DOWN	Below 1 Ω
5 (HL) - 8 (B) 6 (M+) - 7 (E)	LEFT	Below 1 Ω
5 (HL) - 7 (E) 6 (M+) - 8 (B)	RIGHT	Below 1 Ω

If the result is not as specified, replace the outer mirror switch.

      (3) Select R on the left/right adjustment switch.
      (4) Using an ohmmeter, measure the resistance and check the results in accordance with the value(s) in the table below.
      Standard Resistance

Tester Connection	Condition	Specified Condition
-	OFF	10 kΩ or higher
3 (VR) - 8 (B) 6 (M+) - 7 (E)	UP	Below 1 Ω
3 (VR) - 7 (E) 6 (M+) - 8 (B)	DOWN	Below 1 Ω
2 (HR) - 8 (B) 6 (M+) - 7 (E)	LEFT	Below 1 Ω
2 (HR) - 7 (E) 6 (M+) - 8 (B)	RIGHT	Below 1 Ω

If the result is not as specified, replace the outer mirror switch.

MI

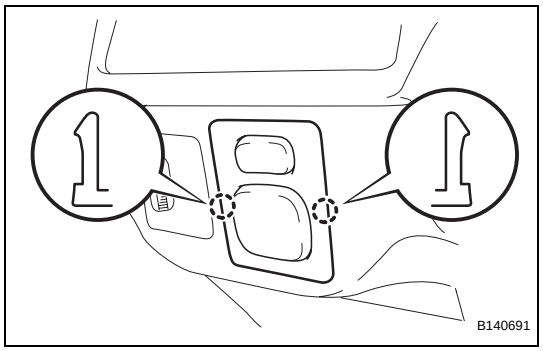

INSTALLATION

1. **INSTALL OUTER MIRROR SWITCH**
   (a) Engage the 2 claws and install the outer mirror switch.
   (b) Connect the connector.
2. **INSTALL INSTRUMENT PANEL BOX (See page IP-53)**
3. **CONNECT CABLE TO NEGATIVE BATTERY TERMINAL**
   Torque: 5.4 N*m (55 kgf*cm, 48 in.*lbf)

OUTER MIRROR SWITCH (for Hatchback)

COMPONENTS

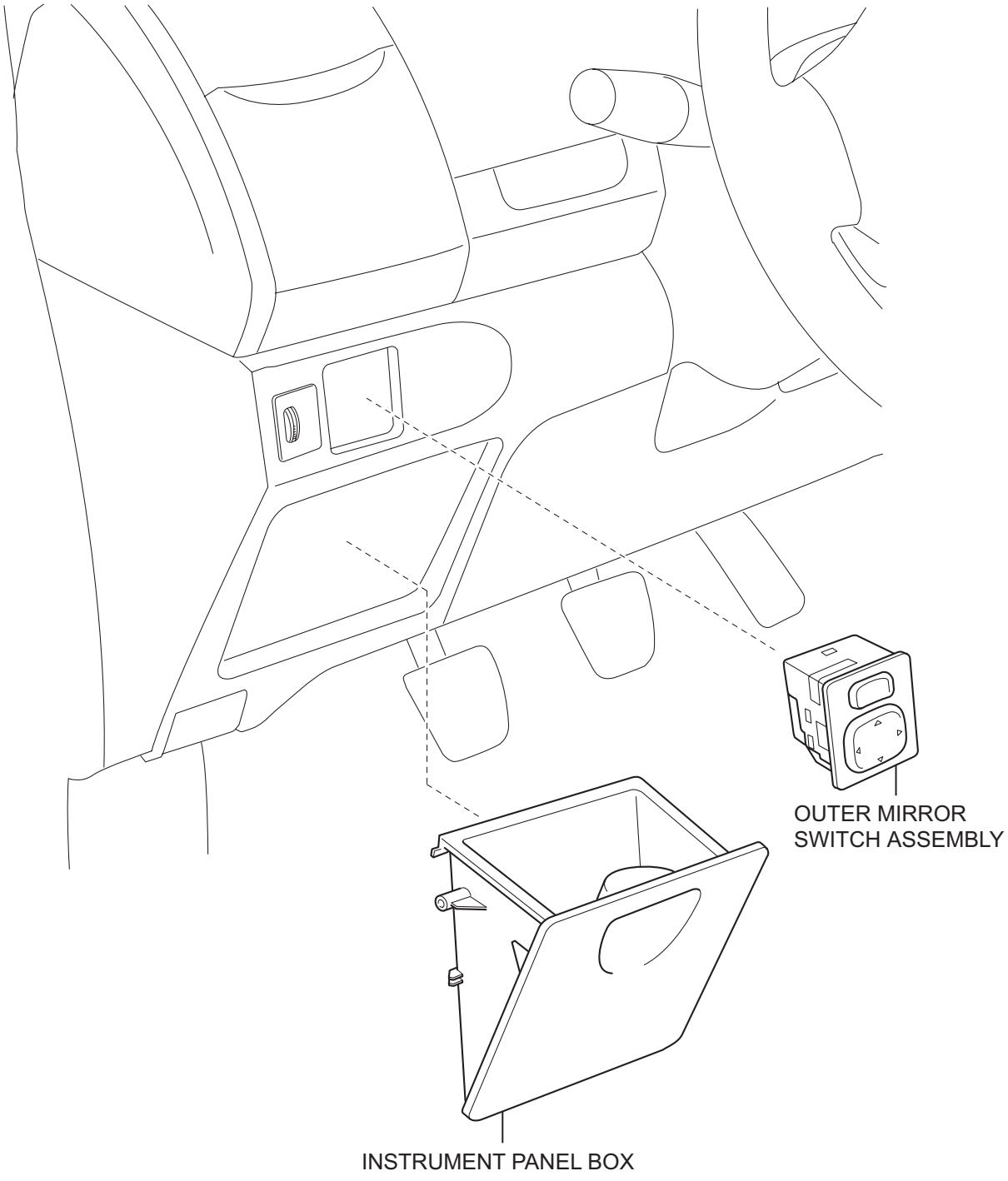

REMOVAL

1. **DISCONNECT CABLE FROM NEGATIVE BATTERY TERMINAL**
2. **REMOVE INSTRUMENT PANEL BOX (See page IP-70)**
3. **REMOVE OUTER MIRROR SWITCH ASSEMBLY**
   (a) Disconnect the connector.
   (b) Disengage the 2 claws and remove the outer mirror switch.

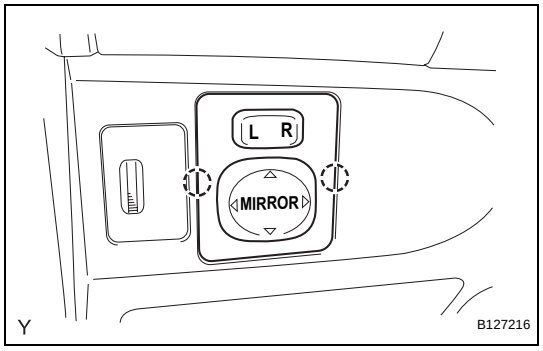

INSPECTION

1. **INSPECT OUTER MIRROR SWITCH ASSEMBLY**
   (a) Check the resistance.
      (1) Select L on the left/right adjustment switch.
      (2) Using an ohmmeter, measure the resistance and check the results in accordance with the value(s) in the table below.

Standard Resistance

Tester Connection	Condition	Specified Condition
-	OFF	10 kΩ or higher
4 (VL) - 8 (B) 6 (M+) - 7 (E)	UP	Below 1 Ω
4 (VL) - 7 (E) 6 (M+) - 8 (B)	DOWN	Below 1 Ω
5 (HL) - 8 (B) 6 (M+) - 7 (E)	LEFT	Below 1 Ω
5 (HL) - 7 (E) 6 (M+) - 8 (B)	RIGHT	Below 1 Ω

If the result is not as specified, replace the outer mirror switch.

      (3) Select R on the left/light adjustment switch.
      (4) Using an ohmmeter, measure the resistance and check the results in accordance with the value(s) in the table below.

Standard Resistance

Tester Connection	Condition	Specified Condition
-	OFF	10 kΩ or higher
3 (VR) - 8 (B) 6 (M+) - 7 (E)	UP	Below 1 Ω
3 (VR) - 7 (E) 6 (M+) - 8 (B)	DOWN	Below 1 Ω
2 (HR) - 8 (B) 6 (M+) - 7 (E)	LEFT	Below 1 Ω
2 (HR) - 7 (E) 6 (M+) - 8 (B)	RIGHT	Below 1 Ω

If the result is not as specified, replace the outer mirror switch.

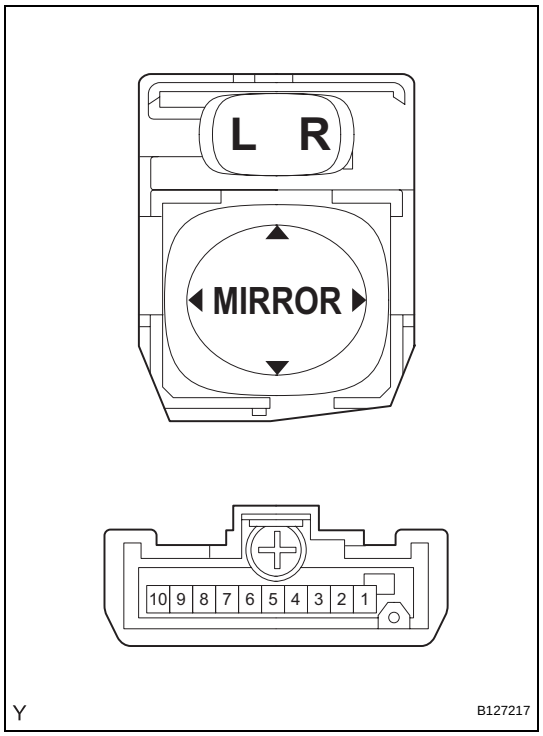

MI

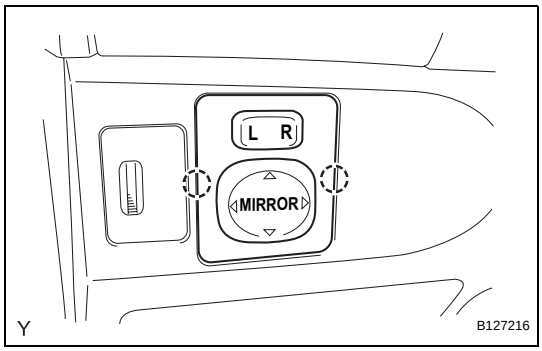

INSTALLATION

1. **INSTALL OUTER MIRROR SWITCH ASSEMBLY**
   (a) Engage the 2 claws and install the outer mirror switch.
   (b) Connect the connector.
2. **INSTALL INSTRUMENT PANEL BOX (See page IP-78)**
3. **CONNECT CABLE TO NEGATIVE BATTERY TERMINAL**
   Torque: 5.4 N*m (55 kgf*cm, 48 in.*lbf)

UPPER INSTRUMENT PANEL (for Sedan)

PRECAUTION

1. PRECAUTION FOR VEHICLES WITH SRS AIRBAG AND SEAT BELT PRETENSIONER

(a) Some of these operations may affect the SRS airbag system. Read the precautionary notices concerning the SRS airbag system before servicing (See page RS-1).

COMPONENTS

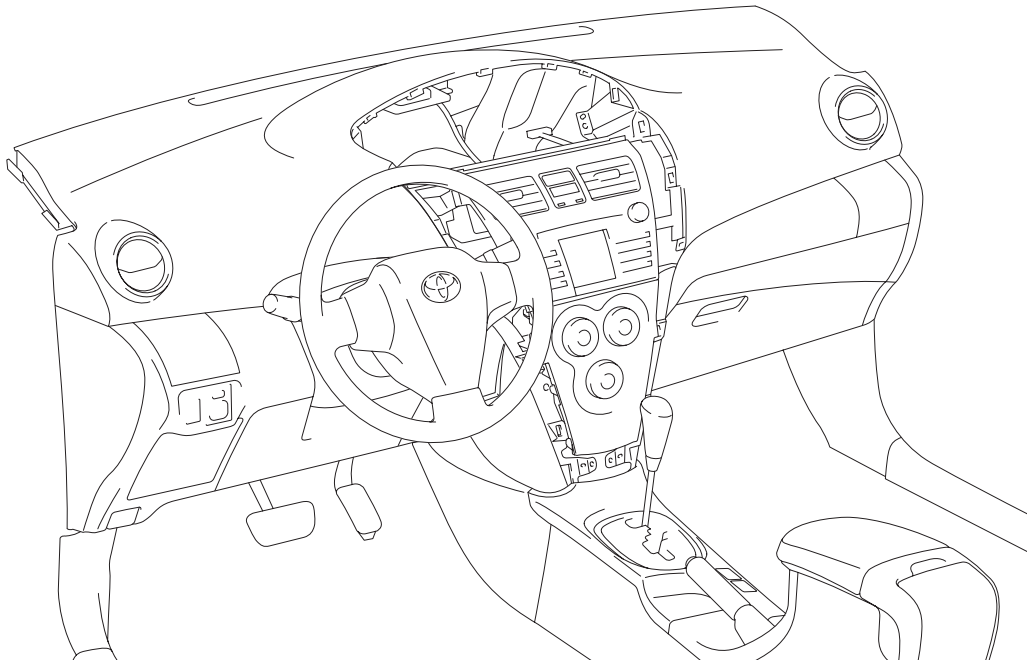

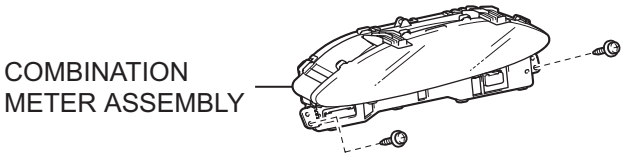



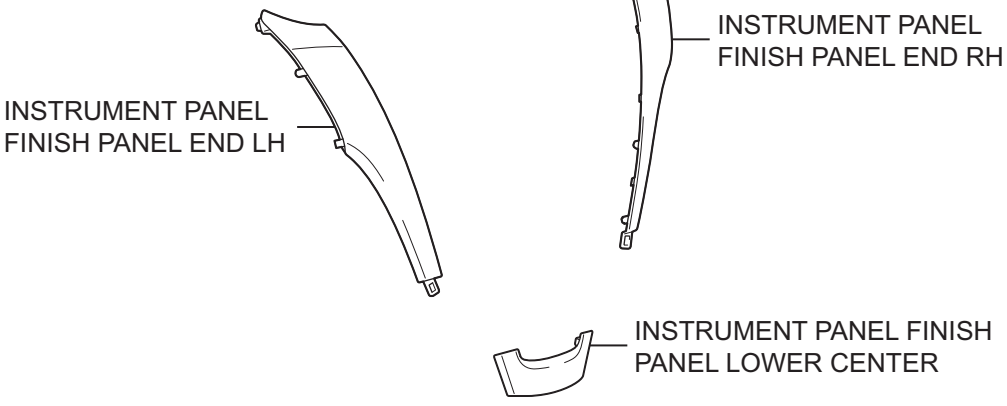

P

E116817E01

IP

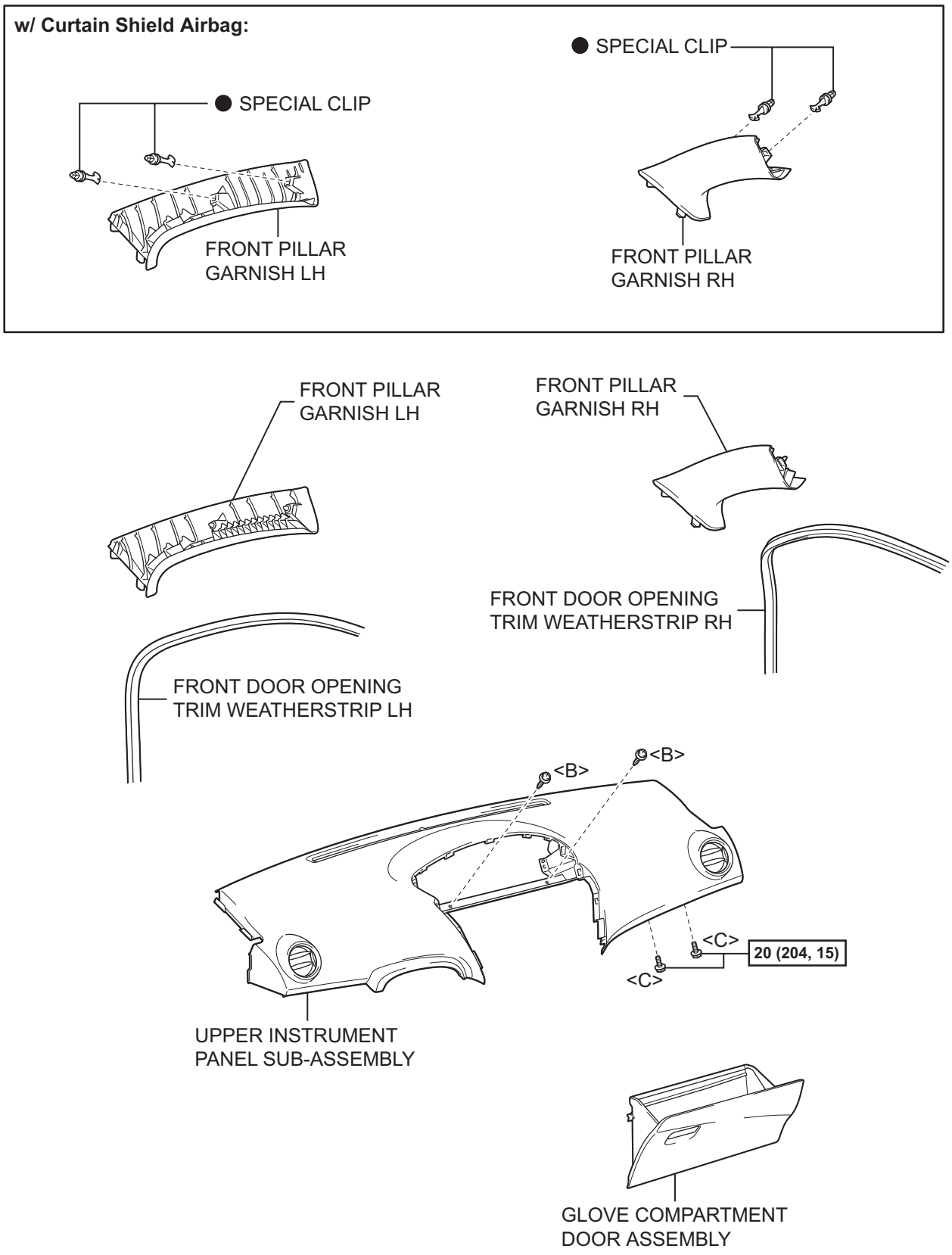

IP

N*m (kgf*cm, ft*lbf) : Specified torque

● Non-reusable part

P

B132310E02

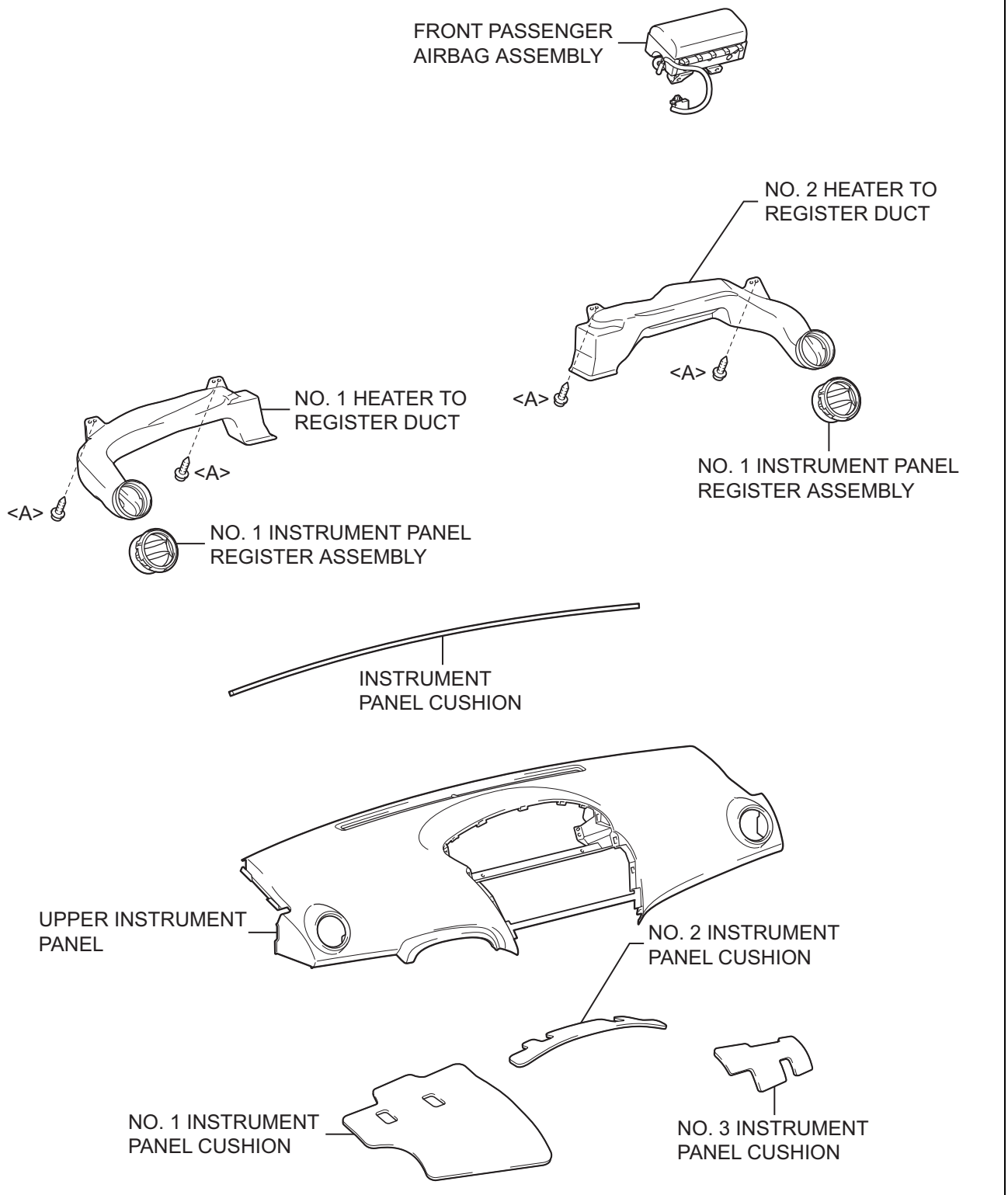

IP

P

B132378E01

REMOVAL

HINT:
Use the same procedure for both the RH and LH sides.

1. **BOLTS, SCREWS AND NUTS TABLE**
   HINT:
   All bolts, screws and nuts relevant to installing and removing the instrument panel are shown, along with their alphabetic codes, in the table below.

mm(in.) (L=Length)

Code	Shape	Code	Shape	Code	Shape
<A>	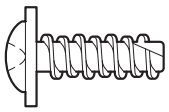 φ=5 (0.20) L=14 (0.55) 93568-15014	<B>	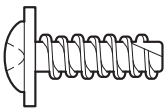 φ=5 (0.20) L=14 (0.55) 93568-55014	<C>	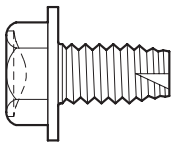 φ=8 (0.31) L=15 (0.59) 90105-08120 91643-80820

P B118994E01

2. **DISCONNECT CABLE FROM NEGATIVE BATTERY TERMINAL**
   (a) Wait for at least 90 seconds after disconnecting the cable to prevent the airbag from working.
3. **REMOVE INSTRUMENT PANEL FINISH PANEL LOWER CENTER (See page ME-138)**
4. **REMOVE INSTRUMENT PANEL FINISH PANEL END LH (See page ME-138)**
5. **REMOVE INSTRUMENT PANEL FINISH PANEL END RH (See page ME-138)**
6. **REMOVE INSTRUMENT CLUSTER FINISH PANEL (See page ME-139)**
7. **REMOVE COMBINATION METER ASSEMBLY (See page ME-139)**
8. **SEPARATE FRONT DOOR OPENING TRIM WEATHERSTRIP RH**
   (a) Separate the front door opening trim weatherstrip.
9. **SEPARATE FRONT DOOR OPENING TRIM WEATHERSTRIP LH**
   (a) Separate the front door opening trim weatherstrip.
10. **REMOVE FRONT PILLAR GARNISH RH (See page IR-18)**
11. **REMOVE FRONT PILLAR GARNISH LH (See page IR-19)**

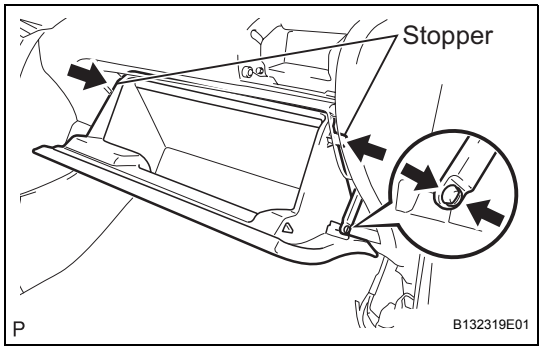

12. REMOVE GLOVE COMPARTMENT DOOR ASSEMBLY

(a) Disengage the claw and separate the 2 glove compartment door stoppers from the glove compartment door.

(b) Slightly flex the upper part of the glove compartment door to release the 2 stoppers and open the glove compartment door assembly until it becomes horizontal.

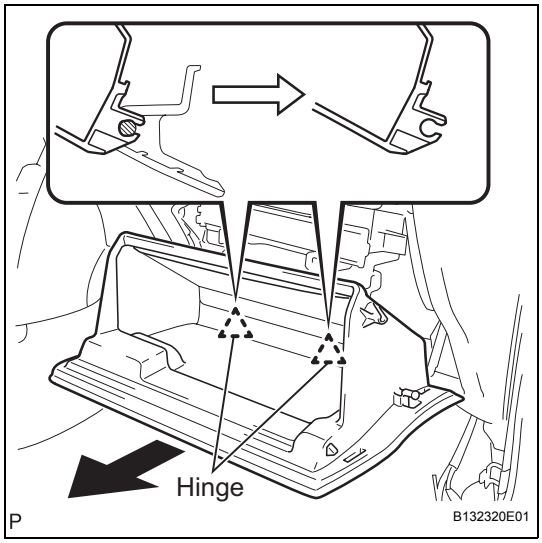

(c) Pull the glove compartment door assembly out horizontally to disengage the hinge portion and remove the glove compartment door.

NOTICE:

Pull the glove compartment door out horizontally, otherwise, installation failure caused by excessive play around the hinge portion will result.

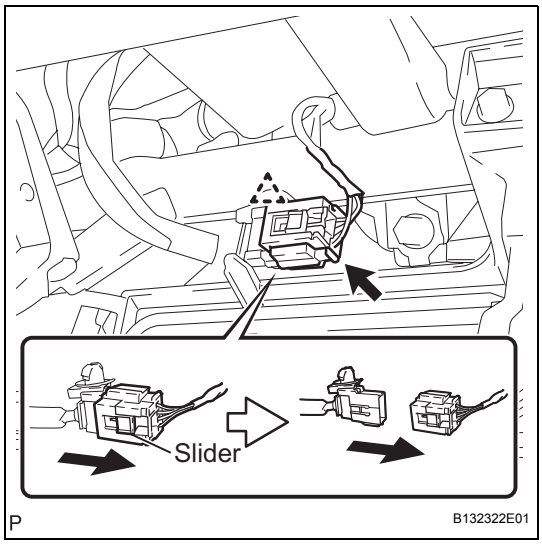

13. REMOVE UPPER INSTRUMENT PANEL SUB-ASSEMBLY

(a) Slide the slider and disconnect the passenger airbag connector.

(b) Disconnect the clamp.

IP

(c) Remove the 2 <C> bolts and 2 <B> screws.

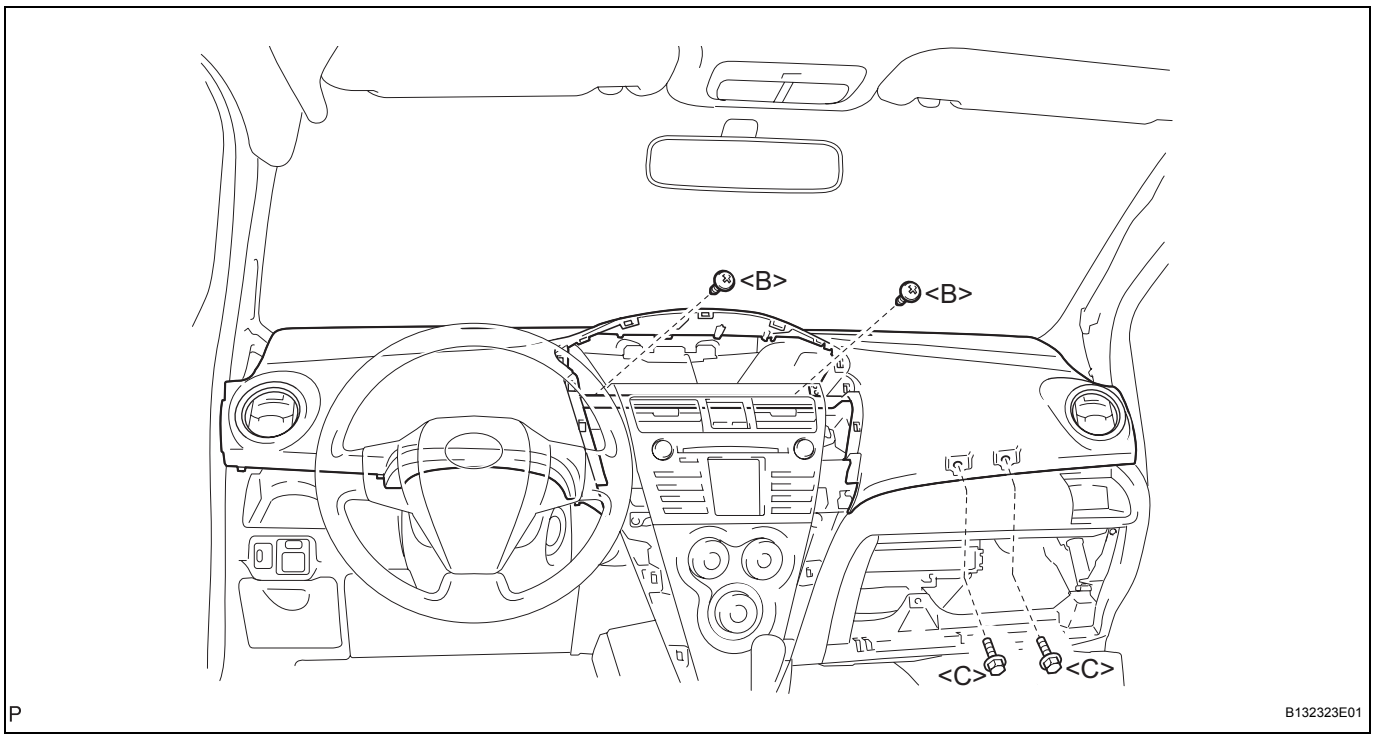

(d) Disengage the 7 clips by lifting the rear side of the instrument panel up.

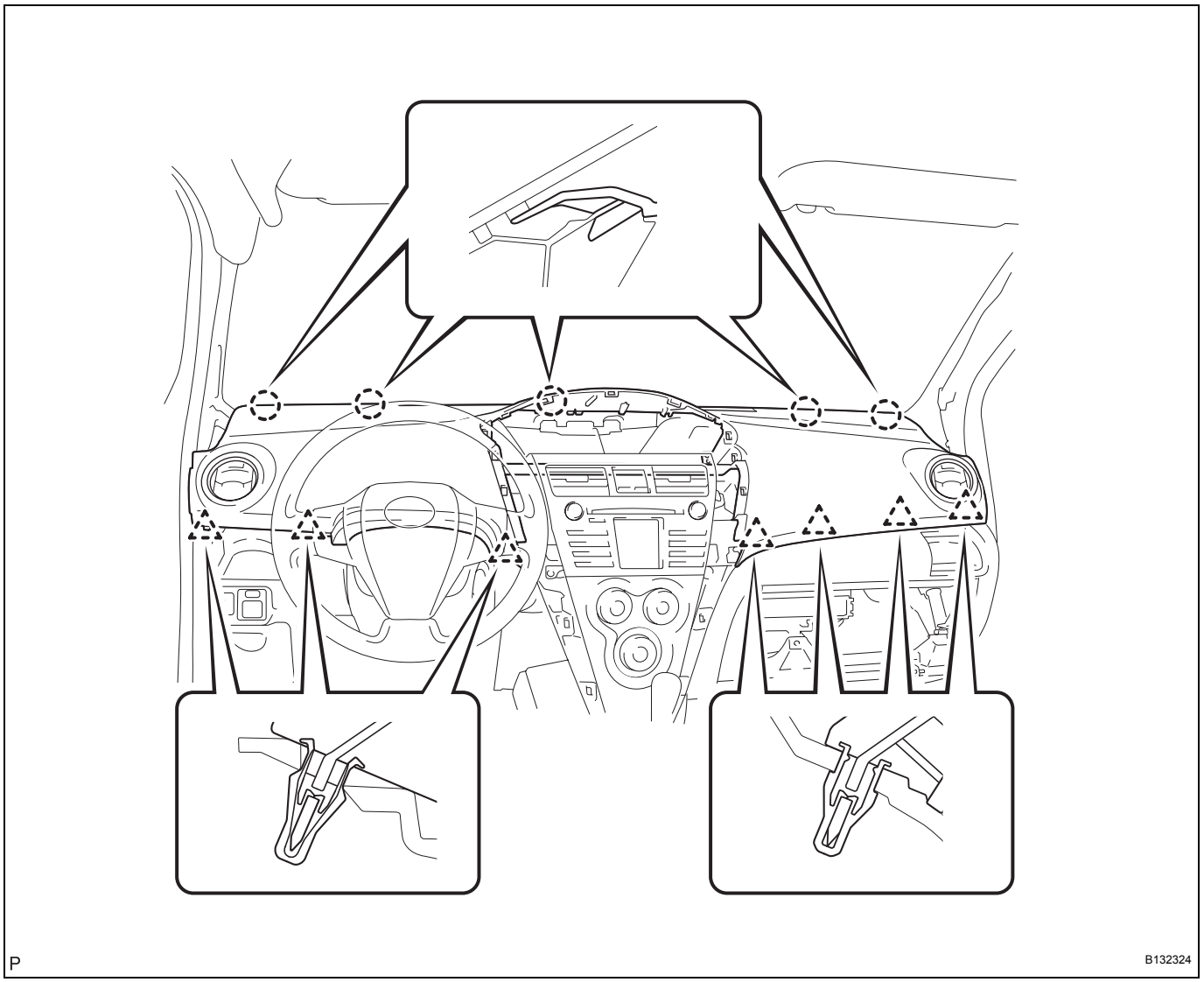

(e) While lifting the instrument panel, slide it toward the rear of the vehicle. Disengage the 5 claws from the front side of the instrument panel and remove the instrument panel.

14. REMOVE NO. 2 HEATER TO REGISTER DUCT

(a) Remove the 2 <A> screws and remove the register duct.

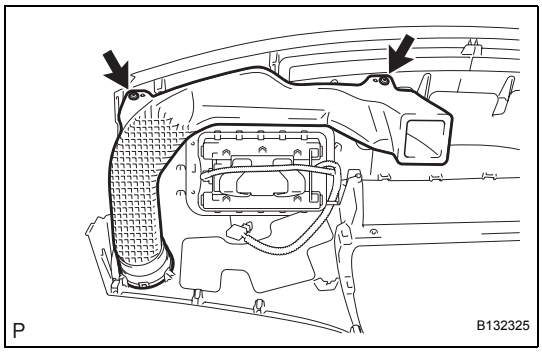

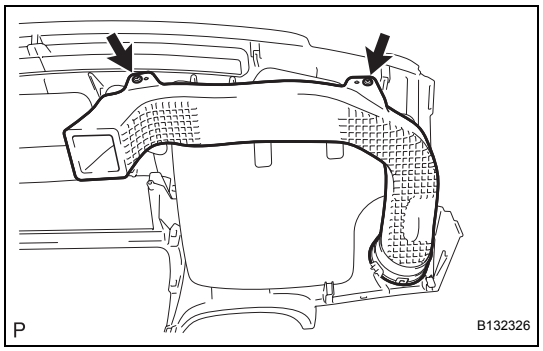

15. REMOVE NO. 1 HEATER TO REGISTER DUCT

(a) Remove the 2 <A> screws and remove the register duct.

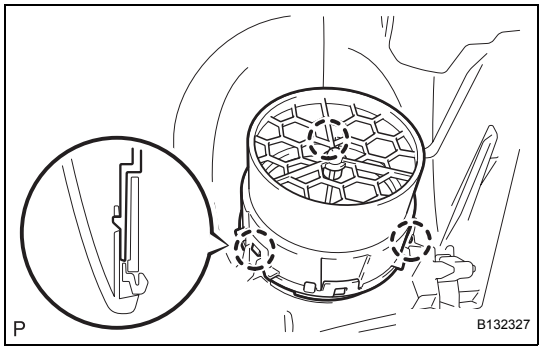

16. REMOVE NO. 1 INSTRUMENT PANEL REGISTER ASSEMBLY

(a) Disengage the 3 claws and remove the register.
HINT:
Use the same procedure for both sides.

17. REMOVE FRONT PASSENGER AIRBAG ASSEMBLY (See page RS-328)

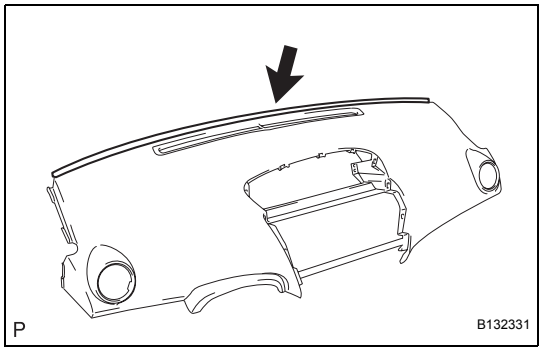

18. REMOVE INSTRUMENT PANEL CUSHION

(a) Remove the instrument panel cushion from the upper instrument panel.

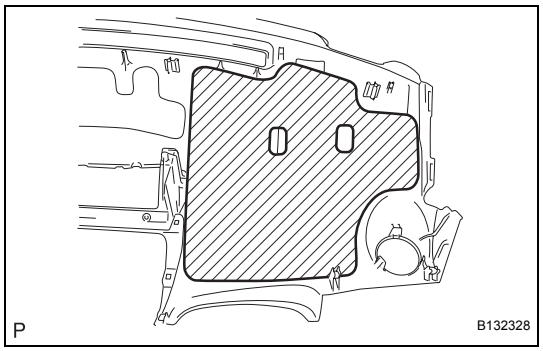

19. REMOVE NO. 1 INSTRUMENT PANEL CUSHION

(a) Remove the instrument panel cushion from the upper instrument panel.

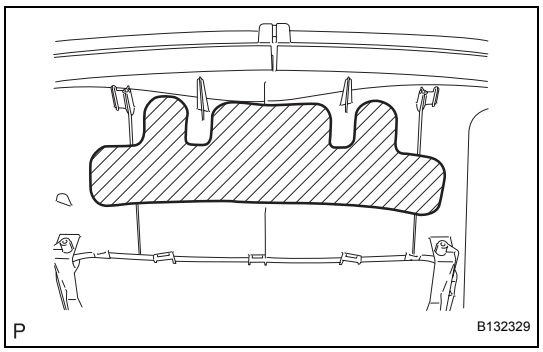

20. REMOVE NO. 2 INSTRUMENT PANEL CUSHION

(a) Remove the instrument panel cushion from the upper instrument panel.

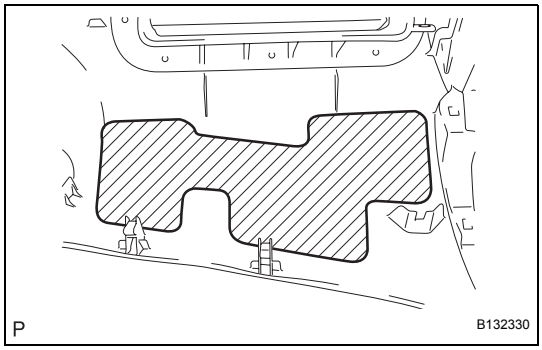

21. REMOVE NO. 3 INSTRUMENT PANEL CUSHION

(a) Remove the instrument panel cushion from the upper instrument panel.

INSTALLATION

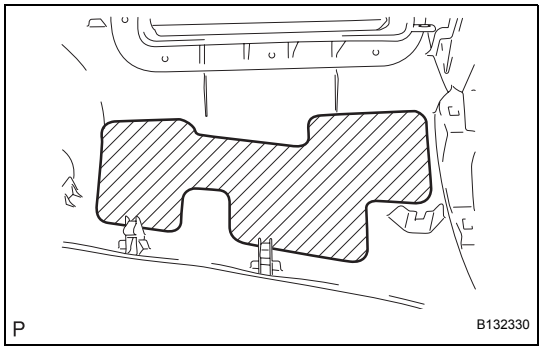

1. INSTALL NO. 3 INSTRUMENT PANEL CUSHION

(a) Install the instrument panel cushion onto the upper instrument panel.

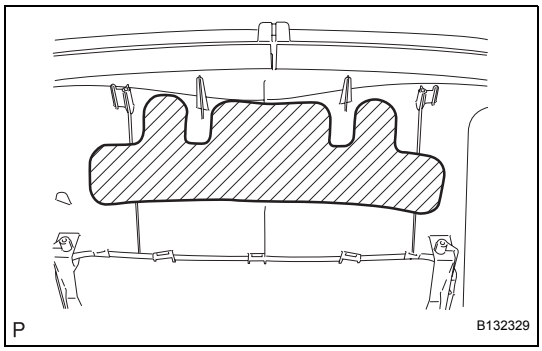

2. INSTALL NO. 2 INSTRUMENT PANEL CUSHION

(a) Install the instrument panel cushion onto the upper instrument panel.

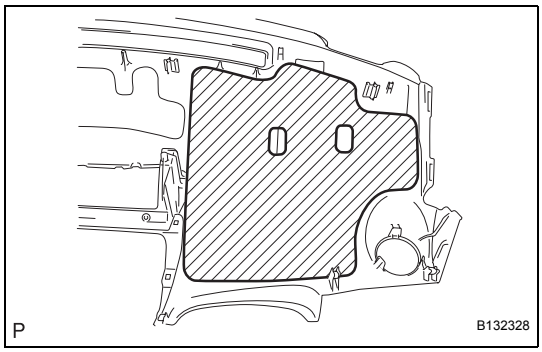

3. INSTALL NO. 1 INSTRUMENT PANEL CUSHION

(a) Install the instrument panel cushion onto the upper instrument panel.

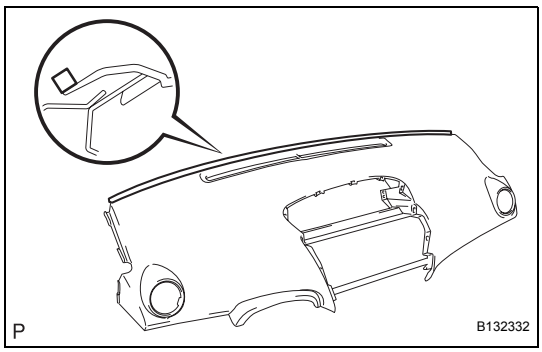

4. INSTALL INSTRUMENT PANEL CUSHION

(a) Install the instrument panel cushion onto the upper instrument panel.

5. INSTALL FRONT PASSENGER AIRBAG ASSEMBLY (See page RS-329)

IP

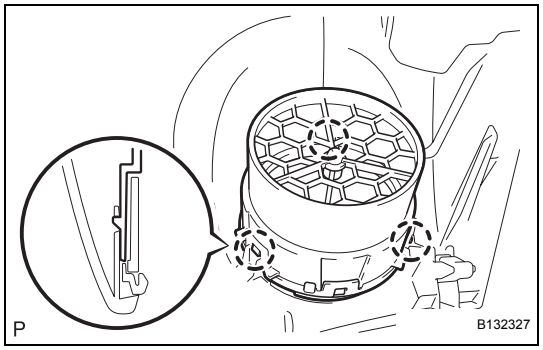

6. INSTALL NO. 1 INSTRUMENT PANEL REGISTER ASSEMBLY

(a) Engage the 3 claws and install the register.
HINT:
Use the same procedure for both sides.

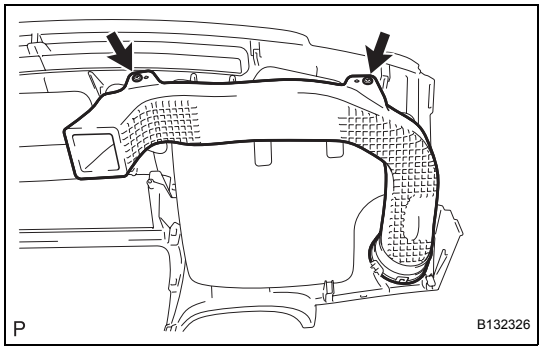

7. INSTALL NO. 1 HEATER TO REGISTER DUCT

(a) Install the register duct with the 2 <A> screws.

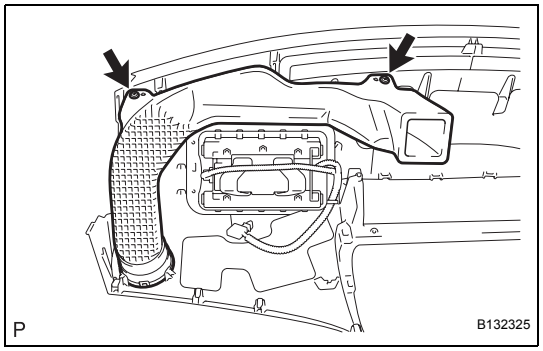

8. INSTALL NO. 2 HEATER TO REGISTER DUCT

(a) Install the register duct with the 2 <A> screws.

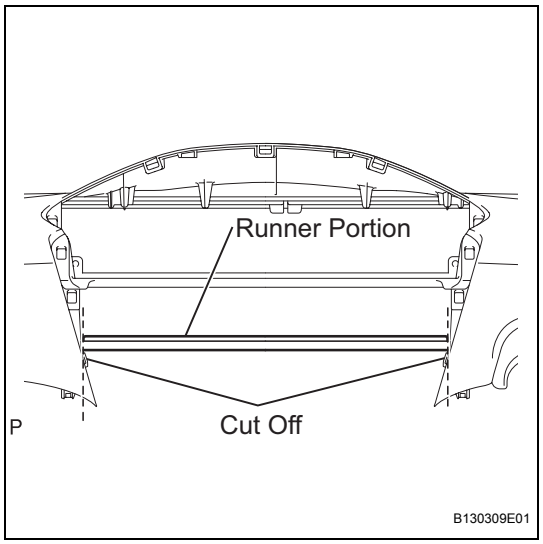

9. INSTALL UPPER INSTRUMENT PANEL SUB-ASSEMBLY

(a) Using a nipper, cut off both ends of the runner portion shown in the illustration (When installing a new one).

(b) Engage the 5 claws at the front side of the instrument panel.

IP

(c) Engage the 7 clips at the rear side of the instrument panel.

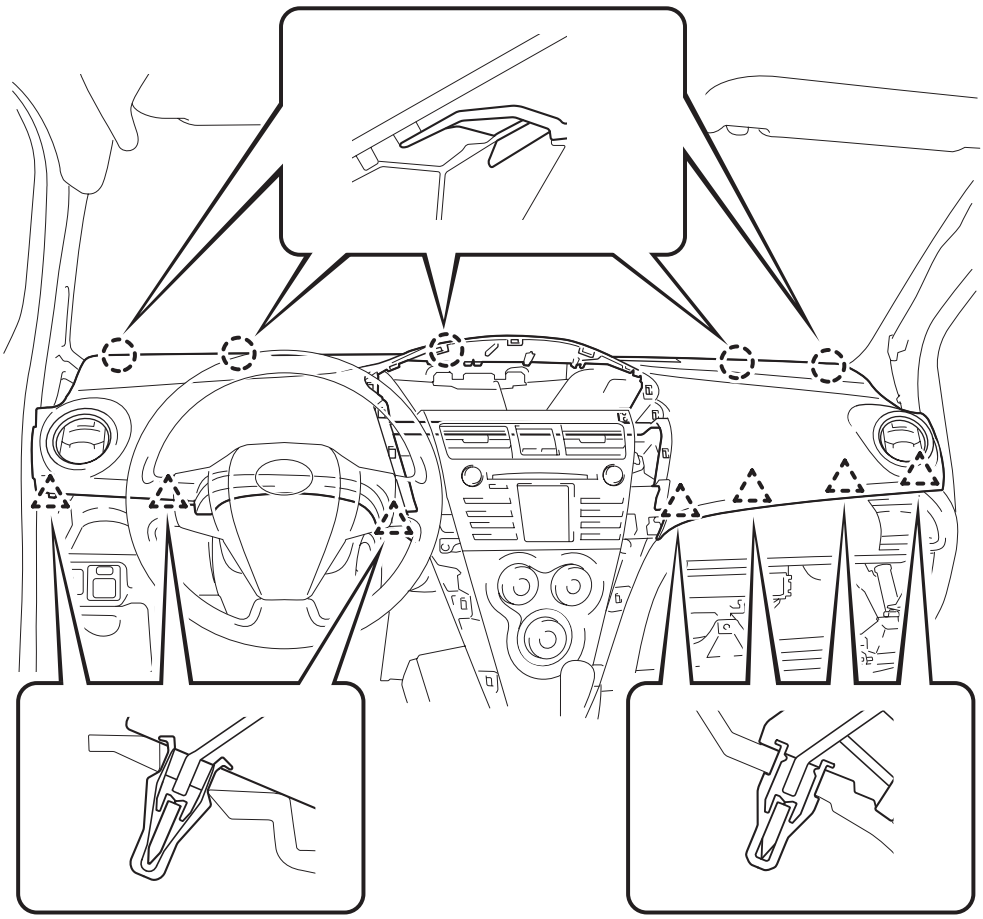

P B132324

(d) Install the upper instrument panel with the 2 <C> bolts and the 2 <B> screws.

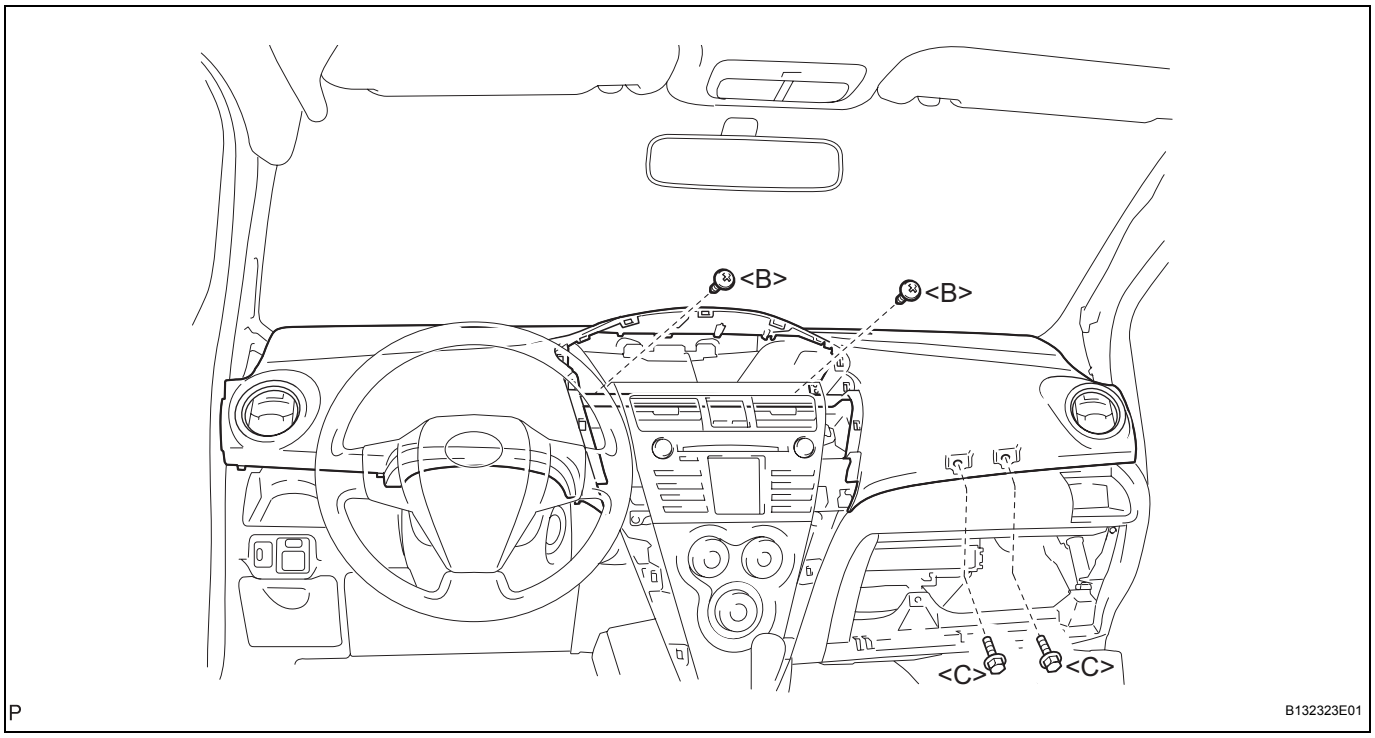

Torque: 20 N*m (204 kgf*cm, 15 ft.*lbf) for bolt <C>

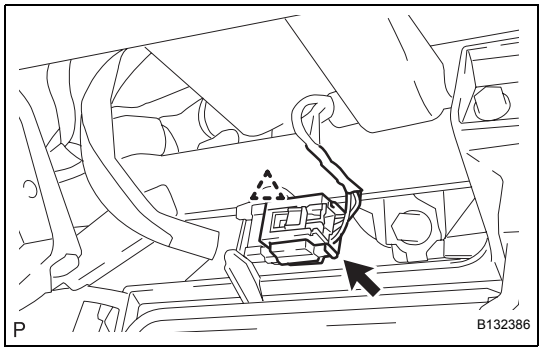

(e) Connect the passenger airbag connector and clamp.

IP

10. INSTALL GLOVE COMPARTMENT DOOR ASSEMBLY

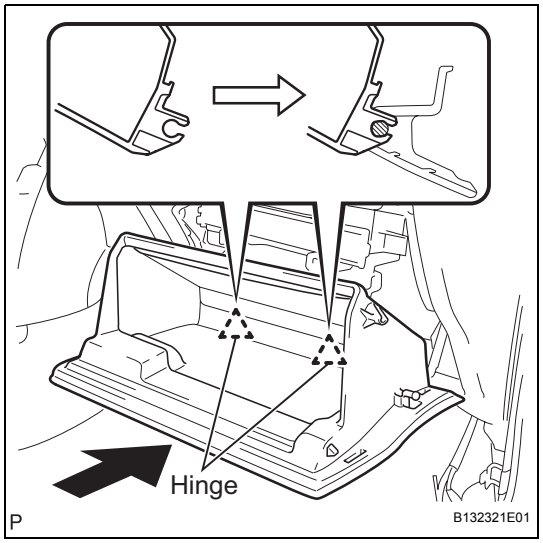

(a) Engage the claws of the hinge portions by pushing the glove compartment door in the horizontal direction to install the glove compartment door assembly.

NOTICE:

Engage the claw by pushing it in the horizontal direction, otherwise, installation failure caused by excessive play around the hinge portion will result.

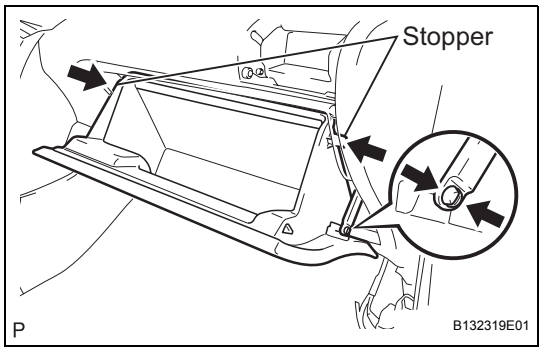

(b) Slightly flex the upper portion of the glove compartment door assembly to engage the stopper.
(c) Install the 2 glove compartment door stoppers onto the glove compartment door.

11. **INSTALL FRONT PILLAR GARNISH RH (See page IR-29)**
12. **INSTALL FRONT PILLAR GARNISH LH (See page IR-30)**
13. **INSTALL FRONT DOOR OPENING TRIM WEATHERSTRIP RH**
    (a) Install the front door opening trim weatherstrip.
14. **INSTALL FRONT DOOR OPENING TRIM WEATHERSTRIP LH**
    (a) Install the front door opening trim weatherstrip.
15. **INSTALL COMBINATION METER ASSEMBLY (See page ME-140)**
16. **INSTALL INSTRUMENT CLUSTER FINISH PANEL (See page ME-140)**
17. **INSTALL INSTRUMENT PANEL FINISH PANEL END RH (See page ME-141)**
18. **INSTALL INSTRUMENT PANEL FINISH PANEL END LH (See page ME-141)**
19. **INSTALL INSTRUMENT PANEL FINISH PANEL LOWER CENTER (See page ME-142)**
20. **CONNECT CABLE TO NEGATIVE BATTERY TERMINAL**
    Torque: 5.4 N*m (55 kgf*cm, 48 in.*lbf)
21. **CHECK SRS WARNING LIGHT**
    (See page RS-31)

IP

UPPER INSTRUMENT PANEL (for Hatchback)

PRECAUTION

1. PRECAUTION FOR VEHICLE WITH SRS AIRBAG AND SEAT BELT PRETENSIONER

(a) Some of these operations may affect the SRS airbag system. Read the precautionary notices concerning the SRS airbag system before servicing (See page RS-31).

COMPONENTS

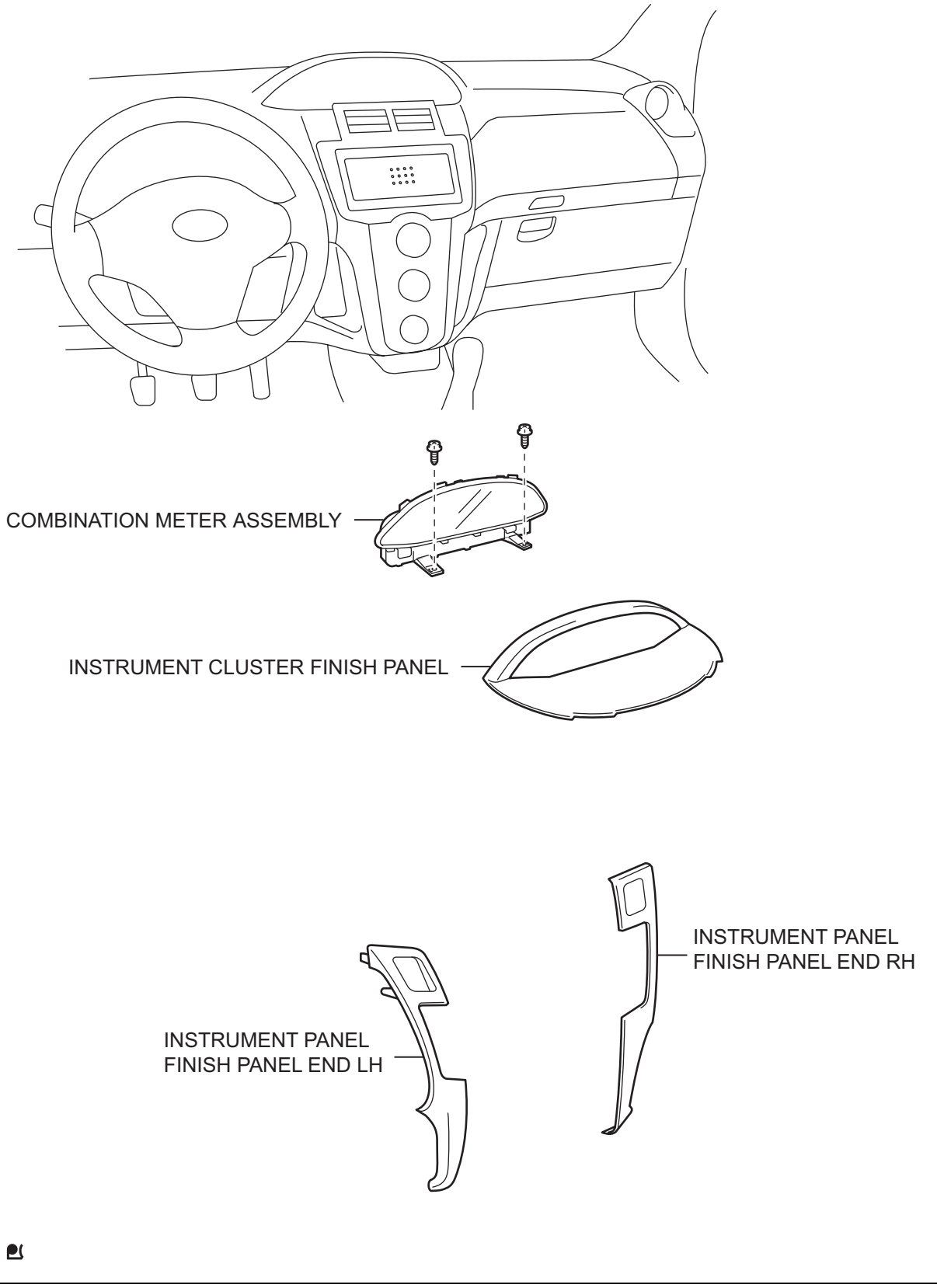
COMBINATION METER ASSEMBLY
INSTRUMENT CLUSTER FINISH PANEL
INSTRUMENT PANEL
FINISH PANEL END RH
INSTRUMENT PANEL
FINISH PANEL END LH
E107796E02

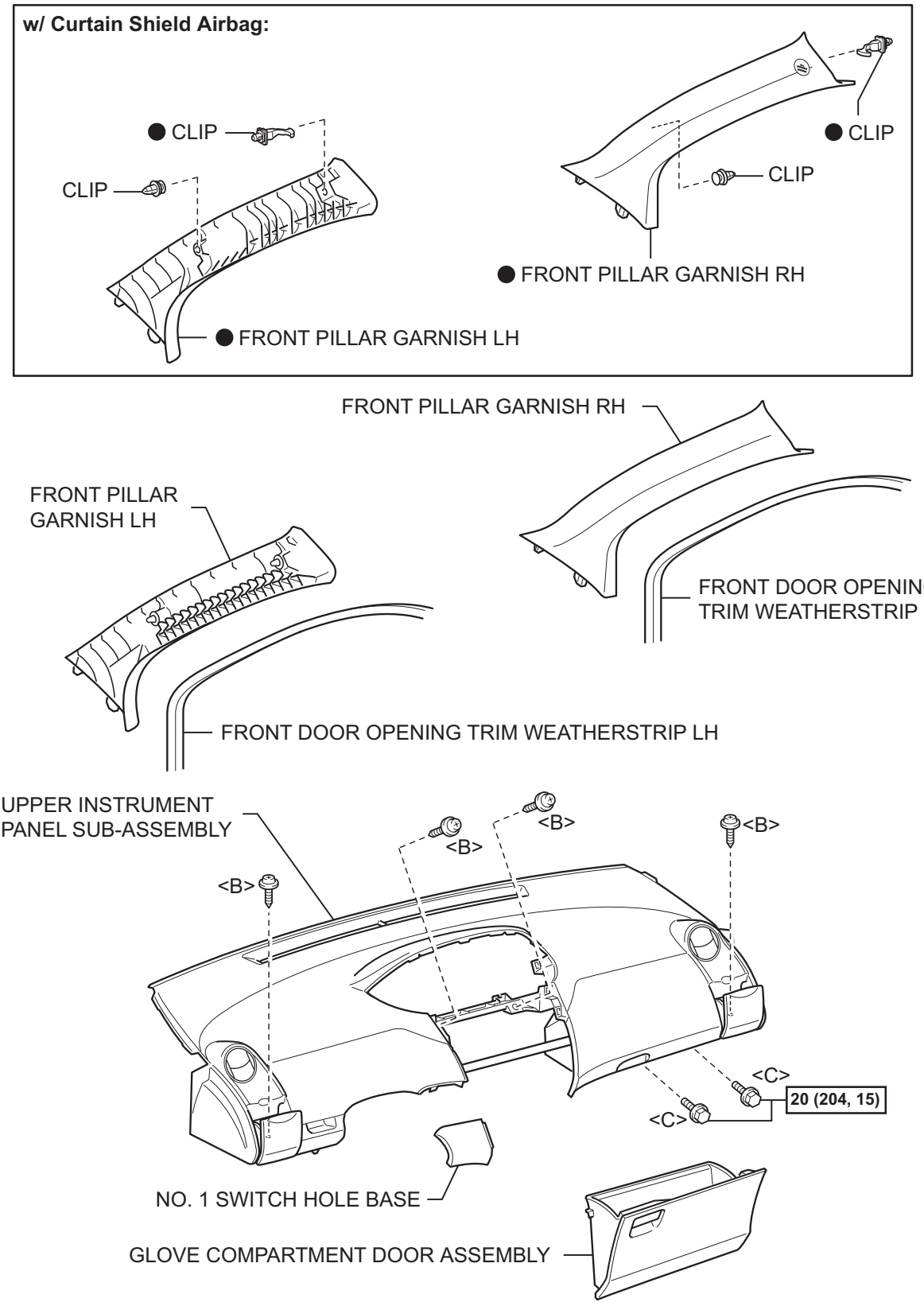

N*m (kgf*cm, ft.*lbf) : Specified torque

● Non-reusable part

B108209E01

IP

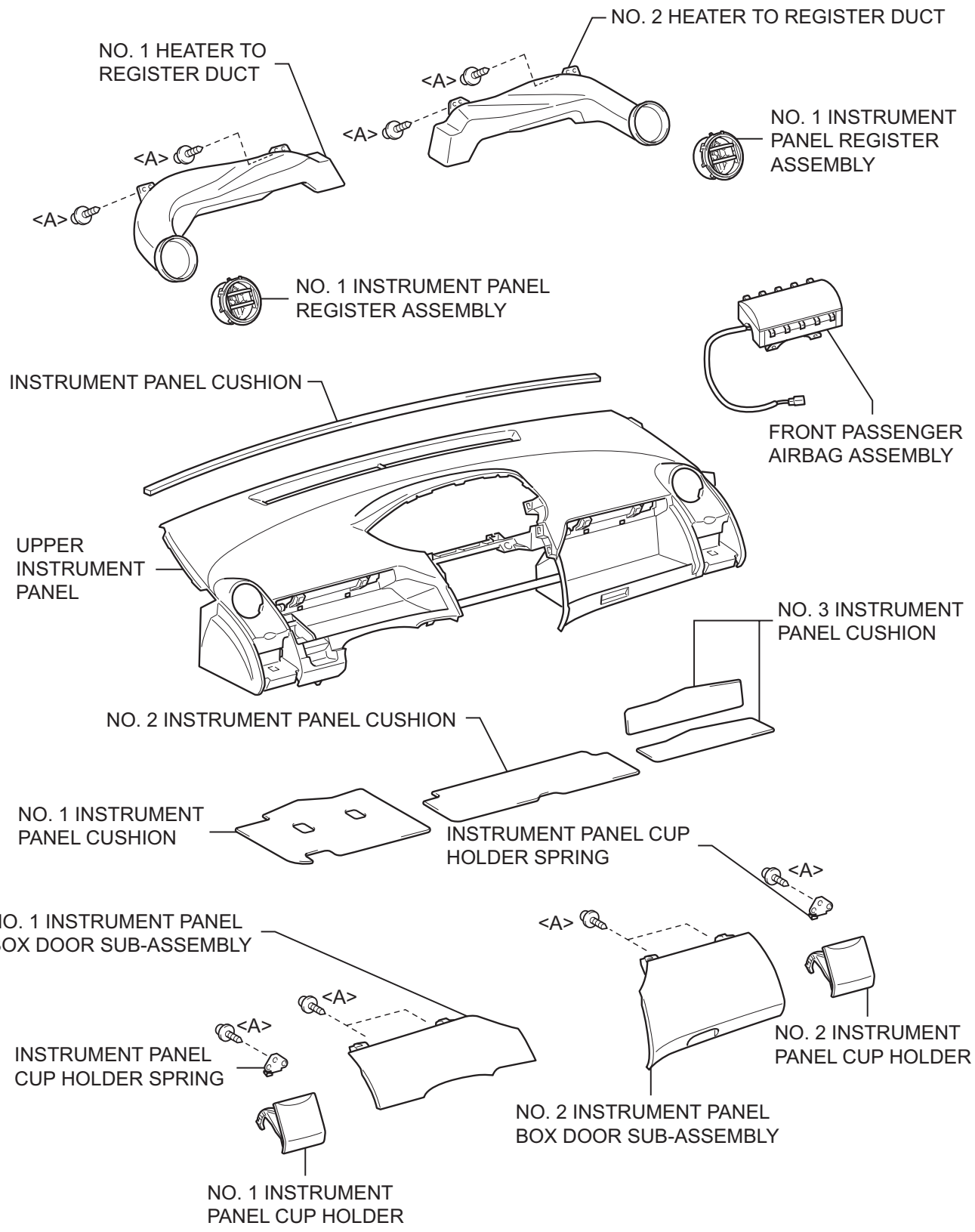

IP

O

B105349E01

REMOVAL

HINT:
Use the same procedure for both the RH and LH sides.

1. **BOLTS, SCREWS AND NUTS TABLE**
   HINT:
   All bolts, screws and nuts relevant to installing and removing the instrument panel are shown, along with their alphabetic codes, in the table below.

mm(in.) (L=Length)

Code	Shape	Code	Shape	Code	Shape
<A>	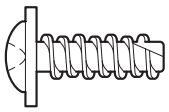 φ=5 (0.20) L=14 (0.55) 93568-15014	<B>	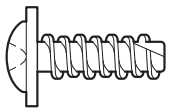 φ=5 (0.20) L=14 (0.55) 93568-55014	<C>	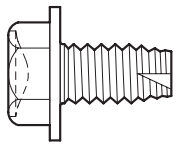 φ=8 (0.31) L=15 (0.59) 90105-08120 91643-80820

P B118994E01

2. **DISCONNECT CABLE FROM NEGATIVE BATTERY TERMINAL**
   (a) Wait for at least 90 seconds after disconnecting the cable to prevent the airbag from working.
3. **REMOVE INSTRUMENT PANEL FINISH PANEL END LH (See page ME-145)**
4. **REMOVE INSTRUMENT PANEL FINISH PANEL END RH (See page ME-145)**
5. **REMOVE INSTRUMENT CLUSTER FINISH PANEL (See page ME-145)**
6. **REMOVE COMBINATION METER ASSEMBLY (See page ME-146)**
7. **REMOVE FRONT DOOR OPENING TRIM WEATHERSTRIP RH (See page IR-50)**
8. **REMOVE FRONT DOOR OPENING TRIM WEATHERSTRIP LH (See page IR-50)**
9. **REMOVE FRONT PILLAR GARNISH RH (See page IR-58)**
10. **REMOVE FRONT PILLAR GARNISH LH (See page IR-59)**

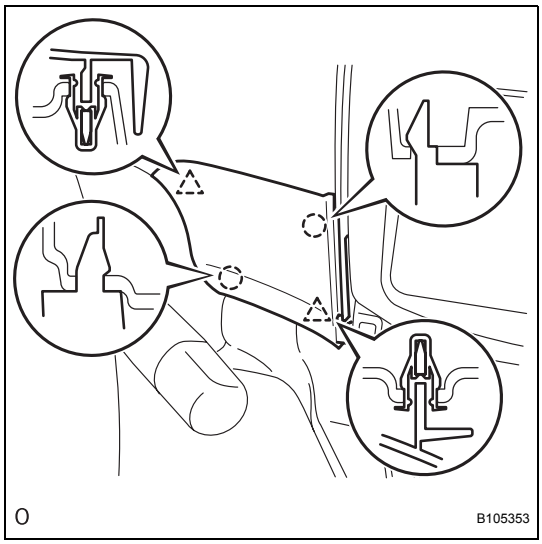

11. REMOVE NO. 1 SWITCH HOLE BASE

(a) Disengage the 2 clips and 2 claws and remove the switch hole base.

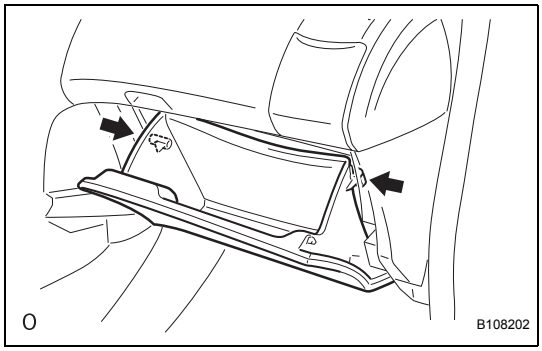

12. REMOVE GLOVE COMPARTMENT DOOR ASSEMBLY

(a) Slightly deform the upper part of the glove compartment door assembly to release the 2 stoppers and open the glove compartment door assembly until it becomes horizontal.

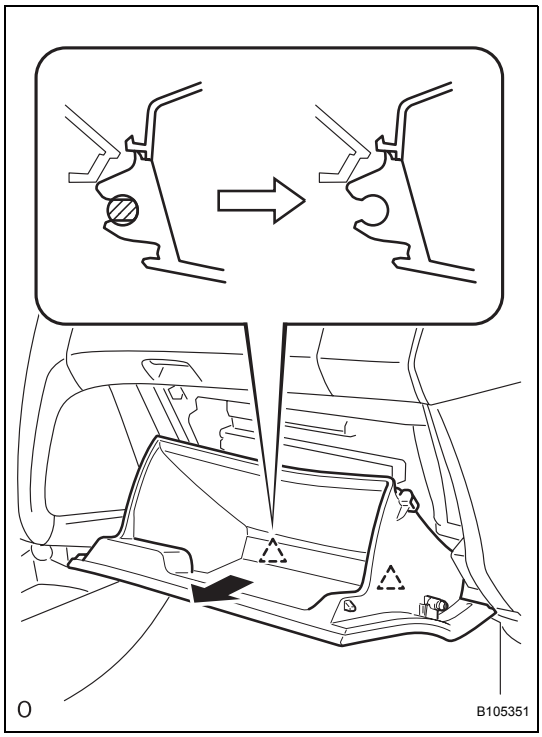

(b) Pull the glove compartment door assembly out horizontally to disengage the hinge portion and remove the glove compartment door assembly.

NOTICE:

Pull the glove compartment door out horizontally, otherwise, installation failure caused by excessive play around the hinge portion will result.

IP

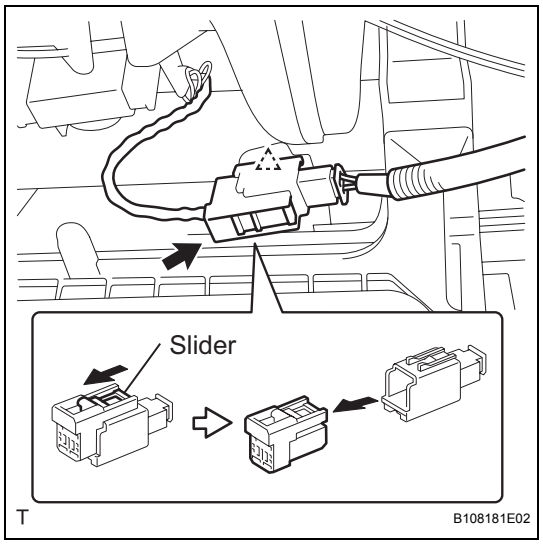

13. REMOVE UPPER INSTRUMENT PANEL SUB-ASSEMBLY

(a) Slide the slider and disconnect the passenger airbag connector.
(b) Disconnect the clamp.
(c) Remove the 2 <C> bolts and 4 <B> screws.

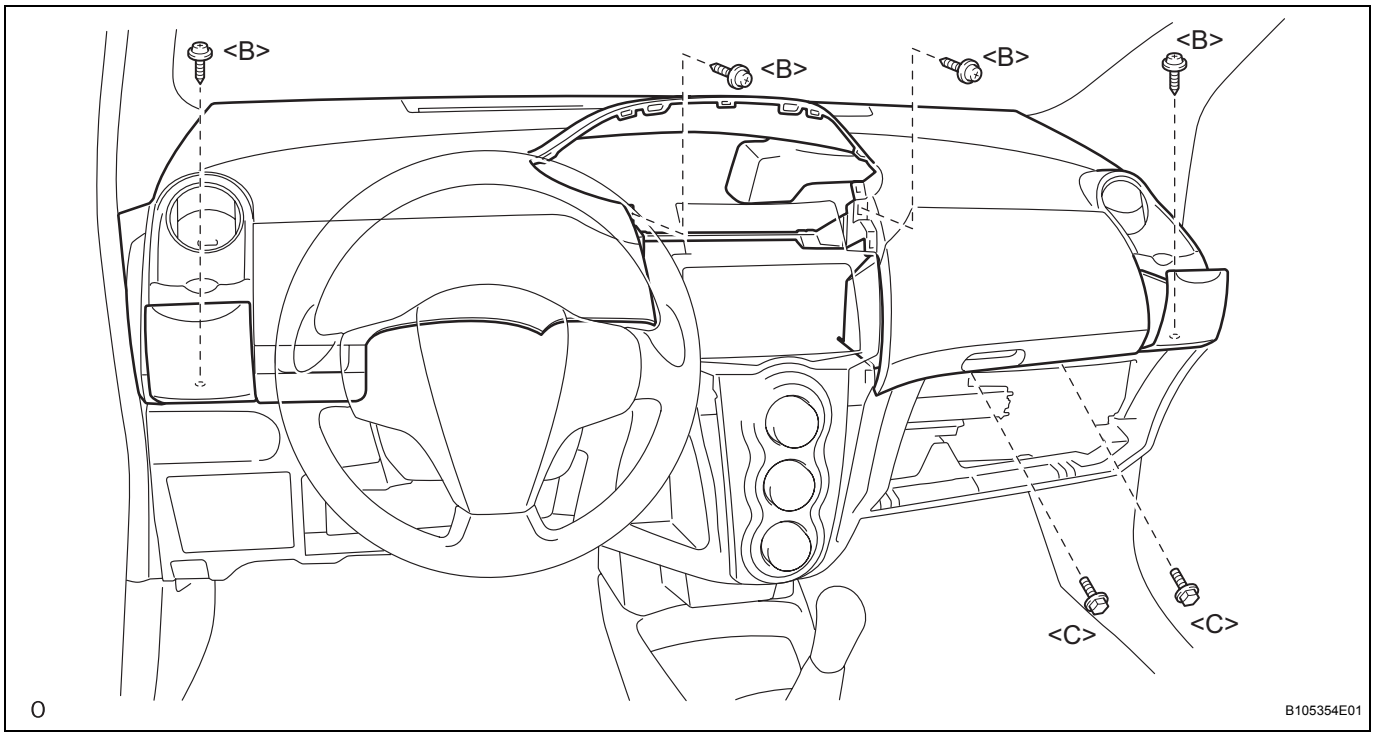

(d) Disconnect the connectors.
(e) Disengage the claw and 3 clips while lifting the rear instrument panel up.

IP

(f) While lifting the instrument panel, slide it toward the rear of the vehicle. Disengage the 5 claws of the front side of the instrument panel and remove the instrument panel.

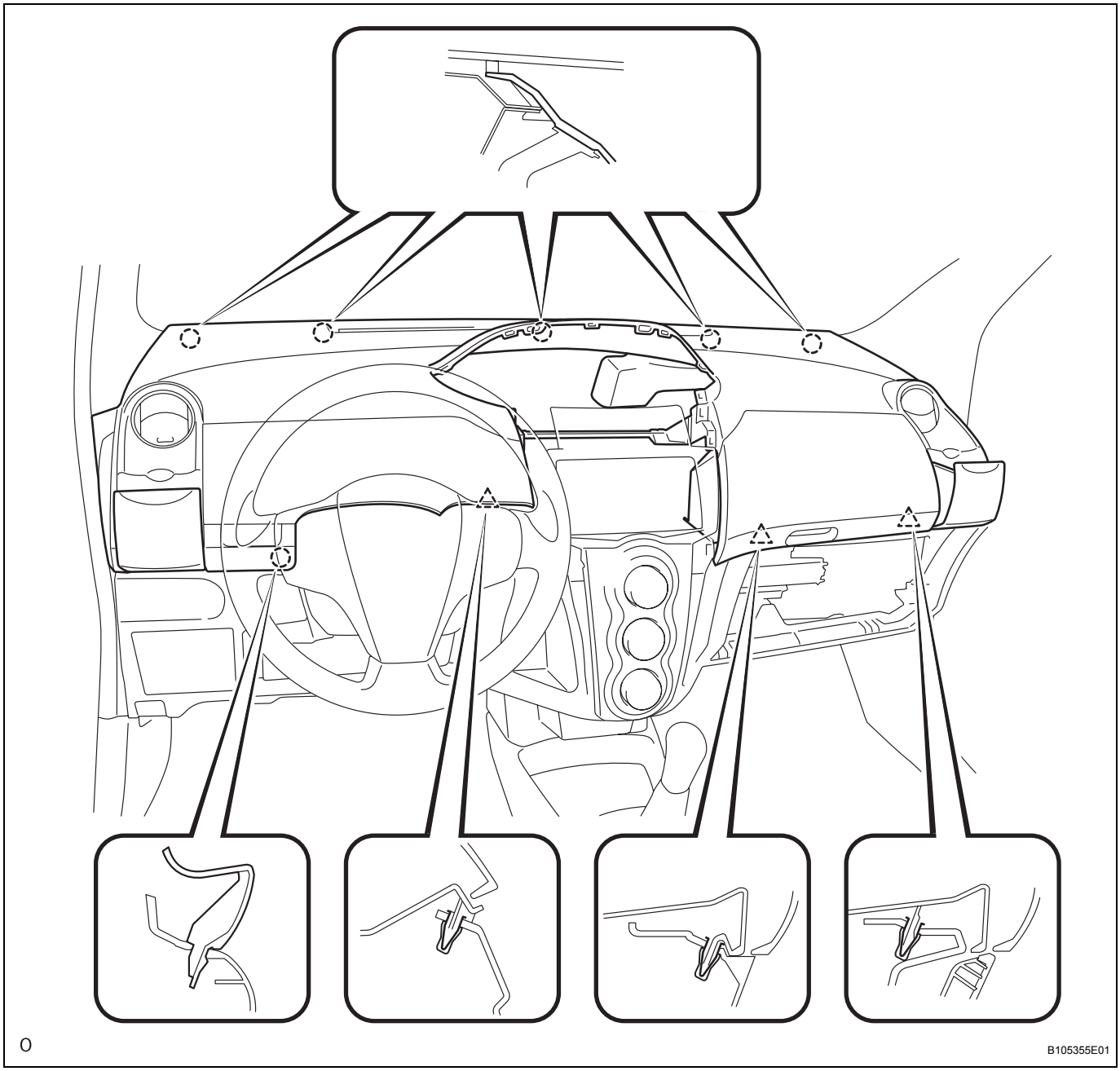

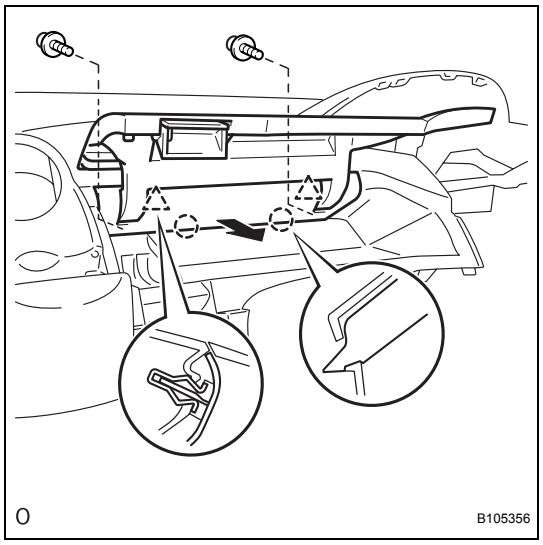

14. REMOVE NO. 1 INSTRUMENT PANEL BOX DOOR SUB-ASSEMBLY

(a) Remove the 2 <A> screws.

(b) Pull the instrument panel box door toward the rear of the vehicle, disengage the 2 claws and 2 clips and remove the instrument panel box door.

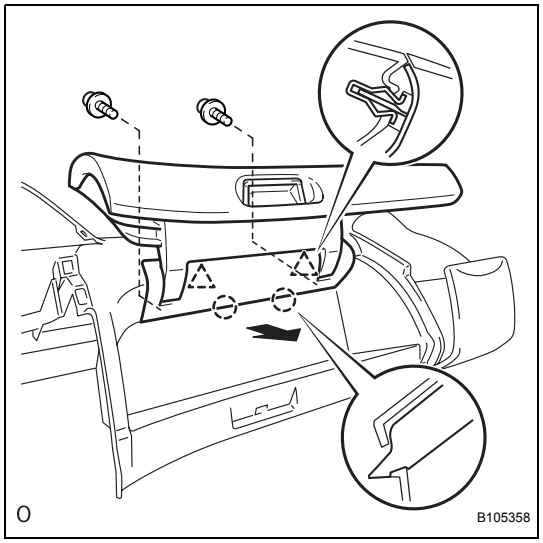

15. REMOVE NO. 2 INSTRUMENT PANEL BOX DOOR SUB-ASSEMBLY

(a) Remove the 2 <A> screws.

(b) Pull the instrument panel box door toward the rear of the vehicle, disengage the 2 claws and 2 clips and remove the instrument panel box door.

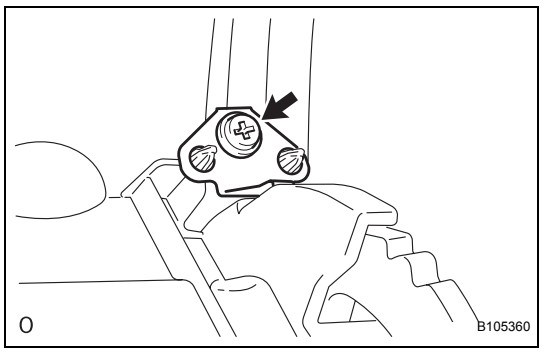

16. REMOVE INSTRUMENT PANEL CUP HOLDER SPRING

(a) Remove screw <A> and remove the cup holder spring.

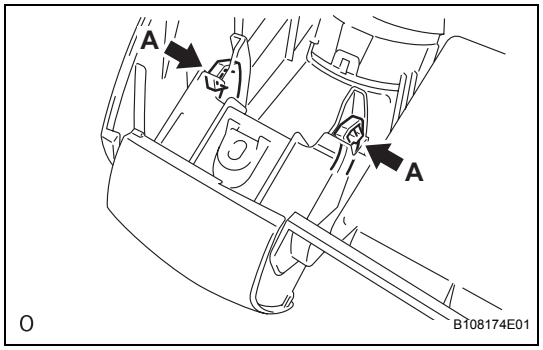

17. REMOVE NO. 1 INSTRUMENT PANEL CUP HOLDER

(a) Slightly deform portion A of the cup holder by pressing it and release the stopper.

IP

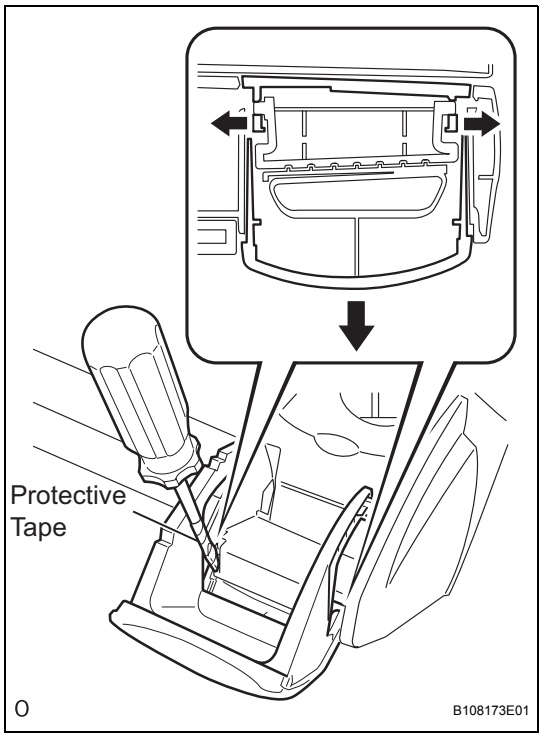

(b) Using a screwdriver with its tip wrapped in protective tape, prize the hinge portion of the cup holder from side to side while being careful not to apply excessive load to the axis of the instrument panel upper, and remove the cup holder.

18. REMOVE NO. 2 INSTRUMENT PANEL CUP HOLDER

HINT:

Use the same procedure as for the RH side.

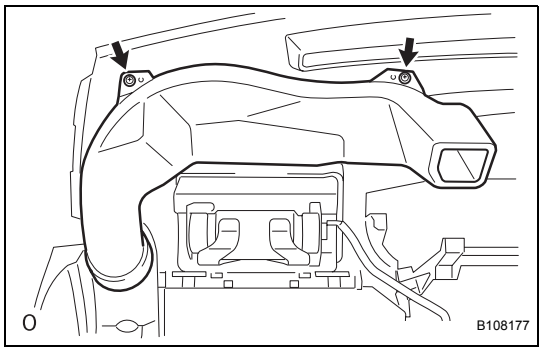

19. REMOVE NO. 2 HEATER TO REGISTER DUCT

(a) Remove the 2 <A> screws and remove the register duct.

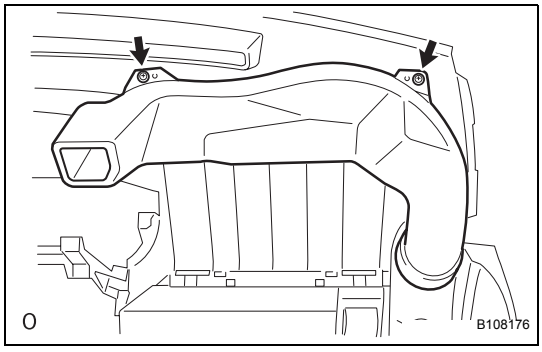

20. REMOVE NO. 1 HEATER TO REGISTER DUCT

(a) Remove the 2 <A> screws and remove the register duct.

IP

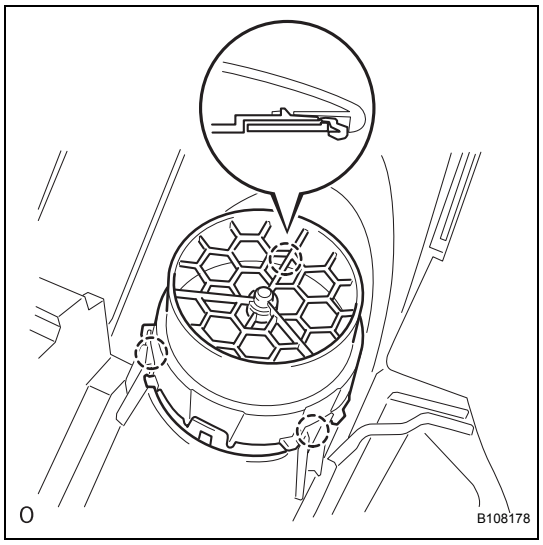

21. REMOVE NO. 1 INSTRUMENT PANEL REGISTER ASSEMBLY

(a) Disengage the 3 claws and remove the register.
HINT:
Use the same procedure as for the opposite side.

22. REMOVE FRONT PASSENGER AIRBAG ASSEMBLY (See page RS-340)

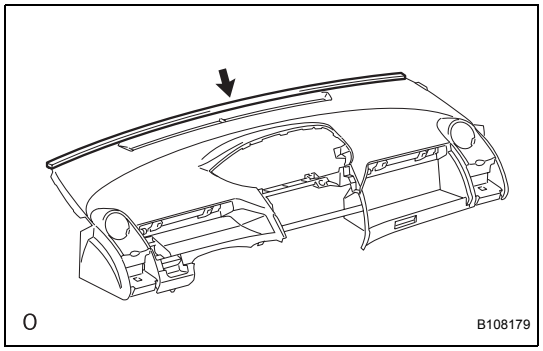

23. REMOVE INSTRUMENT PANEL CUSHION

(a) Remove the instrument panel cushion from the instrument panel upper.

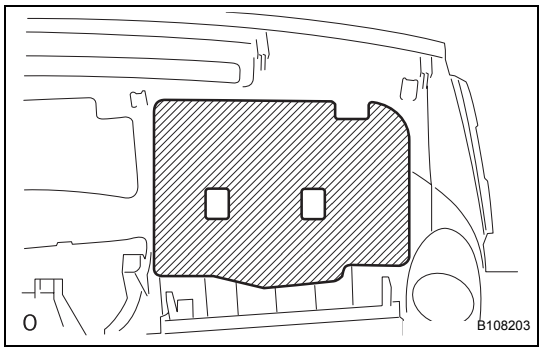

24. REMOVE NO. 1 INSTRUMENT PANEL CUSHION

(a) Remove the instrument panel cushion from the instrument panel upper.

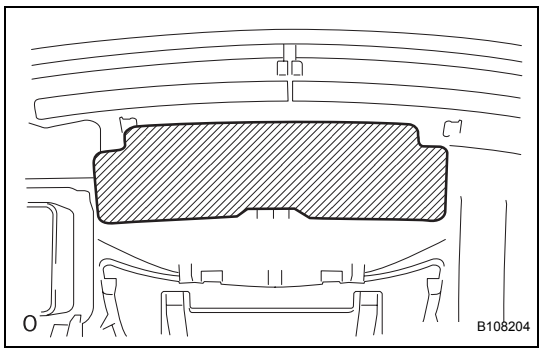

25. REMOVE NO. 2 INSTRUMENT PANEL CUSHION

(a) Remove the instrument panel cushion from the instrument panel upper.

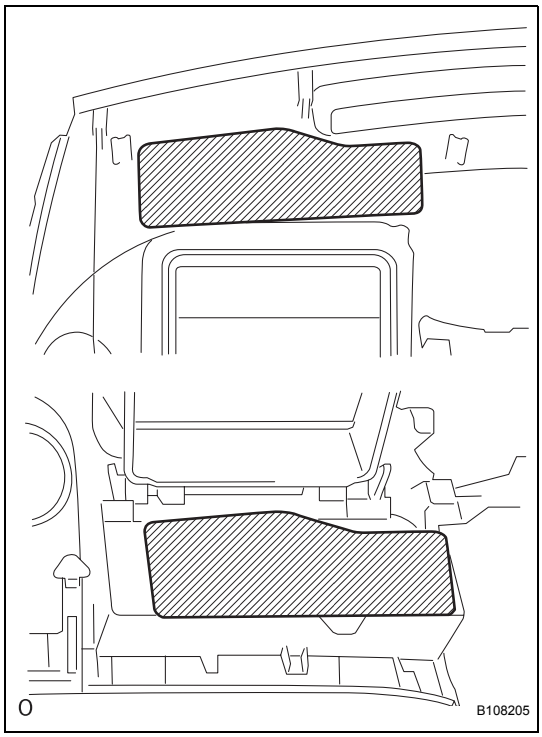

26. REMOVE NO. 3 INSTRUMENT PANEL CUSHION

(a) Remove the 2 instrument panel cushions from the instrument panel upper.

INSTALLATION

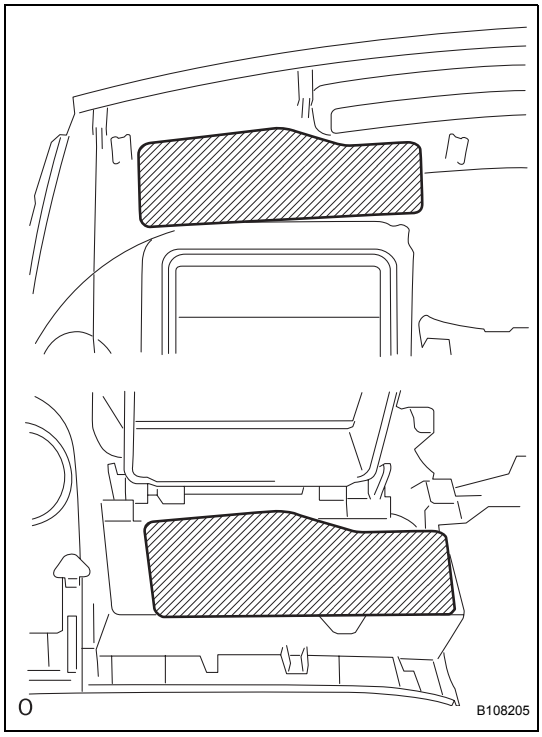

1. INSTALL NO. 3 INSTRUMENT PANEL CUSHION

(a) Install the 2 instrument panel cushions onto the instrument panel upper.

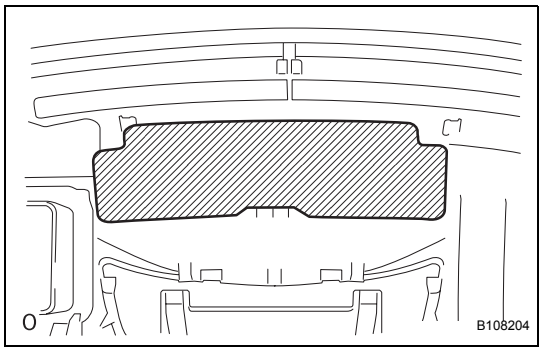

2. INSTALL NO. 2 INSTRUMENT PANEL CUSHION

(a) Install the instrument panel cushion onto the instrument panel upper.

IP

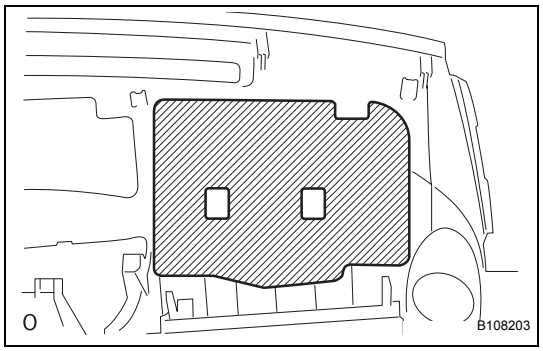

3. INSTALL NO. 1 INSTRUMENT PANEL CUSHION

(a) Install the instrument panel cushion onto the instrument panel upper.

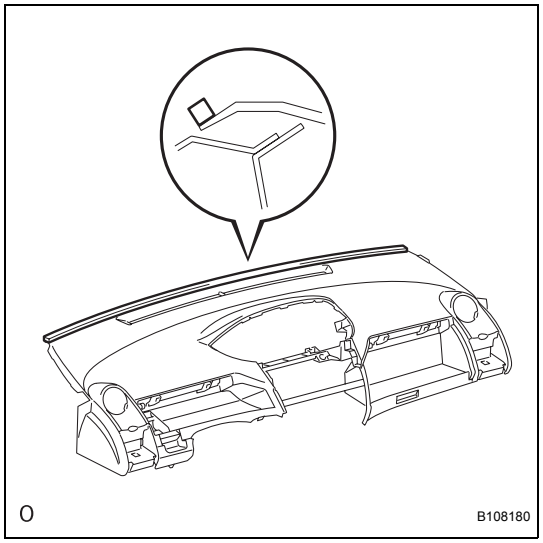

4. INSTALL INSTRUMENT PANEL CUSHION

(a) Install the instrument panel cushion onto the instrument panel upper.

5. INSTALL FRONT PASSENGER AIRBAG ASSEMBLY (See page RS-341)

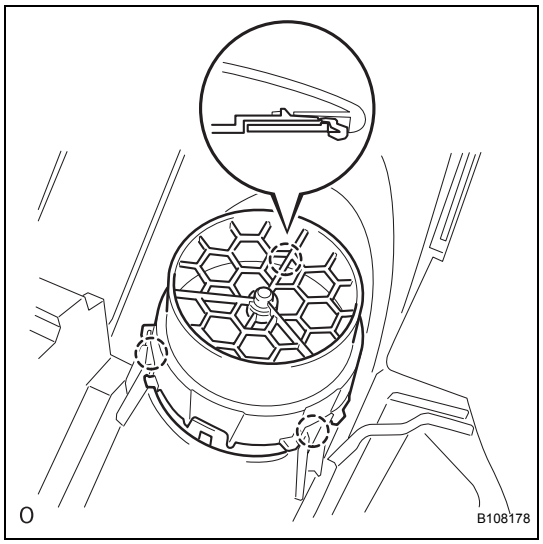

6. INSTALL NO. 1 INSTRUMENT PANEL REGISTER ASSEMBLY

(a) Engage the 3 claws and install the register.
HINT:
Use the same procedure as for the opposite side.

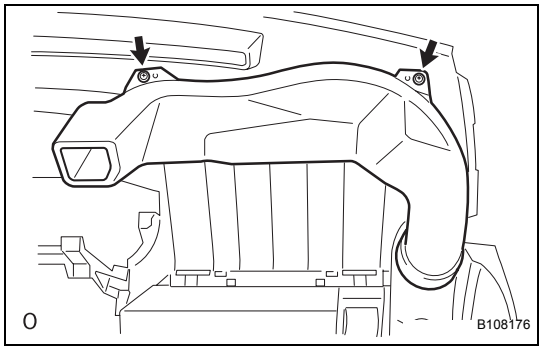

7. INSTALL NO. 1 HEATER TO REGISTER DUCT

(a) Install the register duct with the 2 <A> screws.

IP

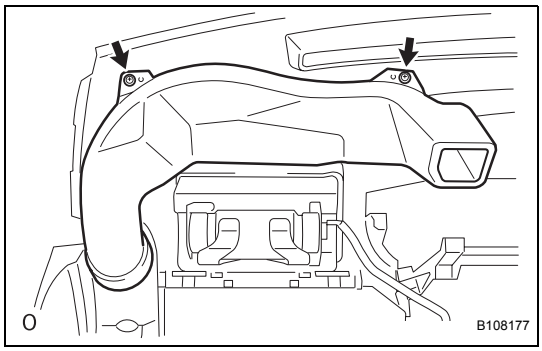

8. INSTALL NO. 2 HEATER TO REGISTER DUCT

(a) Install the register duct with the 2 <A> screws.

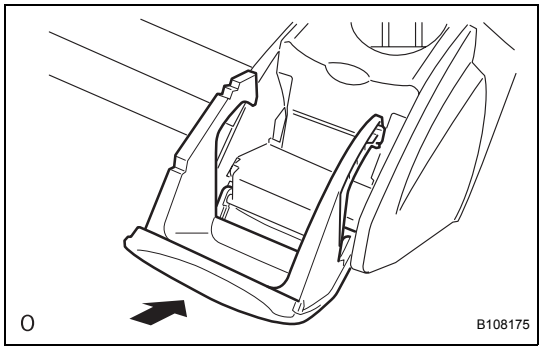

9. INSTALL NO. 1 INSTRUMENT PANEL CUP HOLDER

(a) Engage the hinge portion of the cup holder and install the cup holder.

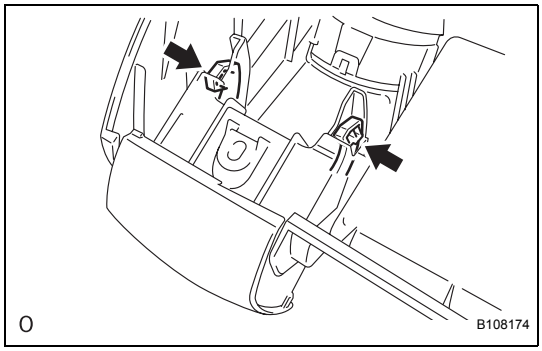

(b) Engage the stopper of the cup holder.

10. INSTALL NO. 2 INSTRUMENT PANEL CUP HOLDER

HINT:

Use the same procedure as for the RH side.

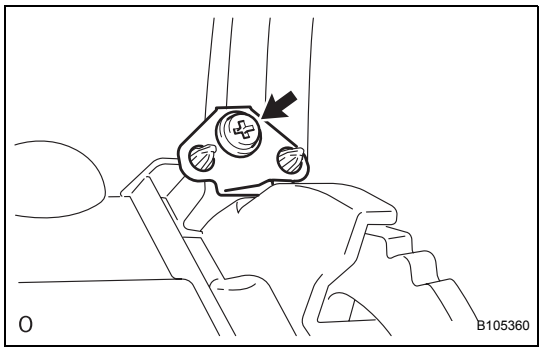

11. INSTALL INSTRUMENT PANEL CUP HOLDER SPRING

(a) Install the cup holder spring with screw <A>.

IP

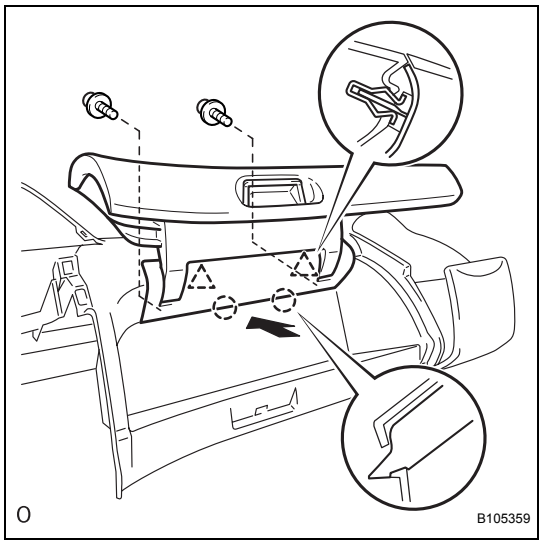

12. INSTALL NO. 2 INSTRUMENT PANEL BOX DOOR SUB-ASSEMBLY

(a) Engage the 2 claws and 2 clips.
(b) Install the box door with the 2 <A> screws.

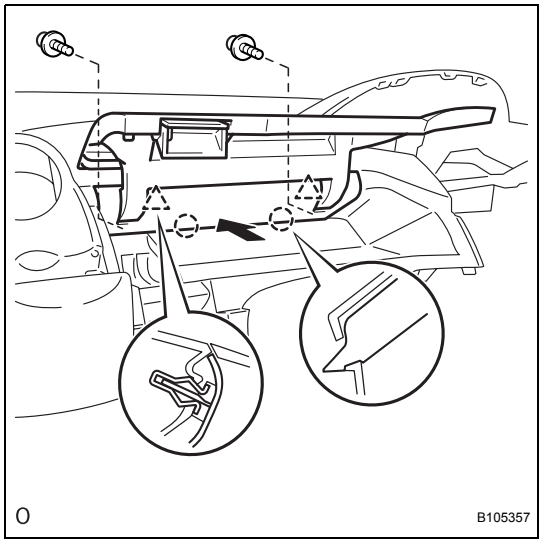

13. INSTALL NO. 1 INSTRUMENT PANEL BOX DOOR SUB-ASSEMBLY

(a) Engage the 2 claws and 2 clips.
(b) Install the box door with the 2 <A> screws.

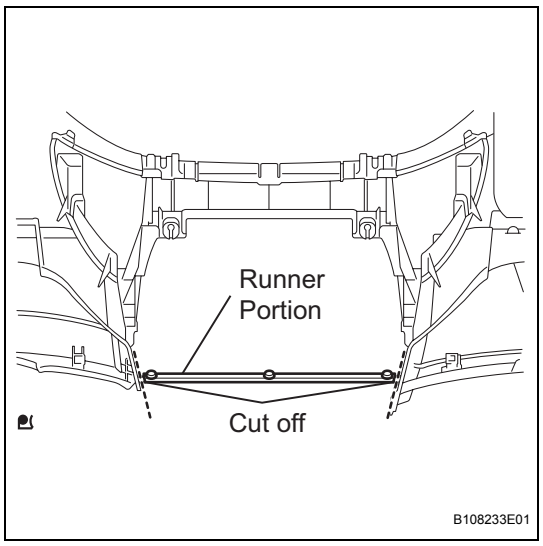

14. INSTALL UPPER INSTRUMENT PANEL SUB-ASSEMBLY

(a) Using a nipper, cut off both ends of the runner portion shown in the illustration (When installing a new one).
(b) Engage the 5 claws at the upper side of the instrument panel.

IP

(c) Engage the claw and the 3 clips at the lower side of the instrument panel.

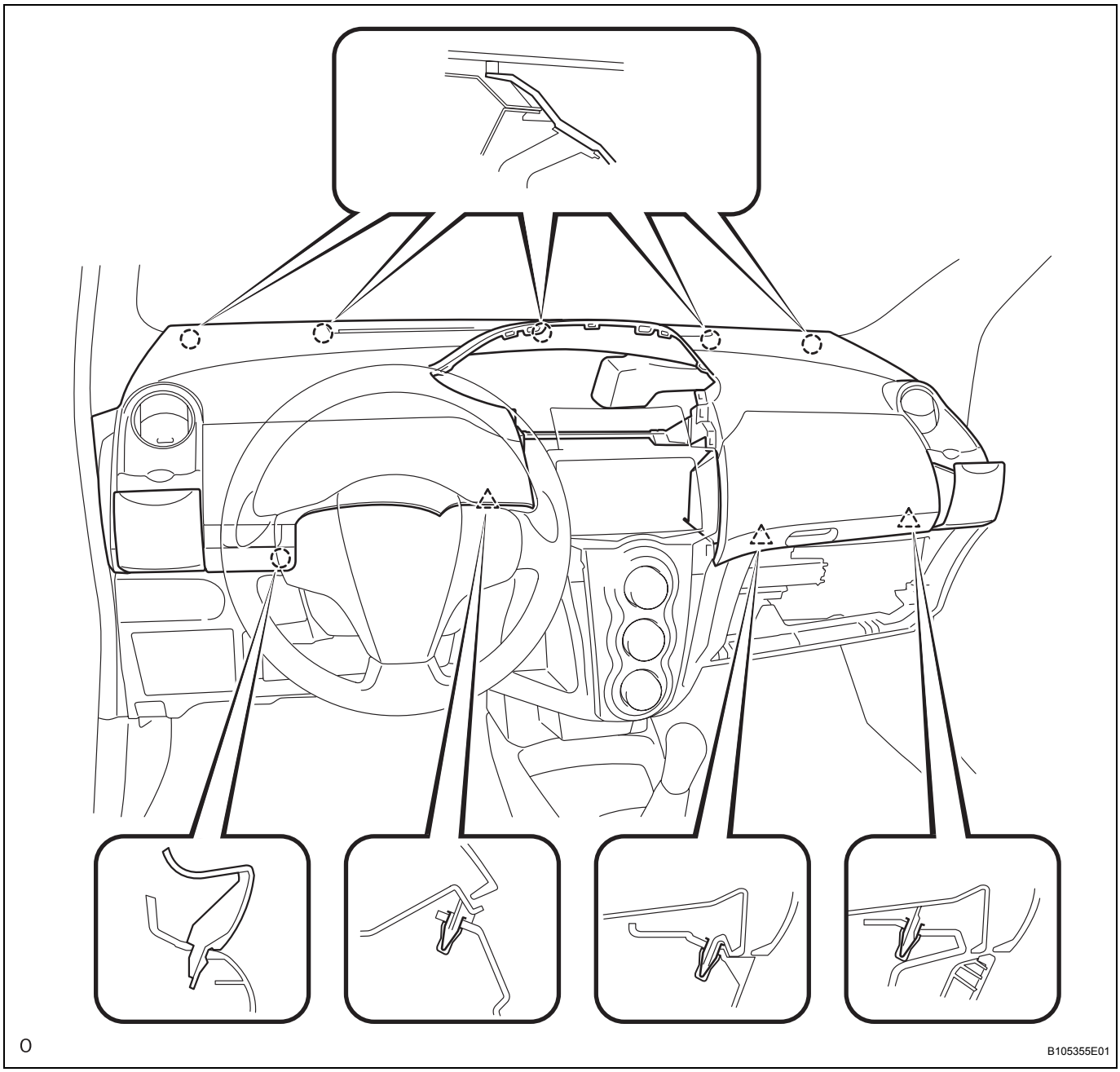

(d) Install the instrument panel upper with the 2 <C> bolts and 4 <B> screws.
Torque: 20 N*m (204 kgf*cm, 15 ft.*lbf) for bolt

(e) Connect the connectors.

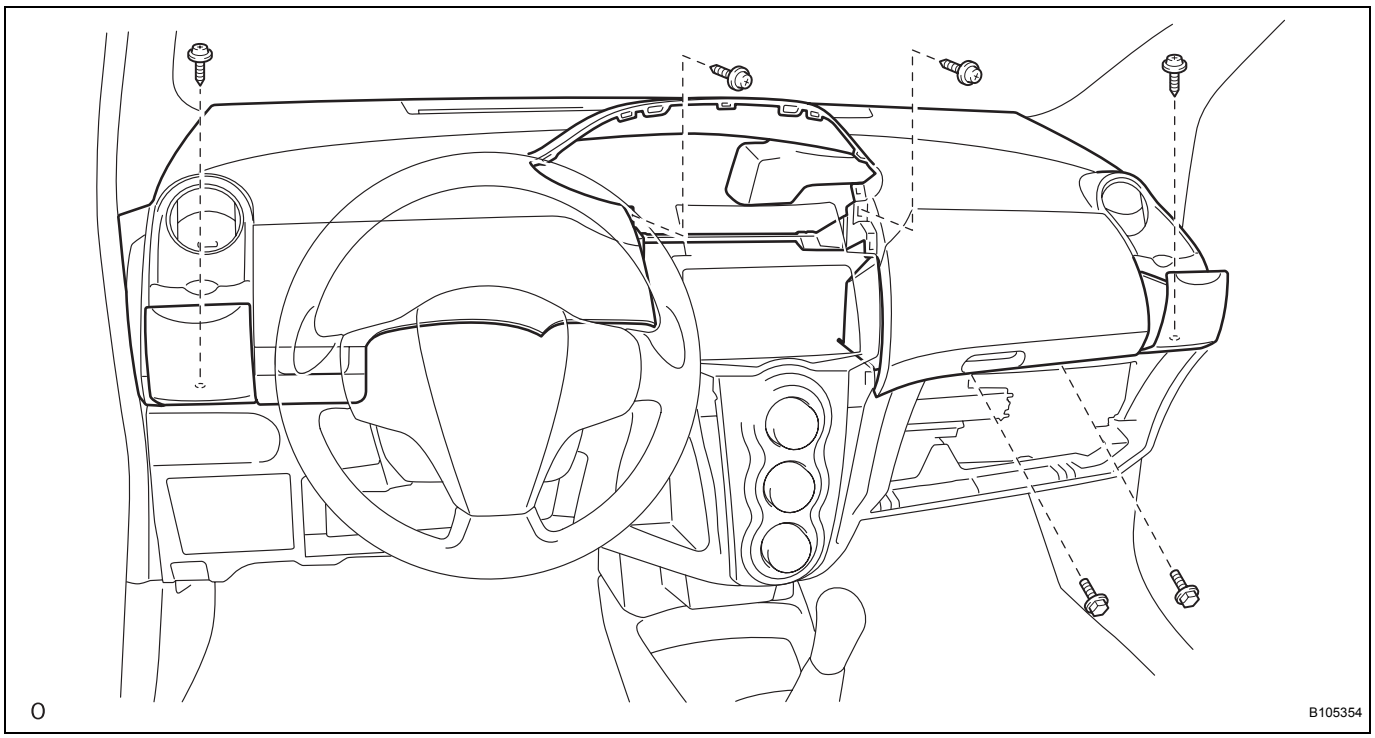

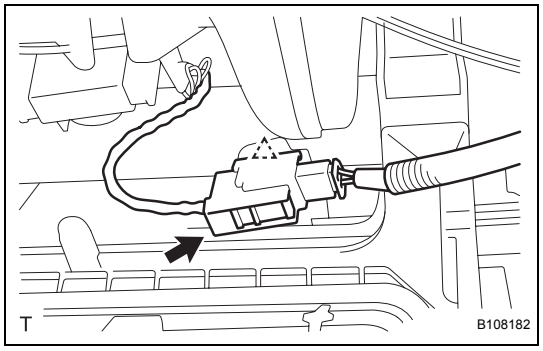

(f) Connect the passenger airbag connector and clamp.

IP

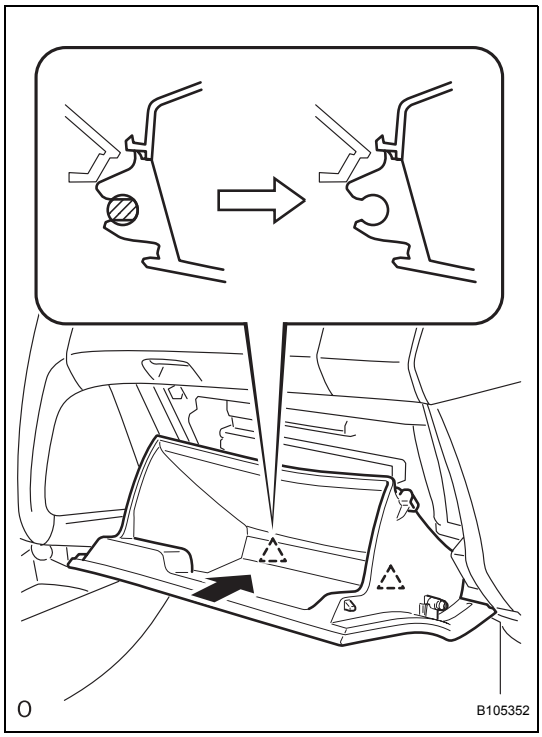

15. **INSTALL GLOVE COMPARTMENT DOOR ASSEMBLY**
    (a) Engage the claw of the hinge portion in the horizontal direction to install the glove compartment door assembly.
    NOTICE:
    Engage the claw in the horizontal direction, otherwise, installation failure caused by excessive play around the hinge portion will result.

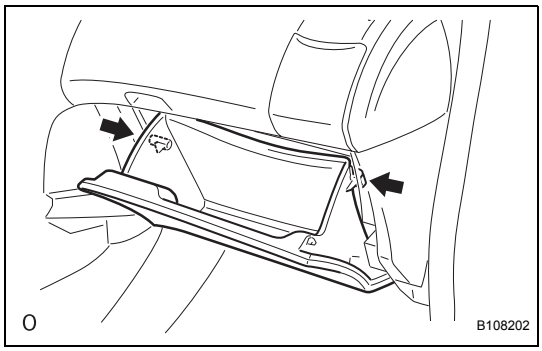

    (b) Slightly deform the upper portion of the glove compartment door assembly to engage the stopper.

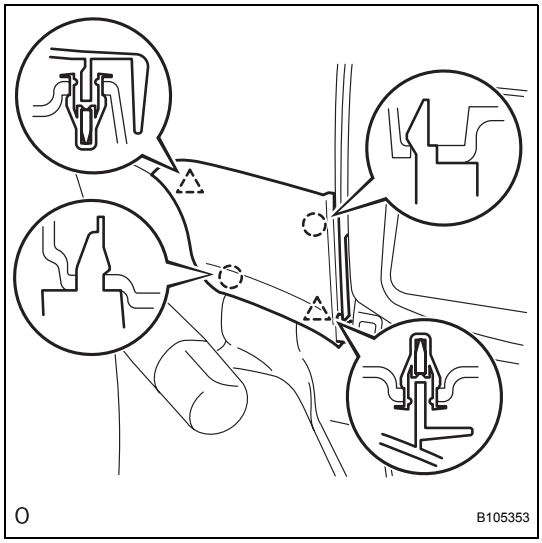

16. **INSTALL NO. 1 SWITCH HOLE BASE**
    (a) Disengage the 2 clips and 2 claws and install the switch hole base.
17. **INSTALL FRONT PILLAR GARNISH RH (See page IR-71)**
18. **INSTALL FRONT PILLAR GARNISH LH (See page IR-72)**
19. **INSTALL FRONT DOOR OPENING TRIM WEATHERSTRIP RH (See page IR-81)**
20. **INSTALL FRONT DOOR OPENING TRIM WEATHERSTRIP LH (See page IR-81)**
21. **INSTALL COMBINATION METER ASSEMBLY (See page ME-148)**
22. **INSTALL INSTRUMENT CLUSTER FINISH PANEL (See page ME-148)**
23. **INSTALL INSTRUMENT PANEL FINISH PANEL END RH (See page ME-149)**

24. **INSTALL INSTRUMENT PANEL FINISH PANEL END LH (See page ME-149)**

25. **CONNECT CABLE TO NEGATIVE BATTERY TERMINAL**
Torque: 5.4 N*m (55 kgf*cm, 48 in.*lbf)

26. **CHECK SRS WARNING LIGHT**
RS-31

LOWER INSTRUMENT PANEL (for Sedan)

COMPONENTS

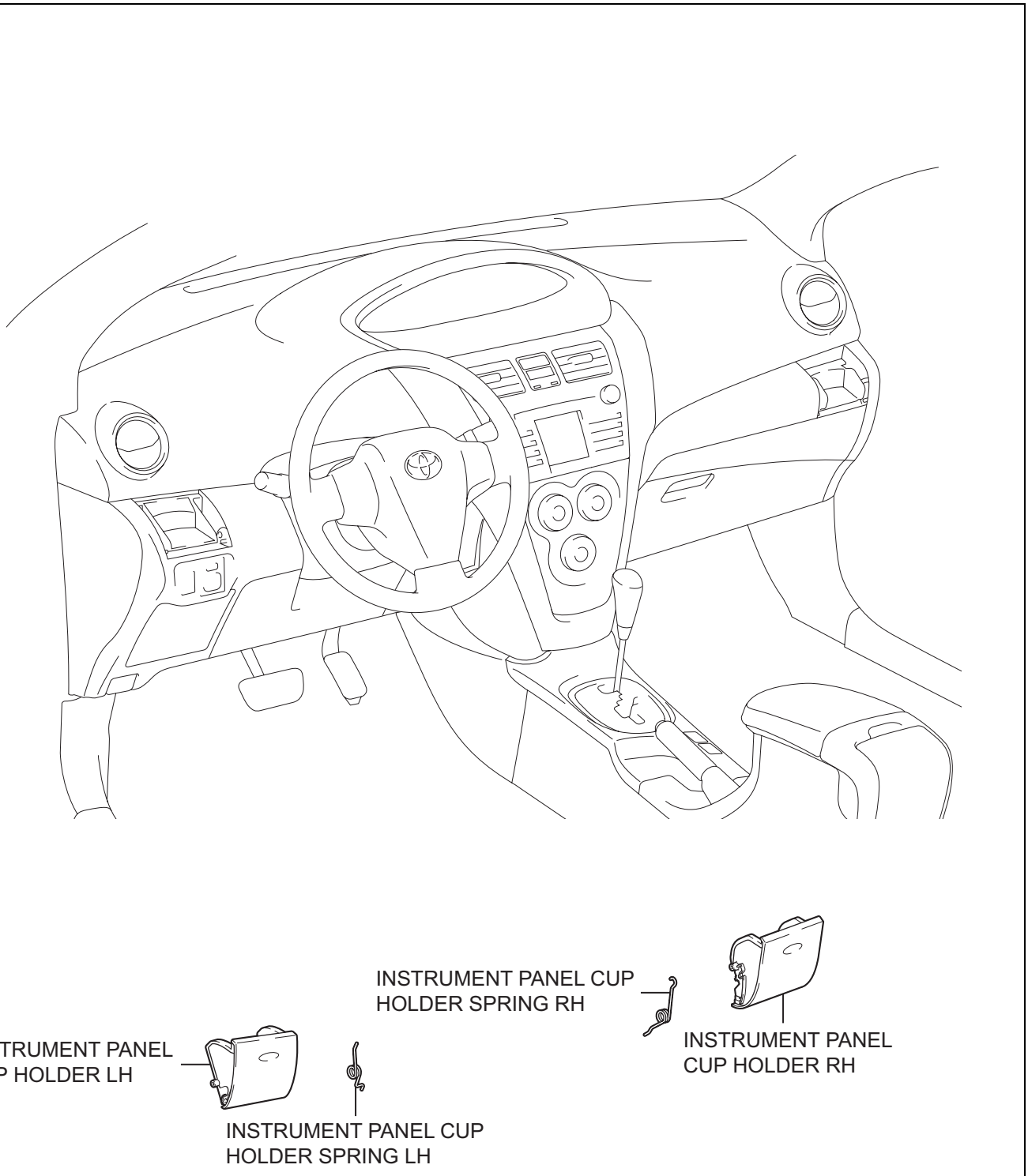

IP

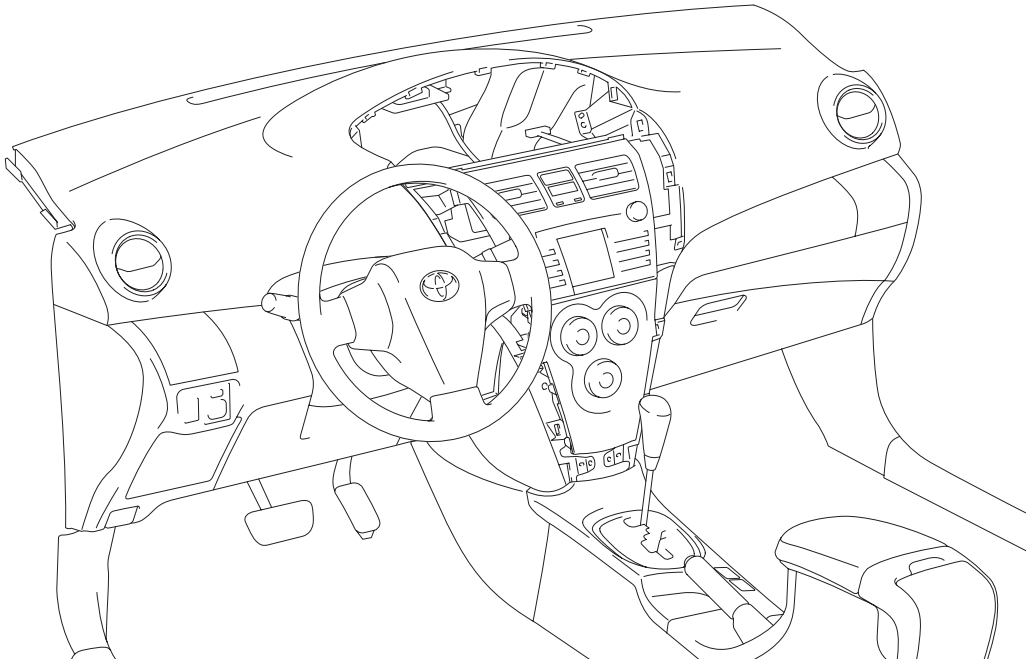

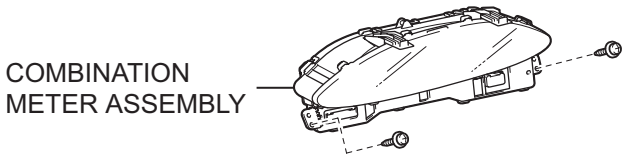

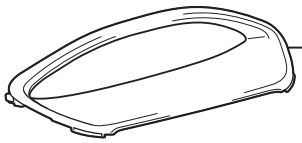

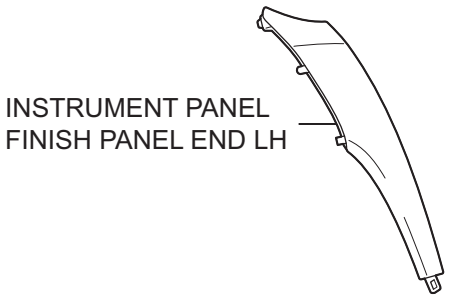

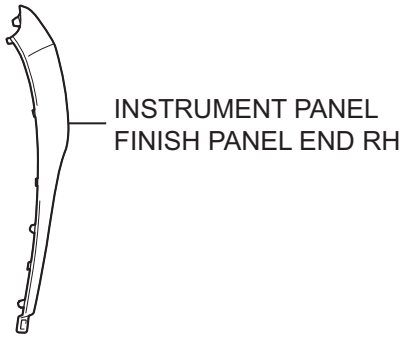



P

E116817E01

IP

w/ Curtain Shield Airbag:

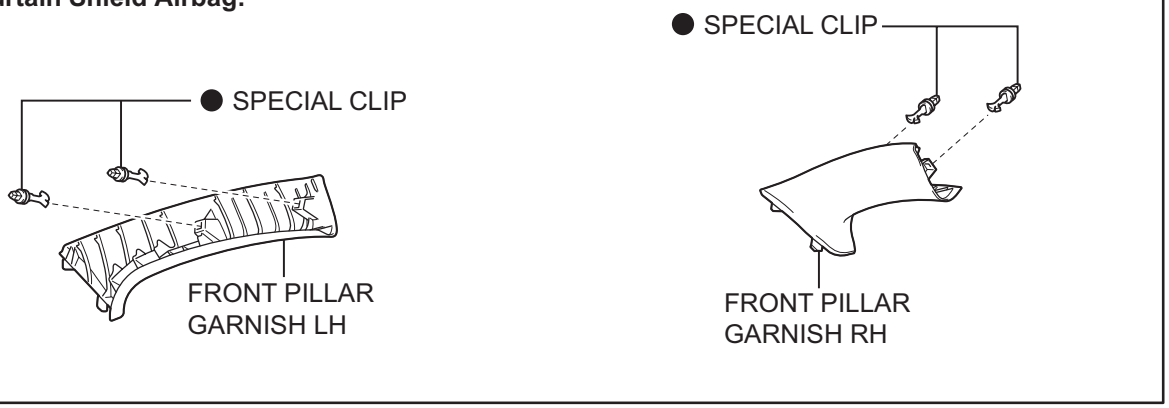

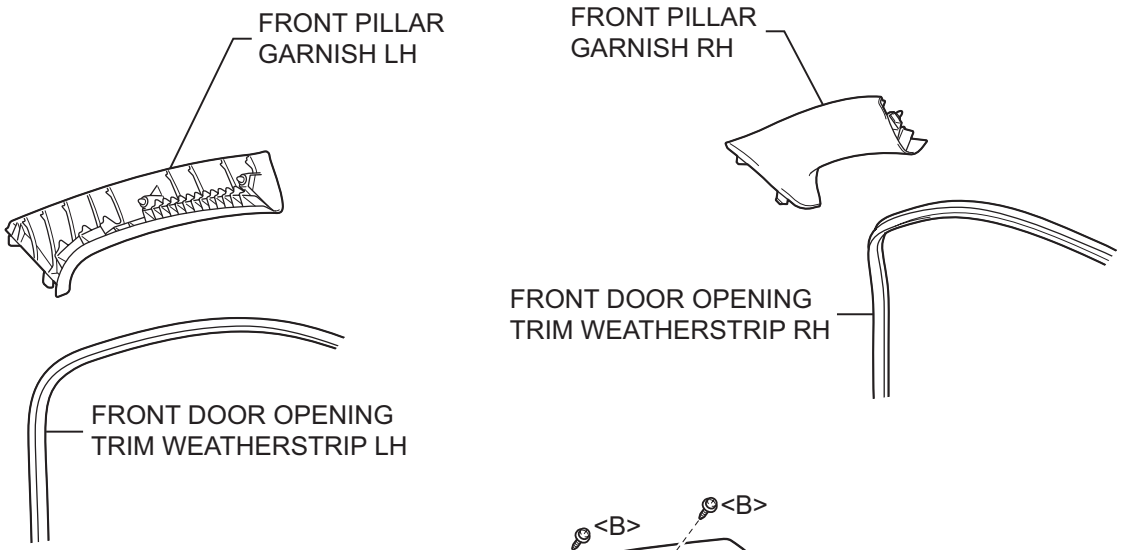

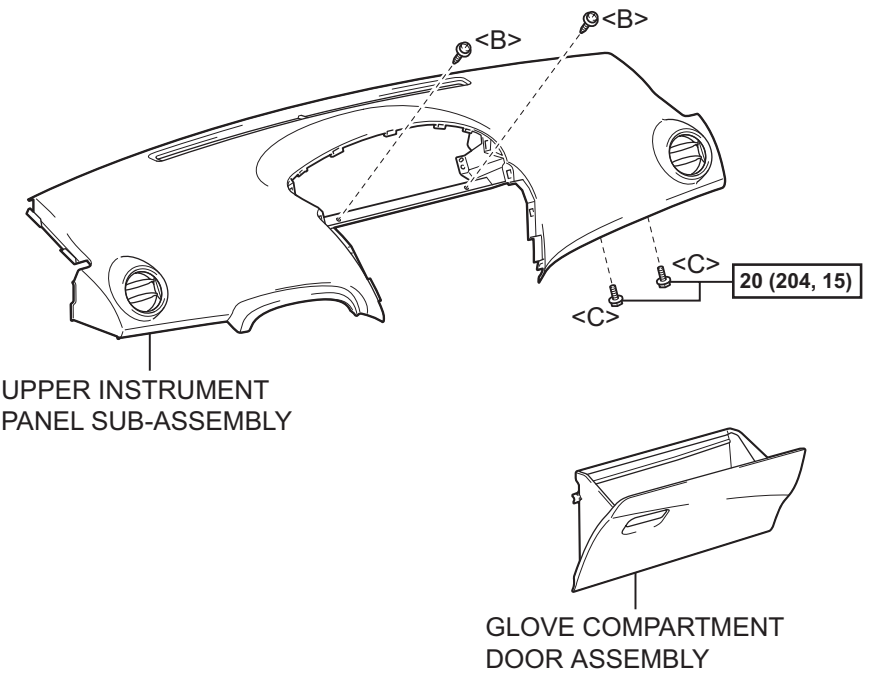

IP

N*m (kgf*cm, ft*lbf) : Specified torque

● Non-reusable part

P

B132310E02

for Integrated w/ Panel:

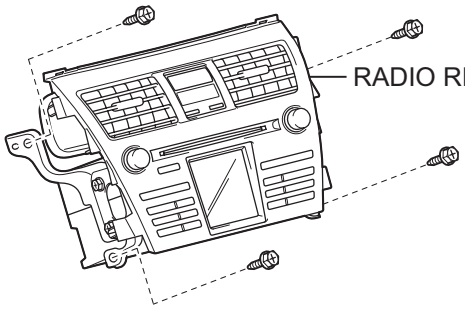

w/o Radio Receiver:

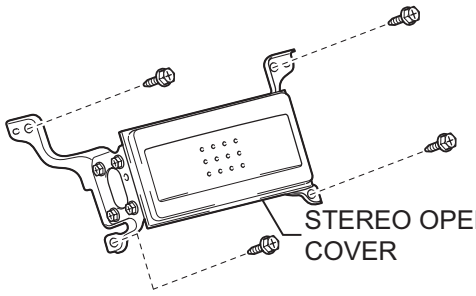

Except for Integrated w/ Panel:

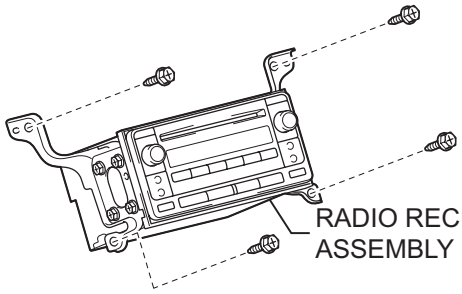

Except for Integrated w/ Panel:

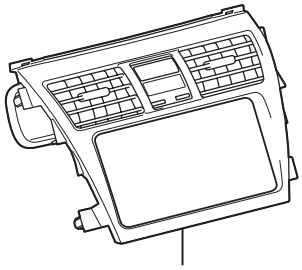

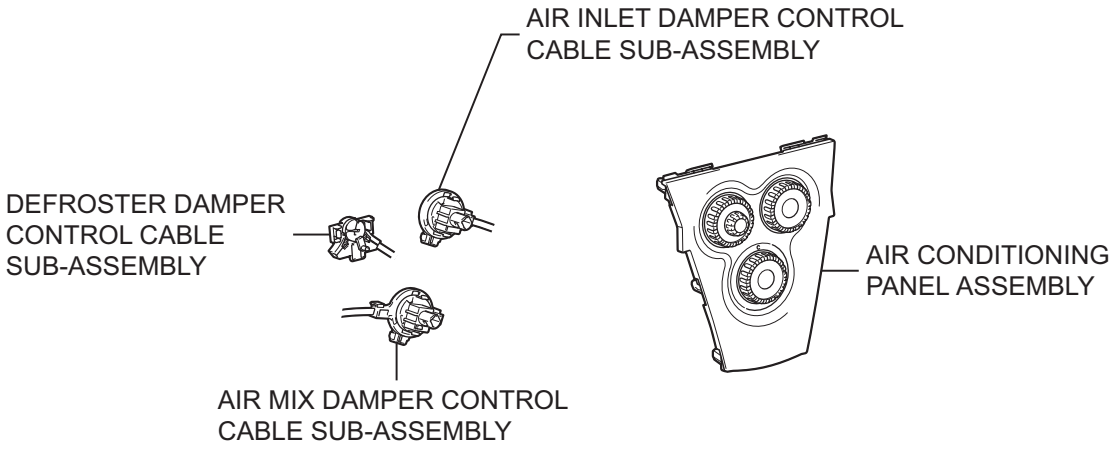

P

B132383E01

IP

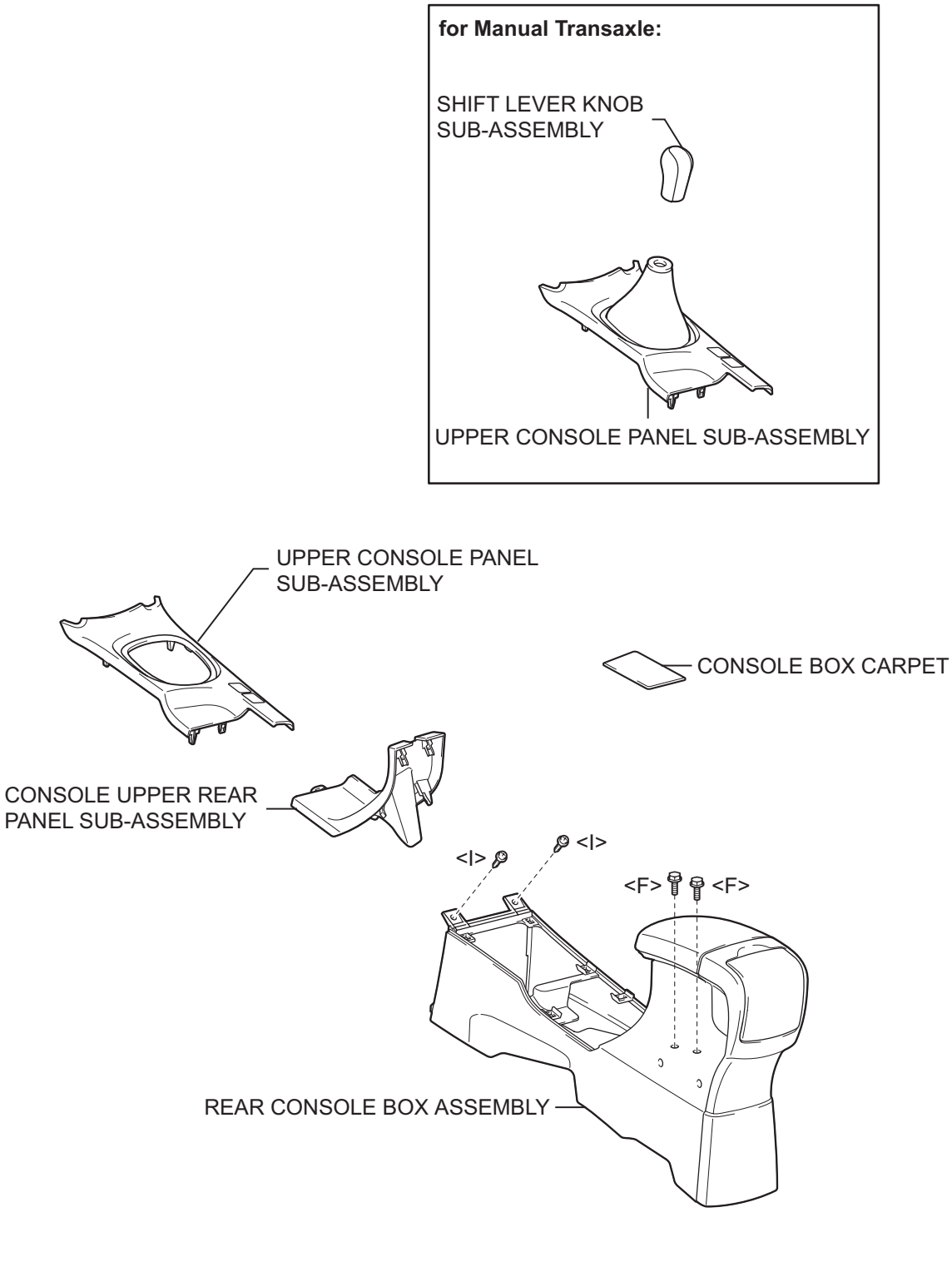
for Manual Transaxle:
SHIFT LEVER KNOB SUB-ASSEMBLY
UPPER CONSOLE PANEL SUB-ASSEMBLY
UPPER CONSOLE PANEL SUB-ASSEMBLY
CONSOLE BOX CARPET
CONSOLE UPPER REAR PANEL SUB-ASSEMBLY
<I>
<I>
<F>
<F>
REAR CONSOLE BOX ASSEMBLY

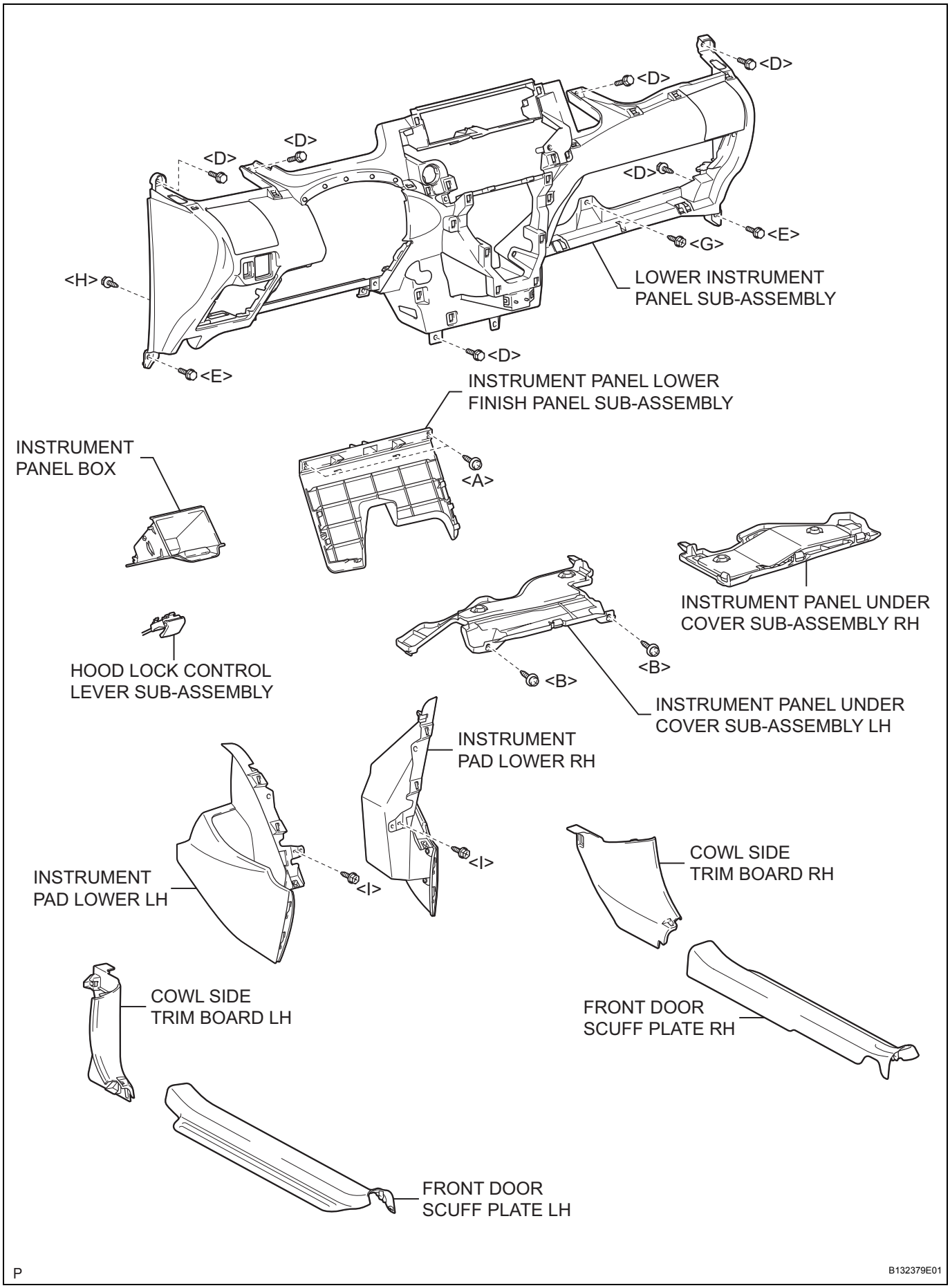
<D>
<D>
<D>
<D>
<D>
<D>
<E>
<G>
<E>
<H>
LOWER INSTRUMENT PANEL SUB-ASSEMBLY
INSTRUMENT PANEL LOWER FINISH PANEL SUB-ASSEMBLY
<A>
INSTRUMENT PANEL BOX
INSTRUMENT PANEL UNDER COVER SUB-ASSEMBLY RH
HOOD LOCK CONTROL LEVER SUB-ASSEMBLY
<B>
<B>
INSTRUMENT PANEL UNDER COVER SUB-ASSEMBLY LH
INSTRUMENT PAD LOWER RH
<I>
<I>
INSTRUMENT PAD LOWER LH
COWL SIDE TRIM BOARD RH
COWL SIDE TRIM BOARD LH
FRONT DOOR SCUFF PLATE RH
FRONT DOOR SCUFF PLATE LH
P
B132379E01

IP

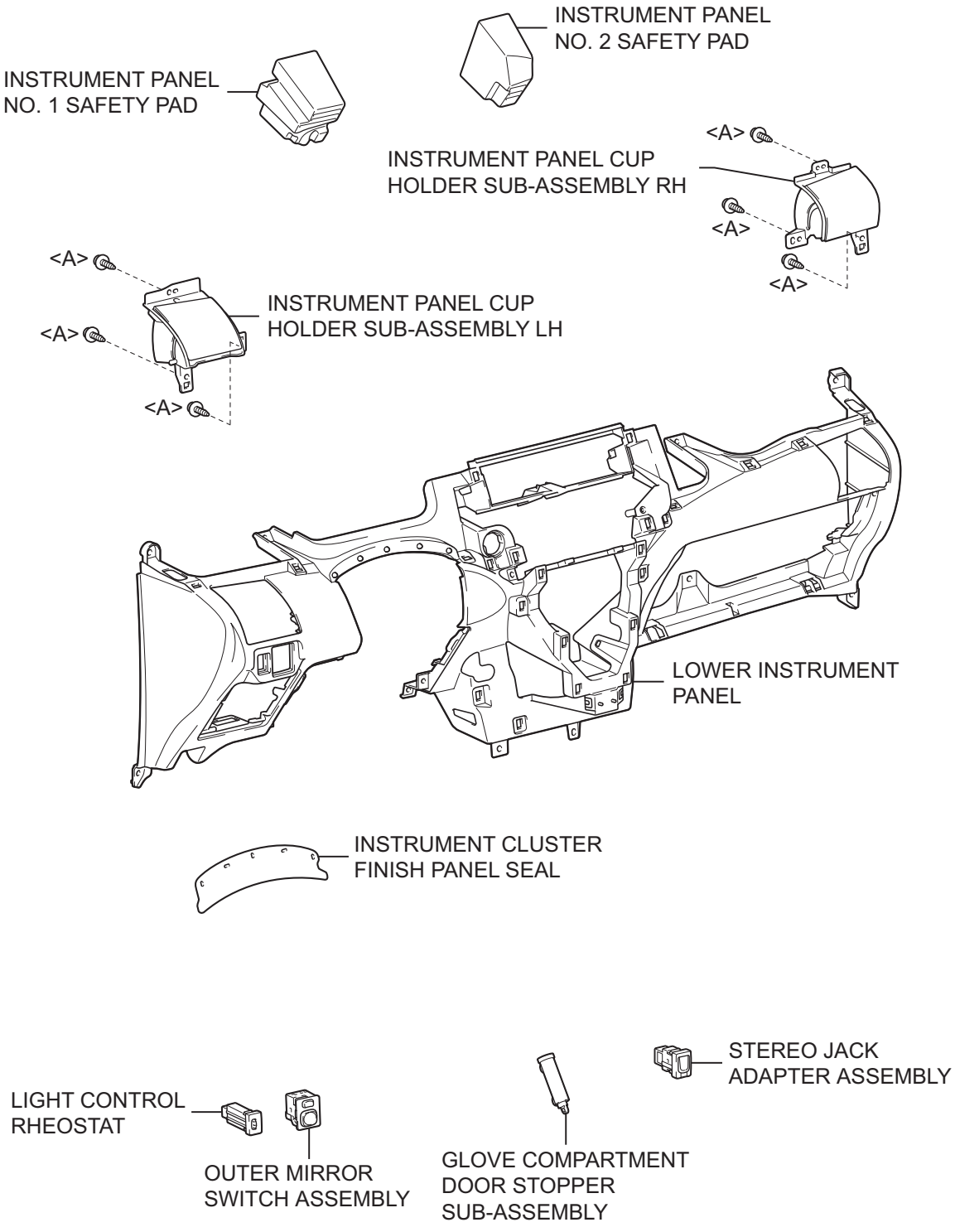

IP

P

B132380E01

REMOVAL

HINT:
Use the same procedure for both the RH and LH sides.

1. BOLTS, SCREWS AND NUTS TABLE

HINT:
All bolts, screws and nuts relevant to installing and removing the instrument panel are shown, along with their alphabetic codes, in the table below.

mm(in.) (L=Length)

Code	Shape	Code	Shape	Code	Shape
<A>	φ=5 (0.20) L=14 (0.55) 93568-15014	<B>	φ=5 (0.20) L=14 (0.55) 93568-55014	<C>	φ=8 (0.31) L=15 (0.59) 90105-08120 91643-80820
<D>	φ=6 (0.24) L=20 (0.79) 90159-60610	<E>	φ=6 (0.24) L=16 (0.63) 91533-80616	<F>	φ=6 (0.24) L=16 (0.63) 91635-60616
<G>	φ=5 (0.20) L=16 (0.63) 90159-50322	<H>	φ=5 (0.20) L=16 (0.63) 93568-15016	<I>	φ=5 (0.20) L=16 (0.63) 90159-50384

P B132394E01

2. DISCONNECT CABLE FROM NEGATIVE BATTERY TERMINAL

Wait for at least 90 seconds after disconnecting the cable to prevent the airbag from working.

IP

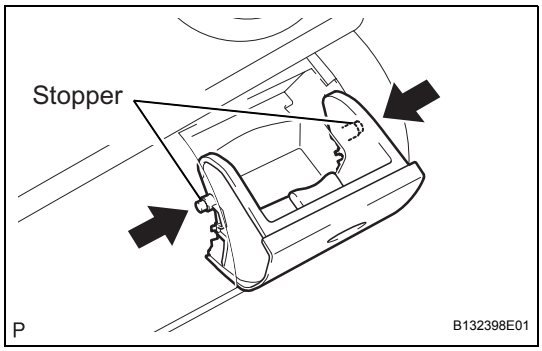

3. REMOVE INSTRUMENT PANEL CUP HOLDER RH

(a) Open the instrument panel cup holder.

(b) Flex both sides of the instrument panel cup holder and disengage the 2 stoppers.

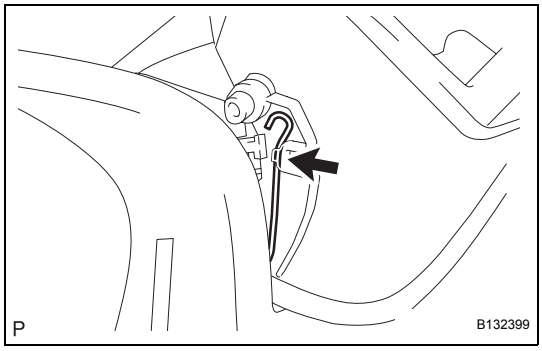

(c) Disengage the spring.

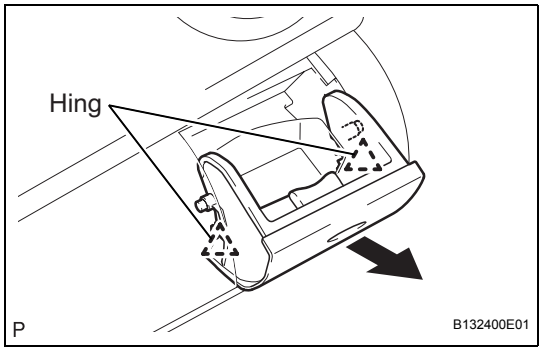

(d) Remove the instrument panel cup holder by moving it toward either the inside or the outside of the vehicle and disengaging the 2 hinges one at a time.

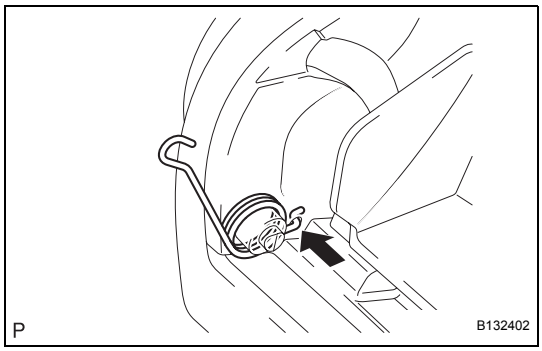

4. REMOVE INSTRUMENT PANEL CUP HOLDER SPRING RH

(a) Remove the spring.

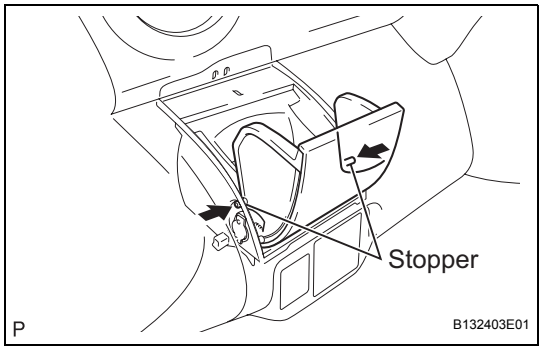

5. REMOVE INSTRUMENT PANEL CUP HOLDER LH

(a) Open the instrument panel cup holder.

(b) Flex both sides of the instrument panel cup holder and disengage the 2 stoppers.

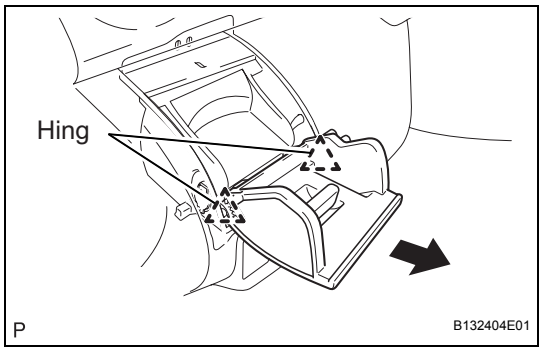

(c) Remove the instrument panel cup holder by moving it toward either the inside or the outside of the vehicle and disengaging the 2 hinges one at a time.

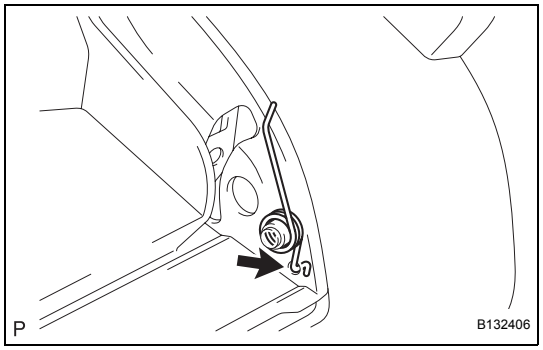

6. **REMOVE INSTRUMENT PANEL CUP HOLDER SPRING LH**
   (a) Remove the spring.
7. **REMOVE INSTRUMENT PANEL FINISH PANEL LOWER CENTER (See page ME-138)**
8. **REMOVE INSTRUMENT PANEL FINISH PANEL END LH (See page ME-138)**
9. **REMOVE INSTRUMENT PANEL FINISH PANEL END RH (See page ME-138)**
10. **REMOVE INSTRUMENT CLUSTER FINISH PANEL (See page ME-139)**
11. **REMOVE COMBINATION METER ASSEMBLY (See page ME-139)**

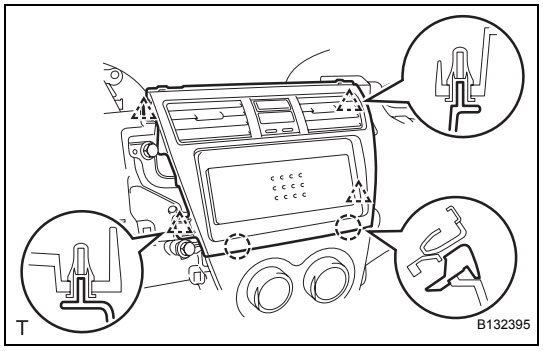

12. **REMOVE INSTRUMENT CLUSTER FINISH PANEL CENTER SUB-ASSEMBLY**
    (a) Disengage the 2 claws and 4 clips and remove the instrument cluster panel center.

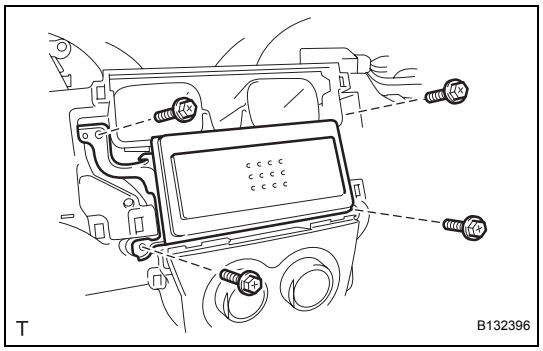

13. **REMOVE STEREO OPENING COVER (w/o Radio Receiver)**
    (a) Remove the 4 screws and remove the stereo opening cover.
14. **REMOVE RADIO RECEIVER ASSEMBLY (See page AV-38)**
15. **REMOVE AIR CONDITIONING PANEL ASSEMBLY (See page AC-239)**
16. **DISCONNECT AIR MIX DAMPER CONTROL CABLE SUB-ASSEMBLY (See page AC-240)**
17. **DISCONNECT DEFROSTER DAMPER CONTROL CABLE SUB-ASSEMBLY (See page AC-240)**
18. **DISCONNECT AIR INLET DAMPER CONTROL CABLE SUB-ASSEMBLY (See page AC-240)**

19. **SEPARATE FRONT DOOR OPENING TRIM WEATHERSTRIP RH (See page IP-5)**
20. **SEPARATE FRONT DOOR OPENING TRIM WEATHERSTRIP LH (See page IP-5)**
21. **REMOVE FRONT PILLAR GARNISH RH (See page IR-18)**
22. **REMOVE FRONT PILLAR GARNISH LH (See page IR-19)**
23. **REMOVE GLOVE COMPARTMENT DOOR ASSEMBLY (See page IP-6)**
24. **REMOVE UPPER INSTRUMENT PANEL SUB-ASSEMBLY (See page IP-6)**
25. **REMOVE FRONT DOOR SCUFF PLATE RH (See page IR-14)**
26. **REMOVE FRONT DOOR SCUFF PLATE LH (See page IR-14)**
27. **REMOVE INSTRUMENT PANEL UNDER COVER SUB-ASSEMBLY LH (See page IR-14)**
28. **REMOVE INSTRUMENT PANEL UNDER COVER SUB-ASSEMBLY RH (See page IR-14)**
29. **REMOVE COWL SIDE TRIM BOARD RH (See page IR-15)**
30. **REMOVE COWL SIDE TRIM BOARD LH (See page IR-15)**
31. **REMOVE SHIFT LEVER KNOB SUB-ASSEMBLY (for Manual Transaxle) (See page IP-84)**
32. **REMOVE UPPER CONSOLE PANEL SUB-ASSEMBLY (See page IP-84)**
33. **REMOVE CONSOLE UPPER REAR PANEL SUB-ASSEMBLY (See page IP-84)**
34. **REMOVE CONSOLE BOX CARPET (See page IP-85)**
35. **REMOVE REAR CONSOLE BOX ASSEMBLY (See page IP-85)**
36. **REMOVE INSTRUMENT PAD LOWER LH**
    (a) Remove screw <I>.
    (b) Disengage the claw and 3 clips and remove the instrument panel pad lower.

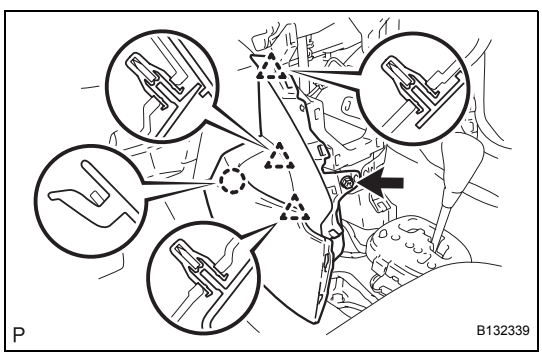

IP

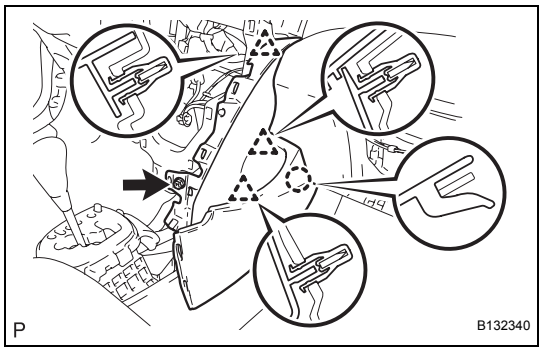

37. REMOVE INSTRUMENT PAD LOWER RH

(a) Remove screw <I>.

(b) Disengage the claw and 3 clips and remove the instrument panel pad lower.

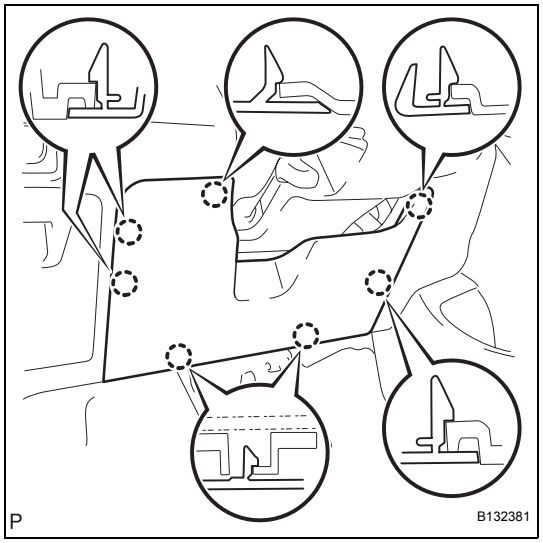

38. REMOVE INSTRUMENT PANEL LOWER FINISH PANEL SUB-ASSEMBLY

(a) Disengage the 7 claws and open the instrument panel lower finish panel.

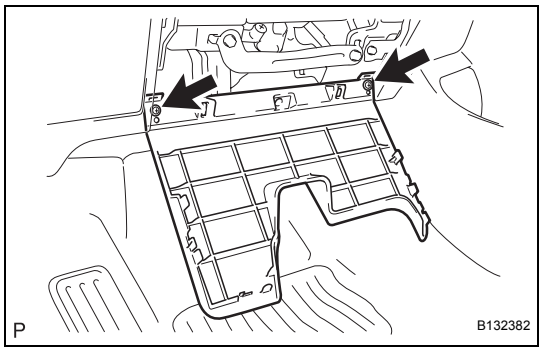

(b) Remove the 2 <A> screws and remove the instrument panel lower finish panel.

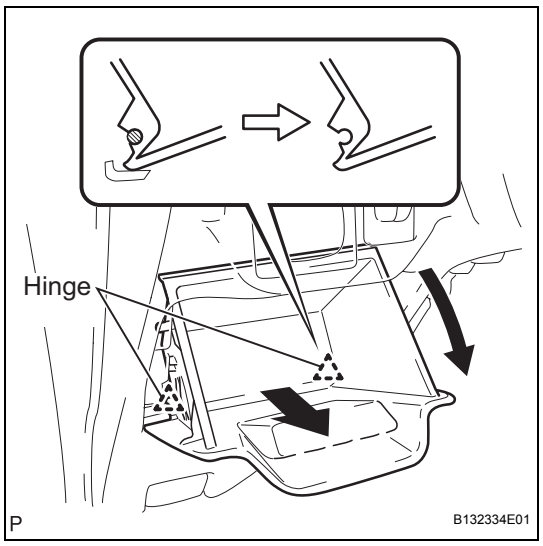

39. REMOVE INSTRUMENT PANEL BOX

(a) Open the instrument panel box.

(b) Pull the instrument panel box out horizontally with the instrument panel open and disengage the 2 hinges.

IP

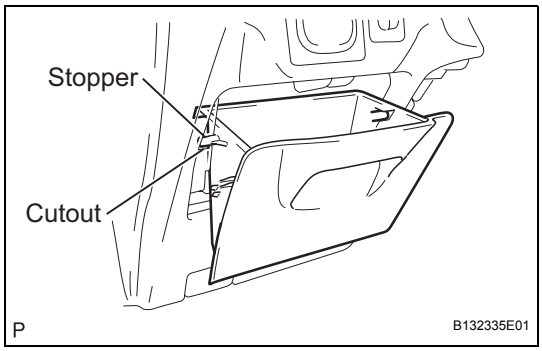

(c) Remove the stopper of the instrument panel box from the cutout of the instrument panel lower and remove the instrument panel box.

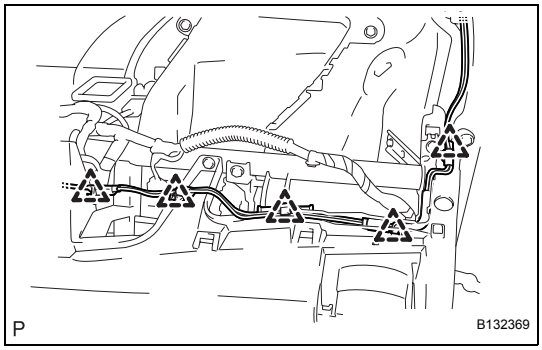

40. DISCONNECT ANTENNA CORD SUB-ASSEMBLY

(a) Disconnect the 5 antenna cord clamps.

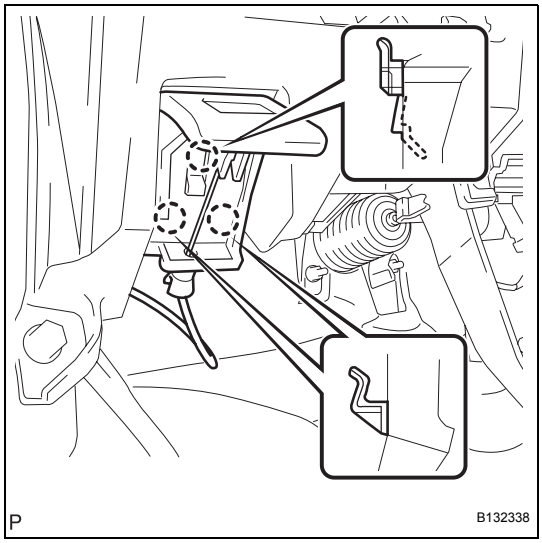

41. SEPARATE HOOD LOCK CONTROL LEVER SUB-ASSEMBLY

(a) Disengage the 3 claws and separate the hood lock control lever.

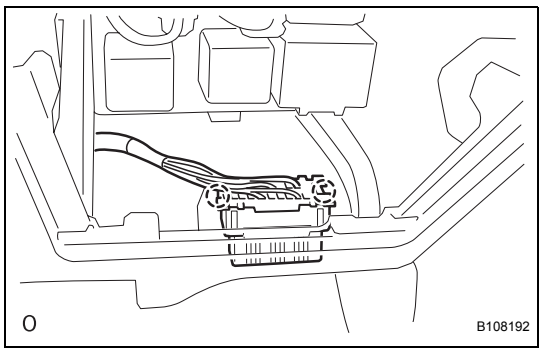

42. REMOVE LOWER INSTRUMENT PANEL SUB-ASSEMBLY

(a) Disengage the 2 claws and disconnect the DLC3 connector.

(b) Disconnect the clamps and connectors.

IP

(c) Remove the 6 <D> bolts, 2 <E> bolts, screw <G> and screw <H> and remove the lower instrument panel.

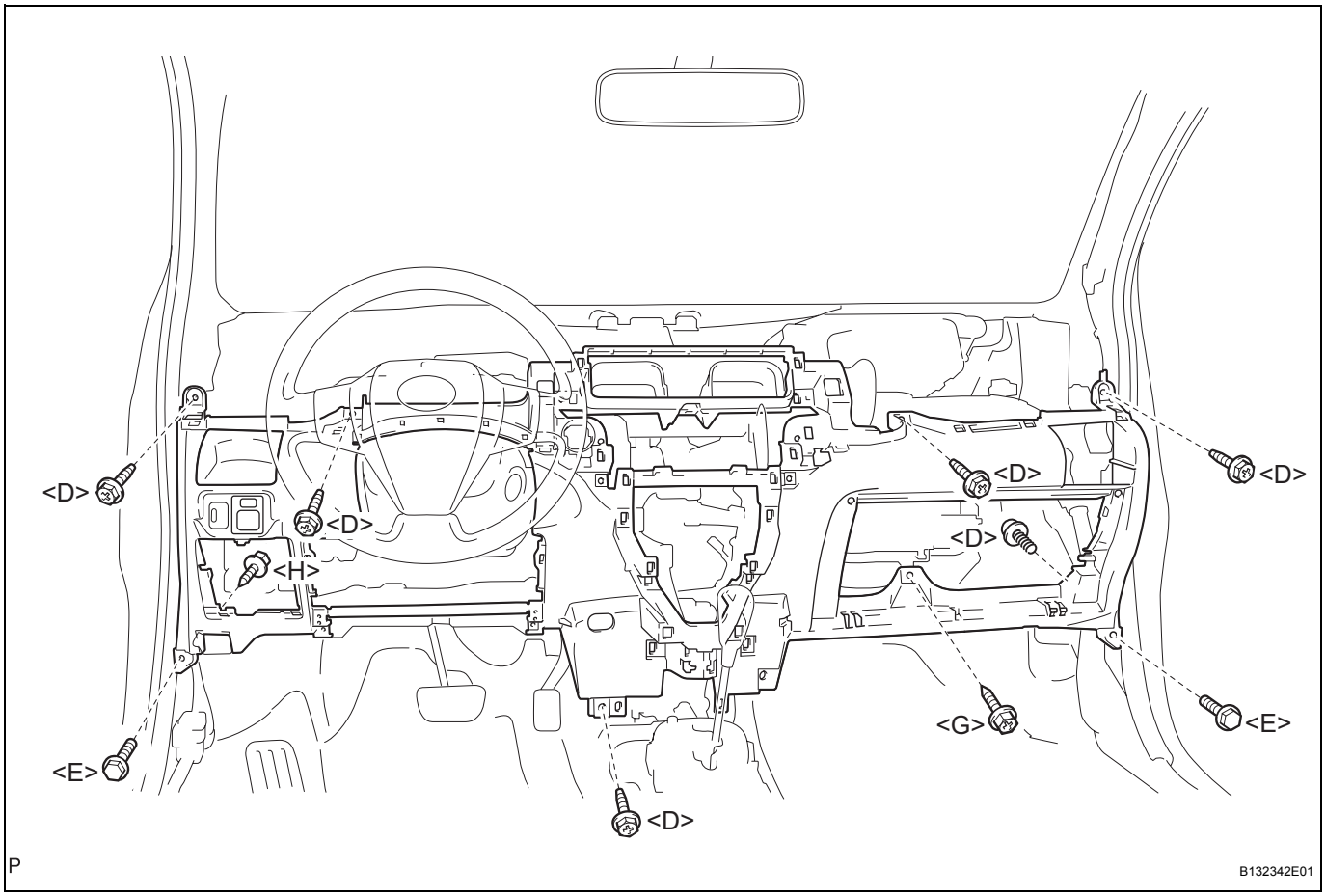

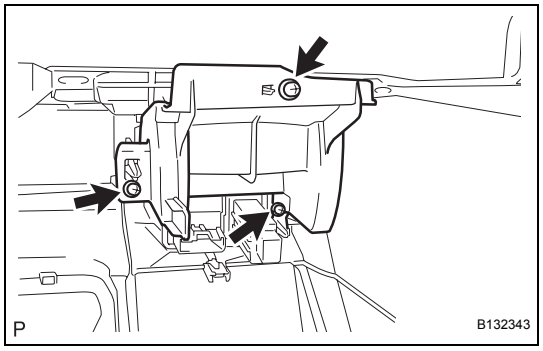

43. REMOVE INSTRUMENT PANEL CUP HOLDER SUB-ASSEMBLY LH

(a) Remove the 3 <A> screws and the instrument panel cup holder.

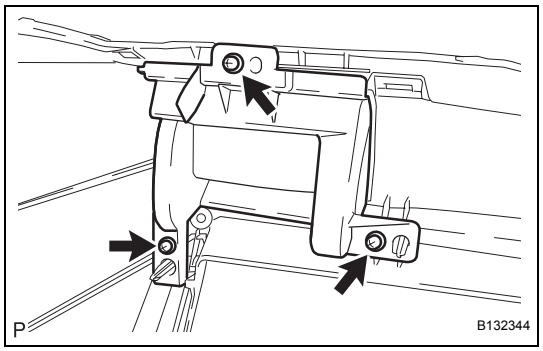

44. REMOVE INSTRUMENT PANEL CUP HOLDER SUB-ASSEMBLY RH

(a) Remove the 3 <A> screws and the instrument panel box.

IP

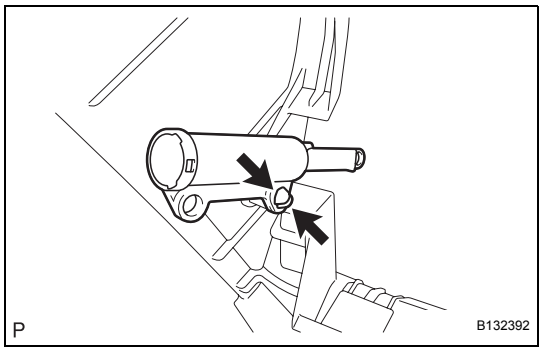

45. REMOVE GLOVE COMPARTMENT DOOR STOPPER SUB-ASSEMBLY

(a) Disengage the claw and remove the glove compartment door stopper.

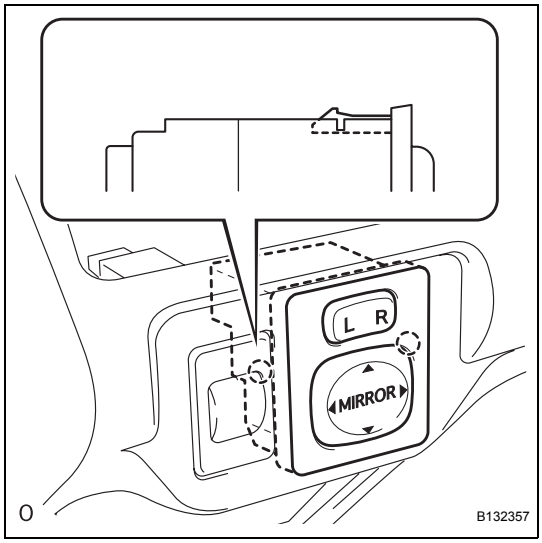

46. REMOVE OUTER MIRROR SWITCH ASSEMBLY

(a) Disengage the 2 claws and remove the outer mirror switch.

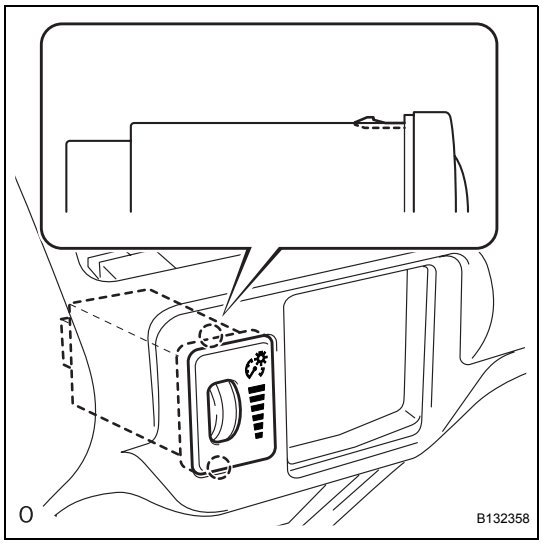

47. REMOVE LIGHT CONTROL RHEOSTAT

(a) Disengage the 2 claws and remove the light control rheostat.

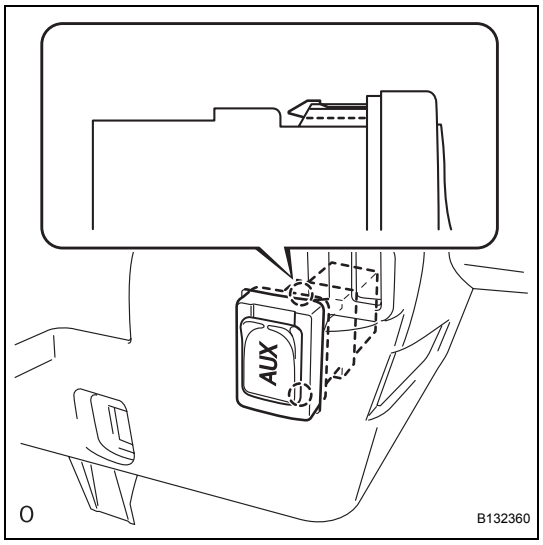

48. REMOVE STEREO JACK ADAPTER ASSEMBLY

(a) Disengage the 2 claws and remove the stereo jack adapter.

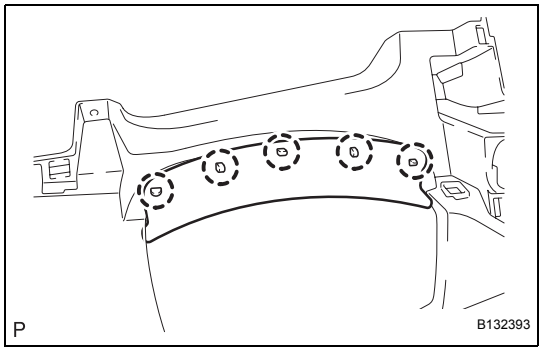

49. REMOVE INSTRUMENT CLUSTER FINISH PANEL SEAL

(a) Disengage the 5 claws and remove the panel seal.

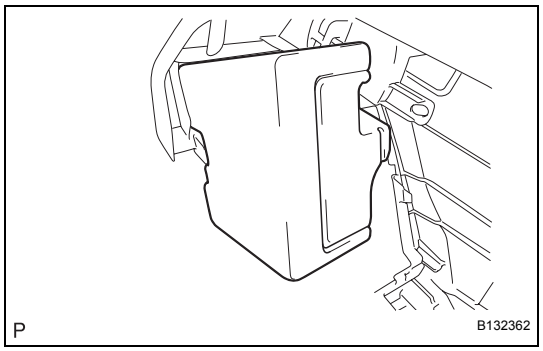

50. REMOVE INSTRUMENT PANEL NO. 1 SAFETY PAD

(a) Remove the safety pad.

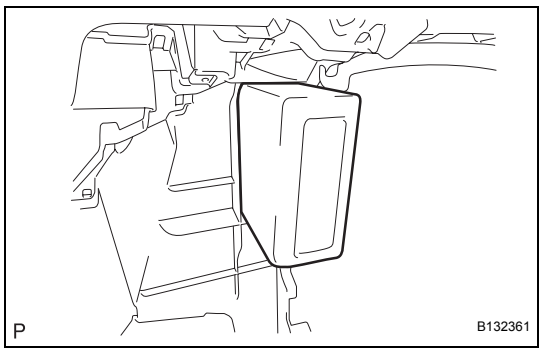

51. REMOVE INSTRUMENT PANEL NO. 2 SAFETY PAD

(a) Remove the safety pad.

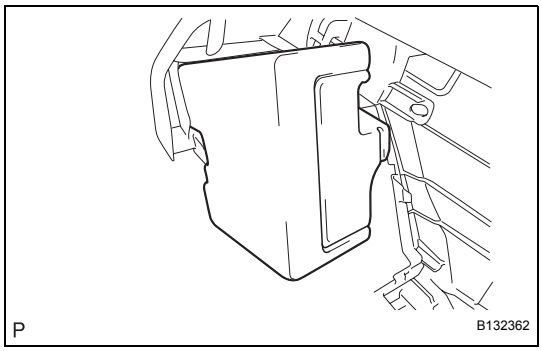

INSTALLATION

1. INSTALL INSTRUMENT PANEL NO. 1 SAFETY PAD

(a) Apply butyl tape to install the instrument panel safety pad No. 1 onto the instrument panel lower (When installing a new one).

Adhesive:

Part No. 08850-00065, Butyl Tape Set or the equivalent

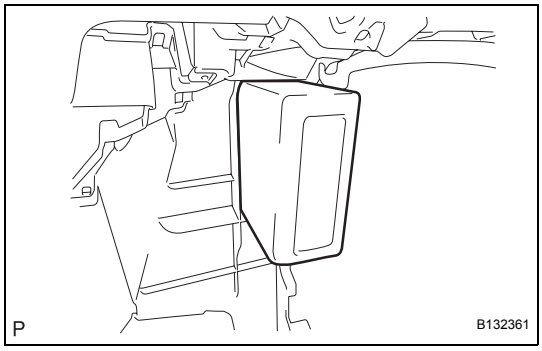

2. INSTALL INSTRUMENT PANEL NO. 2 SAFETY PAD

(a) Apply butyl tape to install the instrument panel safety pad No. 2 onto the instrument panel lower (When installing a new one).

Adhesive:

Part No. 08850-00065, Butyl Tape Set or the equivalent

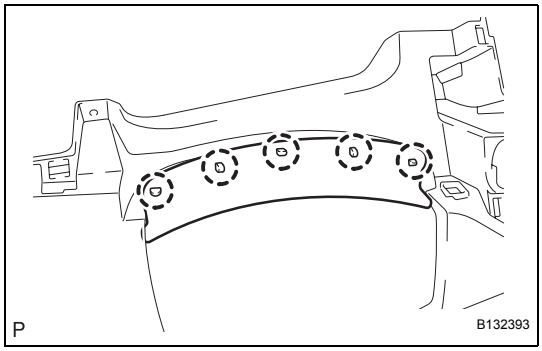

3. INSTALL INSTRUMENT CLUSTER FINISH PANEL SEAL

(a) Engage the 5 claws and install the panel seal.

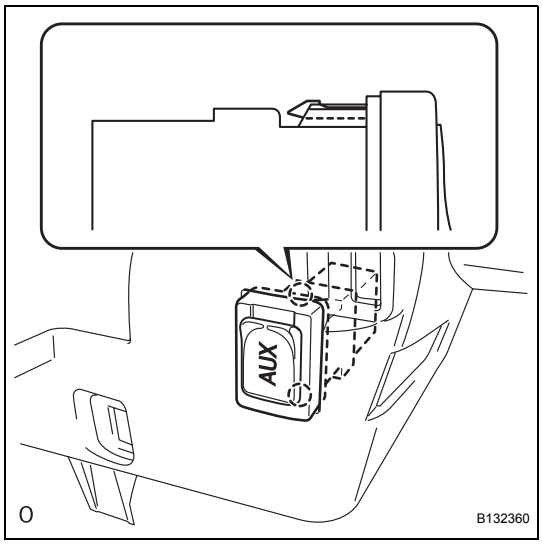

4. INSTALL STEREO JACK ADAPTER ASSEMBLY

(a) Engage the 2 claws and install the stereo jack adapter.

IP

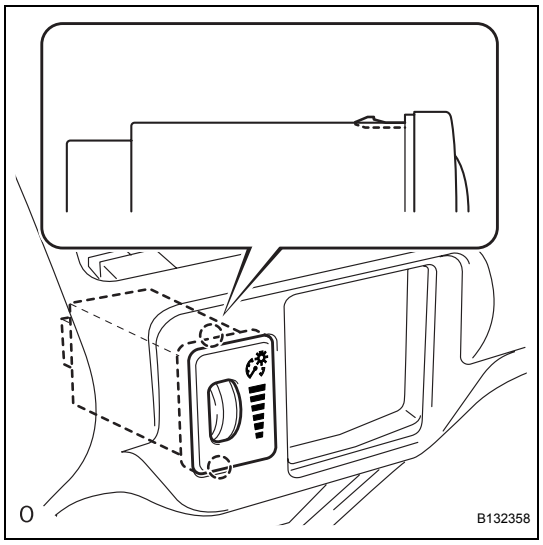

5. INSTALL LIGHT CONTROL RHEOSTAT

(a) Engage the 2 claws and install the light control rheostat.

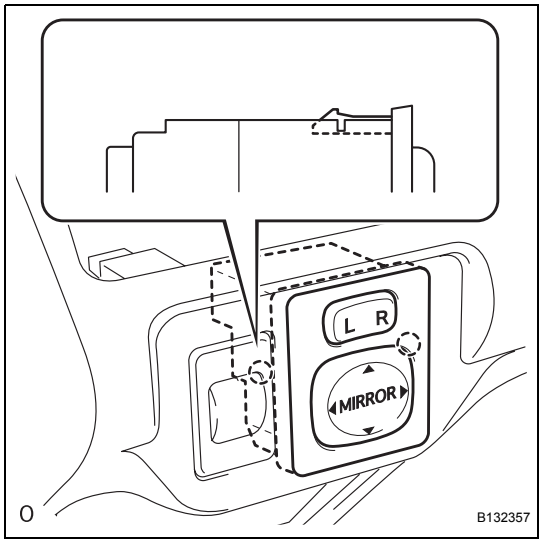

6. INSTALL OUTER MIRROR SWITCH ASSEMBLY

(a) Engage the 2 claws and install the outer mirror switch.

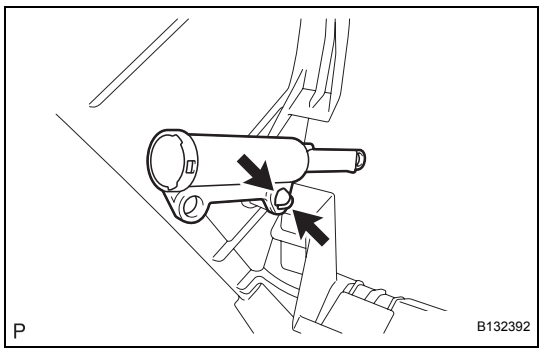

7. INSTALL GLOVE COMPARTMENT DOOR STOPPER SUB-ASSEMBLY

(a) Engage the claw and install the glove compartment door stopper.

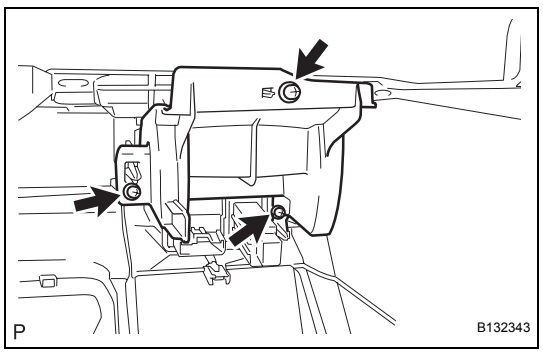

8. INSTALL INSTRUMENT PANEL CUP HOLDER SUB-ASSEMBLY LH

(a) Install the instrument panel cup holder with the 3 <A> screws.

IP

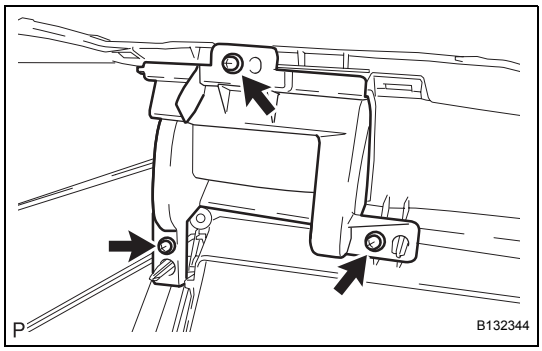

9. INSTALL INSTRUMENT PANEL CUP HOLDER SUB-ASSEMBLY RH

(a) Install the instrument panel cup holder with the 3 <A> screws.

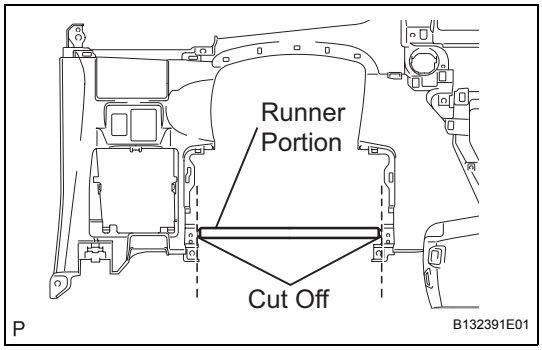

10. INSTALL LOWER INSTRUMENT PANEL SUB-ASSEMBLY

(a) Using a nipper, cut off both ends of the runner portion shown in the illustration (When installing a new one).

(b) Install the lower instrument panel with the 6 <D> bolts, 2 <E> bolts, screw <G> and screw <H>.
NOTICE:
Do not excessively tighten the <D> bolts, as this may damage the area not being tightened.

(c) Connect the clamps and connectors.

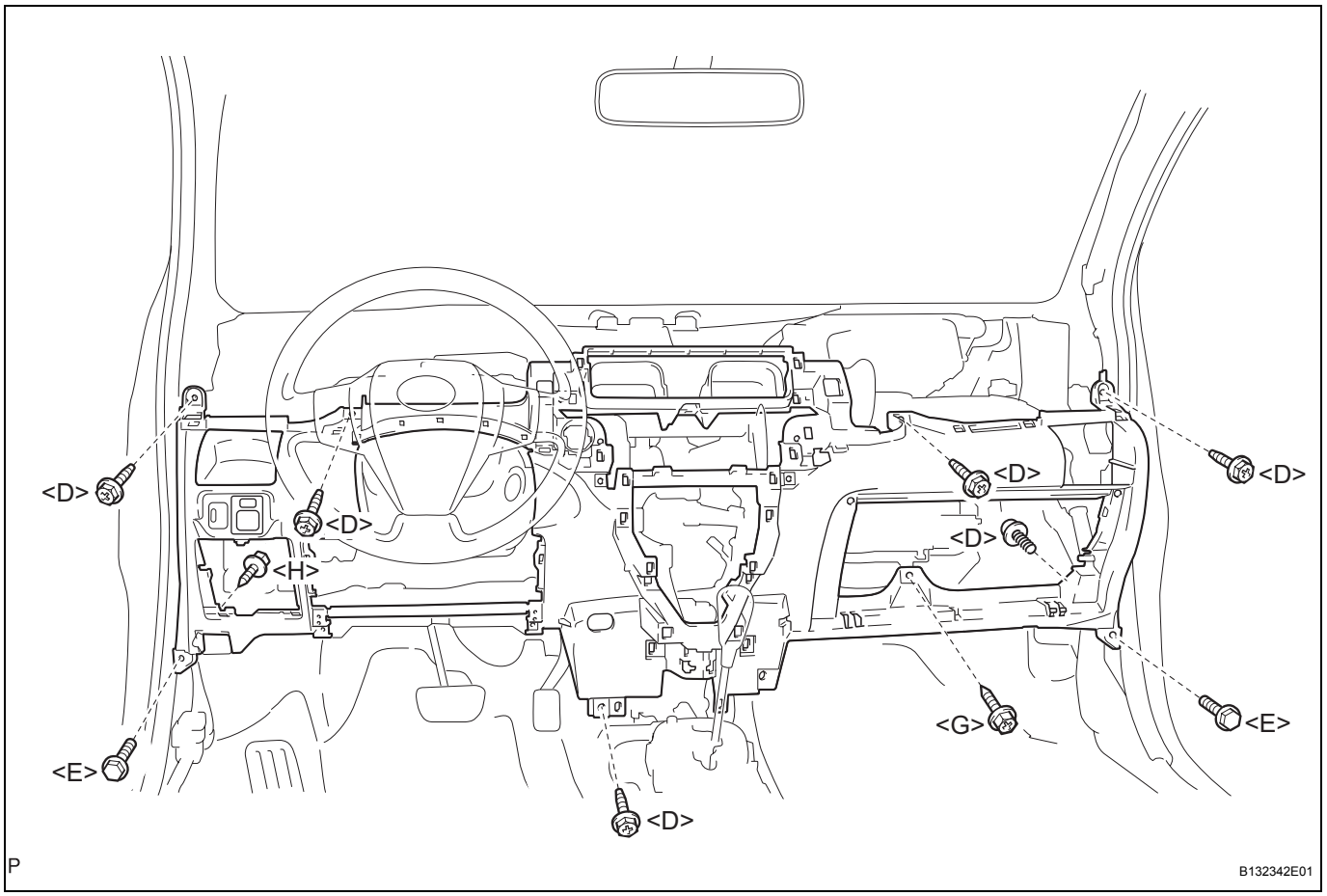

IP

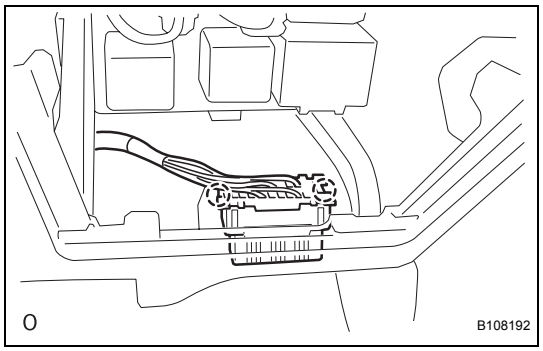

(d) Engage the 2 claws and connect the DLC3 connector.

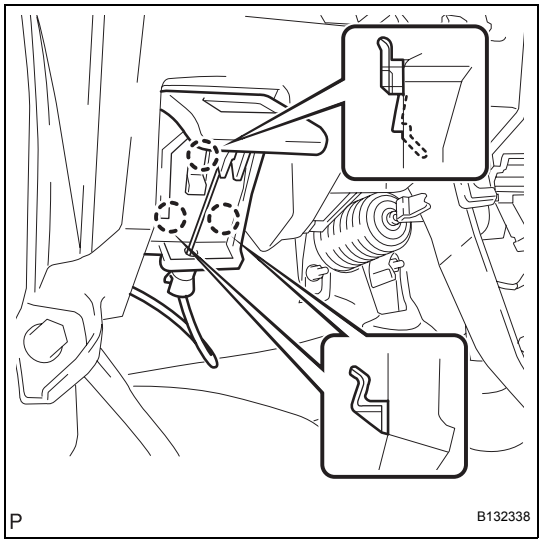

11. CONNECT HOOD LOCK CONTROL LEVER SUB-ASSEMBLY

(a) Engage the 3 claws to connect the control lever.

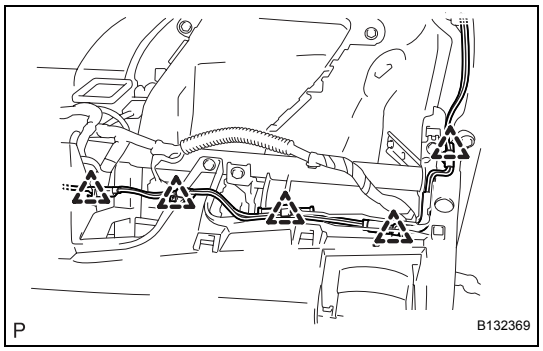

12. CONNECT ANTENNA CORD SUB-ASSEMBLY

(a) Connect the 5 antenna cord clamps.

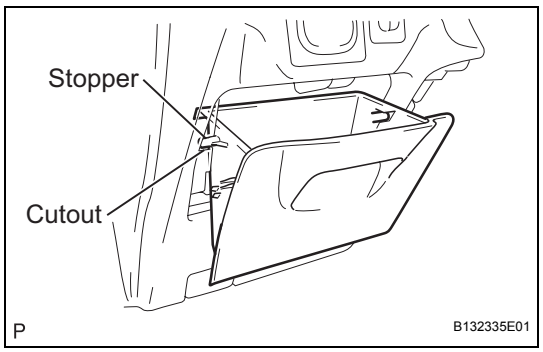

13. INSTALL INSTRUMENT PANEL BOX

(a) Insert the stopper of the instrument panel box from the cutout of the instrument panel lower.

IP

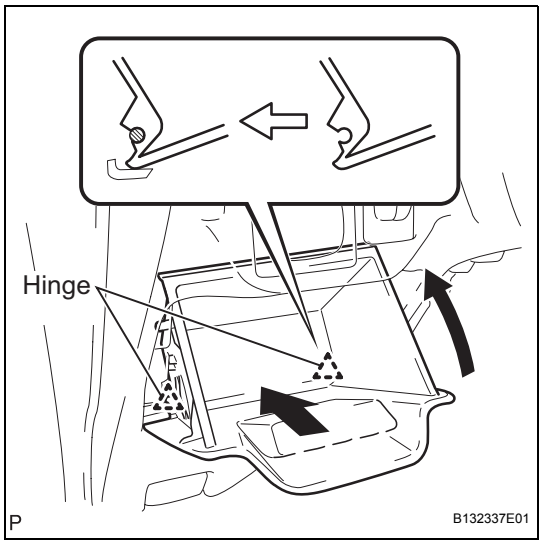

(b) Engage the 2 hinges with the instrument panel open.
(c) Close the instrument panel box.

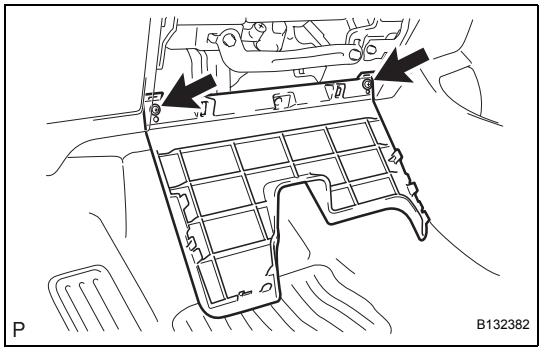

14. INSTALL INSTRUMENT PANEL LOWER FINISH PANEL SUB-ASSEMBLY

(a) Install the 2 <A> screws.

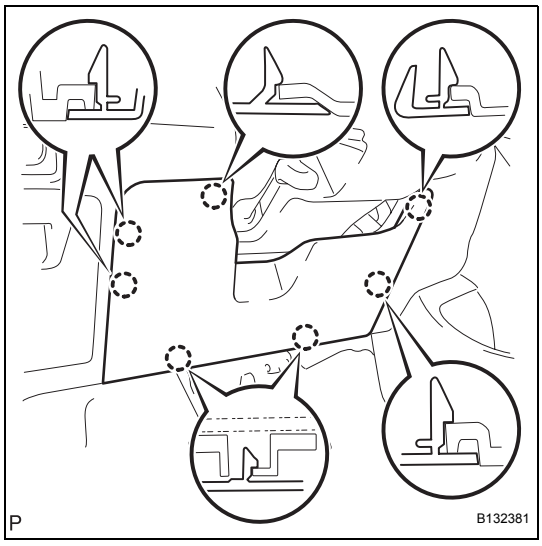

(b) Engage the 7 claws and install the instrument panel lower finish panel.

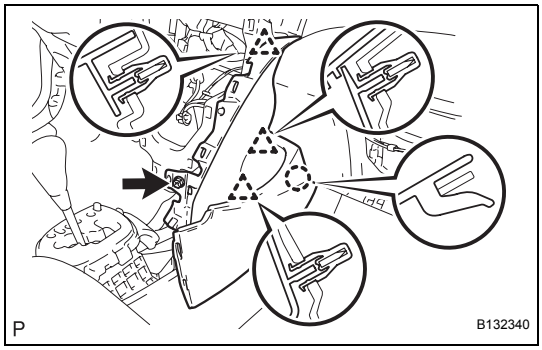

15. INSTALL INSTRUMENT PAD LOWER RH

(a) Engage the claw and 3 clips and install the instrument pad lower.
(b) Install screw <I>.

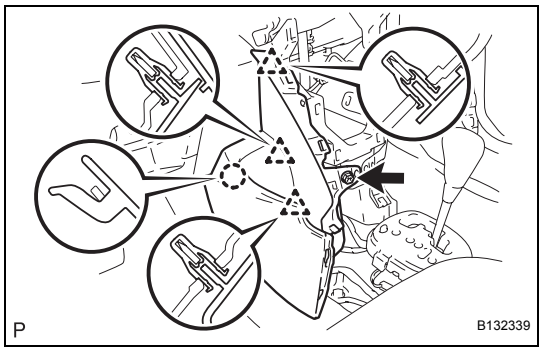

16. **INSTALL INSTRUMENT PAD LOWER LH**
    (a) Engage the claw and 3 clips and install the instrument pad lower.
    (b) Install screw <I>.
17. **INSTALL REAR CONSOLE BOX ASSEMBLY (See page IP-88)**
18. **INSTALL CONSOLE BOX CARPET (See page IP-88)**
19. **INSTALL CONSOLE UPPER REAR PANEL SUB-ASSEMBLY (See page IP-89)**
20. **INSTALL UPPER CONSOLE PANEL SUB-ASSEMBLY (See page IP-89)**
21. **INSTALL SHIFT LEVER KNOB SUB-ASSEMBLY (for Manual Transaxle) (See page IP-89)**
22. **INSTALL COWL SIDE TRIM BOARD RH (See page IR-34)**
23. **INSTALL COWL SIDE TRIM BOARD LH (See page IR-34)**
24. **INSTALL INSTRUMENT PANEL UNDER COVER SUB-ASSEMBLY RH (See page IR-35)**
25. **INSTALL INSTRUMENT PANEL UNDER COVER SUB-ASSEMBLY LH (See page IR-34)**
26. **INSTALL FRONT DOOR SCUFF PLATE RH (See page IR-35)**
27. **INSTALL FRONT DOOR SCUFF PLATE LH (See page IR-35)**
28. **INSTALL UPPER INSTRUMENT PANEL SUB-ASSEMBLY (See page IP-11)**
29. **INSTALL GLOVE COMPARTMENT DOOR ASSEMBLY (See page IP-13)**
30. **INSTALL FRONT PILLAR GARNISH RH (See page IR-29)**
31. **INSTALL FRONT PILLAR GARNISH LH (See page IR-30)**
32. **INSTALL FRONT DOOR OPENING TRIM WEATHERSTRIP RH (See page IP-14)**
33. **INSTALL FRONT DOOR OPENING TRIM WEATHERSTRIP LH (See page IP-14)**
34. **CONNECT AIR INLET DAMPER CONTROL CABLE SUB-ASSEMBLY (See page AC-246)**
35. **CONNECT DEFROSTER DAMPER CONTROL CABLE SUB-ASSEMBLY (See page AC-246)**
36. **CONNECT AIR MIX DAMPER CONTROL CABLE SUB-ASSEMBLY (See page AC-246)**
37. **INSTALL AIR CONDITIONING PANEL ASSEMBLY (See page AC-246)**

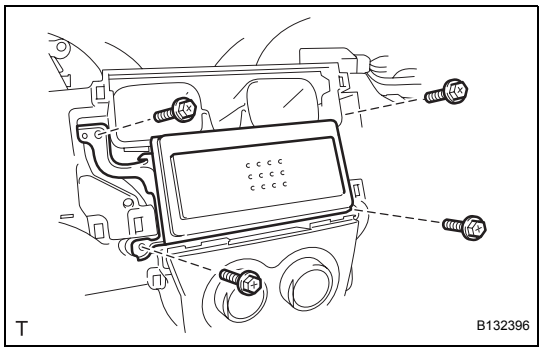

38. **INSTALL STEREO OPENING COVER (w/o Radio Receiver)**
    (a) Install the stereo opening cover with the 4 screws.
39. **INSTALL RADIO RECEIVER ASSEMBLY (See page AV-40)**

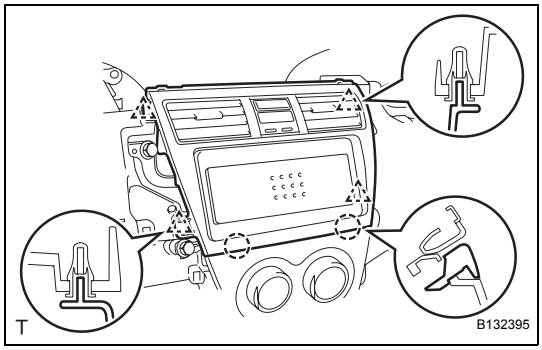

40. **INSTALL INSTRUMENT CLUSTER FINISH PANEL CENTER SUB-ASSEMBLY**
    (a) Engage the 2 claws and 4 clips and install the instrument cluster finish panel center.
41. **INSTALL COMBINATION METER ASSEMBLY (See page ME-140)**
42. **INSTALL INSTRUMENT CLUSTER FINISH PANEL (See page ME-140)**
43. **INSTALL INSTRUMENT PANEL FINISH PANEL END RH (See page ME-141)**
44. **INSTALL INSTRUMENT PANEL FINISH PANEL END LH (See page ME-141)**
45. **INSTALL INSTRUMENT PANEL FINISH PANEL LOWER CENTER (See page ME-142)**

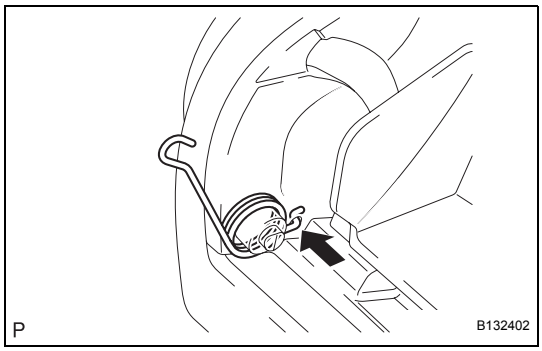

46. **INSTALL INSTRUMENT PANEL CUP HOLDER SPRING RH**
    (a) Install the spring.

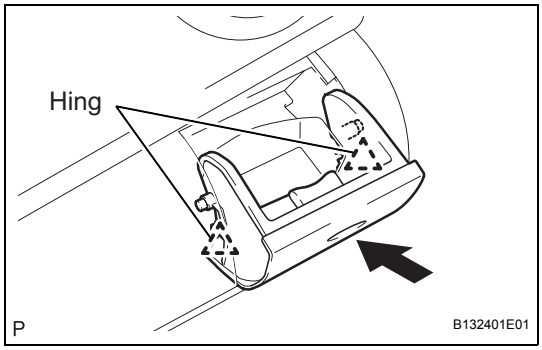

47. **INSTALL INSTRUMENT PANEL CUP HOLDER RH**
    (a) Install the 2 hinges of the cup holder one at a time.

IP

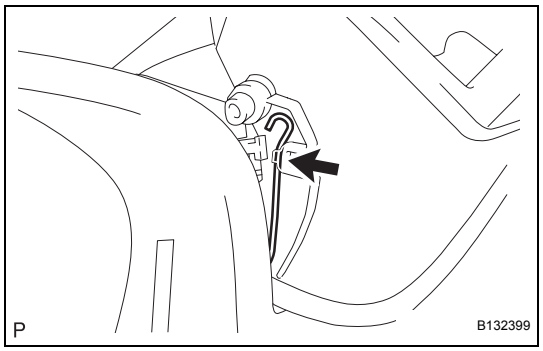

(b) Engage the spring with the instrument panel cup holder.

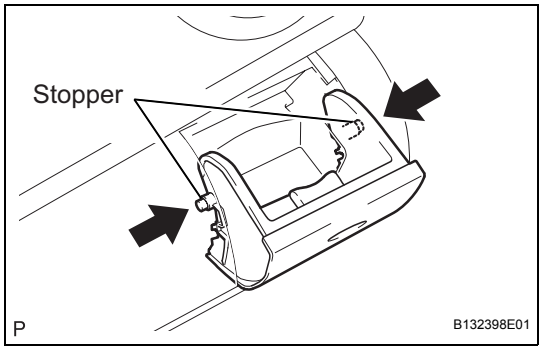

(c) Flex both sides of the cup holder and engage the 2 stoppers.
(d) Close the instrument panel cup holder.

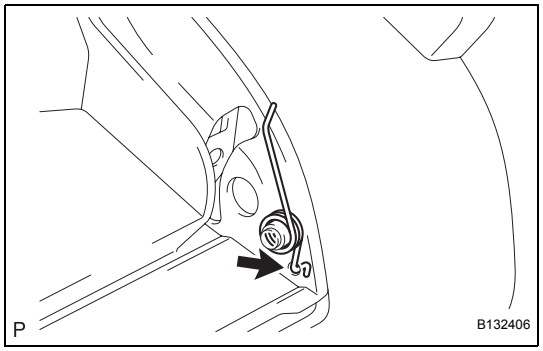

48. INSTALL INSTRUMENT PANEL CUP HOLDER SPRING LH

(a) Install the spring.

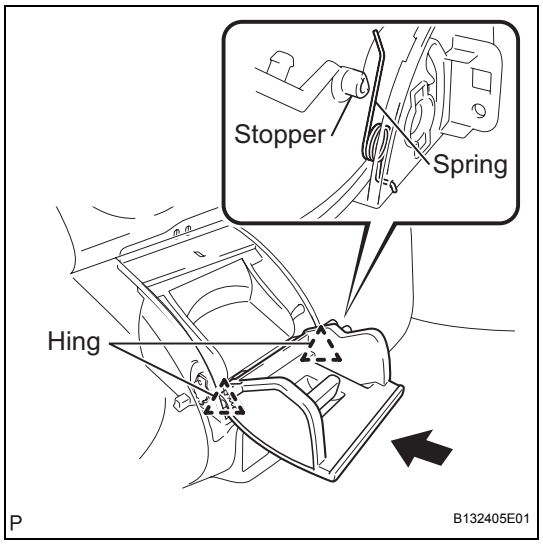

49. INSTALL INSTRUMENT PANEL CUP HOLDER LH

(a) Install the 2 hinges of the cup holder one at a time.
HINT:
Make sure that the spring is set in the position shown in the illustration.

IP

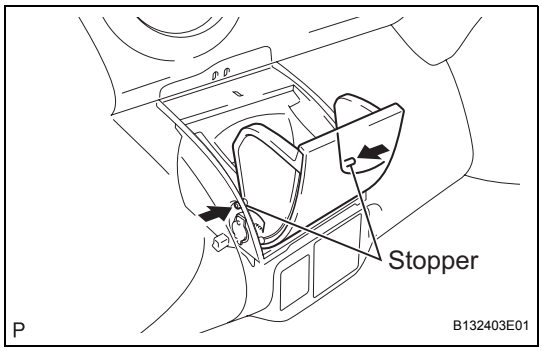

(b) Flex both sides of the cup holder and engage the 2 stoppers.
(c) Close the instrument panel cup holder.

50. CONNECT CABLE TO NEGATIVE BATTERY TERMINAL
Torque: 5.4 N*m (55 kgf*cm, 48 in.*lbf)

51. CHECK SRS WARNING LIGHT
(See page RS-31)

LOWER INSTRUMENT PANEL (for Hatchback)

COMPONENTS

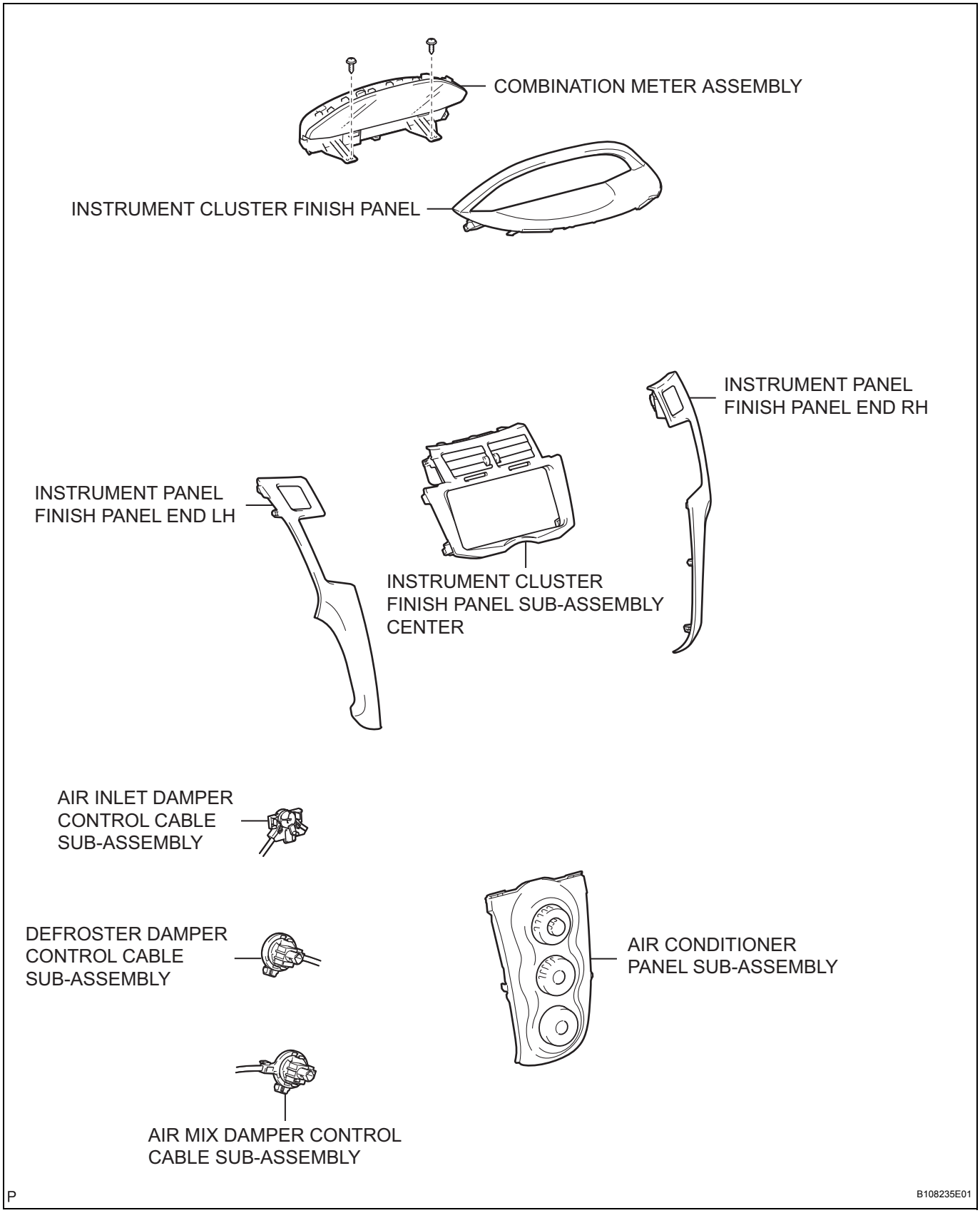

IP

w/o Radio Receiver:

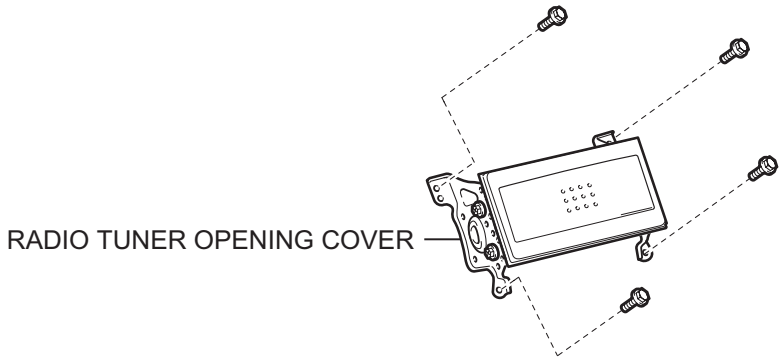

w/o CD Player:

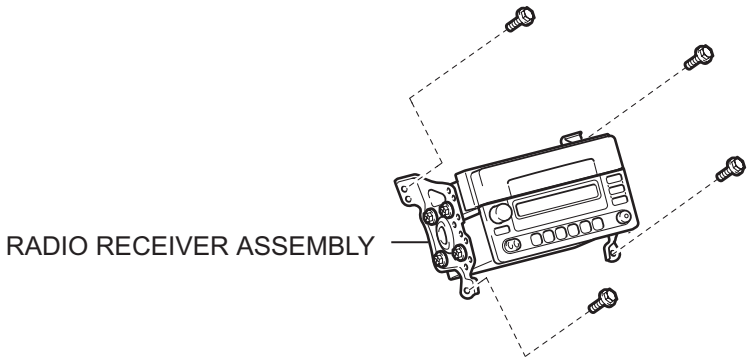

w/ CD Player:

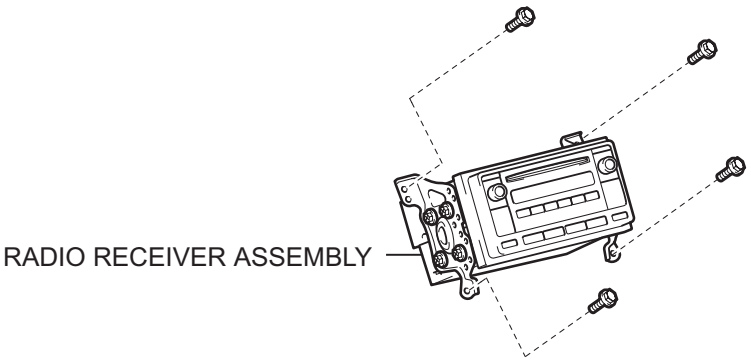

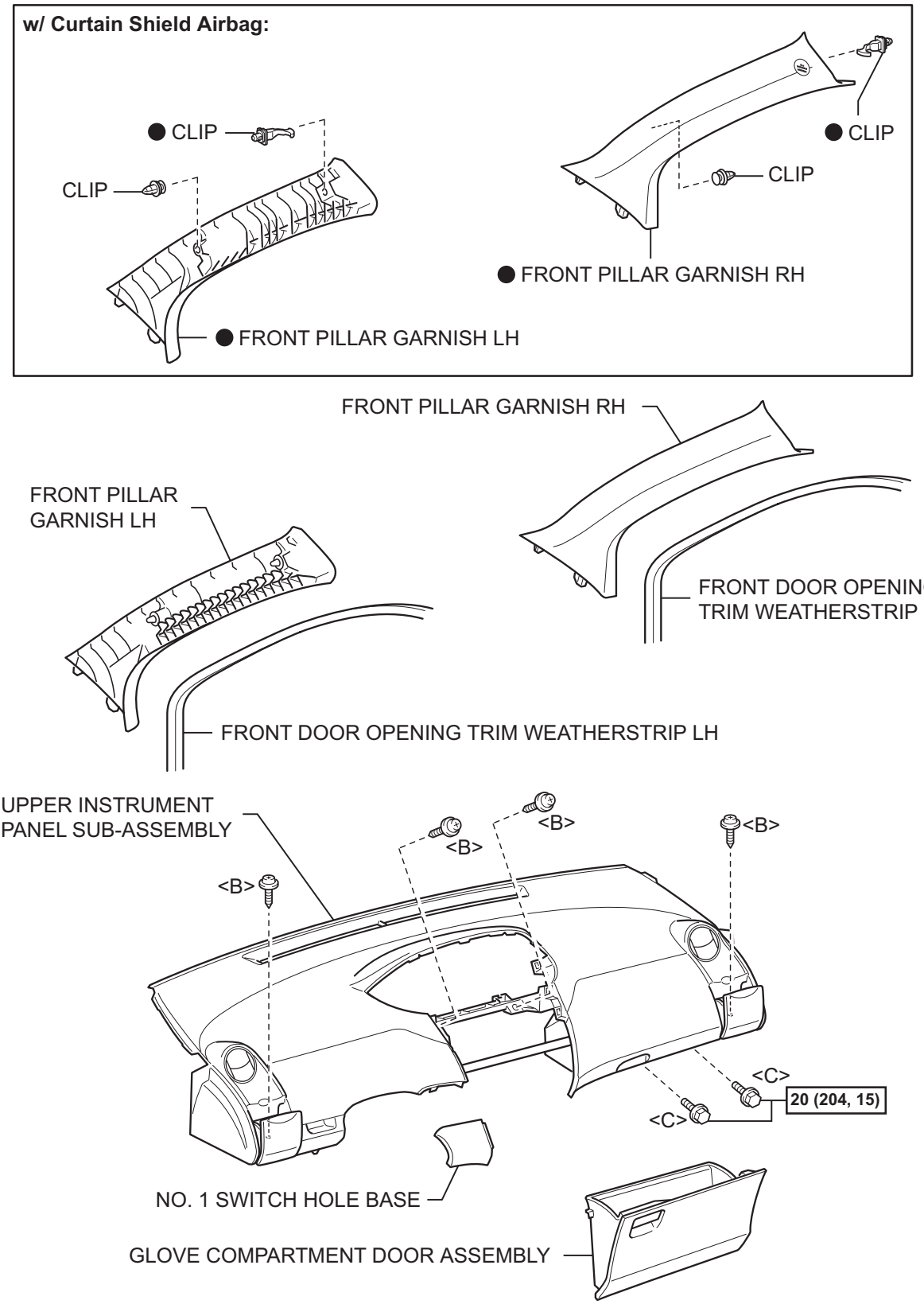

N*m (kgf*cm, ft.*lbf) : Specified torque

● Non-reusable part

IP

B108209E01

for Manual Transaxle:

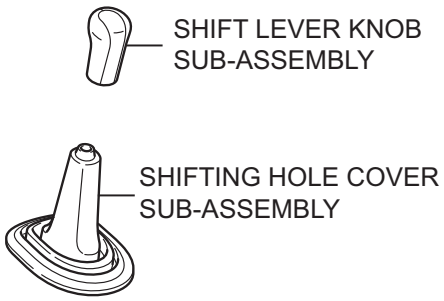

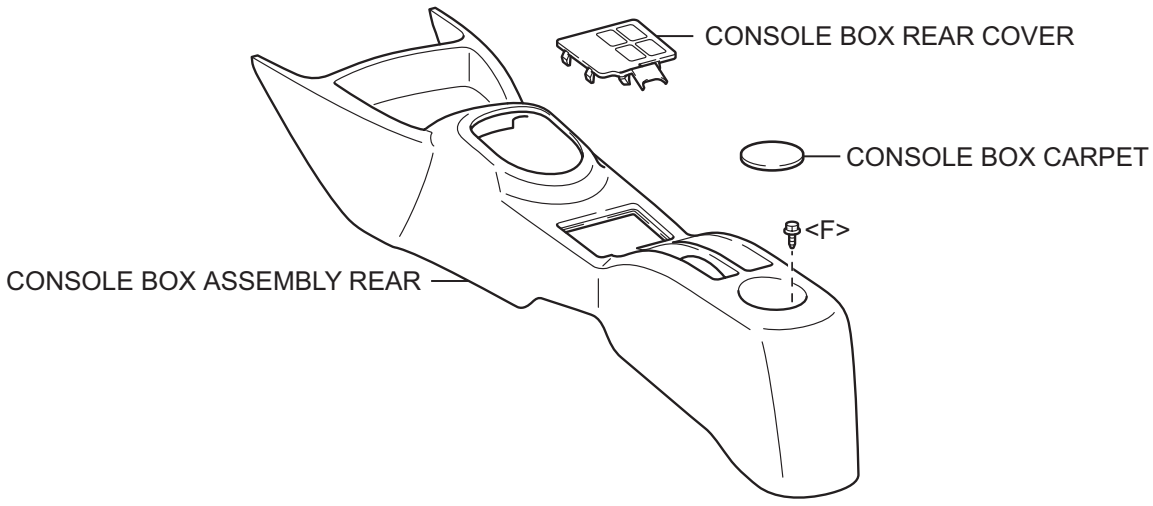

T

B108229E02

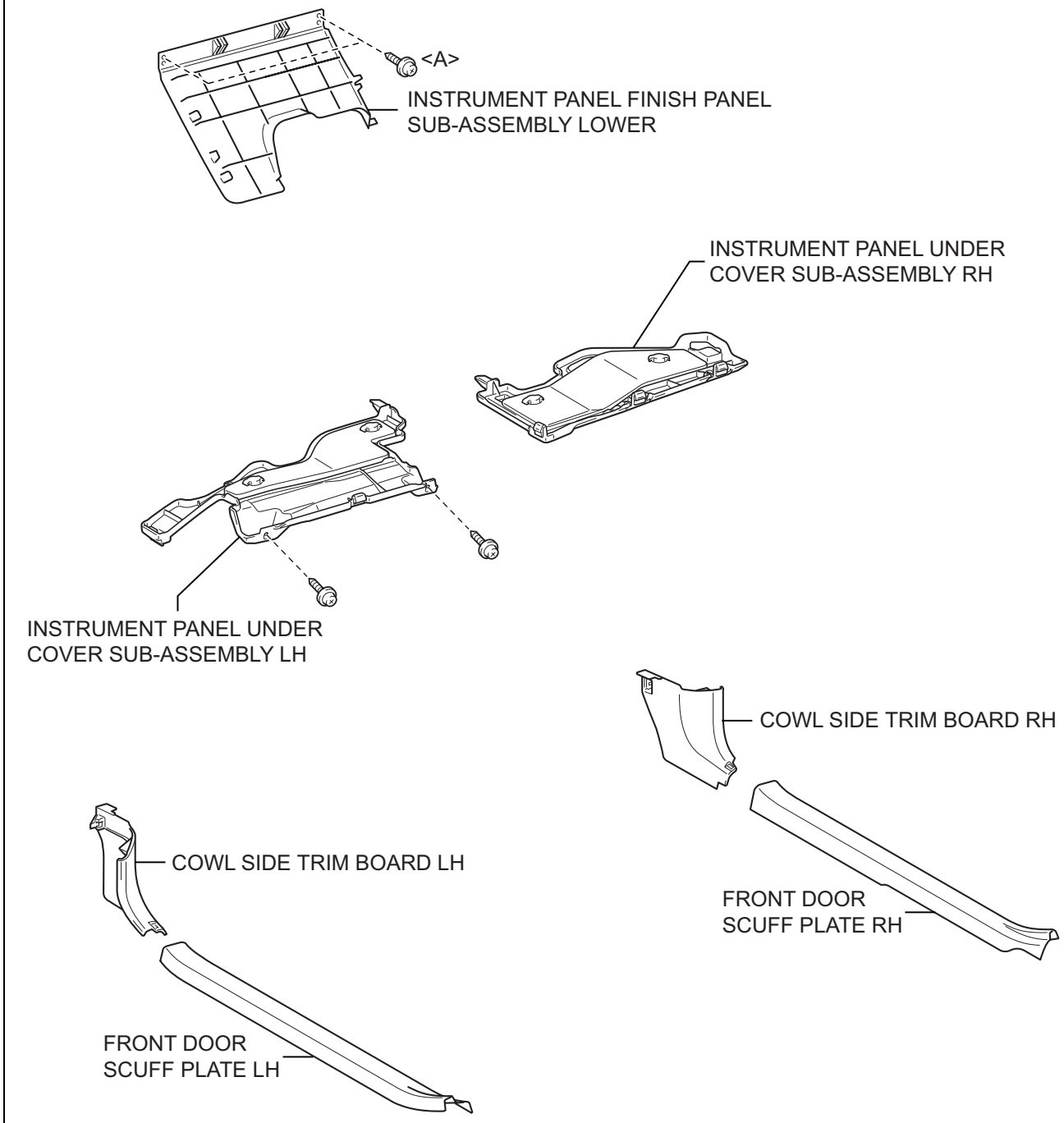

IP

O

B108230E01

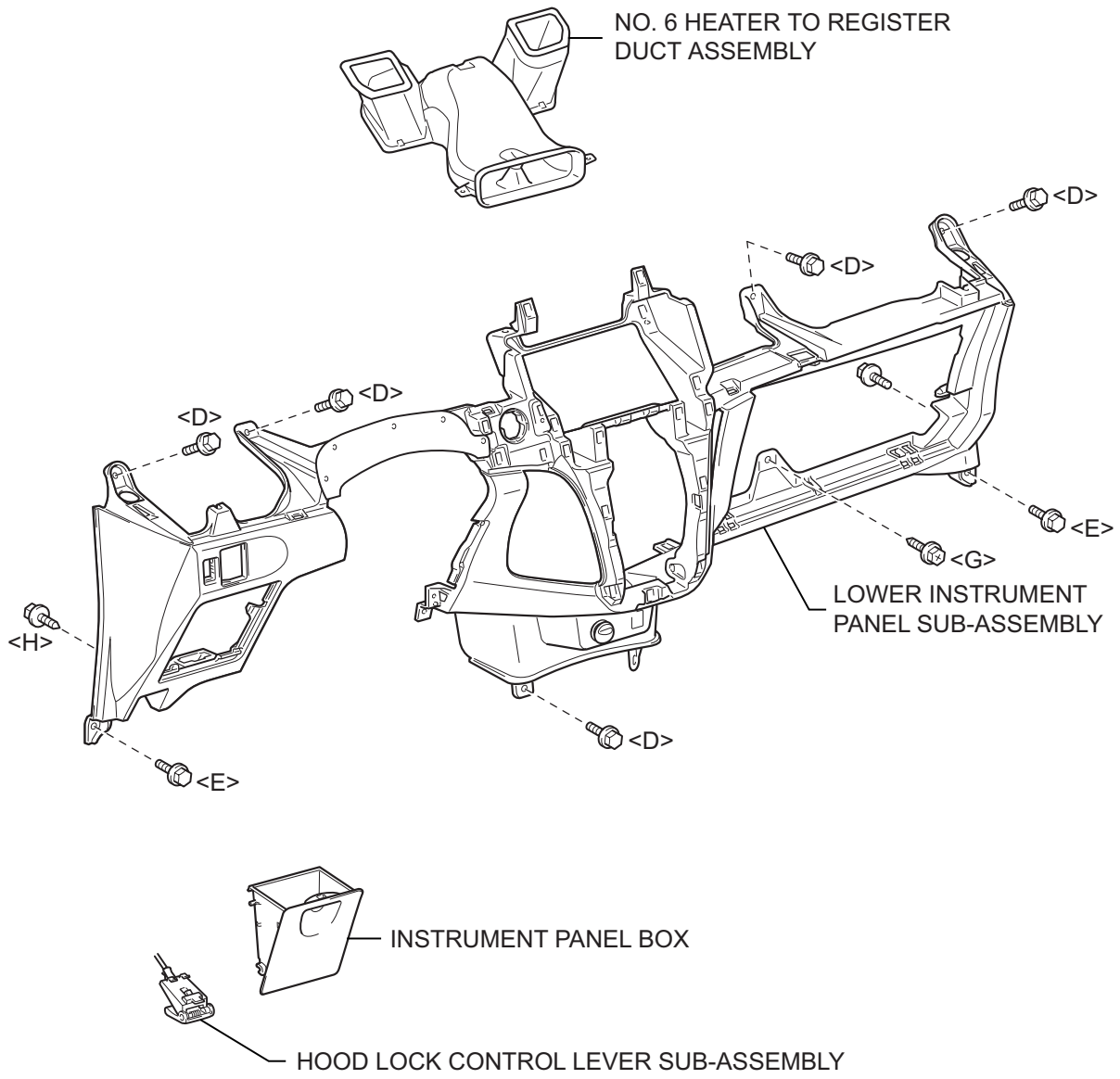
NO. 6 HEATER TO REGISTER DUCT ASSEMBLY
<D>
<D>
<D>
<D>
<E>
<G>
LOWER INSTRUMENT PANEL SUB-ASSEMBLY
<H>
<D>
<E>
INSTRUMENT PANEL BOX
HOOD LOCK CONTROL LEVER SUB-ASSEMBLY

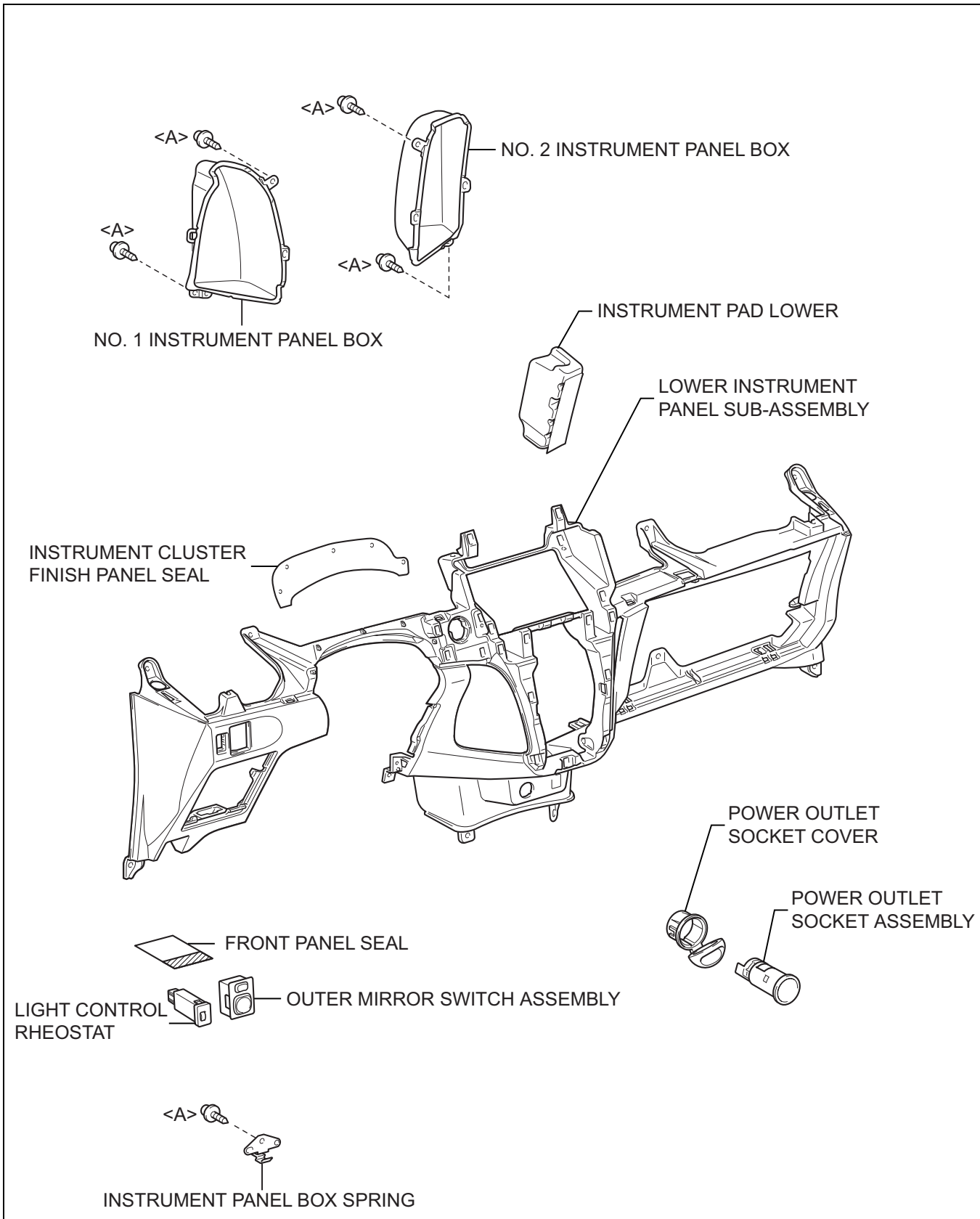

IP

O

B108198E01

REMOVAL

HINT:
Use the same procedure for both the RH and LH sides.

1. **BOLTS, SCREWS AND NUTS TABLE**
   HINT:
   All bolts, screws and nuts relevant to installing and removing the instrument panel are shown, along with their alphabetic codes, in the table below.

mm(in.) (L=Length)

Code	Shape	Code	Shape	Code	Shape
<A>	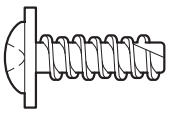 φ=5 (0.20) L=14 (0.55) 93568-15014	<B>	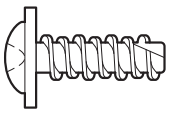 φ=5 (0.20) L=14 (0.55) 93568-55014	<C>	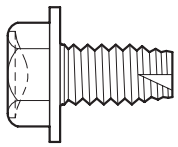 φ=8 (0.31) L=15 (0.59) 90105-08120
<D>	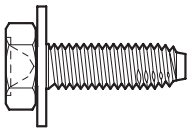 φ=6 (0.24) L=20 (0.79) 90159-60610	<E>	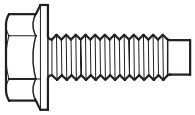 φ=6 (0.24) L=16 (0.63) 91533-80616	<F>	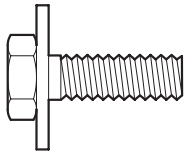 φ=6 (0.24) L=16 (0.63) 91635-60616
<G>	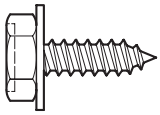 φ=5 (0.20) L=16 (0.63) 90159-50322	<H>	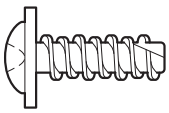 φ=5 (0.20) L=16 (0.63) 93568-15016		

P B118995E01

2. **DISCONNECT CABLE FROM NEGATIVE BATTERY TERMINAL**
   Wait for at least 90 seconds after disconnecting the cable to prevent the airbag from working.
3. **REMOVE INSTRUMENT PANEL FINISH PANEL END LH (See page ME-145)**
4. **REMOVE INSTRUMENT PANEL FINISH PANEL END RH (See page ME-145)**
5. **REMOVE INSTRUMENT CLUSTER FINISH PANEL (See page ME-145)**

IP

6. REMOVE COMBINATION METER ASSEMBLY (See page ME-146)
7. REMOVE INSTRUMENT CLUSTER FINISH PANEL SUB-ASSEMBLY CENTER (See page AC-250)
8. REMOVE RADIO TUNER OPENING COVER (w/o Radio Receiver) (See page AC-125)
9. REMOVE RADIO RECEIVER ASSEMBLY (See page AV-44)
10. REMOVE AIR CONDITIONER PANEL SUB-ASSEMBLY (See page AC-250)
11. DISCONNECT AIR MIX DAMPER CONTROL CABLE SUB-ASSEMBLY (See page AC-251)
12. DISCONNECT DEFROSTER DAMPER CONTROL CABLE SUB-ASSEMBLY (See page AC-251)
13. DISCONNECT AIR INLET DAMPER CONTROL CABLE SUB-ASSEMBLY (See page AC-251)
14. REMOVE FRONT DOOR OPENING TRIM WEATHERSTRIP RH (See page IR-50)
15. REMOVE FRONT DOOR OPENING TRIM WEATHERSTRIP LH (See page IR-50)
16. REMOVE FRONT PILLAR GARNISH RH (See page IR-58)
17. REMOVE FRONT PILLAR GARNISH LH (See page IR-59)
18. REMOVE NO. 1 SWITCH HOLE BASE (See page IP-20)
19. REMOVE GLOVE COMPARTMENT DOOR ASSEMBLY (See page IP-20)
20. REMOVE UPPER INSTRUMENT PANEL SUB-ASSEMBLY (See page IP-21)
21. REMOVE FRONT DOOR SCUFF PLATE RH (See page IR-49)
22. REMOVE FRONT DOOR SCUFF PLATE LH (See page IR-49)
23. REMOVE INSTRUMENT PANEL UNDER COVER SUB-ASSEMBLY RH (See page IR-50)
24. REMOVE INSTRUMENT PANEL UNDER COVER SUB-ASSEMBLY LH (See page IR-50)
25. REMOVE COWL SIDE TRIM BOARD RH (See page IR-50)
26. REMOVE COWL SIDE TRIM BOARD LH (See page IR-50)

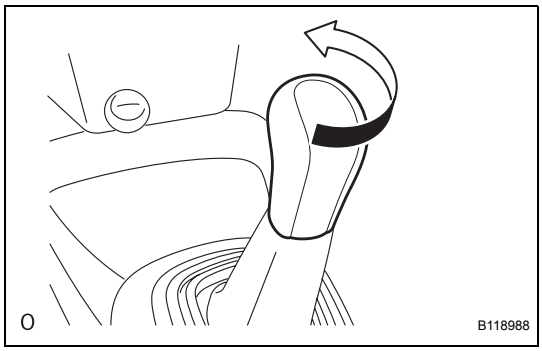

27. REMOVE SHIFT LEVER KNOB SUB-ASSEMBLY (for Manual Transaxle)

(a) Remove the shift lever knob.

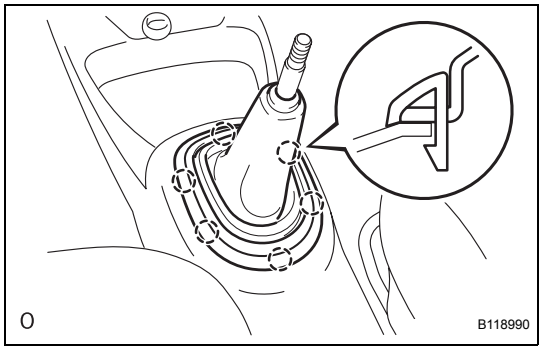

28. REMOVE SHIFTING HOLE COVER SUB-ASSEMBLY (for Manual Transaxle)

(a) Disengage the 6 claws and remove the shifting hole cover.

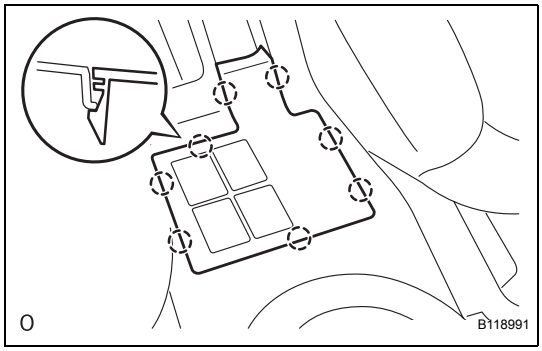

29. REMOVE CONSOLE BOX REAR COVER

(a) Disengage the 8 claws and remove the console box rear cover.

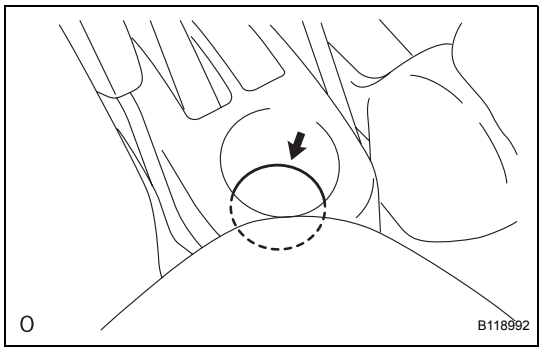

30. REMOVE CONSOLE BOX CARPET

(a) Remove the console box carpet.

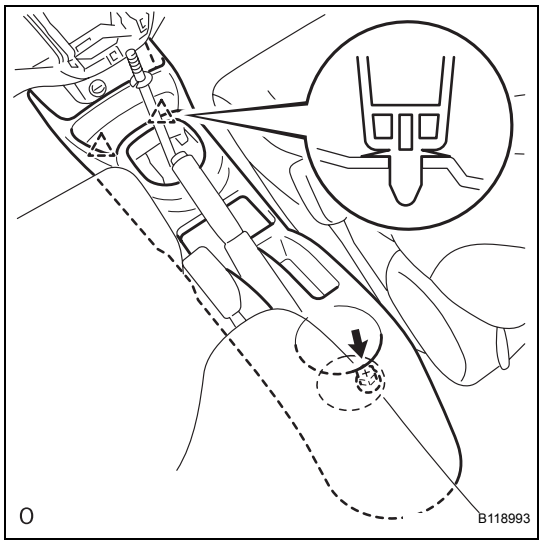

31. REMOVE CONSOLE BOX ASSEMBLY REAR

(a) Remove bolt <F>.

(b) Disengage the 2 clips and remove the console box rear.

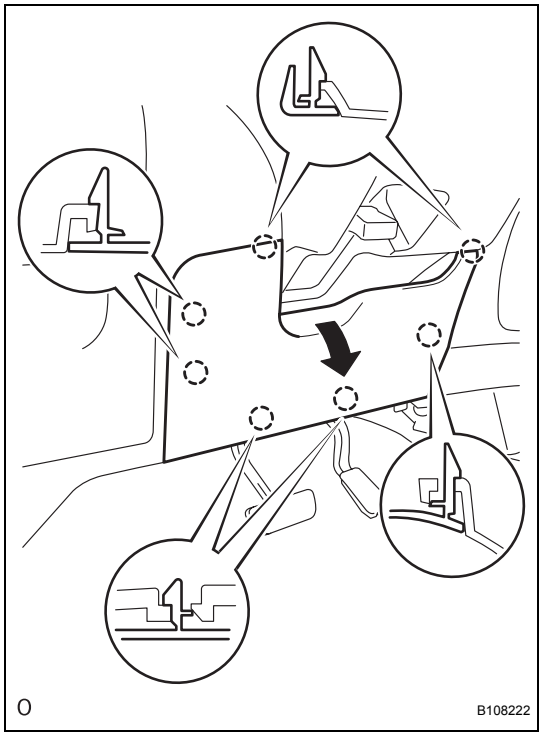

32. REMOVE INSTRUMENT PANEL FINISH PANEL SUB-ASSEMBLY LOWER

(a) Disengage the 7 claws and open the instrument panel finish panel lower.

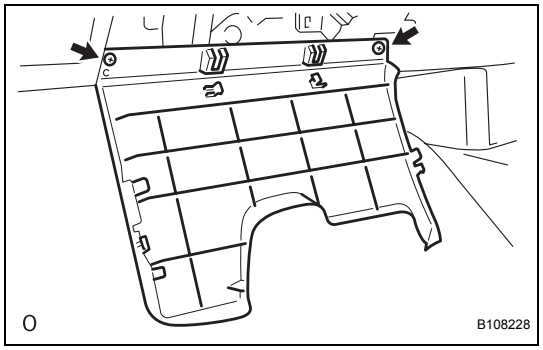

(b) Remove the 2 <A> screws and the instrument panel finish panel lower.

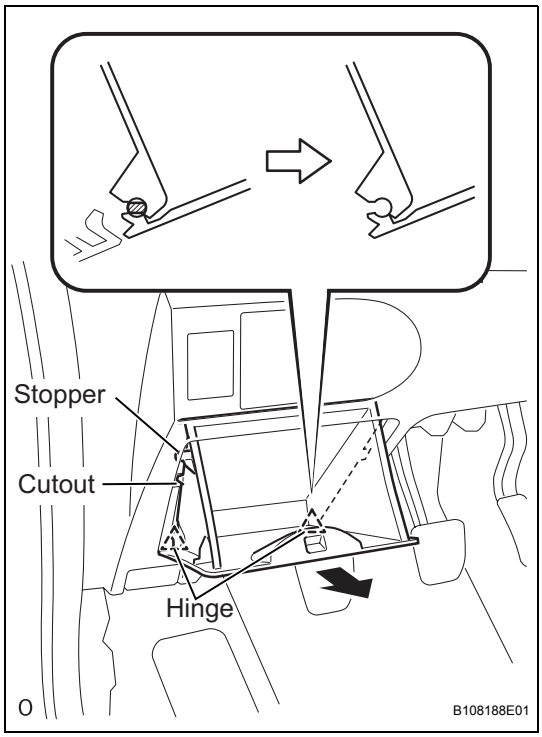

33. REMOVE INSTRUMENT PANEL BOX

(a) Open the instrument panel box.

(b) Pull the hinge side of the instrument panel box out horizontally with the instrument panel open and disengage the 2 hinges.

(c) Remove the stopper of the instrument panel box from the cutout of the instrument panel lower and remove the instrument panel box.

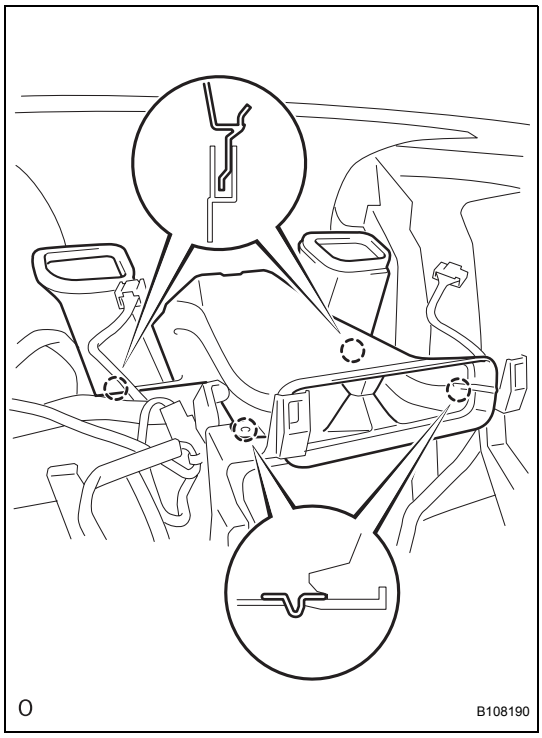

34. REMOVE NO. 6 HEATER TO REGISTER DUCT ASSEMBLY

(a) Disengage the 4 claws and remove the heater to register duct.

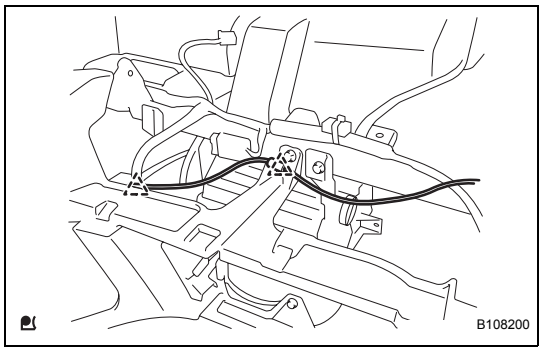

35. DISCONNECT ANTENNA CORD SUB-ASSEMBLY

(a) Disconnect the 2 antenna cord clamps.

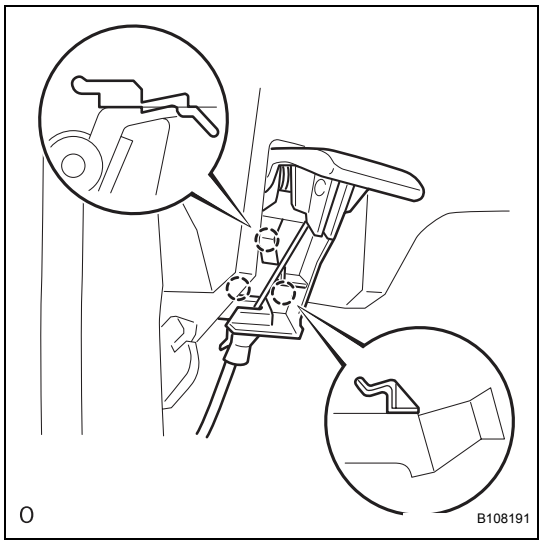

36. SEPARATE HOOD LOCK CONTROL LEVER SUB-ASSEMBLY

(a) Disengage the 3 claws and separate the hood lock control lever.

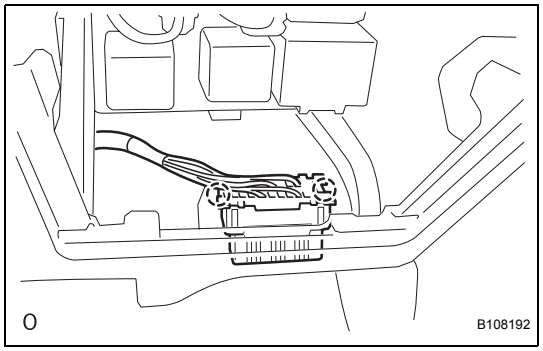

37. REMOVE LOWER INSTRUMENT PANEL SUB-ASSEMBLY

(a) Disengage the 2 claws and disconnect the DLC3 connector.
(b) Disconnect the clamps and connectors.
(c) Remove the 5 <D> bolts, 2 <E> bolts, screw <G> and screw <H> and remove the lower instrument panel.

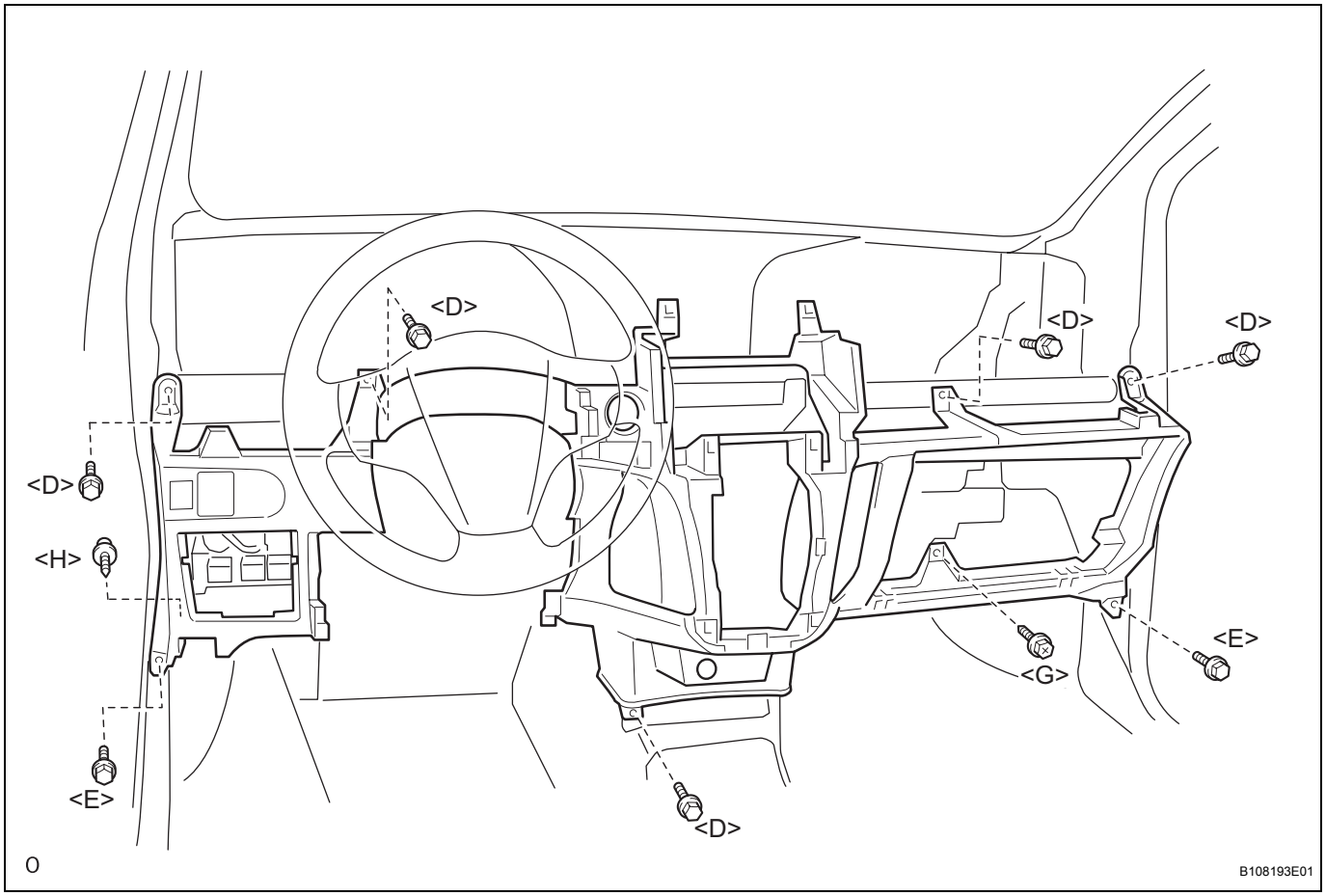

IP

38. REMOVE POWER OUTLET SOCKET ASSEMBLY (See page OT-9)

39. REMOVE POWER OUTLET SOCKET COVER (See page OT-10)

40. REMOVE OUTER MIRROR SWITCH ASSEMBLY

(a) Disengage the 2 claws and remove the outer mirror switch.

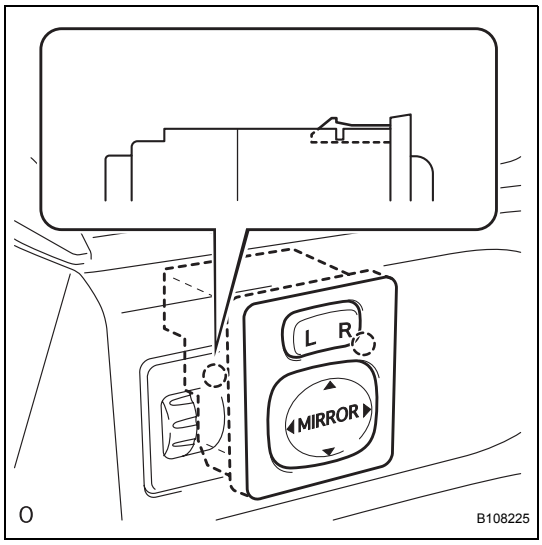

41. REMOVE LIGHT CONTROL RHEOSTAT

(a) Disengage the 2 claws and remove the light control rheostat.

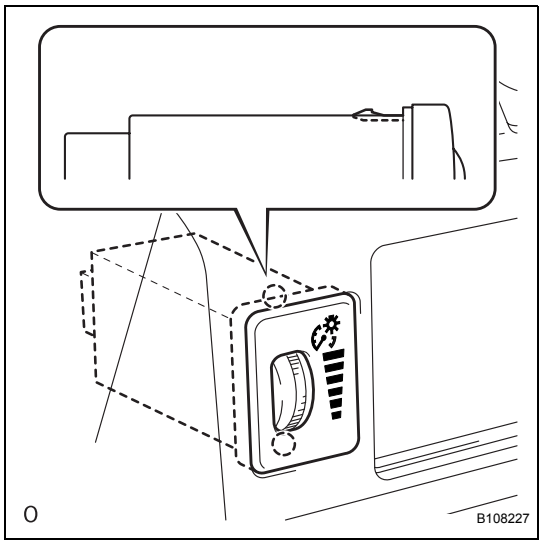

42. REMOVE FRONT PANEL SEAL

(a) Remove the front panel seal.

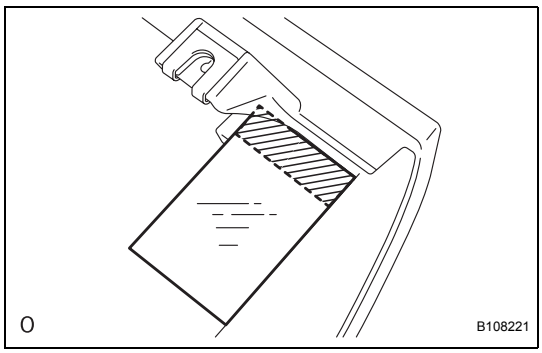

IP

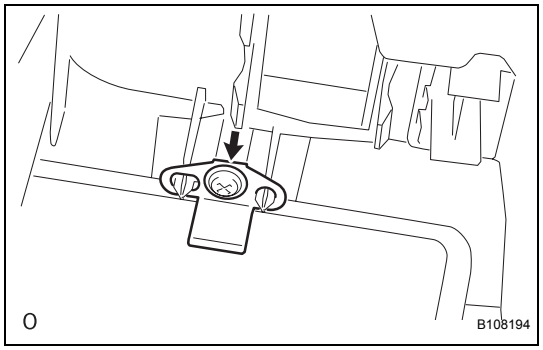

43. REMOVE INSTRUMENT PANEL BOX SPRING

(a) Remove screw <A> and the instrument panel box spring.

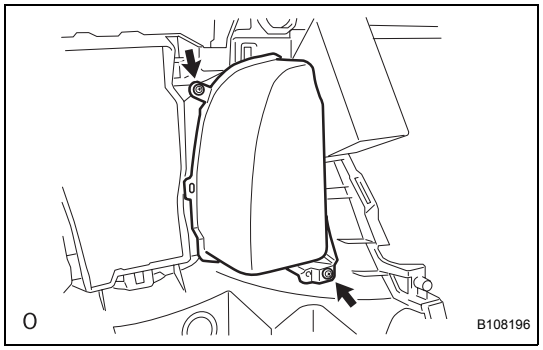

44. REMOVE NO. 1 INSTRUMENT PANEL BOX

(a) Remove the 2 <A> screws and the instrument panel box.

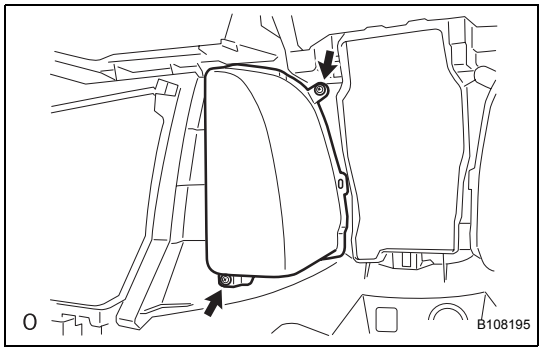

45. REMOVE NO. 2 INSTRUMENT PANEL BOX

(a) Remove the 2 <A> screws and the instrument panel box.

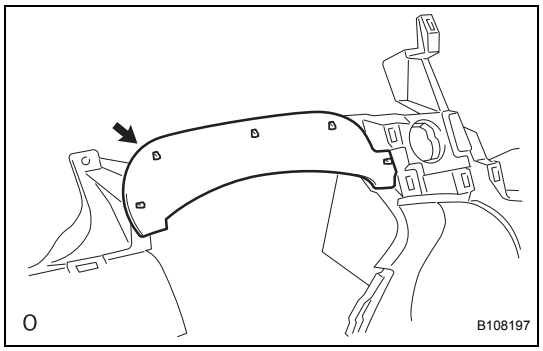

46. REMOVE INSTRUMENT CLUSTER FINISH PANEL SEAL

(a) Disengage the 5 claws and remove the panel seal.

INSTALLATION

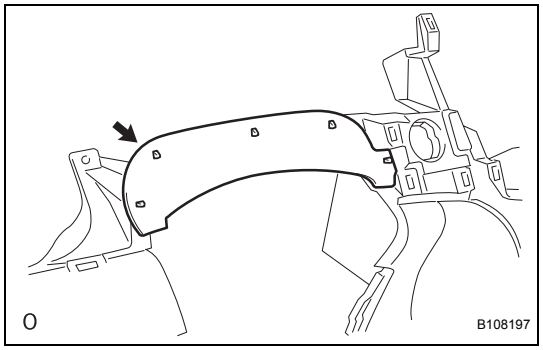

1. INSTALL INSTRUMENT CLUSTER FINISH PANEL SEAL

(a) Engage the 5 claws and install the panel seal.

IP

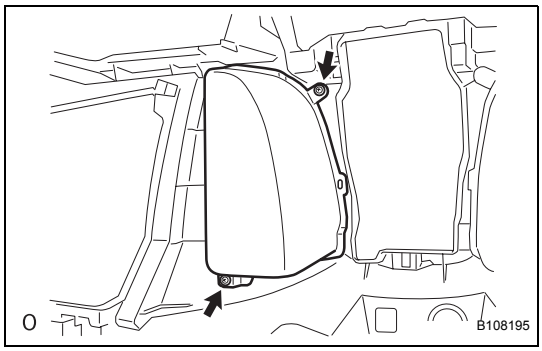

2. INSTALL NO. 2 INSTRUMENT PANEL BOX

(a) Install the instrument panel box with the 2 <A> screws.

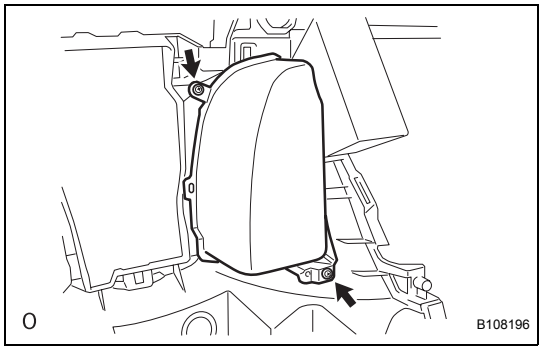

3. INSTALL NO. 1 INSTRUMENT PANEL BOX

(a) Install the instrument panel box with the 2 <A> screws.

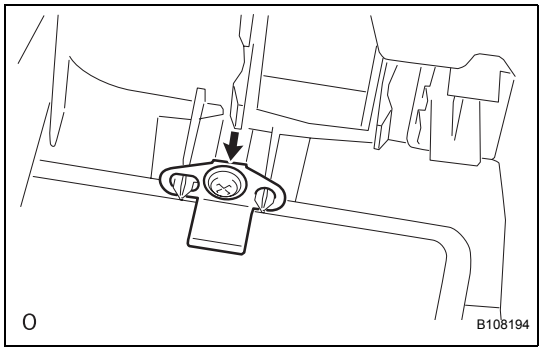

4. INSTALL INSTRUMENT PANEL BOX SPRING

(a) Install the instrument panel box spring with screw <A>.

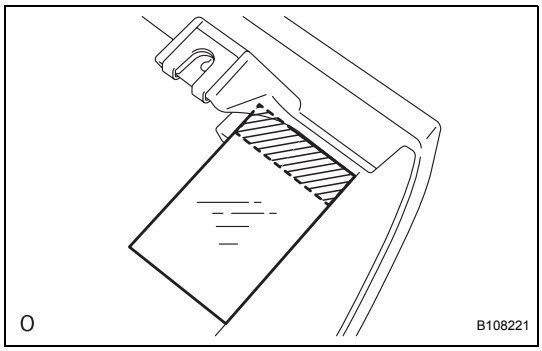

5. INSTALL FRONT PANEL SEAL

(a) Install the front panel seal.

IP

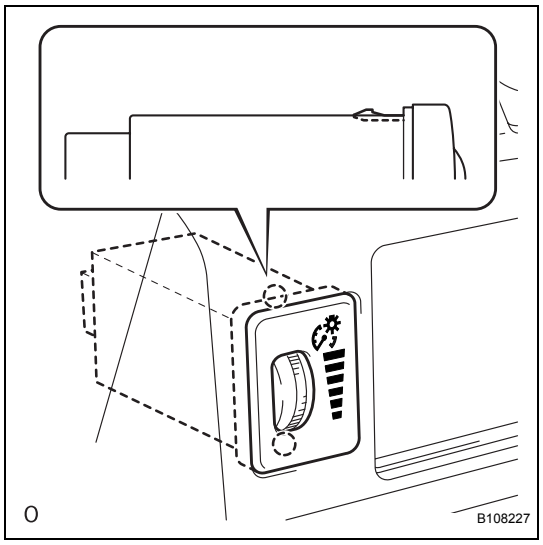

6. **INSTALL LIGHT CONTROL RHEOSTAT**
   (a) Engage the 2 claws and install the light control rheostat.

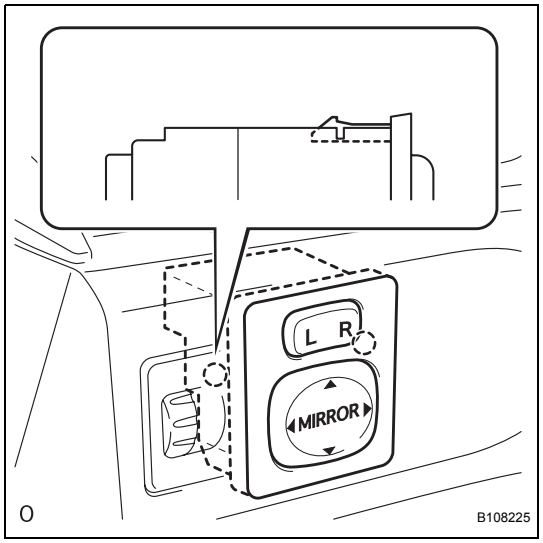

7. **INSTALL OUTER MIRROR SWITCH ASSEMBLY**
   (a) Engage the 2 claws and install the outer mirror switch.
8. **INSTALL POWER OUTLET SOCKET COVER (See page OT-10)**
9. **INSTALL POWER OUTLET SOCKET ASSEMBLY (See page OT-10)**

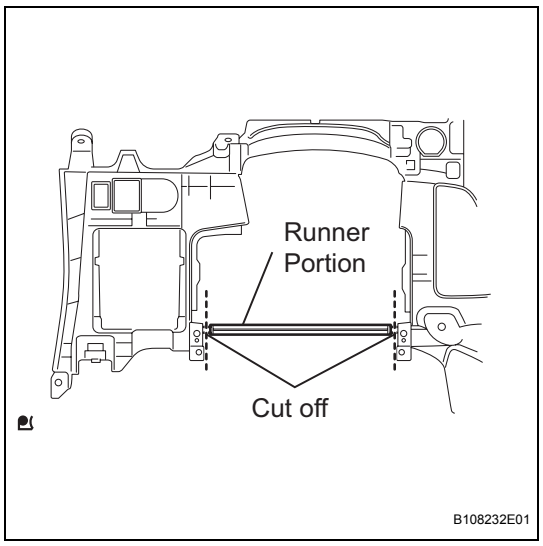

10. **INSTALL LOWER INSTRUMENT PANEL SUB-ASSEMBLY**
    (a) Using a nipper, cut off both ends of the runner portion shown in the illustration (When installing a new one).
    (b) Apply butyl tape to install a new instrument panel pad lower onto the instrument panel lower (When installing a new one).
    Adhesive:
    Part No. 08850-00065, Butyl Tape Set or the equivalent
    (c) Install the lower instrument panel with the 5 <D> bolts, 2 <E> bolts, screw <G> and screw <H>.
    NOTICE:
    Do not excessively tighten the <D> bolts, otherwise, it may damage the area not being tightened.

IP

(d) Connect the clamps and connectors.

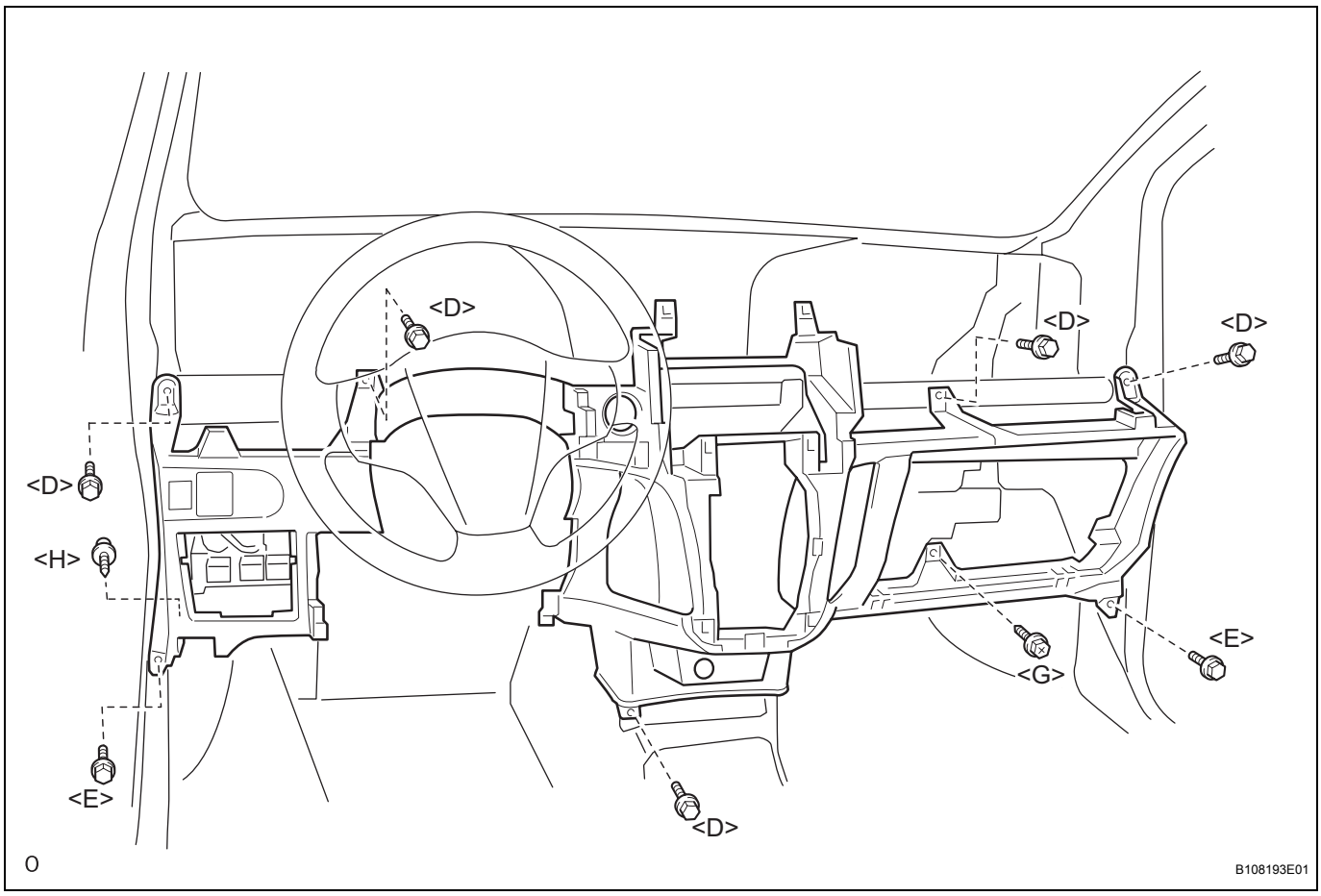

(e) Engage the 2 claws to connect the DLC3 connector.

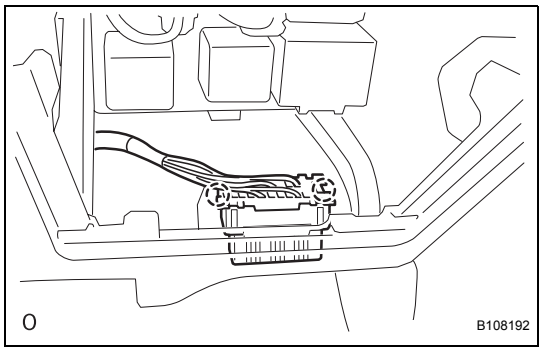

IP

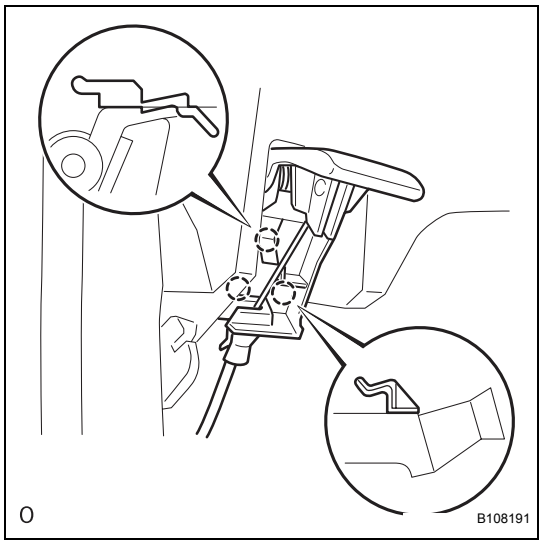

11. CONNECT HOOD LOCK CONTROL LEVER SUB-ASSEMBLY

(a) Engage the 3 claws to connect the control lever.

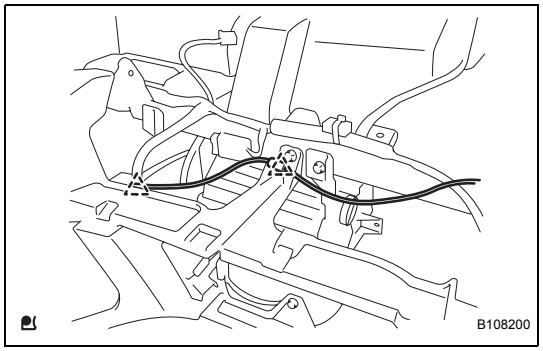

12. CONNECT ANTENNA CORD SUB-ASSEMBLY

(a) Connect the 2 antenna cord clamps.

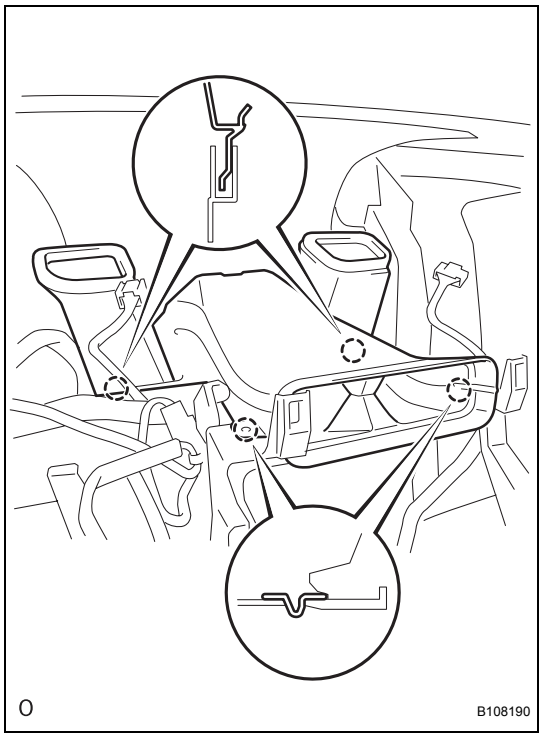

13. INSTALL NO. 6 HEATER TO REGISTER DUCT ASSEMBLY

(a) Engage the 4 claws and install the heater to register duct.

IP

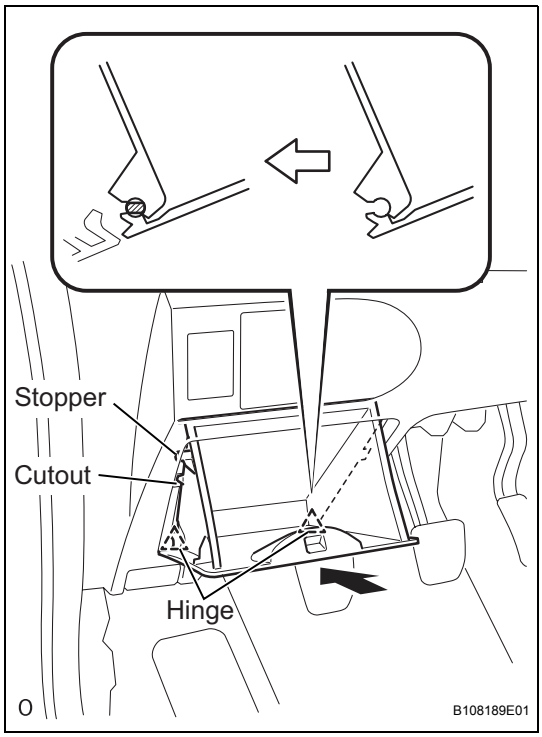

14. INSTALL INSTRUMENT PANEL BOX

(a) Insert the stopper of the instrument panel box from the cutout of the instrument panel lower.

(b) Engage the hinges with the instrument panel open.

(c) Close the instrument panel box.

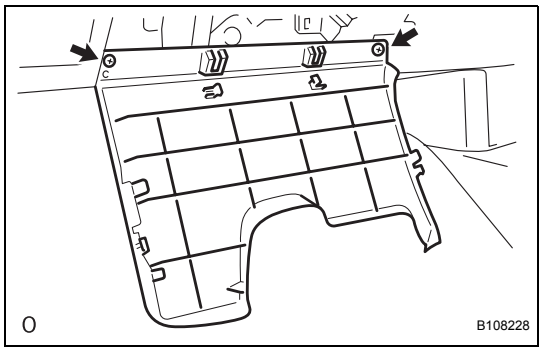

15. INSTALL INSTRUMENT PANEL FINISH PANEL SUB-ASSEMBLY LOWER

(a) Install the 2 <A> screws.

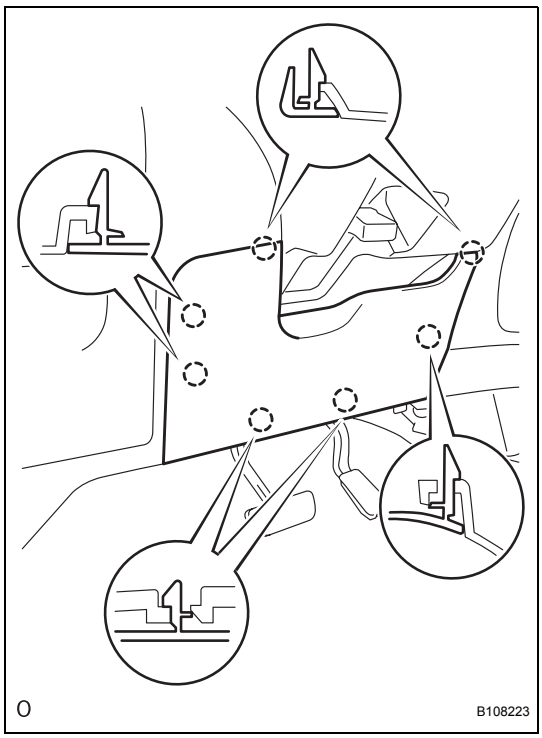

(b) Engage the 7 claws and install the instrument panel finish panel lower.

IP

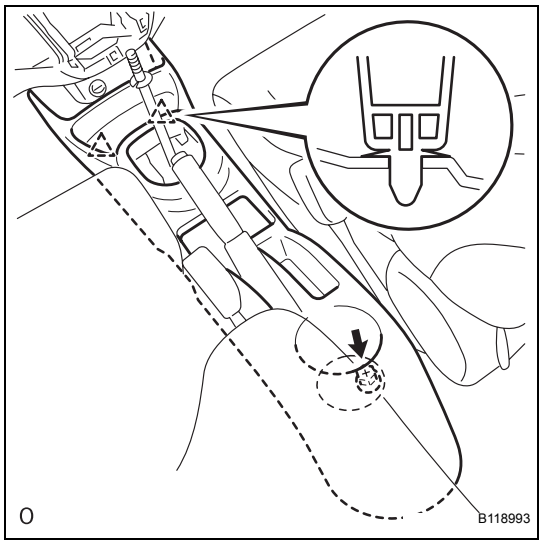

16. INSTALL CONSOLE BOX ASSEMBLY REAR

(a) Engage the 2 clips and install the console box rear.

(b) Install bolt <F>.

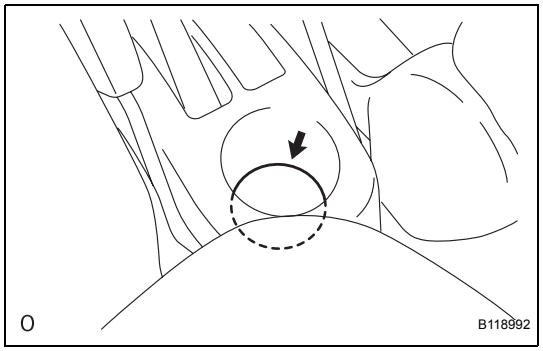

17. INSTALL CONSOLE BOX CARPET

(a) Install the console box carpet.

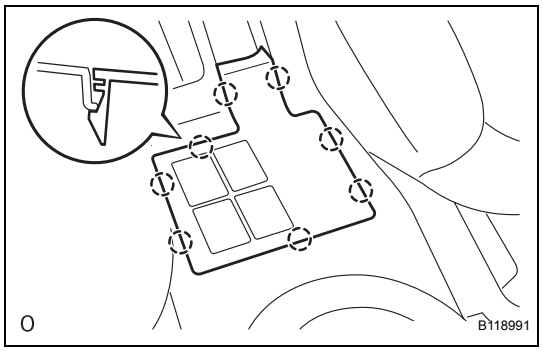

18. INSTALL CONSOLE BOX REAR COVER

(a) Engage the 8 claws and install the console box rear cover.

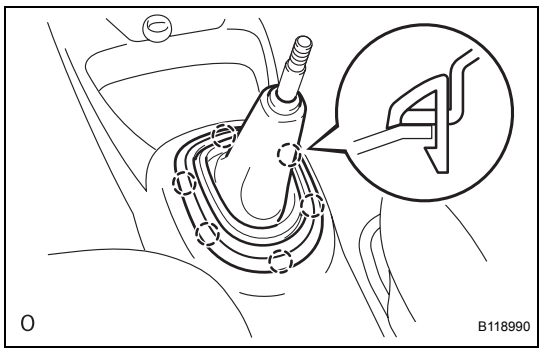

19. INSTALL SHIFTING HOLE COVER SUB-ASSEMBLY (for Manual Transaxle)

(a) Engage the 6 claws and install the shifting hole cover.

IP

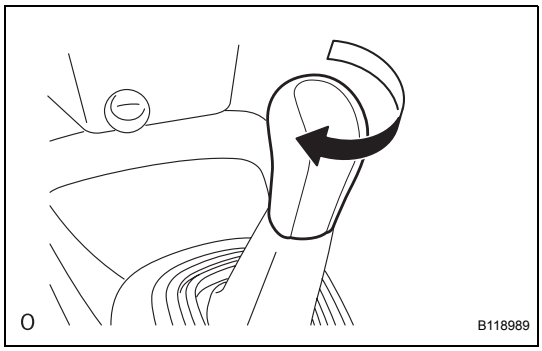

20. **INSTALL SHIFT LEVER KNOB SUB-ASSEMBLY (for Manual Transaxle)**
    (a) Install the shift lever knob.
21. **INSTALL COWL SIDE TRIM BOARD RH (See page IR-81)**
22. **INSTALL COWL SIDE TRIM BOARD LH (See page IR-81)**
23. **INSTALL INSTRUMENT PANEL UNDER COVER SUB-ASSEMBLY LH (See page IR-82)**
24. **INSTALL INSTRUMENT PANEL UNDER COVER SUB-ASSEMBLY RH (See page IR-81)**
25. **INSTALL FRONT DOOR SCUFF PLATE RH (See page IR-82)**
26. **INSTALL FRONT DOOR SCUFF PLATE LH (See page IR-82)**
27. **INSTALL UPPER INSTRUMENT PANEL SUB-ASSEMBLY (See page IP-29)**
28. **INSTALL GLOVE COMPARTMENT DOOR ASSEMBLY (See page IP-32)**
29. **INSTALL NO. 1 SWITCH HOLE BASE (See page IP-32)**
30. **INSTALL FRONT PILLAR GARNISH RH (See page IR-71)**
31. **INSTALL FRONT PILLAR GARNISH LH (See page IR-72)**
32. **INSTALL FRONT DOOR OPENING TRIM WEATHERSTRIP RH (See page IR-81)**
33. **INSTALL FRONT DOOR OPENING TRIM WEATHERSTRIP LH (See page IR-81)**
34. **CONNECT AIR INLET DAMPER CONTROL CABLE SUB-ASSEMBLY (See page AC-257)**
35. **CONNECT DEFROSTER DAMPER CONTROL CABLE SUB-ASSEMBLY (See page AC-257)**
36. **CONNECT AIR MIX DAMPER CONTROL CABLE SUB-ASSEMBLY (See page AC-257)**
37. **INSTALL AIR CONDITIONER PANEL SUB-ASSEMBLY (See page AC-257)**
38. **INSTALL RADIO TUNER OPENING COVER (w/o Radio Receiver) (See page AC-150)**
39. **INSTALL RADIO RECEIVER ASSEMBLY (See page AV-46)**
40. **INSTALL INSTRUMENT CLUSTER FINISH PANEL SUB-ASSEMBLY CENTER (See page AC-258)**
41. **INSTALL COMBINATION METER ASSEMBLY (See page ME-148)**

42. **INSTALL INSTRUMENT CLUSTER FINISH PANEL (See page ME-148)**

43. **INSTALL INSTRUMENT PANEL FINISH PANEL END RH (See page ME-149)**

44. **INSTALL INSTRUMENT PANEL FINISH PANEL END LH (See page ME-149)**

45. **CONNECT CABLE TO NEGATIVE BATTERY TERMINAL**
Torque: 5.4 N*m (55 kgf*cm, 48 in.*lbf)

46. **CHECK SRS WARNING LIGHT**
RS-31

REAR CONSOLE BOX (for Sedan)

COMPONENTS

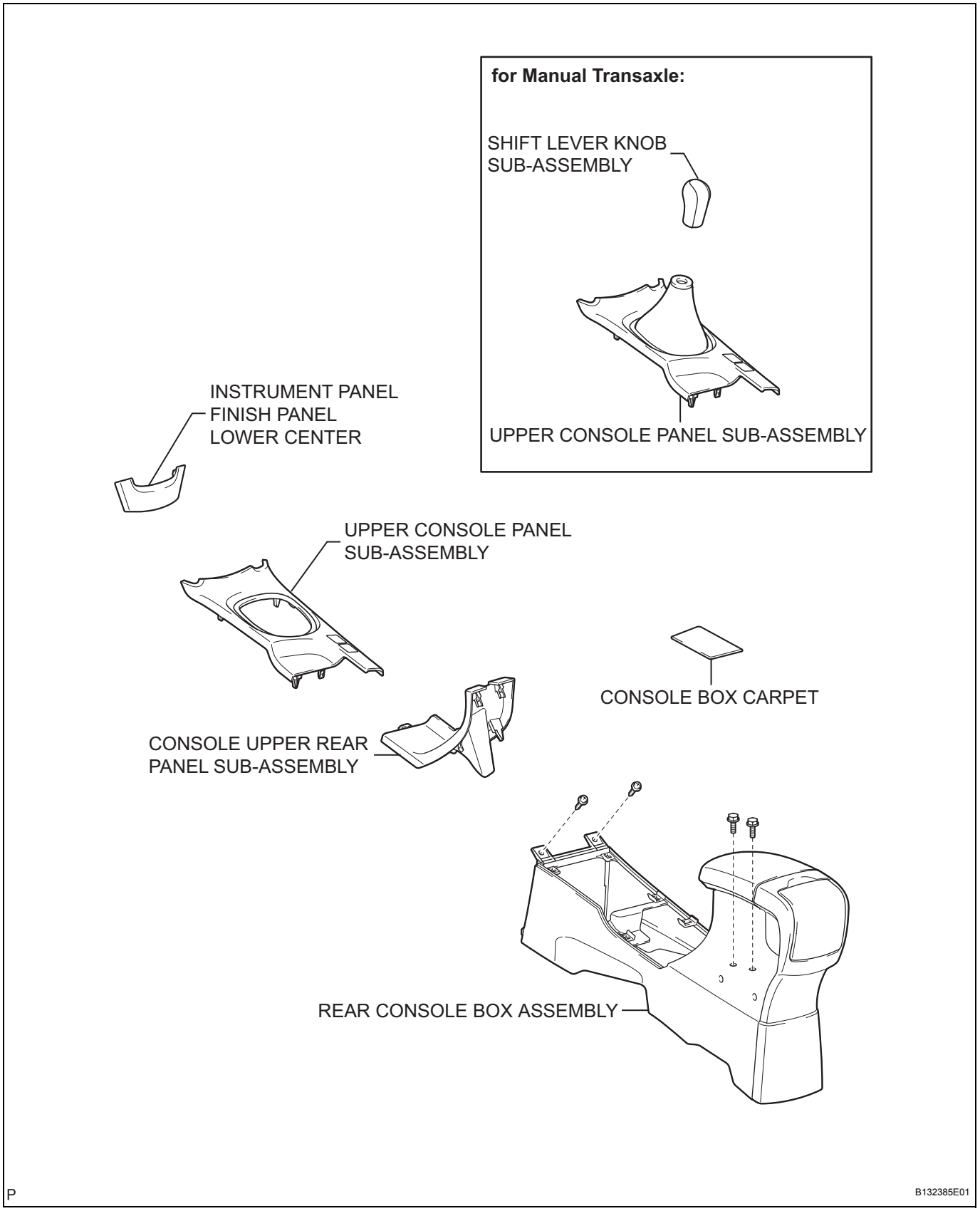

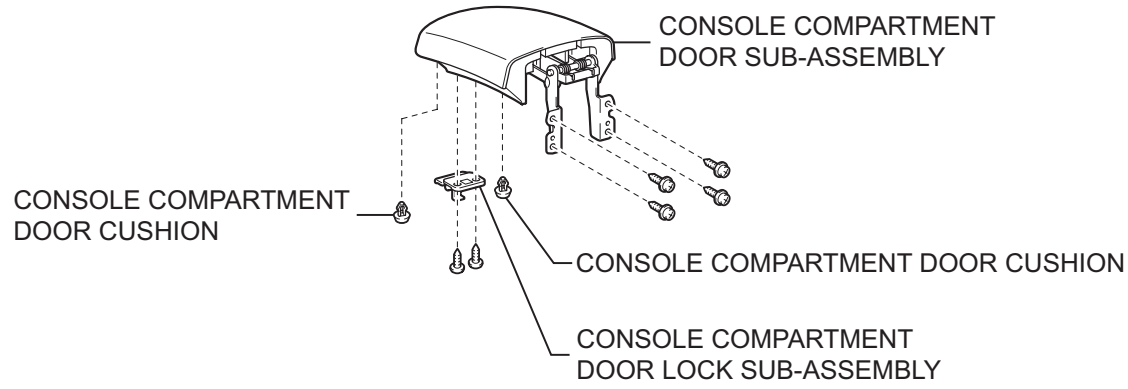

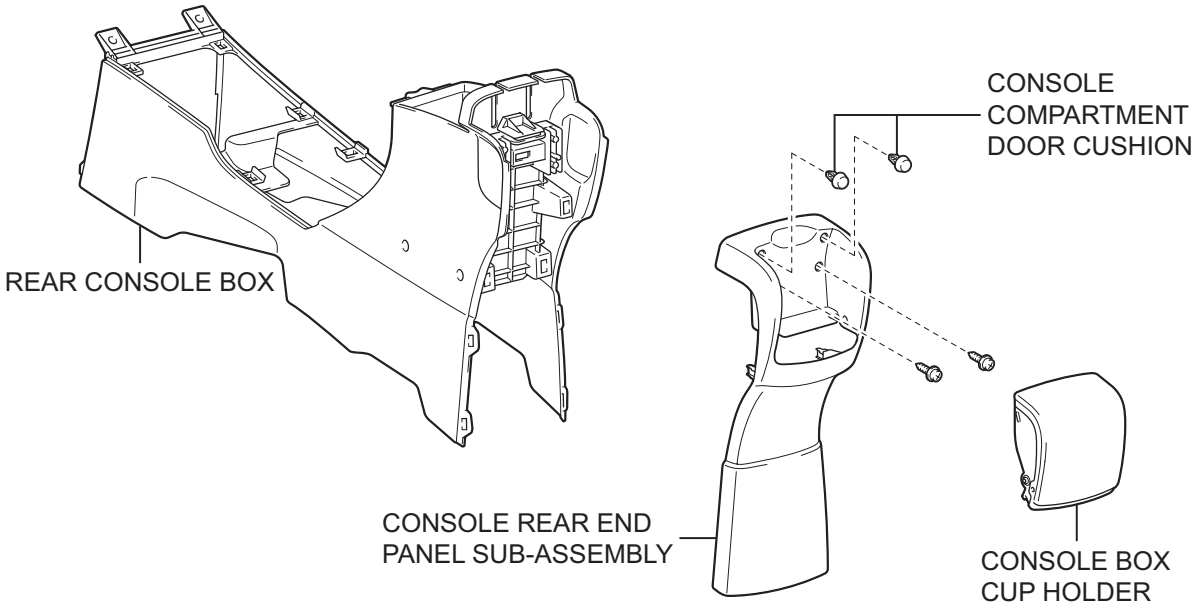

IP

P

B132345E01

REMOVAL

1. **DISCONNECT CABLE FROM NEGATIVE BATTERY TERMINAL**

2. **REMOVE INSTRUMENT PANEL FINISH PANEL LOWER CENTER (See page ME-138)**

3. **REMOVE SHIFT LEVER KNOB SUB-ASSEMBLY (for Manual Transaxle)**
   (a) Remove the shift lever knob.

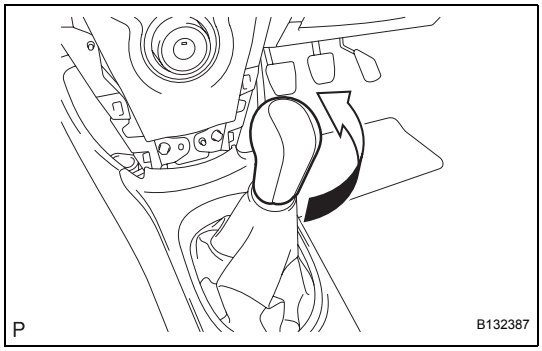

4. **REMOVE UPPER CONSOLE PANEL SUB-ASSEMBLY**
   (a) Shift the shift lever into the N position.
   (b) Disengage the 5 clips and the claw and remove the upper console panel.

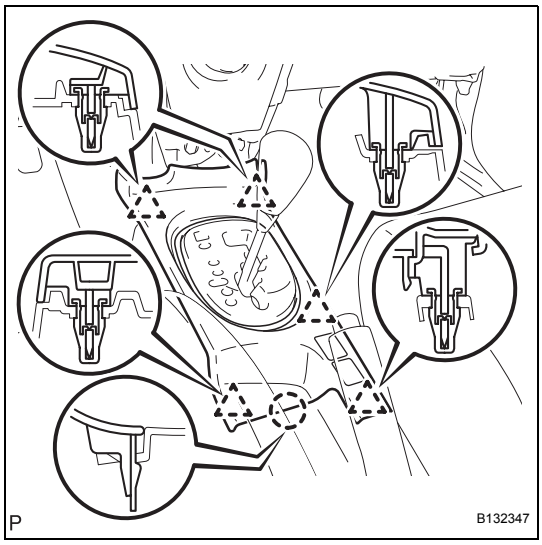

5. **REMOVE CONSOLE UPPER REAR PANEL SUB-ASSEMBLY**
   (a) Disengage the 3 clips and 3 claws.
   (b) Disconnect the connector and remove the console upper rear panel.

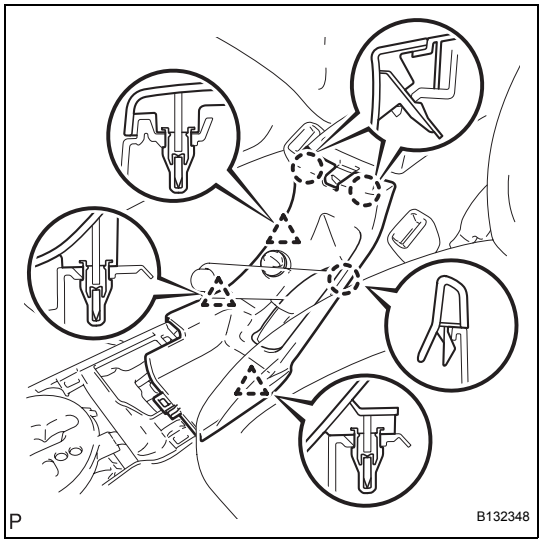

IP

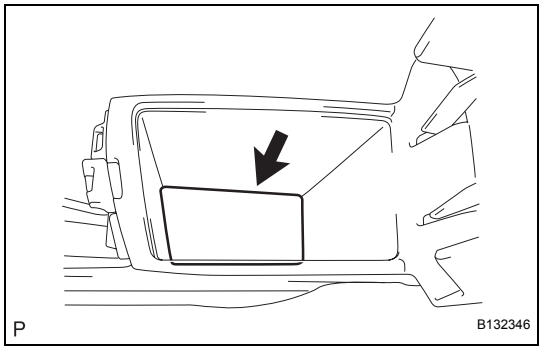

6. REMOVE CONSOLE BOX CARPET

(a) Remove the console box carpet.

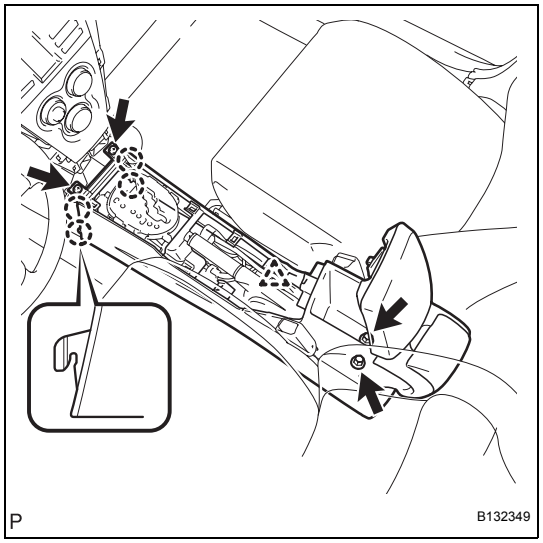

7. REMOVE REAR CONSOLE BOX ASSEMBLY

(a) Disconnect the clamp.
(b) Remove the 2 bolts and 2 screws.
(c) Disengage the 4 claws and remove the rear console box.

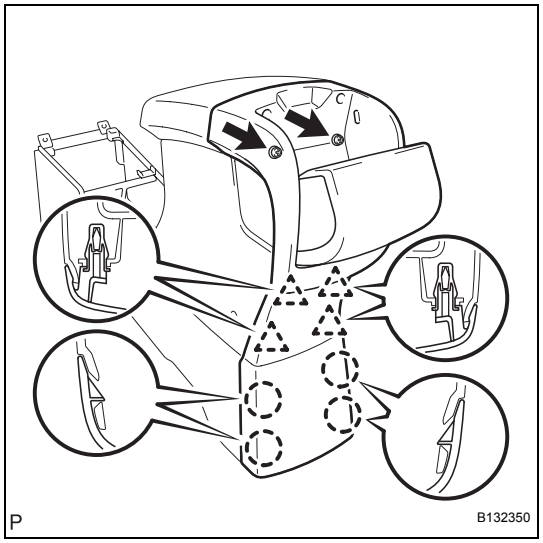

DISASSEMBLY

1. REMOVE CONSOLE REAR END PANEL SUB-ASSEMBLY

(a) Remove the 2 screws.
(b) Disengage the 4 claws and 4 clips and remove the console rear end panel.

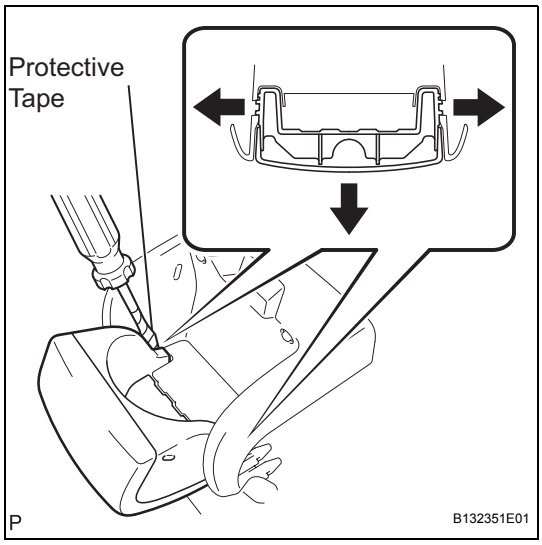

2. REMOVE CONSOLE BOX CUP HOLDER

(a) Using a screwdriver with its tip wrapped in protective tape, prize the hinge portion of the cup holder from side to side while being careful not to apply excessive load to the axis of the instrument panel upper, and remove the cup holder.

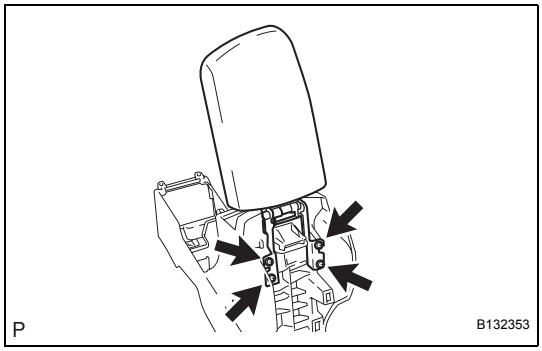

3. REMOVE CONSOLE COMPARTMENT DOOR SUB-ASSEMBLY

(a) Remove the 4 screws and remove the console compartment door.

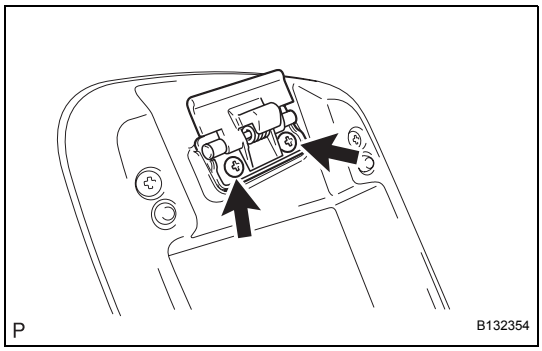

4. REMOVE CONSOLE COMPARTMENT DOOR LOCK SUB-ASSEMBLY

(a) Remove the 2 screws and remove the console compartment door lock.

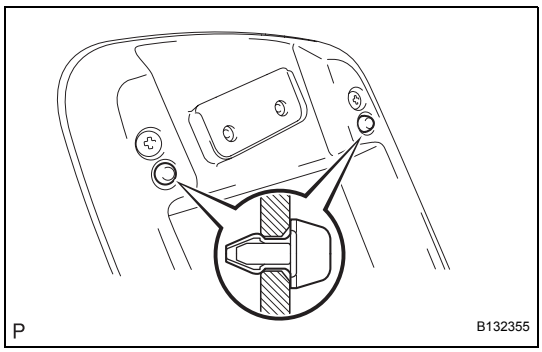

5. REMOVE CONSOLE COMPARTMENT DOOR CUSHION

(a) for Console compartment door:

(1) Remove the console compartment door cushion.

IP

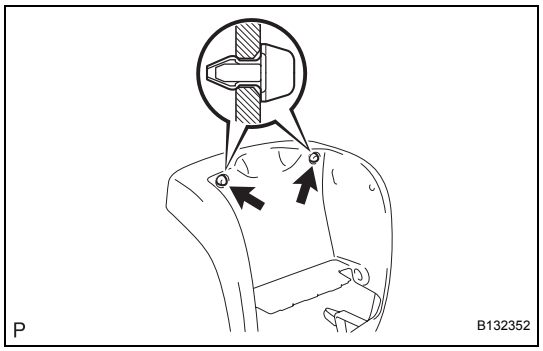

(b) for Console rear end panel:
(1) Remove the console compartment door cushion.

REASSEMBLY

1. INSTALL CONSOLE COMPARTMENT DOOR CUSHION

(a) for Console compartment door:
(1) Install the console compartment door cushion.

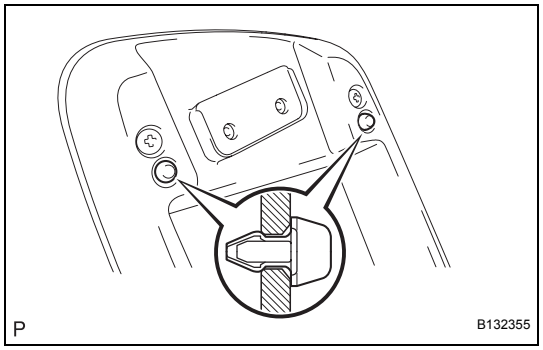

(b) for Console rear end panel:
(1) Install the console compartment door cushion.

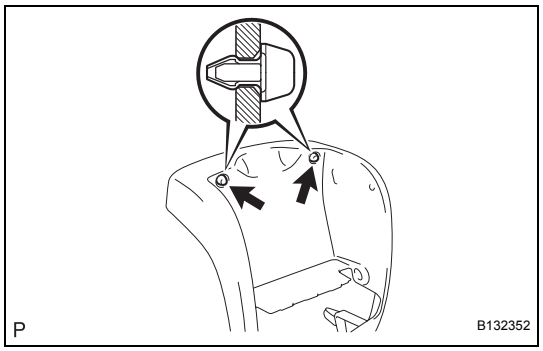

IP

2. INSTALL CONSOLE COMPARTMENT DOOR LOCK SUB-ASSEMBLY

(a) Install the console compartment door lock with the 2 screws.

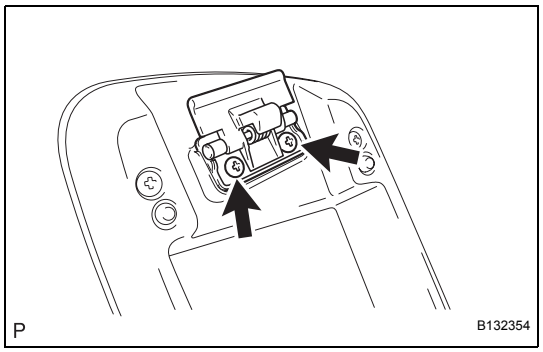

3. INSTALL CONSOLE COMPARTMENT DOOR SUB-ASSEMBLY

(a) Install the console compartment door lock with the 4 screws.

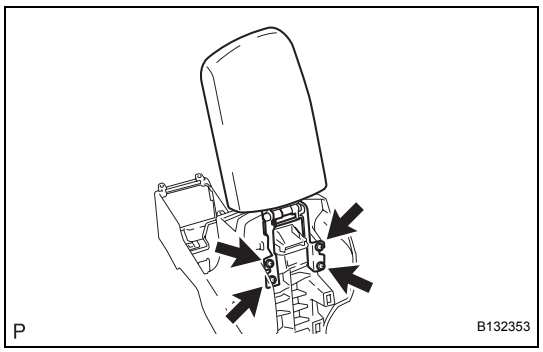

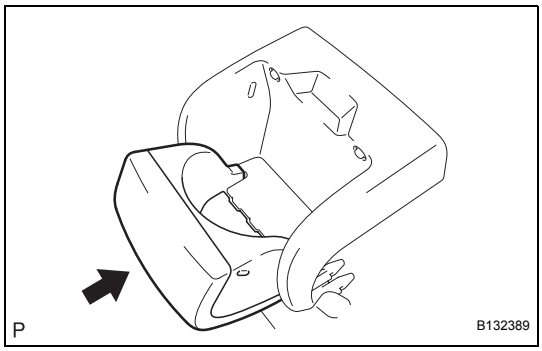

4. INSTALL CONSOLE BOX CUP HOLDER

(a) Engage the hinge portion of the cup holder and install the cup holder.

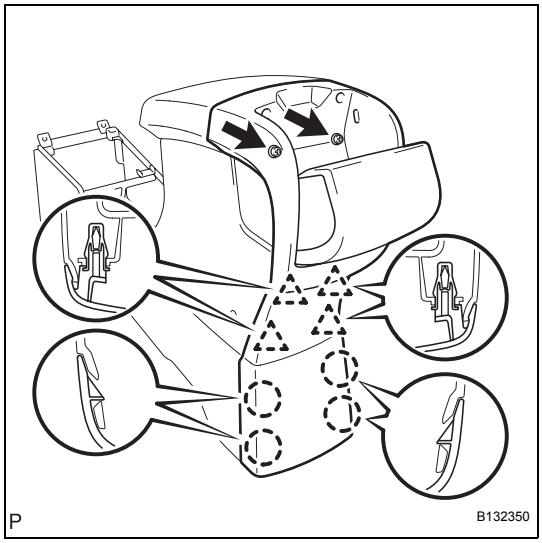

5. INSTALL CONSOLE REAR END PANEL SUB-ASSEMBLY

(a) Engage the 4 claws and 4 clips.
(b) Install the console rear end panel with the 2 screws.

INSTALLATION

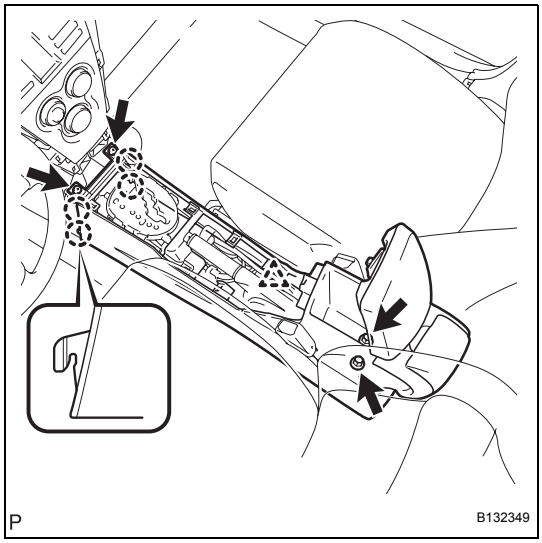

1. INSTALL REAR CONSOLE BOX ASSEMBLY

(a) Engage the 4 claws and install the rear console box.
(b) Install the 2 bolts and 2 screws.
(c) Connect the clamp.

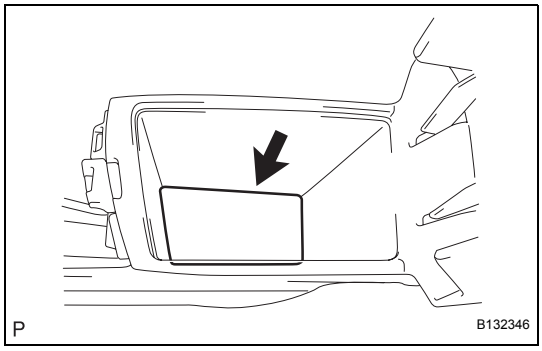

2. INSTALL CONSOLE BOX CARPET

(a) Install the console box carpet.

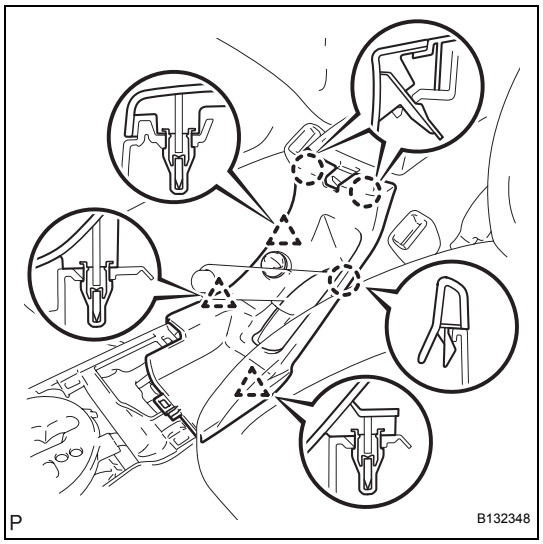

3. **INSTALL CONSOLE UPPER REAR PANEL SUB-ASSEMBLY**
   (a) Connect the connector.
   (b) Engage the 3 clips and 3 claws and install the console upper rear panel.

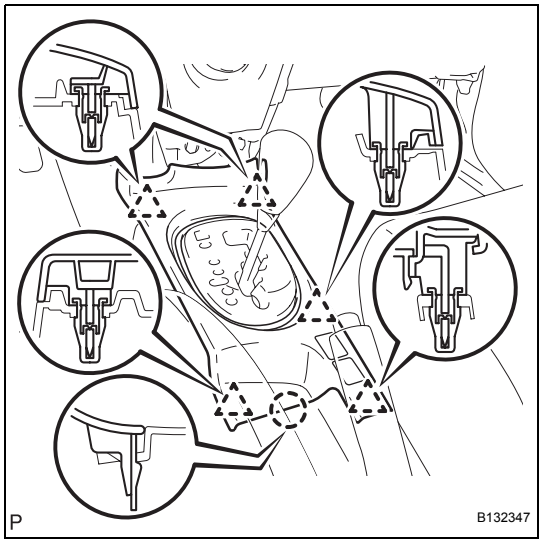

4. **INSTALL UPPER CONSOLE PANEL SUB-ASSEMBLY**
   (a) Engage the 5 clips and the claw and install the upper console panel.

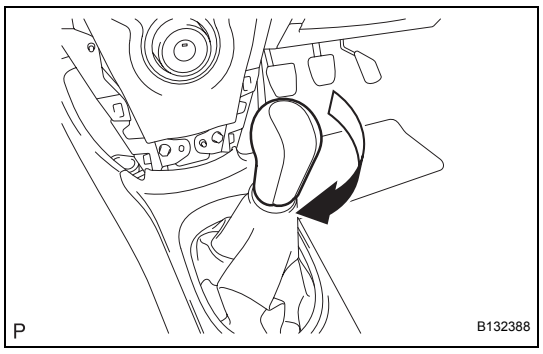

5. **INSTALL SHIFT LEVER KNOB SUB-ASSEMBLY (for Manual Transaxle)**
   (a) Install the shift lever knob.

6. **INSTALL INSTRUMENT PANEL FINISH PANEL LOWER CENTER (See page ME-142)**

7. **CONNECT CABLE TO NEGATIVE BATTERY TERMINAL**
   Torque: 5.4 N*m (55 kgf*cm, 48 in.*lbf)

IP

FRONT PASSENGER SEAT BELT WARNING LIGHT (for Sedan)

COMPONENTS

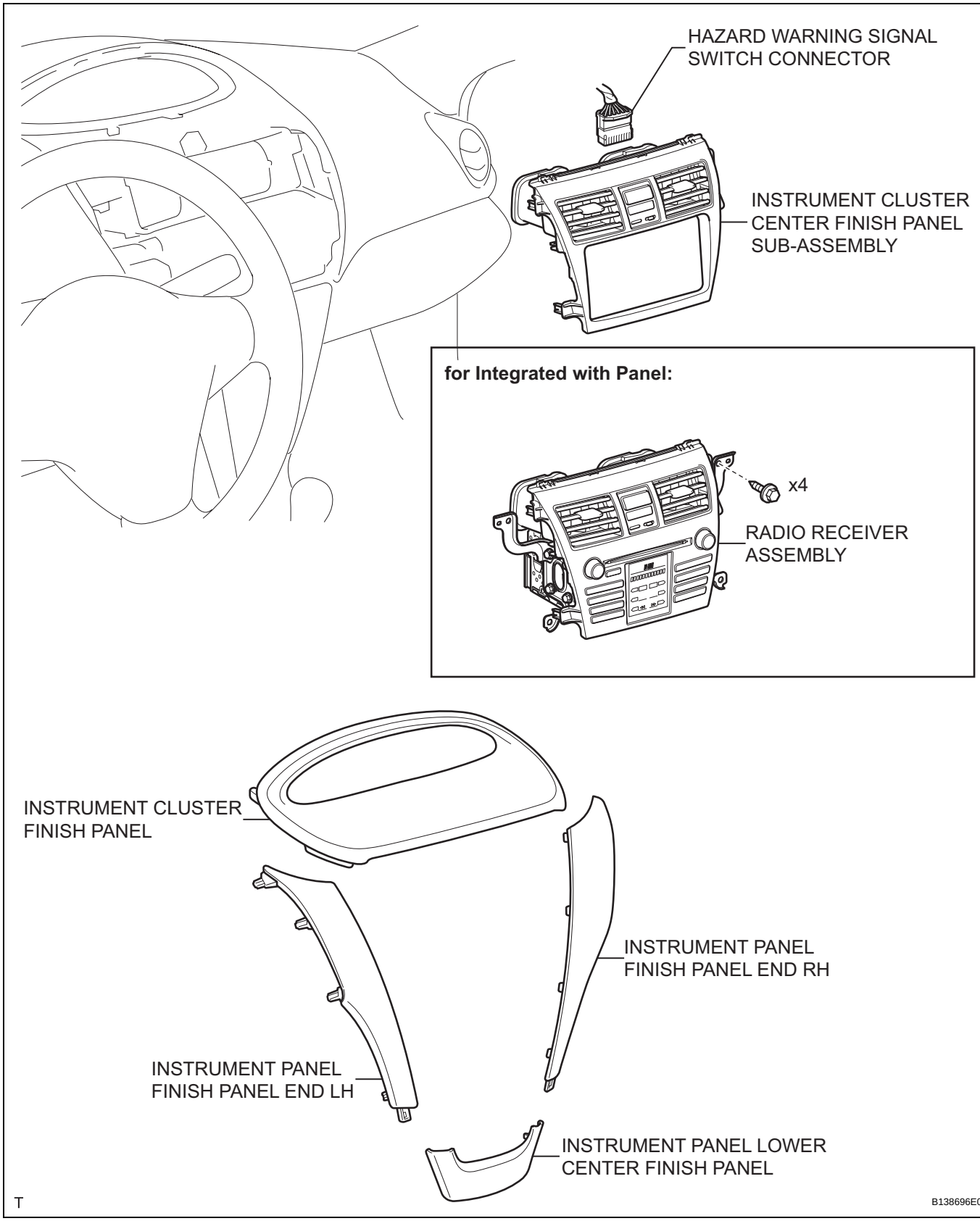

SB

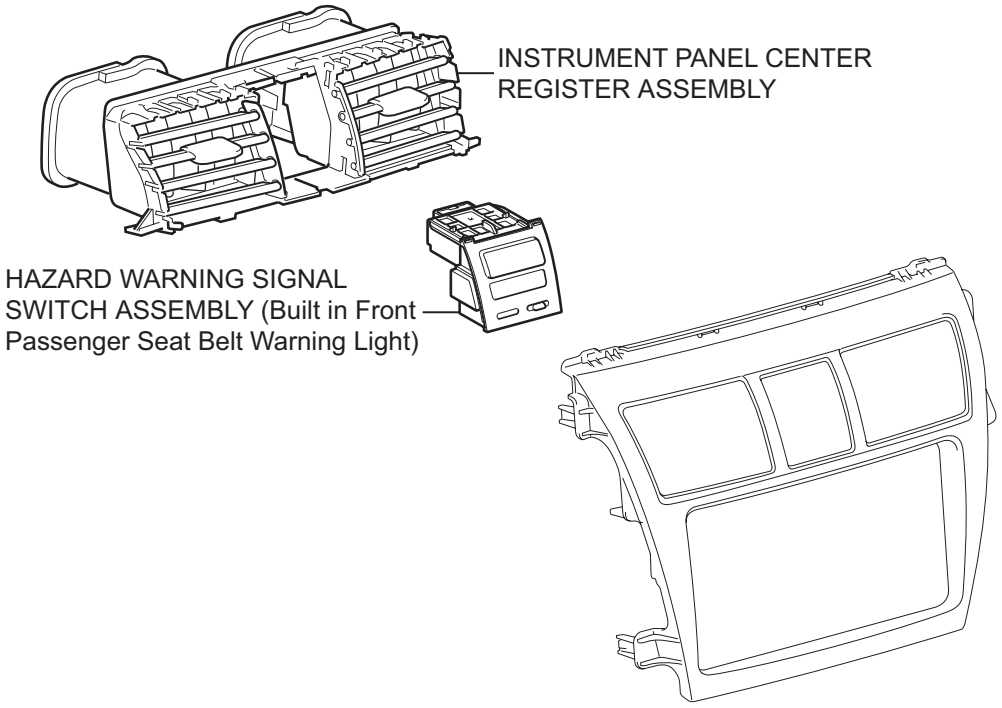

w/ Radio Receiver:

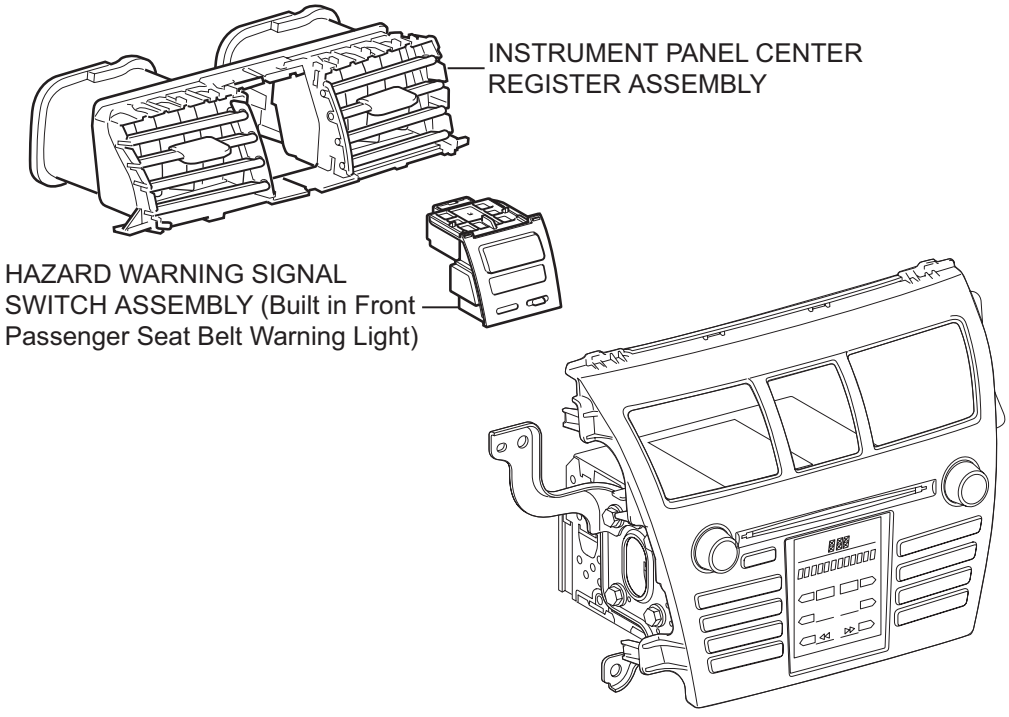

T

B138572E01

REMOVAL

1. **DISCONNECT CABLE FROM NEGATIVE BATTERY TERMINAL**
2. **REMOVE INSTRUMENT PANEL LOWER CENTER FINISH PANEL (See page ME-138)**
3. **REMOVE INSTRUMENT PANEL FINISH PANEL END RH (See page ME-138)**
4. **REMOVE INSTRUMENT PANEL FINISH PANEL END LH (See page ME-138)**
5. **REMOVE INSTRUMENT CLUSTER FINISH PANEL (See page ME-139)**
6. **REMOVE RADIO RECEIVER ASSEMBLY (for Integrated with Panel) (See page AV-38)**
7. **REMOVE INSTRUMENT CLUSTER CENTER FINISH PANEL SUB-ASSEMBLY (except Integrated with Panel) (See page IP-43)**
8. **REMOVE INSTRUMENT PANEL CENTER REGISTER ASSEMBLY (See page LI-166)**
9. **REMOVE HAZARD WARNING SIGNAL SWITCH ASSEMBLY (Built in Front Passenger Seat Belt Warning Light)**
   (a) Disengage the 3 claws and remove the hazard warning signal switch.

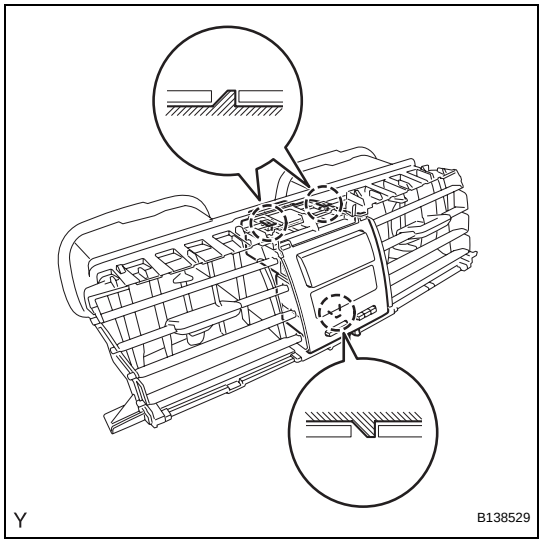

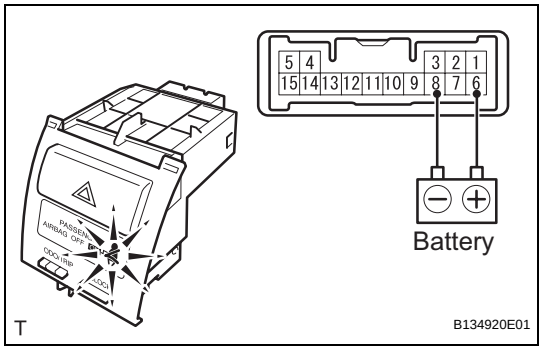

INSPECTION

1. **INSPECT HAZARD WARNING SIGNAL SWITCH ASSEMBLY (Built in Front Passenger Seat Belt Warning Light)**
   (a) Check the operation.
      (1) Apply battery voltage to the terminals and check that the indicator illuminates.
      Standard

Condition	Standard
Positive battery - Terminal 6 (IG+) Negative battery - Terminal 8 (PBEW)	Illuminates

If the result is not as specified, replace the hazard warning signal switch.

SB

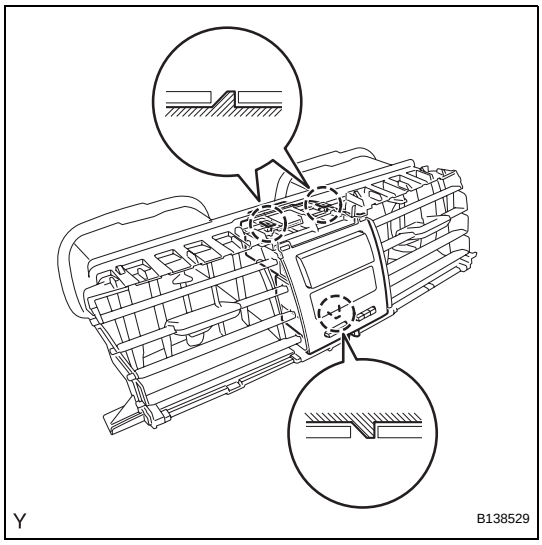

INSTALLATION

1. **INSTALL HAZARD WARNING SIGNAL SWITCH ASSEMBLY (Built in Front Passenger Seat Belt Warning Light)**
   (a) Engage the 3 claws and install the hazard warning signal switch.
2. **INSTALL INSTRUMENT PANEL CENTER REGISTER ASSEMBLY (See page LI-168)**
3. **INSTALL RADIO RECEIVER ASSEMBLY (for Integrated with Panel) (See page AV-40)**
4. **INSTALL INSTRUMENT CLUSTER CENTER FINISH PANEL SUB-ASSEMBLY (except Integrated with Panel) (See page IP-56)**
5. **INSTALL INSTRUMENT CLUSTER FINISH PANEL (See page ME-140)**
6. **INSTALL INSTRUMENT PANEL FINISH PANEL END RH (See page ME-141)**
7. **INSTALL INSTRUMENT PANEL FINISH PANEL END LH (See page ME-141)**
8. **INSTALL INSTRUMENT PANEL LOWER CENTER FINISH PANEL (See page ME-142)**
9. **CONNECT CABLE TO NEGATIVE BATTERY TERMINAL**
   Torque: 5.4 N*m (55 kgf*cm, 48 in.*lbf)

FRONT PASSENGER SEAT BELT WARNING LIGHT (for Hatchback)

COMPONENTS

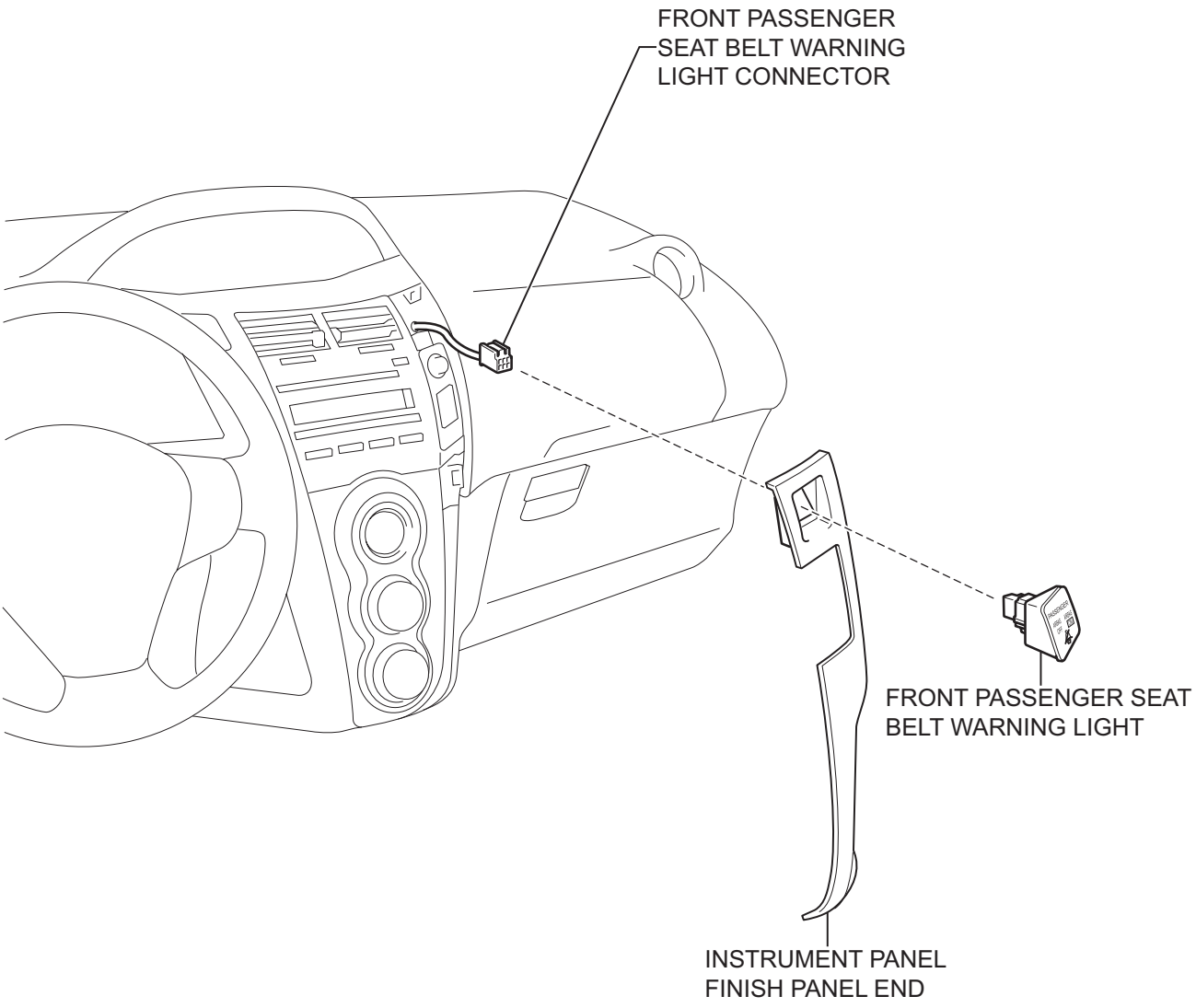

T

B117689E01

SB

REMOVAL

1. **DISCONNECT CABLE FROM NEGATIVE BATTERY TERMINAL**
2. **REMOVE INSTRUMENT PANEL FINISH PANEL END (See page ME-145)**
3. **REMOVE FRONT PASSENGER SEAT BELT WARNING LIGHT**
   (a) Disengage the 2 claws and remove the front passenger seat belt warning light.

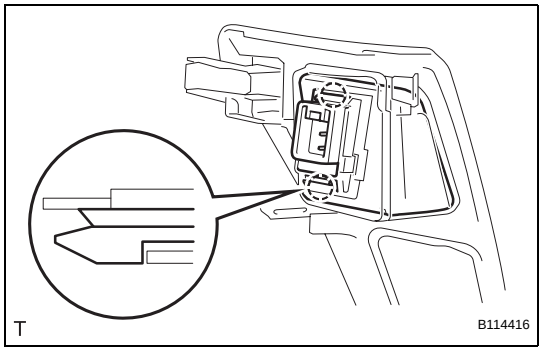

INSPECTION

1. **INSPECT FRONT PASSENGER SEAT BELT WARNING LIGHT**
   (a) Check the operation.
      (1) Apply battery voltage to the terminals and check that the indicator illuminates.
      Standard

Condition	Standard
Positive battery - Terminal 6 (IG+) Negative battery - Terminal 3 (PBELT)	Illuminates

If the result is not as specified, replace the front passenger seat belt warning light.

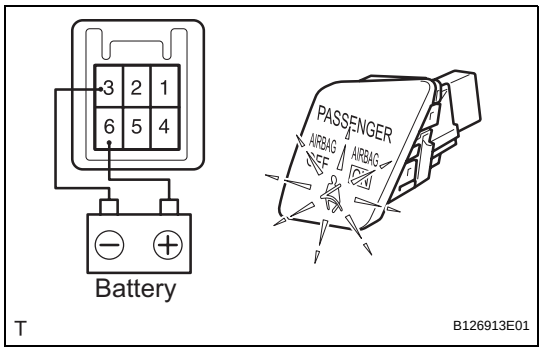

INSTALLATION

1. **INSTALL FRONT PASSENGER SEAT BELT WARNING LIGHT**
   (a) Engage the 2 claws and install the front passenger seat belt warning light.
2. **INSTALL INSTRUMENT PANEL FINISH PANEL END (See page ME-149)**
3. **CONNECT CABLE TO NEGATIVE BATTERY TERMINAL**
   Torque: 5.4 N*m (55 kgf*cm, 48 in.*lbf)

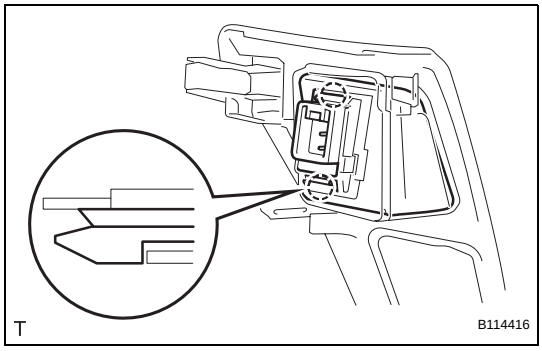

SEAT BELT WARNING SYSTEM

PARTS LOCATION

HATCHBACK:

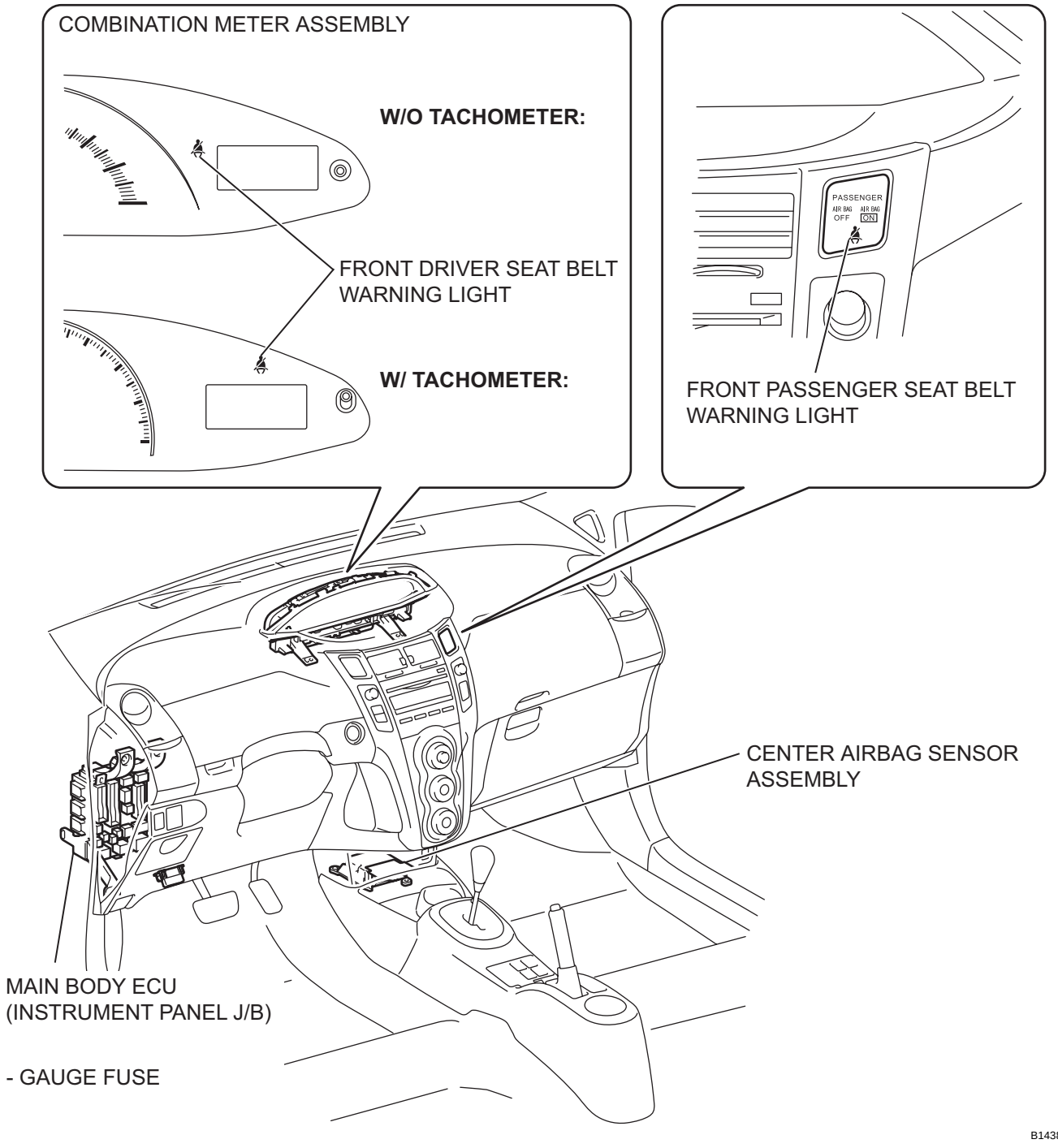

SB

SB

SEDAN:

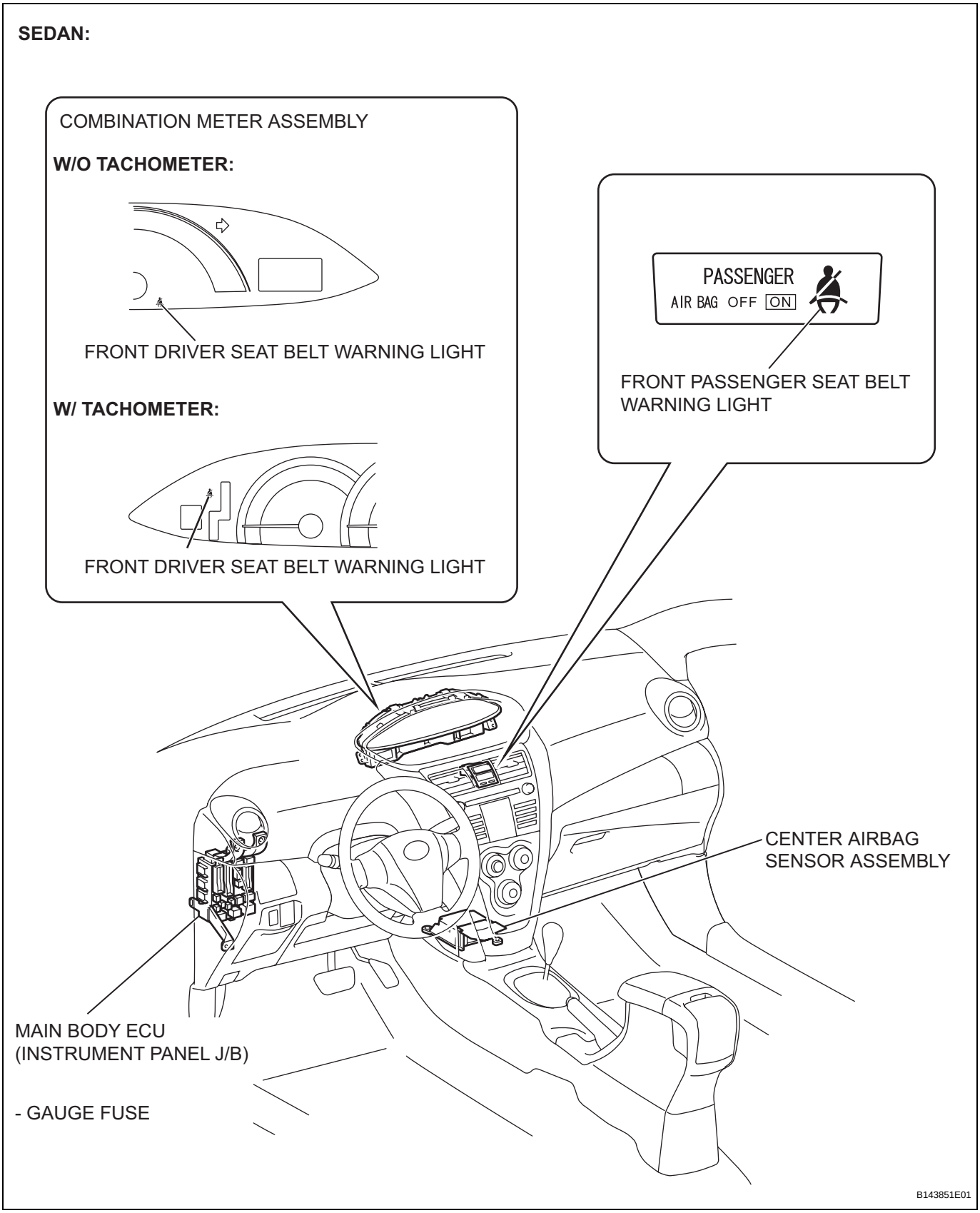
COMBINATION METER ASSEMBLY
W/O TACHOMETER:
FRONT DRIVER SEAT BELT WARNING LIGHT
W/ TACHOMETER:
FRONT DRIVER SEAT BELT WARNING LIGHT
PASSENGER
AIR BAG OFF ON
FRONT PASSENGER SEAT BELT WARNING LIGHT
CENTER AIRBAG SENSOR ASSEMBLY
MAIN BODY ECU (INSTRUMENT PANEL J/B)
- GAUGE FUSE
B143851E01

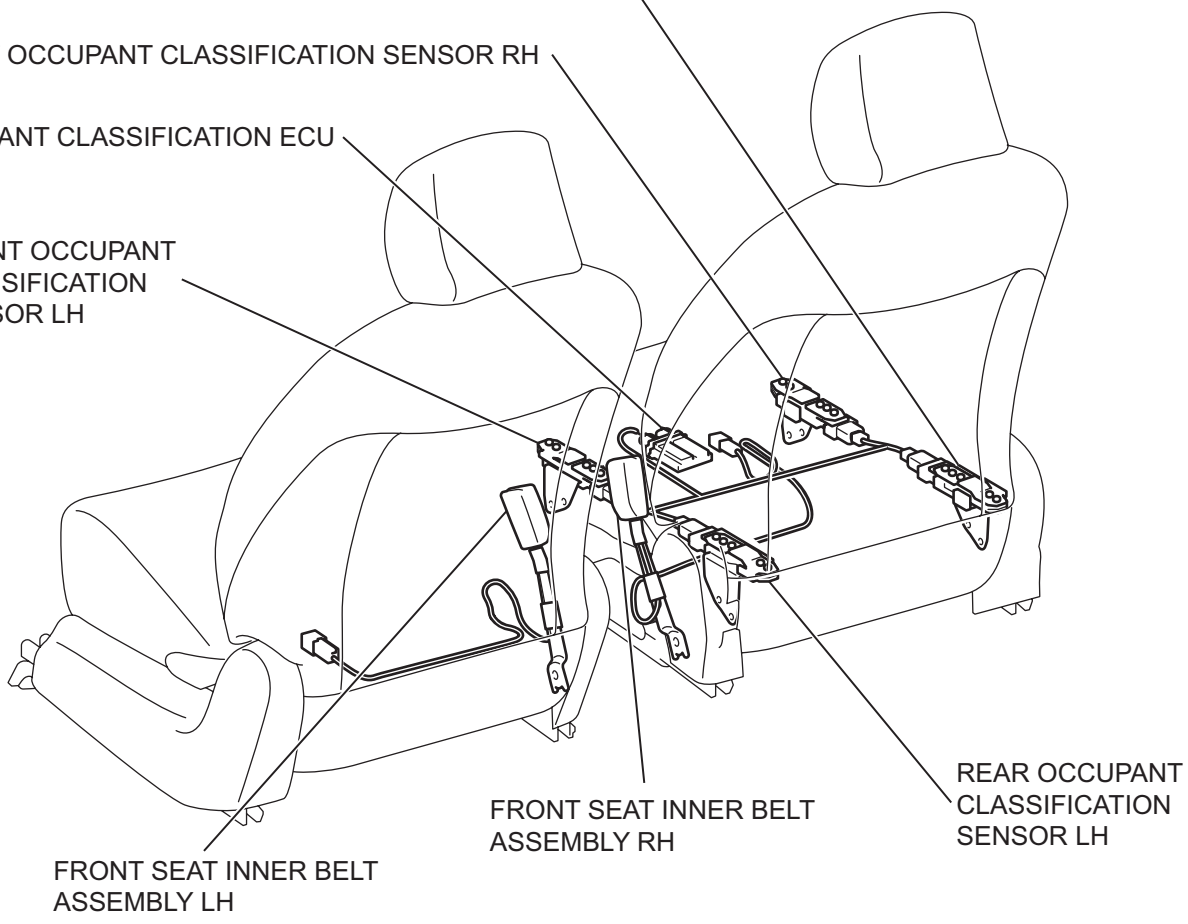
REAR OCCUPANT CLASSIFICATION SENSOR RH
FRONT OCCUPANT CLASSIFICATION SENSOR RH
OCCUPANT CLASSIFICATION ECU
FRONT OCCUPANT CLASSIFICATION SENSOR LH
FRONT SEAT INNER BELT ASSEMBLY LH
FRONT SEAT INNER BELT ASSEMBLY RH
REAR OCCUPANT CLASSIFICATION SENSOR LH
H
B118460E01

SYSTEM DIAGRAM

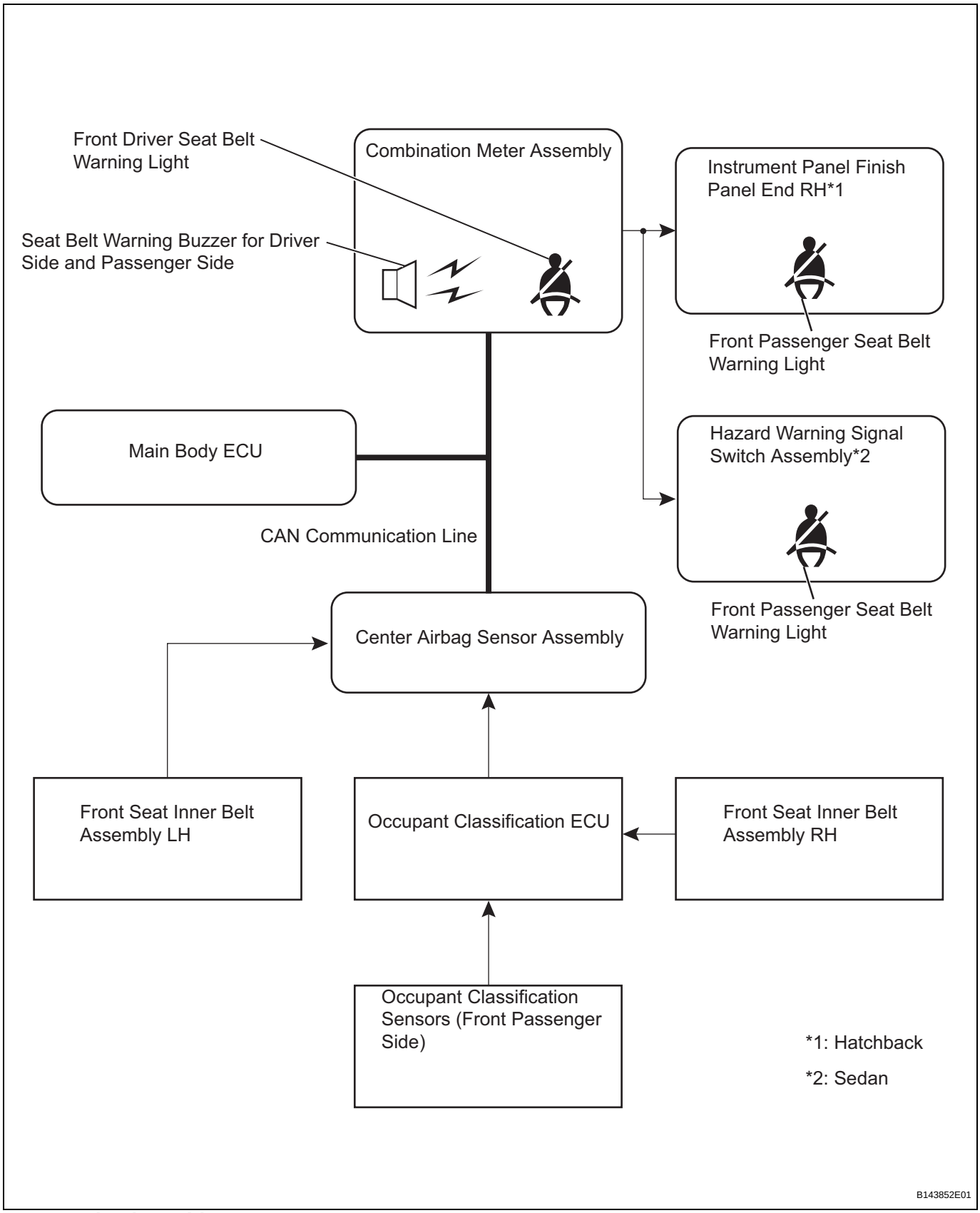

Communication table:

Sender	Receiver	Signal	Line
Center airbag sensor assembly	Main body ECU	Front seat inner belt switch signal (driver side)	CAN communication line

Sender	Receiver	Signal	Line
Center airbag sensor assembly	Main body ECU	Front seat inner belt switch signal (passenger side)	CAN communication line
Main body ECU	Combination meter assembly	Front seat inner belt switch signal (driver side)	CAN communication line
Main body ECU	Combination meter assembly	Front seat inner belt switch signal (passenger side)	CAN communication line

SYSTEM DESCRIPTION

1. SEAT BELT WARNING SYSTEM DESCRIPTION

If a seat belt is not fastened, this system flashes the seat belt warning light and sounds the seat belt warning buzzer as a reminder.

2. FUNCTIONS OF MAIN COMPONENTS

SB

Components	Function
Front Seat Inner Belt Assembly LH	Informs center airbag sensor assembly of front driver seat belt condition (fastened or unfastened)
Front Seat Inner Belt Assembly RH	Informs occupant classification ECU of front passenger seat belt condition (fastened or unfastened)
Occupant Classification ECU	Informs center airbag sensor assembly of front passenger seat condition (occupied or unoccupied) Informs center airbag sensor assembly of front passenger seat belt condition (fastened or unfastened)
Occupant Classification Sensor	Informs occupant classification ECU of front passenger seat condition (occupied or unoccupied)
Main Body ECU	Informs combination meter assembly of front driver and front passenger seat belt condition (fastened or unfastened) Informs combination meter assembly of front passenger seat condition (occupied or unoccupied)
Front Driver Seat Belt Warning Light	If front driver seat belt is unfastened and ignition switch is ON, combination meter assembly flashes seat belt warning light of combination meter assembly as reminder
Front Passenger Seat Belt Warning Light	Hatchback: When front passenger seat is occupied and ignition switch is ON, if passenger seat belt is unfastened, combination meter assembly flashes front passenger seat belt warning light of instrument panel finish panel end RH as reminder Sedan: When front passenger seat is occupied and ignition switch is ON, if passenger seat belt is unfastened, combination meter assembly flashes front passenger seat belt warning light of hazard warning signal switch assembly as reminder
Seat Belt Warning Buzzer for Front Driver Side and Front Passenger Side	If front driver or front passenger seat belt is unfastened and ignition switch is ON, combination meter assembly sounds buzzer as reminder

3. SYSTEM OPERATION

- When the ignition switch is ON, this system detects the condition of the seat belts based on signals from the front seat inner belt switches (for driver and front passenger seats) and the occupant classification sensor (front passenger side only).

HOW TO PROCEED WITH TROUBLESHOOTING

HINT:

- Use these procedures to troubleshoot the seat belt warning system.
- *: Use the intelligent tester.

SB

1	VEHICLE BROUGHT TO WORKSHOP

NEXT

2	INSPECT BATTERY VOLTAGE

Standard voltage:
11 to 14 V
If the voltage is below 11 V, recharge or replace the battery before proceeding.

NEXT

3	CHECK COMMUNICATION FUNCTION OF CAN COMMUNICATION SYSTEM*

(a) Use the intelligent tester to check if the CAN communication system is functioning normally.
Result:

Result	Proceed to
DTC is not output	A
DTC is output	B

B → GO TO CAN COMMUNICATION SYSTEM

A

4	PROBLEM SYMPTOMS TABLE

Result:

Result	Proceed to
Fault is not listed in problem symptoms table	A
Fault is listed in problem symptoms table	B

B → Go to step 6

A

5	OVERALL ANALYSIS AND TROUBLESHOOTING*

(a) DATA LIST / ACTIVE TEST (see page SB-20)

(b) TERMINALS OF ECU (see page SB-14)

NEXT

6	REPAIR OR REPLACE

NEXT

SB

7	CONFIRMATION TEST

NEXT

END

CUSTOMIZE PARAMETERS

HINT:
The following item can be customized.

Combination Meter Assembly

Display (Item)	Default	Function	Setting
SEAT BELT WARN	D/P ON	Changes seat belt warning buzzer setting	D/P ON / D ON / P ON / D/P OFF

NOTICE:

- **When the customer requests the modification of a function, first make sure that the function(s) can be customized.**
- **Record the current settings before customizing.**
- **When troubleshooting a function, first make sure that the function is not set to OFF.**

SB

PROBLEM SYMPTOMS TABLE

HINT:
Use the table below to help determine the causes of the problem symptom. The potential causes of the symptoms are listed in order of probability in the "Suspected Area" column of the table. Check each symptom by checking the suspected areas in the order they are listed. Replace parts as necessary.

Seat belt warning system

Symptom	Suspected area	See page
Front driver seat belt warning light does not operate	Front seat inner belt assembly LH (for Hatchback)	SB-40
	Front seat inner belt assembly LH (for Sedan)	SB-34
	Wire harness	SB-22
	Center airbag sensor assembly	SB-22
	Main body ECU	SB-22
	Combination meter assembly	SB-22
Front passenger seat belt warning light does not operate	Fuse	SB-24
	Front passenger seat belt warning light (for Hatchback)	SB-6
	Front passenger seat belt warning light (for Sedan)	SB-3
	Front seat inner belt assembly RH (for Hatchback)	SB-40
	Front seat inner belt assembly RH (for Sedan)	SB-34
	Occupant classification sensor	RS-226
	Wire harness	SB-24
	Occupant classification ECU	SB-24
	Center airbag sensor assembly	SB-24
	Main body ECU	SB-24
	Combination meter assembly	SB-24
Seat belt warning buzzer does not sound (Front driver and front passenger seat belt warning lights operate normally)	Combination meter assembly (for Hatchback)	ME-73
	Combination meter assembly (for Sedan)	ME-10

TERMINALS OF ECU

1. COMBINATION METER ASSEMBLY

Hatchback:

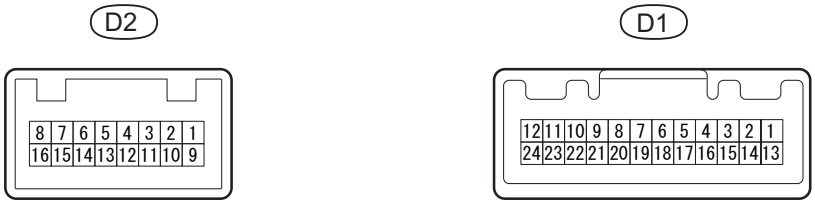

Sedan:



(a) Disconnect the D1 combination meter assembly connector.
(b) Measure the voltage and resistance of the wire harness side connector.

Standard

Symbols (Terminal No.)	Wiring Color	Terminal Description	Condition	Specified Condition
D1-1 - Body ground	B - Body ground	Ignition switch signal	Ignition switch OFF → ON	Below 1 V → 11 to 14 V
D1-2 - Body ground	L - Body ground	Battery	Always	11 to 14 V
D1-24 - Body ground	BR - Body ground	Ground	Always	Below 1 Ω

If the result is not as specified, there may be a malfunction in the wire harness.
(c) Reconnect the combination meter assembly connector.
(d) Measure the voltage of the wire harness side connector.

Standard voltage

Symbols (Terminal No.)	Wiring Color	Terminal Description	Condition	Specified Condition
D1-20 - Body ground	G - Body ground	CAN communication line	Ignition switch ON	Pulse generation (See waveform 1)
D1-21 - Body ground	W - Body ground	CAN communication line	Ignition switch ON	Pulse generation (See waveform 2)
D2-9*1 - Body ground	O - Body ground	Seat belt warning light signal (Front passenger side)	Ignition switch ON Front passenger seat is occupied and its seat belt is unfastened	Alternating between 11 to 14 V and below 1 V
D2-9*1 - Body ground	O - Body ground	Seat belt warning light signal (Front passenger side)	Ignition switch ON Front passenger seat is occupied and its seat belt is fastened	Below 1 V

Symbols (Terminal No.)	Wiring Color	Terminal Description	Condition	Specified Condition
D76-9*2 - Body ground	O - Body ground	Seat belt warning light signal (Front passenger side)	Ignition switch ON Front passenger seat is occupied and its seat belt is unfastened	Alternating between 11 to 14 V and below 1 V
D76-9*2 - Body ground	O - Body ground	Seat belt warning light signal (Front passenger side)	Ignition switch ON Front passenger seat is occupied and its seat belt is fastened	Below 1 V

SB

*1: Hatchback
*2: Sedan
If the result is not as specified, the combination meter may have a malfunction.

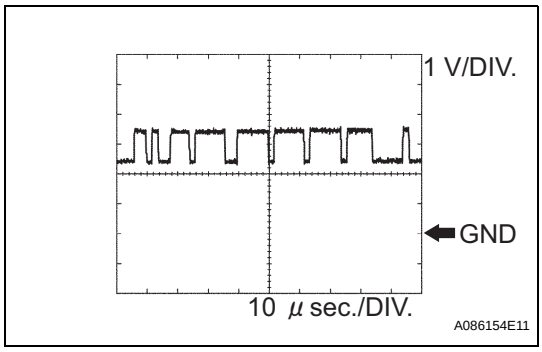

(e) Waveform 1 (Reference): Using an oscilloscope
CAN communication signal

Terminal Name	D1-21 (CANL) - D1-24 (ET)
Tester Range	1V/DIV, 10μs/DIV
Condition	Ignition switch ON

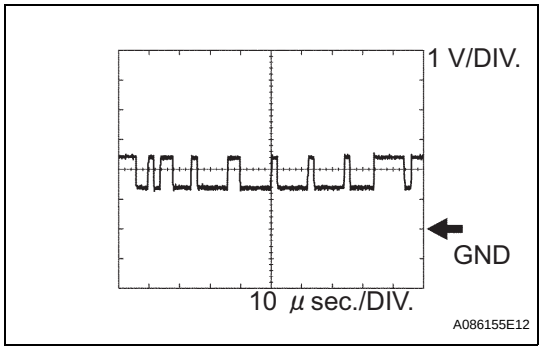

(f) Waveform 2 (Reference): Using an oscilloscope
CAN communication signal

Terminal Name	D1-21 (CANL) - D1-24 (ET)
Tester Range	1V/DIV, 10μs/DIV
Condition	Ignition switch ON

2. CENTER AIRBAG SENSOR ASSEMBLY

Center Airbag Sensor Assembly:

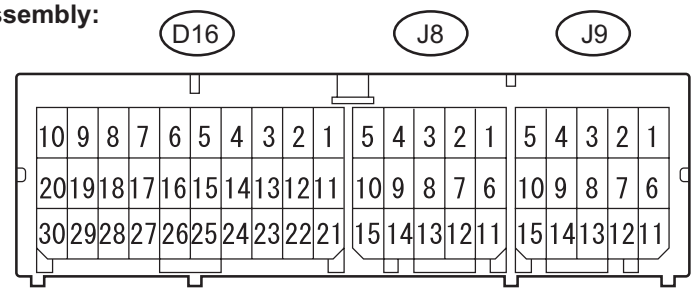

Terminal No.	Terminal Symbol	Destination
D16-13	CANH	CAN communication line
D16-21	IG2	IGN fuse
D16-22	CANL	CAN communication line
D16-25	E1	Ground
D16-26	E2	Ground
J8-11	DBE+	Front seat inner belt assembly LH
J8-12	DBE-	Front seat inner belt assembly LH
J9-12	FSP+	Occupant Classification ECU

Terminal No.	Terminal Symbol	Destination
J9-13	FSP-	Occupant Classification ECU

3. OCCUPANT CLASSIFICATION ECU

Occupant Classification ECU:

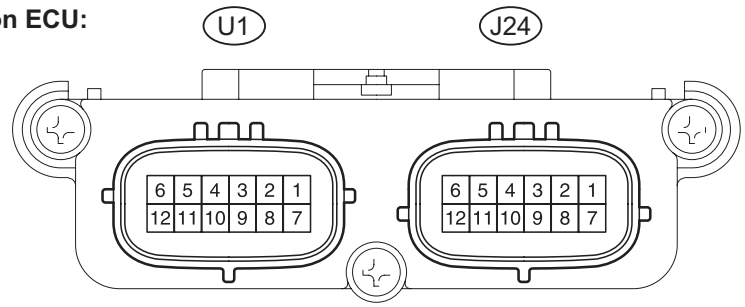

P H100909E04

(a) Disconnect the J24 occupant classification ECU connector.
(b) Measure the voltage and resistance of the wire harness side connector.

Symbols (Terminal No.)	Wiring Color	Terminal Description	Condition	Specified Condition
J24-7 (IG) - J24-3 (GND)	O - W-B	Power source (IG2 Fuse)	Ignition switch OFF	Below 1 V
J24-7 (IG) - J24-3 (GND)	O - W-B	Power source (IG2 Fuse)	Ignition switch ON	11 to 14 V
J24-1 (+B) - Body ground	V - Body ground	Power source (ECU-B Fuse)	Always	11 to 14 V
J24-3 (GND) - Body ground	W-B - Body ground	Ground	Always	Below 1 Ω

If the result is not as specified, there may be a malfunction in the wire harness.
(c) Reconnect the occupant classification ECU connector.
(d) Measure the voltage of the connector.

Symbols (Terminal No.)	Wiring Color	Terminal Description	Condition	Specified Condition
BSW (J24-9) - BGND (J24-5)	O - P	Passenger side buckle switch line	Buckle switch ON Buckle switch OFF	Pulse generation
FSR+ (J24-8) - FSR- (J24-4)	GR - Y	Center airbag sensor assembly communication line	Ignition switch ON	Pulse generation

If the result is not as specified, the combination meter may have a malfunction.

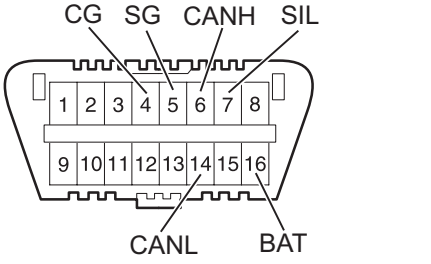

T H100769E16

DIAGNOSIS SYSTEM

1. CHECK DLC3

(a) The ECU uses ISO 15765-4 for communication. The terminal arrangement of the DLC3 complies with SAE J1962 and matches the ISO 15765-4 format.

Symbols (Terminal No.)	Terminal Description	Condition	Specified Condition
SIL (7) - SG (5)	Bus " +" line	During transmission	Pulse generation
CG (4) - Body ground	Chassis ground	Always	Below 1 Ω

Symbols (Terminal No.)	Terminal Description	Condition	Specified Condition
SG (5) - Body ground	Signal ground	Always	Below 1 Ω
BAT (16) - Body ground	Battery positive	Always	11 to 14 V
CANH (6) - CANL (14)	CAN bus line	Ignition switch OFF*	54 to 69 Ω
CANH (6) - CG (4)	HIGH-level CAN bus line	Ignition switch OFF*	200 Ω or higher
CANL (14) - CG (4)	LOW-level CAN bus line	Ignition switch OFF*	200 Ω or higher
CANH (6) - BAT (16)	HIGH-level CAN bus line	Ignition switch OFF*	6 kΩ or higher
CANL (14) - BAT (16)	LOW-level CAN bus line	Ignition switch OFF*	6 kΩ or higher

NOTICE:
***: Before measuring the resistance, leave the vehicle as is for at least 1 minute and do not operate the ignition switch, any other switches or the doors.**

If the result is not as specified, the DLC3 may have a malfunction. Repair or replace the harness and connector.

HINT:

Connect the cable of the intelligent tester to the CAN VIM, connect the CAN VIM to the DLC3, turn the ignition switch ON and attempt to use the tester. If the display indicates that a communication error has occurred, there is a problem either with the vehicle or with the tester.

- If communication is normal when the tester is connected to another vehicle, inspect the DLC3 of the original vehicle.
- If communication is still not possible when the tester is connected to another vehicle, the problem is probably in the tester itself. Consult the Service Department listed in the tester's instruction manual.

Hatchback:

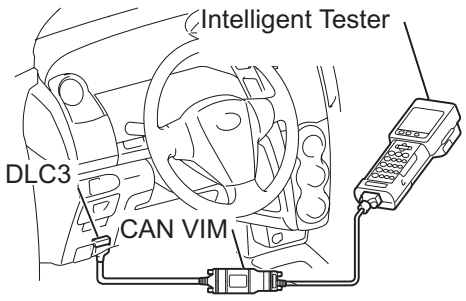

Sedan:

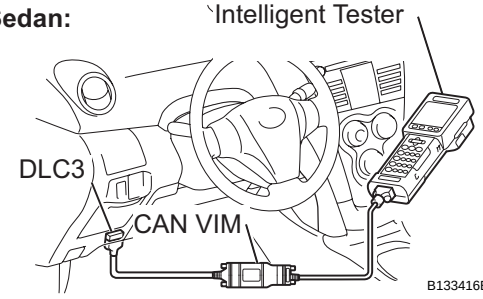

2. INSPECT BATTERY VOLTAGE

Standard voltage:

11 to 14 V

If the voltage is below 11 V, recharge or replace the battery before proceeding.

3. INSPECT FRONT DRIVER SEAT BELT WARNING LIGHT

(a) Turn the ignition switch ON.

(b) When the driver seat belt is not fastened, check that the combination meter assembly driver seat belt warning light blinks.

(c) When the seat belt is fastened, check that the combination meter assembly driver side seat belt warning light turns off.

4. INSPECT FRONT PASSENGER SEAT BELT WARNING LIGHT

(a) Turn the ignition switch ON.

(b) When the front passenger seat is occupied, but the seat belt is not fastened, check that the front passenger seat belt warning light on the instrument panel finish panel end RH*1 or hazard warning signal switch assembly*2 blinks.
*1: Hatchback
*2: Sedan

(c) When the front passenger seat belt is fastened, check that the front passenger seat belt warning light turns off.

5. INSPECT SEAT BELT WARNING BUZZER USING DRIVER SEAT BELT

(a) Turn the ignition switch ON.

(b) When the driver seat belt is not fastened within 1.8 seconds of the ignition switch being turned ON, check that the seat belt warning buzzer sounds at 1.2 second intervals for 6 seconds.

(c) When the driver seat belt is not fastened within 13.8 seconds of the ignition switch being turned ON and the vehicle speed reaches 12.4 mph (20 km/h) or more, check that the buzzer sounds at 1.2 second intervals for 9.6 seconds.

(d) After the buzzer has sounded for 9.6 seconds, check that the buzzer sounds at 0.4 second intervals for a further 20 seconds.

(e) When 29.6 seconds have elapsed since the buzzer started sounding in step (c) above, check that the buzzer stops sounding.

(f) After the buzzer has stopped sounding, turn the ignition switch OFF and then start the engine again. With the driver seat belt unfastened, drive the vehicle at 12.4 mph (20 km/h) or more. Check that the buzzer sounds.

(g) After the buzzer has stopped sounding, fasten the driver seat belt, drive the vehicle at 12.4 mph (20 km/h) or more, and then unfasten the seat belt. Check that the buzzer sounds.

(h) After the buzzer has stopped sounding, move the shift lever to R. Then move the shift lever to D (for A/T only). With the driver seat belt unfastened, drive the vehicle at 12.4 mph (20km/h) or more. Check that the buzzer sounds.

6. INSPECT SEAT BELT WARNING BUZZER USING FRONT PASSENGER SEAT BELT

HINT:
If the following inspection is conducted by one person, since the front passenger seat belt warning buzzer function uses signals from the occupant classification sensors, place an object with a weight of 36 kg (79.37 lb) or more on the front passenger seat.

(a) Turn the ignition switch ON.

(b) When the front passenger seat belt is not fastened within 1.8 seconds of the ignition switch being turned ON, check that the seat belt warning buzzer sounds at 1.2 second intervals for 6 seconds.

(c) When the front passenger seat belt is not fastened within 13.8 seconds of the ignition switch being turned ON and the vehicle speed reaches 12.4 mph (20 km/h) or more, check that the buzzer sounds at 1.2 second intervals for 9.6 seconds.

(d) After the buzzer has sounded for 9.6 seconds, check that the buzzer sounds at 0.4 second intervals for a further 20 seconds.

(e) When 29.6 seconds have elapsed since the buzzer started sounding in step (c) above, check that the buzzer stops sounding.

(f) After the buzzer has stopped sounding, turn the ignition switch OFF and then start the engine again. With the front passenger seat belt unfastened, drive the vehicle at 12.4 mph (20 km/h) or more. Check that the buzzer sounds.

(g) After the buzzer has stopped sounding, fasten the front passenger seat belt, drive the vehicle at 12.4 mph (20 km/h) or more, and then unfasten the front passenger seat belt. Check that the buzzer sounds.

(h) After the buzzer has stopped sounding, move the shift lever to R. Then move the shift lever to D. With the front passenger seat belt unfastened, drive the vehicle at 12.4 mph (20km/h) or more. Check that the buzzer sounds.

DATA LIST / ACTIVE TEST

1. READ DATA LIST

HINT:

By accessing the DATA LIST using the intelligent tester, values of the switches and sensors can be read without removing any parts. Reading the DATA LIST is the first step of troubleshooting and is one method of shortening labor time.

(a) Connect the intelligent tester with the CAN VIM to the DLC3.

(b) Turn the ignition switch ON and turn the tester ON.

(c) Enter the DATA LIST by following the prompts displayed on the tester screen.

Center Airbag Sensor Assembly

Item	Measurement Item/ Range (Display)	Normal Condition	Diagnostic Note
D BUCKLE SW	Buckle switch (Driver side)/ UNSET: Seat belt not fastened SET: Seat belt fastened NG: Data not determined	UNSET/SET	-
P BUCKLE SW	Buckle switch (Passenger side)/ UNSET: Seat belt not fastened SET: Seat belt fastened NG: Data not determined	UNSET/SET	-

Occupant Classification ECU

Item	Measurement Item/ Range (Display)	Normal Condition	Diagnostic Note
P BUCKLE SW	Buckle switch (Front passenger side)/ UNSET: Front passenger side seat belt is unfastened SET: Front passenger side seat belt is fastened NG: Front passenger side seat belt is malfunctioning	UNSET/SET	-
PASSENGER CLASS	Front passenger classification/ AF05: Adult (36 to 54 kg (79.37 to 119.05 lb)) is seated AM50: Adult more than 54 kg (119.05 lb) is seated CHILD: Child (less than 36 kg (79.37 lb)) is seated CRS: Child restraint system (less than 7 kg (15.43 lb)) and front passenger side buckle switch is ON, then 7 to 36 kg (15.43 to 79.37 lb) is set OFF: Vacant	AF05/AM50/CHILD/CRS/OFF	-

2. PERFORM ACTIVE TEST

HINT:

Performing the intelligent tester's ACTIVE TEST allows relays, VSV, actuators and other items to be operated without removing any parts. Performing the ACTIVE TEST early in troubleshooting is one way to save time. The DATA LIST can be displayed during the ACTIVE TEST.

(a) Connect the intelligent tester with the CAN VIM to the DLC3.

(b) Turn the ignition switch ON and turn the tester ON.
(c) Enter the ACTIVE TEST by following the prompts displayed on the tester screen.

Combination Meter Assembly:

Item	Test Details	Diagnostic Note
D-BELT REMIND	Front driver seat belt warning light / OFF or ON	-
P-BELT REMIND	Front passenger seat belt warning light / OFF or ON	-

Driver Side Seat Belt Warning Light does not Operate

DESCRIPTION

When the ignition switch is ON, the center airbag sensor assembly communicates the status of the front seat inner belt assembly LH to the main body ECU using the CAN communication line. The main body ECU receives signals from the center airbag sensor assembly and transmits them to the combination meter assembly. When the seat belt is unfastened, the combination meter assembly flashes the driver seat belt warning light in the combination meter assembly. When the seat belt is fastened, the combination meter assembly stops flashing the front driver seat belt warning light.

WIRING DIAGRAM

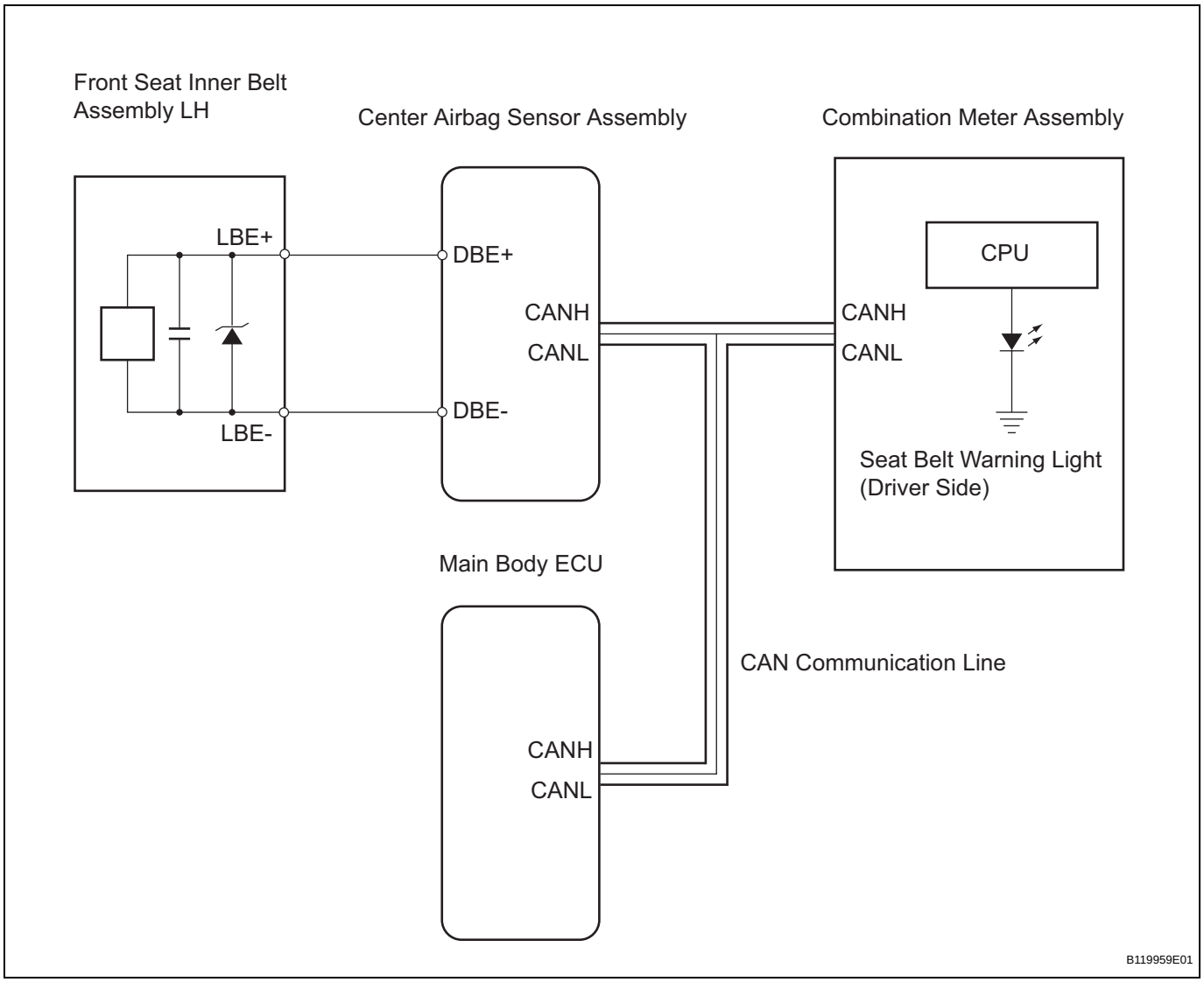

INSPECTION PROCEDURE

1	CHECK SUPPLEMENTAL RESTRAINT SYSTEM

(a) Connect the intelligent tester with the CAN VIM to the DLC3.
(b) Turn the ignition switch ON and turn the tester ON.

(c) Enter the following menus: DIAGNOSIS / SRS AIRBAG/ DTC INFO

Result

Result	Proceed to
No SRS DTCs are output	A
SRS DTCs are output	B

B → **GO TO SUPPLEMENTAL RESTRAINT SYSTEM**

A

2 **PERFORM ACTIVE TEST BY INTELLIGENT TESTER (D-BELT REMIND)**

(a) Connect the intelligent tester with the CAN VIM to the DLC3.
(b) Turn the ignition switch ON and turn the tester ON.
(c) Enter the following menus: DIAGNOSIS / METER / ACTIVE TEST

Combination Meter Assembly

Item	Test Details	Diagnostic Note
D-BELT REMIND	Front driver seat belt warning light / OFF or ON	-

OK:

Front driver seat belt warning light comes on.

OK → **REPLACE MAIN BODY ECU**

NG

REPLACE COMBINATION METER ASSEMBLY

Front Passenger Side Seat Belt Warning Light Malfunction

DESCRIPTION

When the ignition switch is ON and the front passenger seat is occupied, the center airbag sensor assembly communicates the status of the front seat inner belt assembly RH to the main body ECU using the CAN communication line. The main body ECU receives signals from the center airbag sensor assembly and transmits them to the combination meter assembly. When the seat belt is unfastened, the combination meter assembly flashes the front passenger seat belt warning light on the instrument panel finish panel end RH*1 or hazard warning signal switch assembly*2. When the seat belt is fastened, the combination meter assembly stops flashing the front passenger seat belt warning light on the instrument panel finish panel end RH*1 or hazard warning signal switch assembly*2.

HINT:

*1: Hatchback

*2: Sedan

SB

WIRING DIAGRAM

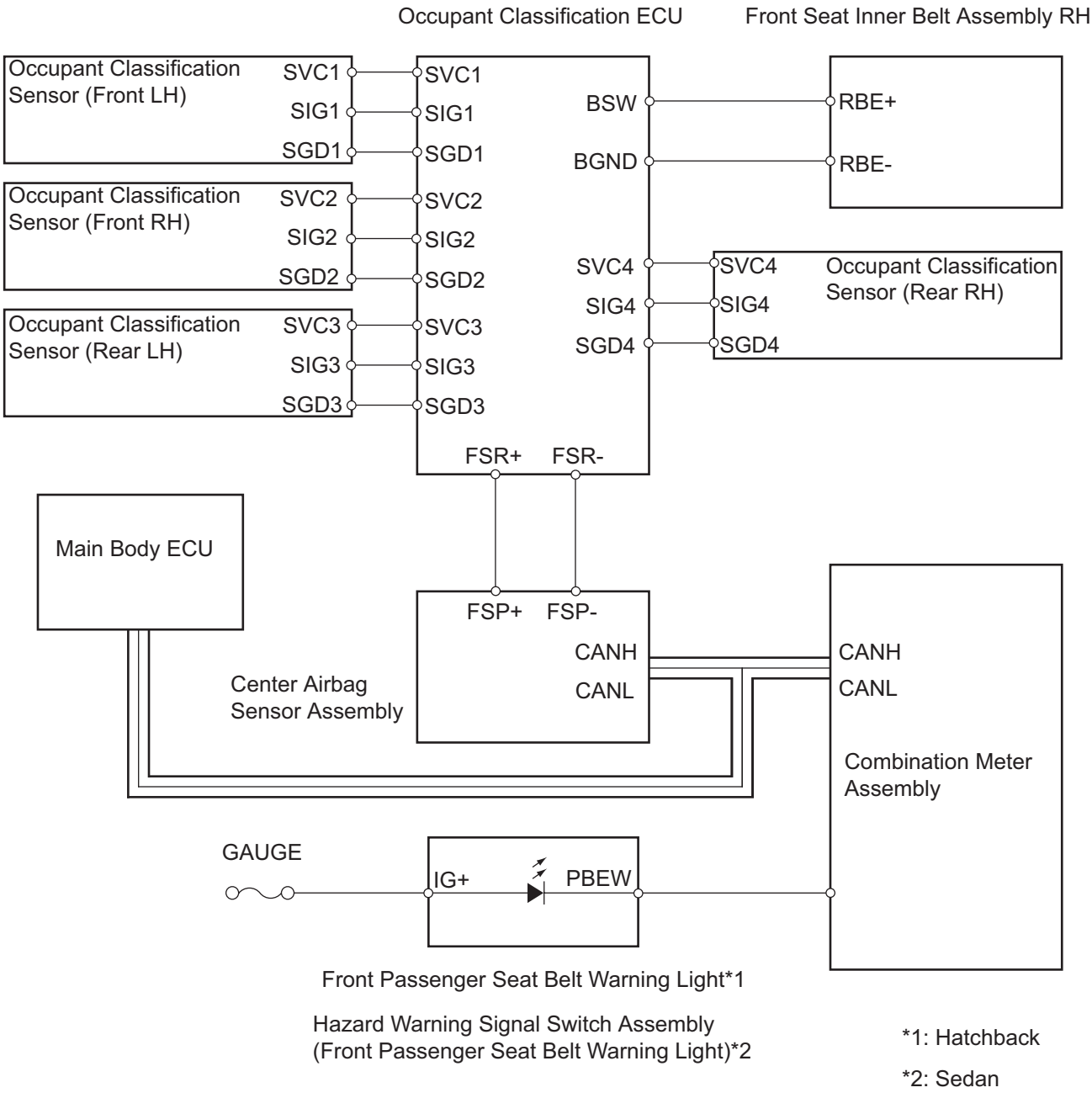

INSPECTION PROCEDURE

1	CHECK SUPPLEMENTAL RESTRAINT SYSTEM

(a) Connect the intelligent tester with the CAN VIM to the DLC3.
(b) Turn the ignition switch ON and turn the tester ON.

(c) Enter the following menus: DIAGNOSIS / SRS AIRBAG/ DTC INFO

Result

Result	Proceed to
No DTCs are output	A
DTCs are output	B

B → **GO TO SUPPLEMENTAL RESTRAINT SYSTEM**

A

2 CHECK OCCUPANT CLASSIFICATION SYSTEM

(a) Connect the intelligent tester with the CAN VIM to the DLC3.
(b) Turn the ignition switch ON and turn the tester ON.
(c) Enter the following menus: DIAGNOSIS / OCCUPANT DETECT / DTC INFO

Result

Result	Proceed to
No DTCs are output	A
DTCs are output	B

B → **GO TO OCCUPANT CLASSIFICATION SYSTEM**

A

3 READ VALUE OF INTELLIGENT TESTER (P BUCKLE SW)

(a) Connect the intelligent tester with the CAN VIM to the DLC3.
(b) Turn the ignition switch ON and turn the tester ON.
(c) Enter the following menus: DIAGNOSIS / SRS AIRBAG/ DATA LIST

Center Airbag Sensor Assembly

Item	Measurement Item / Display (Range)	Normal Condition	Diagnostic Note
P BUCKLE SW	Buckle switch (Front passenger side)/ UNSET: Front passenger side seat belt is unfastened SET: Front passenger side seat belt is fastened NG: Front passenger side seat belt is malfunctioning	UNSET/SET	-

OK:

Front seat inner belt assembly RH operates normally.

OK → **Go to step 7**

NG

4 CHECK FRONT SEAT INNER BELT ASSEMBLY RH

Component Side:

Front Seat Inner Belt Assembly RH

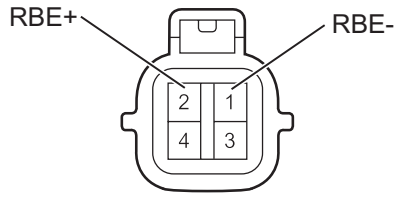

H

B118133E01

(a) Disconnect the J11 front seat inner belt assembly RH connector.
(b) Measure the resistance.
Standard resistance

Tester Connection	Condition	Specified Condition
1 (RBE-) - 2 (RBE+)	Tongue plate fastened	10 kΩ or higher
1 (RBE-) - 2 (RBE+)	Tongue plate unfastened	Below 1 Ω

(c) Reconnect the front seat inner belt assembly RH connector.

NG → **REPLACE FRONT SEAT INNER BELT ASSEMBLY RH**

OK

5 CHECK HARNESS AND CONNECTOR (ECU - FRONT SEAT INNER BELT ASSEMBLY RH)

Wire Harness Side:

Front Seat Inner Belt Assembly RH Connector

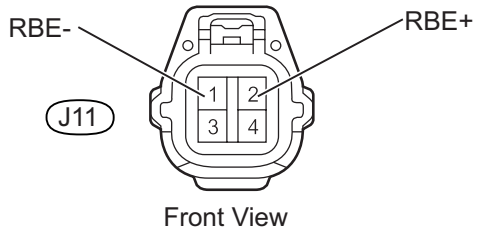

Front View

Occupant Classification ECU Connector

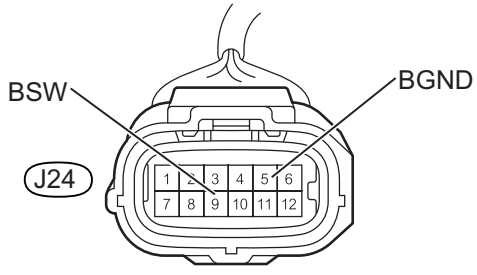

Front View

B148427E01

(a) Disconnect the J24 occupant classification ECU connector.
(b) Disconnect the J11 front seat inner belt assembly RH connector.
(c) Measure the resistance.
Standard resistance

Tester Connection	Specified Condition
J24-9 (BSW) - J11-2 (RBE+)	Below 1 Ω
J24-9 (BSW) or J11-2 (RBE+) - Body ground	10 kΩ or higher
J24-5 (BGND) - J11-1 (RBE-)	Below 1 Ω
J24-5 (BGND) or J11-1 (RBE-) - Body ground	10 kΩ or higher

(d) Reconnect the occupant classification ECU connector.
(e) Reconnect the front seat inner belt assembly connector.

NG → **REPAIR OR REPLACE HARNESS OR CONNECTOR**

OK

6	CHECK HARNESS AND CONNECTOR (CENTER AIRBAG SENSOR ASSEMBLY - OCCUPANT CLASSIFICATION ECU)

Wire Harness Side:

Center Airbag Sensor Assembly Connector

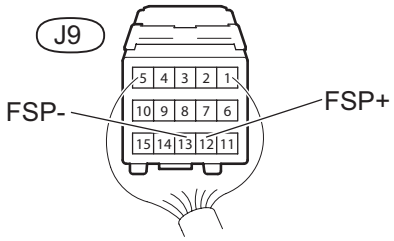

Occupant Classification ECU Connector

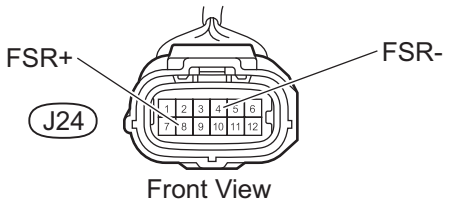

B148428E01

(a) Disconnect the J9 center airbag sensor assembly connector.
(b) Disconnect the J24 occupant classification ECU connector.
(c) Measure the resistance.
Standard resistance

Tester Connection	Specified Condition
J9-12 (FSP+) - J24-8 (FSR+)	Below 1 Ω
J9-12 (FSP+) or J24-8 (FSR+) - Body ground	10 kΩ or higher
J9-13 (FSP-) - J24-4 (FSR-)	Below 1 Ω
J9-13 (FSP-) or J24-4 (FSR-) - Body ground	10 kΩ or higher

(d) Reconnect the center airbag sensor assembly connector.
(e) Reconnect the occupant classification ECU connector.

NG → **REPAIR OR REPLACE HARNESS OR CONNECTOR**

OK

REPLACE OCCUPANT CLASSIFICATION ECU

7	PERFORM ACTIVE TEST BY INTELLIGENT TESTER (P-BELT REMIND)

(a) Connect the intelligent tester with the CAN VIM to the DLC3.
(b) Turn the ignition switch ON and turn the tester ON.
(c) Enter the following menus: DIAGNOSIS / METER / ACTIVE TEST

Combination Meter Assembly

Item	Test Details	Diagnostic Note
P-BELT REMIND	Front passenger seat belt warning light / OFF or ON	-

OK:
Front passenger seat belt warning light comes on.

NG → **REPLACE COMBINATION METER ASSEMBLY**

OK

SB

8	INSPECT FUSE (GAUGE)

(a) Remove the GAUGE fuse from the main body ECU.
(b) Measure the resistance.
Standard resistance:
Below 1 Ω
(c) Reinstall the GAUGE fuse.

NG → **REPLACE FUSE**

OK

9	INSPECT FRONT PASSENGER SEAT BELT WARNING LIGHT

Component Side:

Front Passenger Seat Belt Warning Light

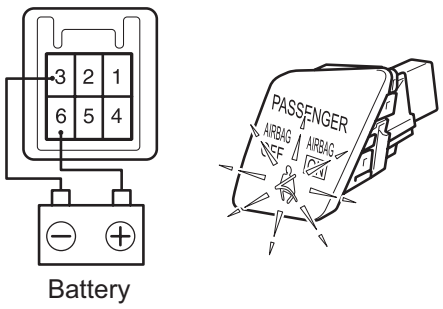

B128414E02

(a) Hatchback:
(1) Remove the front passenger seat belt warning light.
(2) Apply battery voltage to the terminals and check that the indicator illuminates.
Standard

Tester Connection	Specified Condition
Positive battery - Terminal 6 (IG+) Negative battery - Terminal 3 (PBEW)	Illuminates

(3) Reinstall the front passenger seat belt warning light.

Component Side:

Hazard Warning Signal Switch Assembly
(Front Passenger Seat Belt Warning Light)

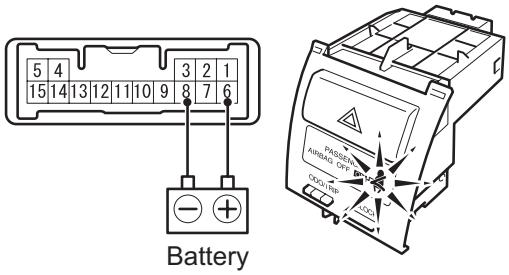

B143890E01

(b) Sedan:
(1) Remove the hazard warning signal switch assembly.
(2) Apply battery voltage to the terminals and check that the indicator illuminates.
Standard

Tester Connection	Specified Condition
Positive battery - Terminal 6 (IG+) Negative battery - Terminal 8 (PBEW)	Illuminates

(3) Reinstall the hazard warning signal switch assembly.

NG → **REPLACE FRONT PASSENGER SEAT BELT WARNING LIGHT**

OK

10	CHECK HARNESS AND CONNECTOR (FUSE - FRONT PASSENGER SEAT BELT WARNING LIGHT)

Wire Harness Side:

Main Body ECU Connector

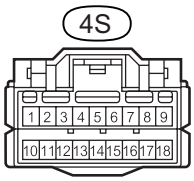

Front View

Front Passenger Seat Belt Warning Light Connector

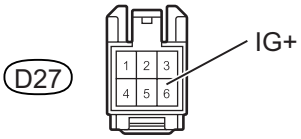

Front View

B143886E01

(a) Hatchback:
(1) Disconnect the D27 front passenger seat belt warning light connector.
(2) Disconnect the 4S main body ECU connector.
(3) Measure the resistance.
Standard resistance

Tester Connection	Specified Condition
4S-15 - D27-6 (IG+)	Below 1 Ω
4S-15 or D27-6 (IG+) - Body ground	10 kΩ or higher

(4) Reconnect the front passenger seat belt warning light connector.
(5) Reconnect the main body ECU connector.

Wire Harness Side:

Main Body ECU Connector

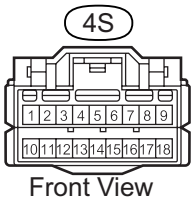

Front View

Hazard Warning Signal Switch Assembly Connector (Front Passenger Seat Belt Warning Light)

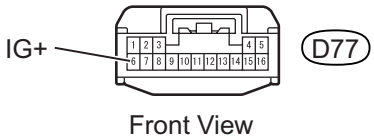

Front View

B143887E01

(b) Sedan:
(1) Disconnect the D77 hazard warning signal switch assembly connector.
(2) Disconnect the 4S main body ECU connector.
(3) Measure the resistance.
Standard resistance

Tester Connection	Specified Condition
4S-15 - D77-6 (IG+)	Below 1 Ω
4S-15 or D77-6 (IG+) - Body ground	10 kΩ or higher

(4) Reconnect the hazard warning signal switch assembly connector.
(5) Reconnect the main body ECU connector.

NG → **REPAIR OR REPLACE HARNESS OR CONNECTOR**

OK

11	**CHECK HARNESS AND CONNECTOR (SEAT BELT WARNING LIGHT - COMBINATION METER ASSEMBLY)**

Wire Harness Side:

Front Passenger Seat Belt Warning Light Connector

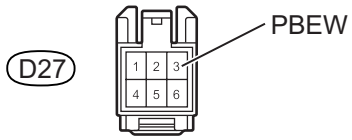

Front View

Combination Meter Assembly Connector

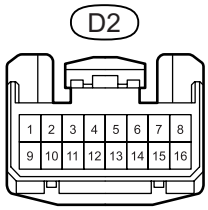

Front View

B147604E01

(a) Hatchback:
(1) Disconnect the D2 combination meter assembly connector.
(2) Disconnect the D27 front passenger seat belt warning light connector.
(3) Measure the resistance.
Standard resistance

Tester Connection	Specified Condition
D2-9 - D27-3 (PBEW)	Below 1 Ω
D2-9 or D27-3 (PBEW) - Body ground	10 kΩ or higher

(4) Reconnect the combination meter assembly connector.
(5) Reconnect the front passenger seat belt warning light connector.

Wire Harness Side:

Hazard Warning Signal Switch Assembly Connector (Front Passenger Seat Belt Warning Light)

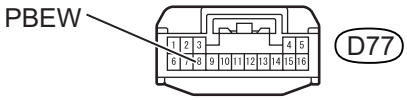

Front View

Combination Meter Assembly Connector

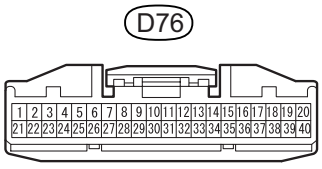

Front View

B147605E01

(b) Sedan:
(1) Disconnect the D76 combination meter assembly connector.
(2) Disconnect the D77 hazard warning signal switch assembly connector.
(3) Measure the resistance.
Standard resistance

Tester Connection	Specified Condition
D76-9 - D77-8 (PBEW)	Below 1 Ω
D76-9 or D77-8 (PBEW) - Body ground	10 kΩ or higher

(4) Reconnect the combination meter assembly connector.
(5) Reconnect the hazard warning signal switch assembly connector.

NG → **REPAIR OR REPLACE HARNESS OR CONNECTOR**

OK

REPLACE MAIN BODY ECU

FRONT SEAT INNER BELT ASSEMBLY (for Sedan)

COMPONENTS

SB

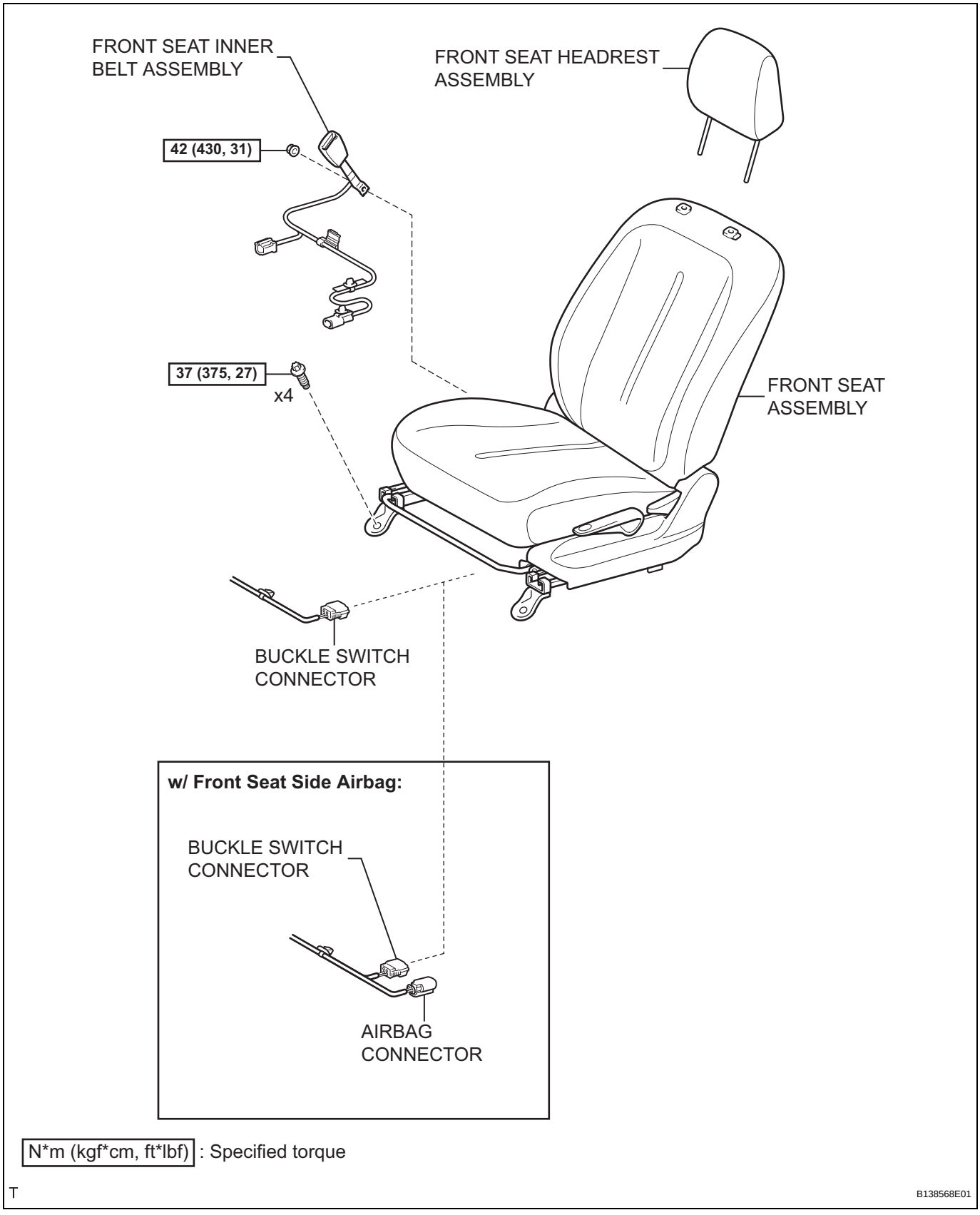

N*m (kgf*cm, ft*lbf) : Specified torque

T

B138568E01

REMOVAL

CAUTION:
Some of these service operations affect the SRS airbag system. Read the precautionary notices concerning the SRS airbag system before servicing (w/ Front Seat Side Airbag) (See page RS-1).
NOTICE:
Always use "Torx" socket wrench E10 when removing the front seat.
HINT:
The procedure described below is for the driver side. Use the same procedure for both the front passenger and driver sides, unless otherwise specified.

1. **DISCONNECT CABLE FROM NEGATIVE BATTERY TERMINAL**
   CAUTION:
   Wait for at least 90 seconds after disconnecting the cable to prevent the airbag from working (w/ Front Seat Side Airbag).
2. **REMOVE FRONT SEAT HEADREST ASSEMBLY (See page SE-5)**
3. **REMOVE FRONT SEAT ASSEMBLY (See page SE-5)**
4. **REMOVE FRONT SEAT INNER BELT ASSEMBLY**
   (a) for Driver Side:
      (1) Disconnect the seat position sensor connector.
      (2) Using a clip remover, remove the connector.
      (3) Using a clip remover, remove the clamp.
      (4) Remove the clamp.

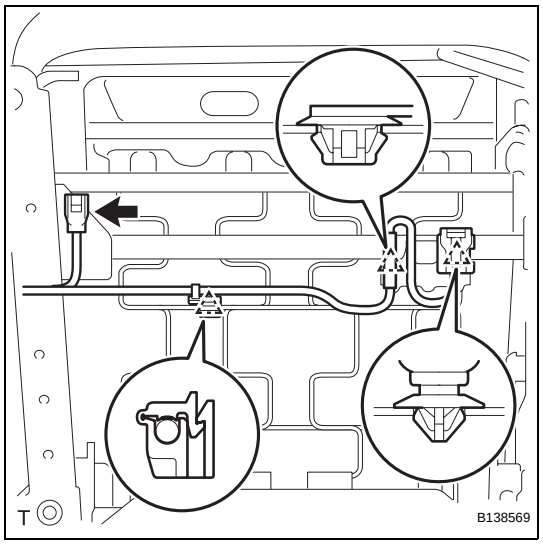

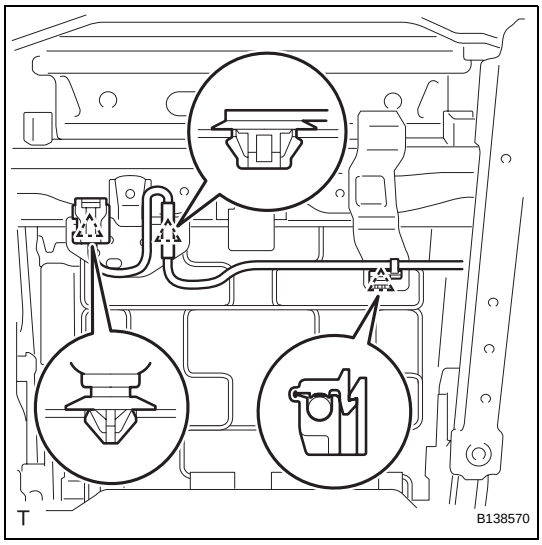

(b) for Front Passenger Seat:
  (1) Using a clip remover, remove the connector.
  (2) Using a clip remover, remove the clamp.
  (3) Remove the clamp.

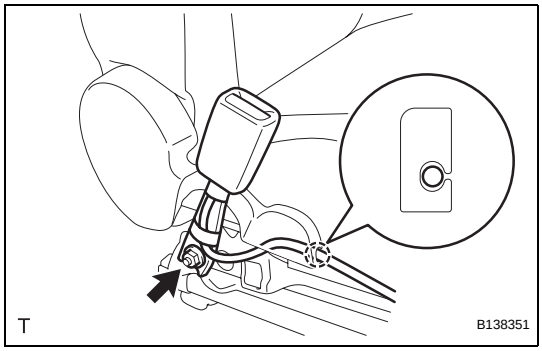

(c) Remove the wire harness from the claw of the front seat cushion inner shield.
(d) Remove the nut and the front seat inner belt.

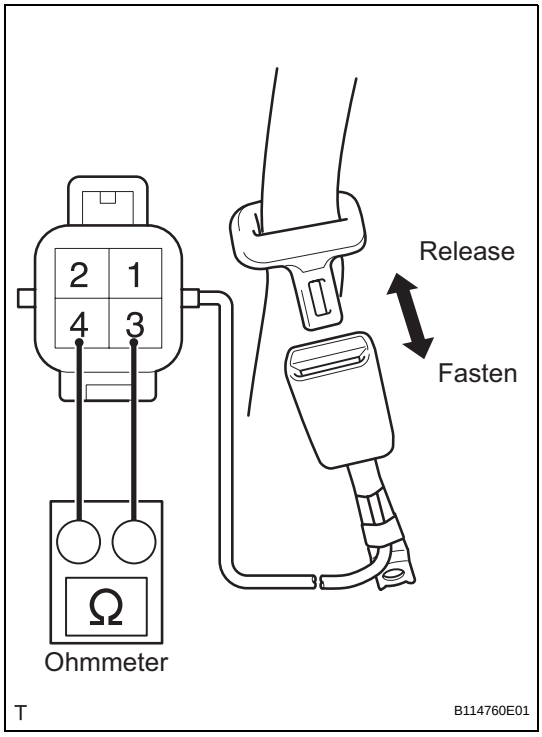

INSPECTION

1. INSPECT FRONT SEAT INNER BELT ASSEMBLY

(a) for Driver Side:
  (1) Check the resistance.
    1. Using an ohmmeter, measure the resistance between the terminals.

Standard resistance

Tester Connection	Condition	Specified Condition
3 - 4	Tongue plate fastened	10 kΩ or higher
	Tongue plate released	Below 1 Ω

If the result is not as specified, replace the front seat inner belt.

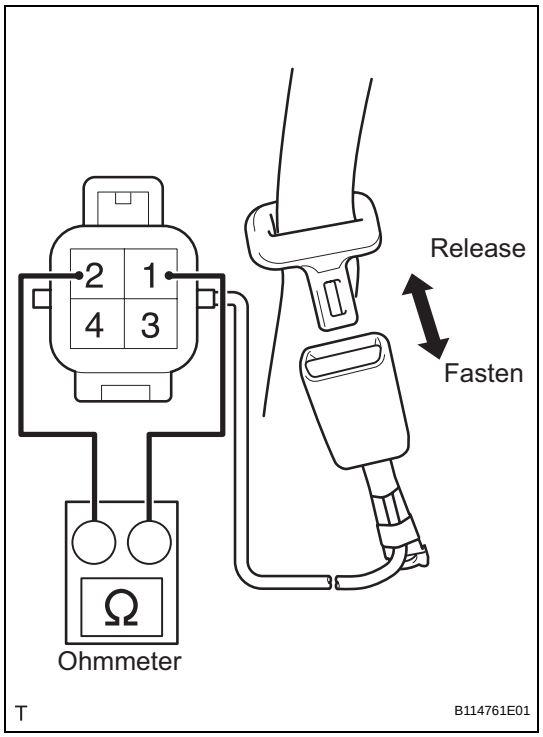

(b) for Front Passenger Side:

(1) Check the resistance.

1. Using an ohmmeter, measure the resistance between the terminals.

Standard resistance

Tester Connection	Condition	Specified Condition
1 - 2	Tongue plate fastened	10 kΩ or higher
	Tongue plate released	Below 1 Ω

If the result is not as specified, replace the front seat inner belt.

SB

SB

INSTALLATION

CAUTION:
Some of these service operations affect the SRS airbag system. Read the precautionary concerning the SRS airbag system before servicing (w/ Front Seat Side Airbag) (See page RS-1).
NOTICE:
Always use "Torx" socket wrench E10 when installing the front seat.
HINT:
The procedure described below is for the driver side. Use the same procedure for both the front passenger and drive sides, unless otherwise specified.

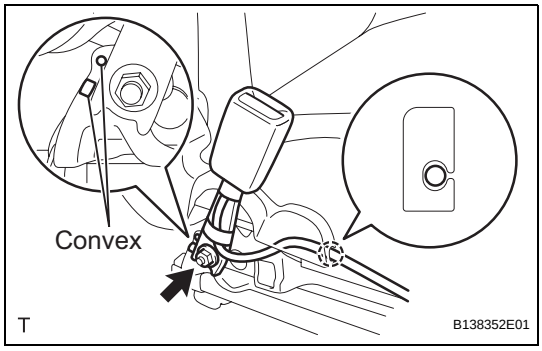

1. INSTALL FRONT SEAT INNER BELT ASSEMBLY

(a) Install the front seat inner belt with the nut.
Torque: 42 N*m (430 kgf*cm, 31 ft.*lbf)
NOTICE:
Do not place the front seat inner belt over the convex areas of the front seat adjuster frame.

(b) Install the wire harness into the claw of the front seat cushion inner shield.

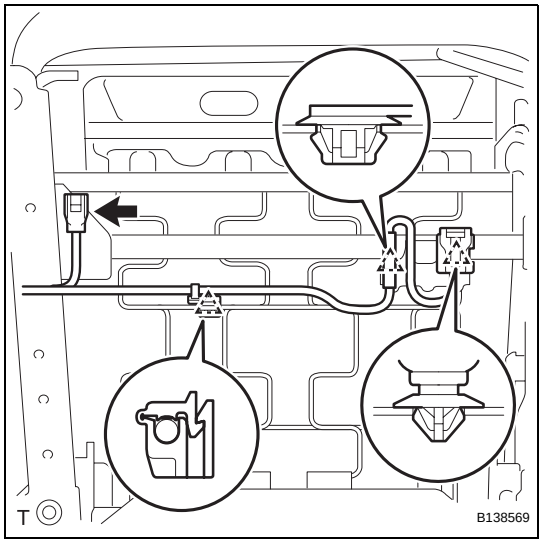

(c) for Driver Side:
(1) Install the 2 clamps.
(2) Install the connector.
(3) Connect the seat position sensor connector.

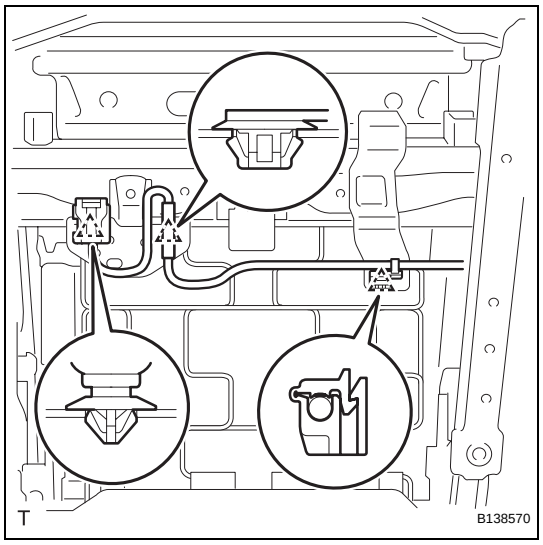

(d) for Front Passenger Side:
  (1) Install the 2 clamps.
  (2) Install the connector.

2. **INSTALL FRONT SEAT ASSEMBLY (See page SE-20)**

3. **INSTALL FRONT SEAT HEADREST ASSEMBLY (See page SE-21)**

4. **CONNECT CABLE TO NEGATIVE BATTERY TERMINAL**
   Torque: 5.4 N*m (55 kgf*cm, 48 in.*lbf)

5. **INSPECT SRS WARNING LIGHT (w/ Front Seat Side Airbag)**
   (See page RS-31)

SB

FRONT SEAT INNER BELT ASSEMBLY (for Hatchback)

COMPONENTS

for Driver Side:

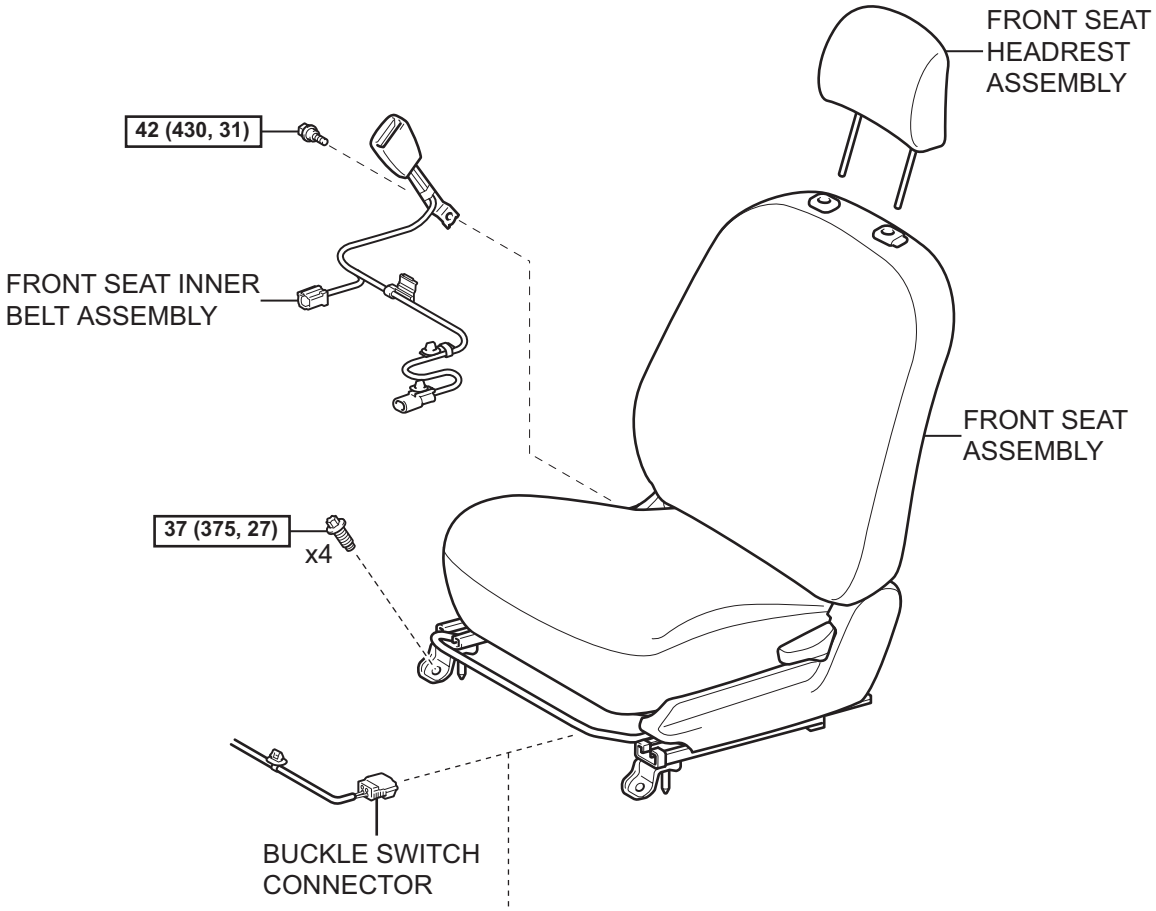

w/ Front Seat Side Airbag:

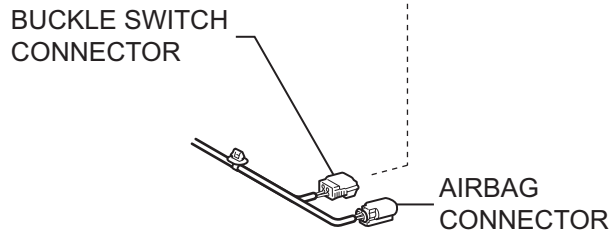

N*m (kgf*cm, ft*lbf) : Specified torque

T

B114721E01

SB

for Front Passenger Side:

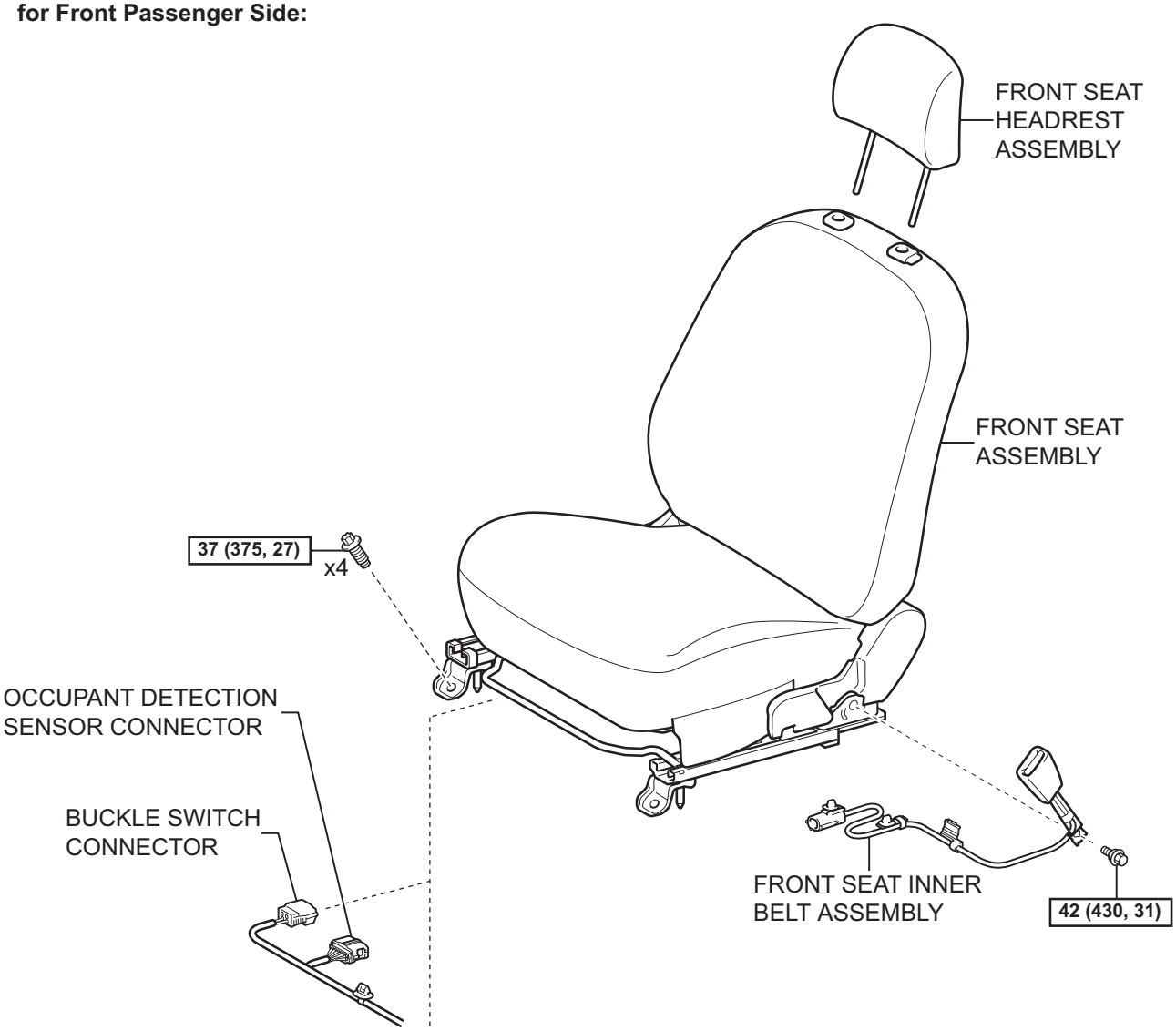

w/ Front Seat Side Airbag:

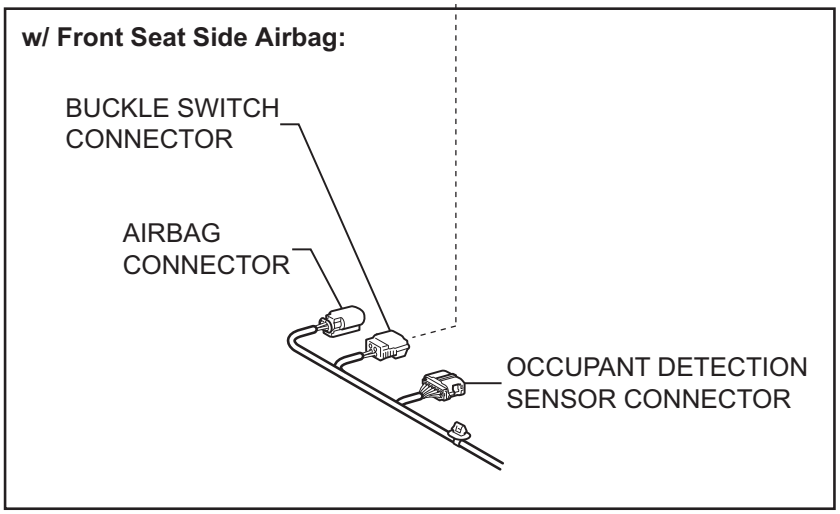

N*m (kgf*cm, ft*lbf) : Specified torque

T

B114722E01

REMOVAL

CAUTION:
Some of these service operations affect the SRS airbag system. Read the precautionary notices concerning the SRS airbag system before servicing (w/ Front Seat Side Airbag) (See pageRS-1).
NOTICE:
Always use "Torx" socket wrench E10 when removing the front seat.
HINT:
The procedure described below is for the driver side. Use the same procedure for both the driver and front passenger sides, unless otherwise specified.

1. **DISCONNECT CABLE FROM NEGATIVE BATTERY TERMINAL**
   CAUTION:
   Wait for at least 90 seconds after disconnecting the cable to prevent the airbag from working (w/ Front Seat Side Airbag).
2. **REMOVE FRONT SEAT HEADREST ASSEMBLY (See page SE-28)**
3. **REMOVE FRONT SEAT ASSEMBLY (See page SE-28)**
4. **REMOVE FRONT SEAT INNER BELT ASSEMBLY**
   (a) for Driver Side:
      (1) Disconnect the seat position sensor connector.
      (2) Remove the buckle switch connector.
      (3) Remove the 2 wiring harness clamps.

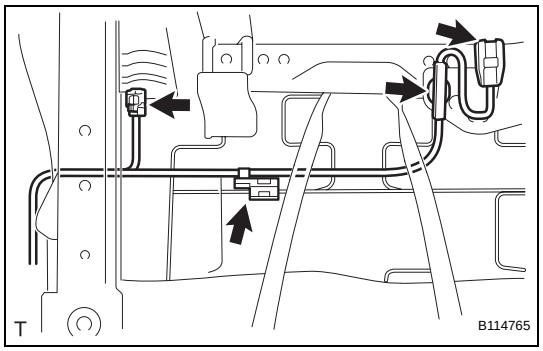

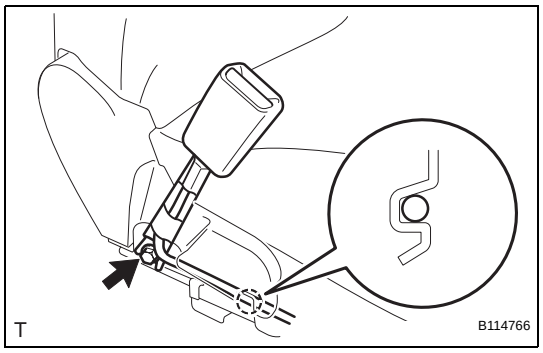

      (4) Remove the wire harness from the claw of the front seat cushion shield.
      (5) Remove the bolt and the front seat inner belt.

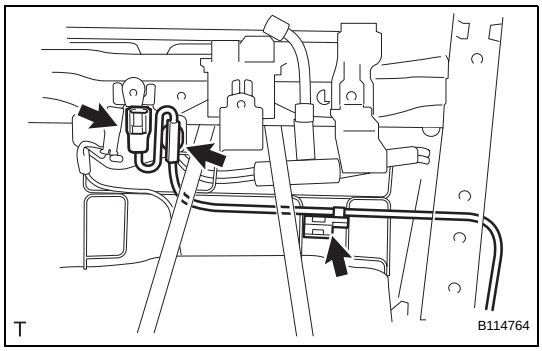

(b) for Front Passenger Side:
(1) Remove the buckle switch connector.
(2) Remove the 2 wiring harness clamps.

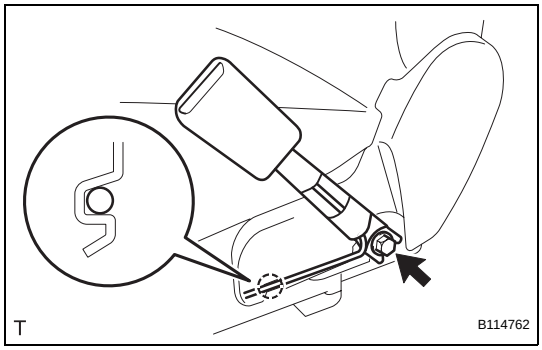

(3) Remove the wiring harness from the claw of the front seat cushion shield.
(4) Remove the bolt and the front seat inner belt.

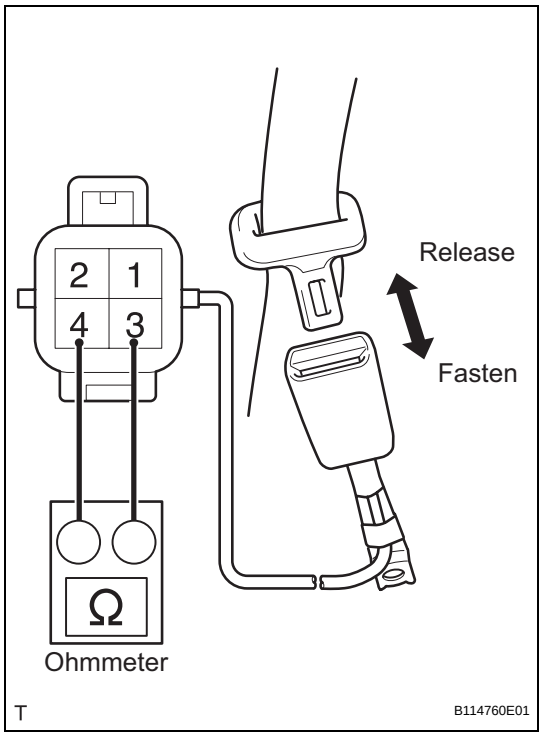

INSPECTION

1. INSPECT FRONT SEAT INNER BELT ASSEMBLY

(a) for Driver Side:
(1) Check the resistance.
1. Using an ohmmeter, measure the resistance between the terminals.

Standard resistance

Tester Connection	Condition	Specified Condition
3 - 4	Tongue plate fastened	10 kΩ or higher
	Tongue plate released	Below 1 Ω

If the result is not as specified, replace the front seat inner belt.

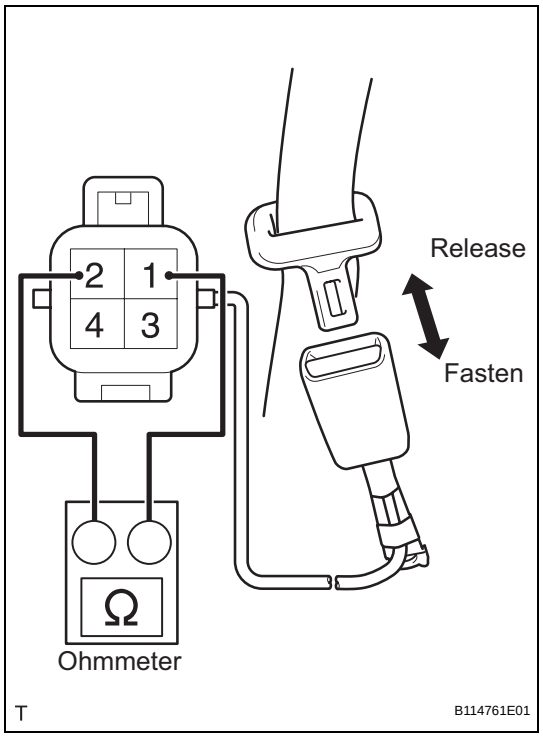

(b) for Front Passenger Side:

(1) Check the resistance.

1. Using an ohmmeter, measure the resistance between the terminals.

Standard resistance

Tester Connection	Condition	Specified Condition
1 - 2	Tongue plate fastened	10 kΩ or higher
	Tongue plate released	Below 1 Ω

If the result is not as specified, replace the front seat inner belt.

SB

SB

INSTALLATION

CAUTION:
Some of these service operations affect the SRS airbag system. Read the precautionary notices concerning the SRS airbag system before servicing (w/ Front Seat Side Airbag) (See pageRS-1).
NOTICE:
Always use "Torx" socket wrench E10 when installing the front seat.
HINT:
The procedure described below is for the driver side. Use the same procedure for both the driver and front passenger sides, unless otherwise specified.

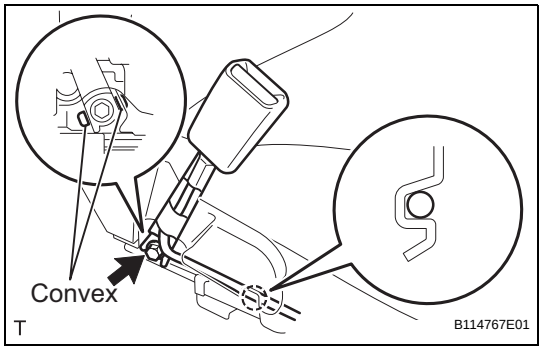

1. INSTALL FRONT SEAT INNER BELT ASSEMBLY

(a) for Driver Side:

(1) Install the front seat inner belt with the bolt.
Torque: 42 N*m (430 kgf*cm, 31 ft.*lbf)
NOTICE:
Do not place the front seat inner belt over the convex areas of the front seat adjuster frame.

(2) Install the wire harness into the claw of the front seat cushion shield.

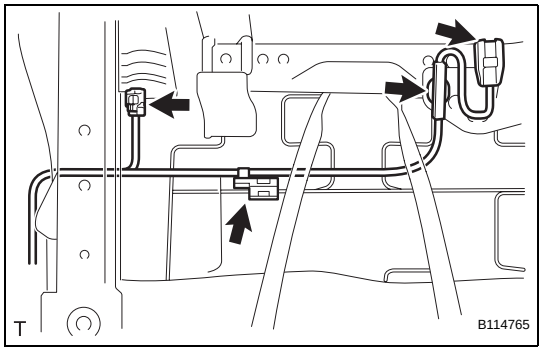

(3) Install the 2 wiring harness clamps.

(4) Install the buckle switch connector.

(5) Connect the seat position sensor connector.

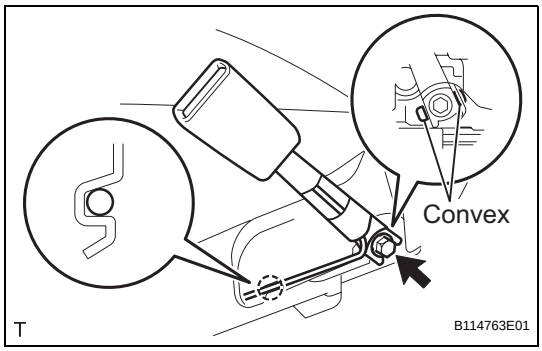

(b) for Front Passenger Side:

(1) Install the front seat inner belt with the bolt.
Torque: 42 N*m (430 kgf*cm, 31 ft.*lbf)
NOTICE:
Do not place the front seat inner belt over the convex areas of the front seat adjuster frame.

(2) Install the wiring harness onto the claw of the front seat cushion shield.

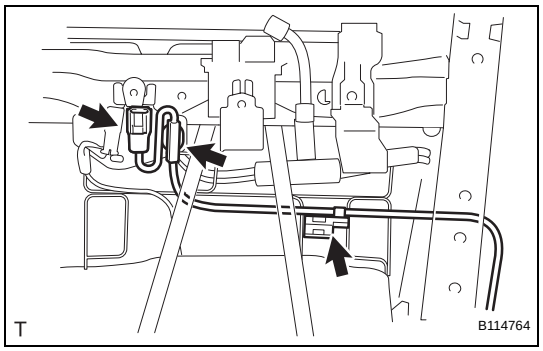

(3) Install the 2 wiring harness clamps.
(4) Install the buckle switch connector.

2. **INSTALL FRONT SEAT ASSEMBLY (See page SE-42)**
3. **INSTALL FRONT SEAT HEADREST ASSEMBLY (See page SE-43)**
4. **CONNECT CABLE TO NEGATIVE BATTERY TERMINAL**
   Torque: 5.4 N*m (55 kgf*cm, 48 in.*lbf)
5. **INSPECT SRS WARNING LIGHT (w/ Front Seat Side Airbag)**
   (See page RS-31)

SB

FRONT SEAT OUTER BELT ASSEMBLY (for Sedan)

COMPONENTS

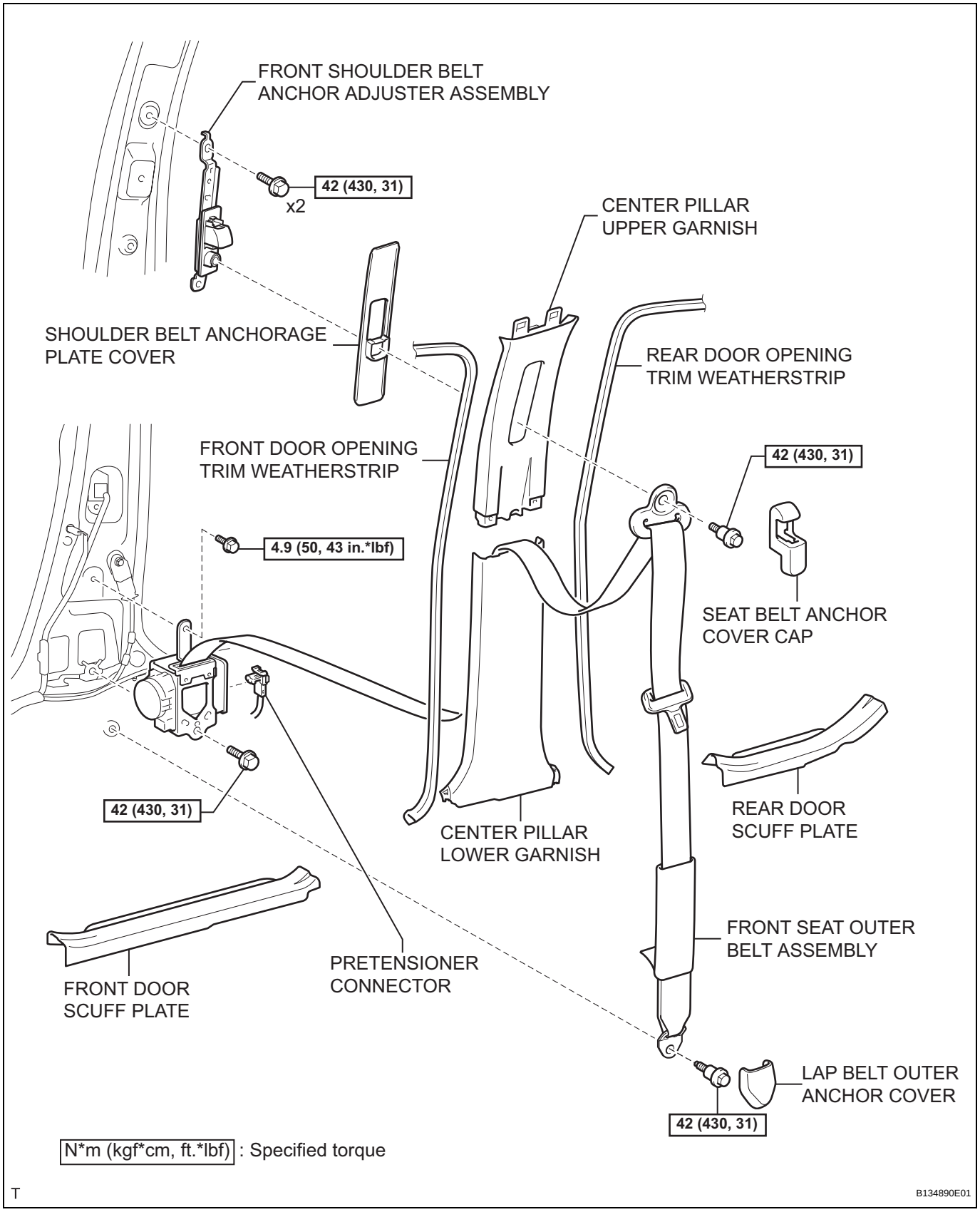

SB

REMOVAL

CAUTION:
Some of these service operations affect the SRS airbag system. Read the precautionary notices concerning the SRS airbag system before servicing (See page RS-1).
HINT:
The procedure described below is for the RH side. Use the same procedure for both the RH and LH sides, unless otherwise specified.

1. **DISCONNECT CABLE FROM NEGATIVE BATTERY TERMINAL**
   CAUTION:
   Wait for at least 90 seconds after disconnecting the cable to prevent the airbag from working.
2. **REMOVE FRONT DOOR SCUFF PLATE (See page IR-14)**
3. **REMOVE REAR DOOR SCUFF PLATE (See page IR-15)**
4. **REMOVE FRONT DOOR OPENING TRIM WEATHERSTRIP**
   (a) Remove the front door opening trim weatherstrip to the extent that the center pillar upper and lower garnishes can be removed.

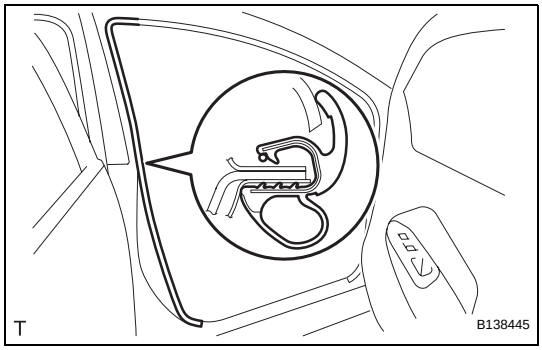

5. **REMOVE REAR DOOR OPENING TRIM WEATHERSTRIP**
   (a) Remove the rear door opening trim weatherstrip to the extent that the center pillar upper and lower garnishes can be removed.
6. **REMOVE CENTER PILLAR LOWER GARNISH (See page IR-16)**

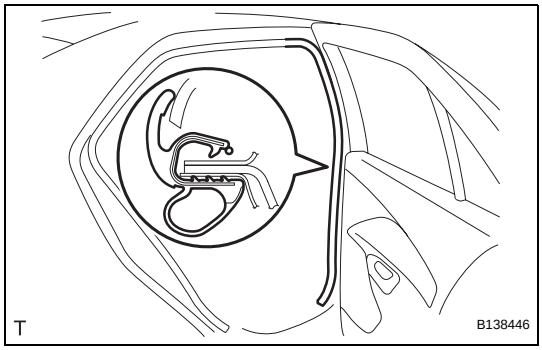

7. **REMOVE SEAT BELT ANCHOR COVER CAP**
   (a) Pull portion A, shown in the illustration, toward you, remove the 2 claws on the lower side followed by the claw on the upper side. Then remove the seat belt anchor cover cap.

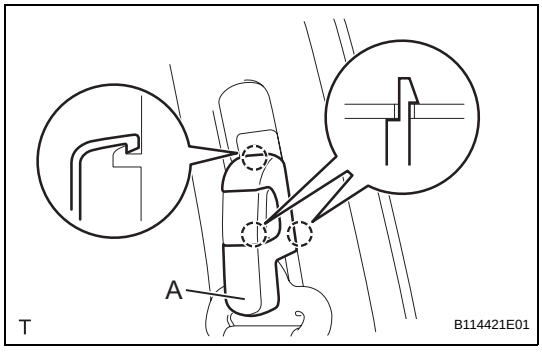

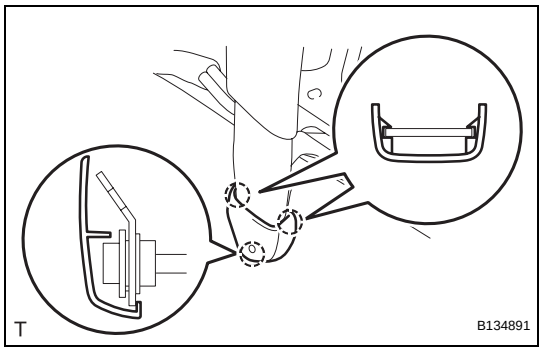

8. REMOVE LAP BELT OUTER ANCHOR COVER

(a) Disengage the 3 claws and remove the lap belt outer anchor cover.

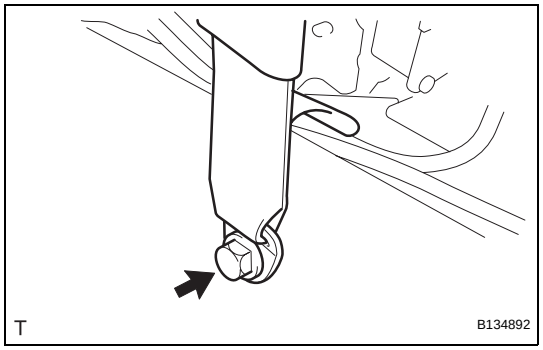

9. REMOVE FRONT SEAT OUTER BELT ASSEMBLY

(a) Remove the bolt and the anchor plate.

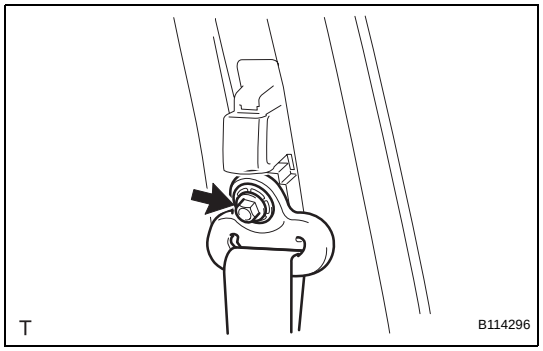

(b) Remove the bolt and the shoulder anchor.

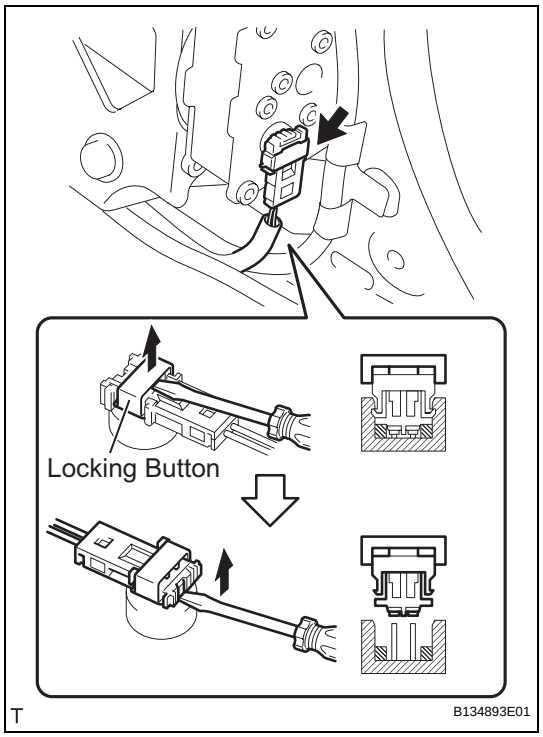

(c) Disconnect the pretensioner connector.
   (1) Using a screwdriver, release the locking button.
   (2) Using a screwdriver, disconnect the pretensioner connector.

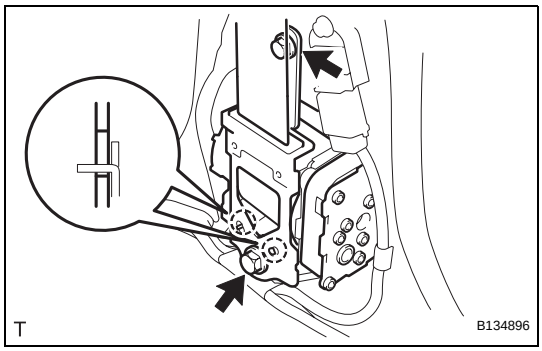

(d) Remove the 2 bolts, the 2 hooks and the retractor.

10. REMOVE CENTER PILLAR UPPER GARNISH (See page IR-17)

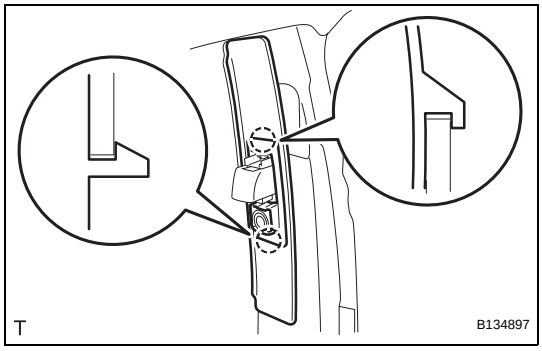

11. REMOVE SHOULDER BELT ANCHORAGE PLATE COVER

(a) Disengage the 2 claws and remove the shoulder belt anchorage plate cover.

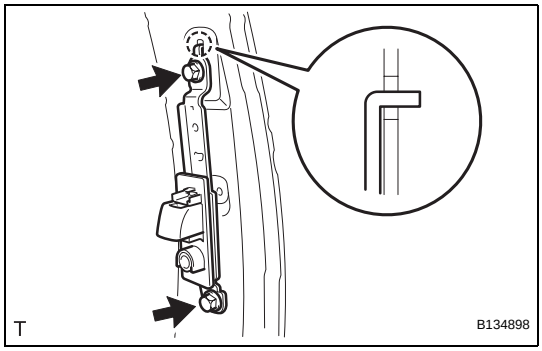

12. REMOVE FRONT SHOULDER BELT ANCHOR ADJUSTER ASSEMBLY

(a) Remove the 2 bolts, the hook and the front shoulder belt anchor adjuster.

INSTALLATION

CAUTION:
Some of these service operations affect the SRS airbag system. Read the precautionary notices concerning the SRS airbag system before servicing (See page RS-1).
HINT:
The procedure described below is for the RH side. Use the same procedure for both the RH and LH sides, unless otherwise specified.

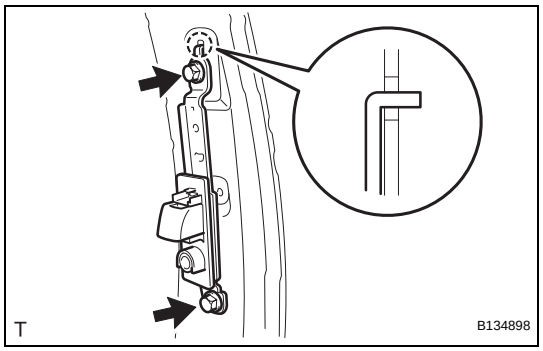

1. INSTALL FRONT SHOULDER BELT ANCHOR ADJUSTER ASSEMBLY

(a) Insert the hook into the body hole and install the shoulder belt anchor adjuster with the 2 bolts.
Torque: 42 N*m (430 kgf*cm, 31 ft.*lbf)

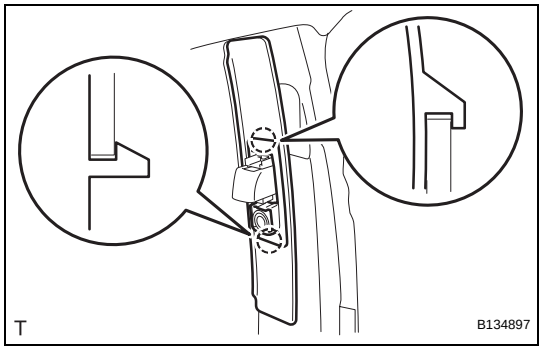

2. INSTALL SHOULDER BELT ANCHORAGE PLATE COVER

(a) Engage the 2 claws and install the shoulder belt anchorage plate cover.

3. INSTALL CENTER PILLAR UPPER GARNISH (See page IR-31)

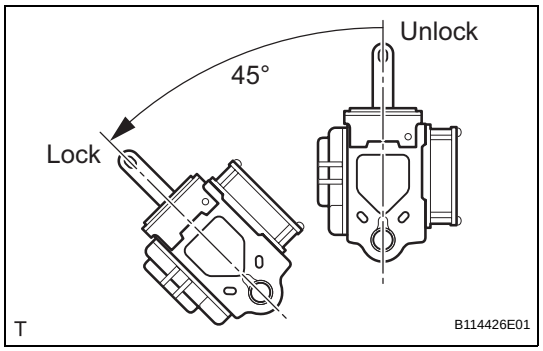

4. INSTALL FRONT SEAT OUTER BELT ASSEMBLY

(a) Check the angle of inclination required to lock the retractor.
(1) Gently incline the retractor from its initial position. Check that the belt does not lock when the retractor is inclined 15 ° or less in any direction. Also, check that the belt locks when the inclination of the retractor is 45 ° or more.
NOTICE:
Do not disassemble the retractor.
If the operation is not as specified, replace the front seat outer belt.

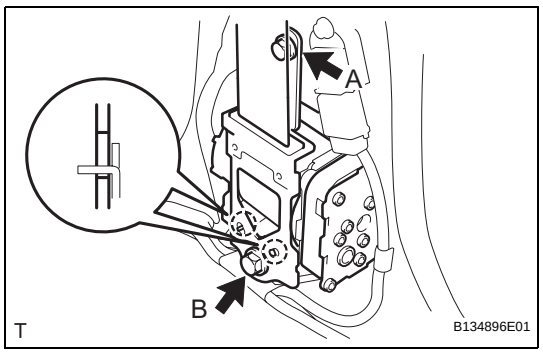

(b) Hook the lower stay of the retractor onto the 2 body hooks and provisionally install the retractor with the 2 bolts.
(c) Tighten bolt A and then bolt B.
Torque: 4.9 N*m (50 kgf*cm, 43 in.*lbf) for bolt A
42 N*m (430 kgf*cm, 31 ft.*lbf) for bolt B

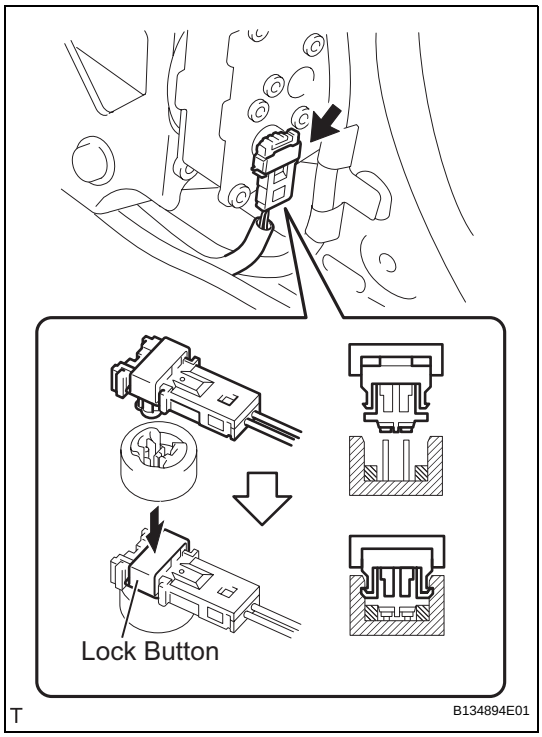

(d) Connect the pretensioner connector.
  (1) Connect the pretensioner connector.
  (2) Lock the locking button.
  NOTICE:
  Securely lock the locking button.

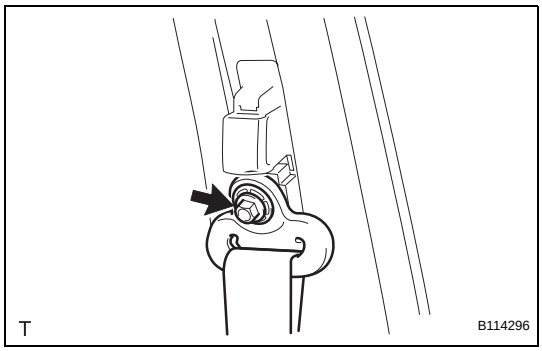

(e) Install the shoulder anchor with the bolt.
Torque: 42 N*m (430 kgf*cm, 31 ft.*lbf)

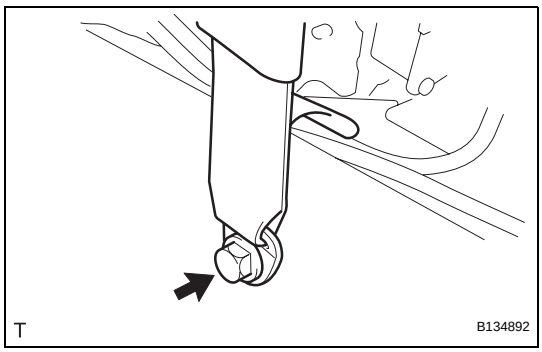

(f) Install the anchor plate with the bolt.
Torque: 42 N*m (430 kgf*cm, 31 ft.*lbf)

(g) Check that the ELR locks.
NOTICE:
- **The check should be performed with the front seat outer belt installed.**
- **Do not allow the anchor part of the front seat outer belt and the protruding parts of the floor panel to overlap.**

  (1) With the belt installed, check that the belt locks when it is pulled out quickly.
  If the operation is not as specified, replace the front seat outer belt.

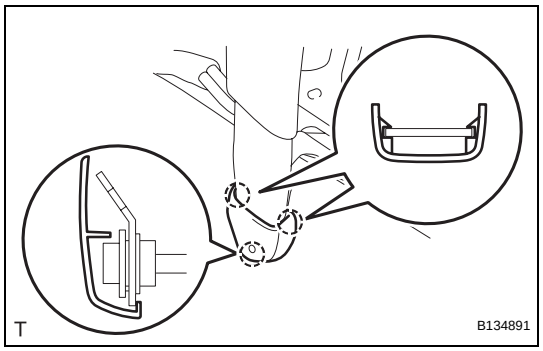

5. INSTALL LAP BELT OUTER ANCHOR COVER
(a) Engage the 3 claws and install the lap belt outer anchor cover.

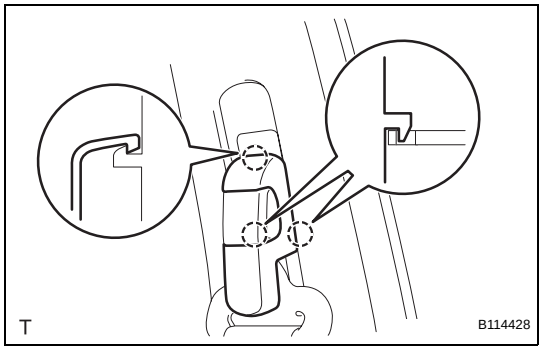

6. INSTALL SEAT BELT ANCHOR COVER CAP
(a) Engage the 3 claws and install the seat belt anchor cover cap.

7. INSTALL CENTER PILLAR LOWER GARNISH (See page IR-32)

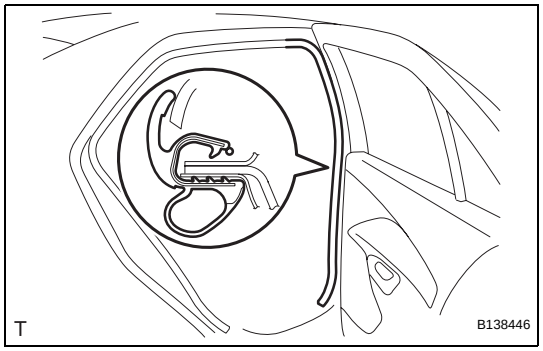

8. INSTALL REAR DOOR OPENING TRIM WEATHERSTRIP
(a) Install the rear door opening trim weatherstrip.

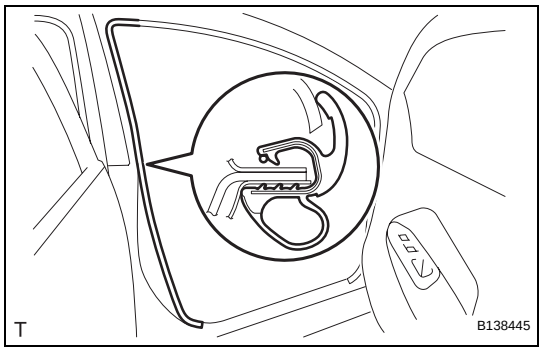

9. INSTALL FRONT DOOR OPENING TRIM WEATHERSTRIP
(a) Install the front door opening trim weatherstrip.

10. INSTALL REAR DOOR SCUFF PLATE (See page IR-34)

11. INSTALL FRONT DOOR SCUFF PLATE (See page IR-35)

12. CONNECT CABLE TO NEGATIVE BATTERY TERMINAL
Torque: 5.4 N*m (55 kgf*cm, 48 in.*lbf)

13. INSPECT SRS WARNING LIGHT
(See page RS-31)

SB

SB

DISPOSAL

CAUTION:

- **Never dispose of a front seat outer belt that has an inactivated pretensioner.**
- **The seat belt pretensioner produces a loud, exploding sound when it activates. Perform the operation outside and where it will not be a nuisance to persons nearby.**
- **When activating a front seat outer belt (with seat belt pretensioner), stand at least 10 m (33 ft) away from the front seat outer belt.**
- **Use gloves and safety glasses when handling a front seat outer belt with an activated pretensioner.**
- **Always wash your hands with water after completing the activation.**
- **Do not apply water to a front seat outer belt that has an activated pretensioner.**
- **When activating the seat belt pretensioner, always use the specified SST (SRS airbag deployment tool).**
- **Perform the operation in a place away from electrical interference.**

HINT:

The procedure described below is for the RH side. Use the same procedure for both the RH and LH sides, unless otherwise specified.

1. DISPOSE OF FRONT SEAT OUTER BELT ASSEMBLY (When Installed in Vehicle)

HINT:

Prepare a battery as the power source to activate the seat belt pretensioner.

(a) Check whether SST is functioning.

SST 09082-00700

CAUTION:

Always use the specified SST when activating the seat belt pretensioner.

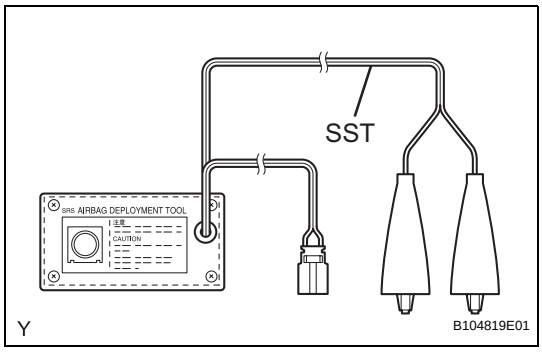

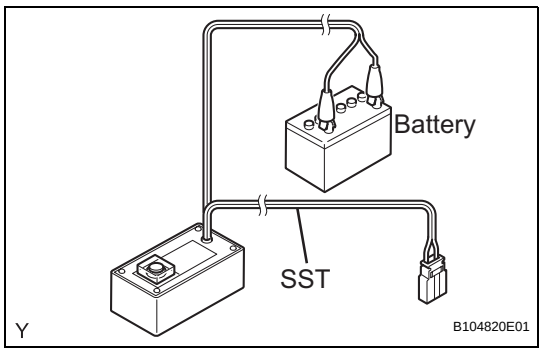

(1) Connect the SST red clip to the positive battery terminal and the black clip to the negative battery terminal.

HINT:

Do not connect the yellow connector. The yellow connector is for connections to the seat belt pretensioner.

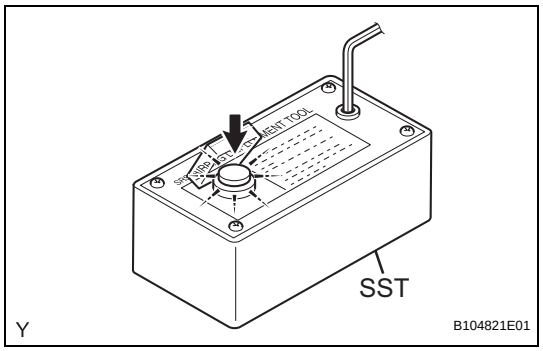

(2) Press the SST activation switch and check that the LED of the SST activation switch turns on.
CAUTION:
If the LED illuminates when the activation switch is not being pressed, SST may be malfunctioning. Do not use SST.

(b) Disconnect SST from the battery.

(c) Disconnect the pretensioner connector.

(1) Disconnect the cable from the negative battery terminal.

(2) Remove the front door scuff plate (See page IR-14).

(3) Remove the rear door scuff plate (See page IR-15).

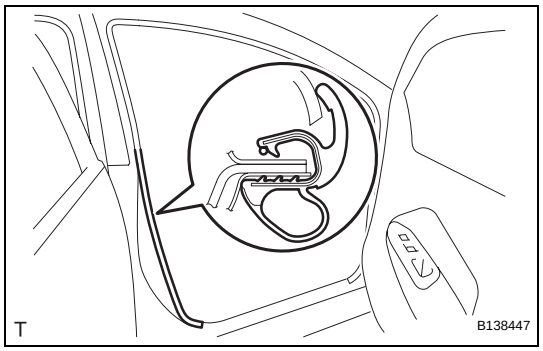

(4) Remove the front door opening trim weatherstrip.

1. Remove the front door opening trim weatherstrip to the extent that the center pillar lower garnish can be removed.

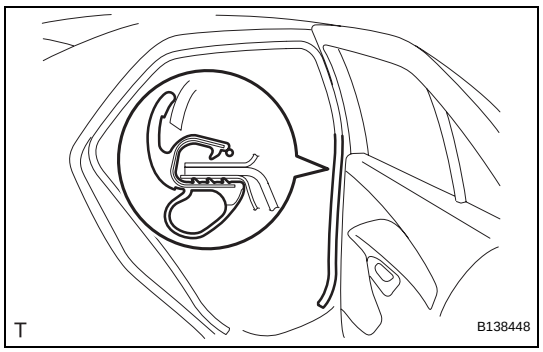

(5) Remove the rear door opening trim weatherstrip.

1. Remove the rear door opening trim weatherstrip to the extent that the center pillar lower garnish can be removed.

(6) Remove the center pillar lower garnish (See page IR-16).

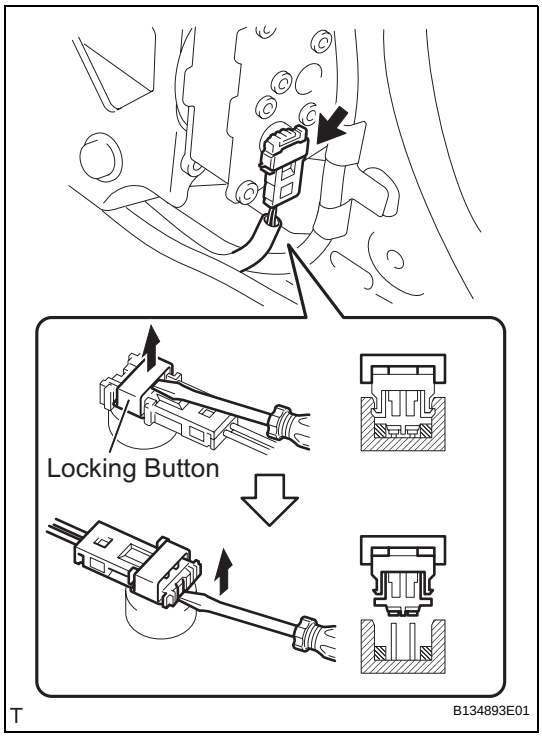

(7) Disconnect the pretensioner connector.
1. Using a screwdriver, release the locking button.
2. Using a screwdriver, disconnect the pretensioner connector.

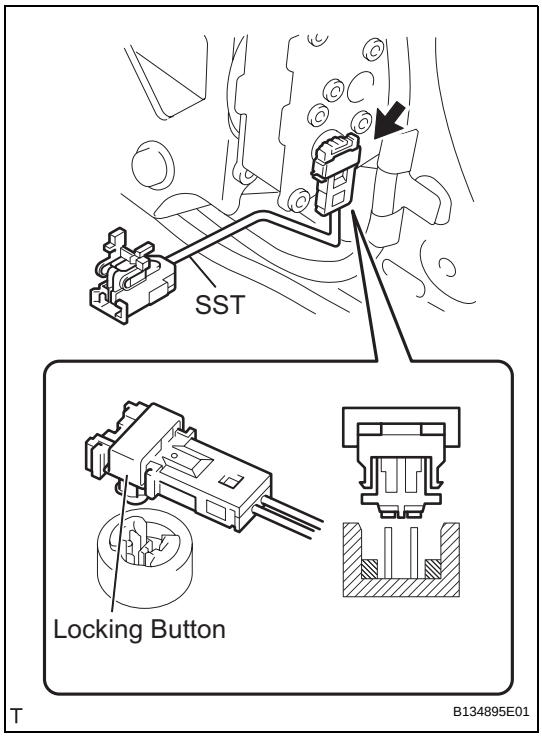

(d) Connect SST.
(1) Connect SST, then the yellow connector to the seat belt pretensioner.
SST 09082-00770
NOTICE:
Do not lock the secondary lock of the twin lock to avoid damaging the SST connector and wire harness.

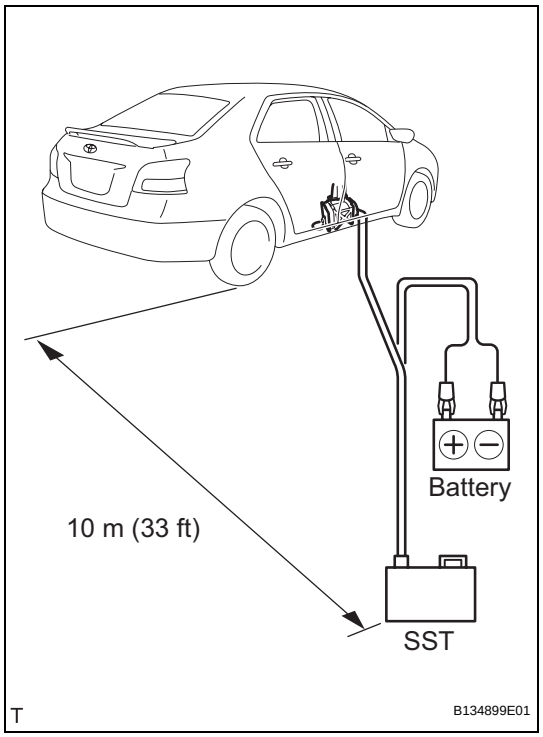

(2) Move SST at least 10 m (33 ft) away from the front of the vehicle.
SST 09082-00700

(3) Close the doors and windows of the vehicle.
NOTICE:
Take care not to damage the SST wire harness.
HINT:
Do not close the windows fully. Leave a gap for inserting the SST wire harness.

(4) Connect the SST red clip to the positive battery terminal and the black clip to the negative battery terminal.

(e) Activate the seat belt pretensioner.

(1) Confirm that no one is inside the vehicle or within 10 m (33 ft) of the vehicle.

(2) Press the SST activation switch and activate the seat belt pretensioner.
HINT:
The seat belt pretensioner operates simultaneously with the SST activation switch LED light.

(f) Disconnect SST.

(g) Dispose of the front seat outer belt (with the seat belt pretensioner).
HINT:
When scrapping a vehicle, activate the seat belt pretensioner, and then scrap the vehicle with the activated front seat outer belt still installed.
CAUTION:
- **Do not touch the front seat outer belt for at least 30 minutes after the seat belt pretensioner has been activated. It is very hot.**
- **Use gloves and safety glasses when handling a front seat outer belt with a pretensioner that has been activated.**
- **Always wash your hands with water after completing the operation.**
- **Do not apply water to a front seat outer belt that has an activated pretensioner.**

2. DISPOSE OF FRONT SEAT OUTER BELT ASSEMBLY (When not Installed in Vehicle)
HINT:
Prepare a battery as the power source to activate the seat belt pretensioner.
NOTICE:
- **When only disposing of the front seat outer belt (with the seat belt pretensioner), never use the customer's vehicle to activate the seat belt pretensioner.**
- **Be sure to follow the procedures described below when activating the seat belt pretensioner.**

(a) Remove the front seat outer belt (See page SB-44).

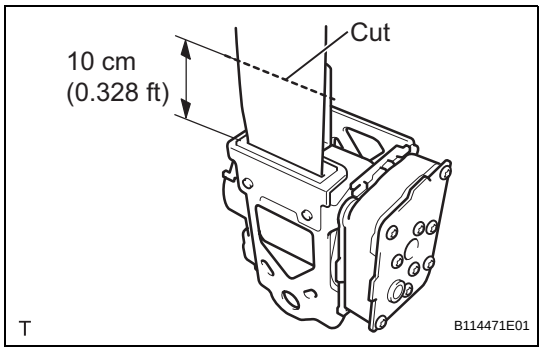

(b) Wind the seat belt with the retractor.

(c) When the seat belt is sufficiently wound, cut the seat belt approximately 10 cm (0.328 ft) from the retractor, as shown in the illustration.
HINT:
The retractor resistance increases in correlation with how much the seat belt is wound.

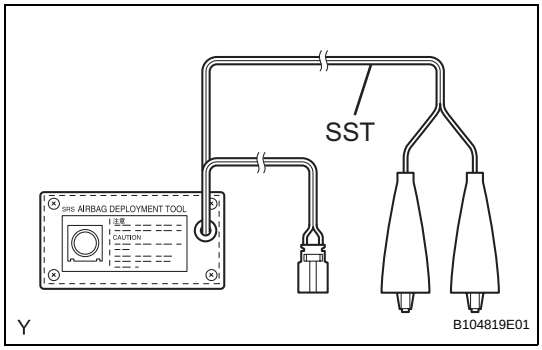

(d) Check whether SST is functioning.
SST 09082-00700
CAUTION:
Always use the specified SST when activating the seat belt pretensioner.

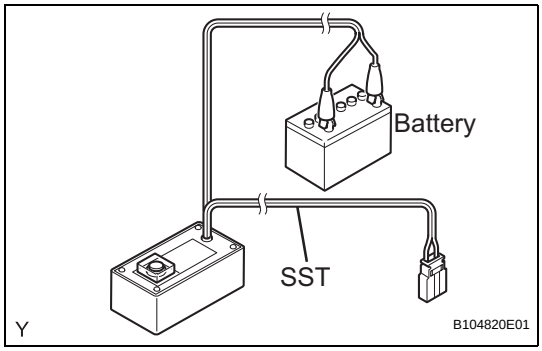

(1) Connect the SST red clip to the positive battery terminal and the black clip to the negative battery terminal.
HINT:
Do not connect the yellow connector. The yellow connector is for connections to the seat belt pretensioner.

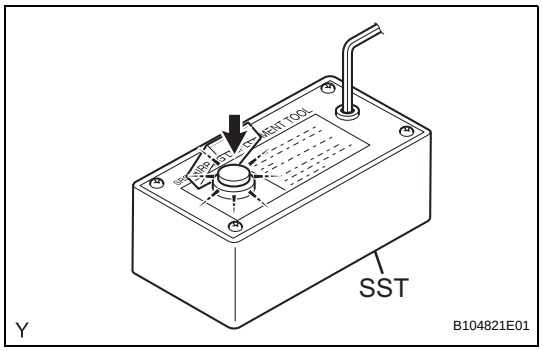

(2) Press the SST activation switch and check that the LED of the SST activation switch turns on.
CAUTION:
If the LED illuminates when the activation switch is not being pressed, SST may be malfunctioning. Do not use SST.

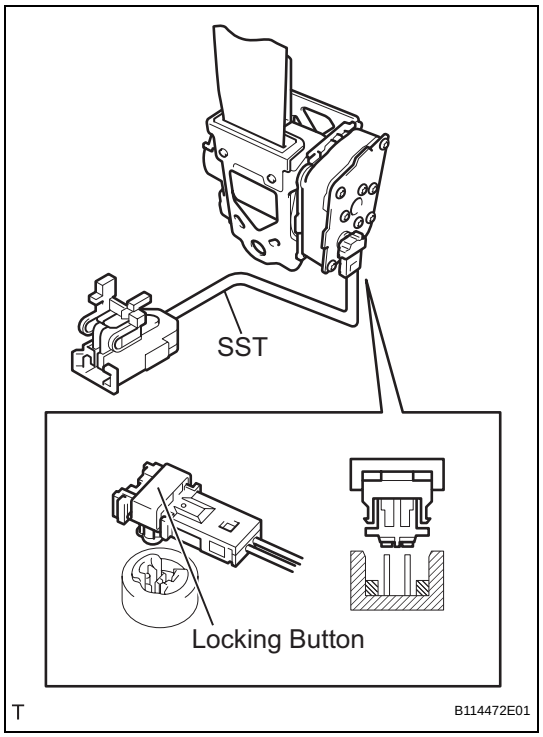

(e) Connect SST.

(1) Connect SST, then the yellow connector to the seat belt pretensioner.

SST 09082-00770

NOTICE:

Do not lock the secondary lock of the twin lock to avoid damaging the SST connector and wire harness.

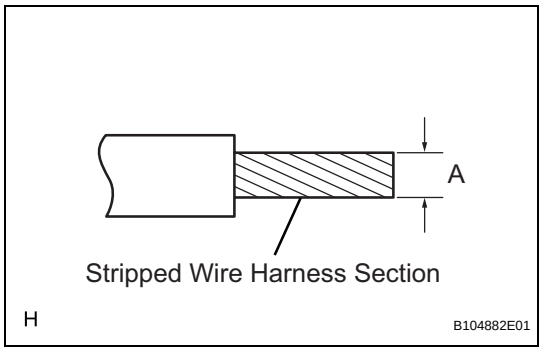

(2) Using a service-purpose wire harness for the vehicle, tie the seat belt pretensioner to the tire with a wheel attached.

Stripped wire harness section

Area	Measurement
A	1.25 mm^2 or more (0.0019 in^2 or more)

CAUTION:

- **Do not use wire harnesses that are too thin or any other object to tie the seat belt pretensioner because they may snap due to the shock when the pretensioner is deployed.**
- **Always use a wire harness for vehicle use, with a cross section of at least 1.25 mm^2 (0.0019 in^2).**

HINT:

To calculate the area of the stripped wire harness cross section:

Area = 3.14 x $(Diameter)^2$ divided by 4

SB

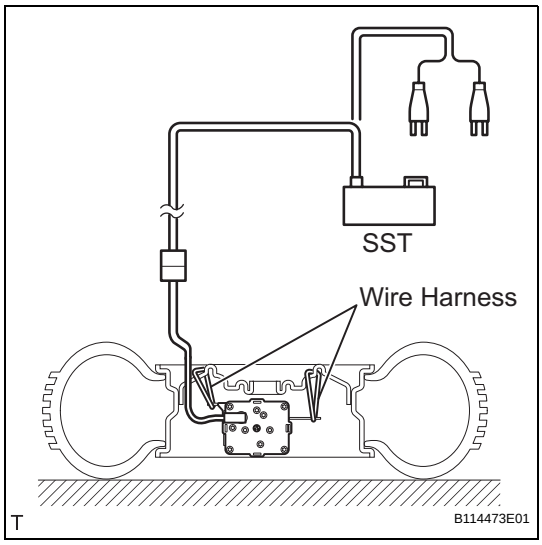

(3) Connect SST.
SST 09082-00700
NOTICE:
- **Do not lock the secondary lock of the twin lock to avoid damaging the SST connector and wire harness.**
- **Set up the front seat outer belt, as shown in the illustration.**

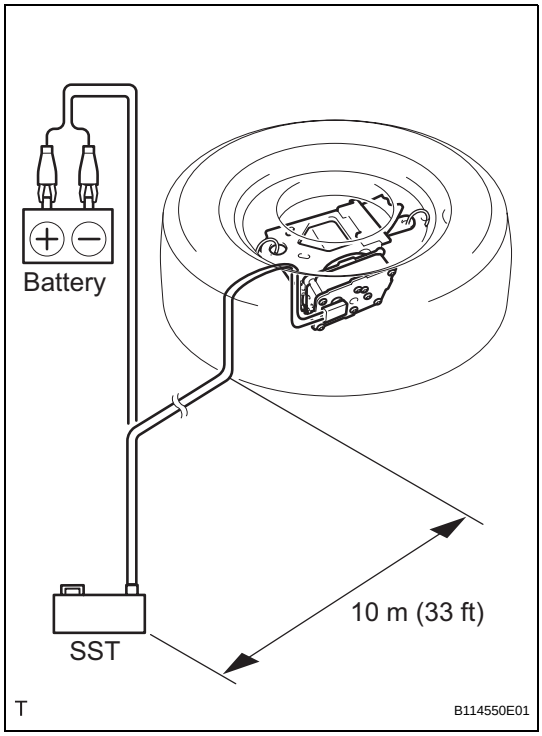

(4) Move SST at least 10 m (33 ft) away from the wheel.
NOTICE:
Take care not to damage the SST wire harness.

(f) Activate the seat belt pretensioner.
(1) Connect the SST red clip to the positive battery terminal and the black clip to the negative battery terminal.
(2) Check that no one is within 10 m (33 ft) of the wheel.
(3) Press the SST activation switch and activate the seat belt pretensioner.
HINT:
The seat belt pretensioner operates simultaneously with the SST activation switch LED light.

(g) Disconnect SST.

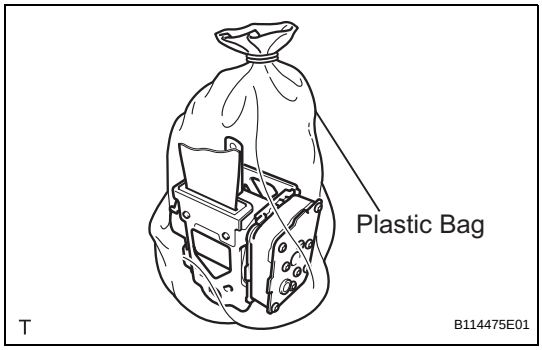

(h) Dispose of the front seat outer belt (with the seat belt pretensioner).
CAUTION:
- **Do not touch the front seat outer belt for at least 30 minutes after the seat belt pretensioner has been activated. It is very hot.**
- **Use gloves and safety glasses when handling an front seat outer belt with a pretensioner that has been activated.**
- **Always wash your hands with water after completing the operation.**
- **Do not apply water to a front seat outer belt that has an activated pretensioner.**

(1) Place the front seat outer belt in a plastic bag, tie the end tightly and dispose of it in the same way as other general parts.

FRONT SEAT OUTER BELT ASSEMBLY (for Hatchback 5 Door)

COMPONENTS

SB

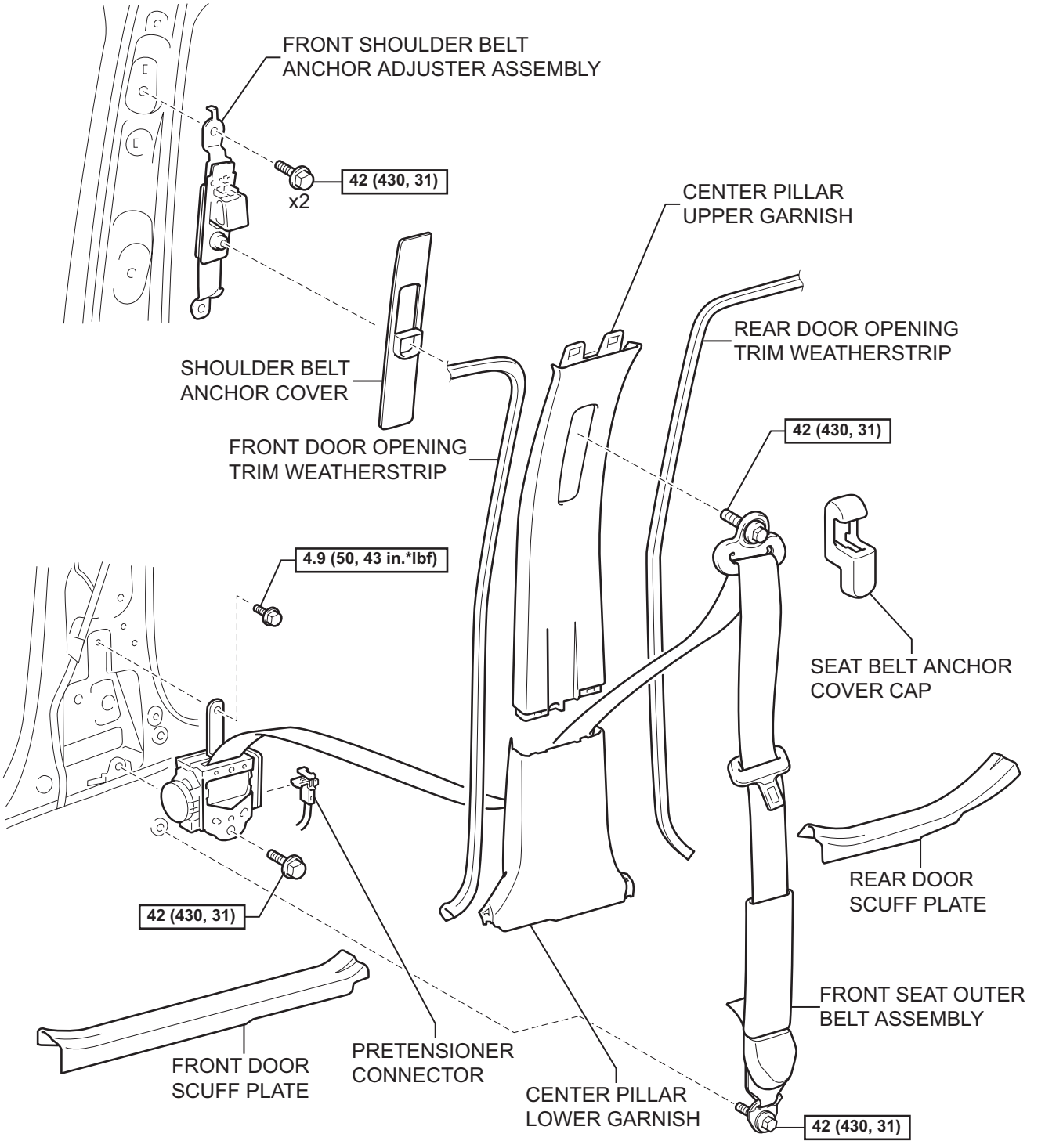

N*m (kgf*cm, ft*lbf) : Specified torque

T

B114418E01

REMOVAL

CAUTION:
Some of these service operations affect the SRS airbag system. Read the precautionary notices concerning the SRS airbag system before servicing (See page RS-1).
HINT:
The procedure described below is for the RH side. Use the same procedure for both the RH and LH sides, unless otherwise specified.

1. **DISCONNECT CABLE FROM NEGATIVE BATTERY TERMINAL**
   CAUTION:
   Wait for at least 90 seconds after disconnecting the cable to prevent the airbag from working.
2. **REMOVE FRONT DOOR SCUFF PLATE (See page IR-49)**
3. **REMOVE REAR DOOR SCUFF PLATE (See page IR-51)**
4. **REMOVE FRONT DOOR OPENING TRIM WEATHERSTRIP**
   (a) Remove the front door opening trim weatherstrip to the extent that the center pillar upper and lower garnishes can be removed.

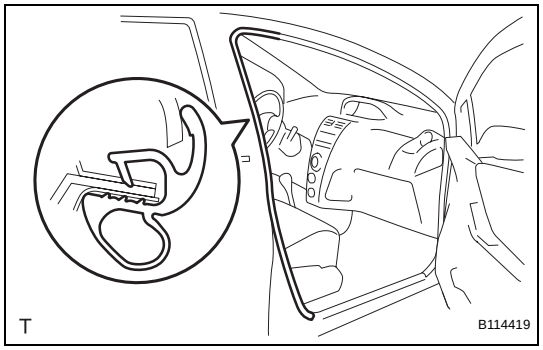

5. **REMOVE REAR DOOR OPENING TRIM WEATHERSTRIP**
   (a) Remove the rear door opening trim weatherstrip to the extent that the center pillar upper and lower garnishes can be removed.
6. **REMOVE CENTER PILLAR LOWER GARNISH (See page IR-55)**

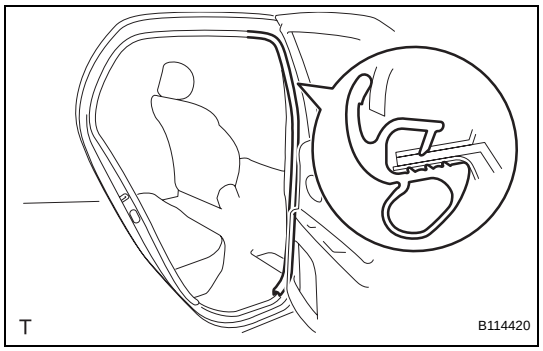

7. **REMOVE SEAT BELT ANCHOR COVER CAP**
   (a) Pull portion A, shown in the illustration, toward you, remove the 2 claws on the lower side followed by the claw on the upper side. Then remove the seat belt anchor cover cap.

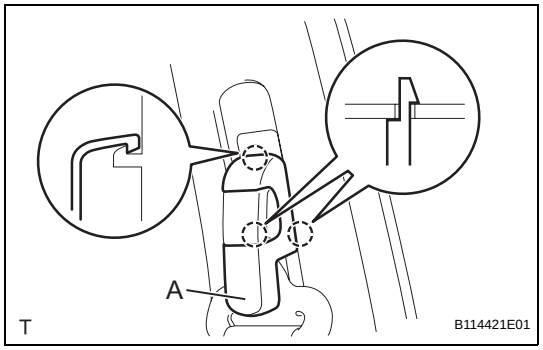

SB

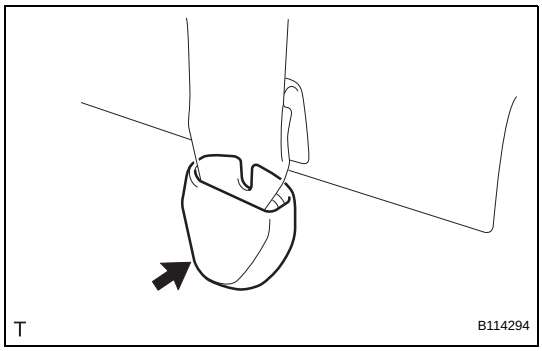

8. REMOVE FRONT SEAT OUTER BELT ASSEMBLY

(a) Remove the anchor plate cover.

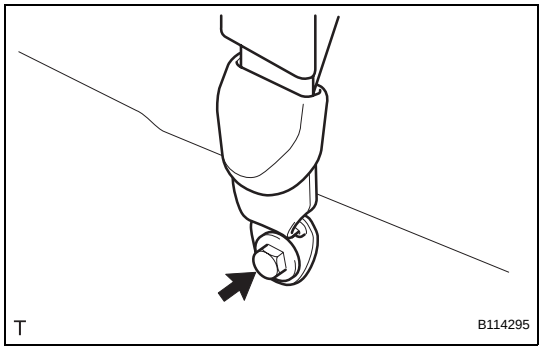

(b) Remove the bolt and the anchor plate.

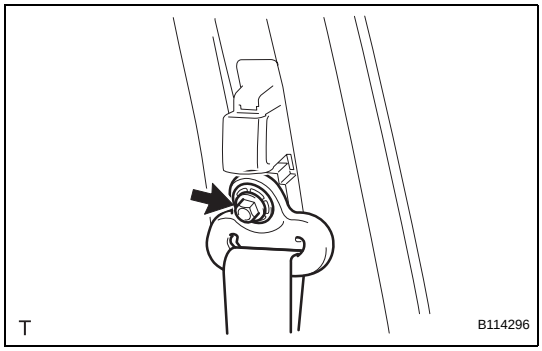

(c) Remove the bolt and the through anchor.

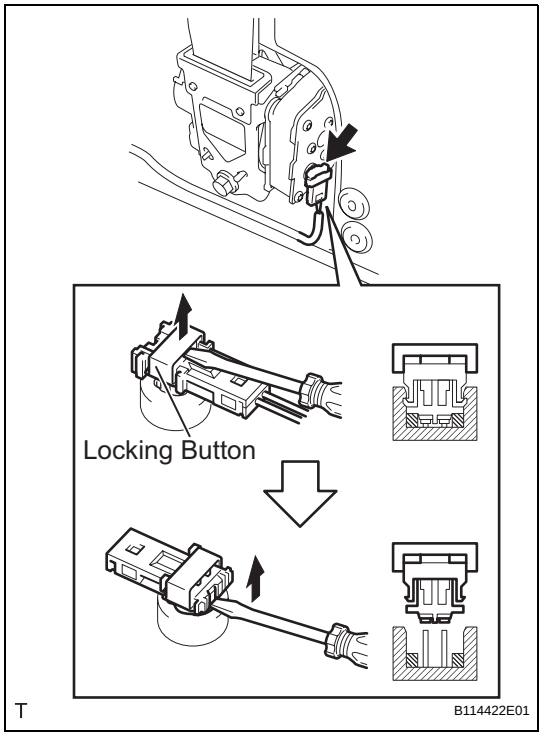

(d) Disconnect the pretensioner connector.
   (1) Using a screwdriver, release the locking button.
   (2) Using a screwdriver, disconnect the pretensioner connector.

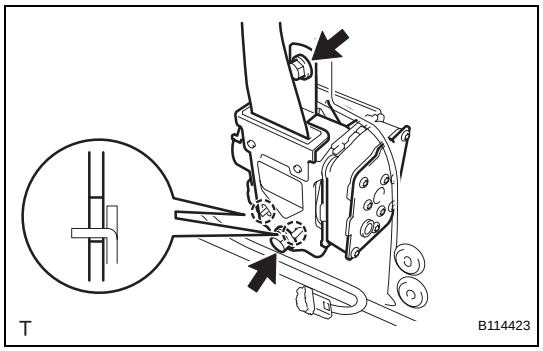

(e) Remove the 2 bolts, the 2 hooks and the retractor.

9. REMOVE CENTER PILLAR UPPER GARNISH (See page IR-55)

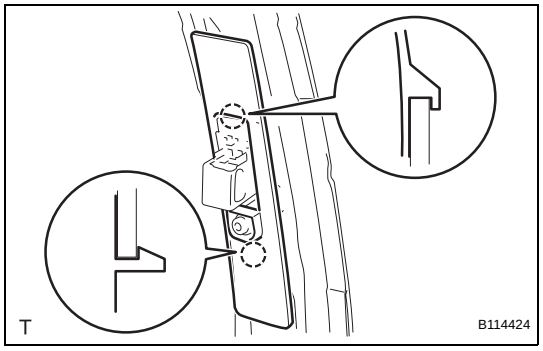

10. REMOVE SHOULDER BELT ANCHOR COVER

(a) Disengage the 2 claws and remove the shoulder belt anchor cover.

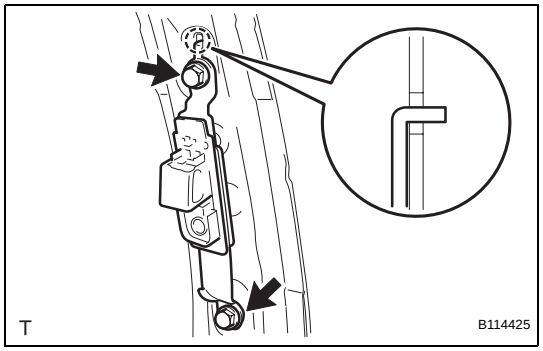

11. REMOVE FRONT SHOULDER BELT ANCHOR ADJUSTER ASSEMBLY

(a) Remove the 2 bolts, the hook and the front shoulder belt anchor adjuster.

SB

SB

INSTALLATION

CAUTION:
Some of these service operations affect the SRS airbag system. Read the precautionary notices concerning the SRS airbag system before servicing (See page RS-1).
HINT:
The procedure described below is for the RH side. Use the same procedure for both the RH and LH sides, unless otherwise specified.

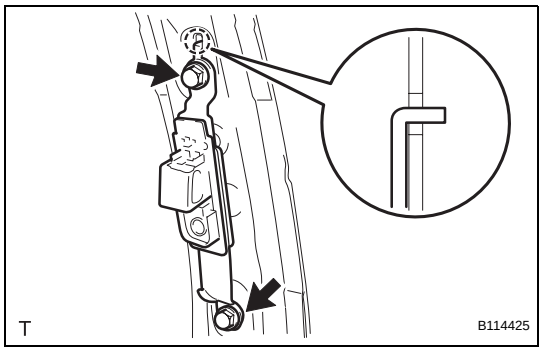

1. INSTALL FRONT SHOULDER BELT ANCHOR ADJUSTER ASSEMBLY
(a) Insert the hook into the body hole and install the shoulder belt anchor adjuster with the 2 bolts.
Torque: 42 N*m (430 kgf*cm, 31 ft.*lbf)

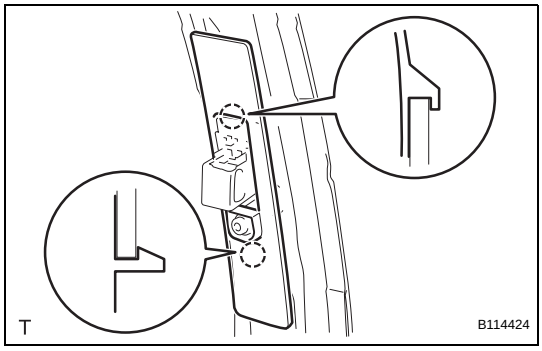

2. INSTALL SHOULDER BELT ANCHOR COVER
(a) Engage the 2 claws and install the shoulder belt anchor cover.

3. INSTALL CENTER PILLAR UPPER GARNISH (See page IR-76)

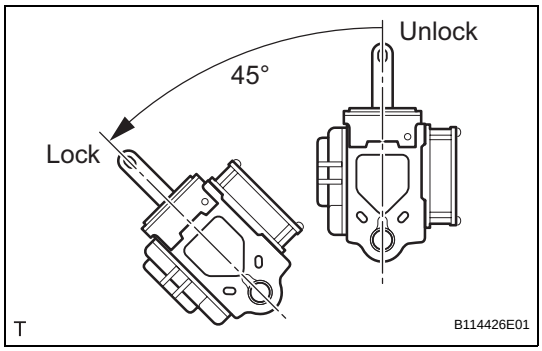

4. INSTALL FRONT SEAT OUTER BELT ASSEMBLY
(a) Check the angle of inclination required to lock the retractor.
(1) Gently incline the retractor from its initial position. Check that the belt does not lock when the retractor is inclined 15° or less in any direction. Also, check that the belt locks when the inclination of the retractor is 45° or more.
NOTICE:
Do not disassemble the retractor.
If the operation is not as specified, replace the front seat outer belt.

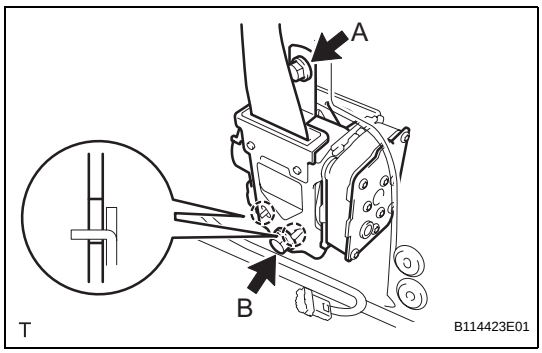

(b) Hook the lower stay of the retractor onto the 2 body hooks and provisionally install the retractor with the 2 bolts.
(c) Tighten bolt A and then bolt B.
Torque: 4.9 N*m (50 kgf*cm, 43 in.*lbf) for bolt A
42 N*m (430 kgf*cm, 31 ft.*lbf) for bolt B

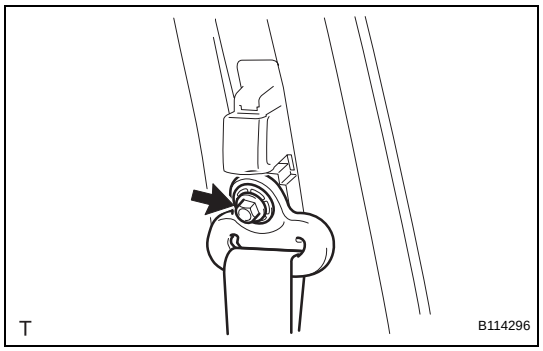

(d) Install the through anchor with the bolt.
Torque: 42 N*m (430 kgf*cm, 31 ft.*lbf)

(e) Check that the ELR locks.
NOTICE:
Perform the check with the front seat outer belt installed.
(1) With the belt installed, check that the belt locks when it is pulled out quickly.
If the operation is not as specified, replace the front seat outer belt.

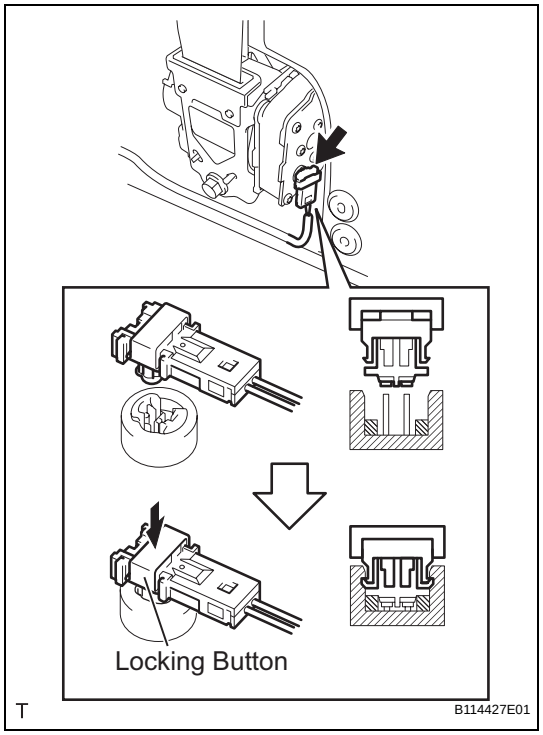

(f) Connect the pretensioner connector.
(1) Connect the pretensioner connector.
(2) Lock the locking button.
NOTICE:
Securely lock the locking button.

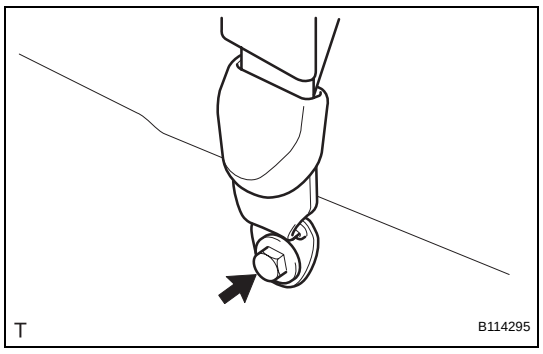

(g) Install the anchor plate with the bolt.
Torque: 42 N*m (430 kgf*cm, 31 ft.*lbf)

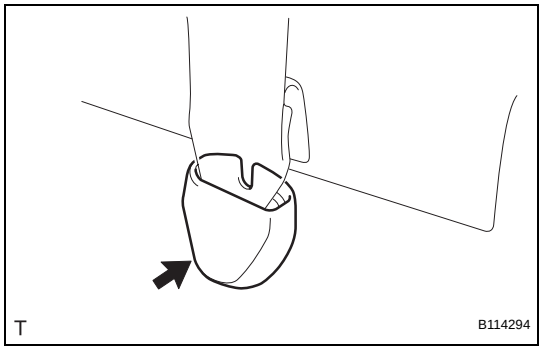

(h) Install the anchor plate cover.

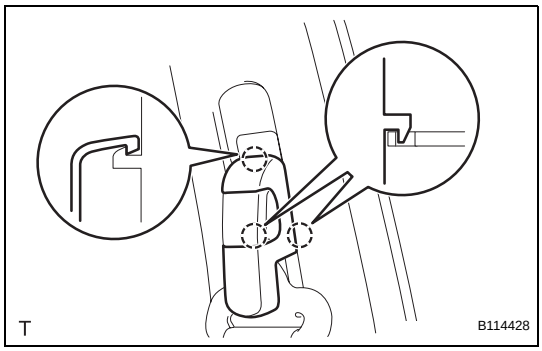

5. **INSTALL SEAT BELT ANCHOR COVER CAP**
   (a) Engage the 3 claws and install the seat belt anchor cover cap.

6. **INSTALL CENTER PILLAR LOWER GARNISH (See page IR-76)**

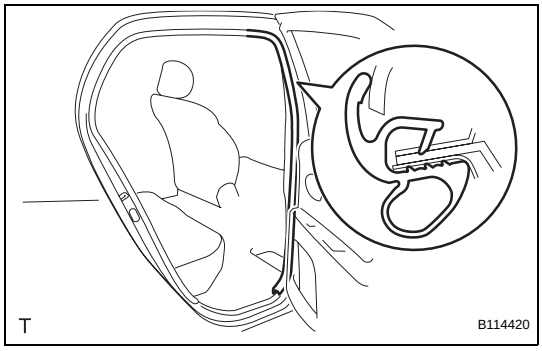

7. **INSTALL REAR DOOR OPENING TRIM WEATHERSTRIP**
   (a) Install the rear door opening trim weatherstrip.

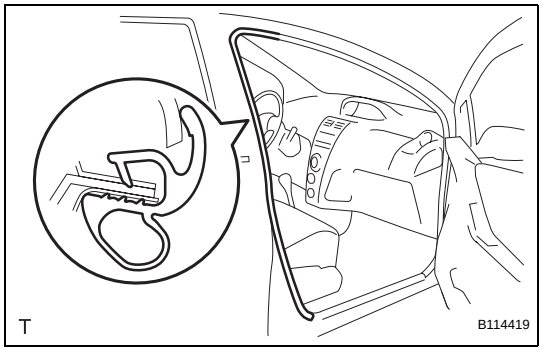

8. **INSTALL FRONT DOOR OPENING TRIM WEATHERSTRIP**
   (a) Install the front door opening trim weatherstrip.

9. **INSTALL REAR DOOR SCUFF PLATE (See page IR-80)**

10. **INSTALL FRONT DOOR SCUFF PLATE (See page IR-82)**

11. **CONNECT CABLE TO NEGATIVE BATTERY TERMINAL**
    Torque: 5.4 N*m (55 kgf*cm, 48 in.*lbf)

12. **INSPECT SRS WARNING LIGHT**
    (See page RS-31)

DISPOSAL

CAUTION:

- **Never dispose of a front seat outer belt that has an inactivated pretensioner.**
- **The seat belt pretensioner produces a loud, exploding sound when it activates. Perform the operation outside and where it will not be a nuisance to persons nearby.**
- **Stand at least 10 m (33 ft) away when activating a front seat outer belt (with seat belt pretensioner).**
- **Use gloves and safety glasses when handling a front seat outer belt with an activated pretensioner.**
- **Always wash your hands with water after completing an activation.**
- **Do not apply water to a front seat outer belt that has an activated pretensioner.**
- **Always use the specified SST (SRS airbag deployment tool) when activating the seat belt pretensioner.**
- **Perform the operation in a place away from electrical interference.**

HINT:

The procedure described below is for the RH side. Use the same procedure for the RH and LH sides, unless otherwise specified.

1. DISPOSE OF FRONT SEAT OUTER BELT ASSEMBLY (When Installed in Vehicle)

HINT:

Prepare a battery as the power source to activate the seat belt pretensioner.

(a) Check whether SST is functioning.

SST 09082-00700

CAUTION:

Always use the specified SST when activating the seat belt pretensioner.

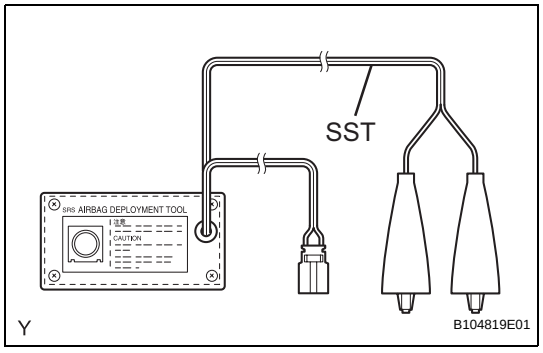

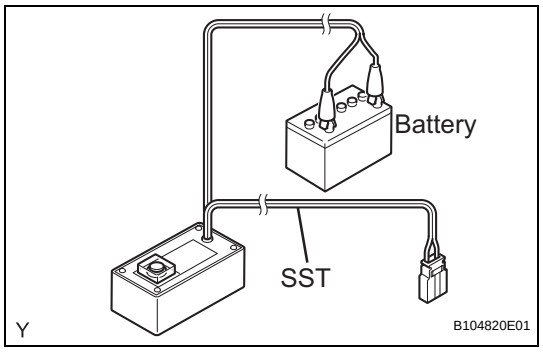

(1) Connect the SST red clip to the positive battery terminal and the black clip to the negative battery terminal.

HINT:

Do not connect the yellow connector. The yellow connector is for connections to the seat belt pretensioner.

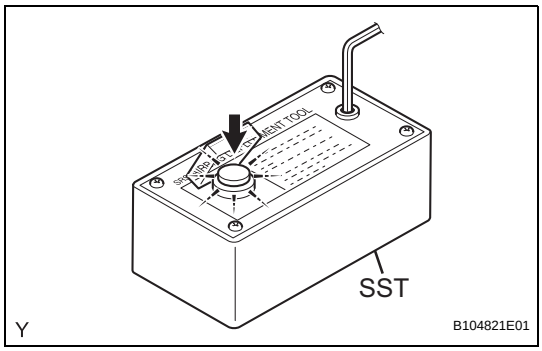

(2) Press the SST activation switch and check that the LED of the SST activation switch turns on.
CAUTION:
If the LED turns on when the activation switch is not being pressed, SST may be malfunctioning. Do not use SST.

(b) Disconnect SST from the battery.

(c) Disconnect the pretensioner connector.

(1) Disconnect the cable from negative battery terminal.

(2) Remove the front door scuff plate (See page IR-49).

(3) Remove the rear door scuff plate (See page IR-51).

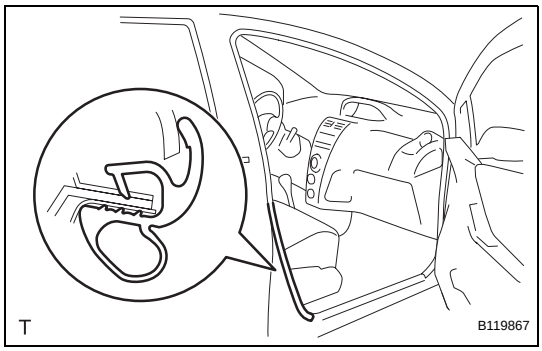

(4) Remove the front door opening trim weatherstrip.

1. Remove the front door opening trim weatherstrip to the extent that the center pillar lower garnish can be removed.

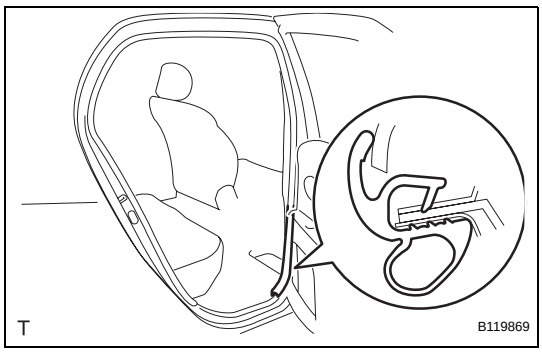

(5) Remove the rear door opening trim weatherstrip.

1. Remove the rear door opening trim weatherstrip to the extent that the center pillar lower garnish can be removed.

(6) Remove the center pillar lower garnish (See page IR-55).

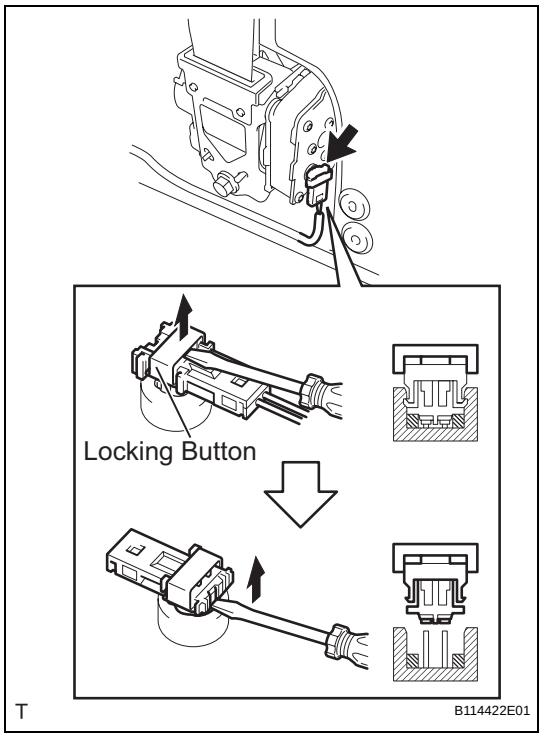

(7) Disconnect the pretensioner connector as shown in the illustration.

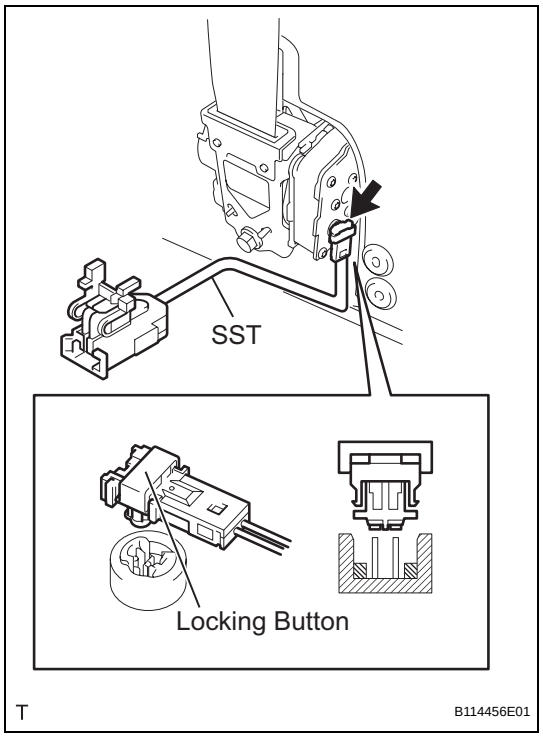

(d) Connect SST.

(1) Connect SST, then connect the yellow connector to the seat belt pretensioner.

SST 09082-00770

NOTICE:

Do not lock the secondary lock of the twin lock to avoid damaging the SST connector and wire harness

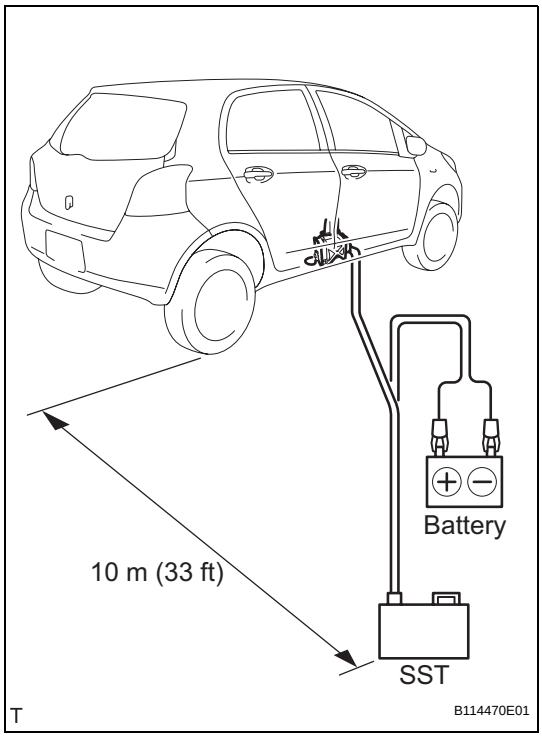

(2) Move SST at least 10 m (33 ft) away from the front of the vehicle.
SST 09082-00700

(3) Close the doors and windows of the vehicle.
HINT:
Do not close the windows fully. Leave a gap for inserting the SST wire harness.
NOTICE:
Do not damaging the SST wire harness.

(4) Connect the SST red clip to the positive battery terminal and the black clip to the negative battery terminal.

(e) Activate the seat belt pretensioner.

(1) Confirm that no one is inside the vehicle or within 10 m (33 ft) of the vehicle.

(2) Press the SST activation switch and activate the seat belt pretensioner.
HINT:
The seat belt pretensioner operates simultaneously with the SST activation switch LED light.

(f) Disconnect SST.

(g) Dispose of the front seat outer belt (with the seat belt pretensioner).
HINT:
When scrapping a vehicle, activate the seat belt pretensioner, and then scrap the vehicle with the activated front seat outer belt still installed.
CAUTION:
- **Do not touch the front seat outer belt for at least 30 minutes after the seat belt pretensioner has been activated. It is very hot.**
- **Use gloves and safety glasses when handling a front seat outer belt with a pretensioner that has been activated.**
- **Always wash your hands with water after completing the operation.**
- **Do not apply water to a front seat outer belt that has an activated pretensioner.**

2. DISPOSE OF FRONT SEAT OUTER BELT ASSEMBLY (When not Installed in Vehicle)
HINT:
Prepare a battery as the power source to activate the seat belt pretensioner.
NOTICE:
- **When only disposing of the front seat outer belt (with the seat belt pretensioner), never use the customer's vehicle to activate the seat belt pretensioner.**
- **Follow the procedure described below when activating the seat belt pretensioner.**

(a) Remove the front seat outer belt assembly (See page SB-59).

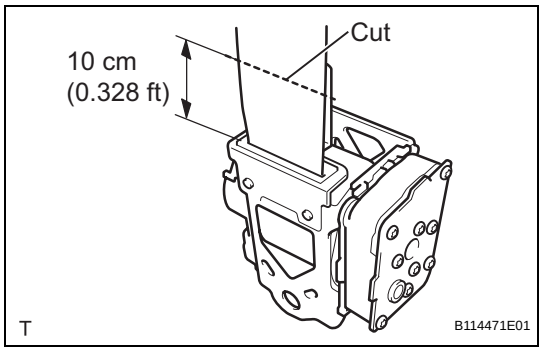

(b) Wind the seat belt with the retractor.
(c) When the seat belt is sufficiently wound, cut the seat belt approximately 10 cm (0.328 ft) from the retractor, as shown in the illustration.
HINT:
The retractor resistance increases in correlation with how much the seat belt is wound.

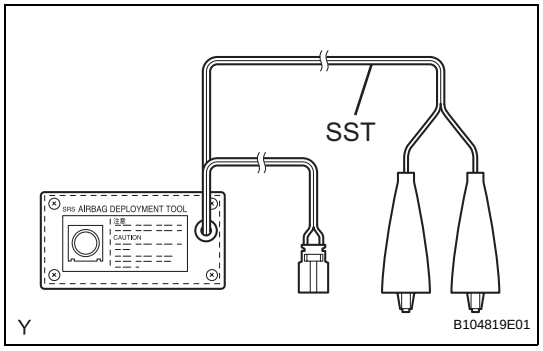

(d) Check whether SST is functioning.
SST 09082-00700
CAUTION:
Always use the specified SST when activating the seat belt pretensioner.

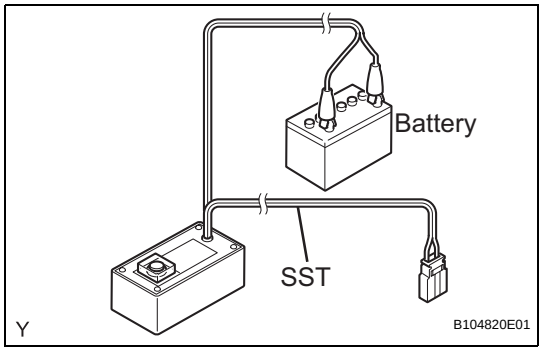

(1) Connect the SST red clip to the positive battery terminal and the black clip to the negative battery terminal.
HINT:
Do not connect the yellow connector. The yellow connector is for connections to the seat belt pretensioner.

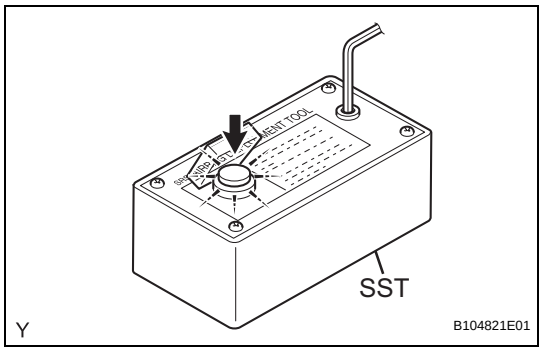

(2) Press the SST activation switch and check that the LED of the SST activation switch turns on.
CAUTION:
If the LED turns on when the activation switch is not being pressed, SST may be malfunctioning. Do not use SST.

SB

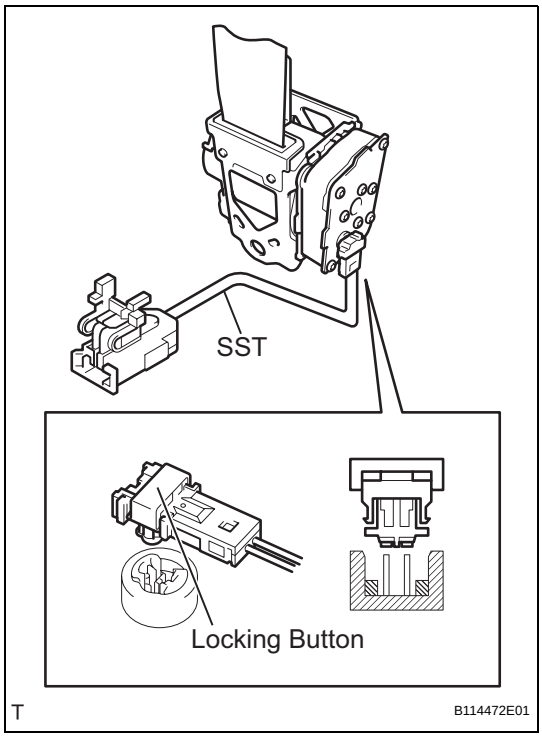

(e) Connect SST.

(1) Connect SST, then connect the yellow connector to the seat belt pretensioner.

SST 09082-00770

NOTICE:

Do not lock the secondary lock of the twin lock to avoid damaging the SST connector and wire harness.

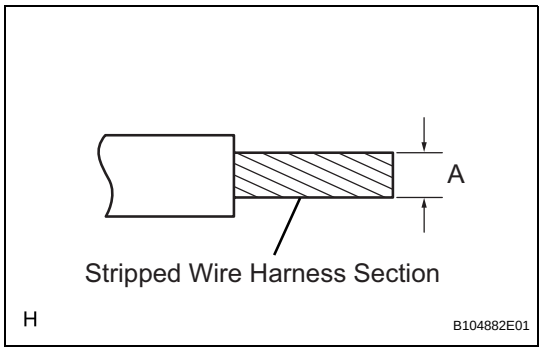

(2) Using a service-purpose wire harness for the vehicle, tie the seat belt pretensioner to the tire with a wheel attached.

Stripped wire harness section:

Area	Measurement
A	1.25 mm^2 or more (0.0019 in^2 or more)

CAUTION:

- **Do not use wire harnesses that are too thin or any other object to tie the seat belt pretensioner because they may snap due to the shock when the pretensioner is deployed.**
- **Always use a wire harness for vehicle use, with a cross section of at least 1.25 mm^2 (0.0019 in^2).**

HINT:

To calculate the area of the stripped wire harness cross section:

Area = 3.14 x $(Diameter)^2$ divided by 4

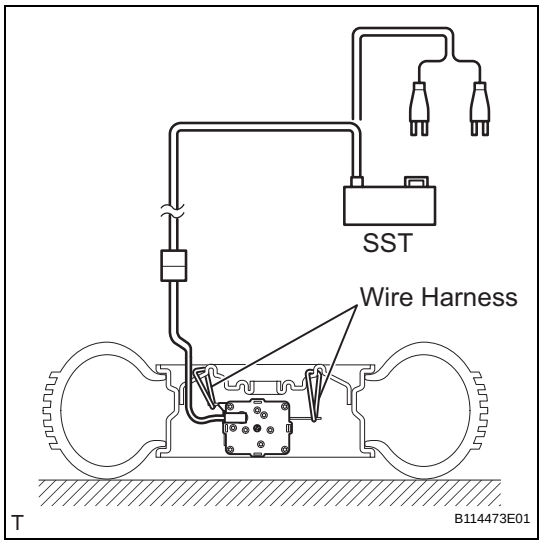

(3) Connect SST.
SST 09082-00700
NOTICE:
- **Do not lock the secondary lock of the twin lock to avoid damaging the SST connector and wire harness.**
- **Set up the front seat outer belt, as shown in the illustration.**

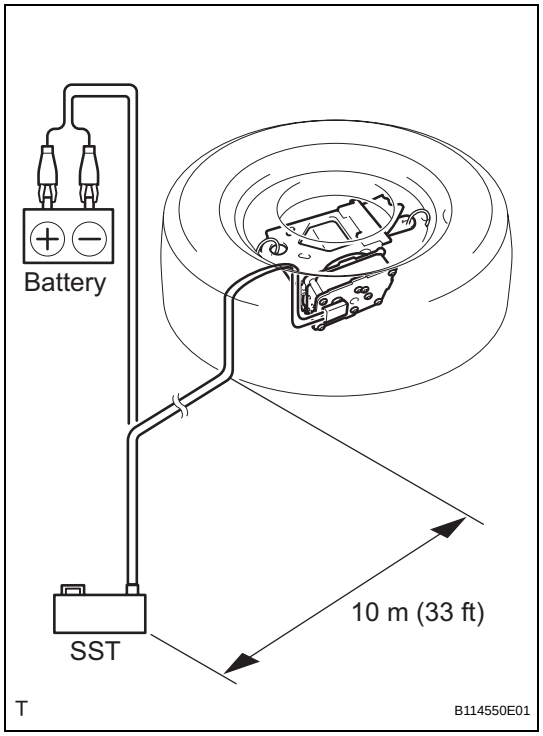

(4) Move SST at least 10 m (33 ft) away from the wheel.
NOTICE:
Do not damage the SST wire harness.

(f) Activate the seat belt pretensioner.
(1) Connect the SST red clip to the positive battery terminal and the black clip to the negative battery terminal.
(2) Check that no one is within 10 m (33 ft) of the wheel.
(3) Press the SST activation switch and activate the seat belt pretensioner.
HINT:
The seat belt pretensioner operates simultaneously with the SST activation switch LED light.

(g) Disconnect SST.

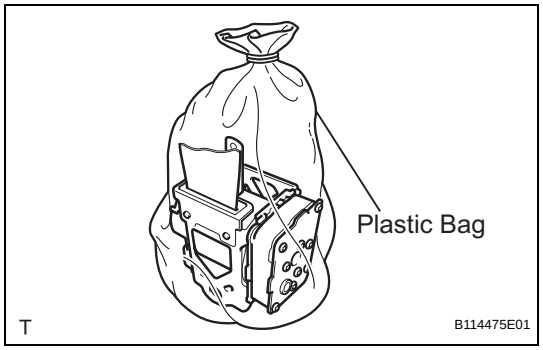

(h) Dispose of the front seat outer belt (with the seat belt pretensioner).
CAUTION:
- **Do not touch the front seat outer belt for at least 30 minutes after the seat belt pretensioner has been activated. It is very hot.**
- **Use gloves and safety glasses when handling a front seat outer belt with a pretensioner that has been activated.**
- **Always wash your hands with water after completing the operation.**
- **Do not apply water to a front seat outer belt that has an activated pretensioner.**

(1) Place the front seat outer belt in a plastic bag, tie the end tightly and dispose of it in the same way as other general parts.

FRONT SEAT OUTER BELT ASSEMBLY (for Hatchback 3 Door)

COMPONENTS

SB

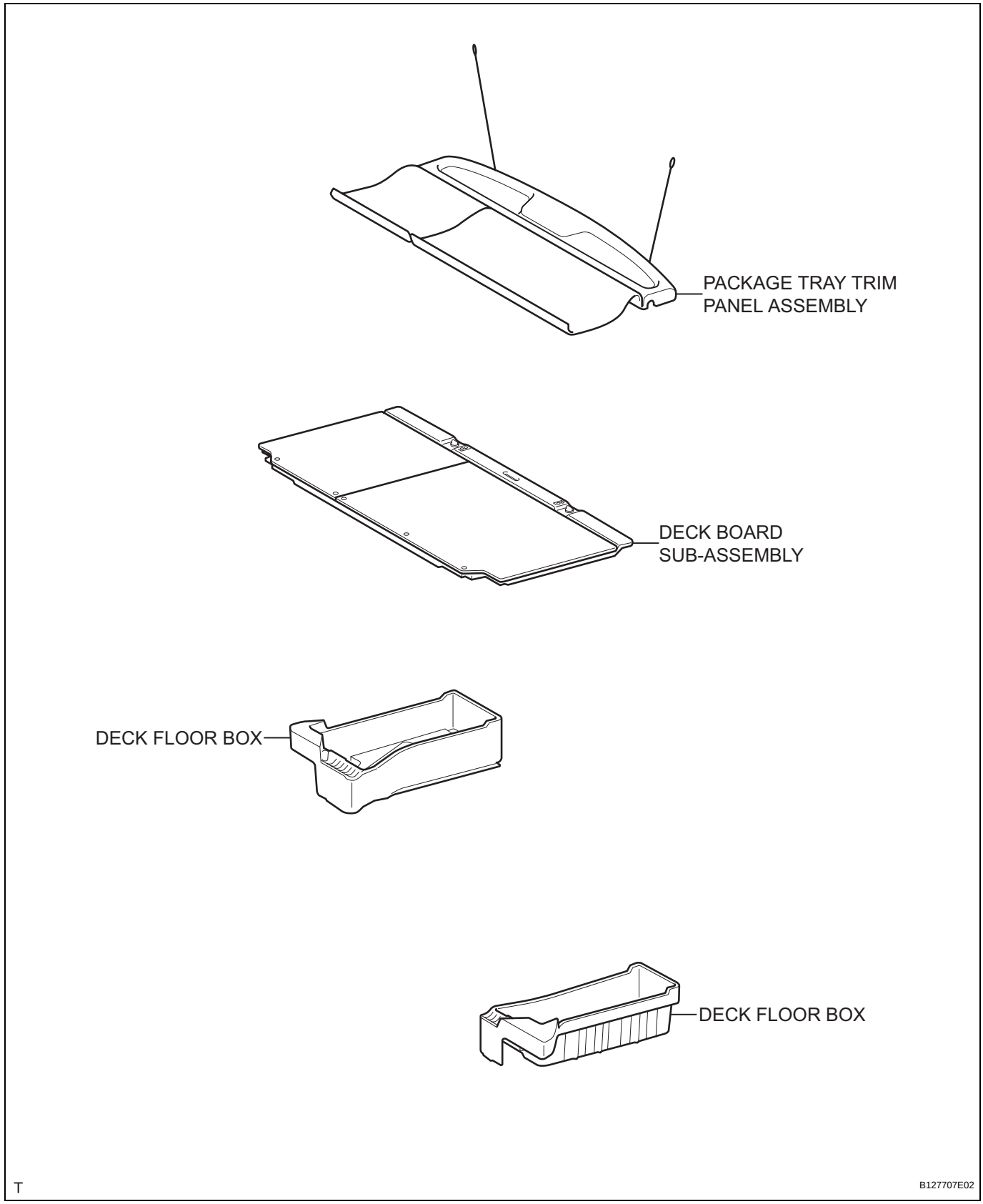

for 60/40 Split Seat Type:

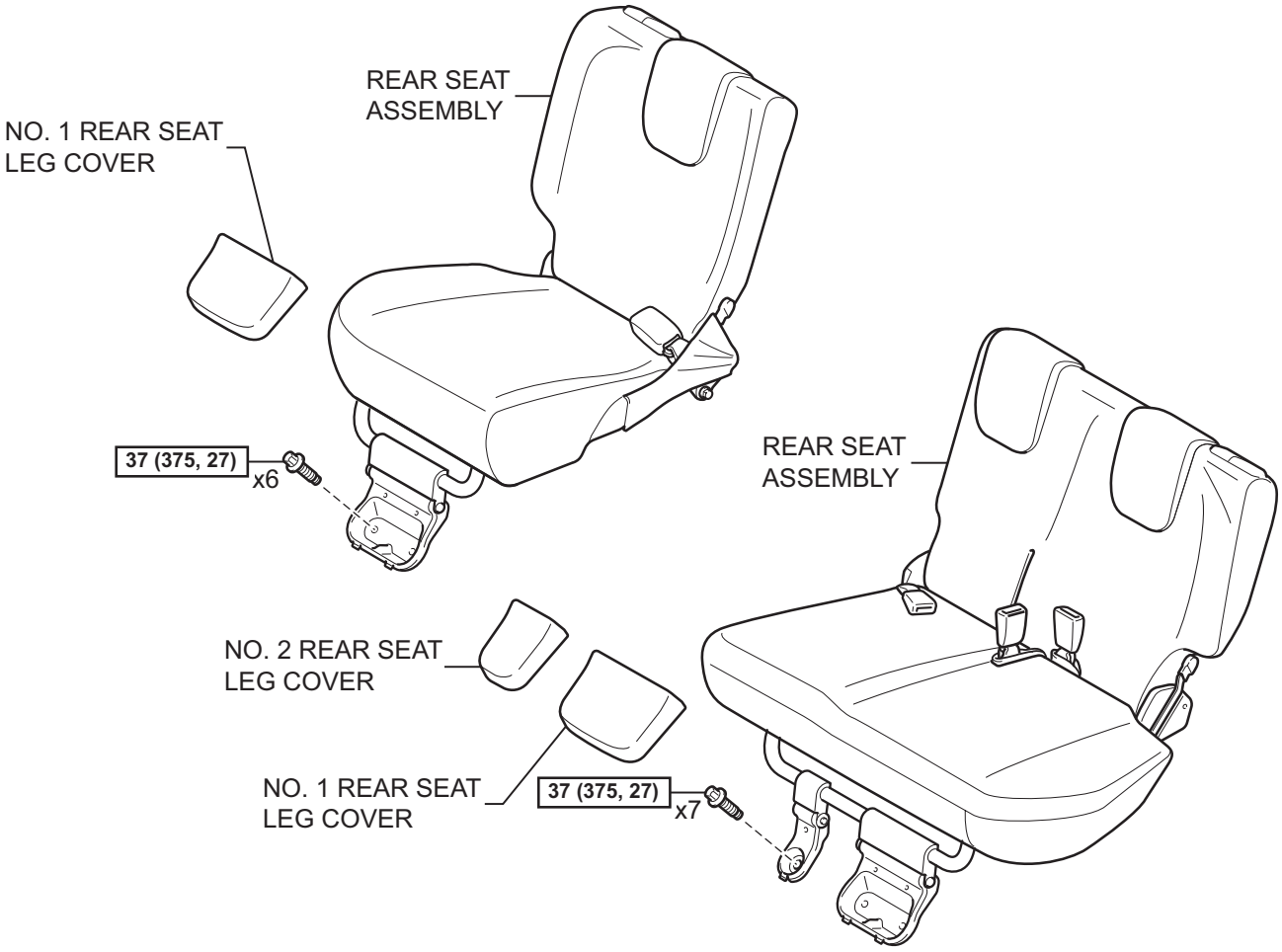

for Hold Down Seat Type:

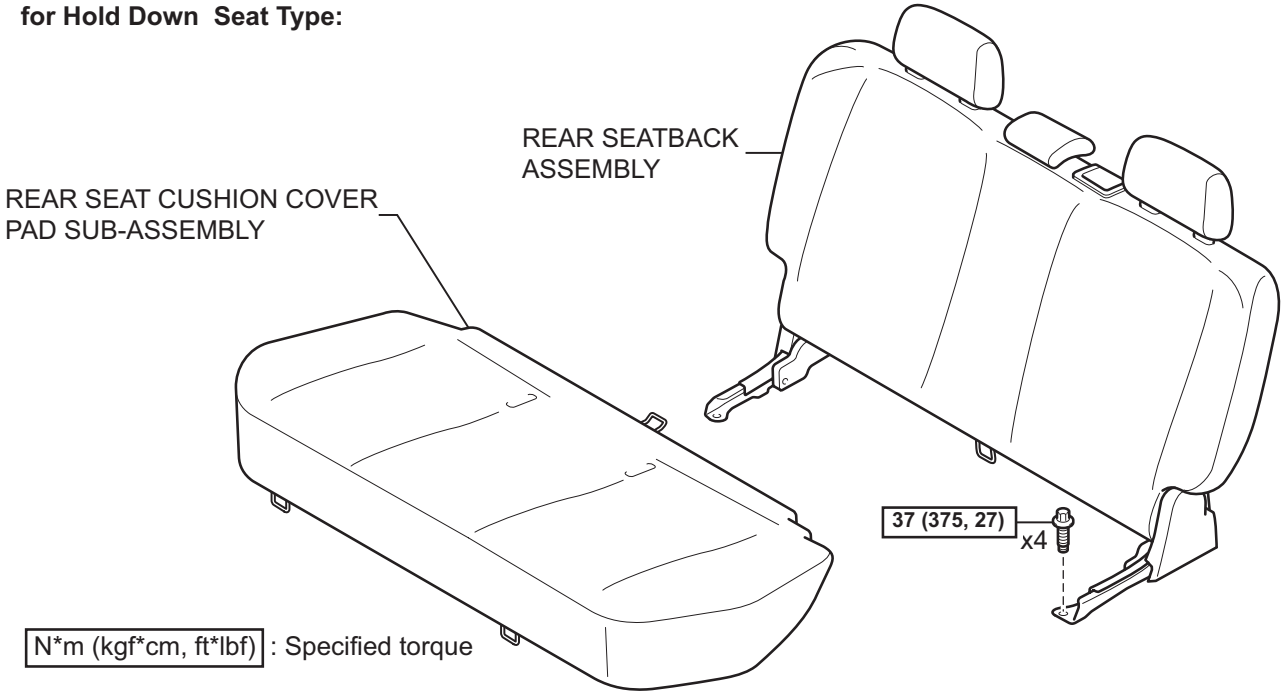

T

B121713E05

SB

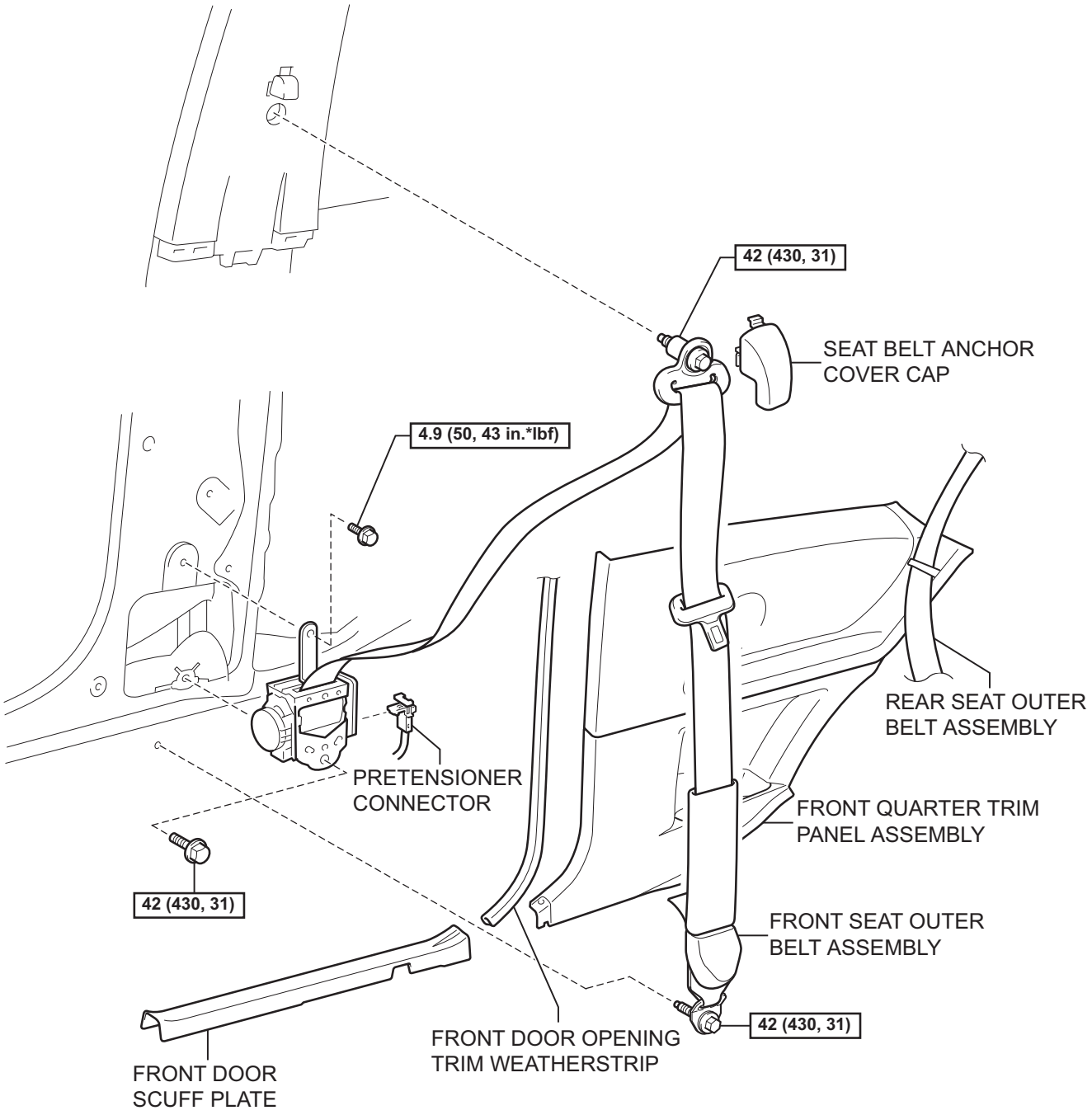

N*m (kgf*cm, ft*lbf) : Specified torque

T

B138697E01

REMOVAL

CAUTION:
Some of these service operations affect the SRS airbag system. Read the precautionary notices concerning the SRS airbag system before servicing (See page RS-1).
NOTICE:
Always use "Torx" socket wrench E10 when removing the rear seat.
HINT:
The procedure described below is for the RH side. Use the same procedure for both the RH and LH sides, unless otherwise specified.

1. **DISCONNECT CABLE FROM NEGATIVE BATTERY TERMINAL**
   CAUTION:
   Wait for at least 90 seconds after disconnecting the cable to prevent the airbag from working.
2. **REMOVE PACKAGE TRAY TRIM PANEL ASSEMBLY (See page IR-48)**
3. **REMOVE DECK BOARD SUB-ASSEMBLY (See page IR-48)**
4. **REMOVE DECK FLOOR BOX**
   (a) for RH Side:
   (1) Remove the deck floor box (See page IR-48).
   (b) for LH Side:
   HINT:
   Use the same procedure as for the RH side.
5. **REMOVE NO. 1 REAR SEAT LEG COVER (for 60/40 Split Seat Type)**
   (a) for RH Side:
   (1) Remove the No. 1 rear seat leg cover (See page SE-89).
   (b) for LH Side:
   (1) Remove the No. 1 rear seat leg cover (See page SE-70).
6. **REMOVE NO. 2 REAR SEAT LEG COVER (for 60/40 Split Seat Type LH Side) (See page SE-70)**
7. **REMOVE REAR SEAT ASSEMBLY (for 60/40 Split Seat Type)**
   (a) for RH Side:
   (1) Remove the rear seat assembly (See page SE-89).
   (b) for LH Side:
   (1) Remove the rear seat assembly (See page SE-71).
8. **REMOVE REAR SEAT CUSHION COVER PAD SUB-ASSEMBLY (for Hold Down Seat Type) (See page SE-114)**
9. **REMOVE REAR SEATBACK ASSEMBLY (for Hold Down Seat Type) (See page SE-115)**

SB

10. REMOVE FRONT DOOR SCUFF PLATE (See page IR-97)

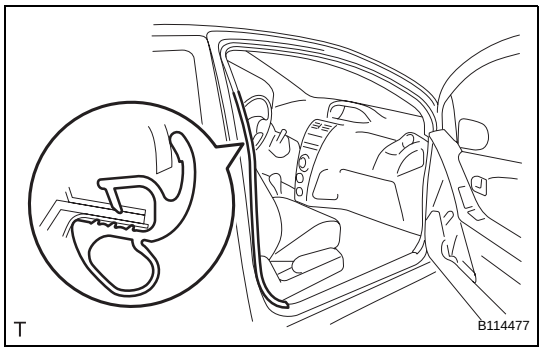

11. REMOVE FRONT DOOR OPENING TRIM WEATHERSTRIP

(a) Remove the front door opening trim weatherstrip to the extent that the front quarter trim panel can be removed.

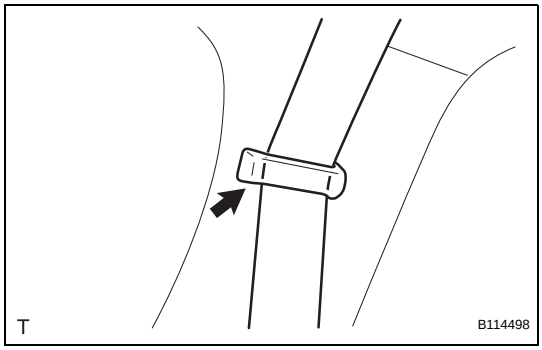

12. REMOVE REAR SEAT OUTER BELT ASSEMBLY

(a) Remove the belt.

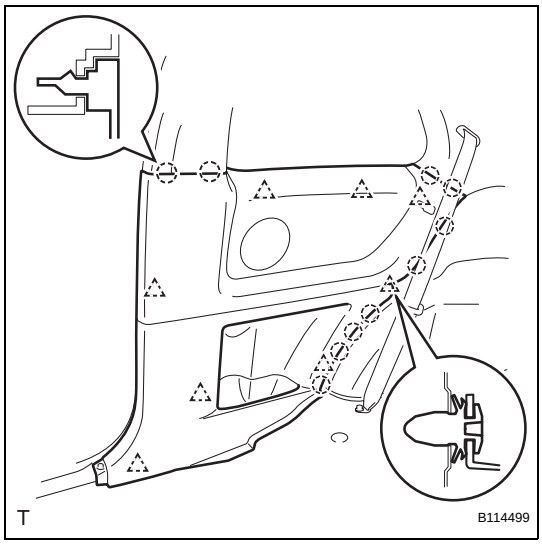

13. REMOVE FRONT QUARTER TRIM PANEL ASSEMBLY

(a) Disengage the 8 clips, the retainer and the 10 claws and remove the front quarter trim panel.

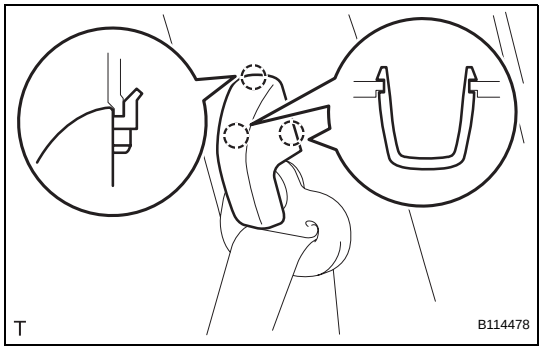

14. REMOVE SEAT BELT ANCHOR COVER CAP

(a) Disengage the 3 claws and remove the seat belt anchor cover cap.

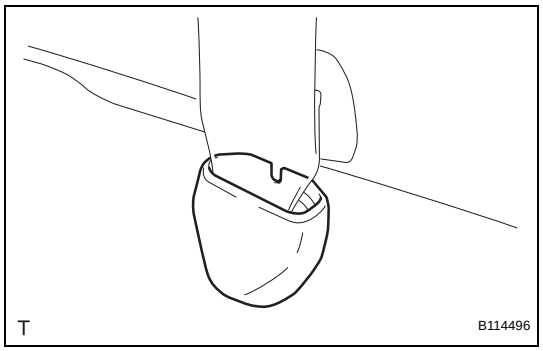

15. REMOVE FRONT SEAT OUTER BELT ASSEMBLY

(a) Remove the anchor plate cover.

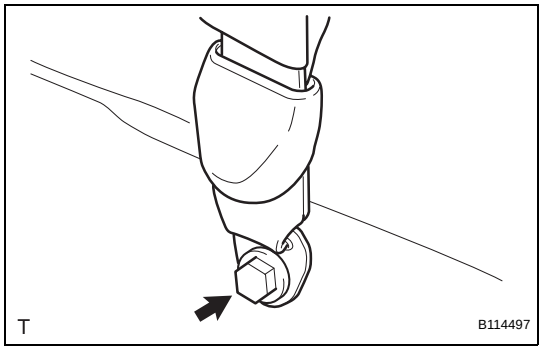

(b) Remove the bolt and the anchor plate.

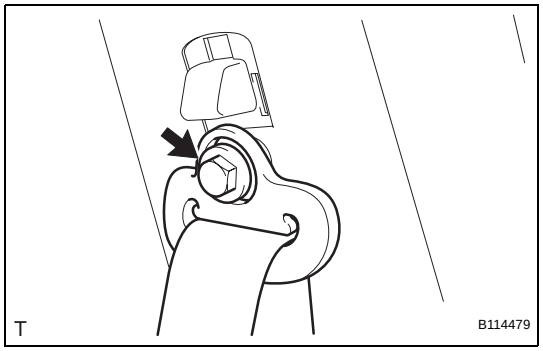

(c) Remove the bolt and the through anchor.

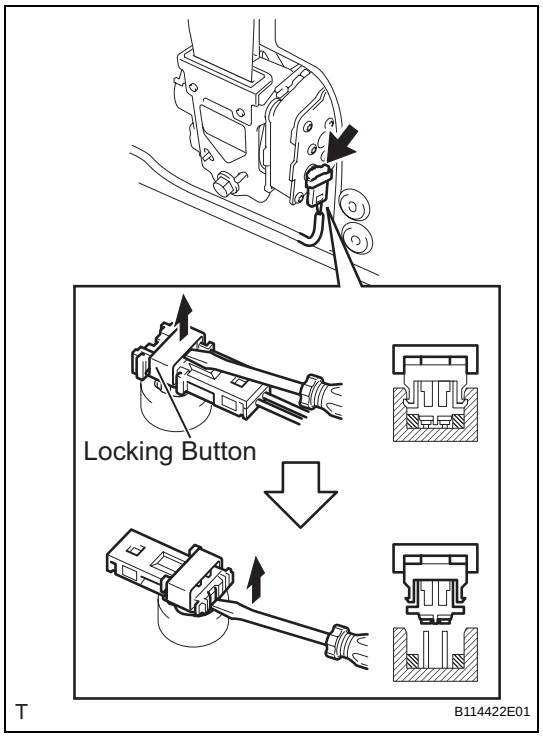

(d) Disconnect the pretensioner connector.
   (1) Using a screwdriver, release the locking button.
   (2) Using a screwdriver, disconnect the pretensioner connector.

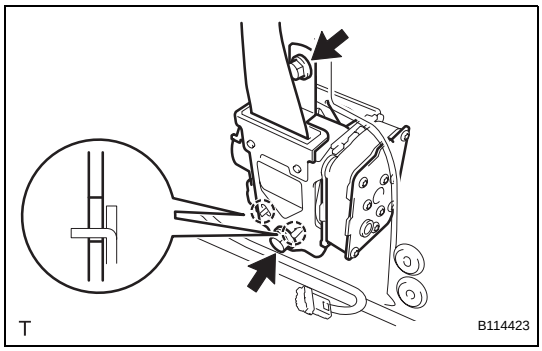

(e) Remove the 2 bolts, the 2 hooks and the retractor.

SB

INSTALLATION

CAUTION:
Some of these service operations affect the SRS airbag system. Read the precautionary notices concerning the SRS airbag system before servicing (See page RS-1).
NOTICE:
Always use "Torx" socket wrench E10 when installing the rear seat.
HINT:
The procedure described below is for the RH side. Use the same procedure for both the RH and LH sides, unless otherwise specified.

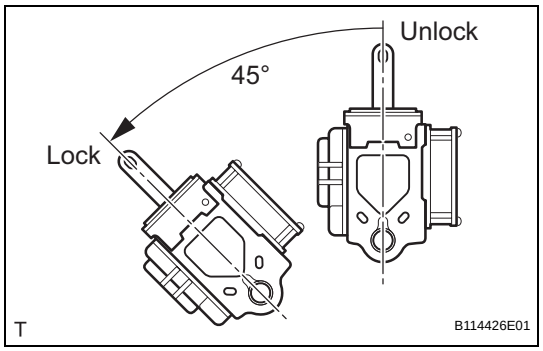

1. INSTALL FRONT SEAT OUTER BELT ASSEMBLY

(a) Check the angle of inclination required to lock the retractor.
  (1) Gently incline the retractor from its initial position. Check that the belt does not lock when the retractor is inclined 15° or less in any direction. Also, check that the belt locks when the inclination of the retractor is 45° or more.
  NOTICE:
  Do not disassemble the retractor.
  If the operation is not as specified, replace the front seat outer belt.

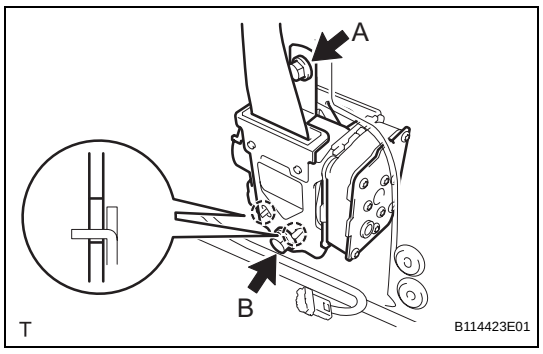

(b) Hook the lower stay of the retractor onto the 2 body hooks and provisionally install the retractor with the 2 bolts.
(c) Tighten bolt A and then bolt B.
Torque: 4.9 N*m (50 kgf*cm, 43 in.*lbf) for bolt A
42 N*m (430 kgf*cm, 31 ft.*lbf) for bolt B

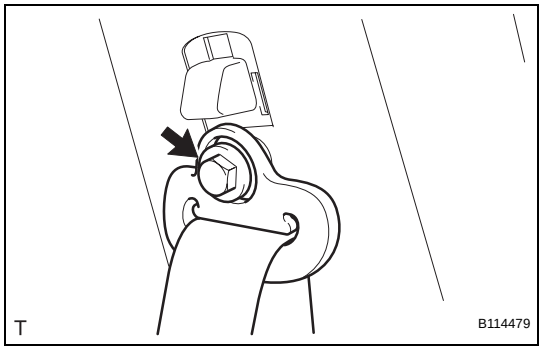

(d) Install the through anchor with the bolt.
Torque: 42 N*m (430 kgf*cm, 31 ft.*lbf)
(e) Check that the ELR locks.
NOTICE:
Perform the check with the front seat outer belt installed
  (1) With the belt installed, check that the belt locks when it is pulled out quickly.
  If the operation is not as specified, replace the front seat outer belt.

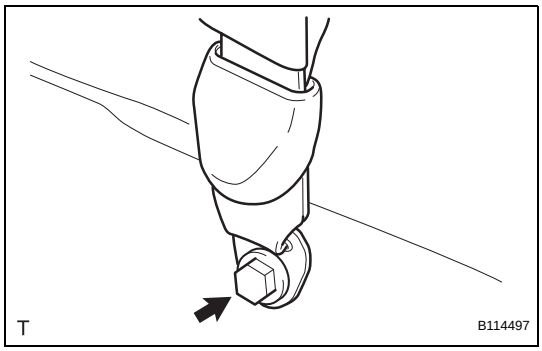

(f) Install the anchor plate with the bolt.
Torque: 42 N*m (430 kgf*cm, 31 ft.*lbf)

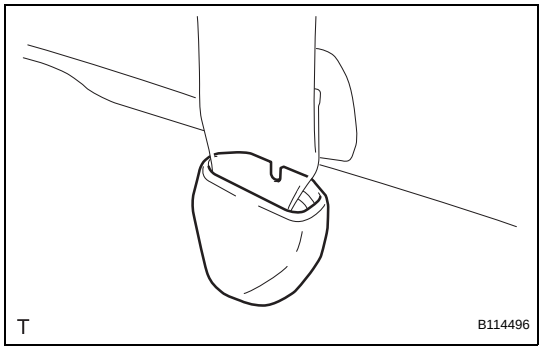

(g) Install the anchor plate cover.

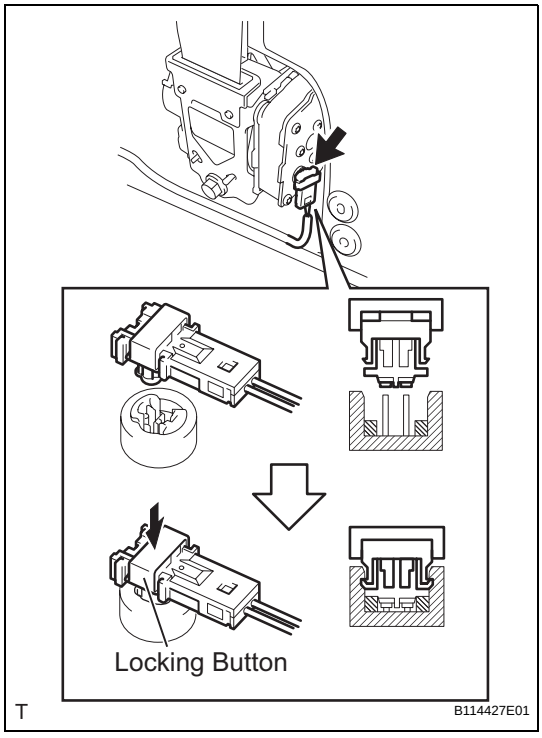

(h) Connect the pretensioner connector.
(1) Connect the pretensioner connector.
(2) Lock the locking button.
NOTICE:
Securely lock the locking button.

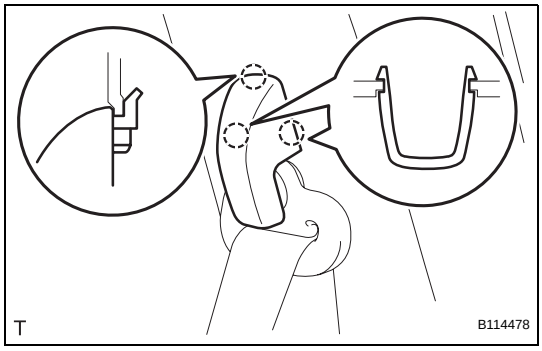

2. INSTALL SEAT BELT ANCHOR COVER CAP

(a) Engage the 3 claws and install the seat belt anchor cover cap.

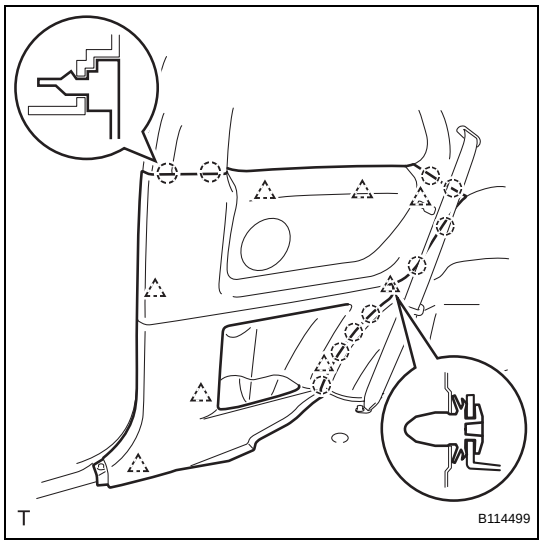

3. **INSTALL FRONT QUARTER TRIM PANEL ASSEMBLY**
   (a) Engage the 8 clips, the retainer and the 10 claws and install the front quarter trim panel.

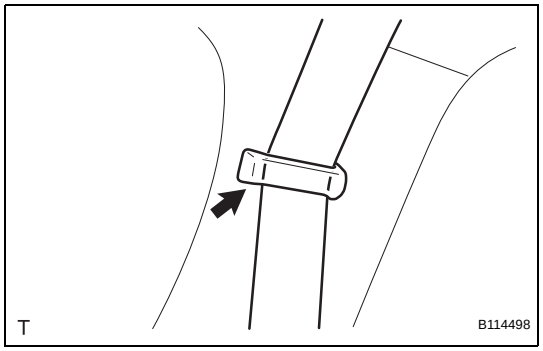

4. **INSTALL REAR SEAT OUTER BELT ASSEMBLY**
   (a) Install the belt.

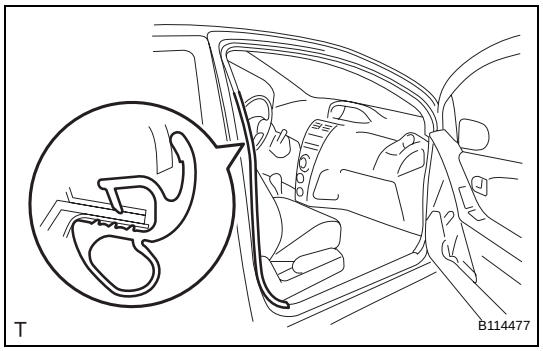

5. **INSTALL FRONT DOOR OPENING TRIM WEATHERSTRIP**
   (a) Install the front door opening trim weatherstrip.
6. **INSTALL FRONT DOOR SCUFF PLATE (See page IR-119)**
7. **INSTALL REAR SEAT ASSEMBLY (for 60/40 Split Seat Type)**
   (a) for RH Side:
      (1) Install the rear seat assembly (See page SE-102).
   (b) for LH Side:
      (1) Install the rear seat assembly (See page SE-84).
8. **INSTALL NO. 2 REAR SEAT LEG COVER (for 60/40 Split Seat Type LH Side) (See page SE-85)**
9. **INSTALL NO. 1 REAR SEAT LEG COVER (for 60/40 Split Seat Type)**
   (a) for RH Side:
      (1) Install the No. 1 rear seat leg cover (See page SE-89).
   (b) for LH Side:
      (1) Install the No. 1 rear seat leg cover (See page SE-85).
10. **INSTALL REAR SEATBACK ASSEMBLY (for Hold Down Seat Type) (See page SE-122)**

11. INSTALL REAR SEAT CUSHION COVER PAD SUB-ASSEMBLY (for Hold Down Seat Type) (See page SE-123)

12. INSTALL DECK FLOOR BOX

(a) for RH side:

(1) Install the deck floor box (See page IR-83).

(b) for LH Side:

HINT:

Use the same procedure as for the RH side.

13. INSTALL DECK BOARD SUB-ASSEMBLY (See page IR-83)

14. INSTALL PACKAGE TRAY TRIM PANEL ASSEMBLY (See page IR-83)

15. CONNECT CABLE TO NEGATIVE BATTERY TERMINAL

Torque: 5.4 N*m (55 kgf*cm, 48 in.*lbf)

16. INSPECT SRS WARNING LIGHT

(See page RS-31)

DISPOSAL

CAUTION:

- **Never dispose of a front seat outer belt that has an inactivated pretensioner.**
- **The seat belt pretensioner produces a loud, exploding sound when it activates. Perform the operation outside and where it will not be a nuisance to persons nearby.**
- **Stand at least 10 m (33 ft) away when activating a front seat outer belt (with seat belt pretensioner).**
- **Use gloves and safety glasses when handling a front seat outer belt with an activated pretensioner.**
- **Always wash your hands with water after completing an activation.**
- **Do not apply water to a front seat outer belt that has an activated pretensioner.**
- **Always use the specified SST (SRS airbag deployment tool) when activating the seat belt pretensioner.**
- **Perform the operation in a place away from electrical interference.**

NOTICE:

Always use "Torx" socket wrench E10 when removing the rear seat.

HINT:

The procedure described below is for the RH side. Use the same procedure for both the RH and LH sides, unless otherwise specified.

1. DISPOSE OF FRONT SEAT OUTER BELT ASSEMBLY (When Installed in Vehicle)

HINT:

Prepare a battery as the power source to activate the seat belt pretensioner.

(a) Check whether SST is functioning.

SST 09082-00700

CAUTION:

Always use the specified SST when activating the seat belt pretensioner.

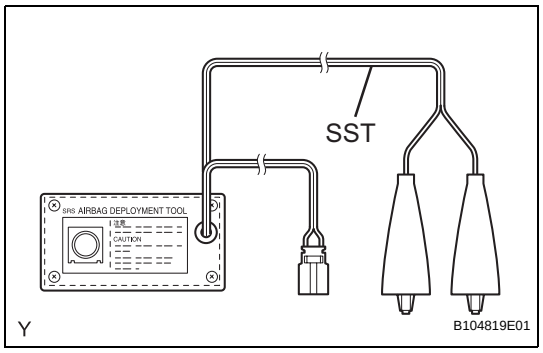

(1) Connect the SST red clip to the positive battery terminal and the black clip to the negative battery terminal.

HINT:

Do not connect the yellow connector. The yellow connector is for connections to the seat belt pretensioner.

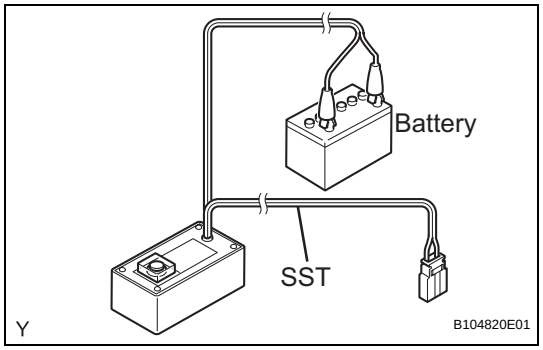

SB

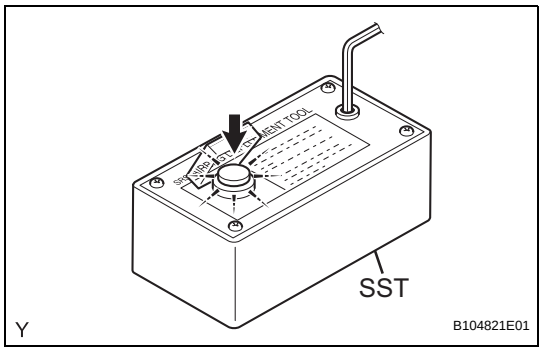

(2) Press the SST activation switch and check that the LED of the SST activation switch turns on.
CAUTION:
If the LED turns on when the activation switch is not being pressed, SST may be malfunctioning. Do not use SST.

(b) Disconnect SST from the battery.

(c) Disconnect the pretensioner connector.

(1) Disconnect the cable from the negative battery terminal.

(2) Remove the package tray trim panel assembly (See page IR-48).

(3) Remove the deck board sub-assembly (See page IR-48).

(4) Remove the deck floor box RH (See page IR-48).

(5) Remove the deck floor box LH (for 60/40 Split Seat Type and Bench Seat Type).
HINT:
Use the same procedure as for the RH side.

(6) Remove the rear seat No. 1 leg cover (for 60/40 Split Seat Type) (See page SB-75).

(7) Remove the rear seat No. 2 leg cover (for 60/40 Split Seat Type LH Side) (See page SE-70).

(8) Remove the rear seat assembly (for 60/40 Split Seat Type) (See page SB-75).

(9) Remove the rear seat cushion cover pad sub-assembly (for Bench Seat Type) (See page SE-114).

(10) Remove the rear seatback assembly (for Bench Seat Type) (See pageSE-115).

(11) Remove the front door scuff plate (See page IR-97).

(12) Remove the front door opening trim weatherstrip (See page SB-76).

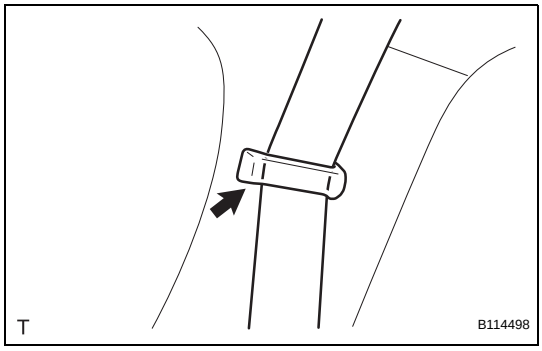

(13) Remove the rear seat outer belt assembly.
1. Remove the belt.

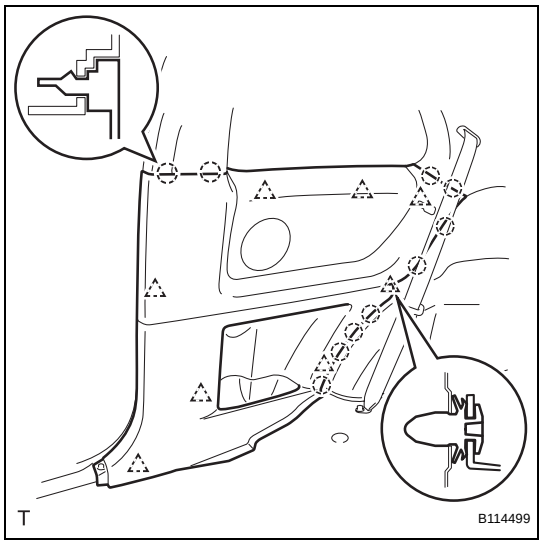

(14) Remove the front quarter trim panel assembly.
1. Disengage the 8 clips, the retainer and the 10 claws and remove the front quarter trim panel.

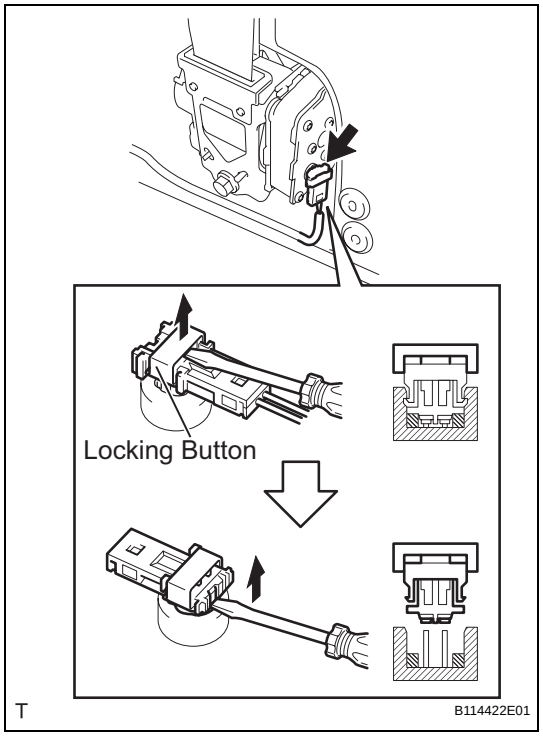

(15) Disconnect the pretensioner connector as shown in the illustration.

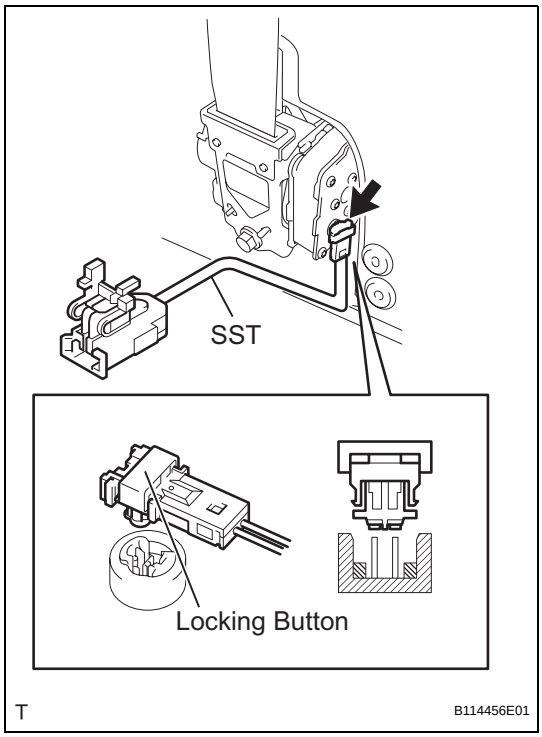

(d) Connect SST.
(1) Connect SST, then connect the yellow connector to the seat belt pretensioner.
SST 09082-00770
NOTICE:
Do not lock the secondary lock of the twin lock to avoid damaging the SST connector and wire harness.

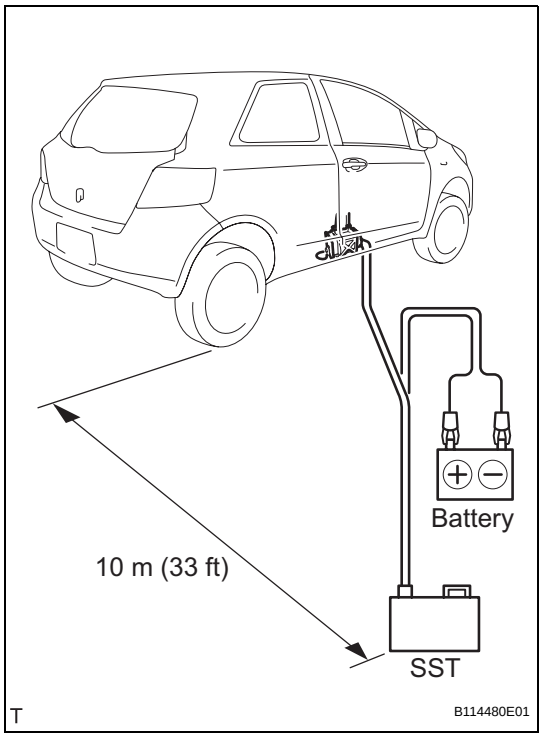

(2) Move the SST at least 10 m (33 ft) away from the front of the vehicle.
SST 09082-00700
(3) Close the doors and windows of the vehicle.
HINT:
Do not close the windows fully. Leave a gap for inserting the SST wire harness.
NOTICE:
Do not damage the SST wire harness.
(4) Connect the SST red clip to the positive battery terminal and the black clip to the negative battery terminal.

(e) Activate the seat belt pretensioner.
(1) Confirm that no one is inside the vehicle or within 10 m (33 ft) of the vehicle.
(2) Press the SST activation switch and activate the seat belt pretensioner.
HINT:
The seat belt pretensioner operates simultaneously with the SST activation switch LED light.

(f) Disconnect SST.

(g) Dispose of the front seat outer belt (with the seat belt pretensioner).
HINT:
When scrapping a vehicle, activate the seat belt pretensioner, and then scrap the vehicle with the activated front seat outer belt still installed.

CAUTION:

- **Do not touch the front seat outer belt for at least 30 minutes after the seat belt pretensioner has been activated. It is very hot.**
- **Use gloves and safety glasses when handling an front seat outer belt with a pretensioner that has been activated.**
- **Always wash your hands with water after completing the operation.**
- **Do not apply water to a front seat outer belt that has an activated pretensioner.**

2. DISPOSE OF FRONT SEAT OUTER BELT ASSEMBLY (When not Installed in Vehicle)

HINT:

Prepare a battery as the power source to activate the seat belt pretensioner.

NOTICE:

- **When only disposing of the front seat outer belt (with the seat belt pretensioner), never use the customer's vehicle to activate the seat belt pretensioner.**
- **Follow the procedure described below when activating the seat belt pretensioner.**

(a) Remove the front seat outer belt assembly (See page SB-75).

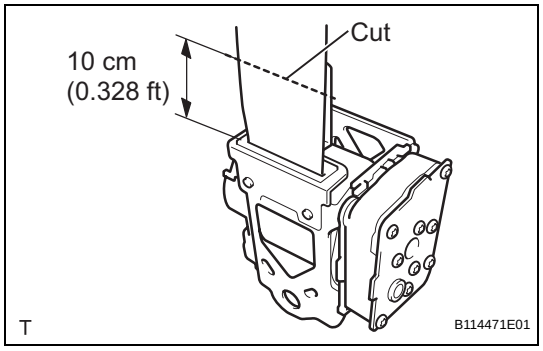

(b) Wind the seat belt with the retractor.

(c) When the seat belt is sufficiently wound, cut the seat belt approximately 10 cm (0.328 ft) from the retractor, as shown in the illustration.

HINT:

The retractor resistance increases in correlation with how much the seat belt is wound.

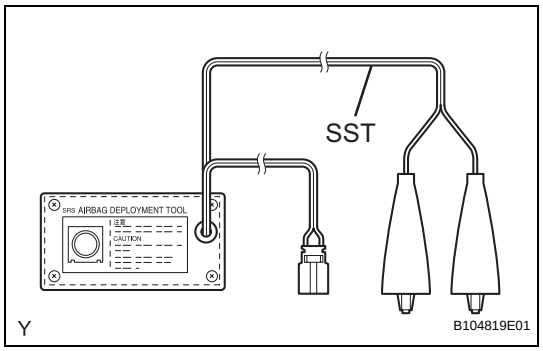

(d) Check whether SST is functioning.

SST 09082-00700

CAUTION:

Always use the specified SST when activating the seat belt pretensioner.

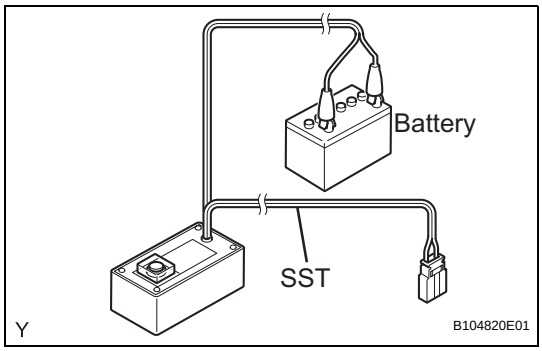

(1) Connect the SST red clip to the positive battery terminal and the black clip to the negative battery terminal.
HINT:
Do not connect the yellow connector. The yellow connector is for connections to the seat belt pretensioner.

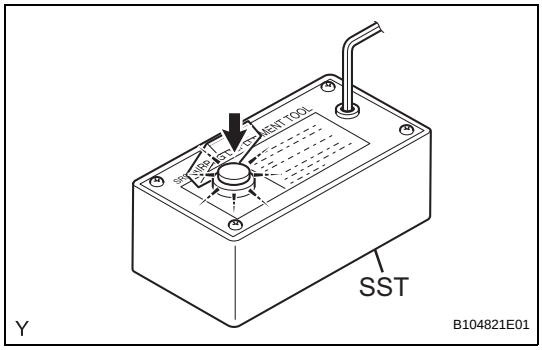

(2) Press the SST activation switch and check that the LED of the SST activation switch turns on.
CAUTION:
If the LED turns on when the activation switch is not being pressed, SST may be malfunctioning. Do not use SST.

(e) Connect SST.

(1) Connect SST, then connect the yellow connector to the seat belt pretensioner.
SST 09082-00770
NOTICE:
Do not lock the secondary lock of the twin lock to avoid damaging the SST connector and wire harness.

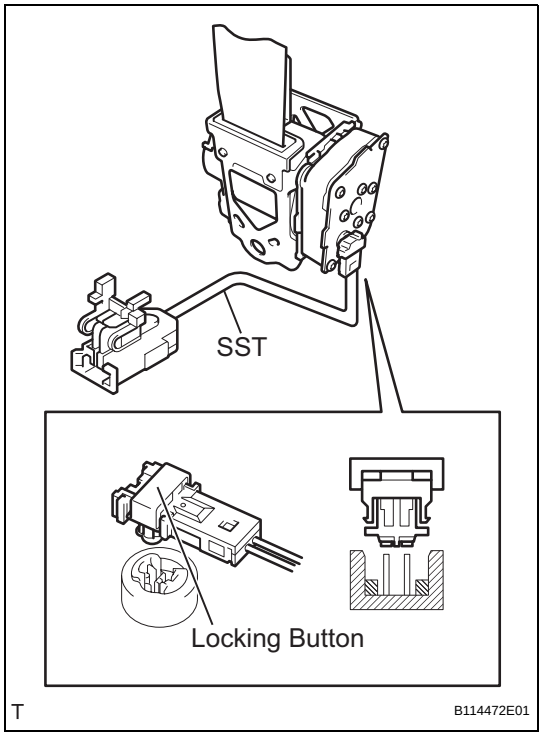

(2) Using a service-purpose wire harness for the vehicle, tie the seat belt pretensioner to the tire with a wheel attached.
Stripped wire harness section:

Area	Measurement
A	1.25 mm^2 or more (0.0019 in^2 or more)

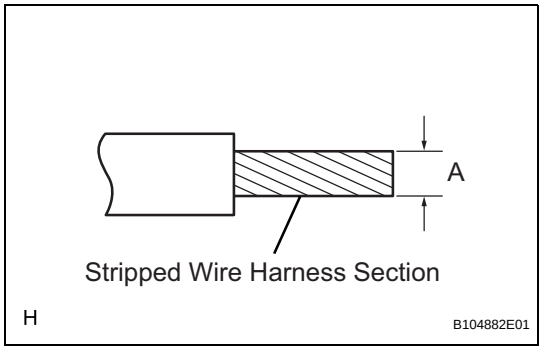

CAUTION:

- **Do not use wire harnesses that are too thin or any other object to tie the seat belt pretensioner because they may snap due to the shock when the pretensioner is deployed.**
- **Always use a wire harness for vehicle use, with a cross section of at least 1.25 mm^2 (0.0019 in^2).**

HINT:

To calculate the area of the stripped wire harness cross section:

Area = 3.14 x (Diameter)^2 divided by 4

(3) Connect SST.

SST 09082-00700

NOTICE:

- **Do not lock the secondary lock of the twin lock to avoid damaging the SST connector and wire harness.**
- **Set up the front seat outer belt as shown in the illustration.**

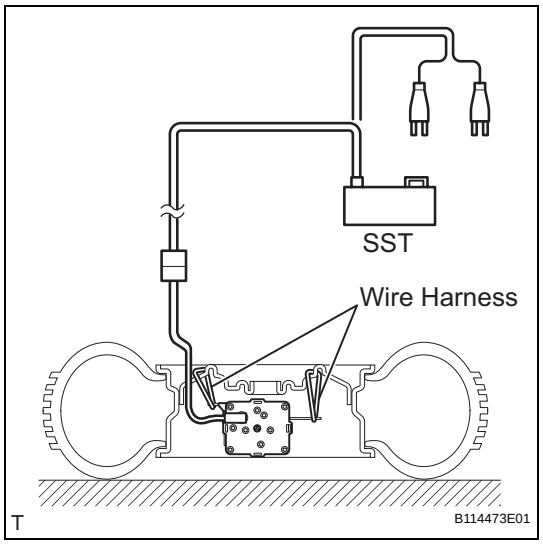

(4) Move SST at least 10 m (33 ft) away from the wheel.

NOTICE:

Do not damage the SST wire harness.

(f) Activate the seat belt pretensioner.

(1) Connect the SST red clip to the positive battery terminal and the black clip to the negative battery terminal.

(2) Check that no one is within 10 m (33 ft) of the wheel.

(3) Press the SST activation switch and activate the seat belt pretensioner.

HINT:

The seat belt pretensioner operates simultaneously with the SST activation switch LED light.

(g) Disconnect SST.

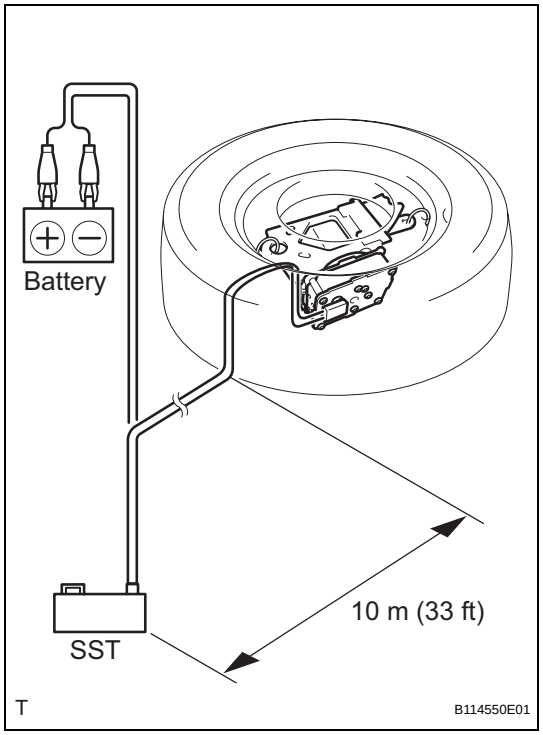

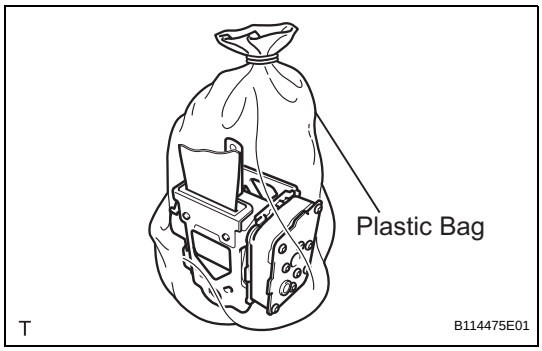

(h) Dispose of the front seat outer belt (with the seat belt pretensioner).

CAUTION:

- **Do not touch the front seat outer belt for at least 30 minutes after the seat belt pretensioner has been activated. It is very hot.**
- **Use gloves and safety glasses when handling a front seat outer belt with a pretensioner that has been activated.**
- **Always wash your hands with water after completing the operation.**
- **Do not apply water to a front seat outer belt that has an activated pretensioner.**

(1) Place the front seat outer belt in a plastic bag, tie the end tightly and dispose of it in the same way as other general parts.

REAR SEAT INNER BELT ASSEMBLY (for Sedan)

COMPONENTS

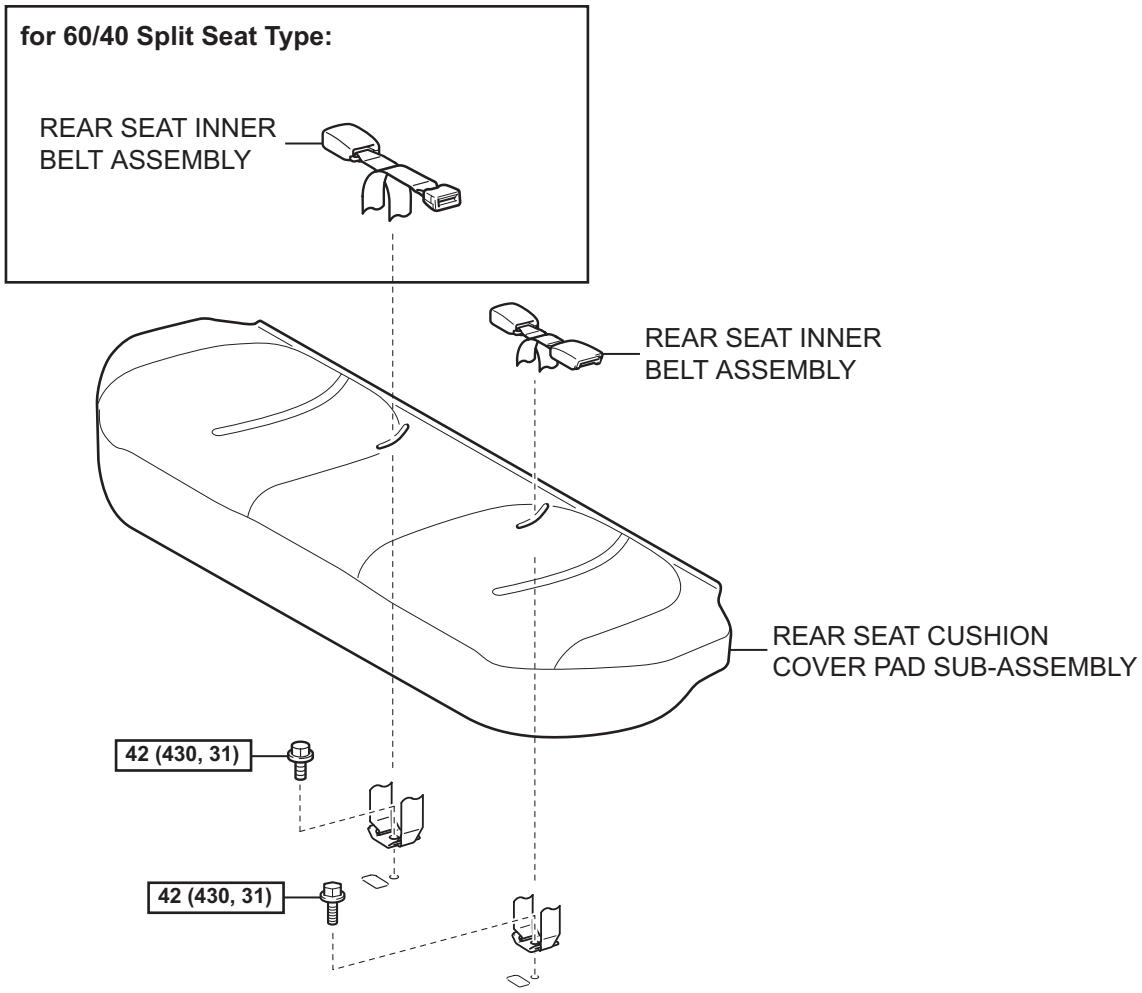

N*m (kgf*cm, ft*lbf) : Specified torque

T

B138566E01

SB

REMOVAL

1. REMOVE REAR SEAT CUSHION COVER PAD SUB-ASSEMBLY

(a) for 60/40 Split Seat Type:

(1) Remove the rear seat cushion cover pad (See page SE-46).

(b) for Fixed Seat Type:

(1) Remove the rear seat cushion cover pad (See page SE-106).

2. REMOVE REAR SEAT INNER BELT ASSEMBLY

(a) for RH Side (for 60/40 Split Seat Type):

(1) Remove the bolt and the rear seat inner belt.

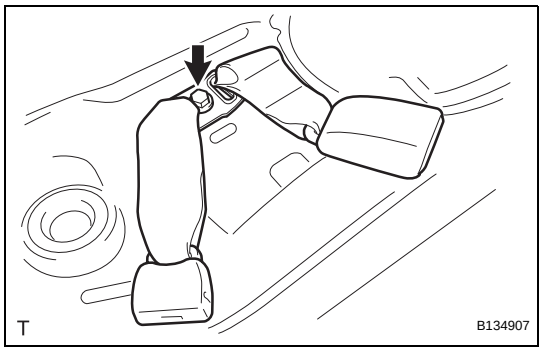

(b) LH Side:

(1) Remove the bolt and the rear seat inner belt.

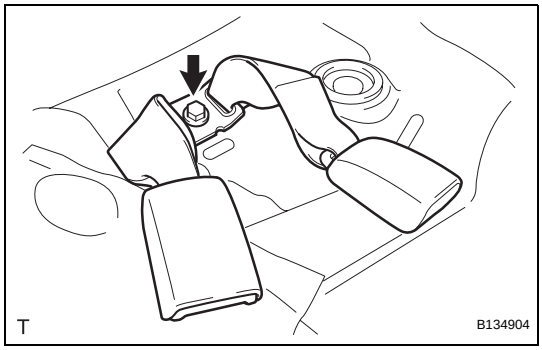

INSTALLATION

1. INSTALL REAR SEAT INNER BELT ASSEMBLY

(a) for RH Side (60/40 Split Seat Type):

(1) Install the rear seat inner belt with the bolt.
Torque: 42 N*m (430 kgf*cm, 31 ft.*lbf)
NOTICE:

- **Install the anchor plate with the arrow mark facing forward.**
- **Do not place the anchor plate over the locating mark area of the floor panel.**

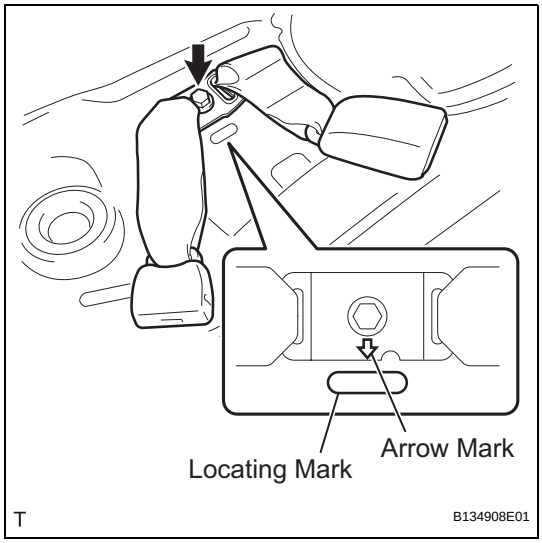

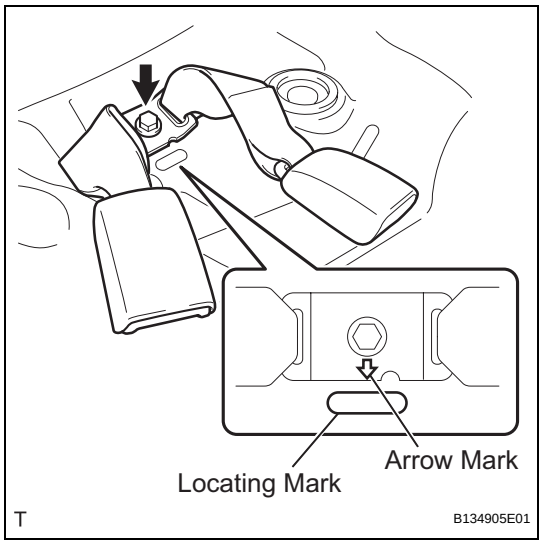

(b) for LH Side:
  (1) Install the rear seat inner belt with the bolt.
  Torque: 42 N*m (430 kgf*cm, 31 ft.*lbf)
  NOTICE:
  - **Install the anchor plate with the arrow mark facing forward.**
  - **Do not place the anchor plate over the locating mark area of the floor panel.**

2. INSTALL REAR SEAT CUSHION COVER PAD SUB-ASSEMBLY

(a) for 60/40 Split Seat Type:
  (1) Install the rear seat cushion cover pad (See page SE-53).

(b) for Fixed Seat Type:
  (1) Install the rear seat cushion cover pad (See page SE-109).

SB

REAR SEAT INNER BELT ASSEMBLY (for Hatchback LH Side)

COMPONENTS

SB

for 60/40 Split Seat Type:

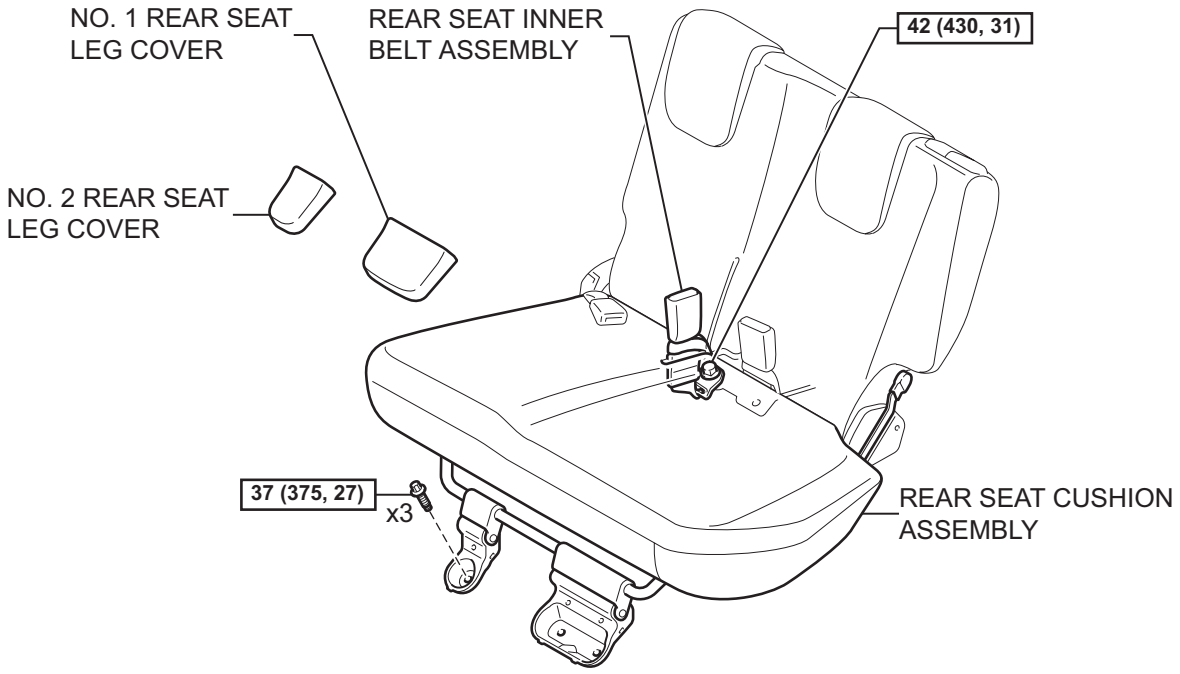

for Hold Down Seat Type:

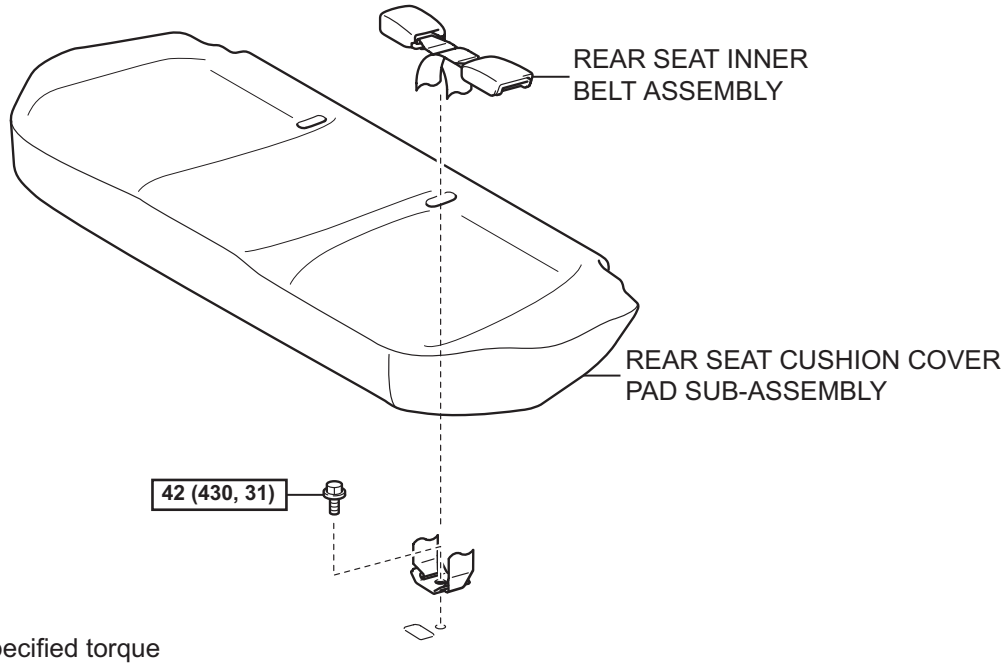

N*m (kgf*cm, ft*lbf) : Specified torque

T

B117789E02

REMOVAL

NOTICE:
Always use "Torx" socket wrench E10 when removing the rear seat.

1. **REMOVE NO. 1 REAR SEAT LEG COVER (for 60/40 Split Seat Type) (See page SE-71)**
2. **REMOVE NO. 2 REAR SEAT LEG COVER (for 60/40 Split Seat Type) (See page SE-70)**
3. **REMOVE REAR SEAT CUSHION COVER PAD SUB-ASSEMBLY (for Hold Down Seat Type) (See page SE-114)**
4. **REMOVE REAR SEAT INNER BELT ASSEMBLY**
   (a) for 60/40 Split Seat Type:
      (1) Using "Torx" socket wrench E10, remove the 3 bolts and pull up the rear seat cushion.

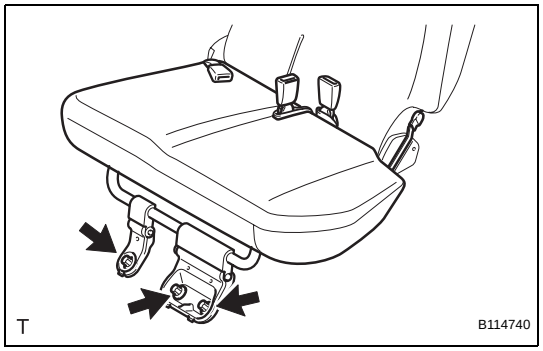

      (2) Remove the belt from the band.
      (3) Remove the bolt and the rear seat inner belt.

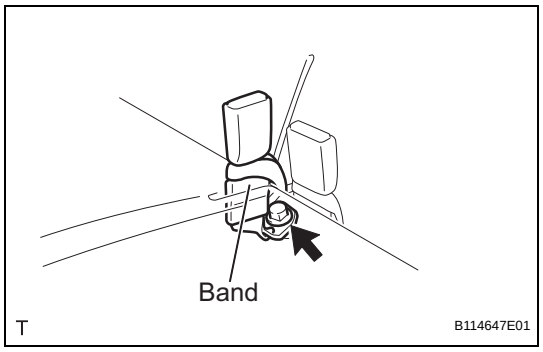

   (b) for Hold Down Seat Type:
      (1) Remove the bolt and the rear seat inner belt.

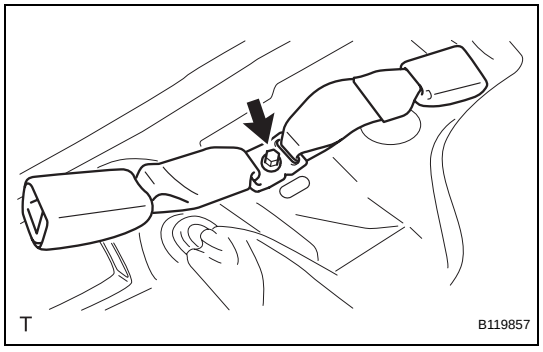

SB

INSTALLATION

NOTICE:
Always use "Torx" socket wrench E10 when installing the rear seat.

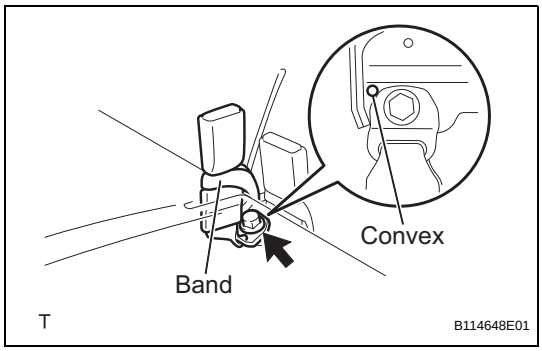

1. INSTALL REAR SEAT INNER BELT ASSEMBLY

(a) for 60/40 Split Seat Type:

(1) Install the rear seat inner belt with the bolt.
Torque: 42 N*m (430 kgf*cm, 31 ft.*lbf)
NOTICE:
Do not place the anchor plate over the convex area of the rear seat back frame.

(2) Install the belt into the band.

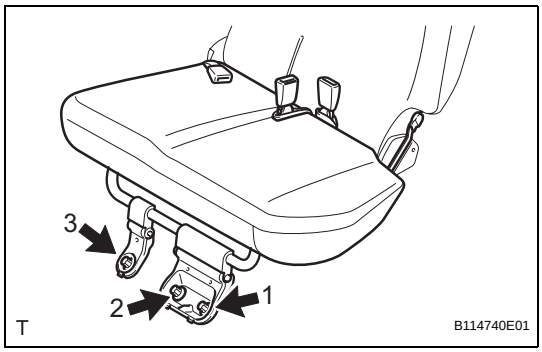

(3) Install the rear seat cushion.

(4) Using "Torx" socket wrench E10, tighten the 3 bolts in the sequence shown in the illustration.
Torque: 37 N*m (375 kgf*cm, 27 ft.*lbf)

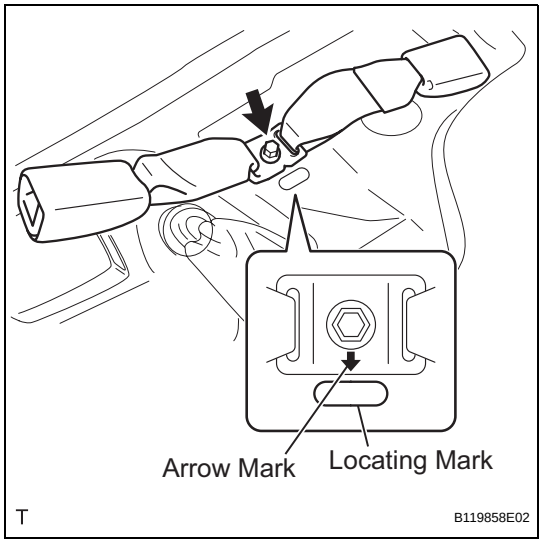

(b) for Hold Down Seat Type:

(1) Install the rear seat inner belt with the bolt.
Torque: 42 N*m (430 kgf*cm, 31 ft.*lbf)
NOTICE:
- **Install the anchor plate with the arrow mark facing forward.**
- **Do not place the anchor plate over the locating mark area of the floor panel.**

2. INSTALL NO. 2 REAR SEAT LEG COVER (for 60/40 Split Seat Type) (See page SE-85)

3. INSTALL NO. 1 REAR SEAT LEG COVER (for 60/40 Split Seat Type) (See page SE-85)

4. INSTALL REAR SEAT CUSHION COVER PAD SUB-ASSEMBLY (for Hold Down Seat Type) (See page SE-123)

REAR SEAT INNER BELT ASSEMBLY (for Hatchback RH Side)

COMPONENTS

SB

for 60/40 Split Seat Type:

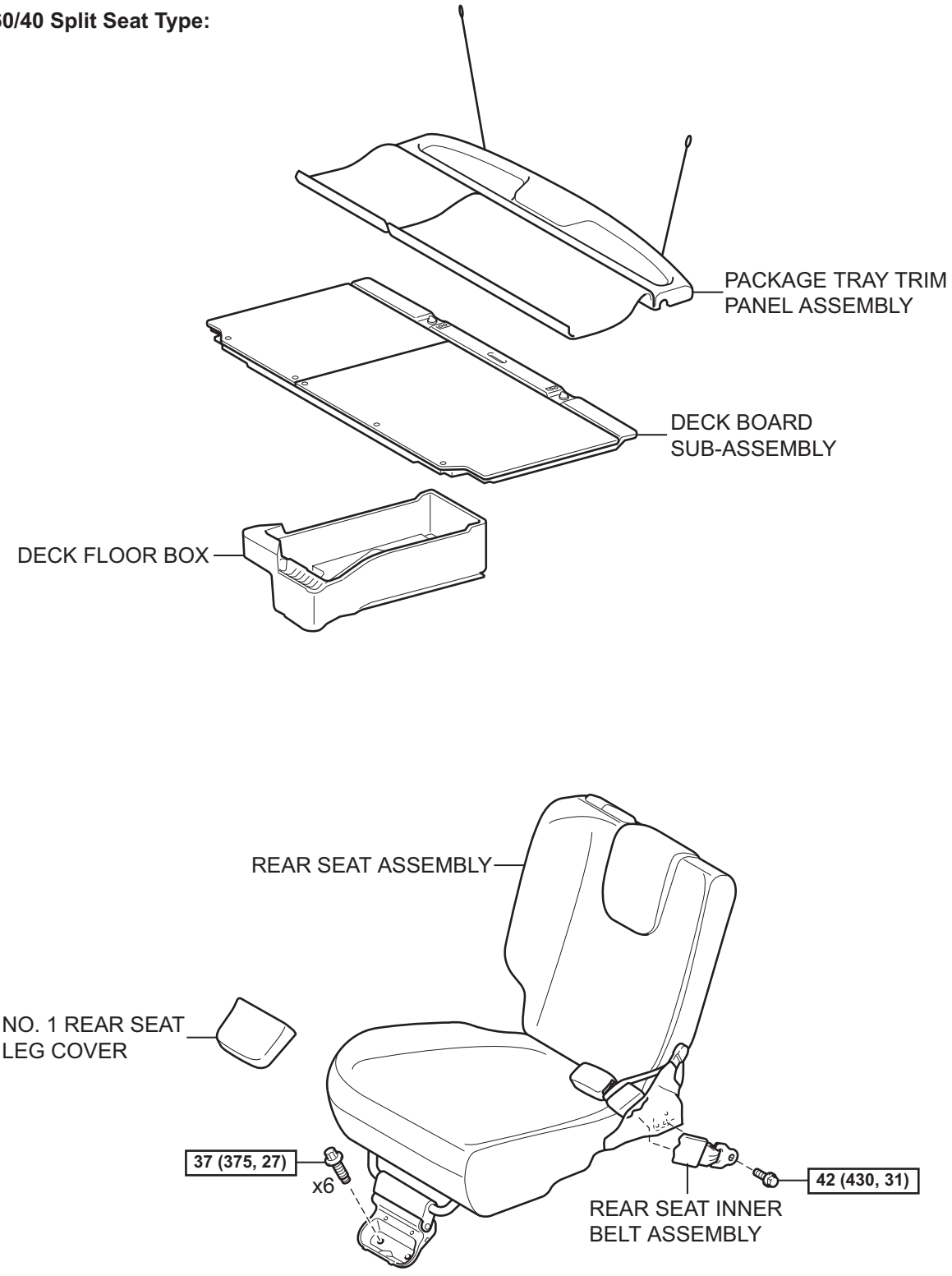

N*m (kgf*cm, ft*lbf) : Specified torque

T

B114642E02

SB

for Hold Down Seat Type:

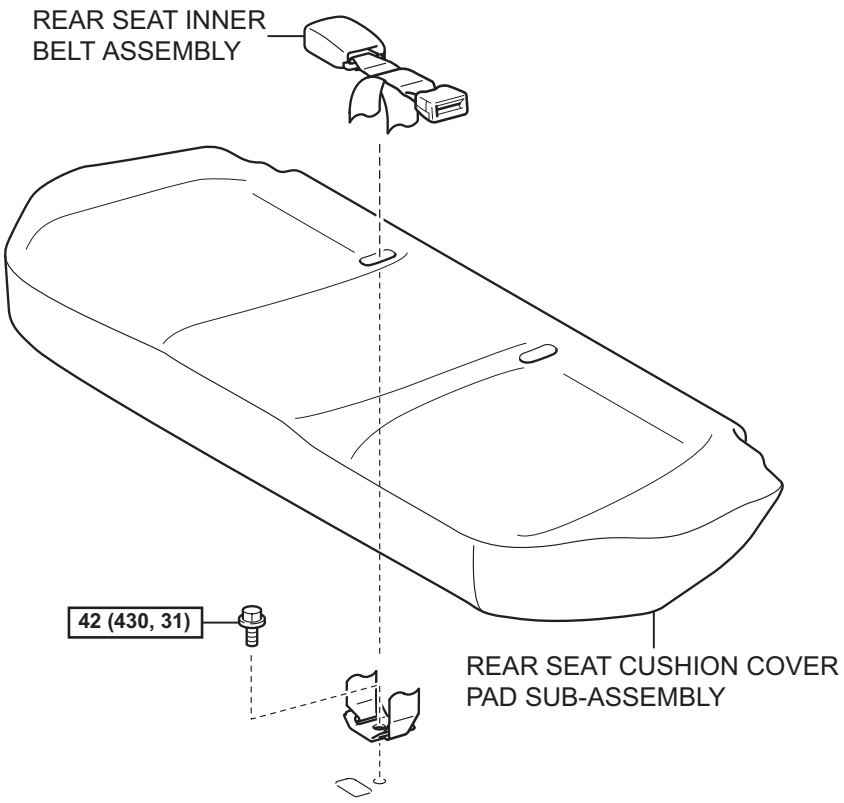

N*m (kgf*cm, ft*lbf) : Specified torque

T

B119856E03

REMOVAL

NOTICE:
Always use "Torx" socket wrench E10 when removing the rear seat.

1. **REMOVE PACKAGE TRAY TRIM PANEL ASSEMBLY (for 60/40 Split Seat Type) (See page IR-48)**
2. **REMOVE DECK BOARD SUB-ASSEMBLY (for 60/40 Split Seat Type) (See page IR-48)**
3. **REMOVE DECK FLOOR BOX (for 60/40 Split Seat Type) (See page IR-48)**
4. **REMOVE NO. 1 REAR SEAT LEG COVER (for 60/40 Split Seat Type) (See page SE-89)**
5. **REMOVE REAR SEAT ASSEMBLY (for 60/40 Split Seat Type) (See page SE-89)**
6. **REMOVE REAR SEAT CUSHION COVER PAD SUB-ASSEMBLY (for Hold Down Seat Type) (See page SE-114)**
7. **REMOVE REAR SEAT INNER BELT ASSEMBLY**
   (a) for 60/40 Split Seat Type:
      (1) Remove the belt from the band.
      (2) Remove the bolt and the rear seat inner belt.

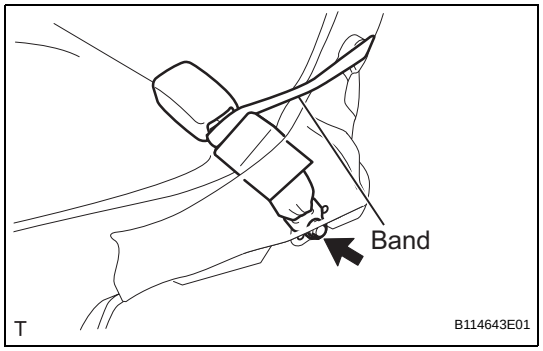

   (b) for Hold Down Seat Type:
      (1) Remove the bolt and the rear seat inner belt.

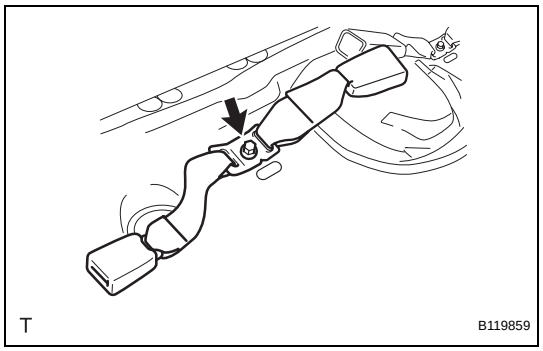

SB

INSTALLATION

NOTICE:
Always use "Torx" socket wrench E10 when installing the rear seat.

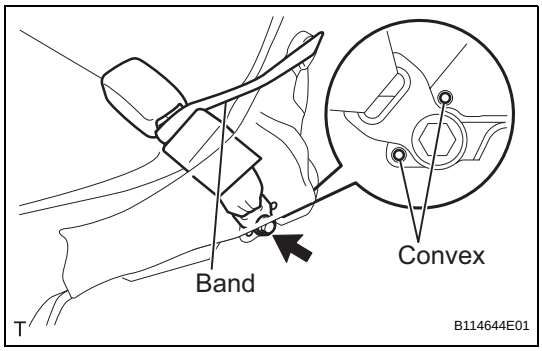

1. INSTALL REAR SEAT INNER BELT ASSEMBLY

(a) for 60/40 Split Seat Type:

(1) Install the rear seat inner belt with the bolt.
Torque: 42 N*m (430 kgf*cm, 31 ft.*lbf)
NOTICE:
Do not place the anchor plate over the convex areas of the rear seat back frame.

(2) Install the belt into the band.

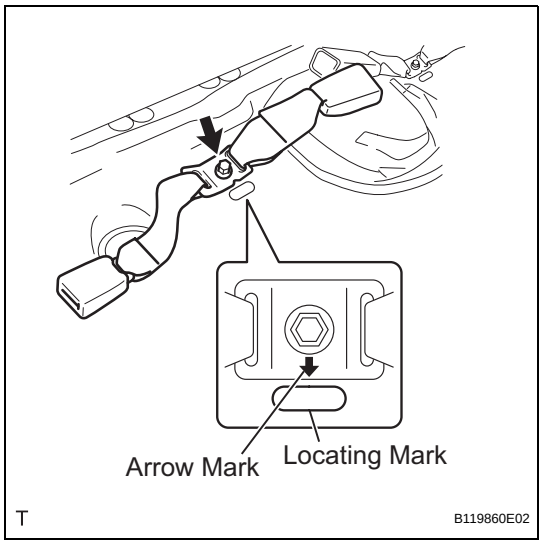

(b) for Hold Down Seat Type:

(1) Install the rear seat inner belt with the bolt.
Torque: 42 N*m (430 kgf*cm, 31 ft.*lbf)
NOTICE:
- **Install the anchor plate with the arrow mark facing forward.**
- **Do not place the anchor plate over the locating mark area of the floor panel.**

2. INSTALL REAR SEAT ASSEMBLY (for 60/40 Split Seat Type) (See page SE-102)

3. INSTALL NO. 1 REAR SEAT LEG COVER (for 60/40 Split Seat Type) (See page SE-103)

4. INSTALL REAR SEAT CUSHION COVER PAD SUB-ASSEMBLY (for Hold Down Seat Type) (See page SE-123)

5. INSTALL DECK FLOOR BOX (for 60/40 Split Seat Type) (See page IR-83)

6. INSTALL DECK BOARD SUB-ASSEMBLY (for 60/40 Split Seat Type) (See page IR-83)

7. INSTALL PACKAGE TRAY TRIM PANEL ASSEMBLY (for 60/40 Split Seat Type) (See page IR-83)

REAR SEAT OUTER BELT ASSEMBLY (for Sedan)

COMPONENTS

for 60/40 Split Seat Type:

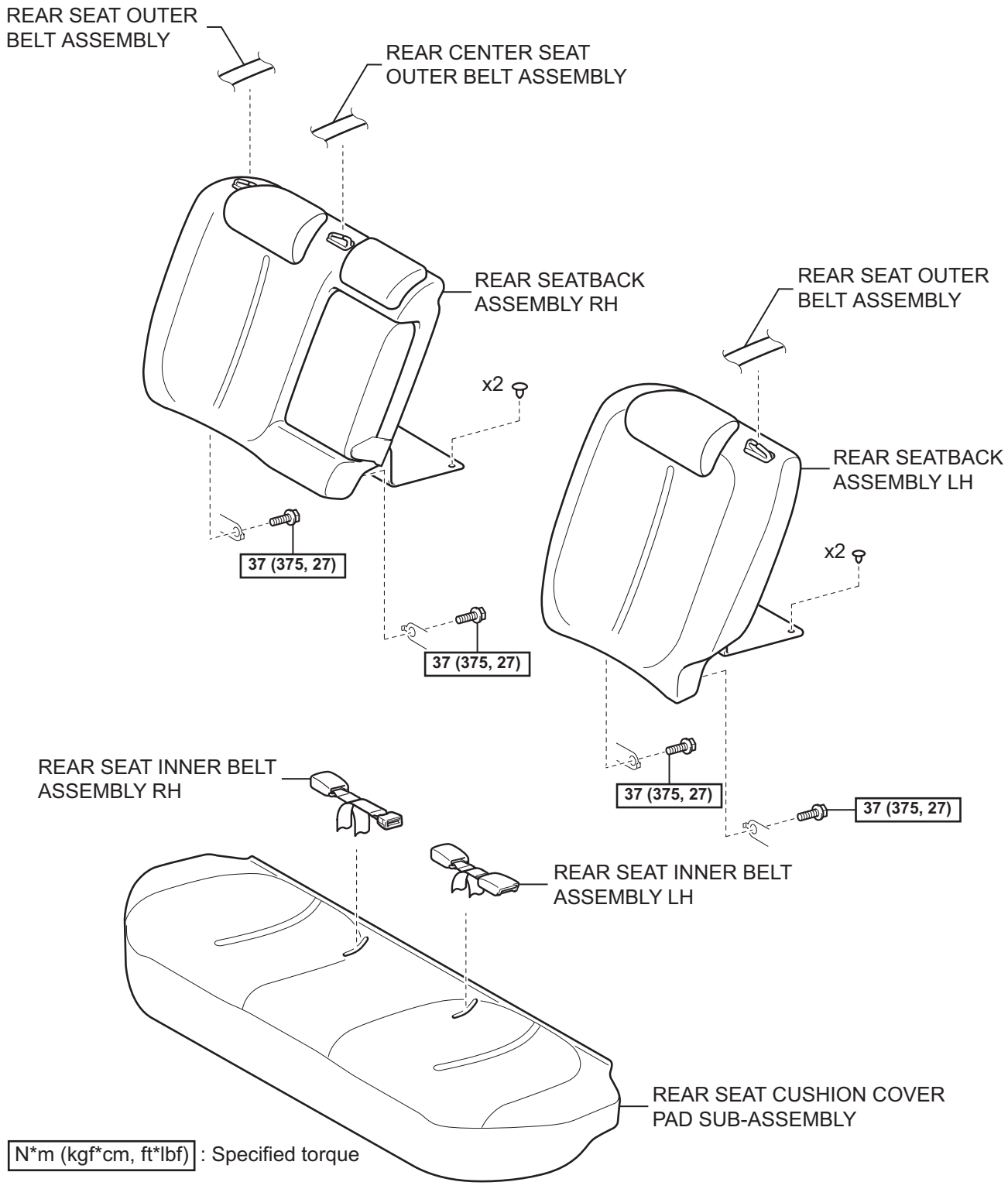

SB

for Fixed Seat Type:

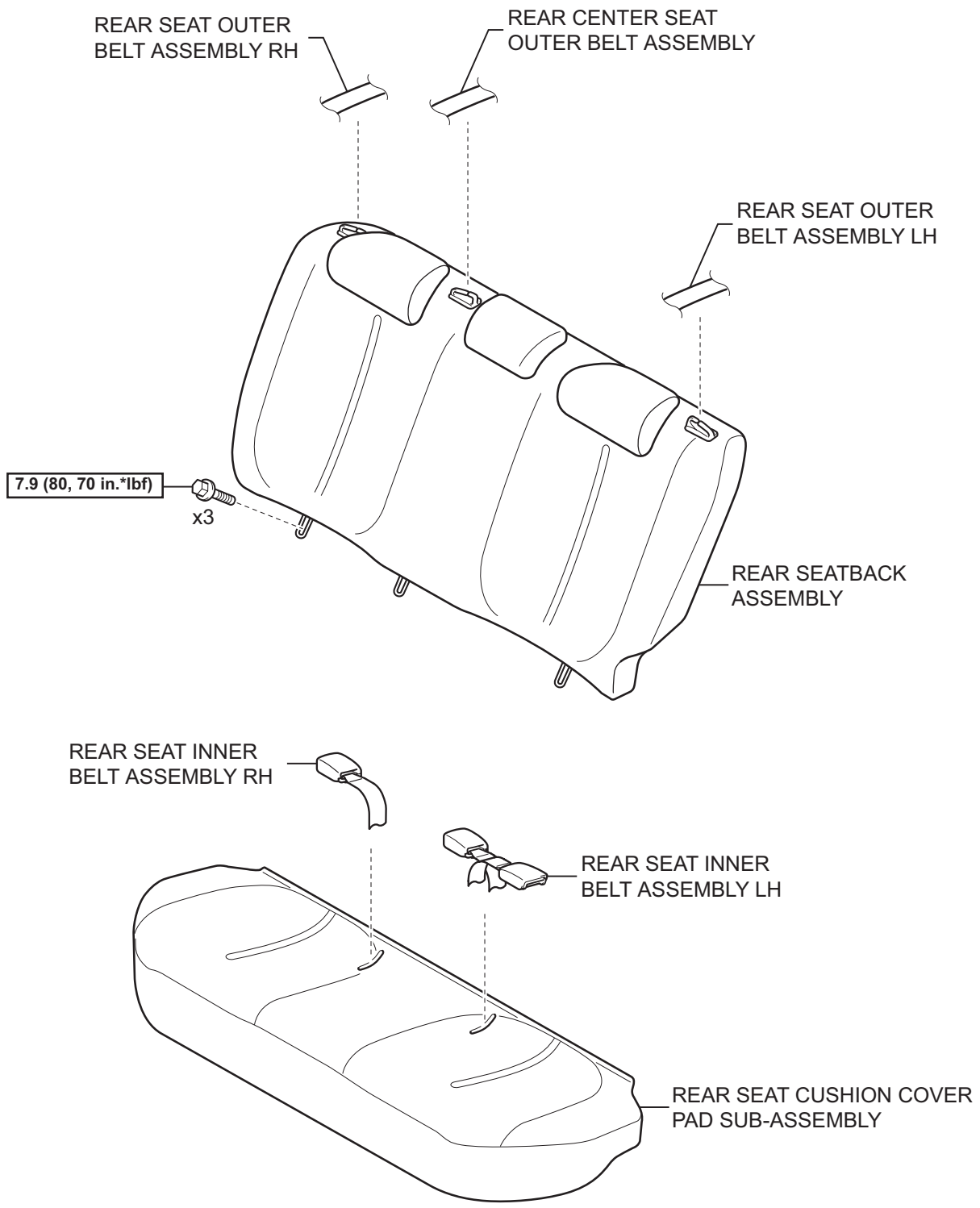

N*m (kgf*cm, ft*lbf) : Specified torque

T

B138611E01

for 60/40 Split Seat Type:

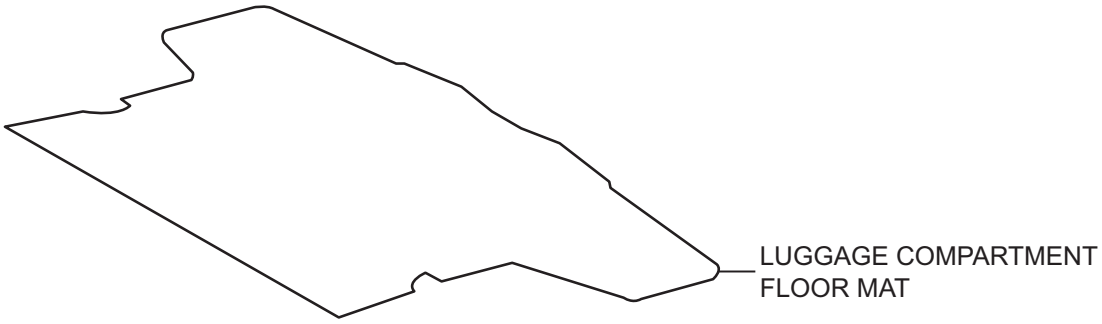

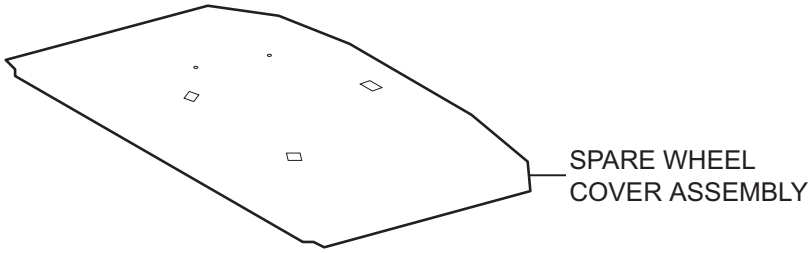

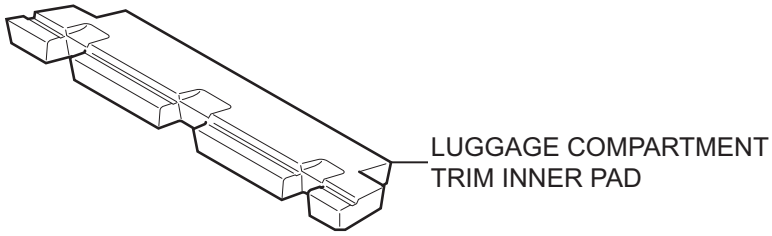

for Grand Tire:

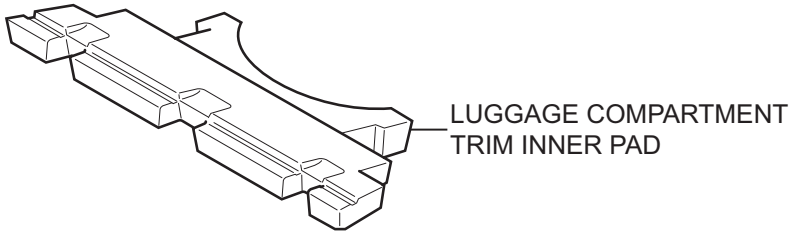

T

B138565E01

SB

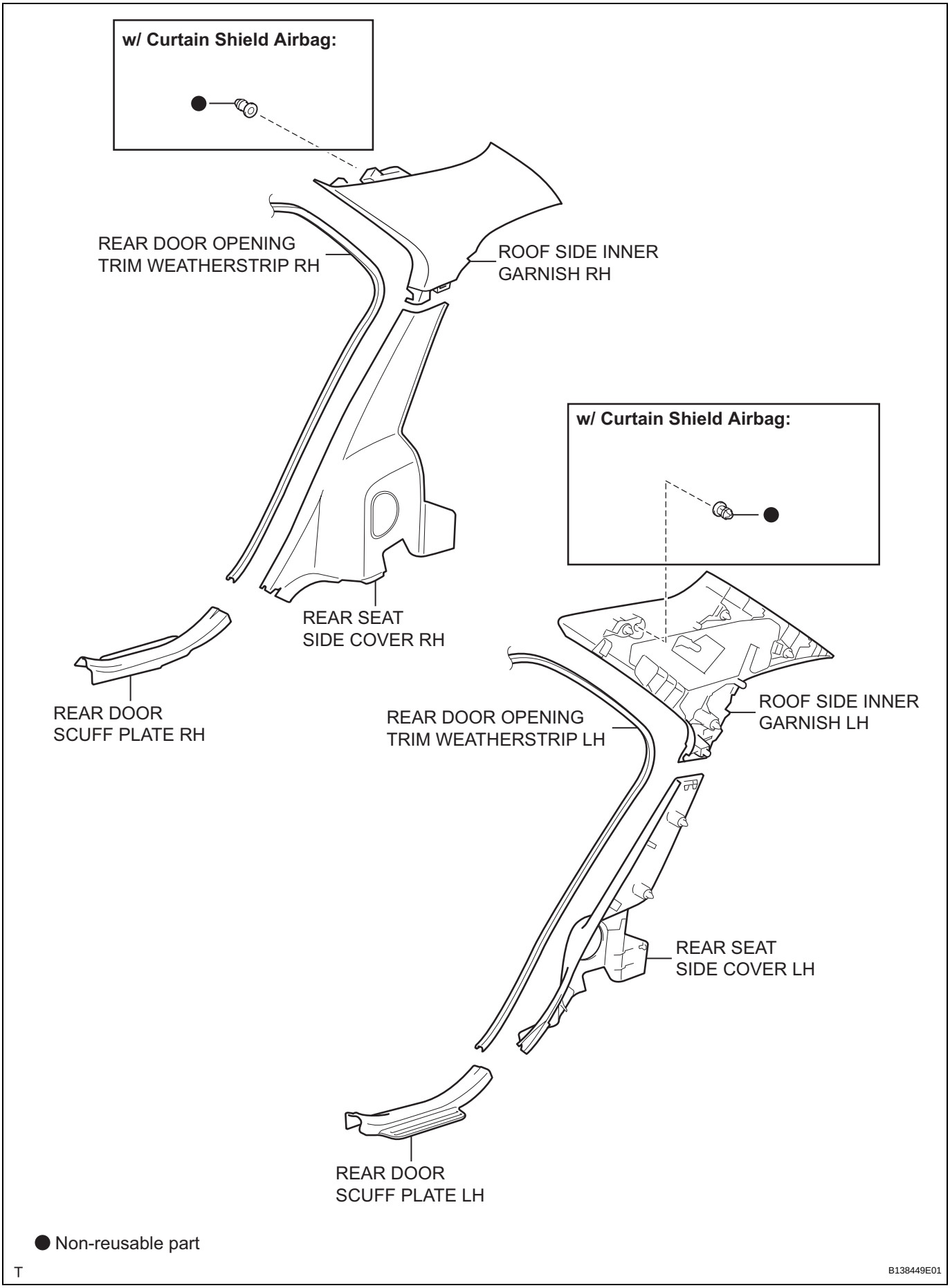
w/ Curtain Shield Airbag:
REAR DOOR OPENING TRIM WEATHERSTRIP RH
ROOF SIDE INNER GARNISH RH
REAR SEAT SIDE COVER RH
REAR DOOR SCUFF PLATE RH
w/ Curtain Shield Airbag:
ROOF SIDE INNER GARNISH LH
REAR DOOR OPENING TRIM WEATHERSTRIP LH
REAR SEAT SIDE COVER LH
REAR DOOR SCUFF PLATE LH
● Non-reusable part
T
B138449E01

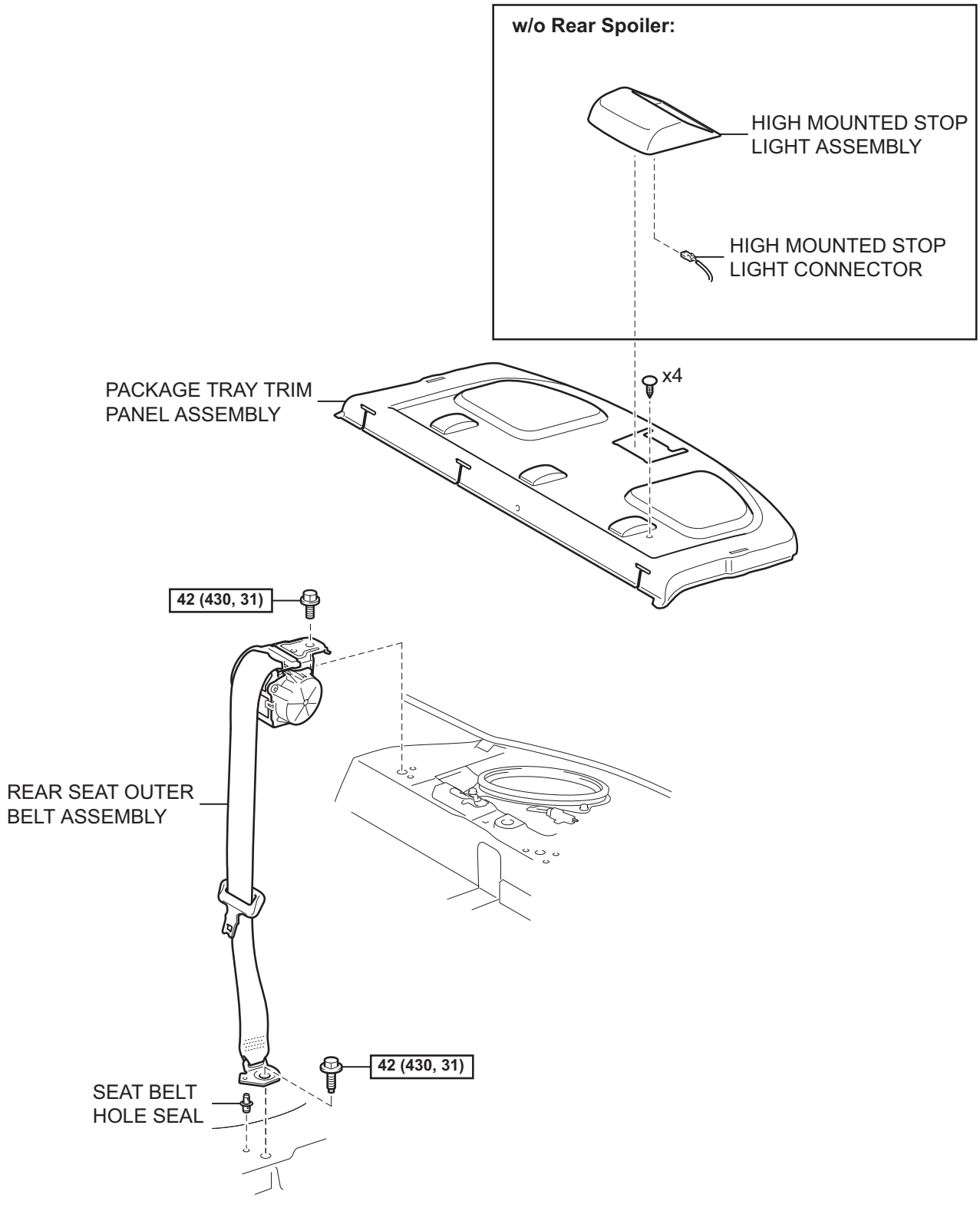

N*m (kgf*cm, ft*lbf) : Specified torque

T

B138567E01

SB

REMOVAL

HINT:
The procedure described below is for the RH side. Use the same procedure for both the RH and LH sides, unless otherwise specified.

1. **DISCONNECT CABLE FROM NEGATIVE BATTERY TERMINAL (w/o Rear Spoiler)**
2. **REMOVE REAR SEAT CUSHION COVER PAD SUB-ASSEMBLY**
   (a) for 60/40 Split Seat Type:
      (1) Remove the rear seat cushion cover pad (See page SE-46).
   (b) for Fixed Seat Type:
      (1) Remove the rear seat cushion cover pad (See page SE-106).
3. **REMOVE REAR SEATBACK ASSEMBLY RH (for 60/40 Split Seat Type) (See page SE-57)**
4. **REMOVE REAR SEATBACK ASSEMBLY LH (for 60/40 Split Seat Type) (See page SE-46)**
5. **REMOVE REAR SEATBACK ASSEMBLY (for Fixed Seat Type) (See page SE-106)**
6. **REMOVE LUGGAGE COMPARTMENT FLOOR MAT (for 60/40 Split Seat Type) (See page ED-133)**
7. **REMOVE SPARE WHEEL COVER ASSEMBLY (for 60/40 Split Seat Type) (See page ED-133)**
8. **REMOVE LUGGAGE COMPARTMENT TRIM INNER PAD (for 60/40 Split Seat Type) (See page ED-134)**
9. **REMOVE REAR DOOR SCUFF PLATE RH (See page IR-15)**
10. **REMOVE REAR DOOR SCUFF PLATE LH (See page IR-15)**
11. **REMOVE REAR DOOR OPENING TRIM WEATHERSTRIP RH (See page AV-173)**
12. **REMOVE REAR DOOR OPENING TRIM WEATHERSTRIP LH (See page AV-173)**
13. **REMOVE REAR SEAT SIDE COVER RH (See page IR-16)**
14. **REMOVE REAR SEAT SIDE COVER LH (See page IR-16)**
15. **REMOVE ROOF SIDE INNER GARNISH RH (See page IR-16)**
16. **REMOVE ROOF SIDE INNER GARNISH LH (See page IR-16)**
17. **REMOVE HIGH MOUNTED STOP LIGHT ASSEMBLY (w/o Rear Spoiler) (See page LI-141)**

18. REMOVE PACKAGE TRAY TRIM PANEL ASSEMBLY (See page AV-173)

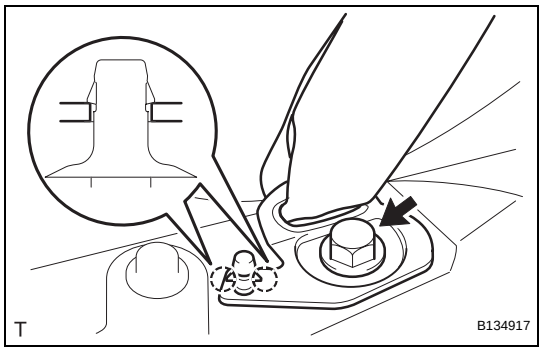

19. REMOVE REAR SEAT OUTER BELT ASSEMBLY

(a) Remove the bolt.

(b) Disengage the 2 claws and remove the anchor plate.

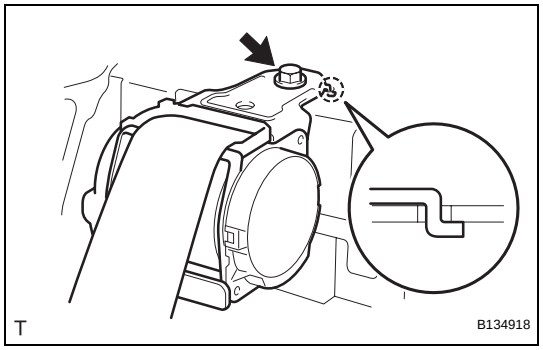

(c) Remove the bolt, the hook and the retractor.

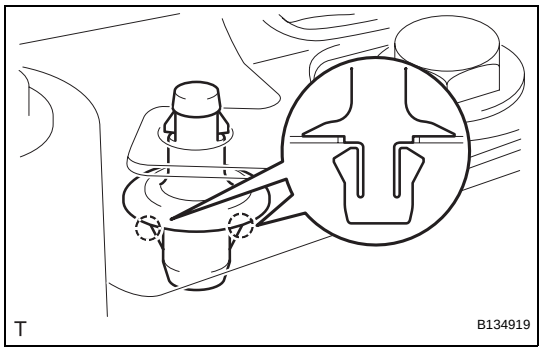

20. REMOVE SEAT BELT HOLE SEAL

(a) Disengage the 2 claws and remove the seat belt hole seal.

SB

SB

INSTALLATION

HINT:
The procedure described below is for the RH side. Use the same procedure for both the RH and LH sides, unless otherwise specified.

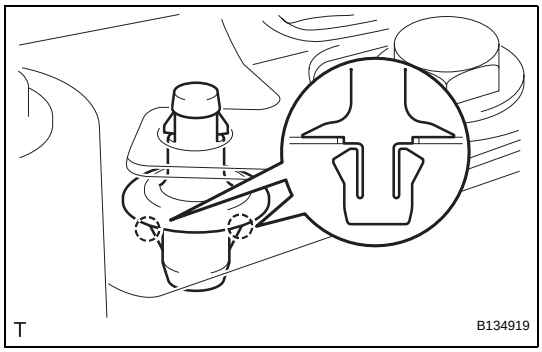

1. INSTALL SEAT BELT HOLE SEAL

(a) Engage the 2 claws and install the seat belt hole seal.

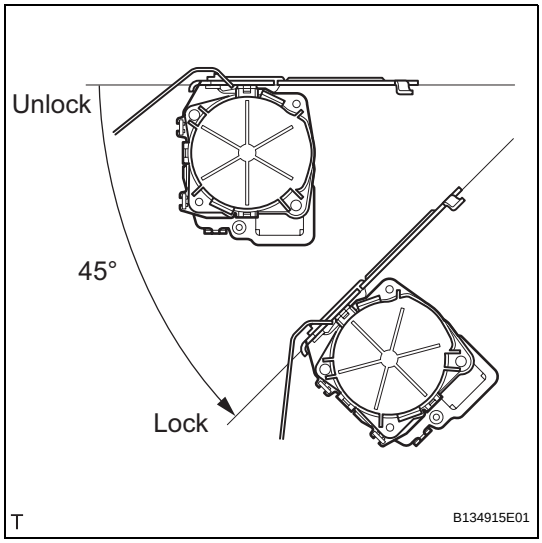

2. INSTALL REAR SEAT OUTER BELT ASSEMBLY

(a) Check the angle of inclination required to lock the retractor.

(1) Gently incline the retractor from its initial position. Check that the belt does not lock when the retractor is inclined 15° or less in any direction.
Also, check that the belt locks when the inclination of the retractor is 45° or more.
NOTICE:
Do not disassemble the retractor.
If the operation is not as specified, replace the rear seat outer belt.

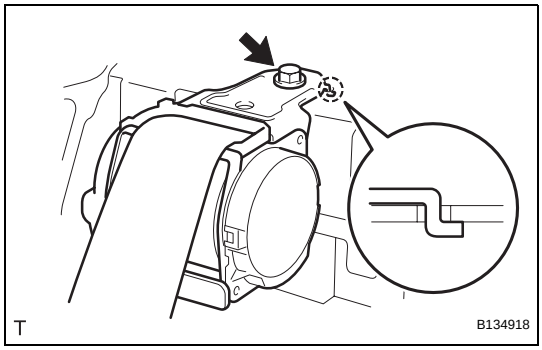

(b) Insert the hook into the body hole and install the retractor with the bolt.
Torque: 42 N*m (430 kgf*cm, 31 ft.*lbf)

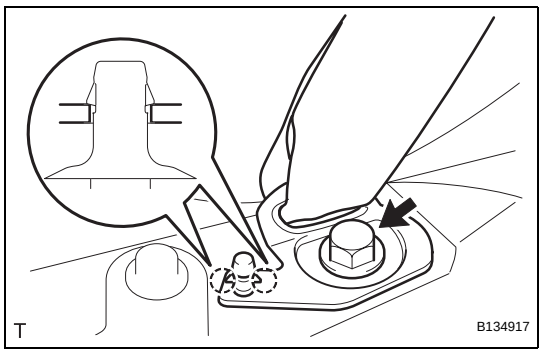

(c) Engage the 2 claws and install the anchor plate.
(d) Tighten the bolt.
Torque: 42 N*m (430 kgf*cm, 31 ft.*lbf)
(e) Check that the ELR locks.
NOTICE:
- **The check should be performed with the rear seat outer belt installed.**
- **Do not allow the anchor part of the rear seat outer belt and the protruding parts of the floor panel to overlap.**

(1) With the belt installed, check that the belt locks when it is pulled out quickly.
If the operation is not as specified, replace the rear seat outer belt.

3. **INSTALL PACKAGE TRAY TRIM PANEL ASSEMBLY (See page AV-174)**
4. **INSTALL HIGH MOUNTED STOP LIGHT ASSEMBLY (w/o Rear Spoiler) (See page LI-142)**
5. **INSTALL ROOF SIDE INNER GARNISH RH (See page IR-32)**
6. **INSTALL ROOF SIDE INNER GARNISH LH (See page IR-33)**
7. **INSTALL REAR SEAT SIDE COVER RH (See page IR-33)**
8. **INSTALL REAR SEAT SIDE COVER LH (See page IR-33)**
9. **INSTALL REAR DOOR OPENING TRIM WEATHERSTRIP RH (See page AV-175)**
10. **INSTALL REAR DOOR OPENING TRIM WEATHERSTRIP LH (See page AV-175)**
11. **INSTALL REAR DOOR SCUFF PLATE RH (See page IR-34)**
12. **INSTALL REAR DOOR SCUFF PLATE LH (See page IR-34)**
13. **INSTALL LUGGAGE COMPARTMENT TRIM INNER PAD (for 60/40 Split Seat Type) (See page ED-136)**
14. **INSTALL SPARE WHEEL COVER ASSEMBLY (for 60/40 Split Seat Type) (See page ED-137)**
15. **INSTALL LUGGAGE COMPARTMENT FLOOR MAT (for 60/40 Split Seat Type) (See page ED-137)**
16. **INSTALL REAR SEATBACK ASSEMBLY RH (for 60/40 Split Seat Type) (See page SE-65)**
17. **INSTALL REAR SEATBACK ASSEMBLY LH (for 60/40 Split Seat Type) (See page SE-52)**
18. **INSTALL REAR SEATBACK ASSEMBLY (for Fixed Seat Type) (See page SE-108)**
19. **INSTALL REAR SEAT CUSHION COVER PAD SUB-ASSEMBLY**
    (a) for 60/40 Split Seat Type:
        (1) Install the rear seat cushion cover pad (See page SE-53).
    (b) for Fixed Seat Type:
        (1) Install the rear seat cushion cover pad (See page SE-109).

SB

20. CONNECT CABLE TO NEGATIVE BATTERY TERMINAL (w/o Rear Spoiler)
Torque: 5.4 N*m (55 kgf*cm, 48 in.*lbf)

REAR SEAT OUTER BELT ASSEMBLY (for Hatchback 5 Door)

COMPONENTS

SB

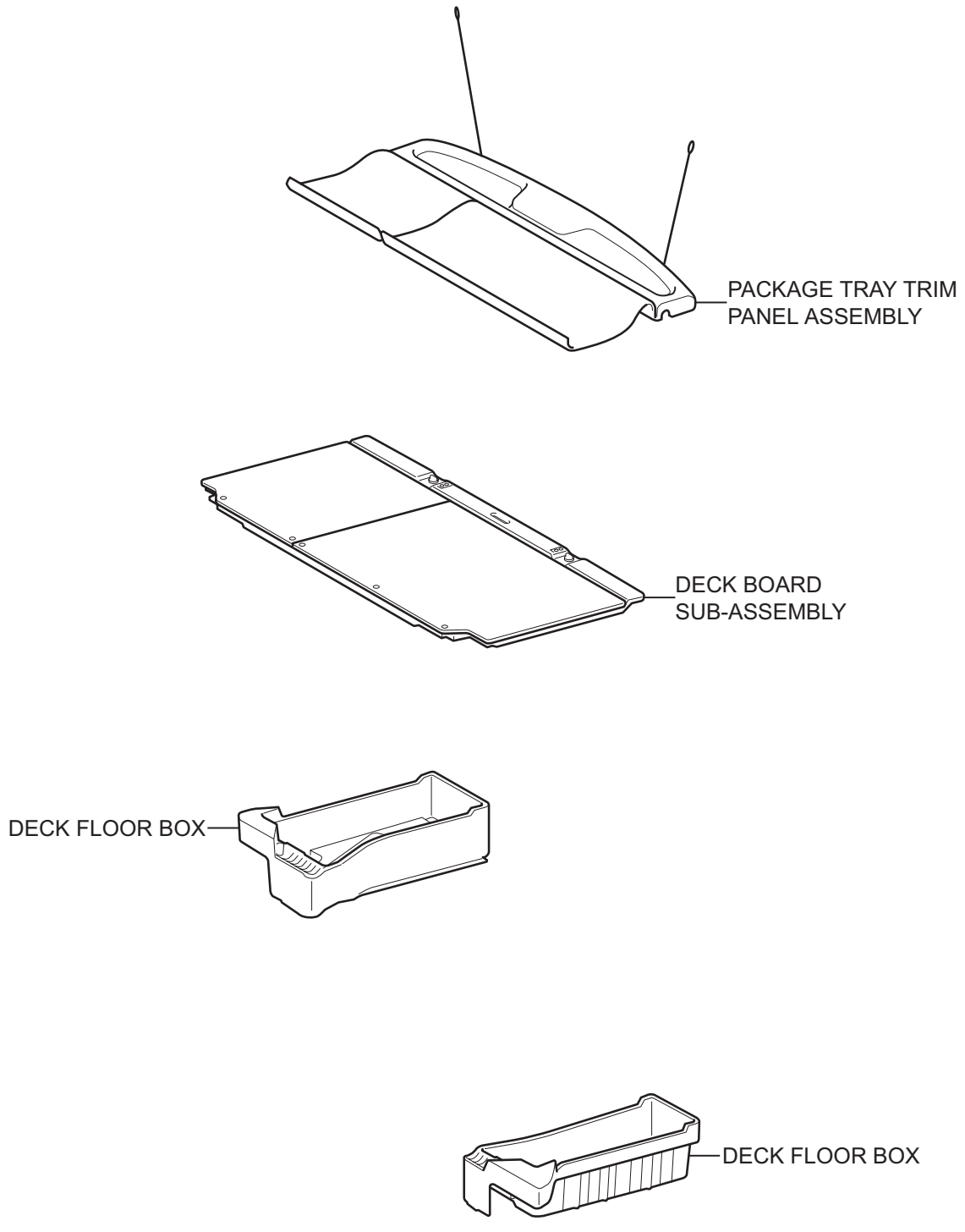

T

B127707E02

SB

for 60/40 Split Seat Type:

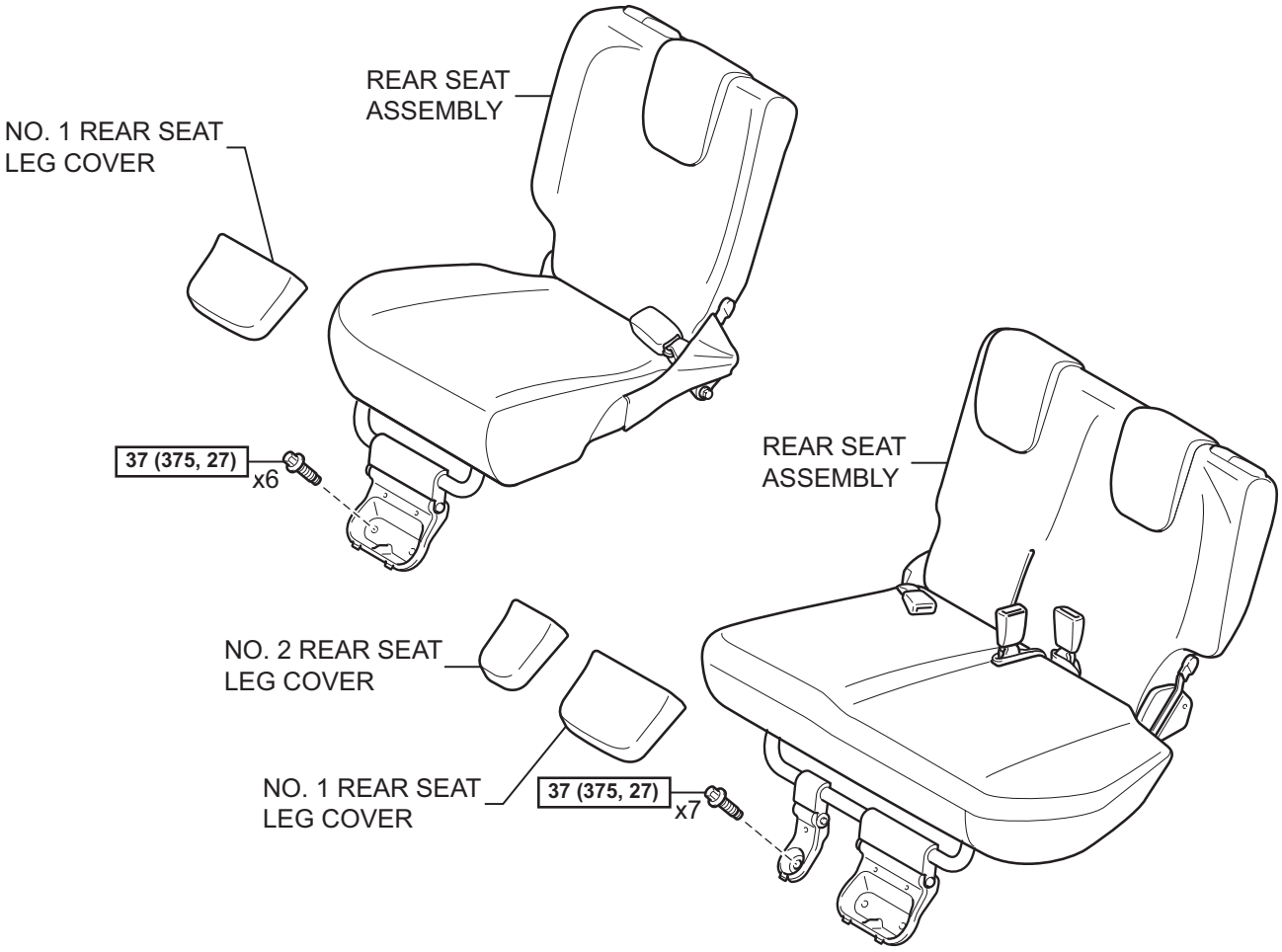

for Hold Down Seat Type:

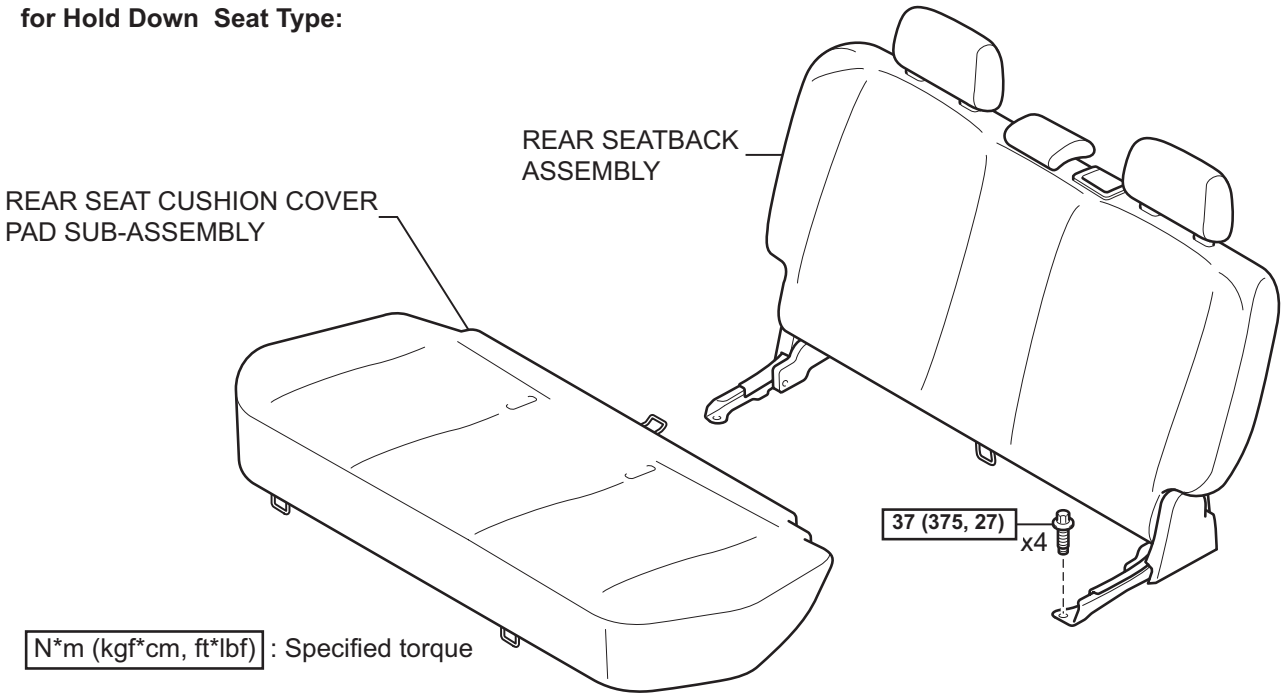

T

B121713E05

SB

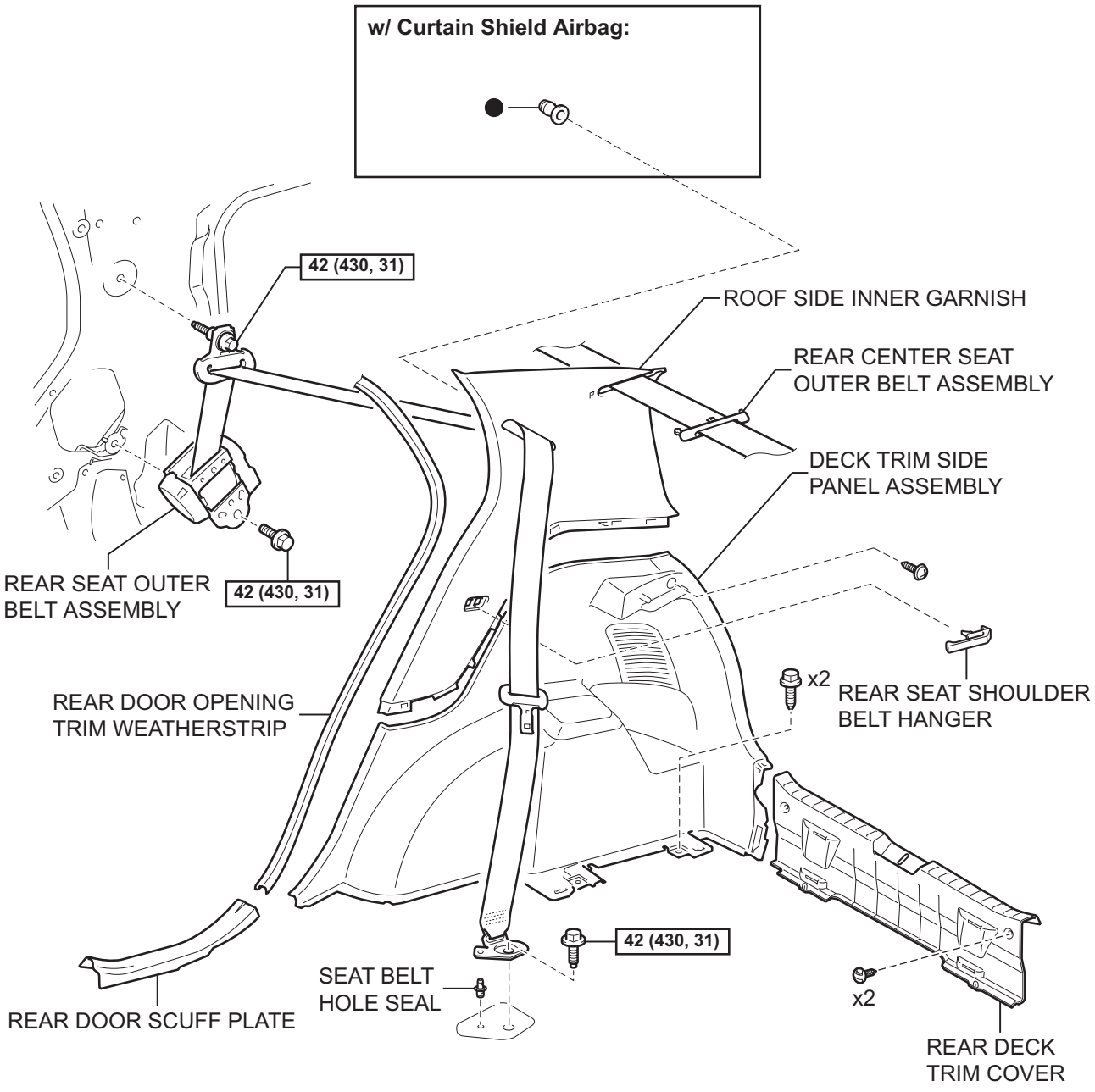

N*m (kgf*cm, ft*lbf) : Specified torque

● Non-reusable part

T

B114430E02

REMOVAL

CAUTION:
Always use "Torx" socket wrench E10 when removing the rear seat.
HINT:
The procedure described below is for the RH side. Use the same procedure for both the RH and LH sides, unless otherwise specified.

1. **DISCONNECT CABLE FROM NEGATIVE BATTERY TERMINAL (for LH Side)**
2. **REMOVE PACKAGE TRAY TRIM PANEL ASSEMBLY (See page IR-48)**
3. **REMOVE DECK BOARD SUB-ASSEMBLY (See page IR-48)**
4. **REMOVE DECK FLOOR BOX**
   (a) for RH Side:
      (1) Remove the deck floor box (See page IR-48).
   (b) for LH Side:
      HINT:
      Use the same procedure as for the RH side.
5. **REMOVE NO. 1 REAR SEAT LEG COVER (for 60/40 Split Seat Type)**
   (a) for RH Side:
      (1) Remove the No. 1 rear seat leg cover (See page SE-89).
   (b) for LH Side:
      (1) Remove the No. 1 rear seat leg cover (See page SE-70).
6. **REMOVE NO. 2 REAR SEAT LEG COVER (for 60/40 Split Seat Type LH Side) (See page SE-70)**
7. **REMOVE REAR SEAT ASSEMBLY (for 60/40 Split Seat Type)**
   (a) for RH Side:
      (1) Remove the rear seat assembly (See page SE-89).
   (b) for LH Side:
      (1) Remove the rear seat assembly (See page SE-71).
8. **REMOVE REAR SEAT CUSHION COVER PAD SUB-ASSEMBLY (for Hold Down Seat Type) (See page SE-114)**
9. **REMOVE REAR SEATBACK ASSEMBLY (for Hold Down Seat Type) (See page SE-115)**
10. **REMOVE REAR DOOR SCUFF PLATE (See page IR-51)**

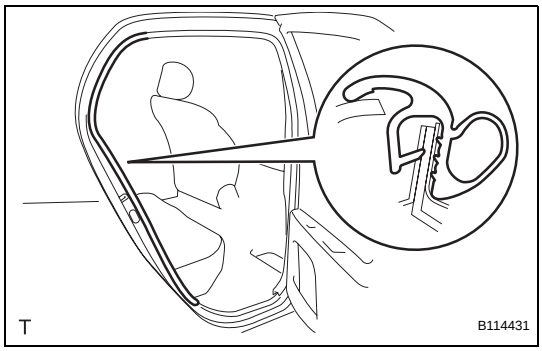

11. REMOVE REAR DOOR OPENING TRIM WEATHERSTRIP

(a) Remove the rear door opening trim weatherstrip to the extent that the deck trim side panel and roof side inner garnish can be removed.

12. REMOVE REAR DECK TRIM COVER (See page IR-49)

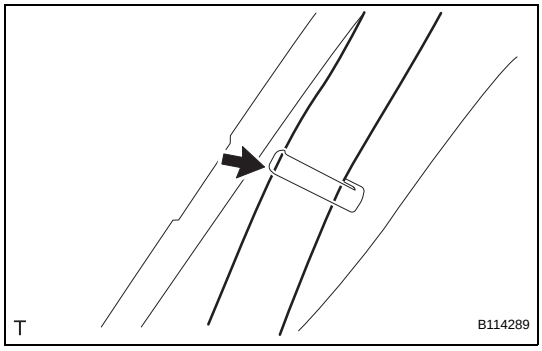

13. REMOVE DECK TRIM SIDE PANEL ASSEMBLY

(a) Remove the belt of the rear seat outer belt from the rear seat shoulder belt hanger.

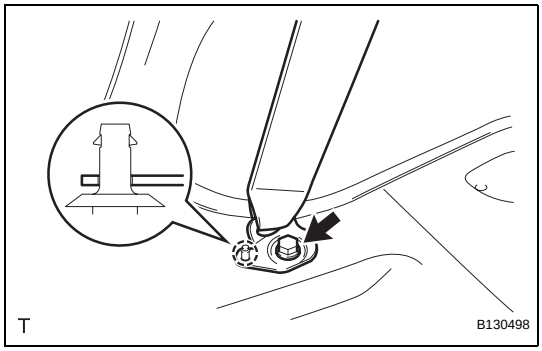

(b) Remove the bolt.

(c) Disengage the clip and remove the anchor plate of the rear seat outer belt.

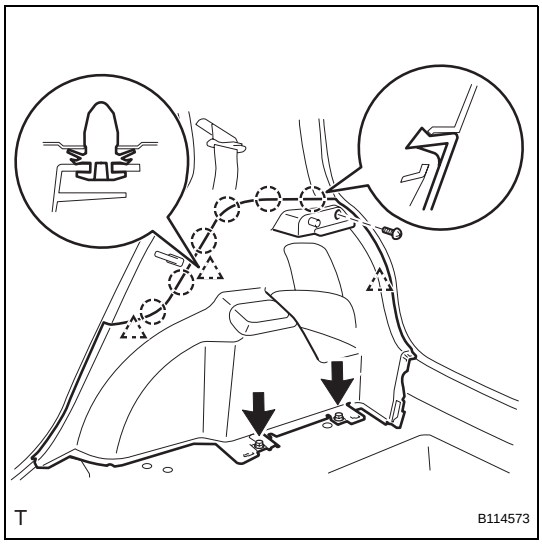

(d) for RH side:

(1) Remove the 3 screws.

(2) Disengage the 3 clips and the 6 claws and remove the deck trim side panel.

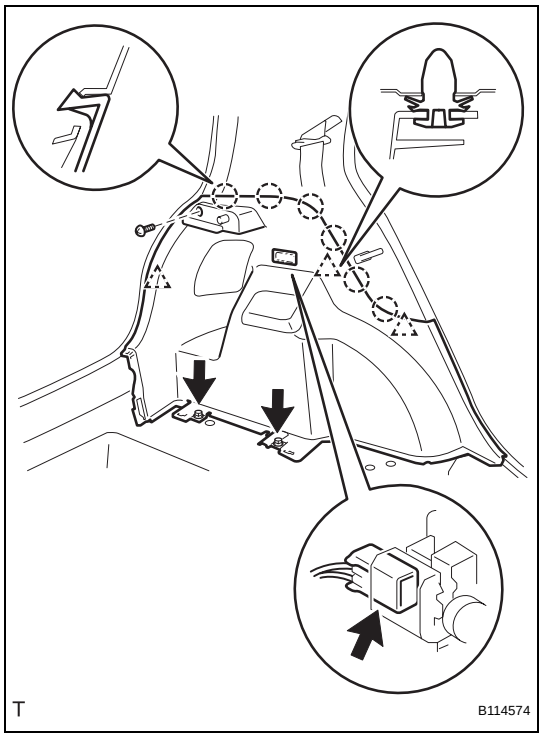

(e) for LH side:
(1) Remove the 3 screws.
(2) Disengage the 3 clips and the 6 claws.
(3) Disconnect the luggage compartment room light connector and remove the deck trim side panel.

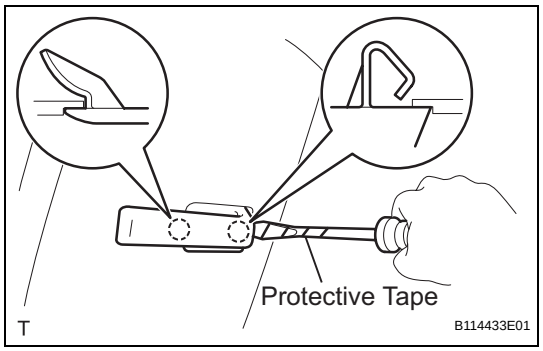

14. REMOVE REAR SEAT SHOULDER BELT HANGER

(a) Using a screwdriver with its tip wrapped in protective tape, disengage the 2 claws and remove the rear seat shoulder belt hanger.

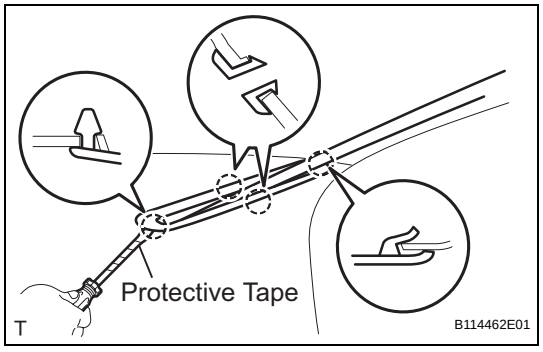

15. REMOVE REAR CENTER SEAT OUTER BELT ASSEMBLY (for RH Side)

(a) Using a screwdriver with its tip wrapped in protective tape, disengage the 4 claws and remove the center belt guide.

SB

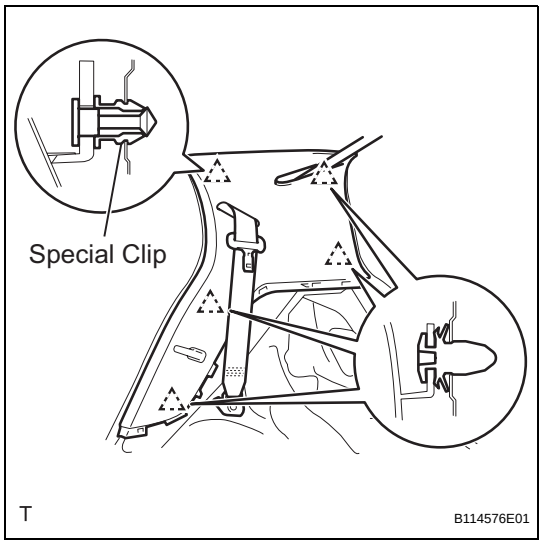

16. REMOVE ROOF SIDE INNER GARNISH

(a) for RH Side (w/ Curtain Shield Airbag):

NOTICE:

Replace the special clip with a new one because it is damaged when the roof side inner garnish is removed.

(1) Disengage the 5 clips.

(2) Pass the rear seat outer and rear center seat outer belts through the slit in the roof side inner garnish and remove the roof side inner garnish.

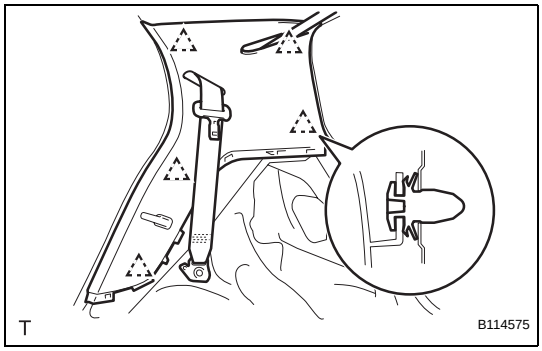

(b) for RH Side (w/o Curtain Shield Airbag):

(1) Disengage the 5 clips.

(2) Pass the rear seat outer and rear center seat outer belts through the slit in the roof side inner garnish and remove the roof side inner garnish.

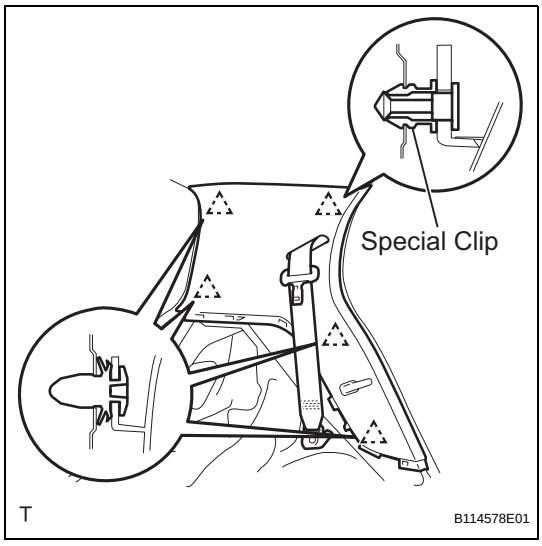

(c) for LH Side (w/ Curtain Shield Airbag):

NOTICE:

Replace the special clip with a new one because it is damaged when the roof side inner garnish is removed.

(1) Disengage the 5 clips.

(2) Pass the rear seat outer belt through the slit in the roof side inner garnish and remove the roof side inner garnish.

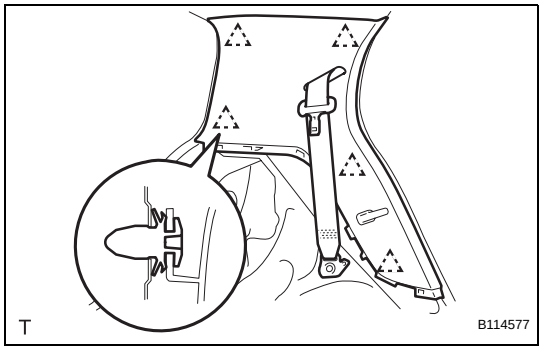

(d) for LH Side (w/o Curtain Shield Airbag):

(1) Disengage the 5 clips.

(2) Pass the rear seat outer belt through the slit in the roof side inner garnish and remove the roof side inner garnish.

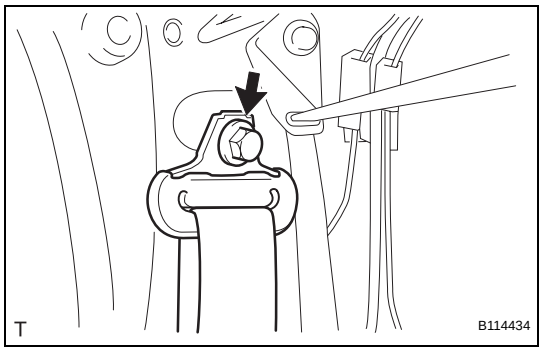

17. REMOVE REAR SEAT OUTER BELT ASSEMBLY

(a) Remove the bolt and the through anchor.

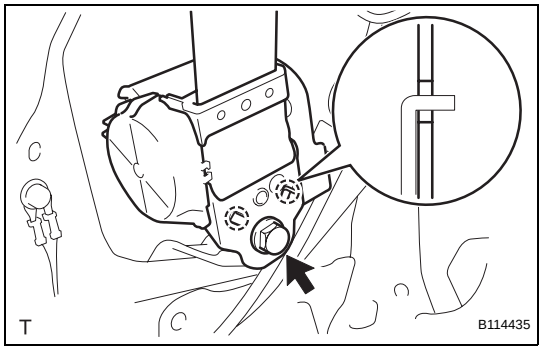

(b) Remove the bolt, the 2 hooks and the retractor.

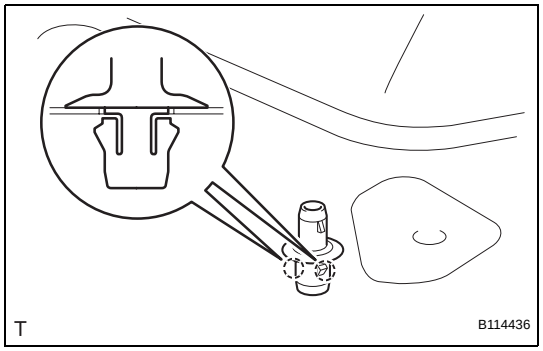

18. REMOVE SEAT BELT HOLE SEAL

(a) Disengage the 2 claws and remove the seat belt hole seal.

SB

INSTALLATION

CAUTION:
Always use "Torx" socket wrench E10 when installing the rear seat.
HINT:
The procedure described below is for the RH side. Use the same procedure for both the RH and LH sides, unless otherwise specified.

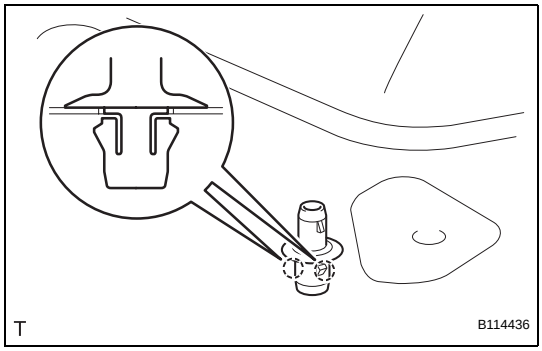

1. INSTALL SEAT BELT HOLE SEAL

(a) Engage the 2 claws and install the seat belt hole seal.

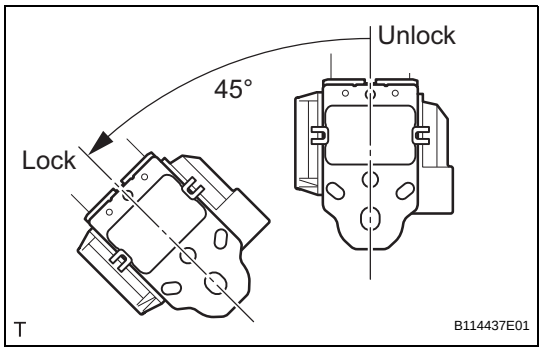

2. INSTALL REAR SEAT OUTER BELT ASSEMBLY

(a) Check the angle of inclination required to lock the retractor.

(1) Gently incline the retractor from its initial position. Check that the belt does not lock when the retractor is inclined 15° or less in any direction. Also, check that the belt locks when the inclination of the retractor is 45° or more.
NOTICE:
Do not disassemble the retractor.
If the operation is not as specified, replace the rear seat outer belt.

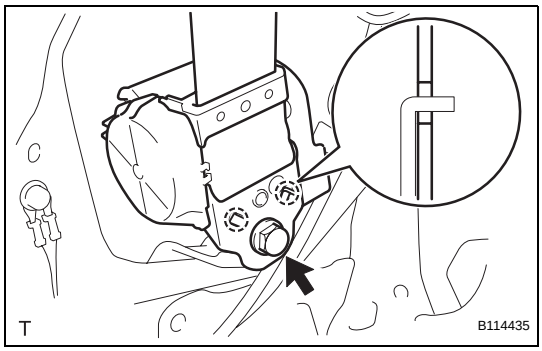

(b) Hook the lower stay of the retractor onto the 2 body hooks and install the retractor with the bolt.
Torque: 42 N*m (430 kgf*cm, 31 ft.*lbf)

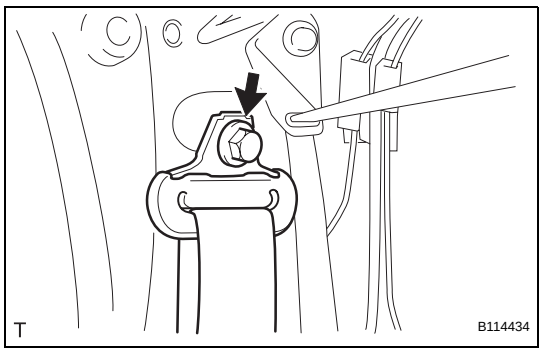

(c) Install the through anchor with the bolt.
Torque: 42 N*m (430 kgf*cm, 31 ft.*lbf)

(d) Check that the ELR locks.
NOTICE:
Perform the check with the rear seat outer belt installed.

(1) With the belt installed, check that the belt locks when it is pulled out quickly.
If the operation is not as specified, replace the rear seat outer belt.

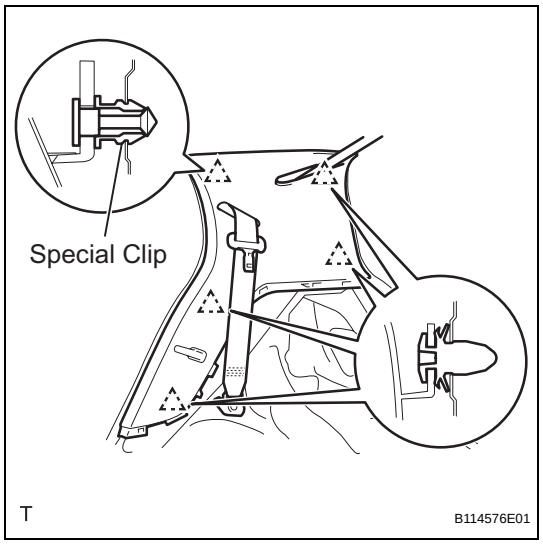

3. INSTALL ROOF SIDE INNER GARNISH

(a) for RH Side (w/ Curtain Shield Airbag):
  (1) Install a new special clip.
  (2) Pass the rear seat outer and rear center seat outer belts through the slit in the roof side inner garnish.
  (3) Engage the 5 clips and install the roof side inner garnish.

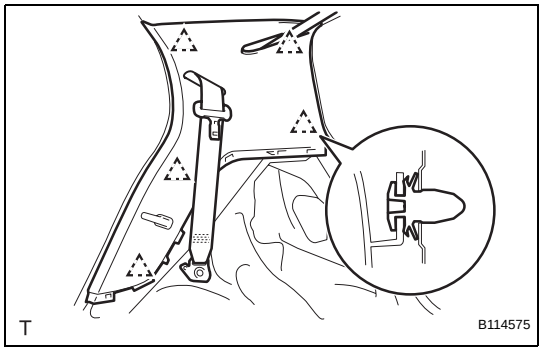

(b) for RH Side (w/o Curtain Shield Airbag):
  (1) Pass the rear seat outer and rear center seat outer belts through the slit in the roof side inner garnish.
  (2) Engage the 5 clips and install the roof side inner garnish.

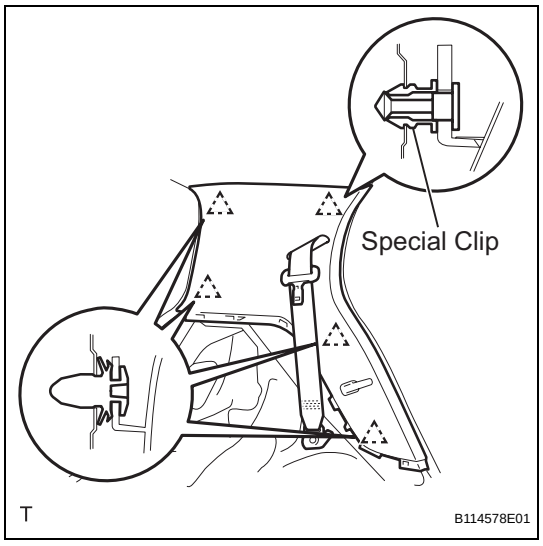

(c) for LH Side (w/ Curtain Shield Airbag):
  (1) Install a new special clip.
  (2) Pass the rear seat outer belt through the slit in the roof side inner garnish.
  (3) Engage the 5 clips and install the roof side inner garnish.

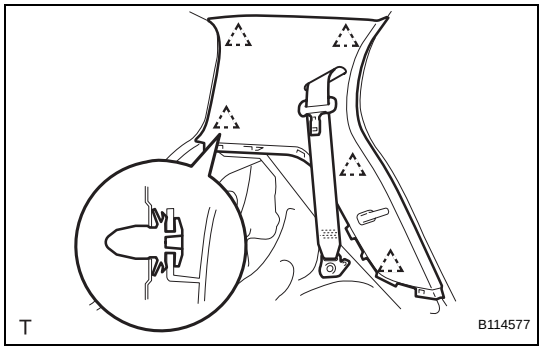

(d) for LH Side (w/o Curtain Shield Airbag):
  (1) Pass the rear seat outer belt through the slit in the roof side inner garnish.
  (2) Engage the 5 clips and install the roof side inner garnish.

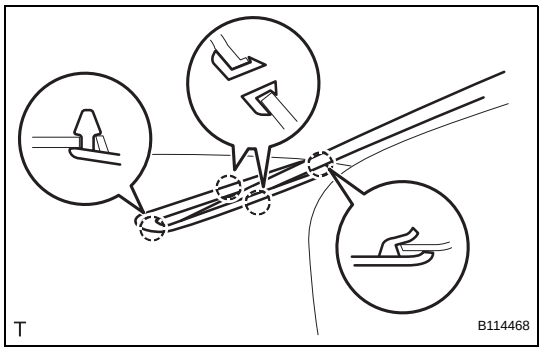

4. INSTALL REAR CENTER SEAT OUTER BELT ASSEMBLY (for RH Side)

(a) Engage the 4 claws and install the center belt guide.

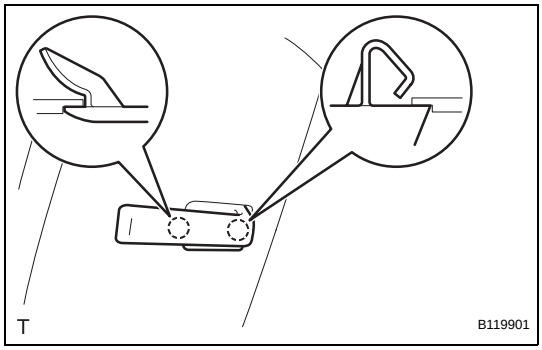

5. INSTALL REAR SEAT SHOULDER BELT HANGER

(a) Engage the 2 claws and install the rear seat shoulder belt hanger.

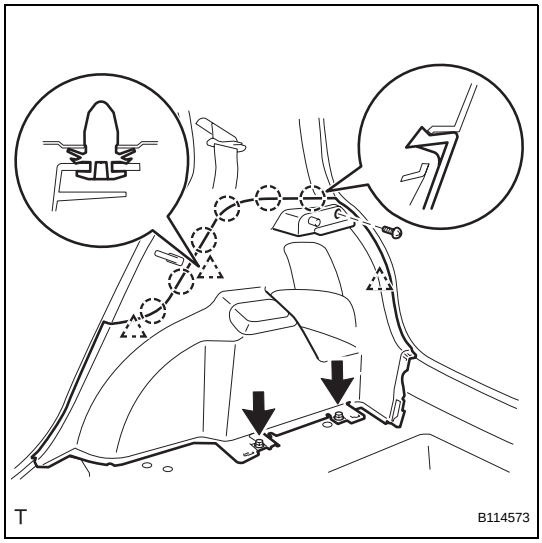

6. INSTALL DECK TRIM SIDE PANEL ASSEMBLY

(a) for RH Side:

(1) Engage the 3 clips and the 6 claws and install the deck trim side panel.

(2) Tighten the 3 screws.

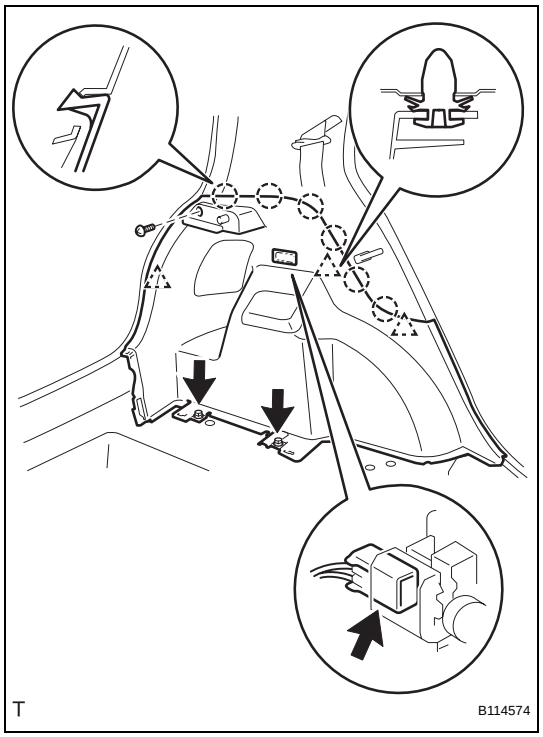

(b) for LH Side:
(1) Connect the luggage compartment room light connector.
(2) Engage the 3 clips and the 6 claws and install the deck trim side panel.
(3) Tighten the 3 screws.

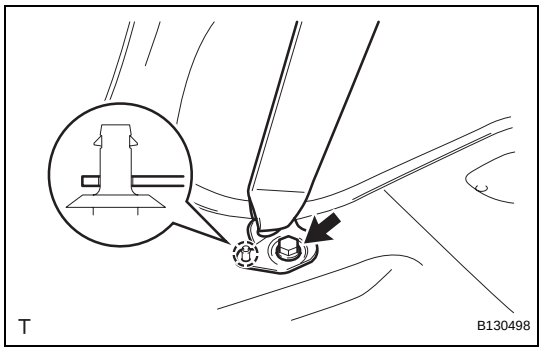

(c) Engage the clip and install the anchor plate of the rear seat outer belt.
(d) Tighten the bolt.
Torque: 42 N*m (430 kgf*cm, 31 ft.*lbf)

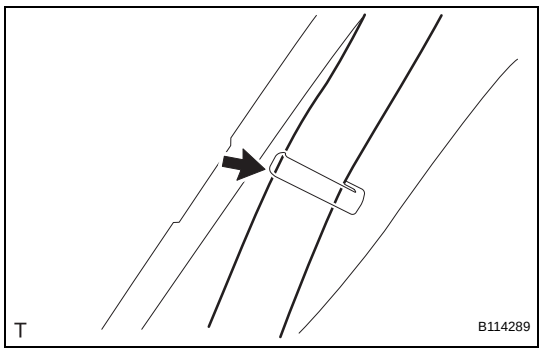

(e) Install the belt of the rear seat outer belt into the rear seat shoulder belt hanger.

7. INSTALL REAR DECK TRIM COVER (See page IR-82)

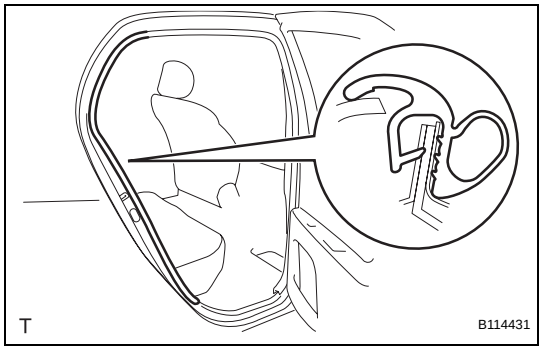

8. INSTALL REAR DOOR OPENING TRIM WEATHERSTRIP
(a) Install the rear door opening trim weatherstrip.

9. INSTALL REAR DOOR SCUFF PLATE (See page IR-80)

10. INSTALL REAR SEAT ASSEMBLY (for 60/40 Split Seat Type)
(a) for RH Side:
(1) Install the rear seat assembly (See page SE-102).

(b) for LH Side:
(1) Install the rear seat assembly (See page SE-84).

11. INSTALL NO. 2 REAR SEAT LEG COVER (for 60/40 Split Seat Type LH Side) (See page SE-85)

12. INSTALL NO. 1 REAR SEAT LEG COVER (for 60/40 Split Seat Type)
(a) for RH Side:
(1) Install the No. 1 rear seat leg cover (See page SE-103).
(b) for LH Side:
(1) Install the No. 1 rear seat leg cover (See page SE-85).

13. INSTALL REAR SEATBACK ASSEMBLY (for Hold Down Seat Type) (See page SE-122)

14. INSTALL REAR SEAT CUSHION COVER PAD SUB-ASSEMBLY (for Hold Down Seat Type) (See page SE-123)

15. INSTALL DECK FLOOR BOX
(a) for RH Side:
(1) Install the deck floor box (See page IR-83).
(b) for LH Side:
HINT:
Use the same procedure as for the RH side.

16. INSTALL DECK BOARD SUB-ASSEMBLY (See page IR-83)

17. INSTALL PACKAGE TRAY TRIM PANEL ASSEMBLY (See page IR-83)

18. CONNECT CABLE TO NEGATIVE BATTERY TERMINAL (for LH Side)
Torque: 5.4 N*m (55 kgf*cm, 48 in.*lbf)

REAR SEAT OUTER BELT ASSEMBLY (for Hatchback 3 Door)

COMPONENTS

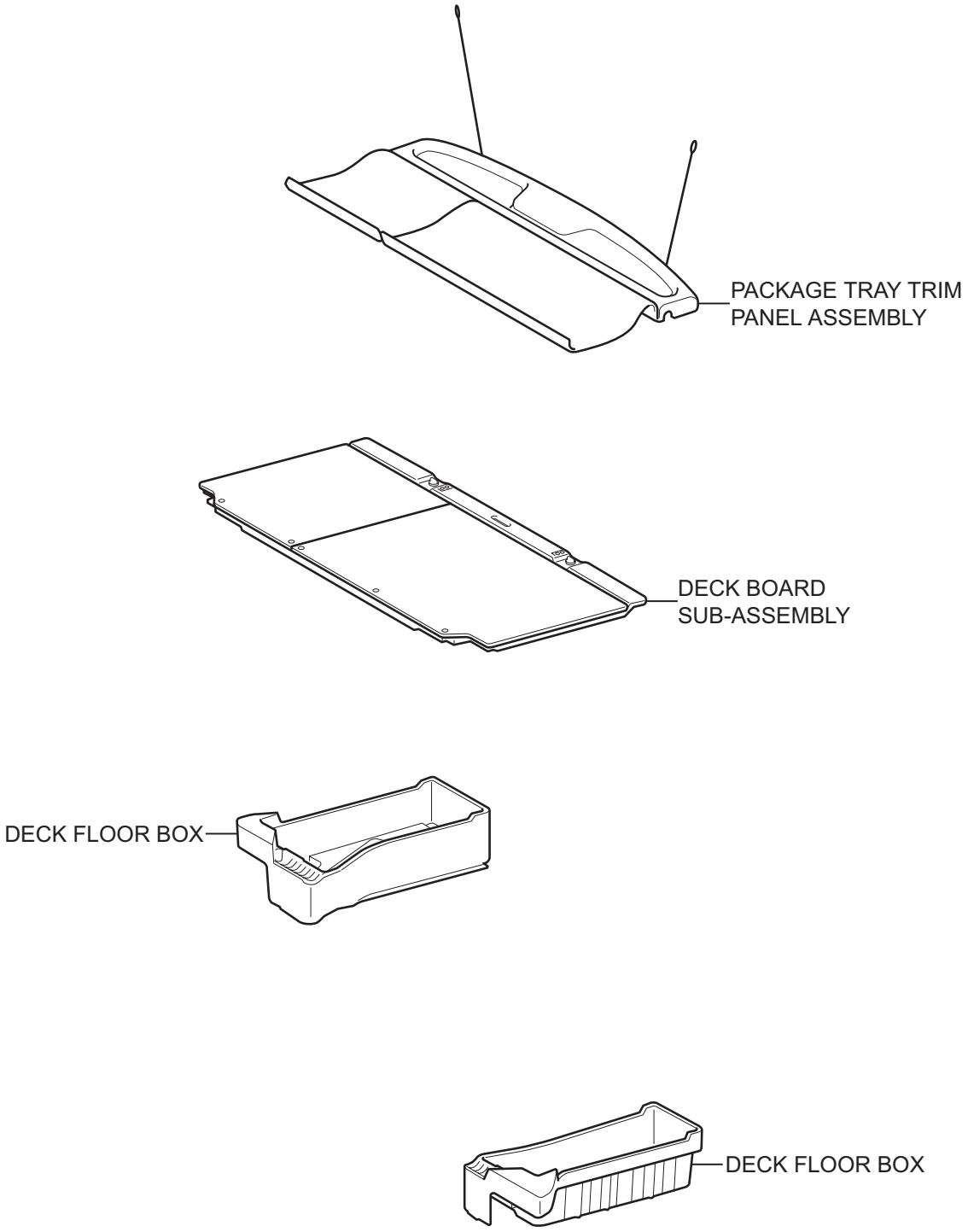

SB

for 60/40 Split Seat Type:

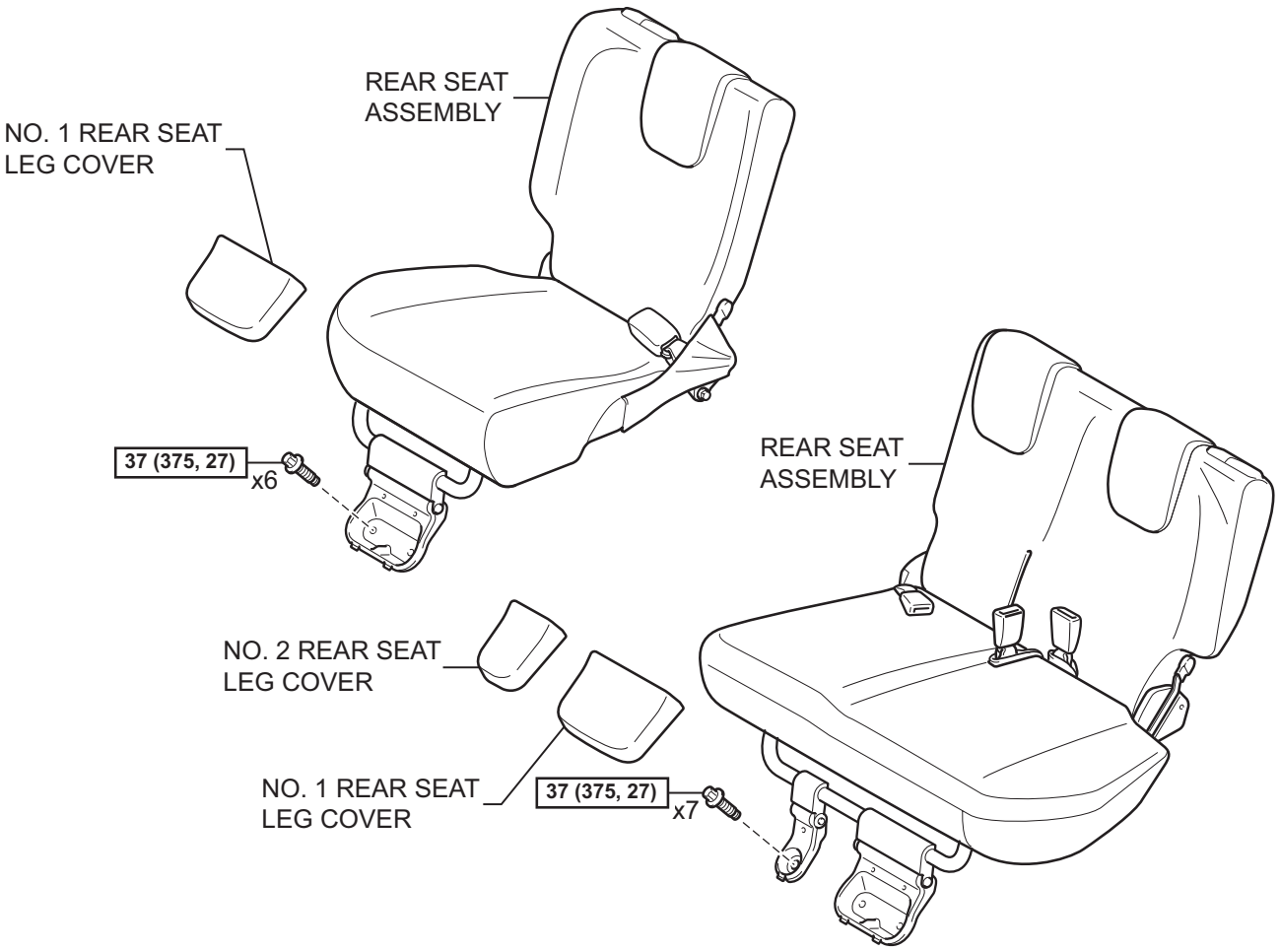

for Hold Down Seat Type:

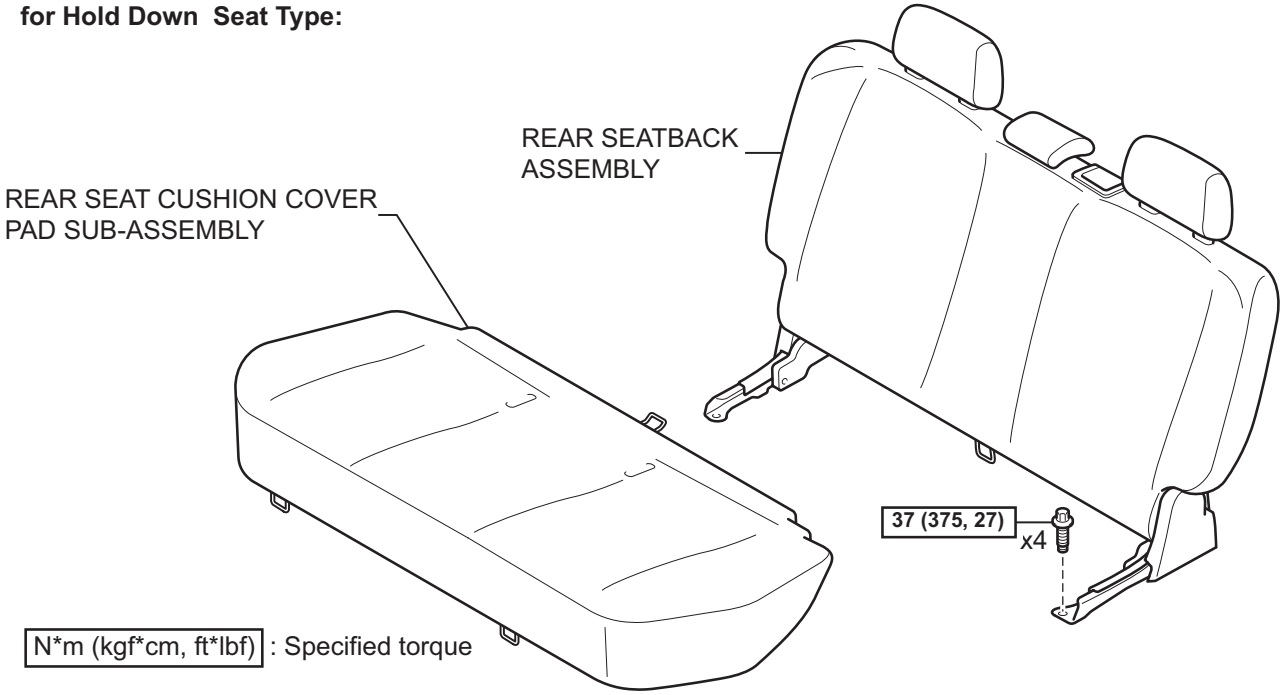

N*m (kgf*cm, ft*lbf) : Specified torque

T

B121713E05

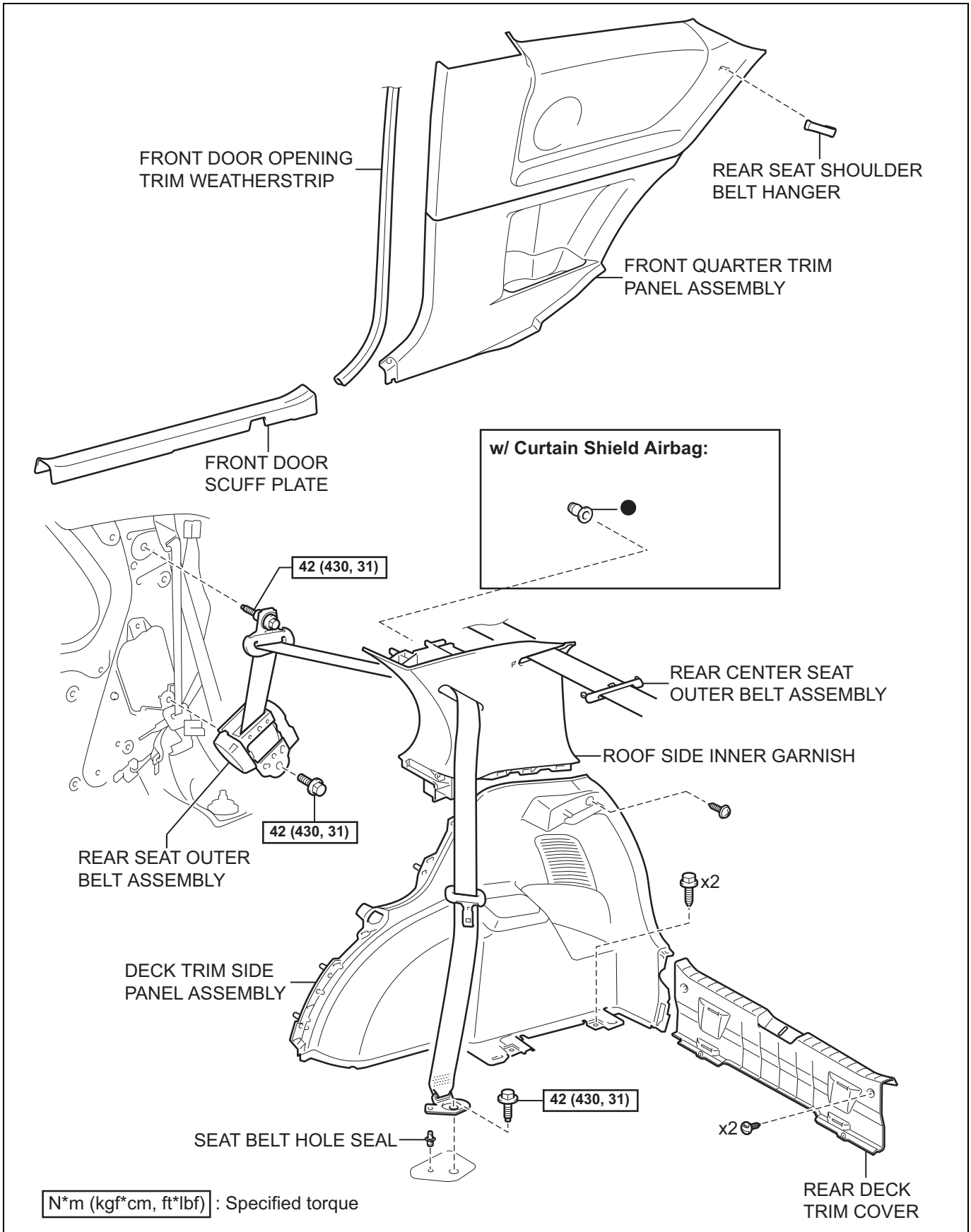

T

B114481E02

SB

REMOVAL

NOTICE:
Always use "Torx" socket wrench E10 when removing the rear seat.
HINT:
The procedure described below is for the RH side. Use the same procedure for both the RH and LH sides, unless otherwise specified.

1. **DISCONNECT CABLE FROM NEGATIVE BATTERY TERMINAL (for LH Side)**
2. **REMOVE PACKAGE TRAY TRIM PANEL ASSEMBLY (See page IR-48)**
3. **REMOVE DECK BOARD SUB-ASSEMBLY (See page IR-48)**
4. **REMOVE DECK FLOOR BOX**
   (a) for RH Side:
      (1) Remove the deck floor box (See page IR-48).
   (b) for LH Side:
      HINT:
      Use the same procedure as for the RH side.
5. **REMOVE NO. 1 REAR SEAT LEG COVER (for 60/40 Split Seat Type)**
   (a) for RH Side:
      (1) Remove the No. 1 rear seat leg cover (See page SE-89).
   (b) for LH Side:
      (1) Remove the No. 1 rear seat leg cover (See page SE-70).
6. **REMOVE NO. 2 REAR SEAT LEG COVER (for 60/40 Split Seat Type LH Side) (See page SE-70)**
7. **REMOVE REAR SEAT ASSEMBLY (for 60/40 Split Seat Type)**
   (a) for RH Side:
      (1) Remove the rear seat assembly (See page SE-89).
   (b) for LH Side:
      (1) Remove the rear seat assembly (See page SE-71).
8. **REMOVE REAR SEAT CUSHION COVER PAD SUB-ASSEMBLY (for Hold Down Seat Type) (See page SE-114)**
9. **REMOVE REAR SEATBACK ASSEMBLY (for Hold Down Seat Type) (See page SE-115)**
10. **REMOVE FRONT DOOR SCUFF PLATE (See page IR-97)**
11. **REMOVE FRONT DOOR OPENING TRIM WEATHERSTRIP (See page SB-76)**

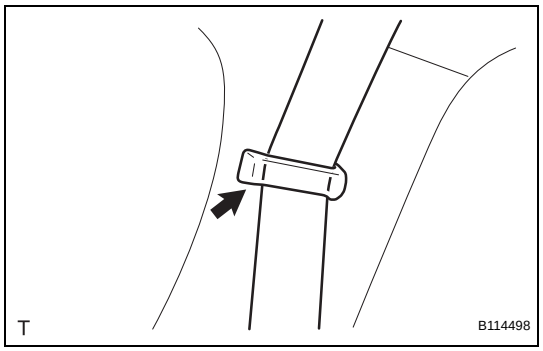

12. REMOVE REAR SEAT SHOULDER BELT HANGER

(a) Remove the belt of the rear seat outer belt.

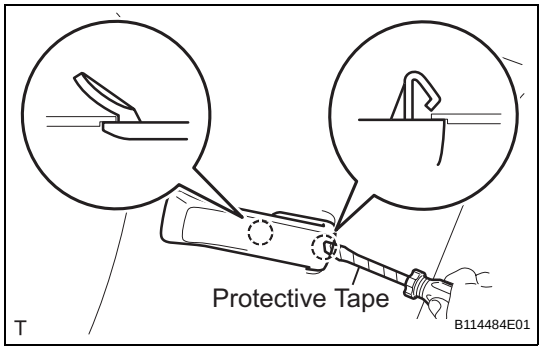

(b) Using a screwdriver with its tip wrapped in protective tape, disengage the 2 claws and remove the rear seat shoulder belt hanger.

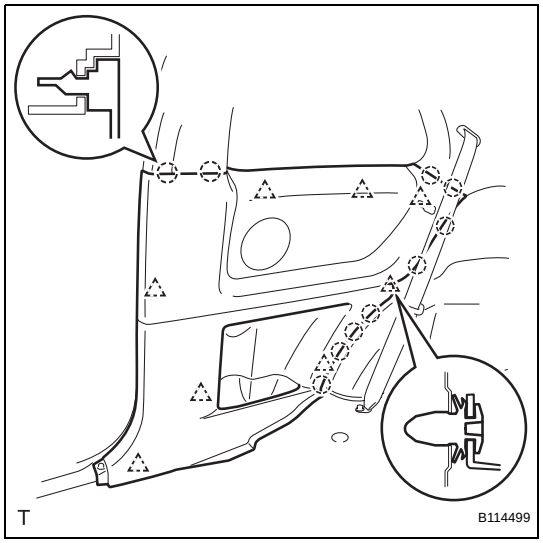

13. REMOVE FRONT QUARTER TRIM PANEL ASSEMBLY

(a) Disengage the 8 clips, the retainer and the 10 claws and remove the front quarter trim panel.

14. REMOVE REAR DECK TRIM COVER (See page IR-49)

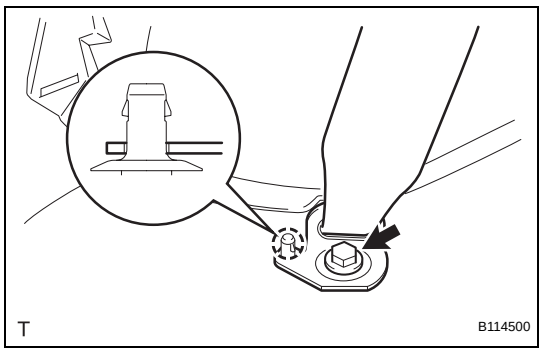

15. REMOVE DECK TRIM SIDE PANEL ASSEMBLY

(a) Remove the bolt.

(b) Disengage the clip and the anchor plate of the rear seat outer belt.

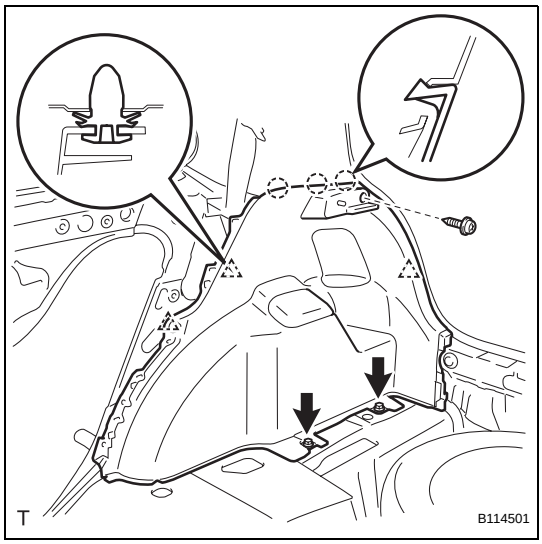

(c) for RH Side:
(1) Remove the 3 screws.
(2) Disengage the 3 clips and the 3 claws and remove the deck trim side panel.

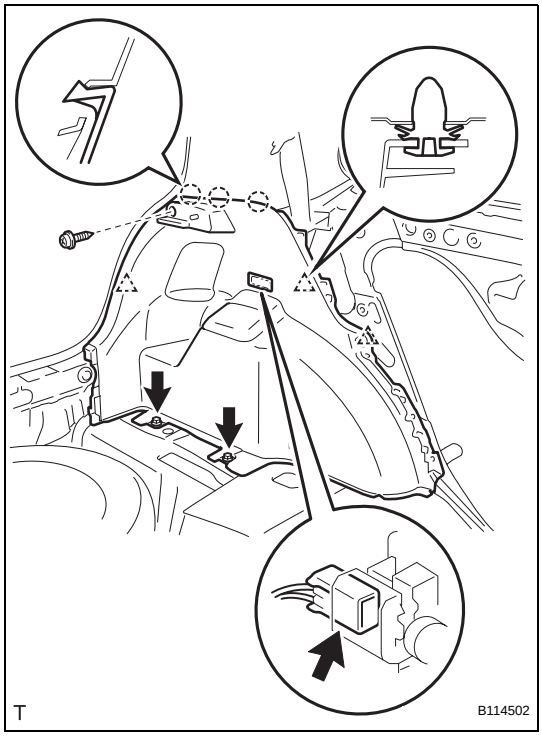

(d) for LH Side:
(1) Remove the 3 screws.
(2) Disengage the 3 clips and the 3 claws.
(3) Disconnect the luggage compartment room light connector and remove the deck trim side panel.

16. REMOVE REAR CENTER SEAT OUTER BELT ASSEMBLY (for RH Side) (See page SB-113)

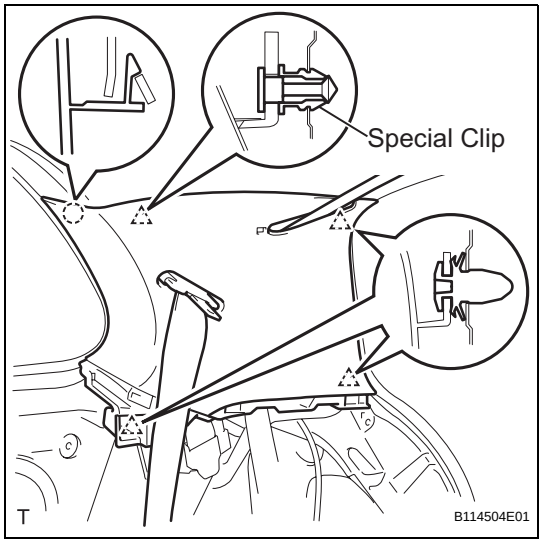

17. REMOVE ROOF SIDE INNER GARNISH

(a) for RH Side (w/ Curtain Shield Airbag):
NOTICE:
Replace the special clip with a new one because it is damaged when the roof side inner garnish is removed.
(1) Disengage the 4 clips and the claw.
(2) Pass the rear seat outer and rear center seat outer belts through the slit in the roof side inner garnish and remove the roof side inner garnish.

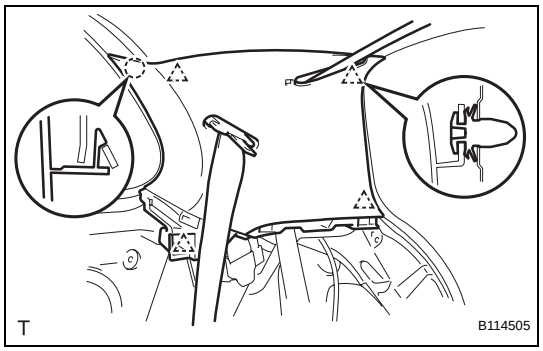

(b) for RH Side (w/o Curtain Shield Airbag):
(1) Disengage the 4 clips and the claw.
(2) Pass the rear seat outer and rear center seat outer belts through the slit in the roof side inner garnish and remove the roof side inner garnish.

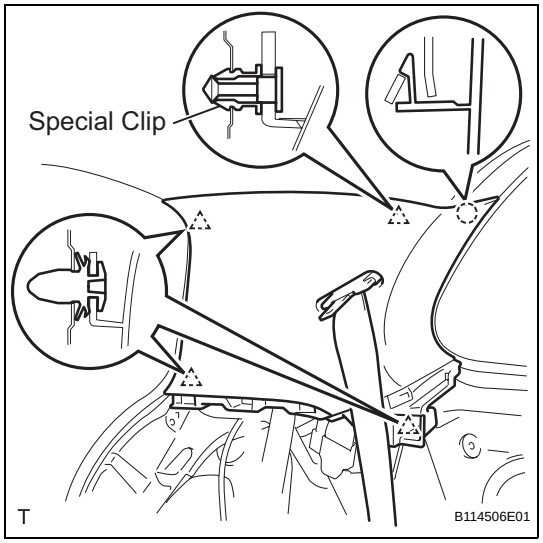

(c) for LH Side (w/ Curtain Shield Airbag):
NOTICE:
Replace the special clip with a new one because it is damaged when the roof side inner garnish is removed.
(1) Disengage the 4 clips and the claw.
(2) Pass the rear seat outer belt through the slit in the roof side inner garnish and remove the roof side inner garnish.

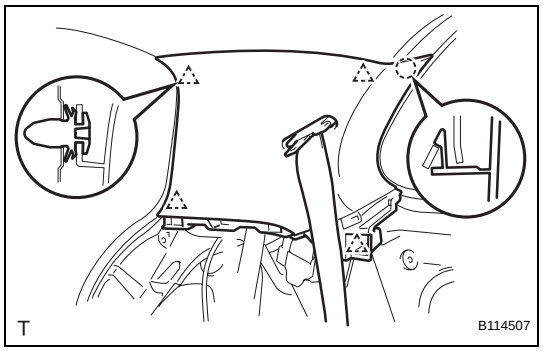

(d) for LH Side (w/o Curtain Shield Airbag):
(1) Disengage the 4 clips and the claw.
(2) Pass the rear seat outer belt through the slit in the roof side inner garnish and remove the roof side inner garnish.

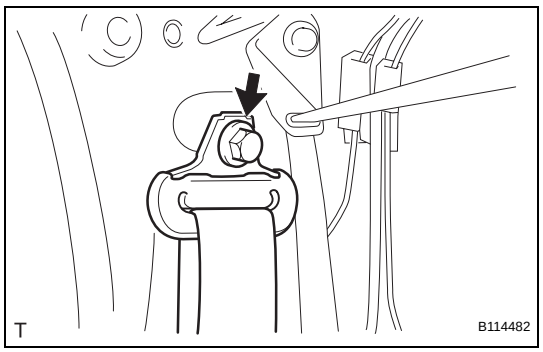

18. REMOVE REAR SEAT OUTER BELT ASSEMBLY
(a) Remove the bolt and the through anchor.

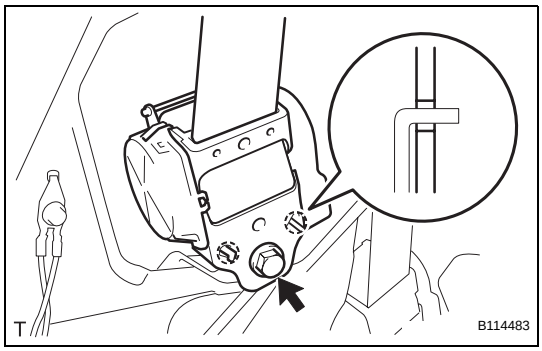

(b) Remove the bolt, the 2 hooks and the retractor.

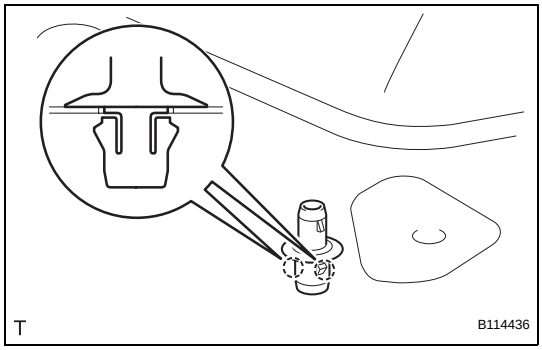

19. REMOVE SEAT BELT HOLE SEAL

(a) Disengage the 2 claws and remove the seat belt hole seal.

INSTALLATION

NOTICE:
Always use "Torx" socket wrench E10 when installing the rear seat.
HINT:
The procedure described below is for the RH side. Use the same procedure for both the RH and LH sides, unless otherwise specified.

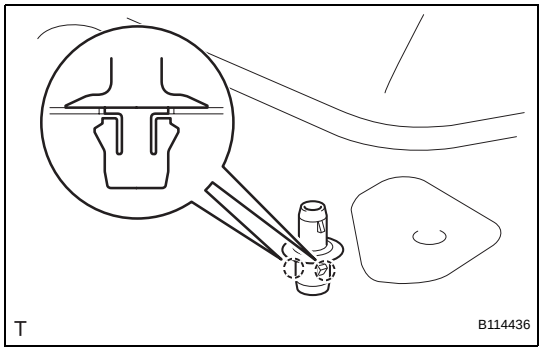

1. INSTALL SEAT BELT HOLE SEAL
(a) Engage the 2 claws and install the seat belt hole seal.

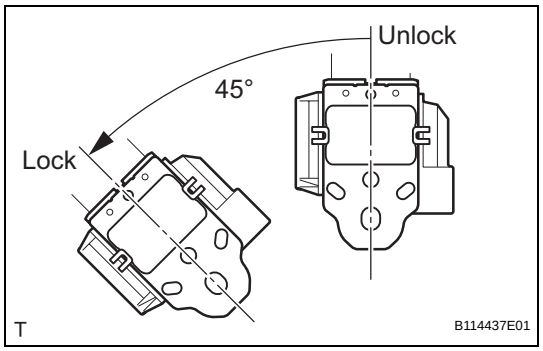

2. INSTALL REAR SEAT OUTER BELT ASSEMBLY
(a) Check the angle of inclination required to lock the retractor.
(1) Gently incline the retractor from its initial position. Check that the belt does not lock when the retractor is inclined 15° or less in any direction. Also, check that the belt locks when the inclination of the retractor is 45° or more.
NOTICE:
Do not disassemble the retractor.
If the operation is not as specified, replace the rear seat outer belt.

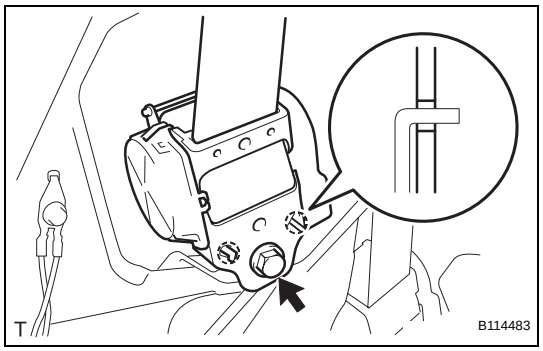

(b) Hook the lower stay of the retractor onto the 2 body hooks and install the retractor with the bolt.
Torque: 42 N*m (430 kgf*cm, 31 ft.*lbf)

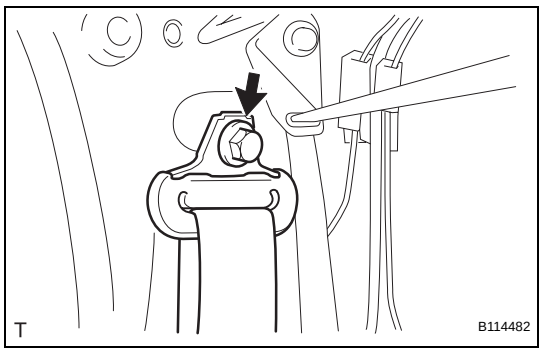

(c) Install the through anchor with the bolt.
Torque: 42 N*m (430 kgf*cm, 31 ft.*lbf)
(d) Check that the ELR locks.
NOTICE:
Perform the check with the rear seat outer belt installed.
(1) With the belt installed, check that the belt locks when it is pulled out quickly.
If the operation is not as specified, replace the rear seat outer belt.

SB

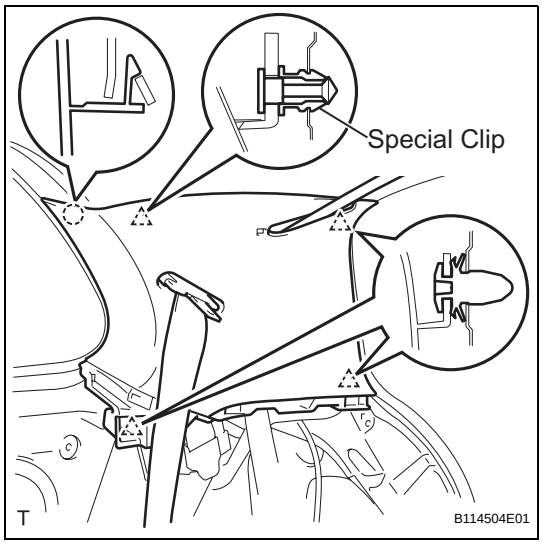

3. INSTALL ROOF SIDE INNER GARNISH

(a) for RH Side (w/ Curtain Shield Airbag):
- (1) Install a new special clip.
- (2) Pass the rear seat outer and rear center seat outer belts through the slit in the roof side inner garnish.
- (3) Engage the 4 clips and the claw and install the roof side inner garnish.

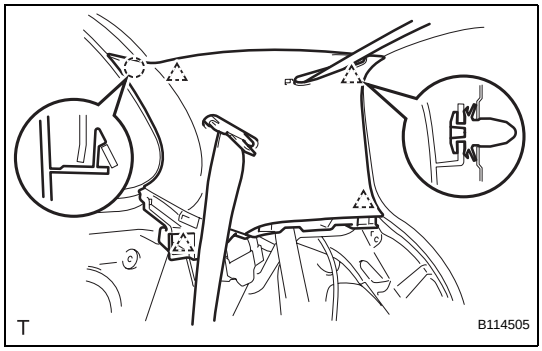

(b) for RH Side (w/o Curtain Shield Airbag):
- (1) Pass the rear seat outer and rear center seat outer belts through the slit in the roof side inner garnish.
- (2) Engage the 4 clips and the claw and install the roof side inner garnish.

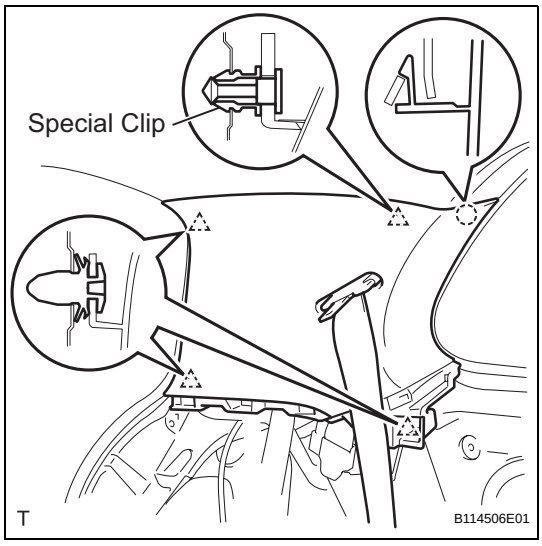

(c) for LH Side (w/ Curtain Shield Airbag):
- (1) Install a new special clip.
- (2) Pass the rear seat outer belt through the slit in the roof side inner garnish.
- (3) Engage the 4 clips and the claw and install the roof side inner garnish.

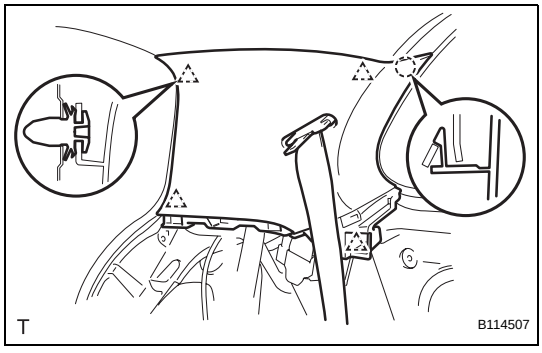

(d) for LH Side (w/o Curtain Shield Airbag):
- (1) Pass the rear seat outer belt through the slit in the roof side inner garnish.
- (2) Engage the 4 clips and the claw and install the roof side inner garnish.

4. INSTALL REAR CENTER SEAT OUTER BELT ASSEMBLY (for RH Side) (See page SB-117)

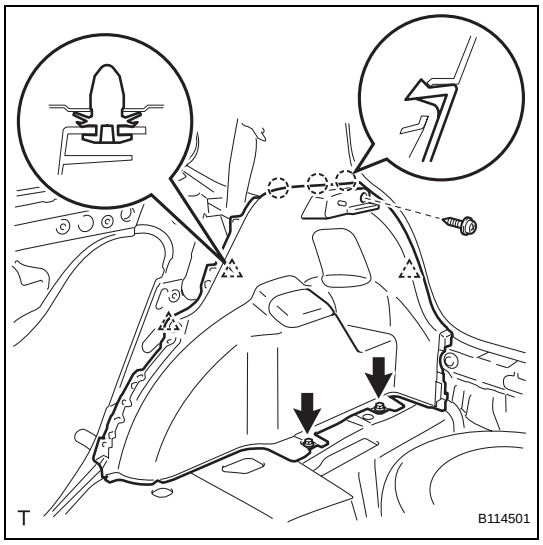

5. INSTALL DECK TRIM SIDE PANEL ASSEMBLY

(a) for RH Side:
  (1) Engage the 3 clips and the 3 claws and install the deck trim side panel.
  (2) Tighten the 3 screws.

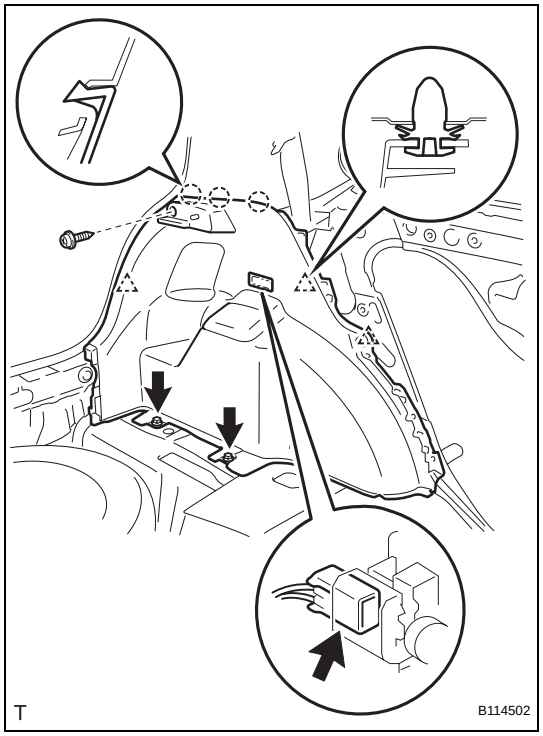

(b) for LH Side:
  (1) Connect the luggage compartment room light connector.
  (2) Engage the 3 clips and the 3 claws and install the deck trim side panel.
  (3) Tighten the 3 screws.

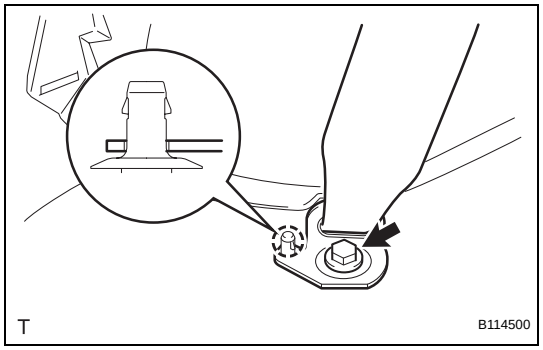

(c) Engage the clip and install the anchor plate of the rear seat outer belt.
(d) Tighten the bolt.
Torque: 42 N*m (430 kgf*cm, 31 ft.*lbf)

6. INSTALL REAR DECK TRIM COVER (See page IR-82)

SB

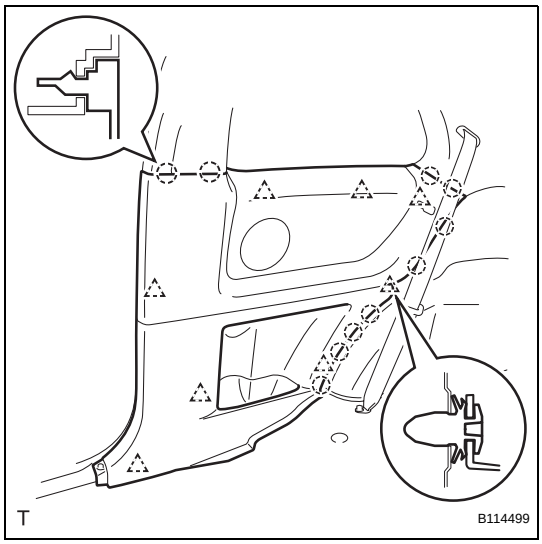

7. INSTALL FRONT QUARTER TRIM PANEL ASSEMBLY

(a) Engage the 8 clips, the retainer and the 10 claws and install the front quarter trim panel.

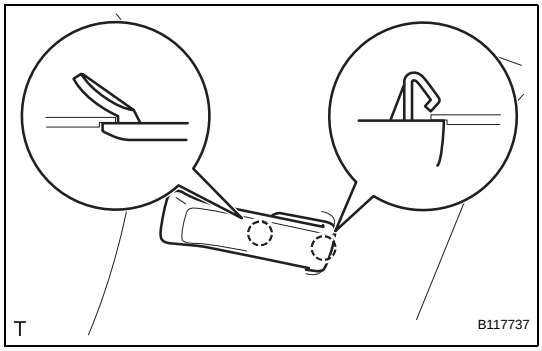

8. INSTALL REAR SEAT SHOULDER BELT HANGER

(a) Engage the 2 claws and install the rear seat shoulder belt hanger.

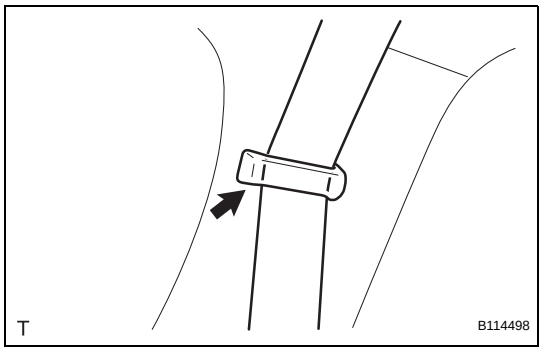

(b) Install the belt of the rear seat outer belt.

9. INSTALL FRONT DOOR OPENING TRIM WEATHERSTRIP (See page SB-80)

10. INSTALL FRONT DOOR SCUFF PLATE (See page IR-119)

11. INSTALL REAR SEAT ASSEMBLY (for 60/40 Split Seat Type)

(a) for RH Side:

(1) Install the rear seat assembly (See page SE-102).

(b) for LH Side:

(1) Install the rear seat assembly (See page SE-84).

12. INSTALL NO. 2 REAR SEAT LEG COVER (for 60/40 Split Seat Type LH Side) (See page SE-85)

13. INSTALL NO. 1 REAR SEAT LEG COVER (for 60/40 Split Seat Type)

(a) for RH Side:

(1) Install the No. 1 rear seat leg cover (See pageSE-103).

(b) for LH Side:

(1) Install the No. 1 rear seat leg cover (See page SE-85).

14. **INSTALL REAR SEATBACK ASSEMBLY (for Hold Down Seat Type) (See page SE-122)**

15. **INSTALL REAR SEAT CUSHION COVER PAD SUB-ASSEMBLY (for Hold Down Seat Type) (See page SE-123)**

16. **INSTALL DECK FLOOR BOX**
    (a) for RH Side:
        (1) Install the deck floor box (See page IR-83).
    (b) for LH Side:
        HINT:
        Use the same procedure as for the RH side.

17. **INSTALL DECK BOARD SUB-ASSEMBLY (See page IR-83)**

18. **INSTALL PACKAGE TRAY TRIM PANEL ASSEMBLY (See page IR-83)**

19. **CONNECT CABLE TO NEGATIVE BATTERY TERMINAL (for LH Side)**
    Torque: 5.4 N*m (55 kgf*cm, 48 in.*lbf)

REAR CENTER SEAT INNER BELT ASSEMBLY (for Sedan)

COMPONENTS

SB

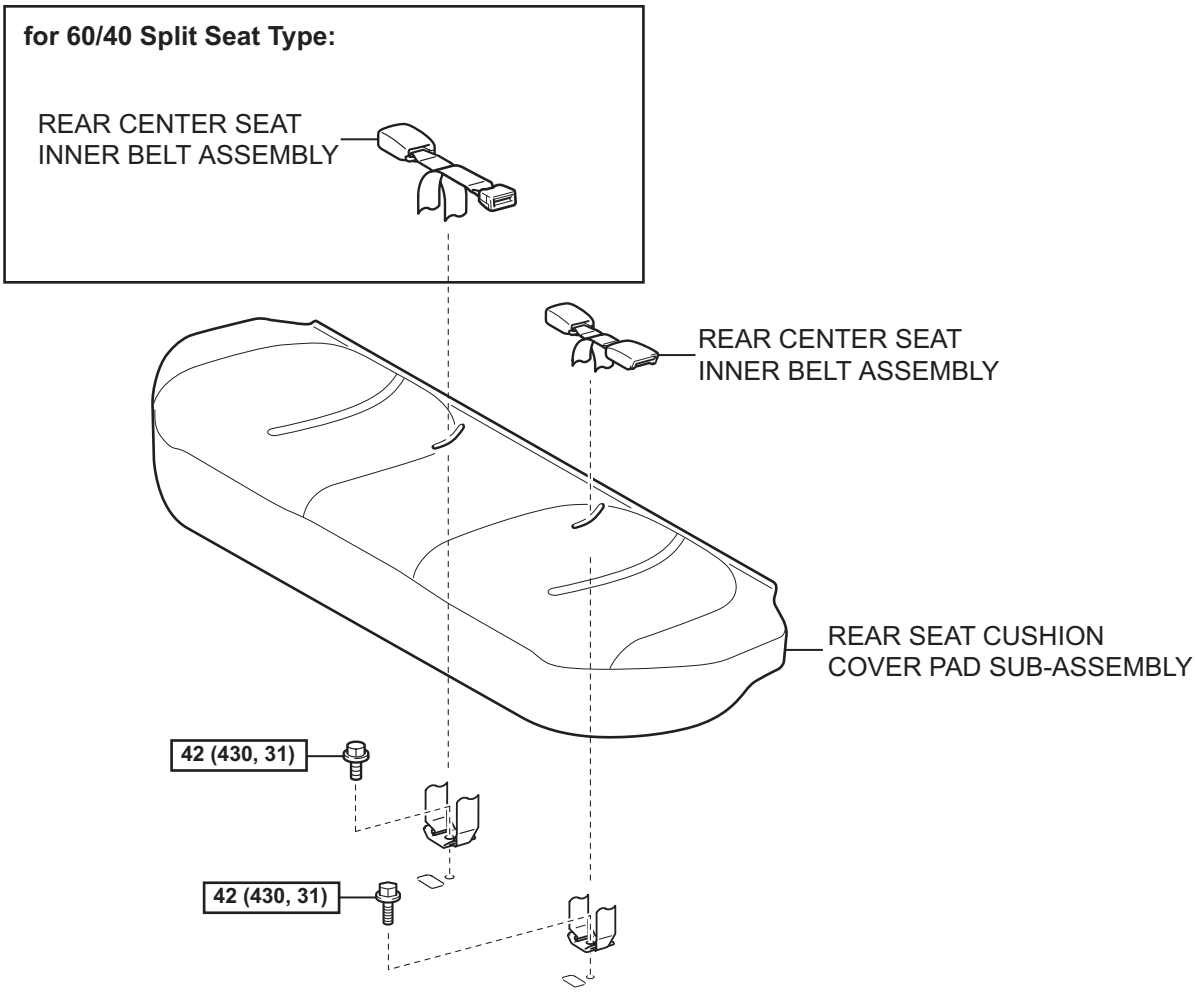

N*m (kgf*cm, ft*lbf) : Specified torque

T

B138566E03

REMOVAL

1. REMOVE REAR SEAT CUSHION COVER PAD SUB-ASSEMBLY

(a) for 60/40 Split Seat Type:

(1) Remove the rear seat cushion cover pad (See page SE-46).

(b) for Fixed Seat Type:

(1) Remove the rear seat cushion cover pad (See page SE-106).

2. REMOVE REAR CENTER SEAT INNER BELT ASSEMBLY

(a) for RH Side (for 60/40 Split Seat Type):

(1) Remove the bolt and the rear center seat inner belt.

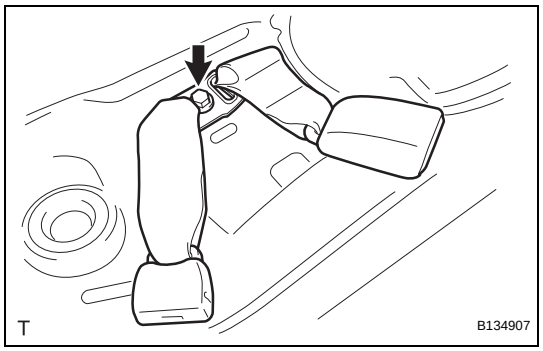

(b) for LH Side:

(1) Remove the bolt and the rear center seat inner belt.

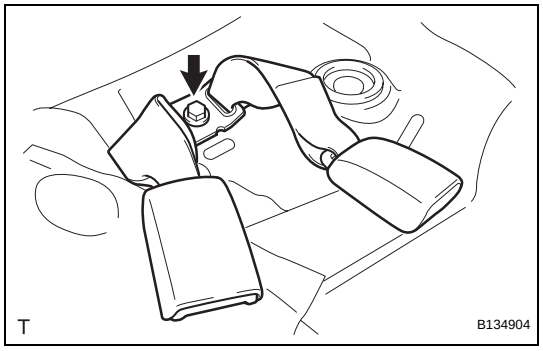

INSTALLATION

1. INSTALL REAR CENTER SEAT INNER BELT ASSEMBLY

(a) for RH Side (for 60/40 Split Seat Type):

(1) Install the rear center seat inner belt with the bolt.

Torque: 42 N*m (430 kgf*cm, 31 ft.*lbf)

NOTICE:

- **Install the anchor plate with the arrow mark facing forward.**
- **Do not place the anchor plate over the locating mark area of the floor panel.**

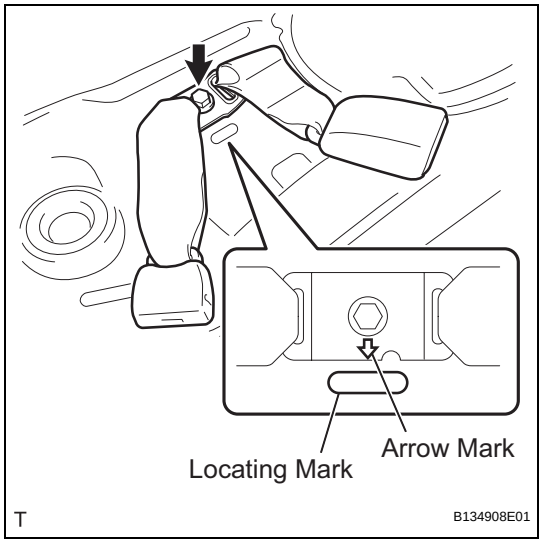

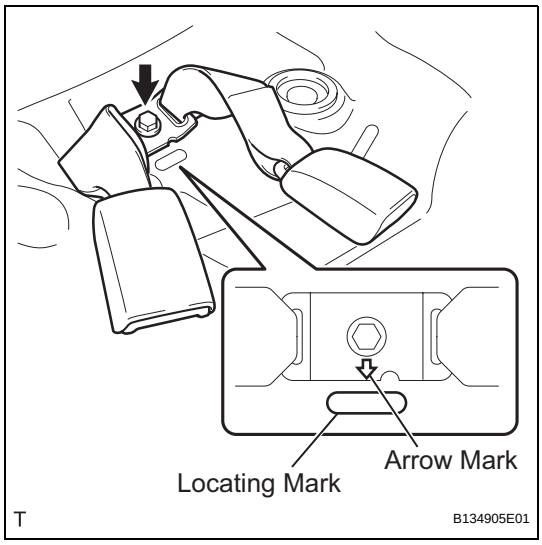

(b) for LH Side:

(1) Install the rear center seat inner belt with the bolt.

Torque: 42 N*m (430 kgf*cm, 31 ft.*lbf)

NOTICE:

- **Install the anchor plate with the arrow mark facing forward.**
- **Do not place the anchor plate over the locating mark area of the floor panel.**

2. INSTALL REAR SEAT CUSHION COVER PAD SUB-ASSEMBLY

(a) for 60/40 Split Seat Type:

(1) Install the rear seat cushion cover pad (See page SE-53).

(b) for Fixed Seat Type:

(1) Install the rear seat cushion cover pad (See page SE-109).

REAR CENTER SEAT INNER BELT ASSEMBLY (for Hatchback LH Side)

COMPONENTS

for 60/40 Split Seat Type:

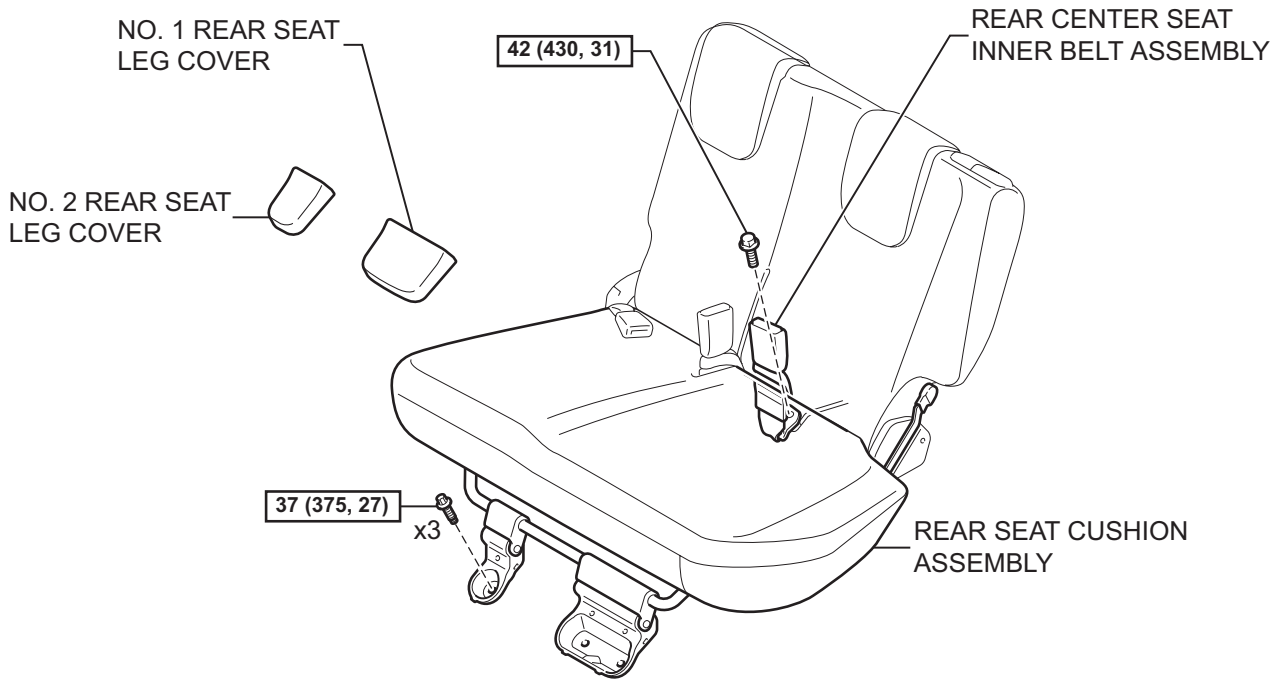

for Hold Down Seat Type:

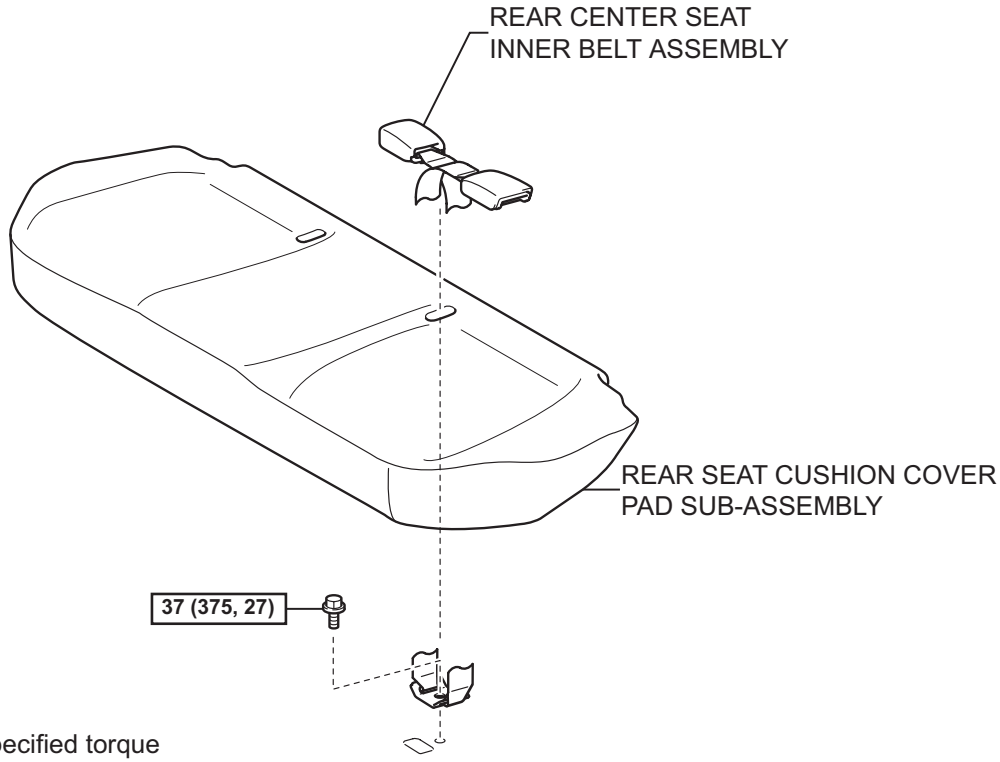

N*m (kgf*cm, ft*lbf) : Specified torque

T

B114645E03

SB

REMOVAL

NOTICE:
Always use "Torx" socket wrench E10 when removing the rear seat.

1. **REMOVE NO. 1 REAR SEAT LEG COVER (for 60/40 Split Seat Type) (See page SE-70)**
2. **REMOVE NO. 2 REAR SEAT LEG COVER (for 60/40 Split Seat Type) (See page SE-70)**
3. **REMOVE REAR SEAT CUSHION COVER PAD SUB-ASSEMBLY (for Hold Down Seat Type) (See page SE-114)**
4. **REMOVE REAR CENTER SEAT INNER BELT ASSEMBLY**
   (a) for 60/40 Split Seat Type:
      (1) Using "Torx" socket wrench E10, remove the 3 bolts and pull up the rear seat cushion.

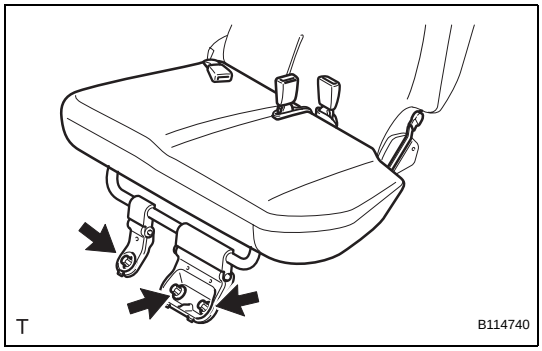

      (2) Remove the belt from the band.
      (3) Remove the bolt and the rear center seat inner belt.

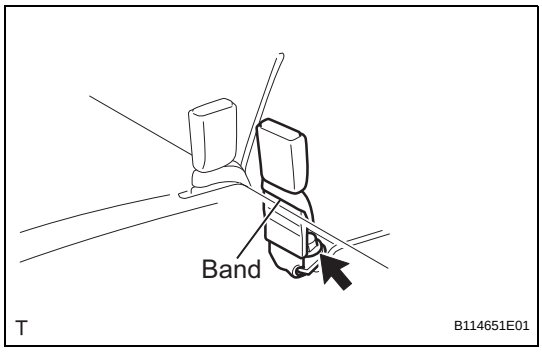

   (b) for Hold Down Seat Type:
      (1) Remove the bolt and the rear center seat inner belt.

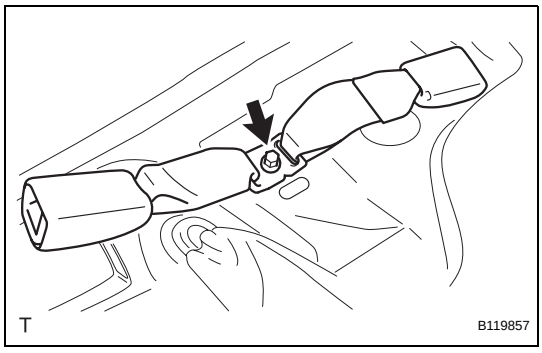

INSTALLATION

NOTICE:
Always use "Torx" socket wrench E10 when installing the rear seat.

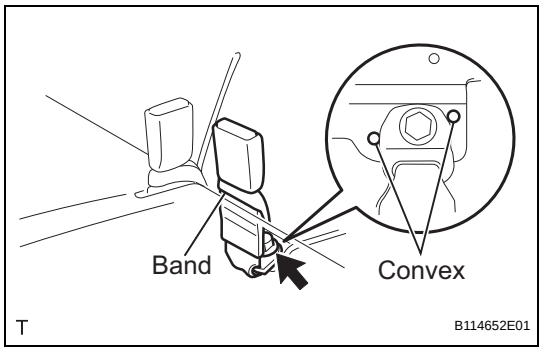

1. INSTALL REAR CENTER SEAT INNER BELT ASSEMBLY

(a) for 60/40 Split Seat Type

(1) Install the rear center seat inner belt with the bolt.
Torque: 42 N*m (430 kgf*cm, 31 ft.*lbf)
NOTICE:
Do not place the anchor plate over the convex areas of the rear seat back frame.

(2) Install the belt into the band.

(3) Install the rear seat cushion.

(4) Using "Torx" socket wrench E10, tighten the 3 bolts in the sequence shown in the illustration.
Torque: 37 N*m (375 kgf*cm, 27 ft.*lbf)

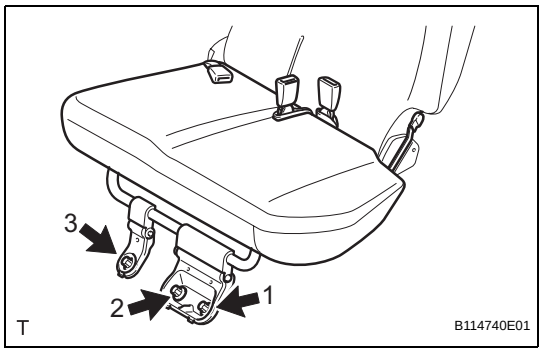

(b) for Hold Down Seat Type:

(1) Install the rear center seat inner belt with the bolt.
Torque: 42 N*m (430 kgf*cm, 31 ft.*lbf)
NOTICE:
- **Install the anchor plate with the arrow mark facing forward.**
- **Do not place the anchor plate over the locating mark area of the floor panel.**

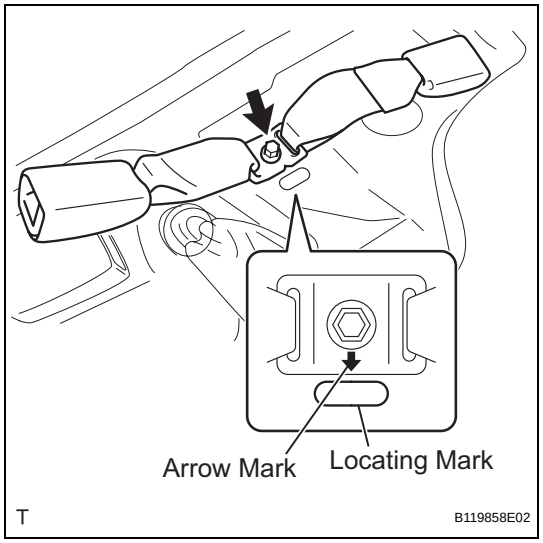

2. INSTALL NO. 2 REAR SEAT LEG COVER (for 60/40 Split Seat Type) (See page SE-85)

3. INSTALL NO. 1 REAR SEAT LEG COVER (for 60/40 Split Seat Type) (See page SE-85)

4. INSTALL REAR SEAT CUSHION COVER PAD SUB-ASSEMBLY (for Hold Down Seat Type) (See page SE-123)

SB

REAR CENTER SEAT INNER BELT ASSEMBLY (for Hatchback RH Side)

COMPONENTS

SB

for 60/40 Split Seat Type:

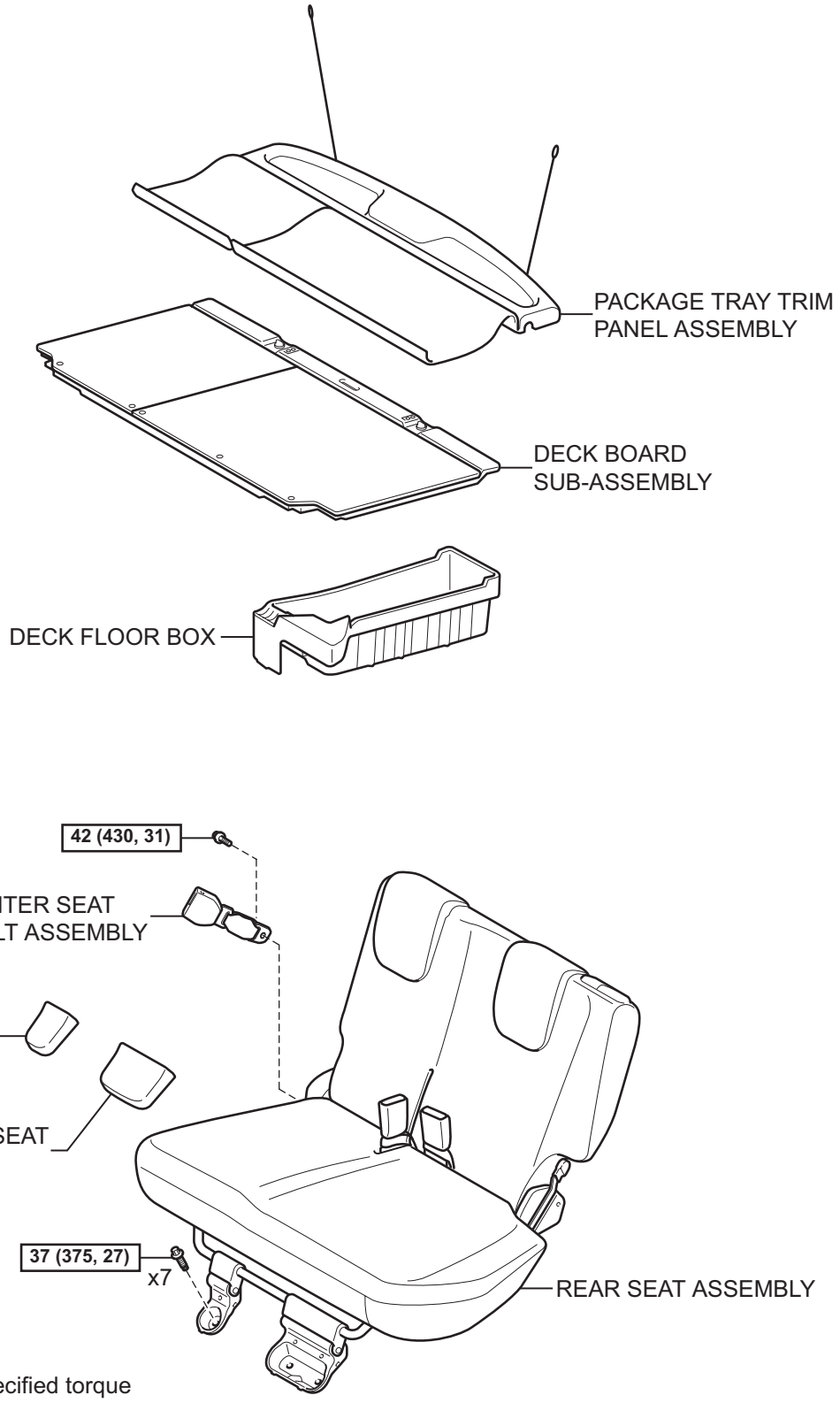

N*m (kgf*cm, ft*lbf) : Specified torque

T

B114653E02

for Hold Down Seat Type:

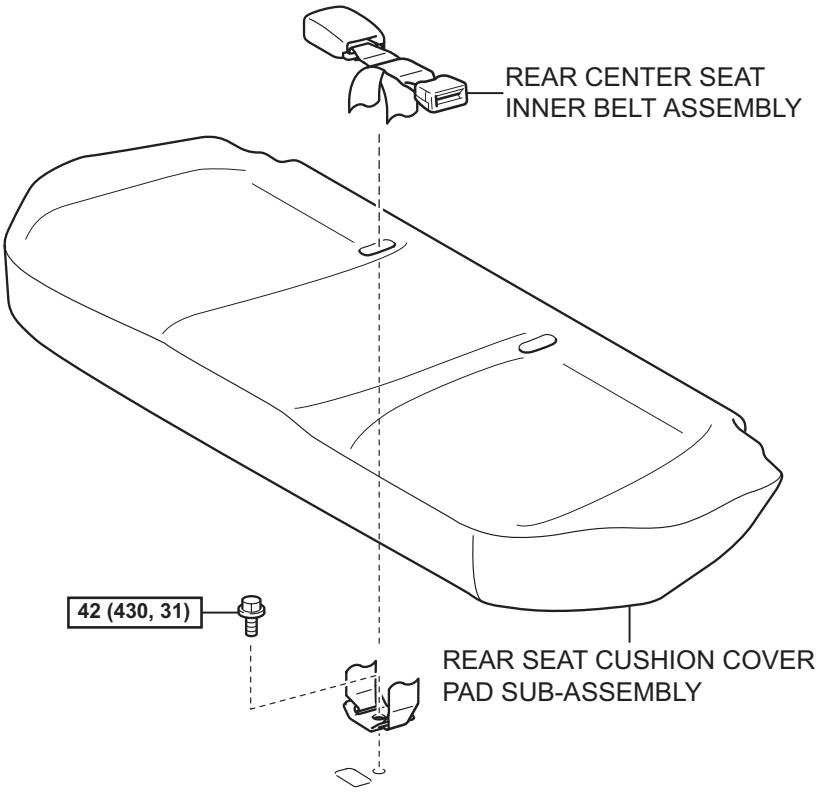

N*m (kgf*cm, ft*lbf) : Specified torque

T

B119856E05

SB

REMOVAL

NOTICE:
Always use "Torx" socket wrench E10 when removing the rear seat.

1. **REMOVE PACKAGE TRAY TRIM PANEL ASSEMBLY (for 60/40 Split Seat Type) (See page IR-48)**
2. **REMOVE DECK BOARD SUB-ASSEMBLY (for 60/40 Split Seat Type) (See page IR-48)**
3. **REMOVE DECK FLOOR BOX (for 60/40 Split Seat Type)**
   HINT:
   Use the same procedure as for the RH side (See page IR-48).
4. **REMOVE NO. 1 REAR SEAT LEG COVER (for 60/40 Split Seat Type) (See page SE-70)**
5. **REMOVE NO. 2 REAR SEAT LEG COVER (for 60/40 Split Seat Type) (See page SE-70)**
6. **REMOVE REAR SEAT ASSEMBLY (for 60/40 Split Seat Type) (See page SE-71)**
7. **REMOVE REAR SEAT CUSHION COVER PAD SUB-ASSEMBLY (for Hold Down Seat Type) (See page SE-114)**
8. **REMOVE REAR CENTER SEAT INNER BELT ASSEMBLY**
   (a) for 60/40 Split Seat Type:
      (1) Remove the bolt and the rear center seat inner belt.

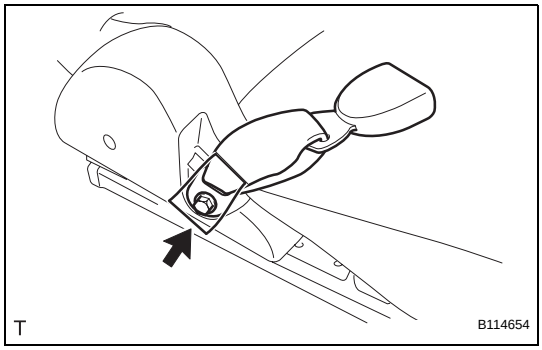

   (b) for Hold Down Seat Type:
      (1) Remove the bolt and the rear center seat inner belt.

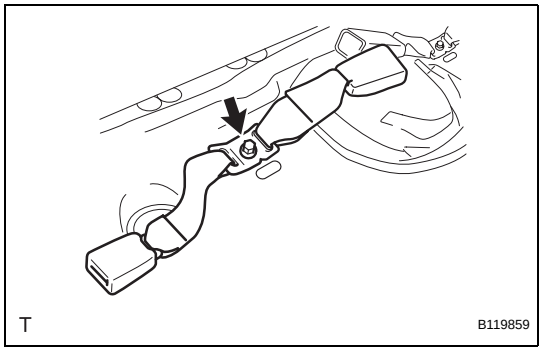

INSTALLATION

NOTICE:
Always use "Torx" socket wrench E10 when installing the rear seat.

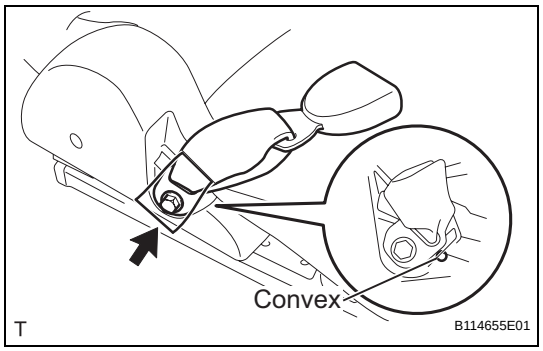

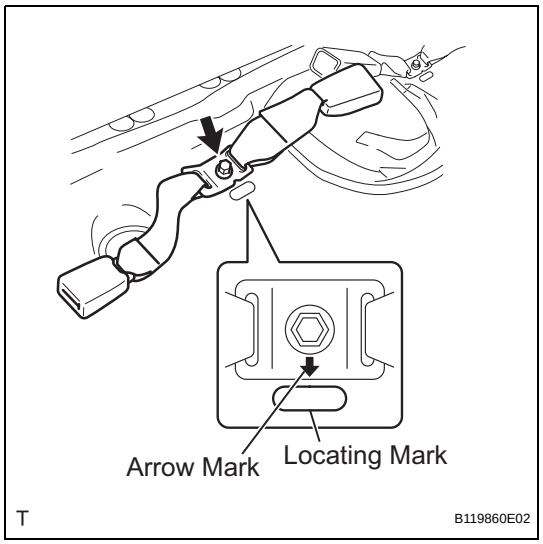

1. **INSTALL REAR CENTER SEAT INNER BELT ASSEMBLY**
   (a) for 60/40 Split Seat Type:
      (1) Install the rear center seat inner belt with the bolt.
      Torque: 42 N*m (430 kgf*cm, 31 ft.*lbf)
      NOTICE:
      Do not place the anchor plate over the convex area of the rear seat back frame.

   (b) for Hold Down Seat Type:
      (1) Install the rear center seat inner belt with the bolt.
      Torque: 42 N*m (430 kgf*cm, 31 ft.*lbf)
      NOTICE:
      - **Install the anchor plate with the arrow mark facing forward.**
      - **Do not place the anchor plate over the locating mark area of the floor panel.**

2. **INSTALL REAR SEAT ASSEMBLY (for 60/40 Split Seat Type) (See page SE-84)**
3. **INSTALL NO. 2 REAR SEAT LEG COVER (for 60/40 Split Seat Type) (See page SE-85)**
4. **INSTALL NO. 1 REAR SEAT LEG COVER (for 60/40 Split Seat Type) (See page SE-85)**
5. **INSTALL REAR SEAT CUSHION COVER PAD SUB-ASSEMBLY (for Hold Down Seat Type) (See page SE-123)**
6. **INSTALL DECK FLOOR BOX (for 60/40 Split Seat Type)**
   HINT:
   Use the same procedure as for the RH side (See page IR-83).
7. **INSTALL DECK BOARD SUB-ASSEMBLY (for 60/40 Split Seat Type) (See page IR-83)**
8. **INSTALL PACKAGE TRAY TRIM PANEL ASSEMBLY (for 60/40 Split Seat Type) (See page IR-83)**

SB

REAR CENTER SEAT OUTER BELT ASSEMBLY (for Sedan)

COMPONENTS

for 60/40 Split Seat Type:

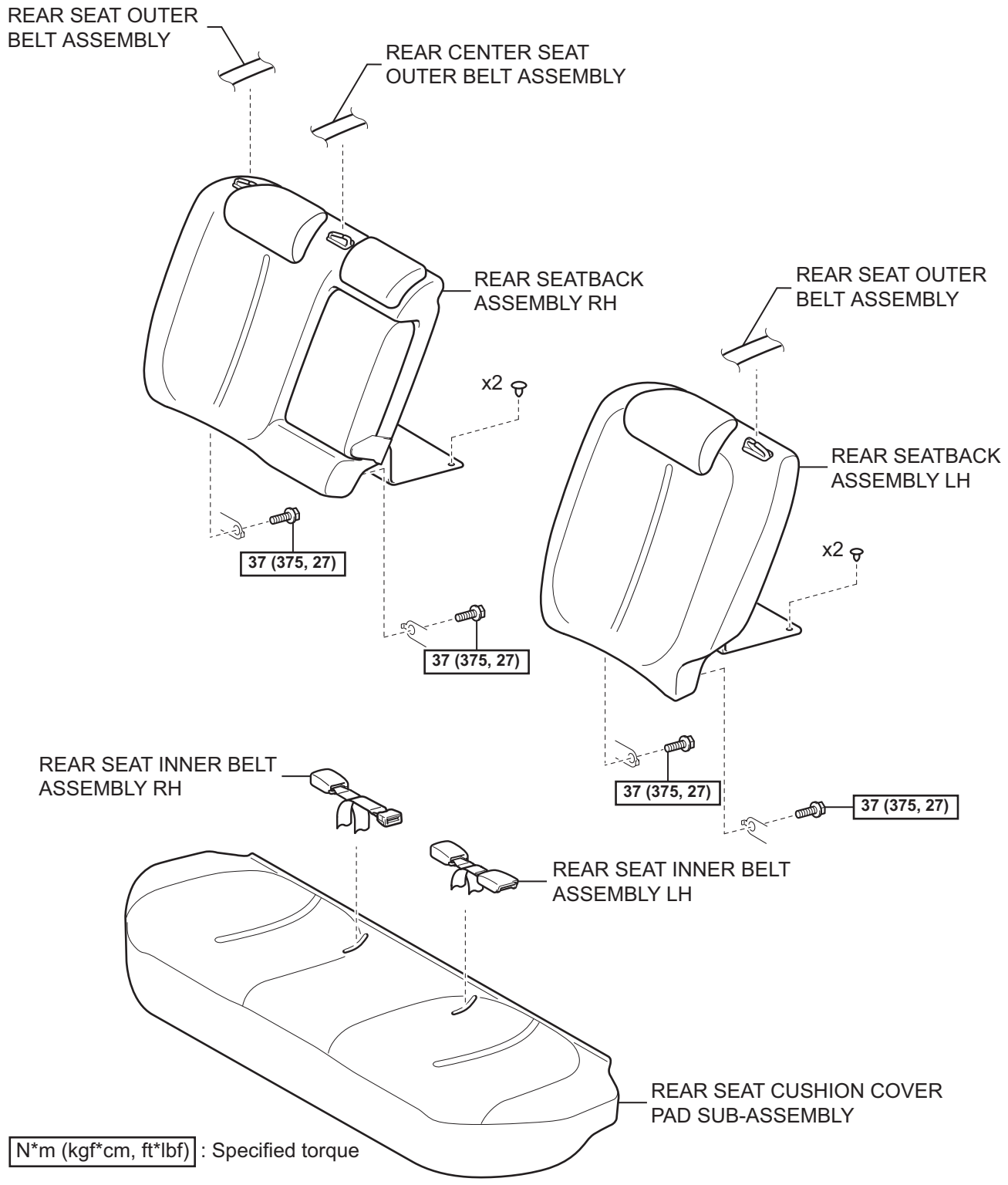

SB

for Fixed Seat Type:

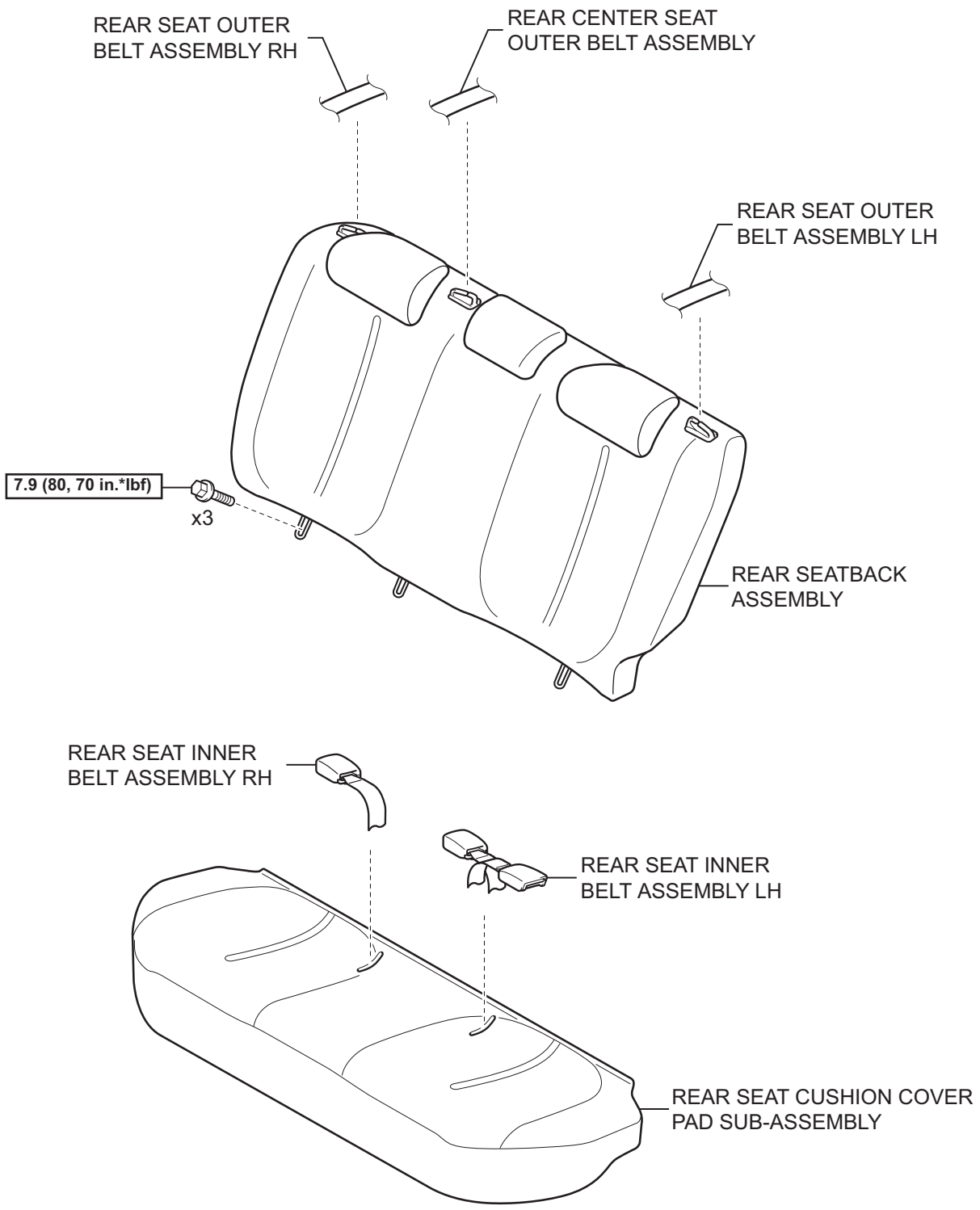

N*m (kgf*cm, ft*lbf) : Specified torque

T

B138611E01

SB

for 60/40 Split Seat Type:

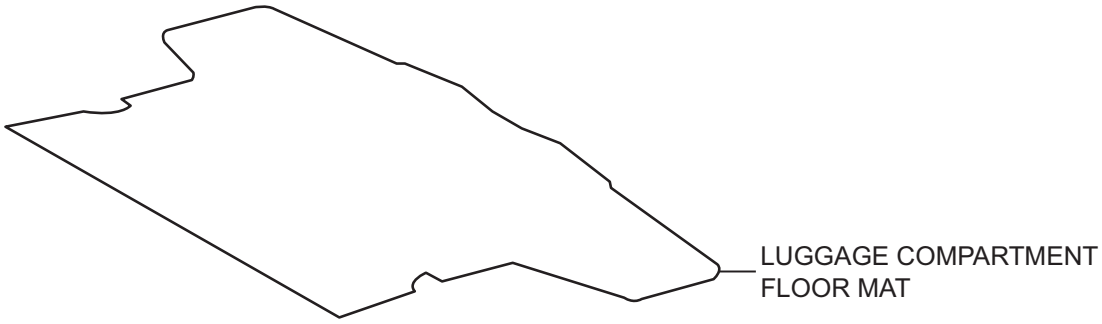

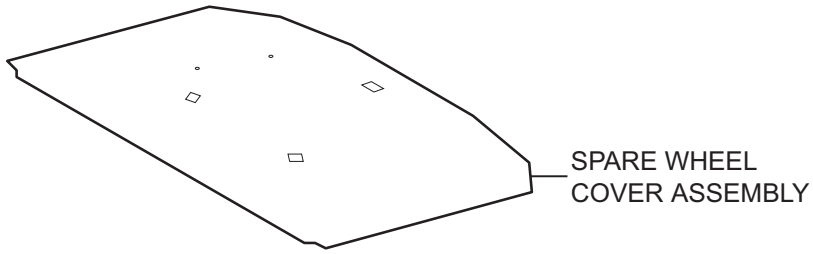

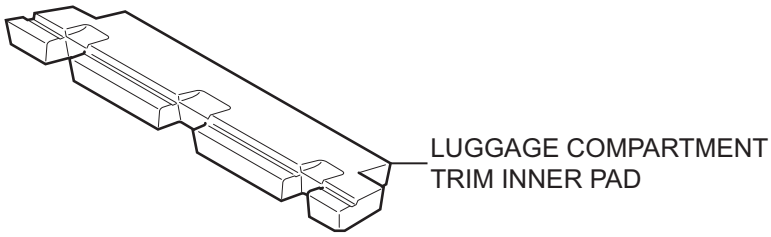

for Grand Tire:

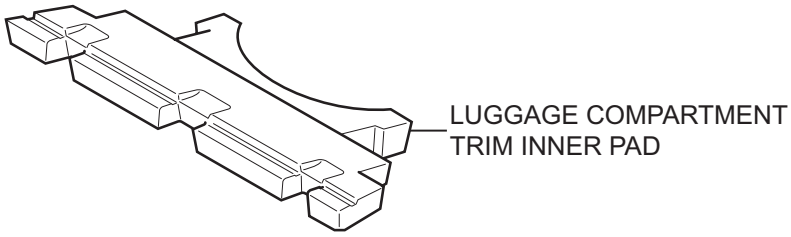

T

B138565E01

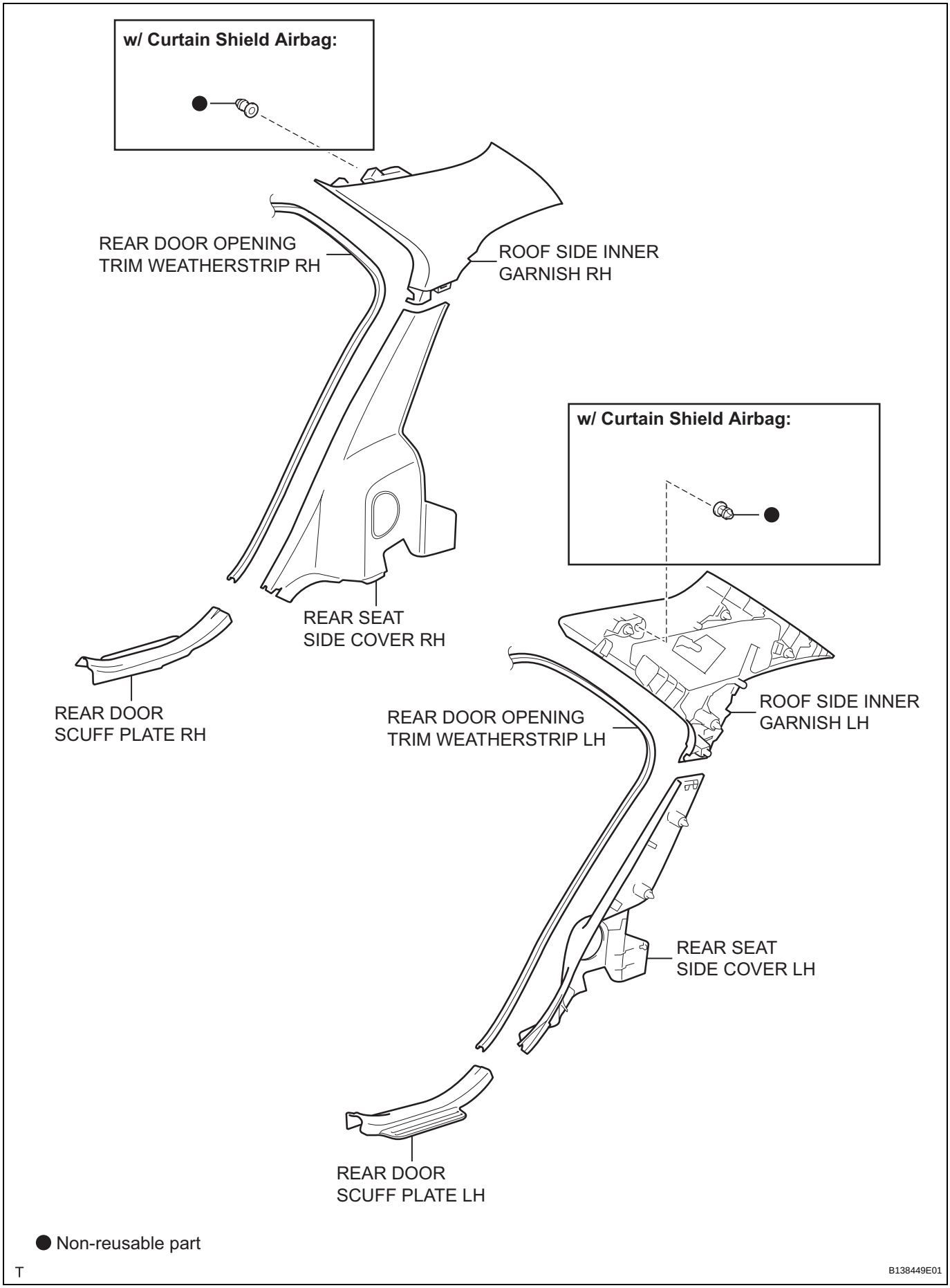
w/ Curtain Shield Airbag:
REAR DOOR OPENING TRIM WEATHERSTRIP RH
ROOF SIDE INNER GARNISH RH
REAR SEAT SIDE COVER RH
REAR DOOR SCUFF PLATE RH
w/ Curtain Shield Airbag:
ROOF SIDE INNER GARNISH LH
REAR DOOR OPENING TRIM WEATHERSTRIP LH
REAR SEAT SIDE COVER LH
REAR DOOR SCUFF PLATE LH
● Non-reusable part
T
B138449E01

SB

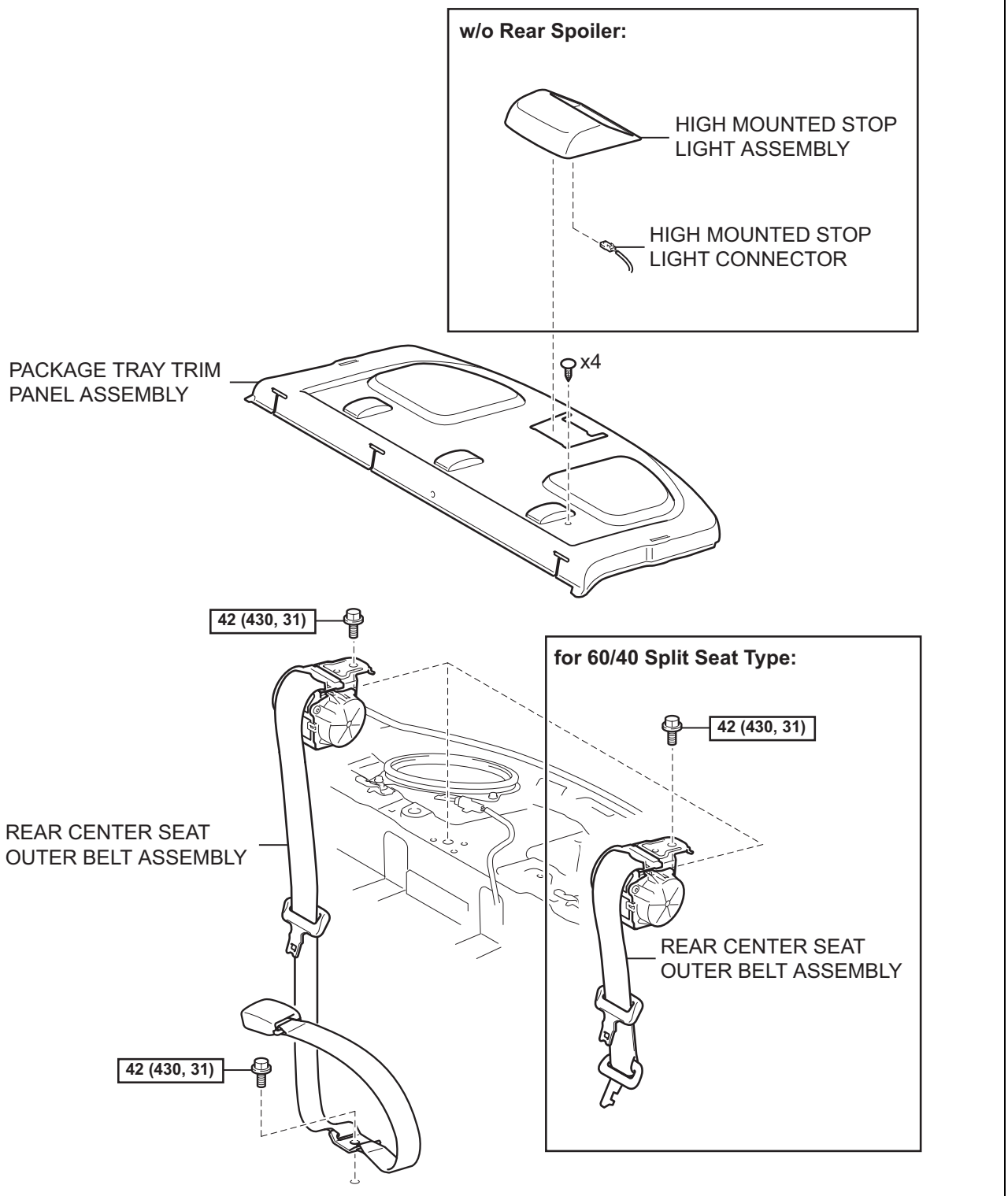

N*m (kgf*cm, ft*lbf) : Specified torque

T

B138564E02

REMOVAL

1. **DISCONNECT CABLE FROM NEGATIVE BATTERY TERMINAL (w/o Rear Spoiler)**
2. **REMOVE REAR SEAT CUSHION COVER PAD SUB-ASSEMBLY**
   (a) for 60/40 Split Seat Type:
      (1) Remove the rear seat cushion cover pad (See page SE-46).
   (b) for Fixed Seat Type:
      (1) Remove the rear seat cushion cover pad (See page SE-106).
3. **REMOVE REAR SEATBACK ASSEMBLY RH (for 60/40 Split Seat Type) (See page SE-57)**
4. **REMOVE REAR SEATBACK ASSEMBLY LH (for 60/40 Split Seat Type) (See page SE-46)**
5. **REMOVE REAR SEATBACK ASSEMBLY (for Fixed Seat Type) (See page SE-106)**
6. **REMOVE LUGGAGE COMPARTMENT FLOOR MAT (for 60/40 Split Seat Type) (See page ED-133)**
7. **REMOVE SPARE WHEEL COVER ASSEMBLY (for 60/40 Split Seat Type) (See page ED-133)**
8. **REMOVE LUGGAGE COMPARTMENT TRIM INNER PAD (for 60/40 Split Seat Type) (See page ED-134)**
9. **REMOVE REAR DOOR SCUFF PLATE RH (See page IR-15)**
10. **REMOVE REAR DOOR SCUFF PLATE LH (See page IR-15)**
11. **REMOVE REAR DOOR OPENING TRIM WEATHERSTRIP RH (See page AV-173)**
12. **REMOVE REAR DOOR OPENING TRIM WEATHERSTRIP LH (See page AV-173)**
13. **REMOVE REAR SEAT SIDE COVER RH (See page IR-16)**
14. **REMOVE REAR SEAT SIDE COVER LH (See page IR-16)**
15. **REMOVE ROOF SIDE INNER GARNISH RH (See page IR-16)**
16. **REMOVE ROOF SIDE INNER GARNISH LH (See page IR-16)**
17. **REMOVE HIGH MOUNTED STOP LIGHT ASSEMBLY (w/o Rear Spoiler) (See page LI-141)**
18. **REMOVE PACKAGE TRAY TRIM PANEL ASSEMBLY (See page AV-173)**

SB

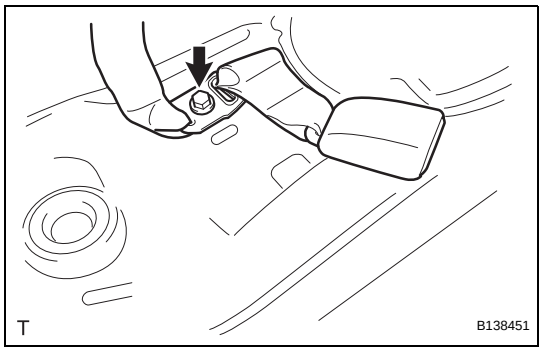

19. REMOVE REAR CENTER SEAT OUTER BELT ASSEMBLY

(a) for Fixed Seat Type:

(1) Remove the bolt and the anchor plate.

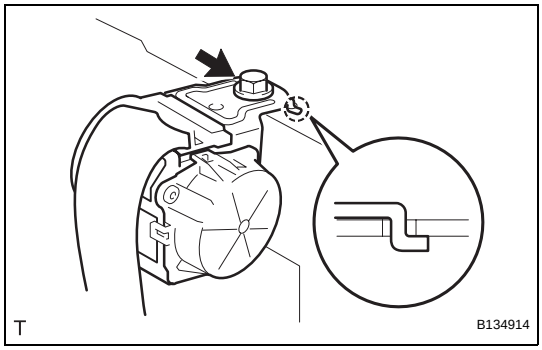

(b) Remove the bolt, the hook and the retractor.

INSTALLATION

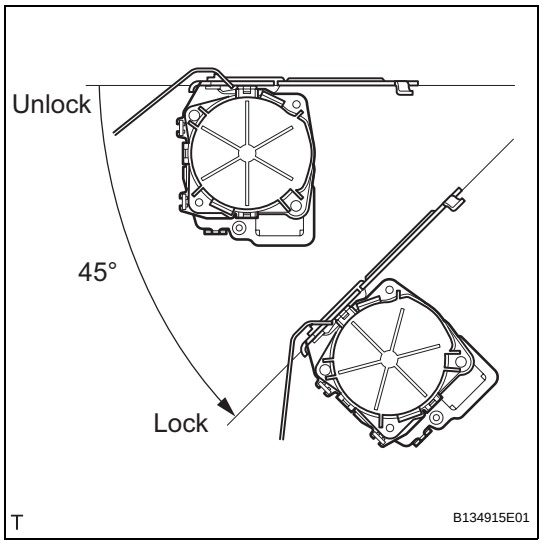

1. INSTALL REAR CENTER SEAT OUTER BELT ASSEMBLY

(a) Check the angle of inclination required to lock the retractor.

(1) Gently incline the retractor from its initial position. Check that the belt does not lock when the retractor is inclined 15° or less in any direction. Also, check that the belt locks when the inclination of the retractor is 45° or more.
NOTICE:
Do not disassemble the retractor.
If the operation is not as specified, replace the rear center seat outer belt.

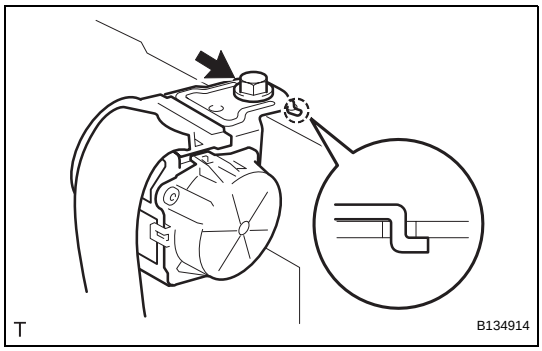

(b) Insert the hook into the body hole and install the retractor with the bolt.

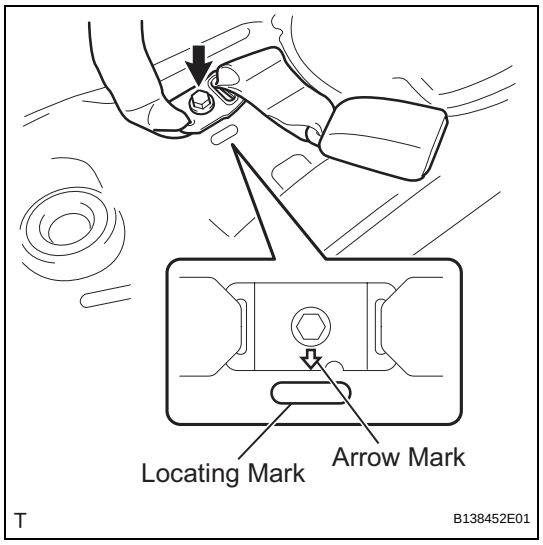

(c) for Fixed Seat Type:

(1) Install the anchor plate with the bolt.

Torque: 42 N*m (430 kgf*cm, 31 ft.*lbf)

NOTICE:

- **Install the anchor plate with the arrow mark facing forward.**
- **Do not place the anchor plate over the locating mark area of the floor panel.**

(d) Check that the ELR locks.

NOTICE:

- **The check should be performed with the rear seat outer belt installed.**
- **Do not allow the anchor part of the rear seat outer belt and the protruding parts of the floor panel to overlap.**

(1) With the belt installed, check that the belt locks when it is pulled out quickly.

If the operation is not as specified, replace the rear center seat outer belt.

2. **INSTALL PACKAGE TRAY TRIM PANEL ASSEMBLY (See page AV-174)**
3. **INSTALL HIGH MOUNTED STOP LIGHT ASSEMBLY (w/o Rear Spoiler) (See page LI-142)**
4. **INSTALL ROOF SIDE INNER GARNISH RH (See page IR-32)**
5. **INSTALL ROOF SIDE INNER GARNISH LH (See page IR-33)**
6. **INSTALL REAR SEAT SIDE COVER RH (See page IR-33)**
7. **INSTALL REAR SEAT SIDE COVER LH (See page IR-33)**
8. **INSTALL REAR DOOR OPENING TRIM WEATHERSTRIP RH (See page AV-175)**
9. **INSTALL REAR DOOR OPENING TRIM WEATHERSTRIP LH (See page AV-175)**
10. **INSTALL REAR DOOR SCUFF PLATE RH (See page IR-34)**
11. **INSTALL REAR DOOR SCUFF PLATE LH (See page IR-34)**
12. **INSTALL LUGGAGE COMPARTMENT TRIM INNER PAD (for 60/40 Split Seat Type) (See page ED-136)**
13. **INSTALL SPARE WHEEL COVER ASSEMBLY (for 60/40 Split Seat Type) (See page ED-137)**
14. **INSTALL LUGGAGE COMPARTMENT FLOOR MAT (for 60/40 Split Seat Type) (See page ED-137)**
15. **INSTALL REAR SEATBACK ASSEMBLY RH (for 60/40 Split Seat Type) (See page SE-65)**

16. **INSTALL REAR SEATBACK ASSEMBLY LH (for 60/40 Split Seat Type) (See page SE-52)**

17. **INSTALL REAR SEATBACK ASSEMBLY (for Fixed Seat Type) (See page SE-108)**

18. **INSTALL REAR SEAT CUSHION COVER PAD SUB-ASSEMBLY**
    (a) for 60/40 Split Seat Type:
        (1) Install the rear seat cushion cover pad (See page SE-53).
    (b) for Fixed Seat Type:
        (1) Install the rear seat cushion cover pad (See page SE-109).

19. **CONNECT CABLE TO NEGATIVE BATTERY TERMINAL (w/o Rear Spoiler)**
    Torque: 5.4 N*m (55 kgf*cm, 48 in.*lbf)

REAR CENTER SEAT OUTER BELT ASSEMBLY (for Hatchback 5 Door)

COMPONENTS

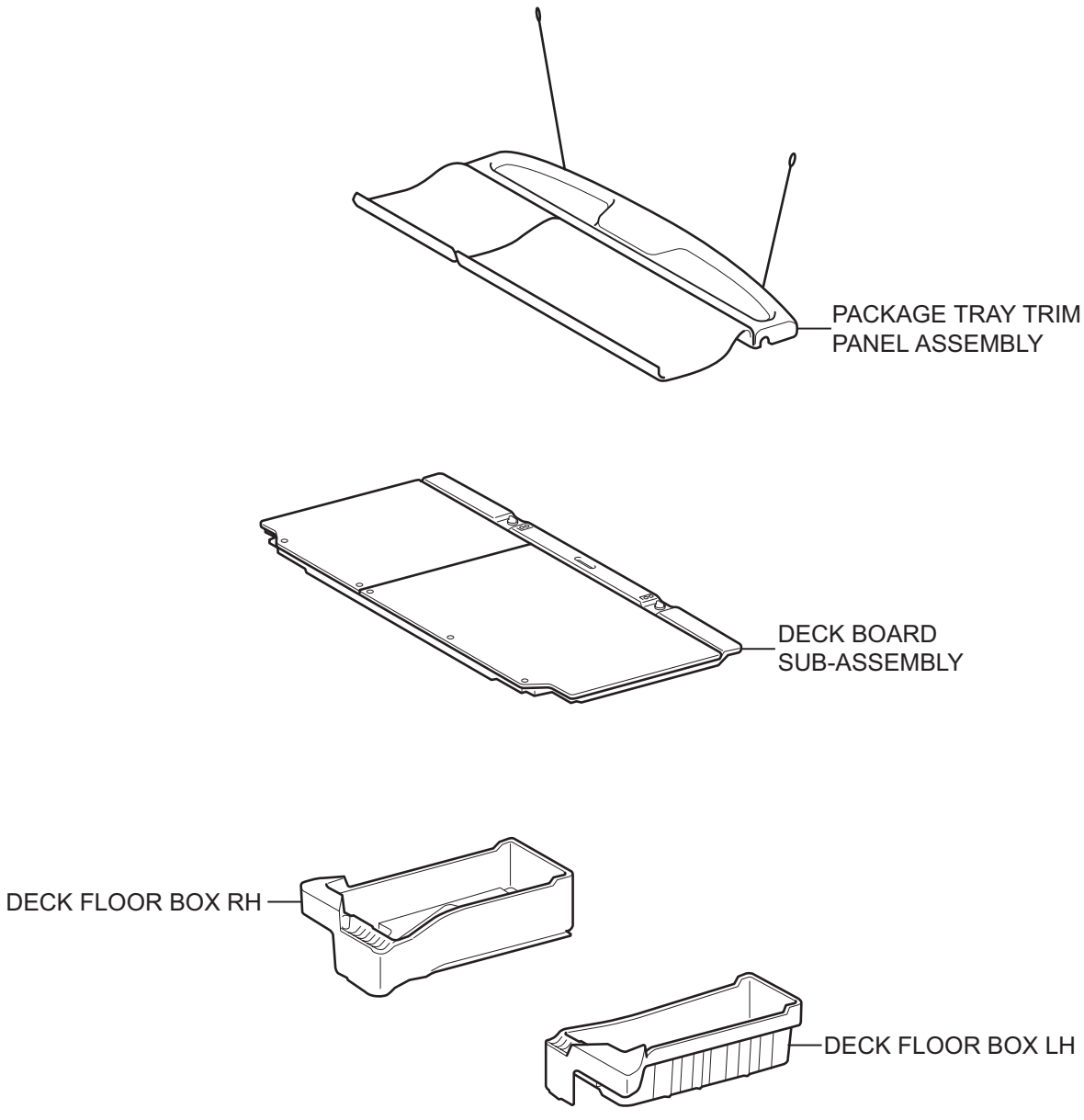

T

B114273E01

SB

for 60/40 Split Seat Type:

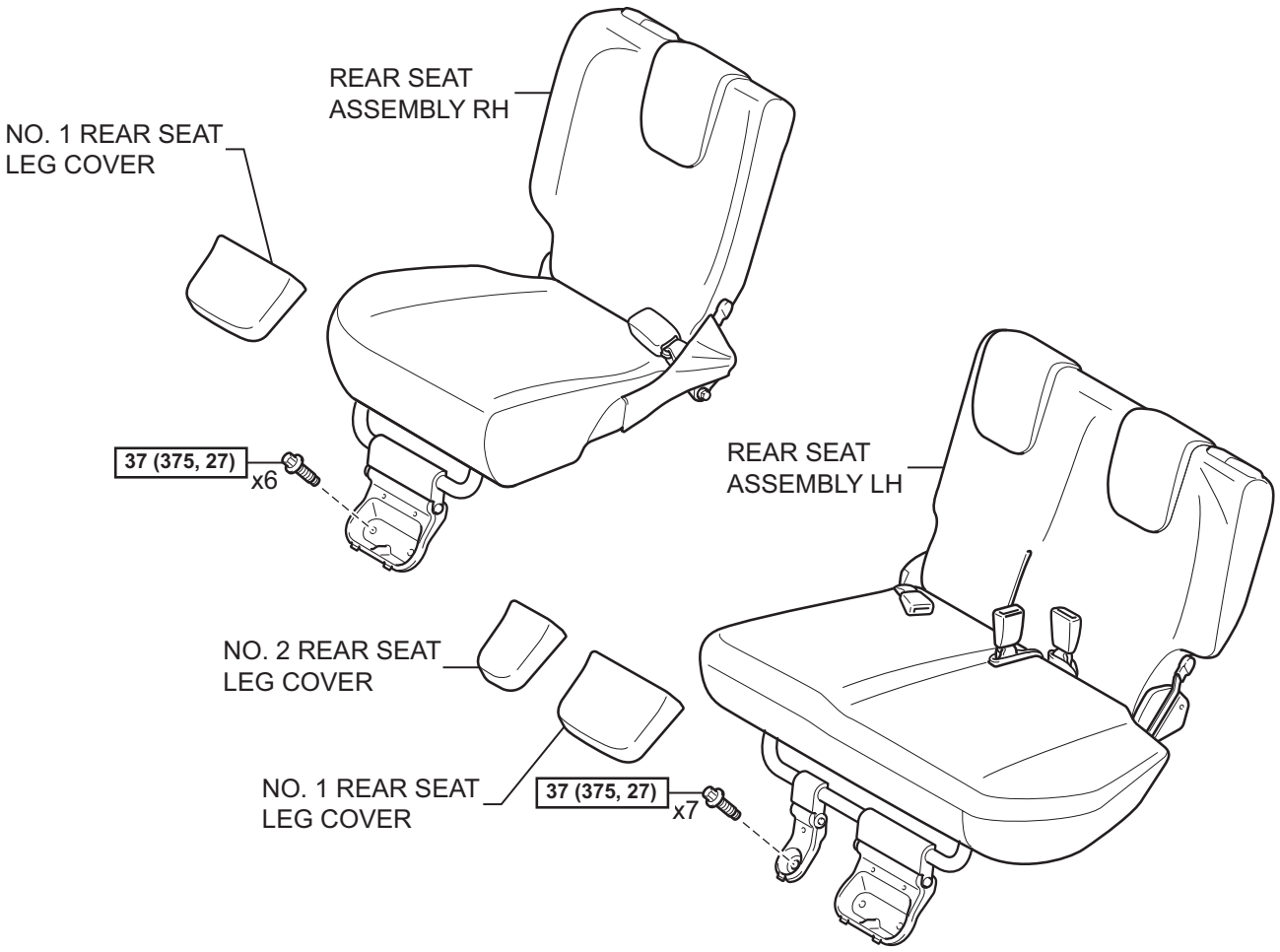

for Hold Down Seat Type:

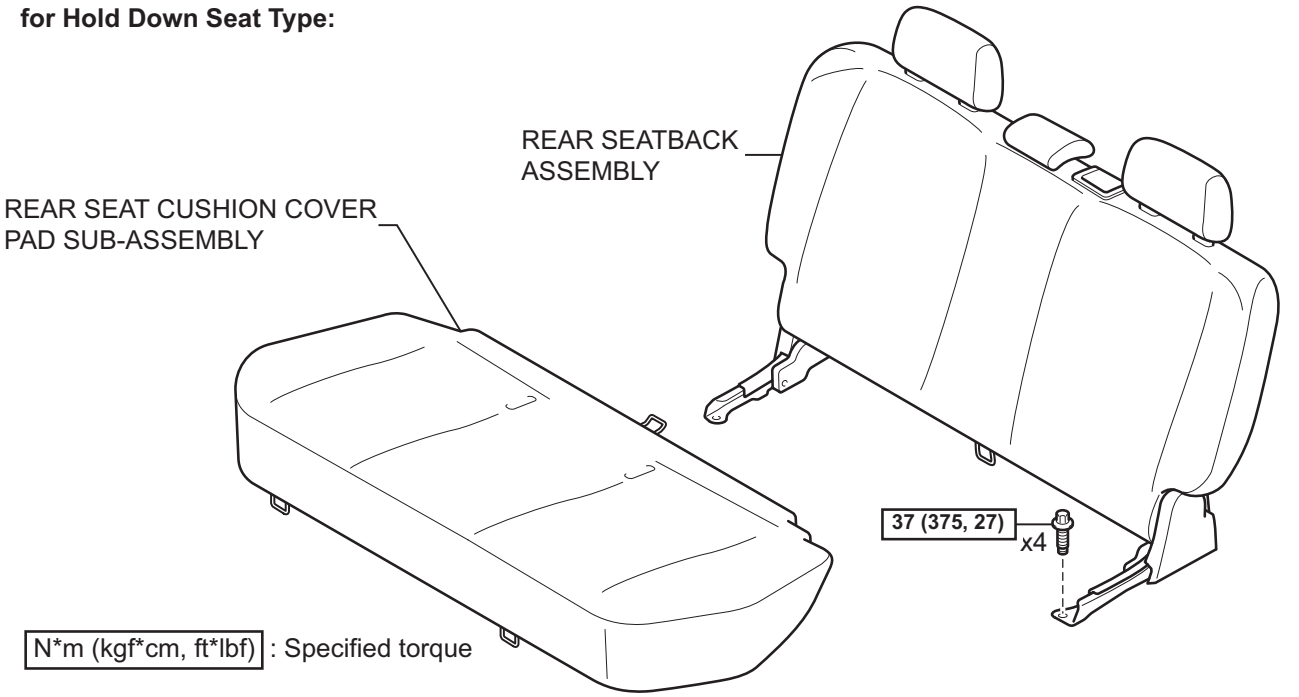

T

B121713E03

SB

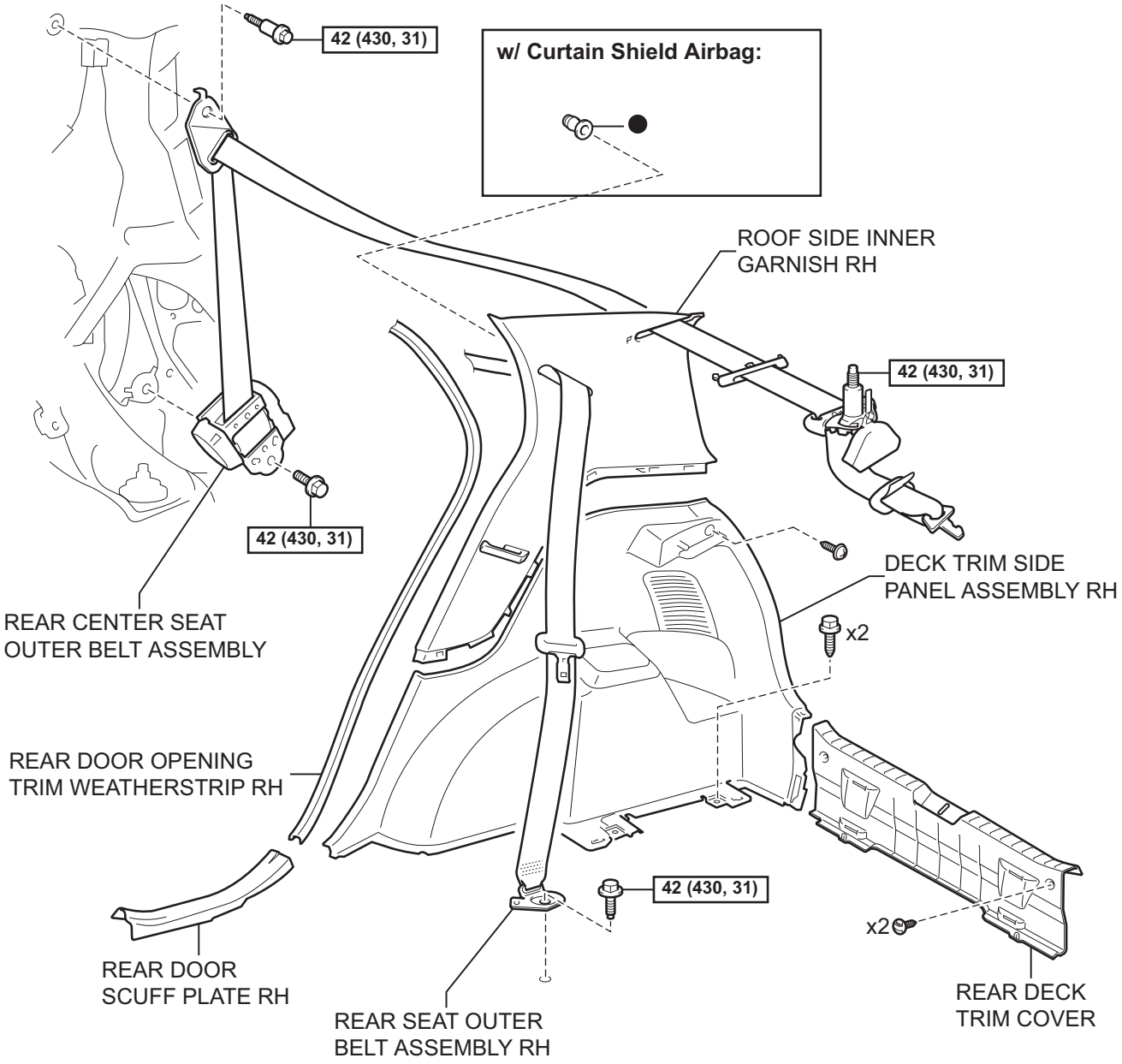

N*m (kgf*cm, ft*lbf) : Specified torque

● Non-reusable part

T

B114457E02

SB

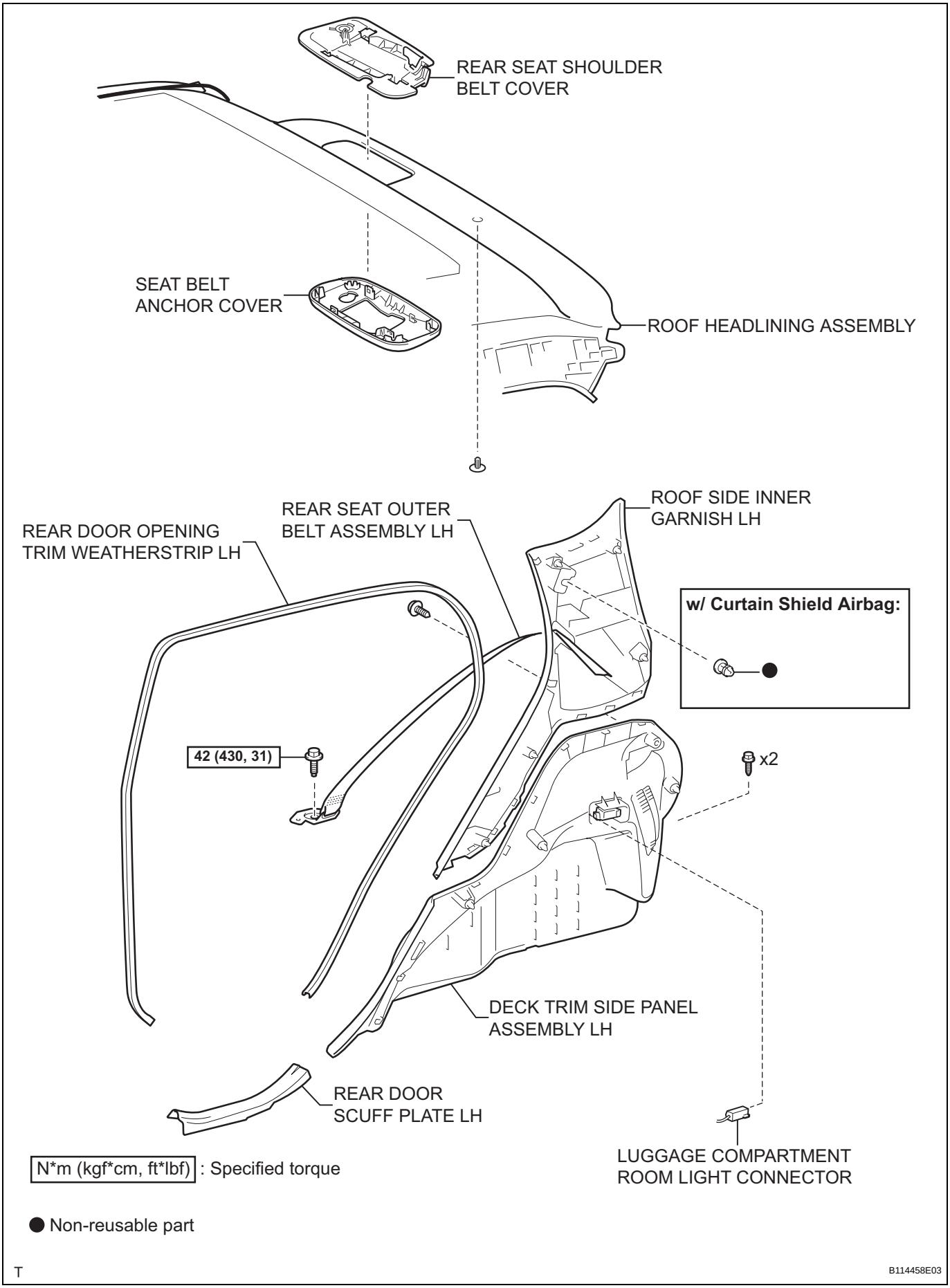

T

B114458E03

REMOVAL

CAUTION:
Always use "Torx" socket wrench E10 when removing the rear seat.

1. **DISCONNECT CABLE FROM NEGATIVE BATTERY TERMINAL**
2. **REMOVE PACKAGE TRAY TRIM PANEL ASSEMBLY (See page IR-48)**
3. **REMOVE DECK BOARD SUB-ASSEMBLY (See page IR-48)**
4. **REMOVE DECK FLOOR BOX RH (See page IR-48)**
5. **REMOVE DECK FLOOR BOX LH (See page IR-48)**
6. **REMOVE NO. 1 REAR SEAT LEG COVER (for 60/40 Split Seat Type)**
   (a) for RH side:
      (1) Remove the No. 1 rear seat leg cover (See page SE-89).
   (b) for LH side:
      (1) Remove the No. 1 rear seat leg cover (See page SE-70).
7. **REMOVE NO. 2 REAR SEAT LEG COVER (for 60/40 Split Seat Type) (See page SE-70)**
8. **REMOVE REAR SEAT ASSEMBLY RH (for 60/40 Split Seat Type) (See page SE-89)**
9. **REMOVE REAR SEAT ASSEMBLY LH (for 60/40 Split Seat Type) (See page SE-71)**
10. **REMOVE REAR SEAT CUSHION COVER PAD SUB-ASSEMBLY (for Hold Down Seat Type) (See page SE-114)**
11. **REMOVE REAR SEATBACK ASSEMBLY (for Hold Down Seat Type) (See page SE-115)**
12. **REMOVE REAR DOOR SCUFF PLATE RH (See page IR-51)**
13. **REMOVE REAR DOOR SCUFF PLATE LH (See page IR-51)**
14. **REMOVE REAR DOOR OPENING TRIM WEATHERSTRIP RH (See page SB-112)**
15. **REMOVE REAR DOOR OPENING TRIM WEATHERSTRIP LH**
    HINT:
    Use the same procedure as for the RH side.
16. **REMOVE REAR DECK TRIM COVER (See page IR-49)**
17. **REMOVE REAR SEAT OUTER BELT ASSEMBLY RH (See page IR-51)**
18. **REMOVE REAR SEAT OUTER BELT ASSEMBLY LH (See page IR-51)**

SB

19. REMOVE DECK TRIM SIDE PANEL ASSEMBLY RH (See page IR-52)

20. REMOVE DECK TRIM SIDE PANEL ASSEMBLY LH (See page IR-52)

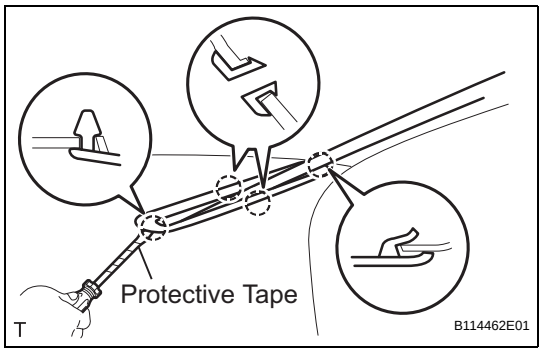

21. REMOVE ROOF SIDE INNER GARNISH RH

(a) Using a screwdriver with its tip wrapped in protective tape, disengage the 4 claws and remove the center belt guide.

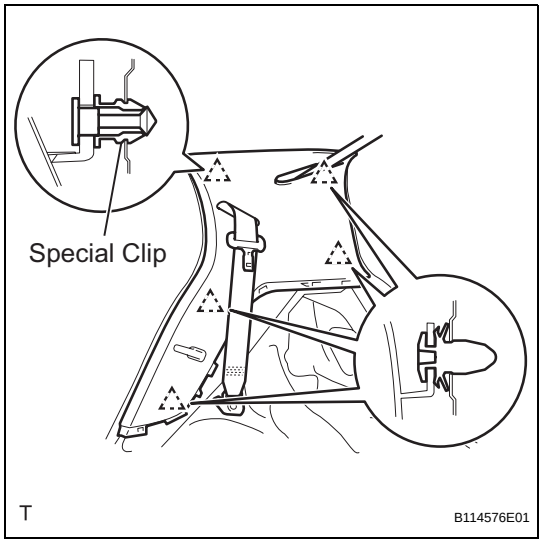

(b) w/ Curtain Shield Airbag:

NOTICE:

Replace the special clip with a new one when the roof side inner garnish is removed.

(1) Disengage the 5 clips.

(2) Pass the rear seat outer belt and the rear center seat outer belt through the slit in the roof side inner garnish and remove the roof side inner garnish.

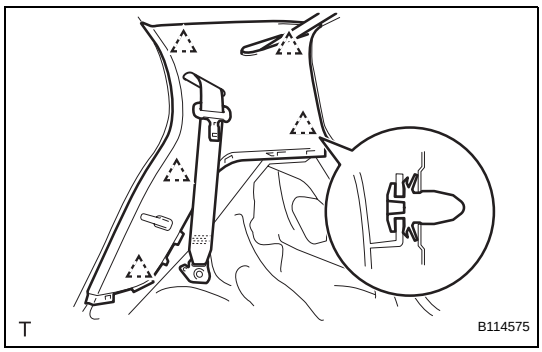

(c) w/o Curtain Shield Airbag:

(1) Disengage the 5 clips.

(2) Pass the rear seat outer belt and the rear center seat outer belt through the slit in the roof side inner garnish and remove the roof side inner garnish.

22. REMOVE ROOF SIDE INNER GARNISH LH (See page IR-54)

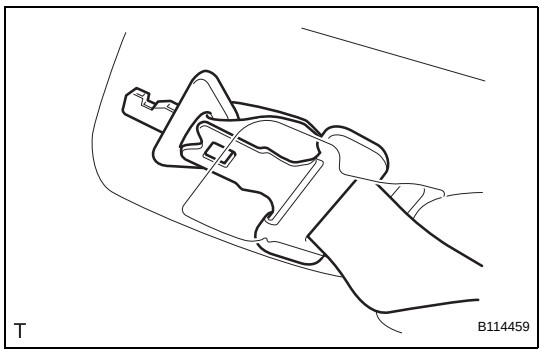

23. REMOVE REAR CENTER SEAT OUTER BELT ASSEMBLY

(a) Remove the 2 tongue plates.

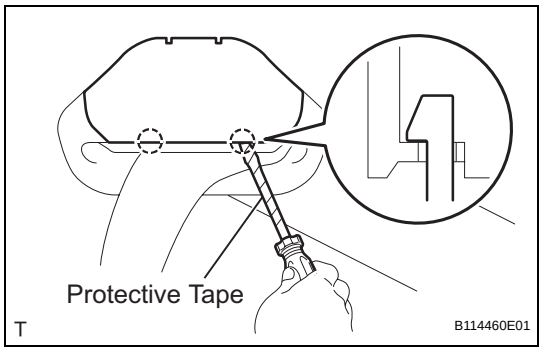

(b) Using a screwdriver with its tip wrapped in protective tape, disengage the 2 claws and open the slip joint cover.

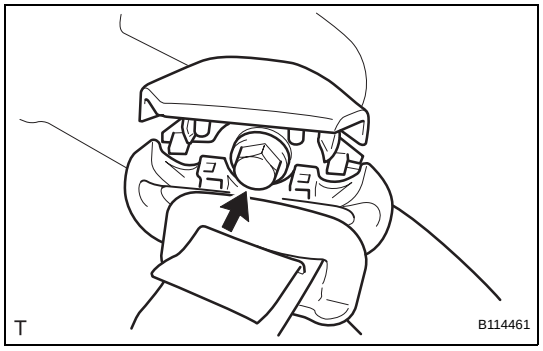

(c) Remove the bolt and the through anchor.

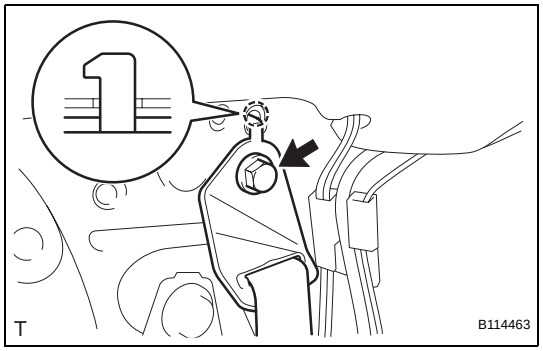

(d) Remove the bolt, the hook and the bracket.

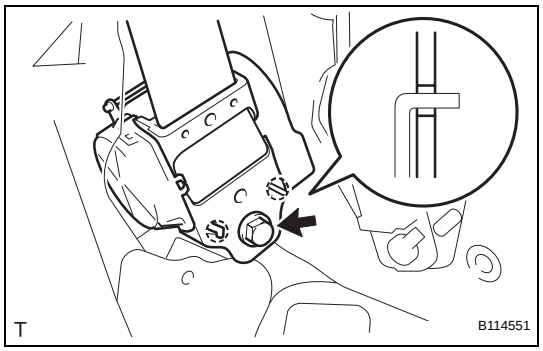

(e) Remove the bolt, the 2 hooks and the retractor.

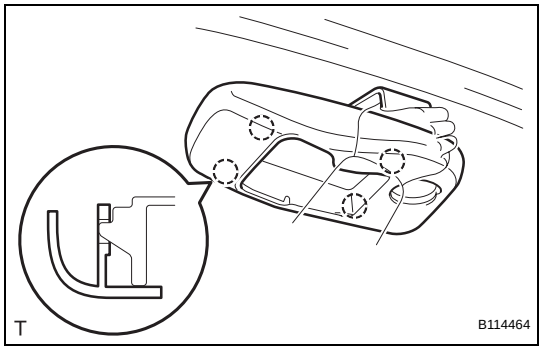

24. REMOVE SEAT BELT ANCHOR COVER

(a) Using a moulding remover, disengage the 4 claws and remove the seat belt anchor cover.

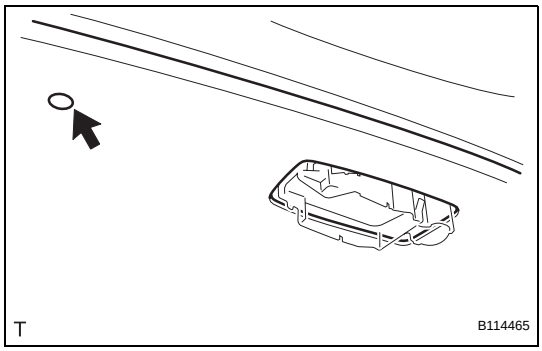

25. REMOVE ROOF HEADLINING ASSEMBLY

(a) Using a clip remover, remove the clip and the roof headlining.

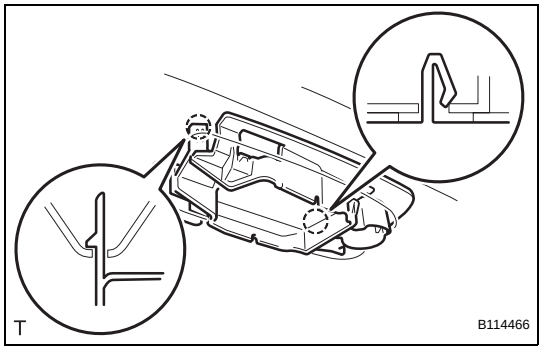

26. REMOVE REAR SEAT SHOULDER BELT COVER

(a) Disengage the 2 claws and remove the rear seat shoulder belt cover.

INSTALLATION

CAUTION:
Always use "Torx" socket wrench E10 when installing the rear seat.

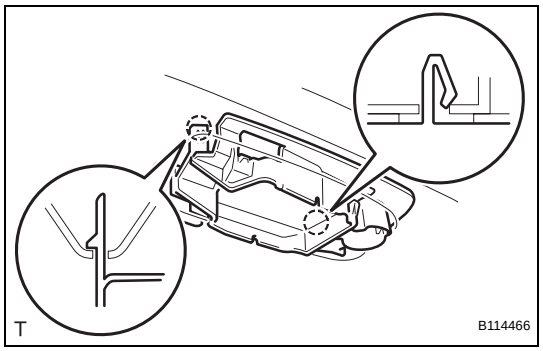

1. INSTALL REAR SEAT SHOULDER BELT COVER

(a) Engage the 2 claws and install the rear seat shoulder belt cover.

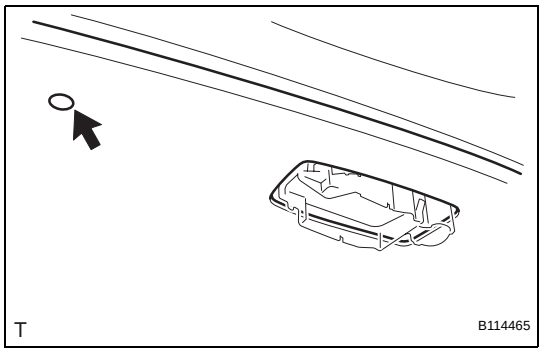

2. INSTALL ROOF HEADLINING ASSEMBLY

(a) Install the roof headlining with the clip.

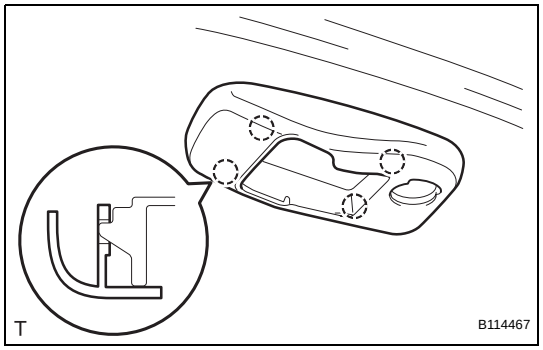

3. INSTALL SEAT BELT ANCHOR COVER

(a) Engage the 4 claws and install the seat belt anchor cover.

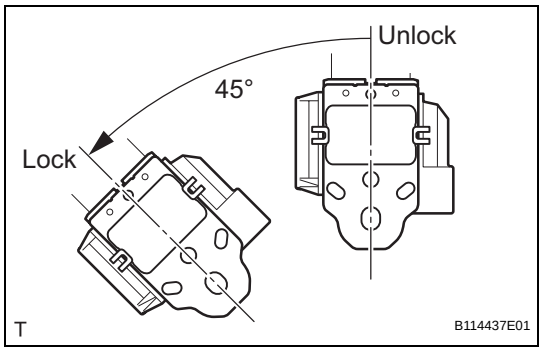

4. INSTALL REAR CENTER SEAT OUTER BELT ASSEMBLY

(a) Check the angle of inclination required to lock the retractor.

(1) Gently incline the retractor from its initial position. Check that the belt does not lock when the retractor is inclined 15° or less in any direction. Also, check that the belt locks when the inclination of the retractor is 45° or more.

NOTICE:
Do not disassemble the retractor.
If the operation is not as specified, replace the rear seat outer belt.

SB

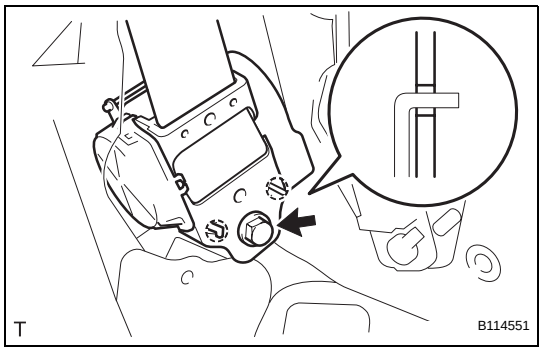

(b) Hook the lower stay of the retractor onto the 2 body hooks and install the retractor with the bolt.
Torque: 42 N*m (430 kgf*cm, 31 ft.*lbf)

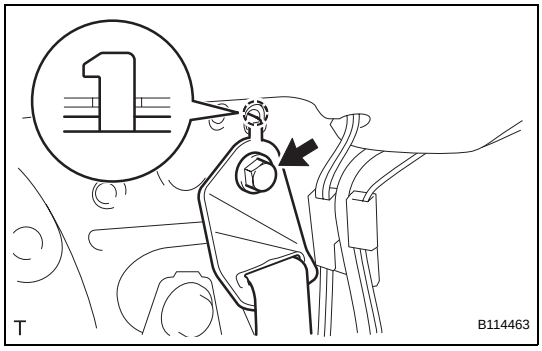

(c) Insert the hook into the body hole and install the bracket with the bolt.
Torque: 42 N*m (430 kgf*cm, 31 ft.*lbf)

(d) Check that the ELR locks.
NOTICE:
Perform the check with the rear center seat outer belt installed.
(1) With the belt installed, check that the belt locks when it is pulled out quickly.
If the operation is not as specified, replace the rear center seat outer belt.

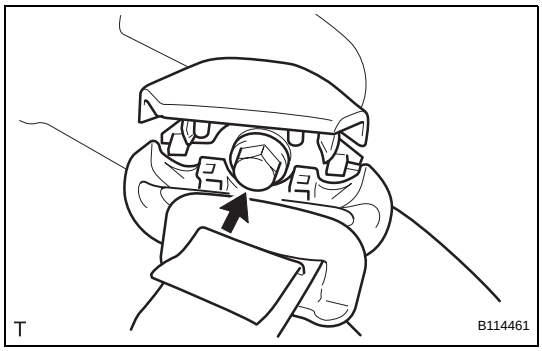

(e) Install the through anchor with the bolt.
Torque: 42 N*m (430 kgf*cm, 31 ft.*lbf)

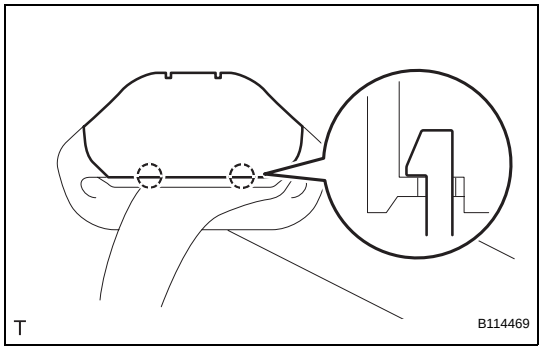

(f) Engage the 2 claws and close the slip joint cover.

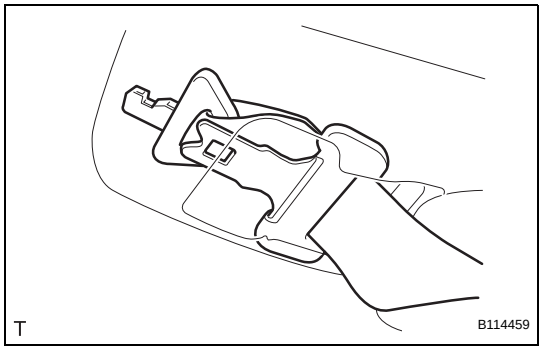

(g) Install the 2 tongue plates.

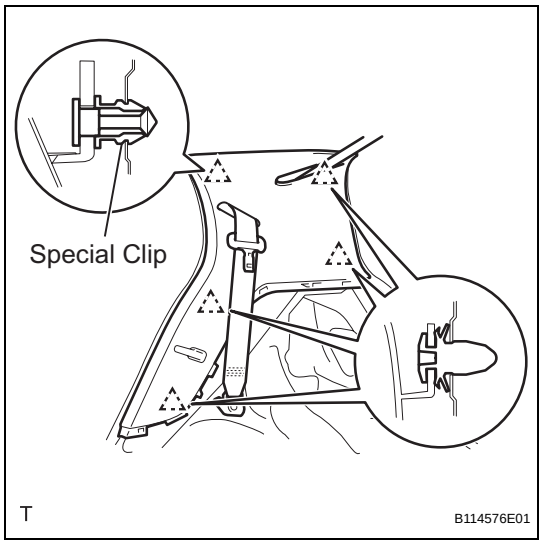

5. INSTALL ROOF SIDE INNER GARNISH RH

(a) w/ Curtain Shield Airbag:

(1) Install a new special clip.

(2) Pass the rear seat outer belt and the rear center seat outer belt through the slit in the roof side inner garnish.

(3) Engage the 5 clips and install the roof side inner garnish.

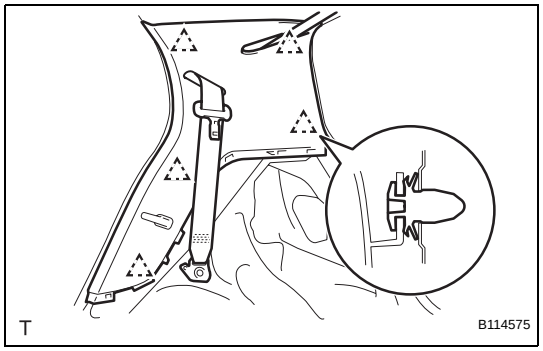

(b) w/o Curtain Shield Airbag:

(1) Pass the rear seat outer belt and the rear center seat outer belt through the slit in the roof side inner garnish.

(2) Engage the 5 clips and install the roof side inner garnish.

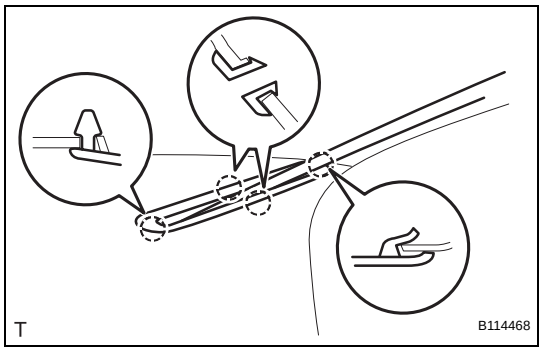

(c) Engage the 4 claws and install the center belt guide.

6. INSTALL ROOF SIDE INNER GARNISH LH (See page IR-77)

7. INSTALL DECK TRIM SIDE PANEL ASSEMBLY RH (See page IR-79)

8. INSTALL DECK TRIM SIDE PANEL ASSEMBLY LH (See page IR-79)

9. INSTALL REAR SEAT OUTER BELT ASSEMBLY RH (See page IR-79)

10. INSTALL REAR SEAT OUTER BELT ASSEMBLY LH (See page IR-80)

11. INSTALL REAR DECK TRIM COVER (See page IR-82)

12. INSTALL REAR DOOR OPENING TRIM WEATHERSTRIP RH (See page SB-119)

13. INSTALL REAR DOOR OPENING TRIM WEATHERSTRIP LH

HINT:

Use the same procedure as for the RH side.

14. INSTALL REAR DOOR SCUFF PLATE RH (See page IR-80)

15. INSTALL REAR DOOR SCUFF PLATE LH (See page IR-80)

SB

16. **INSTALL REAR SEAT ASSEMBLY LH (for 60/40 Split Seat Type) (See page SE-84)**

17. **INSTALL REAR SEAT ASSEMBLY RH (for 60/40 Split Seat Type) (See page SE-102)**

18. **INSTALL NO. 2 REAR SEAT LEG COVER (for 60/40 Split Seat Type) (See page SE-85)**

19. **INSTALL NO. 1 REAR SEAT LEG COVER (for 60/40 Split Seat Type)**
    (a) for RH Side:
        (1) Install the No. 1 rear seat leg cover (See page SE-103).
    (b) for LH Side:
        (1) Install the No. 1 rear seat leg cover (See page SE-85).

20. **INSTALL REAR SEATBACK ASSEMBLY (for Hold Down Seat Type) (See page SE-122)**

21. **INSTALL REAR SEAT CUSHION COVER PAD SUB-ASSEMBLY (for Hold Down Seat Type) (See page SE-123)**

22. **INSTALL DECK FLOOR BOX RH (See page IR-83)**

23. **INSTALL DECK FLOOR BOX LH (See page IR-83)**

24. **INSTALL DECK BOARD SUB-ASSEMBLY (See page IR-83)**

25. **INSTALL PACKAGE TRAY TRIM PANEL ASSEMBLY (See page IR-83)**

26. **CONNECT CABLE TO NEGATIVE BATTERY TERMINAL**
    Torque: 5.4 N*m (55 kgf*cm, 48 in.*lbf)

REAR CENTER SEAT OUTER BELT ASSEMBLY (for Hatchback 3 Door)

COMPONENTS

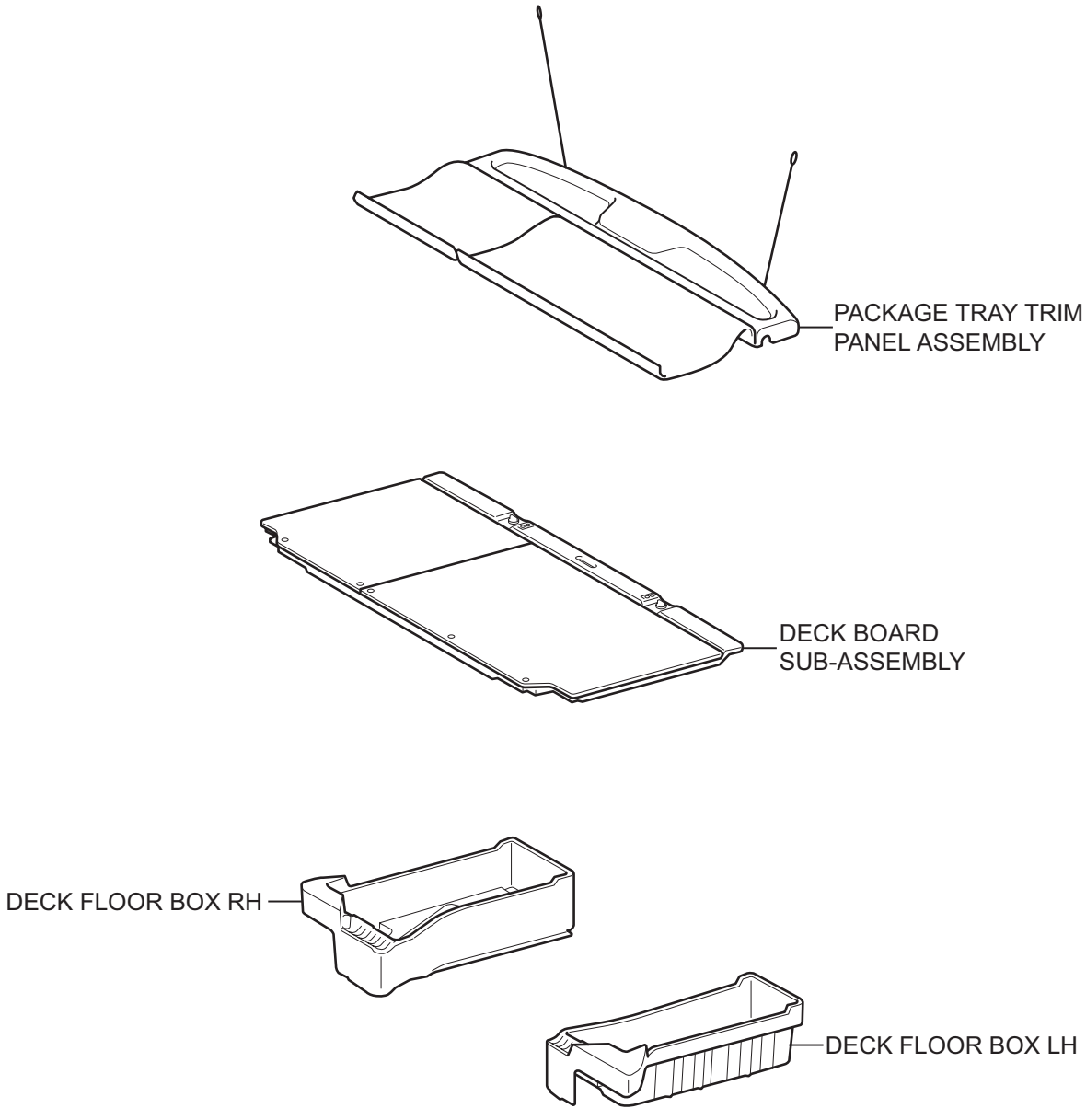

T

B114273E01

SB

for 60/40 Split Seat Type:

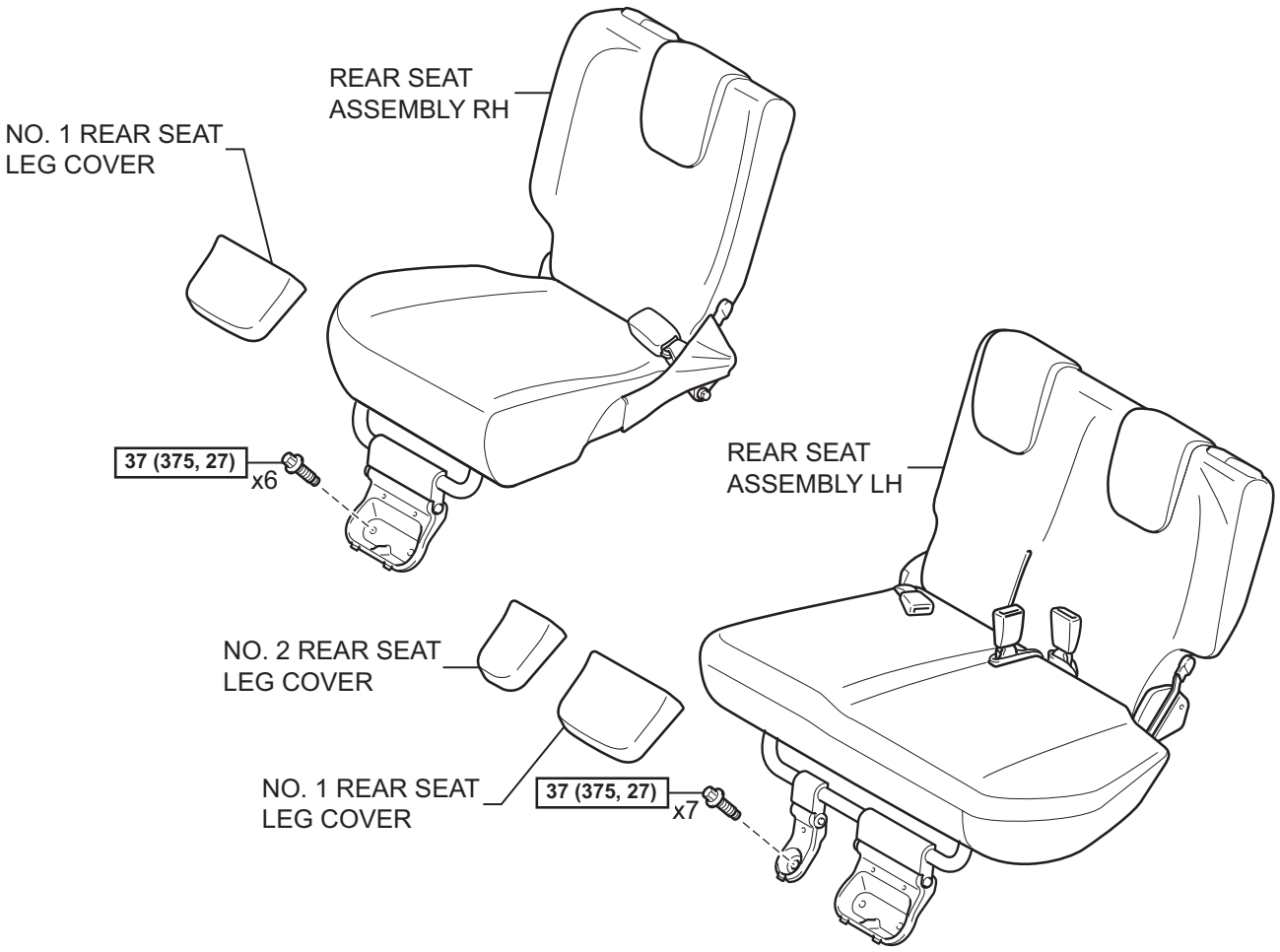

for Hold Down Seat Type:

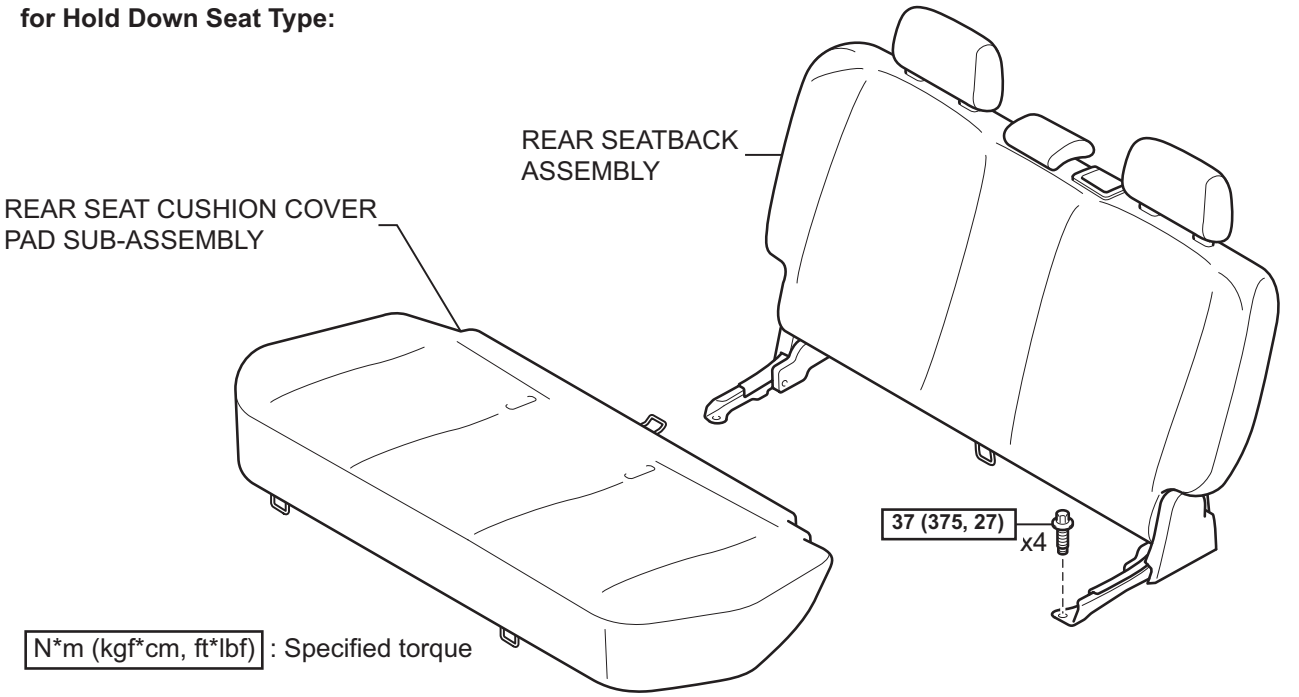

T

B121713E03

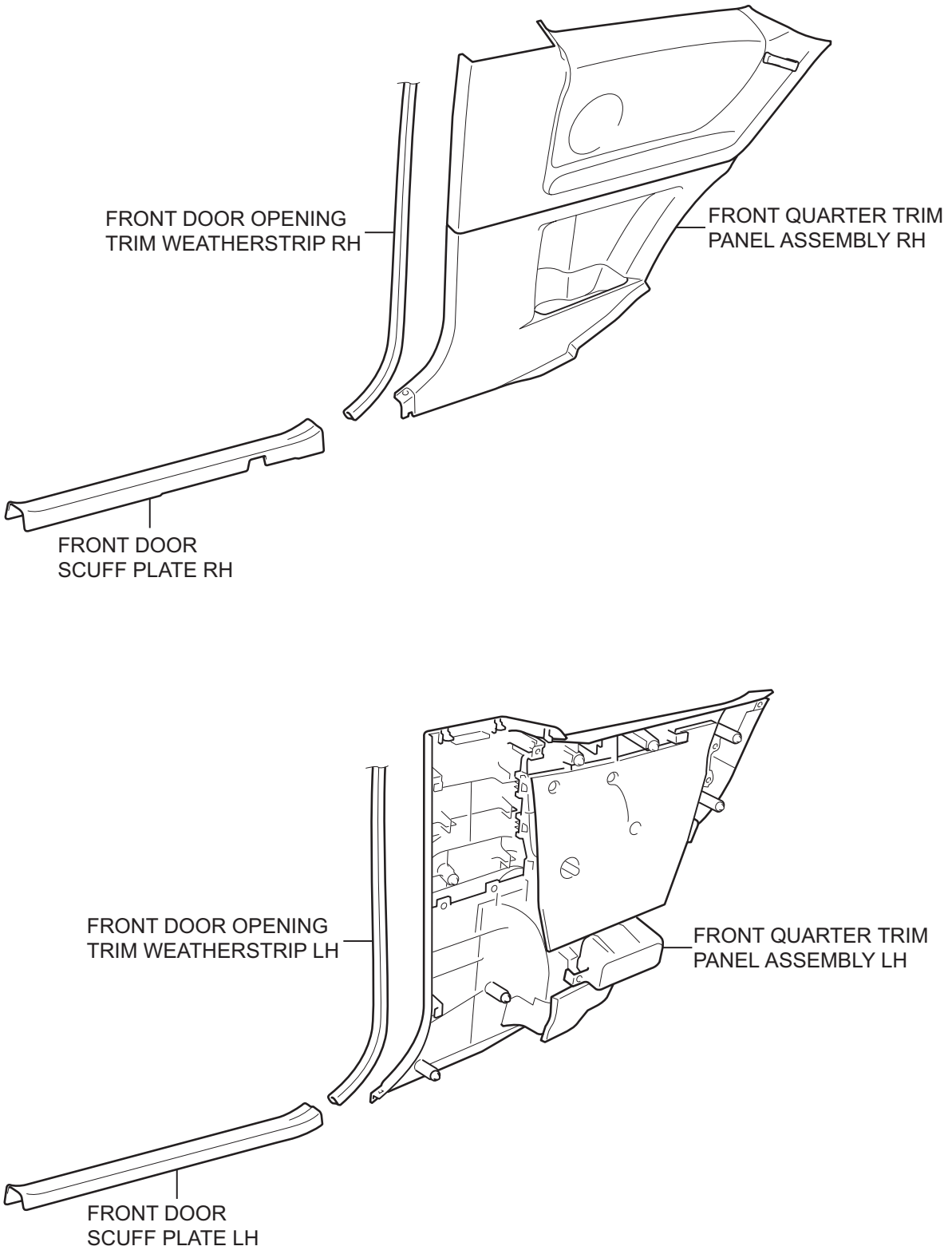

T

B114485E01

SB

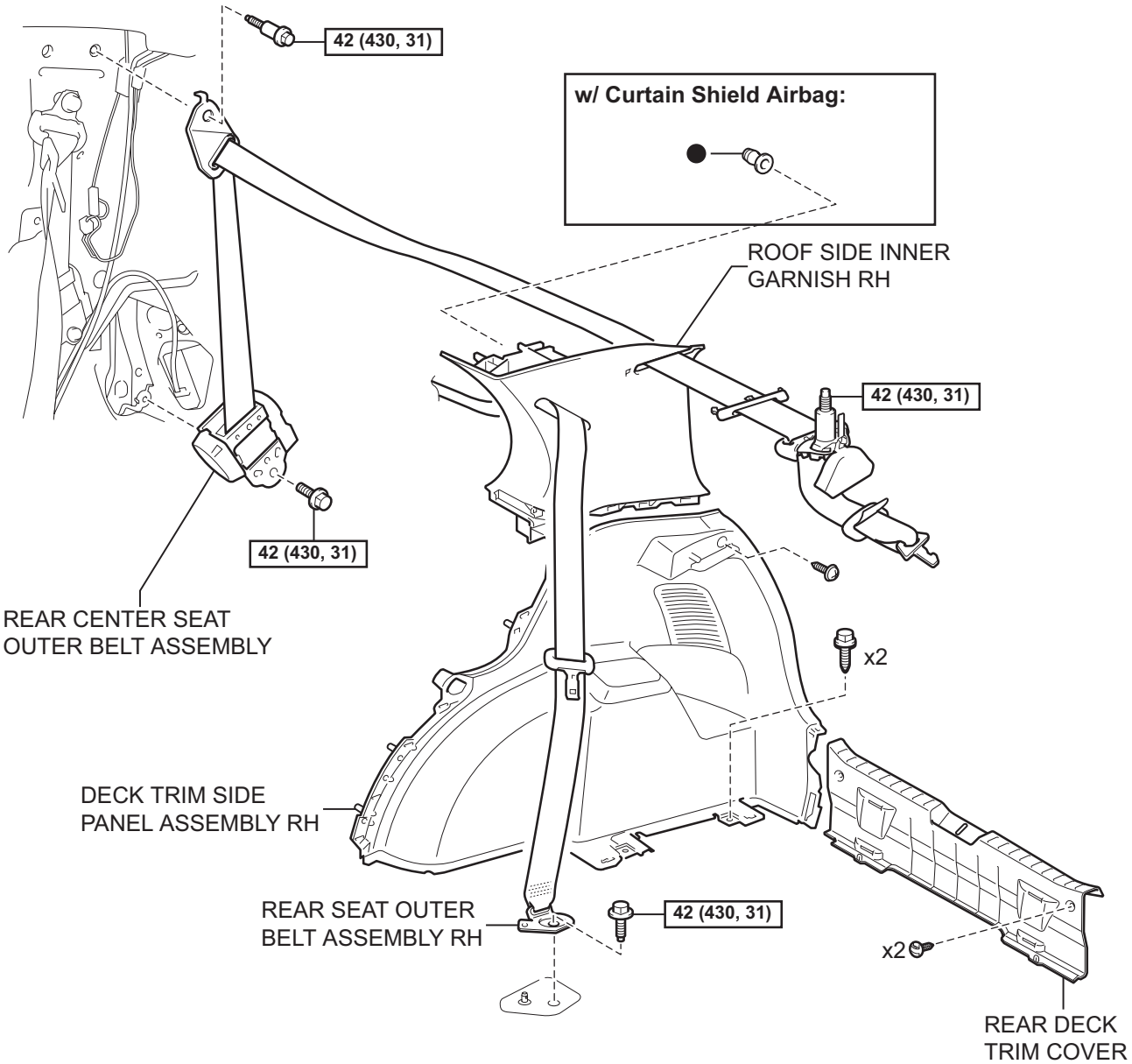

N*m (kgf*cm, ft*lbf) : Specified torque

● Non-reusable part

T

B114486E02

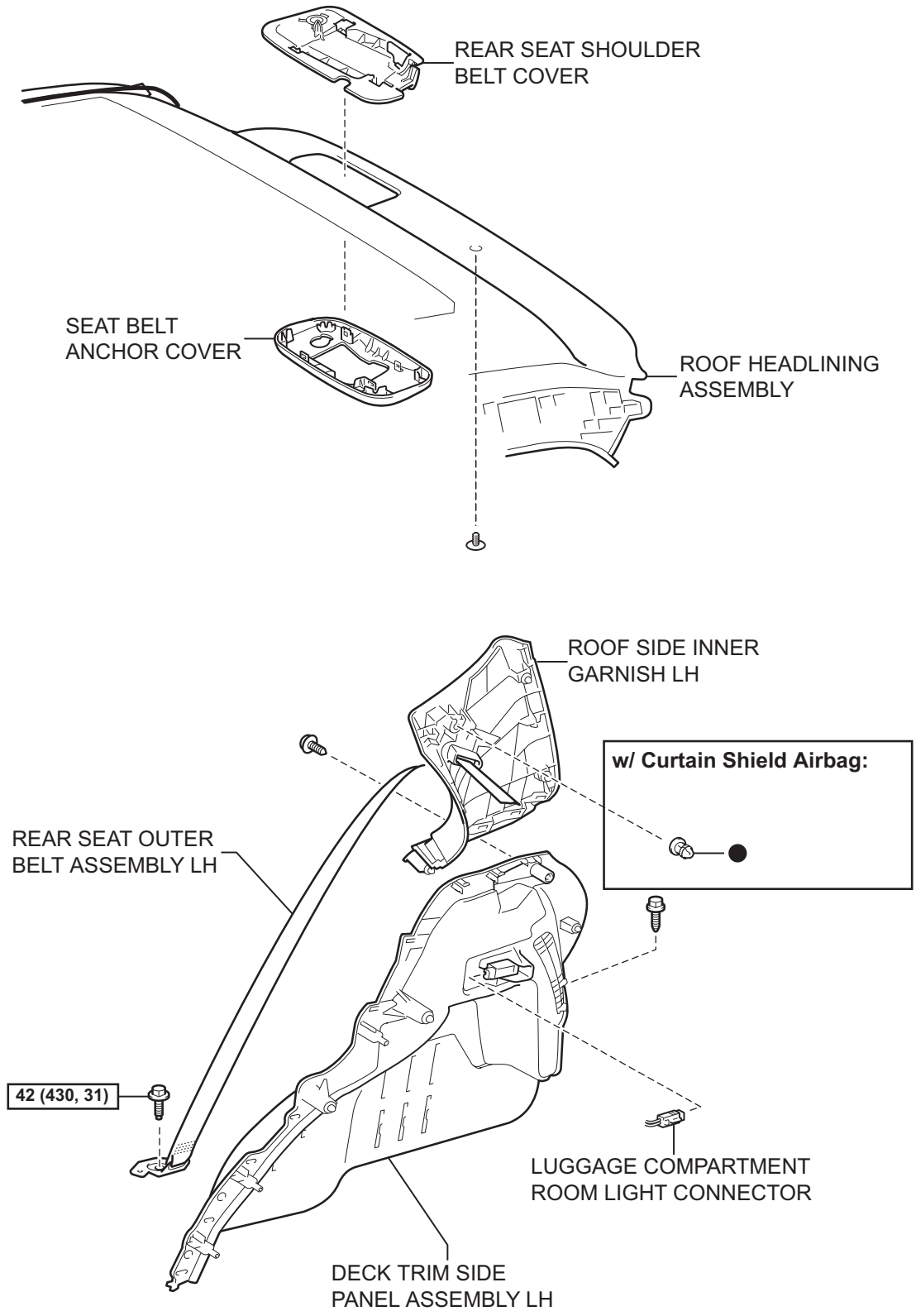

N*m (kgf*cm, ft*lbf) : Specified torque

● Non-reusable part

T

B114487E02

SB

REMOVAL

NOTICE:
Always use "Torx" socket wrench E10 when removing the rear seat.

1. **DISCONNECT CABLE FROM NEGATIVE BATTERY TERMINAL**
2. **REMOVE PACKAGE TRAY TRIM PANEL ASSEMBLY (See page IR-48)**
3. **REMOVE DECK BOARD SUB-ASSEMBLY (See page IR-48)**
4. **REMOVE DECK FLOOR BOX RH (See page IR-48)**
5. **REMOVE DECK FLOOR BOX LH (See page IR-48)**
6. **REMOVE NO. 1 REAR SEAT LEG COVER (for 60/40 Split Seat Type)**
   (a) for RH Side:
      (1) Remove the No. 1 rear seat leg cover (See page SE-89).
   (b) for LH Side:
      (1) Remove the No. 1 rear seat leg cover (See page SE-70).
7. **REMOVE NO. 2 REAR SEAT LEG COVER (for 60/40 Split Seat Type) (See page SE-70)**
8. **REMOVE REAR SEAT ASSEMBLY RH (for 60/40 Split Seat Type) (See page SE-89)**
9. **REMOVE REAR SEAT ASSEMBLY LH (for 60/40 Split Seat Type) (See page SE-71)**
10. **REMOVE REAR SEAT CUSHION COVER PAD SUB-ASSEMBLY (for Hold Down Seat Type) (See page SE-114)**
11. **REMOVE REAR SEATBACK ASSEMBLY (for Hold Down Seat Type) (See page SE-115)**
12. **REMOVE FRONT DOOR SCUFF PLATE RH (See page IR-97)**
13. **REMOVE FRONT DOOR SCUFF PLATE LH (See page IR-97)**
14. **REMOVE FRONT DOOR OPENING TRIM WEATHERSTRIP RH (See page SB-76)**
15. **REMOVE FRONT DOOR OPENING TRIM WEATHERSTRIP LH**
    HINT:
    Use the same procedure as for the RH side.
16. **REMOVE FRONT QUARTER TRIM PANEL ASSEMBLY RH (See page IR-97)**
17. **REMOVE FRONT QUARTER TRIM PANEL ASSEMBLY LH (See page IR-97)**
18. **REMOVE REAR DECK TRIM COVER (See page IR-49)**

19. REMOVE REAR SEAT OUTER BELT ASSEMBLY RH (See page IR-98)

20. REMOVE REAR SEAT OUTER BELT ASSEMBLY LH (See page IR-98)

21. REMOVE DECK TRIM SIDE PANEL ASSEMBLY RH (See page IR-98)

22. REMOVE DECK TRIM SIDE PANEL ASSEMBLY LH (See page IR-98)

23. REMOVE ROOF SIDE INNER GARNISH RH

(a) Using a screwdriver with its tip wrapped in protective tape, disengage the 4 claws and remove the center belt guide.

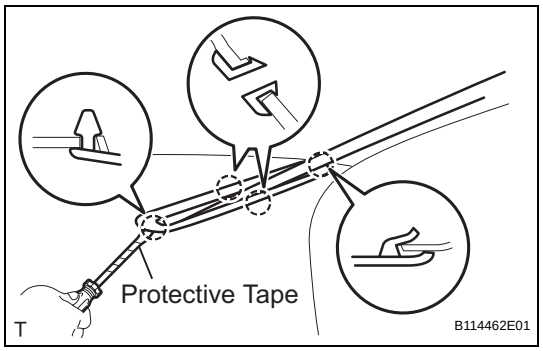

(b) w/ Curtain shield Airbag:

NOTICE:

Replace the special clip with a new one when the roof side inner garnish is removed.

(1) Disengage the 4 clips and the claw.

(2) Pass the rear seat outer belt and the rear center seat outer belt through the slit in the roof side inner garnish and remove the roof side inner garnish.

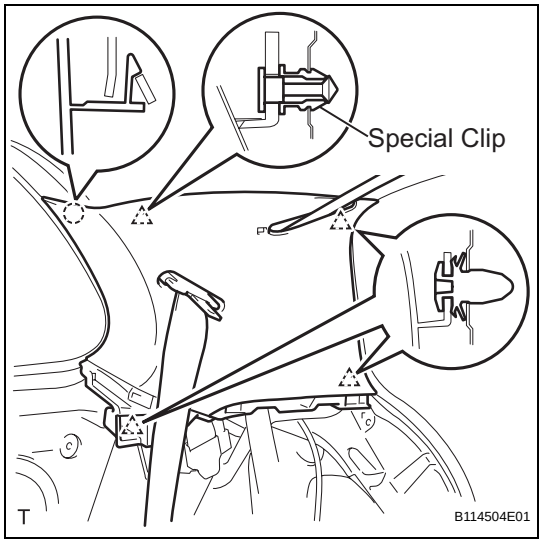

(c) w/o Curtain Shield Airbag:

(1) Disengage the 4 clips and the claw.

(2) Pass the rear seat outer belt and the rear center seat outer belt through the slit in the roof side inner garnish and remove the roof side inner garnish.

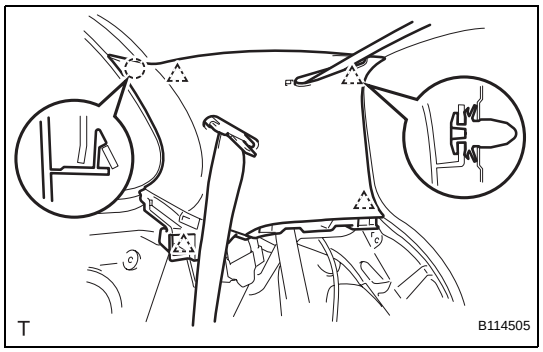

24. REMOVE ROOF SIDE INNER GARNISH LH (See page IR-100)

25. REMOVE REAR CENTER SEAT OUTER BELT ASSEMBLY (See page SB-158)

26. REMOVE SEAT BELT ANCHOR COVER (See page SB-159)

27. REMOVE ROOF HEADLINING ASSEMBLY (See page SB-160)

28. REMOVE REAR SEAT SHOULDER BELT COVER
(See page SB-160)

INSTALLATION

CAUTION:
Always use "Torx" socket wrench E10 when installing the rear seat.

1. **INSTALL REAR SEAT SHOULDER BELT COVER (See page SB-160)**
2. **INSTALL ROOF HEADLINING ASSEMBLY (See page SB-160)**
3. **INSTALL SEAT BELT ANCHOR COVER (See page SB-160)**
4. **INSTALL REAR CENTER SEAT OUTER BELT ASSEMBLY (See page SB-161)**
5. **INSTALL ROOF SIDE INNER GARNISH RH**
   (a) w/ Curtain Shield Airbag:
      (1) Install a new special clip onto the roof side inner garnish.
      (2) Pass the rear seat outer belt and the rear center seat outer belt through the slit in the roof side inner garnish.
      (3) Engage the 4 clips and the claw and install the roof side inner garnish.

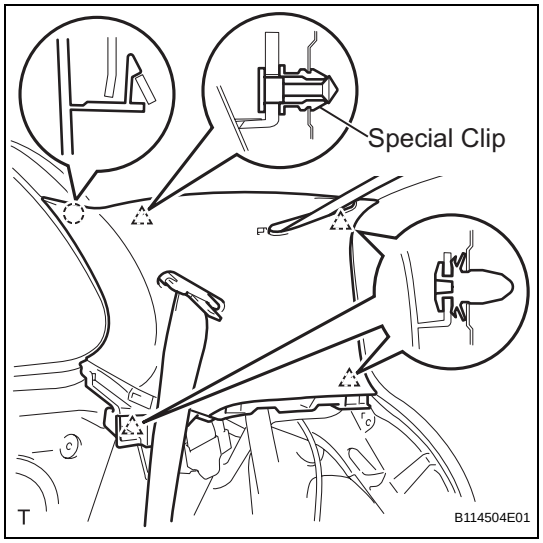

   (b) w/o Curtain Shield Airbag:
      (1) Pass the rear seat outer belt and the rear center seat outer belt through the slit in the roof side inner garnish.
      (2) Engage the 4 clips and the claw and install the roof side inner garnish.

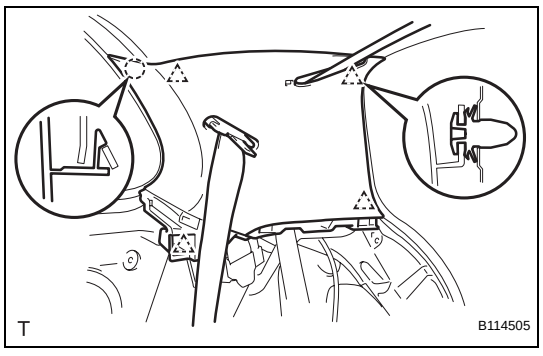

   (c) Engage the 4 claws and install the center belt guide.

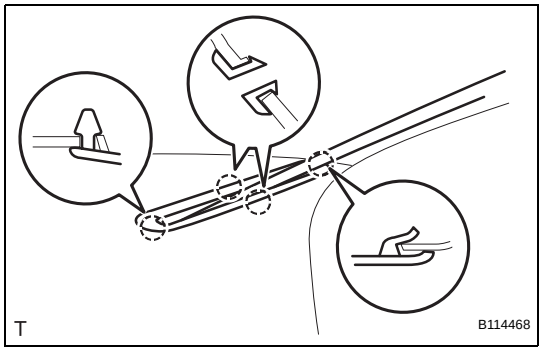

6. **INSTALL ROOF SIDE INNER GARNISH LH (See page IR-116)**
7. **INSTALL DECK TRIM SIDE PANEL ASSEMBLY RH (See page IR-117)**
8. **INSTALL DECK TRIM SIDE PANEL ASSEMBLY LH (See page IR-118)**
9. **INSTALL REAR SEAT OUTER BELT ASSEMBLY RH (See page IR-118)**

10. **INSTALL REAR SEAT OUTER BELT ASSEMBLY LH (See page IR-118)**
11. **INSTALL REAR DECK TRIM COVER (See page IR-82)**
12. **INSTALL FRONT QUARTER TRIM PANEL ASSEMBLY RH (See page IR-118)**
13. **INSTALL FRONT QUARTER TRIM PANEL ASSEMBLY LH (See page IR-119)**
14. **INSTALL FRONT DOOR OPENING TRIM WEATHERSTRIP RH (See page SB-80)**
15. **INSTALL FRONT DOOR OPENING TRIM WEATHERSTRIP LH**
    HINT:
    Use the same procedure as for the RH side.
16. **INSTALL FRONT DOOR SCUFF PLATE RH (See page IR-119)**
17. **INSTALL FRONT DOOR SCUFF PLATE LH (See page IR-119)**
18. **INSTALL REAR SEAT ASSEMBLY LH (for 60/40 Split Seat Type) (See page SE-84)**
19. **INSTALL REAR SEAT ASSEMBLY RH (for 60/40 Split Seat Type) (See page SE-102)**
20. **INSTALL NO. 2 REAR SEAT LEG COVER (for 60/40 Split Seat Type) (See page SE-85)**
21. **INSTALL NO. 1 REAR SEAT LEG COVER (for 60/40 Split Seat Type)**
    (a) for RH Side:
        (1) Install the No. 1 rear seat leg cover (See page SE-103).
    (b) for LH Side:
        (1) Install the No. 1 rear seat leg cover (See page SE-85).
22. **INSTALL REAR SEATBACK ASSEMBLY (for Hold Down Seat Type) (See page SE-122)**
23. **INSTALL REAR SEAT CUSHION COVER PAD SUB-ASSEMBLY (for Hold Down Seat Type) (See page SE-123)**
24. **INSTALL DECK FLOOR BOX RH (See page IR-83)**
25. **INSTALL DECK FLOOR BOX LH (See page IR-83)**
26. **INSTALL DECK BOARD SUB-ASSEMBLY (See page IR-83)**
27. **INSTALL PACKAGE TRAY TRIM PANEL ASSEMBLY (See page IR-83)**
28. **CONNECT CABLE TO NEGATIVE BATTERY TERMINAL**
    Torque: 5.4 N*m (55 kgf*cm, 48 in.*lbf)

CHILD RESTRAINT SEAT ANCHOR BRACKET (for Sedan)

COMPONENTS

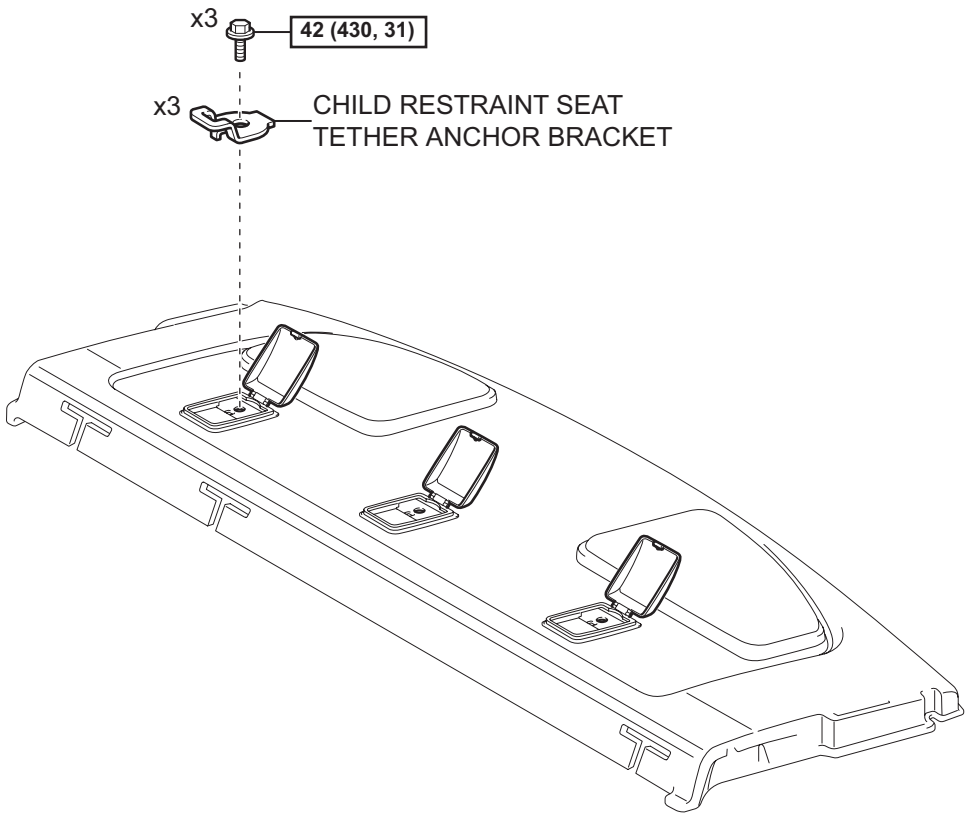

N*m (kgf*cm, ft*lbf) : Specified torque

T

B138377E01

SB

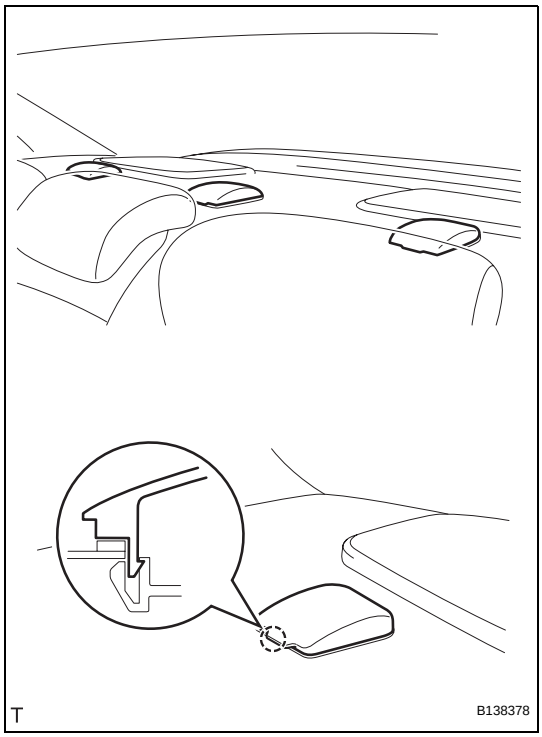

REMOVAL

1. REMOVE CHILD RESTRAINT SEAT TETHER ANCHOR BRACKET

HINT:

Use the same procedure to remove all the child restraint seat tether anchor brackets.

(a) Disengage the claw and open the package tray trim cover.

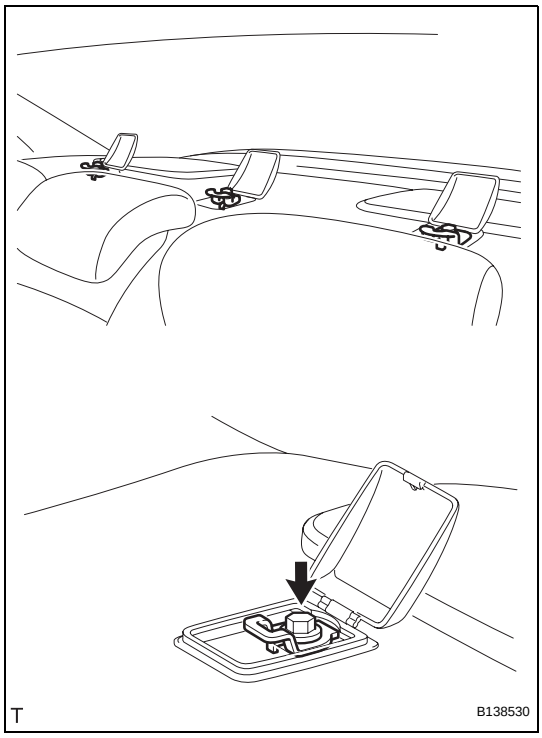

(b) Remove the bolt and the child restraint seat tether anchor bracket.

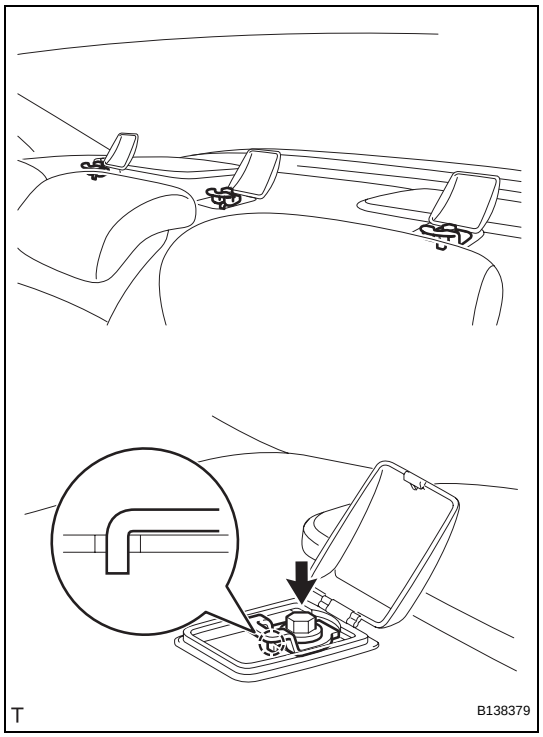

INSTALLATION

1. INSTALL CHILD RESTRAINT SEAT TETHER ANCHOR BRACKET

HINT:

Use the same procedure to install all the child restraint seat tether anchor brackets.

(a) Insert the hook into the body hole and install the child restraint seat tether anchor bracket with the bolt.

Torque: 42 N*m (430 kgf*cm, 31 ft.*lbf)

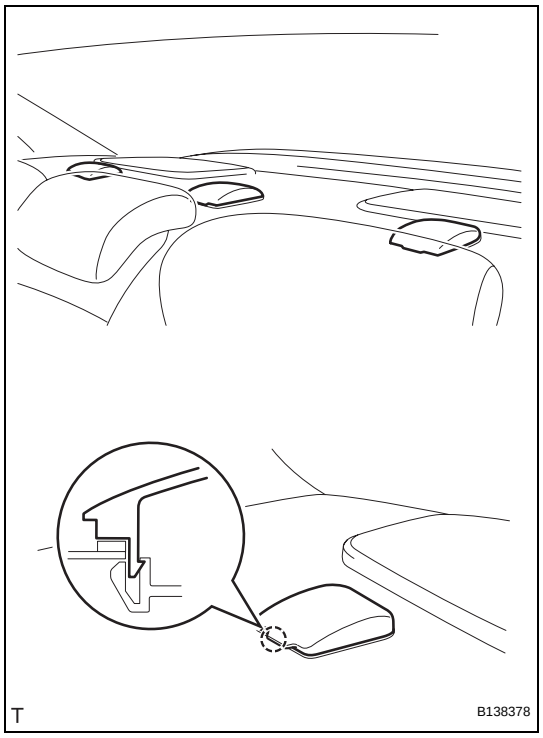

(b) Engage the claw and close the package tray rim cover.

FRONT SEAT ASSEMBLY (for Sedan)

COMPONENTS

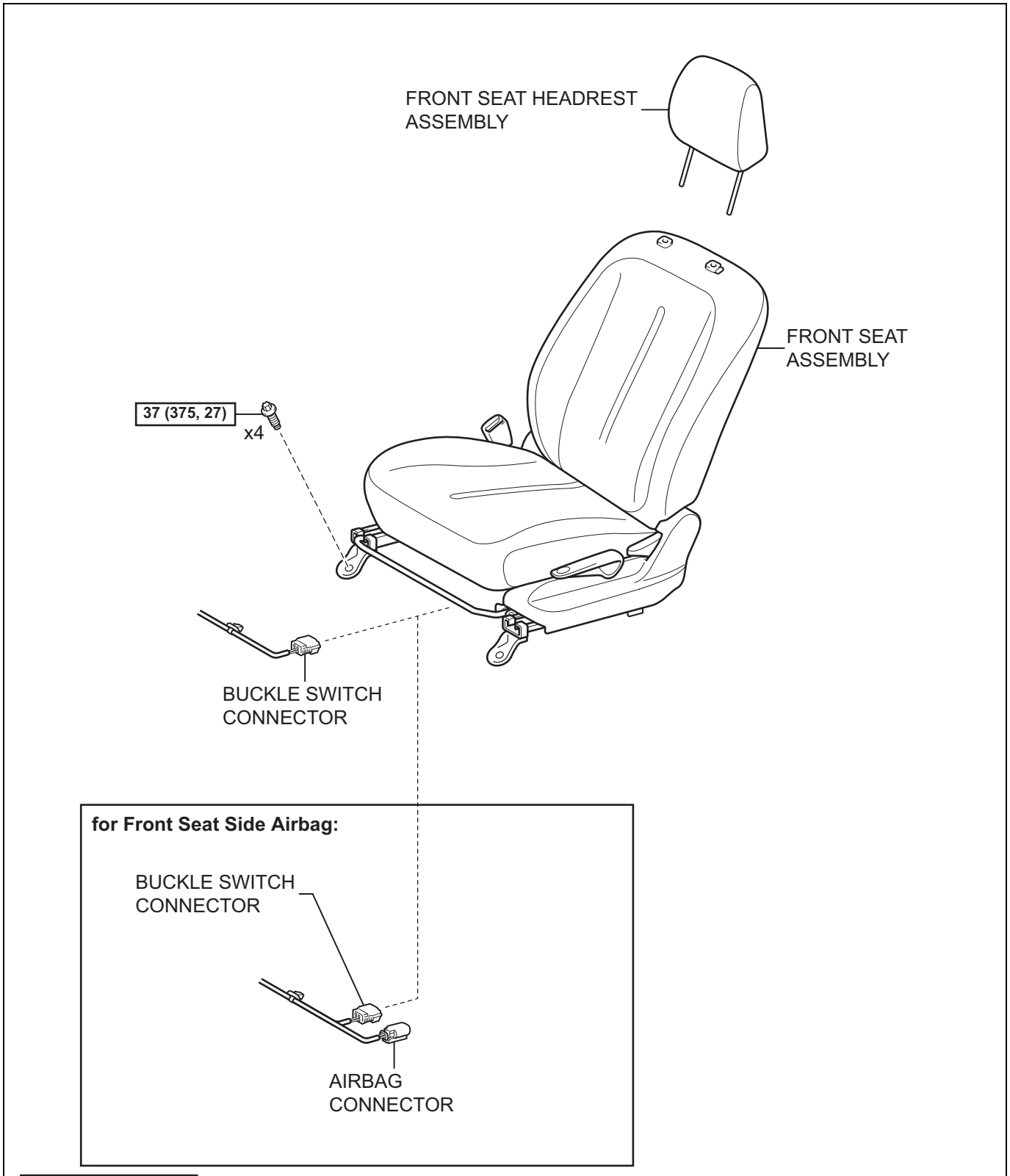

SE

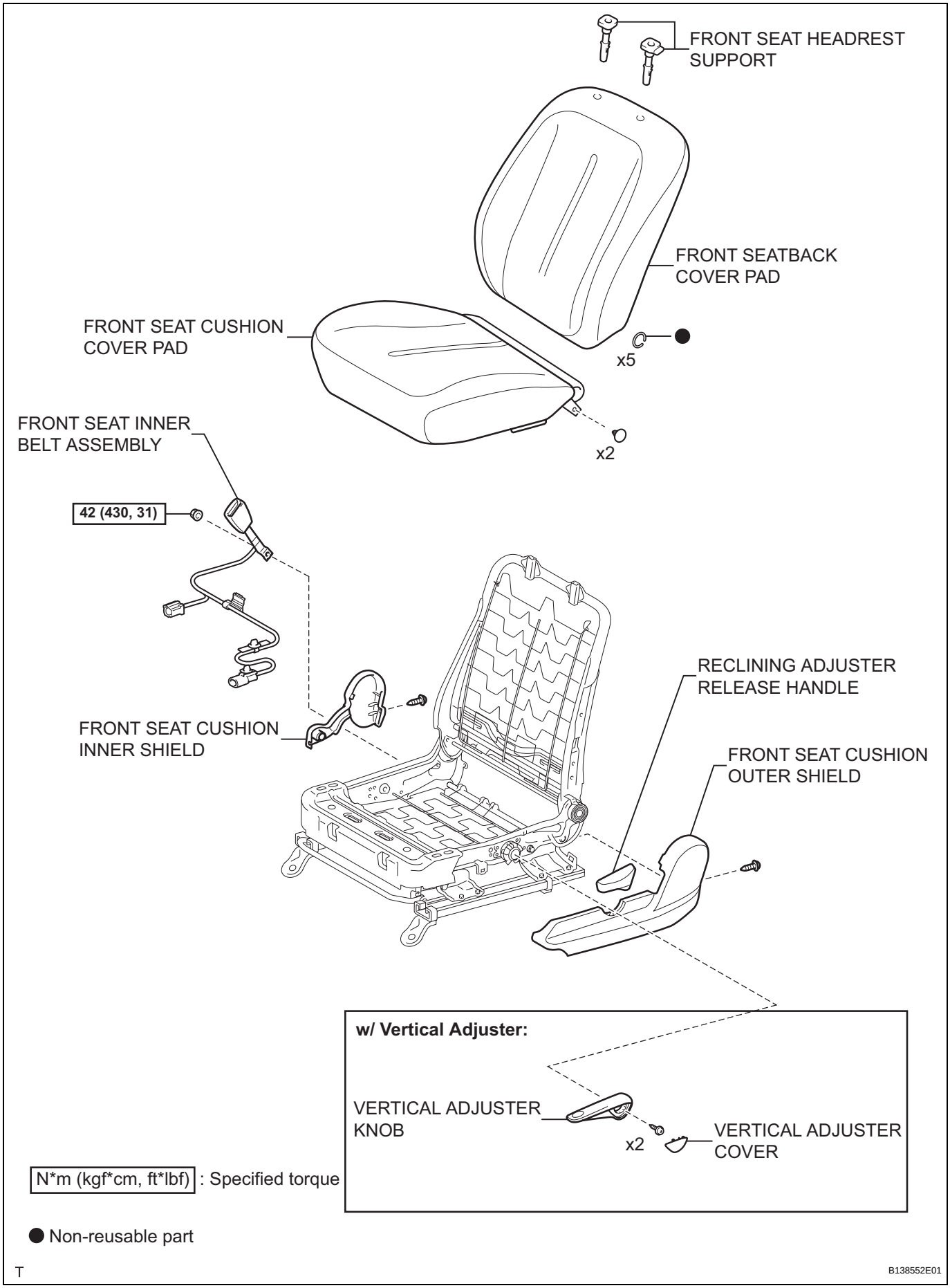
FRONT SEAT HEADREST SUPPORT
FRONT SEATBACK COVER PAD
FRONT SEAT CUSHION COVER PAD
x5
x2
FRONT SEAT INNER BELT ASSEMBLY
42 (430, 31)
FRONT SEAT CUSHION INNER SHIELD
RECLINING ADJUSTER RELEASE HANDLE
FRONT SEAT CUSHION OUTER SHIELD
w/ Vertical Adjuster:
VERTICAL ADJUSTER KNOB
x2
VERTICAL ADJUSTER COVER
N*m (kgf*cm, ft*lbf) : Specified torque
● Non-reusable part
T
B138552E01

SE

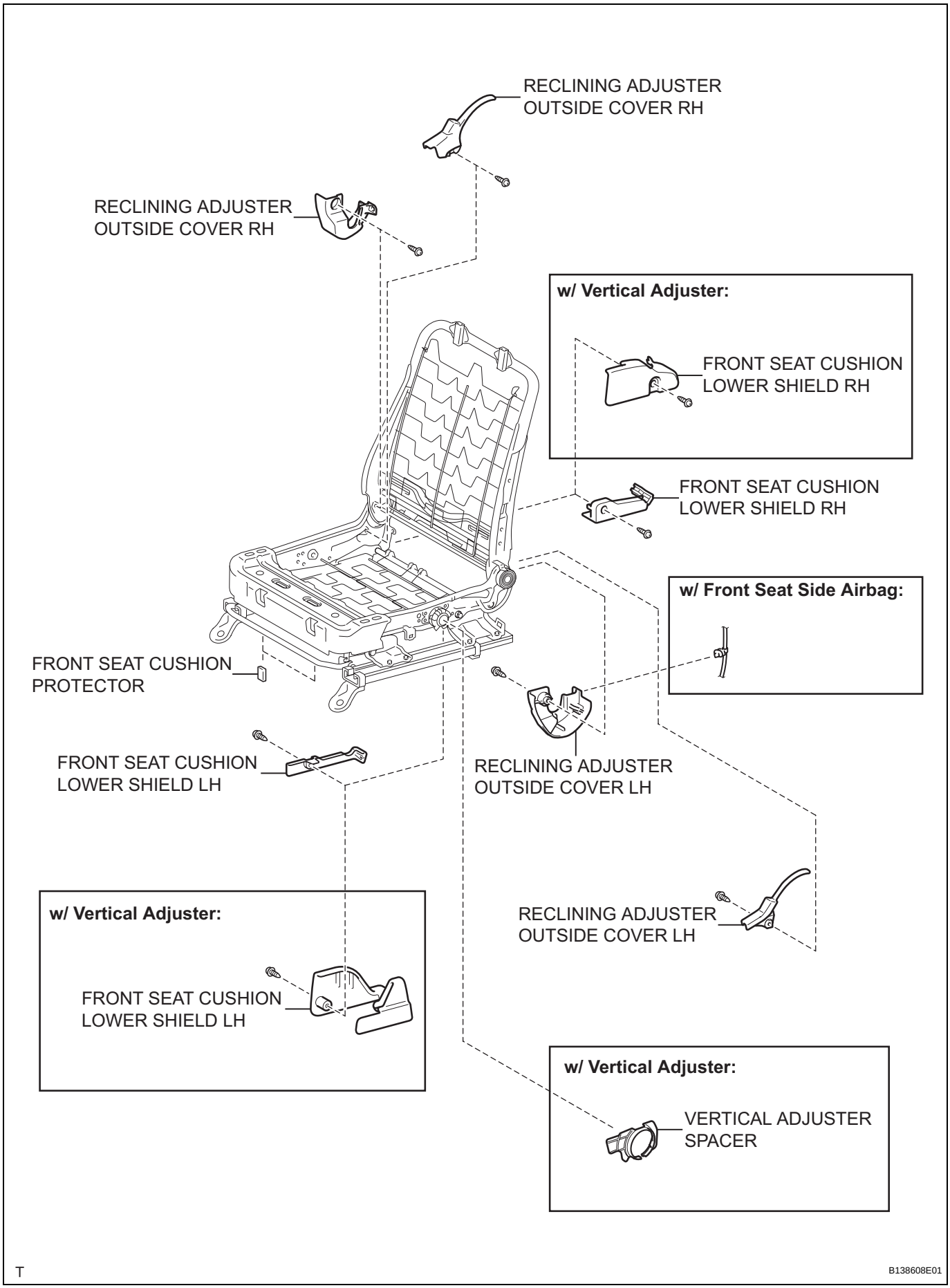
RECLINING ADJUSTER
OUTSIDE COVER RH
RECLINING ADJUSTER
OUTSIDE COVER RH
w/ Vertical Adjuster:
FRONT SEAT CUSHION
LOWER SHIELD RH
FRONT SEAT CUSHION
LOWER SHIELD RH
w/ Front Seat Side Airbag:
FRONT SEAT CUSHION
PROTECTOR
FRONT SEAT CUSHION
LOWER SHIELD LH
RECLINING ADJUSTER
OUTSIDE COVER LH
w/ Vertical Adjuster:
FRONT SEAT CUSHION
LOWER SHIELD LH
RECLINING ADJUSTER
OUTSIDE COVER LH
w/ Vertical Adjuster:
VERTICAL ADJUSTER
SPACER
T
B138608E01

SE

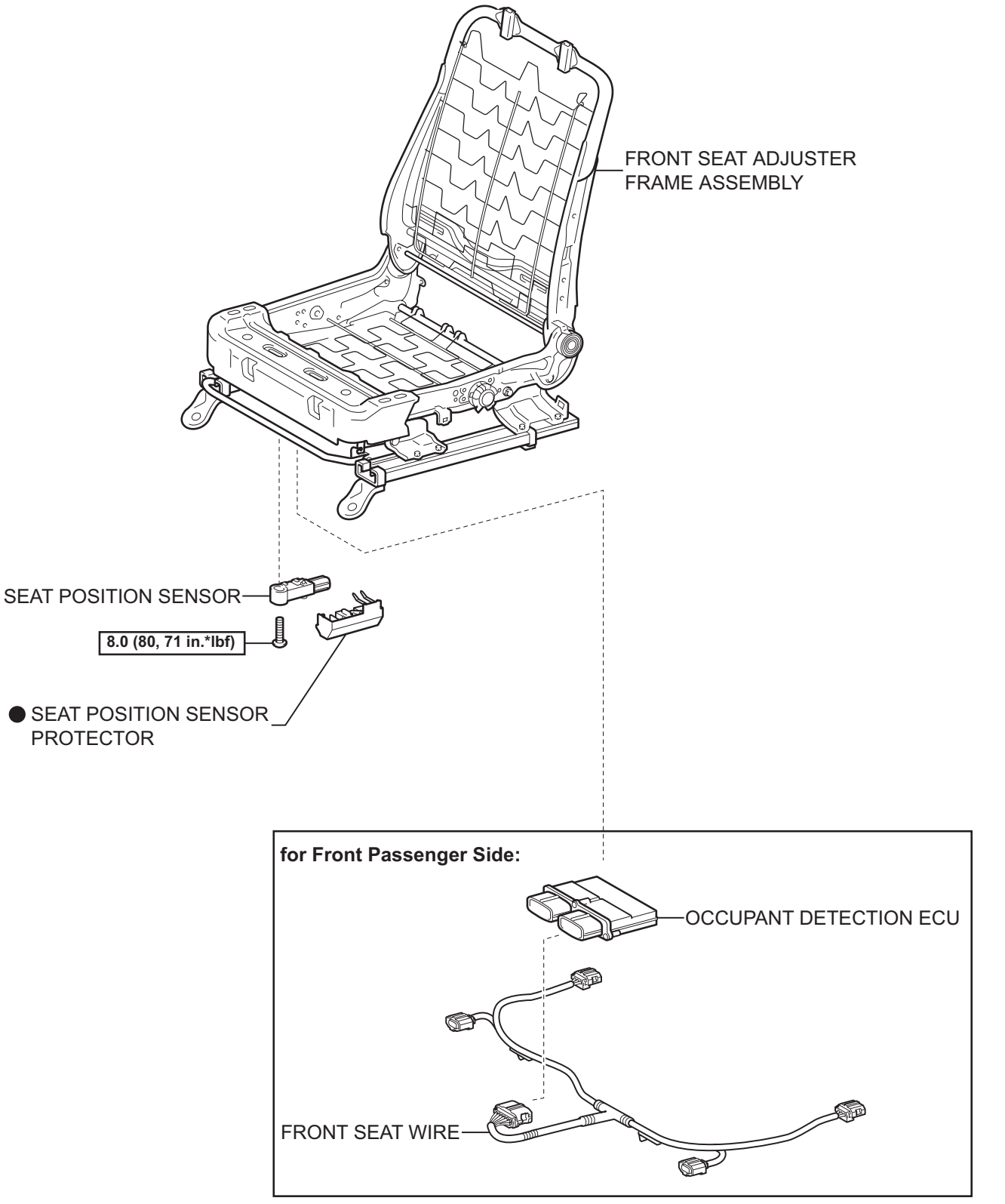

SE

N*m (kgf*cm, ft*lbf) : Specified torque

● Non-reusable part

T

B138553E01

REMOVAL

CAUTION:
Some of these service operations affect the SRS airbag system. Read the precautionary notices concerning the SRS airbag system before servicing (w/ Front Seat Side Airbag) (See page RS-1).
NOTICE:
Always use "Torx" socket wrench E10 when removing the front seat.
HINT:
The procedure described below is for the driver side. Use the same procedure for both the driver and front passenger sides, unless otherwise specified.

1. DISCONNECT CABLE FROM NEGATIVE BATTERY TERMINAL
CAUTION:
Wait for at least 90 seconds after disconnecting the cable to prevent the airbag from working (w/ Front Seat Side Airbag).

2. REMOVE FRONT SEAT HEADREST ASSEMBLY
(a) Push in the lock button of the front seat headrest support and remove the front seat headrest.

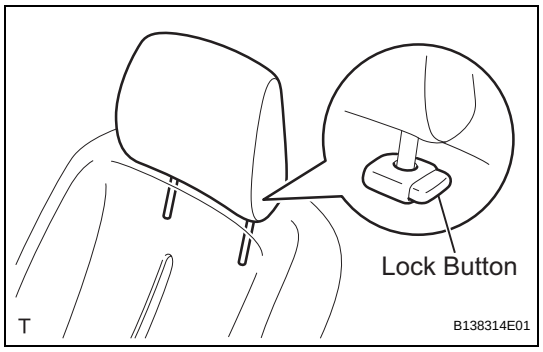

3. REMOVE FRONT SEAT ASSEMBLY
(a) for Driver Side:
(1) Using a clip remover, remove the clamp.
(2) w/ Front Seat Side Airbag:
1. Slide the slider and disconnect the airbag connector.
(3) Disconnect the buckle switch connector.

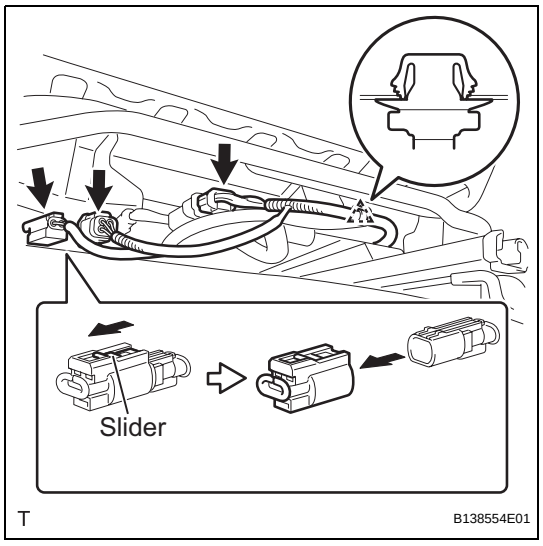

SE

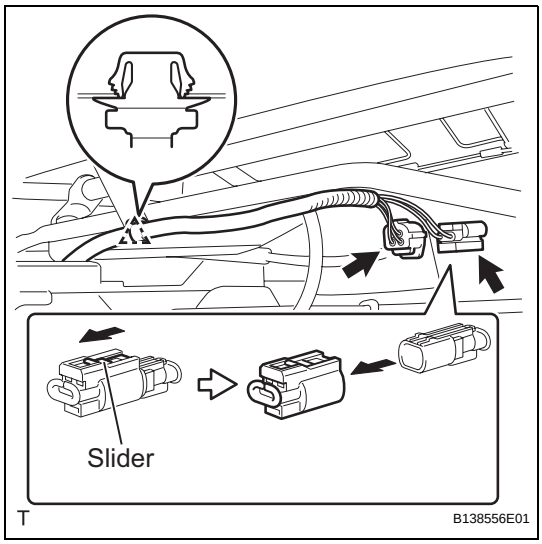

(b) for Front Passenger Side:
  (1) Using a clip remover, remove the clamp.
  (2) w/ Front Seat Side Airbag:
    1. Slide the slider and disconnect the airbag connector.
  (3) Disconnect the buckle switch connector.
  (4) Disconnect the occupant detection ECU connector.

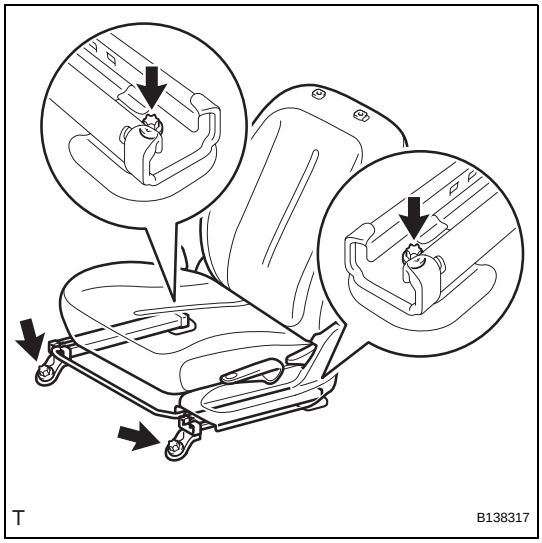

(c) Move the front seat to its most rearward position.
(d) Using "Torx" socket wrench E10, remove the 2 bolts from the front side.
(e) Move the front seat to its most forward position.
(f) Using "Torx" socket wrench E10, remove the 2 bolts from the rear side.
(g) Remove the front seat.

DISASSEMBLY

CAUTION:
Wear protective gloves. Sharp surfaces on the front seat adjuster frame could cause injuries to your hands.
HINT:
The procedure described below is for the driver side. Use the same procedure for both the front passenger and driver sides, unless otherwise specified.

1. REMOVE FRONT SEAT INNER BELT ASSEMBLY (See page SB-33)

2. REMOVE FRONT SEAT CUSHION INNER SHIELD

(a) Remove the screw.
(b) Using a screwdriver with its tip wrapped in protective tape, disengage the claw and the clip and remove the front seat cushion outer shield.

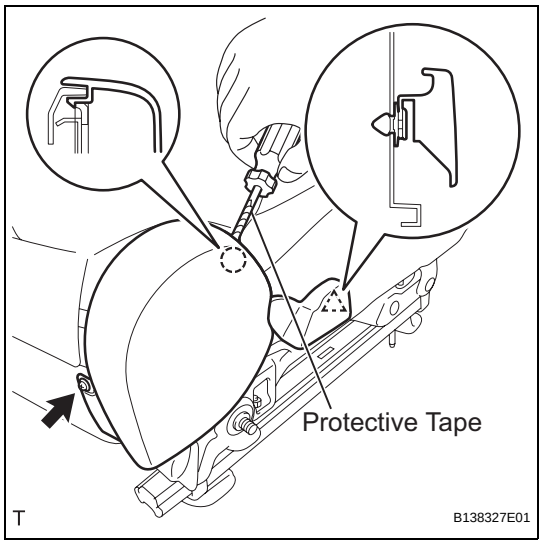

3. REMOVE VERTICAL ADJUSTER COVER (w/ Vertical Adjuster)

(a) Using a screwdriver with its tip wrapped in protective tape, disengage the 3 claws and remove the vertical adjuster cover.

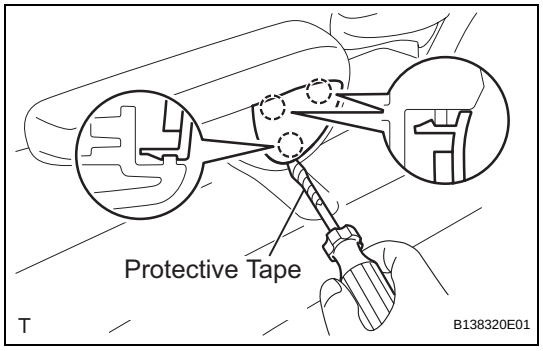

4. REMOVE VERTICAL ADJUSTER KNOB (w/ Vertical Adjuster)

(a) Remove the 2 screws and the vertical adjuster knob.

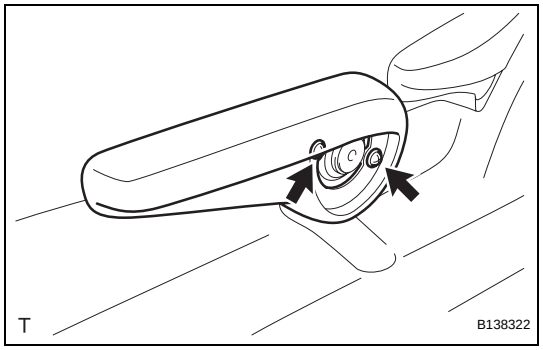

SE

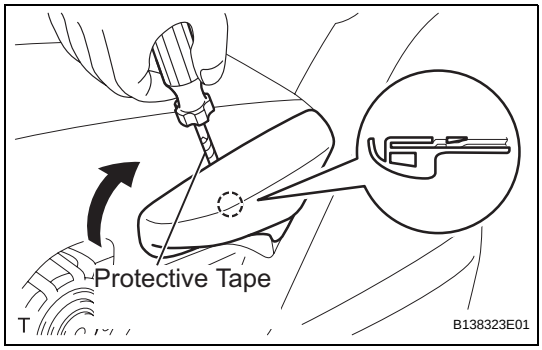

5. REMOVE RECLINING ADJUSTER RELEASE HANDLE

(a) Using a screwdriver with its tip wrapped in protective tape, disengage the claw and remove the reclining adjuster release handle.

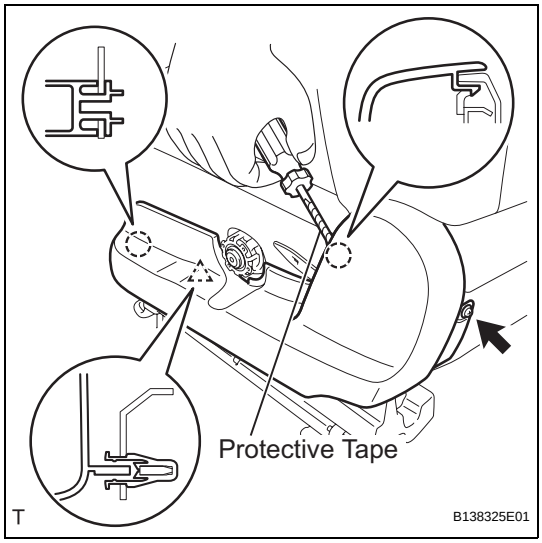

6. REMOVE FRONT SEAT CUSHION OUTER SHIELD

(a) Remove the screw.

(b) Using a screwdriver with its tip wrapped in protective tape, disengage the 2 claws and the clip and remove the front seat cushion outer shield.

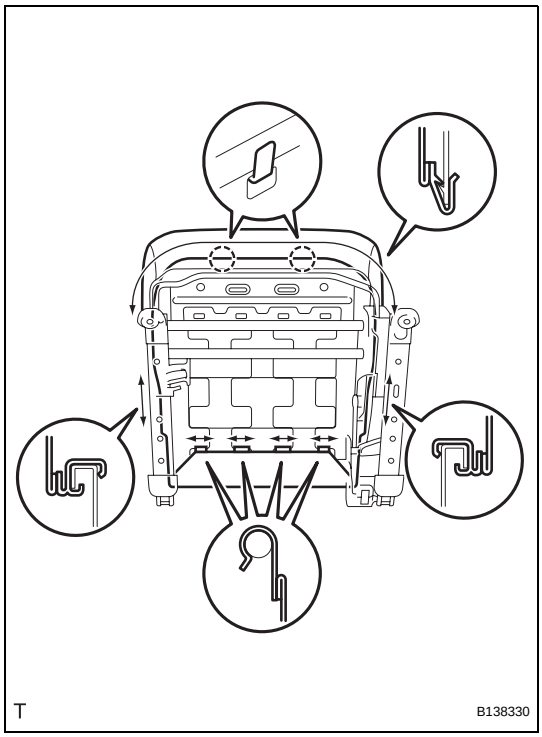

7. REMOVE FRONT SEAT CUSHION COVER PAD

(a) Disengage the 2 claws and 7 hooks.

SE

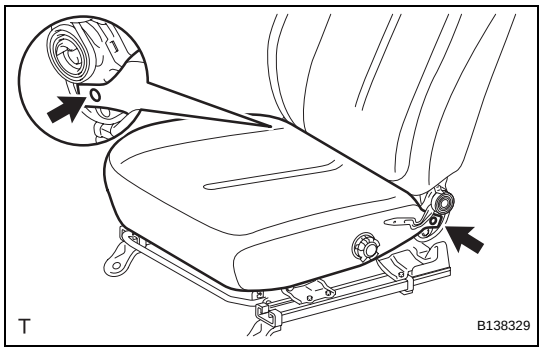

(b) Using a clip remover, remove the 2 clips and the front seat cushion cover pad.

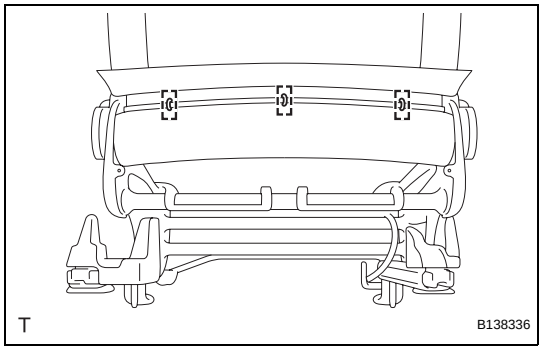

8. REMOVE FRONT SEAT HEADREST SUPPORT

(a) Remove the 3 hog rings.

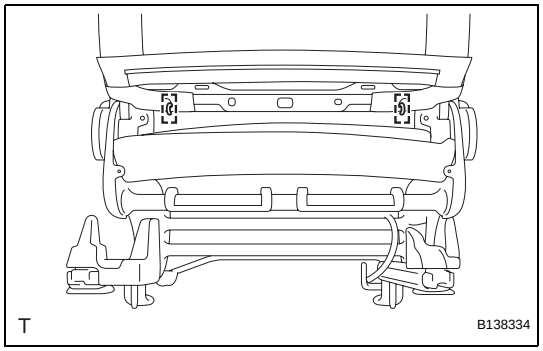

(b) Remove the 2 hog rings.

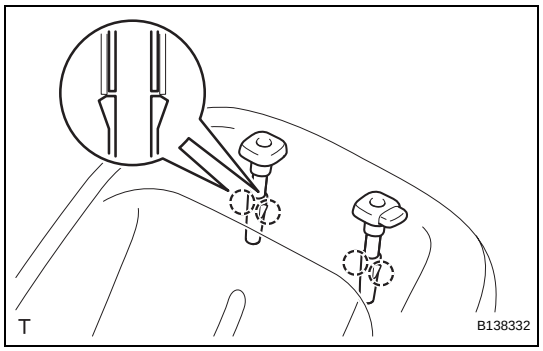

(c) Disengage the 2 claws and remove the front seat headrest support.
HINT:
Use the same procedure for both sides.

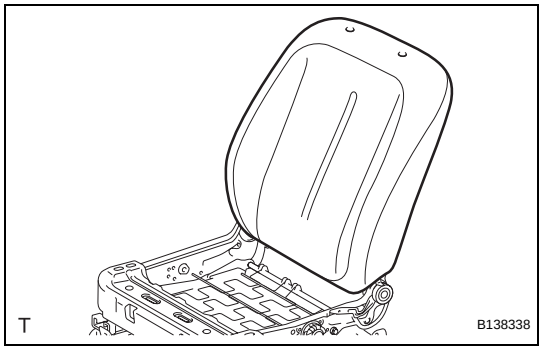

9. REMOVE FRONT SEATBACK COVER PAD

(a) Remove the front seatback cover pad.

SE

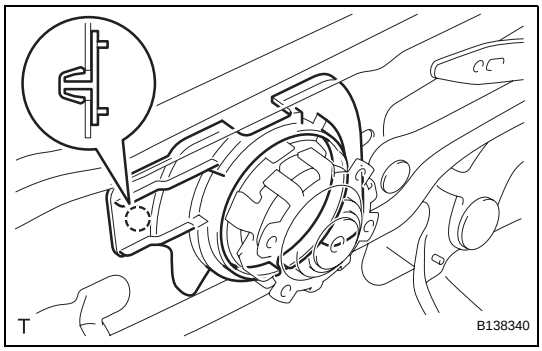

10. REMOVE VERTICAL ADJUSTER SPACER (w/ Vertical Adjuster)

(a) Disengage the claw and remove the vertical adjuster spacer.

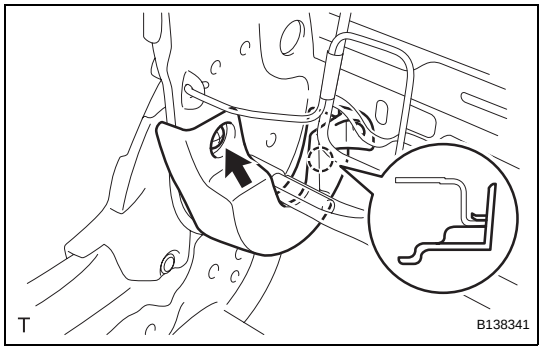

11. REMOVE RECLINING ADJUSTER INSIDE COVER RH

(a) Remove the screw.
(b) Disengage the claw and remove the reclining adjuster inside cover.

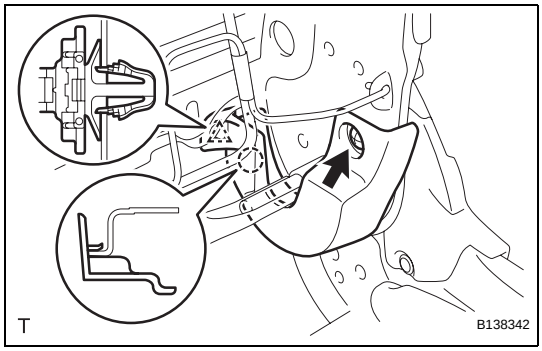

12. REMOVE RECLINING ADJUSTER INSIDE COVER LH

(a) w/ Front Seat Side Airbag:
  (1) Remove the clamp.
(b) Remove the screw.
(c) Disengage the claw and remove the reclining adjuster inside cover.

SE

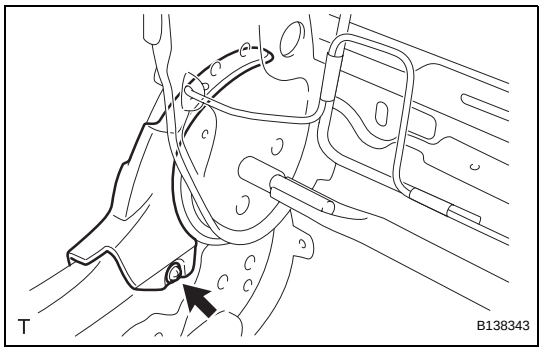

13. REMOVE RECLINING ADJUSTER OUTSIDE COVER RH

(a) Remove the screw and the reclining adjuster outside cover.

14. REMOVE RECLINING ADJUSTER OUTSIDE COVER LH

HINT:
Use the same procedure as for the RH side.

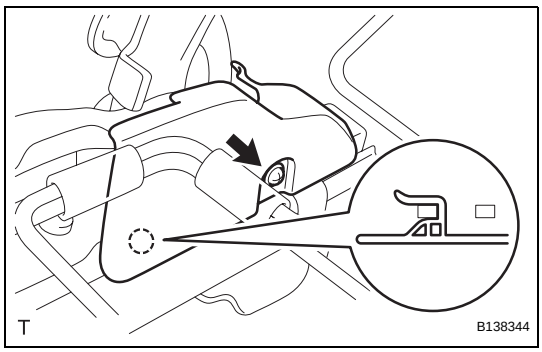

15. REMOVE FRONT SEAT CUSHION LOWER SHIELD RH

(a) w/ Vertical Adjuster:
  (1) Remove the screw.
  (2) Disengage the claw and remove the front seat cushion lower shield.

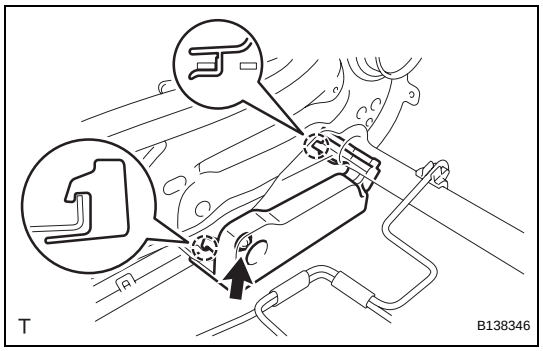

(b) w/o Vertical Adjuster:
(1) Remove the screw.
(2) Disengage the 2 claws and remove the front seat cushion lower shield.

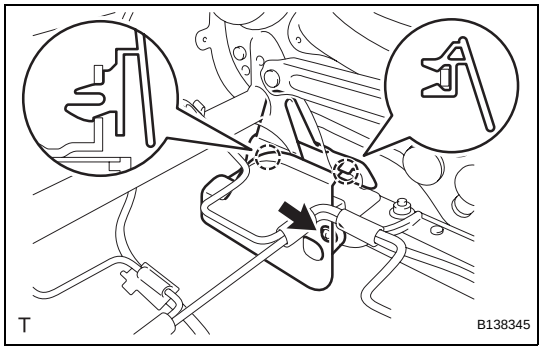

16. REMOVE FRONT SEAT CUSHION LOWER SHIELD LH

(a) w/ Vertical Adjuster:
(1) Remove the screw.
(2) Disengage the 2 claws and remove the front seat cushion lower shield.

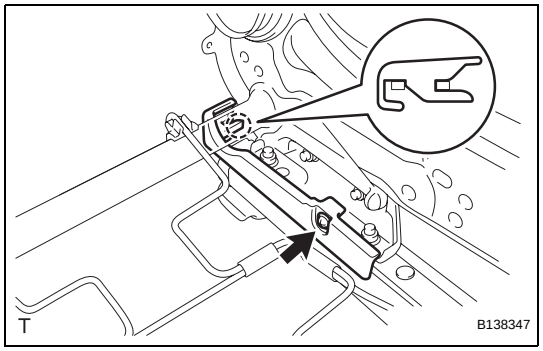

(b) w/o Vertical Adjuster:
(1) Remove the screw.
(2) Disengage the claw and remove the front seat cushion lower shield.

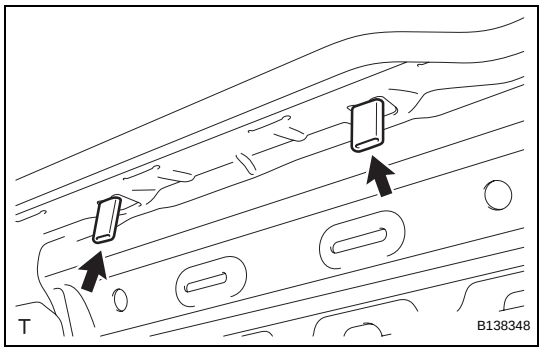

17. REMOVE FRONT SEAT CUSHION PROTECTOR

(a) Remove the 2 front seat cushion protectors.

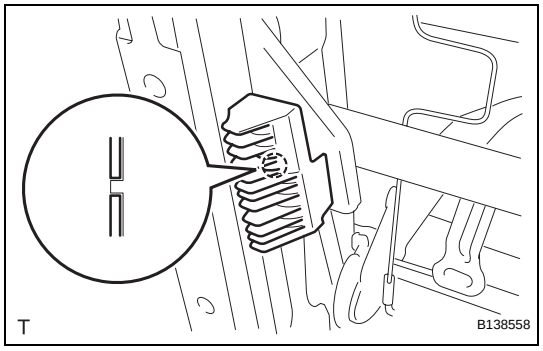

18. REMOVE SEAT POSITION SENSOR PROTECTOR (for Driver Side)

(a) Disengage the pin and remove the seat position sensor protector.

SE

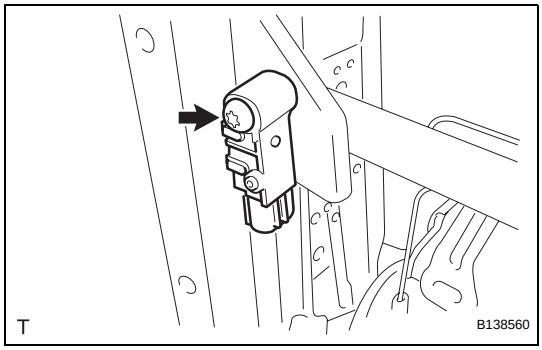

19. REMOVE SEAT POSITION SENSOR (for Driver Side)

(a) Using "Torx" socket wrench T30, remove the bolt and the seat position sensor.

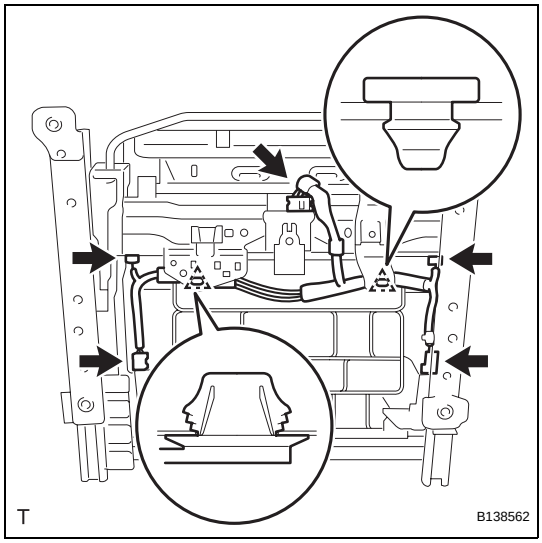

20. REMOVE FRONT SEAT WIRE (for Front Passenger Side)

(a) Disconnect the 5 connectors.

(b) Remove the 2 clamps and the front seat wire

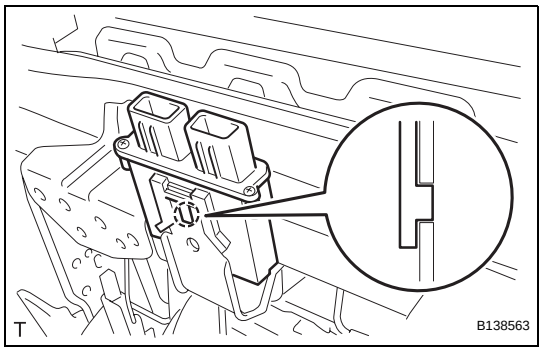

21. REMOVE OCCUPANT DETECTION ECU (for Front Passenger Side)

(a) Disengage the claw and remove the occupant detection ECU.

SE

REASSEMBLY

CAUTION:
Wear protective gloves. Sharp surfaces on the front seat adjuster frame could cause injuries to your hands.
HINT:
The procedure described below is for the driver side of LHD. Use the same procedure for both the front passenger and driver sides of LHD, unless otherwise specified.

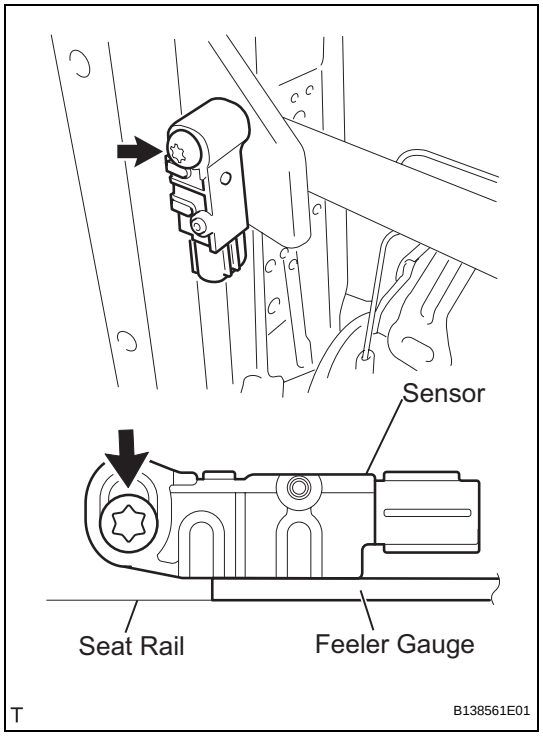

1. INSTALL SEAT POSITION SENSOR (for Driver Side)

(a) Provisionally install the seat position sensor.
NOTICE:
- **If the seat position sensor has been damaged, or there are any cracks, dents or other defects in the case, bracket or connector, replace the seat position sensor with a new one.**
- **When installing the seat position sensor, make sure that the SRS warning does not interfere with other parts and is not pinched between other parts.**

(b) Install a 1 mm (0.04 in.) feeler gauge between the seat rail and seat position sensor, as shown in the illustration.
HINT:
Make sure that the clearance between the seat position sensor and seat rail is within 0.6 to 2 mm (0.023 to 0.079 in.).

(c) Push the top of the seat position sensor toward the seat rail.

(d) While holding the seat position sensor, tighten the bolt using "Torx" socket wrench T30.
Torque: 8.0 N*m (80 kgf*cm, 71 in.*lbf)

SE

2. INSTALL SEAT POSITION SENSOR PROTECTOR (for Driver Side)

(a) Engage the pin and install a new seat position sensor protector.

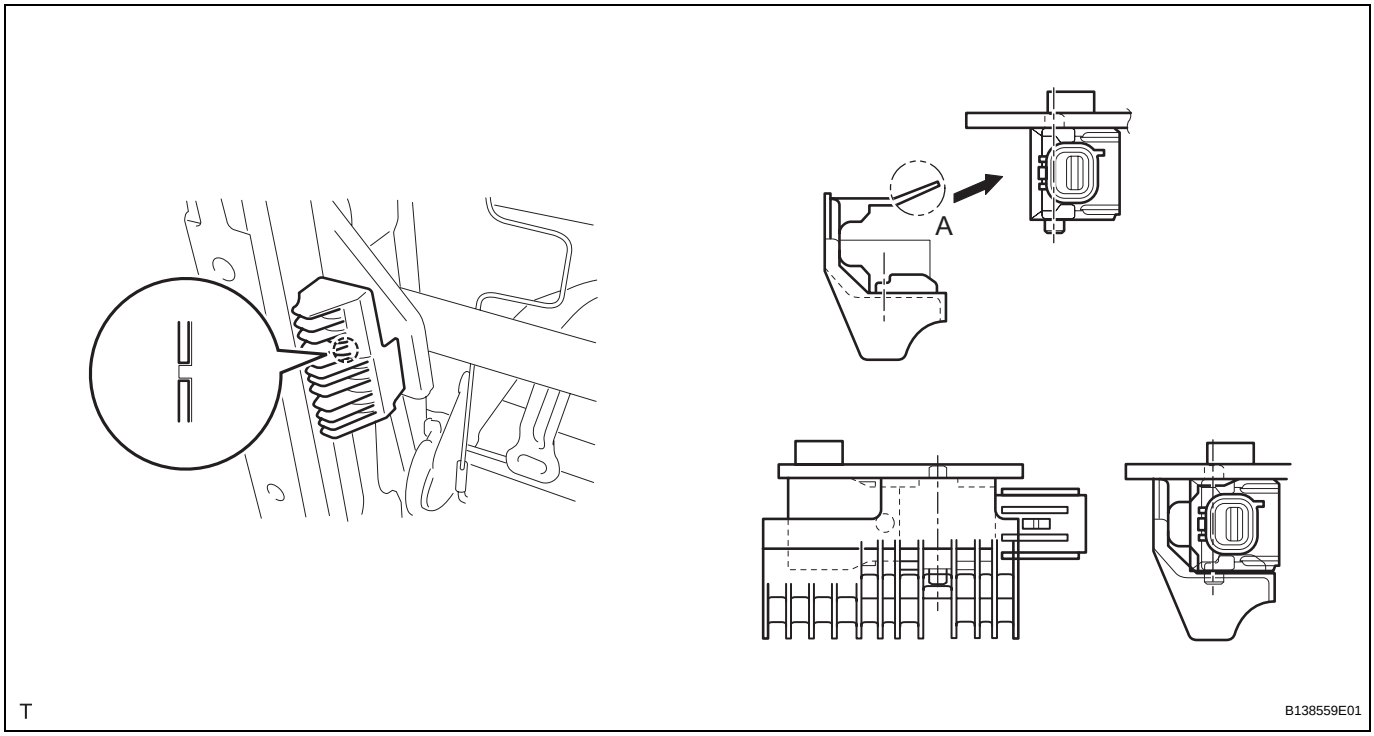

NOTICE:
Do not damage portion A, shown in the illustration, when installing the seat position sensor protector.

3. INSTALL OCCUPANT DETECTION ECU (for Front Passenger Side)

(a) Engage the claw and install the occupant detection ECU.

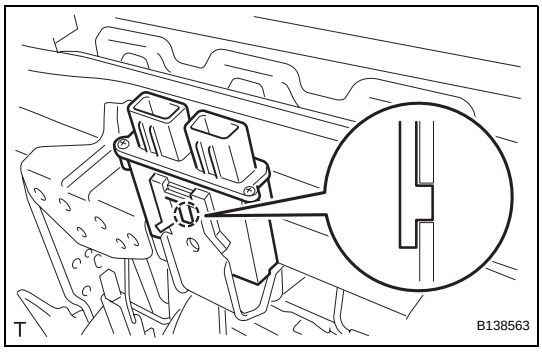

SE

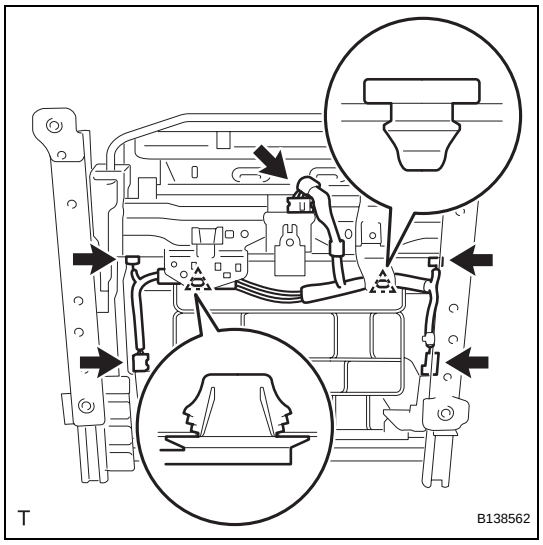

4. INSTALL FRONT SEAT WIRE

(a) Install the front seat wire with the 2 clamps.

(b) Connect the 5 connectors.

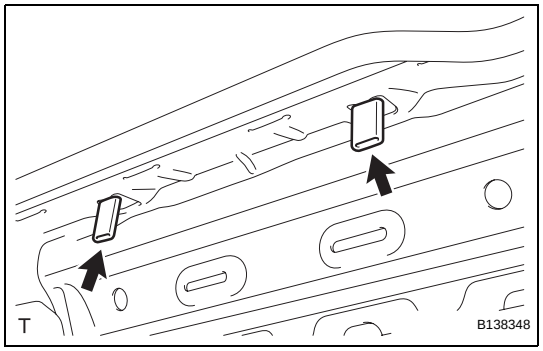

5. INSTALL FRONT SEAT CUSHION PROTECTOR

(a) Install the 2 front seat cushion protectors.

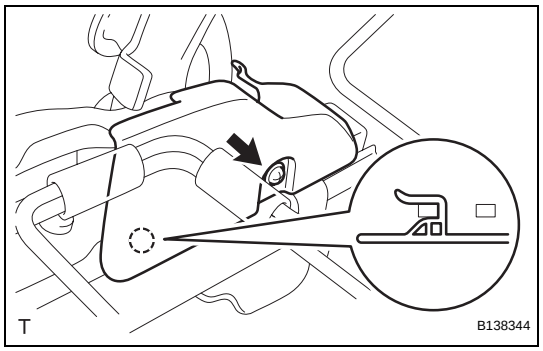

6. INSTALL FRONT SEAT CUSHION LOWER SHIELD RH

(a) w/ Vertical Adjuster:

(1) Engage the claw and install the front seat cushion lower shield.

(2) Tighten the screw.

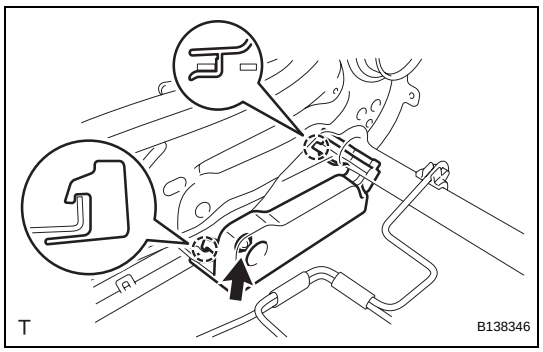

(b) w/o Vertical Adjuster:

(1) Engage the 2 claws and install the front seat cushion lower shield.

(2) Tighten the screw.

SE

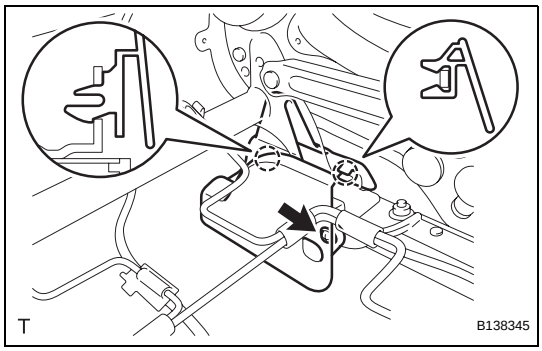

7. INSTALL FRONT SEAT CUSHION LOWER SHIELD LH

(a) w/ Vertical Adjuster:
  (1) Engage the 2 claws and install the front seat cushion lower shield.
  (2) Tighten the screw.

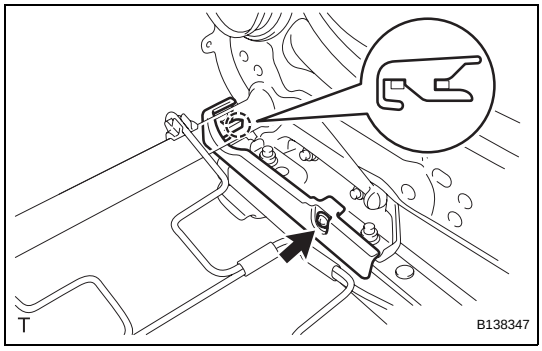

(b) w/o Vertical Adjuster:
  (1) Engage the claw and install the front seat cushion lower shield.
  (2) Tighten the screw.

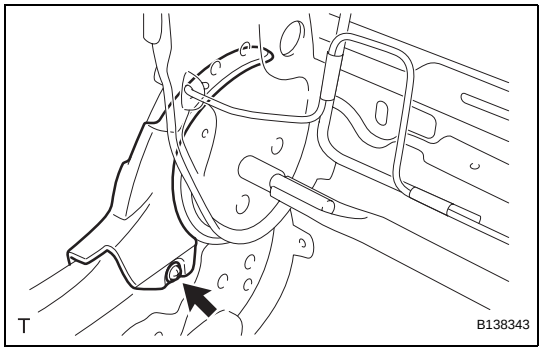

8. INSTALL RECLINING ADJUSTER OUTSIDE COVER RH

(a) Install the reclining adjuster outside cover with the screw.

9. INSTALL RECLINING ADJUSTER OUTSIDE COVER LH

HINT:
Use the same procedure as for the RH side.

SE

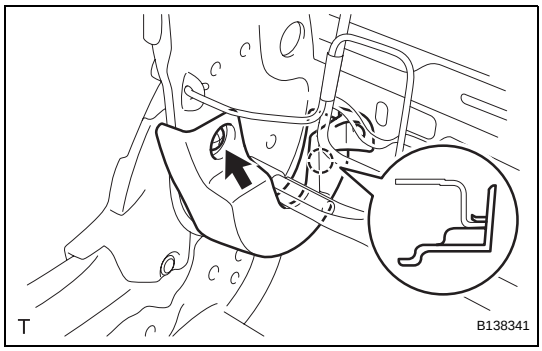

10. INSTALL RECLINING ADJUSTER INSIDE COVER RH

(a) Engage the claw and install the reclining adjuster inside cover.
(b) Tighten the screw.

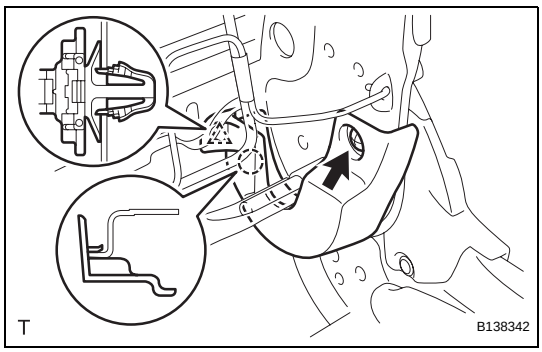

11. INSTALL RECLINING ADJUSTER INSIDE COVER LH

(a) Engage the claw and install the reclining adjuster inside cover.
(b) Tighten the screw.
(c) w/ Front Seat Side Airbag:
  (1) Install the clamp.

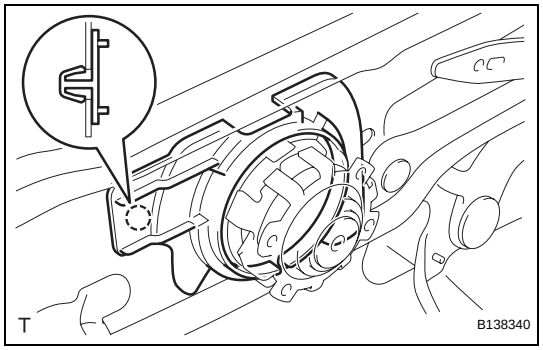

12. INSTALL VERTICAL ADJUSTER SPACER (w/ Vertical Adjuster)

(a) Engage the claw and install the vertical adjuster spacer.

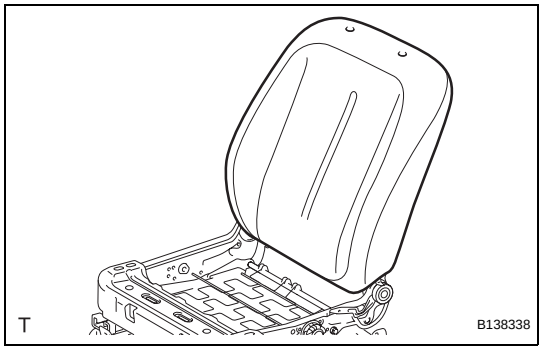

13. INSTALL FRONT SEATBACK COVER PAD

(a) Install the front seatback cover pad.

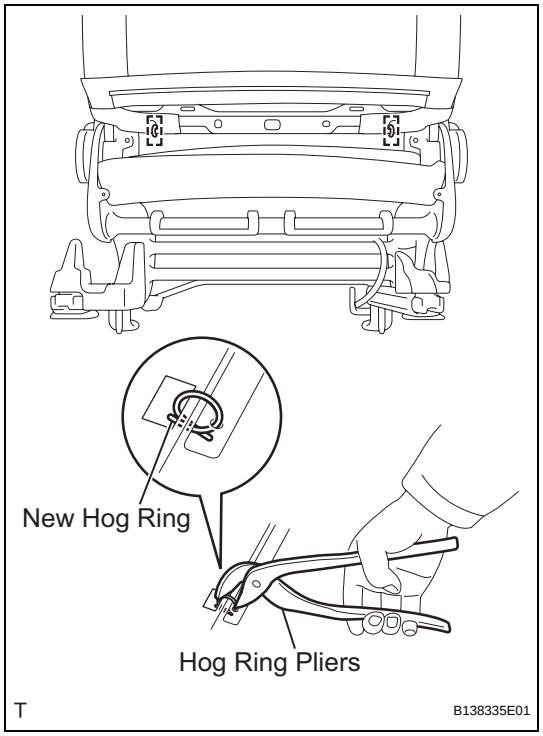

(b) Using hog ring pliers, install 2 new hog rings.

SE

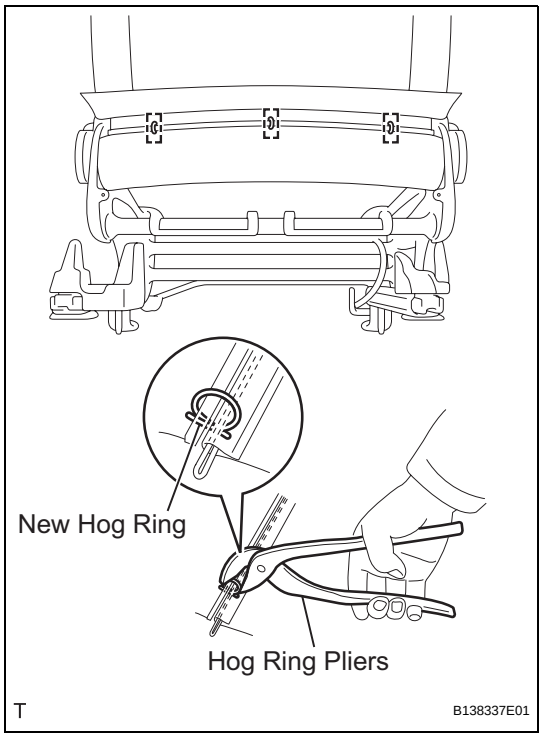

(c) Using hog ring pliers, install 3 new hog rings.

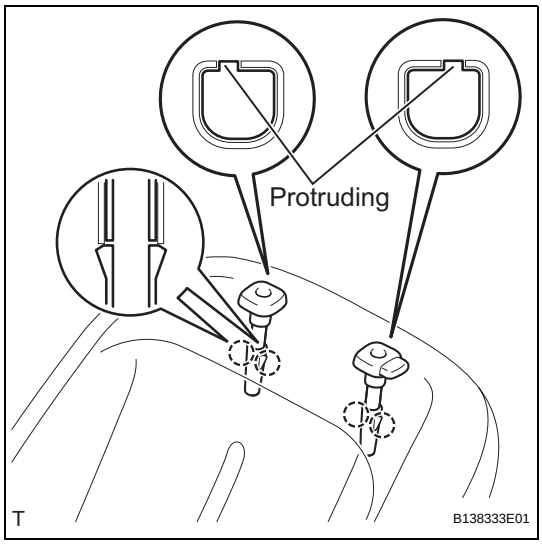

14. INSTALL FRONT SEAT HEADREST SUPPORT

HINT:

Use the same procedure for both sides.

(a) Align the protruding portion of the front seat headrest support with the installation groove of the front seat adjuster frame.

(b) Engage the 2 claws and install the front seat headrest support.

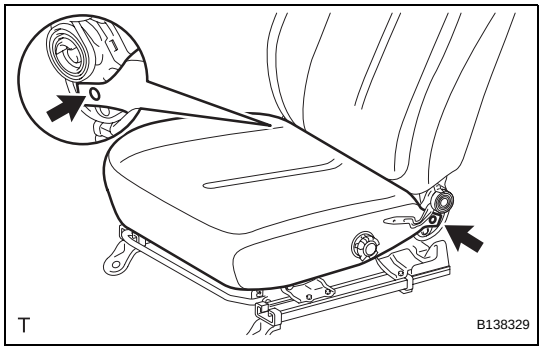

15. INSTALL FRONT SEAT CUSHION COVER PAD

(a) Install the front seat cushion cover pad with the 2 clips.

SE

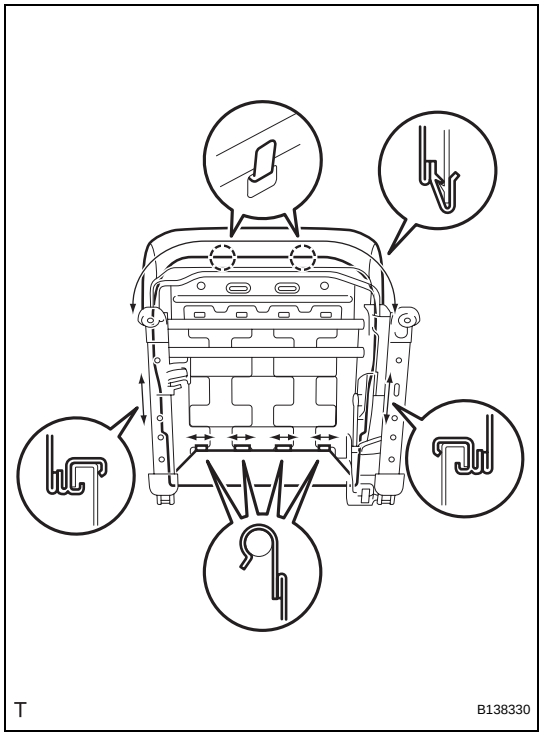

(b) Engage the 2 claws and the 7 hooks.

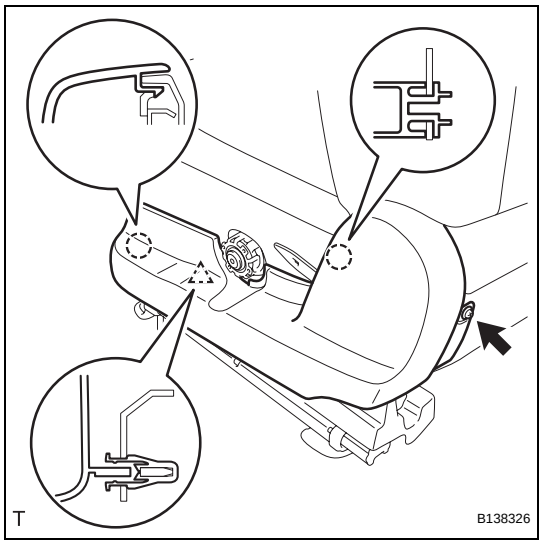

16. INSTALL FRONT SEAT CUSHION OUTER SHIELD

(a) Engage the 2 claws and the clip and install the front seat cushion outer shield.

(b) Tighten the screw.

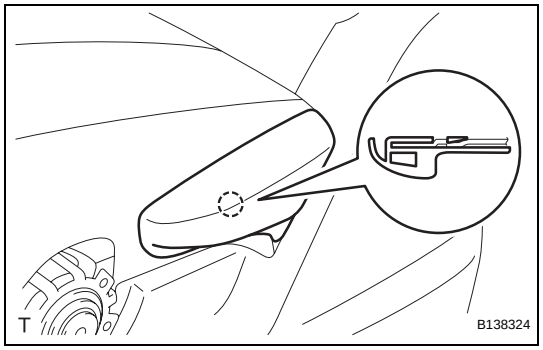

17. INSTALL RECLINING ADJUSTER RELEASE HANDLE

(a) Engage the claw and install the reclining adjuster release handle.

SE

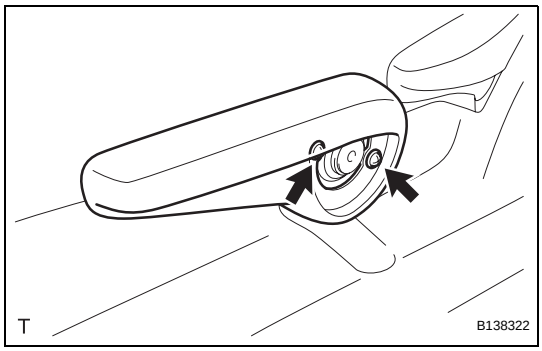

18. INSTALL VERTICAL ADJUSTER KNOB (w/ Vertical Adjuster)

(a) Install the vertical seat adjuster knob.

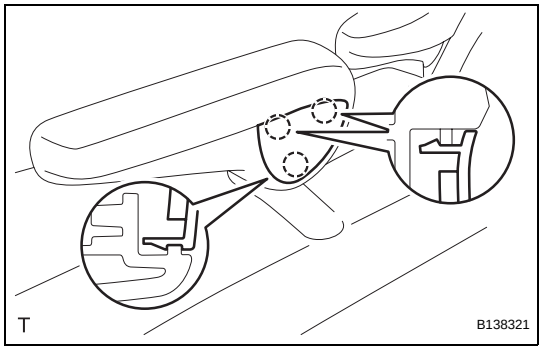

19. INSTALL VERTICAL ADJUSTER COVER (w/ Vertical Adjuster)

(a) Engage the 3 claws and install the vertical adjuster cover.

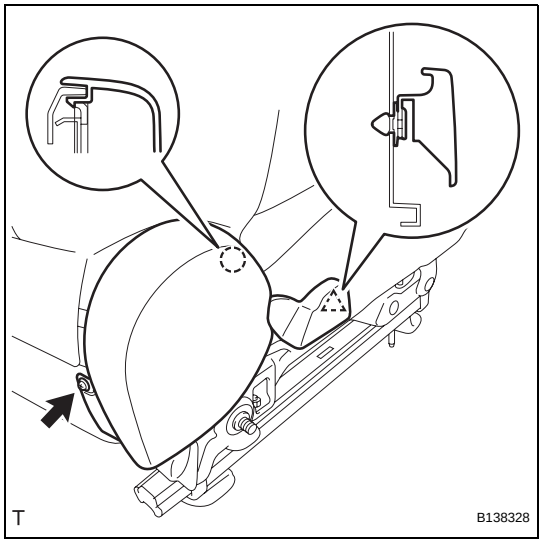

20. INSTALL FRONT SEAT CUSHION INNER SHIELD

(a) Engage the claw and the clip and install the front seat cushion inner shield.

(b) Tighten the screw.

21. INSTALL FRONT SEAT INNER BELT ASSEMBLY (See page SB-35)

SE

INSTALLATION

CAUTION:
Some of these service operations affect the SRS airbag system. Read the precautionary notices concerning the SRS airbag system before servicing (w/ Front Seat Side Airbag) (See page RS-1).
NOTICE:
Always use "Torx" socket wrench E10 when installing the front seat.
HINT:
The procedure described below is for the driver side. Use the same procedure for both the front passenger and driver sides, unless otherwise specified.

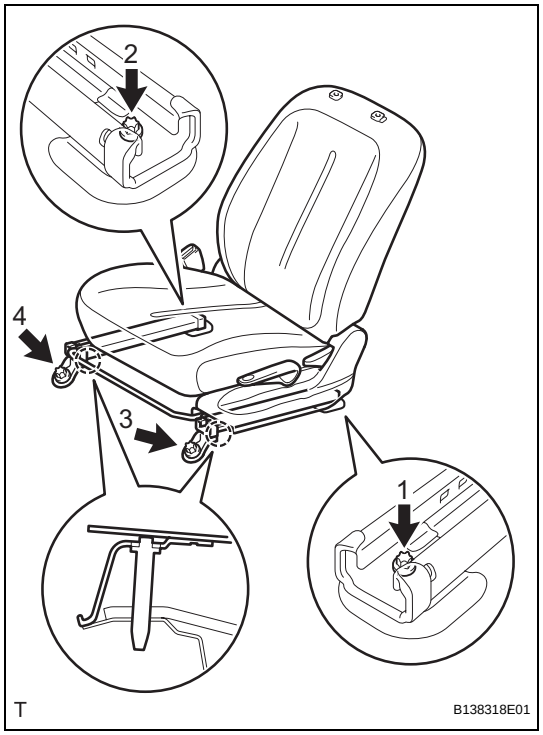

1. INSTALL FRONT SEAT ASSEMBLY
NOTICE:
Follow the procedure described below in order to prevent the seat tracks from locking separately.
(a) Insert the 2 locating pins through the 2 body holes, place the front seat in the most forward position, and then make sure that the inner and outer seat tracks are locked securely.
(b) Using "Torx" socket wrench E10, tighten bolt 1 and then bolt 2 on the rear side.
Torque: 37 N*m (375 kgf*cm, 27 ft.*lbf)
(c) Move the front seat to the most rearward position, and then make sure that the inner and outer seat tracks are locked securely.
(d) Using "Torx" socket wrench E10, tighten bolt 3 and then bolt 4 on the front side.
Torque: 37 N*m (375 kgf*cm, 27 ft.*lbf)
HINT:
If the inner and outer seat tracks do not lock simultaneously, loosen the bolts and adjust the seat tracks.

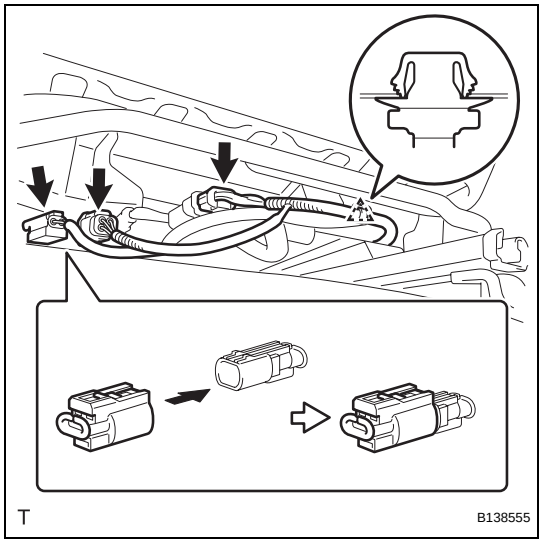

(e) for Driver Side:
(1) w/ Front Seat Side Airbag:
1. Connect the airbag connector.
(2) Connect the buckle switch connector.
(3) Install the clamp.

SE

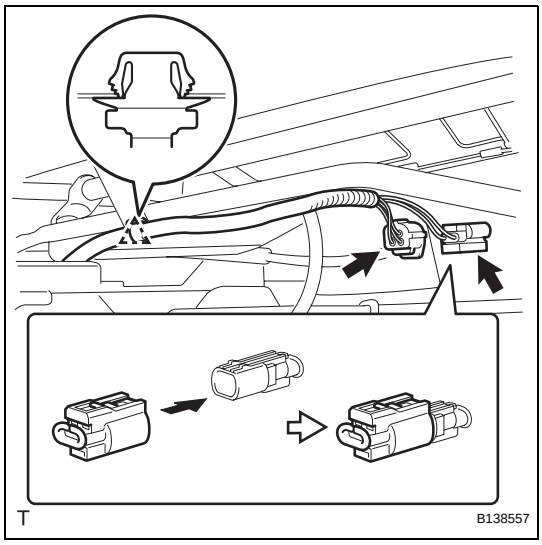

(f) for Front Passenger Side:
  (1) w/ Front Seat Side Airbag:
    1. Connect the airbag connector.
  (2) Connect the buckle switch connector.
  (3) Connect the occupant detection ECU connector.
  (4) Install the clamp.

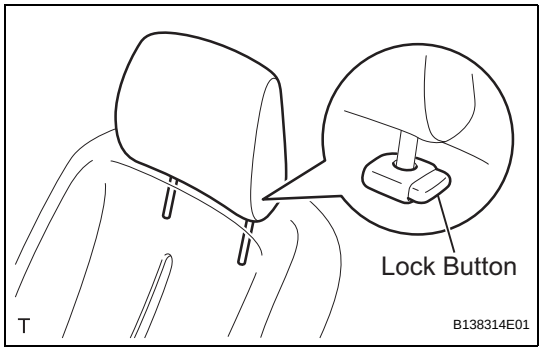

2. INSTALL FRONT SEAT HEADREST ASSEMBLY

(a) Push in the lock button of the front seat headrest support and install the front seat headrest.

3. CONNECT CABLE TO NEGATIVE BATTERY TERMINAL

Torque: 5.4 N*m (55 kgf*cm, 48 in.*lbf)

4. INSPECT SRS WARNING LIGHT (w/ Front Seat Side Airbag)

(See page RS-31)

FRONT SEAT ASSEMBLY (for Hatchback)

COMPONENTS

for Driver Side:

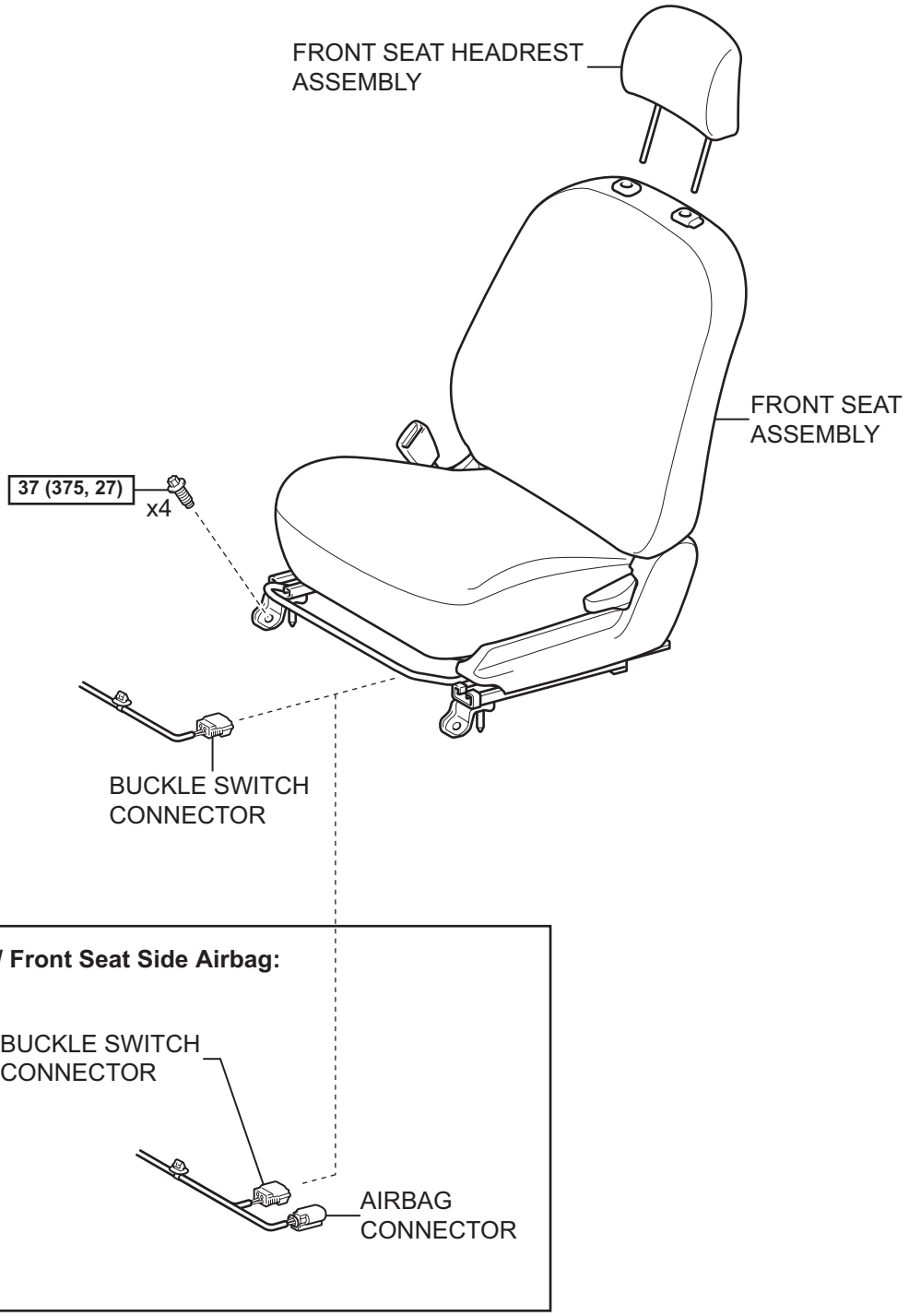

N*m (kgf*cm, ft*lbf) : Specified torque

T

B117721E02

SE

for Front Passenger Side:

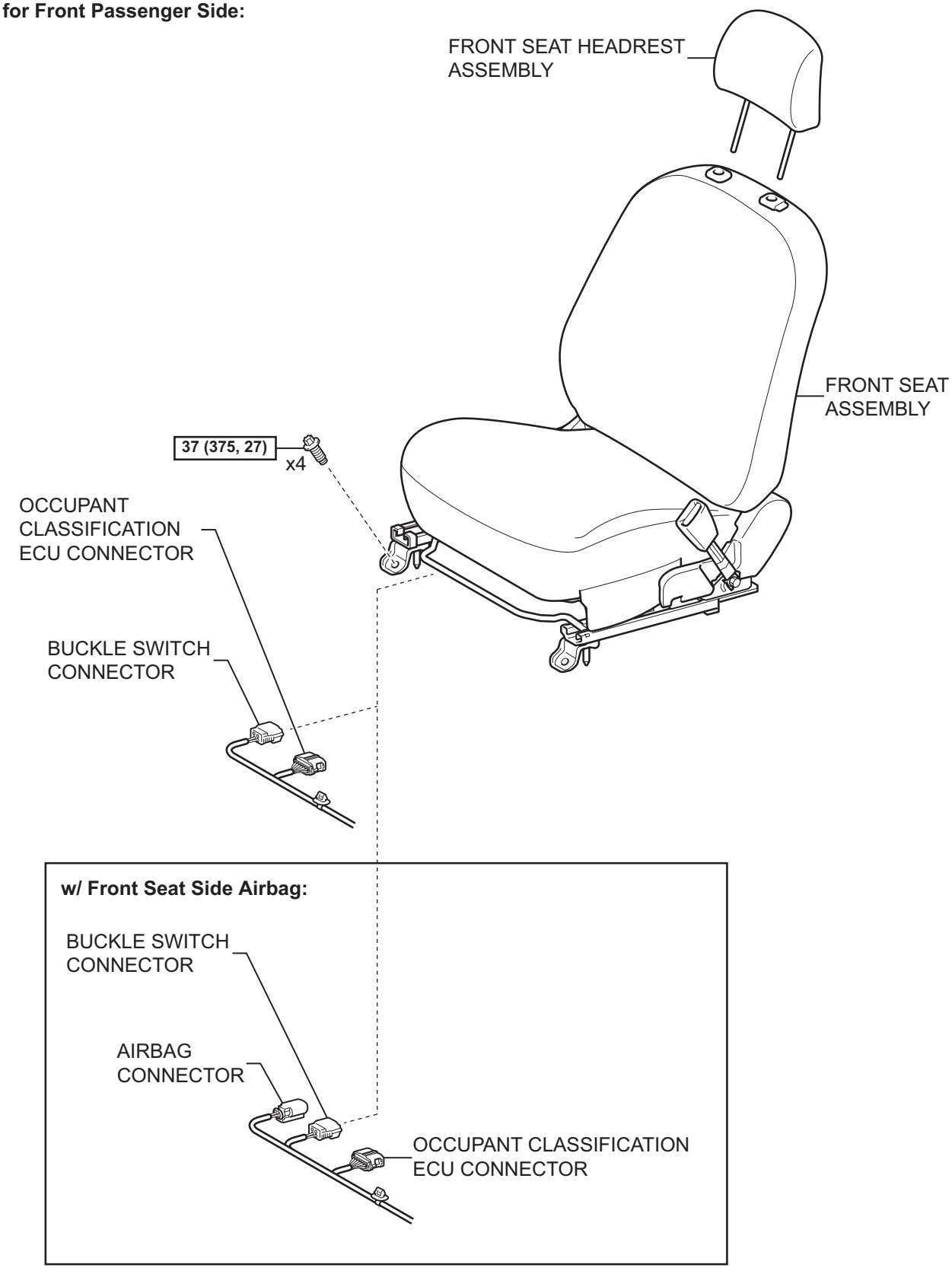

N*m (kgf*cm, ft*lbf) : Specified torque

T

B117720E02

SE

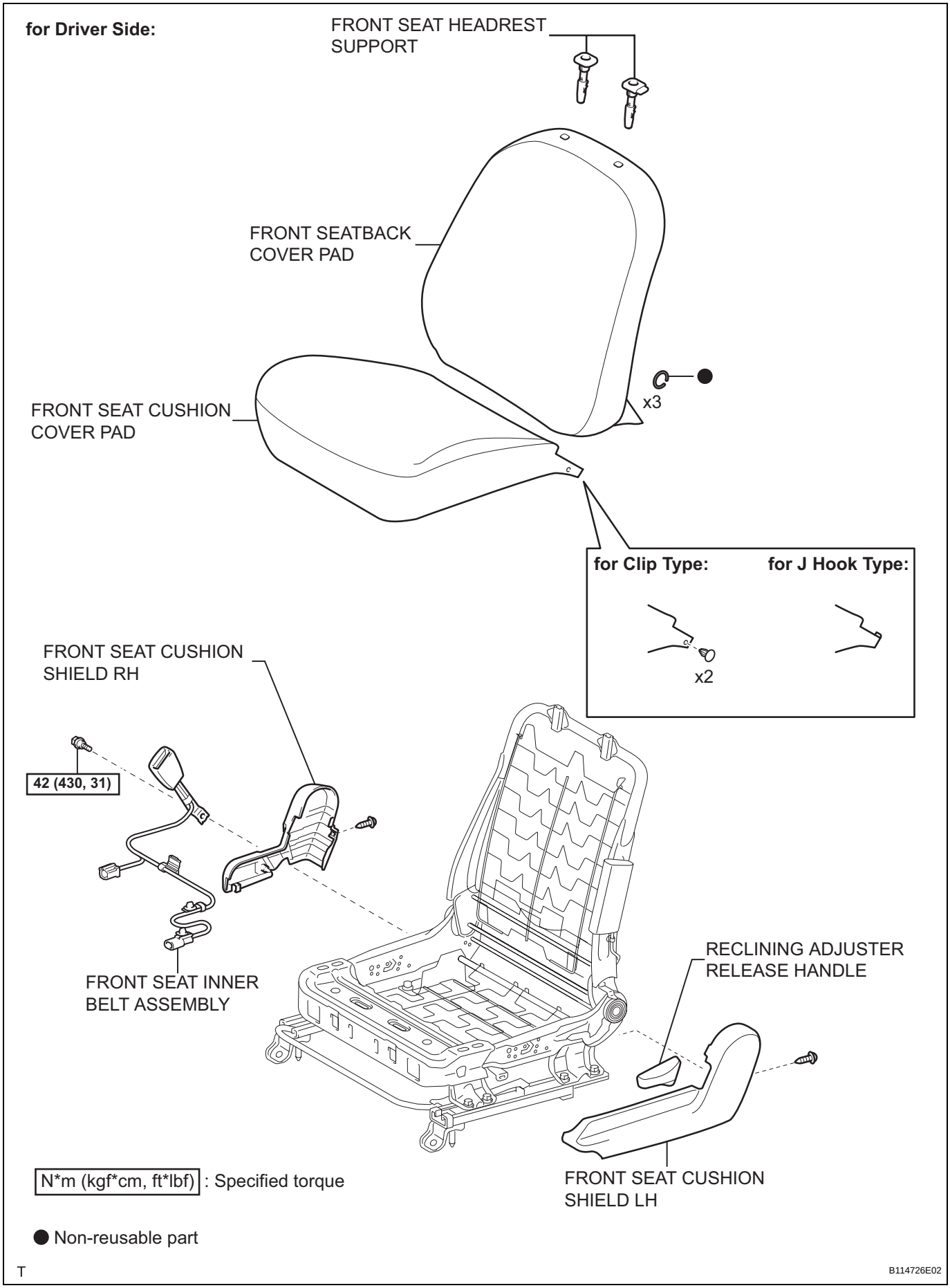
for Driver Side:
FRONT SEAT HEADREST SUPPORT
FRONT SEATBACK COVER PAD
x3
FRONT SEAT CUSHION COVER PAD
for Clip Type:
for J Hook Type:
x2
FRONT SEAT CUSHION SHIELD RH
42 (430, 31)
FRONT SEAT INNER BELT ASSEMBLY
RECLINING ADJUSTER RELEASE HANDLE
FRONT SEAT CUSHION SHIELD LH
N*m (kgf*cm, ft*lbf) : Specified torque
● Non-reusable part
T
B114726E02

SE

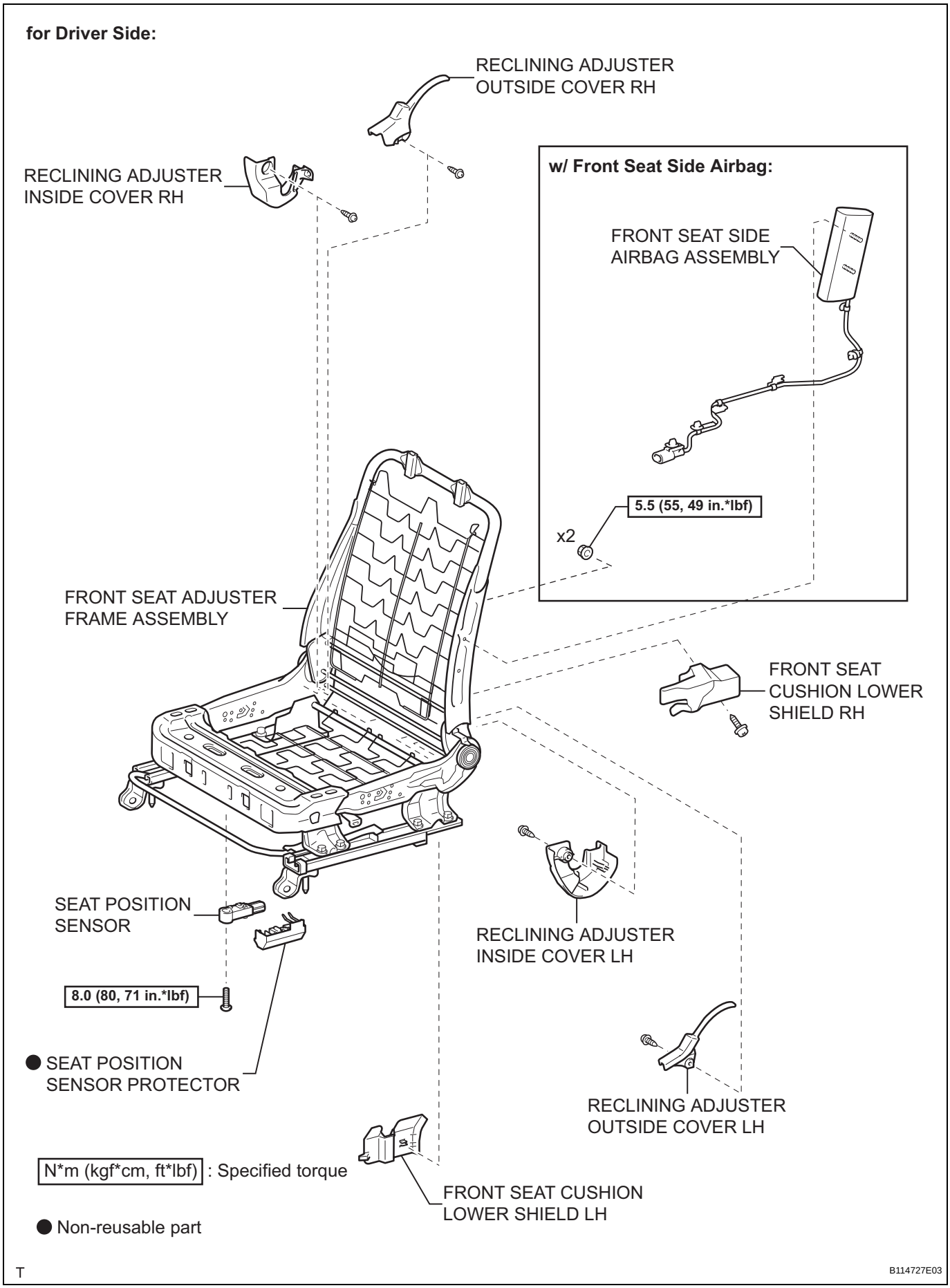
for Driver Side:
RECLINING ADJUSTER OUTSIDE COVER RH
RECLINING ADJUSTER INSIDE COVER RH
w/ Front Seat Side Airbag:
FRONT SEAT SIDE AIRBAG ASSEMBLY
5.5 (55, 49 in.*lbf)
x2
FRONT SEAT ADJUSTER FRAME ASSEMBLY
FRONT SEAT CUSHION LOWER SHIELD RH
SEAT POSITION SENSOR
RECLINING ADJUSTER INSIDE COVER LH
8.0 (80, 71 in.*lbf)
● SEAT POSITION SENSOR PROTECTOR
RECLINING ADJUSTER OUTSIDE COVER LH
N*m (kgf*cm, ft*lbf) : Specified torque
FRONT SEAT CUSHION LOWER SHIELD LH
● Non-reusable part
T
B114727E03

SE

for Front Passenger Side:

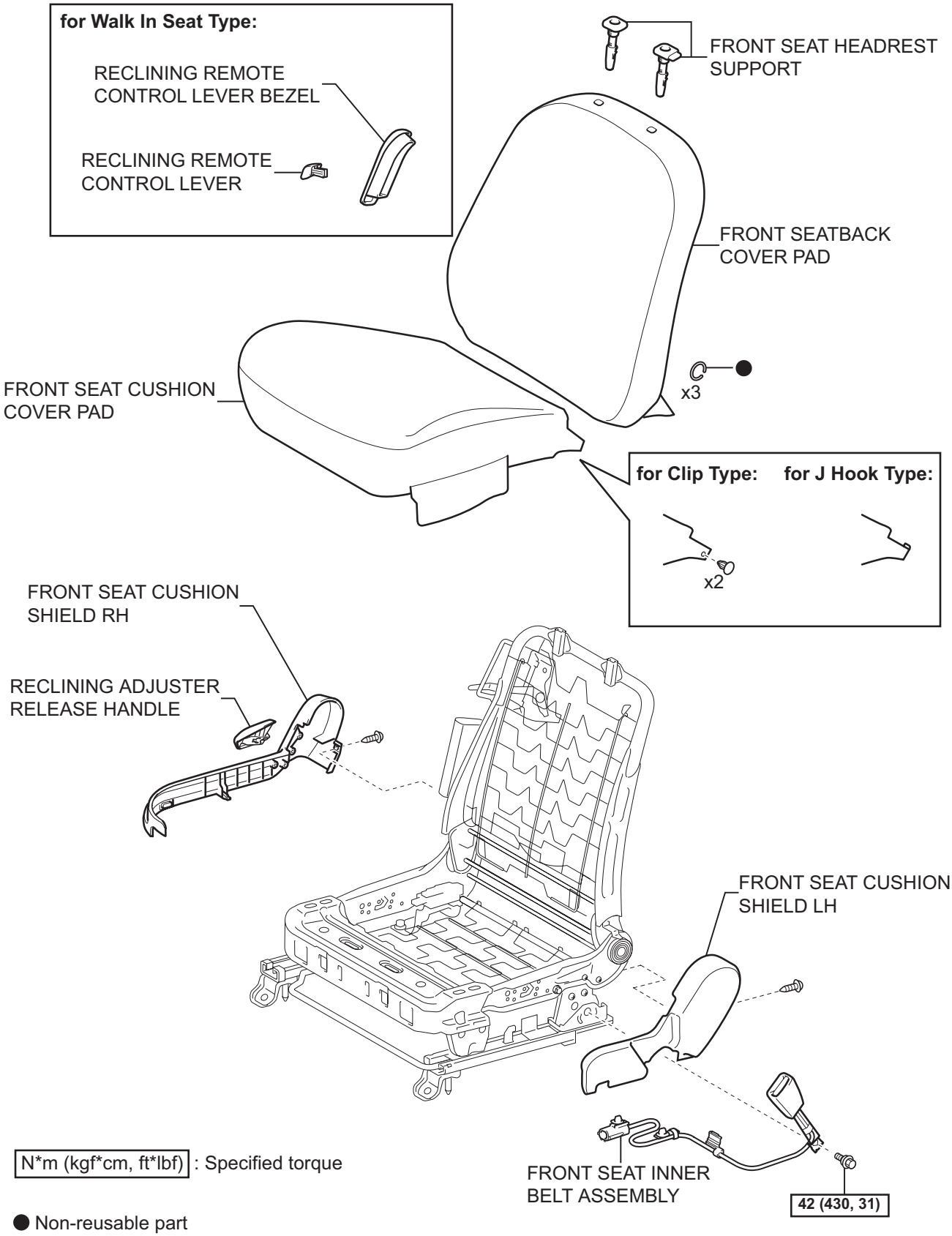

N*m (kgf*cm, ft*lbf) : Specified torque

● Non-reusable part

T

B114728E02

SE

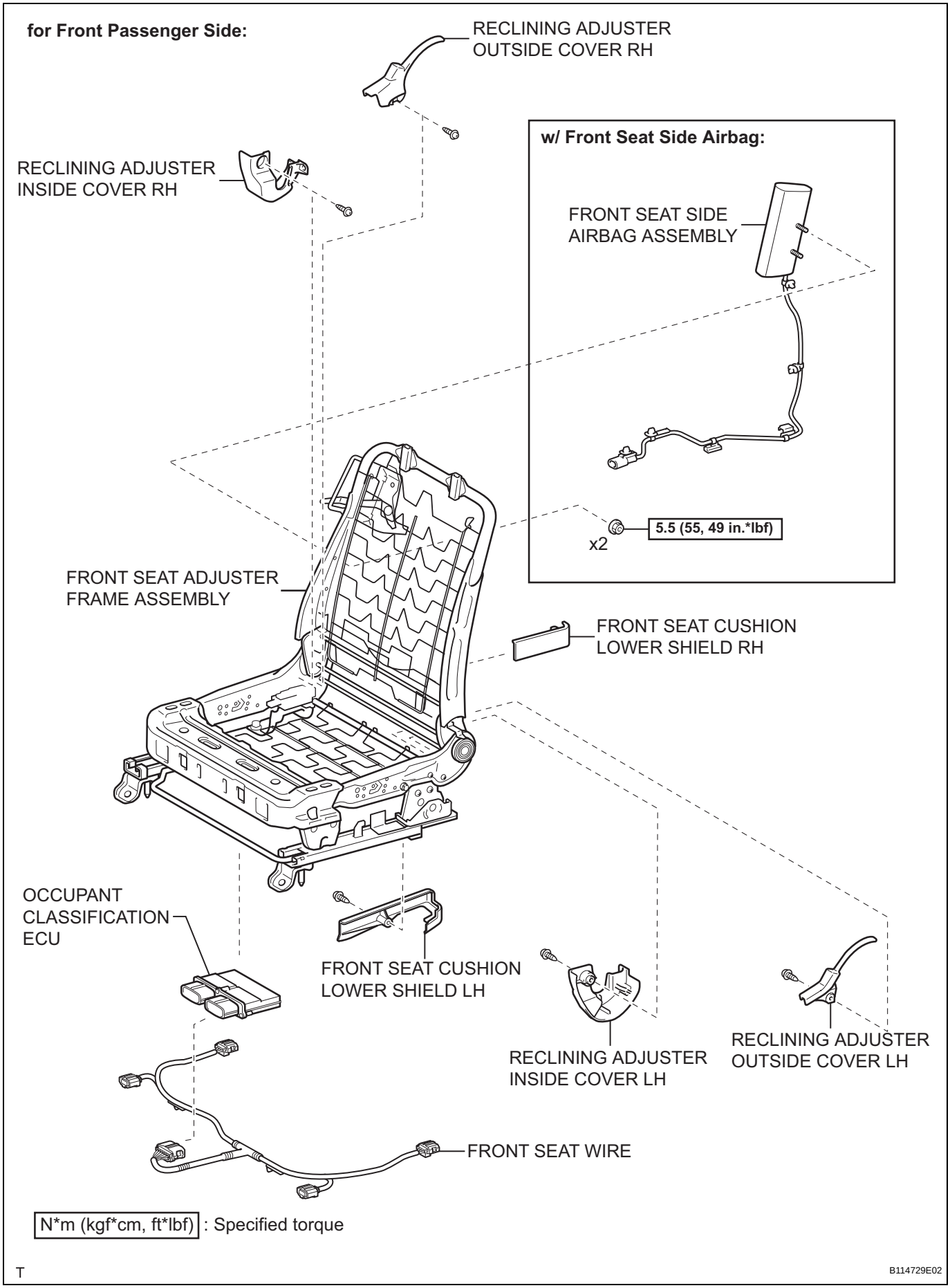
for Front Passenger Side:
RECLINING ADJUSTER OUTSIDE COVER RH
RECLINING ADJUSTER INSIDE COVER RH
w/ Front Seat Side Airbag:
FRONT SEAT SIDE AIRBAG ASSEMBLY
5.5 (55, 49 in.*lbf)
x2
FRONT SEAT ADJUSTER FRAME ASSEMBLY
FRONT SEAT CUSHION LOWER SHIELD RH
OCCUPANT CLASSIFICATION ECU
FRONT SEAT CUSHION LOWER SHIELD LH
RECLINING ADJUSTER INSIDE COVER LH
RECLINING ADJUSTER OUTSIDE COVER LH
FRONT SEAT WIRE
N*m (kgf*cm, ft*lbf) : Specified torque
T
B114729E02

SE

REMOVAL

CAUTION:
Some of these service operations affect the SRS airbag system. Read the precautionary notices concerning the SRS airbag system before servicing (w/ Front Seat Side Airbag) (See page RS-1).
NOTICE:
Always use "Torx" socket wrench E10 when removing the front seat.
HINT:
The procedure described below is for the driver side. Use the same procedure for both the front passenger and driver sides, unless otherwise specified.

1. DISCONNECT CABLE FROM NEGATIVE BATTERY TERMINAL
CAUTION:
Wait for at least 90 seconds after disconnecting the cable to prevent the airbag from working (w/ Front Seat Side Airbag).

2. REMOVE FRONT SEAT HEADREST ASSEMBLY
(a) Push in the lock buttons of the front seat headrest support and remove the front seat headrest.

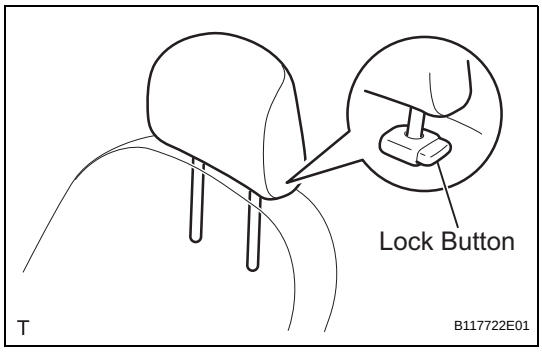

SE

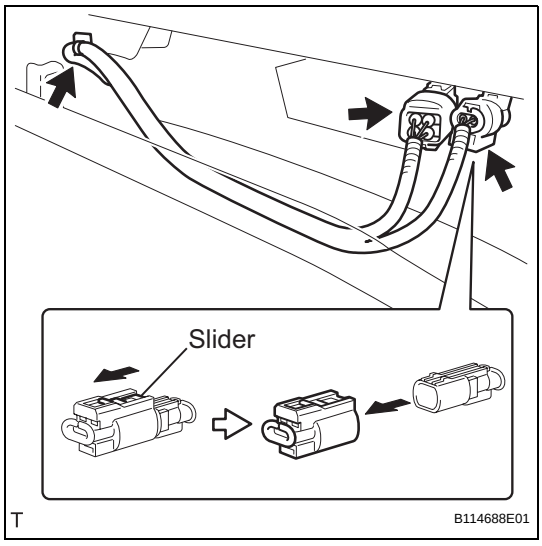

3. REMOVE FRONT SEAT ASSEMBLY
(a) for Driver Side:
(1) Disconnect the buckle switch connector.
(2) w/ Front Seat Side Airbag:
1. Slide the slider and disconnect the airbag connector.
(3) Using a clip remover, remove the clamp.

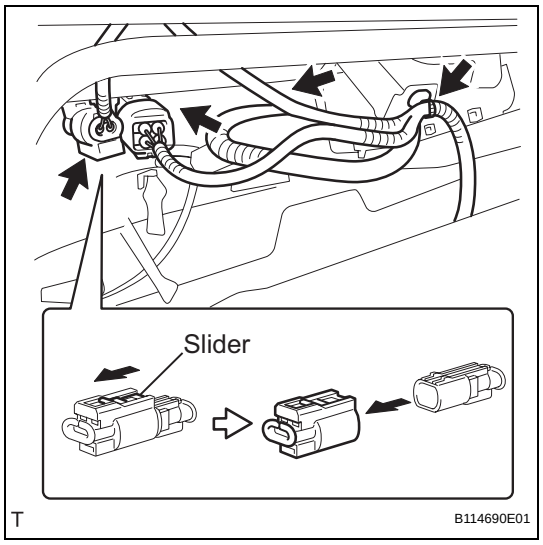

(b) for Front Passenger Seat:
  (1) Disconnect the buckle switch connector.
  (2) w/ Front Seat Side Airbag:
    1. Slide the slider and disconnect the airbag connector.
  (3) Disconnect the occupant classification ECU connector.
  (4) Using a clip remover, remove the clamp.

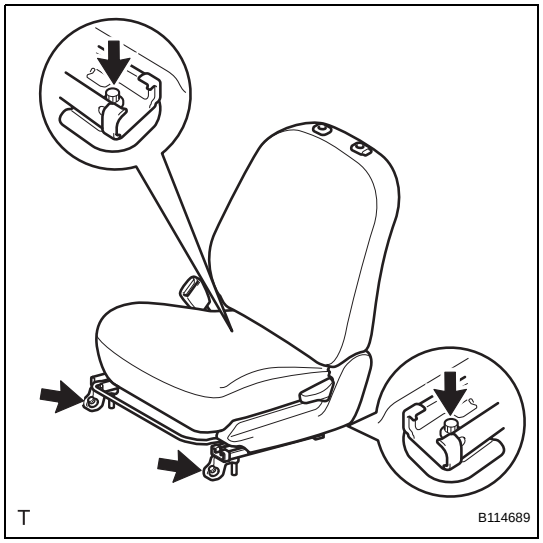

(c) Using "Torx" socket wrench E10, remove the 4 bolts and the front seat.

SE

DISASSEMBLY

CAUTION:
Wear protective gloves. Sharp surfaces on the front seat adjuster frame could cause injuries to your hands.
HINT:
The procedure described below is for the driver side. Use the same procedure for both the front passenger and driver sides, unless otherwise specified.

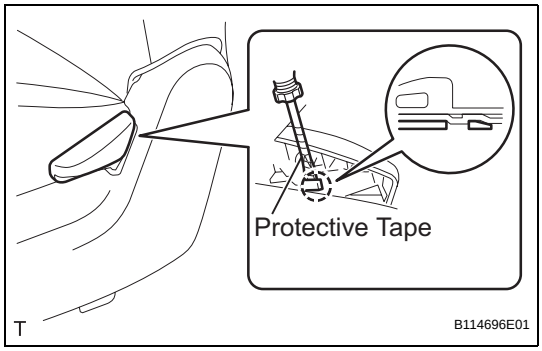

1. REMOVE RECLINING ADJUSTER RELEASE HANDLE
(a) Using a screwdriver with its tip wrapped in protective tape, disengage the claw and remove the reclining adjuster release handle.

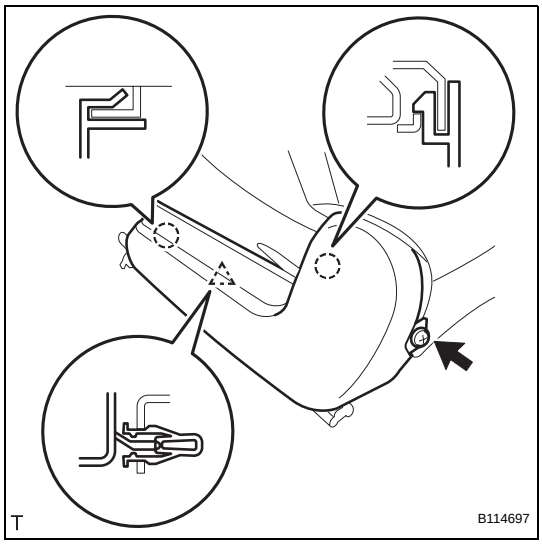

2. REMOVE FRONT SEAT CUSHION SHIELD LH
(a) Remove the screw.
(b) Using a screwdriver with its tip wrapped in protective tape, disengage the 2 claws and clip, and remove the front seat cushion shield.

3. REMOVE FRONT SEAT INNER BELT ASSEMBLY
(See page SB-39)

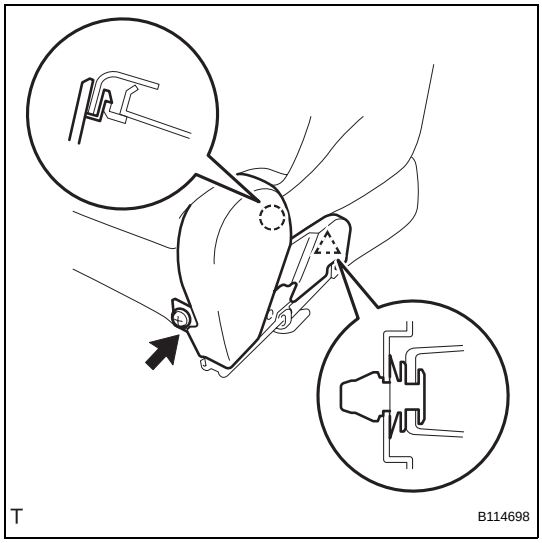

4. REMOVE FRONT SEAT CUSHION SHIELD RH
(a) Remove the screw.
(b) Using a screwdriver with its tip wrapped in protective tape, disengage the claw and clip, and remove the front seat cushion shield.

SE

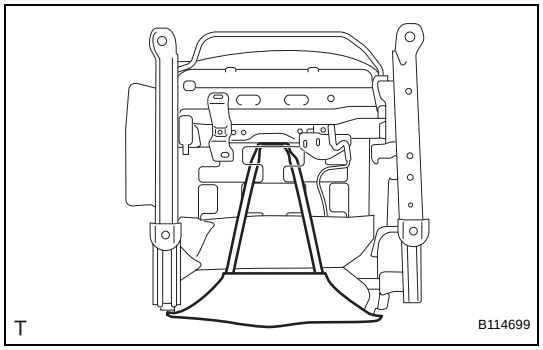

5. REMOVE FRONT SEAT CUSHION COVER PAD

(a) Remove the front seatback cover band.

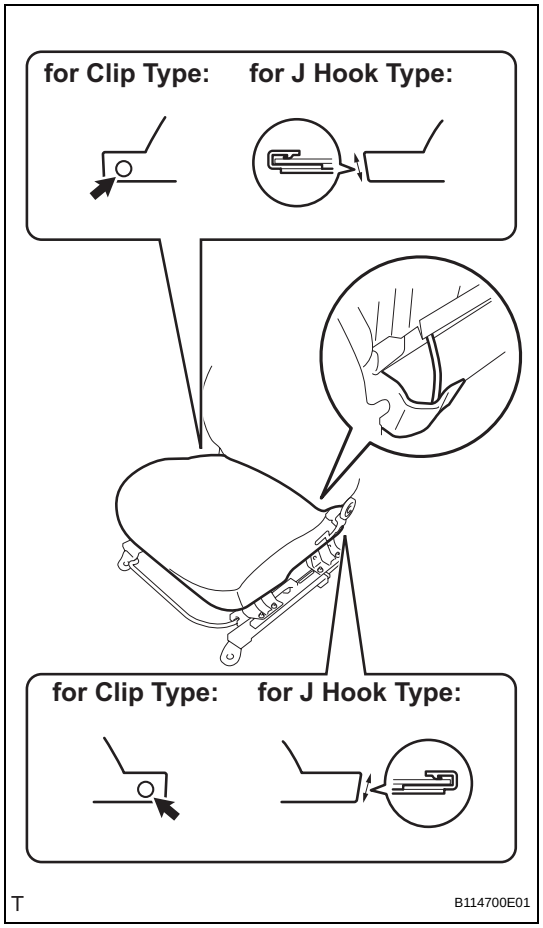

(b) for Clip Type:
  (1) Using a clip remover, remove the 2 clips.

(c) for J Hook Type:
  (1) Disengage the 2 hooks.

(d) w/ Front Seat Side Airbag:
  (1) Remove the hook tape from the front seat cushion cover pad fixing cover.

SE

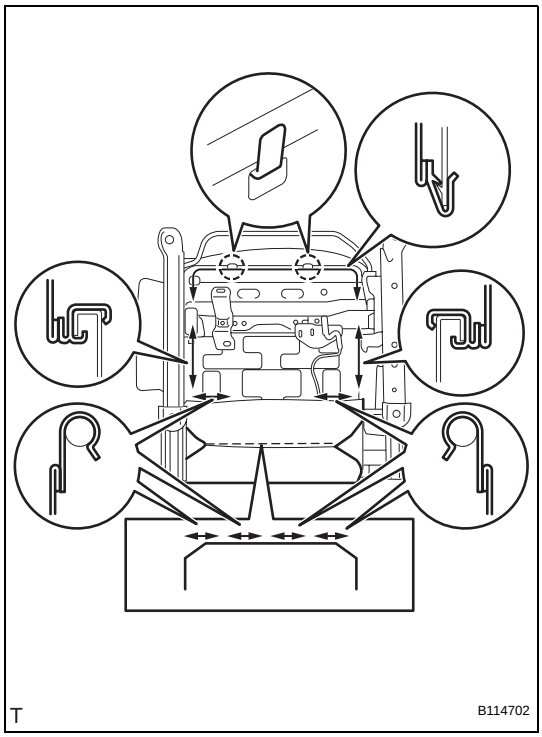

(e) Disengage the 2 claws and 9 hooks, and remove the front seat cushion cover pad.

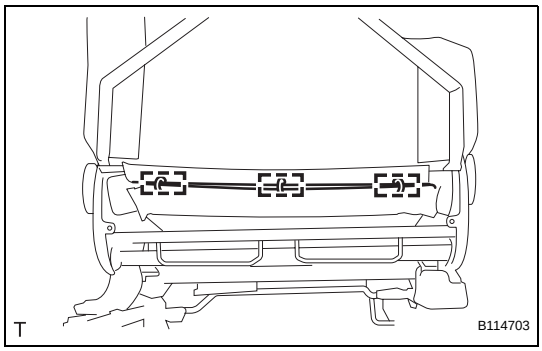

6. REMOVE FRONT SEAT HEADREST SUPPORT

(a) Remove the 3 hog rings shown in the illustration.

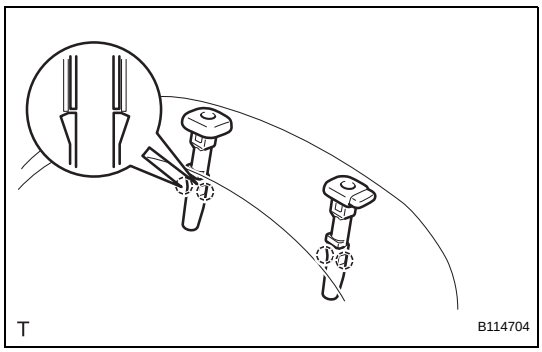

(b) Disengage the 2 claws and remove the front seat headrest support.
HINT:
Use the same procedure for both sides.

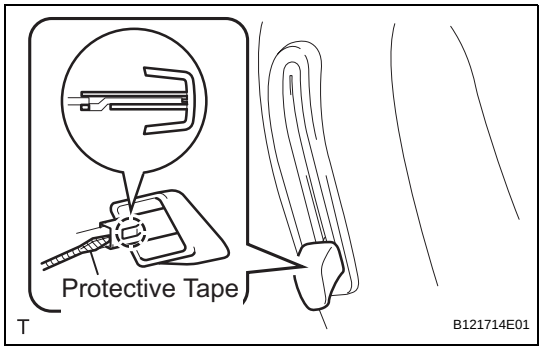

7. REMOVE RECLINING REMOTE CONTROL LEVER (for Walk in Seat Type)

(a) Using a screwdriver with its tip wrapped in protective tape, disengage the claw and remove the reclining adjuster release handle.

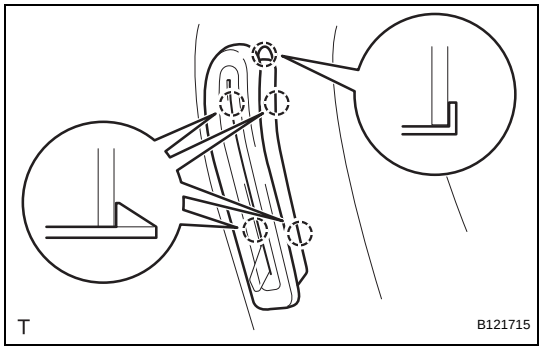

8. REMOVE RECLINING REMOTE CONTROL LEVER BEZEL (for Walk in Seat Type)

(a) Disengage the 5 claws and remove the reclining remote control lever bezel.

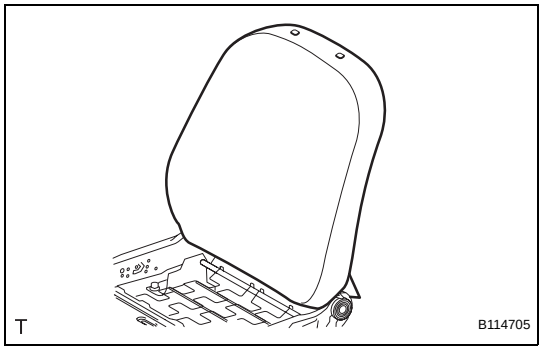

9. REMOVE FRONT SEATBACK COVER PAD

(a) Remove the front seatback cover pad.

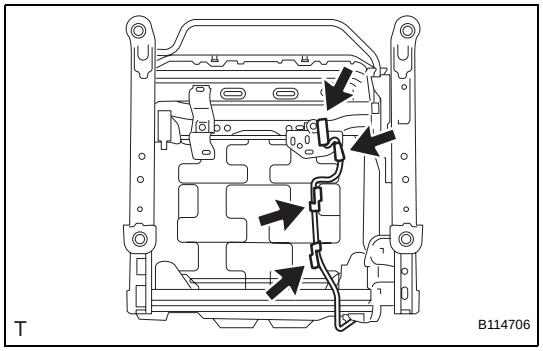

10. REMOVE FRONT SEAT SIDE AIRBAG ASSEMBLY (w/ Front Seat Side Airbag)

(a) Remove the airbag connector and the 3 clamps.

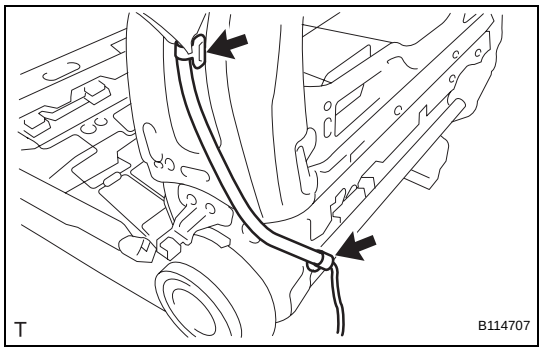

(b) Using a clip remover, remove the 2 clamps.

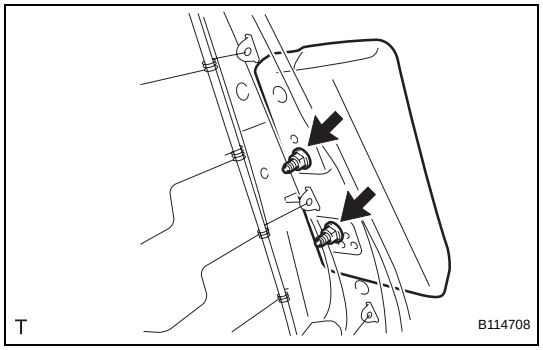

(c) Remove the 2 nuts and the front seat side airbag.

SE

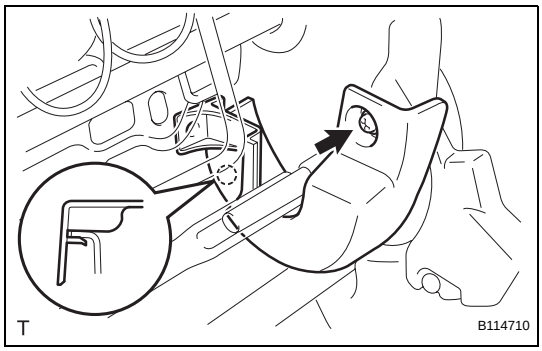

11. REMOVE RECLINING ADJUSTER INSIDE COVER LH
(a) Remove the screw.
(b) Disengage the claw and remove the reclining adjuster inside cover.

12. REMOVE RECLINING ADJUSTER INSIDE COVER RH
HINT:
Use the same procedure as for the LH side.

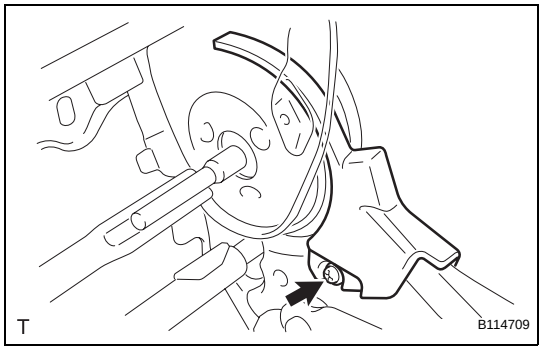

13. REMOVE RECLINING ADJUSTER OUTSIDE COVER LH
(a) Remove the screw and the reclining adjuster outside cover.

14. REMOVE RECLINING ADJUSTER OUTSIDE COVER RH
HINT:
Use the same procedure as for the LH side.

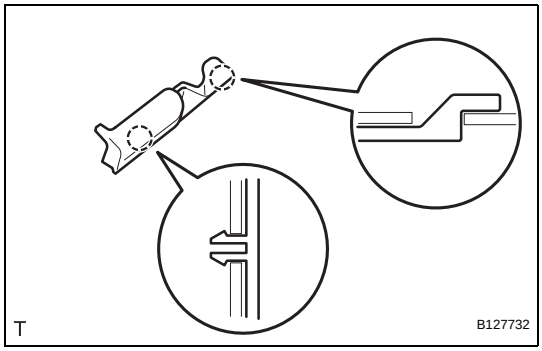

15. REMOVE FRONT SEAT CUSHION LOWER SHIELD LH
(a) Disengage the 2 claws and remove the front seat cushion lower shield.

SE

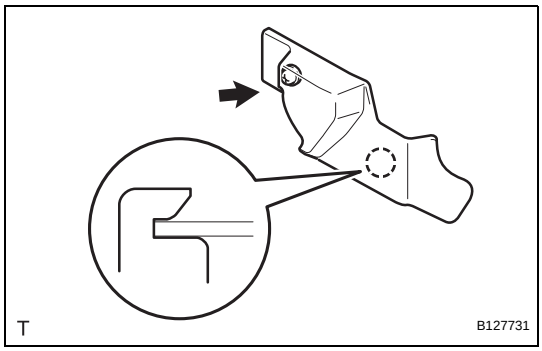

16. REMOVE FRONT SEAT CUSHION LOWER SHIELD RH
(a) Remove the screw.
(b) Disengage the claw and remove the front seat cushion lower shield.

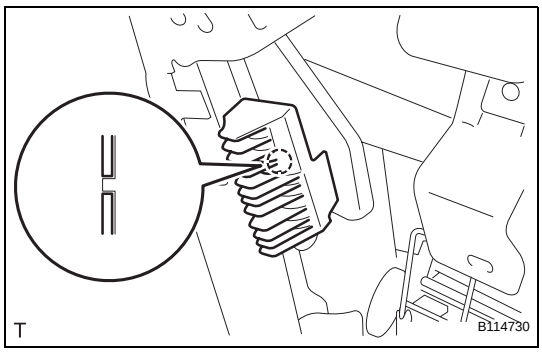

17. REMOVE SEAT POSITION SENSOR (for Driver Side)
(a) Disengage the pin and remove the seat position sensor protector.

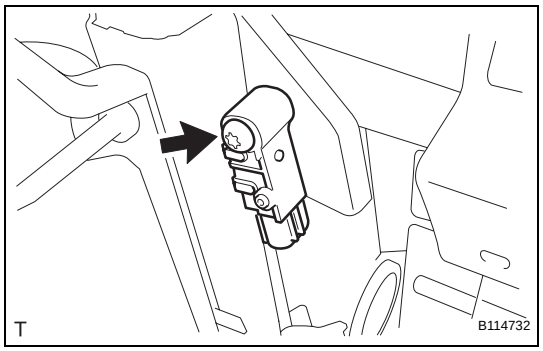

(b) Using "Torx" socket wrench T30, remove the bolt and the seat position sensor.

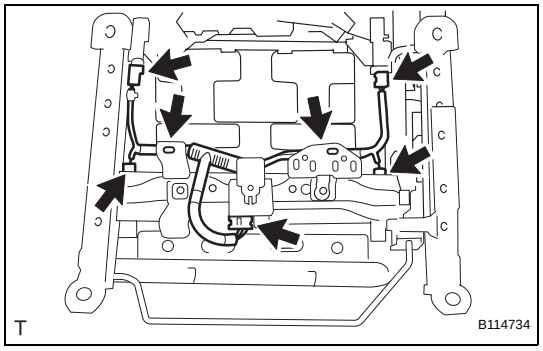

18. REMOVE FRONT SEAT WIRE (for Front Passenger Side)

(a) Disconnect the 5 connectors.
(b) Remove the 2 clamps and the front seat wire.

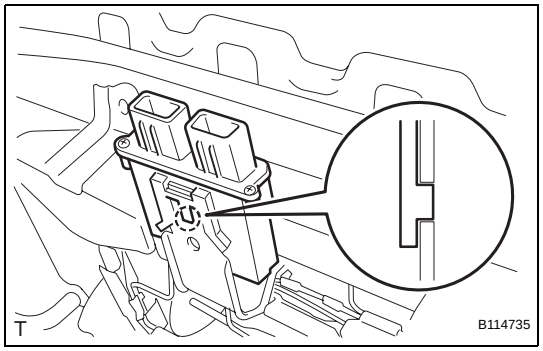

19. REMOVE OCCUPANT CLASSIFICATION ECU (for Front Passenger Side)

(a) Disengage the claw and remove the occupant classification ECU.

SE

REASSEMBLY

CAUTION:
Wear protective gloves. Sharp surfaces on the front seat adjuster frame could cause injuries to your hands.
HINT:
The procedure described below is for the driver side. Use the same procedure for both the front passenger and driver sides, unless otherwise specified.

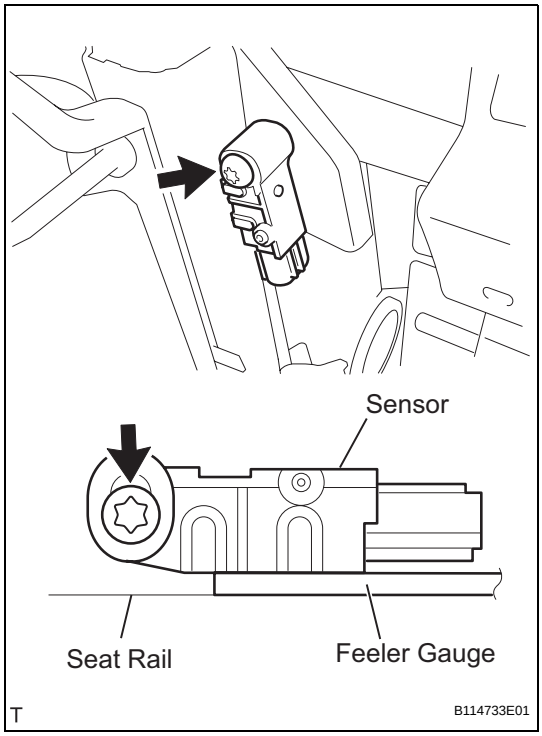

1. INSTALL SEAT POSITION SENSOR (for Driver Side)

(a) Provisionally install the seat position sensor.
NOTICE:
- **If the seat position sensor has been dropped, or there are any cracks, dents or other defects in the case, bracket or connector, replace the seat position sensor with a new one.**
- **When installing the seat position sensor, make sure that the SRS wiring does not interfere with other parts and is not pinched between other parts.**

(b) Install a 1 mm (0.04 in.) feeler gauge between the seat rail and seat position sensor, as shown in the illustration.
HINT:
Make sure that the clearance between the seat position sensor and seat rail is within 0.6 to 2 mm (0.023 to 0.079 in.).

(c) Push the top of the seat position sensor toward the seat rail.

(d) While holding the seat position sensor, tighten the seat position sensor using "Torx" socket wrench T30.
Torque: 8.0 N*m (70 kgf*cm, 71 in.*lbf)

SE

(e) Engage the pin and install a new seat position sensor protector.

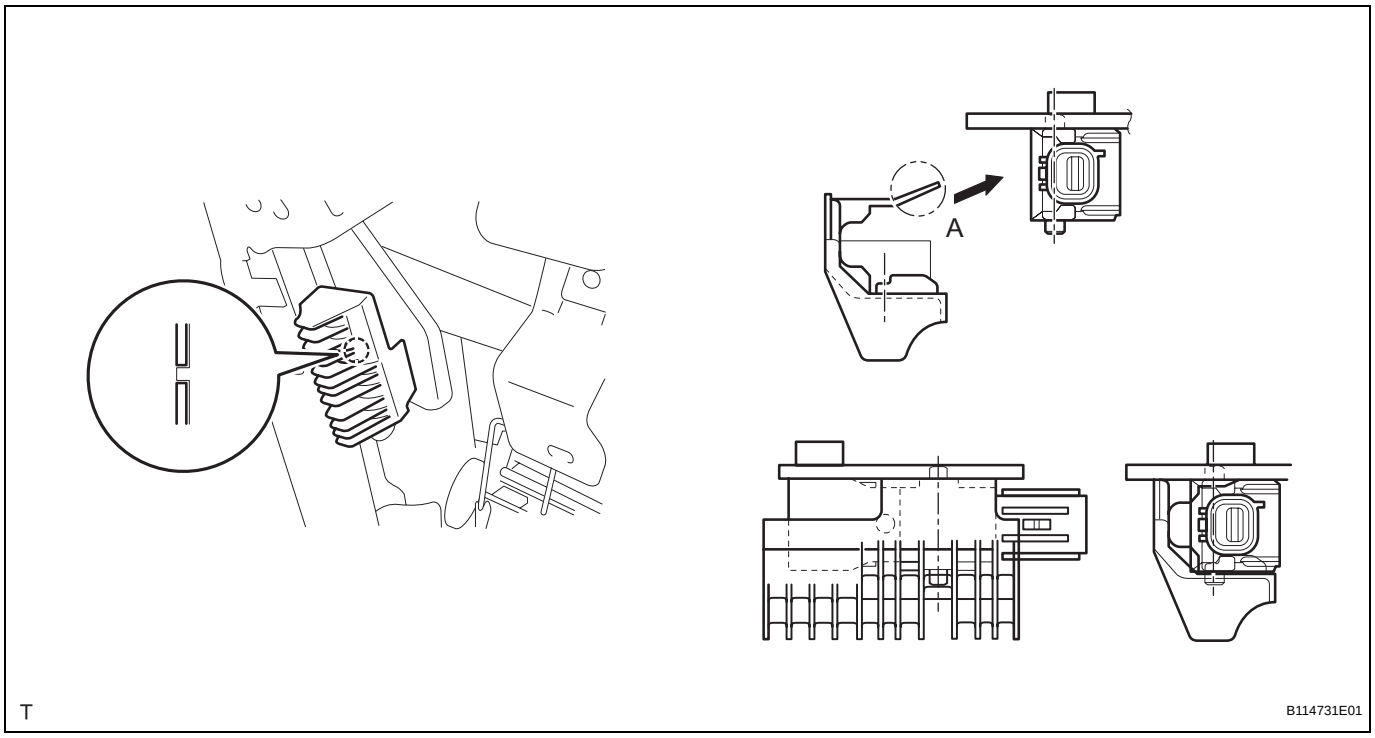

NOTICE:
Do not damage portion A, shown in the illustration, when installing the seat position sensor protector.

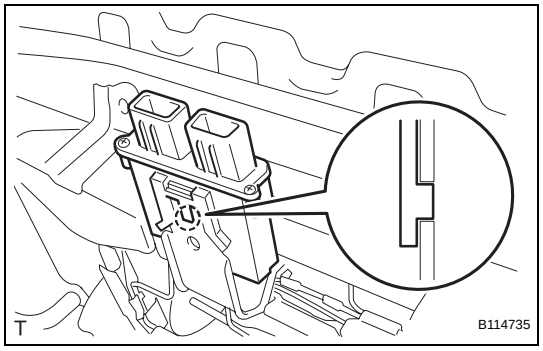

2. INSTALL OCCUPANT CLASSIFICATION ECU (for Front Passenger Side)

(a) Engage the claw and install the occupant classification ECU.

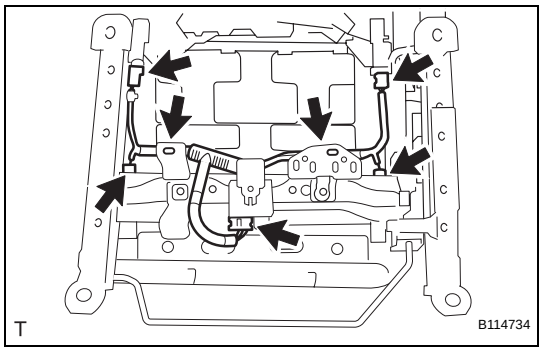

3. INSTALL FRONT SEAT WIRE (for Front Passenger Side)

(a) Install the front seat wire with the 2 clamps.
(b) Connect the 5 connectors.

SE

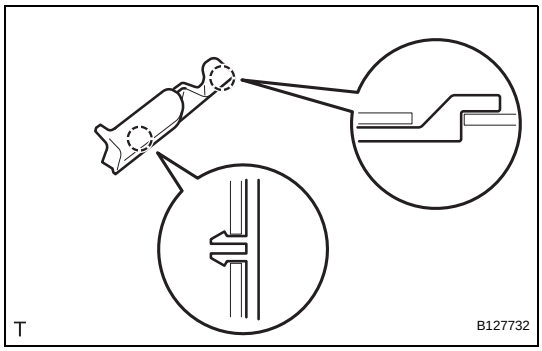

4. INSTALL FRONT SEAT CUSHION LOWER SHIELD LH

(a) Engage the 2 claws and install the front seat cushion lower shield.

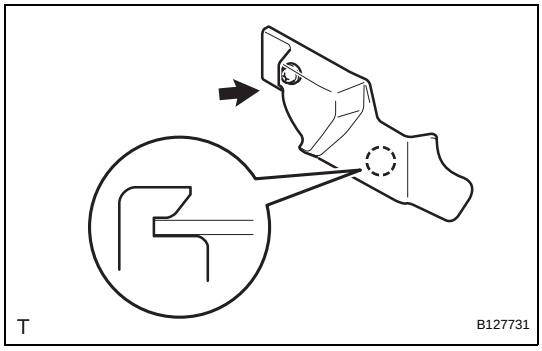

5. INSTALL FRONT SEAT CUSHION LOWER SHIELD RH

(a) Engage the claw and install the front seat cushion lower shield.

(b) Tighten the screw.

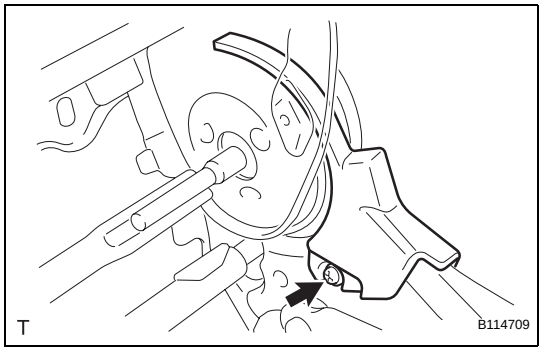

6. INSTALL RECLINING ADJUSTER OUTSIDE COVER LH

(a) Install the reclining adjuster outside cover with the screw.

7. INSTALL RECLINING ADJUSTER OUTSIDE COVER RH

HINT:

Use the same procedure as for the LH side.

SE

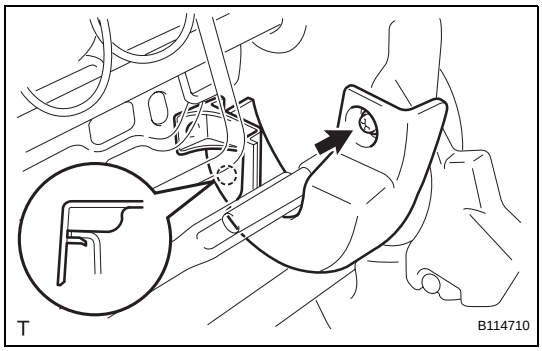

8. INSTALL RECLINING ADJUSTER INSIDE COVER LH

(a) Engage the claw and install the reclining adjuster inside cover.

(b) Tighten the screw.

9. INSTALL RECLINING ADJUSTER INSIDE COVER RH

HINT:

Use the same procedure as for the LH side.

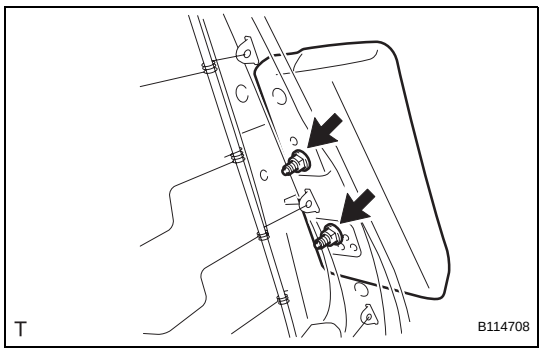

10. INSTALL FRONT SEAT SIDE AIRBAG ASSEMBLY (w/ Front Seat Side Airbag)

(a) Install the front seat side airbag with the 2 nuts.
Torque: 5.5 N*m (55 kgf*cm, 49 in.*lbf)

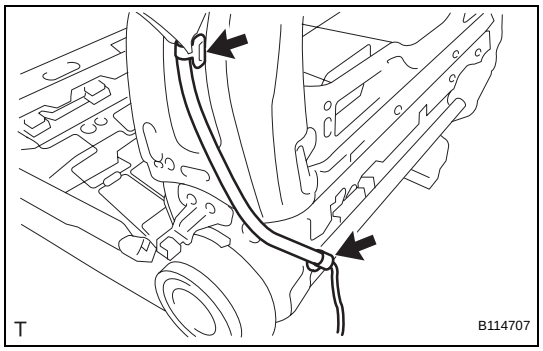

(b) Install the 2 clamps.

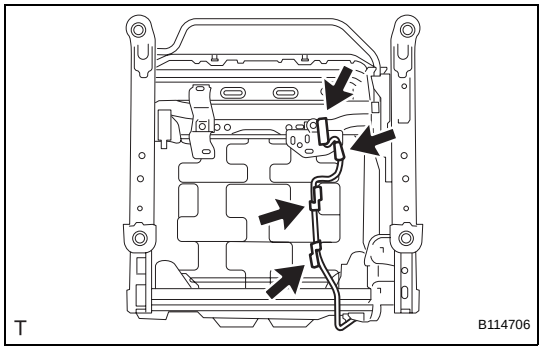

(c) Install the 3 clamps and the airbag connector.

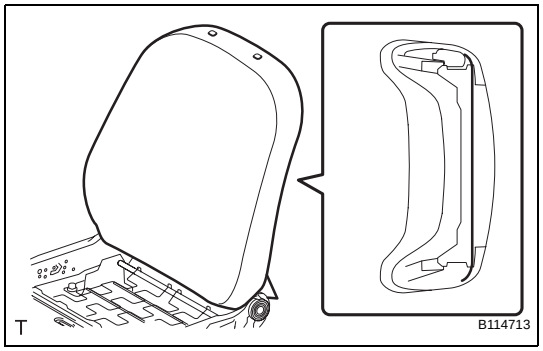

11. INSTALL FRONT SEATBACK COVER PAD

(a) Install the front seatback cover pad.

NOTICE:

The fabring for fixing the airbag must mot be wrinkled when installing the front seatback cover pad (w/ Front Seat Side Airbag).

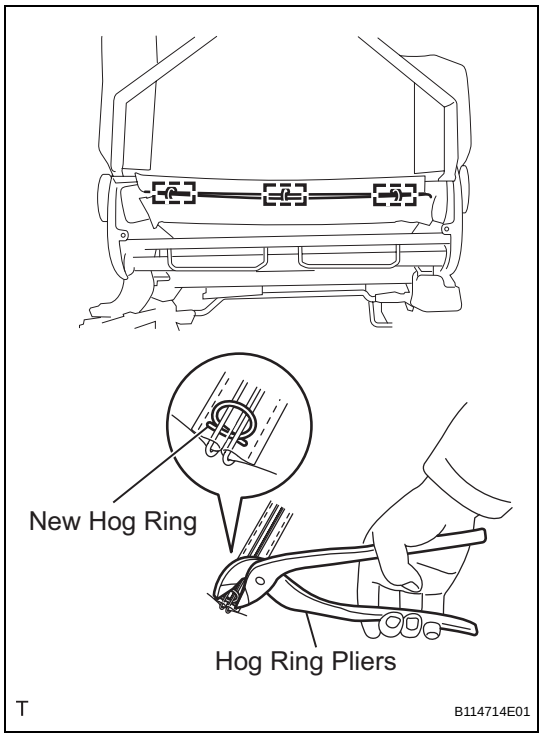

(b) Using hog ring pliers, install 3 new hog rings as shown in the illustration.

SE

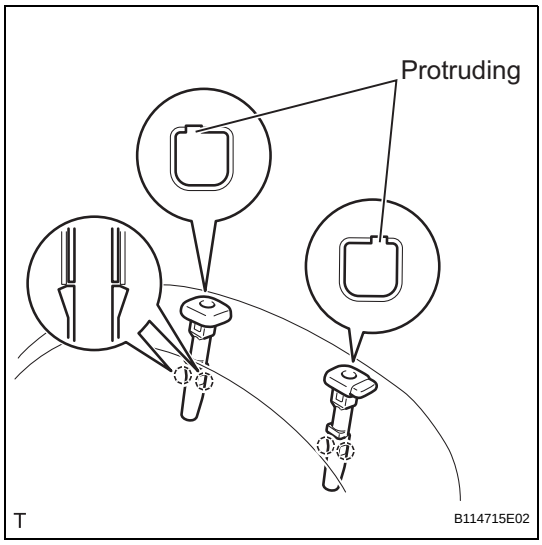

12. INSTALL FRONT SEAT HEADREST SUPPORT

HINT:

Use the same procedure for both sides.

(a) Align the protruding portion of the front seat headrest support with the installation groove of the front seat back frame.

(b) Engage the 2 claws and install the front seat headrest support.

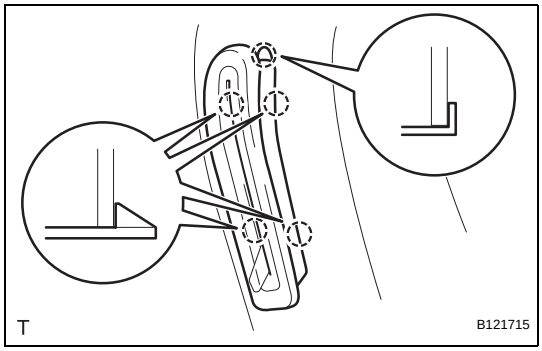

13. INSTALL RECLINING REMOTE CONTROL LEVER BEZEL (for Walk in Seat Type)

(a) Engage the 5 claws and install the reclining remote control lever bezel.

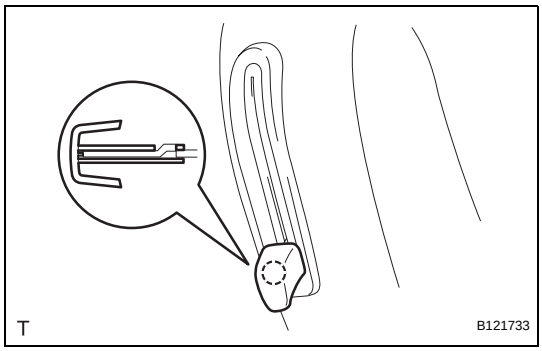

14. INSTALL RECLINING REMOTE CONTROL LEVER (for Walk in Seat Type)

(a) Engage the claw and install the reclining adjuster release handle.

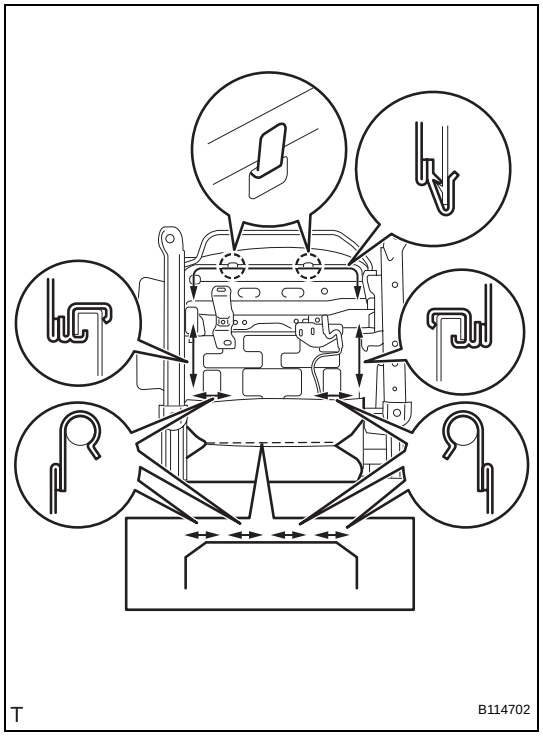

15. INSTALL FRONT SEAT CUSHION COVER PAD

(a) Engage the 2 claws and 9 hooks, and install the front seat cushion cover pad.

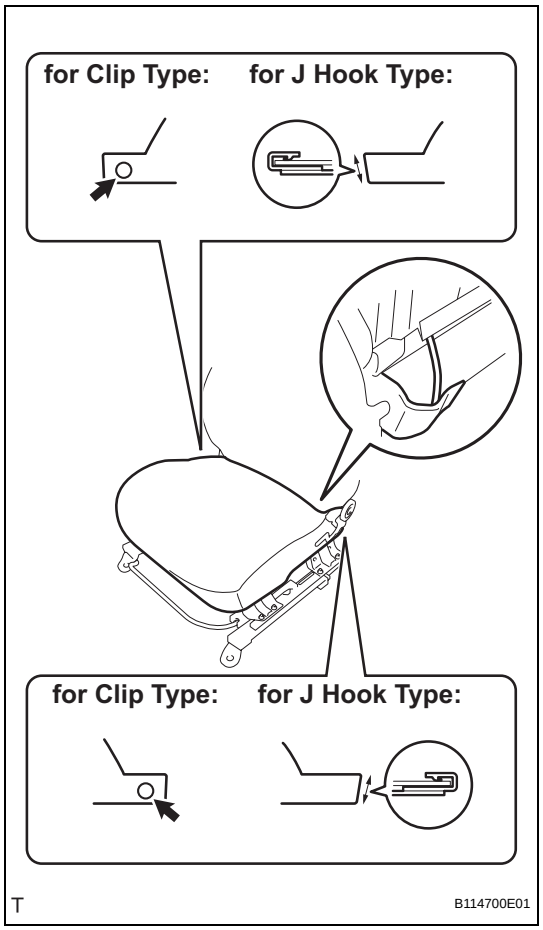

(b) w/ Front Seat Side Airbag:
  (1) Fix the front seat side airbag wire harness with the front seat cushion cover pad fixing cover.

(c) for Clip Type:
  (1) Install the 2 clips.

(d) for J Hook Type:
  (1) Engage the 2 hooks.

SE

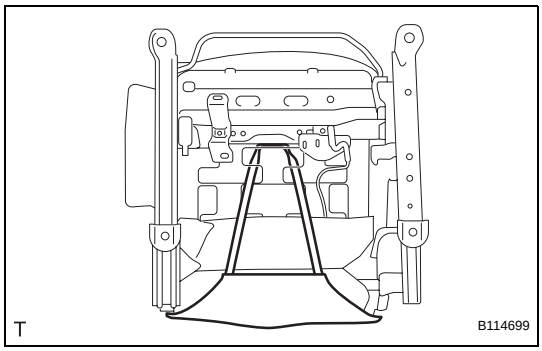

(e) Install the front seatback cover band.

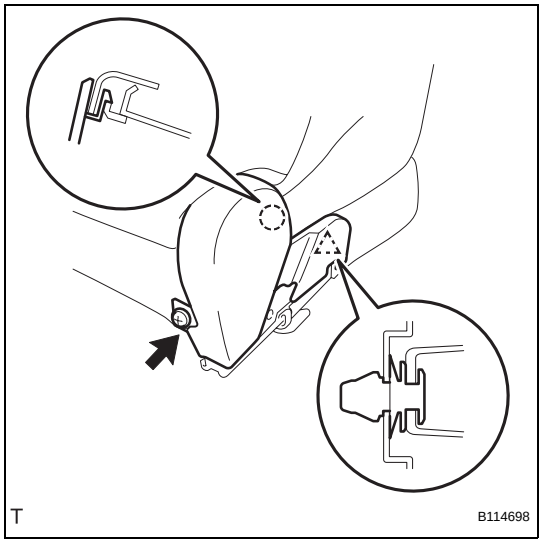

16. INSTALL FRONT SEAT CUSHION SHIELD RH

(a) Engage the claw and the clip and install the front seat cushion shield.
(b) Tighten the screw.

17. INSTALL FRONT SEAT INNER BELT ASSEMBLY (See page SB-41)

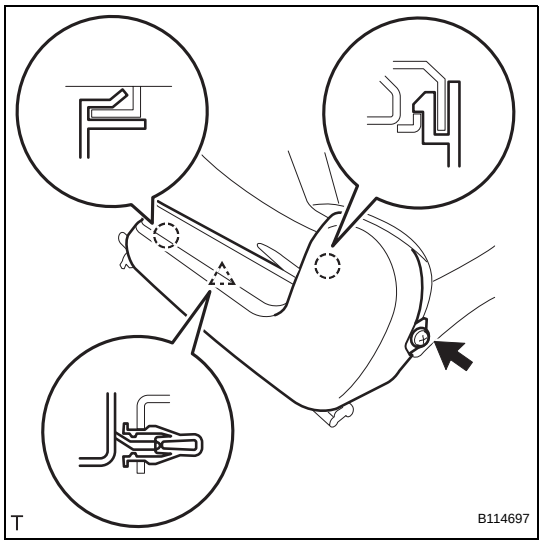

18. INSTALL FRONT SEAT CUSHION SHIELD LH

(a) Engage the 2 claws and the clip and install the front seat cushion shield.
(b) Tighten the screw.

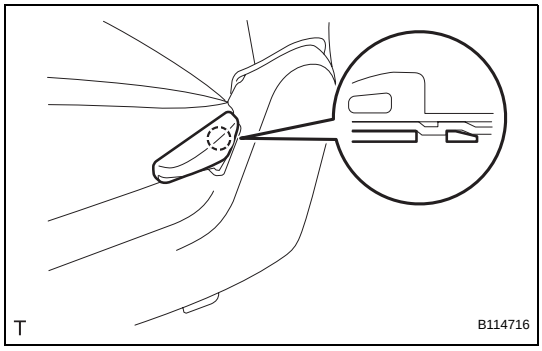

19. INSTALL RECLINING ADJUSTER RELEASE HANDLE

(a) Engage the claw and install the reclining adjuster release handle.

SE

INSTALLATION

CAUTION:
Some of these service operations affect the SRS airbag system. Read the precautionary notices concerning the SRS airbag system before servicing (w/ Front Seat Side Airbag) (See page RS-1).
NOTICE:
Always use "Torx" socket wrench E10 when installing the front seat.
HINT:
The procedure described below is for the driver side. Use the same procedure for both front passenger and driver sides, unless otherwise specified.

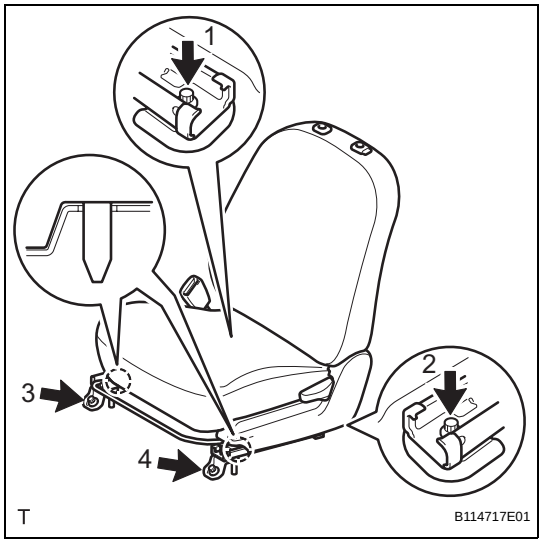

1. INSTALL FRONT SEAT ASSEMBLY
NOTICE:
Follow the procedure described below in order to prevent the seat tracks from locking separately.
(a) Insert the 2 location pins through the 2 body holes, place the front seat in the most forward position and make sure that the inner and outer seat tracks are locked securely.
(b) Using "Torx" socket wrench E10, install bolt 1 and then bolt 2 onto the rear side.
Torque: 37 N*m (375 kgf*cm, 27 ft.*lbf)
(c) Move the front seat to the most rearward position, and then make sure that the inner and outer seat tracks are securely locked.
(d) Using "Torx" socket wrench E10, install bolt 3 and then bolt 4 onto the rear side.
Torque: 37 N*m (375 kgf*cm, 27 ft.*lbf)
(e) Make sure that the inner and outer seat tracks lock simultaneously after the seat is moved.
HINT:
If the inner and outer seat tracks do not lock simultaneously, adjust the seat tracks by loosening the bolts.

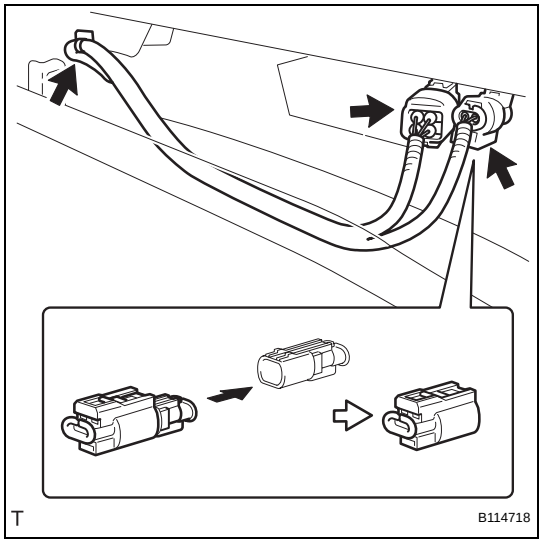

(f) for Driver Side:
(1) w/ Front Seat Side Airbag:
1. Connect the airbag connector.
(2) Connect the buckle switch connector.
(3) Install the clamp.

SE

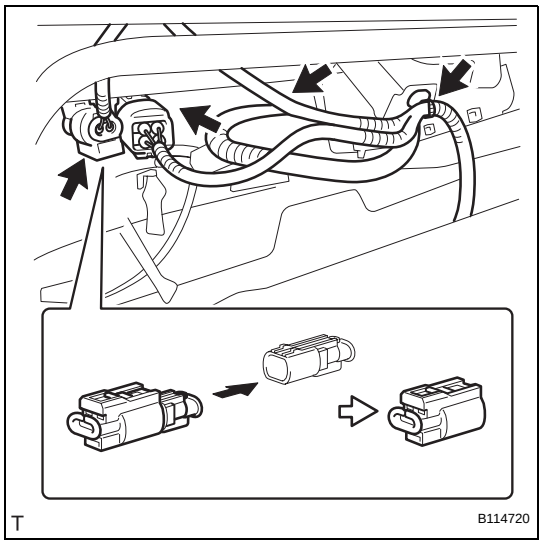

(g) for Front Passenger Side:
  (1) w/ Front Seat Side Airbag:
    1. Connect the airbag connector.
  (2) Connect the occupant classification ECU connector.
  (3) Connect the buckle switch connector.
  (4) Install the clamp.

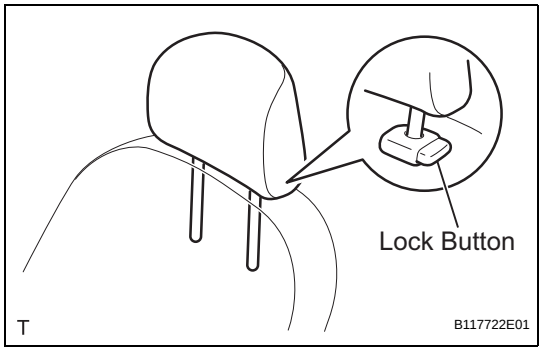

2. INSTALL FRONT SEAT HEADREST ASSEMBLY

(a) Push in the 2 lock buttons of the front seat headrest supports and install the 2 front seat headrests.

3. CONNECT CABLE TO NEGATIVE BATTERY TERMINAL

Torque: 5.4 N*m (55 kgf*cm, 48 in.*lbf)

4. INSPECT SRS WARNING LIGHT (w/ Front Seat Side Airbag)

(See page RS-31)

REAR SEAT ASSEMBLY (for Sedan 60/40 Split Seat Type LH Side)

COMPONENTS

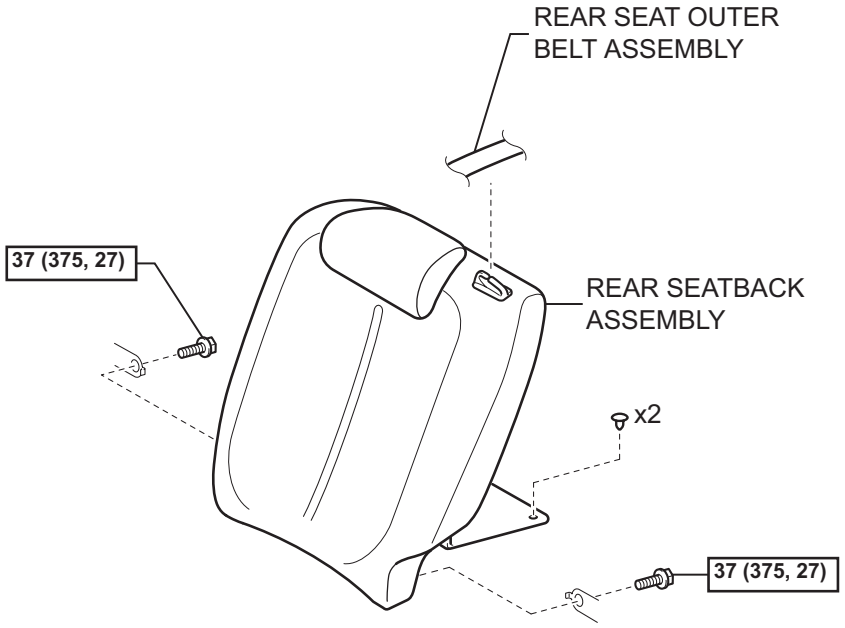

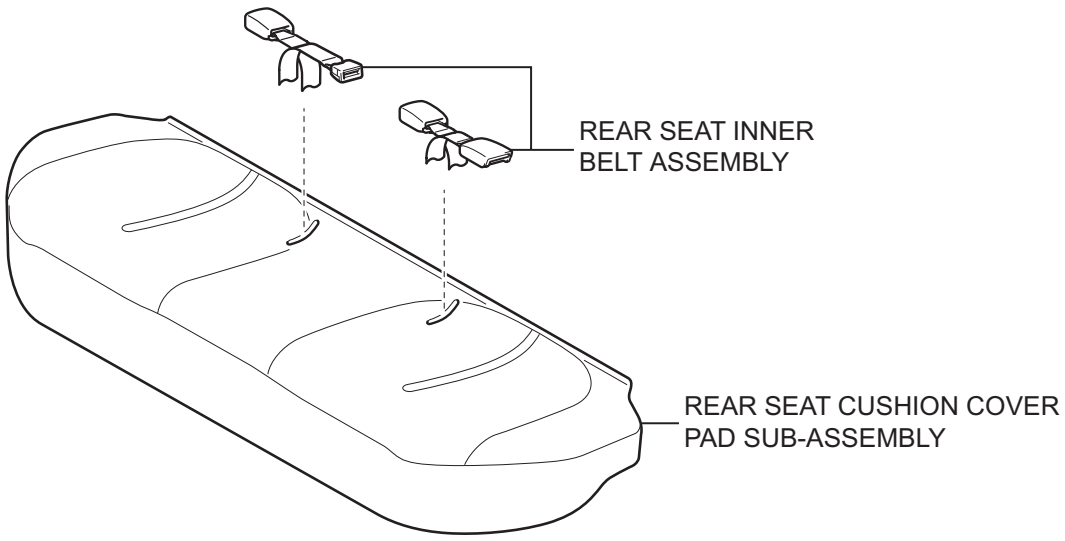

N*m (kgf*cm, ft*lbf) : Specified torque

T

B134921E01

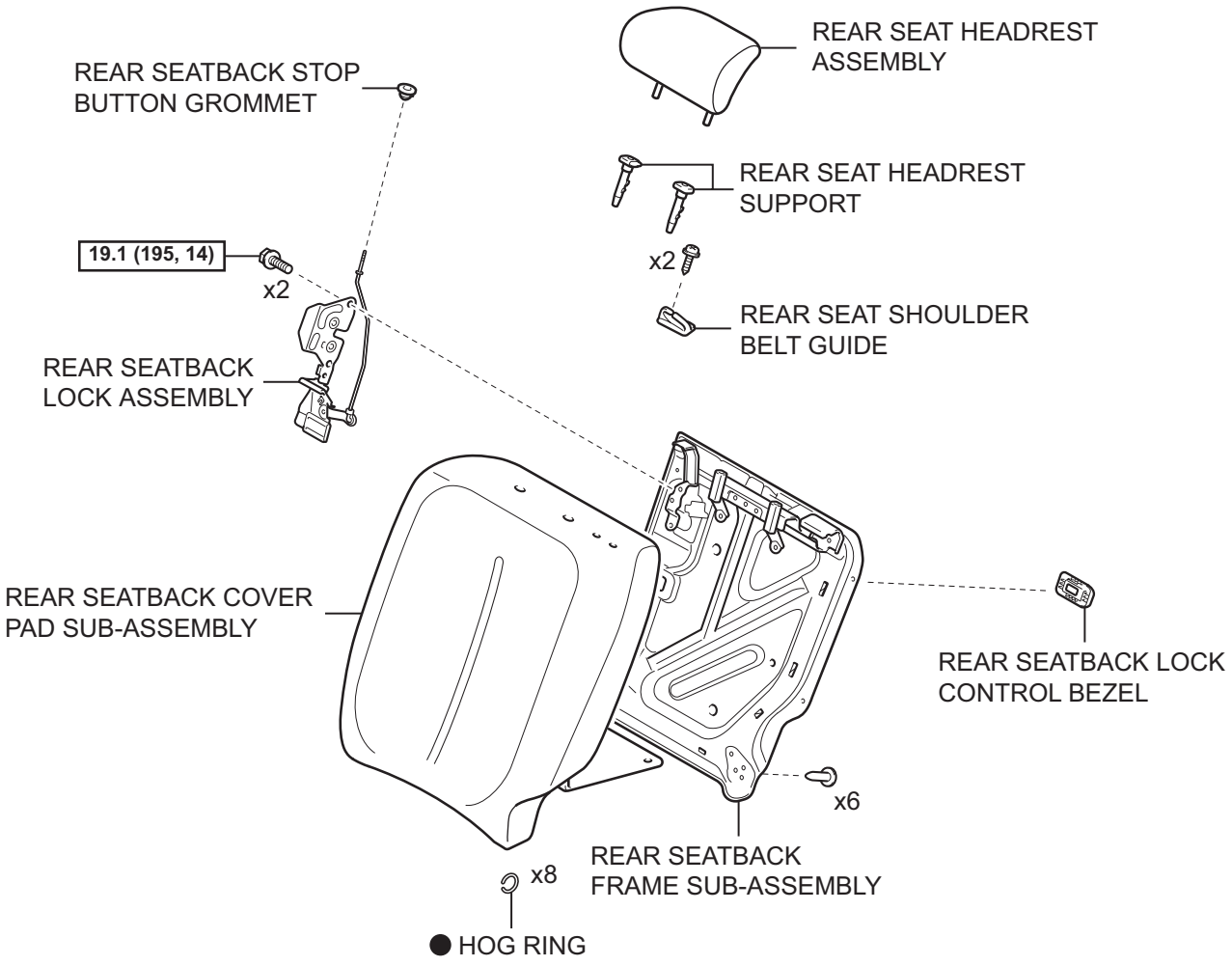

N*m (kgf*cm, ft*lbf) : Specified torque

● Non-reusable part

T

B138548E01

SE

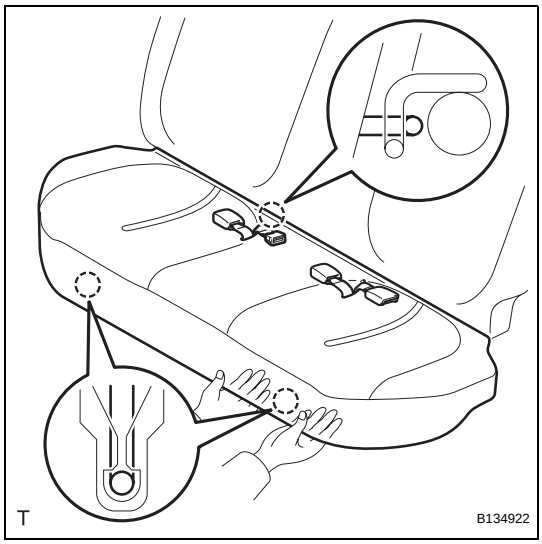

REMOVAL

1. REMOVE REAR SEAT CUSHION COVER PAD SUB-ASSEMBLY

(a) Hold the front edge of the rear seat cushion cover pad and lift it up, as shown in the illustration, to disengage the 2 hooks.

NOTICE:

Hold the area around the hooks so as to avoid deforming the rear seat cushion frame.

(b) Pass the rear seat inner belt through the slit in the rear seat cushion cover pad, disengage the hook between the rear seat cushion cover pad and the rear seatback, and remove the rear seat cushion cover pad.

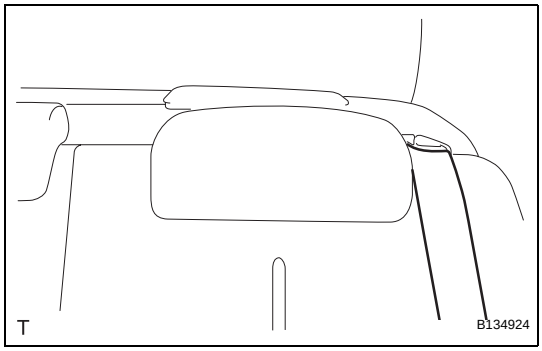

2. REMOVE REAR SEATBACK ASSEMBLY

(a) Remove the rear seat outer belt from the rear seat shoulder belt guide.

(b) Pull the rear seatback lock release button and tilt the rear seatback forward.

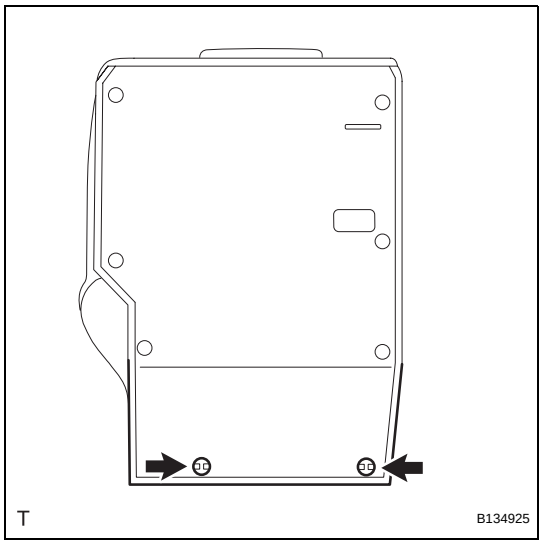

(c) Using a clip remover, remove the 2 clips and the rear seatback cover.

SE

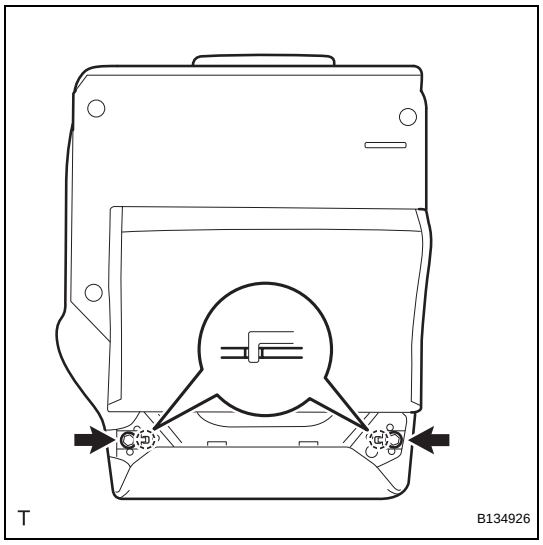

(d) Remove the 2 bolts, the 2 hooks and the rear seatback.

DISASSEMBLY

CAUTION:
Wear protective gloves. Sharp surfaces on the rear seatback frame could cause injuries to your hands.

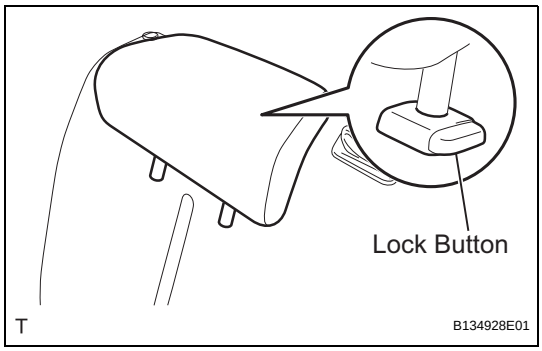

1. REMOVE REAR SEAT HEADREST ASSEMBLY
(a) Push the lock button of the rear seat headrest support and remove the rear seat headrest.

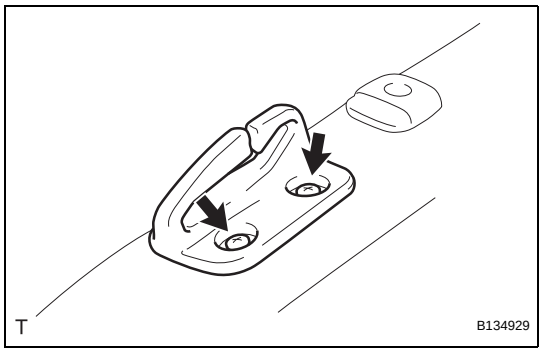

2. REMOVE REAR SEAT SHOULDER BELT GUIDE
(a) Remove the 2 screws and the rear seat shoulder belt guide.

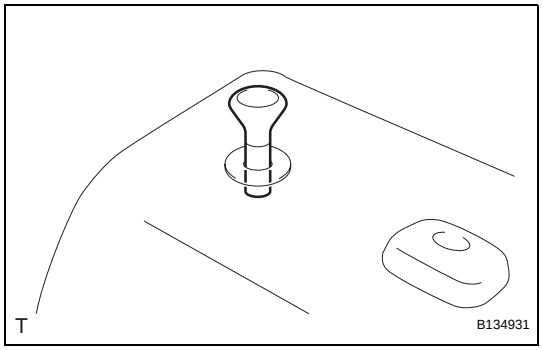

3. REMOVE REAR SEATBACK LOCK RELEASE BUTTON
(a) Remove the rear seatback lock release button.

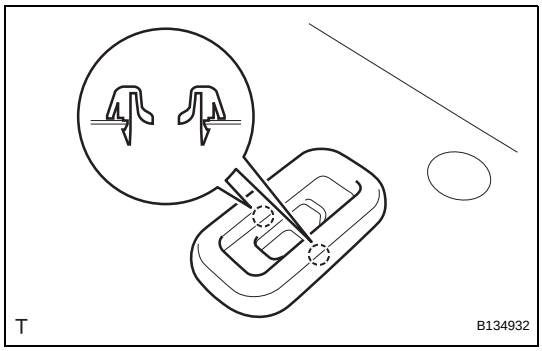

4. REMOVE REAR SEATBACK LOCK CONTROL BEZEL
(a) Disengage the 2 claws and remove the rear seatback lock control bezel.

SE

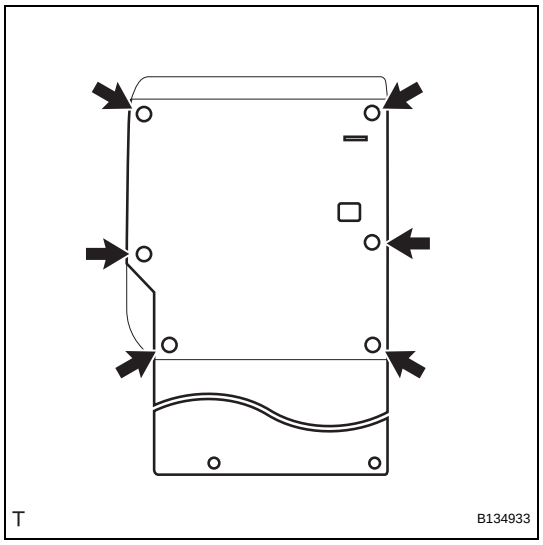

5. REMOVE REAR SEAT HEADREST SUPPORT

(a) Using a clip remover, remove the 6 clips and open the rear seatback cover.

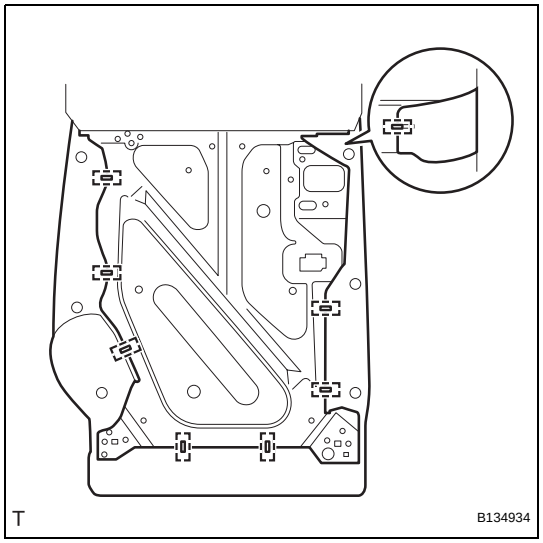

(b) Remove the 8 hog rings.

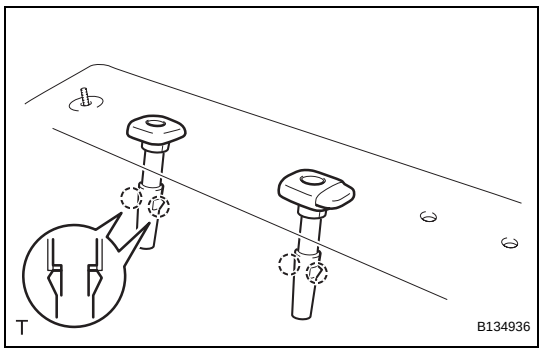

(c) Disengage the 2 claws and remove the rear seat headrest support.
HINT:
Use the same procedure for both sides.

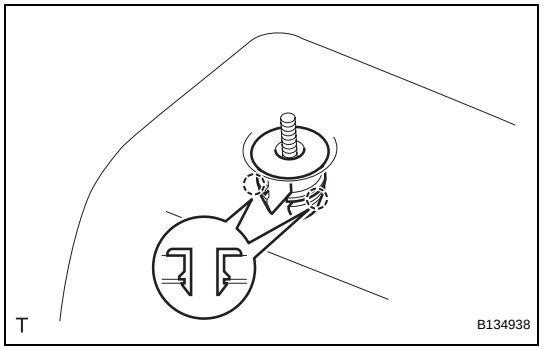

6. REMOVE REAR SEATBACK STOP BUTTON GROMMET

(a) Disengage the 2 claws and remove the rear seatback stop button grommet.

SE

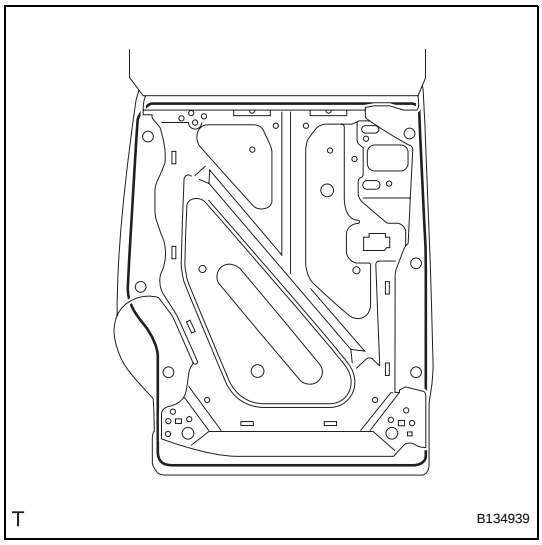

7. REMOVE REAR SEATBACK FRAME SUB-ASSEMBLY

(a) Remove the rear seatback frame.

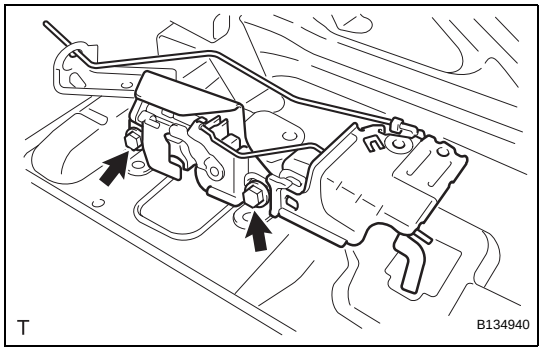

8. REMOVE REAR SEATBACK LOCK ASSEMBLY

(a) Remove the 2 bolts and the rear seatback lock.

REASSEMBLY

CAUTION:
Wear protective gloves. Sharp surfaces on the rear seatback frame could cause injuries to your hands.

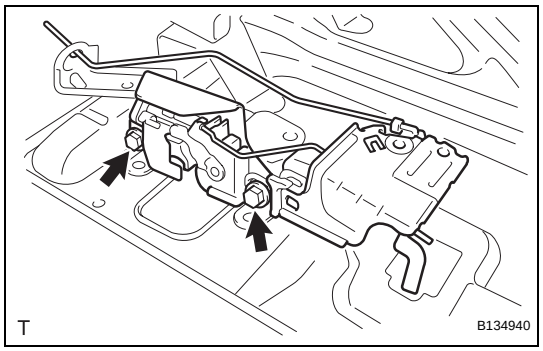

1. INSTALL REAR SEATBACK LOCK ASSEMBLY

(a) Install the rear seatback lock with the 2 bolts.
Torque: 19.1 N*m (195 kgf*cm, 14 ft.*lbf)

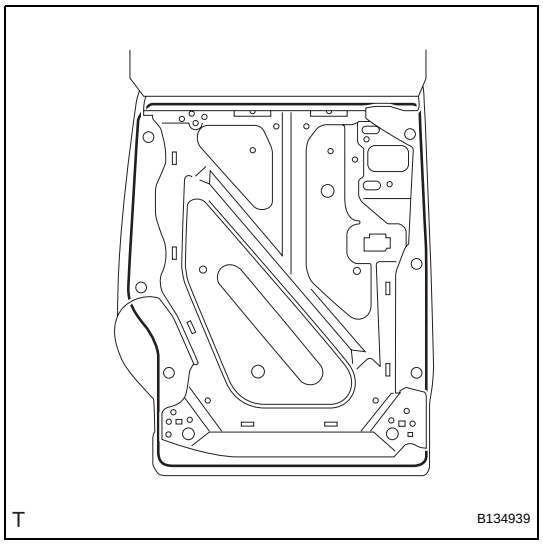

2. INSTALL REAR SEATBACK FRAME SUB-ASSEMBLY

(a) Install the rear seatback frame.

SE

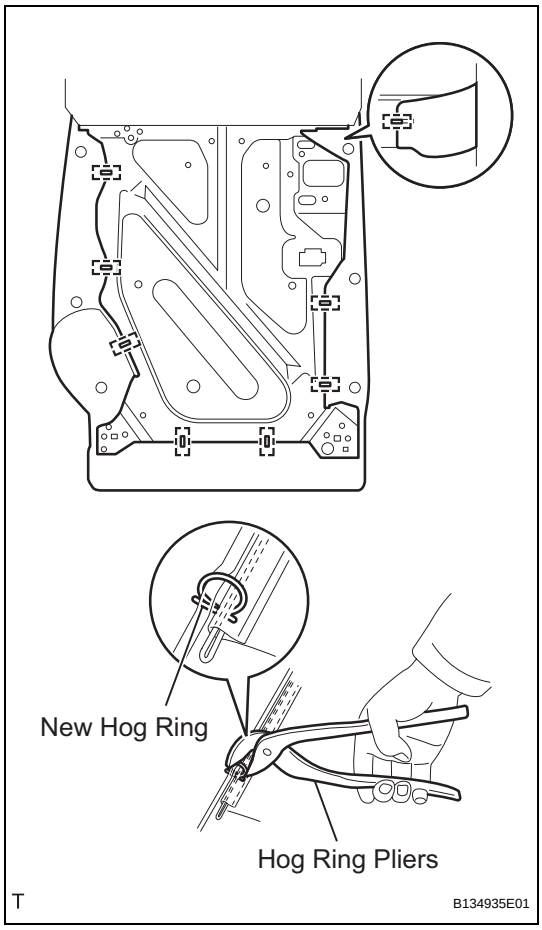

(b) Using hog ring pliers, install 8 new hog rings as shown in the illustration.

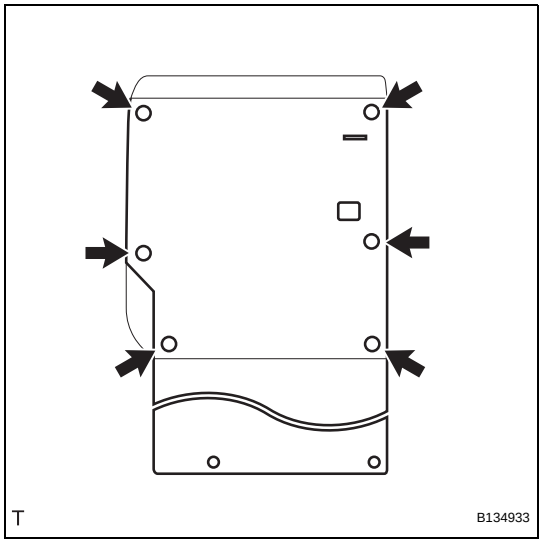

(c) Install the rear seatback cover with the 6 clips.

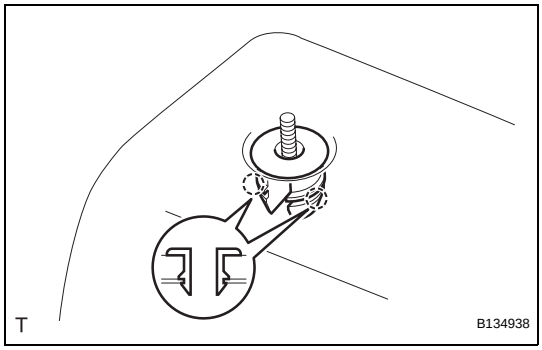

3. INSTALL REAR SEATBACK STOP BUTTON GROMMET

(a) Engage the 2 claws and install the rear seatback stop button grommet.

SE

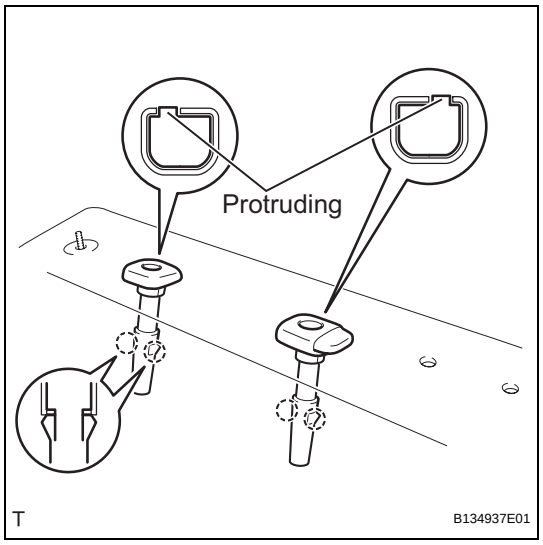

4. INSTALL REAR SEAT HEADREST SUPPORT

HINT:

Use the same procedure for both sides.

(a) Align the protruding portion of the rear seat headrest support with the installation groove of the rear seatback frame.

(b) Engage the 2 claws and install the rear seat headrest support.

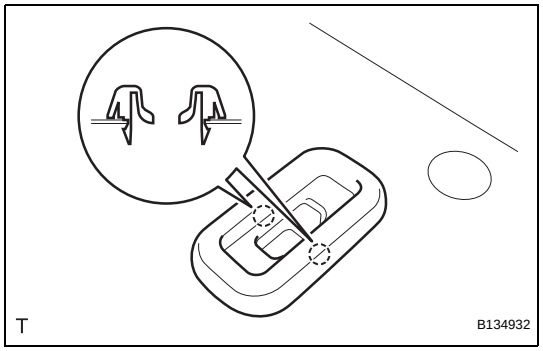

5. INSTALL REAR SEATBACK LOCK CONTROL BEZEL

(a) Engage the 2 claws and install the rear seatback lock control bezel.

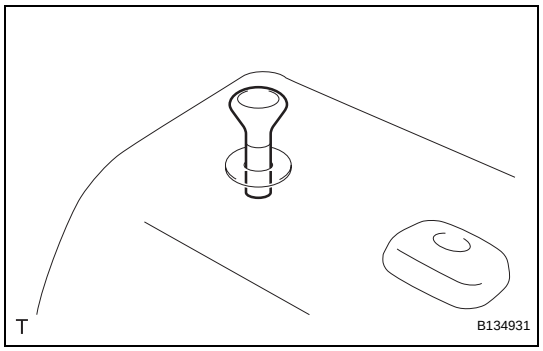

6. INSTALL REAR SEATBACK LOCK RELEASE BUTTON

(a) Install the rear seatback lock release button.

SE

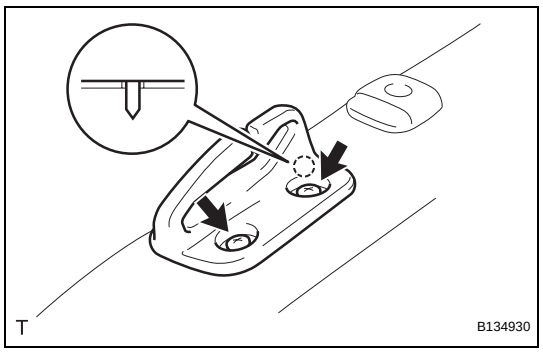

7. INSTALL REAR SEAT SHOULDER BELT GUIDE

(a) Insert the pin into the rear seatback frame hole and install the rear seat shoulder belt guide with the 2 screws.

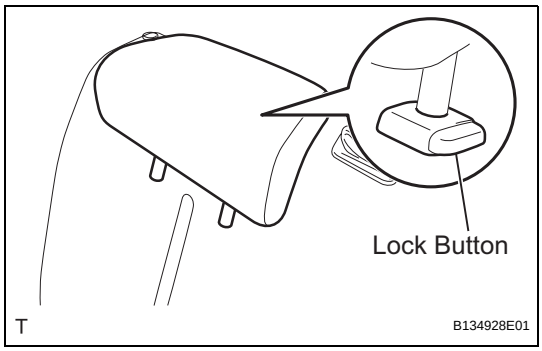

8. INSTALL REAR SEAT HEADREST ASSEMBLY

(a) Push the lock button of the rear seat headrest support and install the rear seat headrest.

INSTALLATION

1. INSTALL REAR SEATBACK ASSEMBLY

(a) Insert the 2 hooks into the rear seatback frame hole and install the rear seatback, tightening the 2 bolts in the sequence shown in the illustration.
Torque: 37 N*m (375 kgf*cm, 27 ft.*lbf)

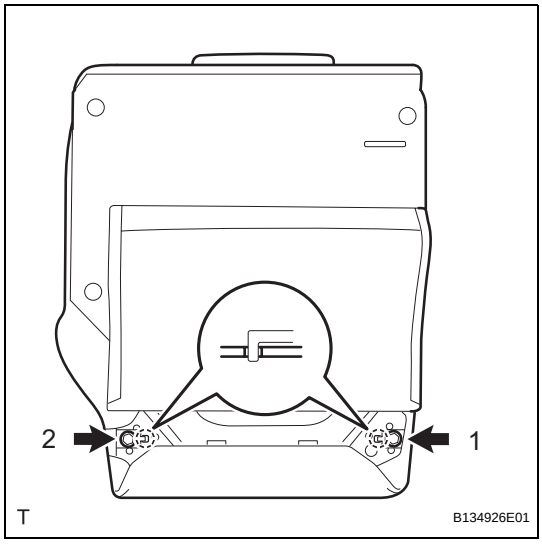

(b) Install the rear seatback cover with the 2 clips.

(c) Pull up the rear seatback.

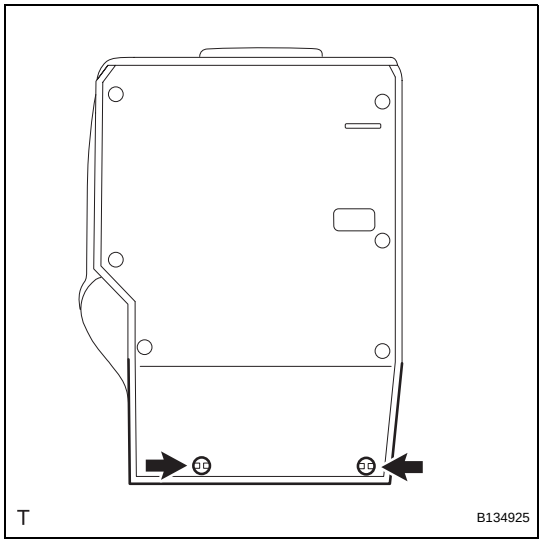

(d) Install the rear seat outer belt into the rear seat shoulder belt guide.

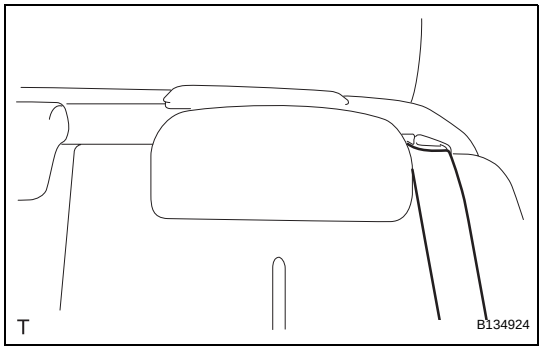

SE

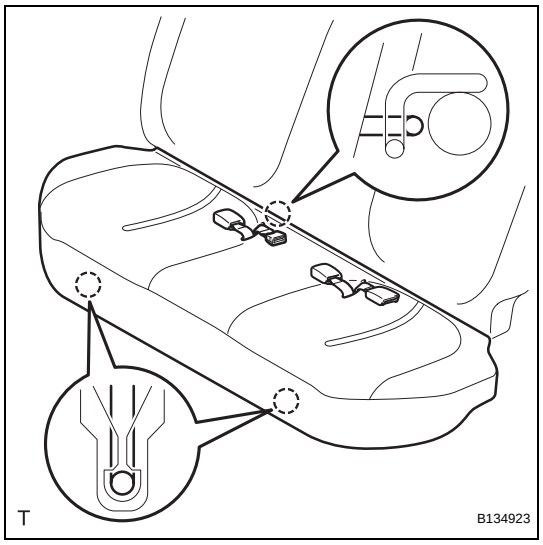

2. INSTALL REAR SEAT CUSHION COVER PAD SUB-ASSEMBLY

(a) Pass the rear seat inner belt through the rear seat cushion cover pad slit.

(b) Engage the 3 hooks and install the rear seat cushion cover pad.

NOTICE:

Make sure that the 2 rear seat cushion lock hooks and the rear seat cushion frame are securely engaged.

REAR SEAT ASSEMBLY (for Sedan 60/40 Split Seat Type RH Side)

COMPONENTS

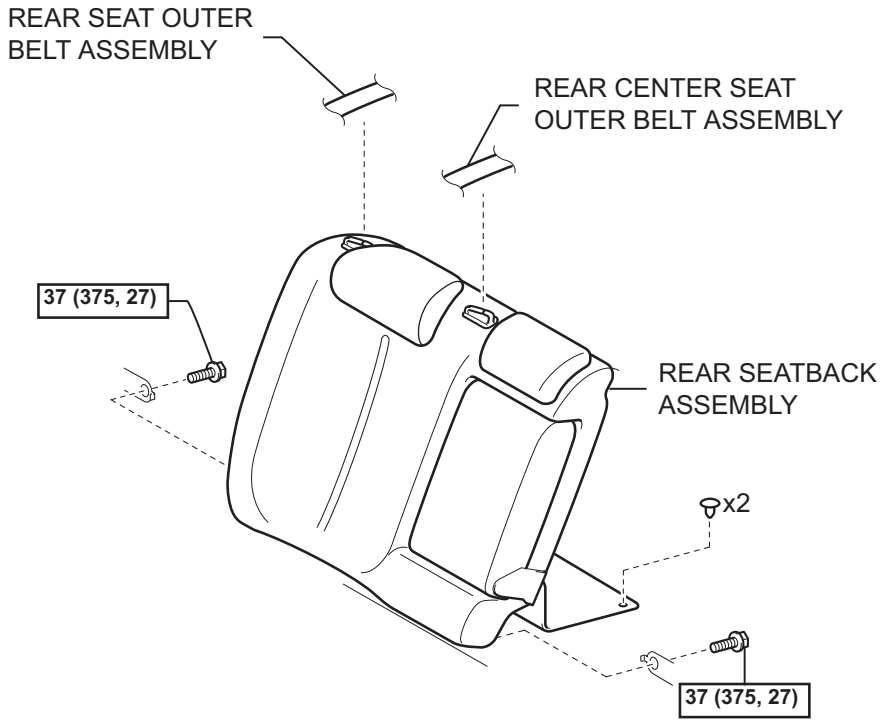

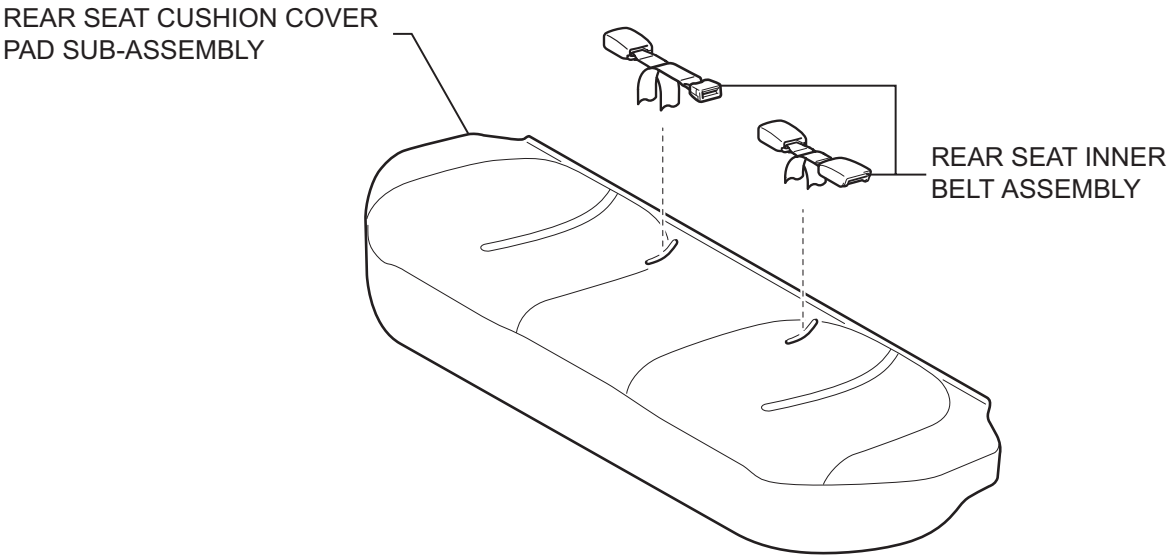

N*m (kgf*cm, ft*lbf) : Specified torque

T

B134942E02

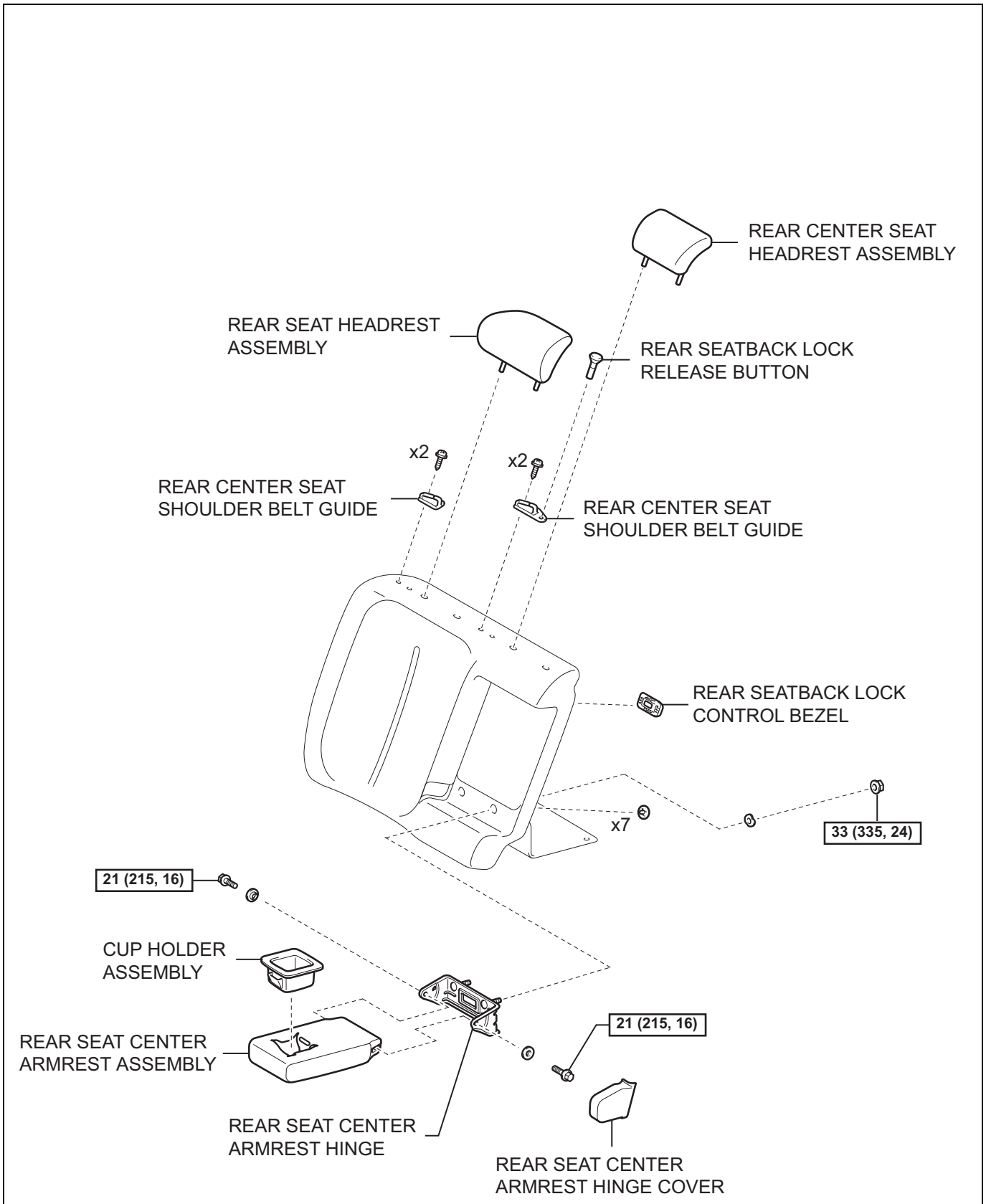

SE

N*m (kgf*cm, ft*lbf) : Specified torque

T

B134946E02

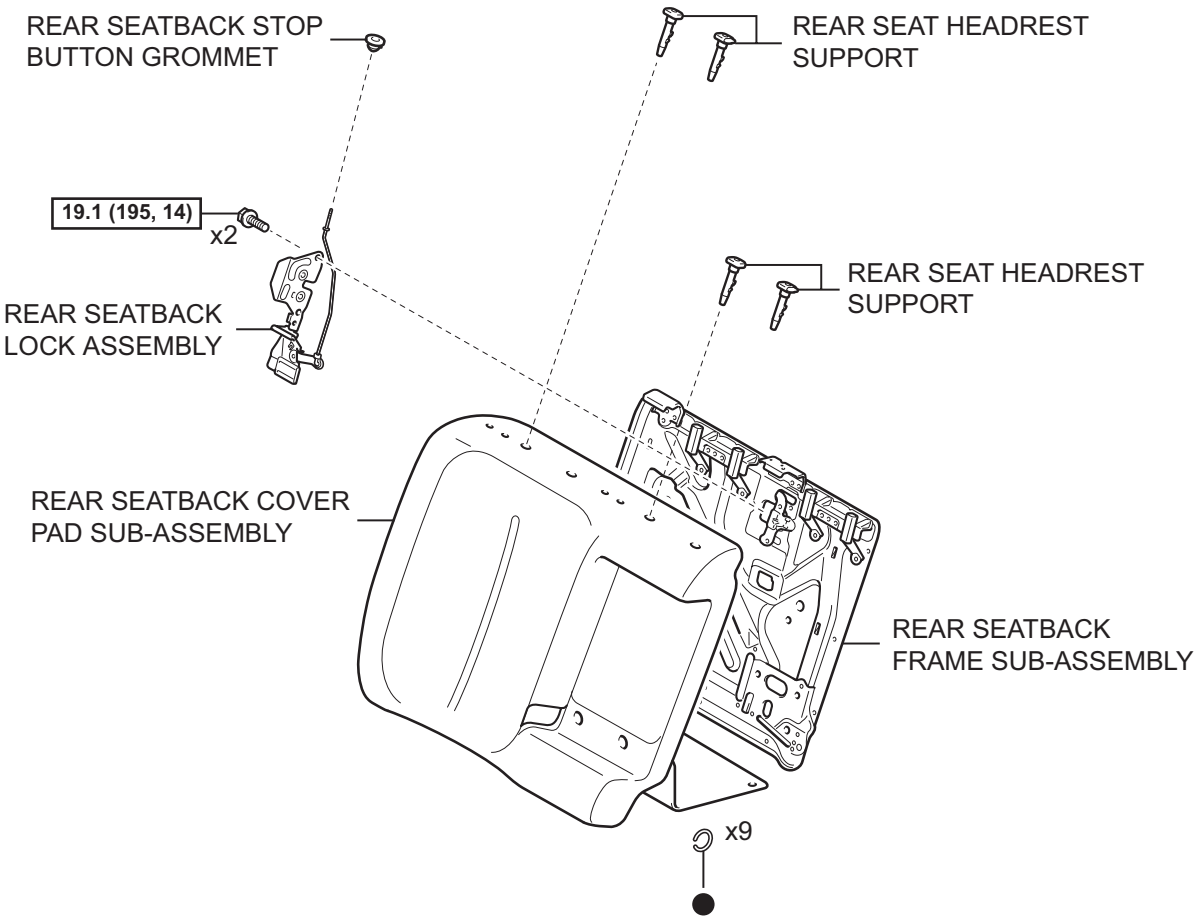

SE

N*m (kgf*cm, ft*lbf) : Specified torque

● Non-reusable part

T

B138549E01

REMOVAL

1. REMOVE REAR SEAT CUSHION COVER PAD SUB-ASSEMBLY (See page SE-46)

2. REMOVE REAR SEATBACK ASSEMBLY

(a) Remove the rear seat outer belt from the rear seat shoulder belt guide.

(b) Remove the rear center seat outer belt from the rear center seat shoulder belt guide.

(c) Pull the rear seatback lock release button and tilt the rear seatback forward.

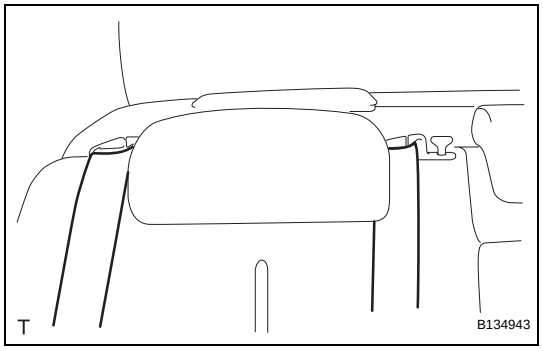

(d) Using a clip remover, remove the 2 clips and the rear seatback cover.

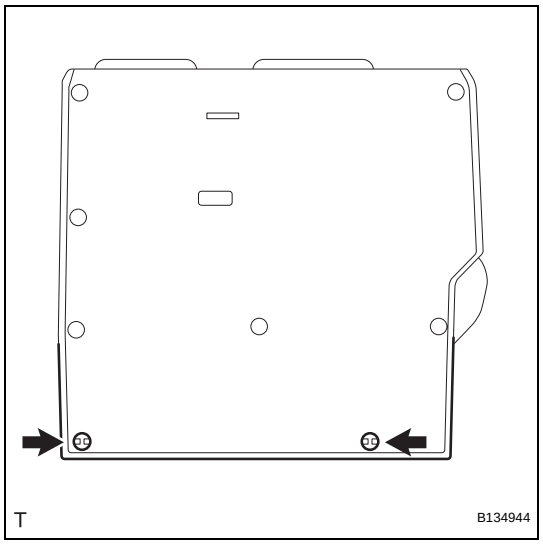

(e) Remove the 2 bolts, the 2 hooks and the rear seatback.

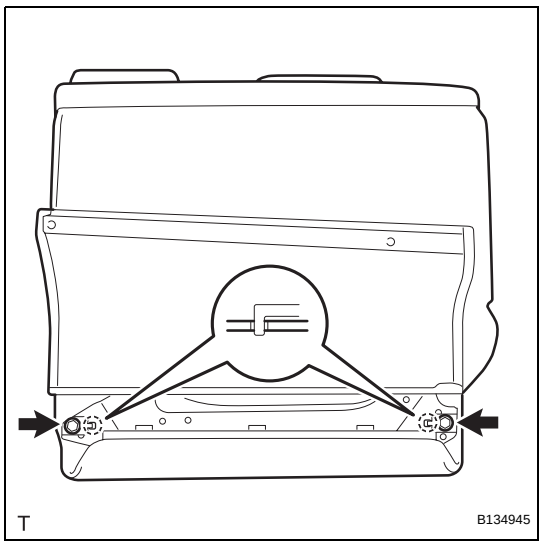

SE

DISASSEMBLY

CAUTION:
Wear protective gloves. Sharp surfaces on the rear seatback frame could cause injuries to your hands.

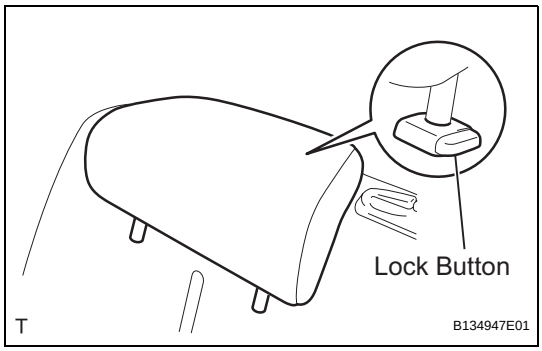

1. REMOVE REAR SEAT HEADREST ASSEMBLY

(a) Push the lock button of the rear seat headrest support and remove the rear seat headrest.

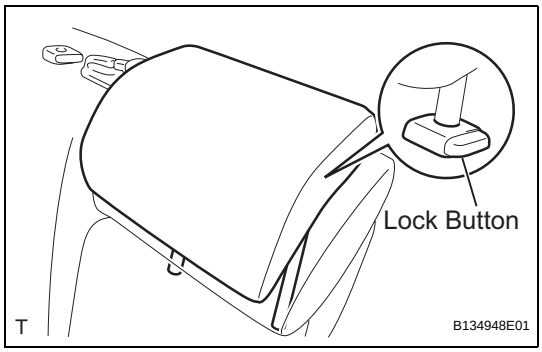

2. REMOVE REAR CENTER SEAT HEADREST ASSEMBLY

(a) Push the lock button of the rear seat headrest support and remove the rear seat headrest.

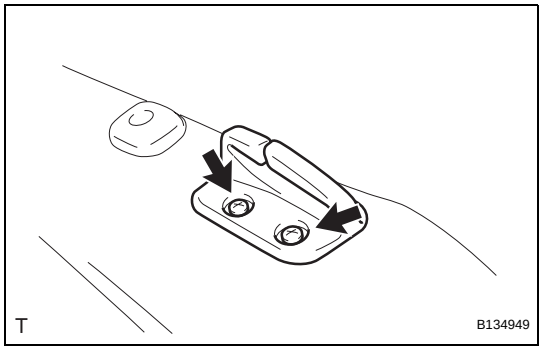

3. REMOVE REAR SEAT SHOULDER BELT GUIDE

(a) Remove the 2 screws and the rear seat shoulder belt guide.

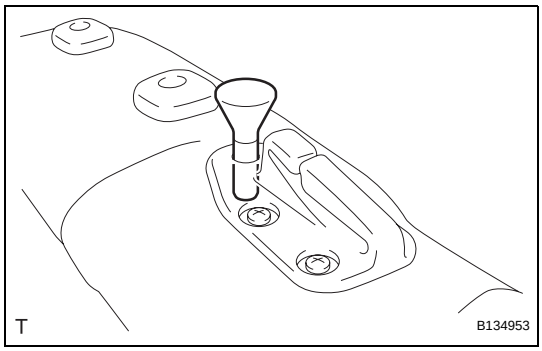

4. REMOVE REAR SEATBACK LOCK RELEASE BUTTON

(a) Remove the rear seatback lock release button.

SE

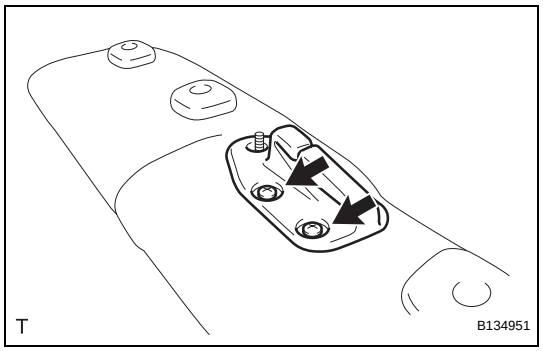

5. REMOVE REAR CENTER SEAT SHOULDER BELT GUIDE

(a) Remove the 2 screws and the rear center seat shoulder belt guide.

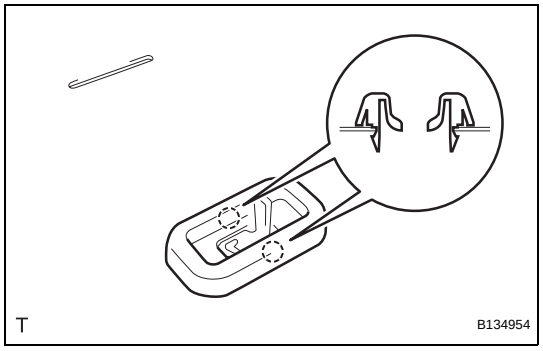

6. REMOVE REAR SEATBACK LOCK CONTROL BEZEL

(a) Disengage the 2 claws and remove the rear seatback lock control bezel.

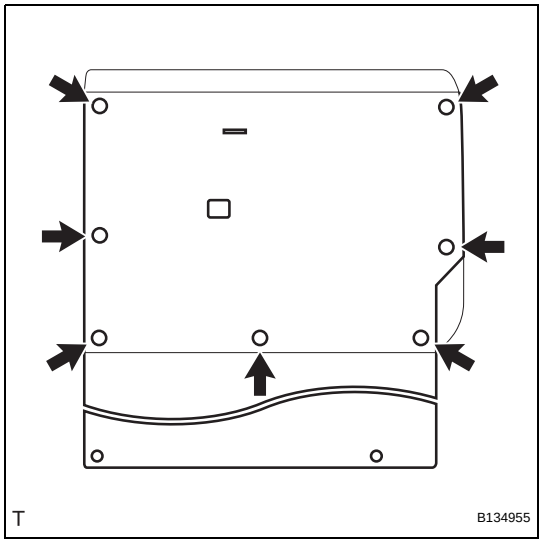

7. REMOVE REAR SEAT CENTER ARMREST ASSEMBLY

(a) Using a clip remover, remove the 7 clips and open the rear seatback cover.

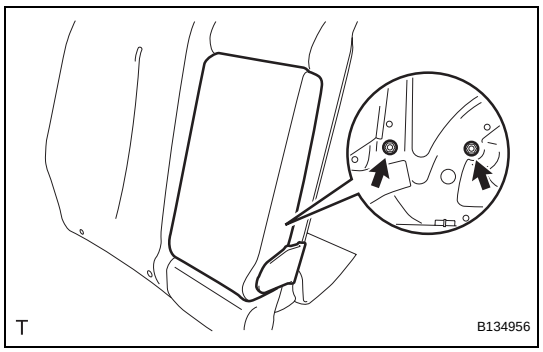

(b) Remove the 2 nuts, the 2 wave washers and the rear seat center armrest.

SE

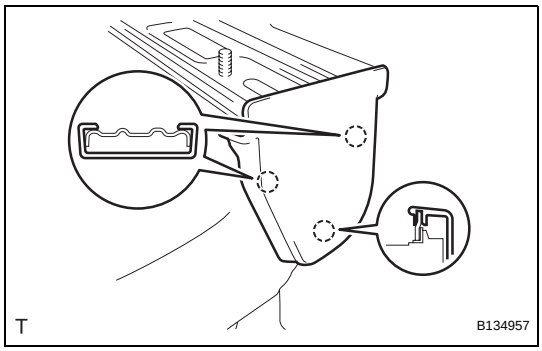

8. REMOVE REAR SEAT CENTER ARMREST HINGE COVER

(a) Disengage the 3 claws and remove the rear seat armrest hinge cover.

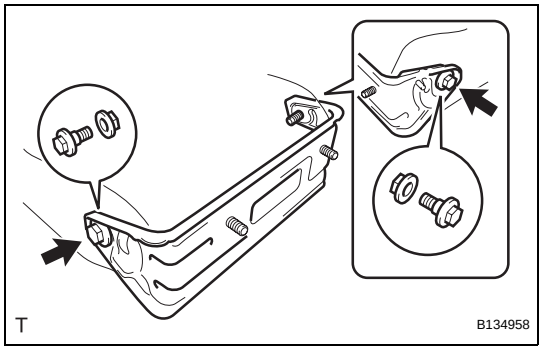

9. REMOVE REAR SEAT CENTER ARMREST HINGE

(a) Remove the 2 bolts, the 2 spacers and the rear seat armrest hinge.

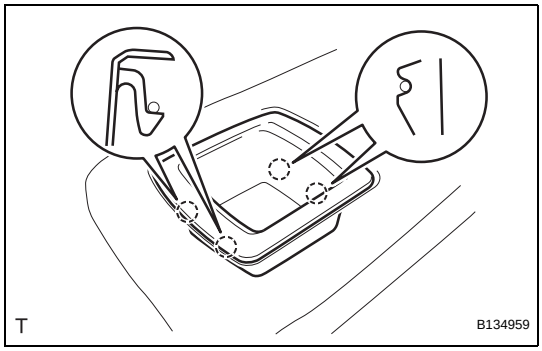

10. REMOVE CUP HOLDER ASSEMBLY

(a) Disengage the 4 claws and remove the cup holder.

SE

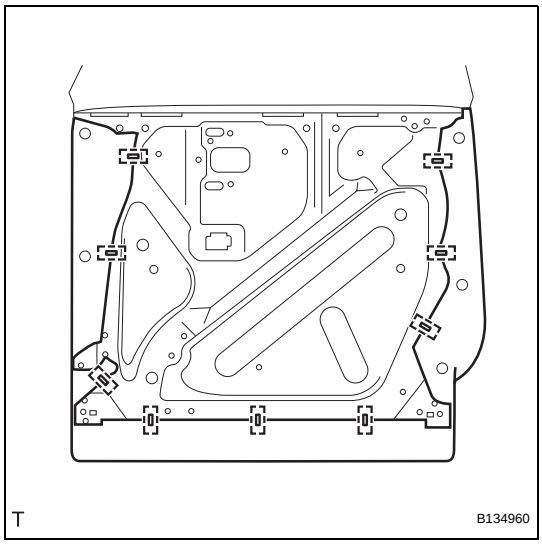

11. REMOVE REAR SEAT HEADREST SUPPORT

(a) Remove the 9 hog rings.

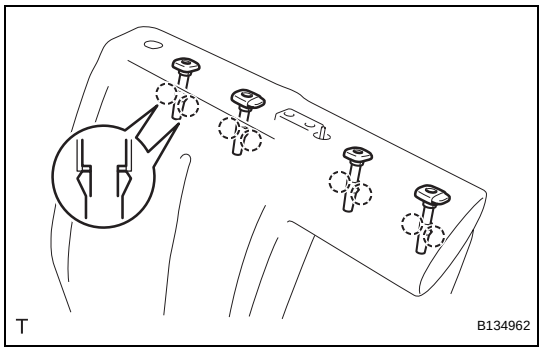

(b) Disengage the 2 claws and remove the rear seat headrest support.
HINT:
Use the same procedure to remove all the rear seat headrest supports.

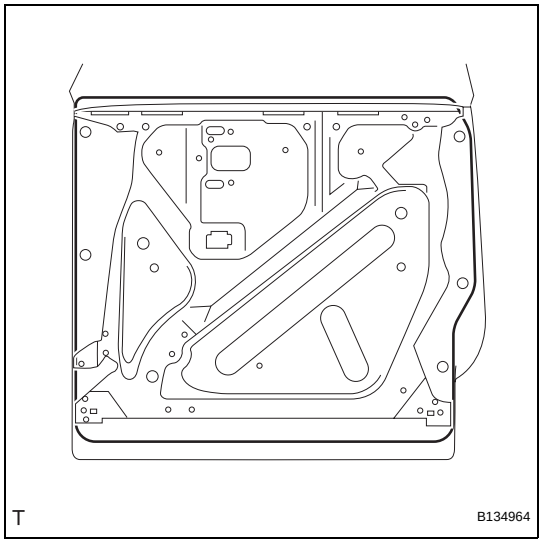

12. REMOVE REAR SEATBACK FRAME SUB-ASSEMBLY

(a) Remove the rear seatback frame.

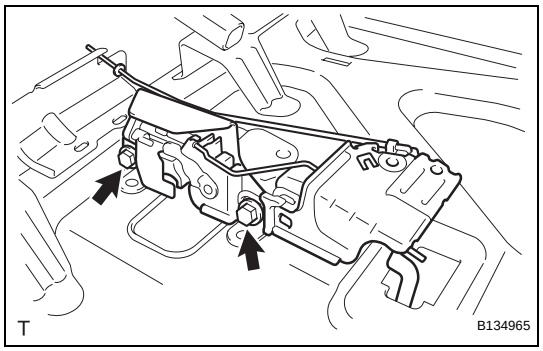

13. REMOVE REAR SEATBACK LOCK ASSEMBLY

(a) Remove the 2 bolts and the rear seatback lock.

SE

REASSEMBLY

CAUTION:
Wear protective gloves. Sharp surfaces on the rear seatback frame could cause injuries to your hands.

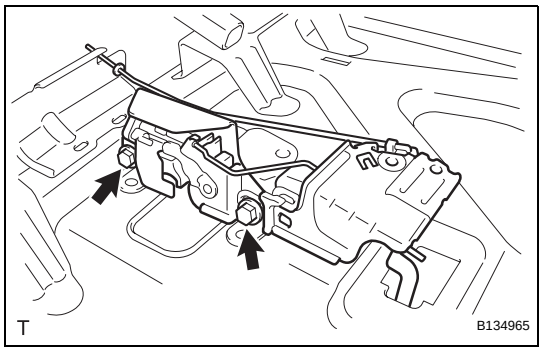

1. INSTALL REAR SEATBACK LOCK ASSEMBLY

(a) Install the rear seatback lock with the 2 bolts.
Torque: 19.1 N*m (195 kgf*cm, 14 ft.*lbf)

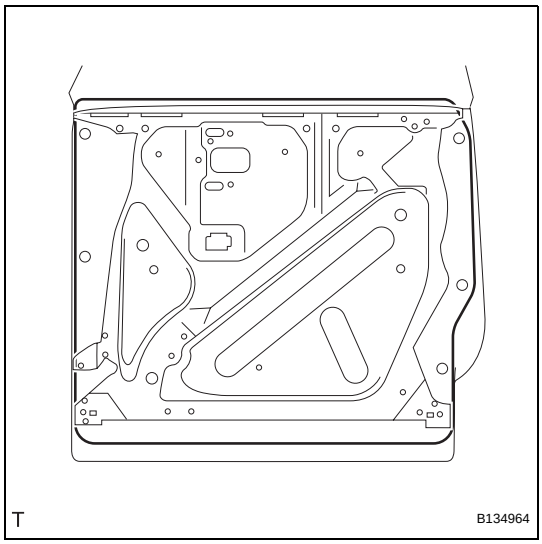

2. INSTALL REAR SEATBACK FRAME SUB-ASSEMBLY

(a) Install the rear seatback frame.

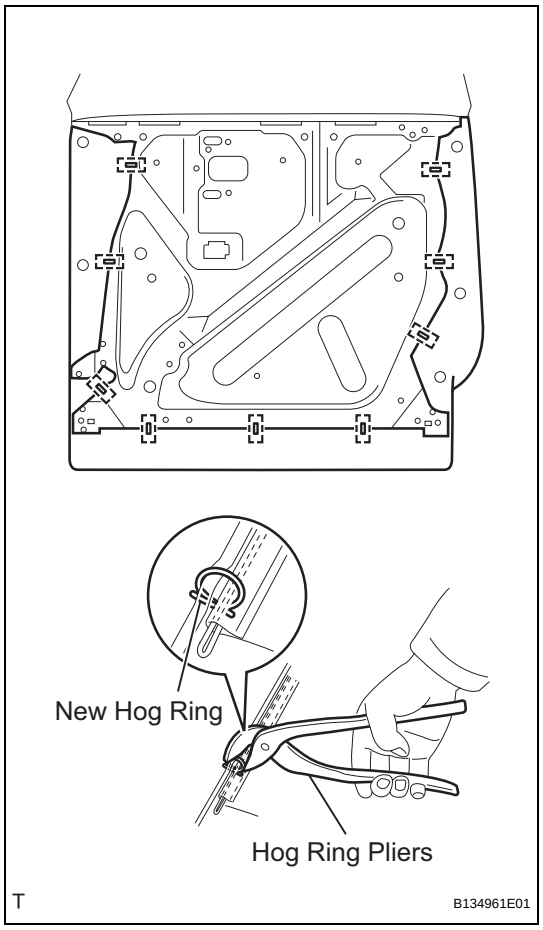

(b) Using hog ring pliers, install 9 new hog rings as shown in the illustration.

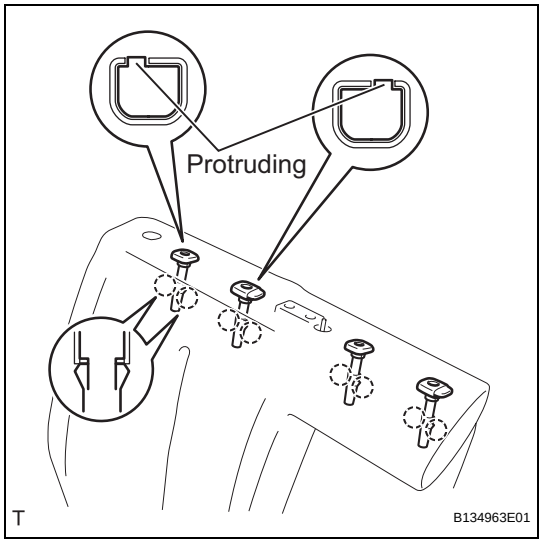

3. INSTALL REAR SEAT HEADREST SUPPORT

HINT:

Use the same procedure to install all the rear seat headrest supports.

(a) Align the protruding portion of the rear seat headrest support with the installation groove of the rear seatback frame.

(b) Engage the 2 claws and install the rear seat headrest support.

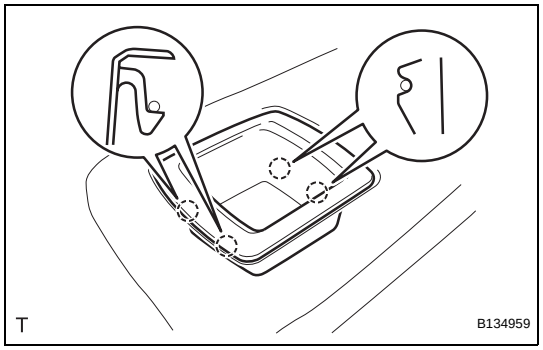

4. INSTALL CUP HOLDER ASSEMBLY

(a) Engage the 4 claws and install the rear seat cup holder.

SE

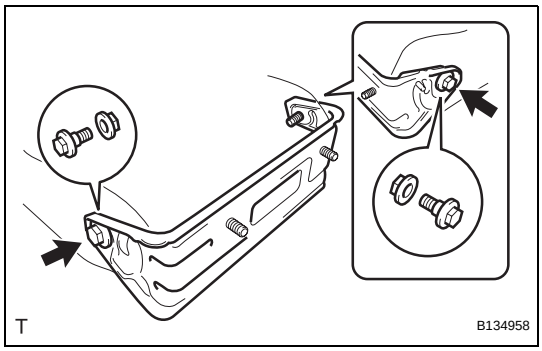

5. INSTALL REAR SEAT CENTER ARMREST HINGE

(a) Install the rear seat armrest hinge with the 2 bolts, the 2 spacers and the 2 spacers.
Torque: 21 N*m (215 kgf*cm, 16 ft.*lbf)

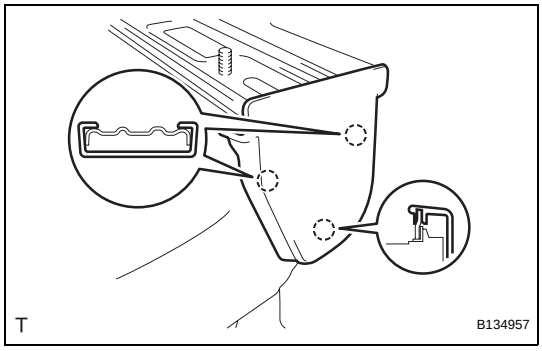

6. INSTALL REAR SEAT CENTER ARMREST HINGE COVER

(a) Engage the 3 claws and install the rear seat center armrest hinge cover.

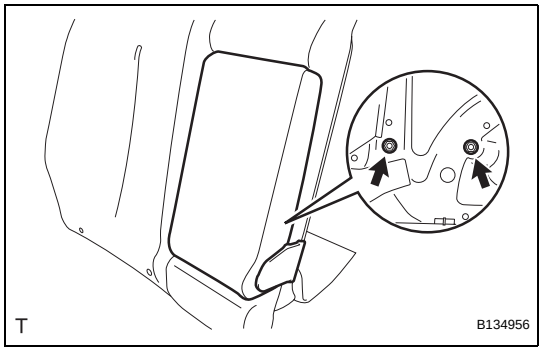

7. INSTALL REAR SEAT CENTER ARMREST ASSEMBLY

(a) Install the rear seat center armrest with the 2 nuts and the 2 wave washers.
Torque: 33 N*m (335 kgf*cm, 24 ft.*lbf)

SE

(b) Install the rear seatback cover with the 7 clips.

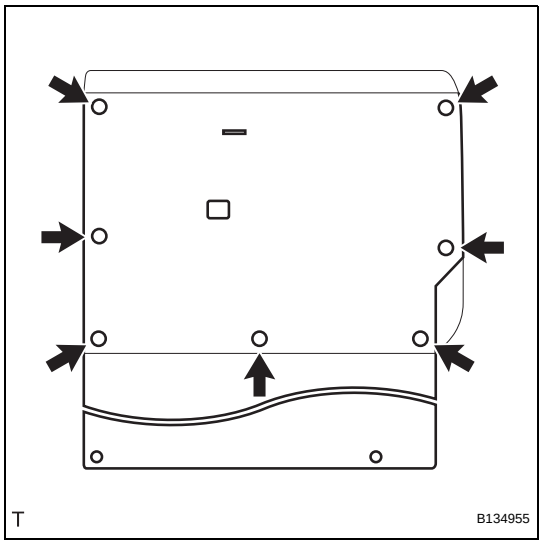

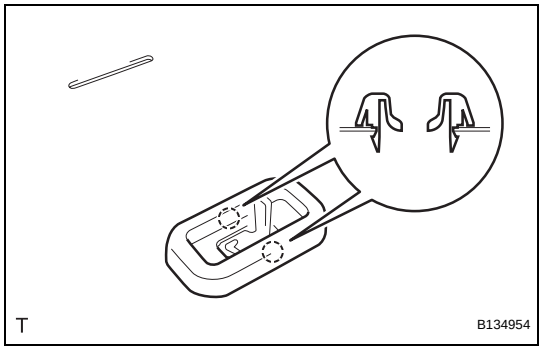

8. INSTALL REAR SEATBACK LOCK CONTROL BEZEL

(a) Engage the 2 claws and install the rear seatback lock control bezel.

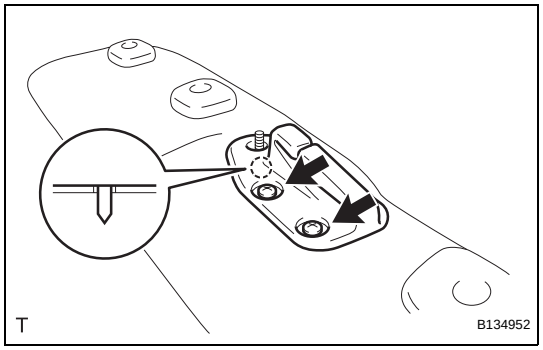

9. INSTALL REAR CENTER SEAT SHOULDER BELT GUIDE

(a) Insert the pin into the rear seatback frame hole and install the rear center seat shoulder belt guide with the 2 screws.

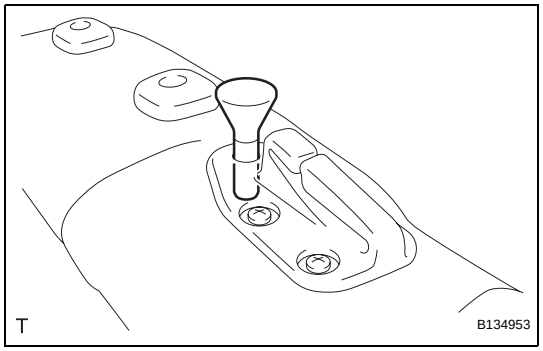

10. INSTALL REAR SEATBACK LOCK RELEASE BUTTON

(a) Install the rear seatback lock release button.

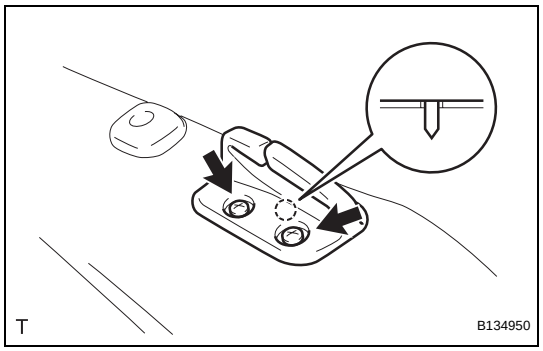

11. INSTALL REAR SEAT SHOULDER BELT GUIDE

(a) Insert the pin into the rear seatback frame hole and install the rear seat shoulder belt guide with the 2 screws.

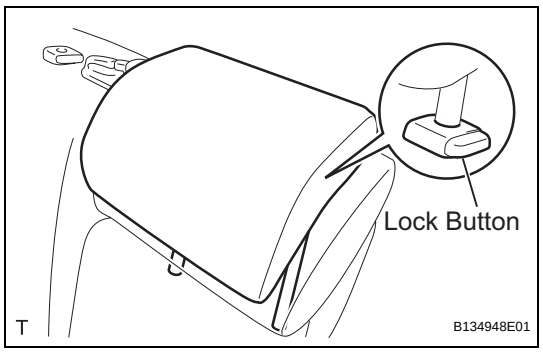

12. INSTALL REAR CENTER SEAT HEADREST ASSEMBLY

(a) Push the lock button of the rear seat headrest support and install the rear seat headrest.

SE

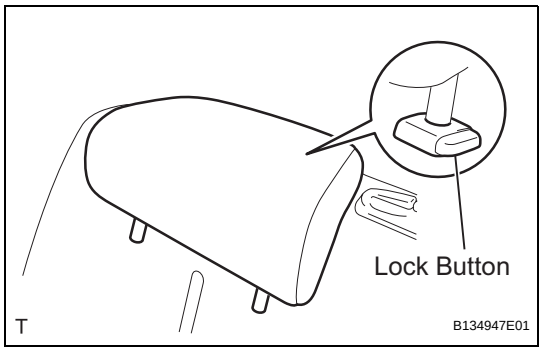

13. INSTALL REAR SEAT HEADREST ASSEMBLY

(a) Push the lock button of the rear seat headrest support and install the rear seat headrest.

INSTALLATION

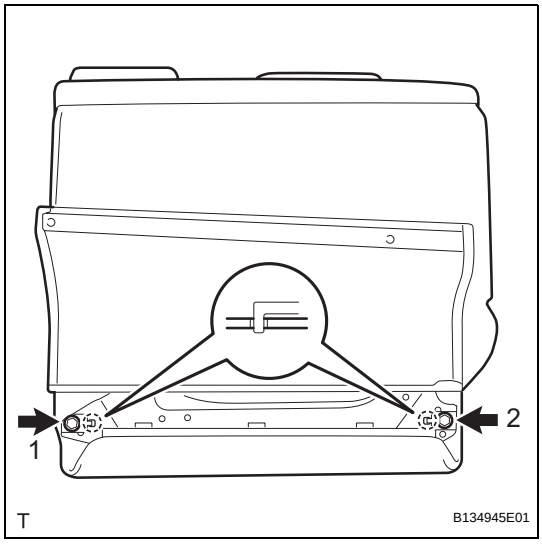

1. INSTALL REAR SEATBACK ASSEMBLY

(a) Insert the 2 hooks into the rear seatback frame hole and install the rear seatback, tightening the 2 bolts in the sequence shown in the illustration.
Torque: 37 N*m (375 kgf*cm, 27 ft.*lbf)

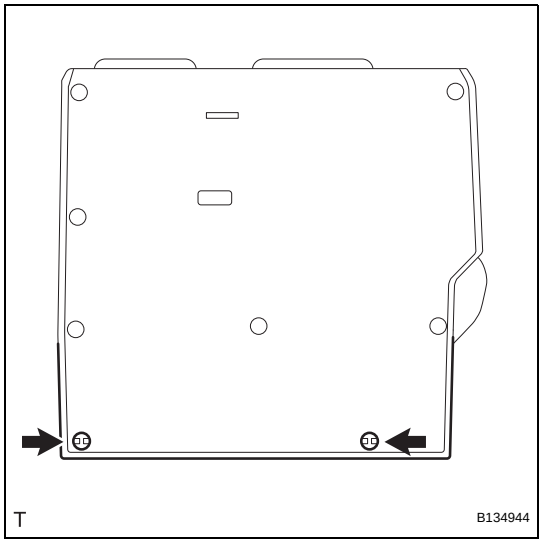

(b) Install the rear seatback cover with the 2 clips.

(c) Pull up the rear seatback.

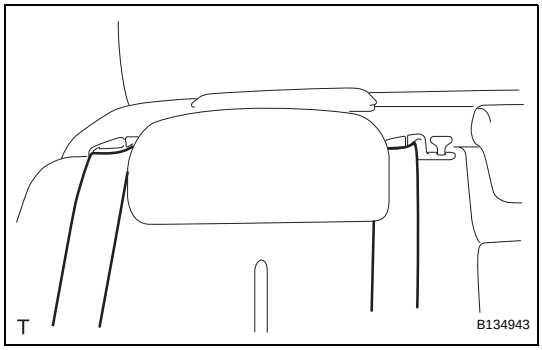

(d) Install the rear seat outer belt into the rear seat shoulder belt guide.

(e) Install the rear center seat outer belt into the rear center seat shoulder belt guide.

2. INSTALL REAR SEAT CUSHION COVER PAD SUB-ASSEMBLY (See page SE-53)

SE

REAR SEAT ASSEMBLY (for Hatchback 60/40 Split Seat Type LH Side)

COMPONENTS

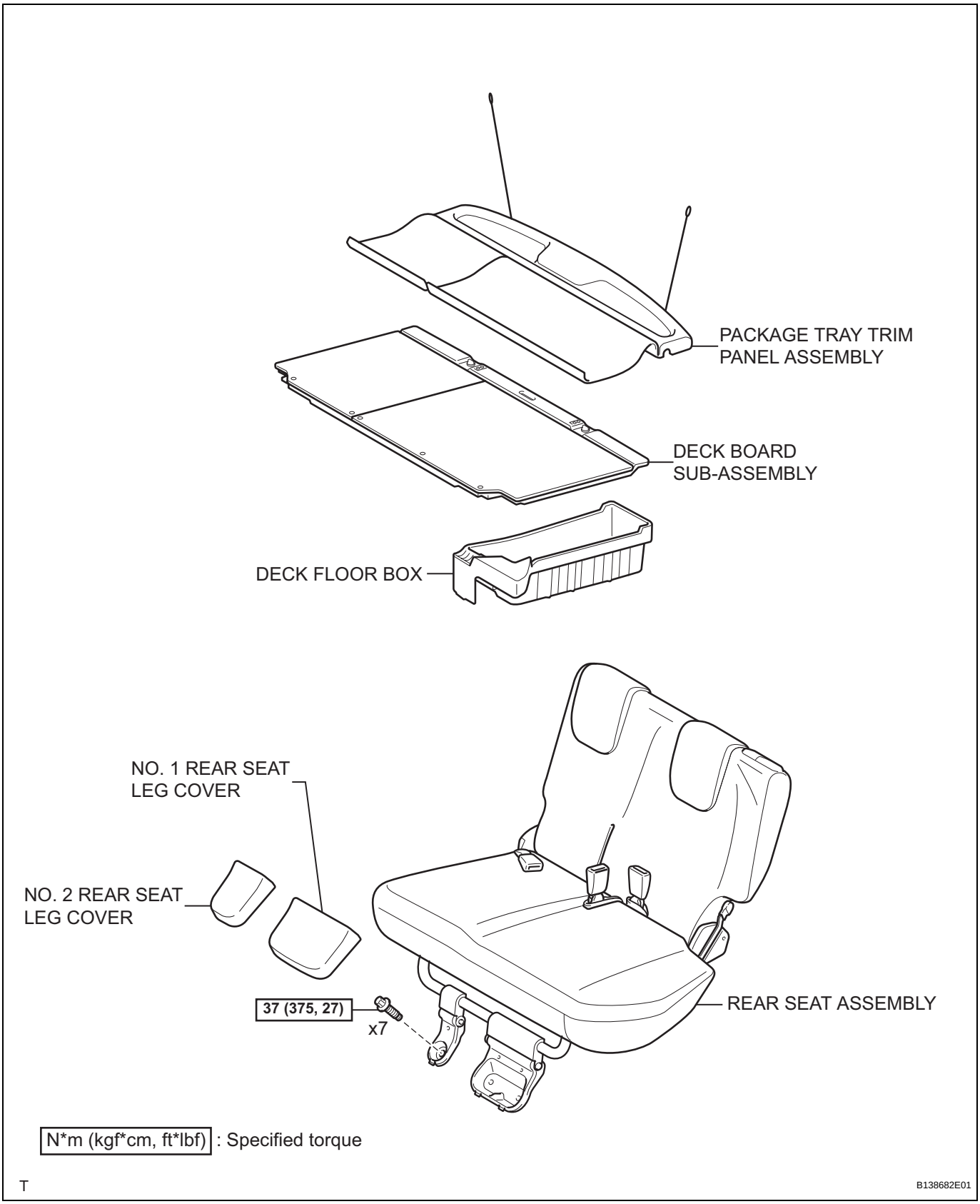

SE

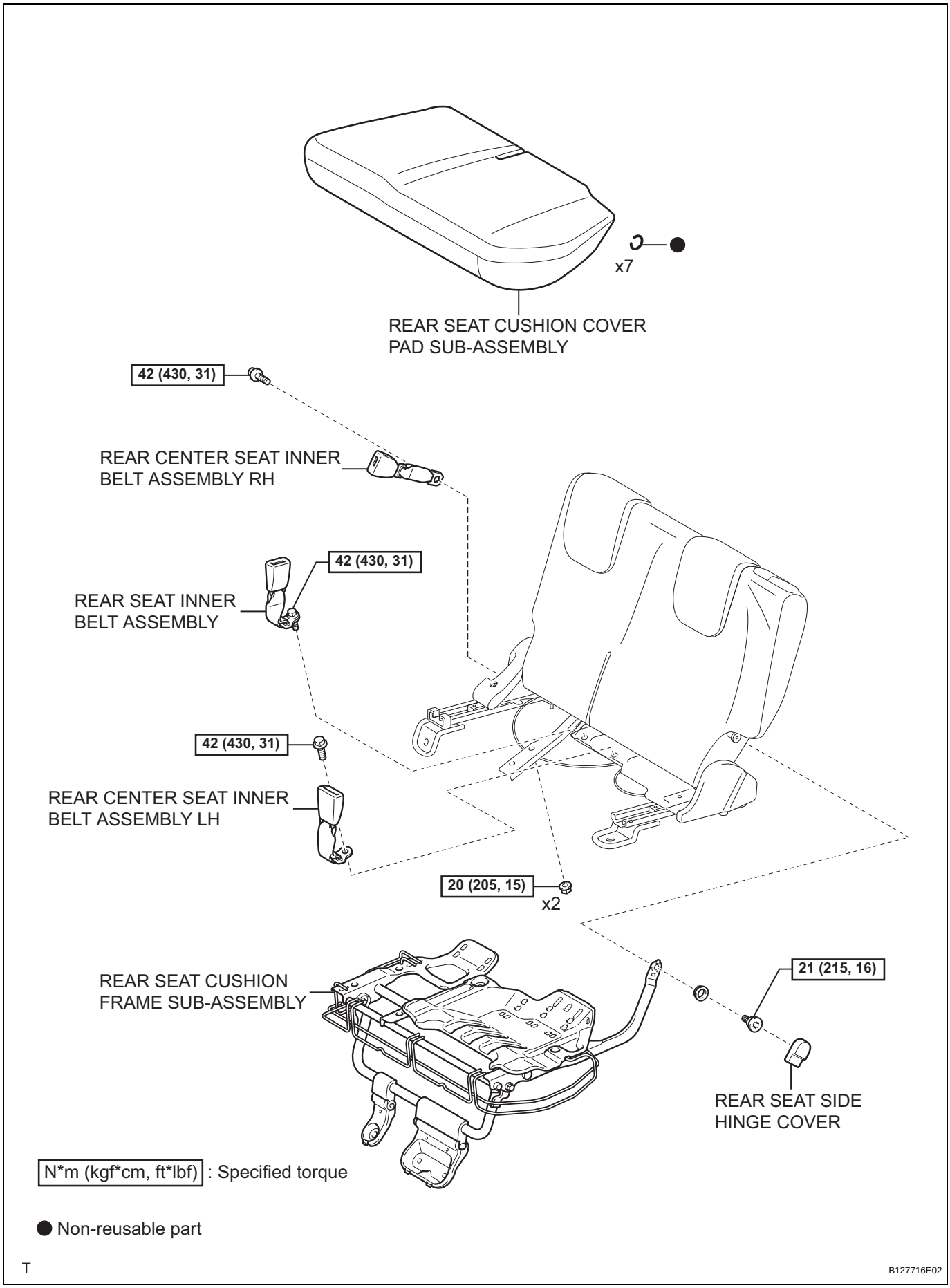
x7
REAR SEAT CUSHION COVER PAD SUB-ASSEMBLY
42 (430, 31)
REAR CENTER SEAT INNER BELT ASSEMBLY RH
42 (430, 31)
REAR SEAT INNER BELT ASSEMBLY
42 (430, 31)
REAR CENTER SEAT INNER BELT ASSEMBLY LH
20 (205, 15)
x2
REAR SEAT CUSHION FRAME SUB-ASSEMBLY
21 (215, 16)
REAR SEAT SIDE HINGE COVER
N*m (kgf*cm, ft*lbf) : Specified torque
● Non-reusable part
T
B127716E02

SE

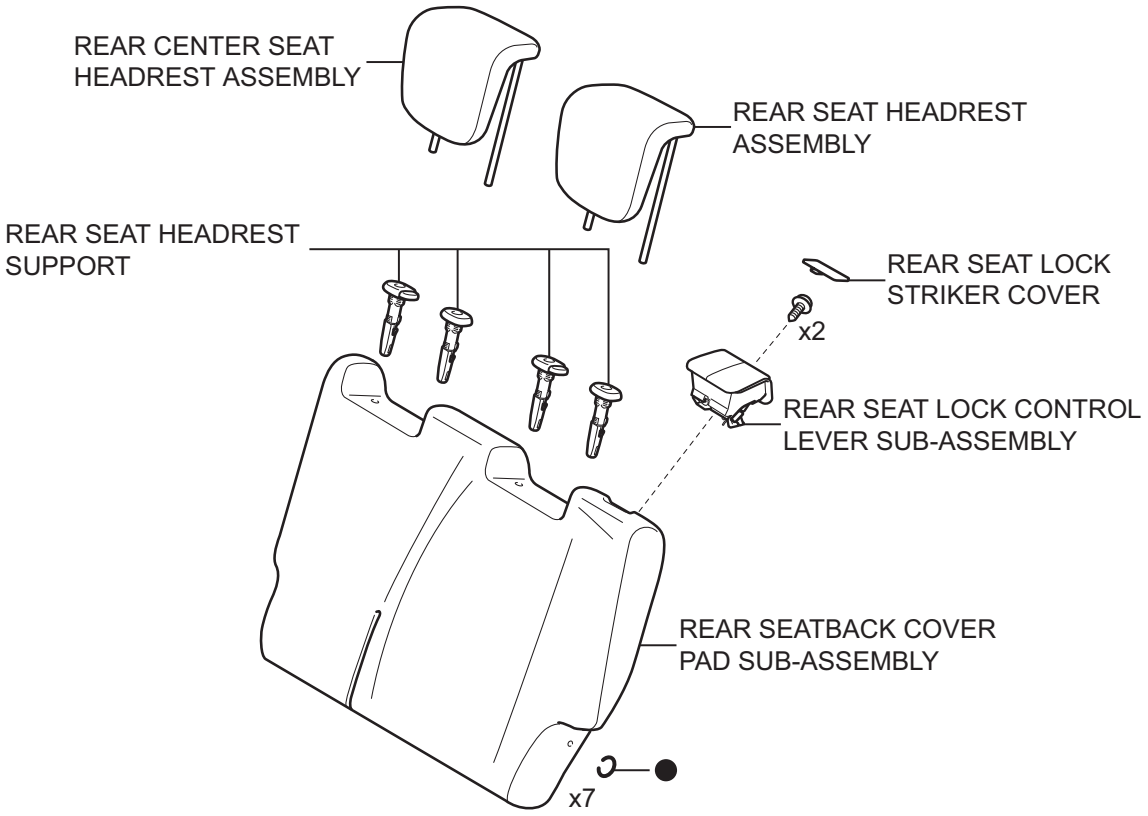

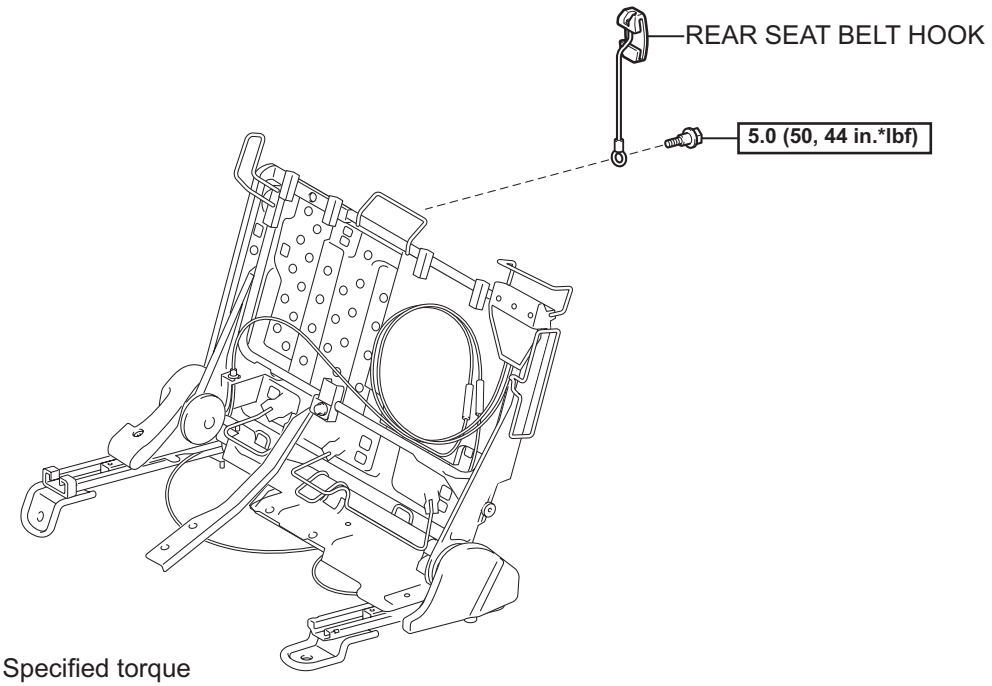

SE

N*m (kgf*cm, ft*lbf) : Specified torque

● Non-reusable part

T

B127717E02

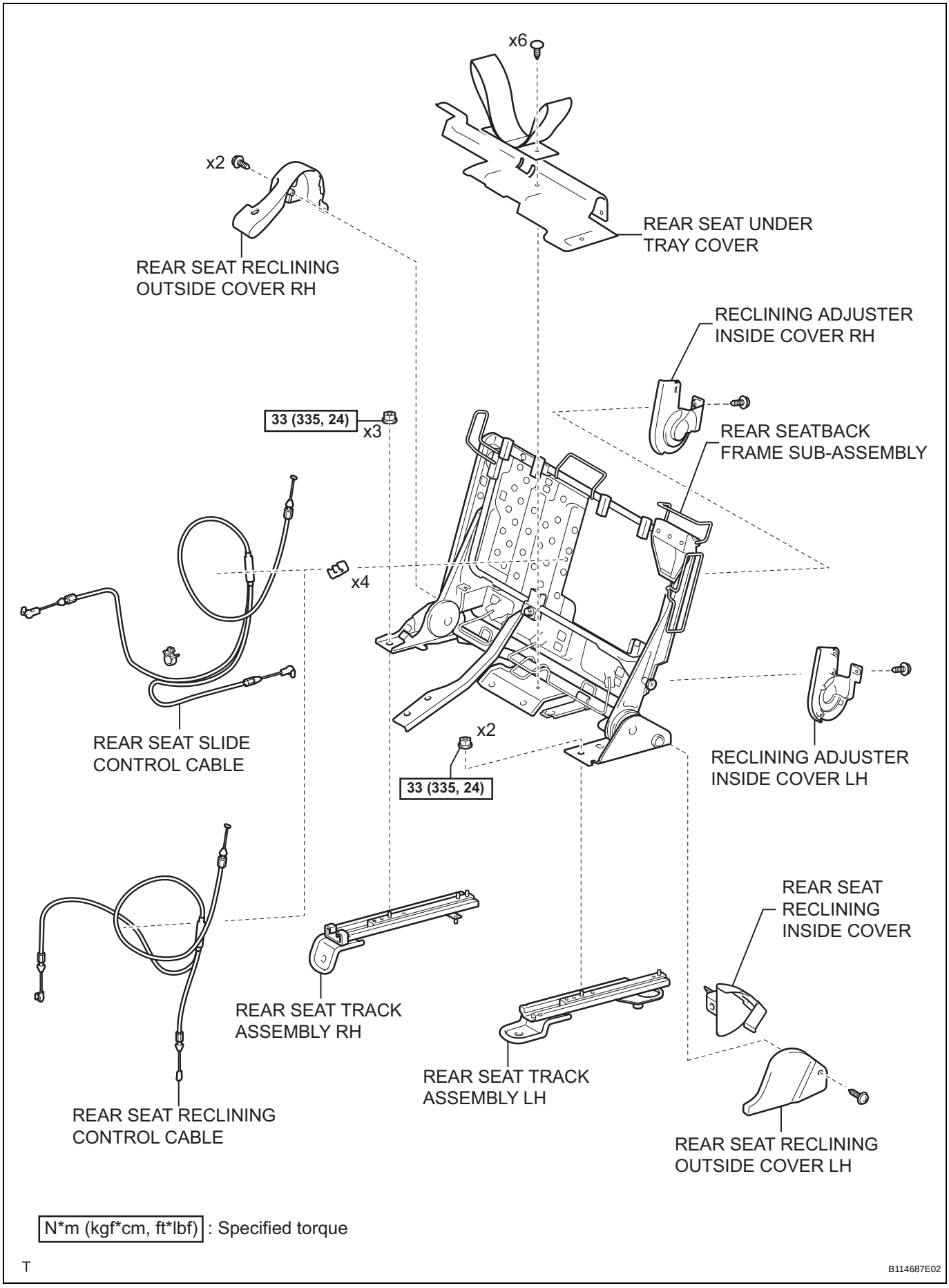

SE

N*m (kgf*cm, ft*lbf) : Specified torque

T

B114687E02

REMOVAL

NOTICE:
Always use "Torx" socket wrench E10 when removing the rear seat.

1. **REMOVE PACKAGE TRAY TRIM PANEL ASSEMBLY (See page IR-48)**
2. **REMOVE DECK BOARD SUB-ASSEMBLY (See page IR-48)**
3. **REMOVE DECK FLOOR BOX**
   (a) Release the 2 knobs and remove the deck floor box.

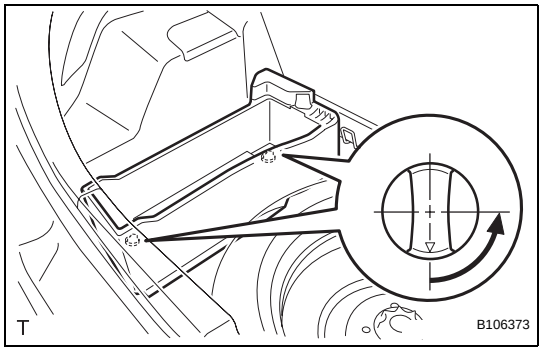

4. **REMOVE NO. 1 REAR SEAT LEG COVER**
   (a) Disengage the 4 claws in the sequence shown in the illustration and remove the No. 1 rear seat leg cover.

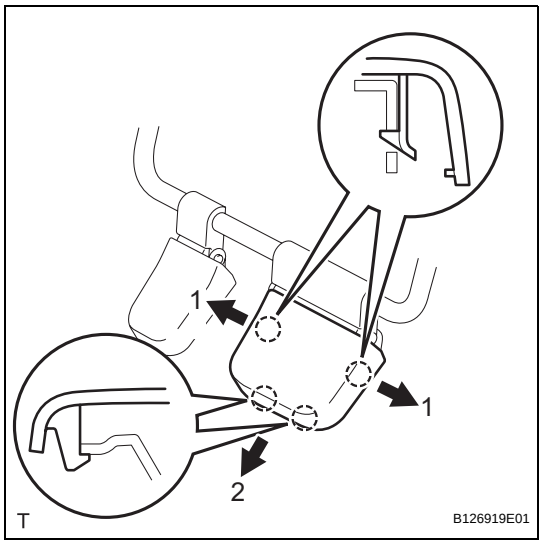

5. **REMOVE NO. 2 REAR SEAT LEG COVER**
   (a) Disengage the 3 claws in the sequence shown in the illustration and remove the No. 2 rear seat leg cover.

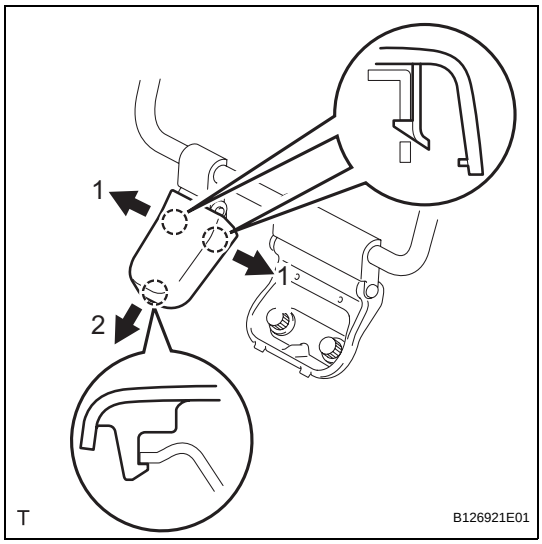

SE

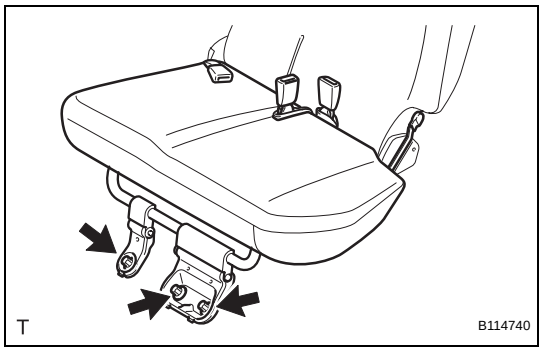

6. REMOVE REAR SEAT ASSEMBLY

(a) Using "Torx" socket wrench E10, remove the 3 bolts and pull up the rear seat cushion.

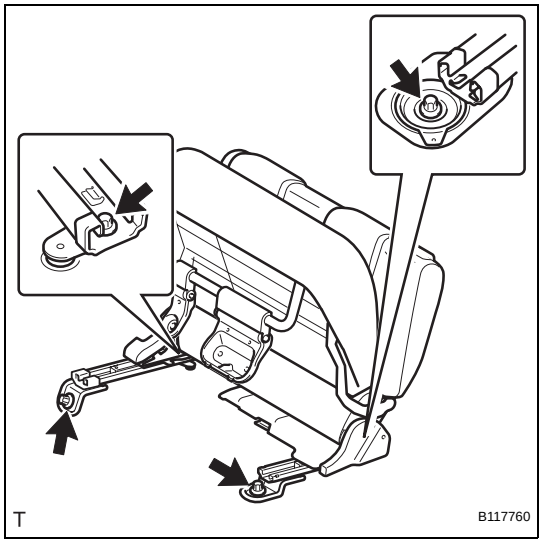

(b) Using "Torx" socket wrench E10, remove the 4 bolts and the rear seat.

SE

DISASSEMBLY

CAUTION:
Wear protective gloves. Sharp surfaces on the rear seatback frame could cause injuries to your hands.

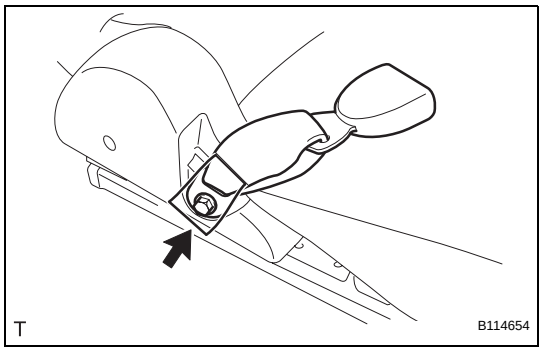

1. REMOVE REAR CENTER SEAT INNER BELT ASSEMBLY RH
(a) Remove the bolt and the rear center seat inner belt.

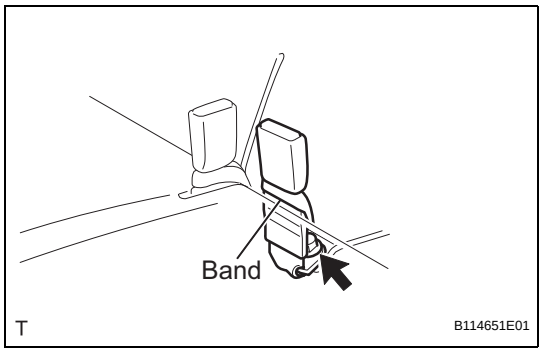

2. REMOVE REAR CENTER SEAT INNER BELT ASSEMBLY LH
(a) Remove the belt from the band.
(b) Remove the bolt and the rear center seat inner belt.

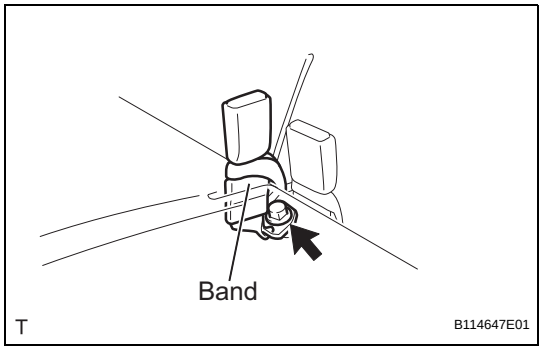

3. REMOVE REAR SEAT INNER BELT ASSEMBLY
(a) Remove the belt from the band.
(b) Remove the bolt and the rear seat inner belt.

SE

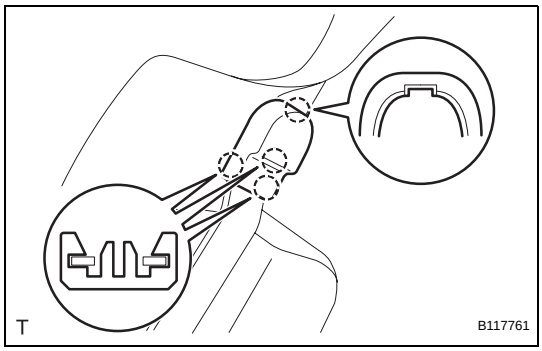

4. REMOVE REAR SEAT SIDE HINGE COVER
(a) Disengage the 4 claws and remove the rear seat side hinge cover.

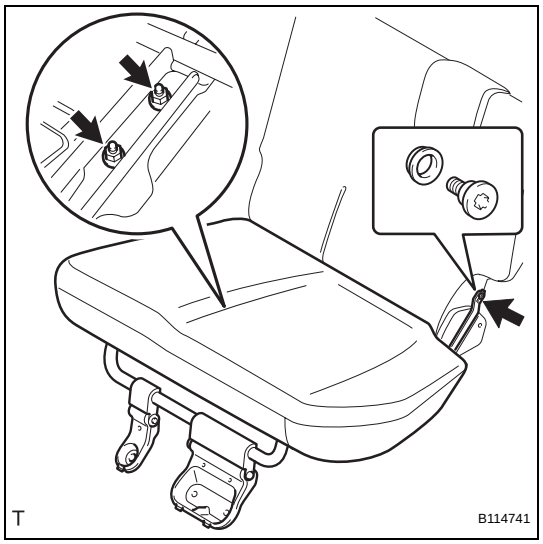

5. REMOVE REAR SEAT CUSHION ASSEMBLY

(a) Using "Torx" socket wrench T45, remove the bolt and the spacer.

(b) Remove the 2 nuts and rear seat cushion.

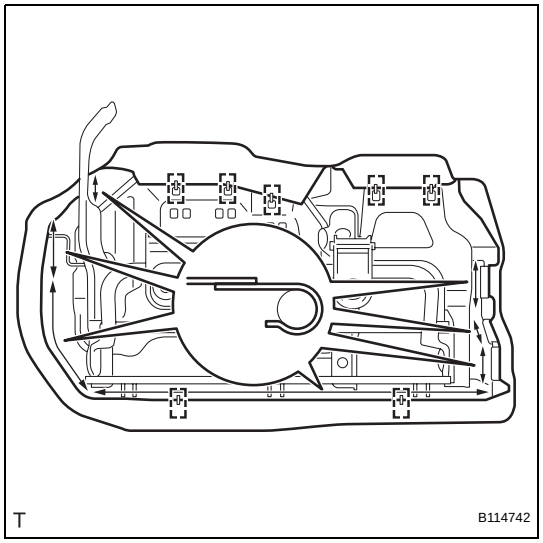

6. REMOVE REAR SEAT CUSHION COVER PAD SUB-ASSEMBLY

(a) Remove the 7 hog rings.

(b) Disengage the 7 hooks and remove the rear seat cushion cover pad.

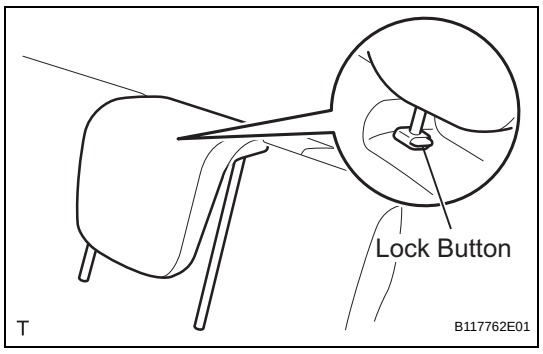

7. REMOVE REAR SEAT HEADREST ASSEMBLY

(a) Push in the lock button of the rear seat headrest support and remove the rear seat headrest.

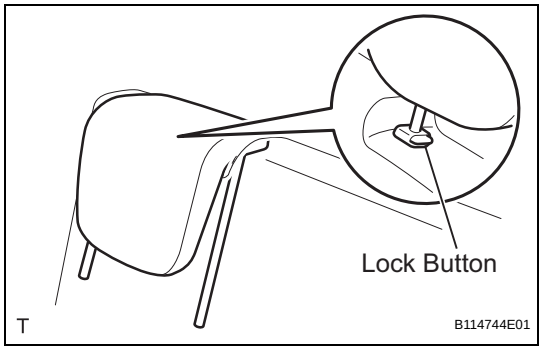

8. REMOVE REAR CENTER SEAT HEADREST ASSEMBLY

(a) Push in the lock button of the rear seat headrest support and remove the rear center seat headrest.

SE

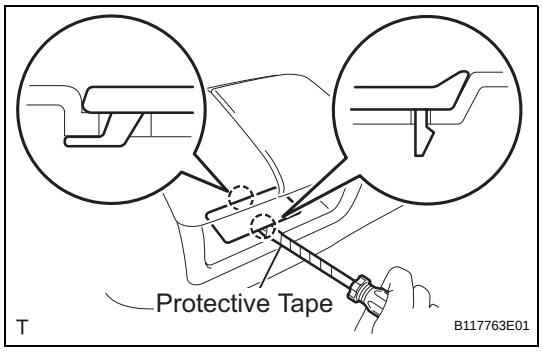

9. REMOVE REAR SEAT LOCK STRIKER COVER

(a) Using a screwdriver with its tip wrapped in protective tape, disengage the 2 claws and remove the rear seat lock striker cover.

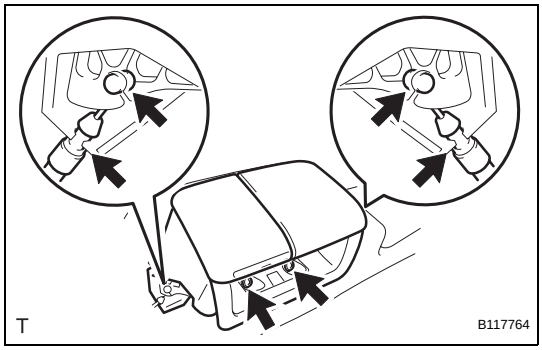

10. REMOVE REAR SEAT LOCK CONTROL LEVER SUB-ASSEMBLY

(a) Remove the 2 screws.

(b) Disconnect the rear seat reclining control cable and the rear seat slide control cable, and remove the rear seat lock control lever.

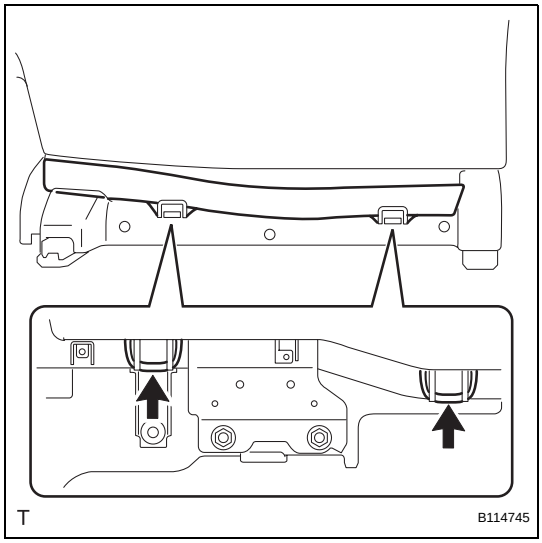

11. REMOVE REAR SEAT HEADREST SUPPORT

(a) Remove the 2 rear seatback cover bands.

(b) Remove the 7 hog rings.

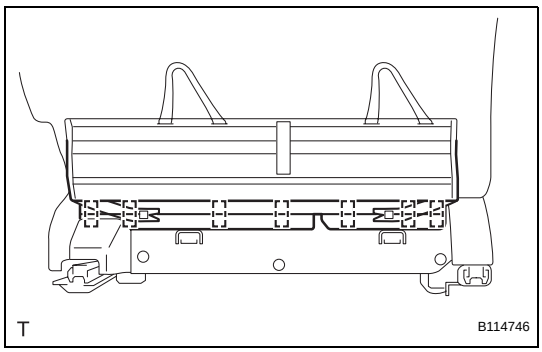

SE

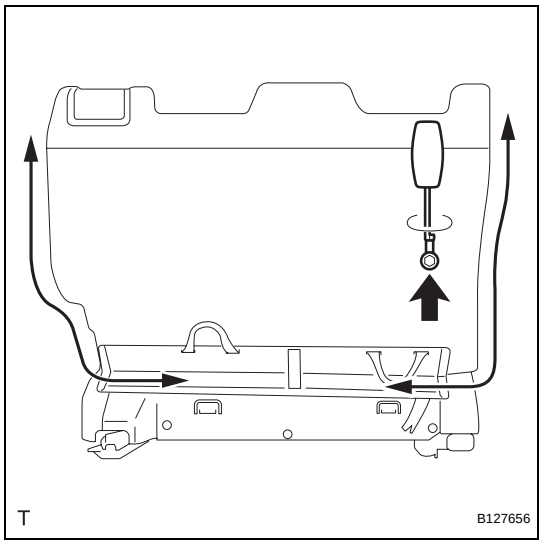

(c) Unfasten the 2 zippers.
(d) Remove the bolt and the rear seat belt hook.

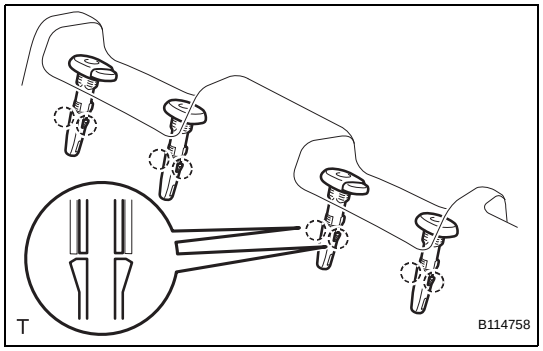

(e) Disengage the 2 claws and remove the rear seat headrest support.
HINT:
Use the same procedure to remove all the rear seat headrest supports.

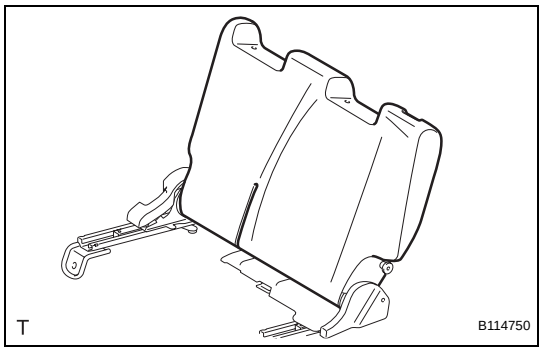

12. REMOVE REAR SEATBACK COVER PAD SUB-ASSEMBLY

(a) Remove the rear seatback cover pad.

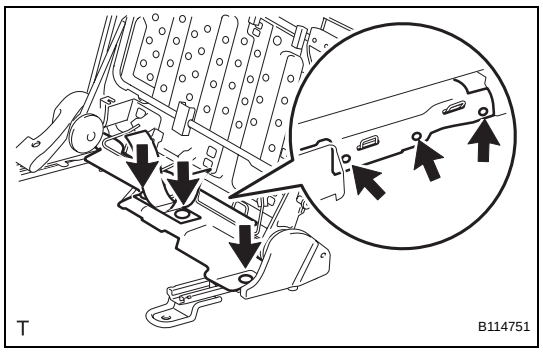

13. REMOVE REAR SEAT UNDER TRAY COVER

(a) Using a clip remover, remove the 6 clips and the rear seat under tray cover.

SE

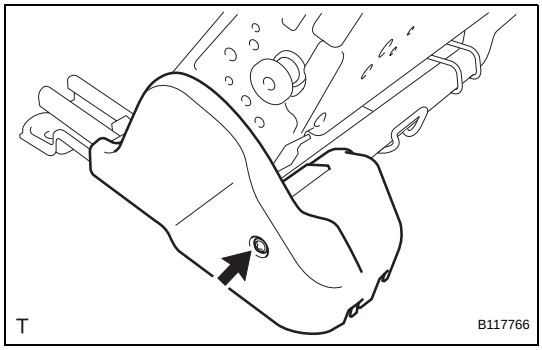

14. REMOVE REAR SEAT RECLINING OUTSIDE COVER LH

(a) Remove the screw and the rear seat reclining outside cover.

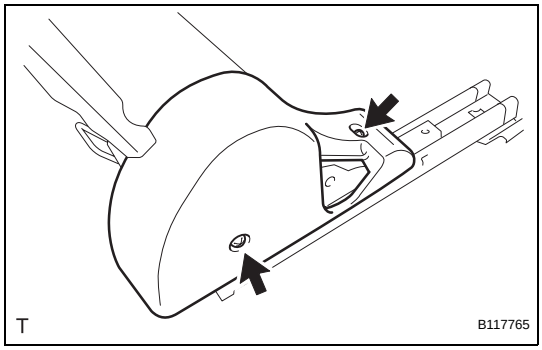

15. REMOVE REAR SEAT RECLINING OUTSIDE COVER RH

(a) Remove the 2 screws and the rear seat reclining outside cover.

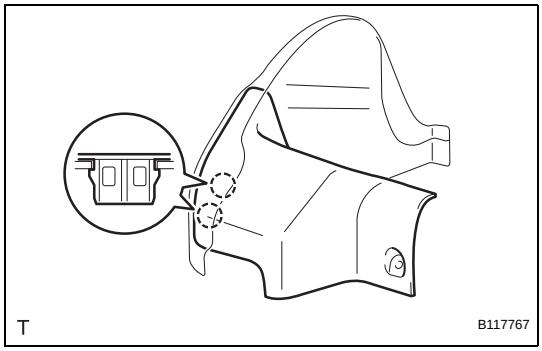

16. REMOVE REAR SEAT RECLINING INSIDE COVER

(a) Disengage the 2 claws and remove the reclining inside cover.

SE

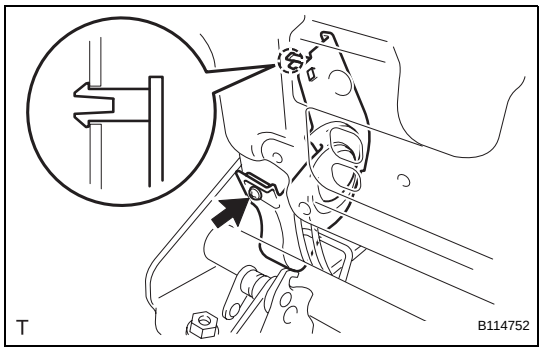

17. REMOVE RECLINING ADJUSTER INSIDE COVER LH

(a) Remove the screw.

(b) Disengage the claw and remove the reclining adjuster inside cover.

18. REMOVE RECLINING ADJUSTER INSIDE COVER RH

HINT:

Use the same procedure as for the LH side.

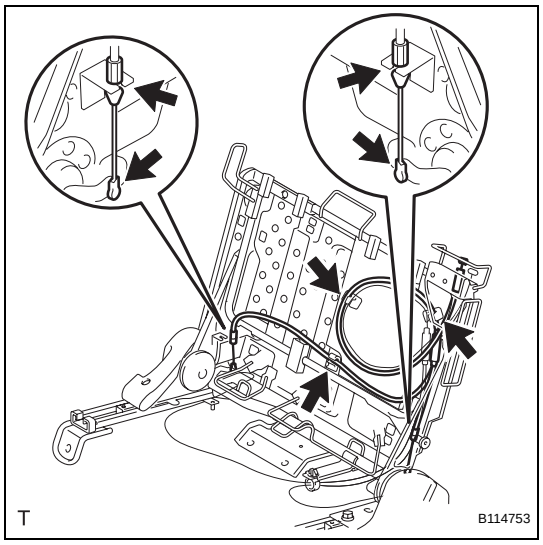

19. REMOVE REAR SEAT RECLINING CONTROL CABLE

(a) Remove the rear seat reclining control cable.

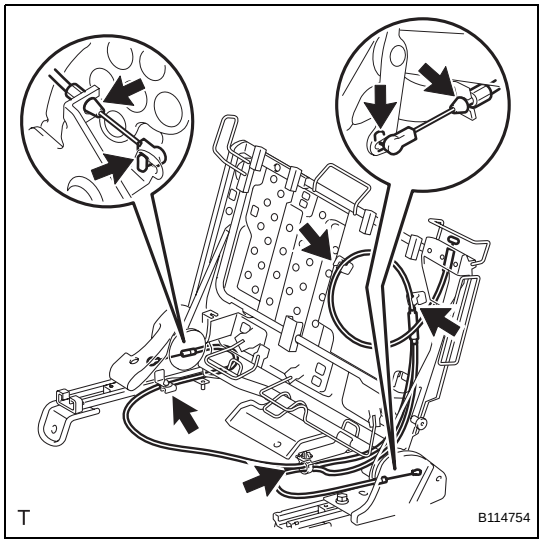

20. REMOVE REAR SEAT SLIDE CONTROL CABLE

(a) Remove the rear seat slide control cable.

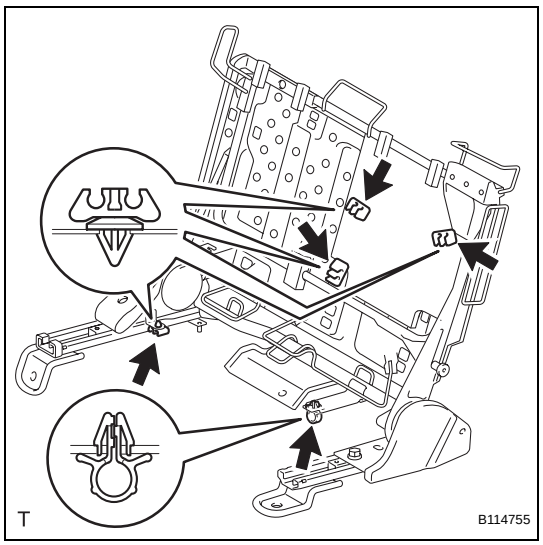

(b) Remove the 5 clamps.

SE

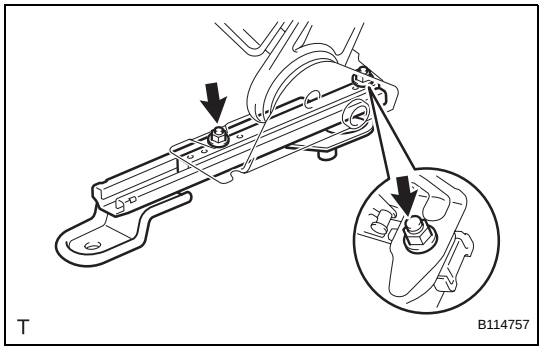

21. REMOVE REAR SEAT TRACK ASSEMBLY LH

(a) Remove the 2 nuts and the rear seat track.

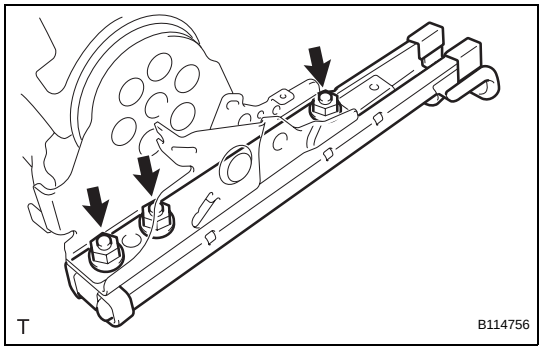

22. REMOVE REAR SEAT TRACK ASSEMBLY RH

(a) Remove the 3 nuts and the rear seat track.

REASSEMBLY

CAUTION:
Wear protective gloves. Sharp surfaces on the rear seatback frame could cause injuries to your hands.

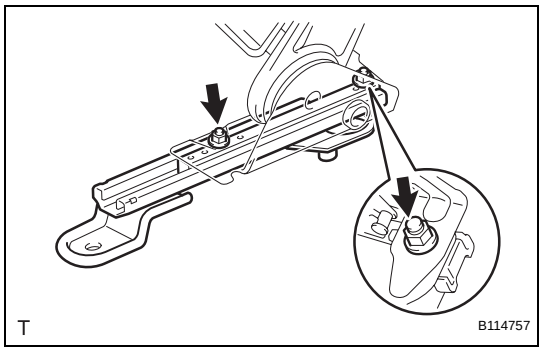

1. INSTALL REAR SEAT TRACK ASSEMBLY LH
(a) Install the rear seat track with the 2 nuts.
Torque: 33 N*m (335 kgf*cm, 24 ft.*lbf)

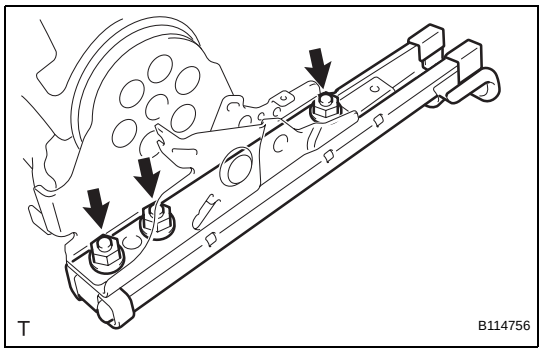

2. INSTALL REAR SEAT TRACK ASSEMBLY RH
(a) Install the rear seat track with the 3 nuts.
Torque: 33 N*m (335 kgf*cm, 24 ft.*lbf)

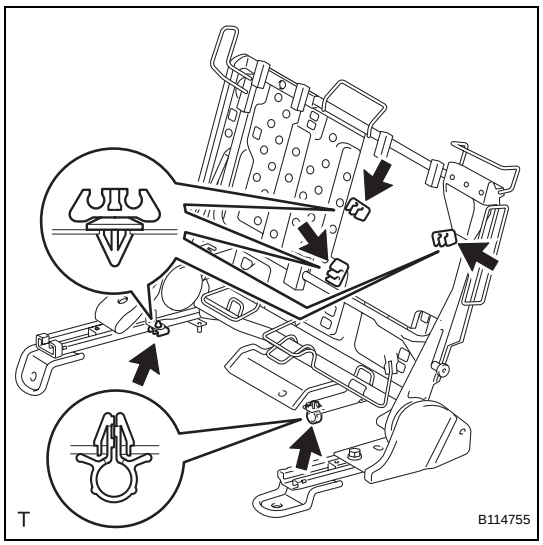

3. INSTALL REAR SEAT SLIDE CONTROL CABLE
(a) Install the 5 clamps.

SE

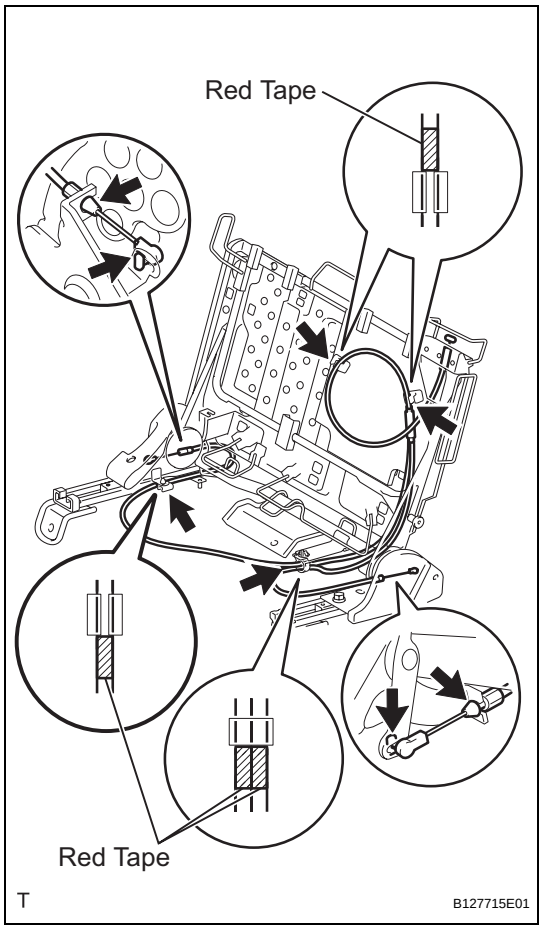

(b) Install the rear seat slide control cable as shown in the illustration.

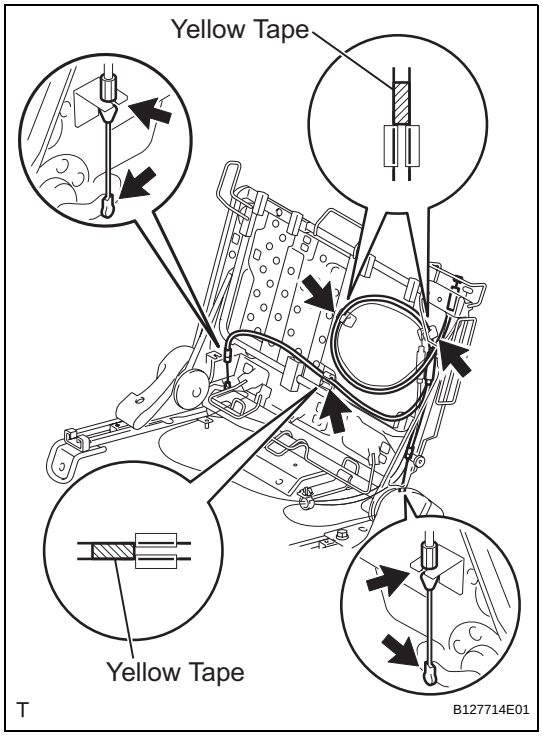

4. INSTALL REAR SEAT RECLINING CONTROL CABLE

(a) Install the rear seat reclining control cable as shown in the illustration.

SE

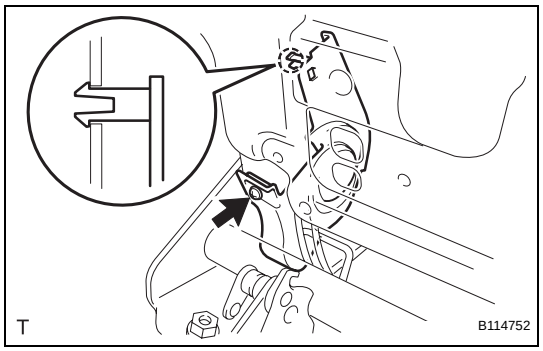

5. INSTALL RECLINING ADJUSTER INSIDE COVER LH
(a) Engage the claw and install the reclining adjuster inside cover.
(b) Tighten the screw.

6. INSTALL RECLINING ADJUSTER INSIDE COVER RH
HINT:
Use the same procedure as for the LH side.

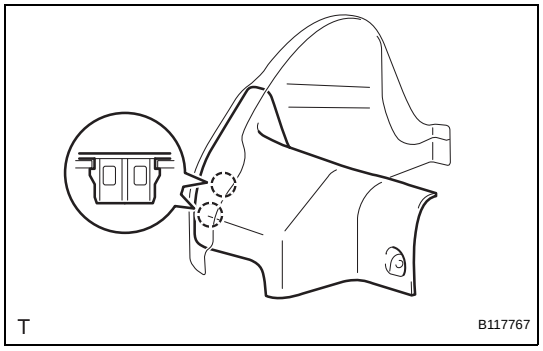

7. INSTALL REAR SEAT RECLINING INSIDE COVER
(a) Engage the 2 claws and install the rear seat reclining inside cover.

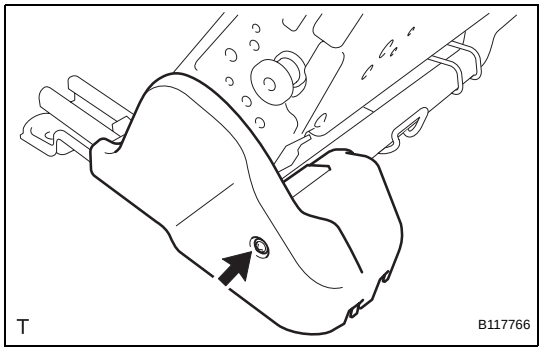

8. INSTALL REAR SEAT RECLINING OUTSIDE COVER LH
(a) Install the rear seat reclining outside cover with the screw.

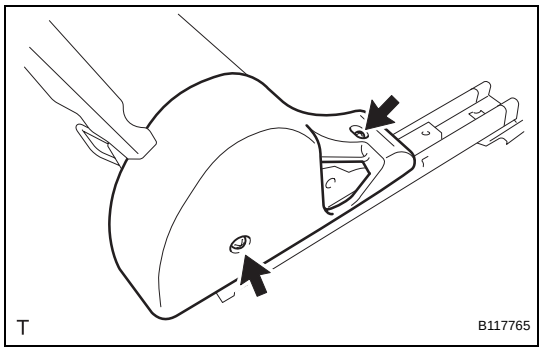

9. INSTALL REAR SEAT RECLINING OUTSIDE COVER RH
(a) Install the rear seat reclining outside cover with the 2 screws.

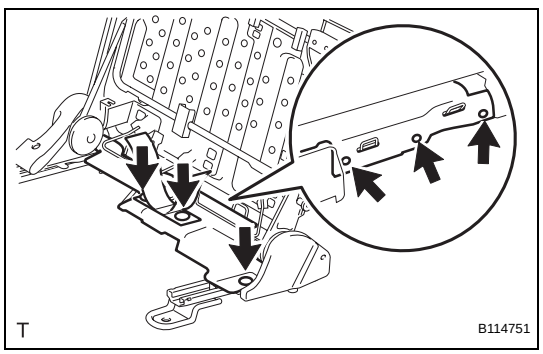

10. INSTALL REAR SEAT UNDER TRAY COVER
(a) Install the rear seat under tray cover with the 6 clips.

SE

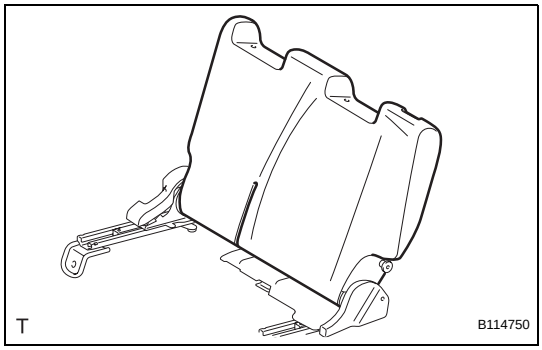

11. INSTALL REAR SEATBACK COVER PAD SUB-ASSEMBLY

(a) Install the rear seatback cover pad.

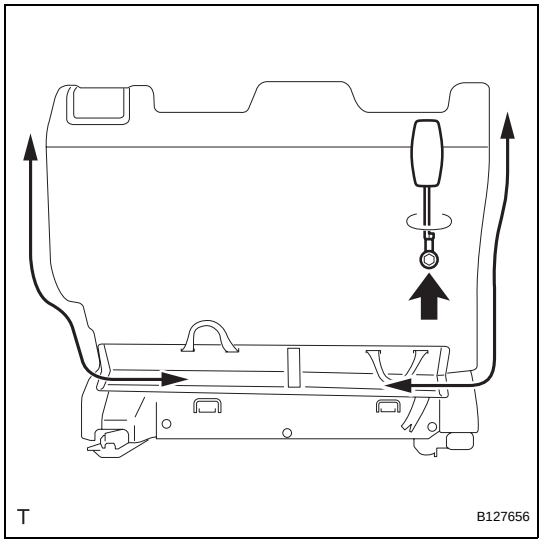

(b) Install the rear seat belt hook with the bolt.
Torque: 5.0 N*m (50 kgf*cm, 44 in.*lbf)

(c) Fasten the 2 zippers.

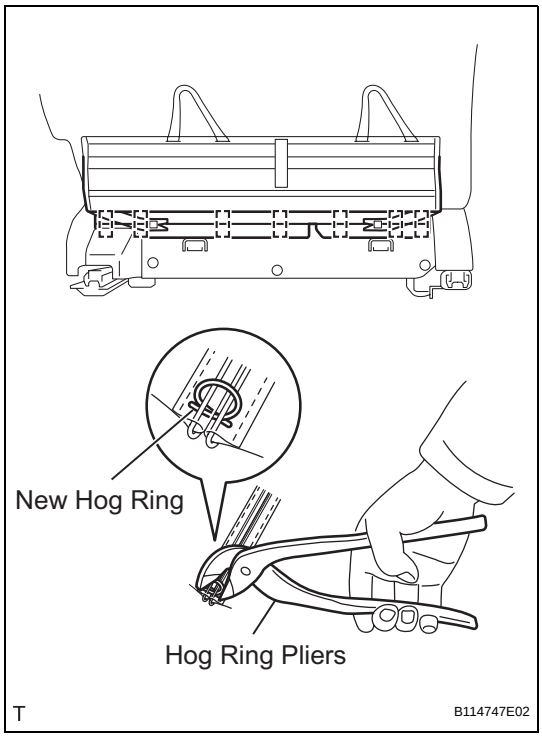

(d) Using hog ring pliers, install 7 new hog rings.

SE

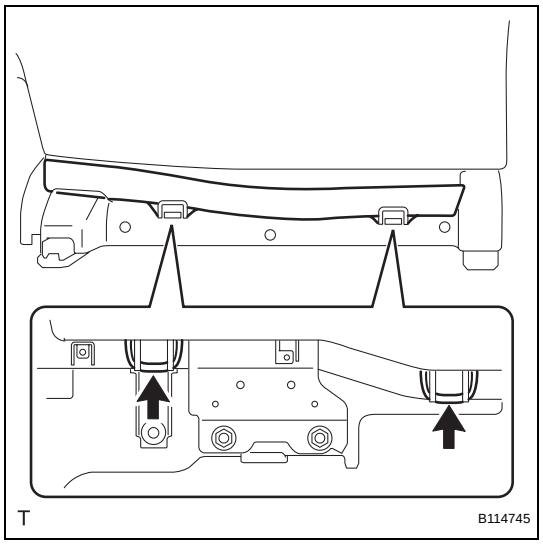

(e) Install the 2 rear seatback bands.

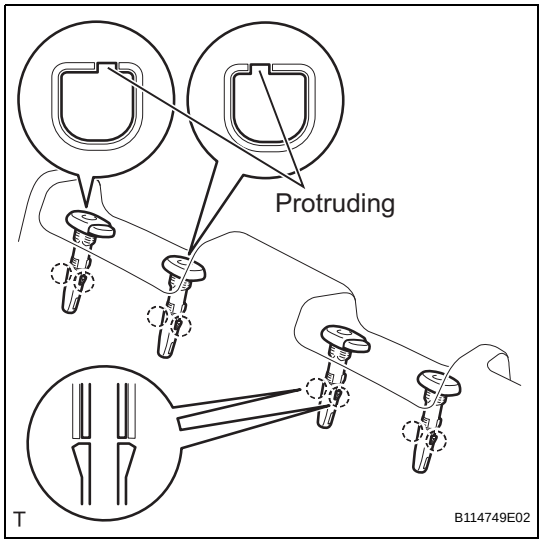

12. INSTALL REAR SEAT HEADREST SUPPORT

HINT:

Use the same procedure to install all the rear seat headrest supports.

(a) Align the protruding portion of the rear seat headrest support with the installation groove of the rear seatback frame.

(b) Engage the 2 claws and install the rear seat headrest support.

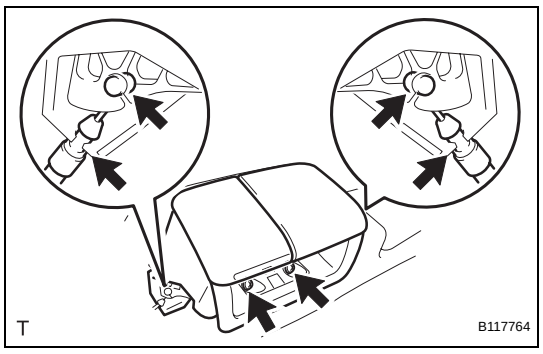

13. INSTALL REAR SEAT LOCK CONTROL LEVER SUB-ASSEMBLY

(a) Connect the rear seat reclining control cable and the rear seat slide control cable, and install the rear seat lock control lever.

(b) Tighten the 2 screws.

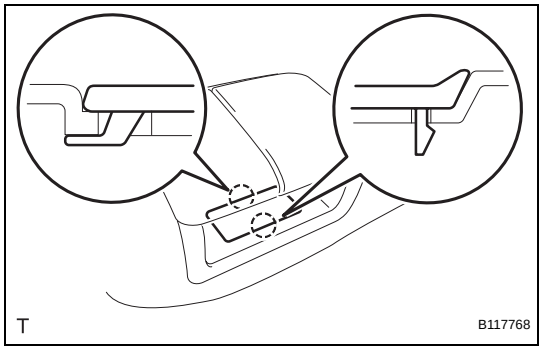

14. INSTALL REAR SEAT LOCK STRIKER COVER

(a) Engage the 2 claws and install the rear seat lock striker cover.

SE

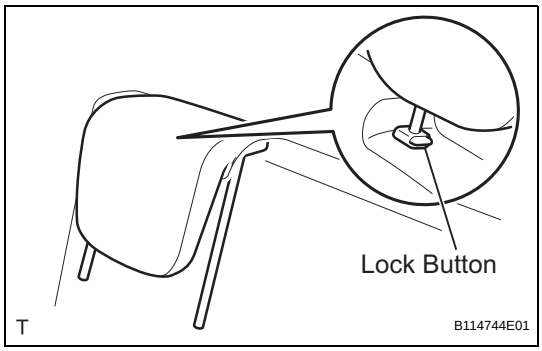

15. INSTALL REAR CENTER SEAT HEADREST ASSEMBLY

(a) Push in the lock button of the rear seat headrest support and install the rear center seat headrest.

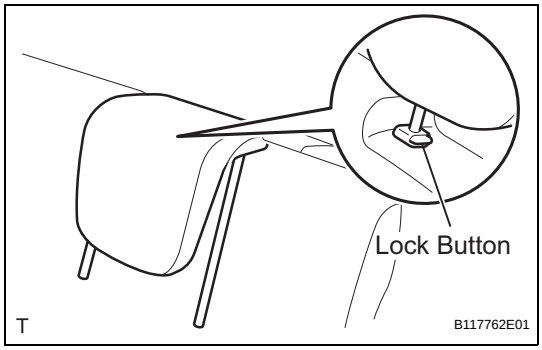

16. INSTALL REAR SEAT HEADREST ASSEMBLY

(a) Push in the lock button of the rear seat headrest support and install the rear seat headrest.

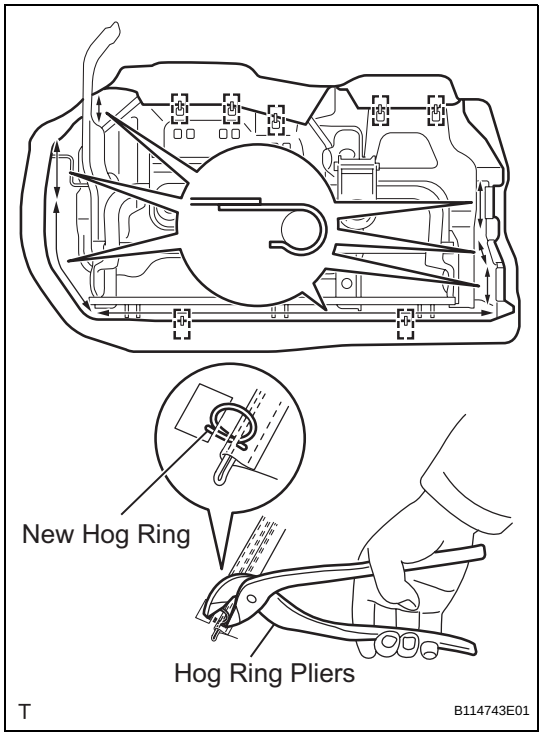

17. INSTALL REAR SEAT CUSHION COVER PAD SUB-ASSEMBLY

(a) Engage the 7 hooks and install the rear seat cushion cover pad.

(b) Using hog ring pliers, install 7 new hog rings.

SE

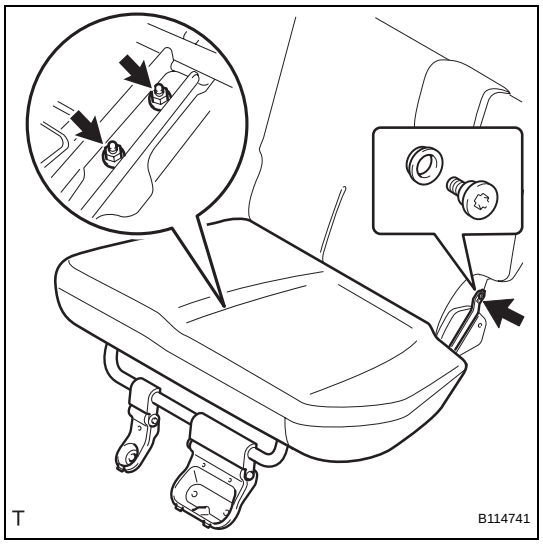

18. INSTALL REAR SEAT CUSHION ASSEMBLY

(a) Install the rear seat cushion with the 2 nuts.
Torque: 20 N*m (205 kgf*cm, 15 ft.*lbf)

(b) Install the bolt into the spacer.

(c) Using "Torx" socket wrench T45, tighten the bolt.
Torque: 21 N*m (215 kgf*cm, 16 ft.*lbf)

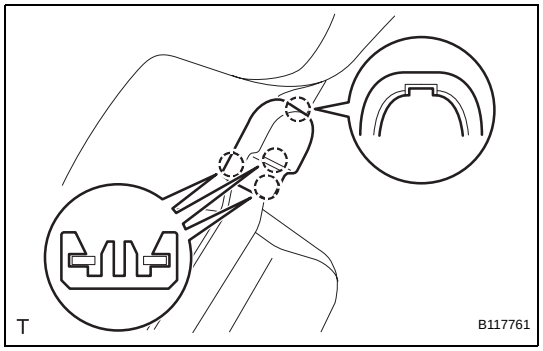

19. INSTALL REAR SEAT SIDE HINGE COVER

(a) Engage the 4 claws and install the rear seat side hinge cover.

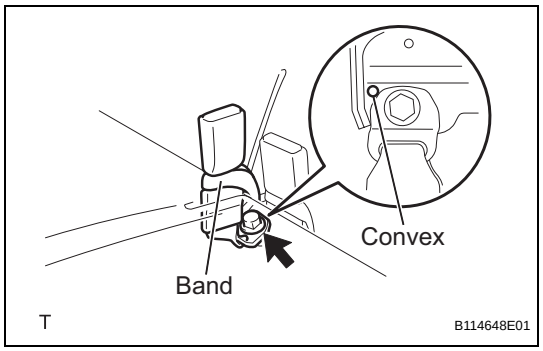

20. INSTALL REAR SEAT INNER BELT ASSEMBLY

(a) Install the rear seat inner belt with the bolt.
Torque: 42 N*m (430 kgf*cm, 31 ft.*lbf)
NOTICE:
Do not place the anchor plate over the convex area of the rear seatback frame.

(b) Install the belt into the band.

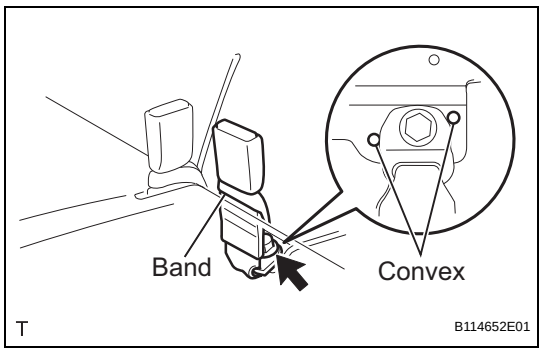

21. INSTALL REAR CENTER SEAT INNER BELT ASSEMBLY LH

(a) Install the rear center seat inner belt with the bolt.
Torque: 42 N*m (430 kgf*cm, 31 ft.*lbf)
NOTICE:
Do not place the anchor plate over the convex areas of the rear seatback frame.

(b) Install the belt into the band.

SE

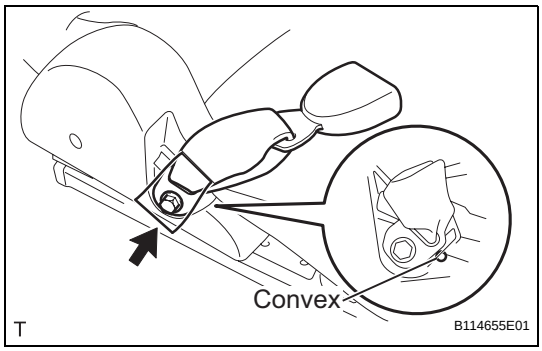

22. INSTALL REAR CENTER SEAT INNER BELT ASSEMBLY RH

(a) Install the rear center seat inner belt with the bolt.
Torque: 42 N*m (430 kgf*cm, 31 ft.*lbf)
NOTICE:
Do not place the anchor plate over the convex area of the rear seatback frame.

INSTALLATION

NOTICE:
Always use "Torx" socket wrench E10 when installing the rear seat.

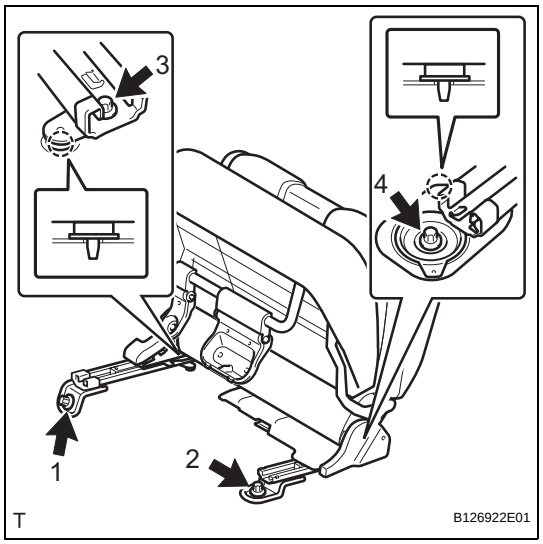

1. INSTALL REAR SEAT ASSEMBLY

(a) Insert the 2 locating pins through the 2 body holes and install the rear seat.

(b) Using "Torx" socket wrench E10, install the 4 bolts in the sequence shown in the illustration.
Torque: 37 N*m (375 kgf*cm, 27 ft.*lbf)

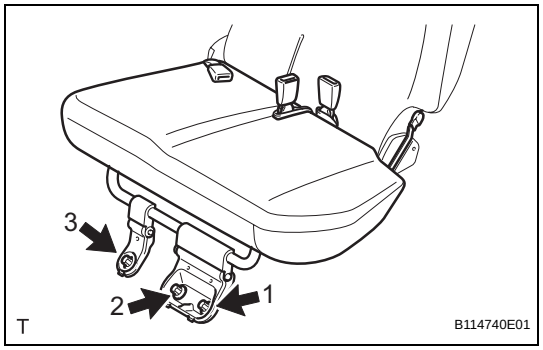

(c) Install the rear seat cushion.

(d) Using "Torx" socket wrench E10, install the 3 bolts in the sequence shown in the illustration.
Torque: 37 N*m (375 kgf*cm, 27 ft.*lbf)

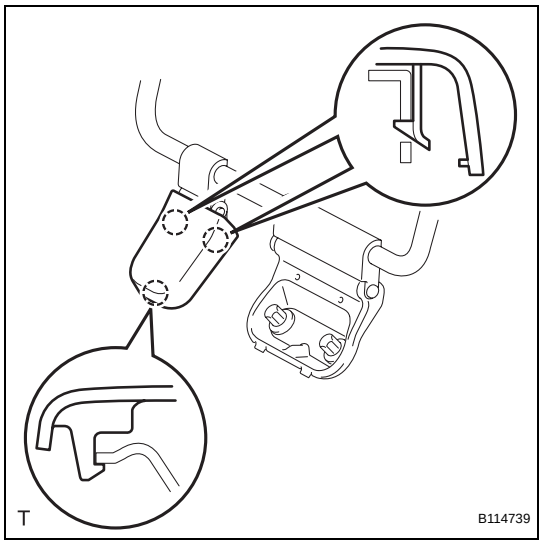

2. INSTALL NO. 2 REAR SEAT LEG COVER

(a) Engage the 3 claws and install the No. 2 rear seat leg cover.

SE

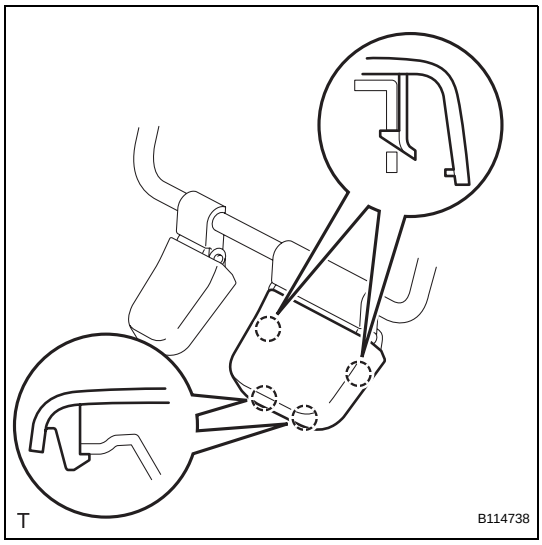

3. INSTALL NO. 1 REAR SEAT LEG COVER

(a) Engage the 4 claws and install the No. 1 rear seat leg cover.

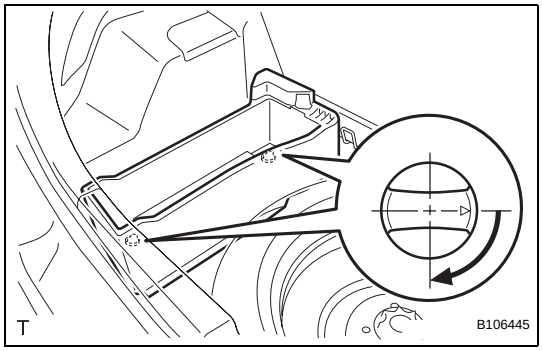

4. INSTALL DECK FLOOR BOX

(a) Install the deck floor box and lock the 2 knobs.

5. INSTALL DECK BOARD SUB-ASSEMBLY (See page IR-83)

6. INSTALL PACKAGE TRAY TRIM PANEL ASSEMBLY (See page IR-83)

REAR SEAT ASSEMBLY (for Hatchback 60/40 Split Seat Type RH Side)

COMPONENTS

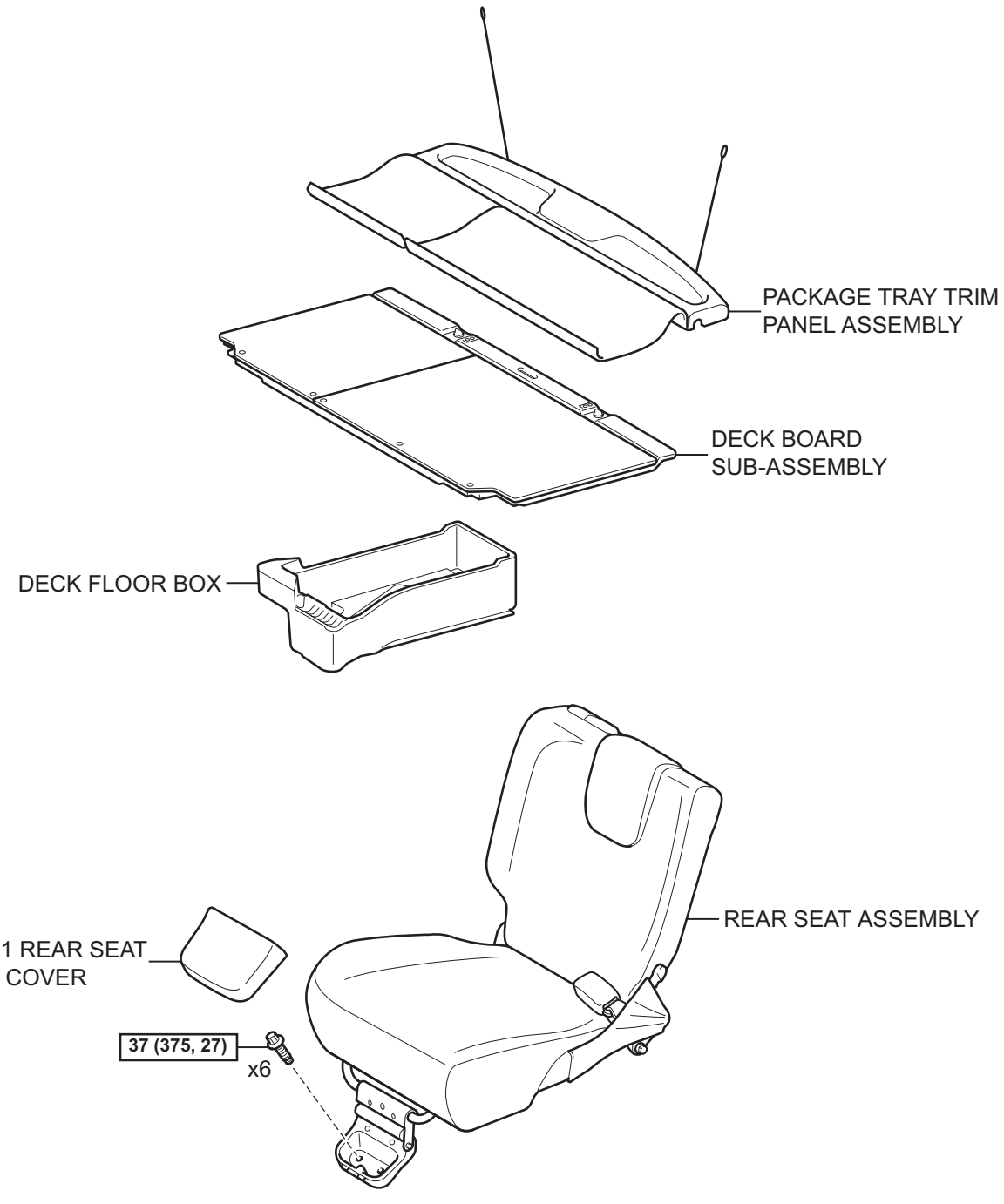

N*m (kgf*cm, ft*lbf) : Specified torque

T

B138683E01

SE

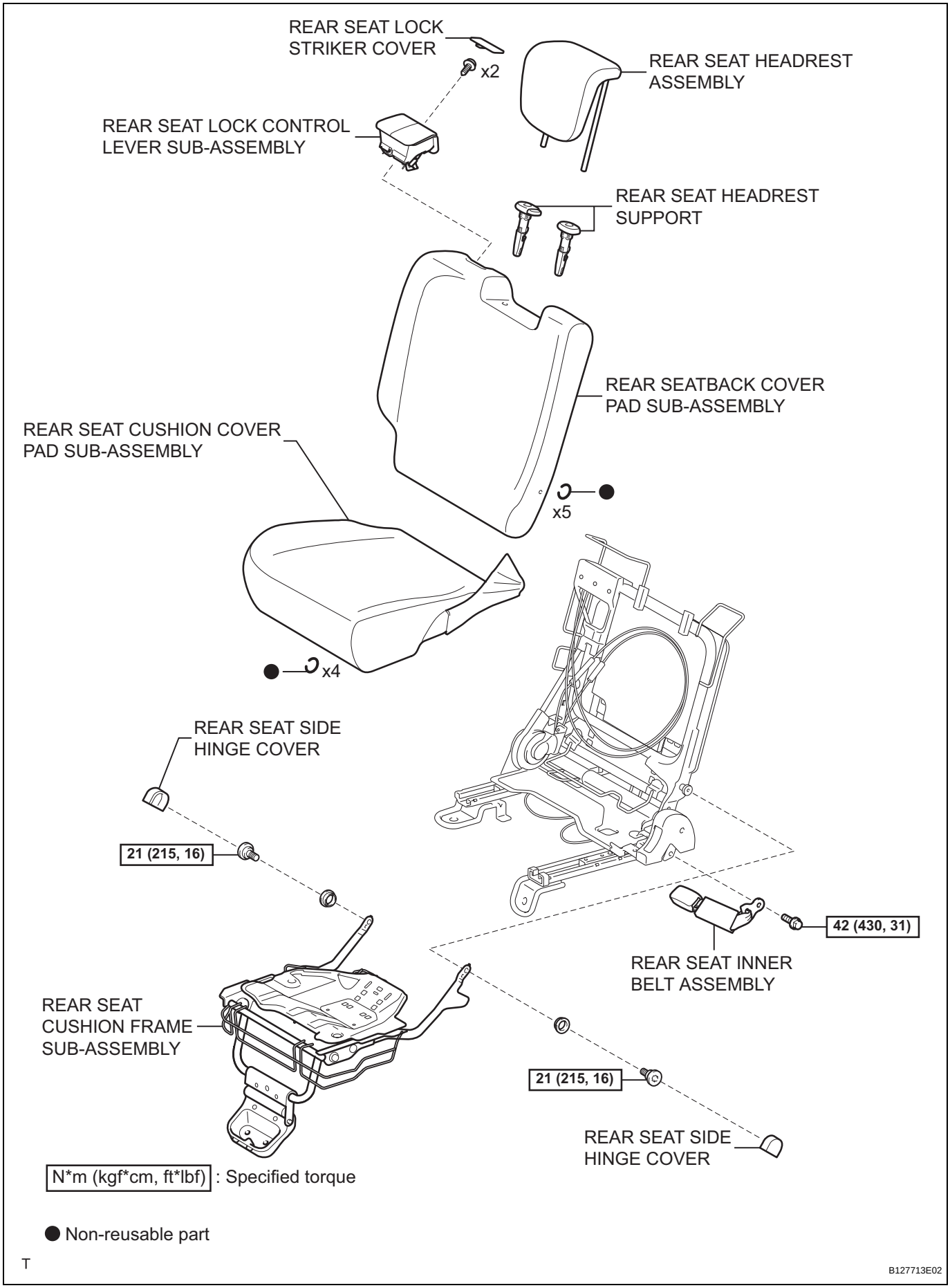
REAR SEAT LOCK STRIKER COVER
x2
REAR SEAT HEADREST ASSEMBLY
REAR SEAT LOCK CONTROL LEVER SUB-ASSEMBLY
REAR SEAT HEADREST SUPPORT
REAR SEATBACK COVER PAD SUB-ASSEMBLY
REAR SEAT CUSHION COVER PAD SUB-ASSEMBLY
x5
x4
REAR SEAT SIDE HINGE COVER
21 (215, 16)
42 (430, 31)
REAR SEAT INNER BELT ASSEMBLY
REAR SEAT CUSHION FRAME SUB-ASSEMBLY
21 (215, 16)
REAR SEAT SIDE HINGE COVER
N*m (kgf*cm, ft*lbf) : Specified torque
● Non-reusable part
T
B127713E02

SE

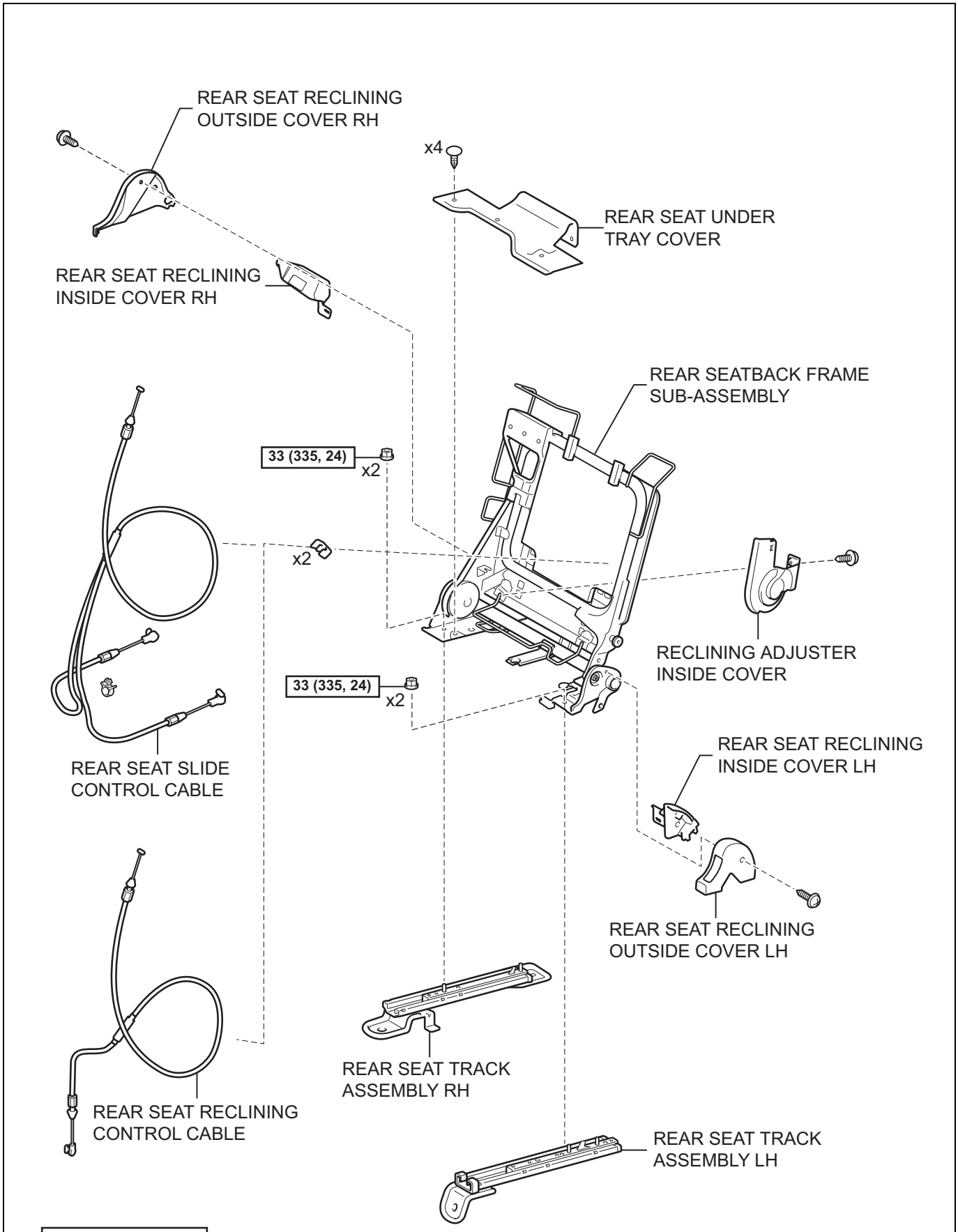
REAR SEAT RECLINING OUTSIDE COVER RH
x4
REAR SEAT UNDER TRAY COVER
REAR SEAT RECLINING INSIDE COVER RH
REAR SEATBACK FRAME SUB-ASSEMBLY
33 (335, 24)
x2
x2
33 (335, 24)
x2
RECLINING ADJUSTER INSIDE COVER
REAR SEAT SLIDE CONTROL CABLE
REAR SEAT RECLINING INSIDE COVER LH
REAR SEAT RECLINING OUTSIDE COVER LH
REAR SEAT TRACK ASSEMBLY RH
REAR SEAT RECLINING CONTROL CABLE
REAR SEAT TRACK ASSEMBLY LH
N*m (kgf*cm, ft*lbf) : Specified torque
T
B114658E02

SE

REMOVAL

NOTICE:
Always use "Torx" socket wrench E10 when removing the rear seat.

1. **REMOVE PACKAGE TRAY TRIM PANEL ASSEMBLY (See page IR-48)**
2. **REMOVE DECK BOARD SUB-ASSEMBLY (See page IR-48)**
3. **REMOVE DECK FLOOR BOX (See page IR-48)**
4. **REMOVE NO. 1 REAR SEAT LEG COVER**
   (a) Disengage the 4 claws in the sequence shown in the illustration and remove the No. 1 rear seat leg cover.

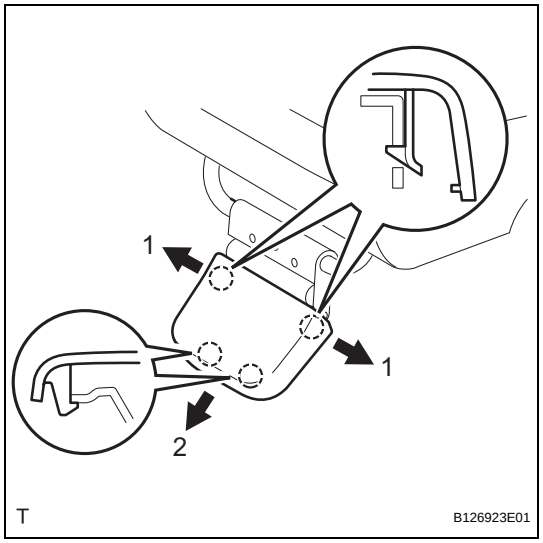

5. **REMOVE REAR SEAT ASSEMBLY**
   (a) Using "Torx" socket wrench E10, remove the 2 bolts and pull up the rear seat cushion.

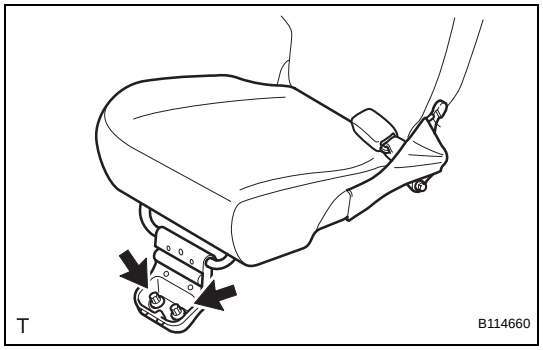

   (b) Using "Torx" socket wrench E10, remove the 4 bolts and the rear seat.

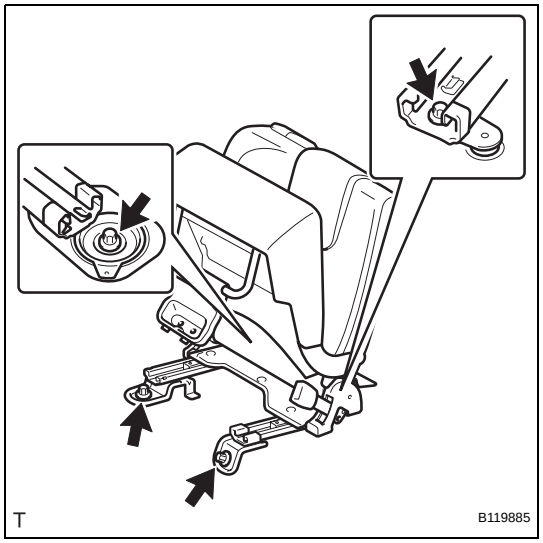

SE

DISASSEMBLY

CAUTION:
Wear protective gloves. Sharp surfaces on the rear seatback frame could cause injuries to your hands.

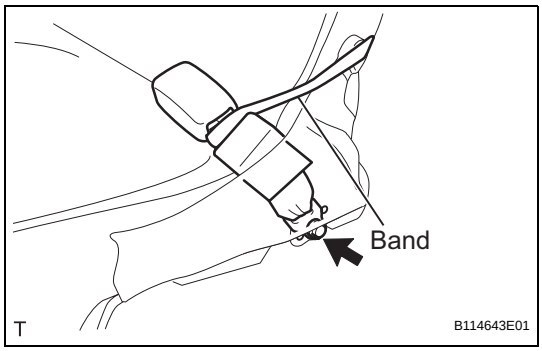

1. REMOVE REAR SEAT INNER BELT ASSEMBLY
(a) Remove the belt from the band.
(b) Remove the bolt and the rear seat inner belt.

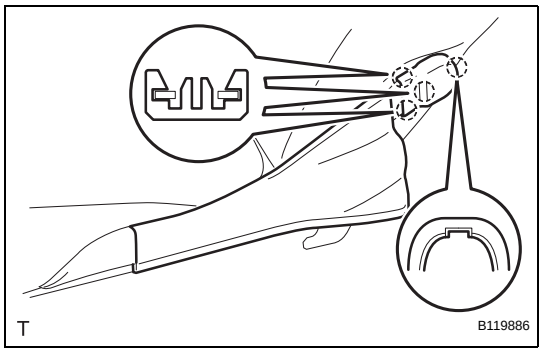

2. REMOVE REAR SEAT SIDE HINGE COVER
HINT:
Use the same procedure for both sides.
(a) Disengage the 4 claws and remove the rear seat side hinge cover.

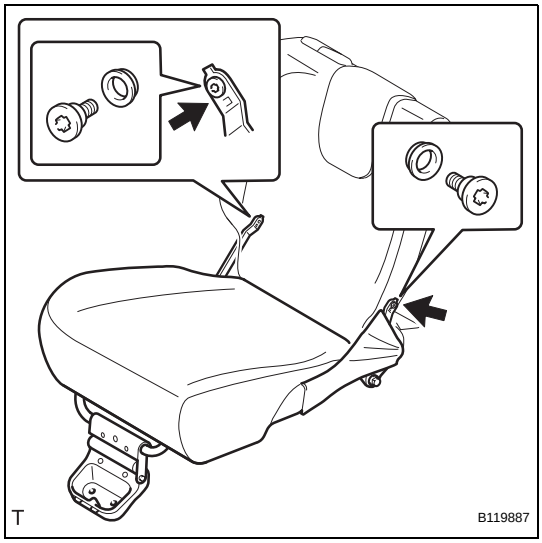

3. REMOVE REAR SEAT CUSHION ASSEMBLY
(a) Using "Torx" socket wrench T45, remove the 2 bolts, 2 spacers and the rear seat cushion.

SE

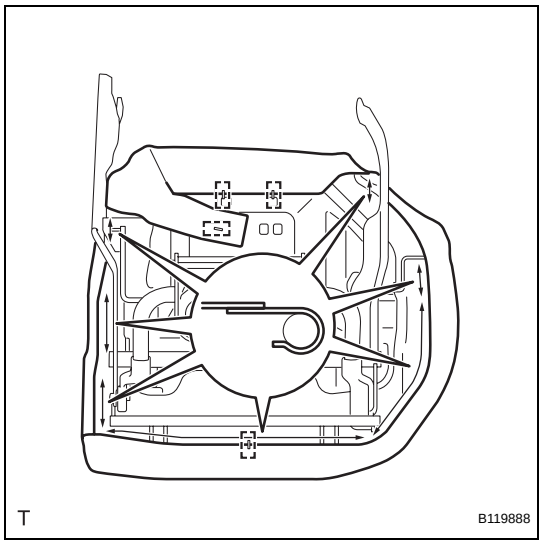

4. REMOVE REAR SEAT CUSHION COVER PAD SUB-ASSEMBLY

(a) Remove the 4 hog rings.

(b) Disengage the 7 hooks and remove the rear seat cushion cover pad.

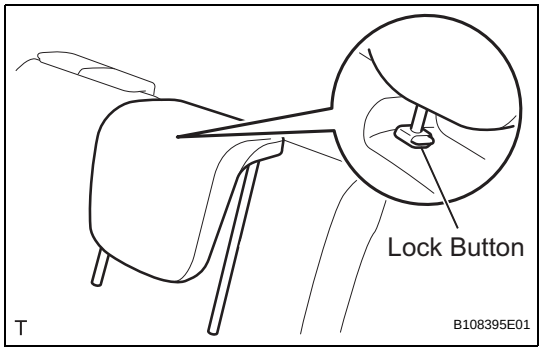

5. REMOVE REAR SEAT HEADREST ASSEMBLY

(a) Push in the lock button of the rear seat headrest support and remove the rear seat headrest.

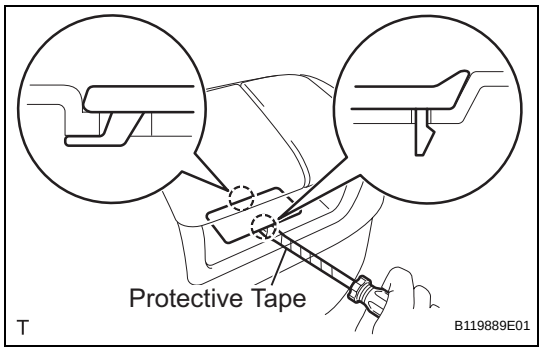

6. REMOVE REAR SEAT LOCK STRIKER COVER

(a) Using a screwdriver with its tip wrapped in protective tape, disengage the 2 claws and remove the rear seat back lock striker cover.

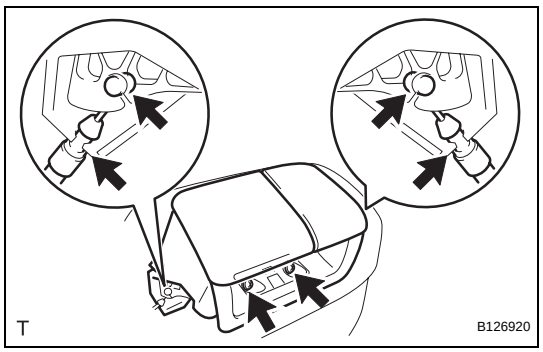

7. REMOVE REAR SEAT LOCK CONTROL LEVER SUB-ASSEMBLY

(a) Remove the 2 screws.

(b) Disconnect the rear seat reclining control cable and the rear seat slide control cable, and remove the rear seat lock control lever.

SE

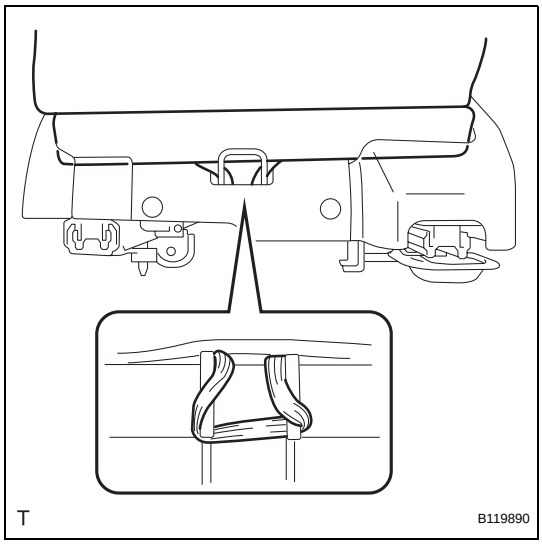

8. REMOVE REAR SEAT HEADREST SUPPORT

(a) Remove the rear seatback cover band.

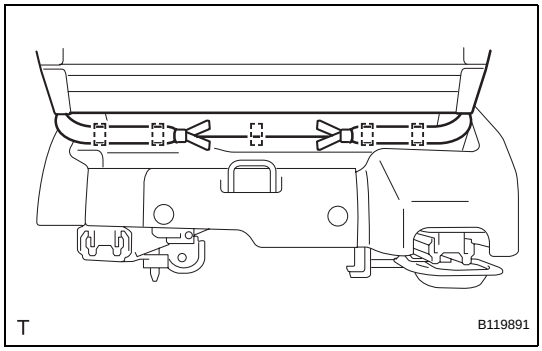

(b) Remove the 5 hog rings.

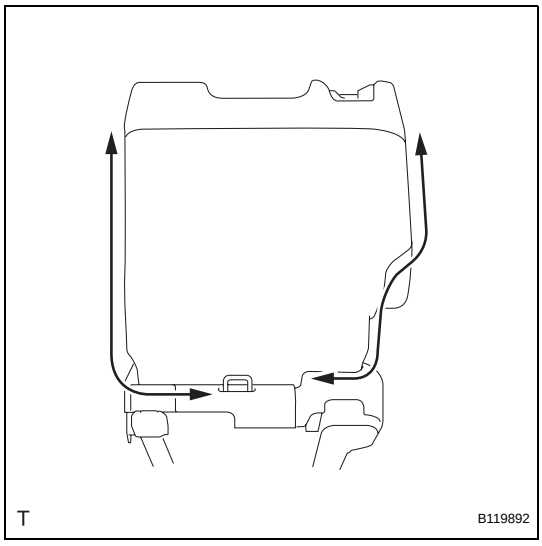

(c) Unfasten the 2 zippers.

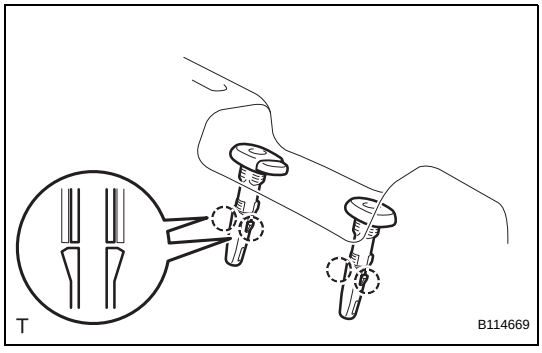

(d) Disengage the 2 claws and remove the rear seat headrest support.
HINT:
Use the same procedure for both sides.

SE

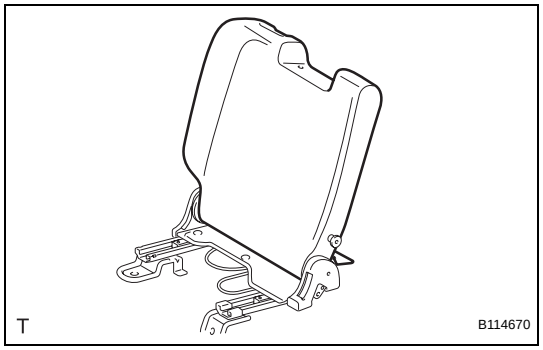

9. REMOVE REAR SEATBACK COVER PAD SUB-ASSEMBLY

(a) Remove the rear seatback cover pad.

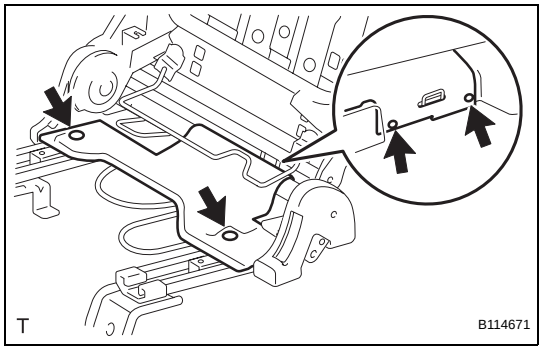

10. REMOVE REAR SEAT UNDER TRAY COVER

(a) Using a clip remover, remove the 4 clips and the rear seat under tray cover.

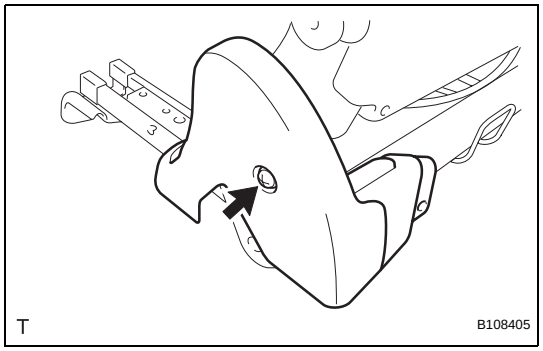

11. REMOVE REAR SEAT RECLINING OUTSIDE COVER LH

(a) Remove the screw and the rear seat reclining outside cover.

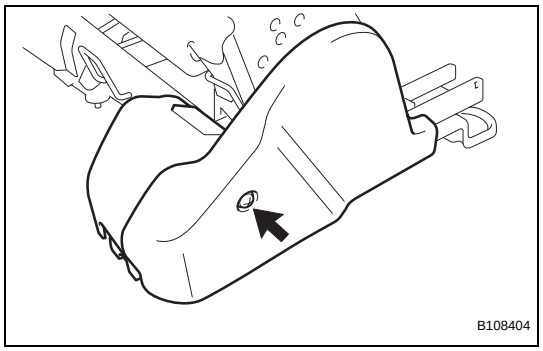

12. REMOVE REAR SEAT RECLINING OUTSIDE COVER RH

(a) Remove the screw and the rear seat reclining outside cover.

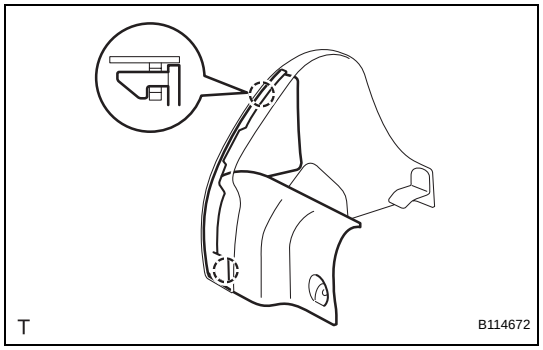

13. REMOVE REAR SEAT RECLINING INSIDE COVER LH

(a) Disengage the 2 claws and remove the reclining inside cover.

SE

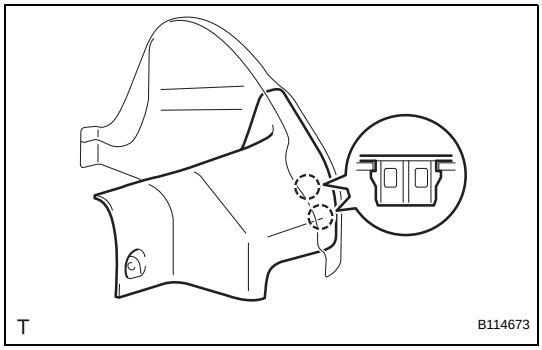

14. REMOVE REAR SEAT RECLINING INSIDE COVER RH

(a) Disengage the 2 claws and remove the reclining inside cover.

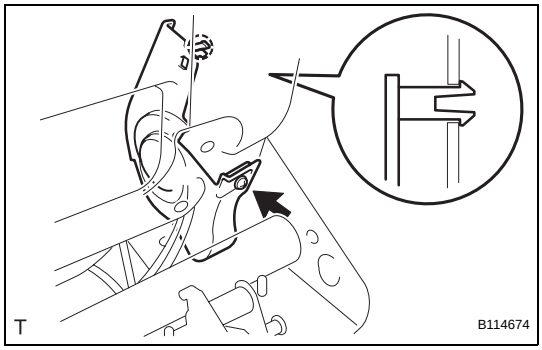

15. REMOVE RECLINING ADJUSTER INSIDE COVER

(a) Remove the screw.

(b) Disengage the claw and remove the reclining adjuster inside cover.

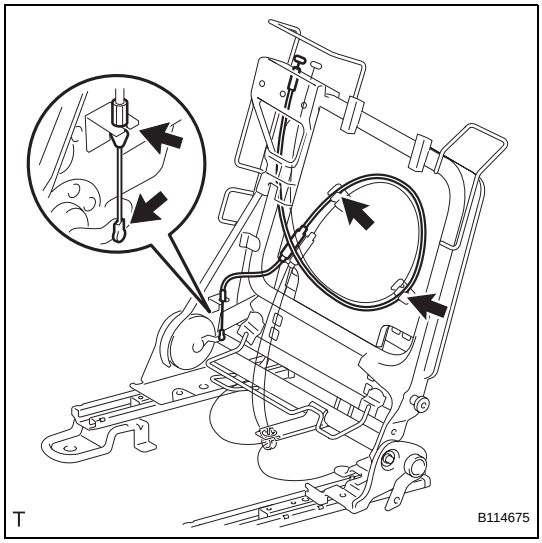

16. REMOVE REAR SEAT RECLINING CONTROL CABLE

(a) Remove the rear seat reclining control cable.

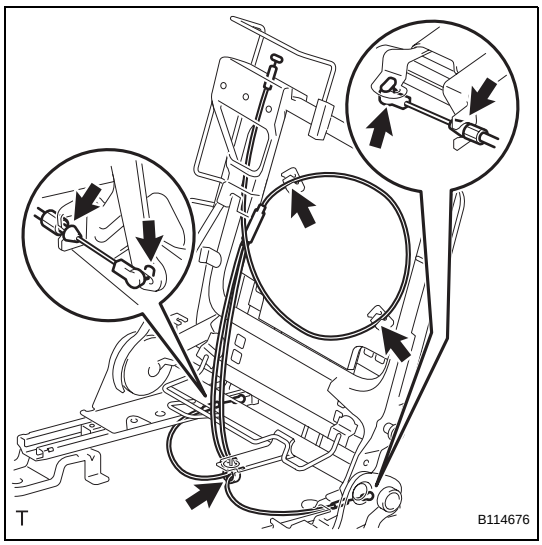

17. REMOVE REAR SEAT SLIDE CONTROL CABLE

(a) Remove the rear seat slide control cable.

SE

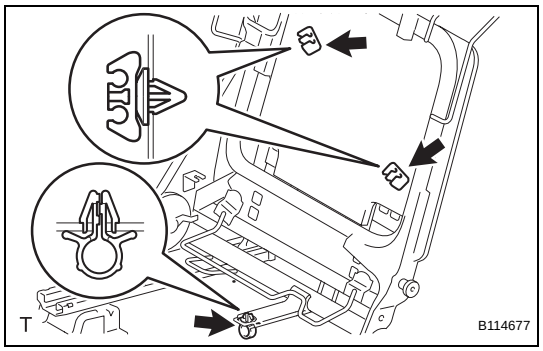

(b) Remove the 3 clamps.

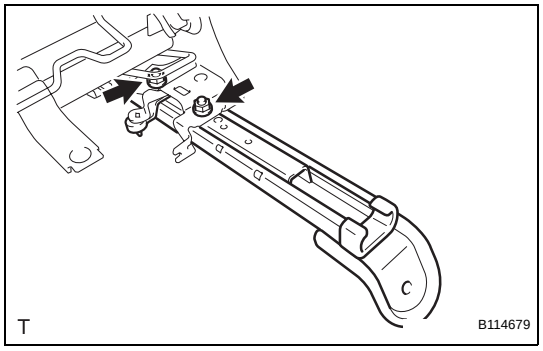

18. REMOVE REAR SEAT TRACK ASSEMBLY LH

(a) Remove the 2 nuts and the rear seat track.

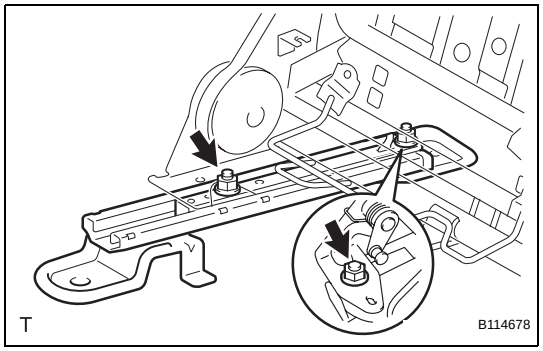

19. REMOVE REAR SEAT TRACK ASSEMBLY RH

(a) Remove the 2 nuts and the rear seat track.

SE

REASSEMBLY

CAUTION:
Wear protective gloves. Sharp surfaces on the rear seatback frame could cause injuries to your hands.

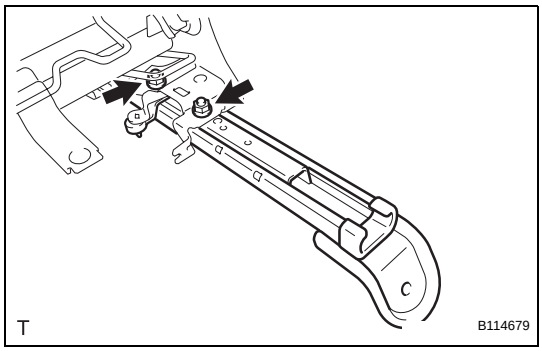

1. INSTALL REAR SEAT TRACK ASSEMBLY LH
(a) Install the rear seat track with the 2 nuts.
Torque: 33 N*m (335 kgf*cm, 24 ft.*lbf)

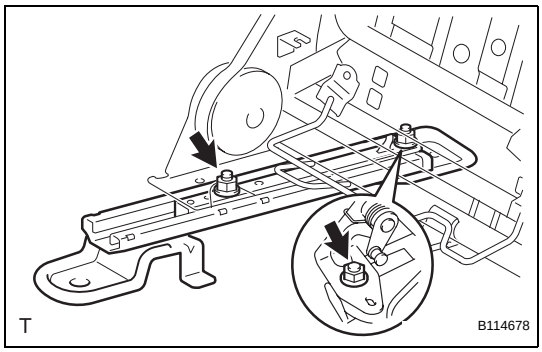

2. INSTALL REAR SEAT TRACK ASSEMBLY RH
(a) Install the rear seat track with the 2 nuts.
Torque: 33 N*m (335 kgf*cm, 24 ft.*lbf)

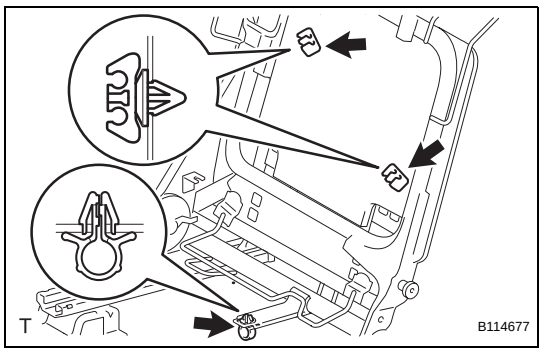

3. INSTALL REAR SEAT SLIDE CONTROL CABLE
(a) Install the 3 clamps.

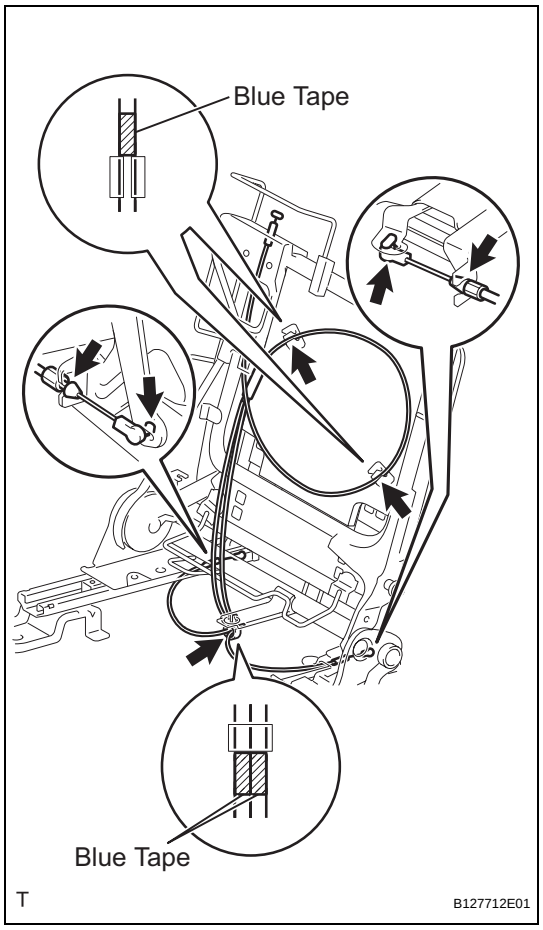

(b) Install the rear seat slide control cable as shown in the illustration.

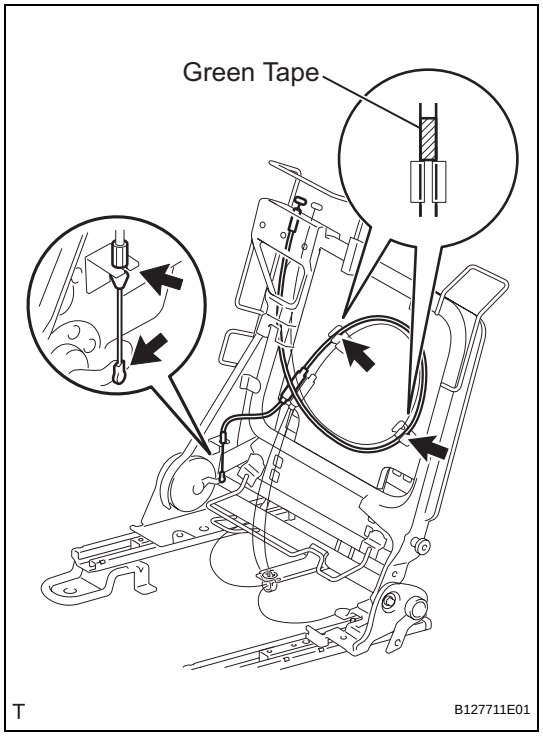

4. INSTALL REAR SEAT RECLINING CONTROL CABLE

(a) Install the rear seat reclining control cable as shown in the illustration.

SE

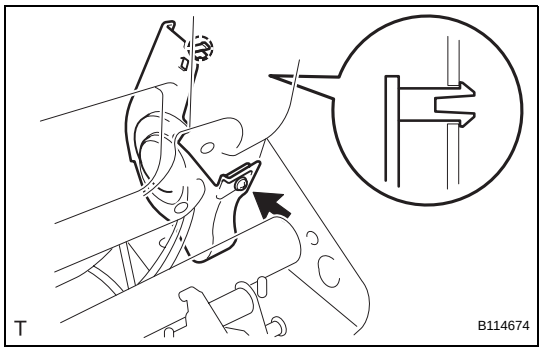

5. INSTALL RECLINING ADJUSTER INSIDE COVER

(a) Engage the claw and install the reclining adjuster inside cover.

(b) Tighten the screw.

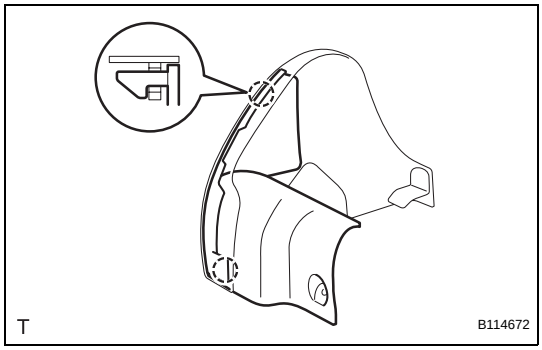

6. INSTALL REAR SEAT RECLINING INSIDE COVER LH

(a) Engage the 2 claws and install the rear seat reclining inside cover.

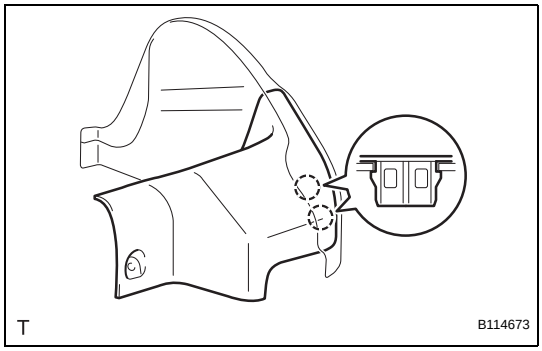

7. INSTALL REAR SEAT RECLINING INSIDE COVER RH

(a) Engage the 2 claws and install the rear seat reclining inside cover.

SE

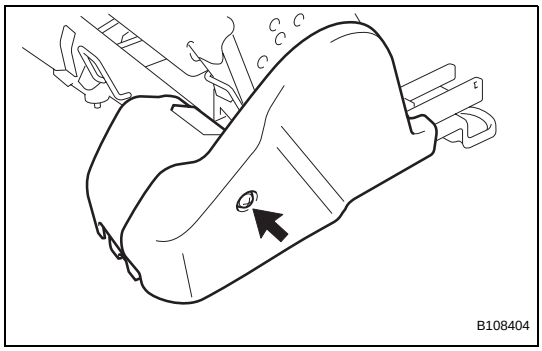

8. INSTALL REAR SEAT RECLINING OUTSIDE COVER RH

(a) Install the rear seat reclining outside cover with the screw.

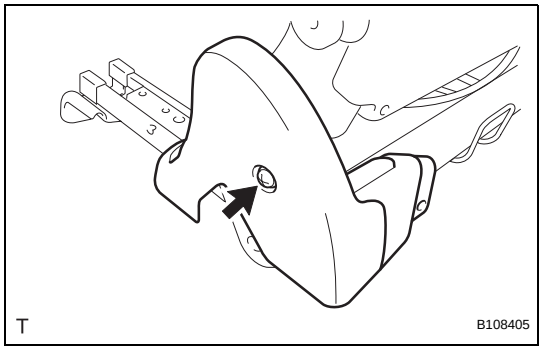

9. INSTALL REAR SEAT RECLINING OUTSIDE COVER LH

(a) Install the rear seat reclining outside cover with the screw.

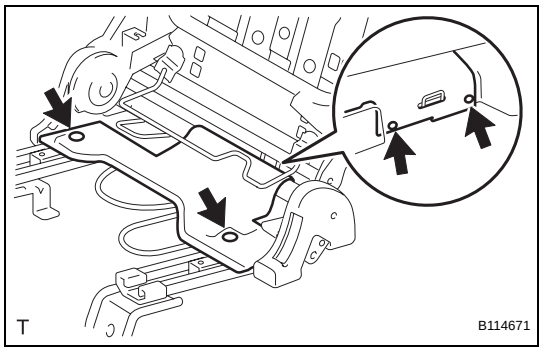

10. INSTALL REAR SEAT UNDER TRAY COVER

(a) Install the rear seat under tray cover with the 4 clips.

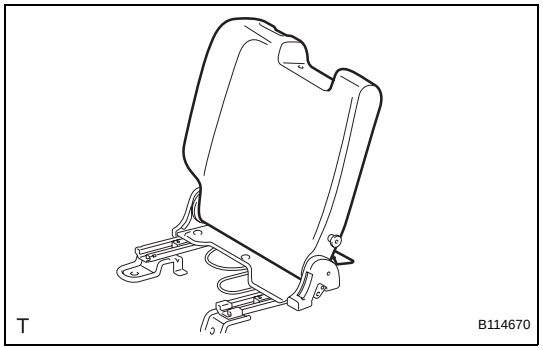

11. INSTALL REAR SEATBACK COVER PAD SUB-ASSEMBLY

(a) Install the rear seatback cover pad.

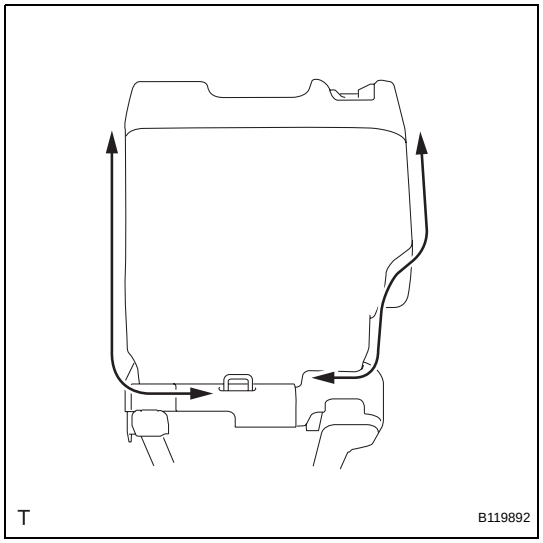

(b) Fasten the 2 zippers.

SE

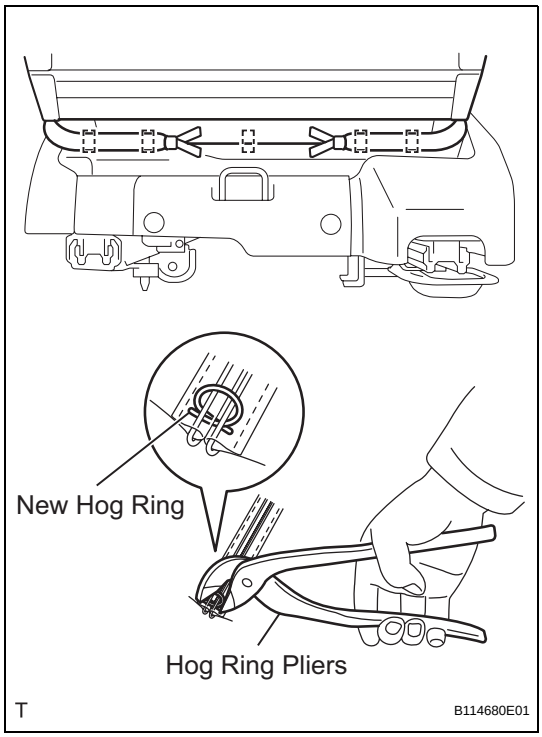

(c) Using hog ring pliers, install 5 new hog rings.

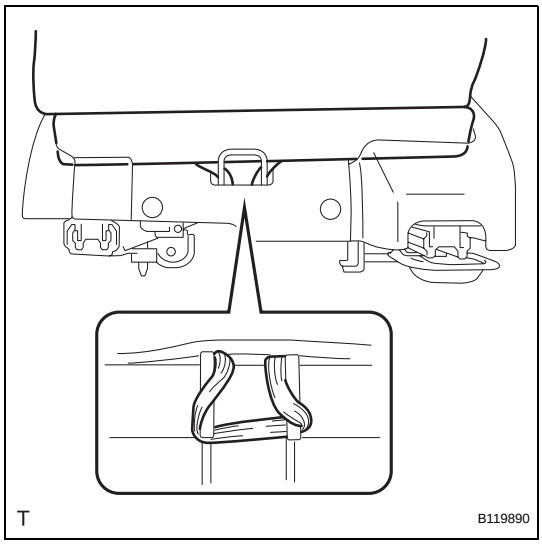

(d) Install the rear seat back band.

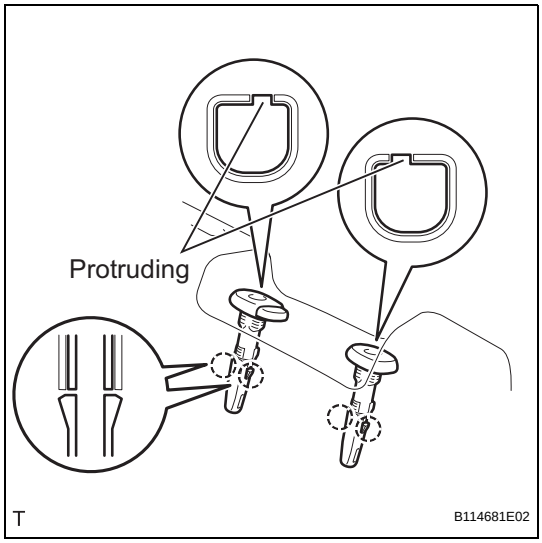

12. INSTALL REAR SEAT HEADREST SUPPORT

HINT:

Use the same procedure for both sides.

(a) Align the protruding portion of the rear seat headrest support with the installation groove of the rear seatback frame.

(b) Engage the 2 claws and install the rear seat headrest support.

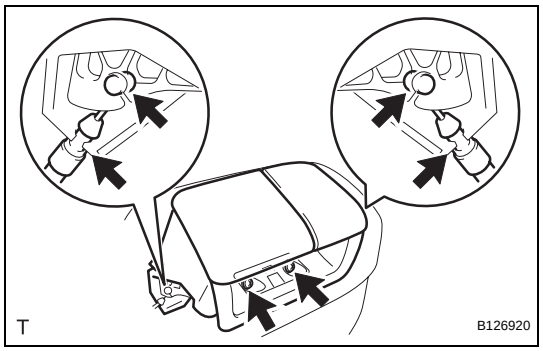

13. INSTALL REAR SEAT LOCK CONTROL LEVER SUB-ASSEMBLY

(a) Connect the rear seat reclining control cable and the rear seat slide control cable, and install the rear seat lock control lever.

(b) Tighten the 2 screws.

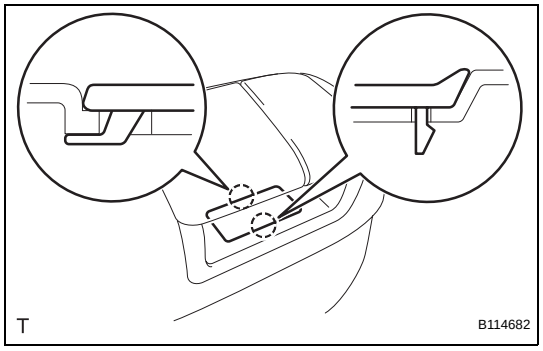

14. INSTALL REAR SEAT LOCK STRIKER COVER

(a) Engage the 2 claws and install the rear seat lock striker cover.

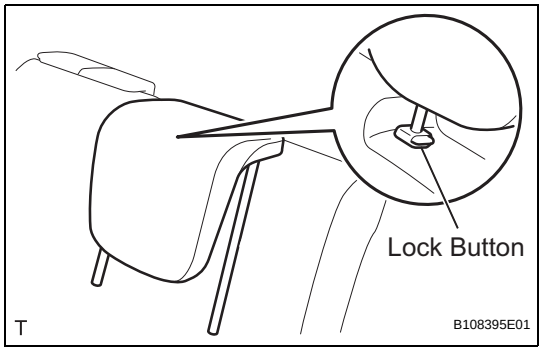

15. INSTALL REAR SEAT HEADREST ASSEMBLY

(a) Push in the lock button of the rear seat headrest support and install the rear seat headrest.

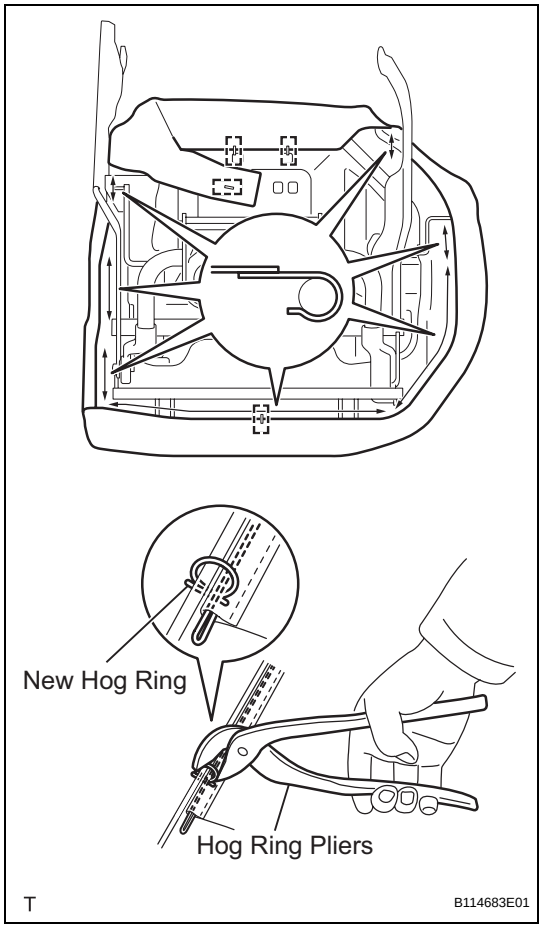

16. INSTALL REAR SEAT CUSHION COVER PAD SUB-ASSEMBLY

(a) Engage the 7 hooks and install the rear seat cushion cover pad.

(b) Using hog ring pliers, install 4 new hog rings.

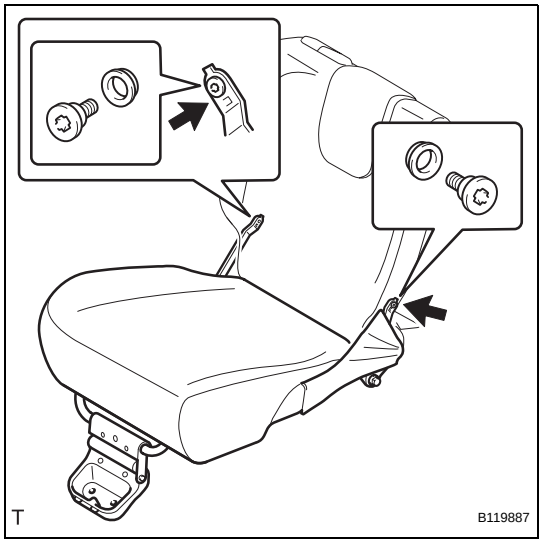

17. INSTALL REAR SEAT CUSHION ASSEMBLY

(a) Install the 2 bolts into the 2 spacers.

(b) Using "Torx" socket wrench T45, install the rear seat cushion with the 2 bolts and the 2 spacers.
Torque: 21 N*m (215 kgf*cm, 16 ft.*lbf)

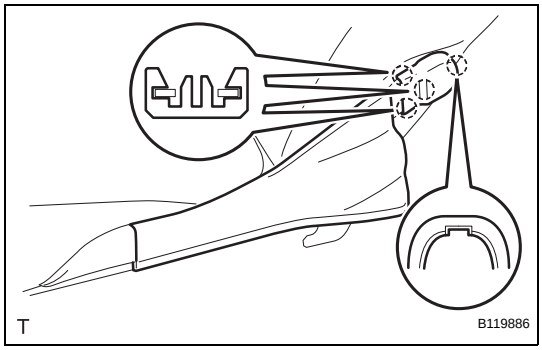

18. INSTALL REAR SEAT SIDE HINGE COVER

HINT:

Use the same procedure for both sides.

(a) Engage the 4 claws and install the rear seat side hinge cover.

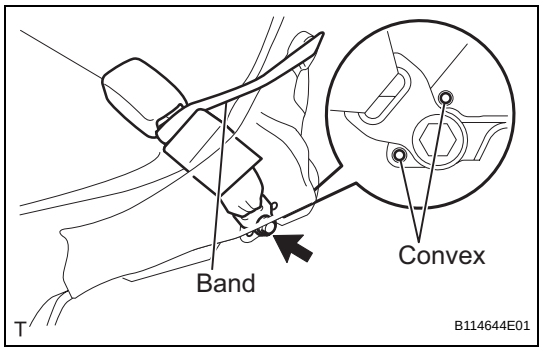

19. INSTALL REAR SEAT INNER BELT ASSEMBLY

(a) Install the rear seat inner belt with the bolt.
Torque: 42 N*m (430 kgf*cm, 31 ft.*lbf)
NOTICE:
Do not place the anchor plate over the convex areas of the rear seatback frame.

(b) Install the belt into the band.

INSTALLATION

NOTICE:
Always use "Torx" socket wrench E10 when installing the rear seat.

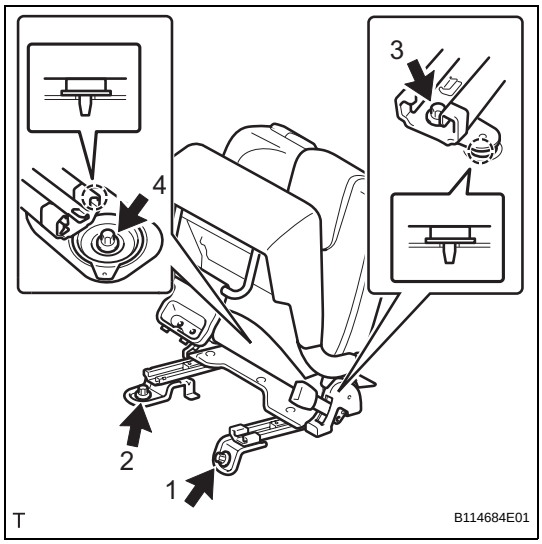

1. INSTALL REAR SEAT ASSEMBLY

(a) Insert the 2 locating pins through the 2 body holes and install the rear seat.

(b) Using "Torx" socket wrench E10, install the 4 bolts in the sequence shown in the illustration.
Torque: 37 N*m (375 kgf*cm, 27 ft.*lbf)

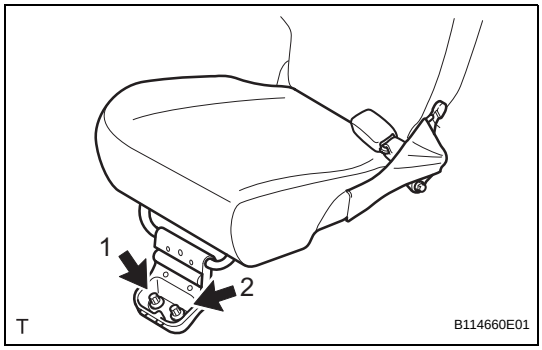

(c) Install the rear seat cushion.

(d) Using "Torx" socket wrench E10, install the 2 bolts in the sequence shown in the illustration.
Torque: 37 N*m (375 kgf*cm, 27 ft.*lbf)

SE

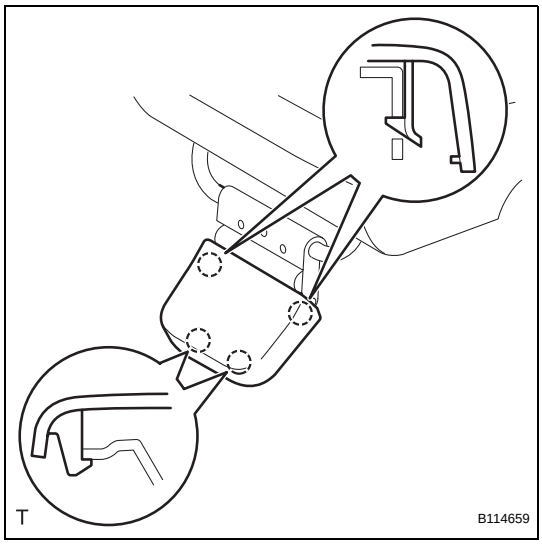

2. INSTALL NO. 1 REAR SEAT LEG COVER

(a) Engage the 4 claws and install the No. 1 rear seat leg cover.

3. INSTALL DECK FLOOR BOX (See page IR-83)

4. INSTALL DECK BOARD SUB-ASSEMBLY (See page IR-83)

5. INSTALL PACKAGE TRAY TRIM PANEL ASSEMBLY (See page IR-83)

REAR SEAT ASSEMBLY (for Fixed Seat Type)

COMPONENTS

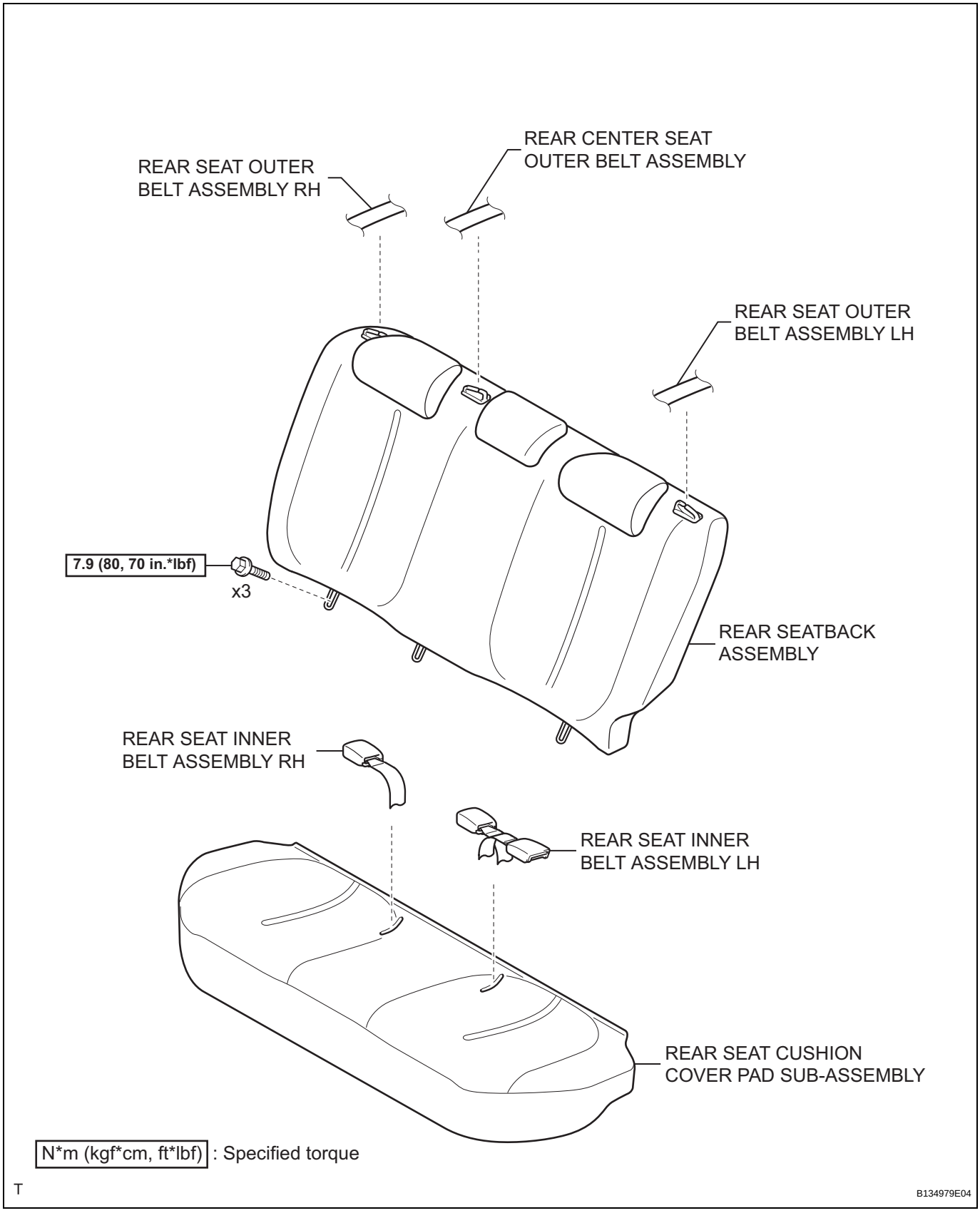

SE

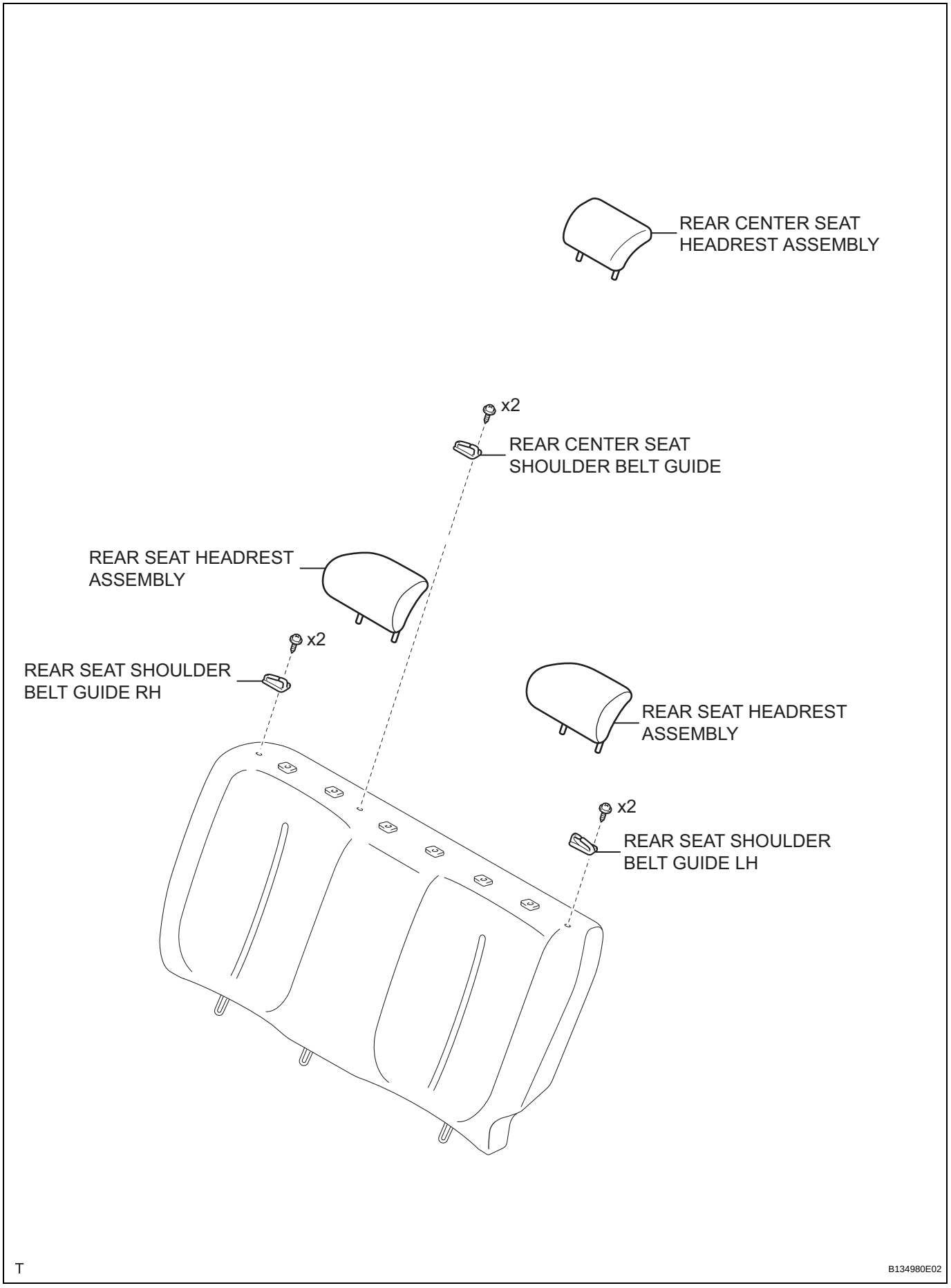
REAR CENTER SEAT HEADREST ASSEMBLY
x2
REAR CENTER SEAT SHOULDER BELT GUIDE
REAR SEAT HEADREST ASSEMBLY
x2
REAR SEAT SHOULDER BELT GUIDE RH
REAR SEAT HEADREST ASSEMBLY
x2
REAR SEAT SHOULDER BELT GUIDE LH
T
B134980E02

SE

REMOVAL

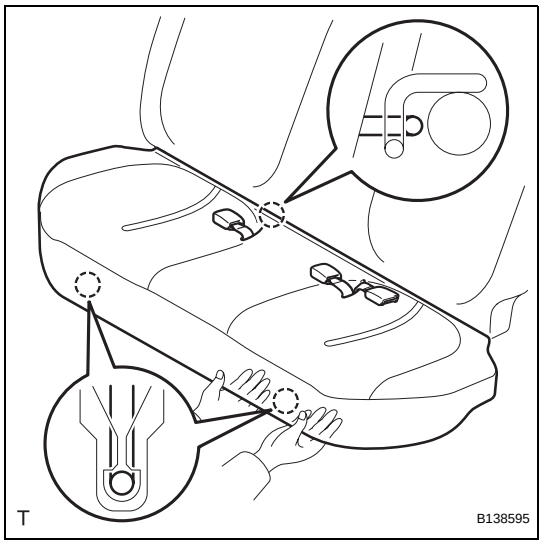

1. REMOVE REAR SEAT CUSHION COVER PAD SUB-ASSEMBLY

(a) Hold the front edge of the rear seat cushion cover pad and lift it up, as shown in the illustration, to disengage the 2 hooks.

NOTICE:

Hold the area around the hooks so as to avoid deforming the rear seat cushion frame.

(b) Pass the rear seat inner belt through the slit in the rear seat cushion cover pad, disengage the hook between the rear seat cushion cover pad and the rear seatback, and remove the rear seat cushion cover pad.

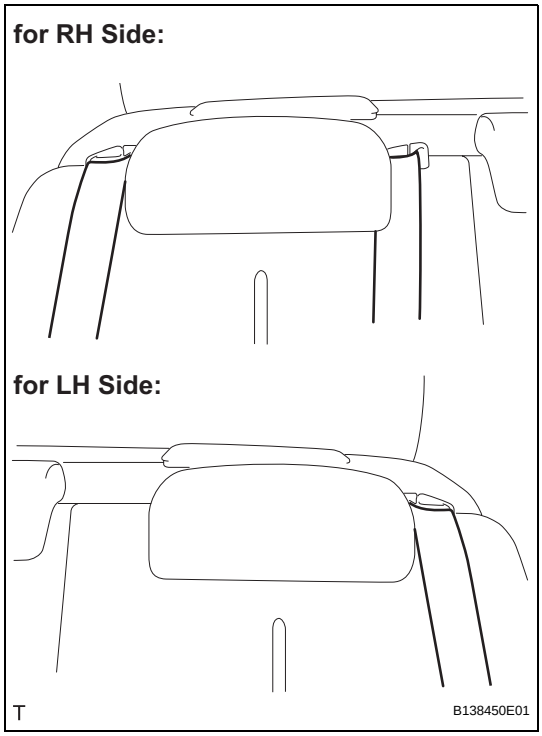

2. REMOVE REAR SEATBACK ASSEMBLY

(a) Remove the rear seat outer belt from the rear seat shoulder belt guide.

HINT:

Use the same procedure for both sides.

(b) Remove the rear center seat outer belt from the rear center seat shoulder belt guide.

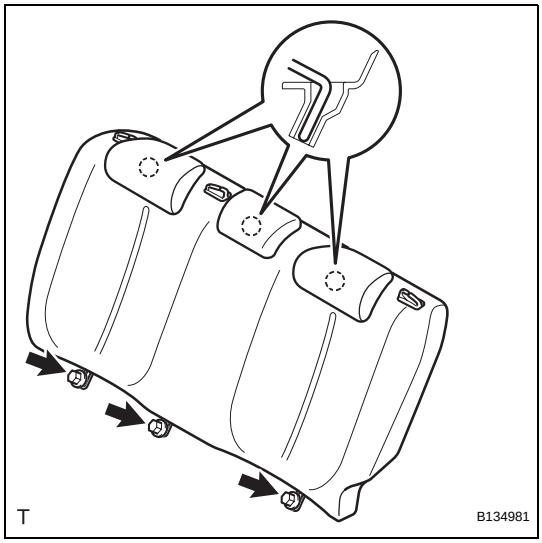

(c) Remove the 3 bolts.

(d) Disengage the 3 hooks and remove the rear seatback.

SE

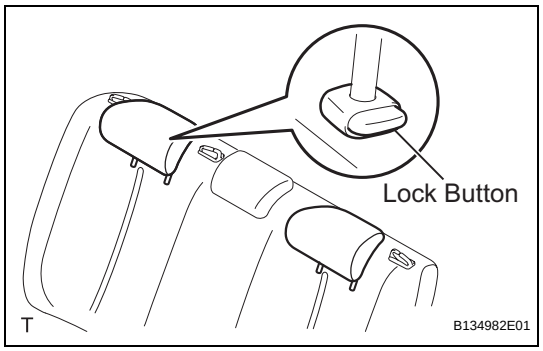

DISASSEMBLY

1. REMOVE REAR SEAT HEADREST ASSEMBLY

HINT:

Use the same procedure for both sides.

(a) Push the lock button of the rear seat headrest support and remove the rear seat headrest.

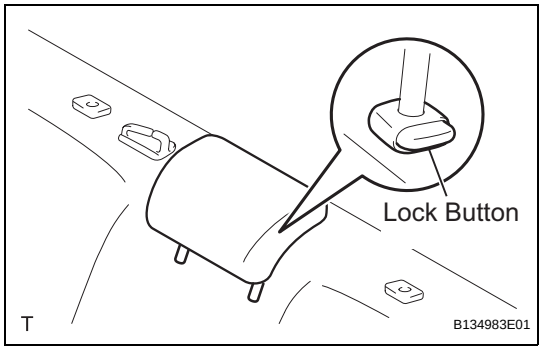

2. REMOVE REAR CENTER SEAT HEADREST ASSEMBLY

(a) Push the lock button of the rear seat headrest support and remove the rear center seat headrest.

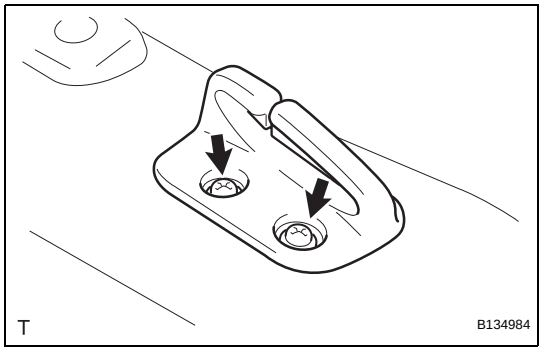

3. REMOVE REAR SEAT SHOULDER BELT GUIDE RH

(a) Remove the 2 screws and the rear seat shoulder belt guide.

4. REMOVE REAR SEAT SHOULDER BELT GUIDE LH

HINT:

Use the same procedure as for the RH side.

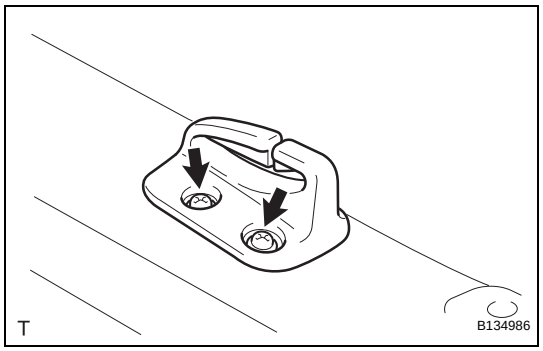

5. REMOVE REAR CENTER SEAT SHOULDER BELT GUIDE

(a) Remove the 2 screws and the rear center seat shoulder belt guide.

REASSEMBLY

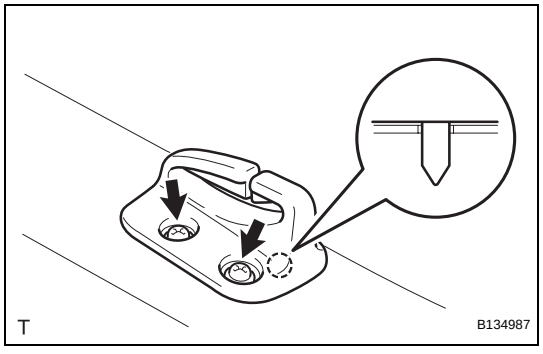

1. INSTALL REAR CENTER SEAT SHOULDER BELT GUIDE

(a) Insert the pin into the rear seatback hole and install the rear center seat shoulder belt guide with the 2 screws.

SE

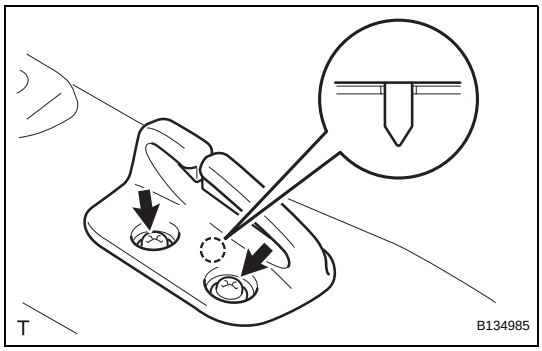

2. INSTALL REAR SEAT SHOULDER BELT GUIDE RH

(a) Insert the pin into the rear seatback hole and install the rear seat shoulder belt guide with the 2 screws.

3. INSTALL REAR SEAT SHOULDER BELT GUIDE LH

HINT:

Use the same procedure as for the RH side.

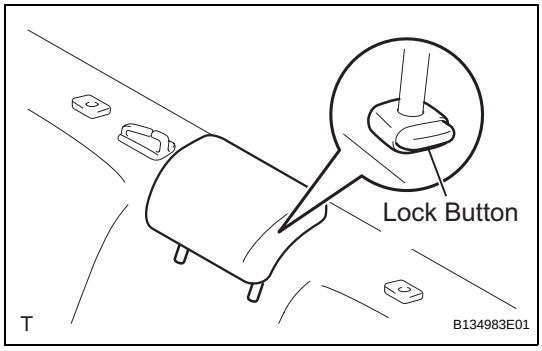

4. INSTALL REAR CENTER SEAT HEADREST ASSEMBLY

(a) Push the lock button of the rear seat headrest support and install the rear center seat headrest.

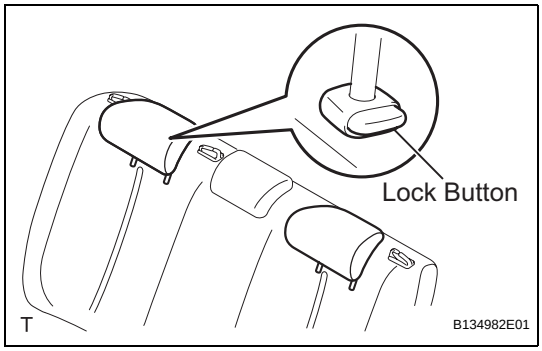

5. INSTALL REAR SEAT HEADREST ASSEMBLY

HINT:

Use the same procedure for both sides.

(a) Push the lock button of the rear seat headrest support and install the rear seat headrest.

SE

INSTALLATION

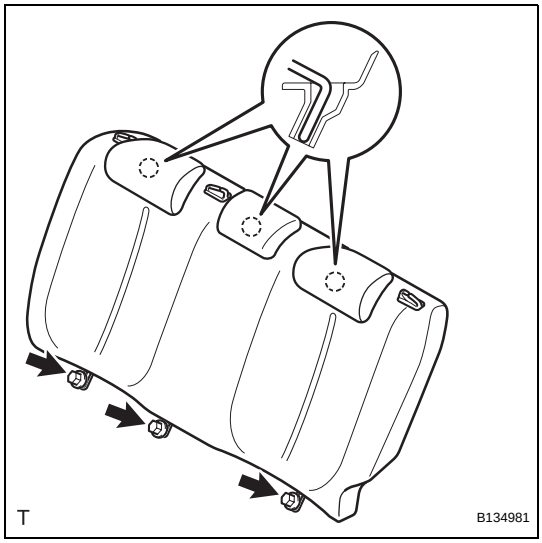

1. INSTALL REAR SEATBACK ASSEMBLY

(a) Engage the 3 hooks and install the rear seatback.

(b) Tighten the 3 bolts.

Torque: 7.9 N*m (80 kgf*cm, 70 in.*lbf)

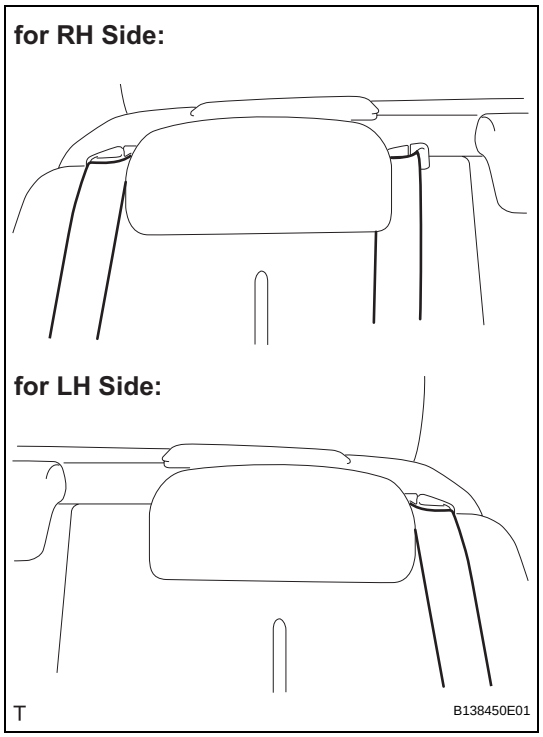

(c) Install the rear seat outer belt into the rear seat shoulder belt guide.
HINT:
Use the same procedure for both sides.

(d) Install the rear center seat outer belt into the rear center seat shoulder belt guide.

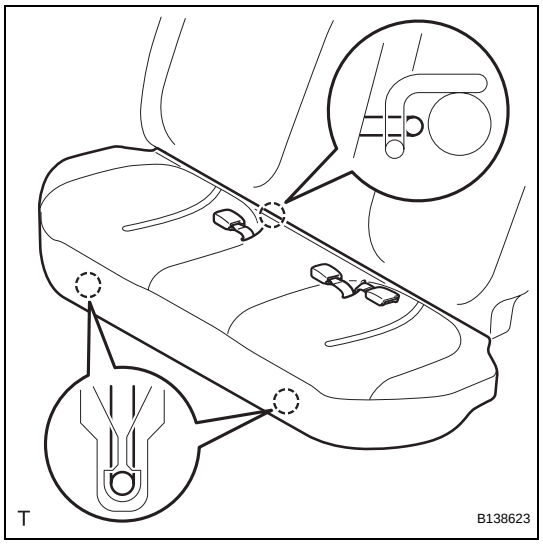

2. INSTALL REAR SEAT CUSHION COVER PAD SUB-ASSEMBLY

(a) Pass the rear seat inner belt through the rear seat cushion cover pad slit.

(b) Engage the 3 hooks and install the rear seat cushion cover pad.
NOTICE:
Make sure that the 2 rear seat cushion lock hooks and the rear seat cushion frame are securely engaged.

SE

REAR SEAT ASSEMBLY (for Hold Down Seat Type)

COMPONENTS

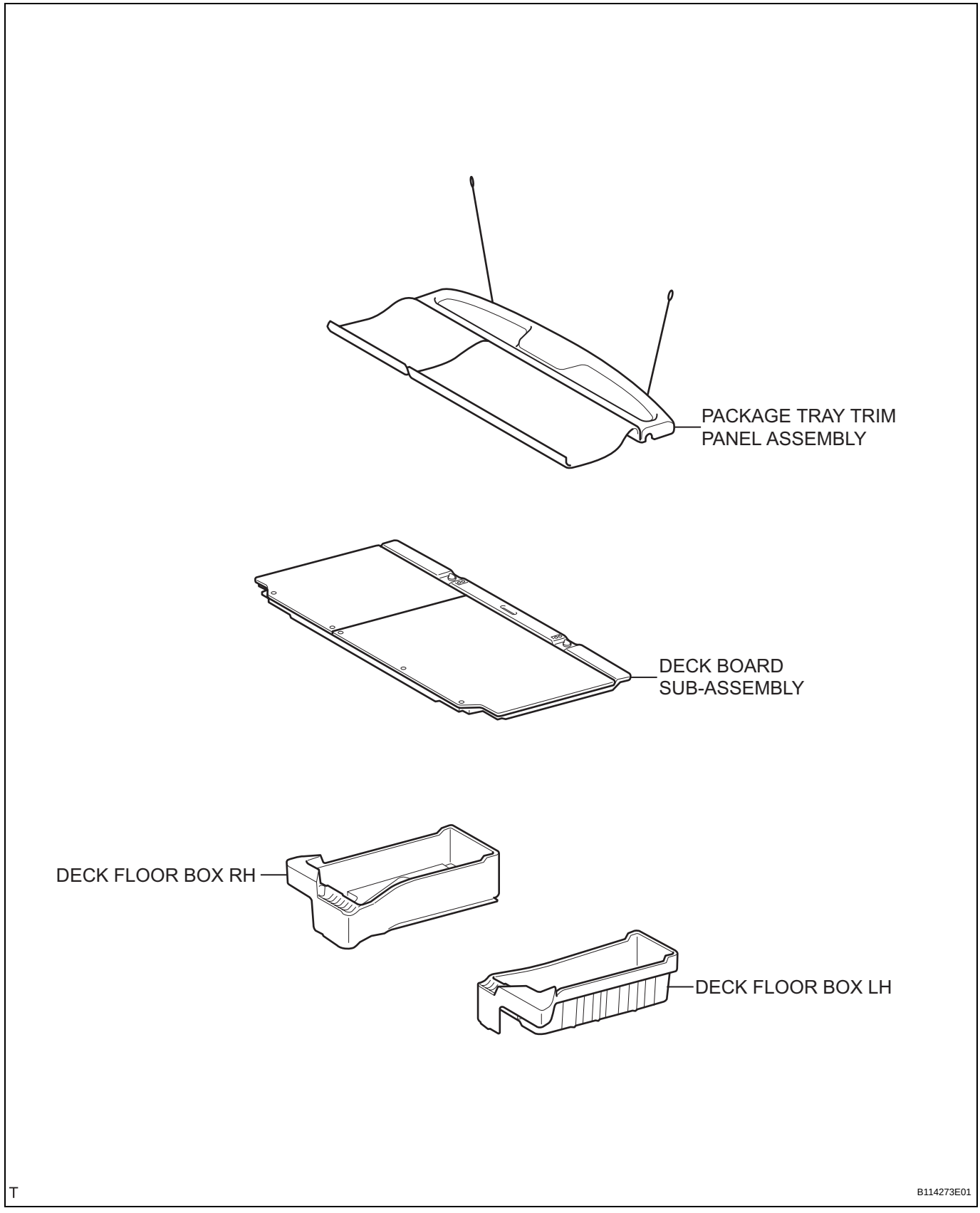

SE

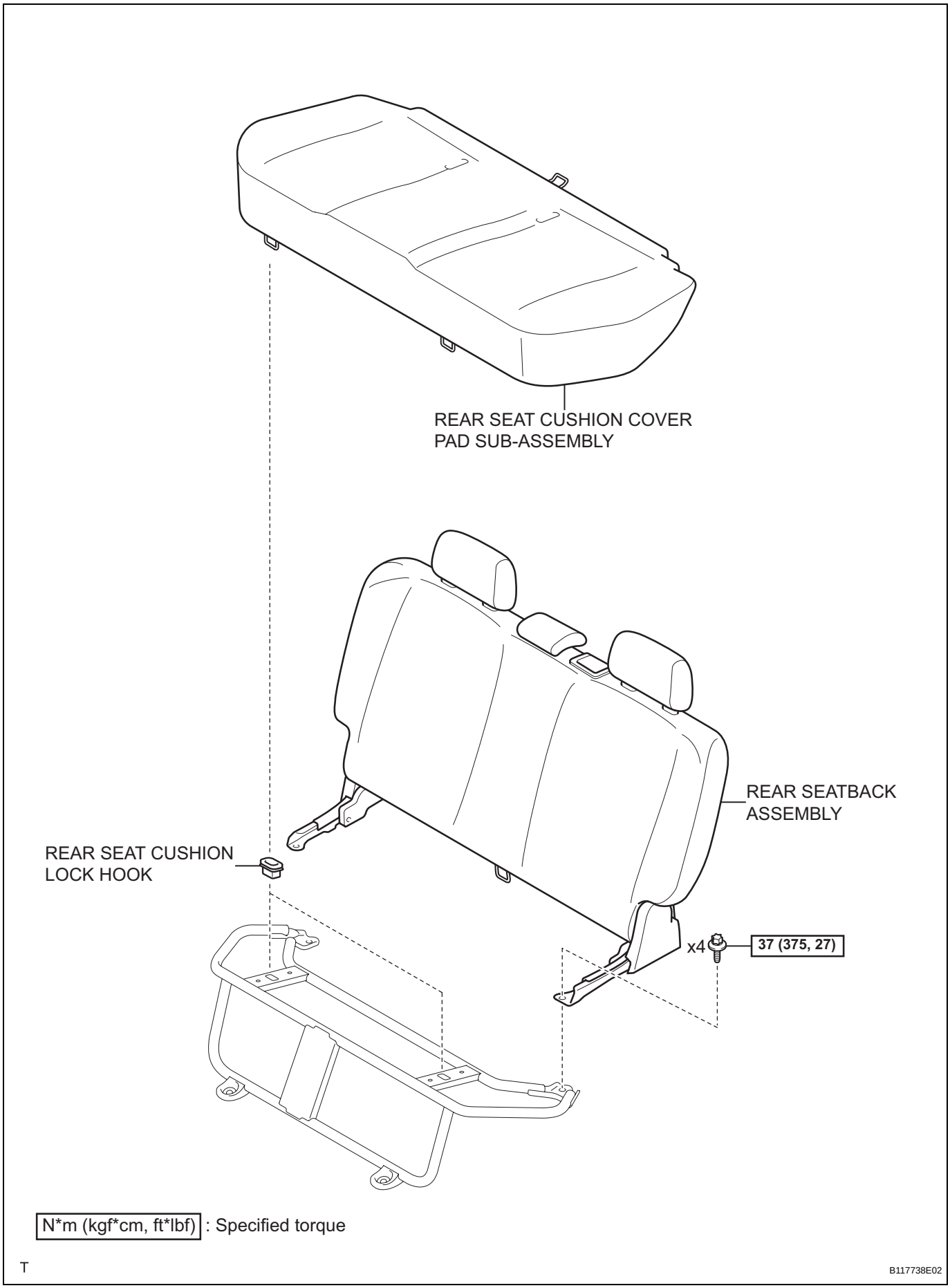

SE

N*m (kgf*cm, ft*lbf) : Specified torque

T

B117738E02

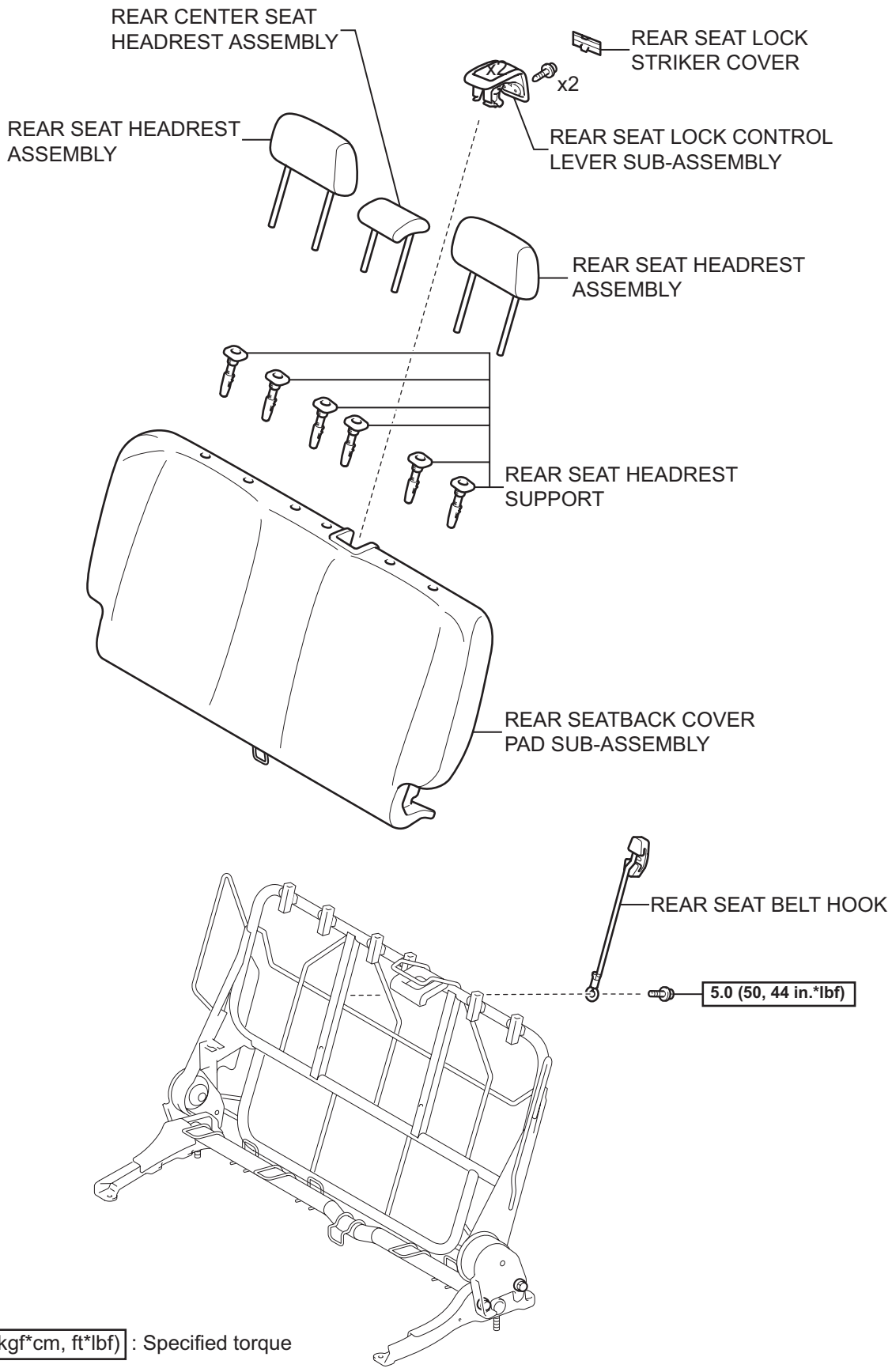

SE

T

B117739E02

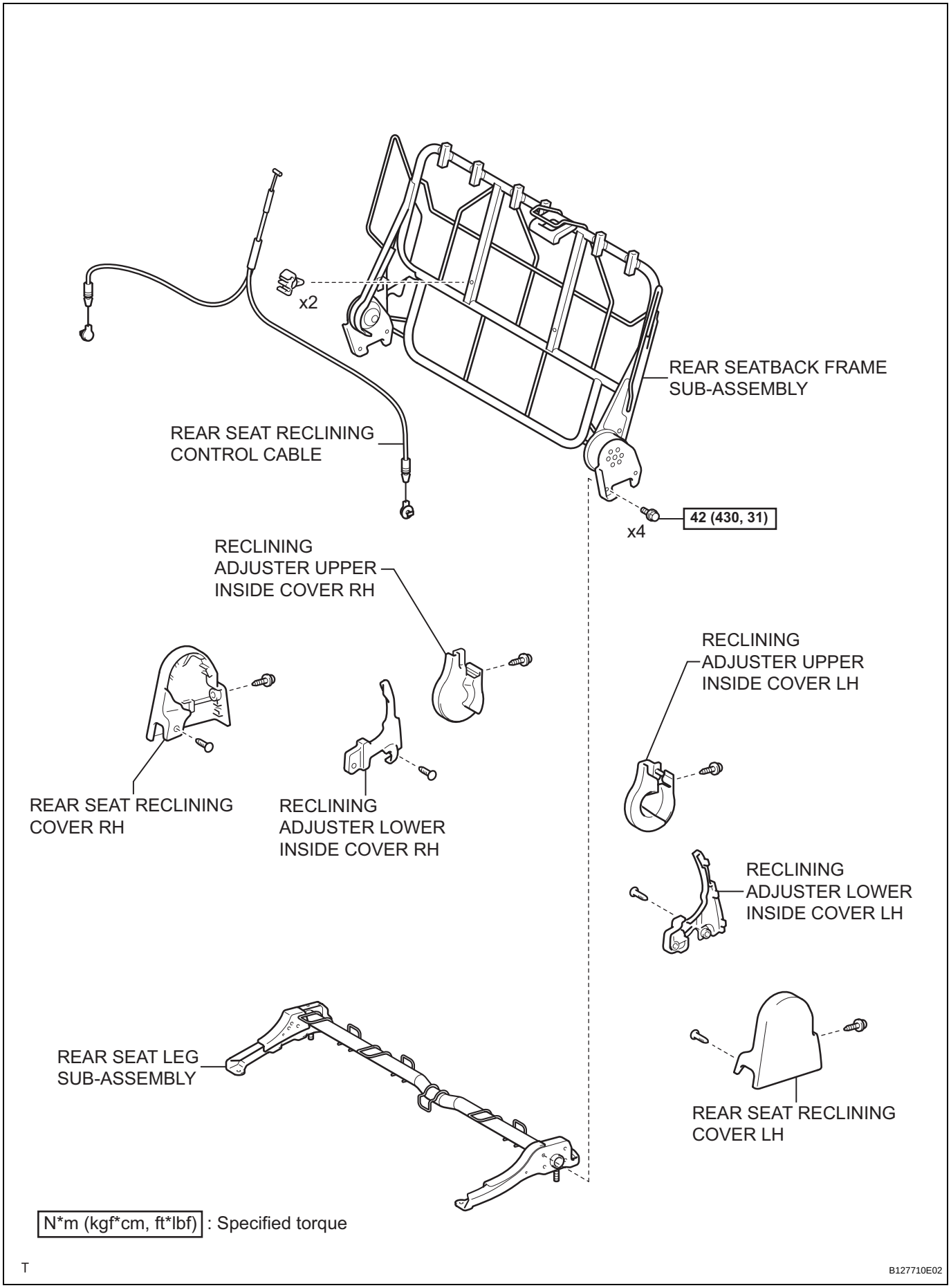
x2
REAR SEATBACK FRAME SUB-ASSEMBLY
REAR SEAT RECLINING CONTROL CABLE
42 (430, 31)
x4
RECLINING ADJUSTER UPPER INSIDE COVER RH
RECLINING ADJUSTER UPPER INSIDE COVER LH
REAR SEAT RECLINING COVER RH
RECLINING ADJUSTER LOWER INSIDE COVER RH
RECLINING ADJUSTER LOWER INSIDE COVER LH
REAR SEAT LEG SUB-ASSEMBLY
REAR SEAT RECLINING COVER LH
N*m (kgf*cm, ft*lbf) : Specified torque
T
B127710E02

SE

REMOVAL

NOTICE:
Always use "Torx" socket wrench E10 when removing the rear seat.

1. **REMOVE PACKAGE TRAY TRIM PANEL ASSEMBLY (See page IR-48)**
2. **REMOVE DECK BOARD SUB-ASSEMBLY (See page IR-48)**
3. **REMOVE DECK FLOOR BOX RH (See page IR-48)**
4. **REMOVE DECK FLOOR BOX LH (See page IR-48)**
5. **REMOVE REAR SEAT CUSHION COVER PAD SUB-ASSEMBLY**
   (a) Hold the front edge of the rear seat cushion cover pad and lift it up, as shown in the illustration, to disengage the 2 rear seat cushion lock hooks.
   NOTICE:
   Hold the area around the rear seat cushion hooks so as to avoid deforming the rear seat cushion frame.
   (b) Pass the rear seat inner belt through the slit in the rear seat cushion cover pad, disengage the hook between the rear seat cushion cover pad and the rear seatback, and remove the rear seat cushion cover pad.

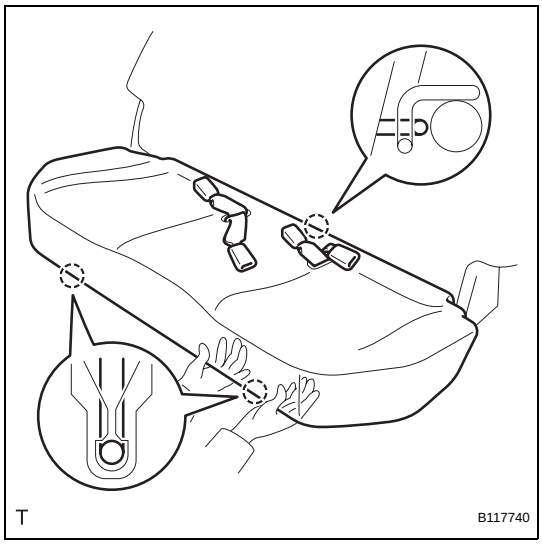

6. **REMOVE REAR SEAT CUSHION LOCK HOOK**
   (a) Disengage the 4 claws and remove the 2 rear seat cushion lock hooks.

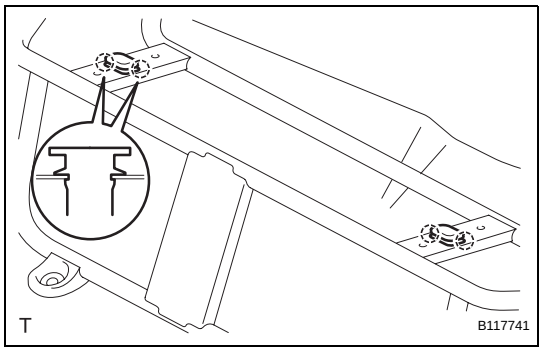

SE

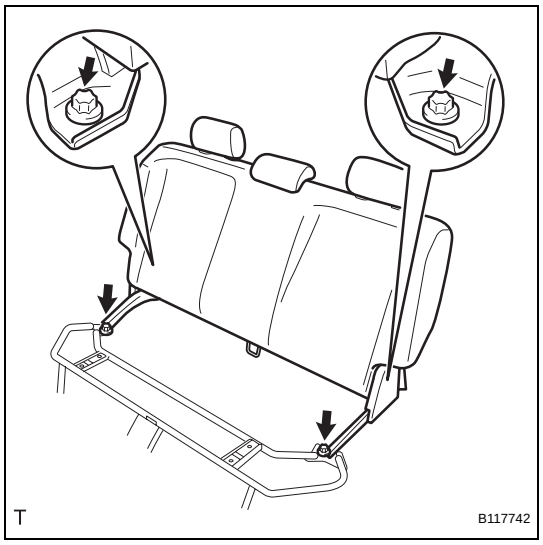

7. REMOVE REAR SEATBACK ASSEMBLY

(a) Using "Torx" socket wrench E10, remove the 4 bolts and the rear seat back.

DISASSEMBLY

CAUTION:
Wear protective gloves. Sharp surfaces on the rear seatback frame could cause injuries to your hands.

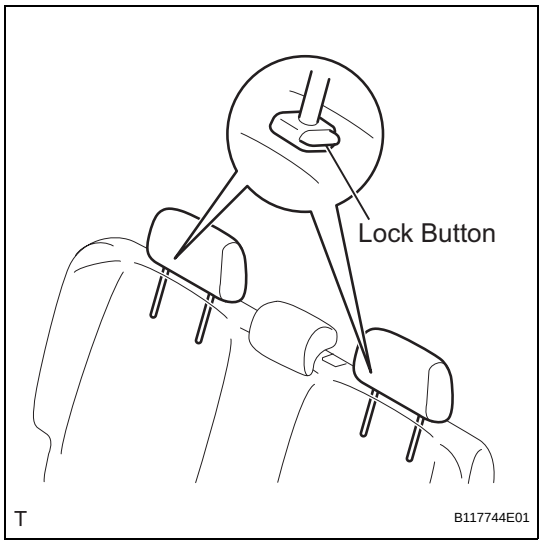

1. REMOVE REAR SEAT HEADREST ASSEMBLY

HINT:
Use the same procedure for both sides.

(a) Push in the lock button of the rear seat headrest support and remove the rear seat headrest.

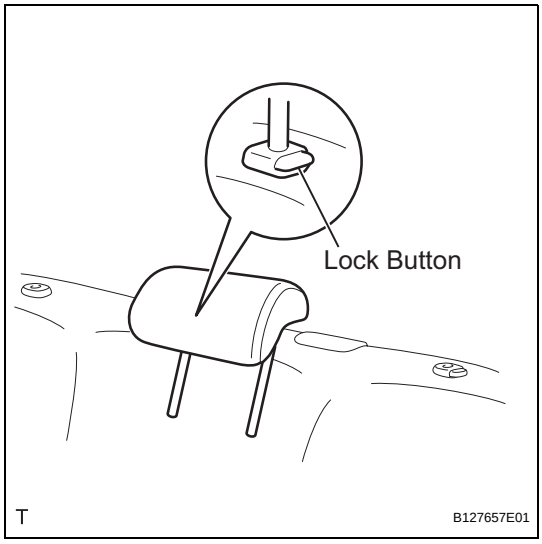

2. REMOVE REAR CENTER SEAT HEADREST ASSEMBLY

(a) Push in the lock button of the rear seat headrest and remove the rear center seat headrest.

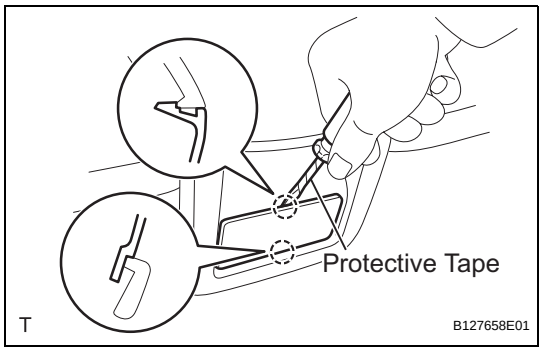

3. REMOVE REAR SEAT LOCK STRIKER COVER

(a) Using a screwdriver with its tip wrapped in protective tape, disengage the 2 claws and remove the rear seat lock striker cover.

SE

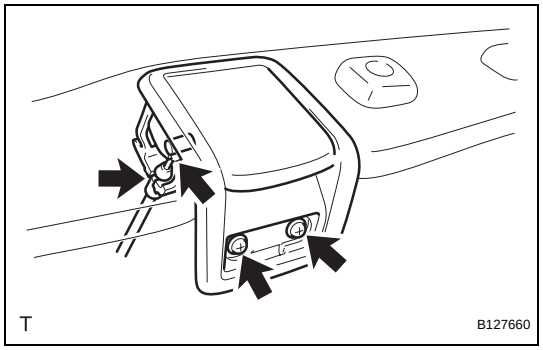

4. REMOVE REAR SEAT LOCK CONTROL LEVER SUB-ASSEMBLY

(a) Remove the 2 screws.

(b) Disconnect the rear seat reclining control cable and remove the rear seat lock control lever.

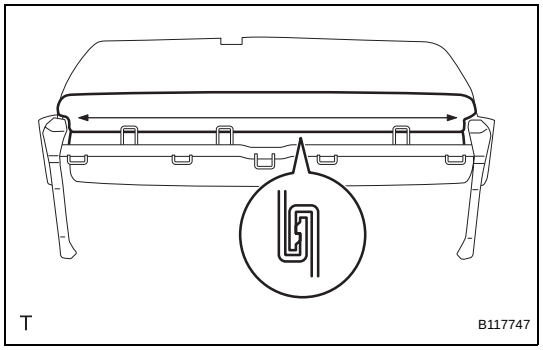

5. REMOVE REAR SEAT HEADREST SUPPORT

(a) Disengage the hook.

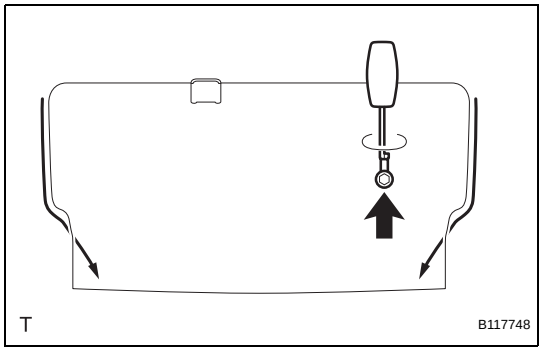

(b) Unfasten the 2 zippers.

(c) Remove the bolt and the rear seat belt hook.

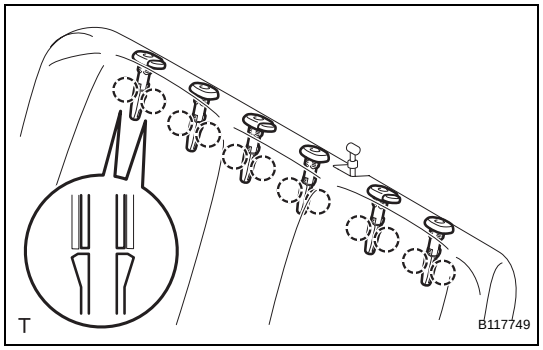

(d) Disengage the 2 claws and remove the rear seat headrest support.
HINT:
Use the same procedure to remove all the rear seat headrest supports.

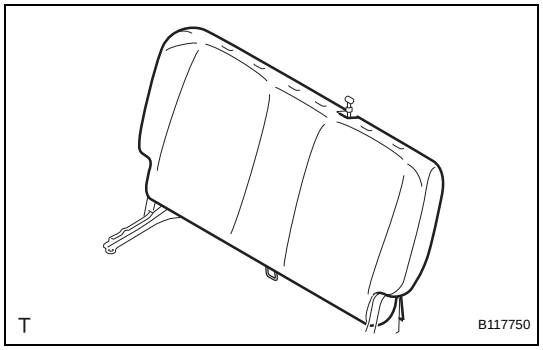

6. REMOVE REAR SEATBACK COVER PAD SUB-ASSEMBLY

(a) Remove the rear seatback cover pad.

SE

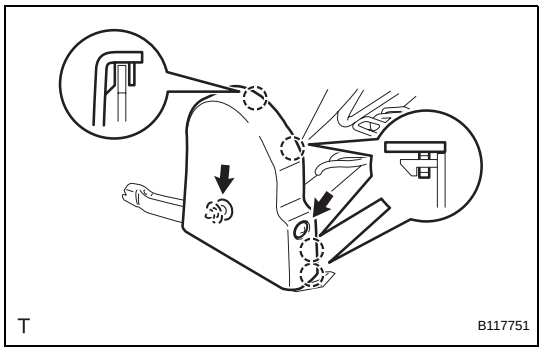

7. REMOVE REAR SEAT RECLINING COVER LH
(a) Remove the screw.
(b) Using a clip remover, remove the clip.
(c) Disengage the 4 claws and remove the rear seat reclining cover.

8. REMOVE REAR SEAT RECLINING COVER RH
HINT:
Use the same procedure as for the LH side.

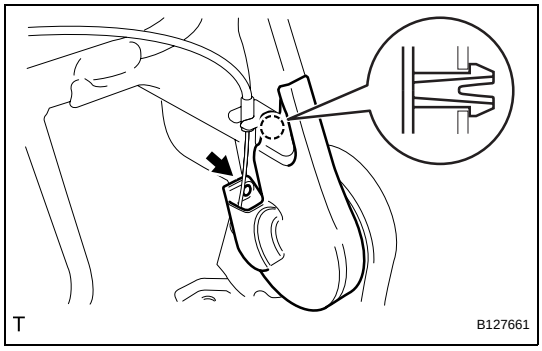

9. REMOVE RECLINING ADJUSTER UPPER INSIDE COVER LH
(a) Remove the screw.
(b) Disengage the claw and remove the reclining adjuster upper inside cover.

10. REMOVE RECLINING ADJUSTER UPPER INSIDE COVER RH
HINT:
Use the same procedure as for the LH side.

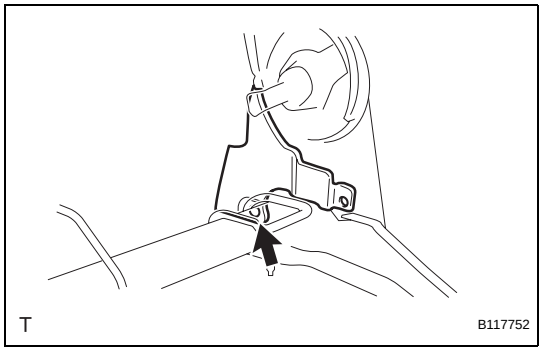

11. REMOVE RECLINING ADJUSTER LOWER INSIDE COVER LH
(a) Using a clip remover, remove the clip and the reclining adjuster lower inside cover.

12. REMOVE RECLINING ADJUSTER LOWER INSIDE COVER RH
HINT:
Use the same procedure as for the LH side.

SE

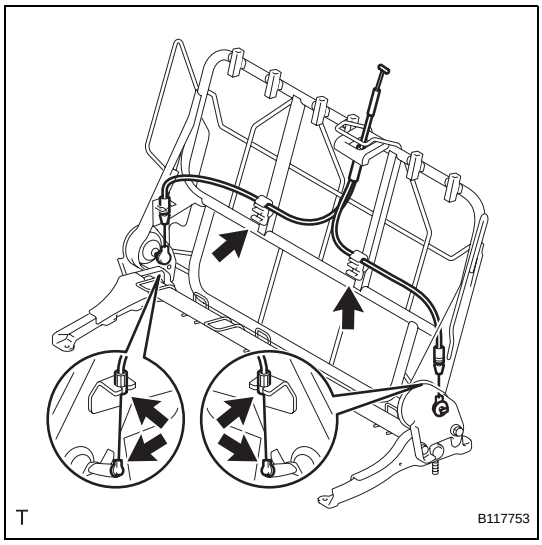

13. REMOVE REAR SEAT RECLINING CONTROL CABLE
(a) Remove the rear seat reclining control cable.

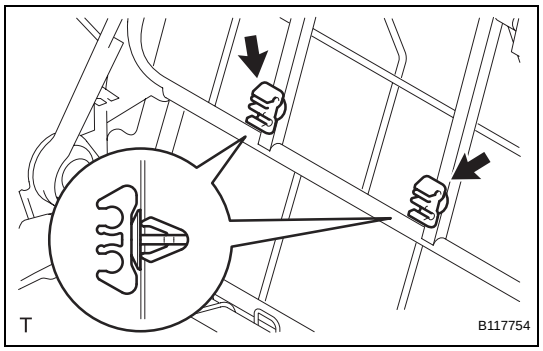

(b) Remove the 2 clamps.

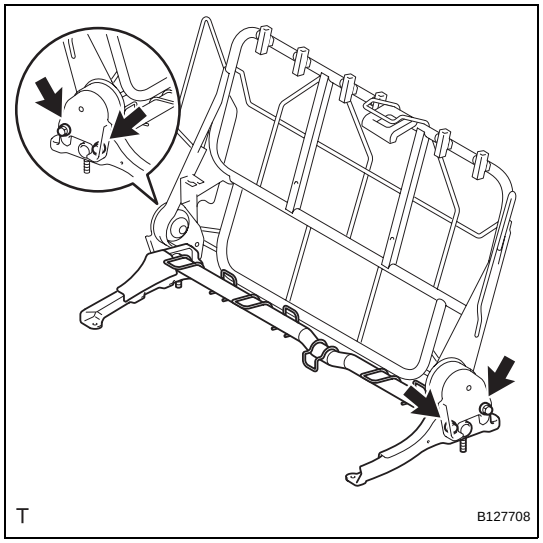

14. REMOVE REAR SEAT LEG SUB-ASSEMBLY

(a) Remove the 4 bolts and the rear seat leg.

SE

REASSEMBLY

CAUTION:
Wear protective gloves. Sharp surfaces on the rear seatback frame could cause injuries to your hands.

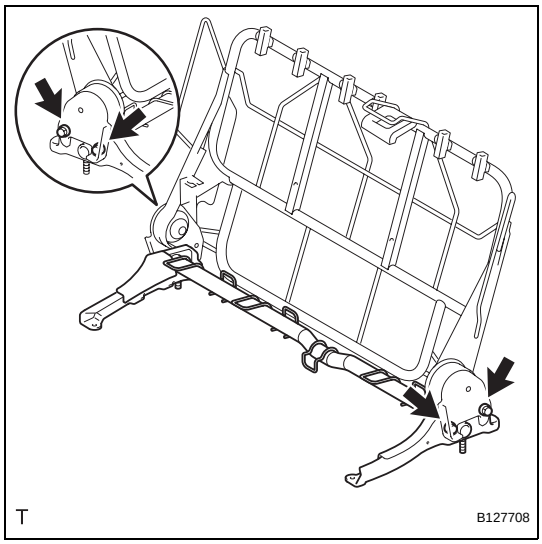

1. INSTALL REAR SEAT LEG SUB-ASSEMBLY

(a) Install the rear seat leg with the 4 bolts.
Torque: 42 N*m (430 kgf*cm, 31 ft.*lbf)

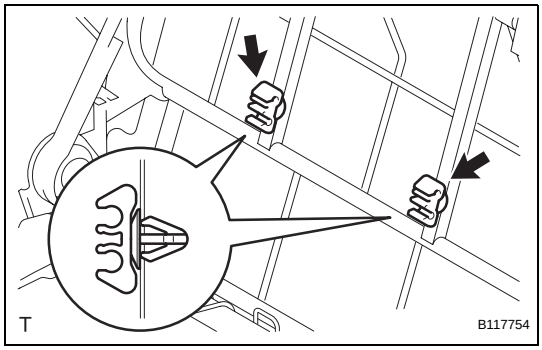

2. INSTALL REAR SEAT RECLINING CONTROL CABLE

(a) Install the 2 clamps.

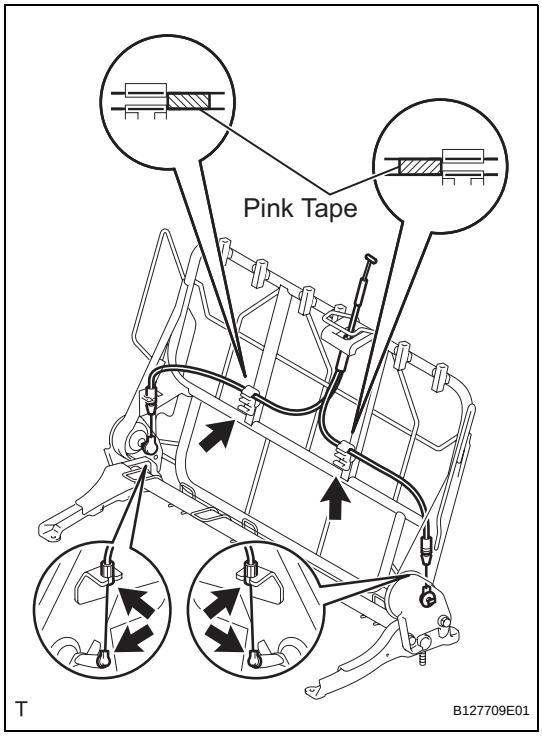

(b) Install the rear seat reclining control cable as shown in the illustration.

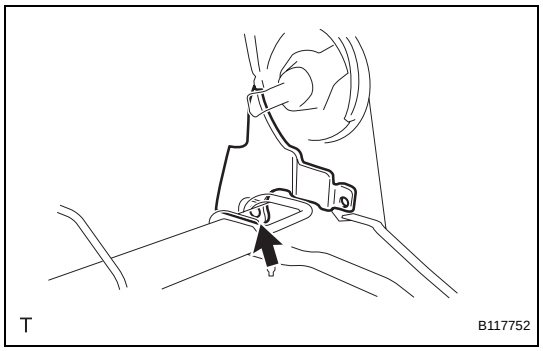

3. INSTALL RECLINING ADJUSTER LOWER INSIDE COVER LH

(a) Install the reclining adjuster lower inside cover with the clip.

4. INSTALL RECLINING ADJUSTER LOWER INSIDE COVER RH

HINT:

Use the same procedure as for the LH side.

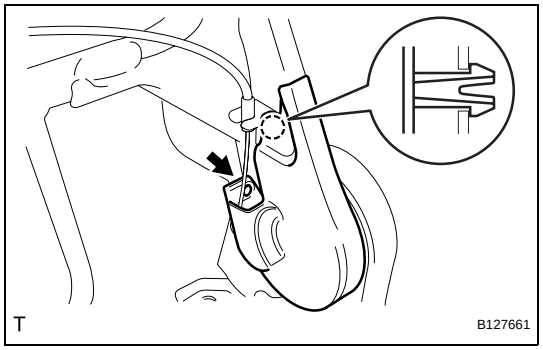

5. INSTALL RECLINING ADJUSTER UPPER INSIDE COVER LH

(a) Engage the claw and install the reclining adjuster upper inside cover.

(b) Tighten the screw.

6. INSTALL RECLINING ADJUSTER UPPER INSIDE COVER RH

HINT:

Use the same procedure as for the LH side.

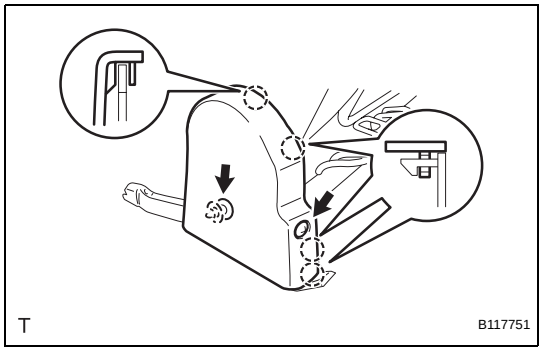

7. INSTALL REAR SEAT RECLINING COVER LH

(a) Engage the 4 claws and install the rear seat reclining cover.

(b) Install the clip.

(c) Tighten the screw.

8. INSTALL REAR SEAT RECLINING COVER RH

HINT:

Use the same procedure as for the LH side.

SE

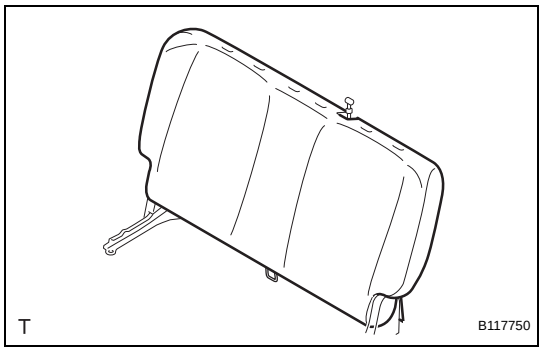

9. INSTALL REAR SEATBACK COVER PAD SUB-ASSEMBLY

(a) Install the rear seatback cover pad.

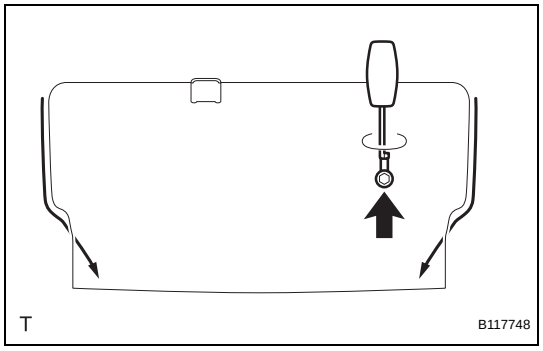

(b) Install the rear seat belt hook with the bolt.
Torque: 5.0 N*m (50 kgf*cm, 44 in.*lbf)

(c) Fasten the 2 zippers.

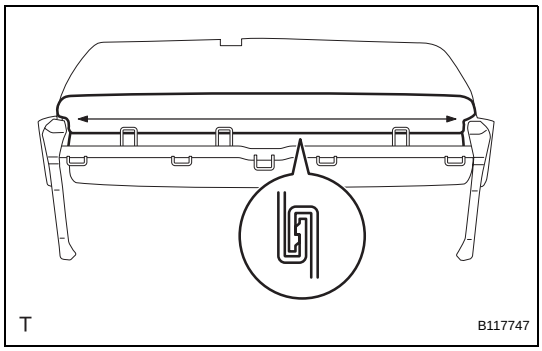

(d) Engage the hook.

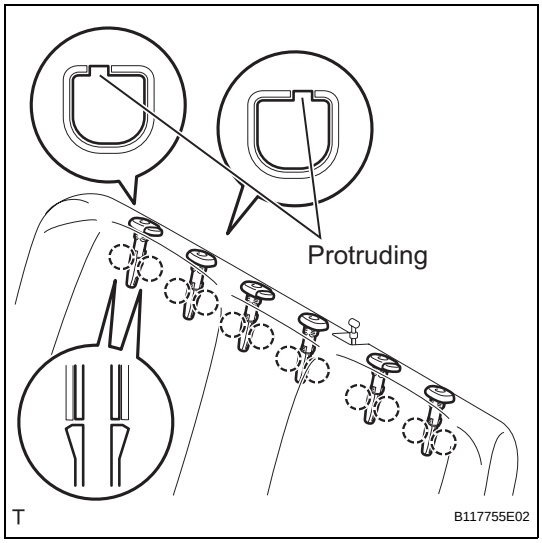

10. INSTALL REAR SEAT HEADREST SUPPORT

HINT:

Use the same procedure to install all the rear seat headrest supports.

(a) Align the protruding portion of the rear seat headrest support with the installation groove of the rear seatback frame.

(b) Engage the 2 claws and install the rear seat headrest support.

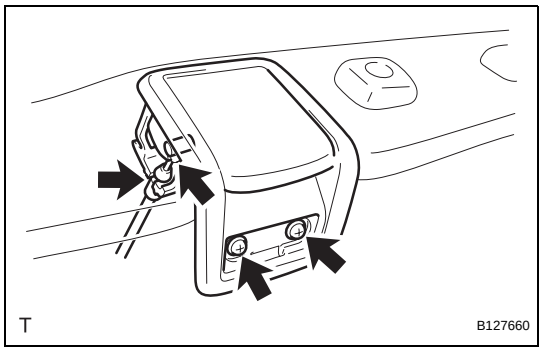

11. INSTALL REAR SEAT LOCK CONTROL LEVER SUB-ASSEMBLY

(a) Connect the rear seat reclining control cable and install the rear seat lock control lever.

(b) Tighten the 2 screws.

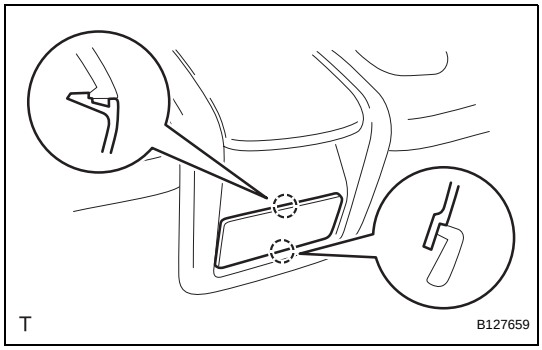

12. INSTALL REAR SEAT LOCK STRIKER COVER

(a) Engage the 2 claws and install the rear seatback lock striker cover.

SE

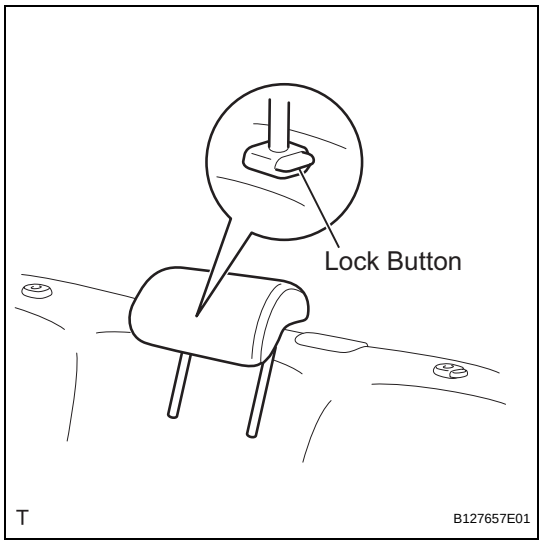

13. INSTALL REAR CENTER SEAT HEADREST ASSEMBLY

(a) Push in the lock button of the rear seat headrest support and install the rear center seat headrest.

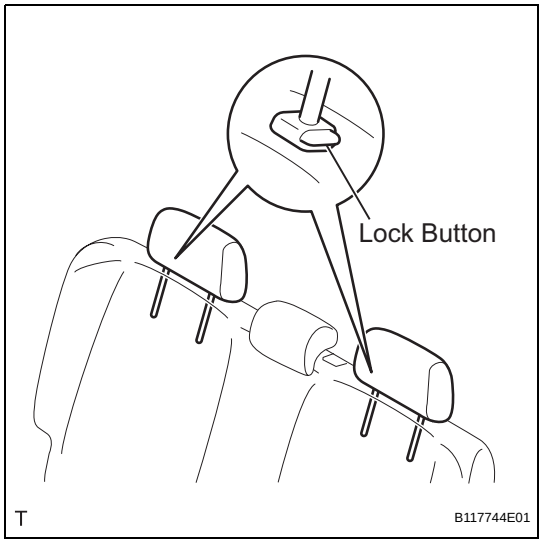

14. INSTALL REAR SEAT HEADREST ASSEMBLY

HINT:

Use the same procedure for both sides.

(a) Push in the lock buttons of the rear seat headrest support and install the rear seat headrest.

SE

INSTALLATION

NOTICE:
Always use "Torx" socket wrench E10 when installing the rear seat.

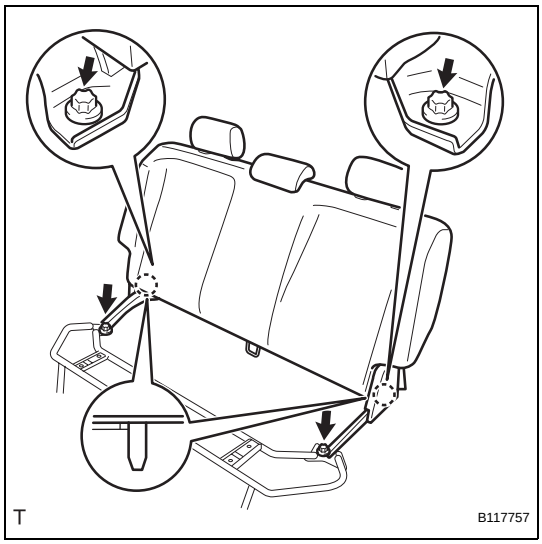

1. INSTALL REAR SEATBACK ASSEMBLY
(a) Insert the 2 locating pins through the 2 body holes and install the rear seatback.
(b) Using "Torx" socket wrench E10, tighten the 4 bolts.
Torque: 37 N*m (375 kgf*cm, 27 ft.*lbf)

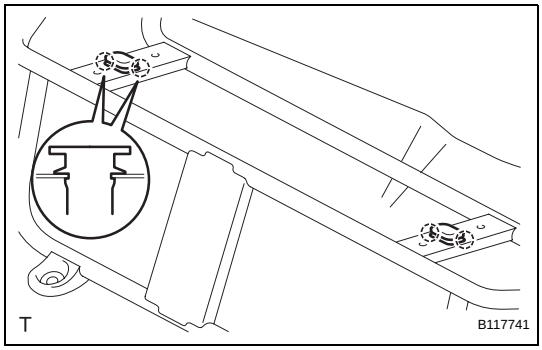

2. INSTALL REAR SEAT CUSHION LOCK HOOK
(a) Engage the 4 claws and install the 2 rear seat cushion lock hooks.

SE

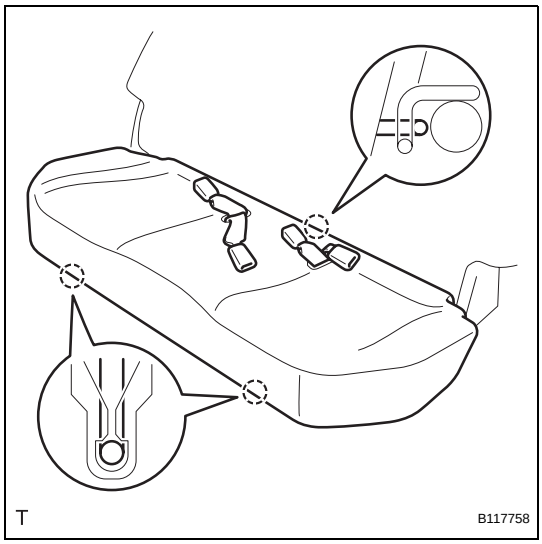

3. INSTALL REAR SEAT CUSHION COVER PAD SUB-ASSEMBLY
(a) Pass the rear seat inner belt through the slit in the rear seat cushion cover pad.
(b) Engage the 3 hooks and install the rear seat cushion cover pad.
NOTICE:
Make sure that the rear seat cushion lock hooks and the rear seat cushion frame are securely engaged.

4. INSTALL DECK FLOOR BOX RH (See page IR-83)

5. INSTALL DECK FLOOR BOX LH (See page IR-83)

6. INSTALL DECK BOARD SUB-ASSEMBLY (See page IR-83)

7. INSTALL PACKAGE TRAY TRIM PANEL ASSEMBLY (See page IR-83)

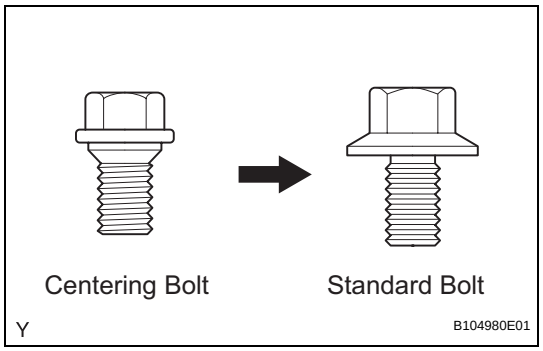

HOOD (for Sedan)

ADJUSTMENT

HINT:

- Centering bolts are used to mount the hood hinge and hood lock. The hood and hood lock cannot be adjusted with the centering bolts on. Substitute standard bolts (with washers) for the centering bolts when making adjustments.
- For bolts without torque specifications, check the standard bolt chart (see page SS-2).

1. INSPECT HOOD

(a) Check that the clearance measurements are within the standard ranges.

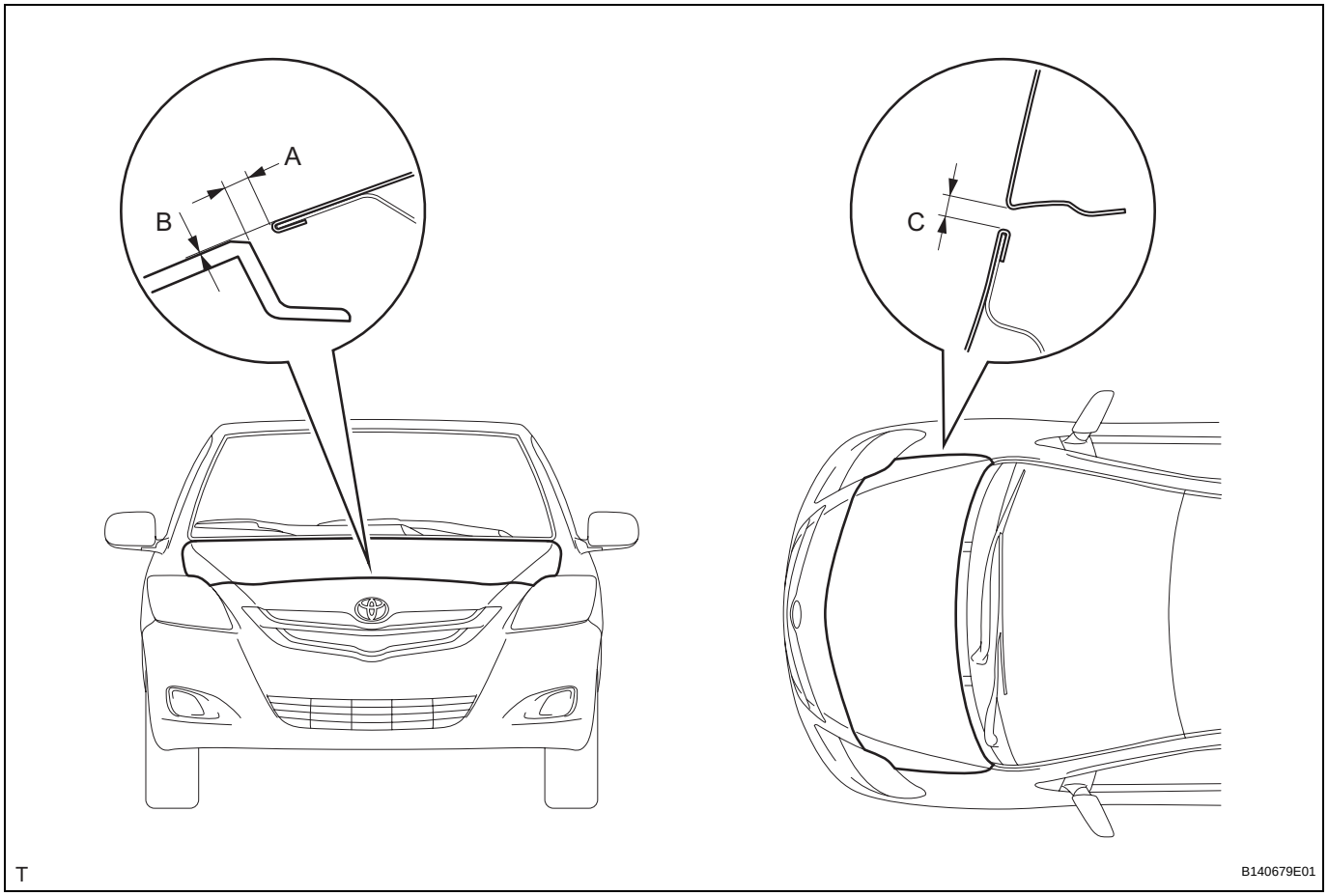

Standard

Area	Measurement	Area	Measurement
A	2.35 to 6.35 mm (0.092 to 0.250 in.)	C	2.0 to 5.0 mm (0.079 to 0.197 in.)
B	-2 to 2 mm (-0.079 to 0.079 in.)	-	-

ED

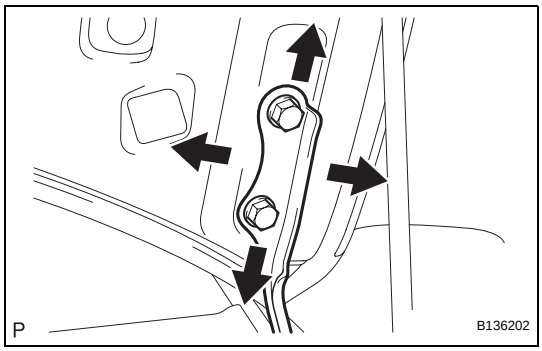

2. ADJUST HOOD

(a) Loosen the hood side hinge bolts.

(b) Move the hood to adjust the clearance to within the standard range.

(c) Tighten the hood side hinge bolts after the adjustment.
Torque: 13 N*m (133 kgf*cm, 10 ft.*lbf)

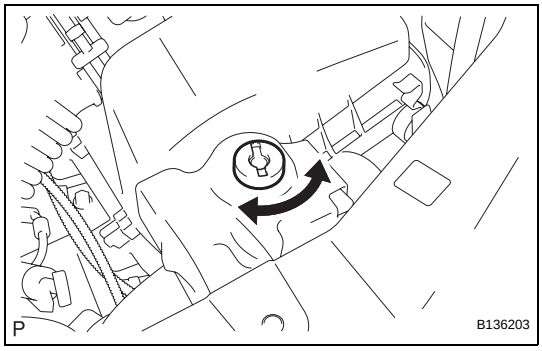

(d) Adjust the height of the hood front end by turning the cushion rubber.
HINT:
The cushion rubber can be raised and lowered by turning it.

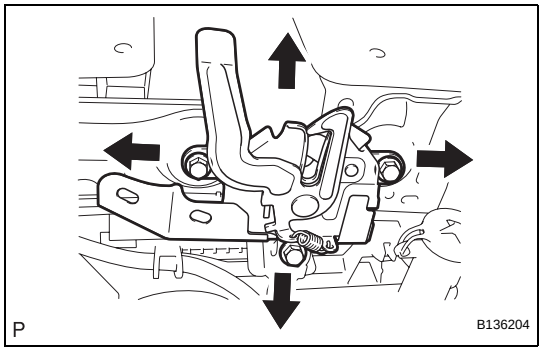

(e) Adjust the hood lock.
(1) Loosen the 3 bolts.
(2) Adjust the hood lock position so that the striker can enter it smoothly.
(3) Tighten the 3 bolts after the adjustment.
Torque: 7.5 N*m (76 kgf*cm, 66 in.*lbf)

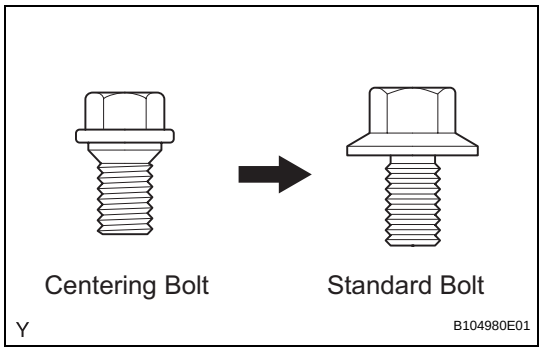

HOOD (for Hatchback)

ADJUSTMENT

HINT:

- Centering bolts are used to mount the hood hinge and hood lock. The hood and hood lock cannot be adjusted with the centering bolts on. Substitute standard bolts (with washers) for the centering bolts when making adjustments.
- For bolts without torque specifications, check the standard bolt chart.

1. INSPECT HOOD

(a) Check that the clearance measurements are within the standard ranges.

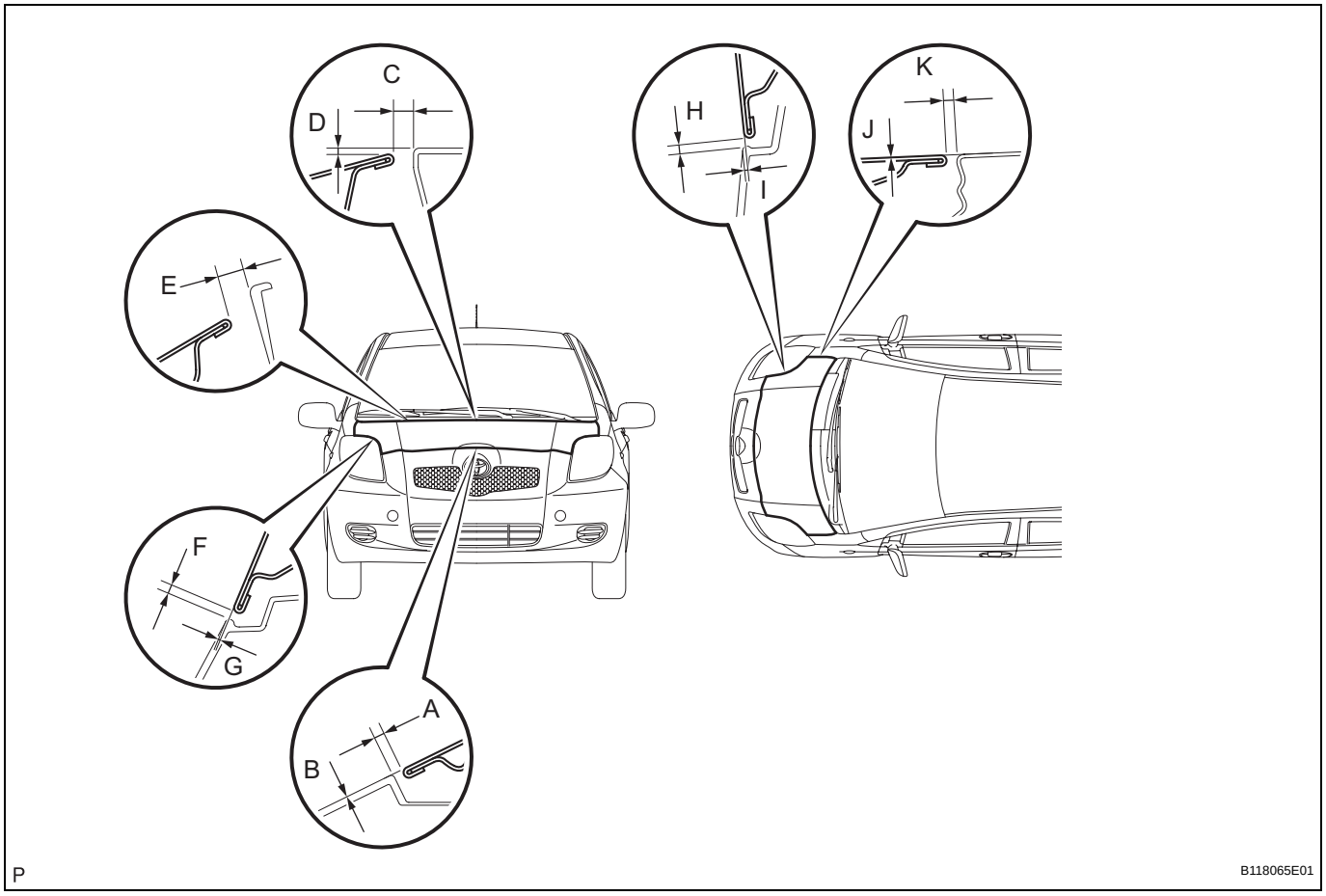

Standard

Area	Measurement	Area	Measurement
A	1.7 to 5.7 mm (0.067 to 0.224 in.)	G	-1.55 to 2.45 mm (-0.061 to 0.096 in.)
B	-2 to 2 mm (-0.079 to 0.079 in.)	H	1.75 to 5.75 mm (0.067 to 0.226 in.)
C	4.45 to 10.45 mm (0.175 to 0.411 in.)	I	-1.25 to 2.75 mm (-0.049 to 0.108 in.)
D	-0.95 to 5.05 mm (-0.037 to 0.199 in.)	J	-1.5 to 1.5 mm (-0.059 to 0.059 in.)
E	7.55 to 13.55 mm (0.297 to 0.533 in.)	K	2.0 to 5.0 mm (0.079 to 0.197 in.)

Area	Measurement	Area	Measurement
F	1.65 to 5.65 mm (0.065 to 0.222 in.)	-	-

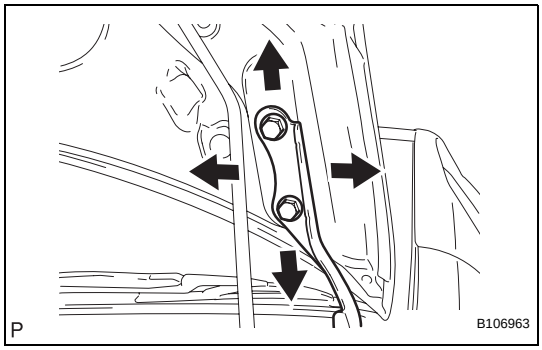

2. ADJUST HOOD

(a) Loosen the hood side hinge bolts.

(b) Move the hood to adjust the clearance to within the standard range.

(c) Tighten the hood side hinge bolts after the adjustment.
Torque: 13 N*m (133 kgf*cm, 10 ft.*lbf)

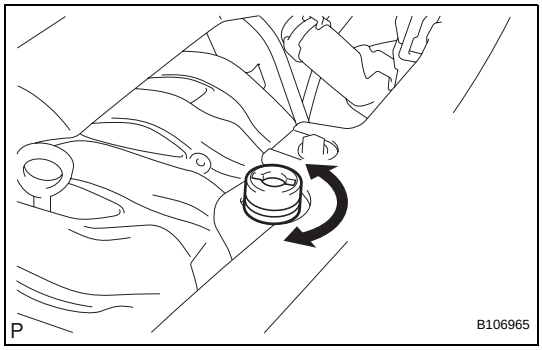

(d) Adjust the height of the hood front end by turning the cushion rubber.
HINT:
The cushion rubber can be raised and lowered by turning it.

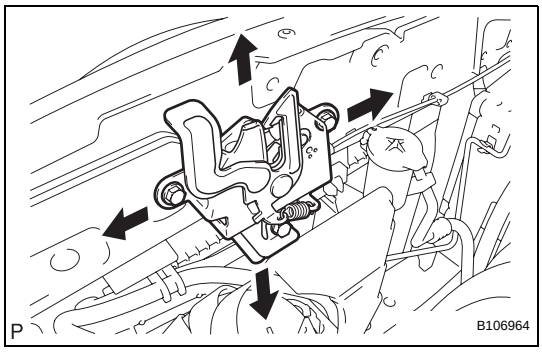

(e) Adjust the hood lock.
(1) Loosen the 3 bolts.
(2) Adjust the hood lock position so that the striker can enter it smoothly.
(3) Tighten the 3 bolts after the adjustment.
Torque: 7.5 N*m (76 kgf*cm, 66 in.*lbf)

FRONT DOOR (for Sedan)

COMPONENTS

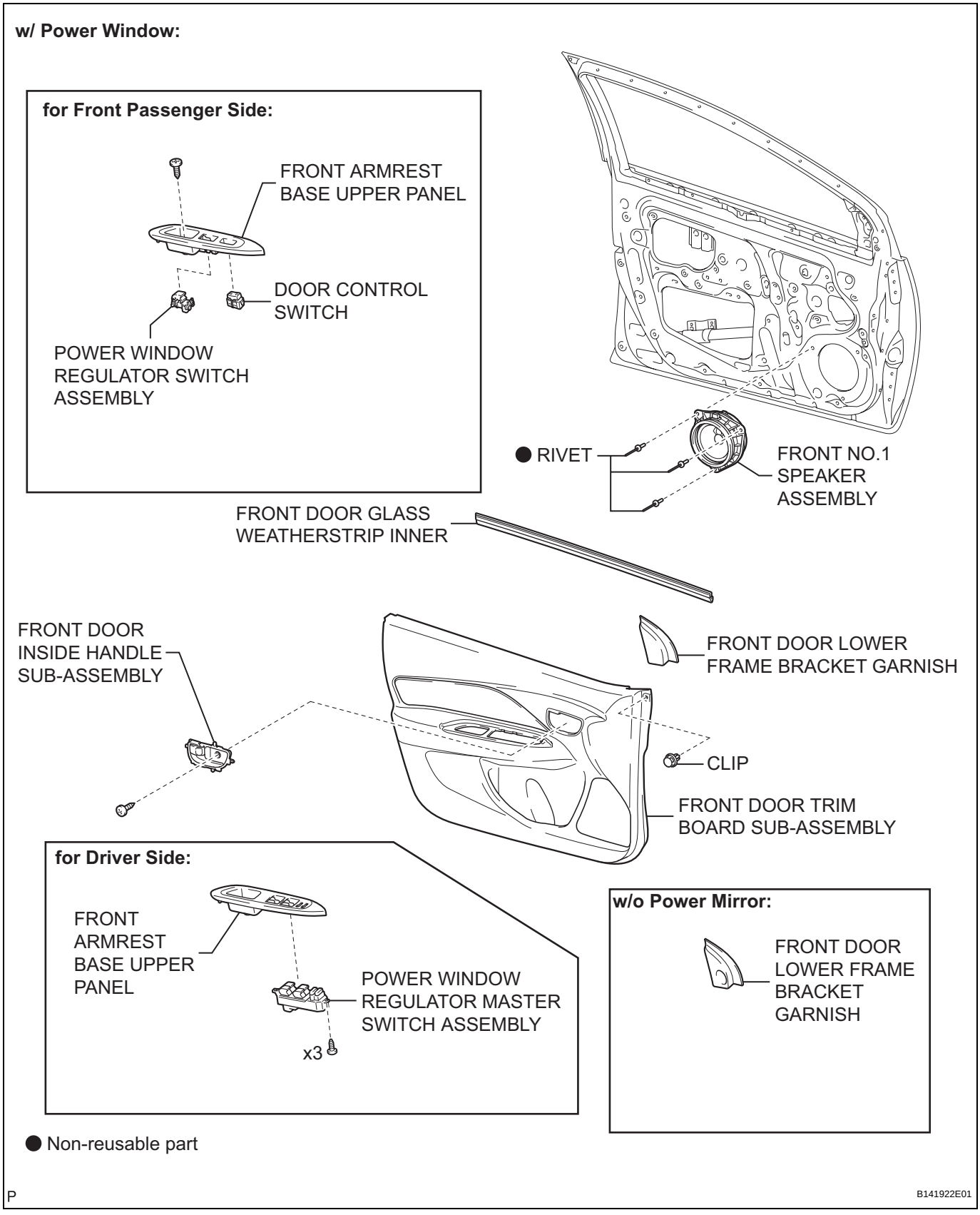

ED

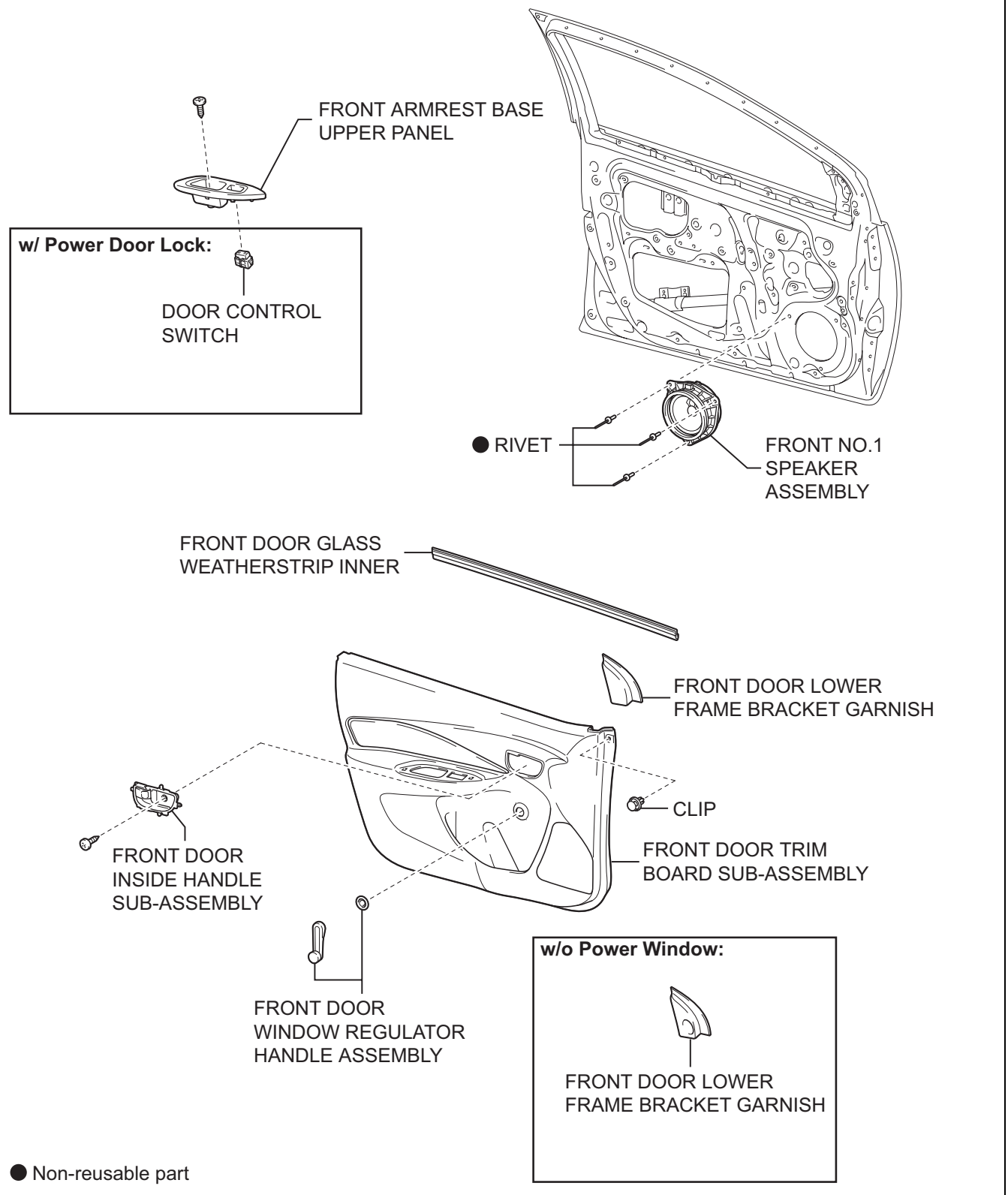

ED

P

B141923E01

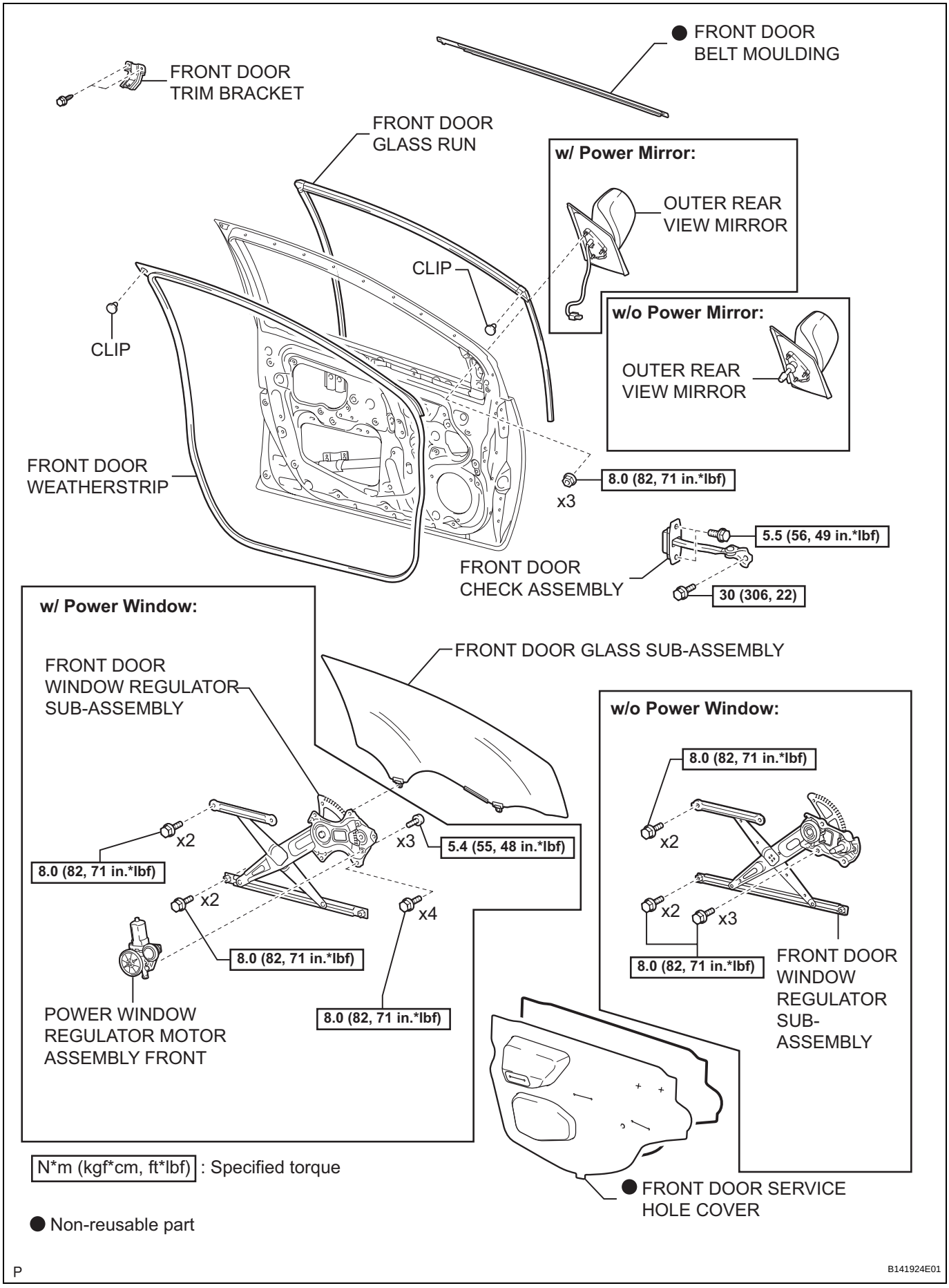
● FRONT DOOR BELT MOULDING
FRONT DOOR TRIM BRACKET
FRONT DOOR GLASS RUN
w/ Power Mirror:
OUTER REAR VIEW MIRROR
CLIP
CLIP
w/o Power Mirror:
OUTER REAR VIEW MIRROR
FRONT DOOR WEATHERSTRIP
8.0 (82, 71 in.*lbf)
x3
5.5 (56, 49 in.*lbf)
FRONT DOOR CHECK ASSEMBLY
30 (306, 22)
w/ Power Window:
FRONT DOOR GLASS SUB-ASSEMBLY
FRONT DOOR WINDOW REGULATOR SUB-ASSEMBLY
x2
8.0 (82, 71 in.*lbf)
x3
5.4 (55, 48 in.*lbf)
x2
x4
8.0 (82, 71 in.*lbf)
8.0 (82, 71 in.*lbf)
POWER WINDOW REGULATOR MOTOR ASSEMBLY FRONT
w/o Power Window:
8.0 (82, 71 in.*lbf)
x2
x2
x3
8.0 (82, 71 in.*lbf)
FRONT DOOR WINDOW REGULATOR SUB-ASSEMBLY
N*m (kgf*cm, ft*lbf) : Specified torque
● FRONT DOOR SERVICE HOLE COVER
● Non-reusable part
P
B141924E01

ED

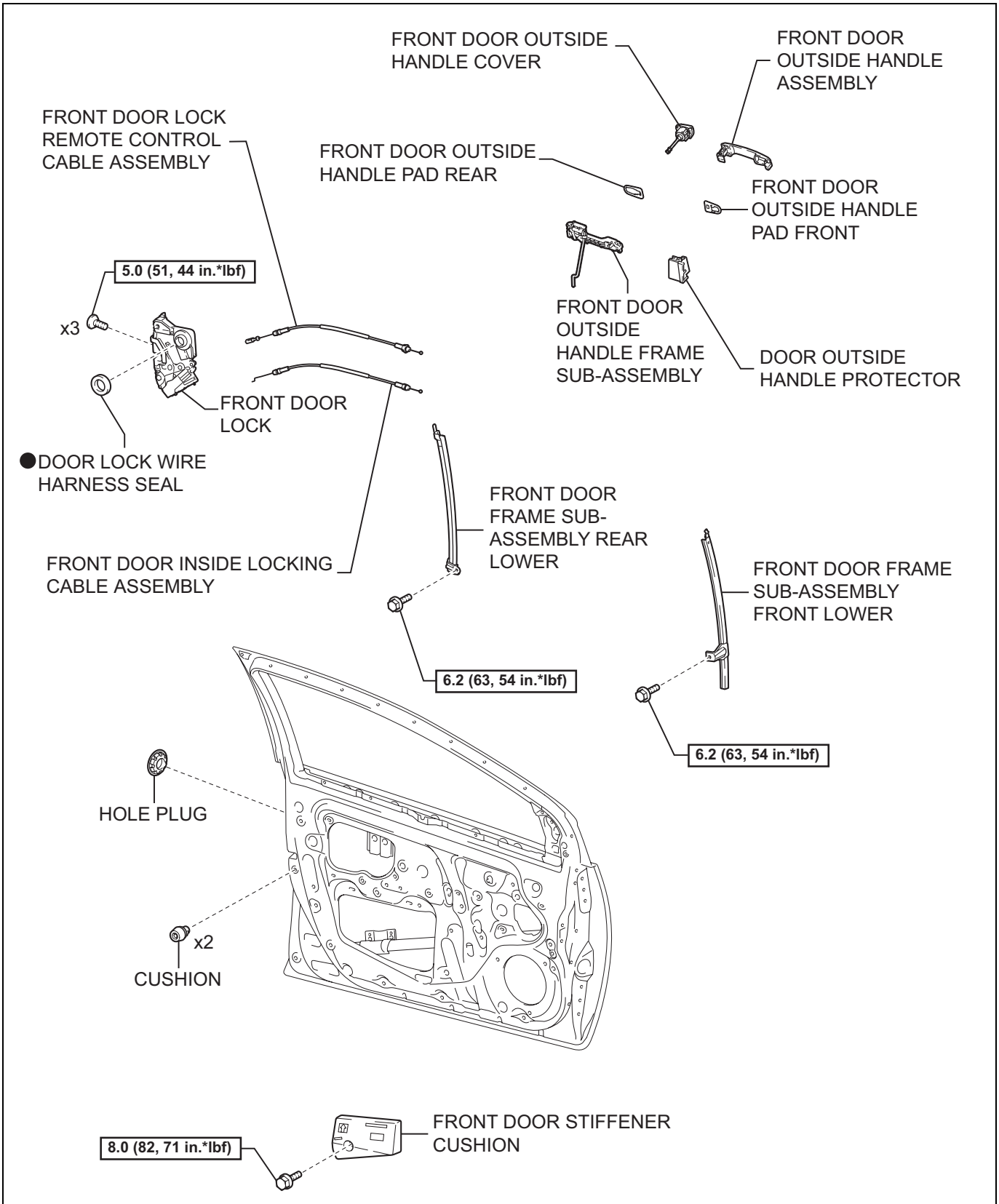

N*m (kgf*cm, ft.*lbf) : Specified torque

● Non-reusable part

P

B136201E01

DISASSEMBLY

HINT:

- Use the same procedure for both the RH and LH sides.
- The procedure described below is for the LH side.

1. DISCONNECT CABLE FROM NEGATIVE BATTERY TERMINAL

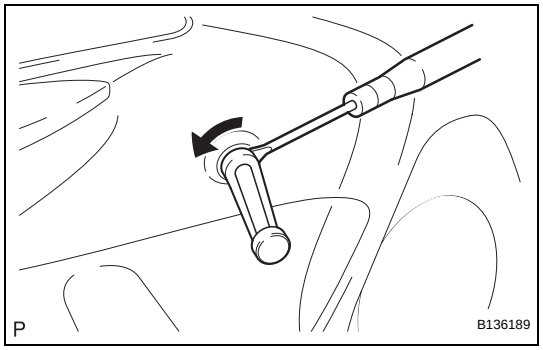

2. REMOVE FRONT DOOR WINDOW REGULATOR HANDLE ASSEMBLY (w/o Power Window)

(a) Insert a clip remover between the plate and door trim.
(b) Turn the handle with the clip remover inserted, as shown in the illustration.
(c) Remove the front door window regulator handle and clip.
(d) Remove the window regulator handle plate.

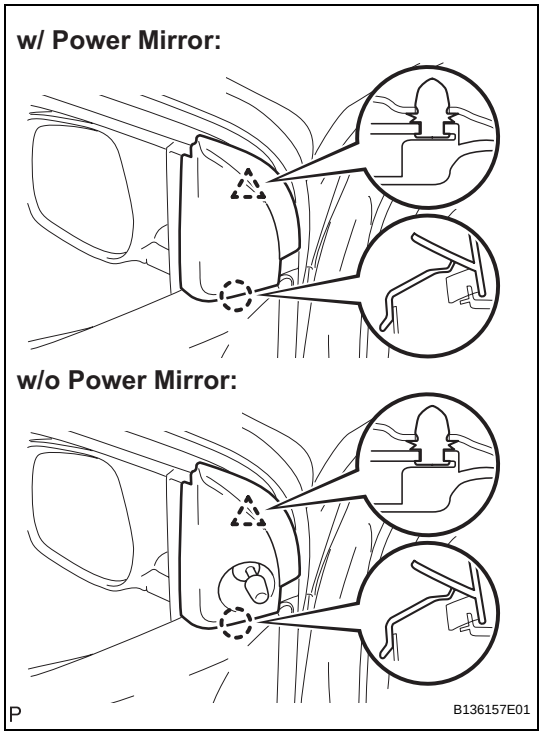

3. REMOVE FRONT DOOR LOWER FRAME BRACKET GARNISH

(a) Disengage the claw and clip and remove the front door lower frame bracket garnish.

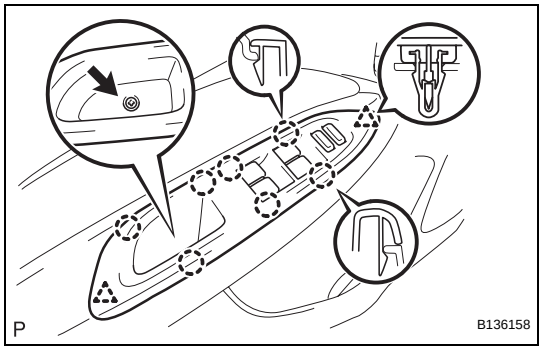

4. REMOVE FRONT ARMREST BASE UPPER PANEL

(a) for Driver side with power window:
  (1) Remove the screw.
  (2) Disengage the 7 claws and 2 clips and remove the front armrest base upper panel.
  (3) Disconnect the connector.

ED

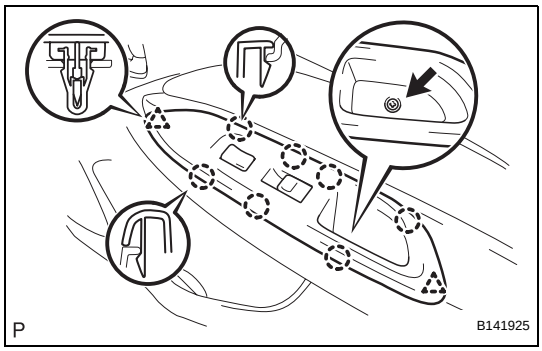

(b) for Front passenger side with power window:
(1) Remove the screw.
(2) Disengage the 7 claws and 2 clips and remove the front armrest base upper panel.
(3) Disconnect the connector.

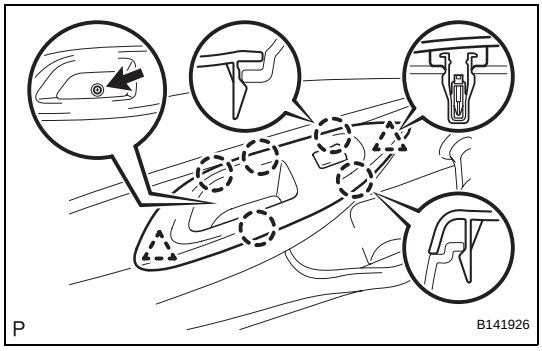

(c) w/o Power window:
(1) Remove the screw.
(2) Disengage the 5 claws and 2 clips and remove the front armrest base upper panel.

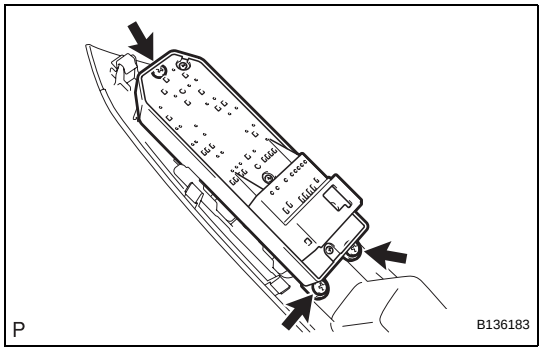

5. REMOVE POWER WINDOW REGULATOR MASTER SWITCH ASSEMBLY (w/ Power Window)
(a) Remove the 3 screws and the power window regulator master switch.

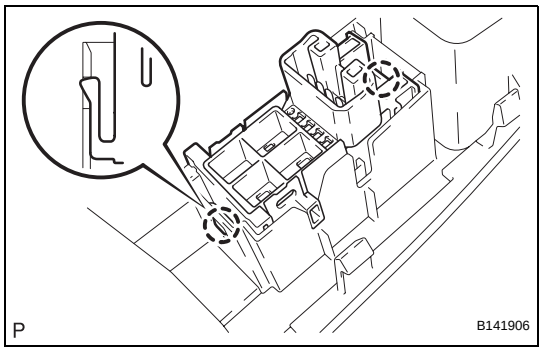

6. REMOVE POWER WINDOW REGULATOR SWITCH ASSEMBLY (w/ Power Window)
(a) Using a screwdriver with its tip wrapped in protective tape, disengage the 2 claws and remove the power window regulator switch.

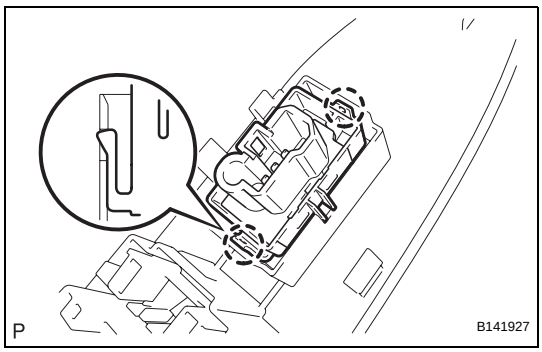

7. REMOVE DOOR CONTROL SWITCH (w/ Power Door Lock)
(a) Using a screwdriver with its tip wrapped in protective tape, disengage the 2 claws and remove the door control switch.

ED

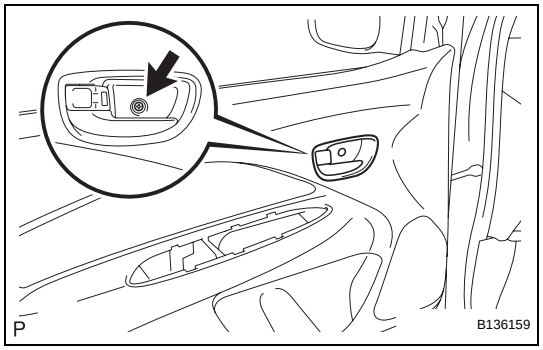

8. REMOVE FRONT DOOR TRIM BOARD SUB-ASSEMBLY

(a) w/ Power window:

(1) Remove the screw.

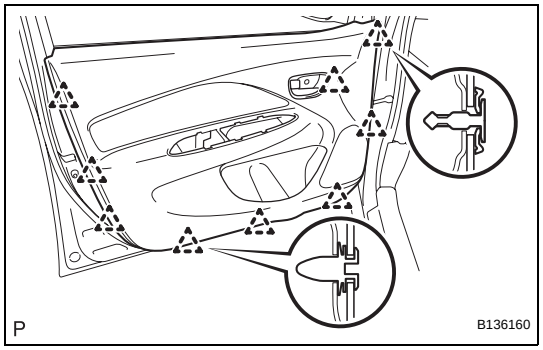

(2) Disengage the 9 clips.

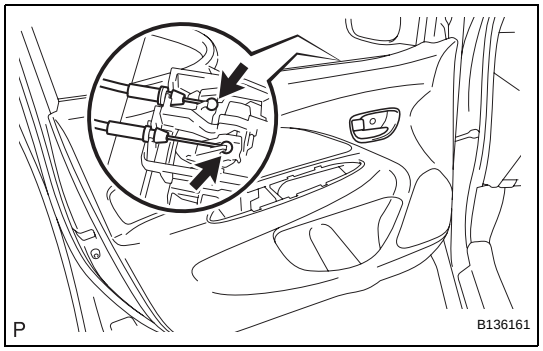

(3) Disconnect the front door lock remote control cable and front door inside locking cable and remove the front door trim board.

(b) w/o Power window:

(1) Remove the screw.

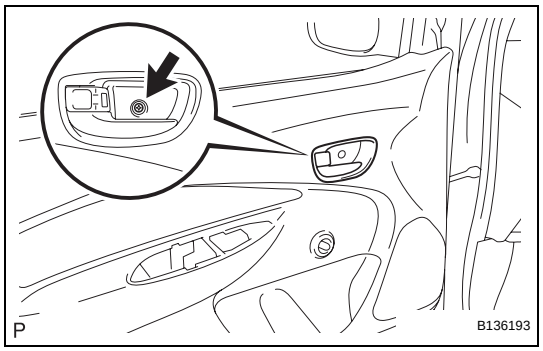

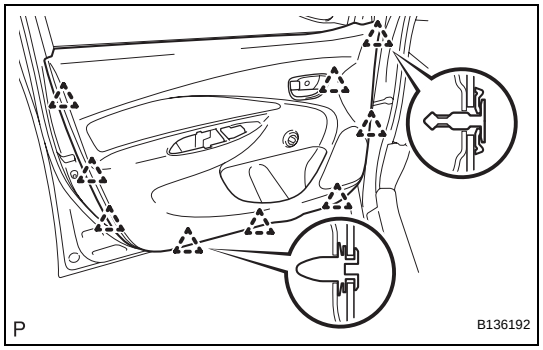

(2) Disengage the 9 clips.

ED

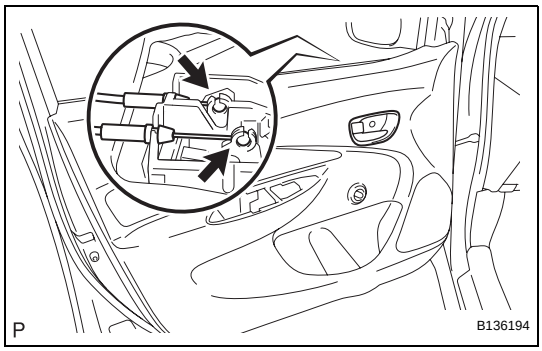

(3) Disconnect the front door lock remote control cable and front door inside locking cable and remove the front door trim board.

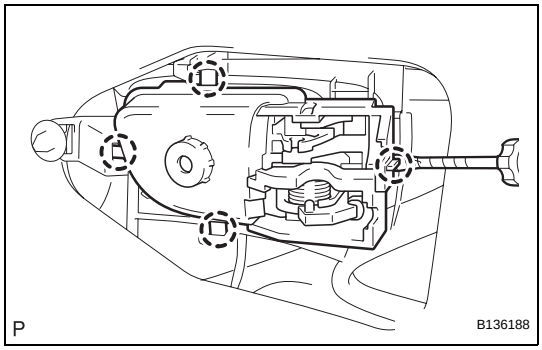

9. REMOVE FRONT DOOR INSIDE HANDLE SUB-ASSEMBLY

(a) Using a screwdriver with its tip wrapped in protective tape, disengage the 4 claws and remove the front door inside handle.

10. REMOVE FRONT DOOR GLASS WEATHERSTRIP INNER

(a) Remove the front door glass weatherstrip inner from the front door trim board.

11. REMOVE FRONT NO.1 SPEAKER ASSEMBLY (See page AV-164)

12. REMOVE OUTER REAR VIEW MIRROR (See page MI-8)

13. REMOVE FRONT DOOR BELT MOULDING (See page ET-85)

14. REMOVE FRONT DOOR TRIM BRACKET

(a) Remove the 2 screws and front door trim bracket.

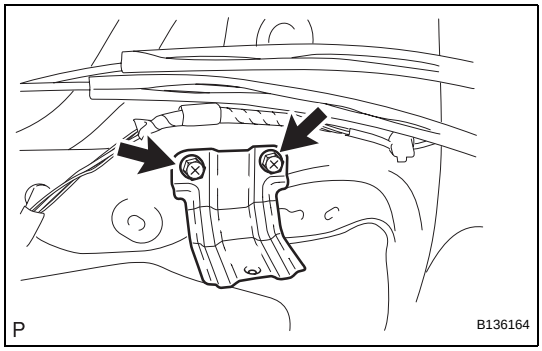

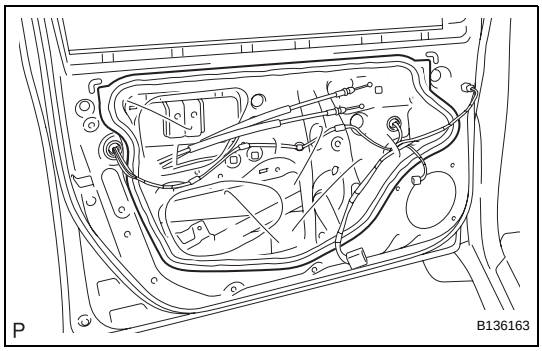

15. REMOVE FRONT DOOR SERVICE HOLE COVER

(a) Disconnect the connectors and clamps, then remove the front door service hole cover.

NOTICE:
Remove any tape remaining on the door side.

16. REMOVE FRONT DOOR GLASS SUB-ASSEMBLY

(a) w/ Power window:

(1) Driver side:
Provisionally install the power window regulator master switch.

(2) Passenger side:
Provisionally install the power window regulator switch.

ED

(b) w/o Power window:
(1) Provisionally install the front door window regulator handle.

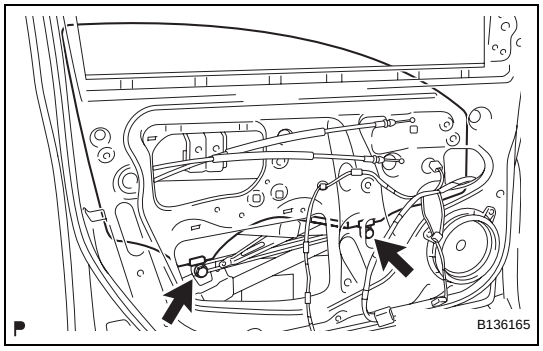

(c) Move the front door glass until the 2 bolts can be seen through the service holes.
(d) Remove the 2 bolts.
NOTICE:
Do not drop or damage the front door glass when removing the bolts.

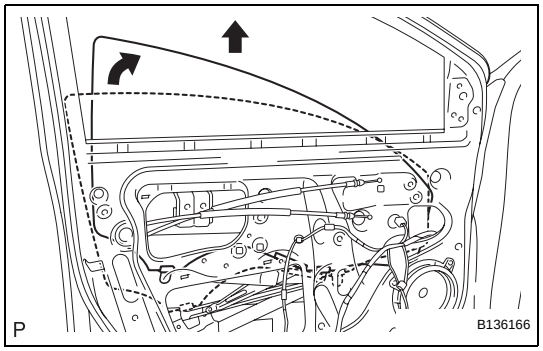

(e) Remove the front door glass in the direction indicated by the arrows in the illustration.
NOTICE:
Do not damage the glass.
(f) w/ Power window:
(1) Driver side:
Remove the power window regulator master switch.
(2) Passenger side:
Remove the power window regulator switch.
(g) w/o Power window:
(1) Remove the front door window regulator handle.

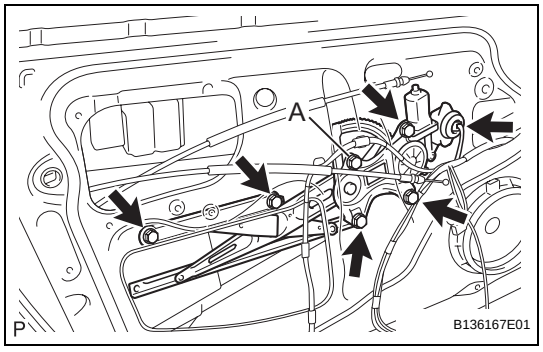

17. REMOVE FRONT DOOR WINDOW REGULATOR SUB-ASSEMBLY
(a) w/ Power window:
(1) Disconnect the connector.
(2) Loosen bolt A.
(3) Remove the 5 bolts, then remove the front door window regulator.
NOTICE:
Do not drop or damage the window regulator when removing the bolts.
HINT:
Remove the window regulator through the service hole.

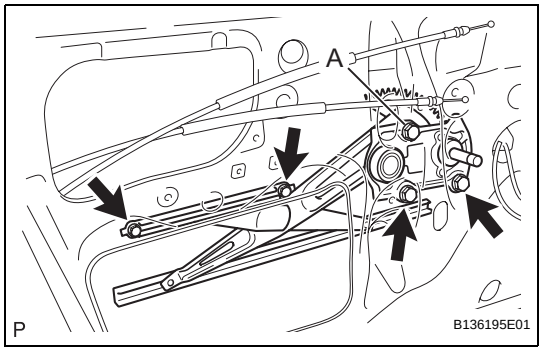

(b) w/o Power window:
(1) Loosen bolt A.
(2) Remove the 5 bolts, then remove the front door window regulator.
NOTICE:
Do not drop or damage the window regulator when removing the bolts.
HINT:
Remove the window regulator through the service hole.

ED

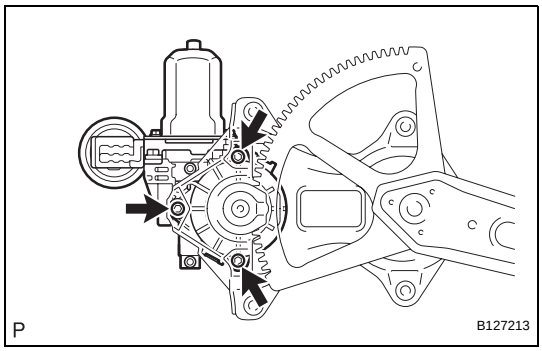

18. REMOVE POWER WINDOW REGULATOR MOTOR ASSEMBLY FRONT (w/ Power Window)

(a) Using "Torx" socket wrench T25, remove the 3 screws and power window regulator motor.

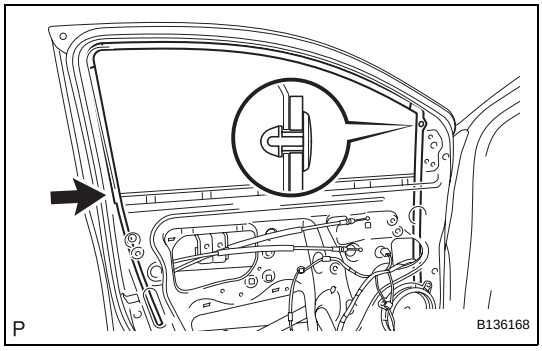

19. REMOVE FRONT DOOR GLASS RUN

(a) Disengage the clip, then remove the front door glass run.

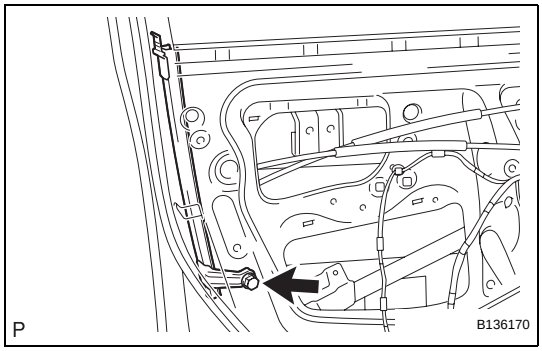

20. REMOVE FRONT DOOR FRAME SUB-ASSEMBLY REAR LOWER

(a) Remove the bolt, then remove the front door frame sub-assembly rear lower.

NOTICE:

Do not drop or damage the front door frame sub-assembly rear lower when removing the bolt.

HINT:

Remove the front door frame sub-assembly rear lower through the service hole.

ED

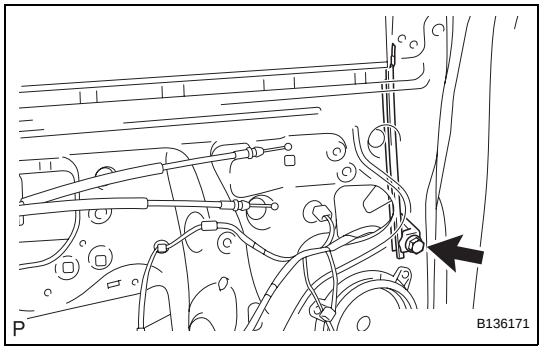

21. REMOVE FRONT DOOR FRAME SUB-ASSEMBLY FRONT LOWER

(a) Remove the bolt, then remove the front door frame sub-assembly front lower.

NOTICE:

Do not drop or damage the front door frame sub-assembly front lower when removing the bolts.

HINT:

Remove the front door frame sub-assembly front lower through the service hole.

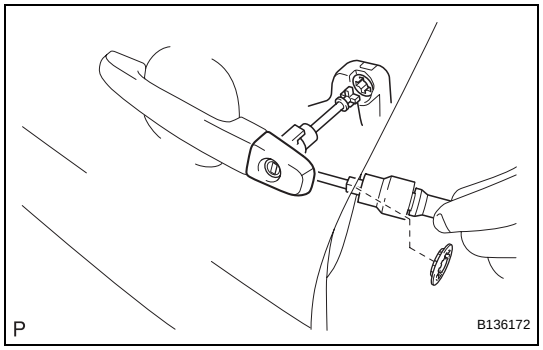

22. REMOVE FRONT DOOR OUTSIDE HANDLE COVER

(a) Remove the hole plug.

(b) Using "Torx" socket wrench T30, loosen the screw and remove the cover with the door lock key cylinder installed.

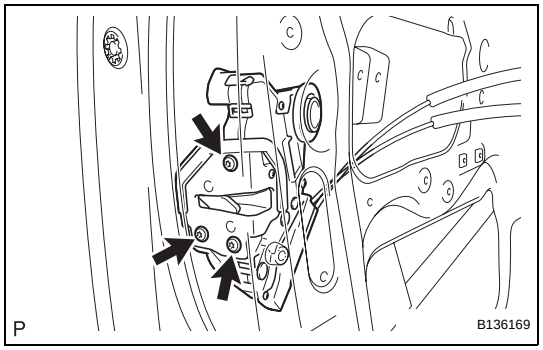

23. REMOVE FRONT DOOR LOCK

(a) Using "Torx" socket wrench T30, remove the 3 screws.

(b) Move the front door lock downward, remove the outside handle frame link and remove the front door lock.

NOTICE:

Do not drop or damage the front door lock when removing the screws.

HINT:

Remove the front door lock through the service hole.

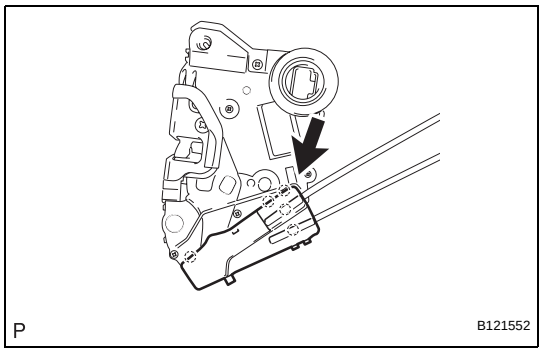

(c) Open the cover.

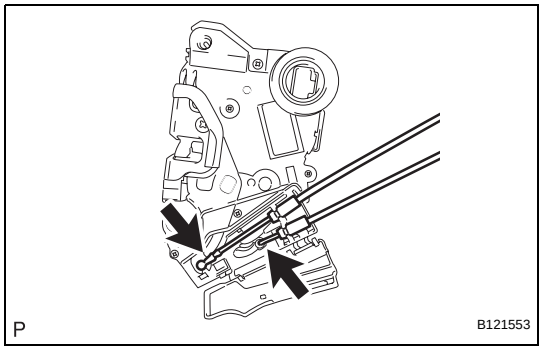

(d) Disconnect the front door lock remote control cable and front door inside locking cable.

(e) Remove the door lock wire harness seal.

ED

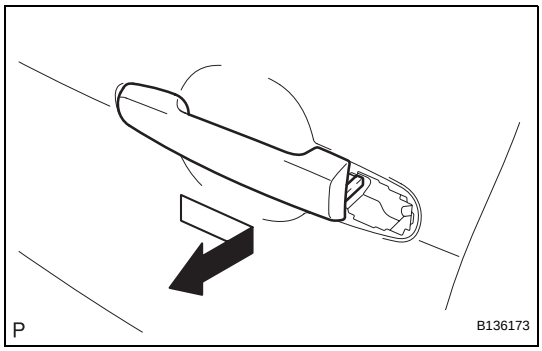

24. REMOVE FRONT DOOR OUTSIDE HANDLE ASSEMBLY

(a) Remove the handle by sliding and pulling it in the direction indicated by the arrow mark in the illustration.

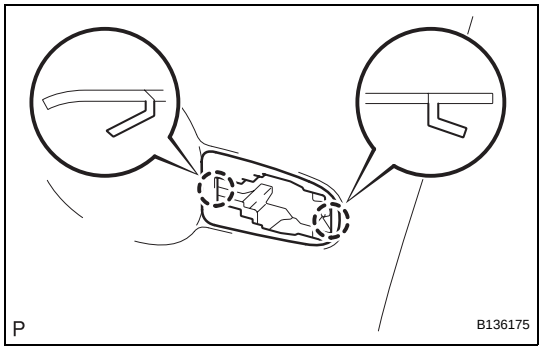

25. REMOVE FRONT DOOR OUTSIDE HANDLE PAD REAR

(a) Disengage the 2 claws and remove the front door outside handle pad rear.

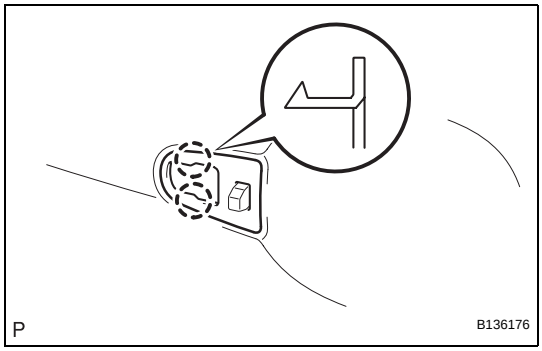

26. REMOVE FRONT DOOR OUTSIDE HANDLE PAD FRONT

(a) Disengage the 2 claws and remove the front door outside handle pad front.

ED

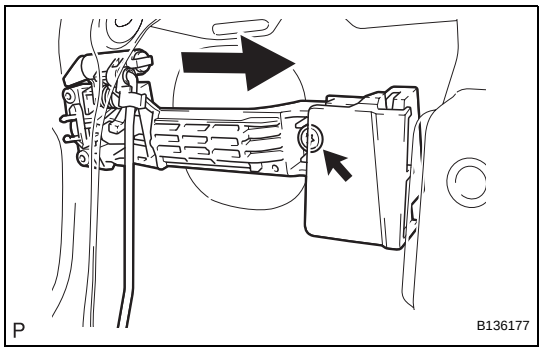

27. REMOVE FRONT DOOR OUTSIDE HANDLE FRAME SUB-ASSEMBLY

(a) Using "Torx" socket wrench T30, loosen the screw.
(b) Slide the front outside handle frame to remove it.

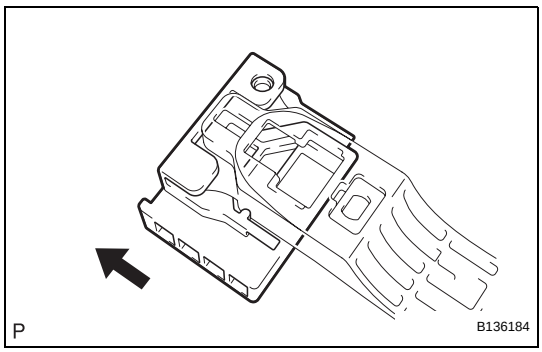

28. REMOVE DOOR OUTSIDE HANDLE PROTECTOR

(a) Slide the door outside handle protector to remove it.

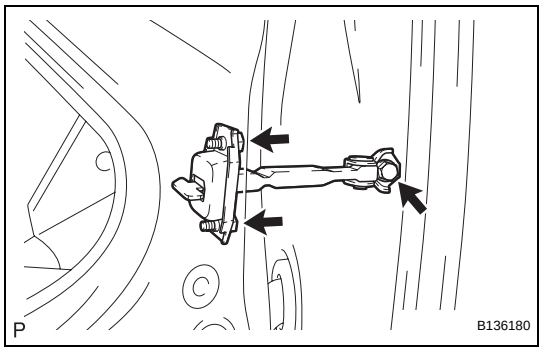

29. REMOVE FRONT DOOR CHECK ASSEMBLY

(a) Remove the 3 bolts, then remove the front door check.

NOTICE:

Do not drop or damage the door check when removing the bolts.

HINT:

Remove the door check through the service hole.

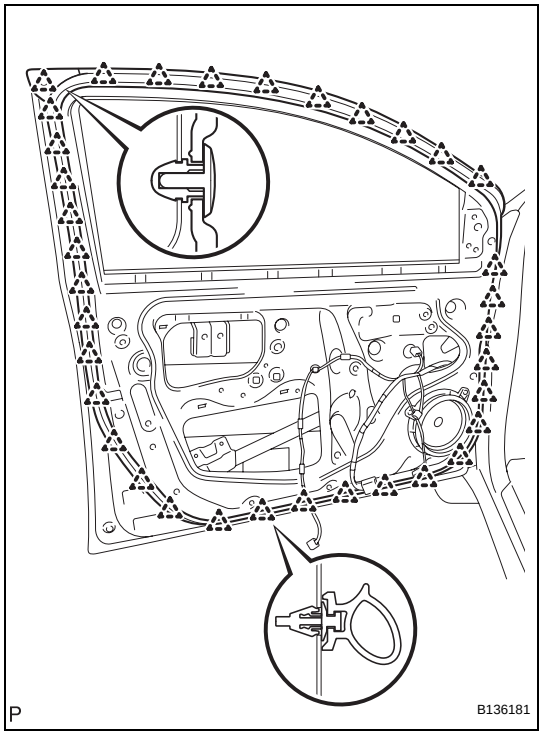

30. REMOVE FRONT DOOR WEATHERSTRIP

(a) Disengage the 35 clips and remove the front door weatherstrip.

NOTICE:

Remove any tape remaining on the door side.

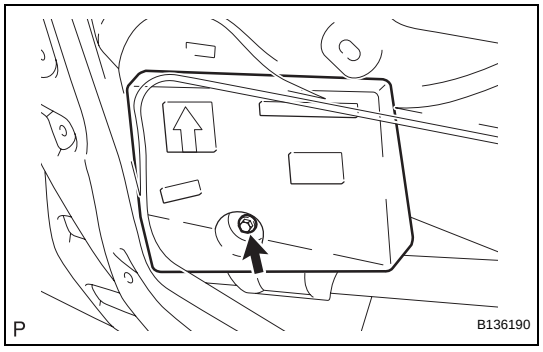

31. REMOVE FRONT DOOR STIFFENER CUSHION

(a) Remove the bolt and front door stiffener cushion.

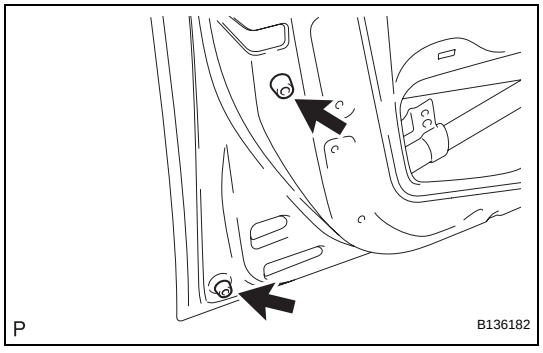

32. REMOVE CUSHION

(a) Remove the 2 cushions from the door panel.

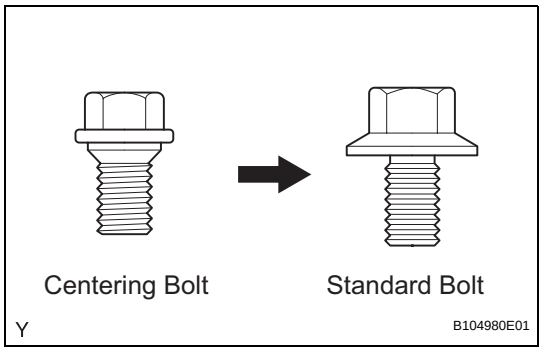

ADJUSTMENT

HINT:

- Before adjusting the door position on vehicles equipped with side airbags and curtain shield airbags, be sure to disconnect the battery. After the adjustment, inspect the SRS warning light, the side airbag system and the curtain shield airbag system for normal operation. Then initialize both airbag systems.
- Use the same procedure for the RH and LH sides.
- The procedures described below are for the LH side.
- Centering bolts are used to mount the door hinge onto the vehicle body and door. The door cannot be adjusted with the centering bolts on. Substitute standard bolts (with washers) for the centering bolts when making adjustments.
- For bolts without torque specifications, check the standard bolt chart (see page SS-2).

1. INSPECT FRONT DOOR

(a) Check that the clearance measurements are within the standard ranges.

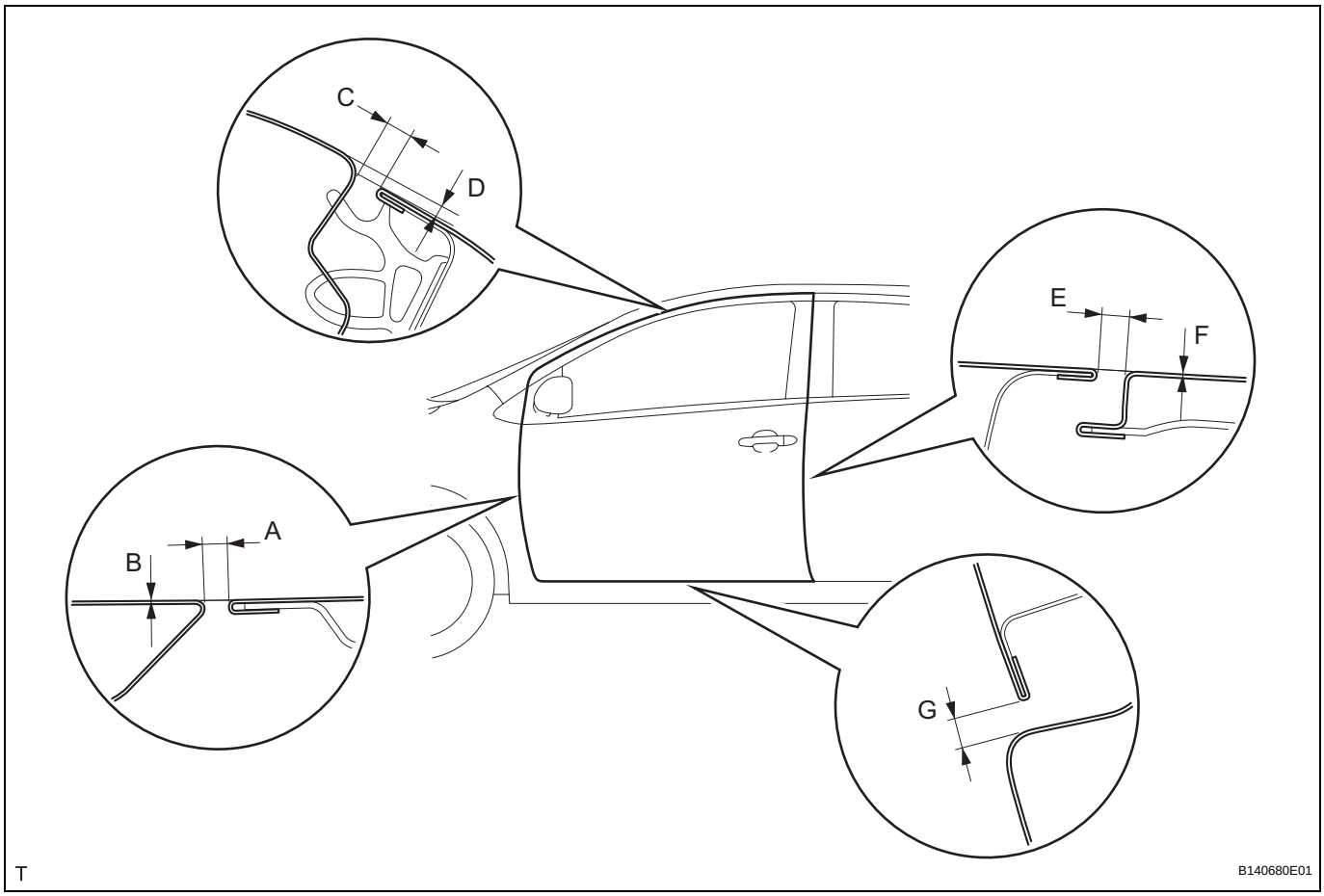

Standard

Area	Measurement	Area	Measurement
A	2.5 to 5.5 mm (0.098 to 0.217 in.)	E	3.3 to 6.3 mm (0.130 to 0.248 in.)
B	-1.5 to 1.5 mm (-0.059 to 0.059 in.)	F	-1.5 to 1.5 mm (-0.059 to 0.059 in.)

ED

Area	Measurement	Area	Measurement
C	3.2 to 6.2 mm (0.126 to 0.244 in.)	G	4.2 to 7.2 mm (0.165 to 0.283 in.)
D	1.3 to 4.3 mm (0.051 to 0.169 in.)	-	-

2. ADJUST FRONT DOOR

(a) Disconnect the cable from the negative battery terminal.
Wait for at least 90 seconds after disconnecting the cable to prevent the airbag from working.

(b) Using SST, adjust the door horizontally and vertically by loosening the body side hinge bolts.
SST 09812-00010

(c) Tighten the body side hinge bolts after the adjustment.
Torque: 26 N*m (265 kgf*cm, 19 ft.*lbf)

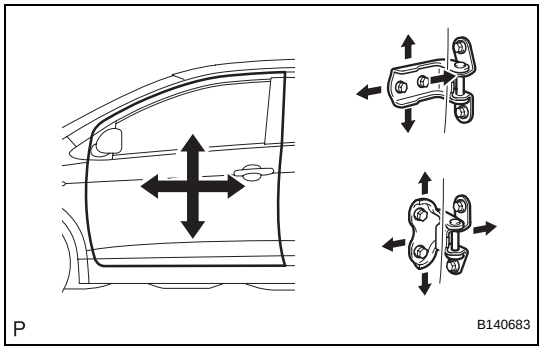

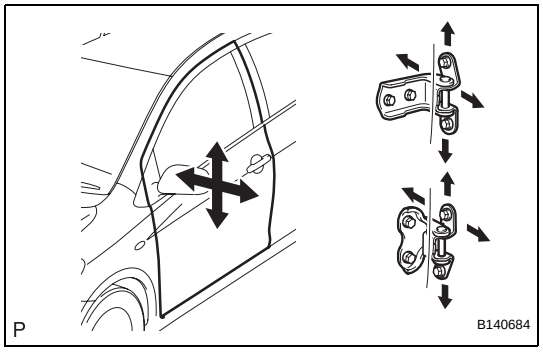

(d) Adjust the door horizontally and vertically by loosening the door side hinge bolts.

(e) Tighten the door side hinge bolts after the adjustment.
Torque: 26 N*m (265 kgf*cm, 19 ft.*lbf)

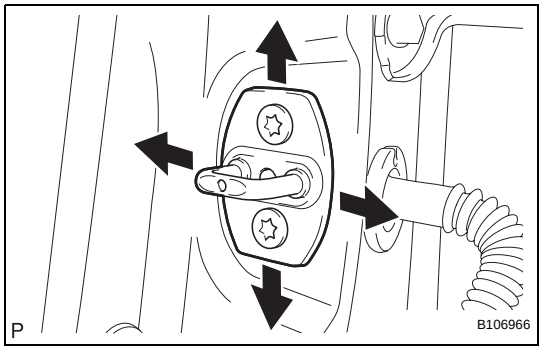

(f) Using "Torx" socket wrench T40, adjust the striker position by slightly loosening the striker mounting screws and hitting the striker with a plastic-faced hammer.

(g) Using "Torx" socket wrench T40, tighten the striker mounting screws after the adjustment.
Torque: 23 N*m (235 kgf*cm, 17 ft.*lbf)

(h) Connect the cable to the negative battery terminal.
Torque: 5.4 N*m (55 kgf*cm, 48 in.*lbf)

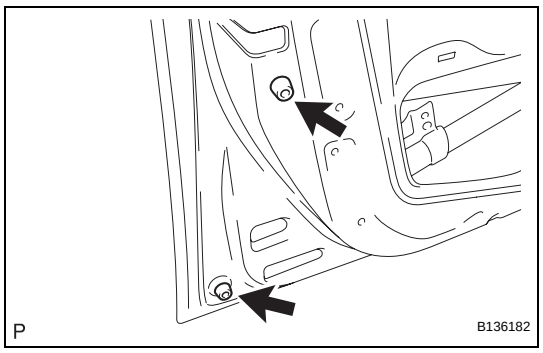

REASSEMBLY

1. INSTALL CUSHION

(a) Install the 2 cushions onto the door panel.

ED

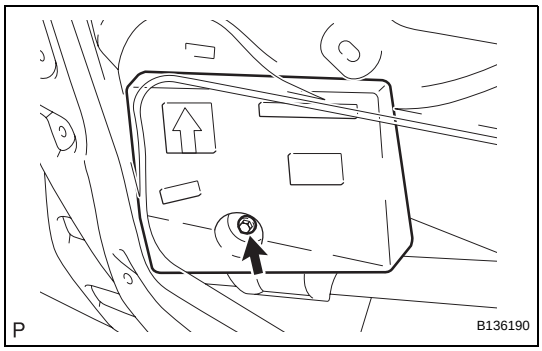

2. INSTALL FRONT DOOR STIFFENER CUSHION

(a) Install the front door stiffener cushion with the bolt.
Torque: 8.0 N*m (82 kgf*cm, 71 in.*lbf)

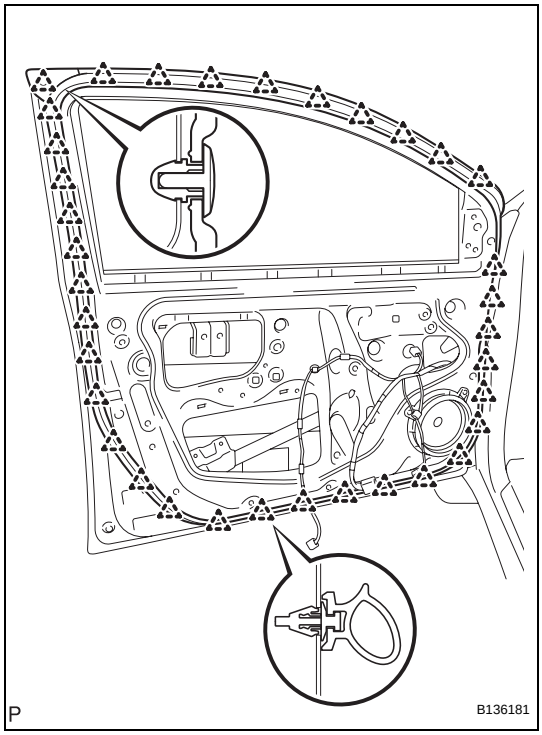

3. INSTALL FRONT DOOR WEATHERSTRIP

(a) Engage the 35 clips and install the front door weatherstrip.

ED

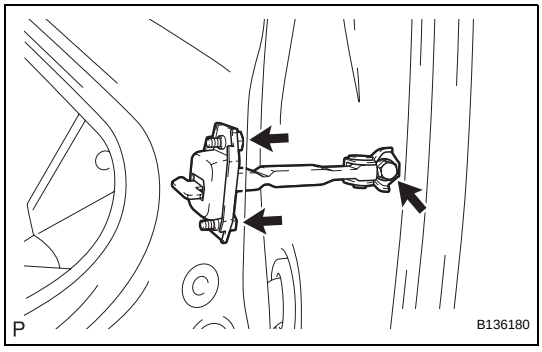

4. INSTALL FRONT DOOR CHECK ASSEMBLY

(a) Apply MP grease to the sliding areas of the door check.

(b) Install the front door check onto the door panel with the 2 bolts.
Torque: 5.5 N*m (56 kgf*cm, 49 in.*lbf)

(c) Apply adhesive to the threads of the bolt.
Adhesive:
Toyota Genuine Adhesive 1324, Three Bond 1324 or the equivalent.

(d) Install the front door check onto the body panel with the bolt.
Torque: 30 N*m (306 kgf*cm, 22 ft.*lbf)

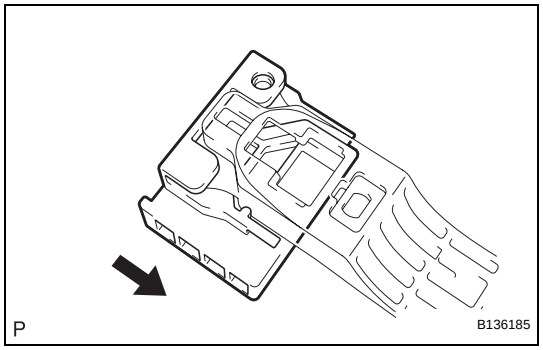

5. INSTALL DOOR OUTSIDE HANDLE PROTECTOR

(a) Slide the door outside handle protector to install it.

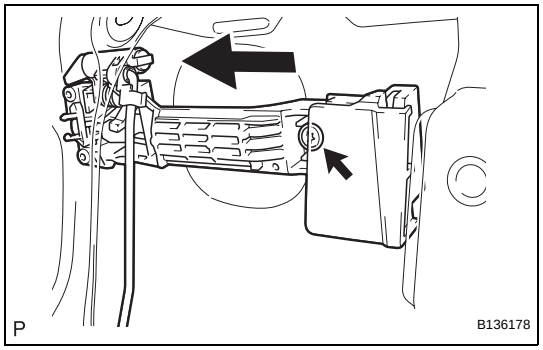

6. INSTALL FRONT DOOR OUTSIDE HANDLE FRAME SUB-ASSEMBLY

(a) Using "Torx" socket wrench T30, install the front outside handle frame with the screw.
Torque: 4.0 N*m (41 kgf*cm, 35 in.*lbf)

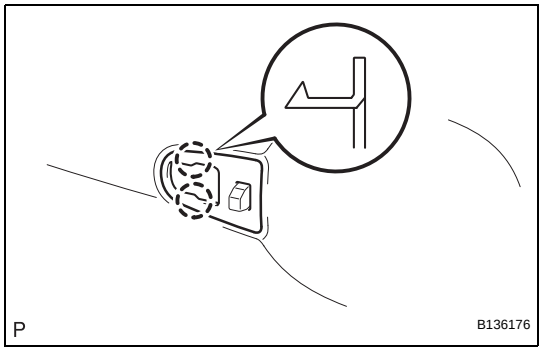

7. INSTALL FRONT DOOR OUTSIDE HANDLE PAD FRONT

(a) Engage the 2 claws and install the front door outside handle pad front.

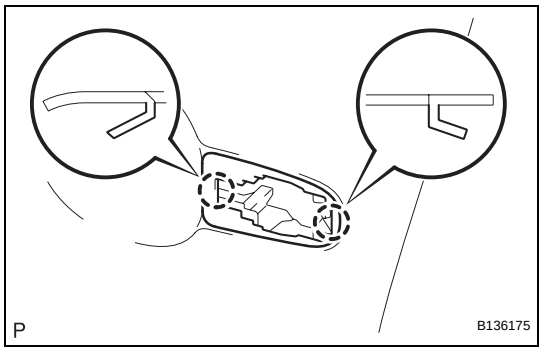

8. INSTALL FRONT DOOR OUTSIDE HANDLE PAD REAR

(a) Engage the 2 claws and install the front door outside handle pad rear.

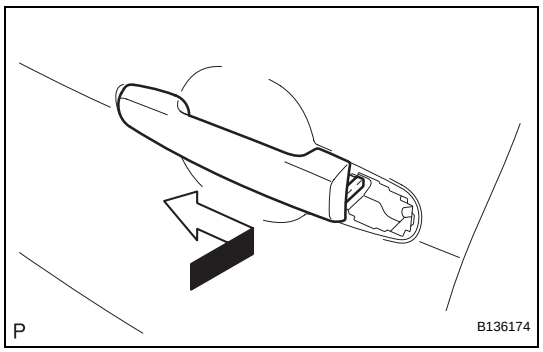

9. INSTALL FRONT DOOR OUTSIDE HANDLE ASSEMBLY

(a) Pushing the front door outside handle in the direction of the arrow mark shown in the illustration, install the front door outside handle.

10. INSTALL FRONT DOOR LOCK

NOTICE:

- **If reusing a door lock that has been removed, replace the packing in the connecting part with new.**

ED

- **Make sure that no grease or dirt adheres to the packing surface in the connecting part.**

(a) Apply MP grease to the sliding and rotating areas of the front door lock.

(b) Connect the front door lock remote control cable and front door inside locking cable.

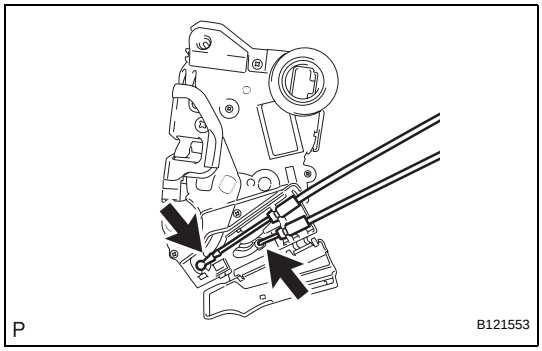

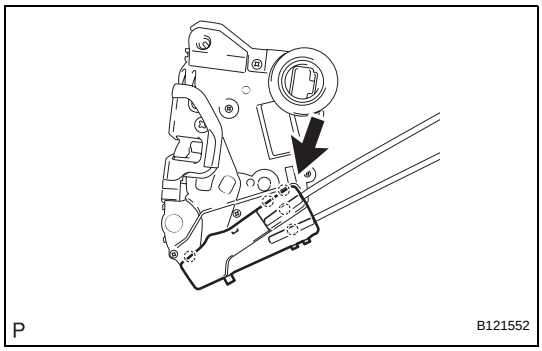

(c) Close the cover.

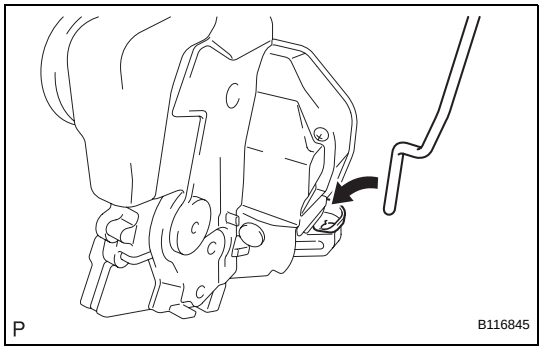

(d) Insert the door lock open rod into the front door lock, then set it to the door panel.
NOTICE:
Make sure that the outside handle link is securely engaged with the door lock.

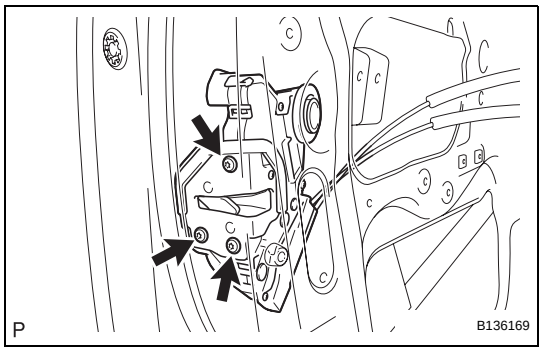

(e) Apply adhesive to the threads of the screws.
Adhesive:
Toyota Genuine Adhesive 1324, Three Bond 1324 or the equivalent.

(f) Using "Torx" socket wrench T30, install the front door lock with the 3 screws.
Torque: 5.0 N*m (51 kgf*cm, 44 in.*lbf)

ED

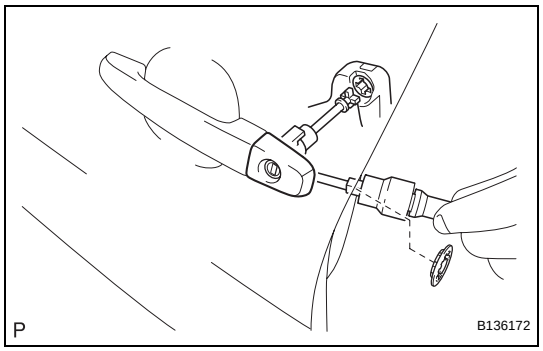

11. INSTALL FRONT DOOR OUTSIDE HANDLE COVER

(a) Using "Torx" socket wrench T30, install the cover with the door lock key cylinder.
Torque: 4.0 N*m (41 kgf*cm, 35 in.*lbf)
HINT:
Make sure that the door lock key cylinder rod is inserted.

(b) Install the hole plug.

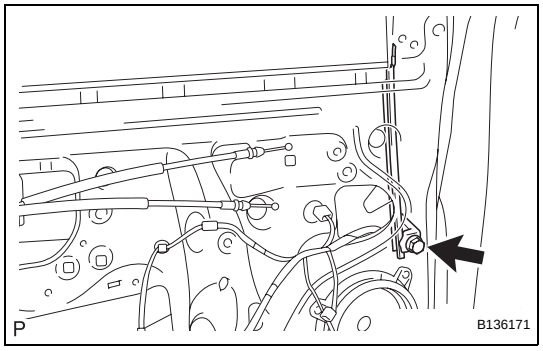

12. INSTALL FRONT DOOR FRAME SUB-ASSEMBLY FRONT LOWER

(a) Install the front door frame sub-assembly front lower with the bolt.
Torque: 6.2 N*m (63 kgf*cm, 54 in.*lbf)

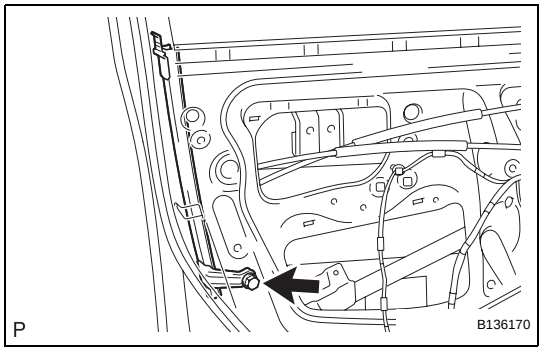

13. INSTALL FRONT DOOR FRAME SUB-ASSEMBLY REAR LOWER

(a) Install the front door frame sub-assembly rear lower with the bolt.
Torque: 6.2 N*m (63 kgf*cm, 54 in.*lbf)

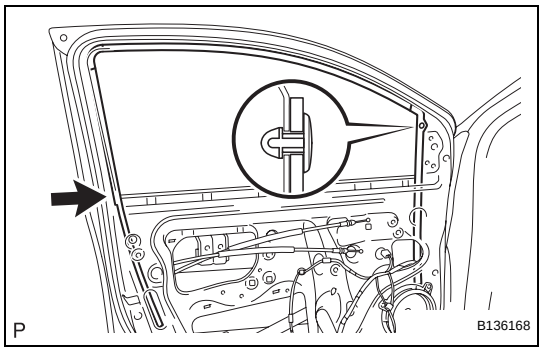

14. INSTALL FRONT DOOR GLASS RUN

(a) Install the front door glass run, then engage the clip.

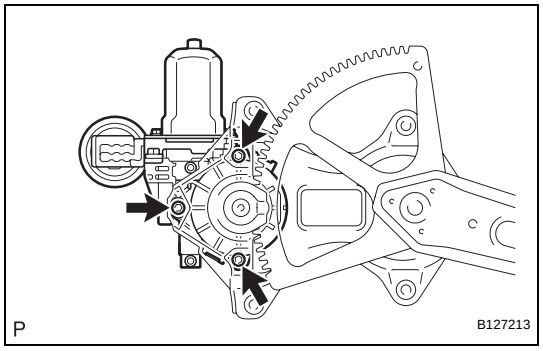

15. INSTALL POWER WINDOW REGULATOR MOTOR ASSEMBLY FRONT (w/ Power Window)

(a) Apply MP grease to the sliding and rotating areas of the regulator motor.

(b) Using "Torx" socket wrench T25, install the power window regulator motor assembly front with the 3 screws.
Torque: 5.4 N*m (55 kgf*cm, 48 in.*lbf)

16. INSTALL FRONT DOOR WINDOW REGULATOR SUB-ASSEMBLY

(a) Apply MP grease to the sliding and rotating areas of the front door window regulator.
NOTICE:
Do not apply grease to the window regulator spring.

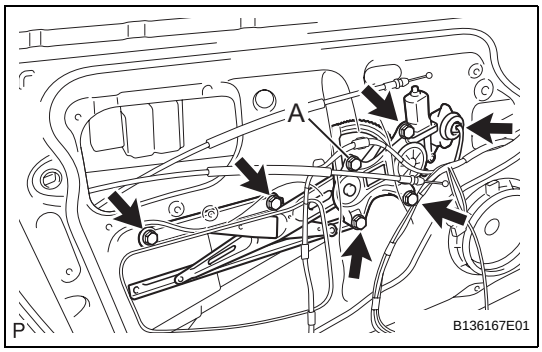

(b) w/ Power window:
(1) Loosely screw bolt A onto the front door window regulator.
(2) Insert the front door window regulator into the door panel. Use bolt A to hang the front door window regulator on the door panel.
NOTICE:
Do not drop the window regulator as it may be damaged.
(3) Install the front door window regulator with the 5 bolts, and tighten bolt A.
Torque: 8.0 N*m (82 kgf*cm, 71 in.*lbf)
(4) Connect the connector.

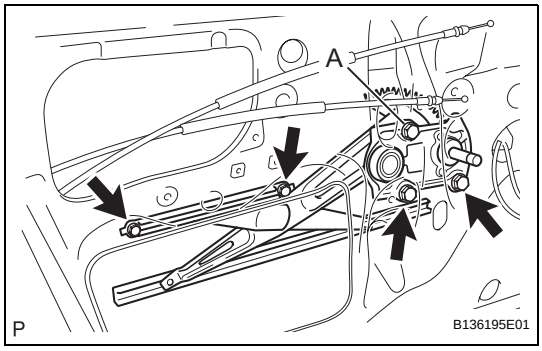

(c) w/o Power window:
(1) Loosely screw bolt A onto the front door window regulator.
(2) Insert the front door window regulator into the door panel. Use bolt A to hang the front door window regulator on the door panel.
NOTICE:
Do not drop the window regulator as it may be damaged.
(3) Install the front door window regulator with the 5 bolts, and tighten bolt A.
Torque: 8.0 N*m (82 kgf*cm, 71 in.*lbf)
(4) Connect the connector.

ED

17. INSTALL FRONT DOOR GLASS SUB-ASSEMBLY

(a) Insert the door glass into the door panel along the glass run as indicated by the arrows in the illustration.
NOTICE:
Do not damage the glass.

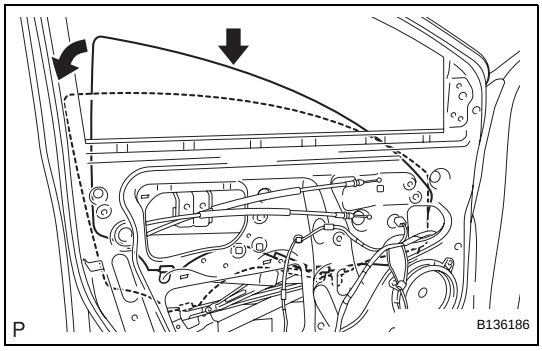

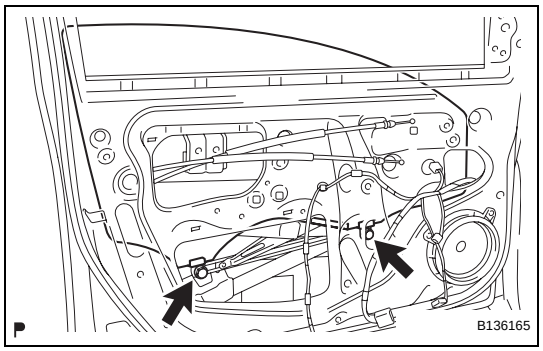

(b) Install the front door glass onto the front door window regulator with the 2 bolts.
Torque: 8.0 N*m (82 kgf*cm, 71 in.*lbf)

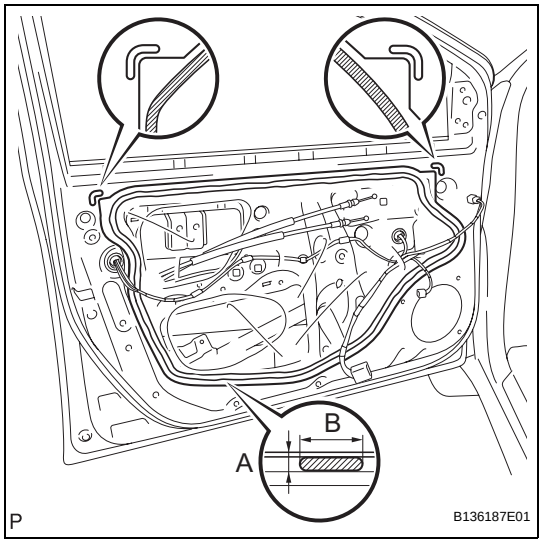

18. INSTALL FRONT DOOR SERVICE HOLE COVER

(a) Apply butyl tape to the door panel, then install a new front door service hole cover as shown in the illustration.
Adhesive:
Part No. 08850-00065, Butyl Tape Set or the equivalent
Specification

Area	Dimension
A	2.0 mm (0.079 in.) or more
B	6.0 mm (0.236 in.) or more

HINT:
- When installing the service hole cover, pull the links and connectors out through the service hole.
- There should be no wrinkles or folds after attaching the service hole cover.
- After attaching the service hole cover, check the quality of the seal.

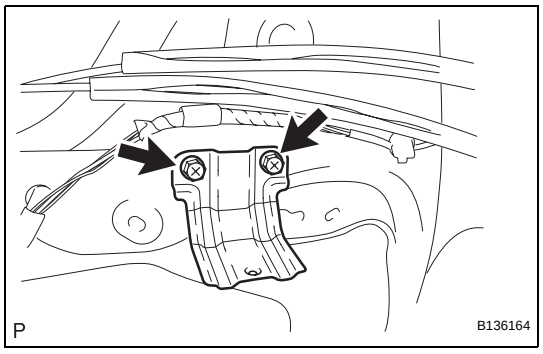

19. INSTALL FRONT DOOR TRIM BRACKET

(a) Install the front door trim bracket with the 2 screws.

20. INSTALL FRONT DOOR BELT MOULDING (See page ET-86)

21. INSTALL OUTER REAR VIEW MIRROR (See page MI-11)

22. INSTALL FRONT NO.1 SPEAKER ASSEMBLY (See page AV-160)

23. INSTALL FRONT DOOR GLASS WEATHERSTRIP INNER

(a) Install the front door glass weatherstrip inner onto the front door trim board.

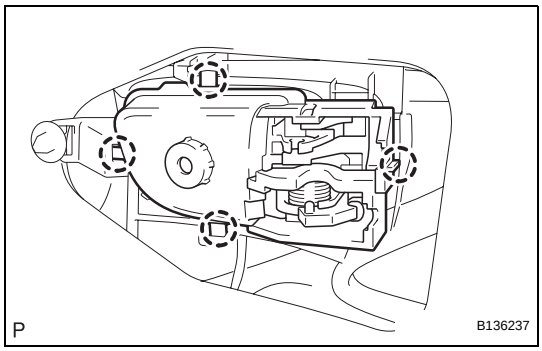

24. INSTALL FRONT DOOR INSIDE HANDLE SUB-ASSEMBLY

(a) Engage the 4 claws and install the front door inside handle.

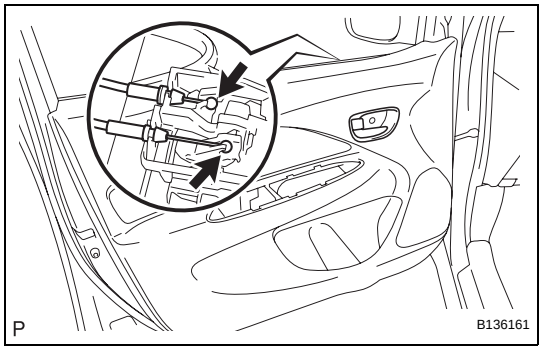

25. INSTALL FRONT DOOR TRIM BOARD SUB-ASSEMBLY

(a) w/ Power window:

(1) Connect the front door lock remote control cable and front door inside locking cable.

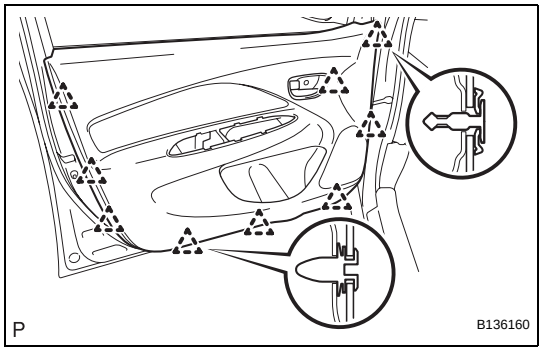

(2) Engage the 9 clips and install the front door trim board.

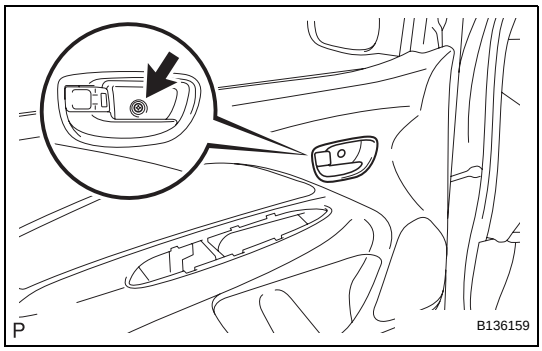

(3) Tighten the screw.

(b) w/o Power window:

(1) Connect the front door lock remote control cable and front door inside locking cable.

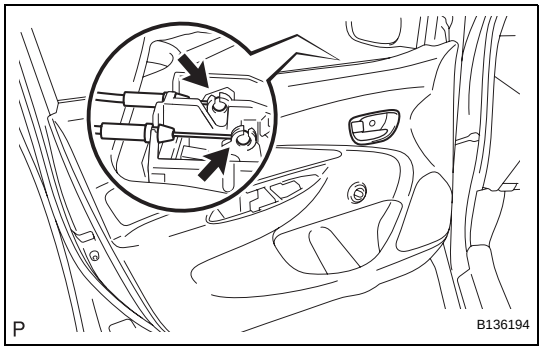

ED

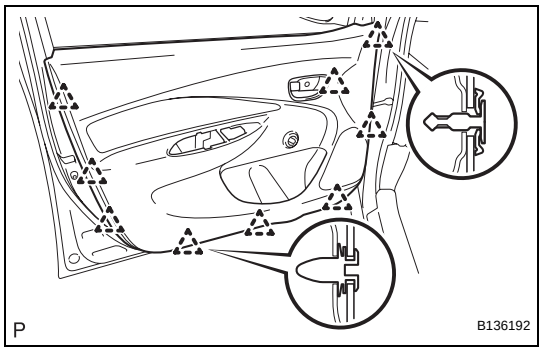

(2) Engage the 9 clips and install the front door trim board.

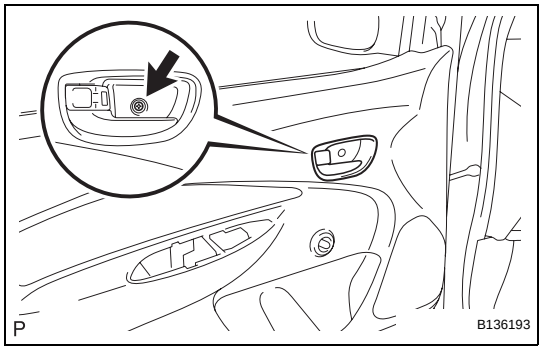

(3) Tighten the screw.

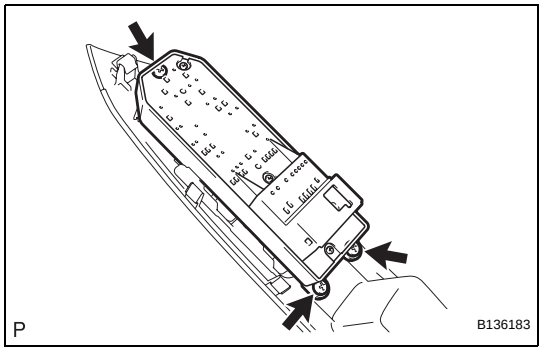

26. INSTALL POWER WINDOW REGULATOR MASTER SWITCH ASSEMBLY (w/ Power Window)

(a) Install the power window regulator master switch with the 3 screws.

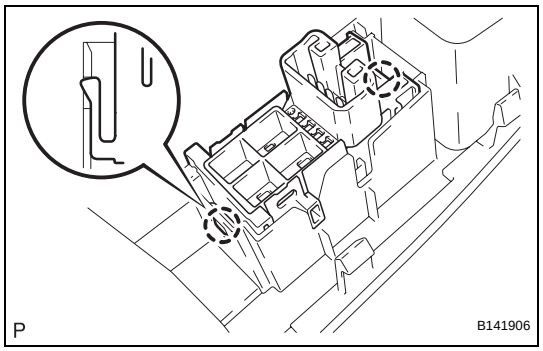

27. INSTALL POWER WINDOW REGULATOR SWITCH ASSEMBLY (w/ Power Window)

(a) Engage the 2 claws and install the power window regulator switch.

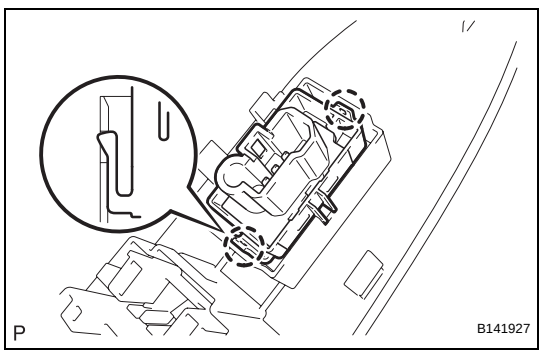

28. INSTALL DOOR CONTROL SWITCH (w/ Power Door Lock)

(a) Engage the 2 claws and install the door control switch.

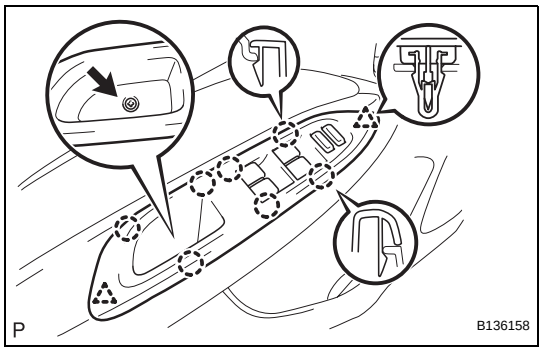

29. INSTALL FRONT ARMREST BASE UPPER PANEL

(a) for Driver side with power window:
  (1) Connect the connector.
  (2) Engage the 7 claws and 2 clips and install the front armrest base upper panel.
  (3) Tighten the screw.

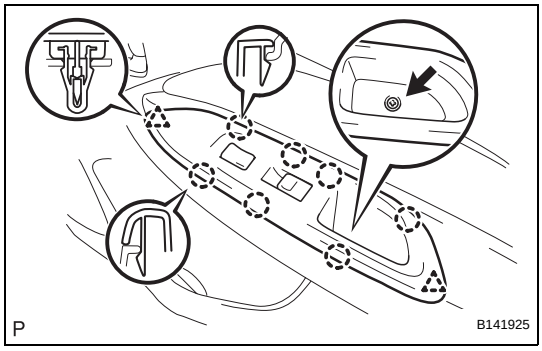

(b) for Front passenger side with power window:
  (1) Connect the connector.
  (2) Engage the 7 claws and 2 clips and install the front armrest base upper panel.
  (3) Tighten the screw.

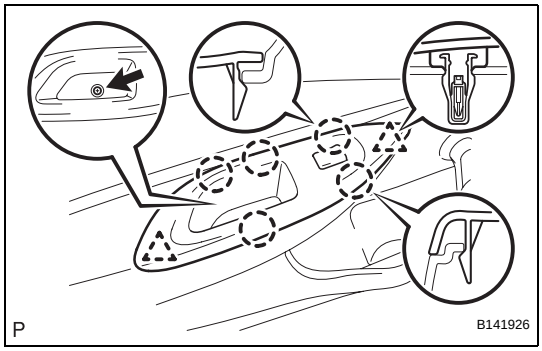

(c) w/o Power window:
  (1) Engage the 5 clips and 2 clips and install the front armrest base upper panel.
  (2) Tighten the screw.

ED

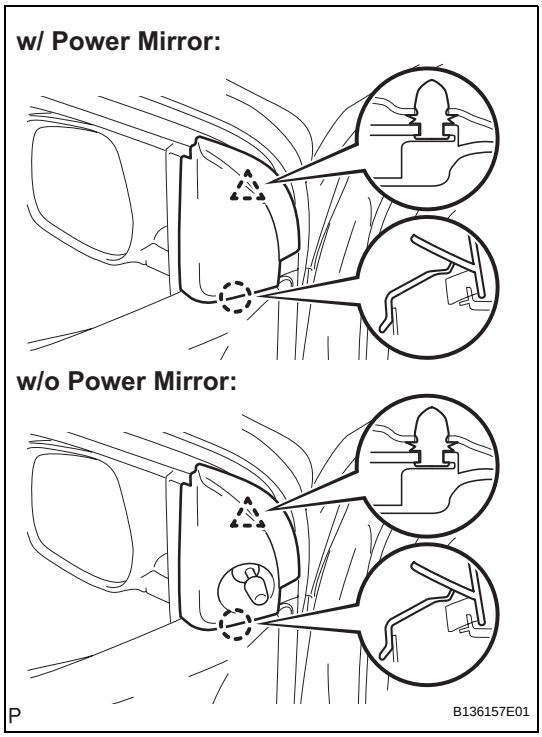

30. INSTALL FRONT DOOR LOWER FRAME BRACKET GARNISH

(a) Engage the claw and clip and install the front door lower frame bracket garnish.

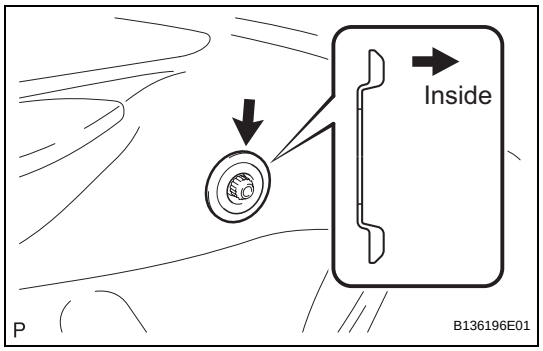

31. INSTALL FRONT DOOR WINDOW REGULATOR HANDLE ASSEMBLY (w/o Power Window)

(a) Install the window regulator handle plate.

(b) Open all the windows.

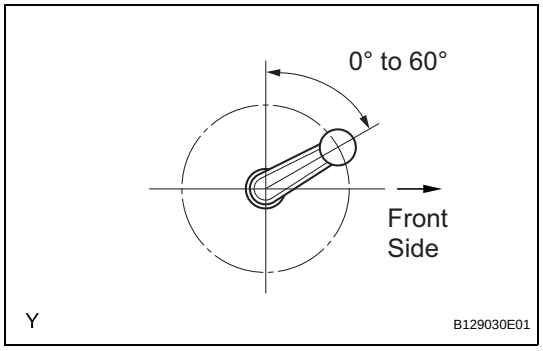

(c) Install the front door window regulator handle with the clip at the angle shown in the illustration.

32. CONNECT CABLE TO NEGATIVE BATTERY TERMINAL

Torque: 5.4 N*m (55 kgf*cm, 48 in.*lbf)

FRONT DOOR (for Hatchback with Power Window)

COMPONENTS

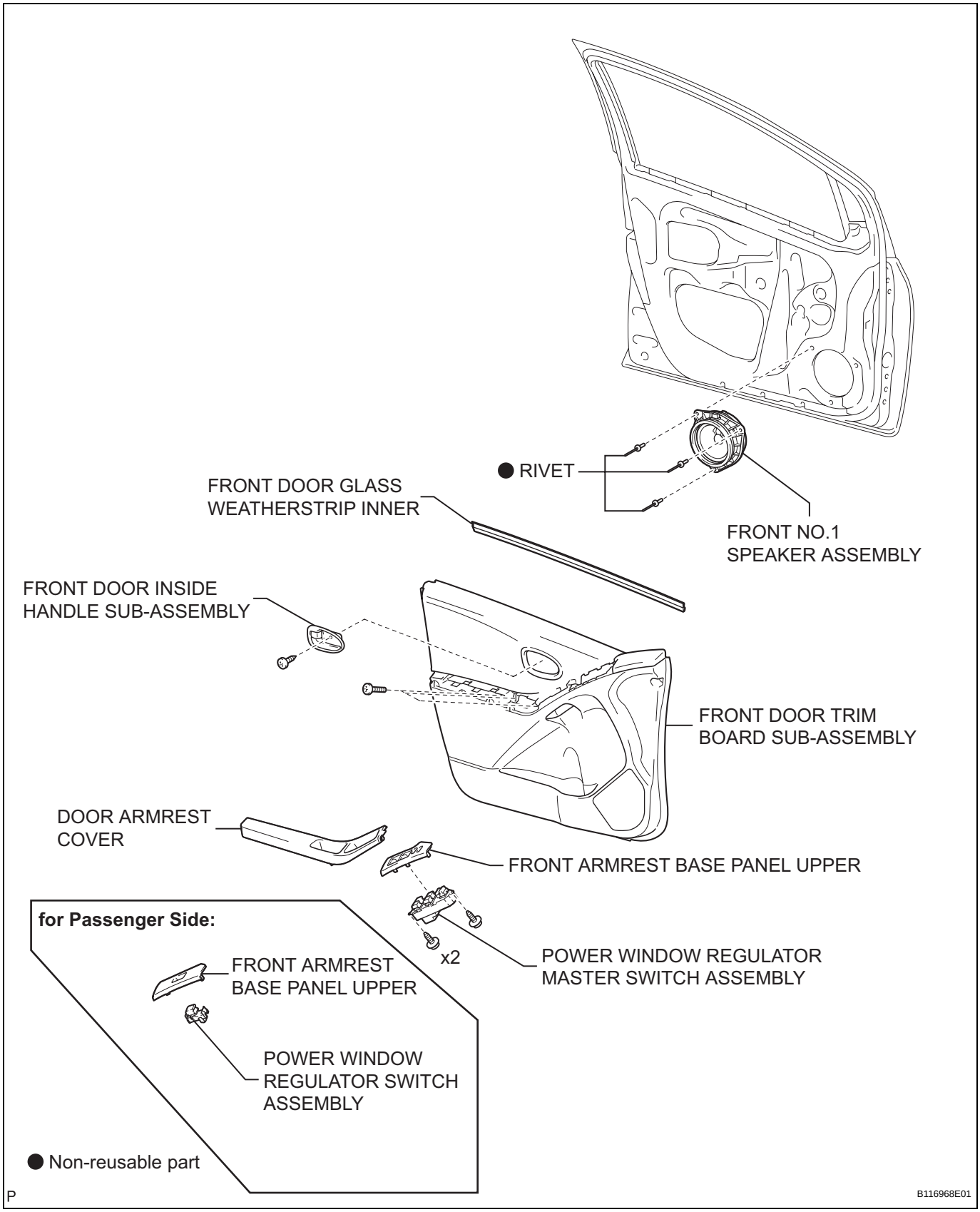

ED

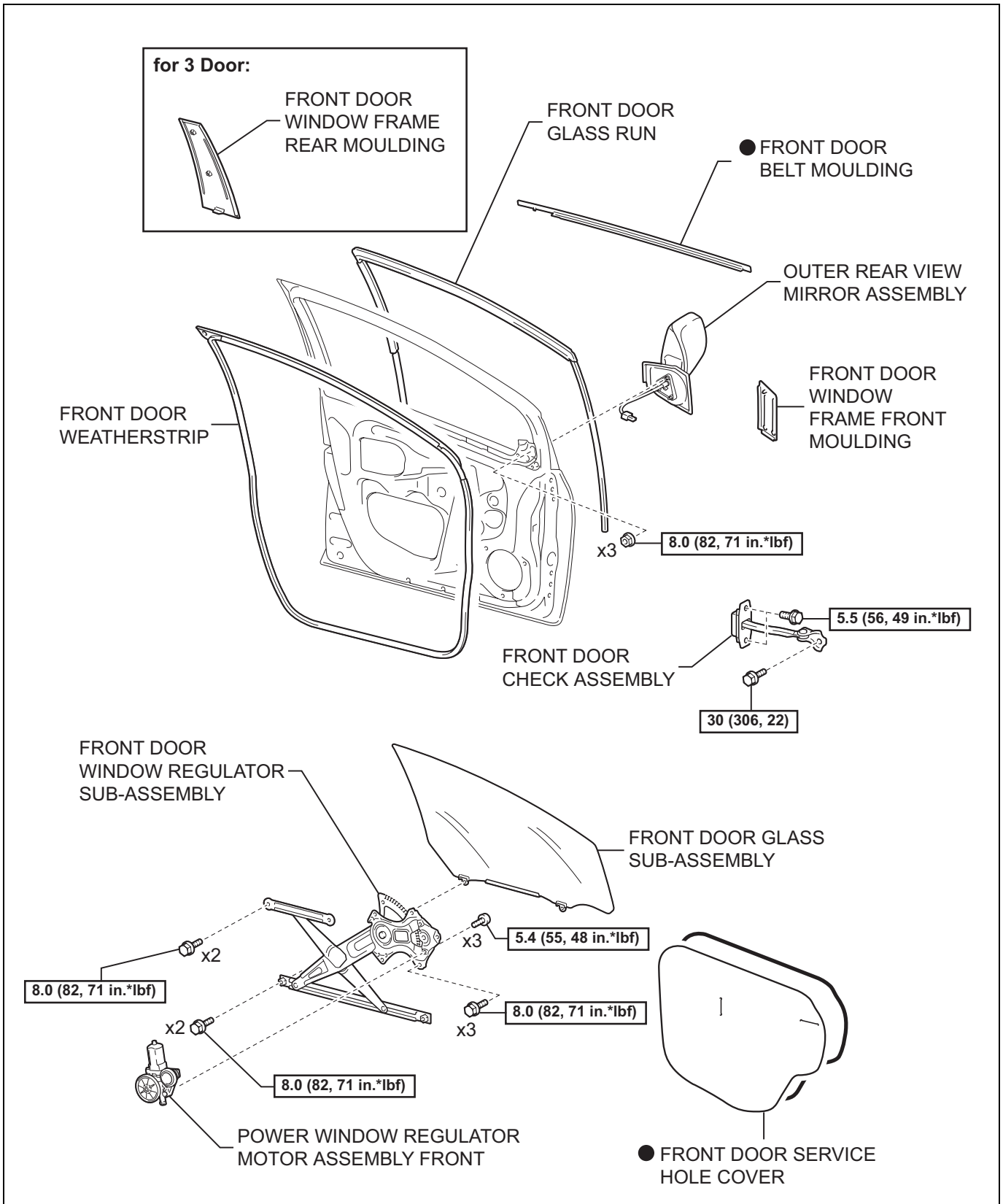

N*m (kgf*cm, ft*lbf) : Specified torque

● Non-reusable part

P

B127218E01

ED

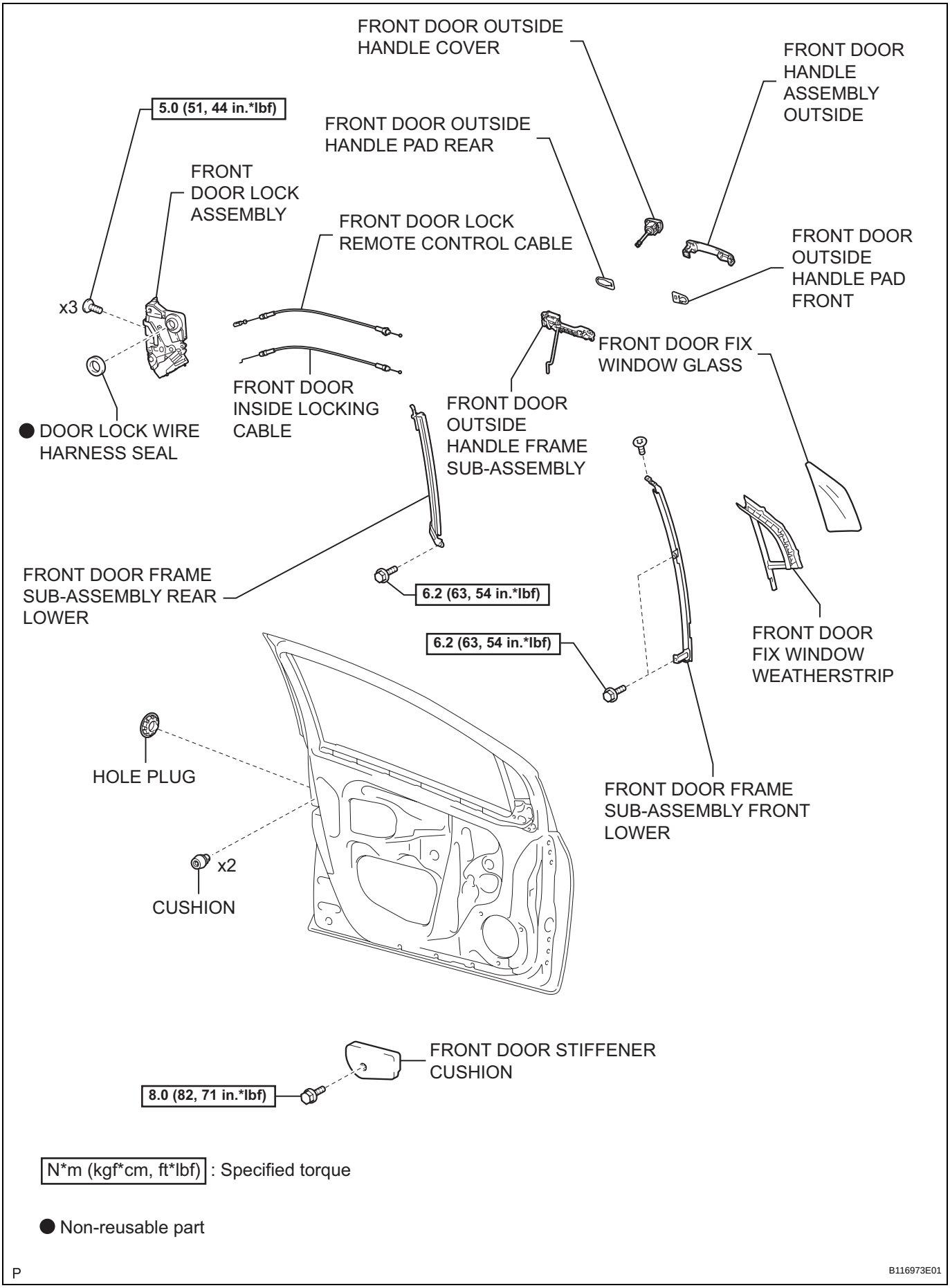

ED

P

B116973E01

DISASSEMBLY

HINT:

- Use the same procedure for both the RH and LH sides.
- The procedure described below is for the LH side.

1. DISCONNECT CABLE FROM NEGATIVE BATTERY TERMINAL

2. REMOVE DOOR ARMREST COVER

(a) for 5 Door:
Using a screwdriver with its tip wrapped in protective tape, disengage the 8 claws and 3 clips and remove the door armrest cover.

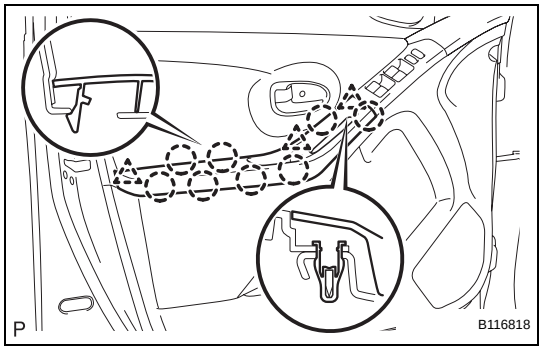

(b) for 3 Door:
Disengage the 12 claws and 4 clips and remove the door armrest cover.

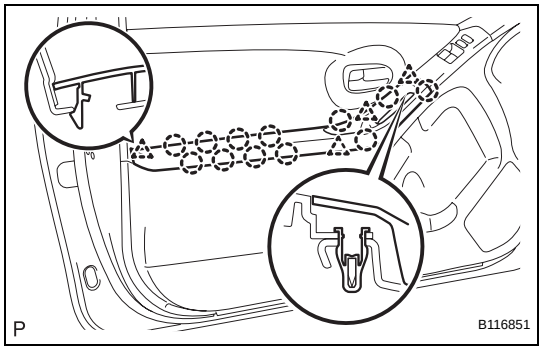

3. REMOVE FRONT ARMREST BASE PANEL UPPER

(a) Using a screwdriver with its tip wrapped in protective tape, disengage the 5 claws and clip and remove the front armrest base panel upper.
(b) Disconnect the connector.

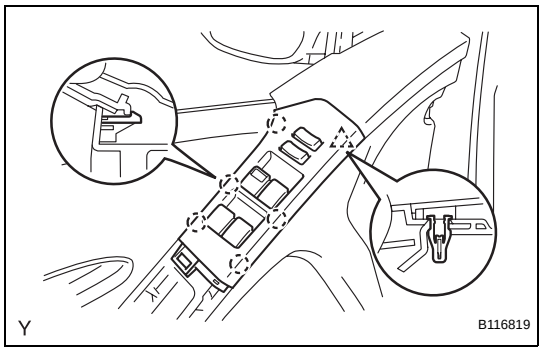

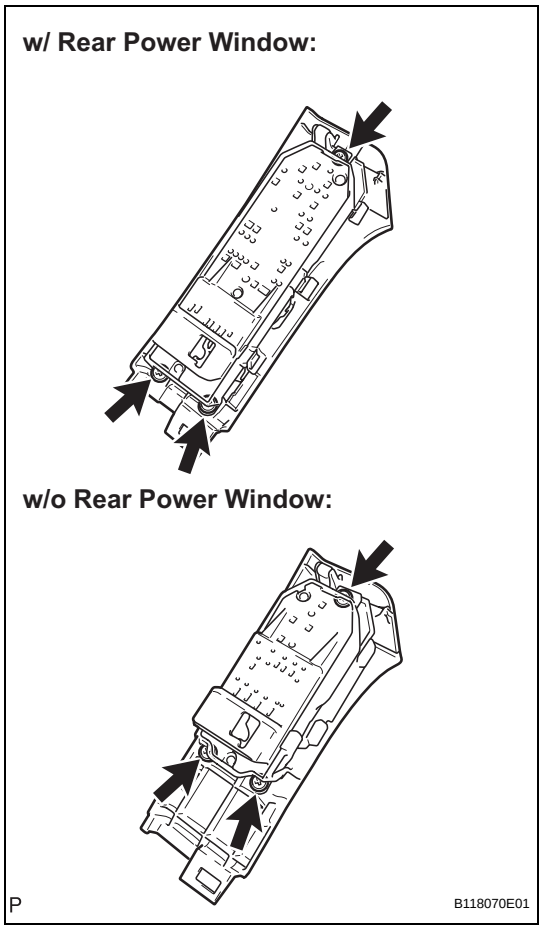

4. REMOVE POWER WINDOW REGULATOR MASTER SWITCH ASSEMBLY

(a) Remove the 3 screws and the power window regulator master switch.

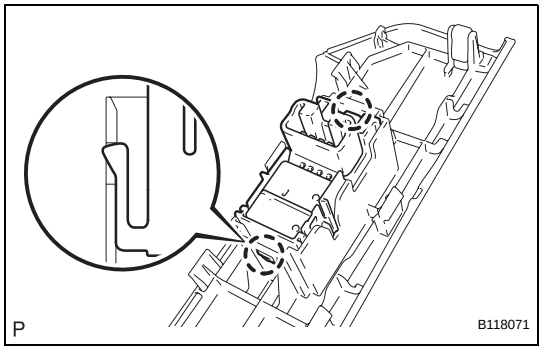

5. REMOVE POWER WINDOW REGULATOR SWITCH ASSEMBLY

(a) Disengage the 2 claws and remove the power window regulator switch.

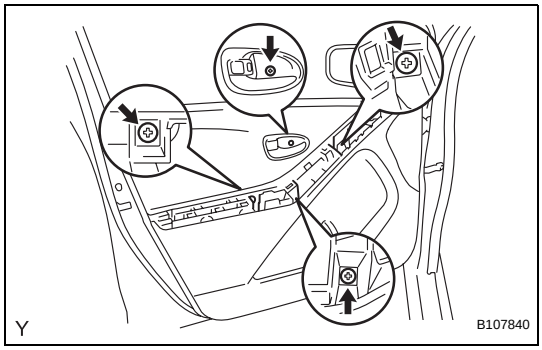

6. REMOVE FRONT DOOR TRIM BOARD SUB-ASSEMBLY

(a) Remove the 4 screws.

ED

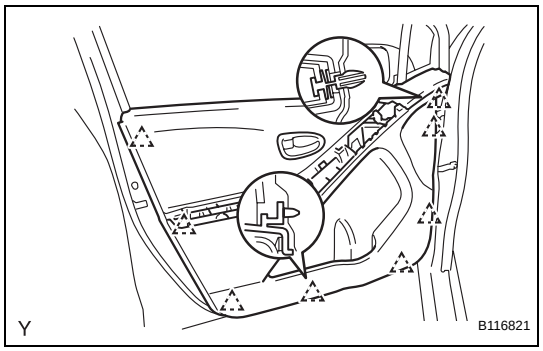

(b) 5 Door:
Disengage the 8 clips.

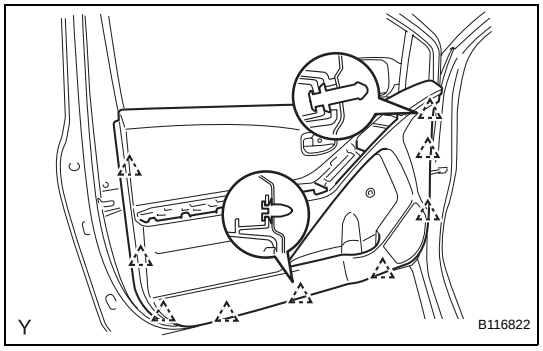

(c) 3 Door:
Disengage the 9 clips.

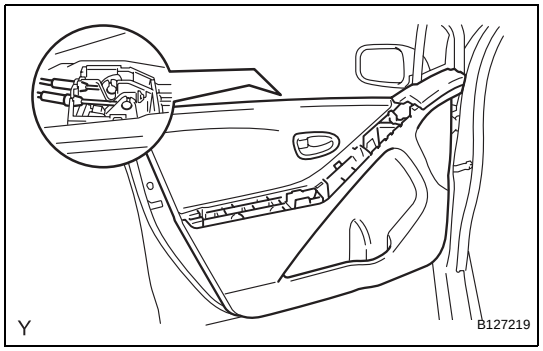

(d) Disconnect the front door lock remote control cable and front door inside locking cable and remove the front door trim board.

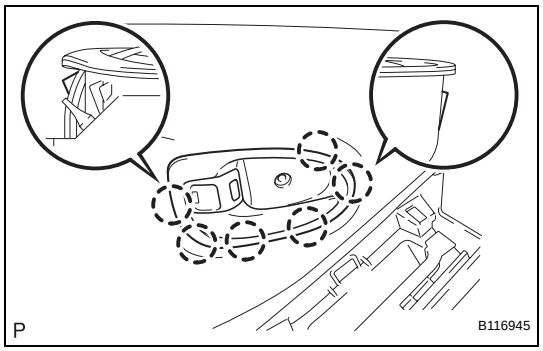

7. REMOVE FRONT DOOR INSIDE HANDLE SUB-ASSEMBLY

(a) Disengage the 6 claws and remove the front door inside handle.

8. REMOVE FRONT DOOR GLASS WEATHERSTRIP INNER

(a) Remove the front door glass weatherstrip inner from the front door trim board.

9. REMOVE FRONT NO.1 SPEAKER ASSEMBLY (See page AV-164)

10. REMOVE FRONT DOOR WINDOW FRAME FRONT MOULDING (See page ET-114)

11. REMOVE FRONT DOOR WINDOW FRAME REAR MOULDING (for 3 Door) (See page ET-114)

12. REMOVE OUTER REAR VIEW MIRROR ASSEMBLY (See page MI-13)

13. REMOVE FRONT DOOR BELT MOULDING (See page ET-91)

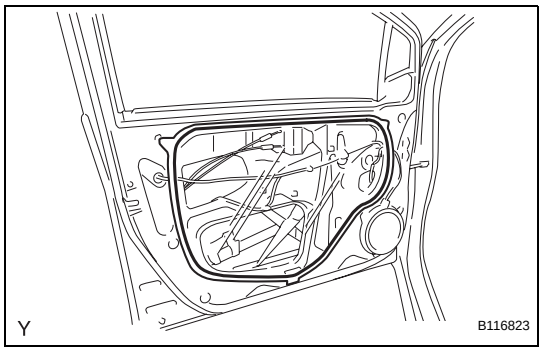

14. REMOVE FRONT DOOR SERVICE HOLE COVER

(a) for 5 Door:
Disconnect the connectors and clamps, then remove the front door service hole cover.
NOTICE:
Remove any tape remaining on the door side.

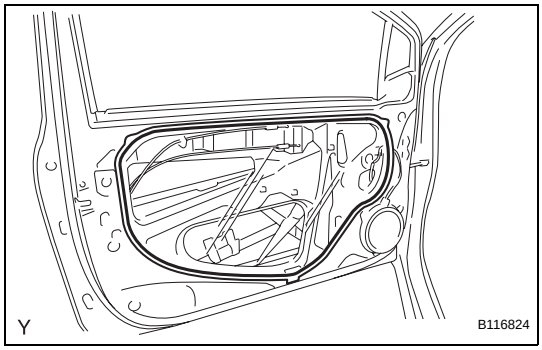

(b) for 3 Door:
Disconnect the connectors and clamps, then remove the front door service hole cover.
NOTICE:
Remove any tape remaining on the door side.

15. REMOVE FRONT DOOR GLASS SUB-ASSEMBLY

(a) Driver side:
Provisionally install the power window regulator master switch.

(b) Passenger side:
Provisionally install the power window regulator switch.

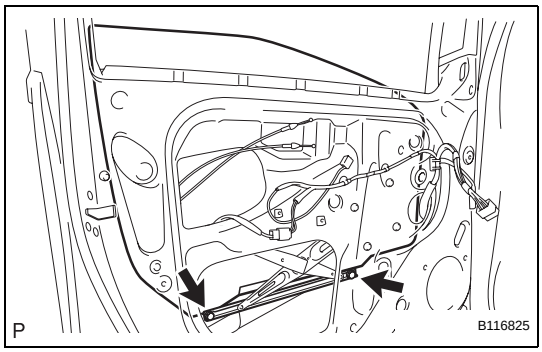

(c) Move the front door glass until the 2 bolts appear in the service holes.

(d) Remove the 2 bolts.
NOTICE:
Do not drop or damage the front door glass when removing the 2 bolts.

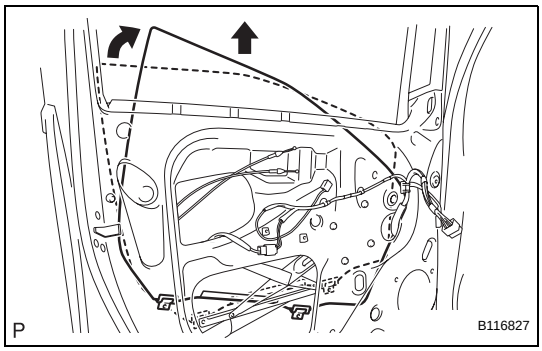

(e) Remove the front door glass in the direction indicated by the arrows in the illustration.
NOTICE:
Do not damage the glass.

(f) Driver side:
Remove the power window regulator master switch.

(g) Passenger side:
Remove the power window regulator switch.

ED

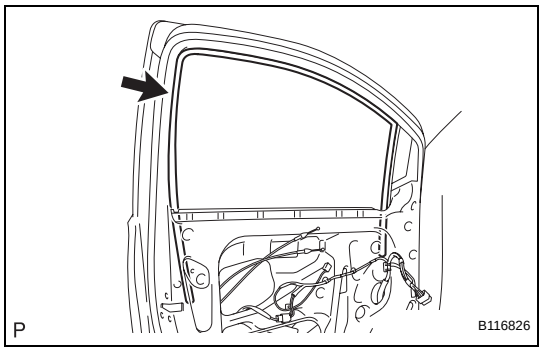

16. REMOVE FRONT DOOR GLASS RUN

(a) Remove the front door glass run.

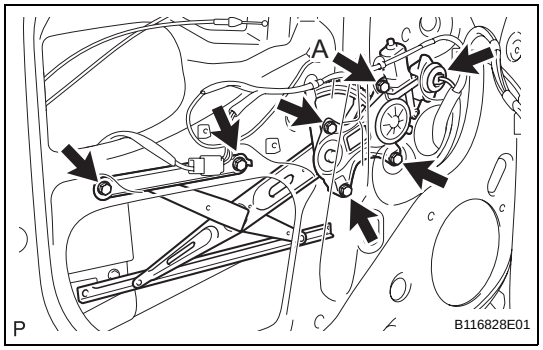

17. REMOVE FRONT DOOR WINDOW REGULATOR SUB-ASSEMBLY

(a) Disconnect the connector.

(b) Loosen bolt A.

(c) Remove the 5 bolts, then remove the front door window regulator.

NOTICE:

Do not drop or damage the window regulator when removing the bolts.

HINT:

Remove the window regulator through the service hole.

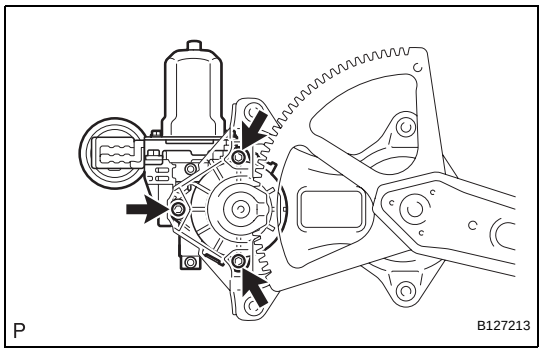

18. REMOVE POWER WINDOW REGULATOR MOTOR ASSEMBLY FRONT

(a) Using "Torx" socket wrench T25, remove the 3 screws and power window regulator motor.

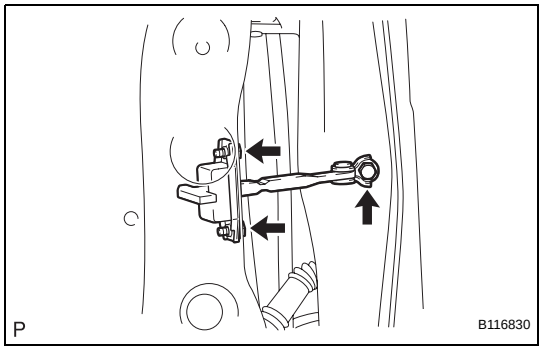

19. REMOVE FRONT DOOR CHECK ASSEMBLY

(a) Remove the 3 bolts, then remove the front door check.

NOTICE:

Do not drop or damage the door check when removing the bolts.

HINT:

Remove the door check through the service hole.

ED

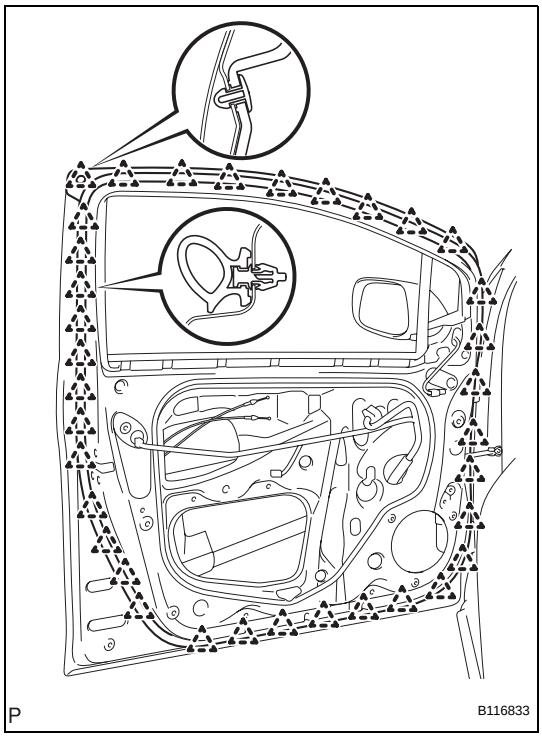

20. REMOVE FRONT DOOR WEATHERSTRIP

(a) for 5 Door:
Disengage the 35 clips and remove the front door weatherstrip.
NOTICE:
Remove any tape remaining on the door side.

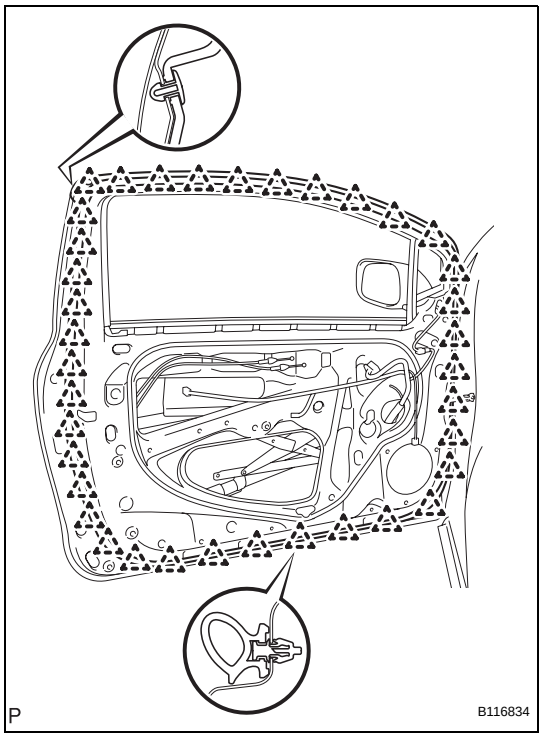

(b) for 3 Door:
Disengage the 37 clips and remove the front door weatherstrip.
NOTICE:
Remove any tape remaining on the door side.

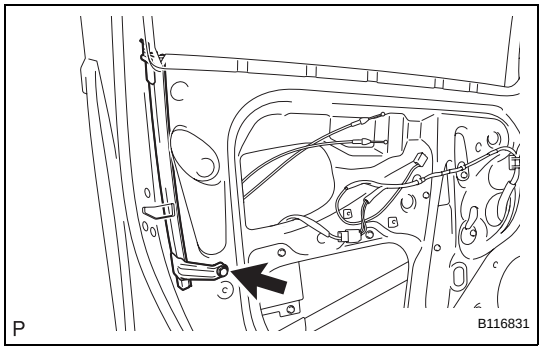

21. REMOVE FRONT DOOR FRAME SUB-ASSEMBLY REAR LOWER

(a) Remove the bolt, then remove the front door frame sub-assembly rear lower.
NOTICE:
Do not drop or damage the front door frame sub-assembly rear lower when removing the bolt.

HINT:
Remove the front door frame sub-assembly rear lower through the service hole.

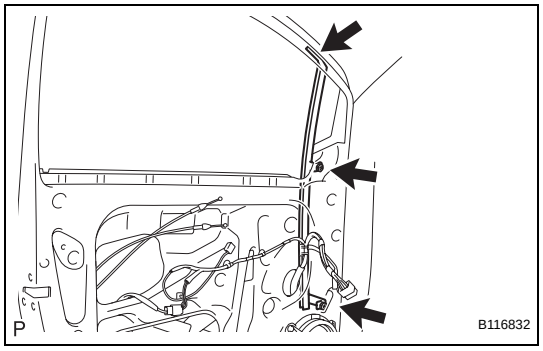

22. REMOVE FRONT DOOR FRAME SUB-ASSEMBLY FRONT LOWER

(a) Remove the 2 bolts and screw, then remove the front door frame sub-assembly front lower.
NOTICE:
Do not drop or damage the front door frame sub-assembly front lower when removing the bolts and screw.
HINT:
Remove the front door frame sub-assembly front lower through the service hole.

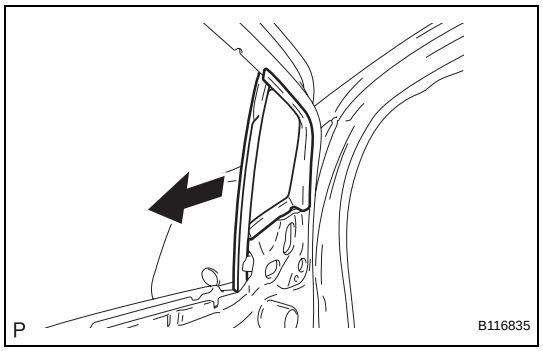

23. REMOVE FRONT DOOR FIX WINDOW WEATHERSTRIP

(a) Slide the front door fix window weatherstrip, in the direction indicated by the arrow in the illustration, to remove them.
(b) Remove the front door fix window glass from the front door fix window weatherstrip.

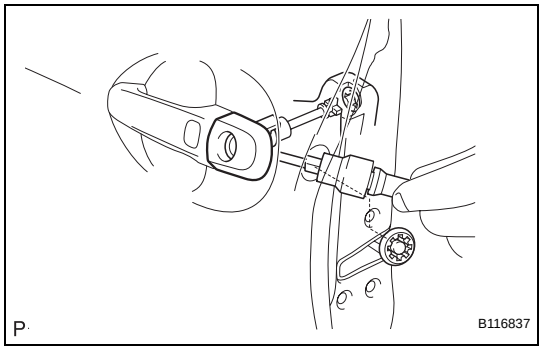

24. REMOVE FRONT DOOR OUTSIDE HANDLE COVER

(a) Remove the hole plug.
(b) Using "Torx" socket wrench T30, loosen the screw and remove the cover with the door lock key cylinder installed.

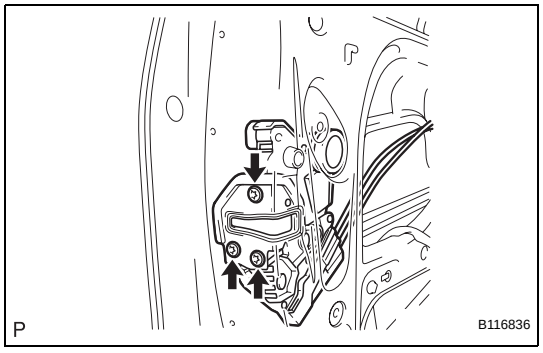

25. REMOVE FRONT DOOR LOCK ASSEMBLY

(a) Using "Torx" socket wrench T30, remove the 3 screws.
(b) Move the front door lock downward, remove the outside handle frame link and remove the front door lock.
NOTICE:
Do not drop or damage the door lock when removing the screws.
HINT:
Remove the front door lock through the service hole.

ED

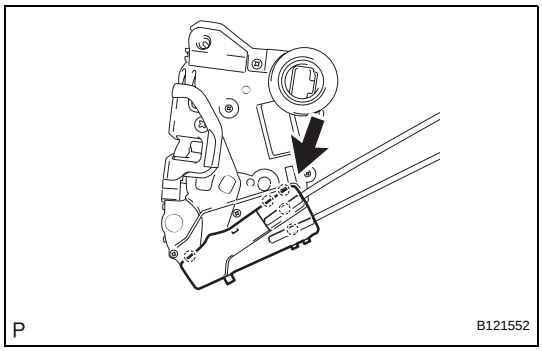

(c) Disengage the 5 claws and open the cover.

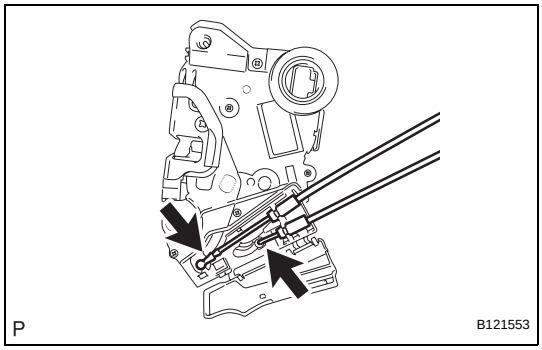

(d) Disconnect the front door lock remote control cable and front door inside locking cable.
(e) Remove the door lock wire harness seal.

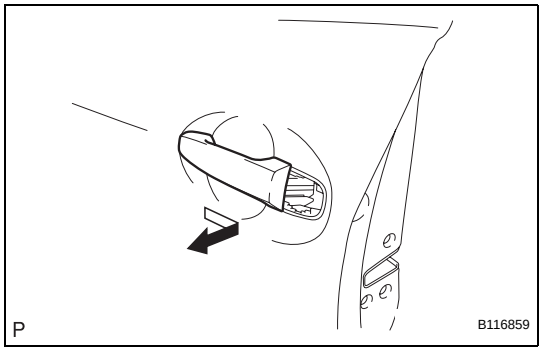

26. REMOVE FRONT DOOR HANDLE ASSEMBLY OUTSIDE

(a) Remove the handle by sliding and pulling it in the direction indicated by the arrow mark in the illustration.

ED

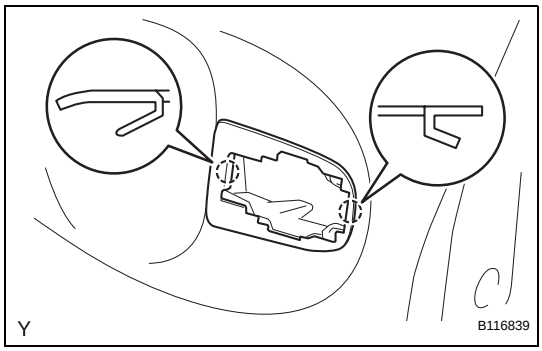

27. REMOVE FRONT DOOR OUTSIDE HANDLE PAD REAR

(a) Disengage the 2 claws and remove the front door outside handle pad rear.

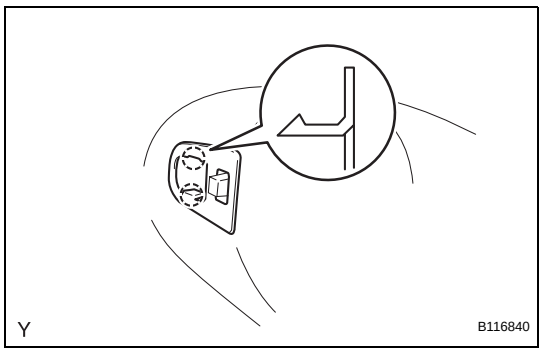

28. REMOVE FRONT DOOR OUTSIDE HANDLE PAD FRONT

(a) Disengage the 2 claws and remove the front door outside handle pad front.

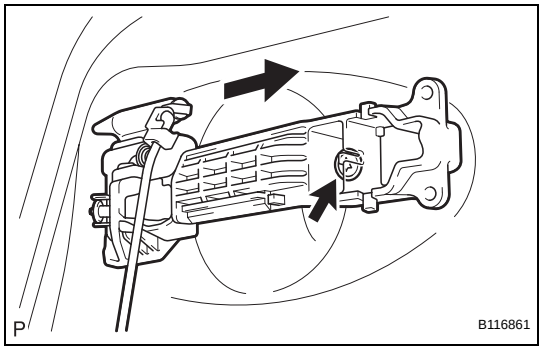

29. REMOVE FRONT DOOR OUTSIDE HANDLE FRAME SUB-ASSEMBLY

(a) Using "Torx" socket wrench T30, loosen the screw.

(b) Slide the front outside handle frame to remove it.

30. REMOVE CUSHION

(a) Remove the 2 cushions from the door panel.

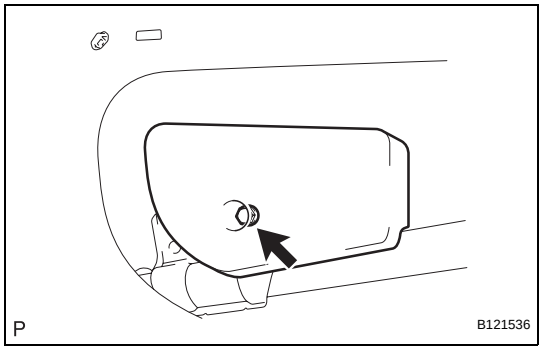

31. REMOVE FRONT DOOR STIFFENER CUSHION

(a) Remove the bolt and front door stiffener cushion.

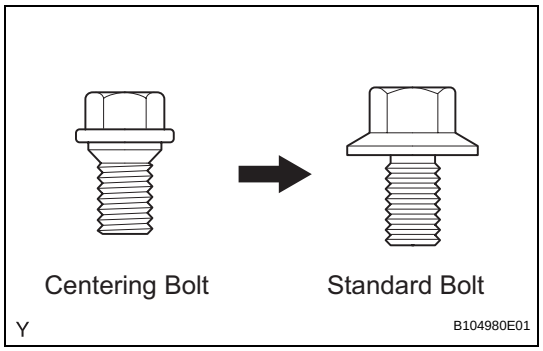

ADJUSTMENT

HINT:

- Before adjusting the door position on vehicles equipped with side airbags and curtain shield airbags, be sure to disconnect the battery. After adjustment, inspect the SRS warning light, the side airbag system and the curtain shield airbag system for normal operation. Then initialize both airbag systems.
- Use the same procedure for the RH and LH sides.
- The procedures described below are for the LH side.
- Centering bolts are used to mount the door hinge onto the vehicle body and door. The door cannot be adjusted with the centering bolts on. Substitute standard bolts (with washers) for the centering bolts when making adjustments.
- For bolts without torque specifications, check the standard bolt chart.

1. INSPECT FRONT DOOR (for 5 Door)

(a) Check that the clearance measurements are within the standard ranges.

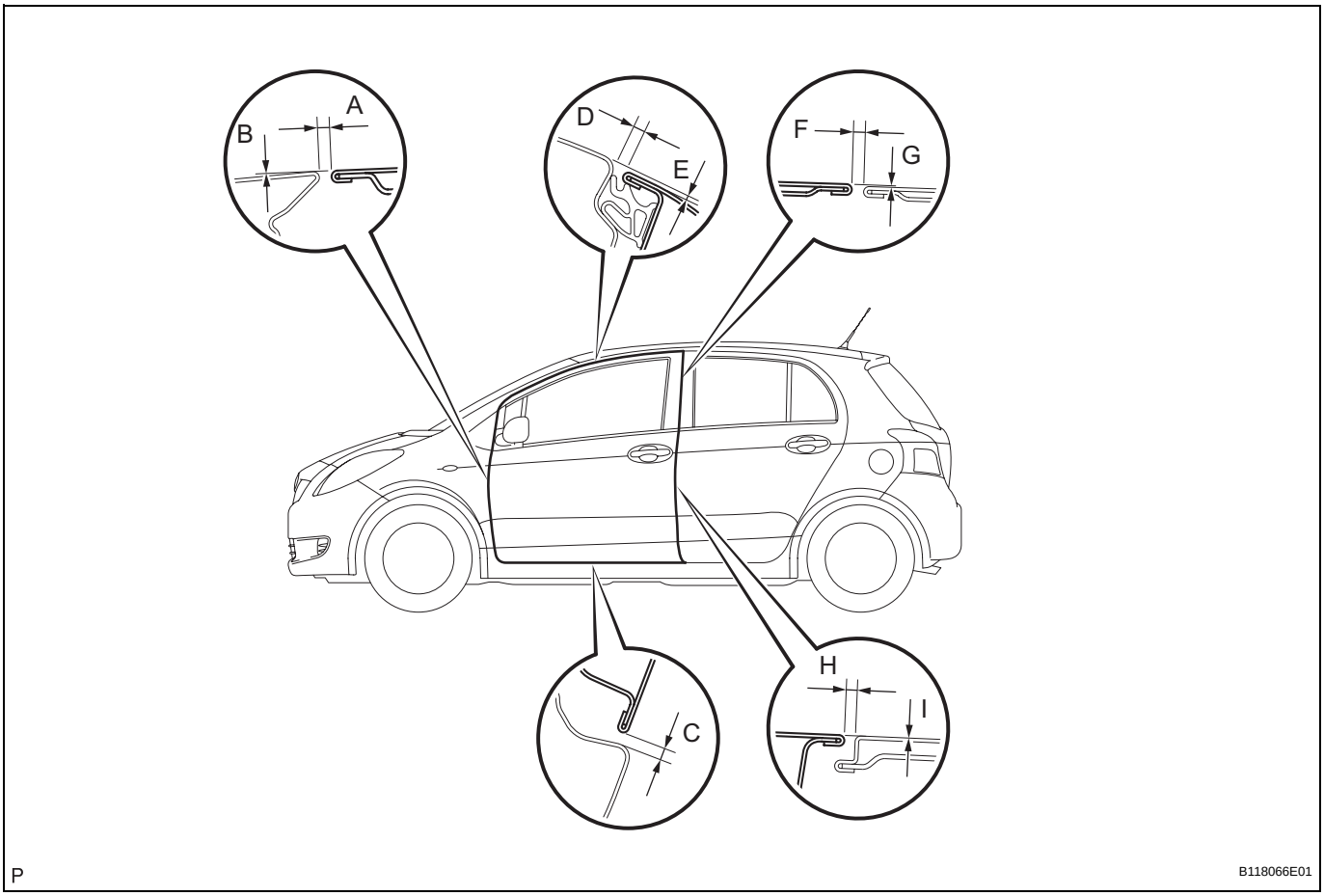

Standard

Area	Measurement	Area	Measurement
A	2.5 to 5.5 mm (0.098 to 0.217 in.)	F	3.3 to 6.3 mm (0.130 to 0.248 in.)
B	-1.5 to 1.5 mm (-0.059 to 0.059 in.)	G	-1.5 to 1.5 mm (-0.059 to 0.059 in.)
C	4.1 to 7.1 mm (0.161 to 0.280 in.)	H	3.3 to 6.3 mm (0.130 to 0.248 in.)
D	3.5 to 6.5 mm (0.138 to 0.256 in.)	I	-1.5 to 1.5 mm (-0.059 to 0.059 in.)
E	2.8 mm (0.110 in.)	-	-

2. INSPECT FRONT DOOR (for 3 Door)

(a) Check that the clearance measurements are within the standard ranges.

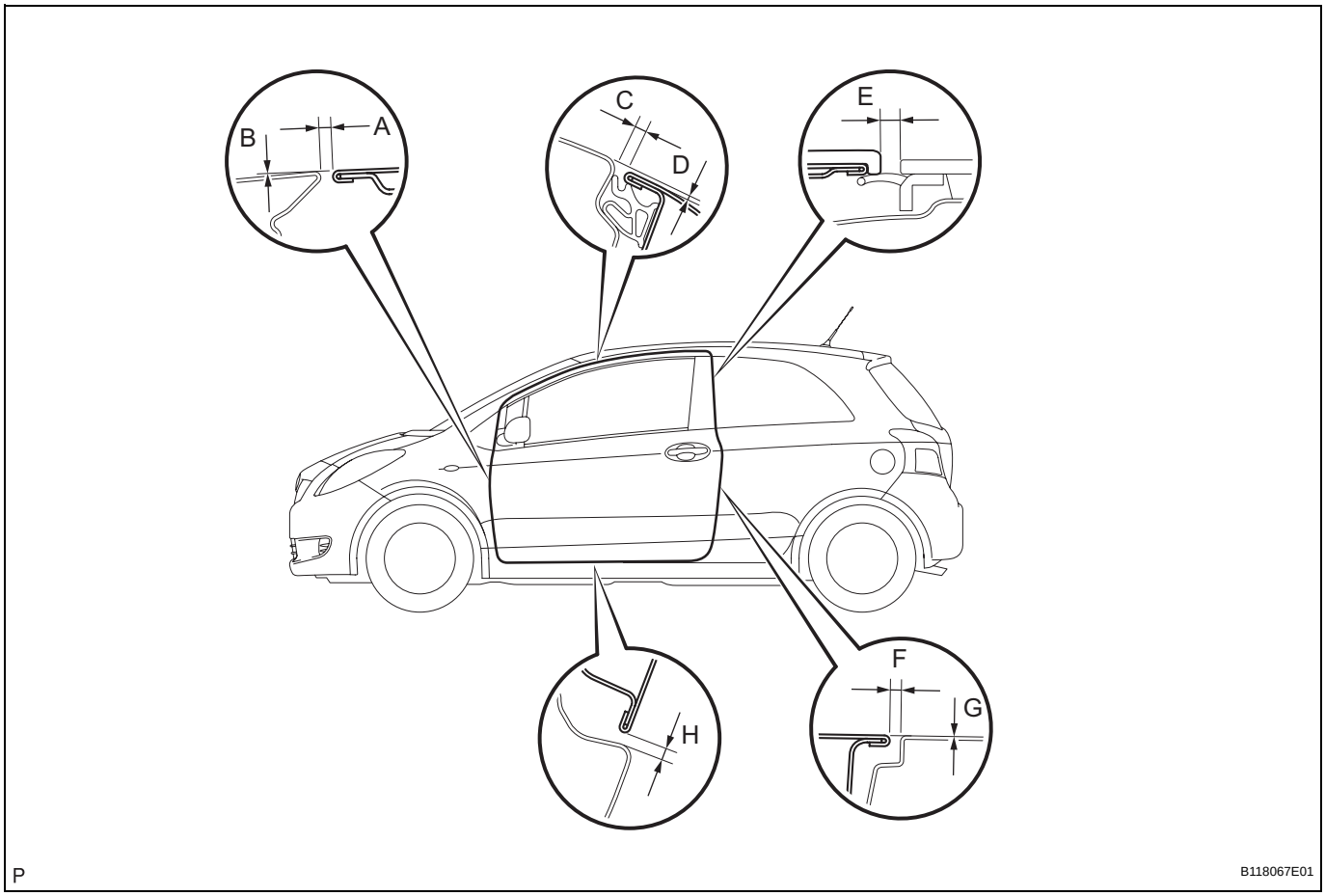

Standard

Area	Measurement	Area	Measurement
A	2.5 to 5.5 mm (0.098 to 0.217 in.)	E	2.8 to 5.8 mm (0.110 to 0.228 in.)
B	-1.5 to 1.5 mm (-0.059 to 0.059 in.)	F	2.5 to 5.5 mm (0.098 to 0.217 in.)
C	3.5 to 6.5 mm (0.138 to 0.256 in.)	G	-1.5 to 1.5 mm (-0.059 to 0.059 in.)
D	2.8 mm (0.110 in.)	H	4.1 to 7.1 mm (0.161 to 0.280 in.)

3. ADJUST FRONT DOOR

(a) Disconnect the cable from the negative battery terminal.

Wait for at least 90 seconds after disconnecting the cable to prevent the airbag from working.

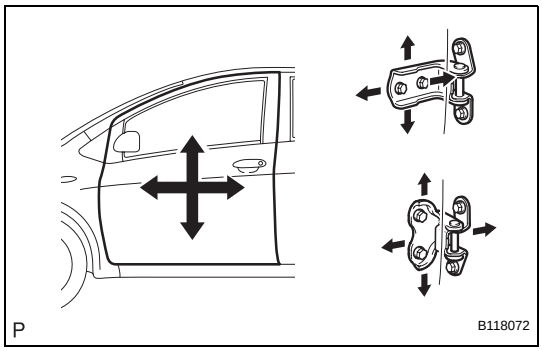

(b) Using SST, adjust the door horizontally and vertically by loosening the body side hinge bolts.
SST 09812-00010

(c) Tighten the body side hinge bolts after the adjustment.
Torque: 26 N*m (265 kgf*cm, 19 ft.*lbf)

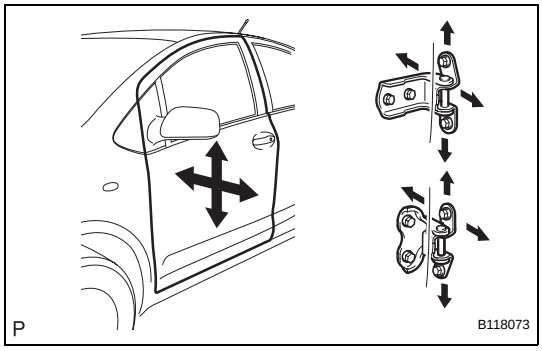

(d) Adjust the door horizontally and vertically by loosening the door side hinge bolts.

(e) Tighten the door side hinge bolts after the adjustment.
Torque: 26 N*m (265 kgf*cm, 19 ft.*lbf)

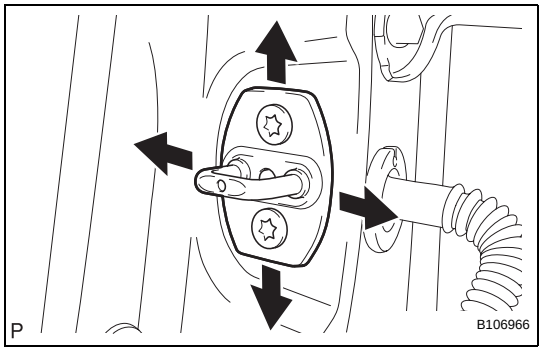

(f) Using "Torx" socket wrench T40, adjust the striker position by slightly loosening the striker mounting screws and hitting the striker with a plastic-faced hammer.

(g) Using "Torx" socket wrench T40, tighten the striker mounting screws after the adjustment.
Torque: 23 N*m (235 kgf*cm, 17 ft.*lbf)

(h) Connect the cable to the negative battery terminal.
Torque: 5.4 N*m (55 kgf*cm, 48 in.*lbf)

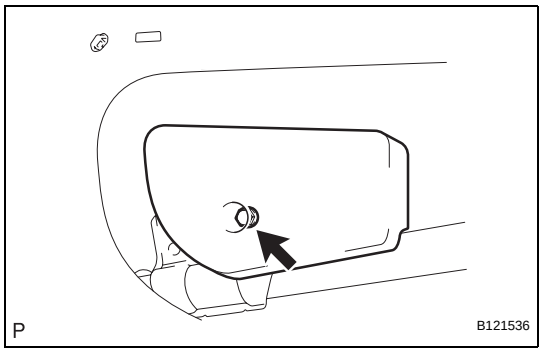

REASSEMBLY

1. INSTALL FRONT DOOR STIFFENER CUSHION

(a) Install the front door stiffener cushion with the bolt.
Torque: 8.0 N*m (82 kgf*cm, 71 in.*lbf)

2. INSTALL CUSHION

(a) Install the 2 cushions onto the door panel.

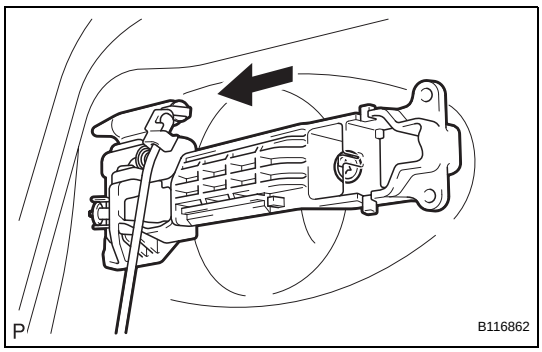

3. INSTALL FRONT DOOR OUTSIDE HANDLE FRAME SUB-ASSEMBLY

(a) Using "Torx" socket wrench T30, install the front outside handle frame with the screw.
Torque: 4.0 N*m (41 kgf*cm, 35 in.*lbf)

ED

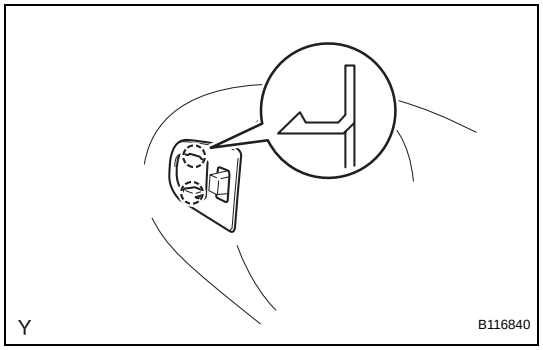

4. INSTALL FRONT DOOR OUTSIDE HANDLE PAD FRONT

(a) Engage the 2 claws and install the front door outside handle pad front.

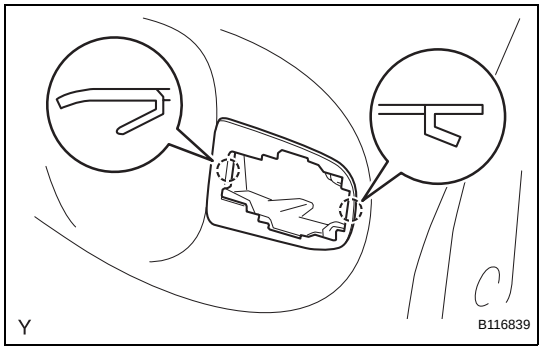

5. INSTALL FRONT DOOR OUTSIDE HANDLE PAD REAR

(a) Engage the 2 claws and install the front door outside handle pad rear.

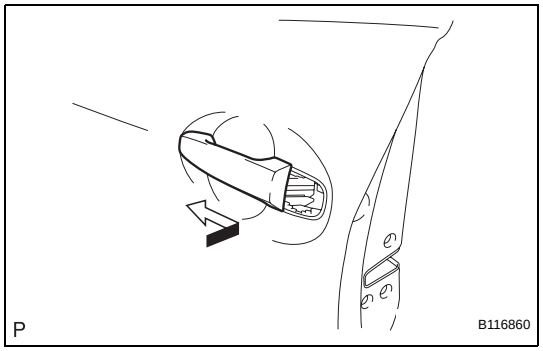

6. INSTALL FRONT DOOR HANDLE ASSEMBLY OUTSIDE

(a) Pushing the front door handle assembly outside in the direction of the arrow mark shown in the illustration, install the front door handle assembly outside.

7. INSTALL FRONT DOOR LOCK ASSEMBLY

NOTICE:

- **If reusing a door lock that has been removed, replace the packing in the connecting part with new.**
- **Make sure that no grease and dirt adheres to the packing surface in the connecting part.**

(a) Apply MP grease to the sliding and rotating areas of the front door lock.

(b) Connect the front door lock remote control cable and front door inside locking cable.

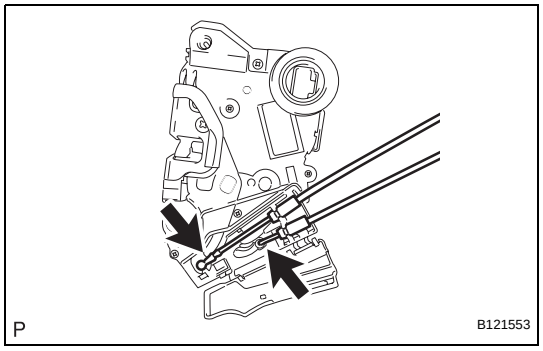

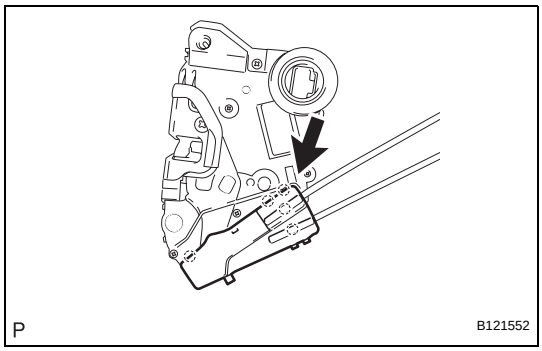

(c) Engage the 5 claws and close the cover.

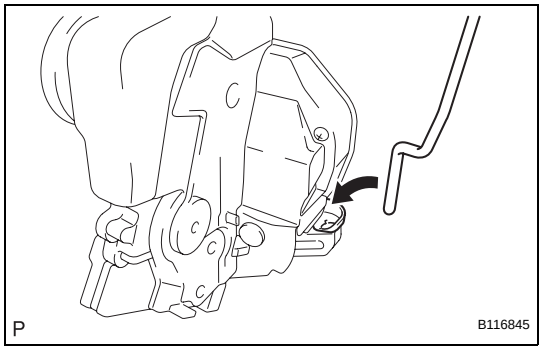

(d) Insert the door lock open rod into the front door lock, then set it to the door panel.
NOTICE:
Make sure that the outside handle link is securely engaged with the door lock.

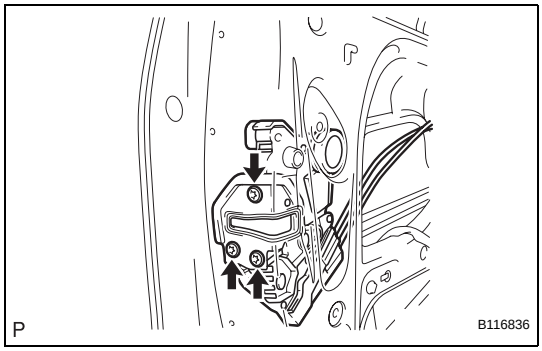

(e) Apply adhesive to the threads of the screws.
Adhesive:
Part No. 08833-00070, THREE BOND 1324 or the equivalent

(f) Using "Torx" socket wrench T30, install the front door lock with the 3 screws.
Torque: 5.0 N*m (51 kgf*cm, 44 in.*lbf)

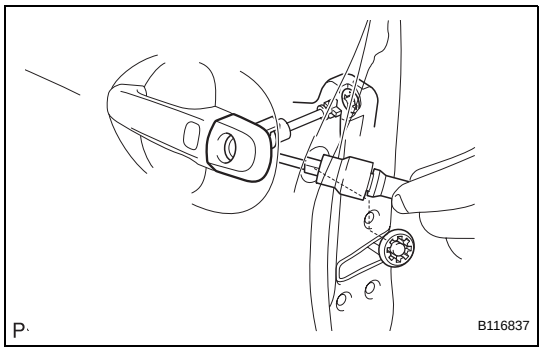

8. INSTALL FRONT DOOR OUTSIDE HANDLE COVER

(a) Using "Torx" socket wrench T30, install the cover with the door lock key cylinder.
Torque: 4.0 N*m (41 kgf*cm, 35 in.*lbf)
HINT:
Make sure that the door lock key cylinder rod is inserted.

(b) Install the hole plug.

9. INSTALL FRONT DOOR FIX WINDOW WEATHERSTRIP

(a) Install the front door fix window glass onto the front door fix window weatherstrip.

ED

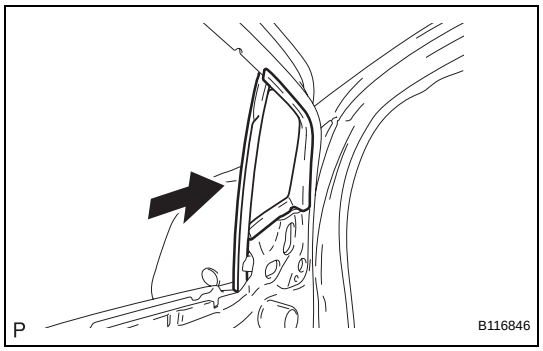

(b) Slide the front door fix window weatherstrip, in the direction indicated by the arrow in the illustration, to install it.

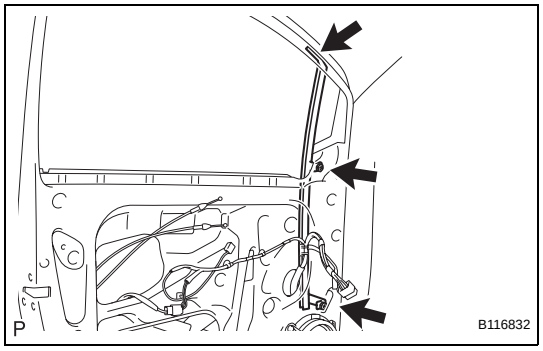

10. INSTALL FRONT DOOR FRAME SUB-ASSEMBLY FRONT LOWER

(a) Install the front door frame sub-assembly front lower with the 2 bolts and screw.
Torque: 6.2 N*m (63 kgf*cm, 54 in.*lbf)

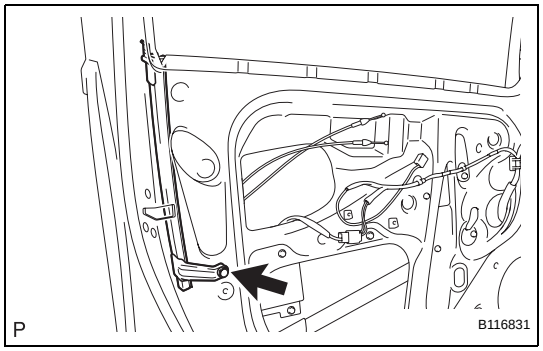

11. INSTALL FRONT DOOR FRAME SUB-ASSEMBLY REAR LOWER

(a) Install the front door frame sub-assembly rear lower with the bolt.
Torque: 6.2 N*m (63 kgf*cm, 54 in.*lbf)

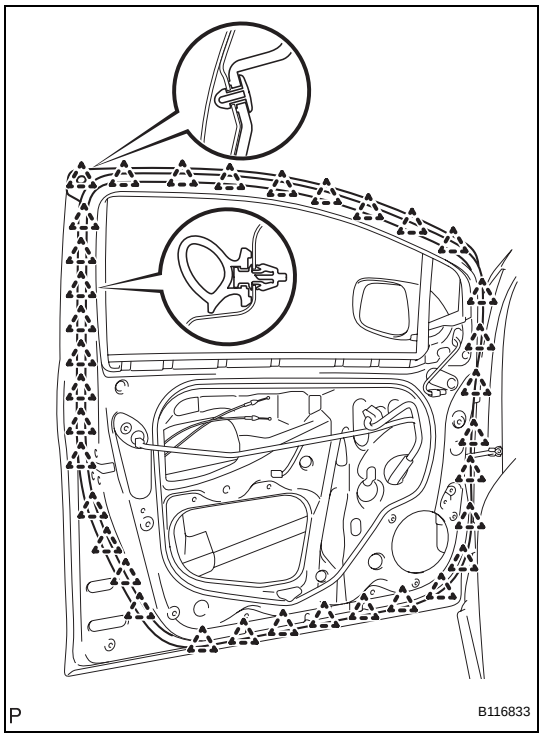

12. INSTALL FRONT DOOR WEATHERSTRIP

(a) for 5 Door:
Engage the 35 clips and install the front door weatherstrip.

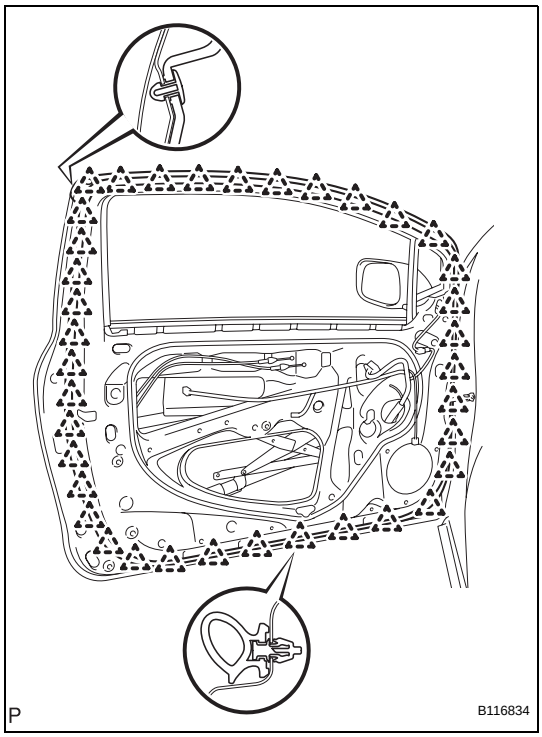

(b) for 3 Door:
Engage the 37 clips and install the front door weatherstrip.

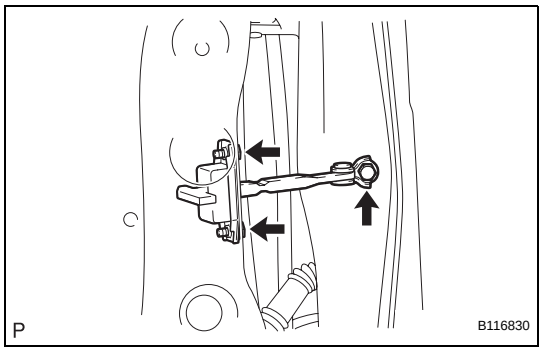

13. INSTALL FRONT DOOR CHECK ASSEMBLY

(a) Apply MP grease to the sliding areas of the door check.

(b) Install the front door check onto the door panel with the 2 bolts.
Torque: 5.5 N*m (56 kgf*cm, 49 in.*lbf)

(c) Apply adhesive to the threads of the bolt.
Adhesive:
Part No. 08833-00070, THREE BOND 1324 or the equivalent

(d) Install the front door check onto the body panel with the bolt.
Torque: 30 N*m (306 kgf*cm, 22 ft.*lbf)

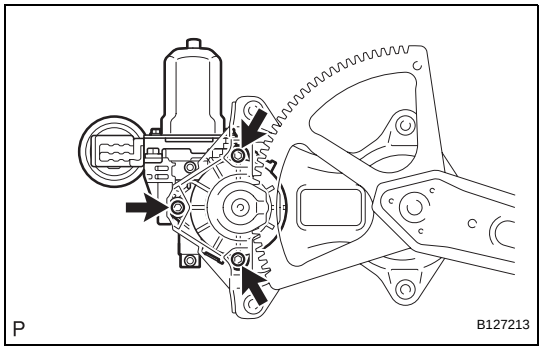

14. INSTALL POWER WINDOW REGULATOR MOTOR ASSEMBLY FRONT

(a) Apply MP grease to the sliding and rotating areas of the regulator motor.

(b) Using "Torx" socket wrench T25, install the power window regulator motor assembly front with the 3 screws.
Torque: 5.4 N*m (55 kgf*cm, 48 in.*lbf)

15. INSTALL FRONT DOOR WINDOW REGULATOR SUB-ASSEMBLY

(a) Apply MP grease to the sliding and rotating areas of the front door window regulator.
NOTICE:
Do not apply grease to the window regulator spring.

ED

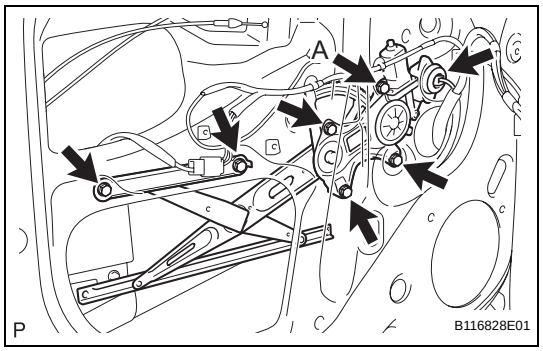

(b) Loosely screw bolt A onto the front door window regulator.
(c) Insert the front door window regulator into the door panel. Use bolt A to hang the front door window regulator on the door panel.
NOTICE:
Do not drop the window regulator as it may be damaged.
(d) Install the front door window regulator with the 5 bolts, and tighten bolt A.
Torque: 8.0 N*m (82 kgf*cm, 71 in.*lbf)
(e) Connect the connector.

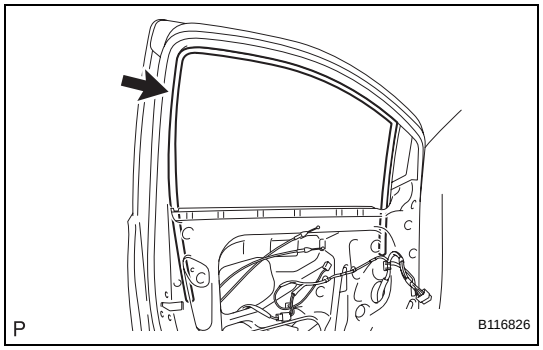

16. INSTALL FRONT DOOR GLASS RUN
(a) Install the front door glass run.

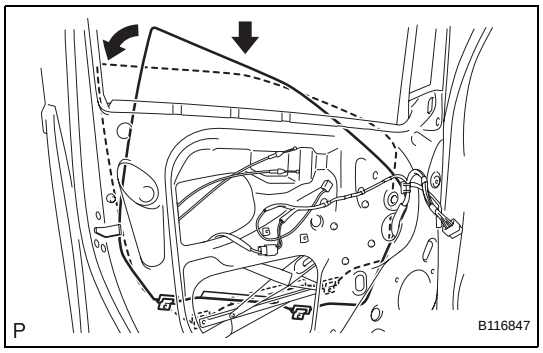

17. INSTALL FRONT DOOR GLASS SUB-ASSEMBLY
(a) Insert the door glass into the door panel along the glass run as indicated by the arrows in the illustration.
NOTICE:
Do not damage the glass.

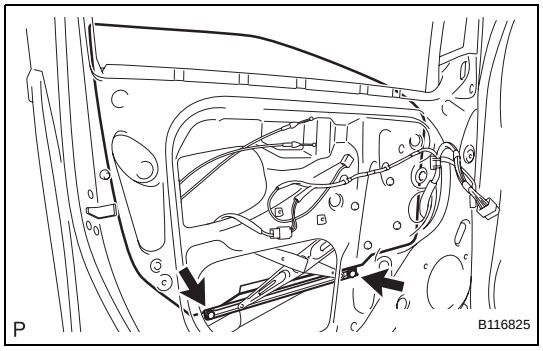

(b) Install the front door glass onto the front door window regulator with the 2 bolts.
Torque: 8.0 N*m (82 kgf*cm, 71 in.*lbf)

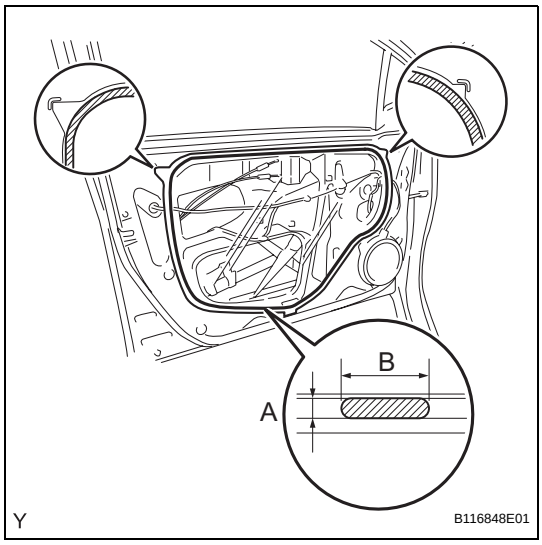

18. INSTALL FRONT DOOR SERVICE HOLE COVER

(a) for 5 Door:

Apply butyl tape to the door panel, then install the front door service hole cover as shown in the illustration.

Adhesive:

Part No. 08850-00065, Butyl Tape Set or the equivalent

Specification

Area	Dimension
A	2.0mm (0.079 in.) or more
B	6.0mm (0.236 in.) or more

HINT:

- When installing the service hole cover, pull the links and connectors out through the service hole.
- There should be no wrinkles or folds after attaching the service hole cover.
- After attaching the service hole cover, check the quality of the seal.

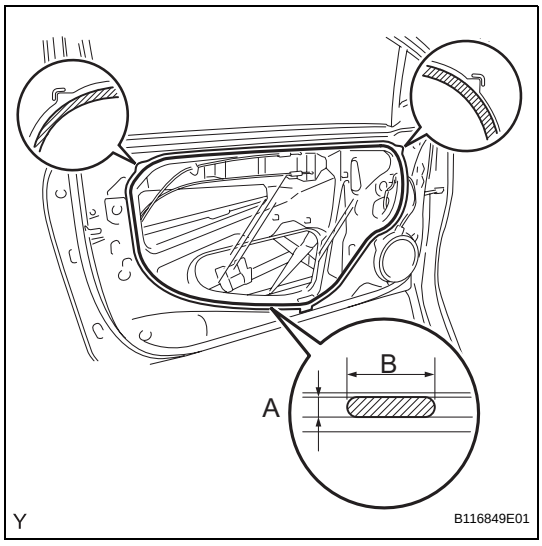

(b) for 3 Door:

Apply butyl tape to the door panel, then install the front door service hole cover as shown in the illustration.

Adhesive:

Part No. 08850-00065, Butyl Tape Set or the equivalent

Specification

Area	Dimension
A	2.0mm (0.079 in.) or more
B	6.0mm (0.236 in.) or more

HINT:

- When installing the service hole cover, pull the links and connectors out through the service hole.
- There should be no wrinkles or folds after attaching the service hole cover.
- After attaching the service hole cover, check the quality of the seal.

19. INSTALL FRONT DOOR BELT MOULDING (See page ET-92)

20. INSTALL OUTER REAR VIEW MIRROR ASSEMBLY (See page MI-13)

21. INSTALL FRONT DOOR WINDOW FRAME REAR MOULDING (for 3 Door) (See page ET-114)

22. INSTALL FRONT DOOR WINDOW FRAME FRONT MOULDING (See page ET-115)

23. INSTALL FRONT NO.1 SPEAKER ASSEMBLY (See page AV-164)

24. INSTALL FRONT DOOR GLASS WEATHERSTRIP INNER

(a) Install the front door glass weatherstrip inner onto the front door trim board.

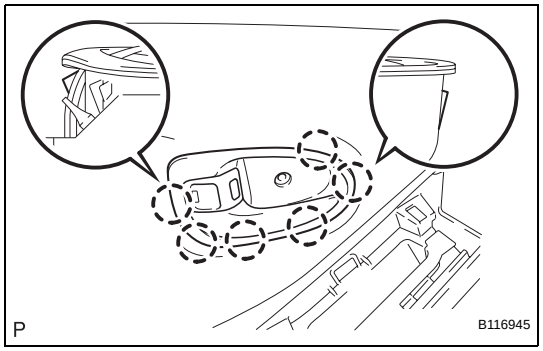

25. INSTALL FRONT DOOR INSIDE HANDLE SUB-ASSEMBLY

(a) Engage the 6 claws and install the front door inside handle.

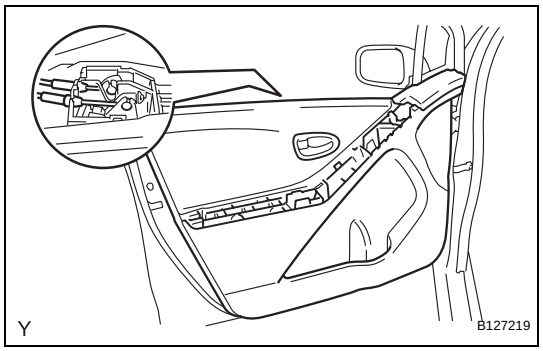

26. INSTALL FRONT DOOR TRIM BOARD SUB-ASSEMBLY

(a) Connect the front door lock remote control cable and front door inside locking cable.

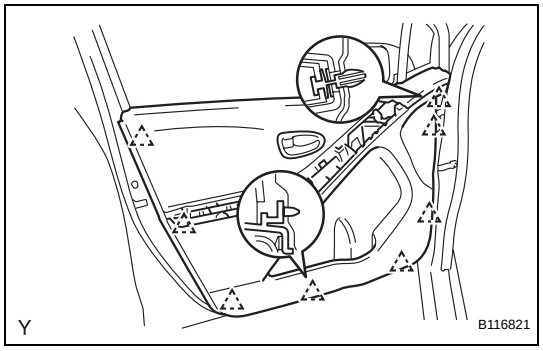

(b) 5 Door:
Engage the 8 clips and install the front door trim board.

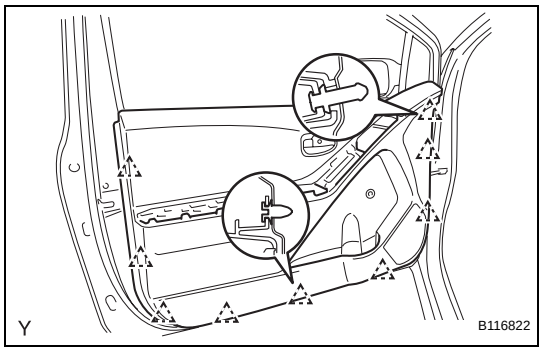

(c) 3 Door:
Engage the 9 clips and install the front door trim board.

ED

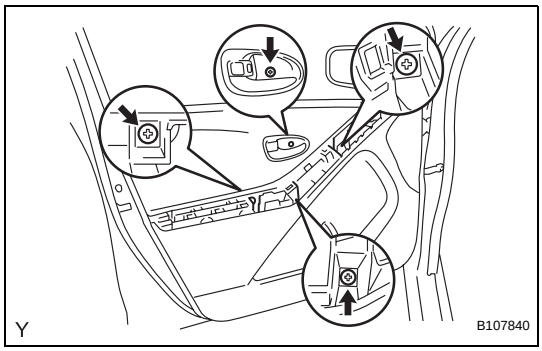

(d) Tighten the 4 screws.

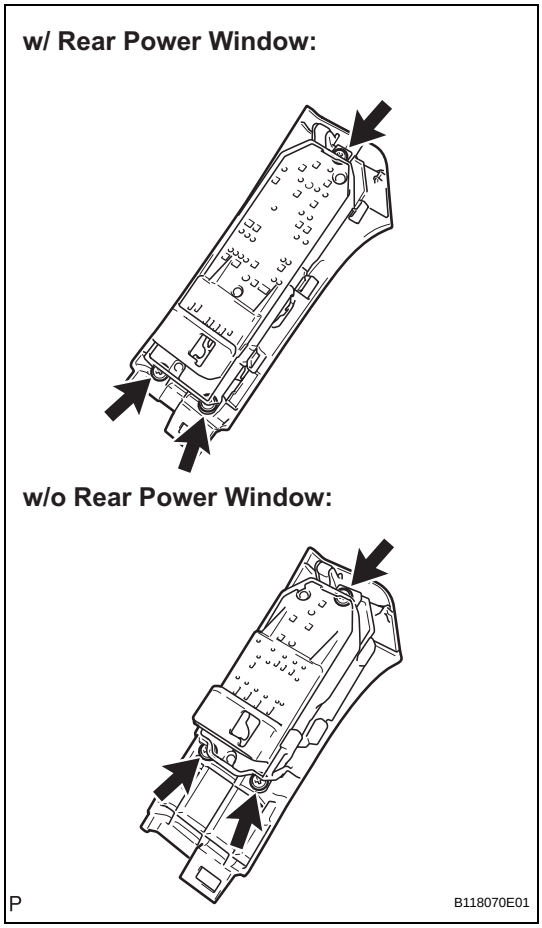

27. INSTALL POWER WINDOW REGULATOR MASTER SWITCH ASSEMBLY

(a) Install the power window regulator master switch with the 3 screws.

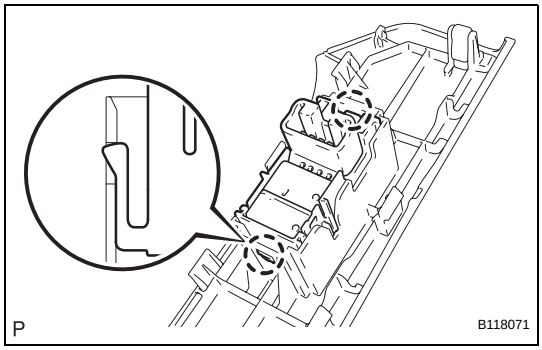

28. INSTALL POWER WINDOW REGULATOR SWITCH ASSEMBLY

(a) Engage the 2 claws and install the power window regulator switch.

ED

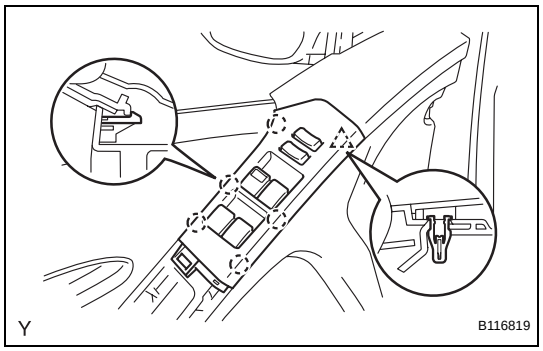

29. INSTALL FRONT ARMREST BASE PANEL UPPER

(a) Connect the connector.

(b) Engage the 5 claws and clip and install the front armrest base panel upper.

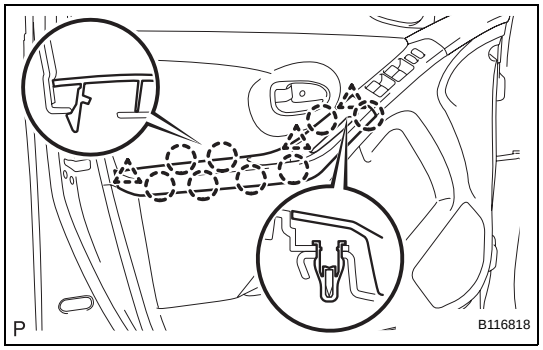

30. INSTALL DOOR ARMREST COVER

(a) for 5 Door:
Engage the 8 claws and 3 clips and install the door armrest cover.

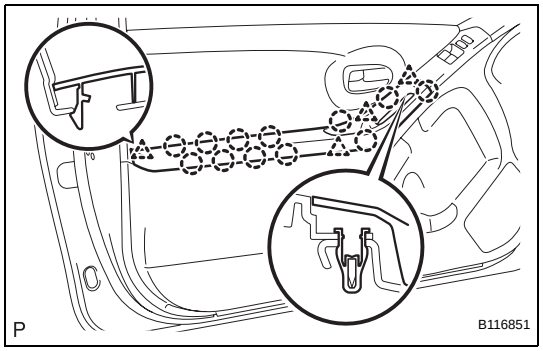

(b) for 3 Door:
Engage the 12 claws and 4 clips and install the door armrest cover.

31. CONNECT CABLE TO NEGATIVE BATTERY TERMINAL
Torque: 5.4 N*m (55 kgf*cm, 48 in.*lbf)

FRONT DOOR (for Hatchback without Power Window)

COMPONENTS

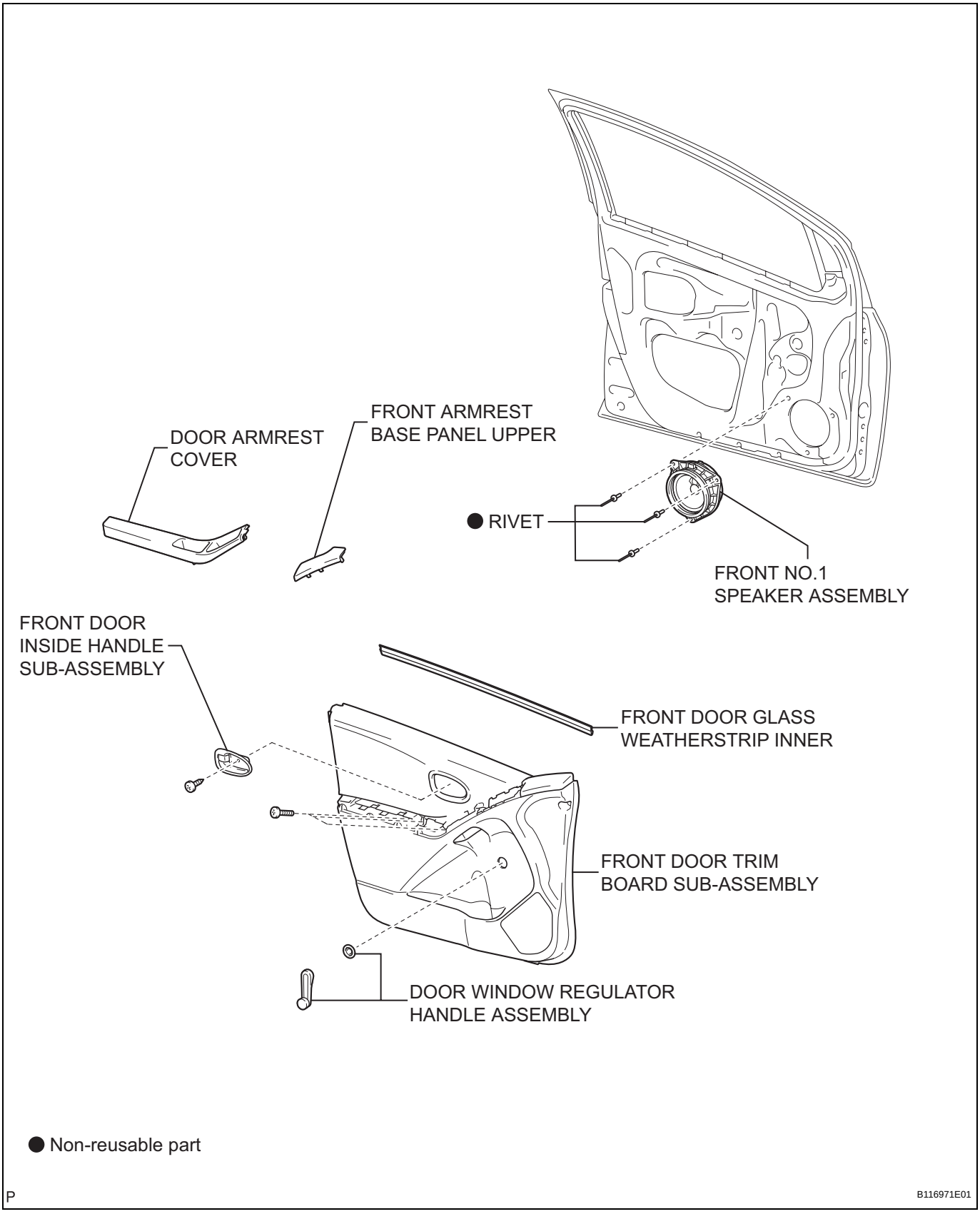

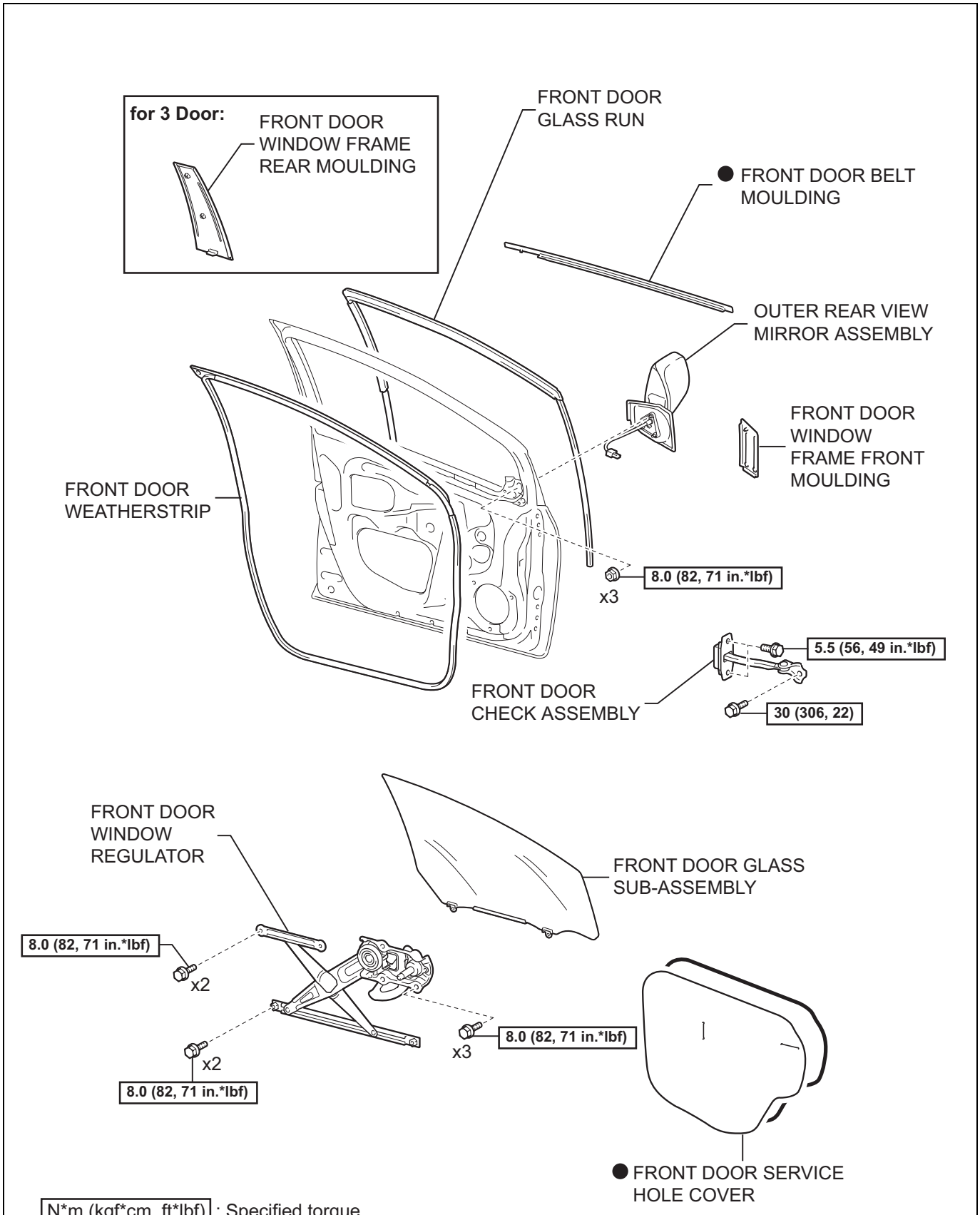

N*m (kgf*cm, ft*lbf) : Specified torque

● Non-reusable part

P

B116972E01

ED

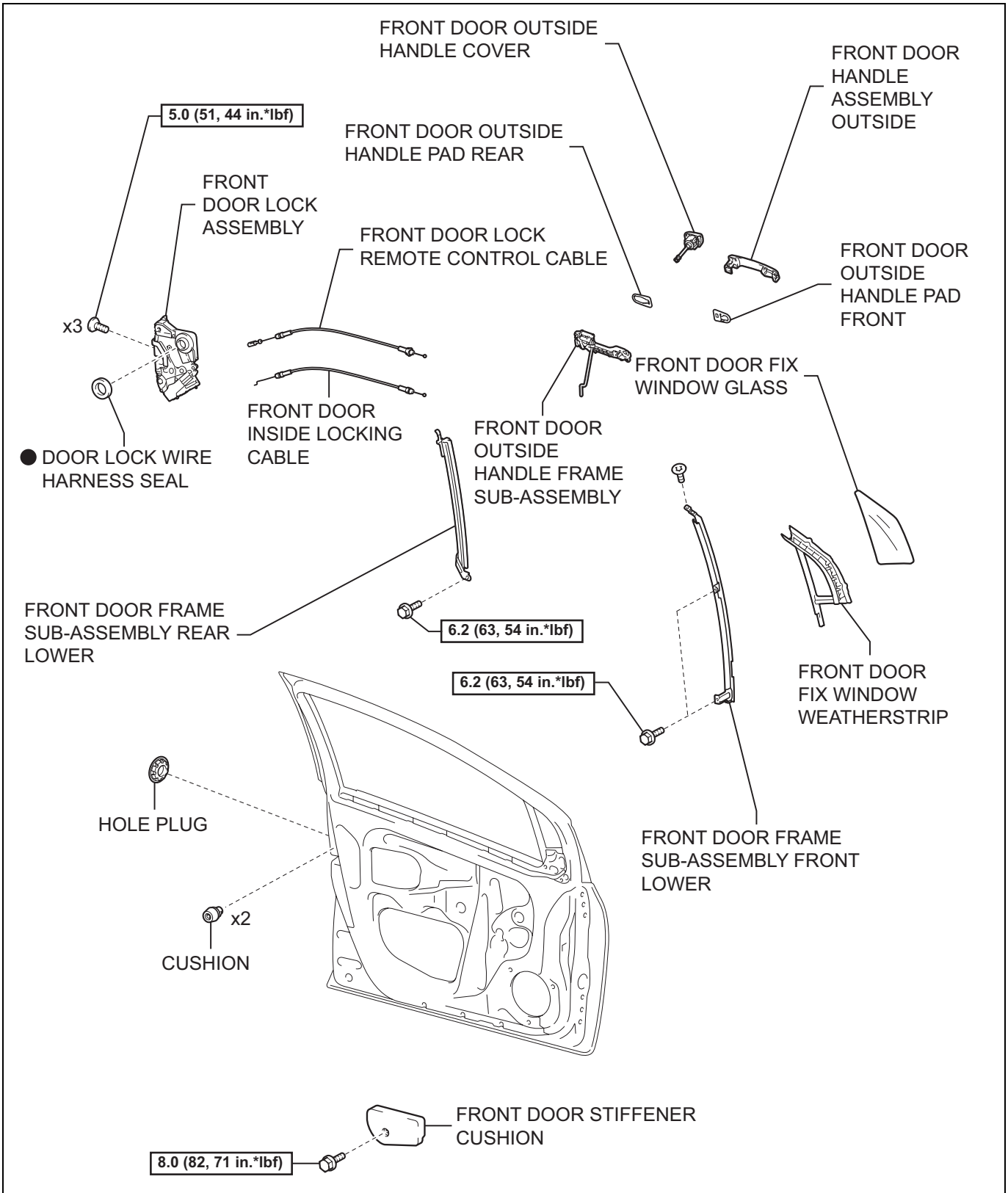

N*m (kgf*cm, ft*lbf) : Specified torque

● Non-reusable part

P

B116973E01

ED

DISASSEMBLY

HINT:
- Use the same procedure for both the RH and LH sides.
- The procedure described below is for the LH side.

1. DISCONNECT CABLE FROM NEGATIVE BATTERY TERMINAL

2. REMOVE DOOR WINDOW REGULATOR HANDLE ASSEMBLY

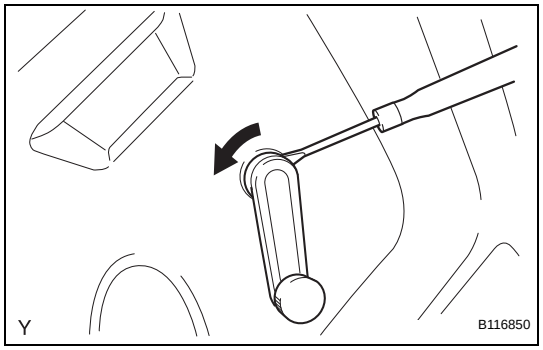

(a) Insert a clip remover between the plate and door trim.
(b) Turn the handle with the clip remover inserted, as shown in the illustration.
(c) Remove the front door window regulator handle and clip.
(d) Remove the window regulator handle plate.

3. REMOVE DOOR ARMREST COVER

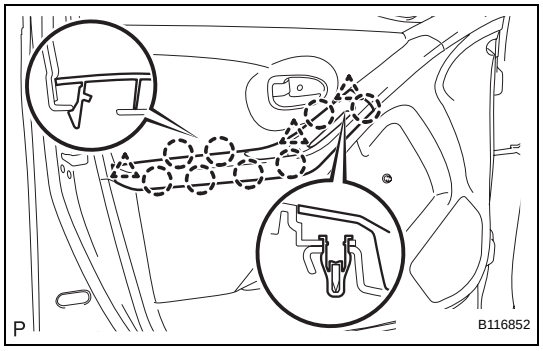

(a) for 5 Door:
Using a screwdriver with its tip wrapped in protective tape, disengage the 8 claws and 3 clips and remove the door armrest cover.

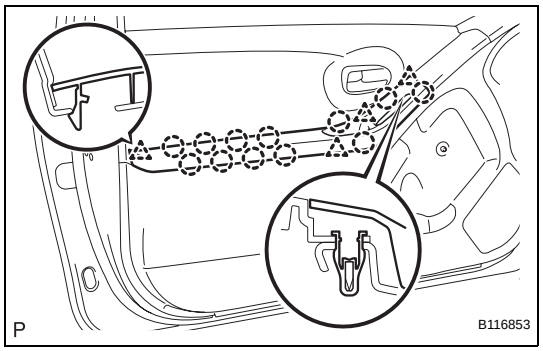

(b) for 3 Door:
Disengage the 12 claws and 4 clips and remove the door armrest cover.

4. REMOVE FRONT ARMREST BASE PANEL UPPER

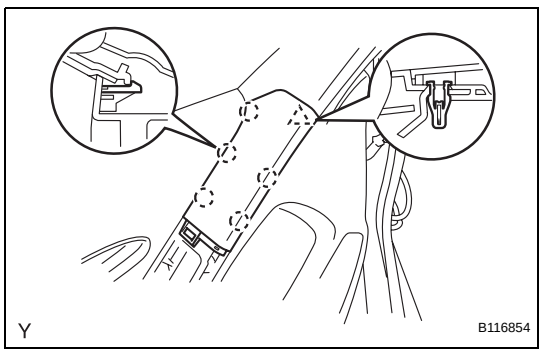

(a) Using a screwdriver with its tip wrapped in protective tape, disengage the 5 claws and clip and remove the front armrest base panel upper.

ED

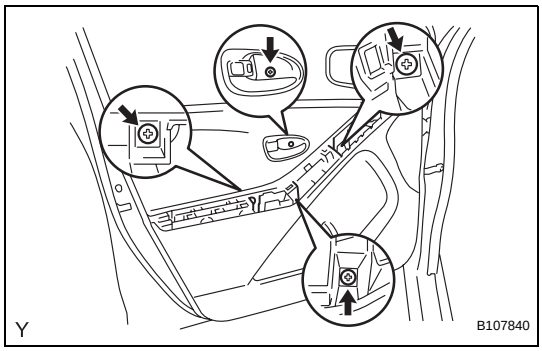

5. REMOVE FRONT DOOR TRIM BOARD SUB-ASSEMBLY

(a) Remove the 4 screws.

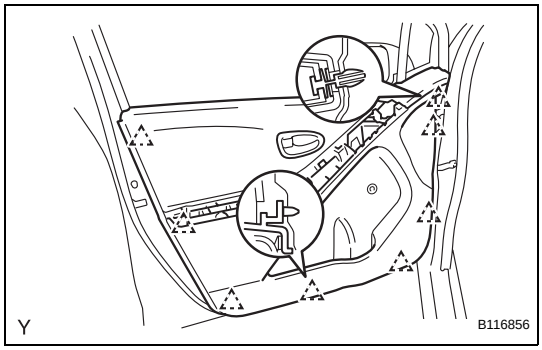

(b) for 5 Door:
Disengage the 8 clips.

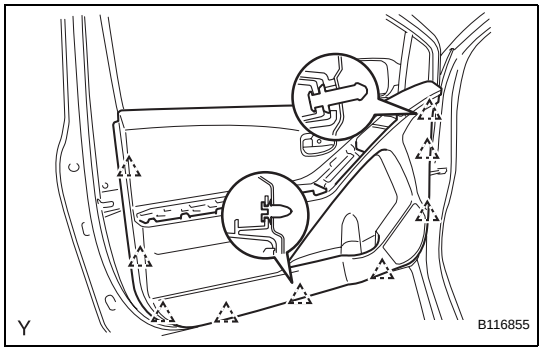

(c) for 3 Door:
Disengage the 9 clips.

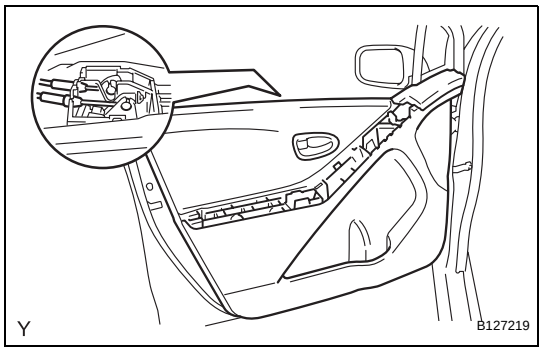

(d) Disconnect the front door lock remote control cable and front door inside locking cable and remove the front door trim board.

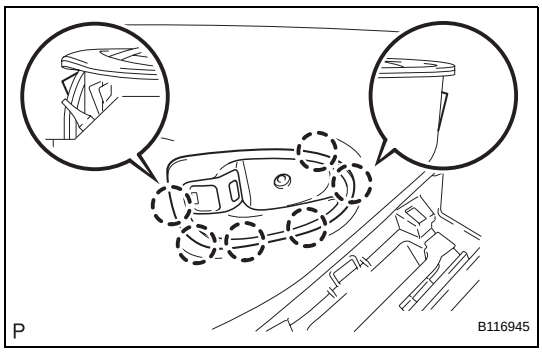

6. REMOVE FRONT DOOR INSIDE HANDLE SUB-ASSEMBLY

(a) Disengage the 6 claws and remove the front door inside handle.

7. REMOVE FRONT DOOR GLASS WEATHERSTRIP INNER

(a) Remove the front door glass weatherstrip inner from the front door trim board.

8. REMOVE FRONT NO.1 SPEAKER ASSEMBLY (See page AV-164)

ED

9. REMOVE FRONT DOOR WINDOW FRAME FRONT MOULDING (See page ET-114)

10. REMOVE FRONT DOOR WINDOW FRAME REAR MOULDING (for 3 Door) (See page ET-114)

11. REMOVE OUTER REAR VIEW MIRROR ASSEMBLY (See page MI-13)

12. REMOVE FRONT DOOR BELT MOULDING (See page ET-91)

13. REMOVE FRONT DOOR SERVICE HOLE COVER

(a) for 5 Door:
Disconnect the connectors and clamps, then remove the front door service hole cover.
NOTICE:
Remove any tape remaining on the door side.

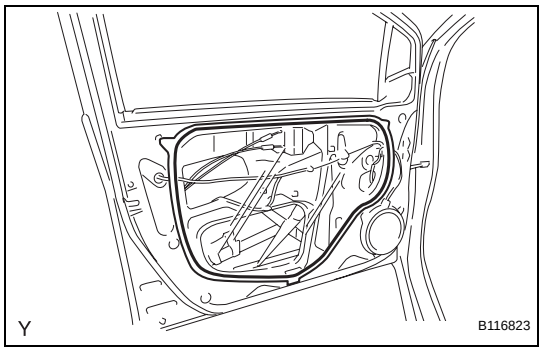

(b) for 3 Door:
Disconnect the connectors and clamps, then remove the front door service hole cover.
NOTICE:
Remove any tape remaining on the door side.

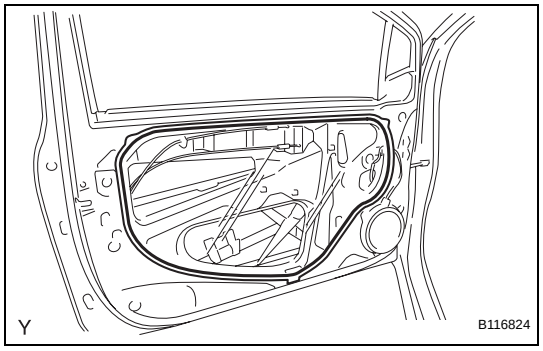

14. REMOVE FRONT DOOR GLASS SUB-ASSEMBLY

(a) Provisionally install the front door window regulator handle.

(b) Move the front door glass until the 2 bolts appear in the service holes.

(c) Remove the 2 bolts.
NOTICE:
Do not drop or damage the front door glass when removing the 2 bolts.

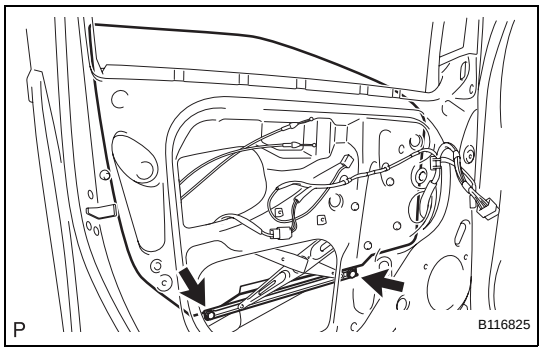

(d) Remove the front door glass in the direction indicated by the arrows in the illustration.
NOTICE:
Do not damage the glass.

(e) Remove the front door window regulator handle.

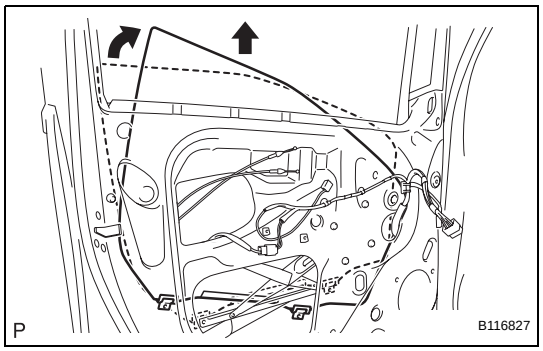

ED

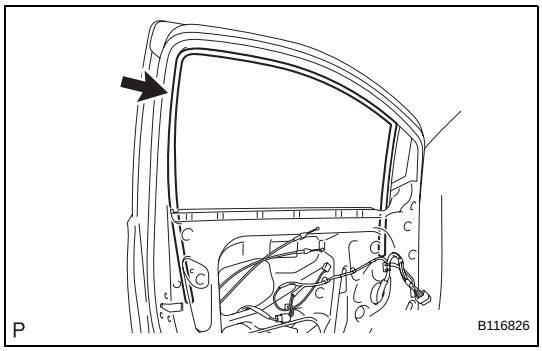

15. REMOVE FRONT DOOR GLASS RUN

(a) Remove the front door glass run.

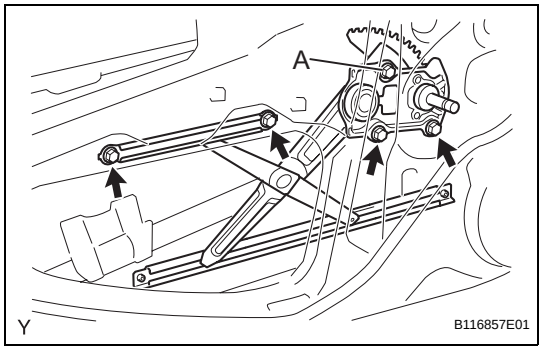

16. REMOVE FRONT DOOR WINDOW REGULATOR

(a) Loosen bolt A.

(b) Remove the 4 bolts, then remove the front door window regulator.

NOTICE:

Do not drop or damage the window regulator when removing the bolts.

HINT:

Remove the window regulator through the service hole.

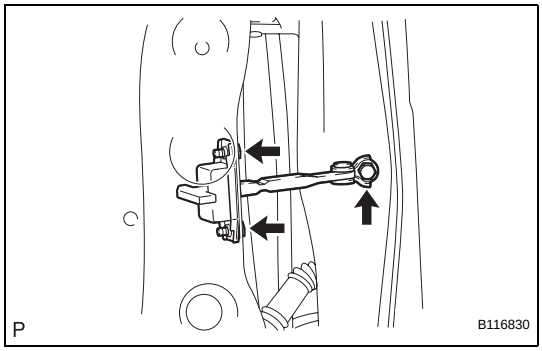

17. REMOVE FRONT DOOR CHECK ASSEMBLY

(a) Remove the 3 bolts, then remove the front door check.

NOTICE:

Do not drop or damage the door check when removing the bolts.

HINT:

Remove the door check through the service hole.

ED

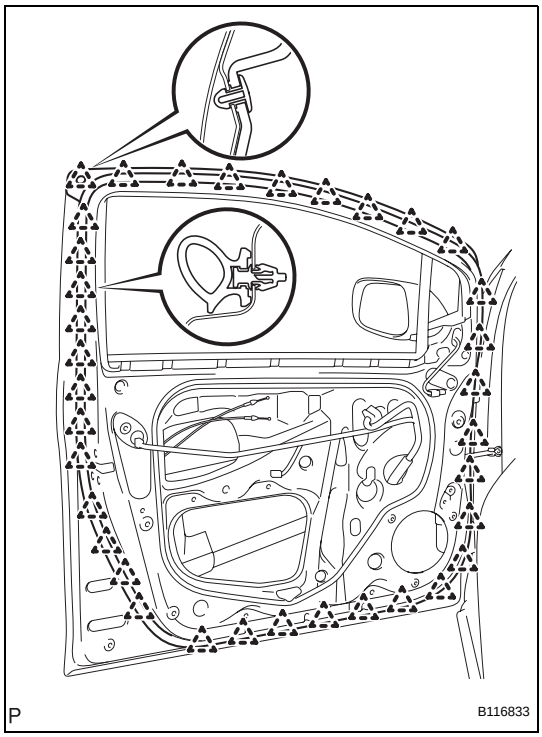

18. REMOVE FRONT DOOR WEATHERSTRIP

(a) for 5 Door:

Disengage the 35 clips and remove the front door weatherstrip.

NOTICE:

Remove any tape remaining on the door side.

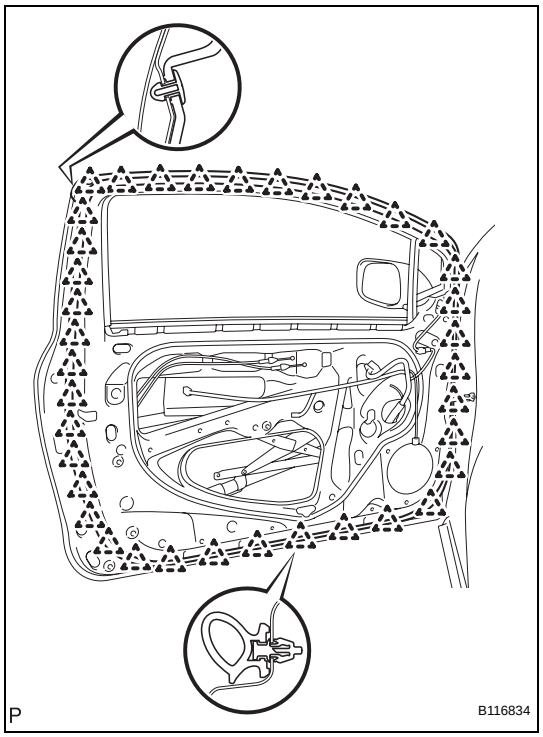

(b) for 3 Door:
Disengage the 37 clips and remove the front door weatherstrip.
NOTICE:
Remove any tape remaining on the door side.

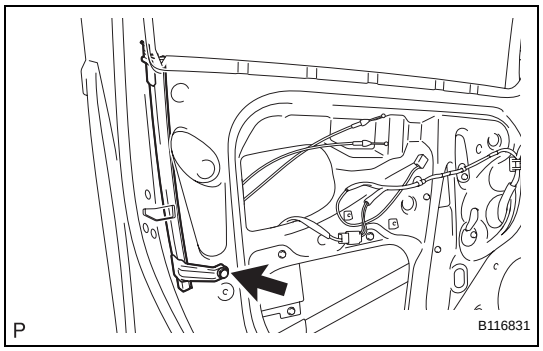

19. REMOVE FRONT DOOR FRAME SUB-ASSEMBLY REAR LOWER

(a) Remove the bolt, then remove the front door frame sub-assembly rear lower.
NOTICE:
Do not drop or damage the front door frame sub-assembly rear lower when removing the bolt.
HINT:
Remove the front door frame sub-assembly rear lower through the service hole.

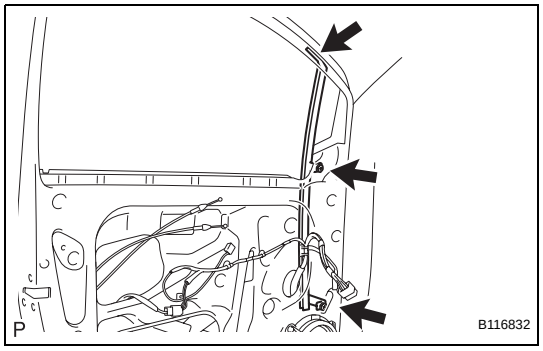

20. REMOVE FRONT DOOR FRAME SUB-ASSEMBLY FRONT LOWER

(a) Remove the 2 bolts and screw, then remove the front door frame sub-assembly front lower.
NOTICE:
Do not drop or damage the front door frame sub-assembly front lower when removing the bolts and screw.
HINT:
Remove the front door frame sub-assembly front lower through the service hole.

ED

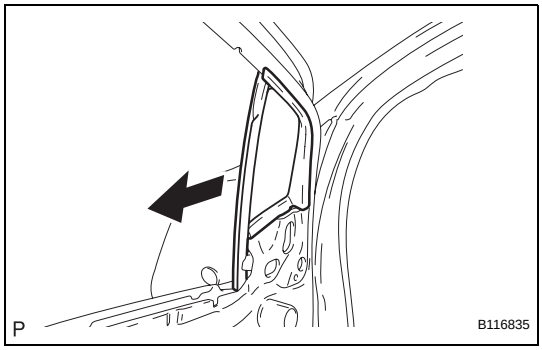

21. REMOVE FRONT DOOR FIX WINDOW WEATHERSTRIP

(a) Slide the front door fix window weatherstrip, in the direction indicated by the arrow in the illustration, to remove it.

(b) Remove the front door fix window glass from the front door fix window weatherstrip.

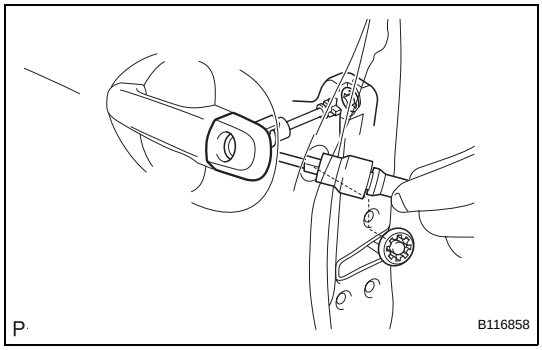

22. REMOVE FRONT DOOR OUTSIDE HANDLE COVER

(a) Remove the hole plug.

(b) Using "Torx" socket wrench T30, loosen the screw and remove the cover with the door lock key cylinder installed.

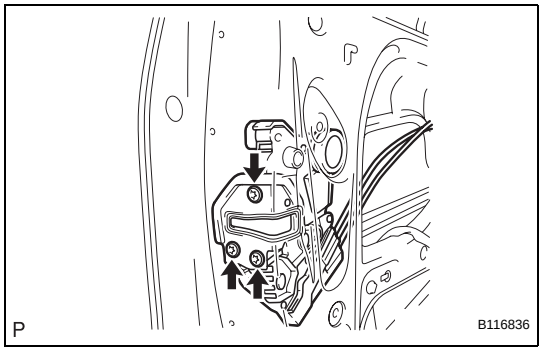

23. REMOVE FRONT DOOR LOCK ASSEMBLY

(a) Using "Torx" socket wrench T30, remove the 3 screws.

(b) Move the front door lock downward, remove the outside handle frame link and remove the front door lock.

NOTICE:

Do not drop or damage the door lock when removing the screws.

HINT:

Remove the front door lock through the service hole.

(c) Disengage the 5 claws and open the cover.

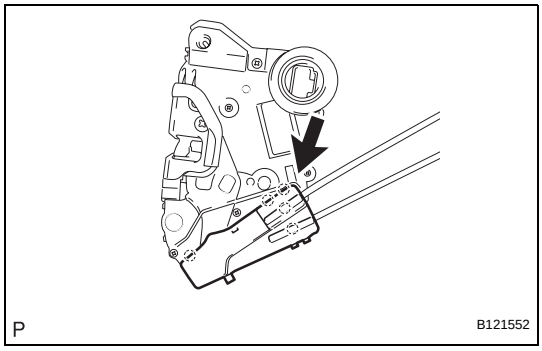

ED

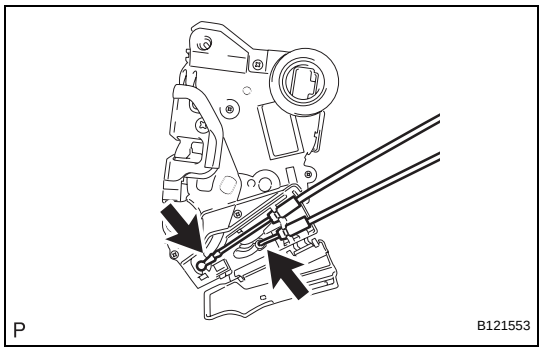

(d) Disconnect the front door lock remote control cable and front door inside locking cable.
(e) Remove the door lock wire harness seal.

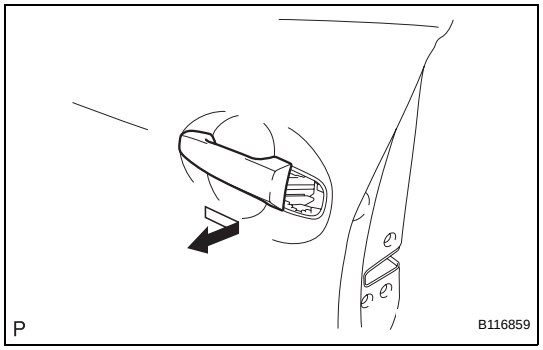

24. REMOVE FRONT DOOR HANDLE ASSEMBLY OUTSIDE

(a) Remove the handle by sliding and pulling it in the direction indicated by the arrow mark in the illustration.

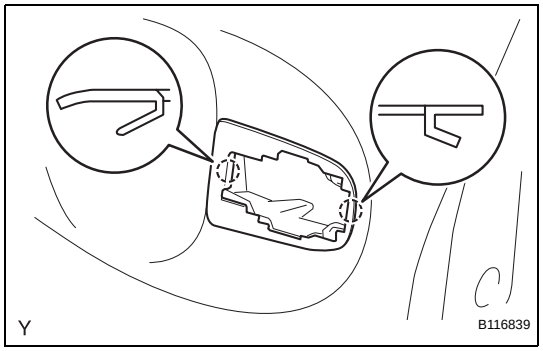

25. REMOVE FRONT DOOR OUTSIDE HANDLE PAD REAR

(a) Disengage the 2 claws and remove the front door outside handle pad rear.

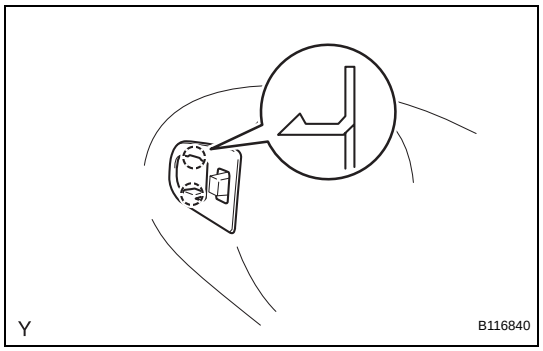

26. REMOVE FRONT DOOR OUTSIDE HANDLE PAD FRONT

(a) Disengage the 2 claws and remove the front door outside handle pad front.

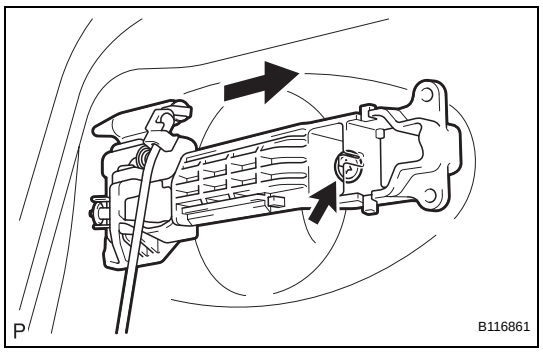

27. REMOVE FRONT DOOR OUTSIDE HANDLE FRAME SUB-ASSEMBLY

(a) Using "Torx" socket wrench T30, loosen the screw.
(b) Slide the outside handle frame to remove it.

28. REMOVE CUSHION

(a) Remove the 2 cushions from the door panel.

ED

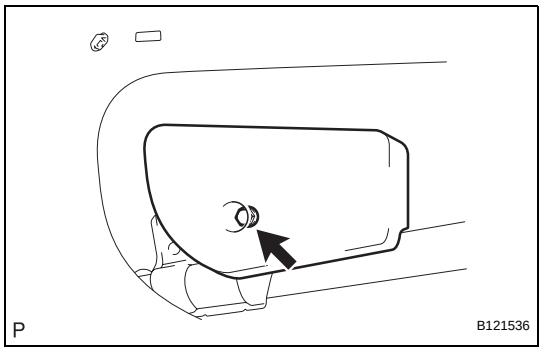

29. REMOVE FRONT DOOR STIFFENER CUSHION

(a) Remove the bolt and front door stiffener cushion.

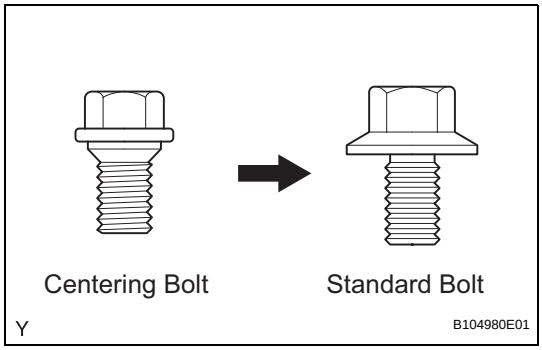

ADJUSTMENT

HINT:

- Before adjusting the door position on vehicles equipped with side airbags and curtain shield airbags, be sure to disconnect the battery. After adjustment, inspect the SRS warning light, the side airbag system and the curtain shield airbag system for normal operation. Then initialize both airbag systems.
- Use the same procedure for the RH and LH sides.
- The procedures described below are for the LH side.
- Centering bolts are used to mount the door hinge onto the vehicle body and door. The door cannot be adjusted with the centering bolts on. Substitute standard bolts (with washers) for the centering bolts when making adjustments.
- For bolts without torque specifications, check the standard bolt chart.

1. INSPECT FRONT DOOR (for 5 Door)

(a) Check that the clearance measurements are within the standard ranges.

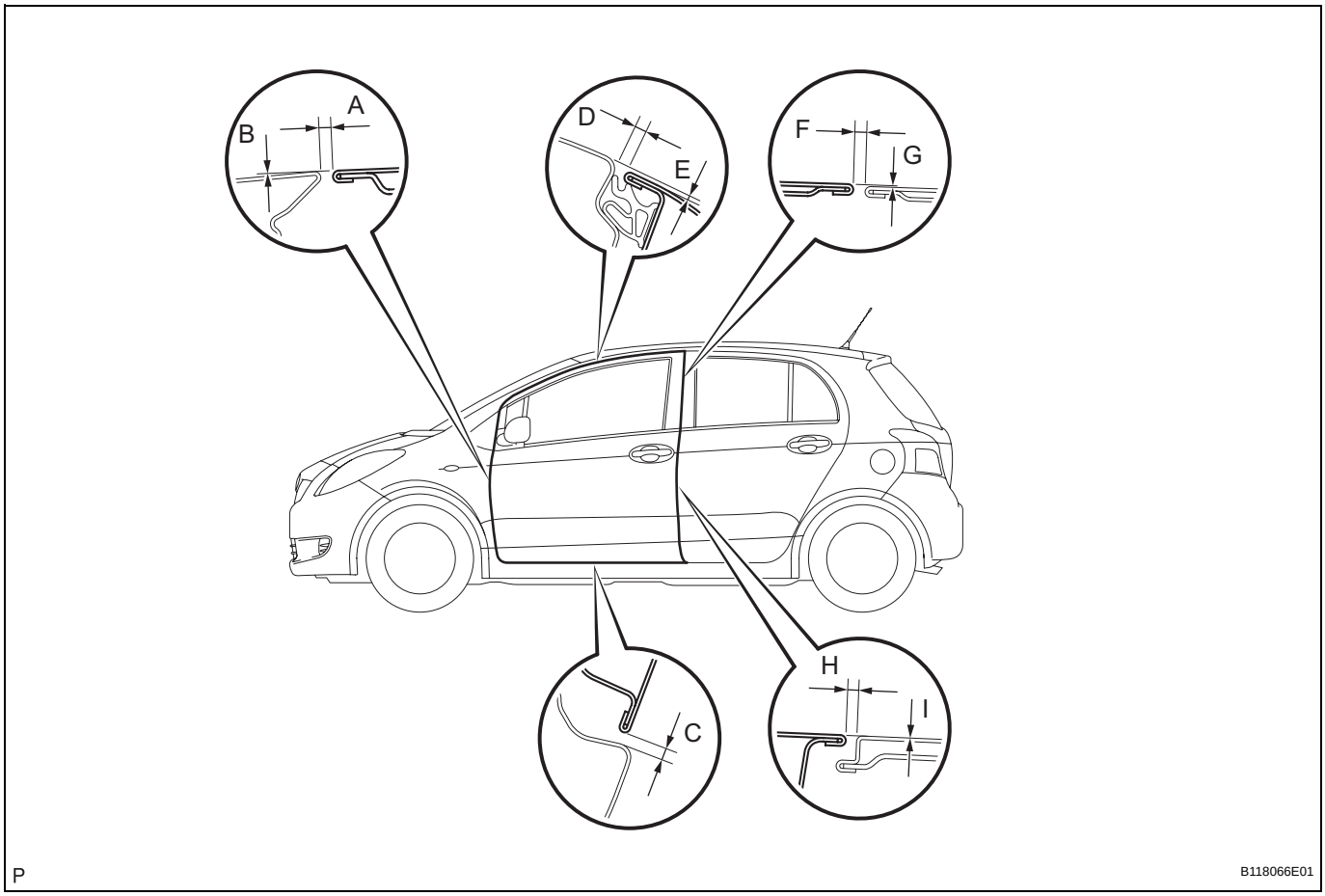

Standard

Area	Measurement	Area	Measurement
A	2.5 to 5.5 mm (0.098 to 0.217 in.)	F	3.3 to 6.3 mm (0.130 to 0.248 in.)
B	-1.5 to 1.5 mm (-0.059 to 0.059 in.)	G	-1.5 to 1.5 mm (-0.059 to 0.059 in.)
C	4.1 to 7.1 mm (0.161 to 0.280 in.)	H	3.3 to 6.3 mm (0.130 to 0.248 in.)
D	3.5 to 6.5 mm (0.138 to 0.256 in.)	I	-1.5 to 1.5 mm (-0.059 to 0.059 in.)
E	2.8 mm (0.110 in.)	-	-

2. REMOVE FRONT DOOR (for 3 Door)

(a) Check that the clearance measurements are within the standard ranges.

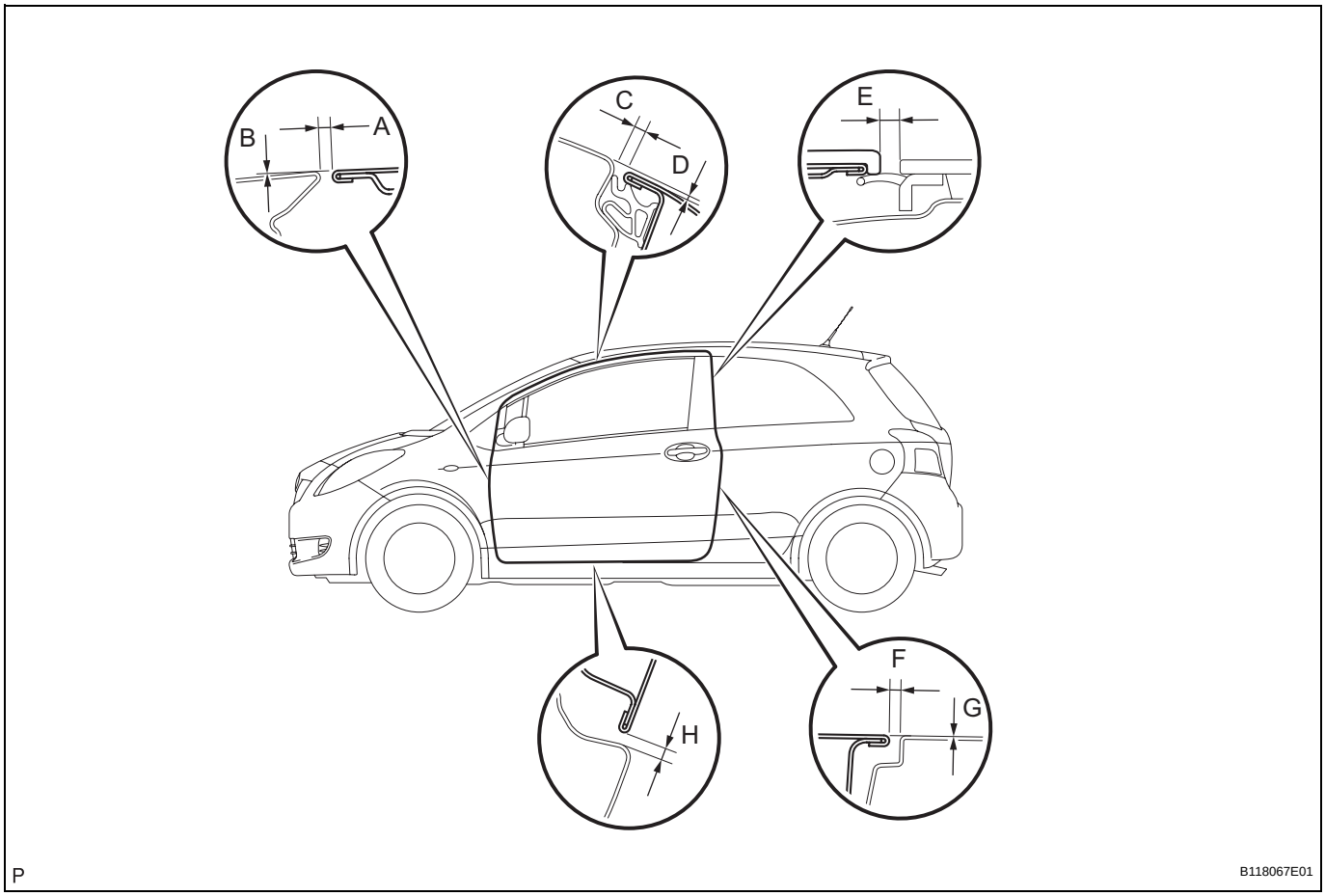

Standard

Area	Measurement	Area	Measurement
A	2.5 to 5.5 mm (0.098 to 0.217 in.)	E	2.8 to 5.8 mm (0.110 to 0.228 in.)
B	-1.5 to 1.5 mm (-0.059 to 0.059 in.)	F	2.5 to 5.5 mm (0.098 to 0.217 in.)
C	3.5 to 6.5 mm (0.138 to 0.256 in.)	G	-1.5 to 1.5 mm (-0.059 to 0.059 in.)
D	2.8 mm (0.110 in.)	H	4.1 to 7.1 mm (0.161 to 0.280 in.)

3. ADJUST FRONT DOOR

(a) Disconnect the cable from the negative battery terminal.

Wait for at least 90 seconds after disconnecting the cable to prevent the airbag from working.

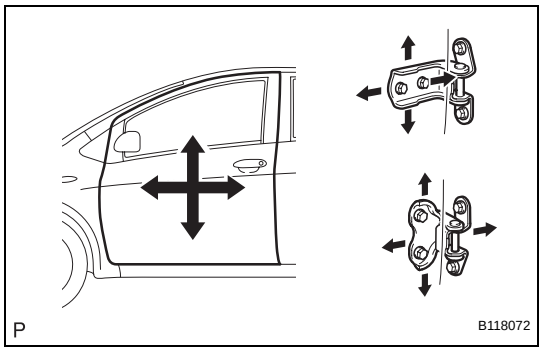

(b) Using SST, adjust the door horizontally and vertically by loosening the body side hinge bolts.
SST 09812-00010
(c) Tighten the body side hinge bolts after the adjustment.
Torque: 26 N*m (265 kgf*cm, 19 ft.*lbf)

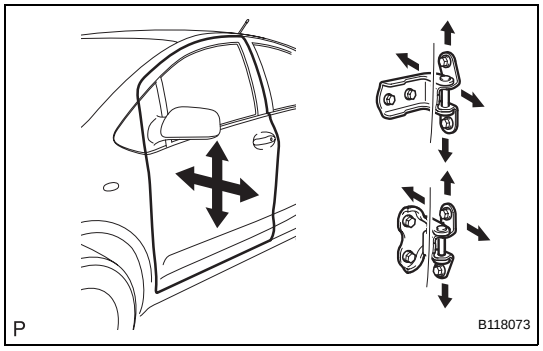

(d) Adjust the door horizontally and vertically by loosening the door side hinge bolts.
(e) Tighten the door side hinge bolts after the adjustment.
Torque: 26 N*m (265 kgf*cm, 19 ft.*lbf)

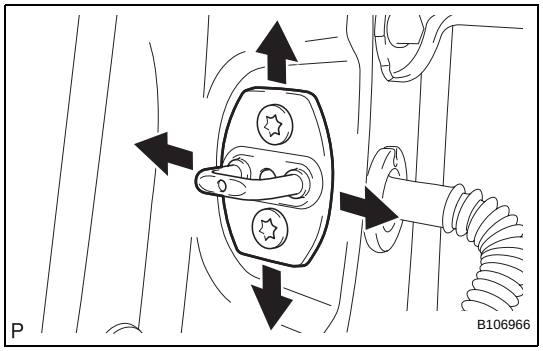

(f) Using "Torx" socket wrench T40, adjust the striker position by slightly loosening the striker mounting screws and hitting the striker with a plastic-faced hammer.
(g) Using "Torx" socket wrench T40, tighten the striker mounting screws after the adjustment.
Torque: 23 N*m (235 kgf*cm, 17 ft.*lbf)
(h) Connect the cable to the negative battery terminal.
Torque: 5.4 N*m (55 kgf*cm, 48 in.*lbf)

REASSEMBLY

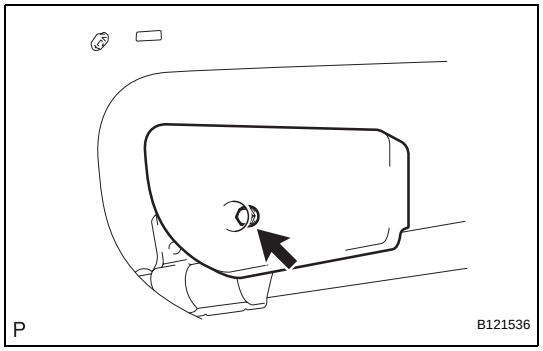

1. INSTALL FRONT DOOR STIFFENER CUSHION
(a) Install the front door stiffener cushion with the bolt.
Torque: 8.0 N*m (82 kgf*cm, 71 in.*lbf)

2. INSTALL CUSHION
(a) Install the cushion onto the door panel.

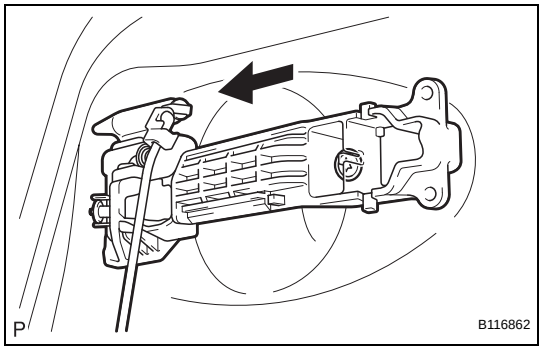

3. INSTALL FRONT DOOR OUTSIDE HANDLE FRAME SUB-ASSEMBLY
(a) Using "Torx" socket wrench T30, install the front outside handle frame with the screw.
Torque: 4.0 N*m (41 kgf*cm, 35 in.*lbf)

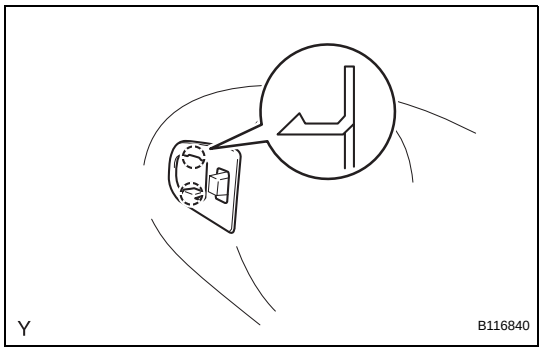

4. INSTALL FRONT DOOR OUTSIDE HANDLE PAD FRONT

(a) Engage the 2 claws and install the front door outside handle pad front.

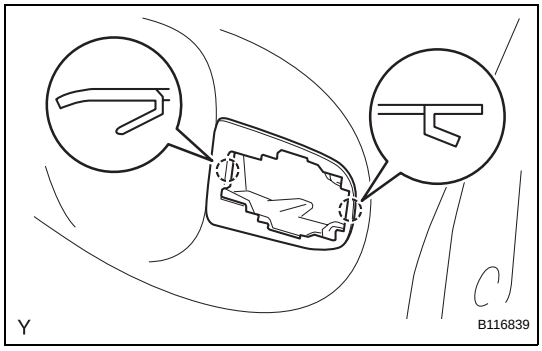

5. INSTALL FRONT DOOR OUTSIDE HANDLE PAD REAR

(a) Engage the 2 claws and install the front door outside handle pad rear.

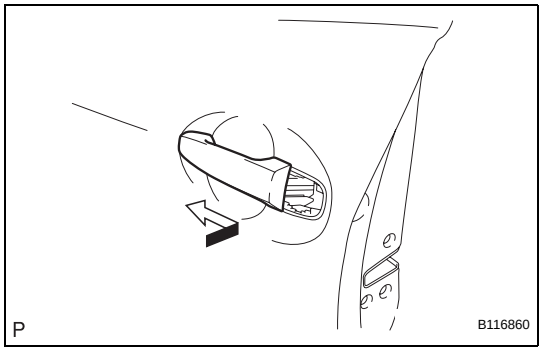

6. INSTALL FRONT DOOR HANDLE ASSEMBLY OUTSIDE

(a) Pushing the front door handle assembly outside in the direction of the arrow mark shown in the illustration, install the front door handle assembly outside.

7. INSTALL FRONT DOOR LOCK ASSEMBLY

NOTICE:

- **If reusing a door lock that has been removed, replace the packing in the connecting part with new.**
- **Make sure that no grease and dirt adheres to the packing surface in the connecting part.**

(a) Apply MP grease to the sliding and rotating areas of the front door lock.

(b) Connect the front door lock remote control cable and front door inside locking cable.

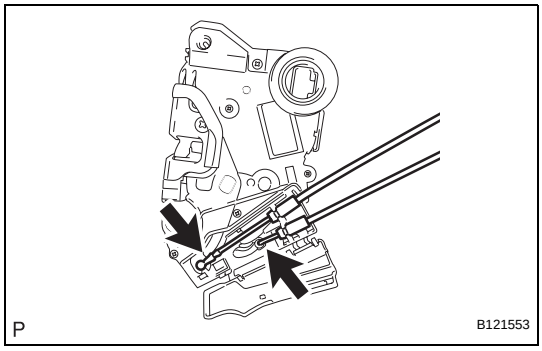

ED

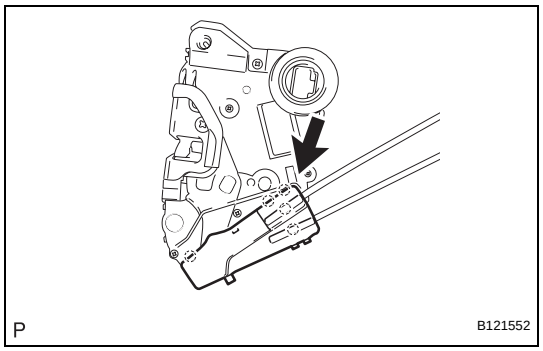

(c) Engage the 5 claws and close the cover.

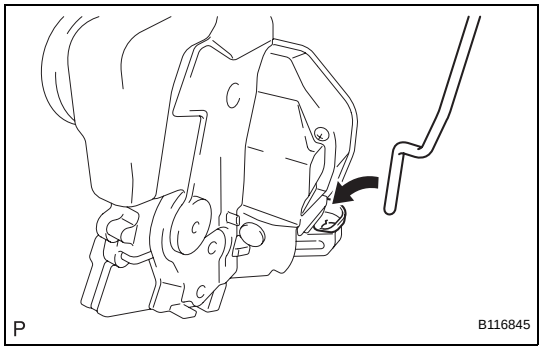

(d) Insert the door lock open rod into the front door lock, then set it to the door panel.
NOTICE:
Make sure that the outside handle link is securely engaged with the door lock.

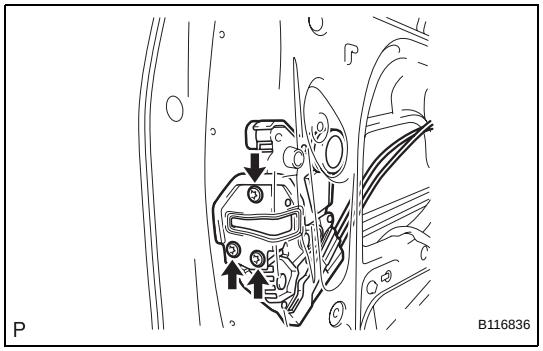

(e) Apply adhesive to the threads of the screws.
Adhesive:
Part No. 08833-00070, THREE BOND 1324 or the equivalent

(f) Using "Torx" socket wrench T30, install the front door lock with the 3 screws.
Torque: 5.0 N*m (51 kgf*cm, 44 in.*lbf)

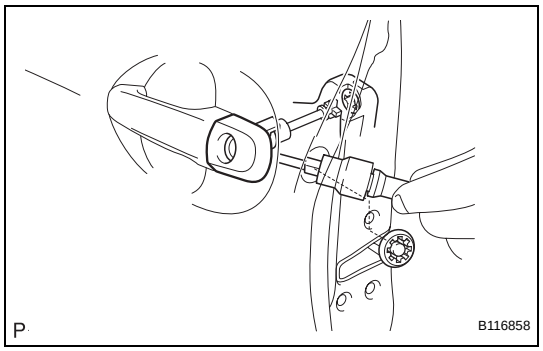

8. INSTALL FRONT DOOR OUTSIDE HANDLE COVER

(a) Using "Torx" socket wrench T30, install the cover with the door lock key cylinder.
Torque: 4.0 N*m (41 kgf*cm, 35 in.*lbf)
HINT:
Make sure that the door lock key cylinder rod is inserted.

(b) Install the hole plug.

9. INSTALL FRONT DOOR FIX WINDOW WEATHERSTRIP

(a) Install the front door fix window glass onto the front door fix window weatherstrip.

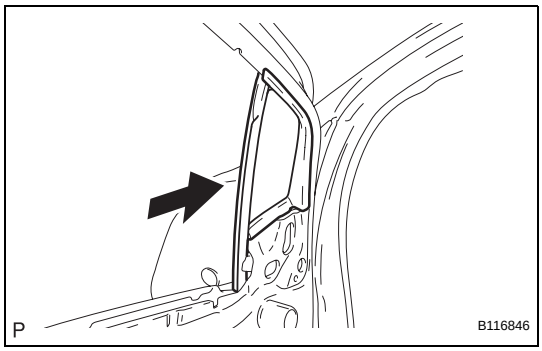

(b) Slide the front door fix window weatherstrip, in the direction indicated by the arrow in the illustration, to install it.

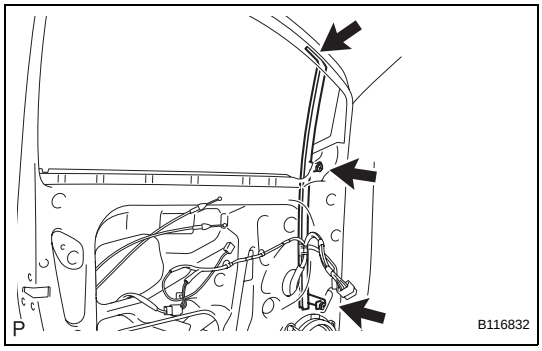

10. INSTALL FRONT DOOR FRAME SUB-ASSEMBLY FRONT LOWER

(a) Install the front door frame sub-assembly front lower with the 2 bolts and screw.
Torque: 6.2 N*m (63 kgf*cm, 54 in.*lbf)

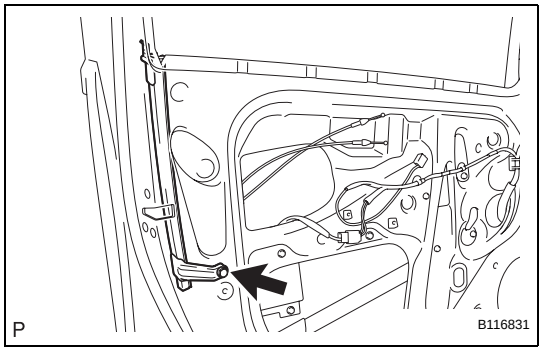

11. INSTALL FRONT DOOR FRAME SUB-ASSEMBLY REAR LOWER

(a) Install the front door frame sub-assembly rear lower with the bolt.
Torque: 6.2 N*m (63 kgf*cm, 54 in.*lbf)

ED

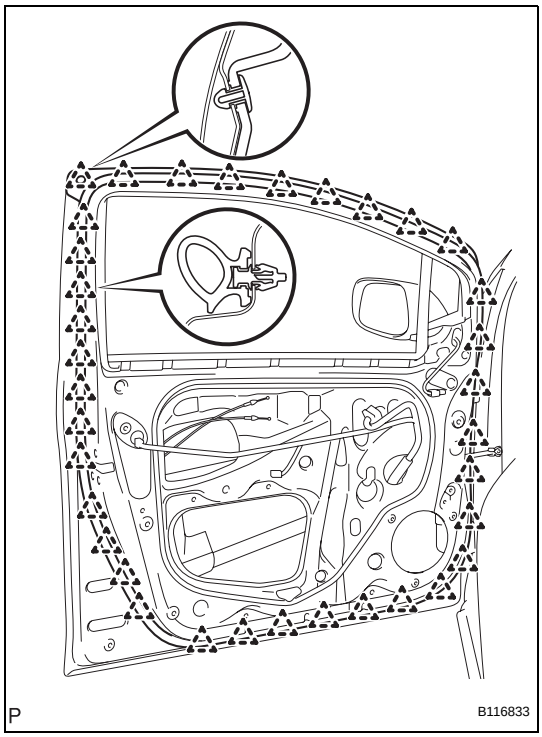

12. INSTALL FRONT DOOR WEATHERSTRIP

(a) for 5 Door:
Engage the 35 clips and install the front door weatherstrip.

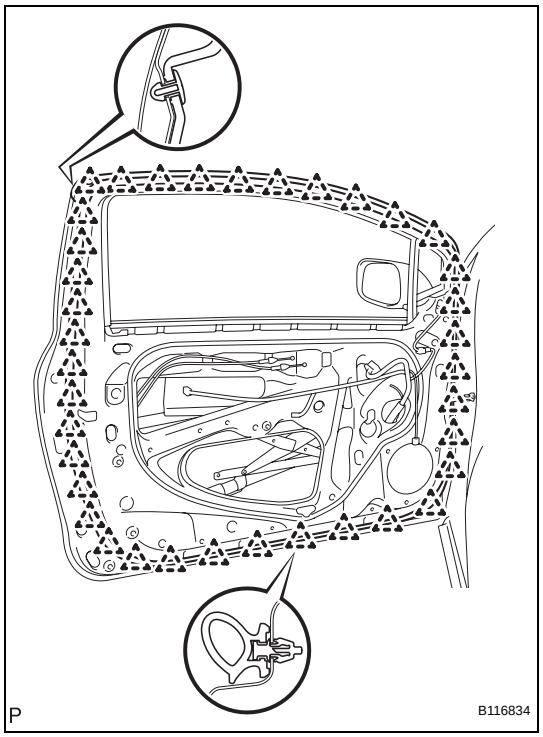

(b) for 3 Door:
Engage the 37 clips and install the front door weatherstrip.

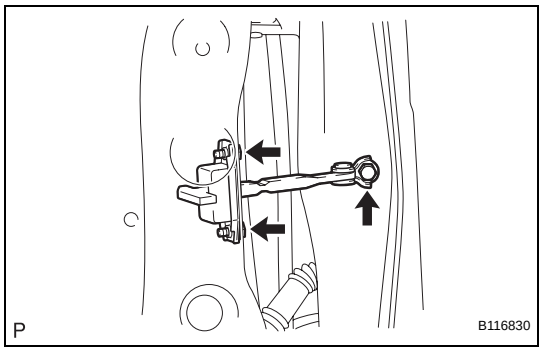

13. INSTALL FRONT DOOR CHECK ASSEMBLY

(a) Apply MP grease to the sliding areas of the door check.

(b) Install the front door check onto the door panel with the 2 bolts.
Torque: 5.5 N*m (56 kgf*cm, 49 in.*lbf)

(c) Apply adhesive to the threads of the bolt.
Adhesive:
Part No. 08833-00070, THREE BOND 1324 or the equivalent

(d) Install the front door check onto the body panel with the bolt.
Torque: 30 N*m (306 kgf*cm, 22 ft.*lbf)

ED

14. INSTALL FRONT DOOR WINDOW REGULATOR

(a) Apply MP grease to the sliding and rotating areas of the front door window regulator sub-assembly.
NOTICE:
Do not apply grease to the window regulator spring.

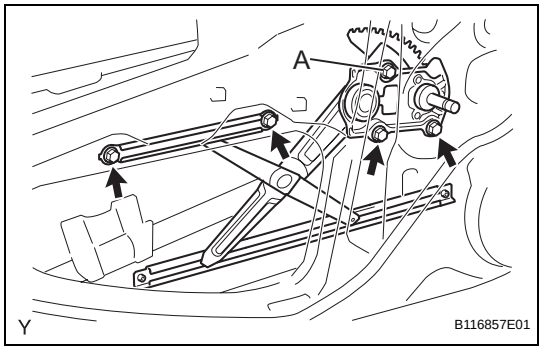

(b) Loosely screw bolt A onto the front door window regulator sub-assembly.

(c) Insert the front door window regulator into the door panel. Use bolt A to hang the front door window regulator on the door panel.
NOTICE:
Do not drop the window regulator as it may be damaged.

(d) Install the front door window regulator with the 4 bolts, and tighten bolt A.
Torque: 8.0 N*m (82 kgf*cm, 71 in.*lbf)

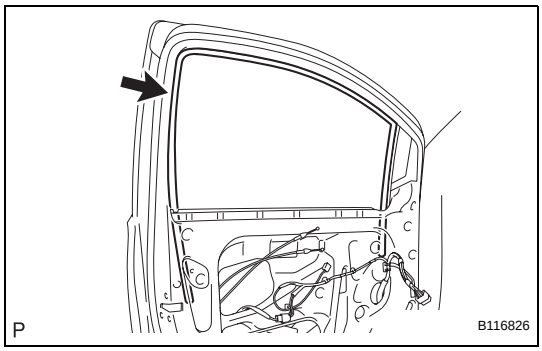

15. INSTALL FRONT DOOR GLASS RUN

(a) Install the front door glass run.

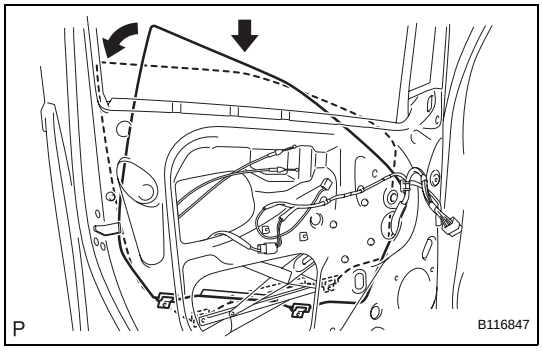

16. INSTALL FRONT DOOR GLASS SUB-ASSEMBLY

(a) Insert the door glass into the door panel along the glass run as indicated by the arrows in the illustration.
NOTICE:
Do not damage the glass.

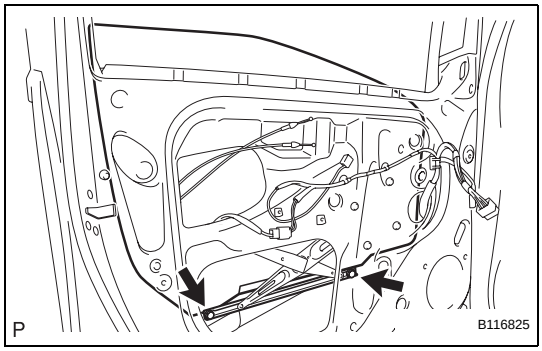

(b) Install the front door glass onto the front door window regulator with the 2 bolts.
Torque: 8.0 N*m (82 kgf*cm, 71 in.*lbf)

ED

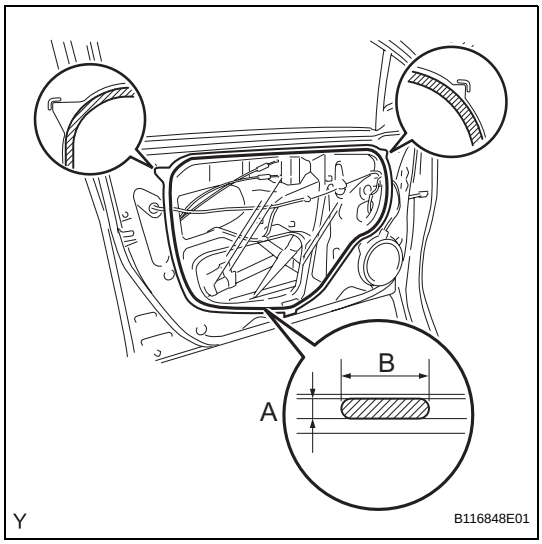

17. INSTALL FRONT DOOR SERVICE HOLE COVER

(a) for 5 Door:
Apply butyl tape to the door panel, then install the front door service hole cover as shown in the illustration.
Adhesive:
Part No. 08850-00065, Butyl Tape Set or the equivalent
Specification

Area	Dimension
A	2.0 mm (0.079 in.) or more
B	6.0 mm (0.236 in.) or more

HINT:
- When installing the service hole cover, pull the links and connectors out through the service hole.
- There should be no wrinkles or folds after attaching the service hole cover.
- After attaching the service hole cover, check the quality of the seal.

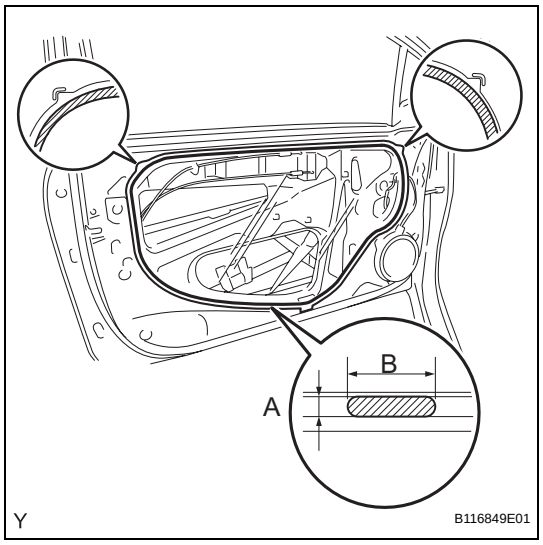

(b) for 3 Door:
Apply butyl tape to the door panel, then install the front door service hole cover as shown in the illustration.

Adhesive:
Part No. 08850-00065, Butyl Tape Set or the equivalent

Specification

Area	Dimension
A	2.0 mm (0.079 in.) or more
B	6.0 mm (0.236 in.) or more

HINT:
- When installing the service hole cover, pull the links and connectors out through the service hole.
- There should be no wrinkles or folds after attaching the service hole cover.
- After attaching the service hole cover, check the quality of the seal.

18. INSTALL FRONT DOOR BELT MOULDING (See page ET-92)

19. INSTALL OUTER REAR VIEW MIRROR ASSEMBLY (See page MI-16)

20. INSTALL FRONT DOOR WINDOW FRAME REAR MOULDING (for 3 Door) (See page ET-114)

21. INSTALL FRONT DOOR WINDOW FRAME FRONT MOULDING (See page ET-115)

22. INSTALL FRONT NO.1 SPEAKER ASSEMBLY (See page AV-164)

23. INSTALL FRONT DOOR GLASS WEATHERSTRIP INNER

(a) Install the front door glass weatherstrip inner onto the front door trim board.

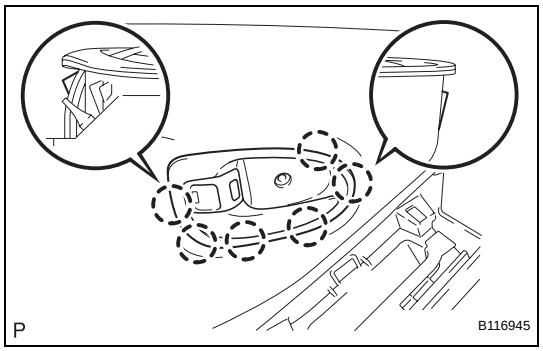

24. INSTALL FRONT DOOR INSIDE HANDLE SUB-ASSEMBLY

(a) Engage the 6 claws and install the front door inside handle.

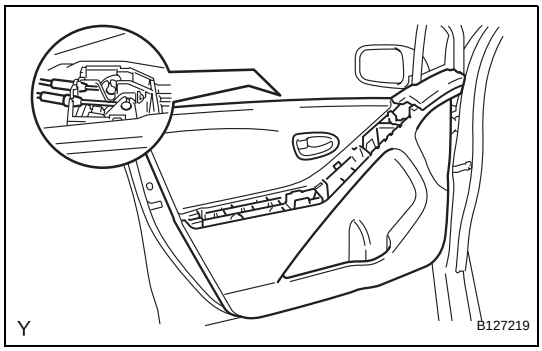

25. INSTALL FRONT DOOR TRIM BOARD SUB-ASSEMBLY

(a) Connect the front door lock remote control cable and front door inside locking cable.

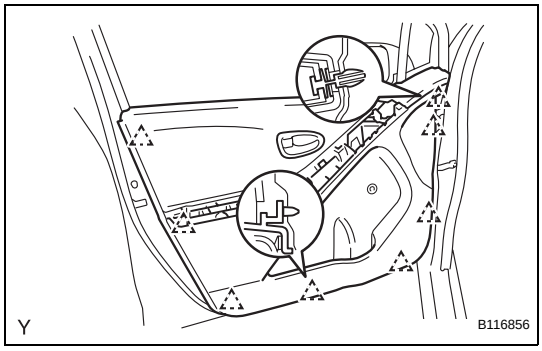

(b) for 5 Door:
Engage the 8 clips and install the front door trim board.

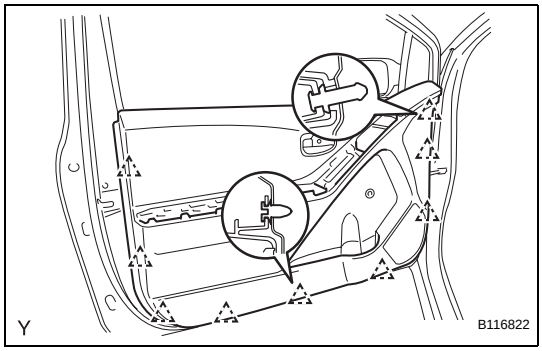

(c) for 3 Door:
Engage the 9 clips and install the front door trim board.

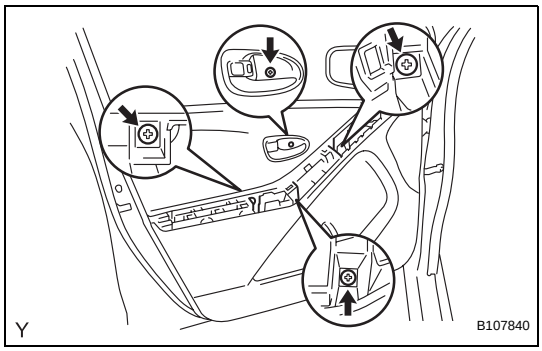

(d) Tighten the 4 screws.

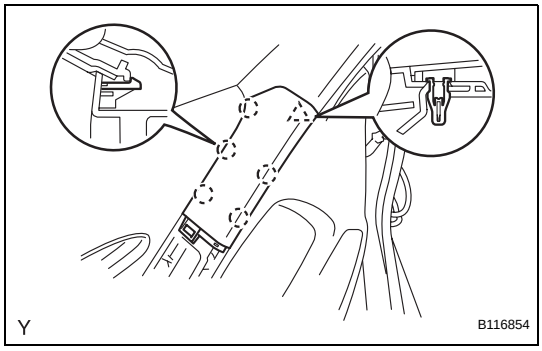

26. INSTALL FRONT ARMREST BASE PANEL UPPER

(a) Engage the 5 claws and clip and install the front door armrest base panel upper.

ED

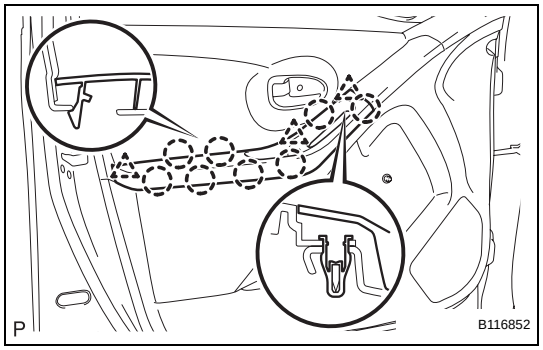

27. INSTALL DOOR ARMREST COVER

(a) for 5 Door:
Engage the 8 claws and 3 clips and install the door armrest cover.

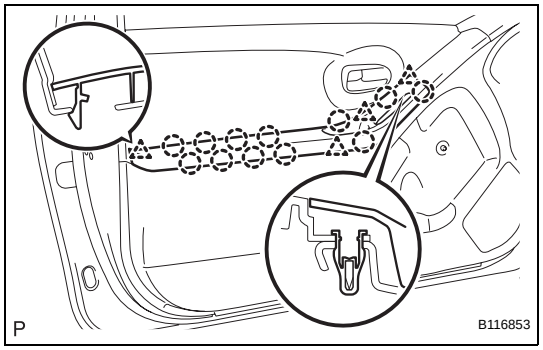

(b) for 3 Door:
Engage the 12 claws and 4 clips and install the door armrest cover.

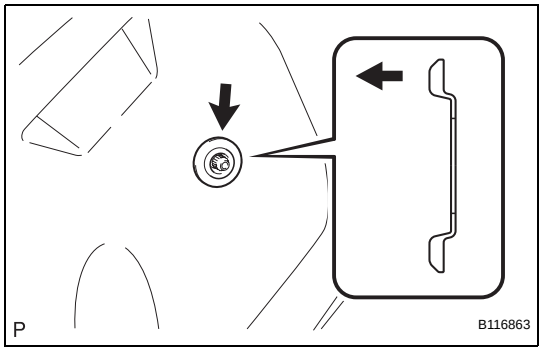

28. INSTALL DOOR WINDOW REGULATOR HANDLE ASSEMBLY

(a) Install the window regulator handle plate.
(b) Open all the windows.

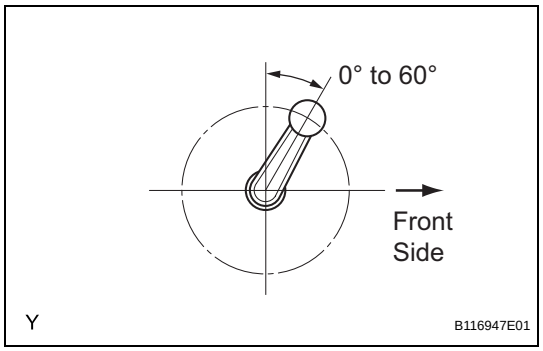

(c) Install the front door window regulator handle with the clip at the angle shown in the illustration.

29. CONNECT CABLE TO NEGATIVE BATTERY TERMINAL
Torque: 5.4 N*m (55 kgf*cm, 48 in.*lbf)

ED

REAR DOOR (for Sedan)

COMPONENTS

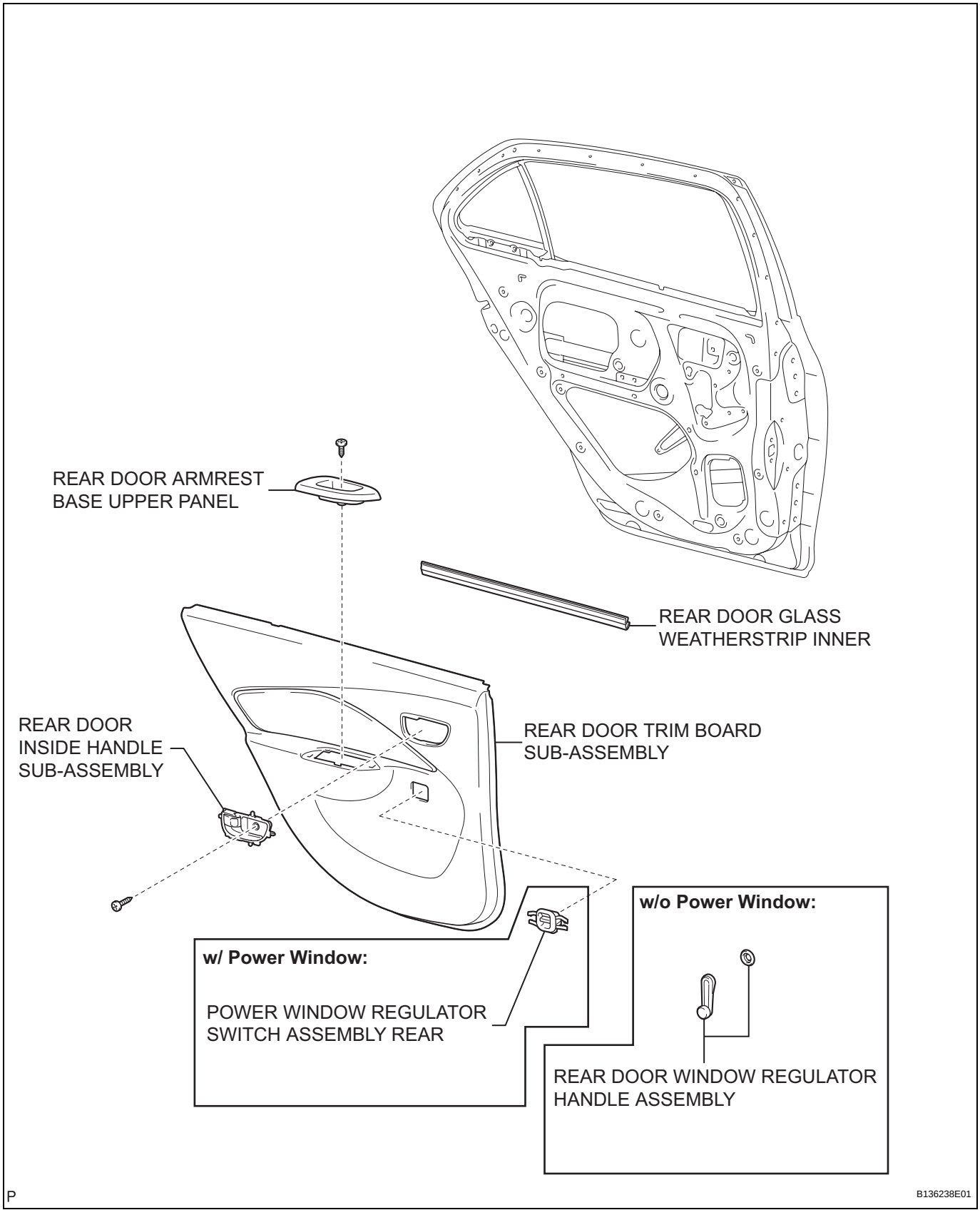

ED

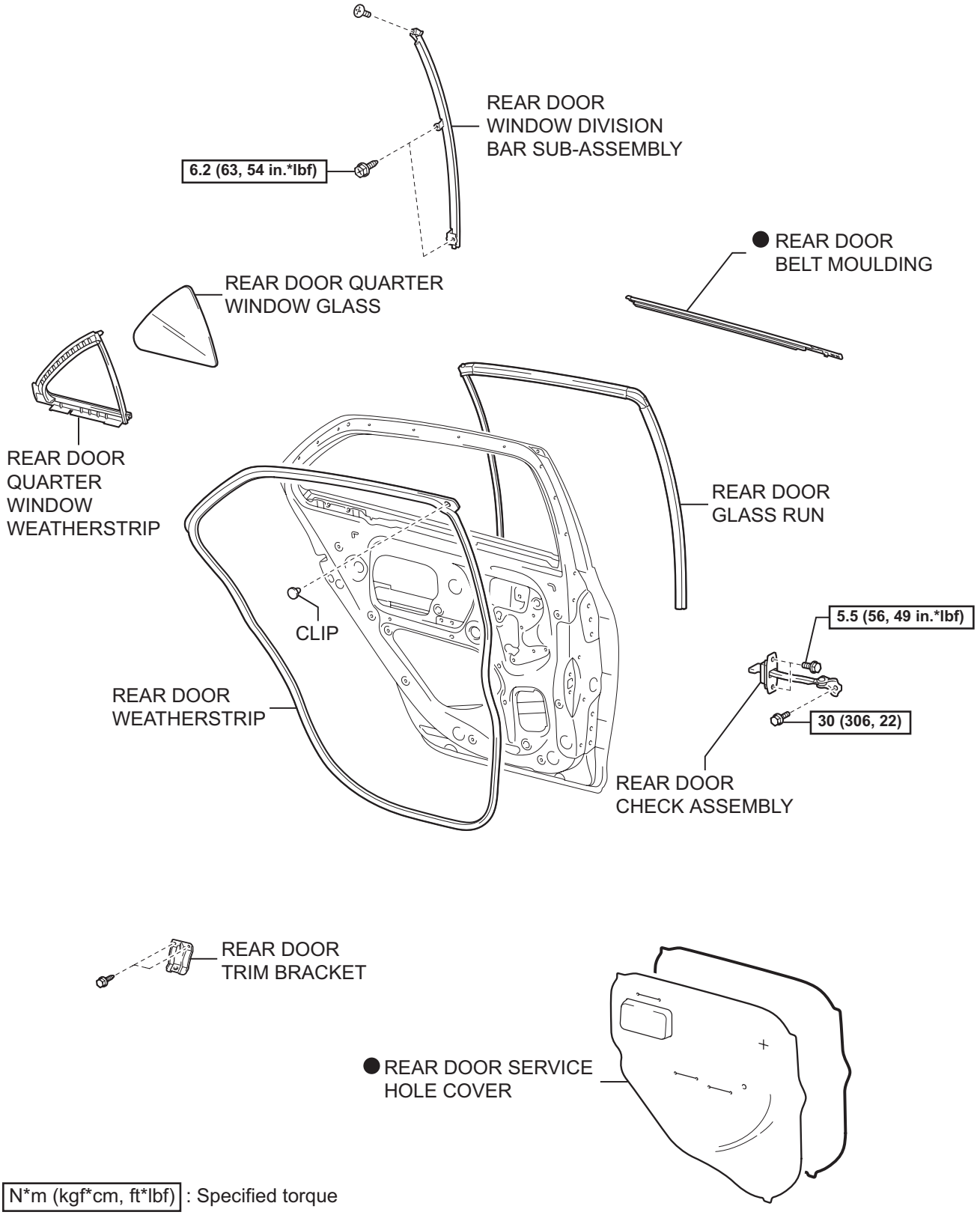

ED

P

B141930E01

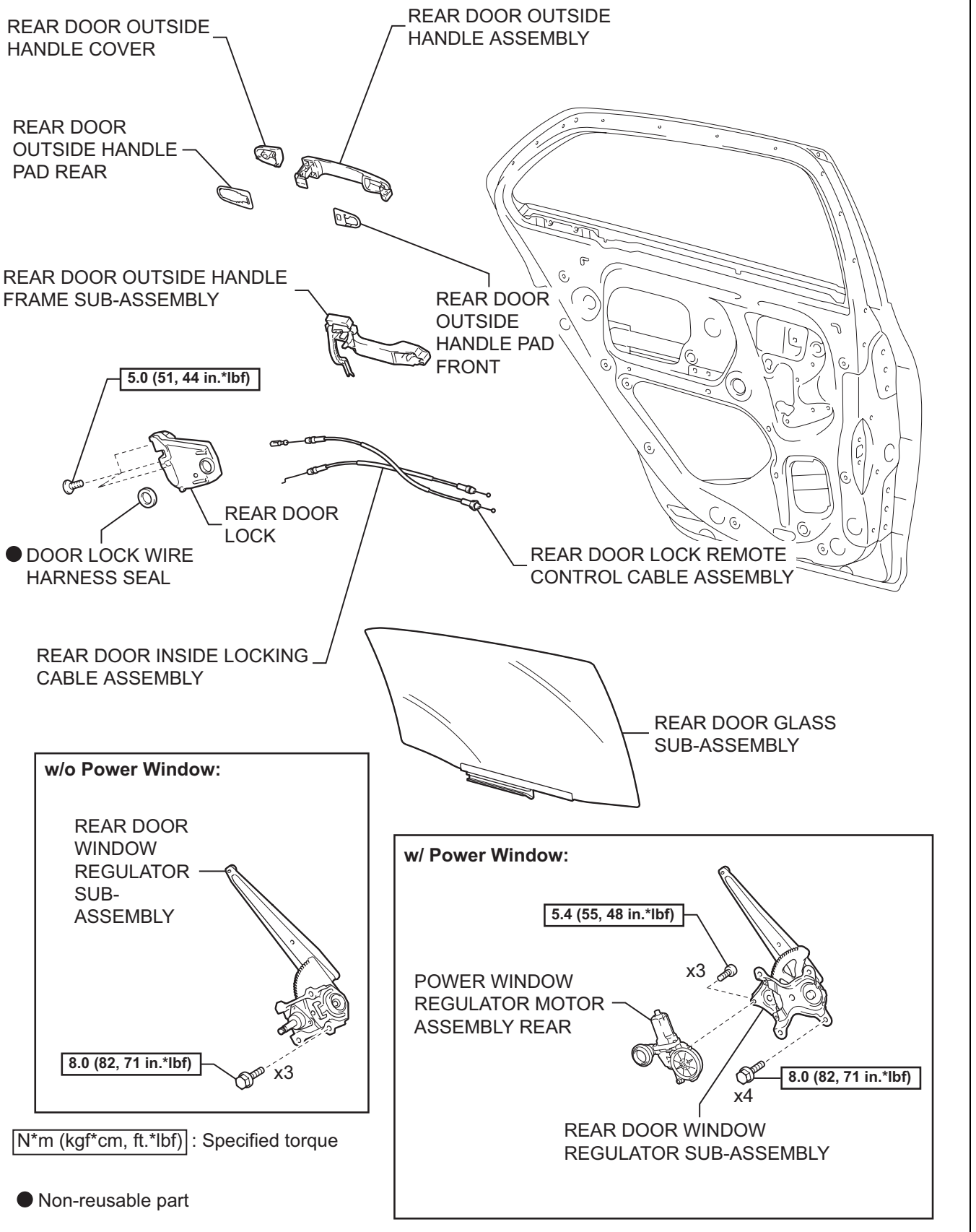

ED

P

B136240E01

DISASSEMBLY

HINT:
- Use the same procedure for both the RH and LH sides.
- The procedure described below is for the LH side.

1. DISCONNECT CABLE FROM NEGATIVE BATTERY TERMINAL

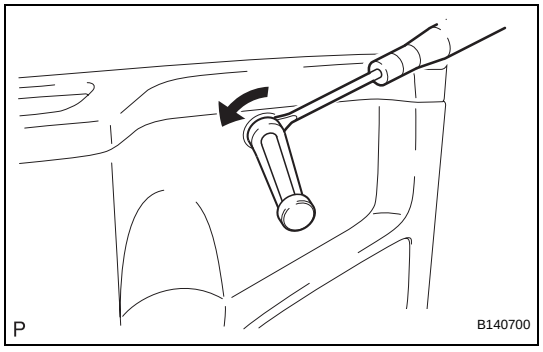

2. REMOVE REAR DOOR WINDOW REGULATOR HANDLE ASSEMBLY (w/o Power Window)

(a) Insert a clip remover between the plate and door trim.
(b) Turn the handle with the clip remover inserted, as shown in the illustration.
(c) Remove the rear door window regulator handle assembly and clip.
(d) Remove the window regulator handle plate.

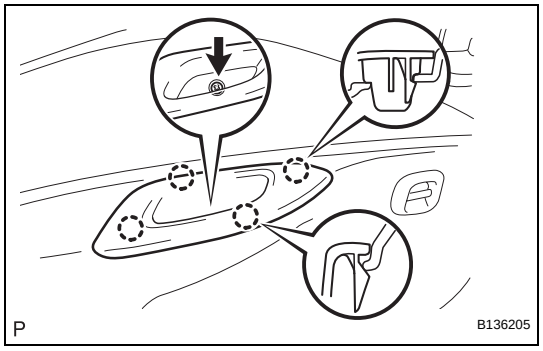

3. REMOVE REAR DOOR ARMREST BASE UPPER PANEL

(a) Disengage the 4 claws and remove the rear door armrest base upper panel.

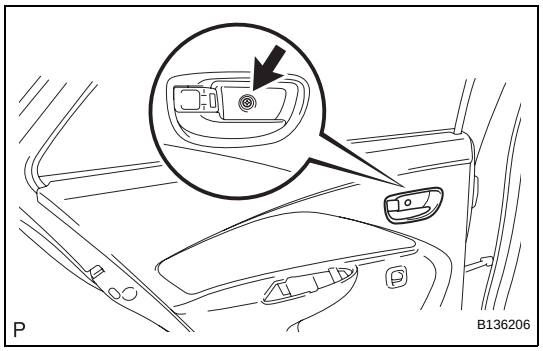

4. REMOVE REAR DOOR TRIM BOARD SUB-ASSEMBLY

(a) Remove the screw.

(b) Disengage the 7 clips.
(c) w/ Power window:
Disconnect the connector.

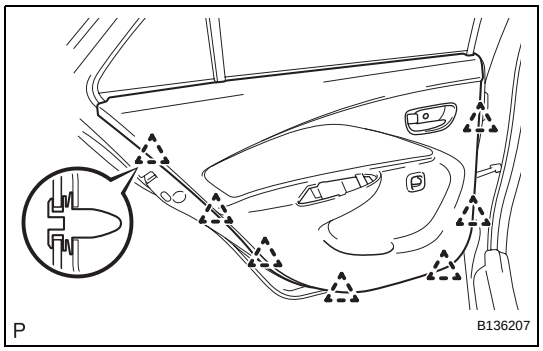

ED

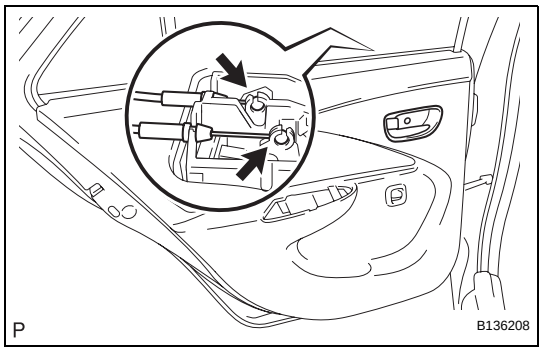

(d) Disconnect the rear door lock remote control cable and rear door inside locking cable and remove the rear door trim board.

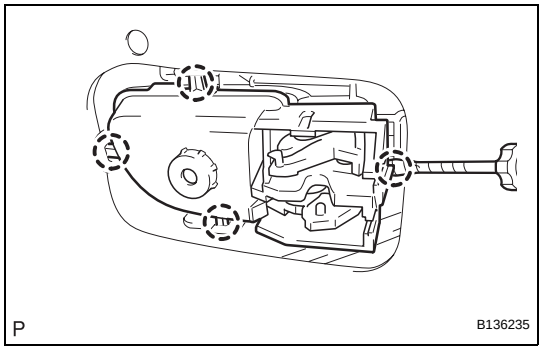

5. REMOVE REAR DOOR INSIDE HANDLE SUB-ASSEMBLY

(a) Using a screwdriver with its tip wrapped in protective tape, disengage the 4 claws and remove the rear door inside handle.

6. REMOVE REAR DOOR GLASS WEATHERSTRIP INNER

(a) Remove the rear door glass weatherstrip inner from the rear door trim board.

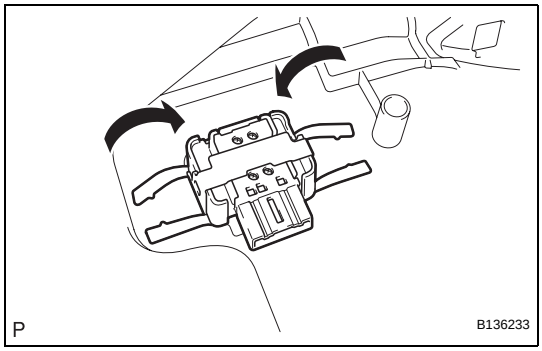

7. REMOVE POWER WINDOW REGULATOR SWITCH ASSEMBLY REAR (w/ Power Window)

(a) Disengage the set plate and remove the power window regulator switch.

ED

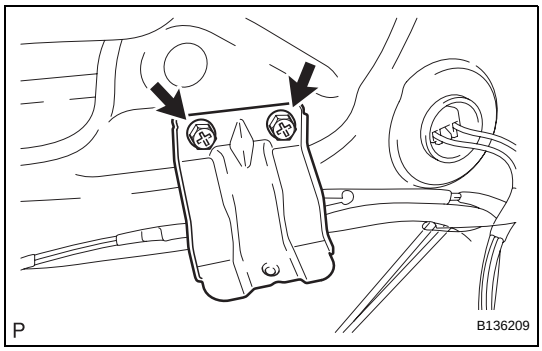

8. REMOVE REAR DOOR TRIM BRACKET

(a) Remove the 2 screws and the rear door trim bracket.

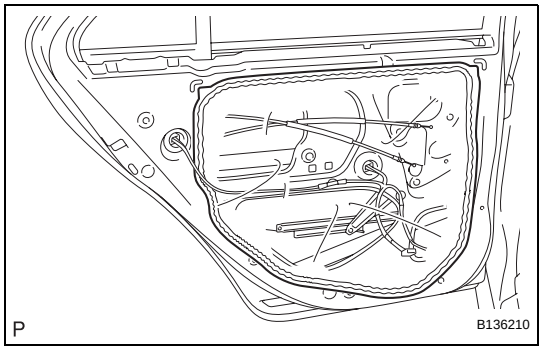

9. REMOVE REAR DOOR SERVICE HOLE COVER

(a) Disconnect the connectors and clamps, then remove the rear door service hole cover.
NOTICE:
Remove any tape remaining on the door side.

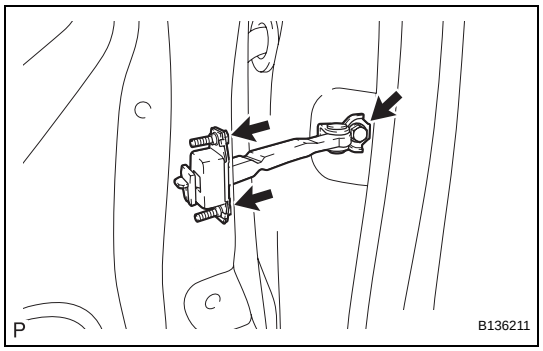

10. REMOVE REAR DOOR CHECK ASSEMBLY

(a) Remove the 3 bolts, then remove the rear door check.

NOTICE:

Do not drop or damage the door check when removing the bolts.

HINT:

Remove the door check through the service hole.

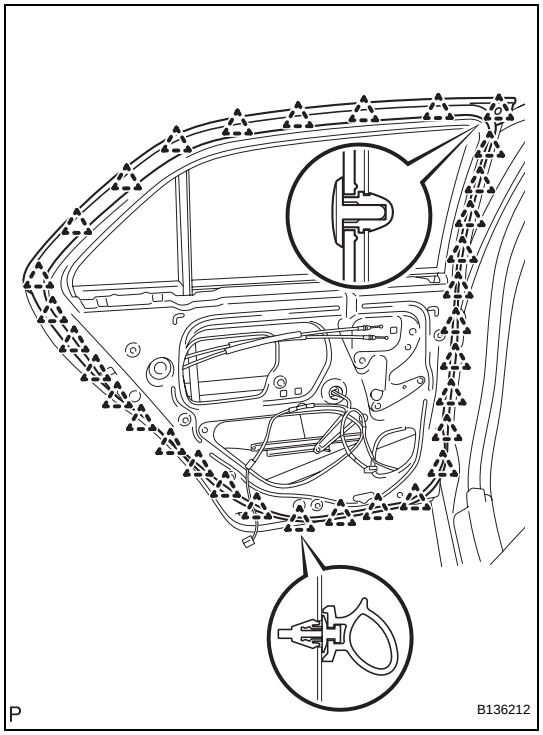

11. REMOVE REAR DOOR WEATHERSTRIP

(a) Disengage the 32 clips and remove the rear door weatherstrip.

NOTICE:

Remove any tape remaining on the door side.

12. REMOVE REAR DOOR BELT MOULDING (See page ET-95)

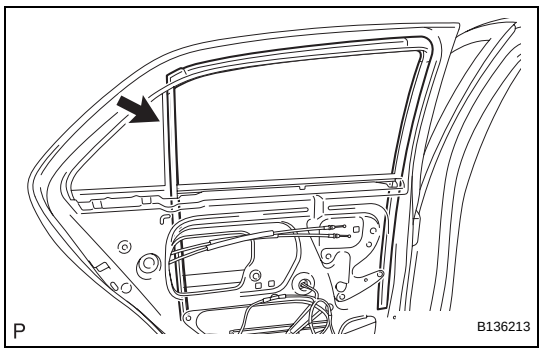

13. REMOVE REAR DOOR GLASS RUN

(a) Remove the rear door glass run.

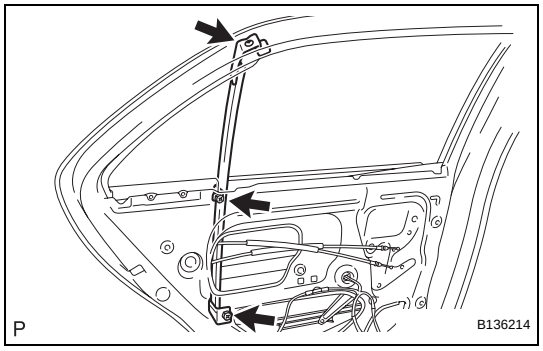

14. REMOVE REAR DOOR WINDOW DIVISION BAR SUB-ASSEMBLY

(a) Remove the 2 bolts, screw and rear door window division bar.

NOTICE:

Do not drop or damage the rear door window division bar when removing the bolts and screw.

ED

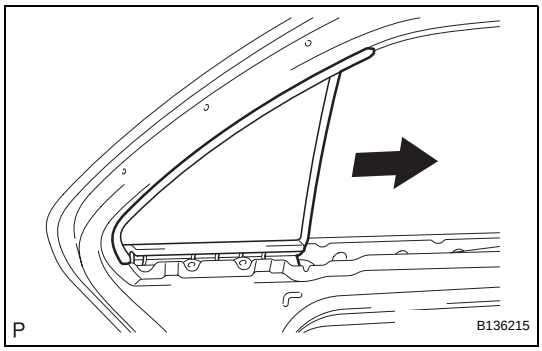

15. REMOVE REAR DOOR QUARTER WINDOW WEATHERSTRIP

(a) Slide the rear door quarter window weatherstrip, in the direction indicated by the arrow in the illustration, to remove it.

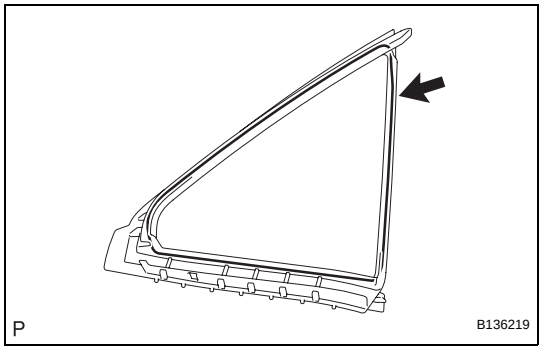

(b) Remove the rear door quarter window glass from the rear door quarter window weatherstrip.

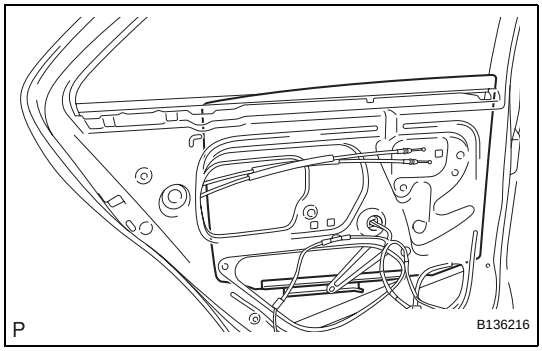

16. REMOVE REAR DOOR GLASS SUB-ASSEMBLY

(a) w/ Power window:

(1) Remove the rear door glass from the rear door window regulator.

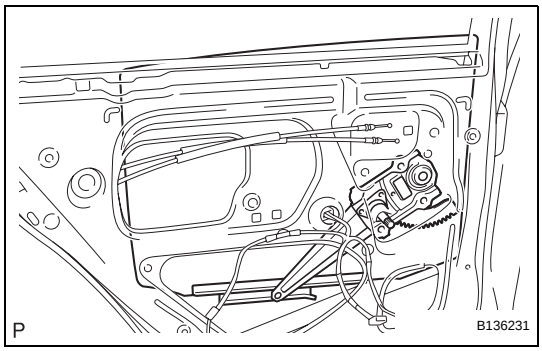

(b) w/o Power window:

(1) Remove the rear door glass from the rear door window regulator.

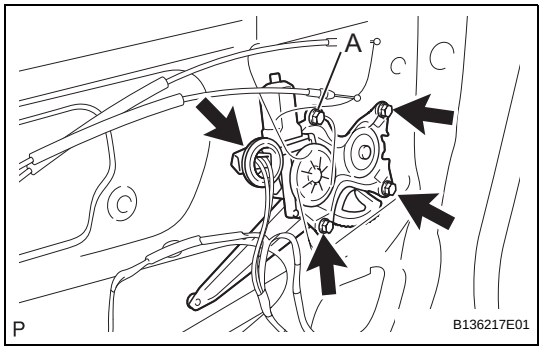

17. REMOVE REAR DOOR WINDOW REGULATOR SUB-ASSEMBLY

(a) w/ Power window:

(1) Disconnect the connector.

(2) Loosen bolt A.

(3) Remove the 3 bolts, then remove the rear door window regulator.

NOTICE:

Do not drop or damage the rear door window regulator when removing the bolts.

ED

HINT:
Remove the window regulator through the service hole.

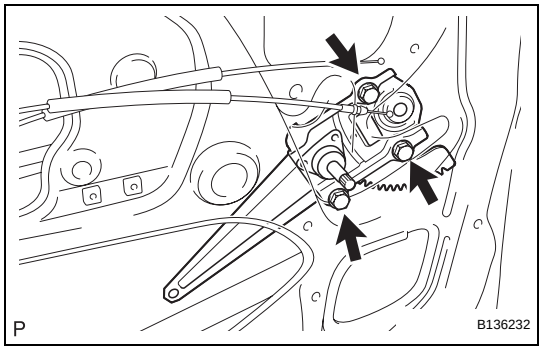

(b) w/o Power window:
(1) Remove the 3 bolts, then remove the rear door window regulator.
NOTICE:
Do not drop or damage the rear door window regulator when removing the bolts.
HINT:
Remove the window regulator through the service hole.

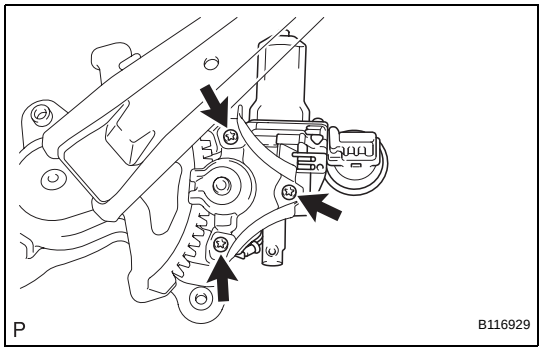

18. REMOVE POWER WINDOW REGULATOR MOTOR ASSEMBLY REAR (w/ Power Window)
(a) Using "Torx" socket wrench T25, remove the 3 screws and power window regulator motor.

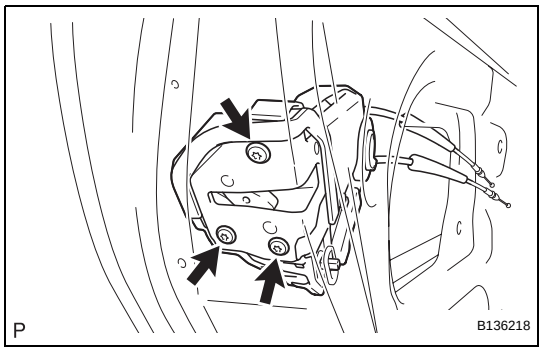

19. REMOVE REAR DOOR LOCK
(a) Using "Torx" socket wrench T30, remove the 3 screws.
(b) Move the rear door lock downward, remove the outside handle frame release plate and remove the rear door lock.
NOTICE:
Do not drop or damage the rear door lock when removing the screws.
HINT:
Remove the rear door lock through the service hole.

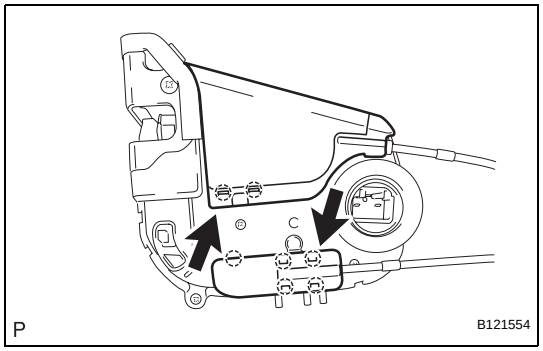

(c) Open the 2 covers.

ED

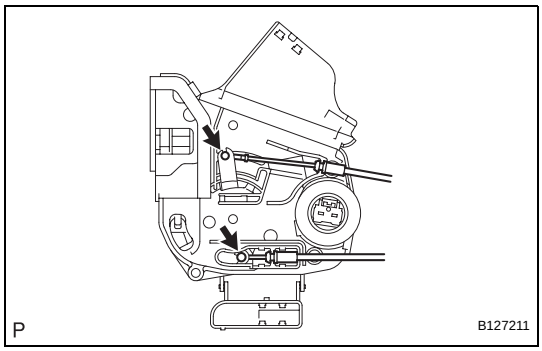

(d) Disconnect the rear door lock remote control cable and rear door inside locking cable.
(e) Remove the door lock wire harness seal.

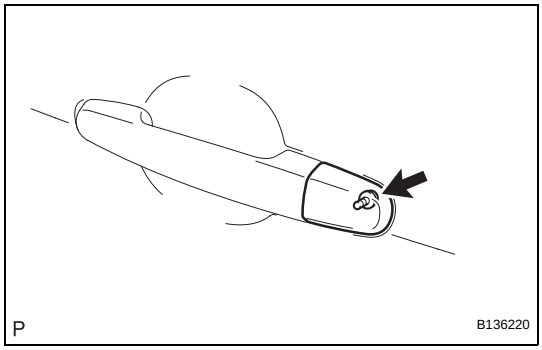

20. REMOVE REAR DOOR OUTSIDE HANDLE COVER
(a) Using "Torx" socket wrench T30, remove the screw and rear door outside handle cover.

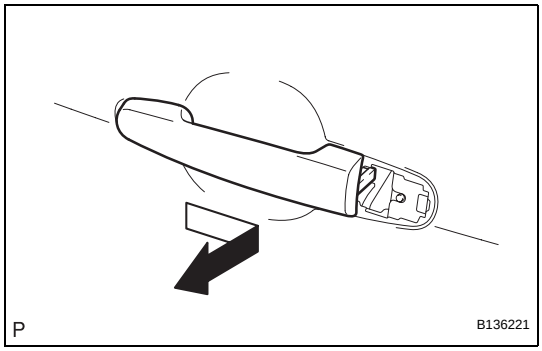

21. REMOVE REAR DOOR OUTSIDE HANDLE ASSEMBLY
(a) Remove the handle by sliding and pulling it in the direction indicated by the arrow mark in the illustration.

ED

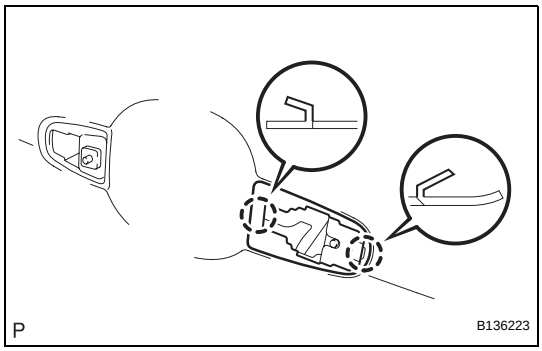

22. REMOVE REAR DOOR OUTSIDE HANDLE PAD REAR
(a) Disengage the 2 claws and remove the rear door outside handle pad rear.

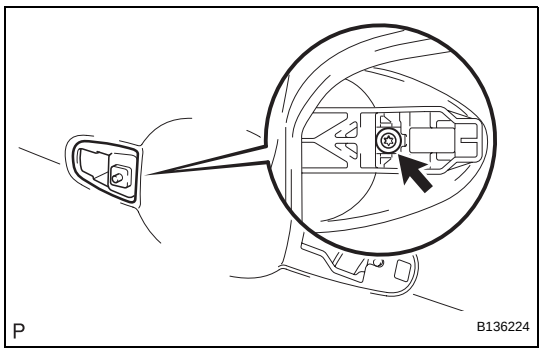

23. REMOVE REAR DOOR OUTSIDE HANDLE PAD FRONT
(a) Using "Torx" socket wrench T30, loosen the screw.

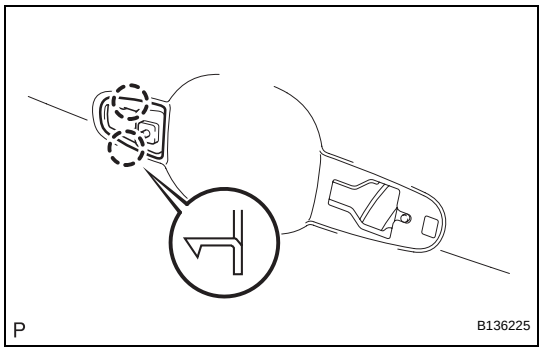

(b) Disengage the 2 claws and remove the rear door outside handle pad front.

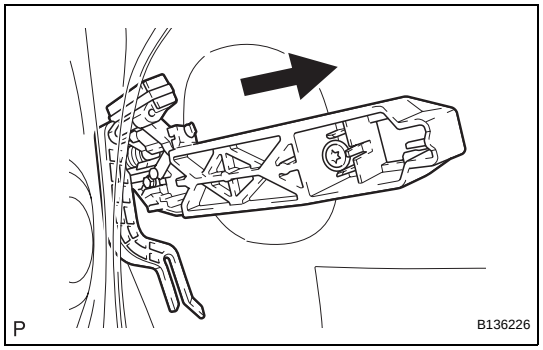

24. REMOVE REAR DOOR OUTSIDE HANDLE FRAME SUB-ASSEMBLY

(a) Slide the outside handle frame to remove it.

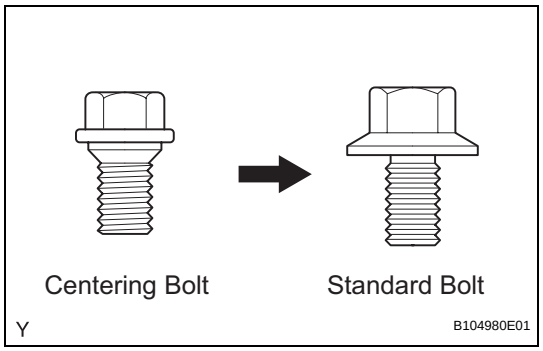

ADJUSTMENT

HINT:

- Before adjusting the door position on vehicles equipped with side airbags and curtain shield airbags, be sure to disconnect the battery. After the adjustment, inspect the SRS warning light, the side airbag system and the curtain shield airbag system for normal operation. Then initialize both airbag systems.
- Use the same procedure for the RH and LH sides.
- The procedures described below are for the LH side.
- Centering bolts are used to mount the door hinge onto the vehicle body and door. The door cannot be adjusted with the centering bolts on. Substitute standard bolts (with washers) for the centering bolts when making adjustments.
- For bolts without torque specifications, check the standard bolt chart (see page SS-2).

1. INSPECT REAR DOOR

(a) Check that the clearance measurements are within the standard ranges.

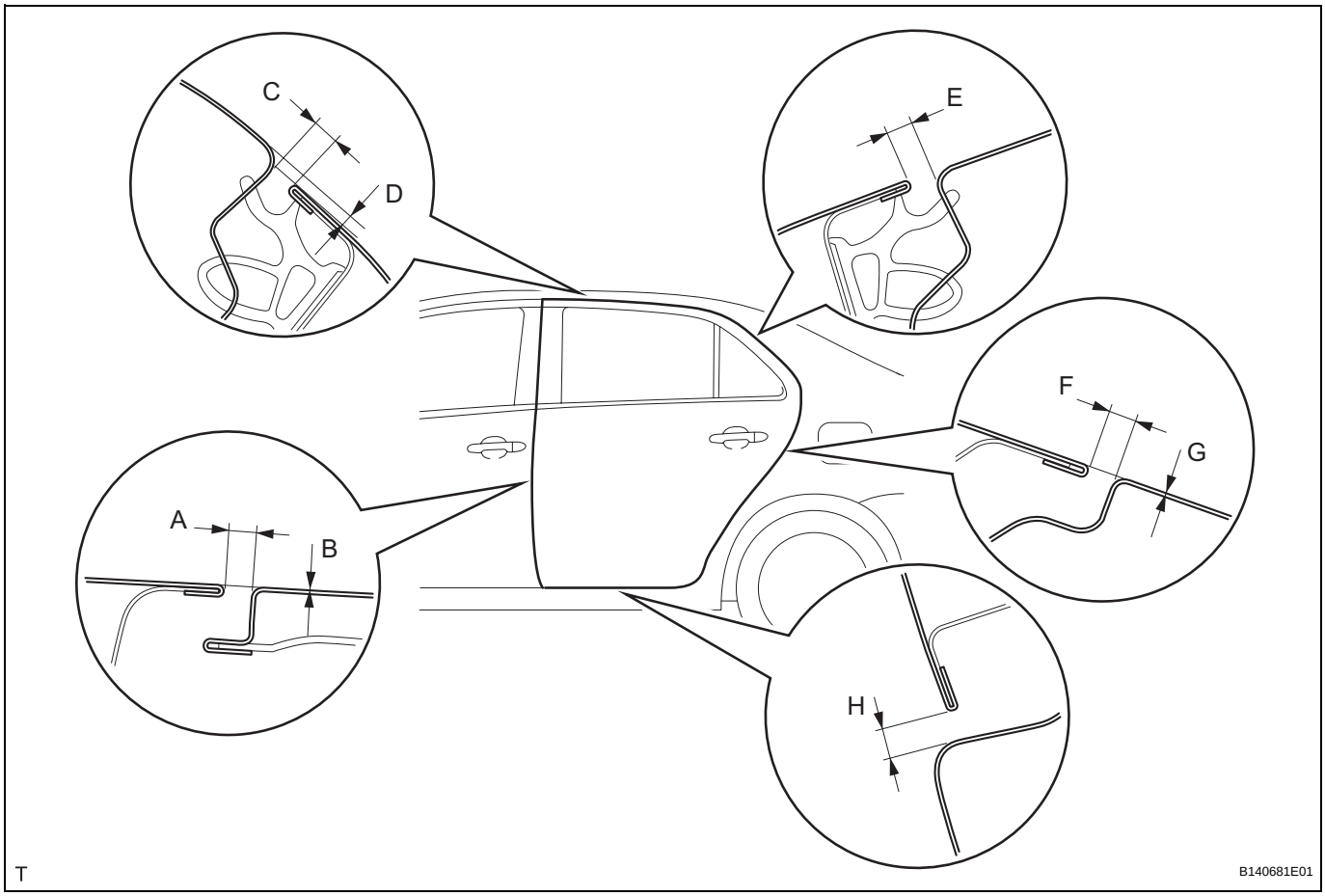

Standard

Area	Measurement	Area	Measurement
A	3.3 to 6.3 mm (0.130 to 0.248 in.)	E	2.5 to 5.5 mm (0.098 to 0.217 in.)
B	-1.5 to 1.5 mm (-0.059 to 0.059 in.)	F	2.5 to 5.5 mm (0.098 to 0.217 in.)
C	3.2 to 6.2 mm (0.126 to 0.244 in.)	G	-1.5 to 1.5 mm (-0.059 to 0.059 in.)
D	1.3 to 4.3 mm (0.051 to 0.169 in.)	H	4.2 to 7.2 mm (0.165 to 0.283 in.)

2. ADJUST REAR DOOR

(a) Disconnect the cable from the negative battery terminal.

Wait for at least 90 seconds after disconnecting the cable to prevent the airbag from working.

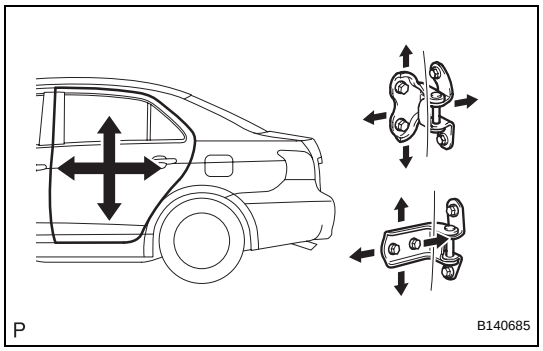

(b) Adjust the door horizontally and vertically by loosening the body side hinge bolts.
(c) Tighten the body side hinge bolts after the adjustment.
Torque: 26 N*m (265 kgf*cm, 19 ft.*lbf)

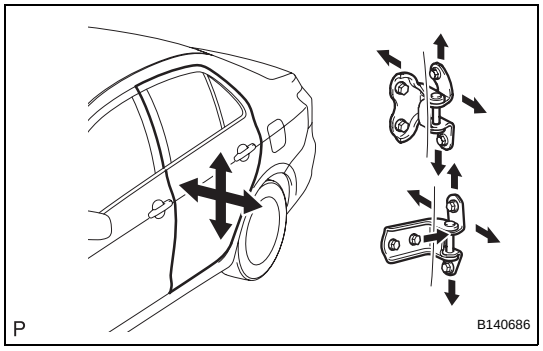

(d) Adjust the door horizontally and vertically by loosening the door side hinge bolts.
(e) Tighten the door side hinge bolts after the adjustment.
Torque: 26 N*m (265 kgf*cm, 19 ft.*lbf)

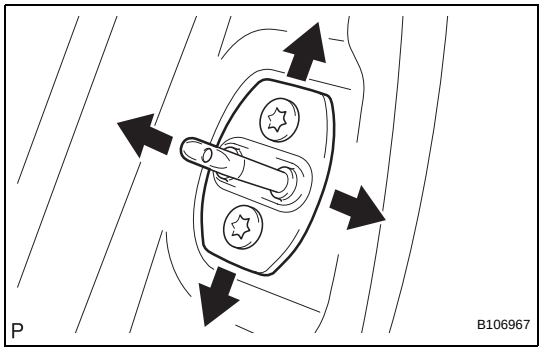

(f) Using "Torx" socket wrench T40, adjust the striker position by slightly loosening the striker mounting screws and hitting the striker with a plastic-faced hammer.
(g) Using "Torx" socket wrench T40, tighten the striker mounting screws after the adjustment.
Torque: 23 N*m (235 kgf*cm, 17 ft.*lbf)
(h) Connect the cable to the negative battery terminal.
Torque: 5.4 N*m (55 kgf*cm, 48 in.*lbf)

REASSEMBLY

1. INSTALL REAR DOOR OUTSIDE HANDLE FRAME SUB-ASSEMBLY

(a) Apply MP grease to the sliding areas of the rear door outside handle frame.

(b) Slide the outside handle frame to install it.

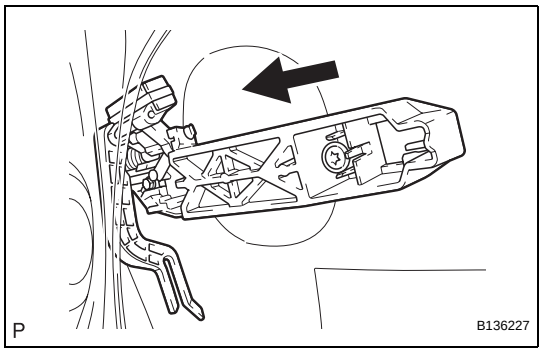

2. INSTALL REAR DOOR OUTSIDE HANDLE PAD FRONT

(a) Engage the 2 claws and install the rear door outside handle pad front.

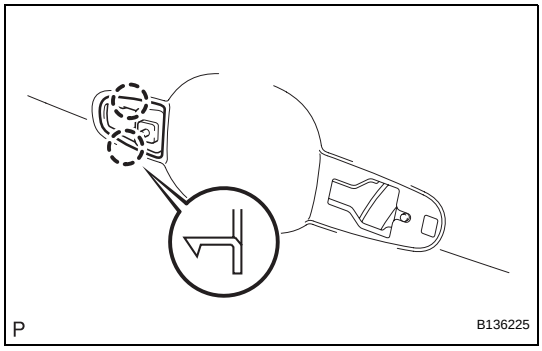

(b) Using "Torx" socket wrench T30, tighten the screw.
Torque: 4.0 N*m (41 kgf*cm, 35 in.*lbf)

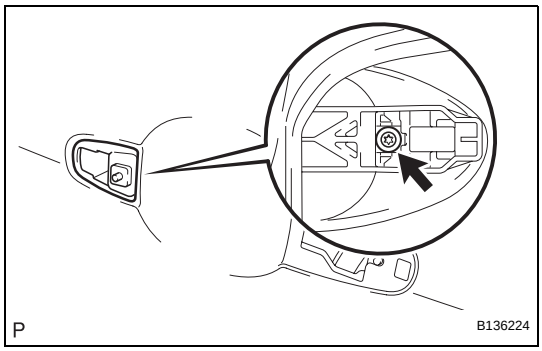

3. INSTALL REAR DOOR OUTSIDE HANDLE PAD REAR

(a) Engage the 2 claws and install the rear door outside handle pad rear.

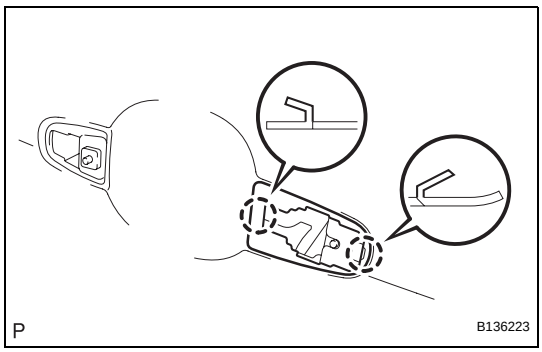

ED

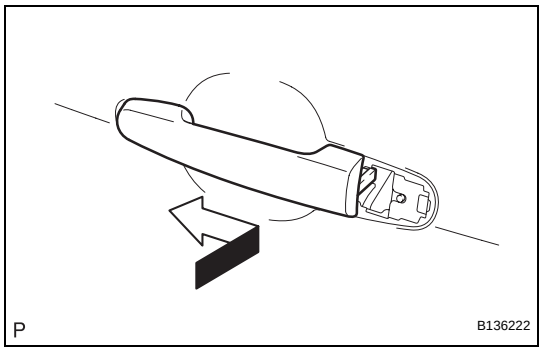

4. INSTALL REAR DOOR OUTSIDE HANDLE ASSEMBLY

(a) Pushing the rear door outside handle in the direction of the arrow mark shown in the illustration, install the rear door outside handle.

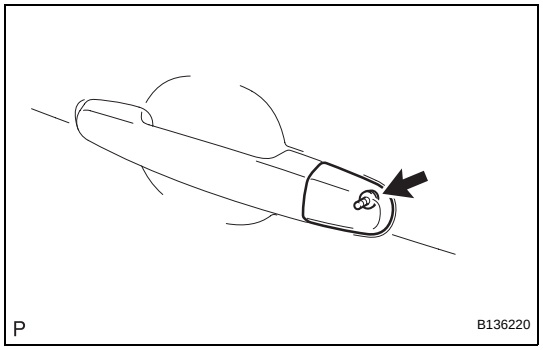

5. INSTALL REAR DOOR OUTSIDE HANDLE COVER

(a) Using "Torx" socket wrench T30, install the rear door outside handle cover with the screw.
Torque: 4.0 N*m (41 kgf*cm, 35 in.*lbf)

6. INSTALL REAR DOOR LOCK

NOTICE:

- **If reusing a door lock that has been removed, replace the packing in the connecting part with new.**
- **Make sure that no grease or dirt adheres to the packing surface in the connecting part.**

(a) Apply MP grease to the sliding and rotating areas of the front door lock.

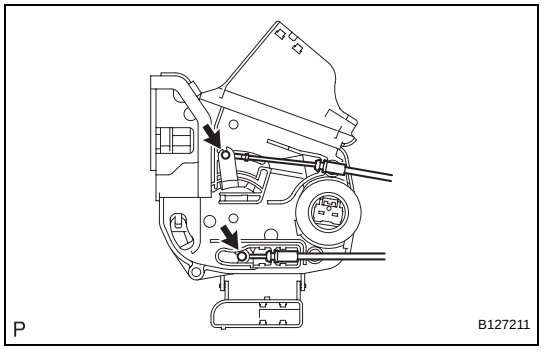

(b) Connect the rear door lock remote control cable and rear door inside locking cable.

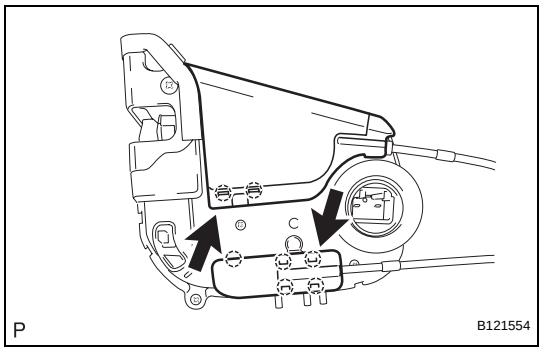

(c) Close the 2 covers.

(d) Insert the door lock into the outside handle frame release plate, then set it onto the door panel.

(e) Make sure that the outside handle frame link is securely engaged with the door lock.

(f) Apply adhesive to the threads of the screws.
Adhesive:
Toyota Genuine Adhesive 1324, Three Bond 1324 or the equivalent.

ED

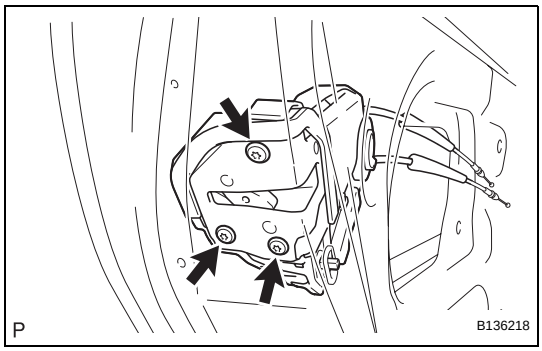

(g) Using "Torx" socket wrench T30, install the rear door lock with the 3 screws.
Torque: 5.0 N*m (51 kgf*cm, 44 in.*lbf)

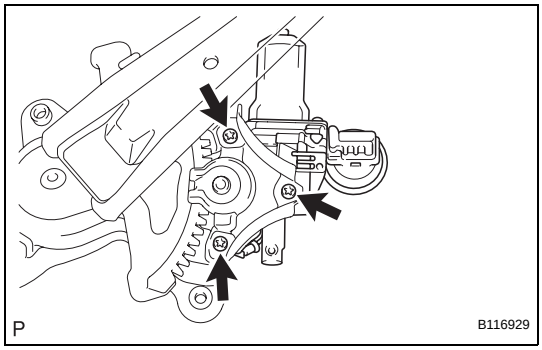

7. INSTALL POWER WINDOW REGULATOR MOTOR ASSEMBLY REAR (w/ Power Window)

(a) Apply MP grease to the sliding and rotating areas of the regulator motor.

(b) Using "Torx" socket wrench T25, install the power window regulator motor with the 3 screws.
Torque: 5.4 N*m (55 kgf*cm, 48 in.*lbf)

8. INSTALL REAR DOOR WINDOW REGULATOR SUB-ASSEMBLY

(a) w/ Power window:

(1) Apply MP grease to the sliding and rotating areas of the rear door window regulator.
NOTICE:
Do not apply grease to the window regulator spring.

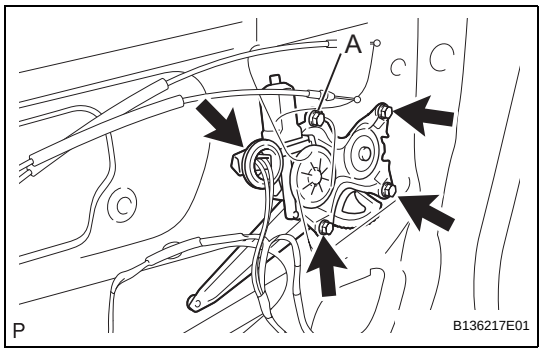

(2) Loosely screw bolt A onto the rear door window regulator.

(3) Insert the rear door window regulator into the door panel. Use bolt A to hang the rear door window regulator on the door panel.
NOTICE:
Do not drop the window regulator as it may be damaged.

(4) Install the rear door window regulator with the 4 bolts, and tighten bolt A.
Torque: 8.0 N*m (82 kgf*cm, 71 in.*lbf)

(5) Connect the connector.

(b) w/o Power window:

(1) Apply MP grease to the sliding and rotating areas of the rear door window regulator.
NOTICE:
Do not apply grease to the window regulator spring.

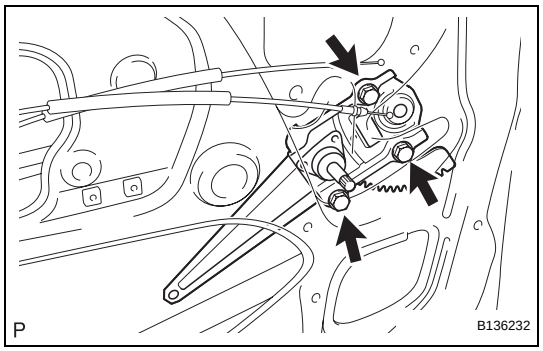

(2) Install the rear door window regulator with the 3 bolts.
Torque: 8.0 N*m (82 kgf*cm, 71 in.*lbf)

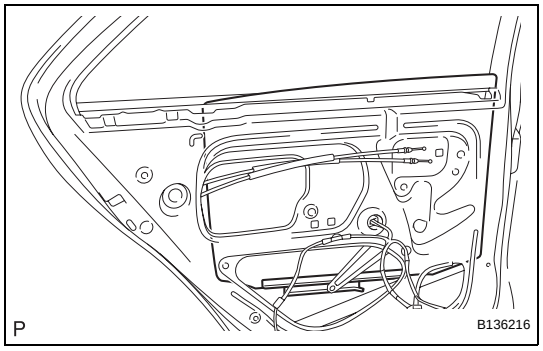

9. INSTALL REAR DOOR GLASS SUB-ASSEMBLY

(a) w/ Power window:

(1) Install the rear door glass onto the rear door window regulator.

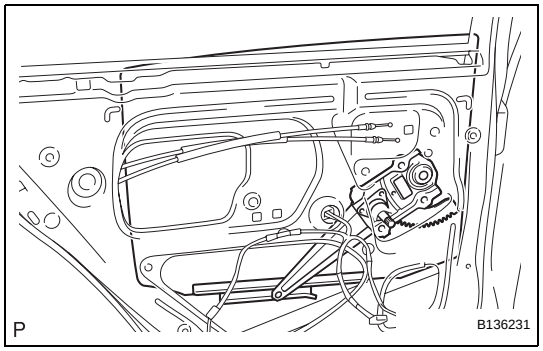

(b) w/o Power window:

(1) Install the rear door glass onto the rear door window regulator.

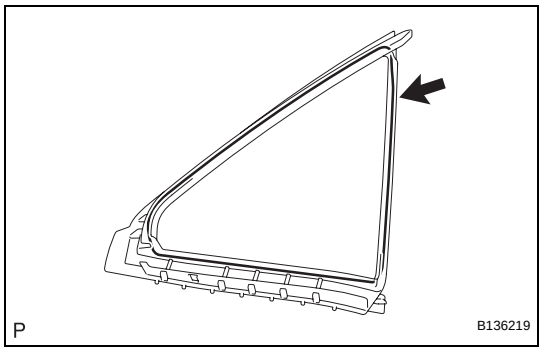

10. INSTALL REAR DOOR QUARTER WINDOW WEATHERSTRIP

(a) Install the rear door quarter window glass onto the rear door quarter window weatherstrip.

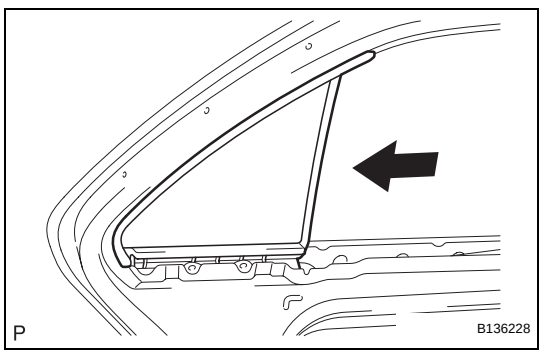

(b) Slide the rear door quarter window weatherstrip, in the direction indicated by the arrow in the illustration, to install it.

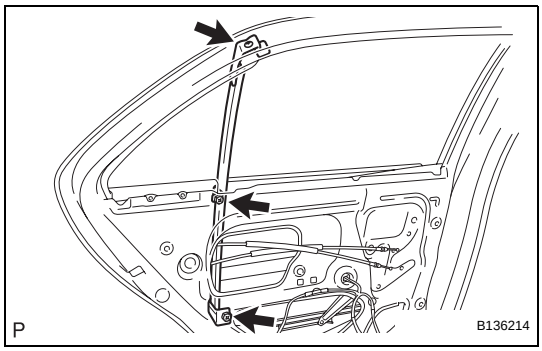

11. INSTALL REAR DOOR WINDOW DIVISION BAR SUB-ASSEMBLY

(a) Install the rear door window division bar with the 2 bolts and screw.
Torque: 6.2 N*m (63 kgf*cm, 54 in.*lbf)

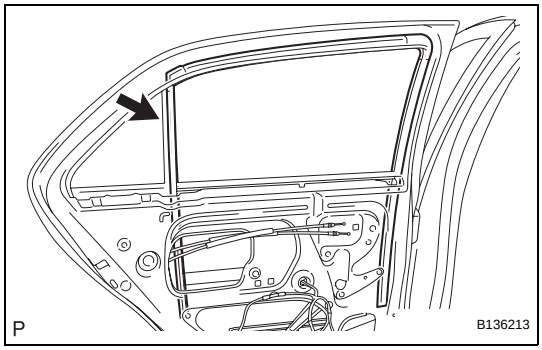

12. INSTALL REAR DOOR GLASS RUN

(a) Install the rear door glass run.

13. INSTALL REAR DOOR BELT MOULDING (See page ET-95)

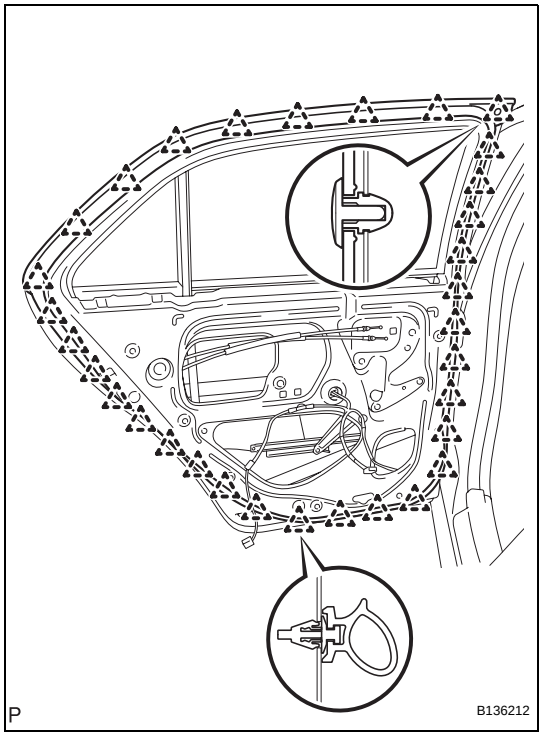

14. INSTALL REAR DOOR WEATHERSTRIP

(a) Engage the 32 clips and install the rear door weatherstrip.

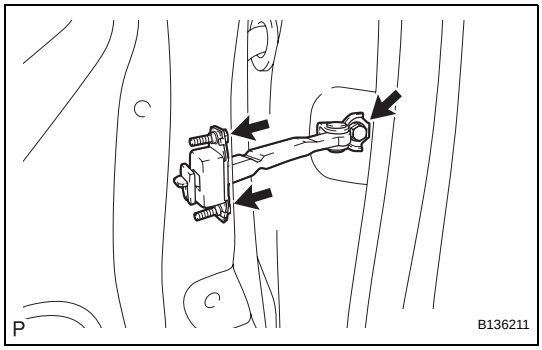

15. INSTALL REAR DOOR CHECK ASSEMBLY

(a) Apply MP grease to the sliding areas of the door check.

(b) Install the rear door check onto the door panel with the 2 bolts.
Torque: 5.5 N*m (56 kgf*cm, 49 in.*lbf)

(c) Apply adhesive to the threads of the bolt.
Adhesive:
Toyota Genuine Adhesive 1324, Three Bond 1324 or the equivalent.

ED

(d) Install the rear door check onto the body panel with the bolt.
Torque: 30 N*m (306 kgf*cm, 22 ft.*lbf)

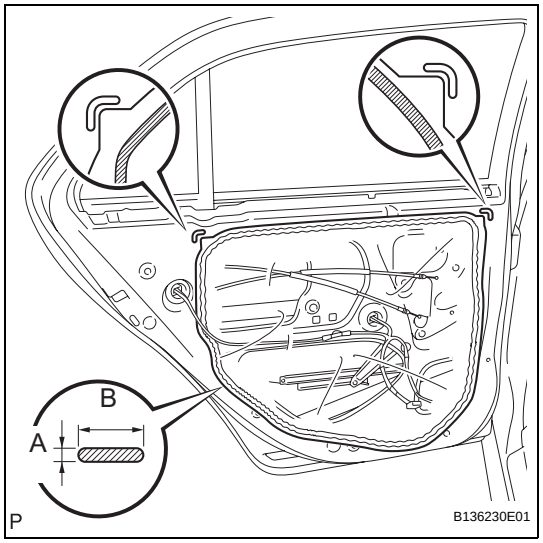

16. INSTALL REAR DOOR SERVICE HOLE COVER

(a) Apply butyl tape to the door panel, then install the rear door service hole cover as shown in the illustration.
Adhesive:
Part No. 08850-00065, Butyl Tape Set or the equivalent
Specification

Area	Dimension
A	2.0 mm (0.079 in,) or more
B	6.0 mm (0.236 in.) or more

HINT:
- When installing the service hole cover, pull the links and connectors out through the service hole.
- There should be no wrinkles or folds after attaching the service hole cover.
- After attaching the service hole cover, check the quality of the seal.

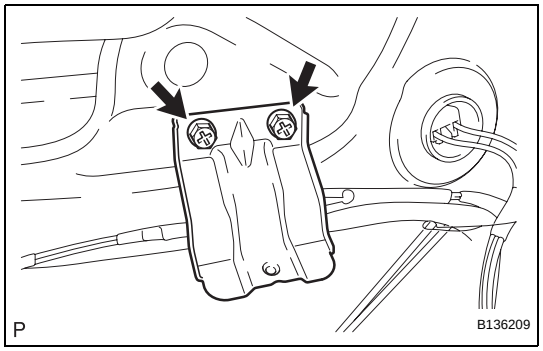

17. INSTALL REAR DOOR TRIM BRACKET

(a) Install the rear door trim bracket with the 2 screws.

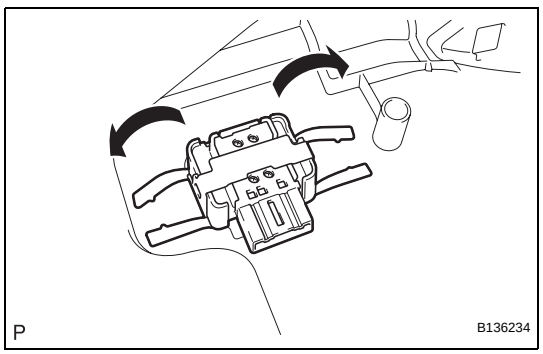

18. INSTALL POWER WINDOW REGULATOR SWITCH ASSEMBLY REAR (w/ Power Window)

(a) Engage the set plate and install the power window regulator switch.

19. INSTALL REAR DOOR GLASS WEATHERSTRIP INNER

(a) Install the rear door glass weatherstrip inner onto the rear door trim board.

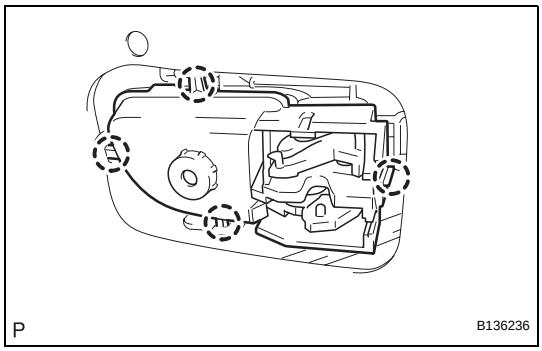

20. INSTALL REAR DOOR INSIDE HANDLE SUB-ASSEMBLY

(a) Engage the 4 claws and install the rear door inside handle.

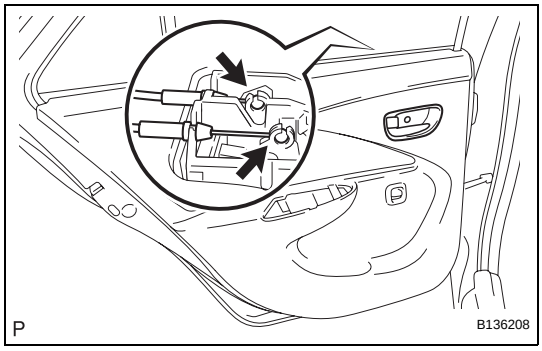

21. INSTALL REAR DOOR TRIM BOARD SUB-ASSEMBLY

(a) Connect the rear door lock remote control cable and rear door inside locking cable.

(b) w/ Power window:
Connect the connector.

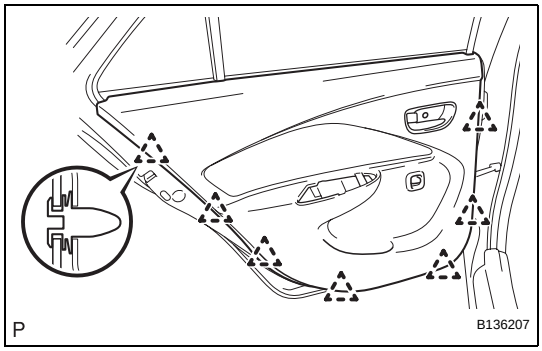

(c) Engage the 7 clips and install the rear door trim board.

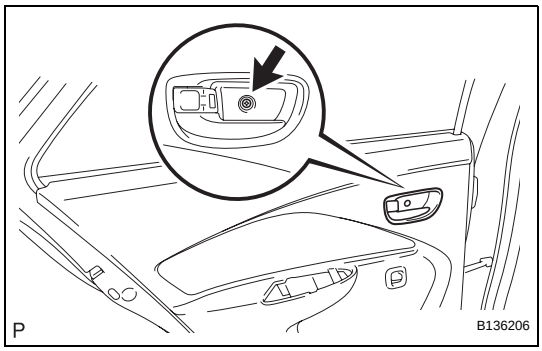

(d) Tighten the screw.

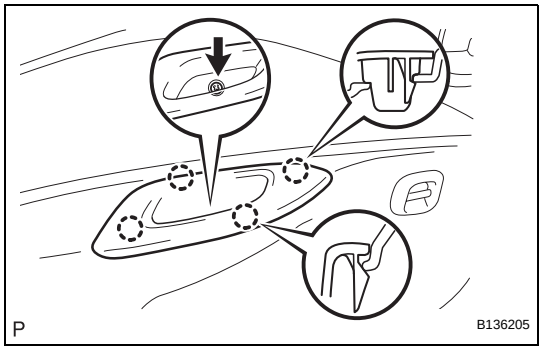

22. INSTALL REAR DOOR ARMREST BASE UPPER PANEL

(a) Engage the 4 claws and install the rear door armrest base upper panel.

ED

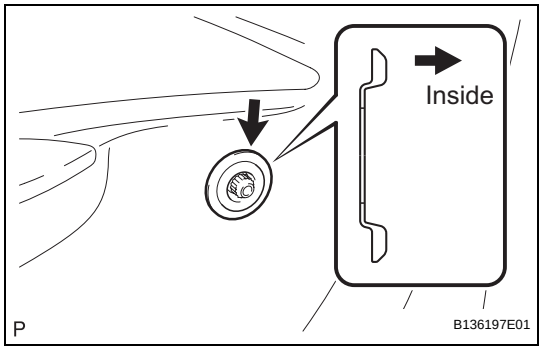

23. INSTALL REAR DOOR WINDOW REGULATOR HANDLE ASSEMBLY (w/o Power Window)

(a) Install the window regulator handle plate.

(b) Open all the windows.

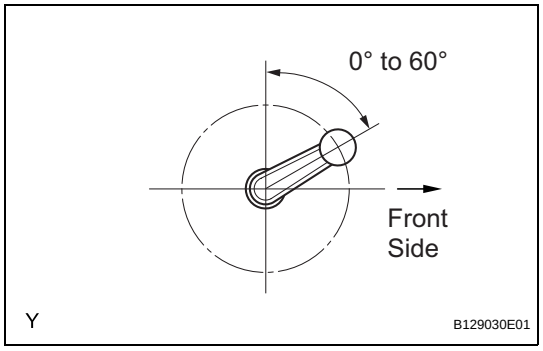

(c) Install the rear door window regulator handle with the clip at the angle shown in the illustration.

24. CONNECT CABLE TO NEGATIVE BATTERY TERMINAL

Torque: 5.4 N*m (55 kgf*cm, 48 in.*lbf)

REAR DOOR (for Hatchback with Power Window)

COMPONENTS

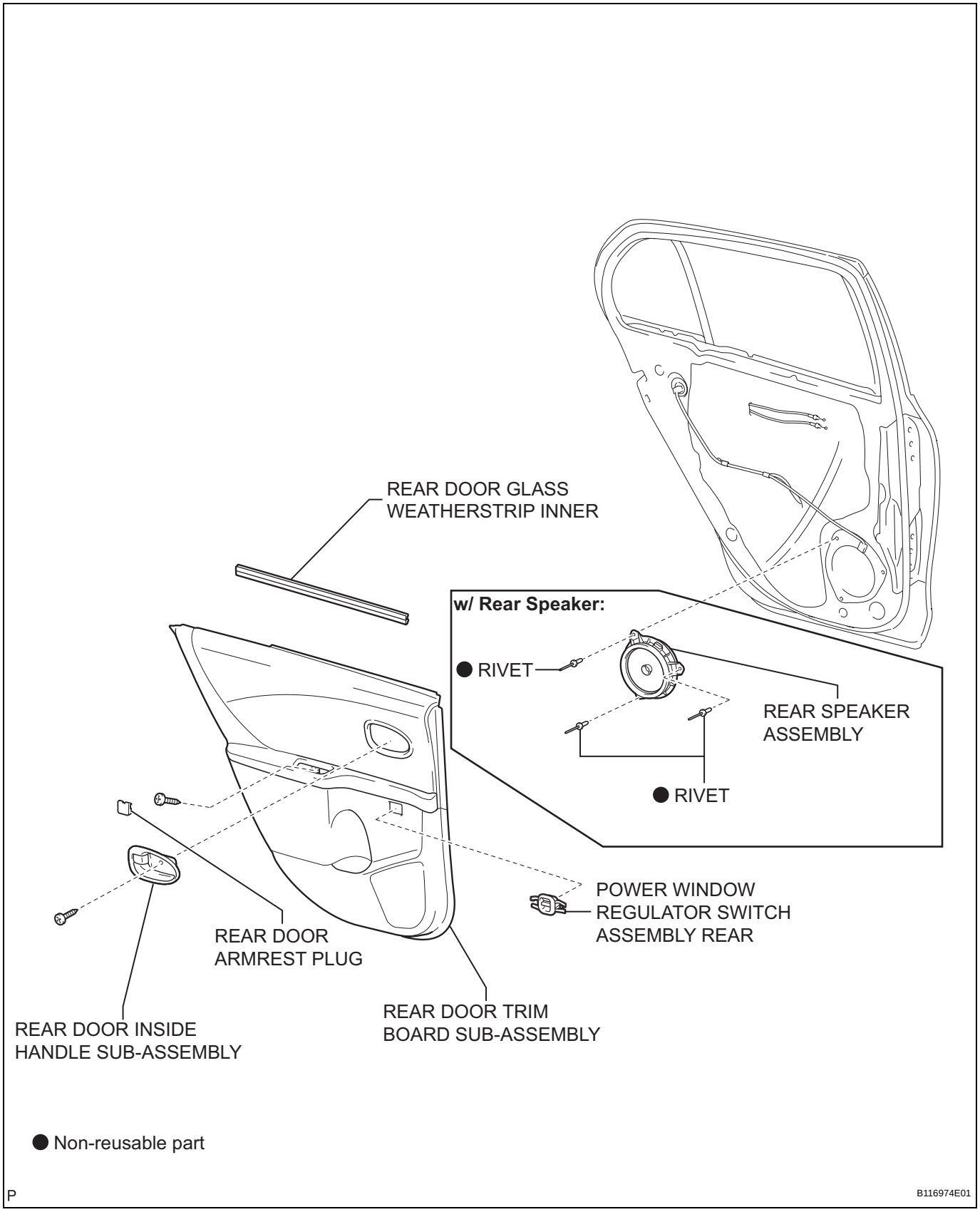

ED

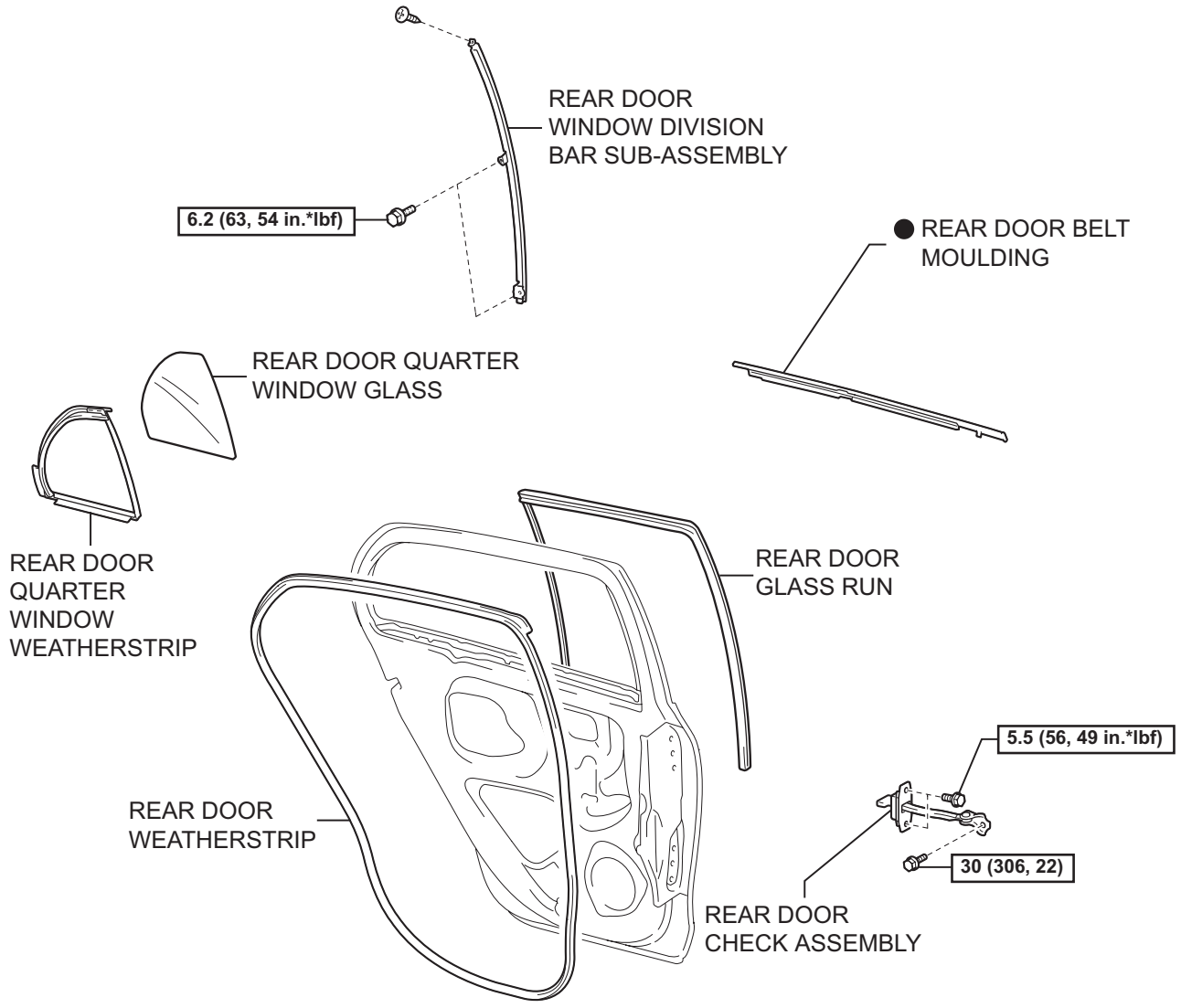

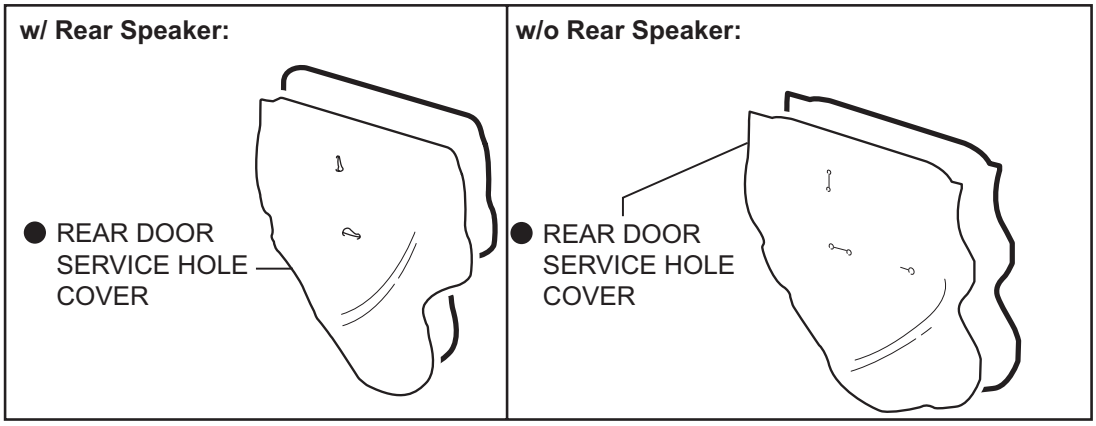

N*m (kgf*cm, ft*lbf) : Specified torque

● Non-reusable part

P

B116975E01

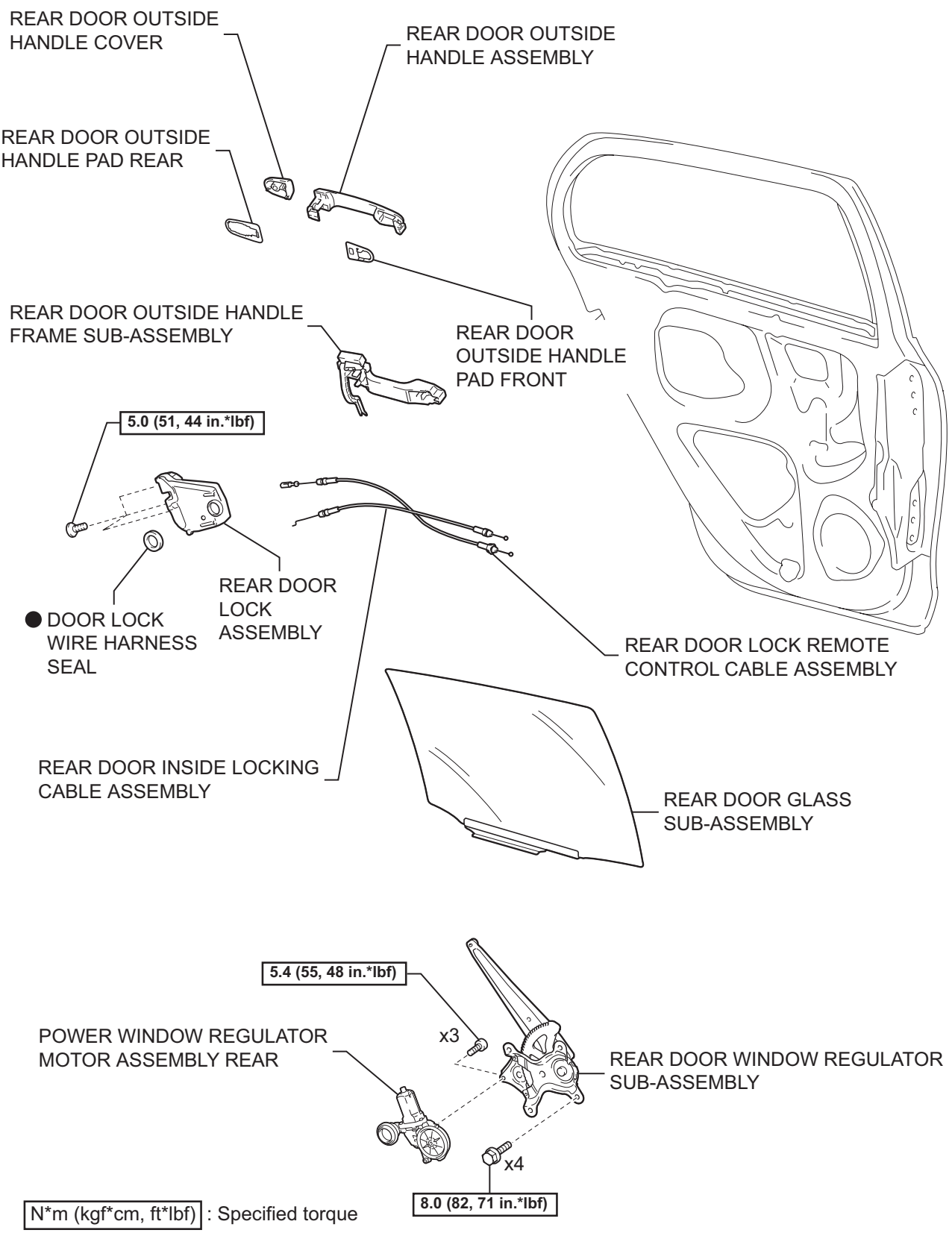

ED

P

B116976E01

DISASSEMBLY

HINT:
- Use the same procedure for both the RH and LH side.
- The procedure described below is for the LH side.

1. DISCONNECT CABLE FROM NEGATIVE BATTERY TERMINAL

2. REMOVE REAR DOOR TRIM BOARD SUB-ASSEMBLY

(a) Using a screwdriver with its tip wrapped in protective tape, disengage the 3 claws and remove the rear door armrest plug.

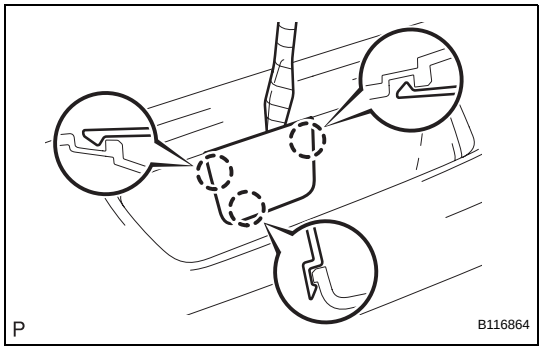

(b) Remove the 2 screws.

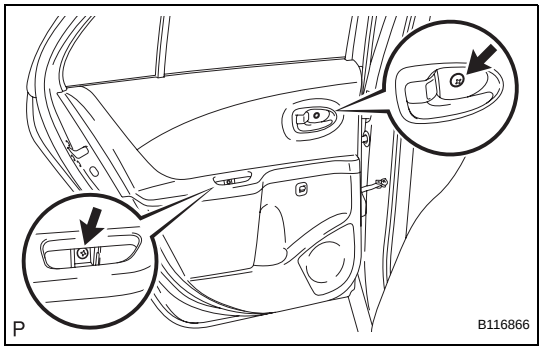

(c) Disengage the 7 clips.
(d) Disconnect the connector.

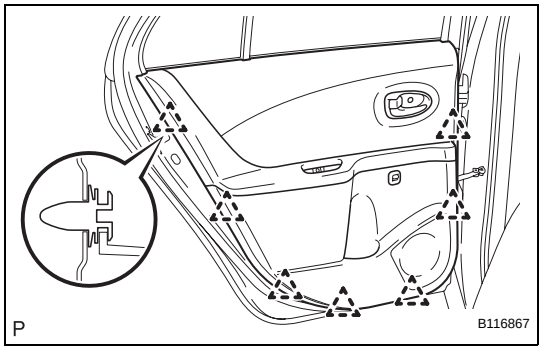

(e) Disconnect the rear door lock remote control cable and rear door inside locking cable and remove the rear door trim board.

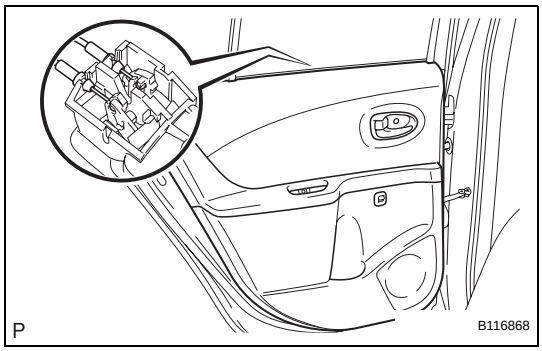

ED

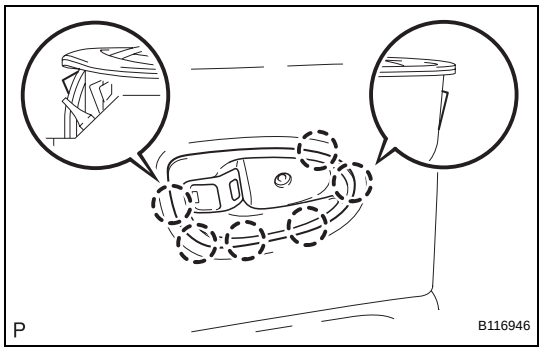

3. REMOVE REAR DOOR INSIDE HANDLE SUB-ASSEMBLY

(a) Disengage the 6 claws and remove the rear door inside handle.

4. REMOVE REAR DOOR GLASS WEATHERSTRIP INNER

(a) Remove the rear door glass weatherstrip inner from the rear door trim board.

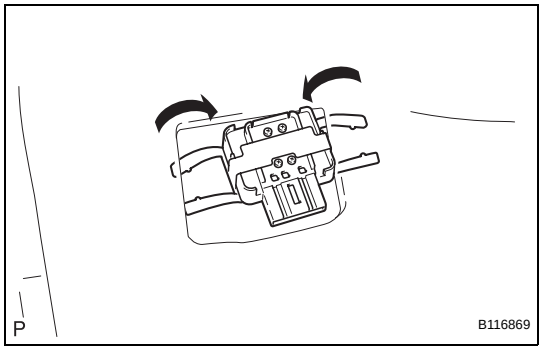

5. REMOVE POWER WINDOW REGULATOR SWITCH ASSEMBLY REAR

(a) Disengage the set plate and remove the power window regulator switch.

6. REMOVE REAR SPEAKER ASSEMBLY (w/ Rear Speaker) (See page AV-178)

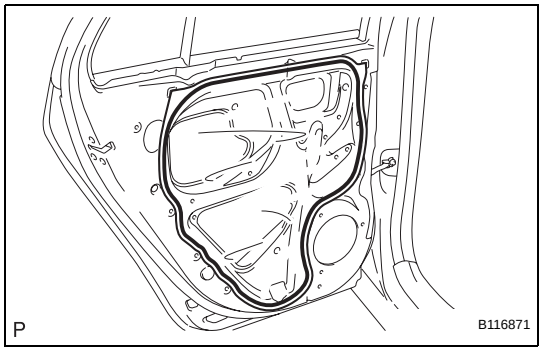

7. REMOVE REAR DOOR SERVICE HOLE COVER

(a) w/ Rear speaker:
Disconnect the connectors and clamps, then remove the rear door service hole cover.
NOTICE:
Remove any tape remaining on the door side.

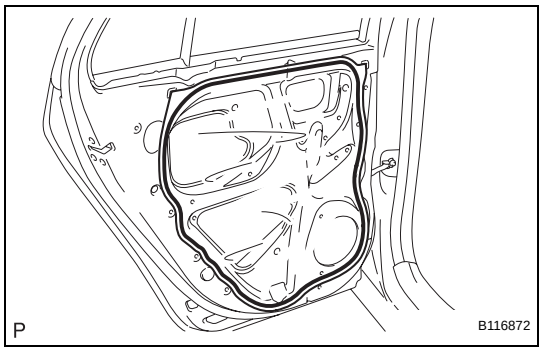

(b) w/o Rear speaker:
Disconnect the connectors and clamps, then remove the rear door service hole cover.
NOTICE:
Remove any tape remaining on the door side.

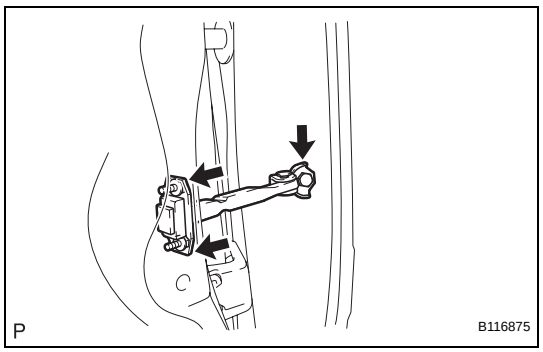

8. REMOVE REAR DOOR CHECK ASSEMBLY

(a) Remove the 3 bolts, then remove the rear door check.
NOTICE:
Do not drop or damage the door check when removing bolts.
HINT:
Remove the door check through the service hole.

ED

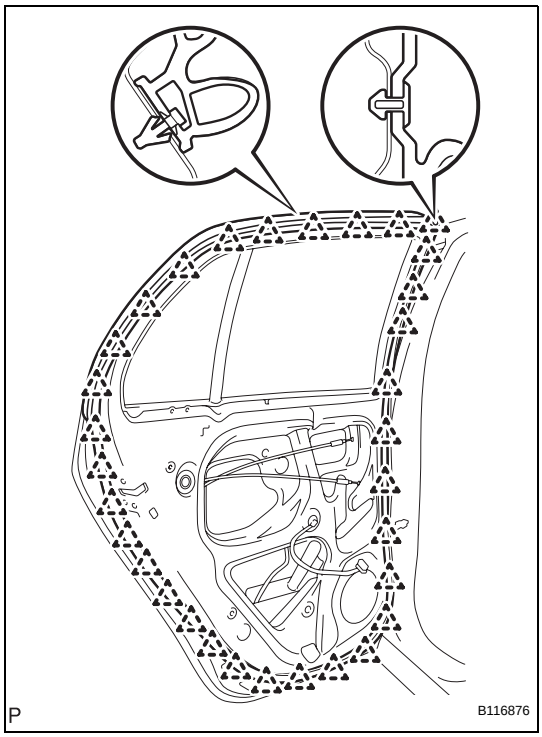

9. REMOVE REAR DOOR WEATHERSTRIP

(a) Disengage the 32 clips and remove the rear door weatherstrip.

NOTICE:

Remove any tape remaining on the door side.

10. REMOVE REAR DOOR BELT MOULDING (See page ET-97)

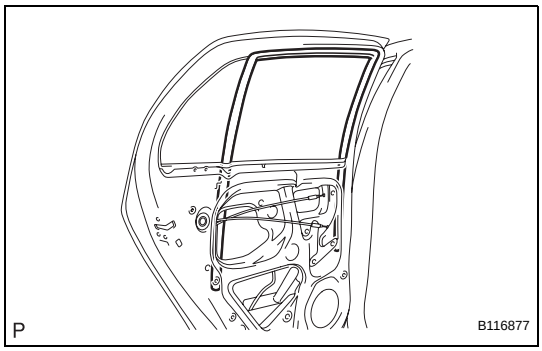

11. REMOVE REAR DOOR GLASS RUN

(a) Remove the rear door glass run.

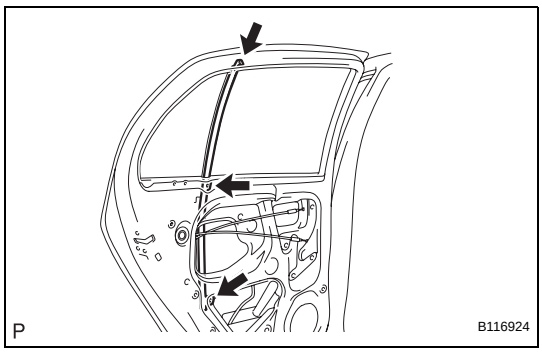

12. REMOVE REAR DOOR WINDOW DIVISION BAR SUB-ASSEMBLY

(a) Remove the 2 bolts and screw and rear door window division bar.

NOTICE:

Do not drop or damage the rear door window division bar when removing the bolts and screw.

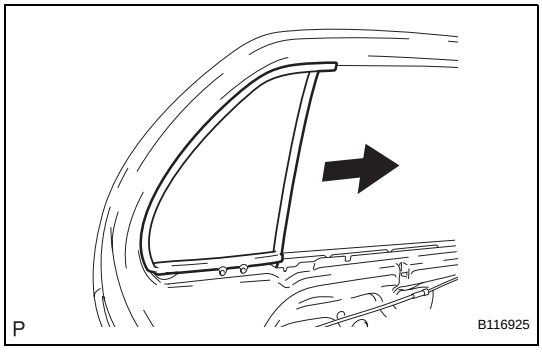

13. REMOVE REAR DOOR QUARTER WINDOW WEATHERSTRIP

(a) Slide the rear door quarter window weatherstrip, in the direction indicated by the arrow in the illustration, to remove it.

(b) Remove the rear door quarter window glass from the rear door quarter window weatherstrip.

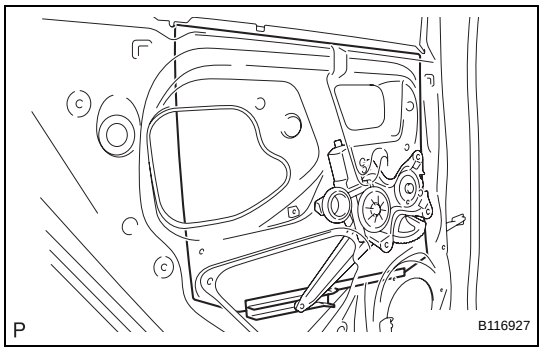

14. REMOVE REAR DOOR GLASS SUB-ASSEMBLY

(a) Remove the rear door glass from the rear door window regulator.

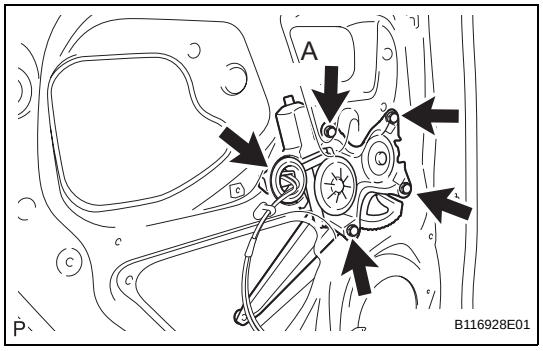

15. REMOVE REAR DOOR WINDOW REGULATOR SUB-ASSEMBLY

(a) Disconnect the connector.

(b) Loosen bolt A.

(c) Remove the 3 bolts, then remove the rear door window regulator.

NOTICE:

Do not drop or damage the window regulator when removing the bolts.

HINT:

Remove the window regulator through the service hole.

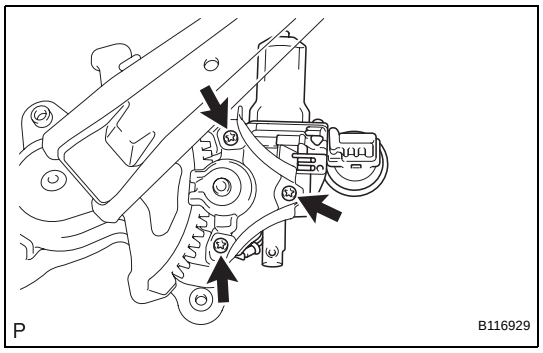

16. REMOVE POWER WINDOW REGULATOR MOTOR ASSEMBLY REAR

(a) Using "Torx" socket wrench T25, remove the 3 screws and power window regulator motor.

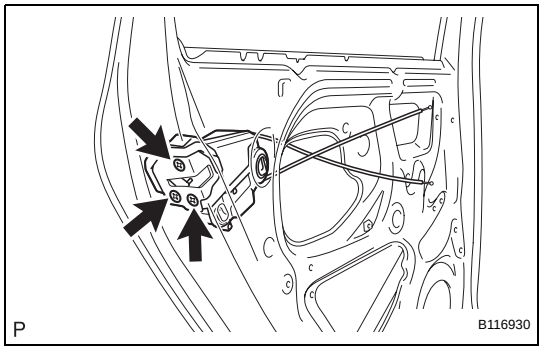

17. REMOVE REAR DOOR LOCK ASSEMBLY

(a) Using "Torx" socket wrench T30, remove the 3 screws.

(b) Move the rear door lock downward, remove the outside handle frame release plate and remove the rear door lock.

NOTICE:

Do not drop or damage the door lock when removing the screws.

HINT:

Remove the rear door lock through the service hole.

ED

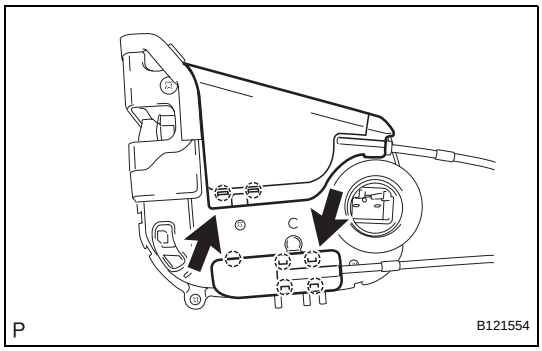

(c) Disengage the 7 claws and open the 2 covers.

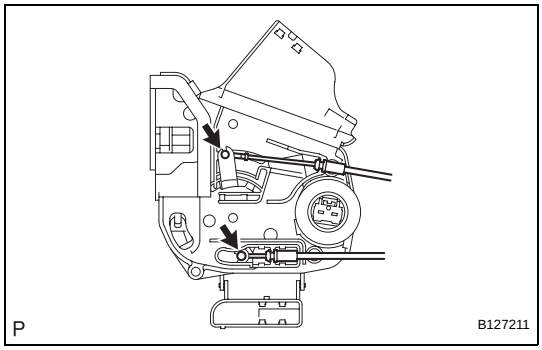

(d) Disconnect the rear door lock remote control cable and rear door inside locking cable.
(e) Remove the door lock wire harness seal.

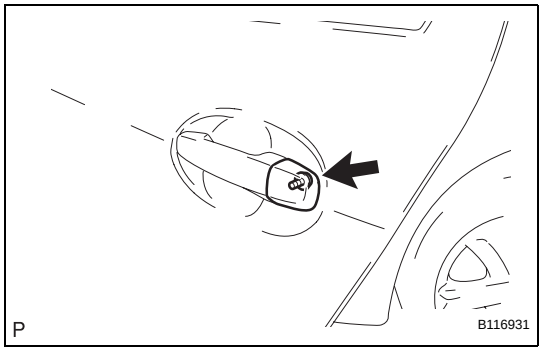

18. REMOVE REAR DOOR OUTSIDE HANDLE COVER

(a) Using "Torx" socket wrench T30, remove the screw and rear door outside handle cover.

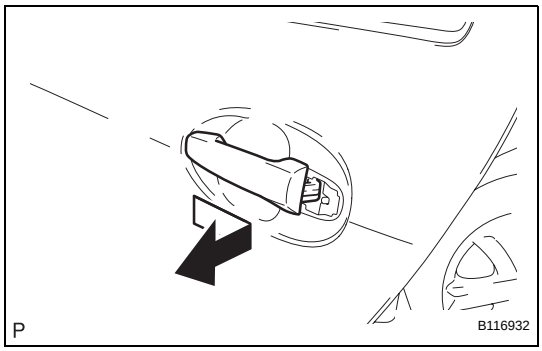

19. REMOVE REAR DOOR OUTSIDE HANDLE ASSEMBLY

(a) Remove the handle by sliding and pulling it in the direction indicated by the arrow mark in the illustration.

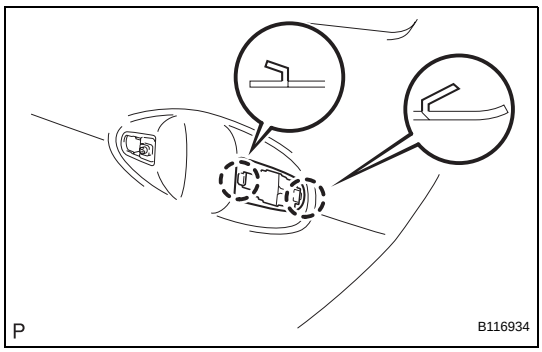

20. REMOVE REAR DOOR OUTSIDE HANDLE PAD REAR

(a) Disengage the 2 claws and remove the rear door outside handle pad rear.

ED

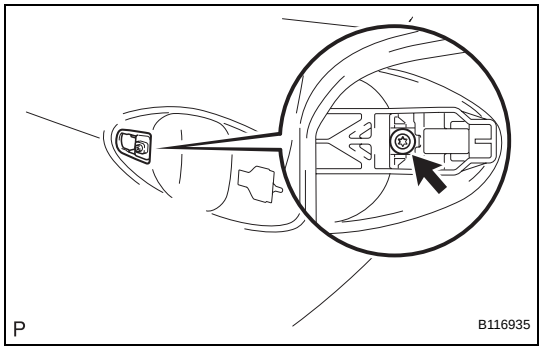

21. REMOVE REAR DOOR OUTSIDE HANDLE PAD FRONT

(a) Using "Torx" socket wrench T30, loosen the screw.

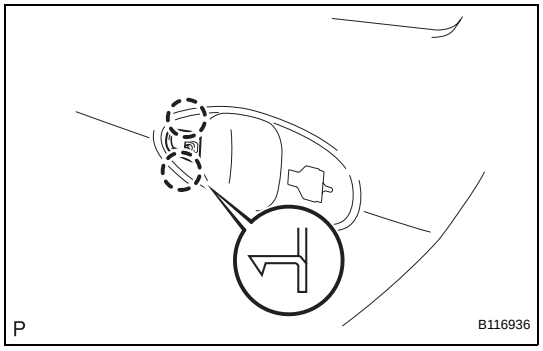

(b) Disengage the 2 claws and remove the rear door outside handle pad front.

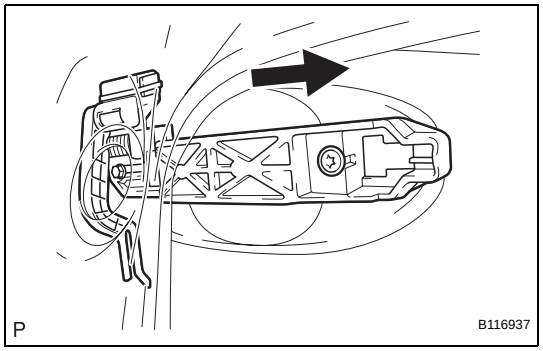

22. REMOVE REAR DOOR OUTSIDE HANDLE FRAME SUB-ASSEMBLY

(a) Slide the outside handle frame to remove it.

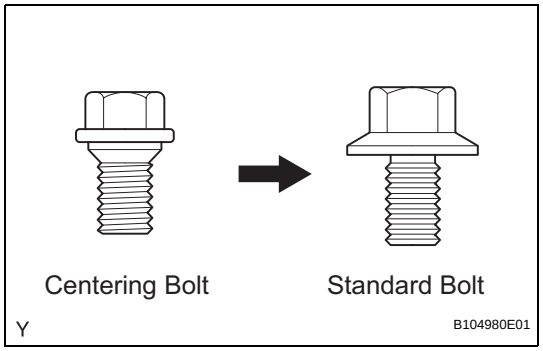

ADJUSTMENT

HINT:

- Before adjusting the door position on vehicles equipped with side airbags and curtain shield airbags, be sure to disconnect the battery. After adjustment, inspect the SRS warning light, the side airbag system and the curtain shield airbag system for normal operation. Then initialize both airbag systems.
- Use the same procedure for the RH and LH sides.
- The procedures described below are for the LH side.
- Centering bolts are used to mount the door hinge onto the vehicle body and door. The door cannot be adjusted with the centering bolts on. Substitute standard bolts (with washers) for the centering bolts when making adjustments.
- For bolts without torque specifications, check the standard bolt chart.

1. INSPECT REAR DOOR

(a) Check that the clearance measurements are within the standard ranges.

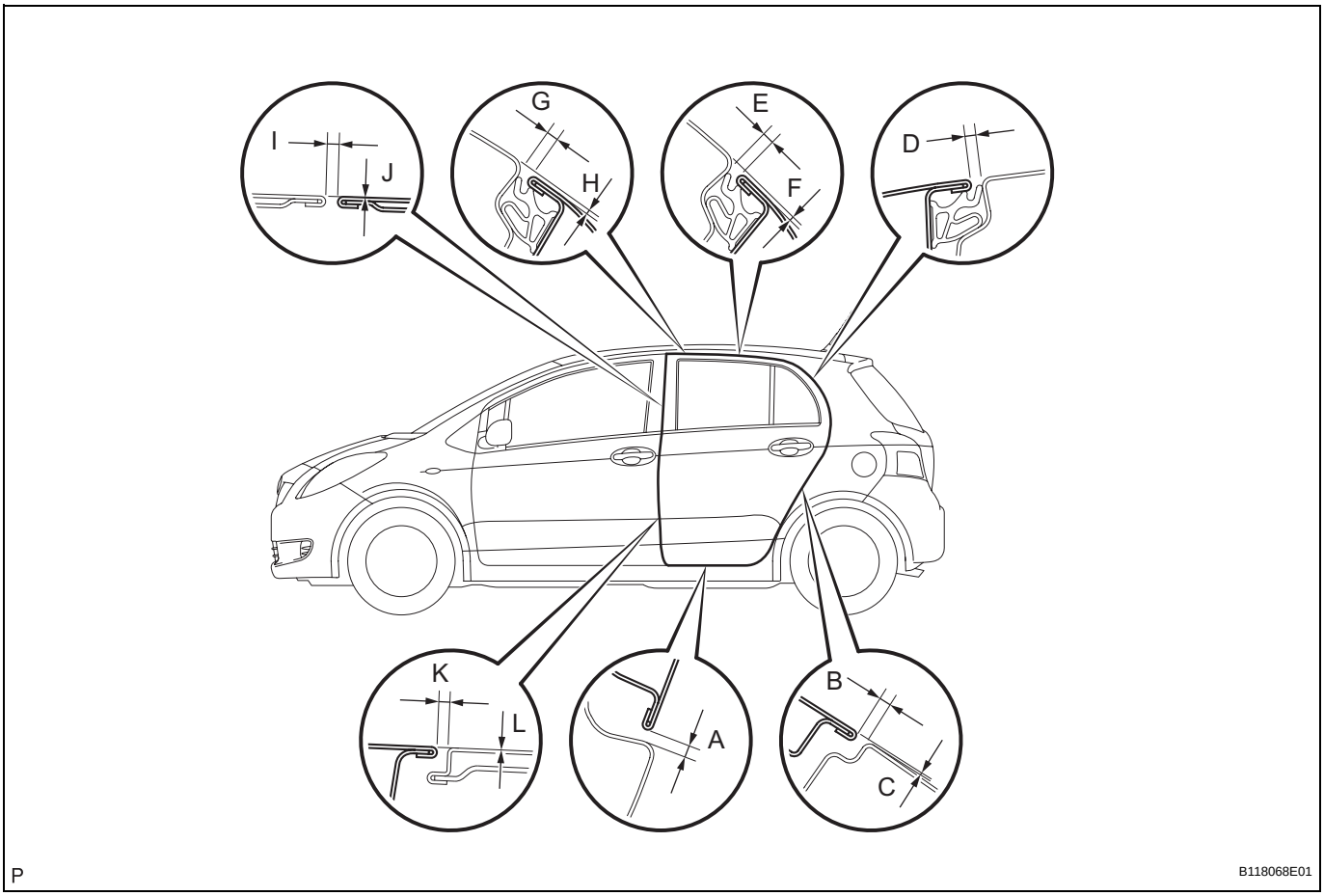

Standard

Area	Measurement	Area	Measurement
A	4.1 to 7.1 mm (0.161 to 0.280 in.)	G	3.5 to 6.5mm (0.138 to 0.256 in.)
B	2.5 to 5.5mm (0.098 to 0.217 in.)	H	2.6 mm (0.102 in.)
C	-1.5 to 1.5mm (-0.059 to 0.059 in.)	I	3.3 to 6.3mm (0.130 to 0.248 in.)
D	2.5 to 5.5mm (0.098 to 0.217 in.)	J	-1.5 to 1.5mm (-0.059 to 0.059 in.)
E	3.5 to 6.5mm (0.138 to 0.256 in.)	K	3.3 to 6.3mm (0.130 to 0.248 in.)
F	1.9 mm (0.075 in.)	L	-1.5 to 1.5mm (-0.059 to 0.059 in.)

2. ADJUST REAR DOOR

(a) Disconnect the cable from the negative battery terminal.

Wait for at least 90 seconds after disconnecting the cable to prevent the airbag from working.

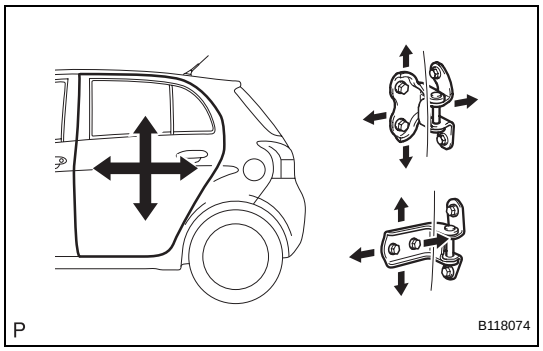

(b) Using SST, adjust the door horizontally and vertically by loosening the body side hinge bolts.
SST 09812-00010
(c) Tighten the body side hinge bolts after the adjustment.
Torque: 26 N*m (265 kgf*cm, 19 ft.*lbf)

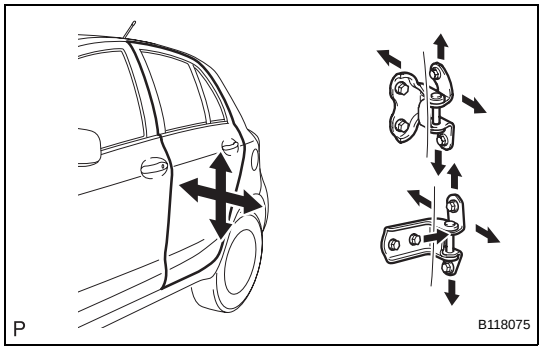

(d) Adjust the door horizontally and vertically by loosening the door side hinge bolts.
(e) Tighten the door side hinge bolts after the adjustment.
Torque: 26 N*m (265 kgf*cm, 19 ft.*lbf)

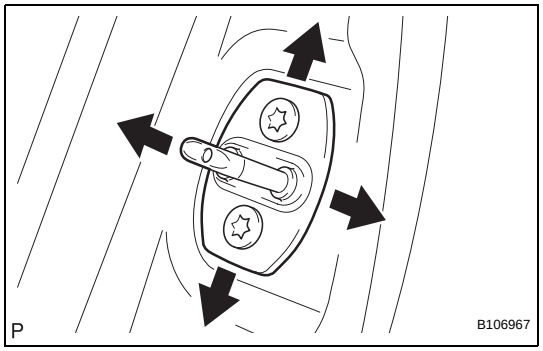

(f) Using "Torx" socket wrench T40, adjust the striker position by slightly loosening the striker mounting screws and hitting the striker with a plastic-faced hammer.
(g) Using "Torx" socket wrench T40, tighten the striker mounting screws after the adjustment.
Torque: 23 N*m (235 kgf*cm, 17 ft.*lbf)
(h) Connect the cable to the negative battery terminal.
Torque: 5.4 N*m (55 kgf*cm, 48 in.*lbf)

REASSEMBLY

1. INSTALL REAR DOOR OUTSIDE HANDLE FRAME SUB-ASSEMBLY

(a) Apply MP grease to the sliding areas of the rear door outside handle frame.

(b) Slide the outside handle frame to install it.

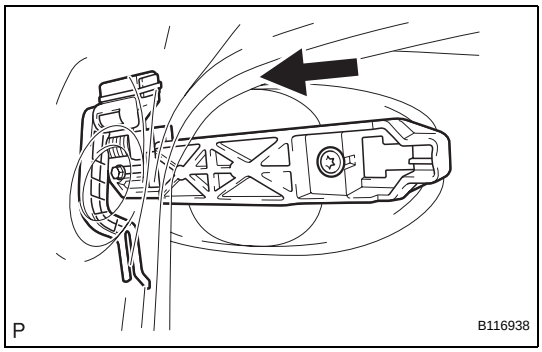

2. INSTALL REAR DOOR OUTSIDE HANDLE PAD FRONT

(a) Engage the 2 claws and install the rear door outside pad front.

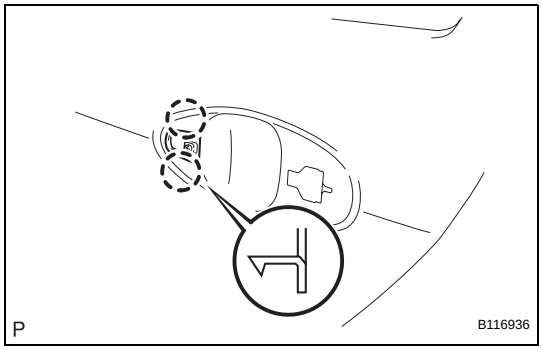

(b) Using "Torx" socket wrench T30, tighten the screw.
Torque: 4.0 N*m (41 kgf*cm, 35 in.*lbf)

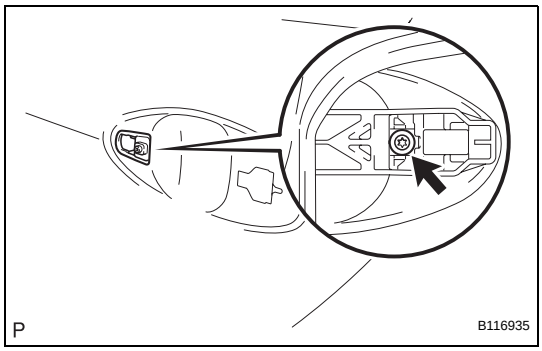

3. INSTALL REAR DOOR OUTSIDE HANDLE PAD REAR

(a) Engage the 2 claws and install the rear door outside pad rear.

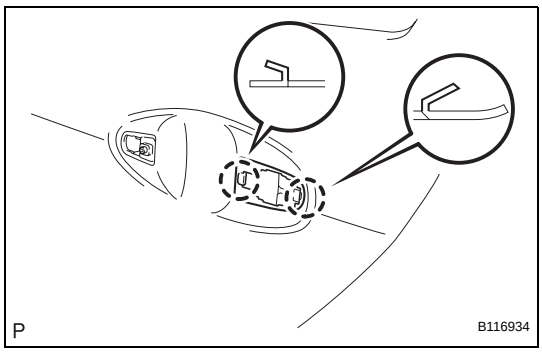

ED

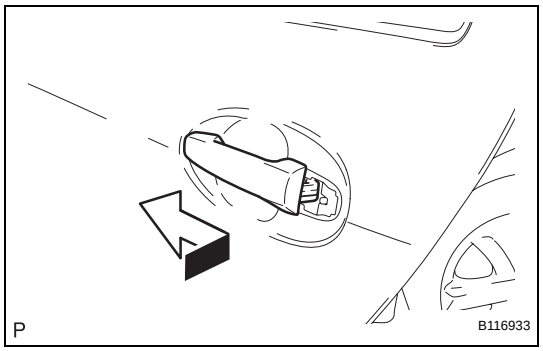

4. INSTALL REAR DOOR OUTSIDE HANDLE ASSEMBLY

(a) Pushing the rear door outside handle in the direction of the arrow mark shown in the illustration, install the rear door outside handle.

5. INSTALL REAR DOOR LOCK ASSEMBLY

NOTICE:

- **If reusing a door lock that has been removed, replace the packing in the connecting part with new.**
- **Make sure that no grease and dirt adheres to the packing surface in the connecting part.**

(a) Apply MP grease to the sliding and rotating areas of the front door lock.

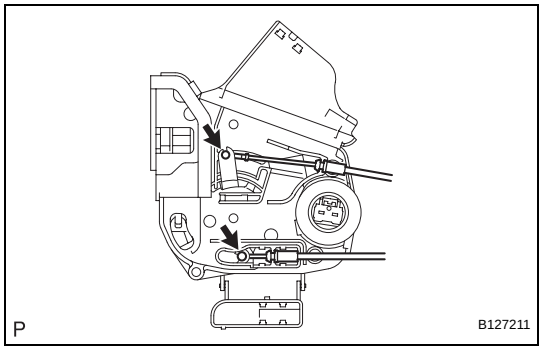

(b) Connect the rear door lock remote control cable and rear door inside locking cable.

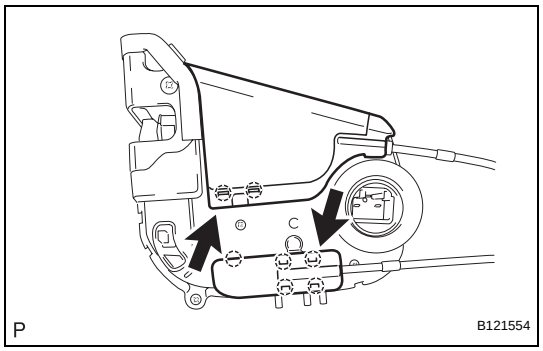

(c) Engage the 7 claws and close the 2 covers.

(d) Insert the door lock into the outside handle frame release plate, then set it onto the door panel.

(e) Make sure that the outside handle frame link is securely engaged with the door lock.

(f) Apply adhesive to the threads of the screws.

Adhesive:

Part No. 08833-00070, THREE BOND 1324 or the equivalent

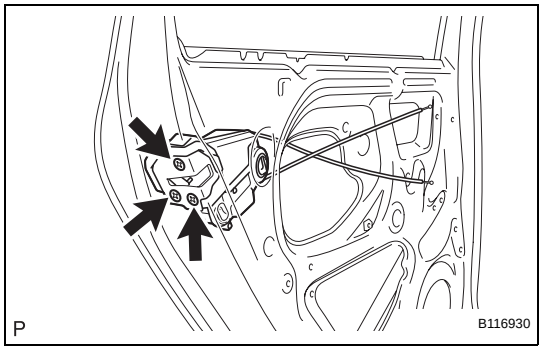

(g) Using "Torx" socket wrench T30, install the rear door lock with the 3 screws.

Torque: 5.0 N*m (51 kgf*cm, 44 in.*lbf)

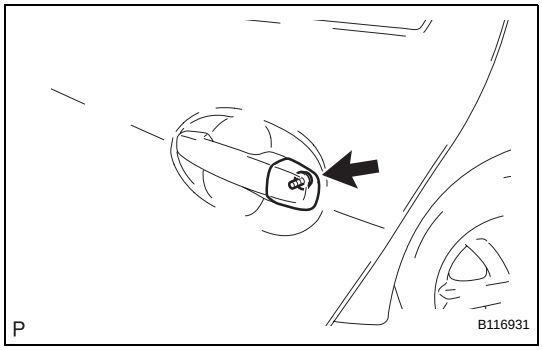

6. INSTALL REAR DOOR OUTSIDE HANDLE COVER

(a) Using "Torx" socket wrench T30, install the rear door outside handle cover with the screw.
Torque: 4.0 N*m (41 kgf*cm, 35 in.*lbf)

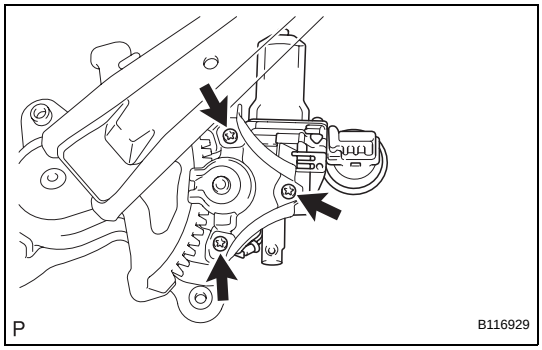

7. INSTALL POWER WINDOW REGULATOR MOTOR ASSEMBLY REAR

(a) Apply MP grease to the sliding and rotating areas of the regulator motor.
(b) Using "Torx" socket wrench T25, install the power window regulator motor with the 3 screws.
Torque: 5.4 N*m (55 kgf*cm, 48 in.*lbf)

8. INSTALL REAR DOOR WINDOW REGULATOR SUB-ASSEMBLY

(a) Apply MP grease to the sliding and rotating areas of the rear door window regulator.
NOTICE:
Do not apply grease to the window regulator spring.

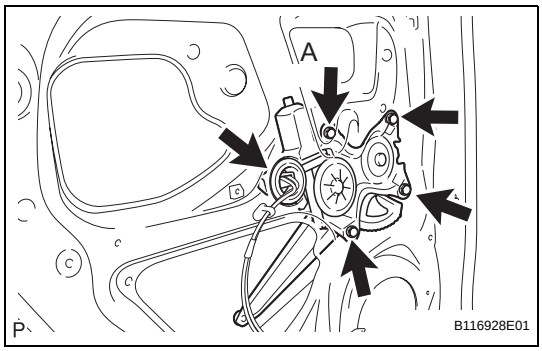

(b) Loosely screw bolt A onto the rear door window regulator.
(c) Insert the rear door window regulator into the door panel. Use bolt A to hang the rear door window regulator on the door panel.
NOTICE:
Do not drop the window regulator as it may be damaged.
(d) Install the rear door window regulator with the 4 bolts, and tighten bolt A.
Torque: 8.0 N*m (82 kgf*cm, 71 in.*lbf)
(e) Connect the connector.

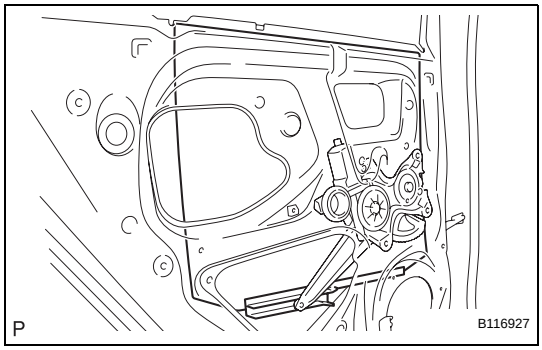

9. INSTALL REAR DOOR GLASS SUB-ASSEMBLY

(a) Install the rear door glass onto the rear door window regulator.

10. INSTALL REAR DOOR QUARTER WINDOW WEATHERSTRIP

(a) Install the rear door quarter window glass onto the rear door quarter window weatherstrip.

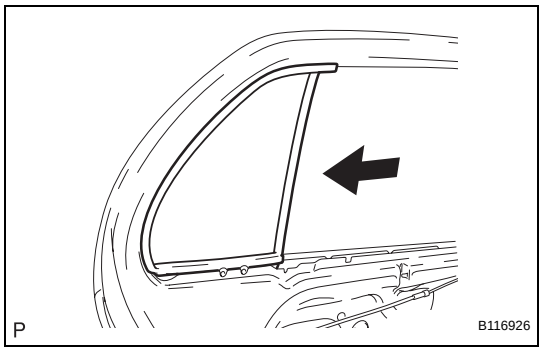

(b) Slide the rear door quarter window weatherstrip, in the direction indicated by the arrow in the illustration, to install it.

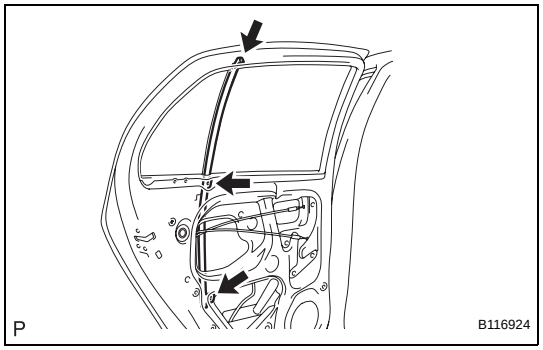

11. INSTALL REAR DOOR WINDOW DIVISION BAR SUB-ASSEMBLY

(a) Install the rear door window division bar with the 2 bolts and screw.
Torque: 6.2 N*m (63 kgf*cm, 54 in.*lbf)

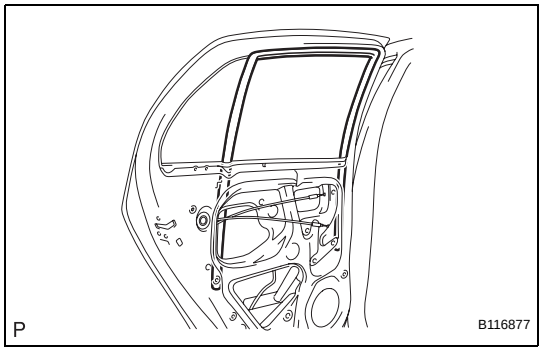

12. INSTALL REAR DOOR GLASS RUN

(a) Install the rear door glass run.

13. INSTALL REAR DOOR BELT MOULDING (See page ET-97)

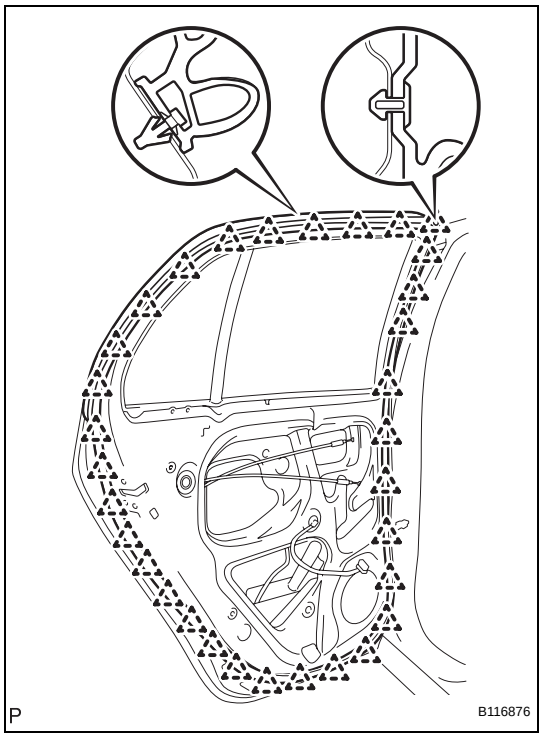

14. INSTALL REAR DOOR WEATHERSTRIP

(a) Engage the 32 clips and install the rear door weatherstrip.

ED

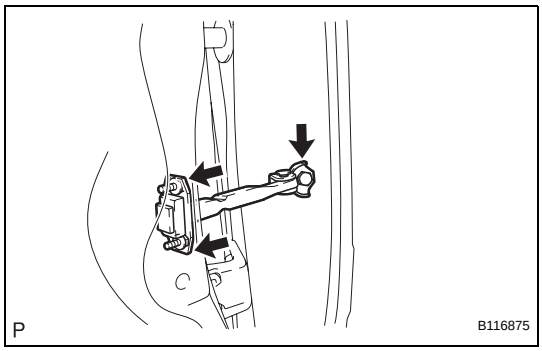

15. INSTALL REAR DOOR CHECK ASSEMBLY

(a) Apply MP grease to the sliding areas of the door check.

(b) Install the rear door check onto the door panel with the 2 bolts.

Torque: 5.5 N*m (56 kgf*cm, 49 in.*lbf)

(c) Apply adhesive to the threads of the bolt.

Adhesive:

Part No. 08833-00070, THREE BOND 1324 or the equivalent

(d) Install the rear door check onto the body panel with the bolt.

Torque: 30 N*m (306 kgf*cm, 22 ft.*lbf)

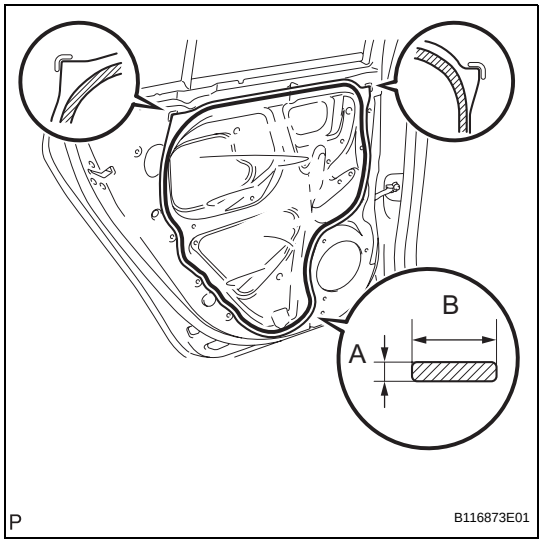

16. INSTALL REAR DOOR SERVICE HOLE COVER

(a) w/ Rear speaker:

Apply butyl tape to the door panel, then install the rear door service hole cover as shown in the illustration.

Adhesive:

Part No. 08850-00065, Butyl Tape Set or the equivalent

Specification

Area	Dimension
A	2.0 mm (0.079 in.) or more
B	6.0 mm (0.236 in.) or more

HINT:

- When installing the service hole cover, pull the links and connectors out through the service hole.
- There should be no wrinkles or folds after attaching the service hole cover.
- After attaching the service hole cover, check the quality of the seal.

(b) w/o Rear speaker:

Apply butyl tape to the door panel, then install the rear door service hole cover as shown in the illustration.

Adhesive:

Part No. 08850-00065, Butyl Tape Set or the equivalent

Specification

Area	Dimension
A	2.0 mm (0.079 in.) or more
B	6.0 mm (0.236 in.) or more

HINT:

- When installing the service hole cover, pull the links and connectors out through the service hole.
- There should be no wrinkles or folds after attaching the service hole cover.
- After attaching the service hole cover, check the quality of the seal.

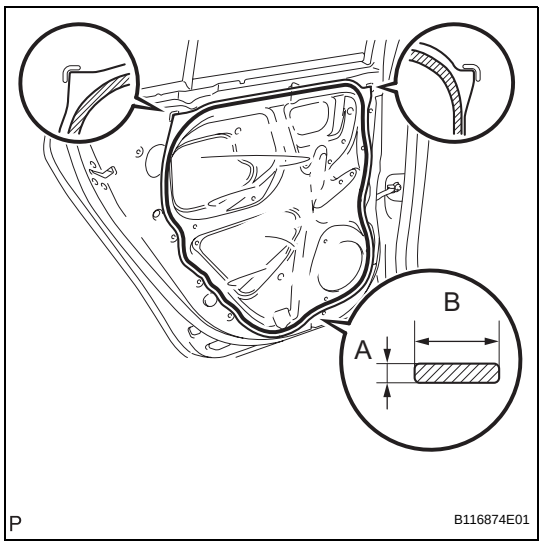

ED

17. INSTALL REAR SPEAKER ASSEMBLY (w/ Rear Speaker) (See page AV-178)

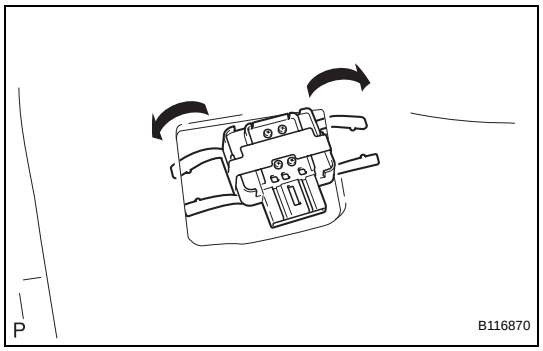

18. INSTALL POWER WINDOW REGULATOR SWITCH ASSEMBLY REAR

(a) Engage the set plate and install the power window regulator switch.

19. INSTALL REAR DOOR GLASS WEATHERSTRIP INNER

(a) Install the rear door glass weatherstrip inner onto the rear door trim board.

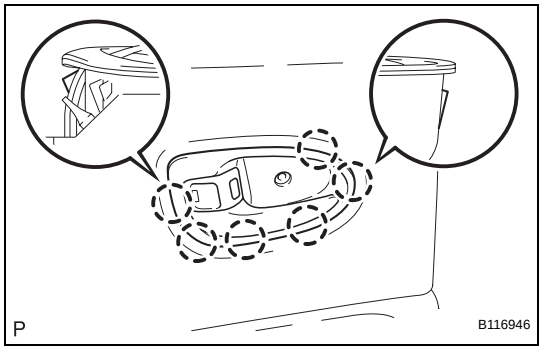

20. INSTALL REAR DOOR INSIDE HANDLE SUB-ASSEMBLY

(a) Engage the 6 claws and install the rear door inside handle.

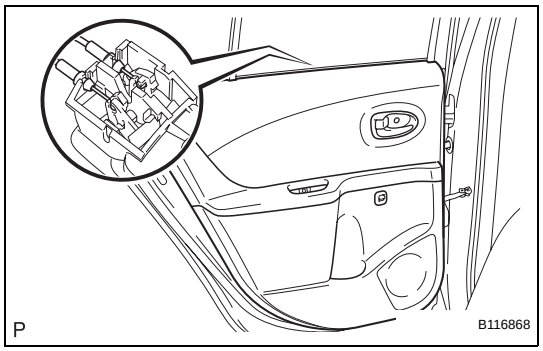

21. INSTALL REAR DOOR TRIM BOARD SUB-ASSEMBLY

(a) Connect the rear door lock remote control cable and rear door inside locking cable.

(b) Connect the connector.

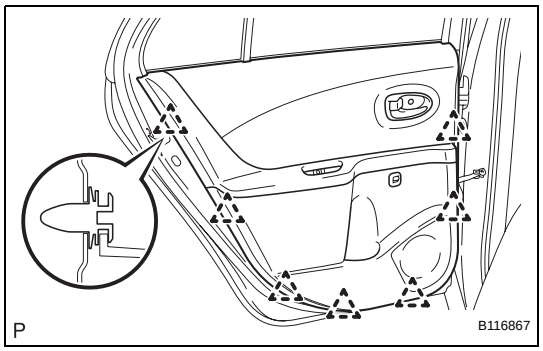

(c) Engage the 7 clips and install the rear door trim board.

ED

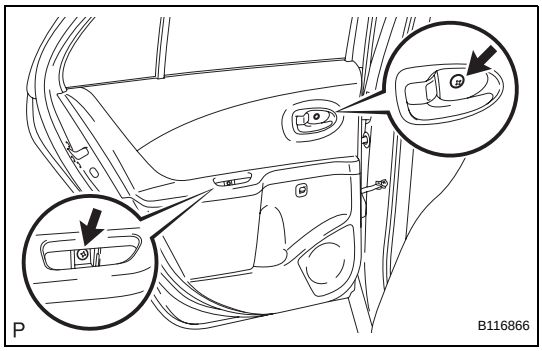

(d) Tighten the 2 screws.

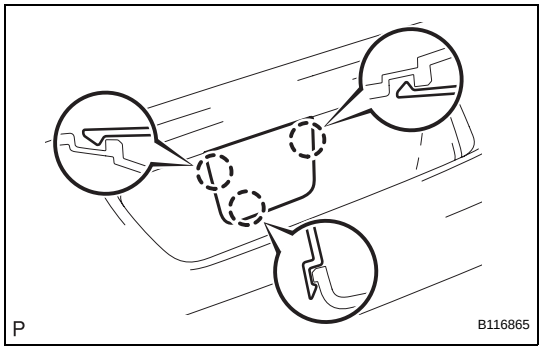

(e) Engage the 3 claws and install the rear door armrest plug.

22. CONNECT CABLE TO NEGATIVE BATTERY TERMINAL
Torque: 5.4 N*m (55 kgf*cm, 48 in.*lbf)

REAR DOOR (for Hatchback without Power Window)

COMPONENTS

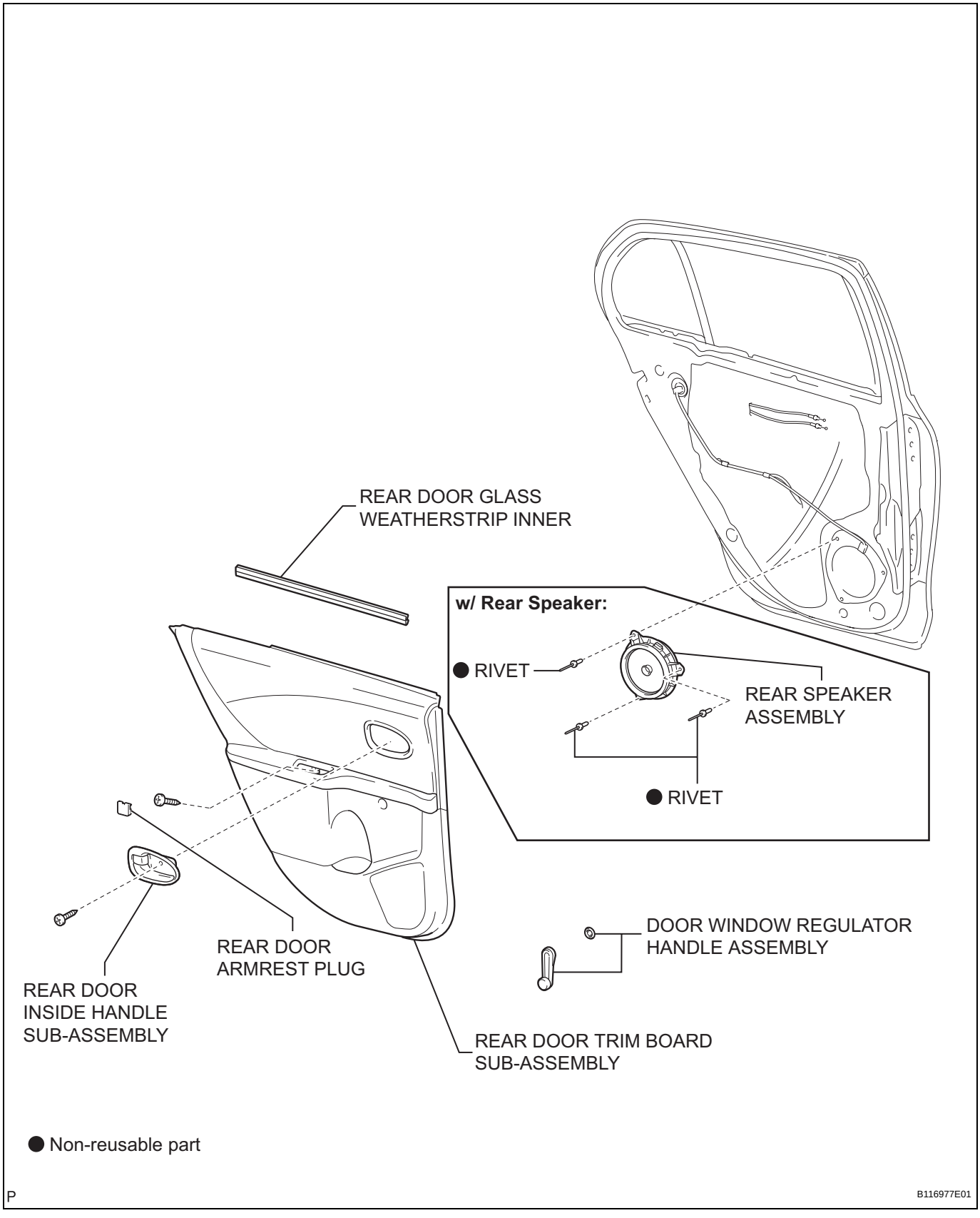

ED

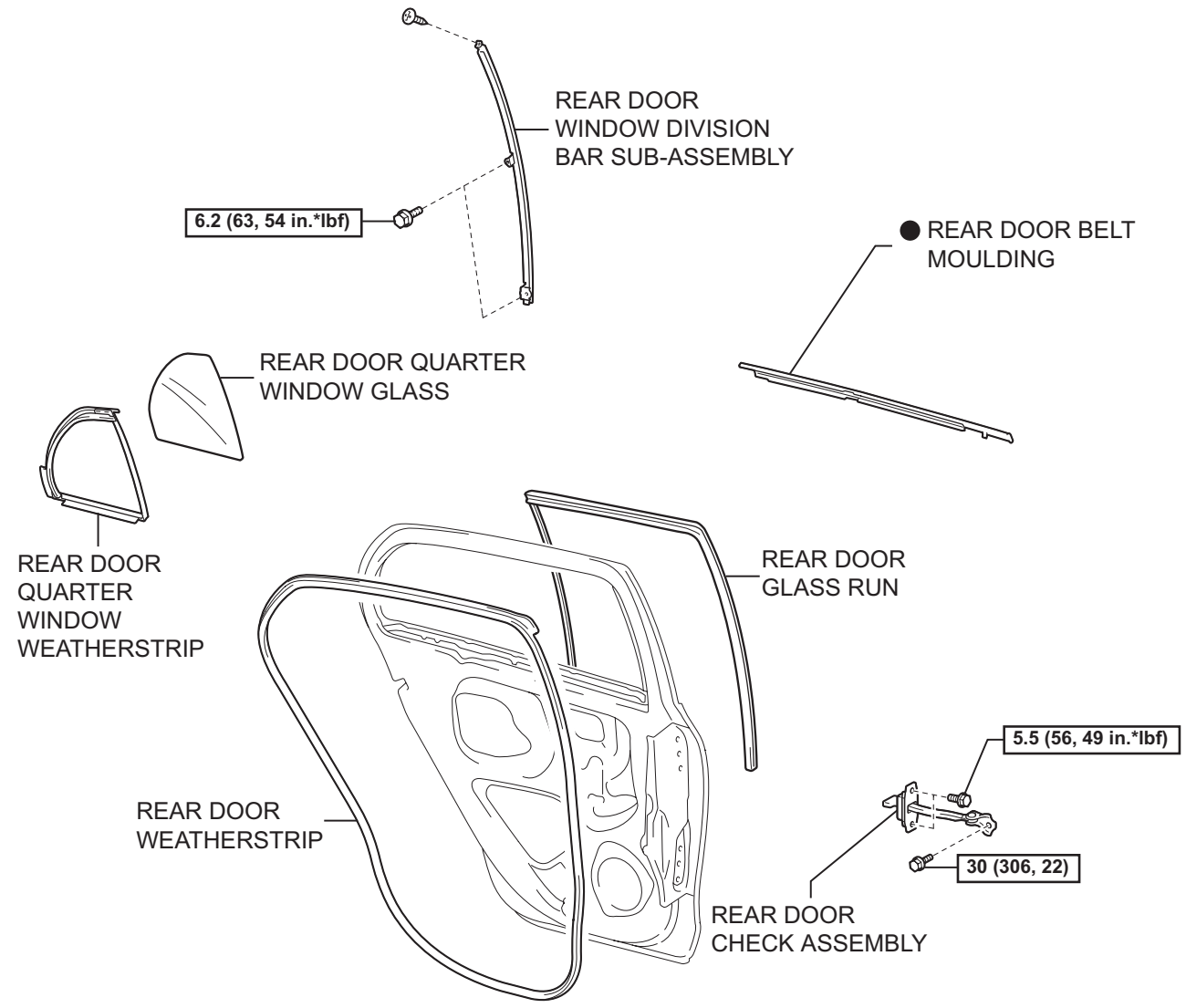

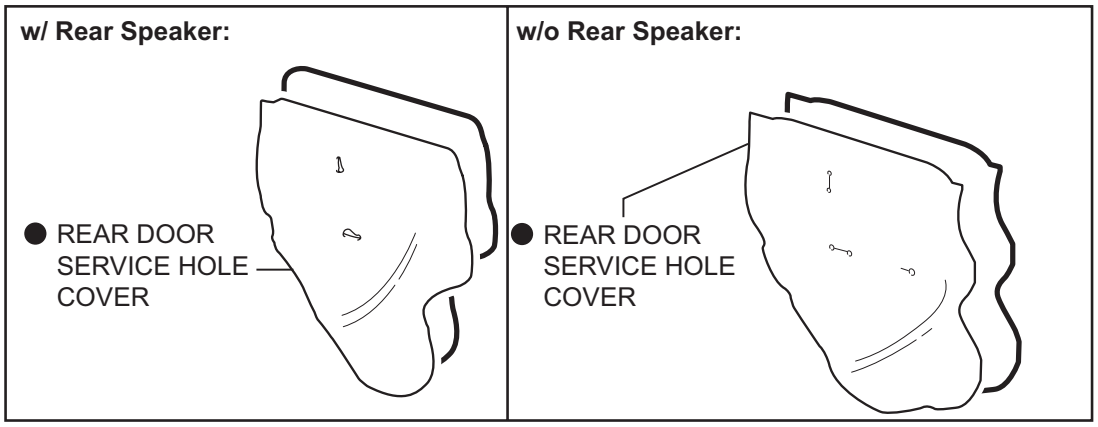

N*m (kgf*cm, ft*lbf) : Specified torque

● Non-reusable part

P

B116975E01

ED

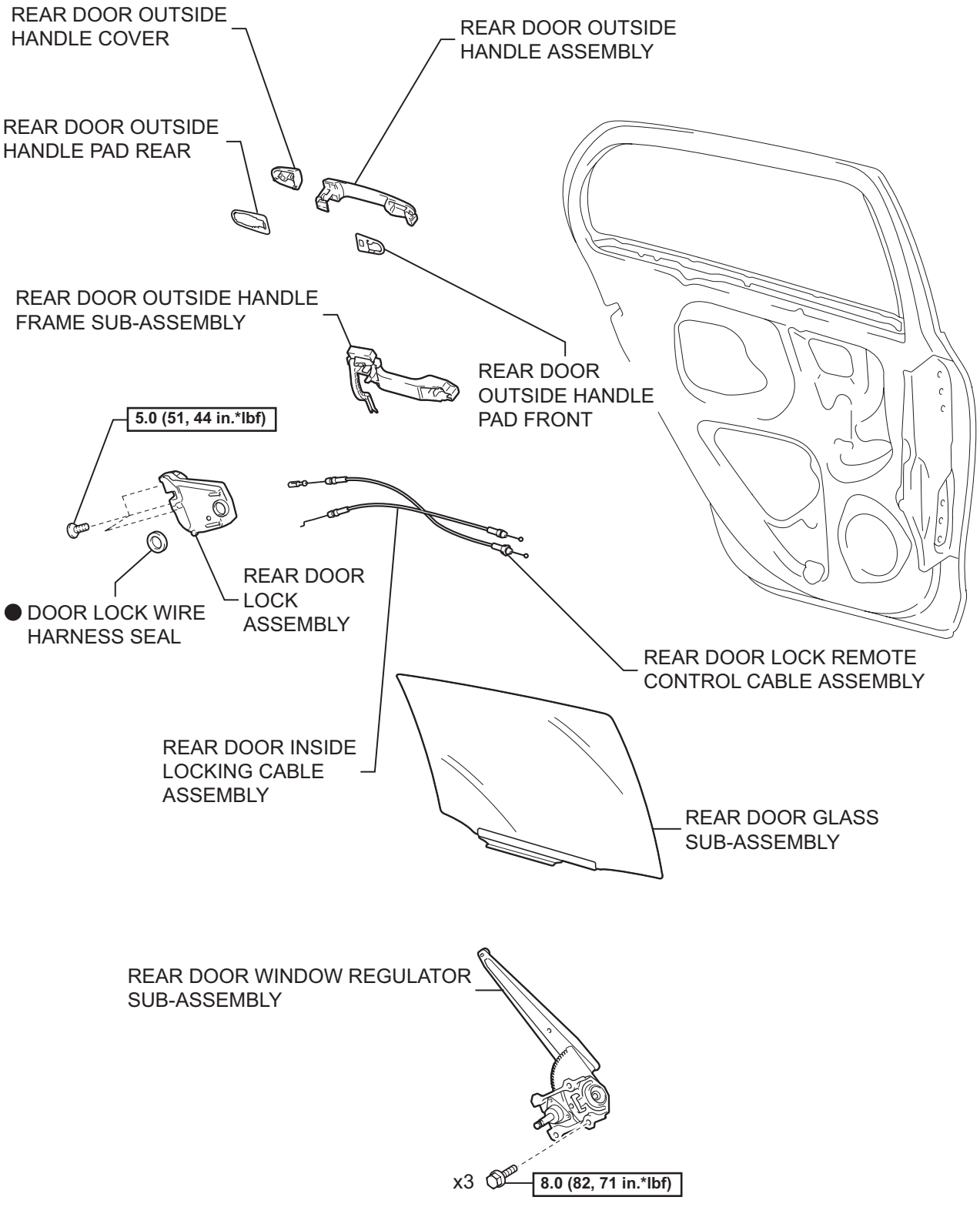

N*m (kgf*cm, ft*lbf) : Specified torque

● Non-reusable part

P

B116978E01

DISASSEMBLY

HINT:

- Use the same procedure for both the RH and LH side.
- The procedure described below is for the LH side.

1. DISCONNECT CABLE FROM NEGATIVE BATTERY TERMINAL

2. REMOVE DOOR WINDOW REGULATOR HANDLE ASSEMBLY

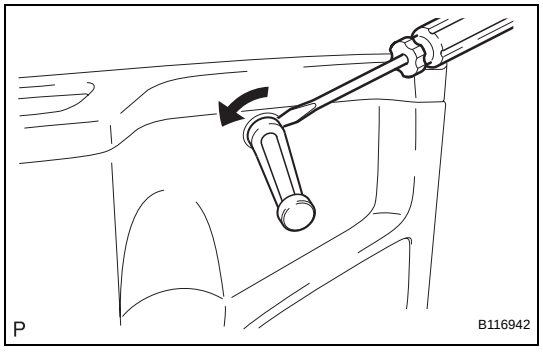

(a) Insert a clip remover between the plate and door trim.
(b) Turn the handle with the clip remover inserted, as shown in the illustration.
(c) Remove the rear door window regulator handle assembly and clip.
(d) Remove the window regulator handle plate.

3. REMOVE REAR DOOR TRIM BOARD SUB-ASSEMBLY

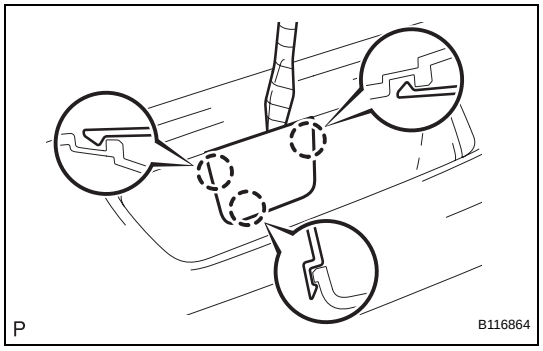

(a) Using a screwdriver with its tip wrapped in protective tape, disengage the 3 claws and remove the rear door armrest plug.

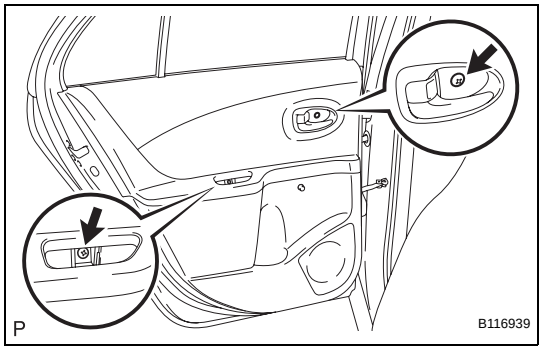

(b) Remove the 2 screws.

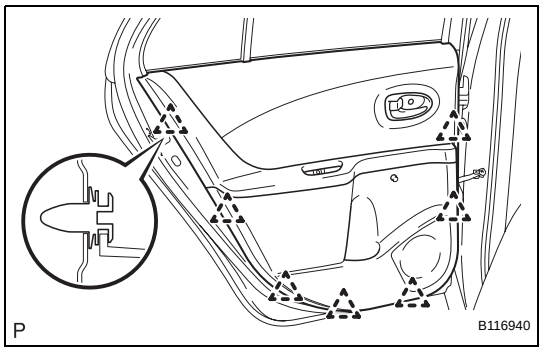

(c) Disengage the 7 clips.
(d) Disconnect the connector.

ED

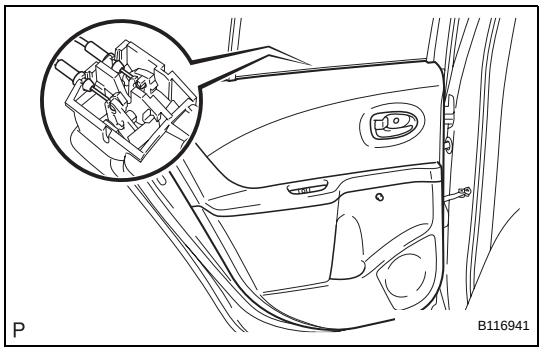

(e) Disconnect the rear door lock remote control cable and rear door inside locking cable and remove the rear door trim board.

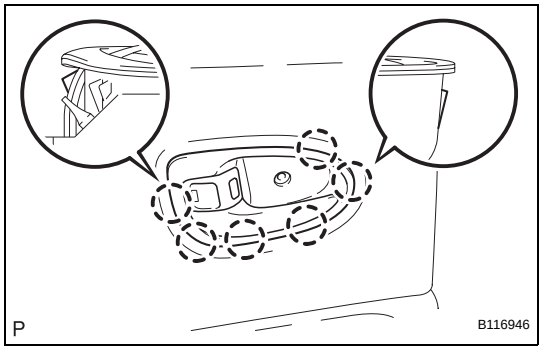

4. REMOVE REAR DOOR INSIDE HANDLE SUB-ASSEMBLY

(a) Disengage the 6 claws and remove the rear door inside handle.

5. REMOVE REAR DOOR GLASS WEATHERSTRIP INNER

(a) Remove the rear door glass weatherstrip inner from the rear door trim board.

6. REMOVE REAR SPEAKER ASSEMBLY (w/ Rear Speaker) (See page AV-178)

7. REMOVE REAR DOOR SERVICE HOLE COVER

(a) w/ Rear speaker:
Disconnect the connectors and clamps, then remove the rear door service hole cover.
NOTICE:
Remove any tape remaining on the door side.

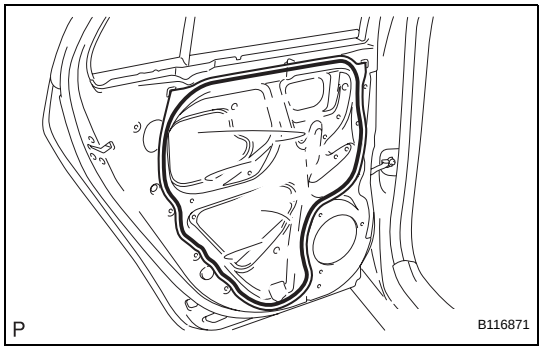

(b) w/o Rear speaker:
Disconnect the connectors and clamps, then remove the rear door service hole cover.
NOTICE:
Remove any tape remaining on the door side.

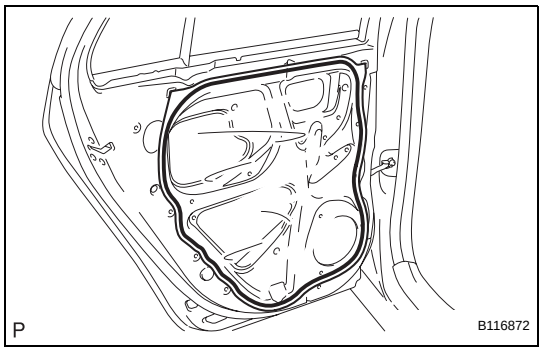

8. REMOVE REAR DOOR CHECK ASSEMBLY

(a) Remove the 3 bolts, then remove the rear door check.
NOTICE:
Do not drop or damage the door check when removing the bolts.
HINT:
Remove the door check through the service hole.

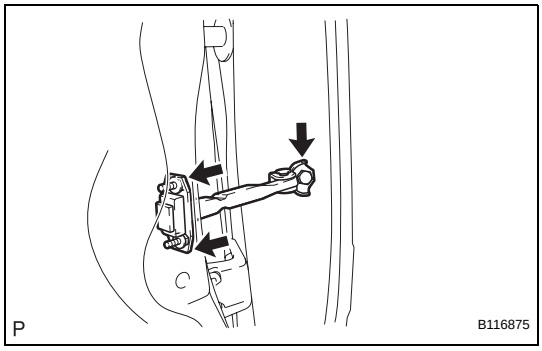

ED

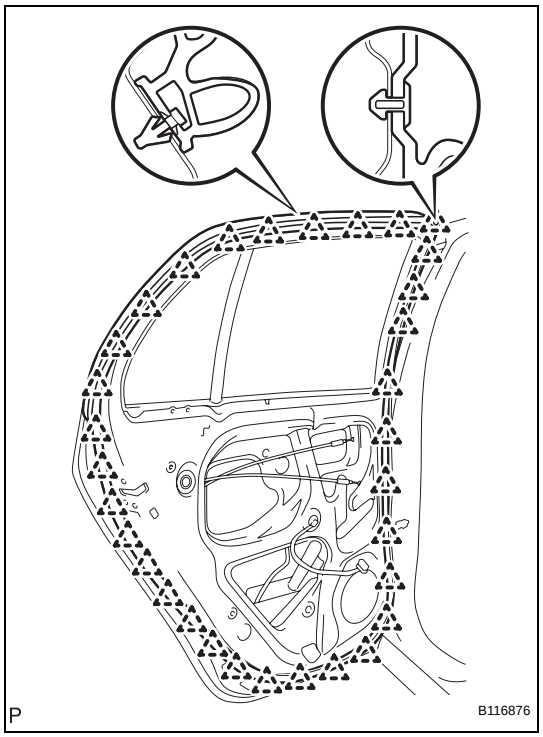

9. REMOVE REAR DOOR WEATHERSTRIP

(a) Disengage the 32 clips and remove the rear door weatherstrip.

NOTICE:

Remove any tape remaining on the door side.

10. REMOVE REAR DOOR BELT MOULDING (See page ET-97)

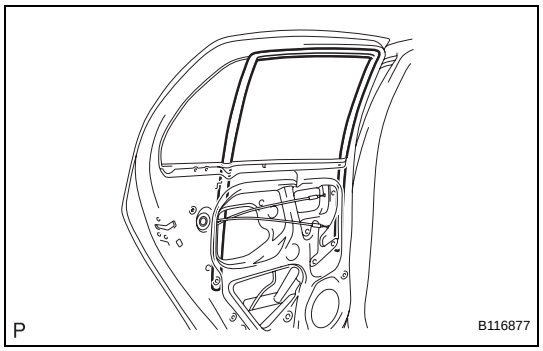

11. REMOVE REAR DOOR GLASS RUN

(a) Remove the rear door glass run.

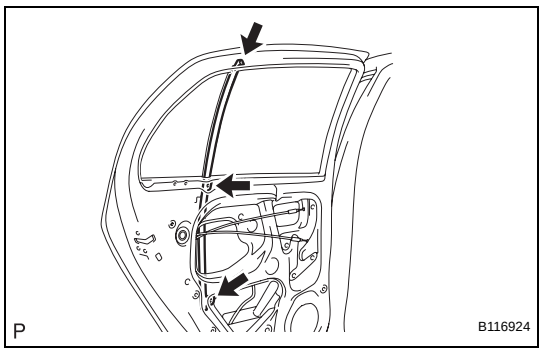

12. REMOVE REAR DOOR WINDOW DIVISION BAR SUB-ASSEMBLY

(a) Remove the 2 bolts and screw and rear door window division bar.

NOTICE:

Do not drop or damage the rear door window division bar when removing the bolts and screw.

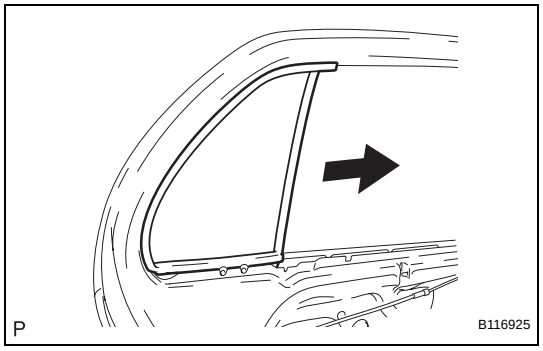

13. REMOVE REAR DOOR QUARTER WINDOW WEATHERSTRIP

(a) Slide the rear door quarter window weatherstrip, in the direction indicated by the arrow in the illustration, to remove it.

(b) Remove the rear door quarter window glass from the rear door quarter window weatherstrip.

ED

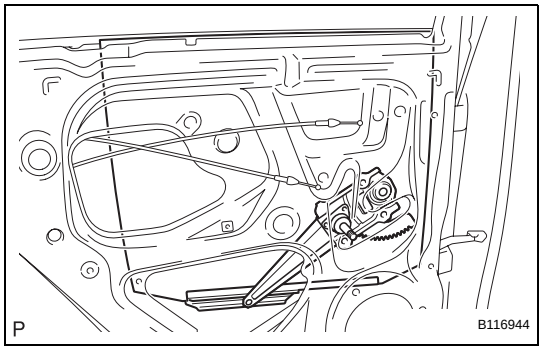

14. REMOVE REAR DOOR GLASS SUB-ASSEMBLY

(a) Remove the rear door glass from the rear door window regulator.

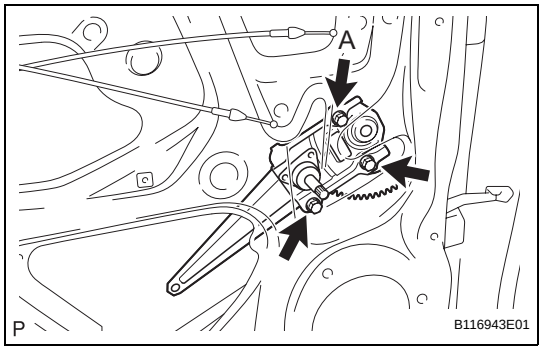

15. REMOVE REAR DOOR WINDOW REGULATOR SUB-ASSEMBLY

(a) Loosen bolt A.

(b) Remove the 2 bolts, then remove the rear door window regulator.

NOTICE:

Do not drop or damage the window regulator when removing the bolts.

HINT:

Remove the window regulator through the service hole.

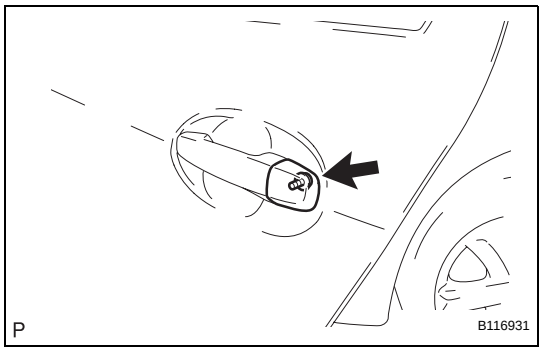

16. REMOVE REAR DOOR OUTSIDE HANDLE COVER

(a) Using "Torx" socket wrench T30, remove the screw and rear door outside handle cover.

ED

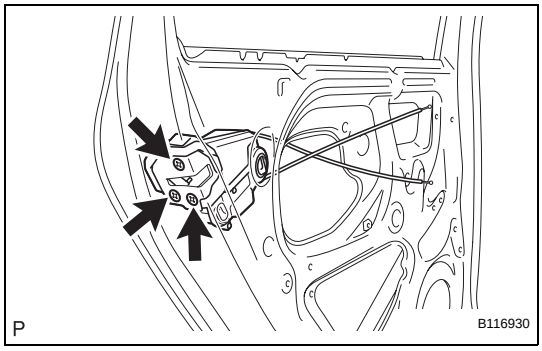

17. REMOVE REAR DOOR LOCK ASSEMBLY

(a) Using "Torx" socket wrench T30, remove the 3 screws.

(b) Move the rear door lock downward, remove the outside handle frame release plate and remove the rear door lock.

NOTICE:

Do not drop or damage the door lock when removing the bolts.

HINT:

Remove the rear door lock through the service hole.

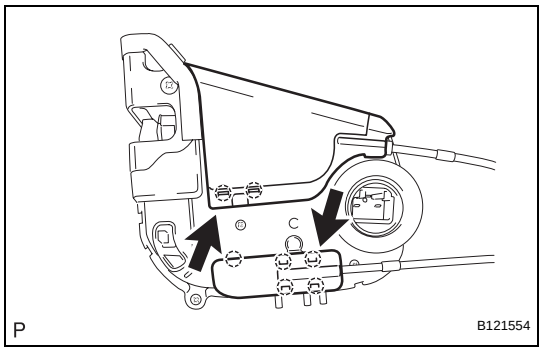

(c) Disengage the 7 claws and open the 2 covers.

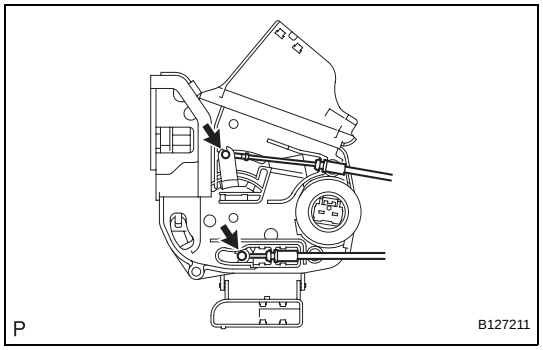

(d) Disconnect the rear door lock remote control cable and rear door inside locking cable.
(e) Remove the door lock wire harness seal.

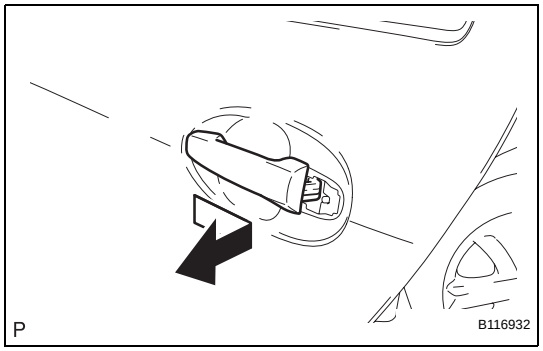

18. REMOVE REAR DOOR OUTSIDE HANDLE ASSEMBLY

(a) Remove the handle by sliding and pulling it in the direction indicated by the arrow mark in the illustration.

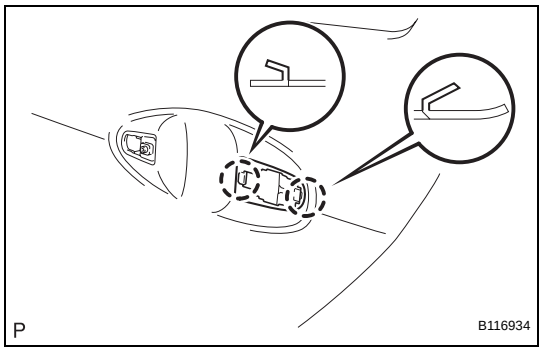

19. REMOVE REAR DOOR OUTSIDE HANDLE PAD REAR

(a) Disengage the 2 claws and remove the rear door outside handle pad rear.

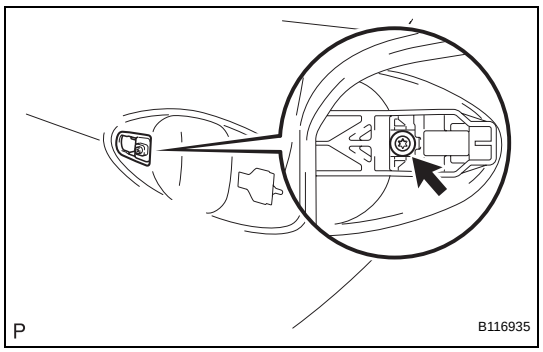

20. REMOVE REAR DOOR OUTSIDE HANDLE PAD FRONT

(a) Using "Torx" socket wrench T30, loosen the screw.

ED

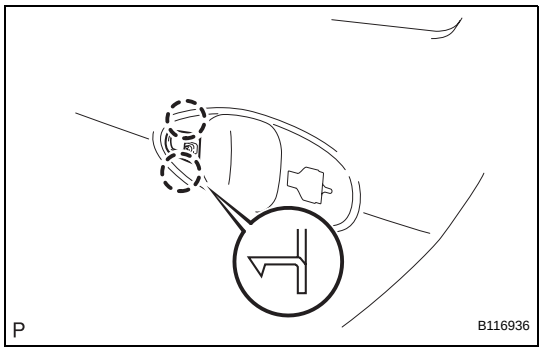

(b) Disengage the 2 claws and remove the rear door outside handle pad front.

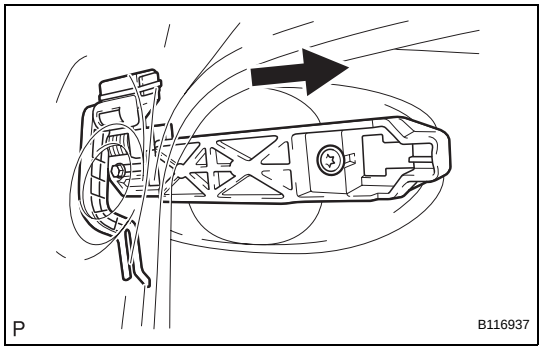

21. REMOVE REAR DOOR OUTSIDE HANDLE FRAME SUB-ASSEMBLY

(a) Slide the outside handle frame to remove it.

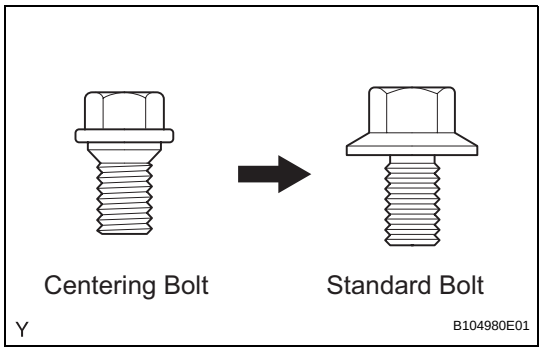

ADJUSTMENT

HINT:

- Before adjusting the door position on vehicles equipped with side airbags and curtain shield airbags, be sure to disconnect the battery. After adjustment, inspect the SRS warning light, the side airbag system and the curtain shield airbag system for normal operation. Then initialize both airbag systems.
- Use the same procedure for the RH and LH sides.
- The procedures described below are for the LH side.
- Centering bolts are used to mount the door hinge onto the vehicle body and door. The door cannot be adjusted with the centering bolts on. Substitute standard bolts (with washers) for the centering bolts when making adjustments.
- For bolts without torque specifications, check the standard bolt chart.

1. INSPECT REAR DOOR

(a) Check that the clearance measurements are within the standard ranges.

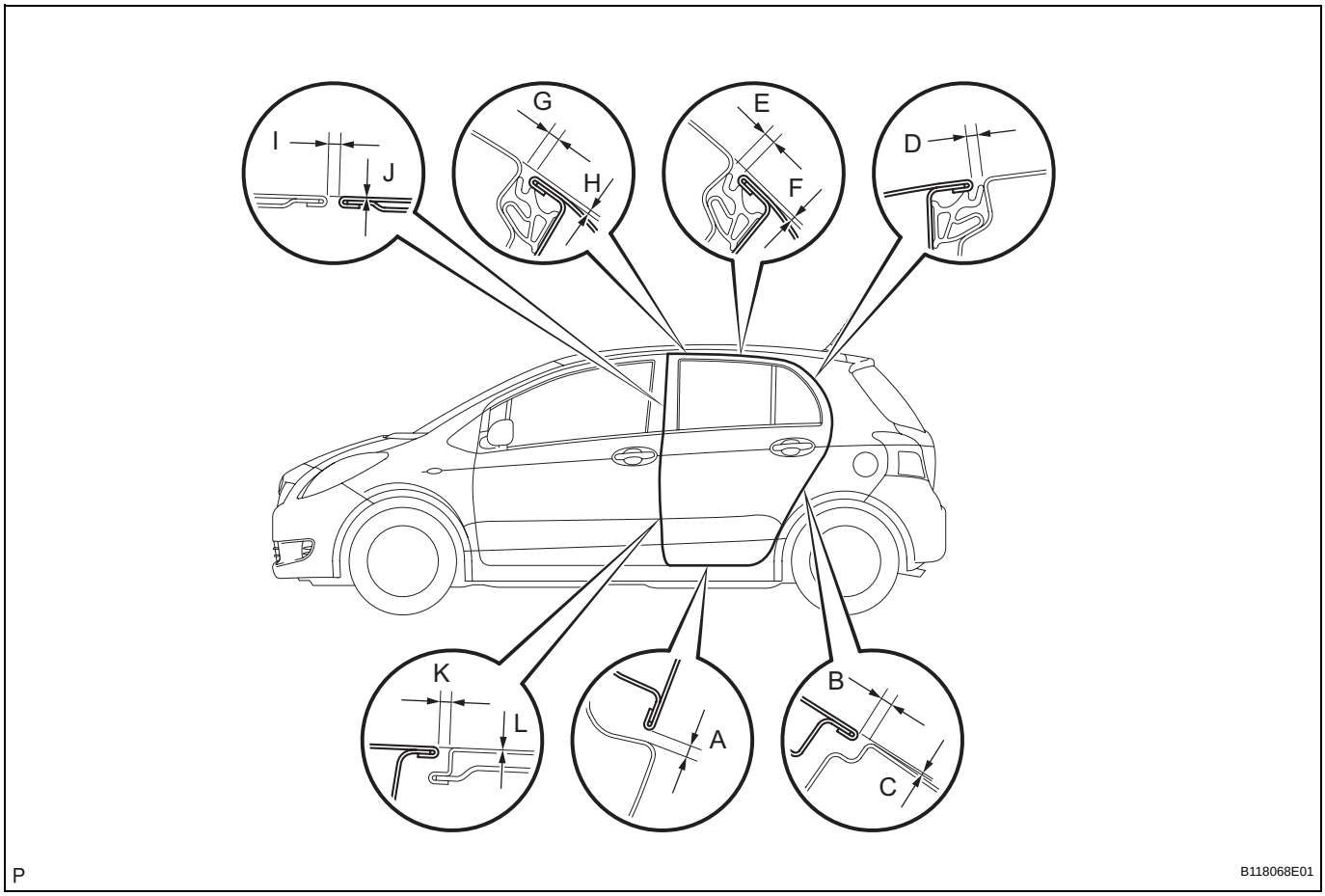

Standard

Area	Measurement	Area	Measurement
A	4.1 to 7.1 mm (0.161 to 0.280 in.)	G	3.5 to 6.5 mm (0.138 to 0.256 in.)
B	2.5 to 5.5 mm (0.098 to 0.217 in.)	H	2.6 mm (0.102 in.)
C	-1.5 to 1.5 mm (-0.059 to 0.059 in.)	I	3.3 to 6.3 mm (0.130 to 0.248 in.)
D	2.5 to 5.5 mm (0.098 to 0.217 in.)	J	-1.5 to 1.5 mm (-0.059 to 0.059 in.)
E	3.5 to 6.5 mm (0.138 to 0.256 in.)	K	3.3 to 6.3 mm (0.130 to 0.248 in.)
F	1.9 mm (0.075 in.)	L	-1.5 to 1.5 mm (-0.059 to 0.059 in.)

2. ADJUST REAR DOOR

(a) Disconnect the cable from the negative battery terminal.

Wait for at least 90 seconds after disconnecting the cable to prevent the airbag from working.

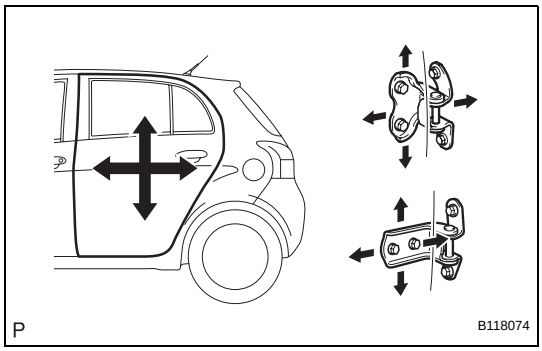

(b) Using SST, adjust the door horizontally and vertically by loosening the body side hinge bolts.
SST 09812-00010

(c) Tighten the body side hinge bolts after the adjustment.
Torque: 26 N*m (265 kgf*cm, 19 ft.*lbf)

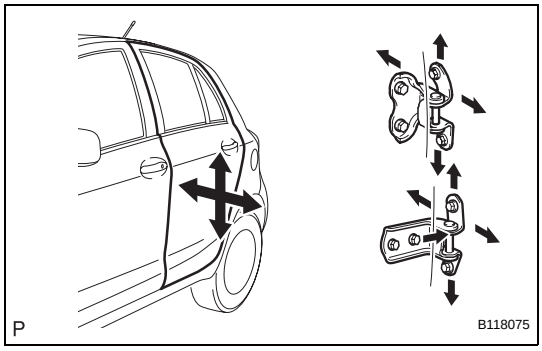

(d) Adjust the door horizontally and vertically by loosening the door side hinge bolts.

(e) Tighten the door side hinge bolts after the adjustment.
Torque: 26 N*m (265 kgf*cm, 19 ft.*lbf)

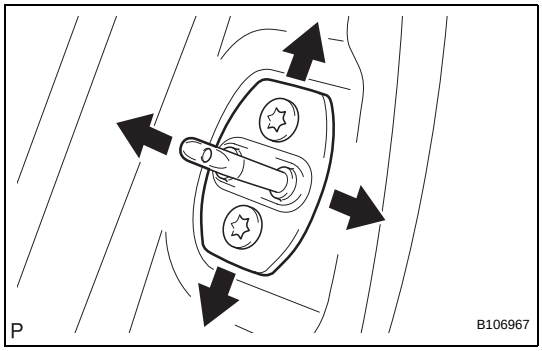

(f) Using "Torx" socket wrench T40, adjust the striker position by slightly loosening the striker mounting screws and hitting the striker with a plastic-faced hammer.

(g) Using "Torx" socket wrench T40, tighten the striker mounting screws after the adjustment.
Torque: 23 N*m (235 kgf*cm, 17 ft.*lbf)

(h) Connect the cable to the negative battery terminal.
Torque: 5.4 N*m (55 kgf*cm, 48 in.*lbf)

REASSEMBLY

1. INSTALL REAR DOOR OUTSIDE HANDLE FRAME SUB-ASSEMBLY

(a) Apply MP grease to the sliding areas of the rear door outside handle frame.

(b) Slide the outside handle frame to install it.

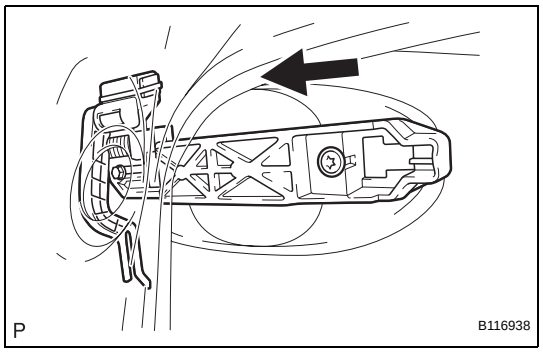

2. INSTALL REAR DOOR OUTSIDE HANDLE PAD FRONT

(a) Engage the 2 claws and install the rear door outside pad front.

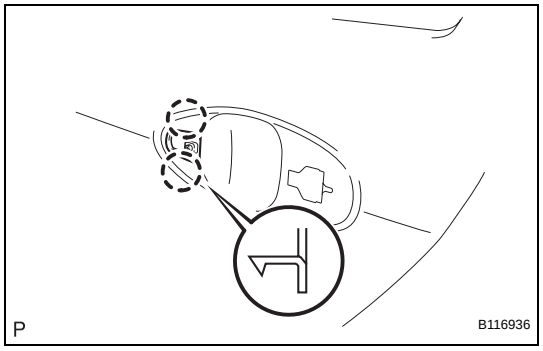

(b) Using "Torx" socket wrench T30, tighten the screw.
Torque: 4.0 N*m (41 kgf*cm, 35 in.*lbf)

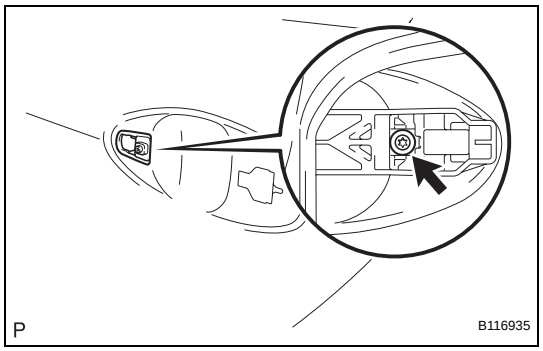

3. INSTALL REAR DOOR OUTSIDE HANDLE PAD REAR

(a) Engage the 2 claws and install the rear door outside pad rear.

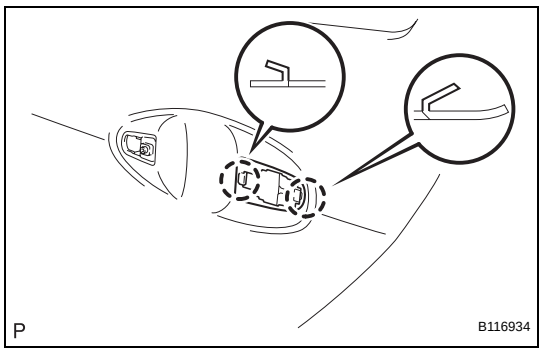

ED

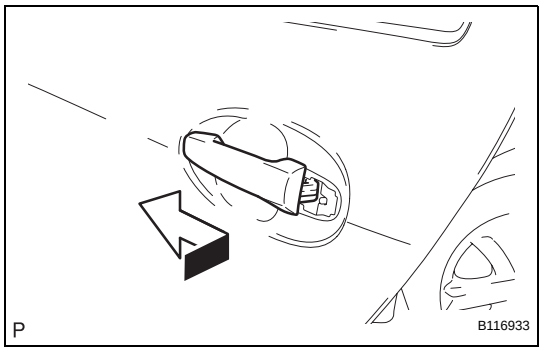

4. INSTALL REAR DOOR OUTSIDE HANDLE ASSEMBLY

(a) Pushing the rear door outside handle in the direction of the arrow mark shown in the illustration, install the rear door outside handle.

5. INSTALL REAR DOOR LOCK ASSEMBLY

NOTICE:

- **If reusing a door lock that has been removed, replace the packing in the connecting part with new.**
- **Make sure that no grease and dirt adheres to the packing surface in the connecting part.**

(a) Apply MP grease to the sliding and rotating areas of the front door lock.

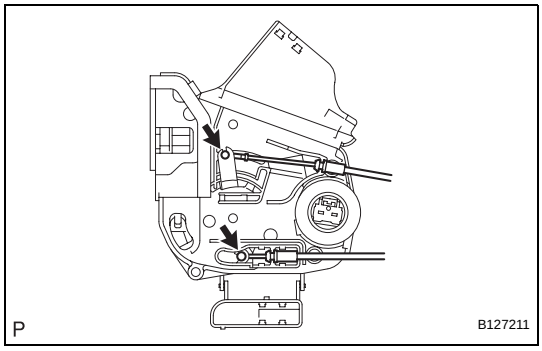

(b) Connect the rear door lock remote control cable and rear door inside locking cable.

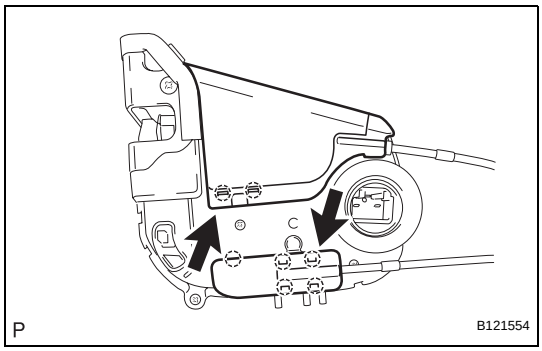

(c) Engage the 7 claws and close the 2 covers.

(d) Insert the door lock into the outside handle frame release plate, then set it onto the door panel.

(e) Make sure that the outside handle frame link is securely engaged with the door lock.

(f) Apply adhesive to the threads of the screws.

Adhesive:

Part No. 08833-00070, THREE BOND 1324 or the equivalent

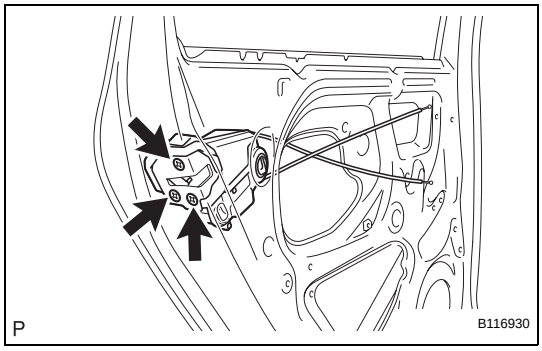

(g) Using "Torx" socket wrench T30, install the rear door lock with the 3 screws.

Torque: 5.0 N*m (51 kgf*cm, 44 in.*lbf)

ED

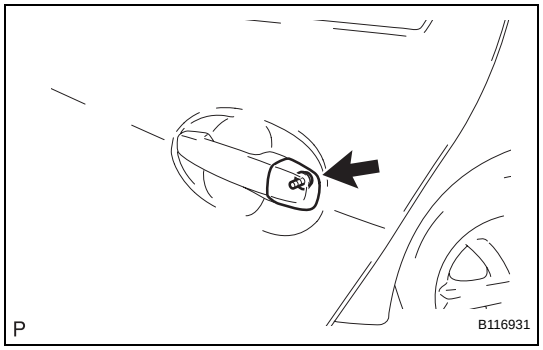

6. INSTALL REAR DOOR OUTSIDE HANDLE COVER

(a) Using "Torx" socket wrench T30, install the rear door outside handle cover with the screw.
Torque: 4.0 N*m (41 kgf*cm, 35 in.*lbf)

7. INSTALL REAR DOOR WINDOW REGULATOR SUB-ASSEMBLY

(a) Apply MP grease to the sliding and rotating areas of the rear door window regulator.
NOTICE:
Do not apply grease to the window regulator spring.

(b) Loosely screw bolt A onto the rear door window regulator.

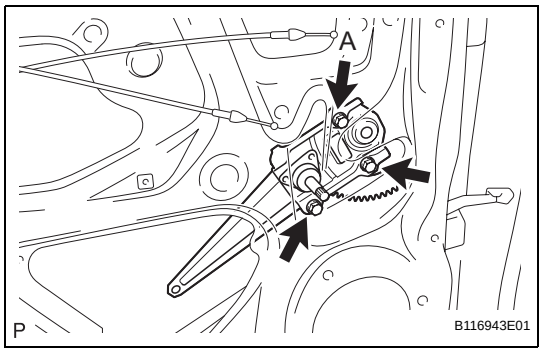

(c) Install the rear door window regulator into the door panel. Use bolt A to hang the rear door window regulator on the door panel.
NOTICE:
Do not drop the window regulator as it may be damaged.

(d) Install the rear door window regulator with the 2 bolts, and tighten bolt A.
Torque: 8.0 N*m (82 kgf*cm, 71 in.*lbf)

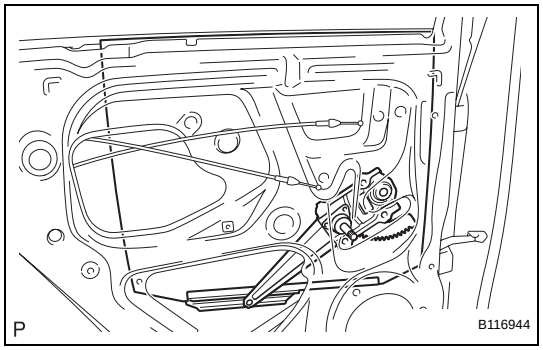

8. INSTALL REAR DOOR GLASS SUB-ASSEMBLY

(a) Install the rear door glass onto the rear door window regulator.

9. INSTALL REAR DOOR QUARTER WINDOW WEATHERSTRIP

(a) Install the rear door quarter window glass onto the rear door quarter window weatherstrip.

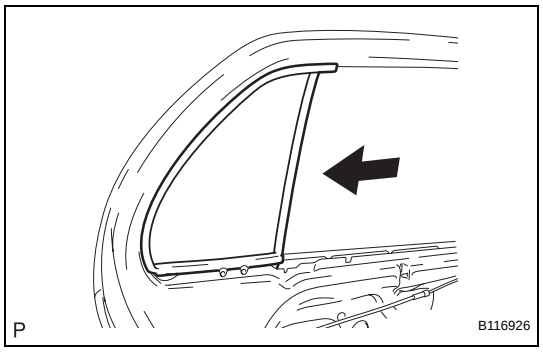

(b) Slide the rear door quarter window weatherstrip, in the direction indicated by the arrow in the illustration, to install it.

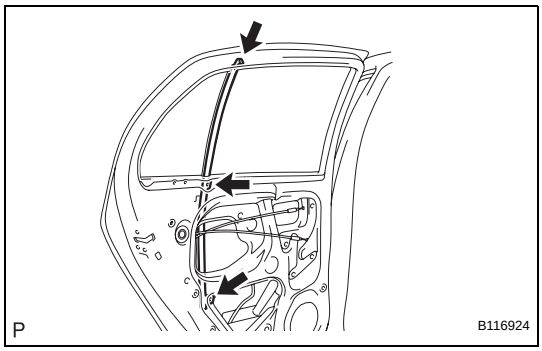

10. INSTALL REAR DOOR WINDOW DIVISION BAR SUB-ASSEMBLY

(a) Install the rear door window division bar with the 2 bolts and screw.
Torque: 6.2 N*m (63 kgf*cm, 54 in.*lbf)

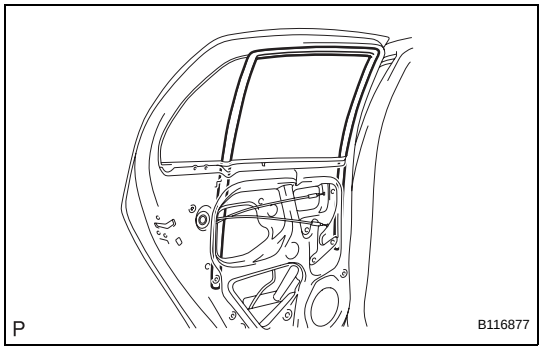

11. INSTALL REAR DOOR GLASS RUN

(a) Install the rear door glass run.

12. INSTALL REAR DOOR BELT MOULDING (See page ET-97)

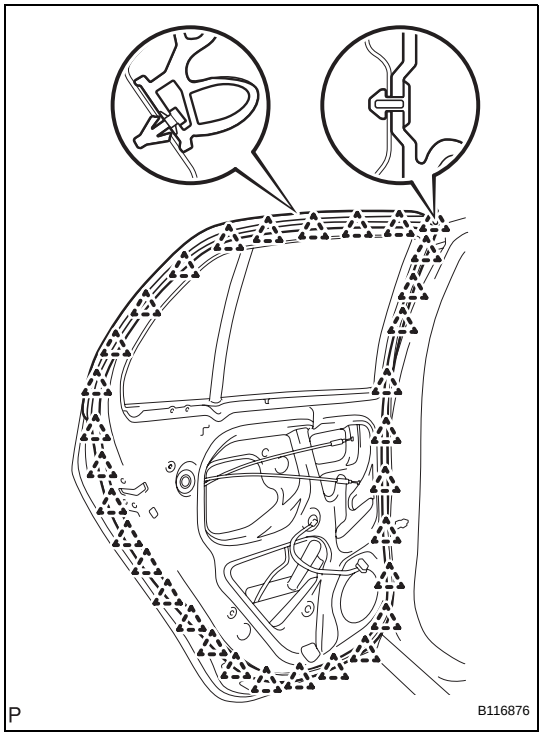

13. INSTALL REAR DOOR WEATHERSTRIP

(a) Engage the 32 clips and install the rear door weatherstrip.

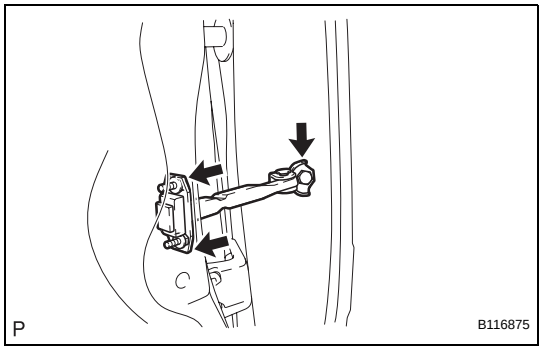

14. INSTALL REAR DOOR CHECK ASSEMBLY

(a) Apply MP grease to the sliding areas of the door check.

(b) Install the rear door check onto the door panel with the 2 bolts.
Torque: 5.5 N*m (56 kgf*cm, 49 in.*lbf)

(c) Apply adhesive to the threads of the bolt.
Adhesive:
Part No. 08833-00070, THREE BOND 1324 or the equivalent

ED

(d) Install the rear door check onto the body panel with the bolt.
Torque: 30 N*m (306 kgf*cm, 22 ft.*lbf)

15. INSTALL REAR DOOR SERVICE HOLE COVER

(a) w/ Rear speaker:
Apply butyl tape to the door panel, then install the rear door service hole cover as shown in the illustration.
Adhesive:
Part No. 08850-00065, Butyl Tape Set or the equivalent
Specification

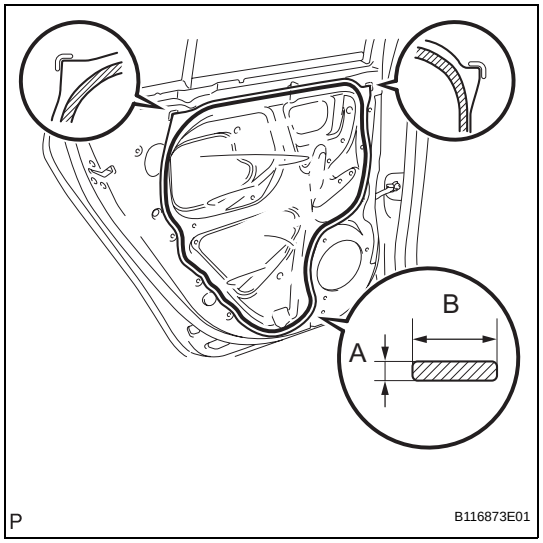

Area	Dimension
A	2.0 mm (0.079 in.) or more
B	6.0 mm (0.236 in.) or more

HINT:
- When installing the service hole cover, pull the links and connectors out through the service hole.
- There should be no wrinkles or folds after attaching the service hole cover.
- After attaching the service hole cover, check the quality of the seal.

(b) w/o Rear speaker:
Apply butyl tape to the door panel, then install the rear door service hole cover as shown in the illustration.
Adhesive:
Part No. 08850-00065, Butyl Tape Set or the equivalent
Specification

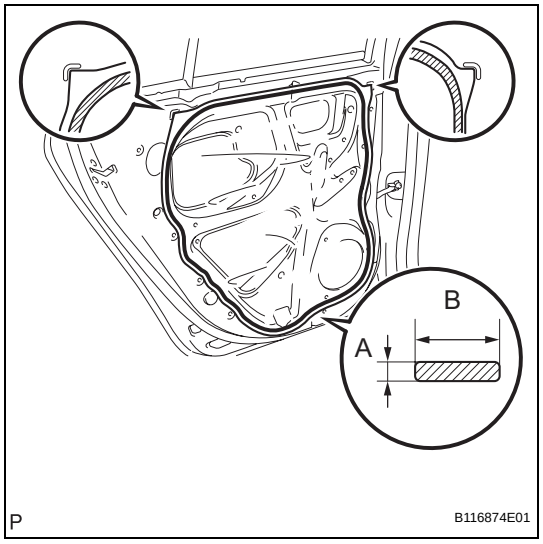

Area	Dimension
A	2.0 mm (0.079 in.) or more
B	6.0 mm (0.236 in.) or more

HINT:
- When installing the service hole cover, pull the links and connectors out through the service hole.
- There should be no wrinkles or folds after attaching the service hole cover.
- After attaching the service hole cover, check the quality of the seal.

16. INSTALL REAR SPEAKER ASSEMBLY (w/ Rear Speaker) (See page AV-178)

17. INSTALL REAR DOOR GLASS WEATHERSTRIP INNER

(a) Install the rear door glass weatherstrip inner onto the rear door trim board.

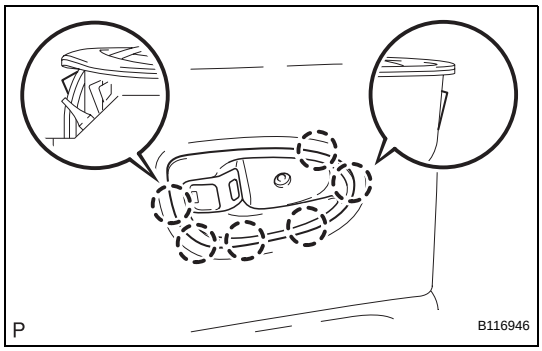

18. INSTALL REAR DOOR INSIDE HANDLE SUB-ASSEMBLY

(a) Engage the 6 claws and install the rear door inside handle.

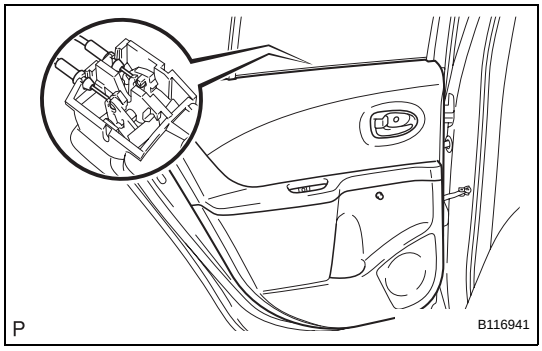

19. INSTALL REAR DOOR TRIM BOARD SUB-ASSEMBLY

(a) Connect the rear door lock remote control cable and rear door inside locking cable.
(b) Connect the connector.

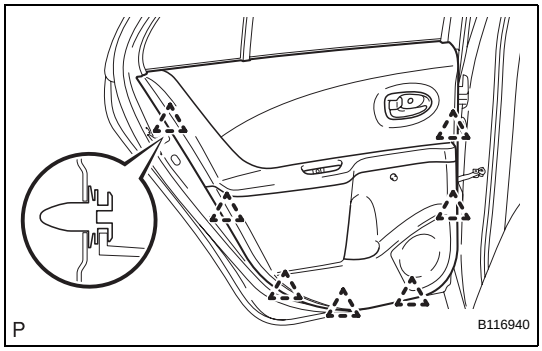

(c) Engage the 7 clips and install the rear door trim board.
(d) Tighten the 2 screws.

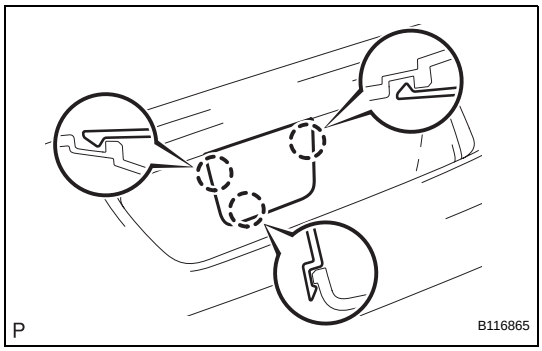

(e) Engage the 3 claws and install the rear door armrest plug.

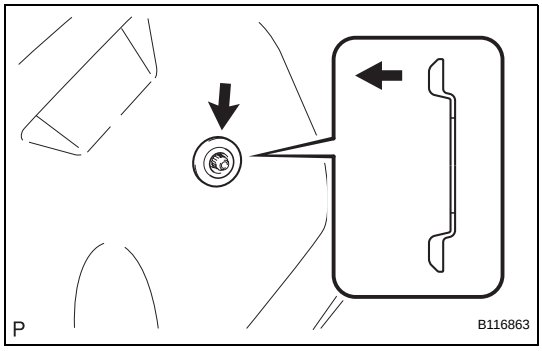

20. INSTALL DOOR WINDOW REGULATOR HANDLE ASSEMBLY

(a) Install the window regulator handle plate.
(b) Open all the windows.

ED

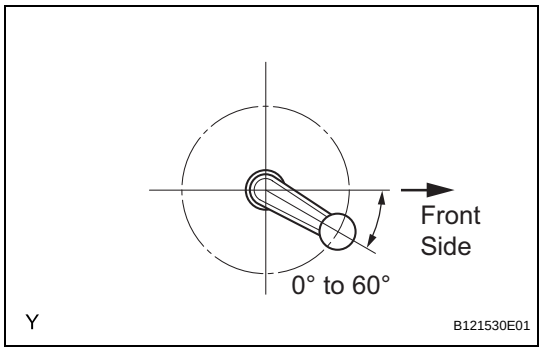

(c) Install the rear door window regulator handle with the clip at the angle shown in the illustration.

21. CONNECT CABLE TO NEGATIVE BATTERY TERMINAL
Torque: 5.4 N*m (55 kgf*cm, 48 in.*lbf)

LUGGAGE COMPARTMENT DOOR (for Sedan)

COMPONENTS

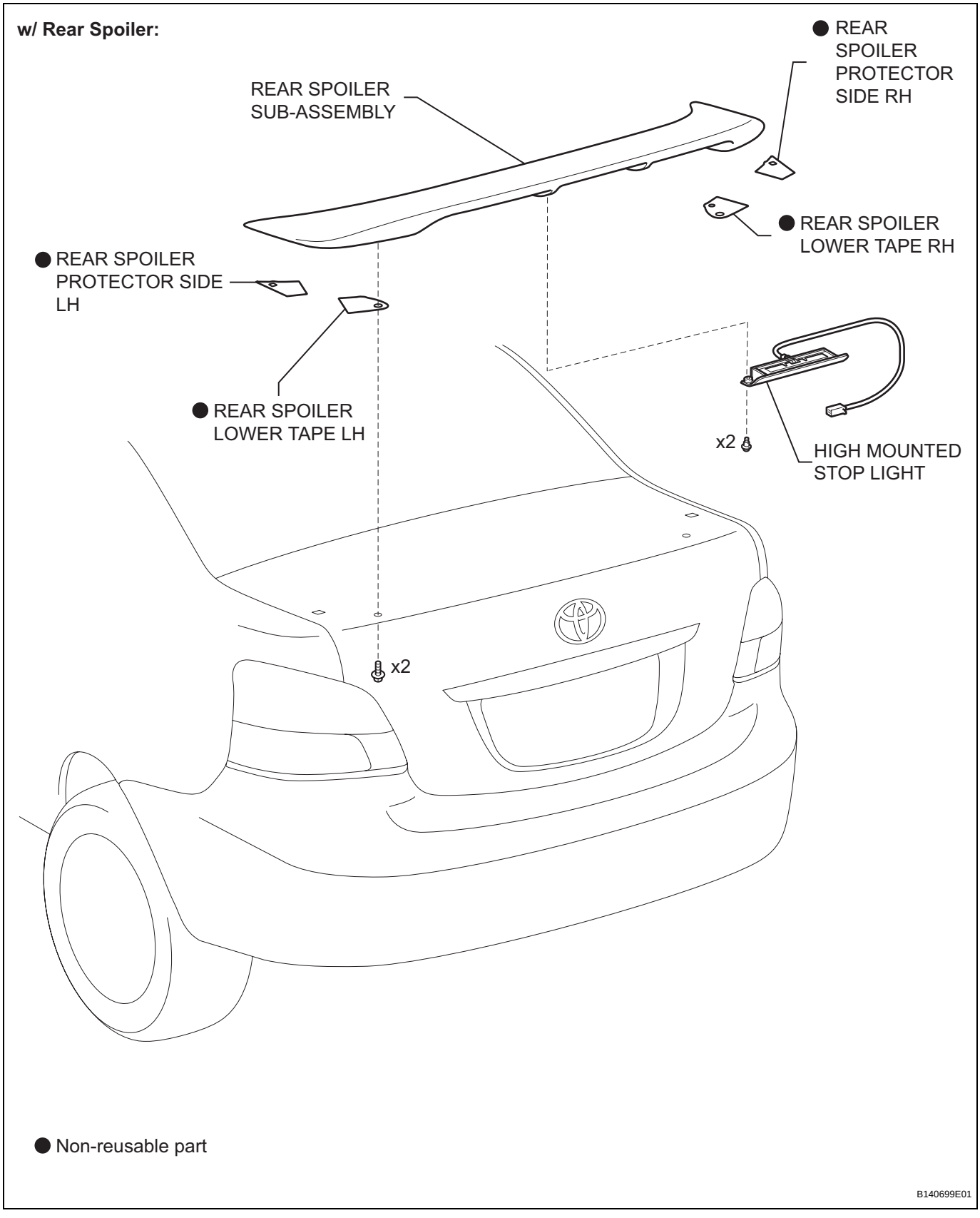

ED

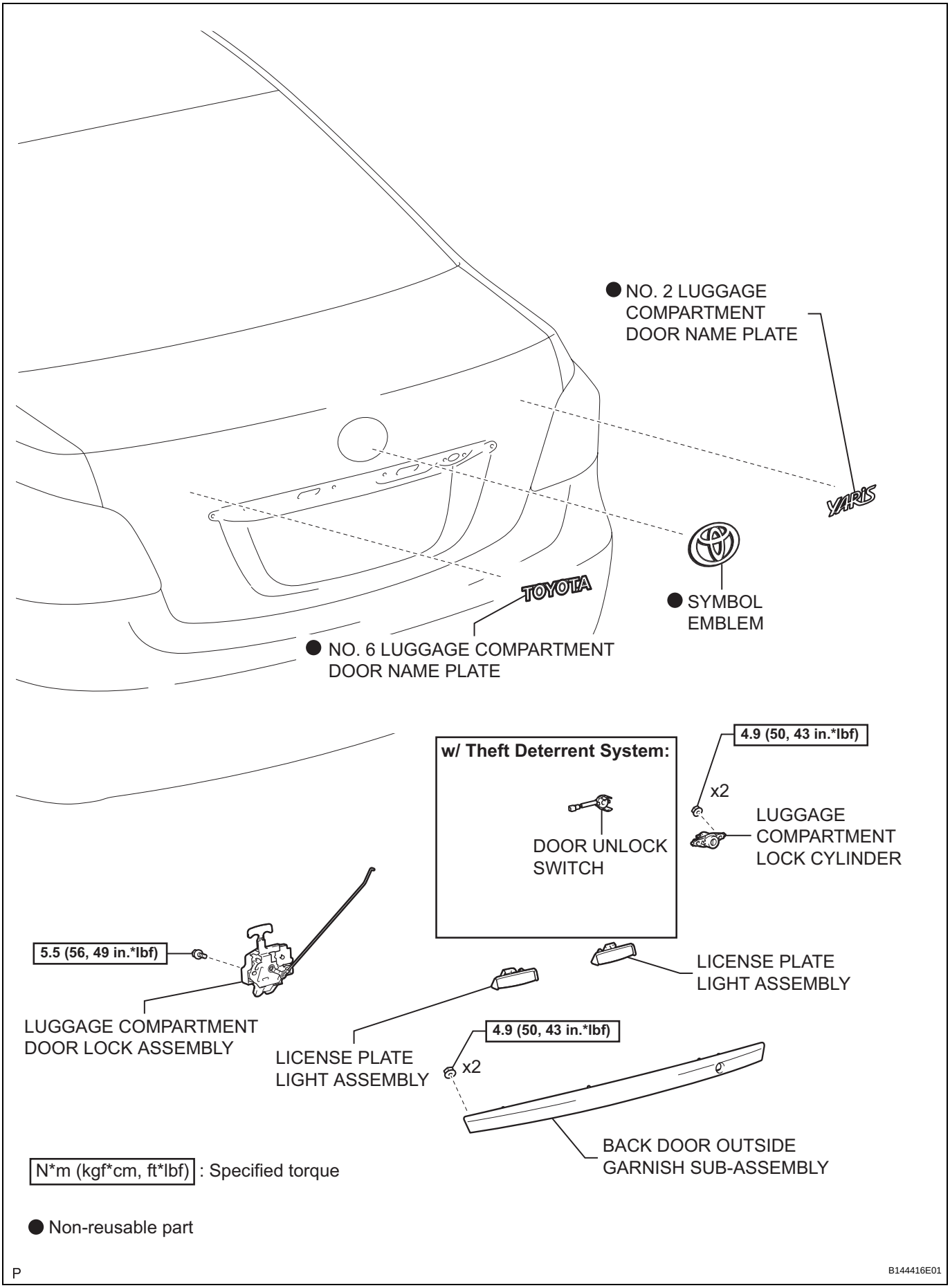

ED

P

B144416E01

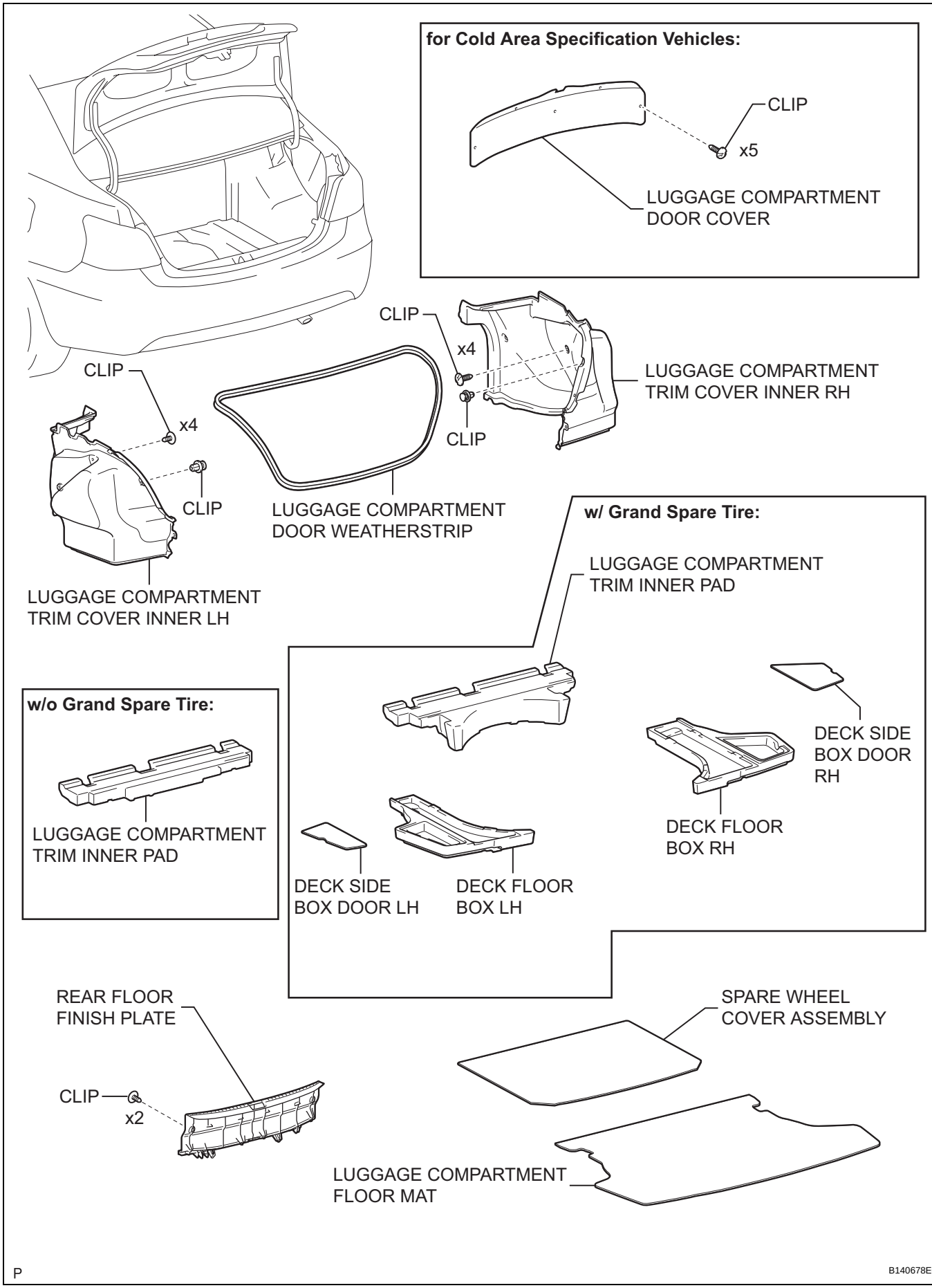
for Cold Area Specification Vehicles:
CLIP
x5
LUGGAGE COMPARTMENT DOOR COVER
CLIP
x4
LUGGAGE COMPARTMENT TRIM COVER INNER RH
CLIP
LUGGAGE COMPARTMENT DOOR WEATHERSTRIP
CLIP
x4
CLIP
LUGGAGE COMPARTMENT TRIM COVER INNER LH
w/ Grand Spare Tire:
LUGGAGE COMPARTMENT TRIM INNER PAD
DECK SIDE BOX DOOR RH
DECK FLOOR BOX RH
DECK SIDE BOX DOOR LH
DECK FLOOR BOX LH
w/o Grand Spare Tire:
LUGGAGE COMPARTMENT TRIM INNER PAD
REAR FLOOR FINISH PLATE
CLIP
x2
SPARE WHEEL COVER ASSEMBLY
LUGGAGE COMPARTMENT FLOOR MAT
P
B140678E01

ED

DISASSEMBLY

1. **DISCONNECT CABLE FROM NEGATIVE BATTERY TERMINAL**

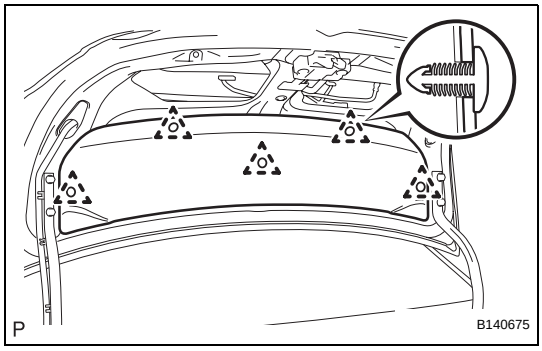

2. **REMOVE LUGGAGE COMPARTMENT DOOR COVER (for Cold Area Specification Vehicles)**
   (a) Disengage the 5 clips and remove the luggage compartment door cover.
3. **REMOVE REAR SPOILER SUB-ASSEMBLY (w/ Rear Spoiler) (See page ET-77)**
4. **REMOVE HIGH MOUNTED STOP LIGHT (w/ Rear Spoiler) (See page ET-78)**
5. **REMOVE LUGGAGE COMPARTMENT DOOR LOCK ASSEMBLY (See page LI-188)**
6. **REMOVE LUGGAGE COMPARTMENT LOCK CYLINDER**
   (a) w/ Theft deterrent system:
   Disconnect the connector.
   (b) Disconnect the luggage compartment door lock link, then remove the 2 nuts and the luggage compartment lock cylinder.

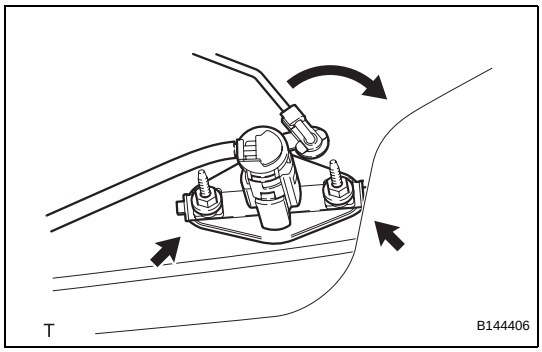

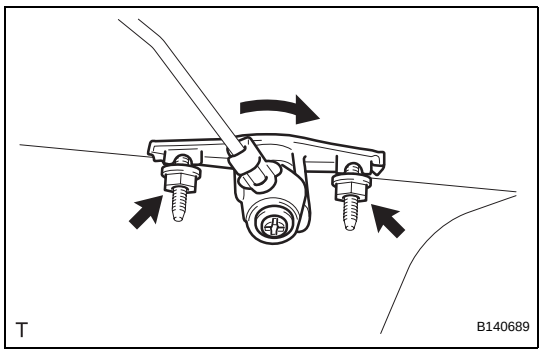

   (c) w/o Theft deterrent system:
   Disconnect the luggage compartment door lock link, then remove the 2 nuts and the luggage compartment lock cylinder.
7. **REMOVE DOOR UNLOCK SWITCH (w/ Theft Deterrent System) (See page TD-56)**
8. **REMOVE BACK DOOR OUTSIDE GARNISH SUB-ASSEMBLY (See page ET-117)**
9. **REMOVE LICENSE PLATE LIGHT ASSEMBLY (See page LI-133)**
10. **REMOVE NO. 6 LUGGAGE COMPARTMENT DOOR NAME PLATE (See page ET-57)**
11. **REMOVE NO. 2 LUGGAGE COMPARTMENT DOOR NAME PLATE (See page ET-57)**
12. **REMOVE SYMBOL EMBLEM (See page ET-58)**

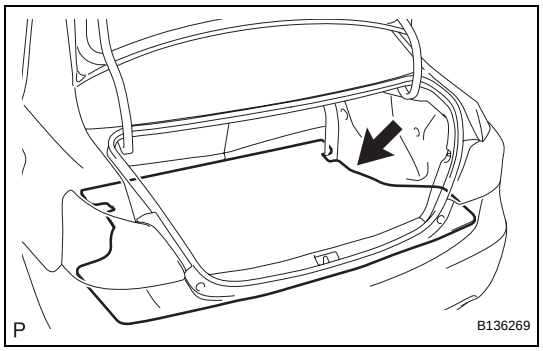

13. REMOVE LUGGAGE COMPARTMENT FLOOR MAT

(a) Remove the luggage compartment floor mat.

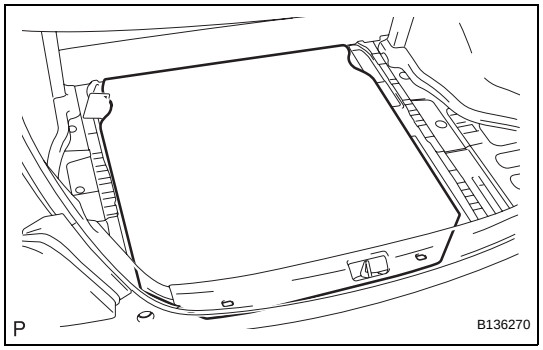

14. REMOVE SPARE WHEEL COVER ASSEMBLY

(a) Remove the spare wheel cover.

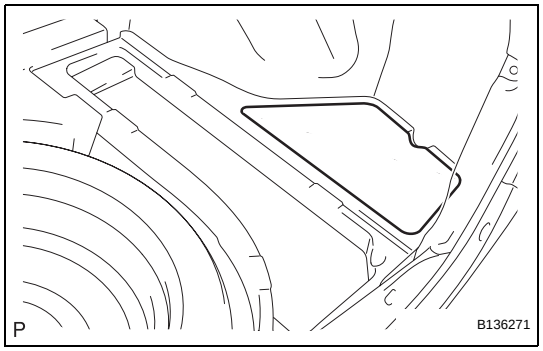

15. REMOVE DECK SIDE BOX DOOR RH (w/ Grand Spare Tire)

(a) Remove the deck side box door RH.

16. REMOVE DECK SIDE BOX DOOR LH (w/ Grand Spare Tire)

HINT:

Use the same procedure as described for the RH side.

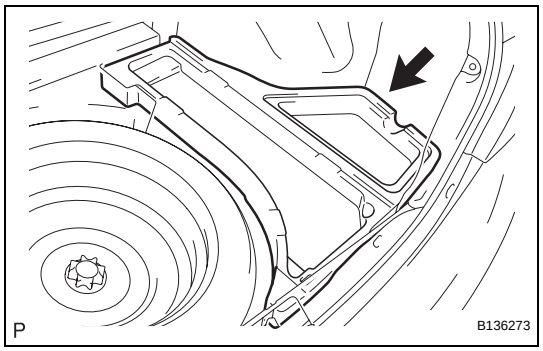

17. REMOVE DECK FLOOR BOX RH (w/ Grand Spare Tire)

(a) Remove the deck floor box RH.

18. REMOVE DECK FLOOR BOX LH (w/ Grand Spare Tire)

HINT:

Use the same procedure as described for the RH side.

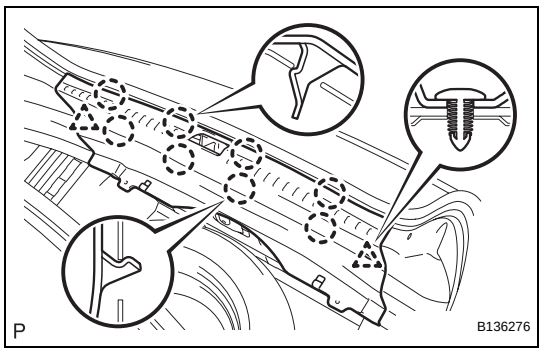

19. REMOVE REAR FLOOR FINISH PLATE

(a) Disengage the 8 claws and 2 clips and remove the rear floor finish plate.

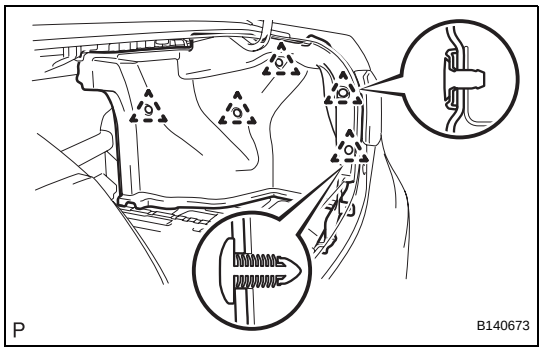

20. REMOVE LUGGAGE COMPARTMENT TRIM COVER INNER RH

(a) Disengage the 5 clips and remove the luggage compartment trim cover inner RH.

21. REMOVE LUGGAGE COMPARTMENT TRIM COVER INNER LH

HINT:

Use the same procedure as described for the RH side.

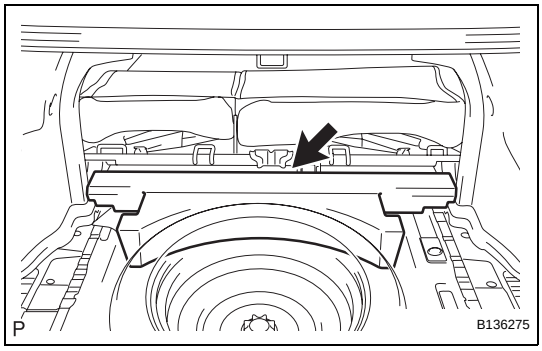

22. REMOVE LUGGAGE COMPARTMENT TRIM INNER PAD

(a) w/ Grand Spare Tire:
Remove the luggage compartment trim inner pad.

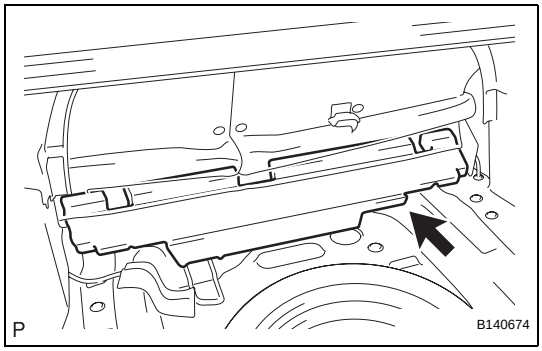

(b) w/o Grand Spare Tire:
Remove the luggage compartment trim inner pad.

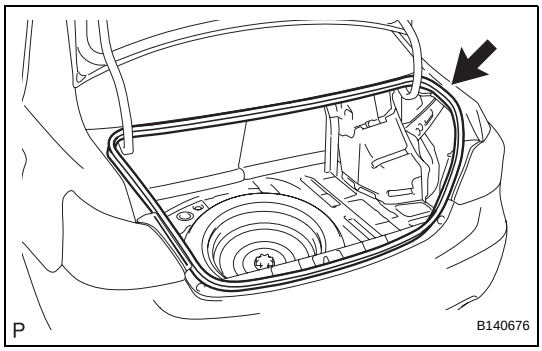

23. REMOVE LUGGAGE COMPARTMENT DOOR WEATHERSTRIP

(a) Remove the luggage compartment door weatherstrip.

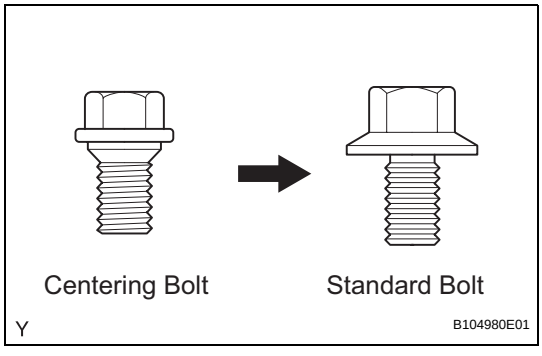

ADJUSTMENT

HINT:

- Centering bolts are used to mount the door hinge onto the vehicle body and door. The door cannot be adjusted with the centering bolts on. Substitute standard bolts (with washers) for the centering bolts when making adjustments.
- For bolts without torque specifications, check the standard bolt chart (see page SS-2).

1. **INSPECT LUGGAGE COMPARTMENT DOOR**
   (a) Check that the clearance measurements are within the standard ranges.

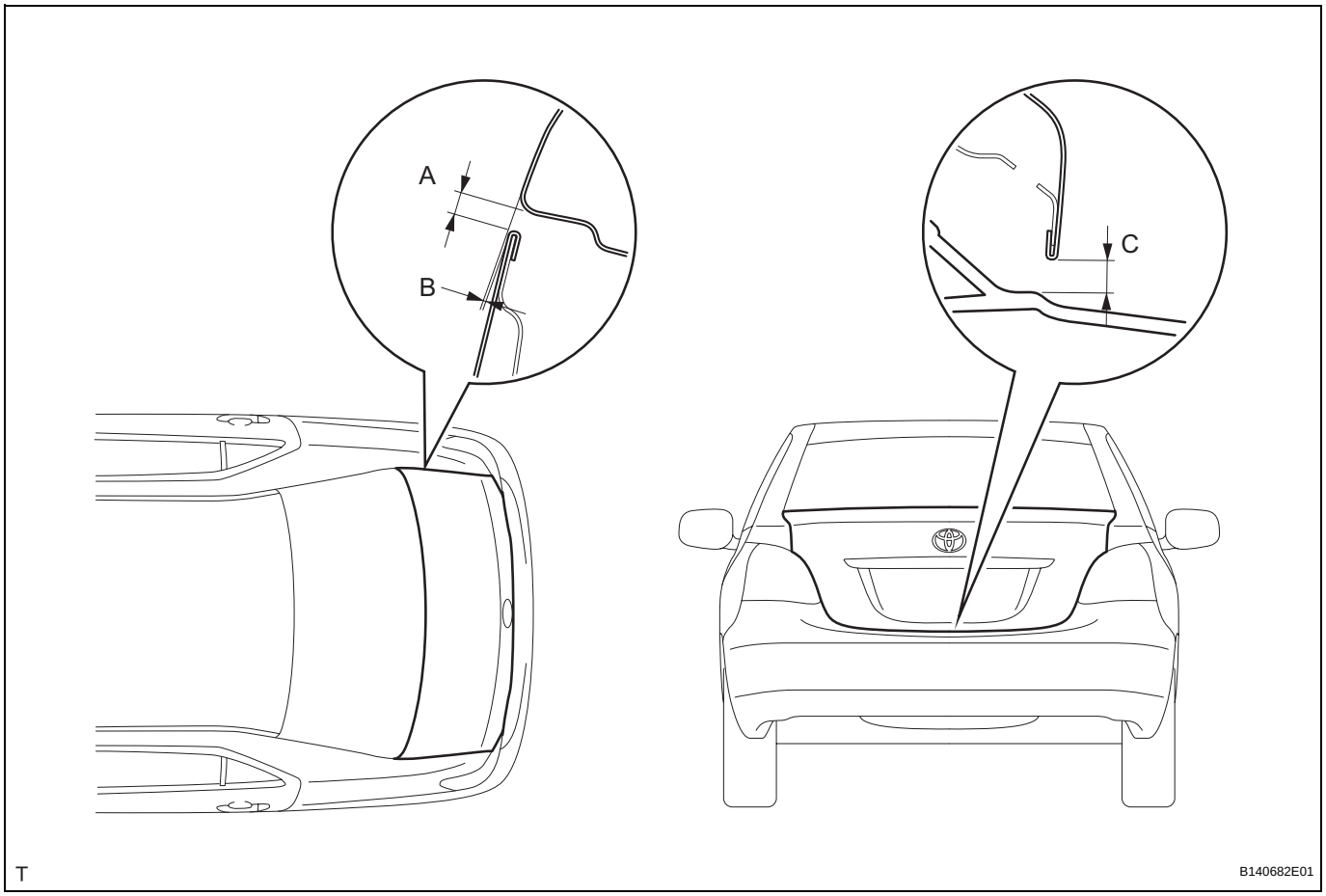

Standard

Area	Measurement	Area	Measurement
A	2.6 to 5.6 mm (0.102 to 0.220 in.)	C	6.45 mm (0.254 in.)
B	-0.6 to 1.4 mm (-0.023 to 0.055 in.)	-	-

2. **REMOVE REAR FLOOR FINISH PLATE (See page ED-133)**

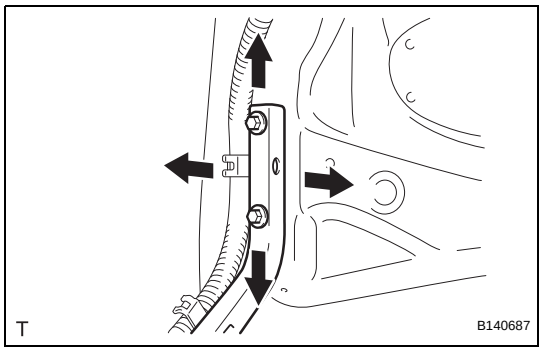

3. **ADJUST LUGGAGE COMPARTMENT DOOR**
   (a) Adjust the door position.
      (1) Horizontally and vertically adjust the door by loosening the door side hinge bolts.
      Torque: 7.0 N*m (71 kgf*cm, 62 in.*lbf)

ED

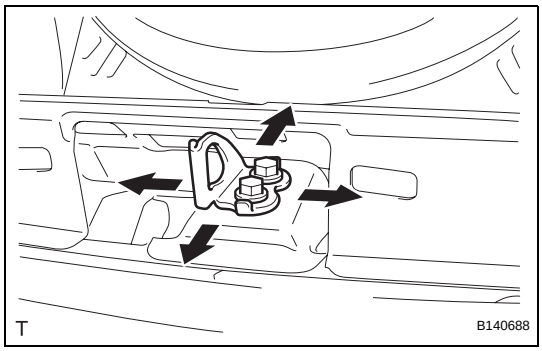

(b) Adjust the striker position.
(1) Adjust the striker position by slightly loosening the striker mounting bolts and hitting the striker with a plastic hammer.
(2) Tighten the striker mounting bolts after the adjustment.
Torque: 5.5 N*m (56 kgf*cm, 49 in.*lbf)

4. INSTALL REAR FLOOR FINISH PLATE (See page ED-137)

INSTALLATION

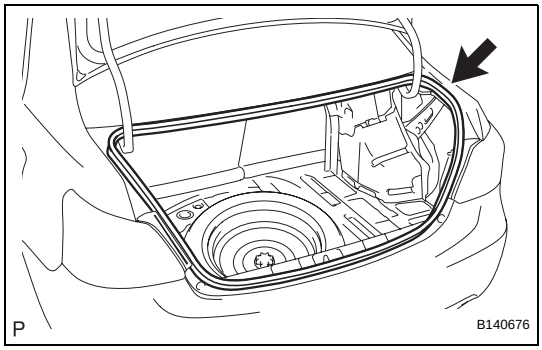

1. INSTALL LUGGAGE COMPARTMENT DOOR WEATHERSTRIP
(a) Install the luggage compartment door weatherstrip.

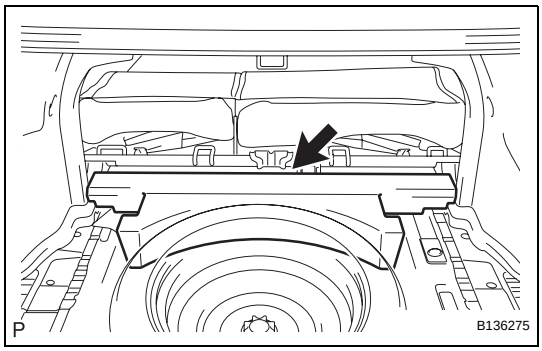

2. INSTALL LUGGAGE COMPARTMENT TRIM INNER PAD
(a) w/ Grand Spare Tire:
Install the luggage compartment trim inner pad.

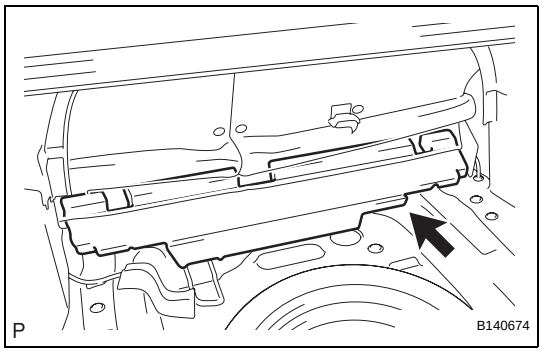

(b) w/o Grand Spare Tire:
Install the luggage compartment trim inner pad.

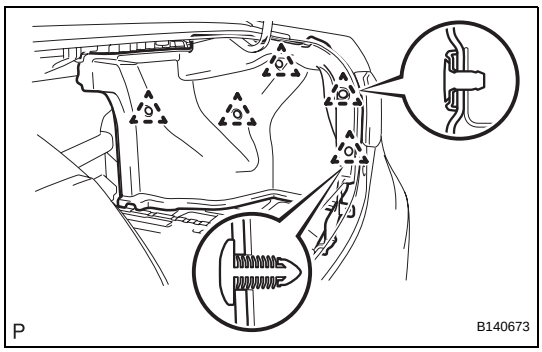

3. INSTALL LUGGAGE COMPARTMENT TRIM COVER INNER RH
(a) Engage the 5 clips and install the luggage compartment trim cover inner RH.

4. INSTALL LUGGAGE COMPARTMENT TRIM COVER INNER LH
HINT:
Use the same procedure as described for the RH side.

ED

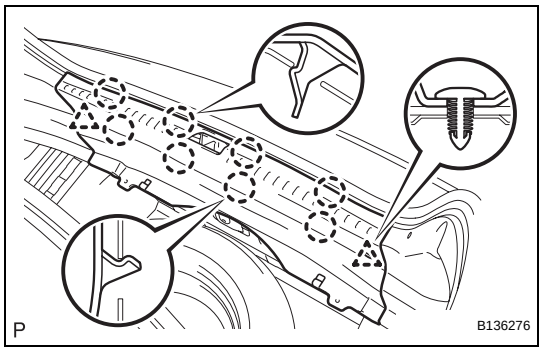

5. **INSTALL REAR FLOOR FINISH PLATE**
   (a) Engage the 8 claws and 2 clips and install the rear floor finish plate.

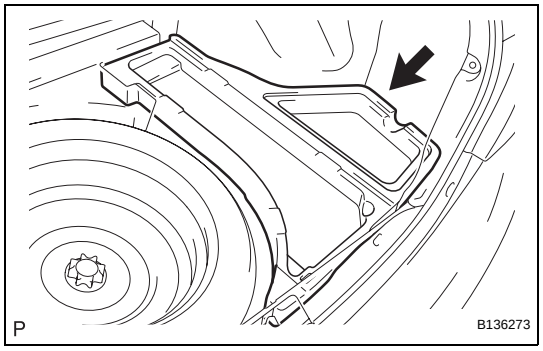

6. **INSTALL DECK FLOOR BOX RH (w/ Grand Spare Tire)**
   (a) Install the deck floor box RH.
7. **INSTALL DECK FLOOR BOX LH (w/ Grand Spare Tire)**
   HINT:
   Use the same procedure as described for the RH side.

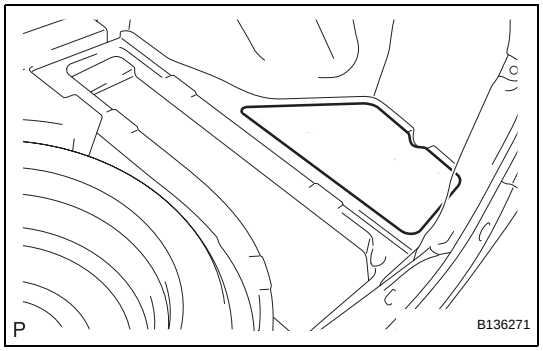

8. **INSTALL DECK SIDE BOX DOOR RH (w/ Grand Spare Tire)**
   (a) Install the deck floor box RH.
9. **INSTALL DECK SIDE BOX DOOR LH (w/ Grand Spare Tire)**
   HINT:
   Use the same procedure as described for the RH side.

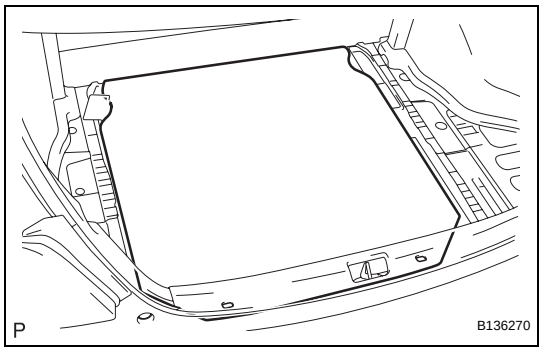

10. **INSTALL SPARE WHEEL COVER ASSEMBLY**
    (a) Install the spare wheel cover.

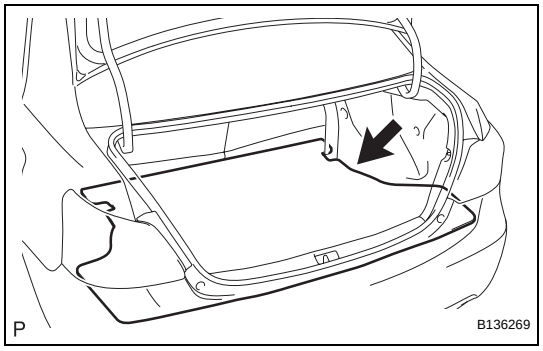

11. **INSTALL LUGGAGE COMPARTMENT FLOOR MAT**
    (a) Install the luggage compartment floor mat.
12. **INSTALL SYMBOL EMBLEM (See page ET-58)**
13. **INSTALL NO. 2 LUGGAGE COMPARTMENT DOOR NAME PLATE (See page ET-59)**
14. **INSTALL NO. 6 LUGGAGE COMPARTMENT DOOR NAME PLATE (See page ET-60)**
15. **INSTALL LICENSE PLATE LIGHT ASSEMBLY (See page LI-134)**

16. **INSTALL BACK DOOR OUTSIDE GARNISH SUB-ASSEMBLY (See page ET-117)**

17. **INSTALL DOOR UNLOCK SWITCH (w/ Theft Deterrent System) (See page TD-56)**

18. **INSTALL LUGGAGE COMPARTMENT LOCK CYLINDER**
    (a) w/ Theft deterrent system:
    Install the luggage compartment lock cylinder with the 2 nuts.
    Torque: 4.9 N*m (50 kgf*cm, 43 in.*lbf)
    (b) Connect the luggage compartment door lock link and connector.

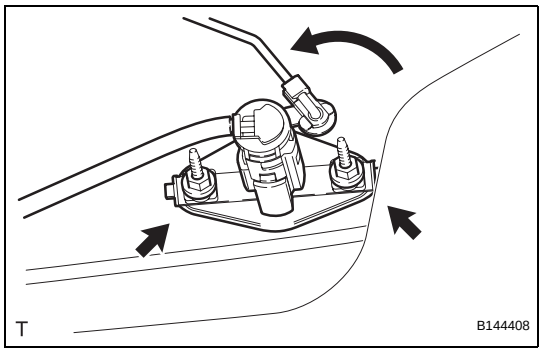

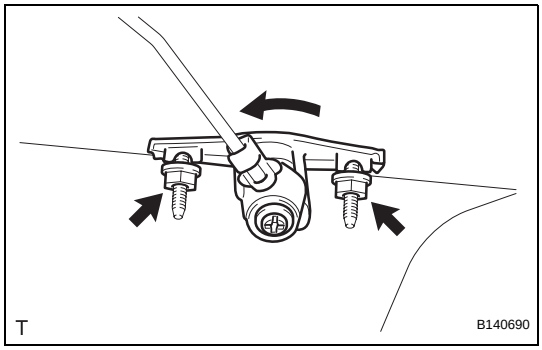

    (c) w/o Theft deterrent system:
    Install the luggage compartment lock cylinder with the 2 nuts.
    Torque: 4.9 N*m (50 kgf*cm, 43 in.*lbf)
    (d) Connect the luggage compartment door lock link.

19. **INSTALL LUGGAGE COMPARTMENT DOOR LOCK ASSEMBLY (See page LI-189)**

20. **INSTALL HIGH MOUNTED STOP LIGHT (w/ Rear Spoiler) (See page ET-78)**

21. **INSTALL REAR SPOILER PROTECTOR SIDE LH (w/ Rear Spoiler) (See page ET-78)**

22. **INSTALL REAR SPOILER PROTECTOR SIDE RH (w/ Rear Spoiler) (See page ET-78)**

23. **INSTALL REAR SPOILER SUB-ASSEMBLY (w/ Rear Spoiler) (See page ET-78)**

ED

24. **INSTALL LUGGAGE COMPARTMENT DOOR COVER (for Cold Area Specification Vehicles)**
    (a) Engage the 5 clips and install the luggage compartment door cover.

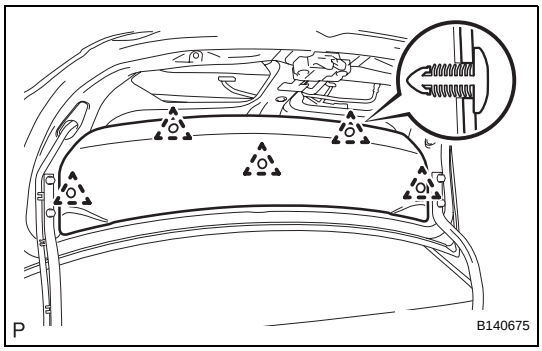

25. **CONNECT CABLE TO NEGATIVE BATTERY TERMINAL**
    Torque: 5.4 N*m (55 kgf*cm, 48 in.*lbf)

BACK DOOR (for Hatchback)

COMPONENTS

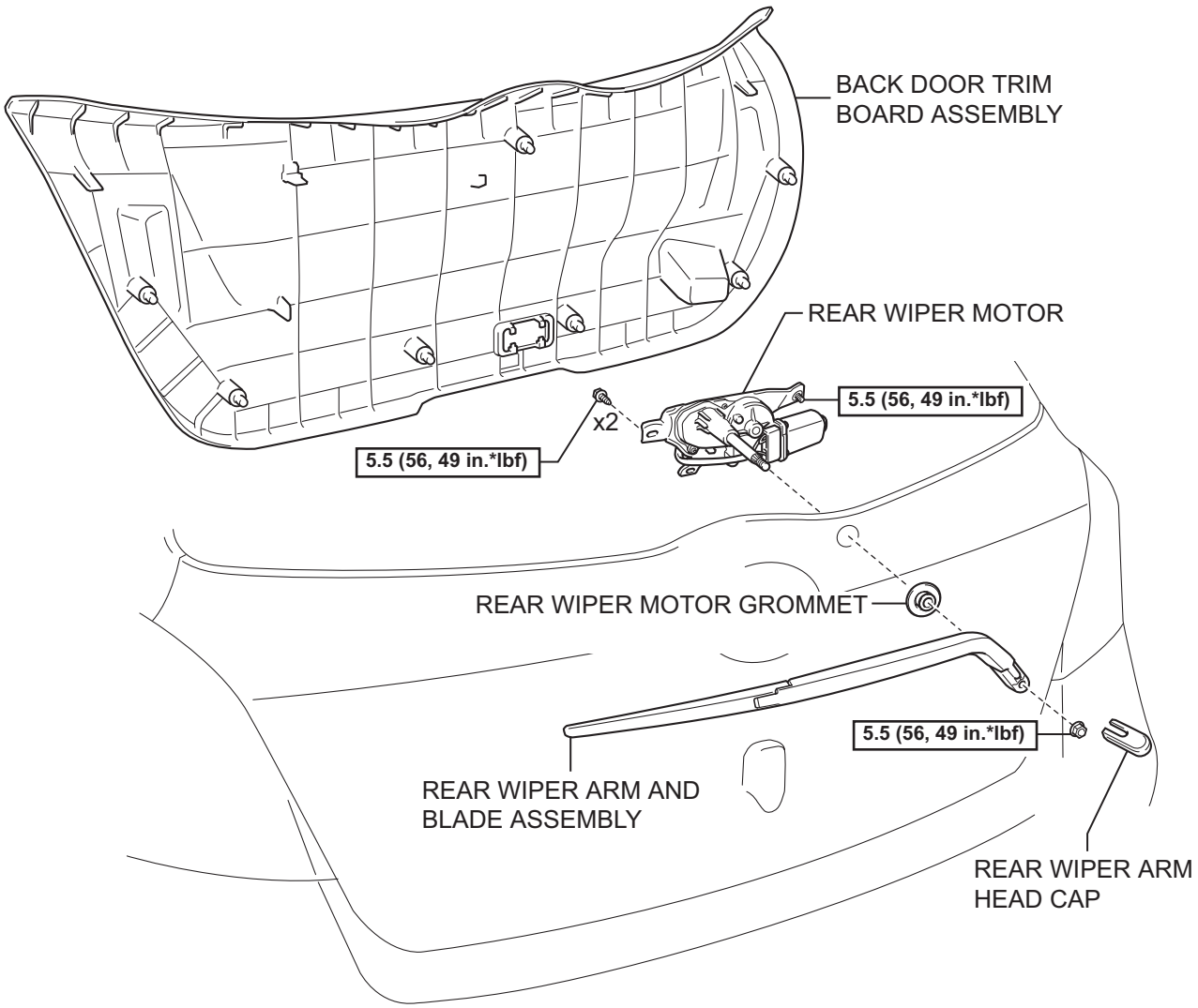

N*m (kgf*cm, ft*lbf) : Specified torque

Y

E117636E01

ED

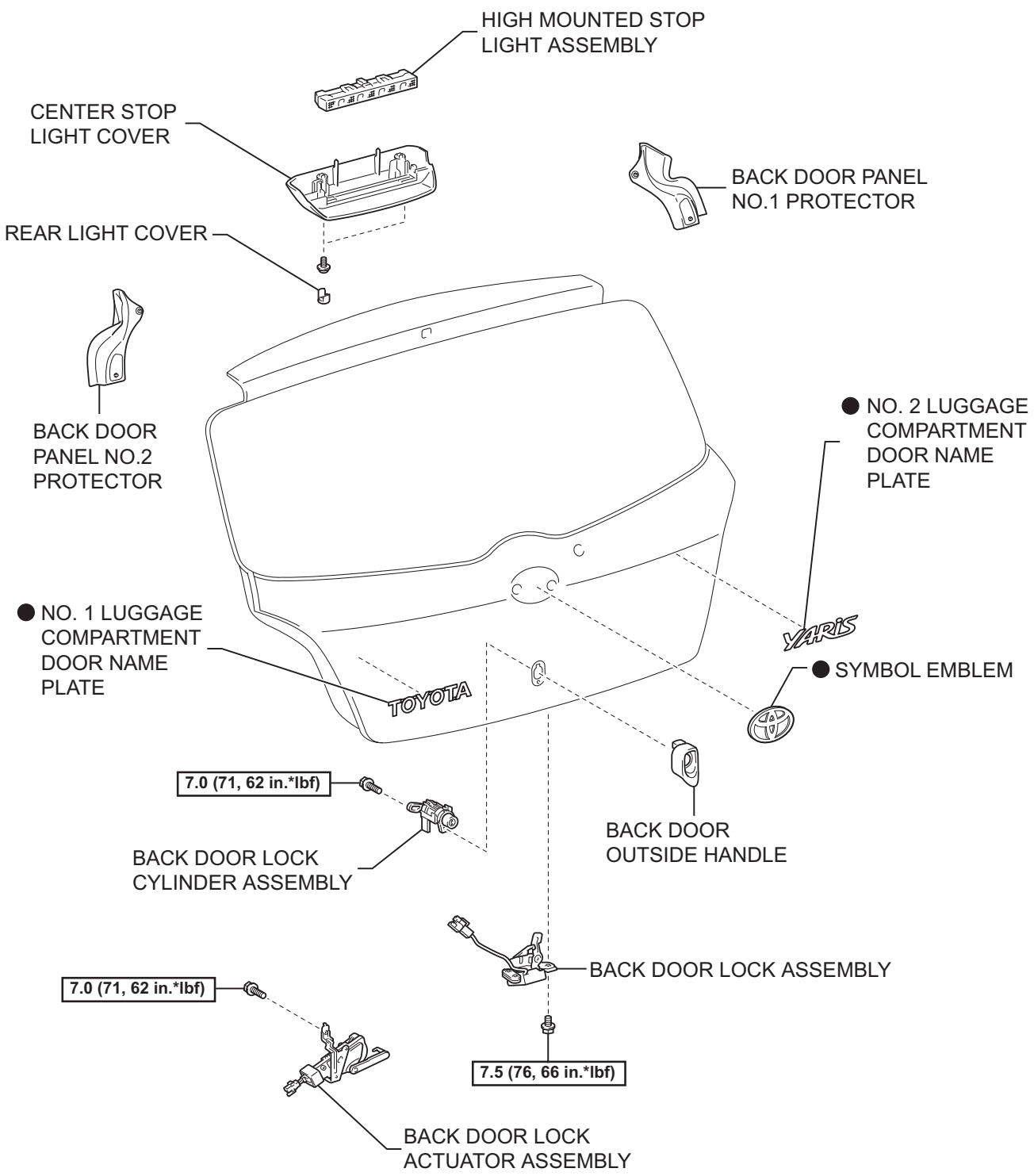

N*m (kgf*cm, ft*lbf) : Specified torque

● Non-reusable part

Y

B121538E01

ED

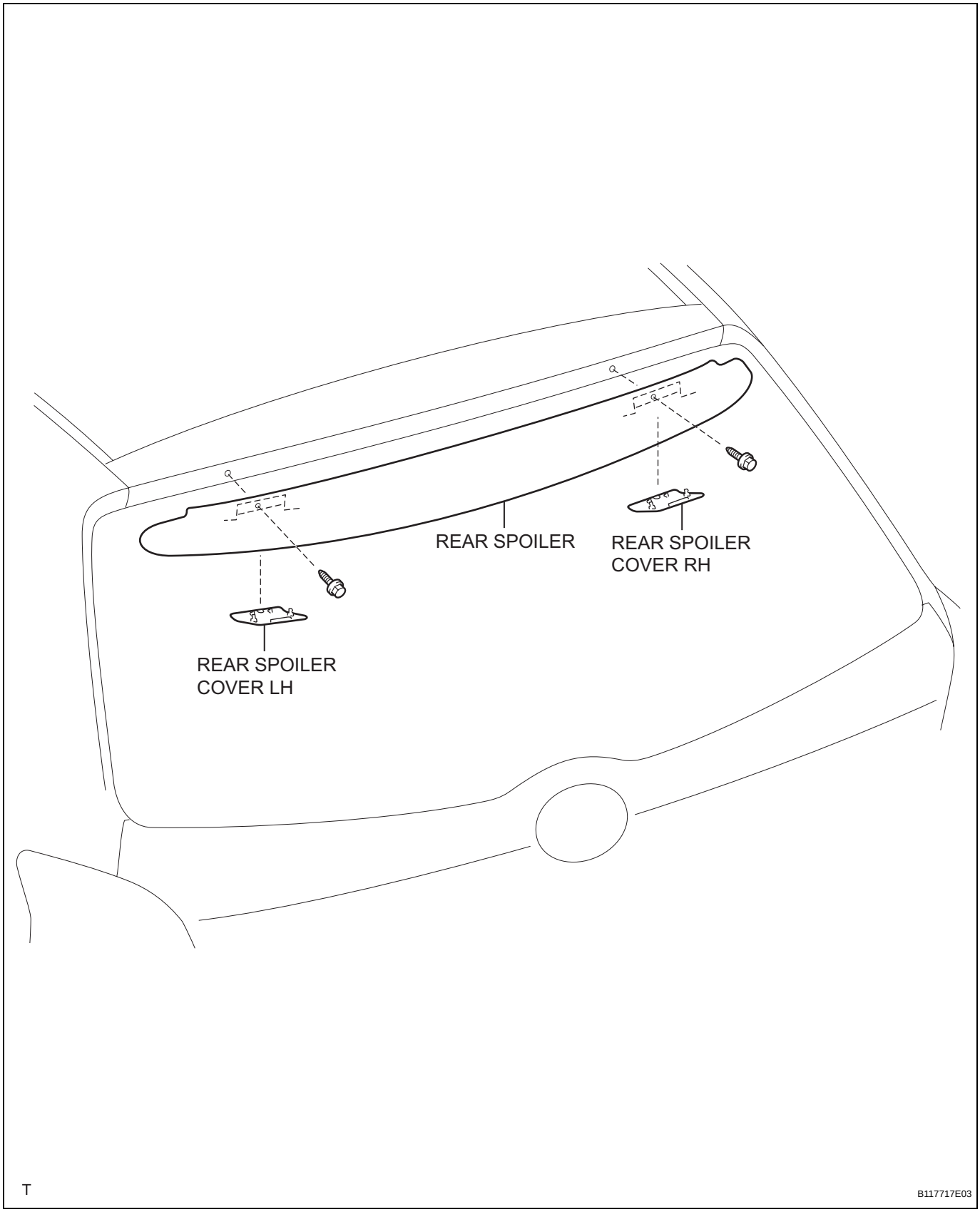
REAR SPOILER
REAR SPOILER COVER RH
REAR SPOILER COVER LH
T
B117717E03

DISASSEMBLY

1. **DISCONNECT CABLE FROM NEGATIVE BATTERY TERMINAL**
2. **REMOVE CENTER STOP LIGHT COVER (See page LI-144)**
3. **REMOVE HIGH MOUNTED STOP LIGHT ASSEMBLY (See page LI-144)**
4. **REMOVE BACK DOOR TRIM BOARD ASSEMBLY**
   (a) Using a screwdriver with its tip wrapped in protective tape, slide the handle plate of the back door trim board to disengage it.

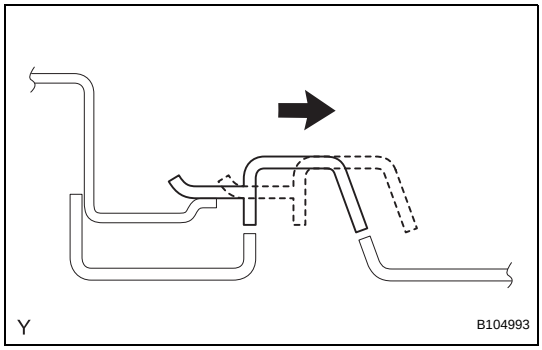

   (b) Disengage the 3 claws and 9 clips and remove the back door trim board.

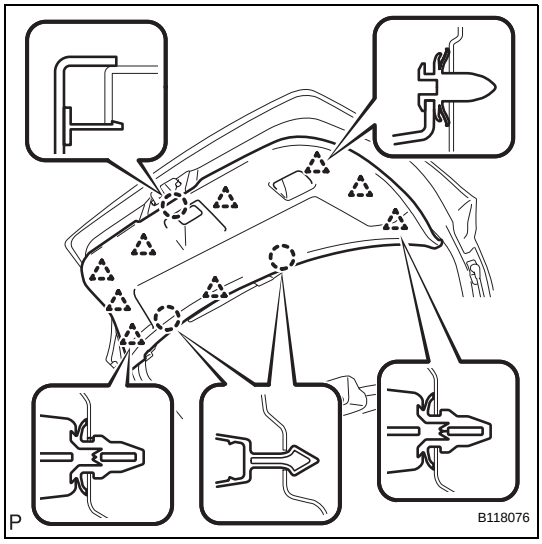

5. **REMOVE REAR WIPER ARM AND BLADE ASSEMBLY (See page WW-28)**
6. **REMOVE REAR WIPER MOTOR GROMMET (See page WW-28)**
7. **REMOVE REAR WIPER MOTOR (See page WW-29)**
8. **REMOVE BACK DOOR PANEL NO.2 PROTECTOR**
   (a) Disengage the claw and clip, then remove back door panel protector No. 2.
   NOTICE:
   Remove any tape remaining on the back door side.

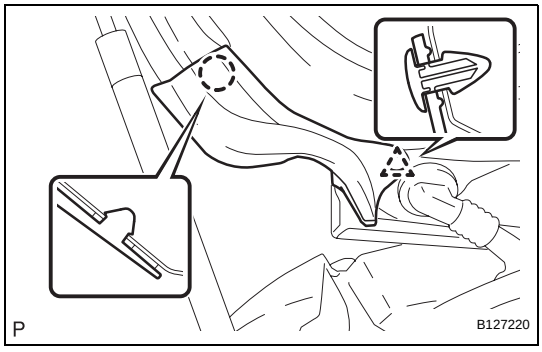

9. **REMOVE BACK DOOR PANEL NO.1 PROTECTOR**
   HINT:
   Use the same procedure as described for the No. 2 side.
10. **REMOVE BACK DOOR LOCK ASSEMBLY (See page DL-152)**

ED

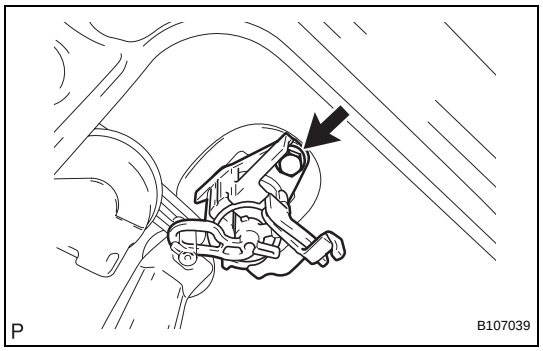

11. REMOVE BACK DOOR LOCK CYLINDER ASSEMBLY

(a) Remove the bolt and back door lock cylinder assembly.

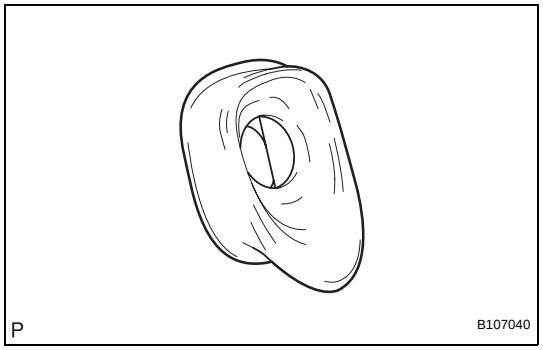

12. REMOVE BACK DOOR OUTSIDE HANDLE

(a) Remove the back door outside handle from the back door panel.

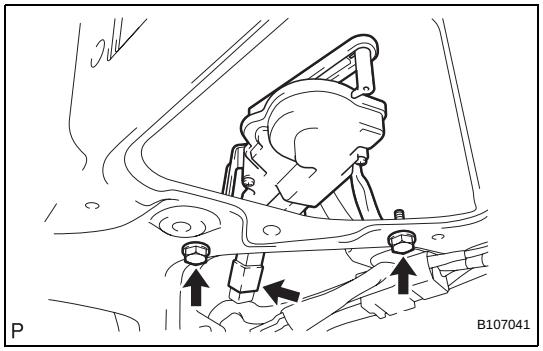

13. REMOVE BACK DOOR LOCK ACTUATOR ASSEMBLY

(a) Disconnect the connector.

(b) Remove the 2 bolts and the back door lock actuator.

14. REMOVE REAR SPOILER COVER LH (See page ET-81)

15. REMOVE REAR SPOILER COVER RH (See page ET-81)

16. REMOVE REAR SPOILER (See page ET-81)

17. REMOVE NO. 1 LUGGAGE COMPARTMENT DOOR NAME PLATE (See page ET-68)

18. REMOVE NO. 2 LUGGAGE COMPARTMENT DOOR NAME PLATE (See page ET-69)

19. REMOVE SYMBOL EMBLEM (See page ET-68)

ADJUSTMENT

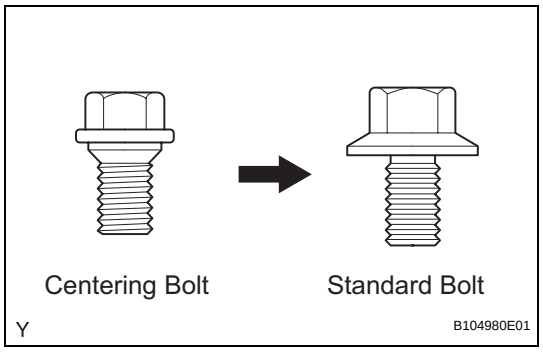

HINT:

- Centering bolts are used to mount the door hinge onto the vehicle body and door. The door cannot be adjusted with the centering bolts on. Substitute standard bolts (with washers) for the centering bolts when making adjustments.
- For bolts without torque specifications, check the standard bolt chart.

ED

1. INSPECT BACK DOOR

(a) Check that the clearance measurements are within the standard ranges.

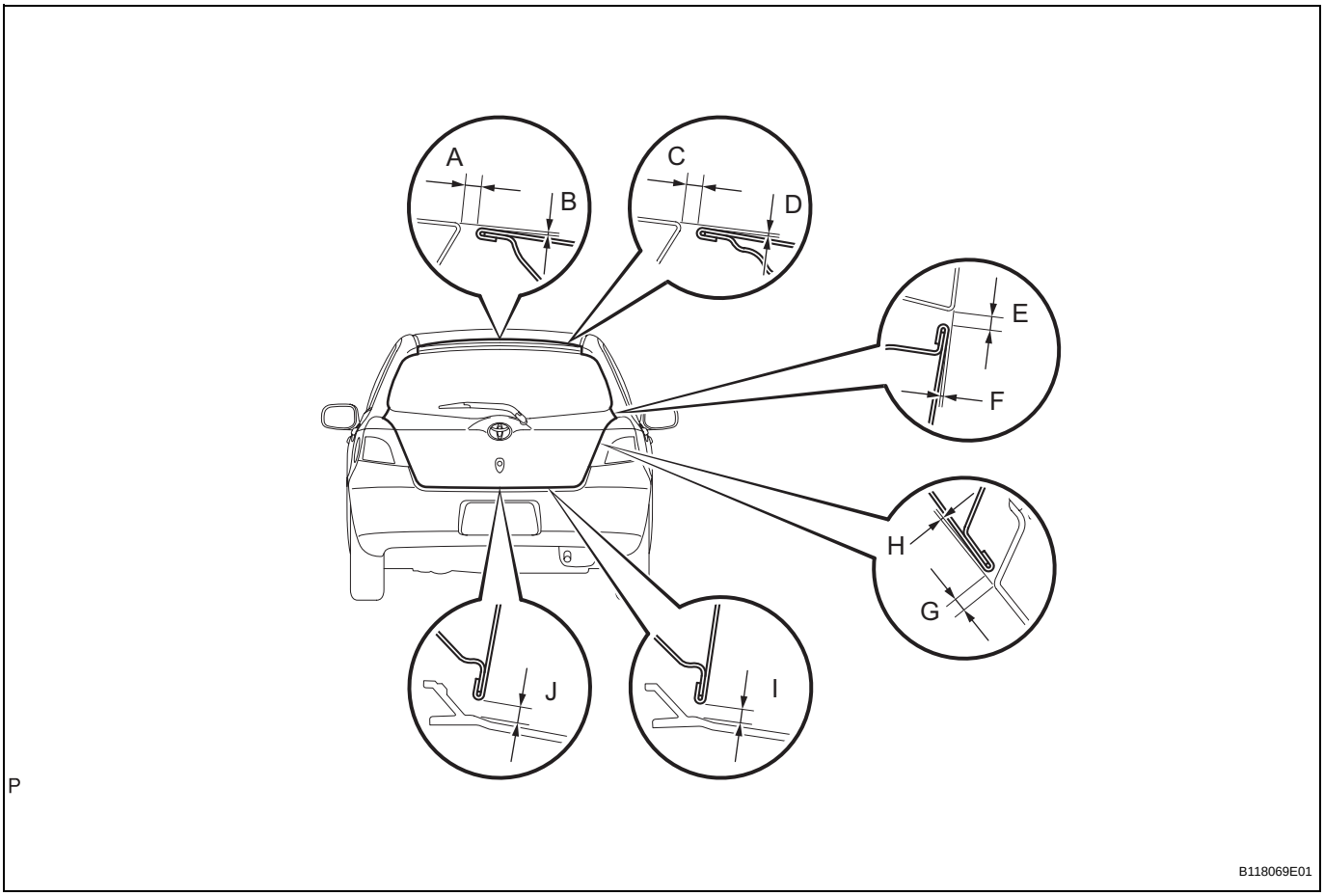

Standard

Area	Measurement	Area	Measurement
A	4.5 to 7.5 mm (0.177 to 0.295 in.)	F	-1.5 to 1.5 mm (-0.059 to 0.059 in.)
B	-0.5 to 2.5 mm (-0.020 to 0.098 in.)	G	3.05 to 7.05 mm (0.120 to 0.278 in.)
C	4.5 to 7.5mm (0.177 to 0.295 in.)	H	-1.5 to 1.5 mm (-0.059 to 0.059 in.)
D	-0.6 to 2.4 mm (-0.024 to 0.094 in.)	I	4.05 to 8.05 mm (0.159 to 0.317 in.)
E	3.6 to 6.6 mm (0.142 to 0.260 in.)	J	4.15 to 8.15 mm (0.163 to 0.321 in.)

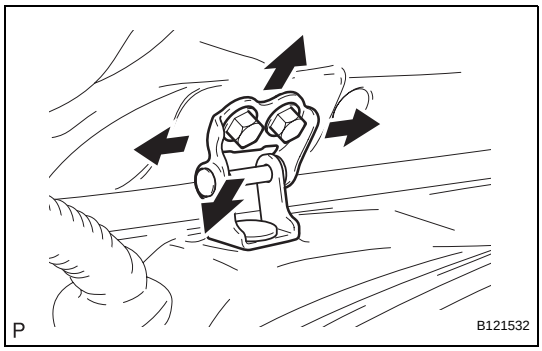

2. ADJUST BACK DOOR

(a) Adjust the door position.

(1) Horizontally and vertically adjust the door by loosening the door side hinge bolts.

Torque: 12 N*m (122 kgf*cm, 8.9 ft.*lbf)

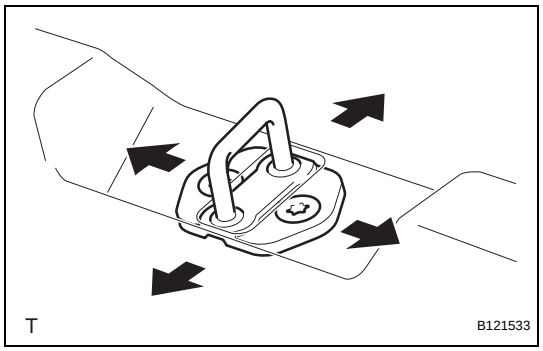

(b) Adjust the striker position.
  (1) Adjust the striker position by slightly loosening the striker mounting bolts and hitting the striker with a plastic hammer.
  (2) Tighten the striker mounting bolts after the adjustment.
  Torque: 12 N*m (122 kgf*cm, 8.9 in.*lbf)

REASSEMBLY

1. **INSTALL SYMBOL EMBLEM (See page ET-72)**
2. **INSTALL NO. 2 LUGGAGE COMPARTMENT DOOR NAME PLATE (See page ET-70)**
3. **INSTALL NO. 1 LUGGAGE COMPARTMENT DOOR NAME PLATE (See page ET-71)**
4. **INSTALL REAR SPOILER (See page ET-81)**
5. **INSTALL REAR SPOILER COVER LH (See page ET-82)**
6. **INSTALL REAR SPOILER COVER RH (See page ET-82)**
7. **INSTALL BACK DOOR LOCK ACTUATOR ASSEMBLY**
   (a) Install the back door lock actuator with the 2 bolts.
   Torque: 7.0 N*m (71 kgf*cm, 62 in.*lbf)
   (b) Connect the connector.

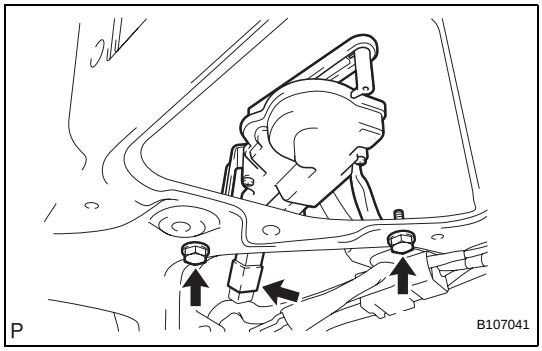

8. **INSTALL BACK DOOR OUTSIDE HANDLE**
   (a) Install the back door outside handle onto the back door panel.

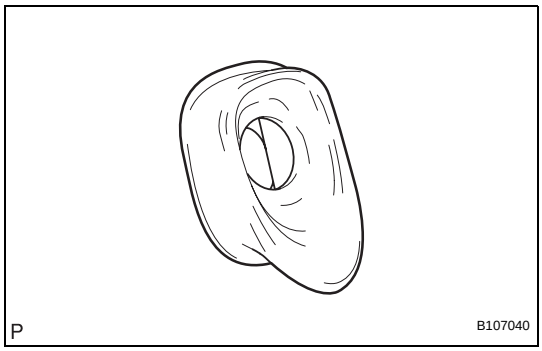

9. **INSTALL BACK DOOR LOCK CYLINDER ASSEMBLY**
   (a) Install back door lock cylinder with the bolt.
   Torque: 7.0 N*m (71 kgf*cm, 62 in.*lbf)
10. **INSTALL BACK DOOR LOCK ASSEMBLY (See page DL-153)**

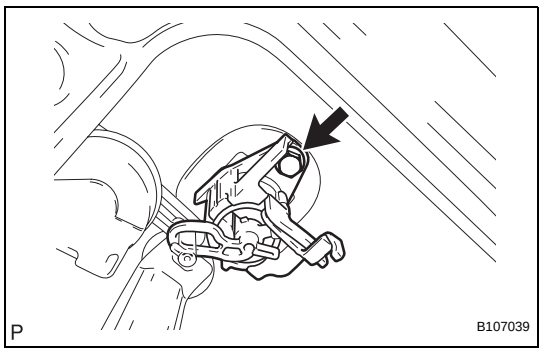

ED

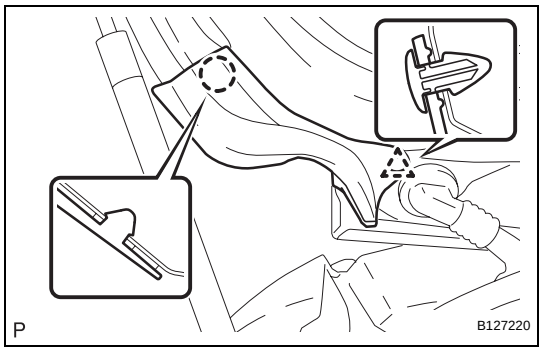

11. INSTALL BACK DOOR PANEL NO.2 PROTECTOR

(a) Apply Primer G to the installation part of back door panel protector No. 2.

NOTICE:

- **Allow the primer to dry for 3 minutes or more.**
- **Throw away any leftover Primer G.**
- **Do not apply too much Primer G.**

(b) Engage the claw and clip and install the protector onto the back door panel, as shown in the illustration.

12. INSTALL BACK DOOR PANEL NO.1 PROTECTOR

HINT:

Use the same procedure as described for the No. 2 side.

13. INSTALL REAR WIPER MOTOR (See page WW-29)

14. INSTALL REAR WIPER MOTOR GROMMET (See page WW-29)

15. INSTALL REAR WIPER ARM AND BLADE ASSEMBLY (See page WW-30)

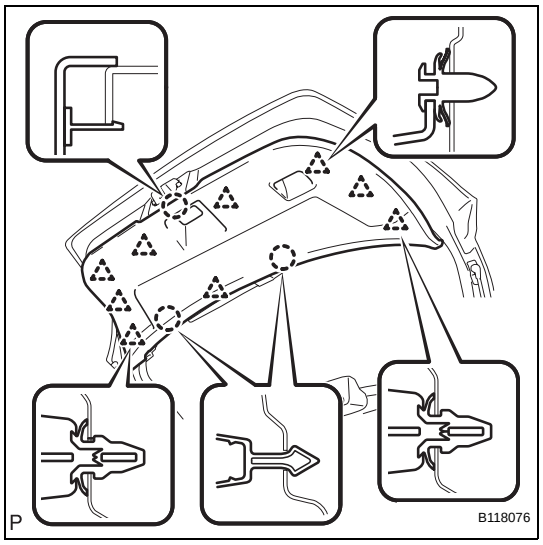

16. INSTALL BACK DOOR TRIM BOARD ASSEMBLY

(a) Engage the 3 claws and 9 clips and install the back door trim board.

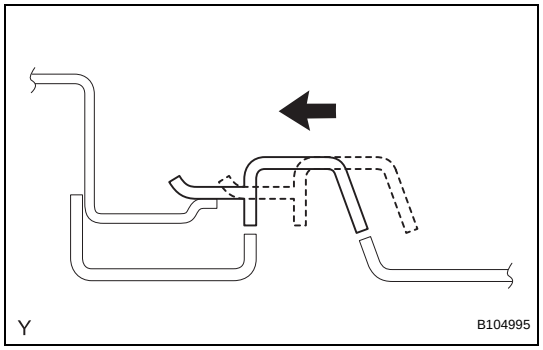

(b) Slide the handle plate of the back door trim board to engage it.

17. INSTALL HIGH MOUNTED STOP LIGHT ASSEMBLY (See page LI-145)

18. INSTALL CENTER STOP LIGHT COVER (See page LI-145)

19. CONNECT CABLE TO NEGATIVE BATTERY TERMINAL

Torque: 5.4 N*m (55 kgf*cm, 48 in.*lbf)

ED

BACK DOOR SUPPORT (for Hatchback)

COMPONENTS

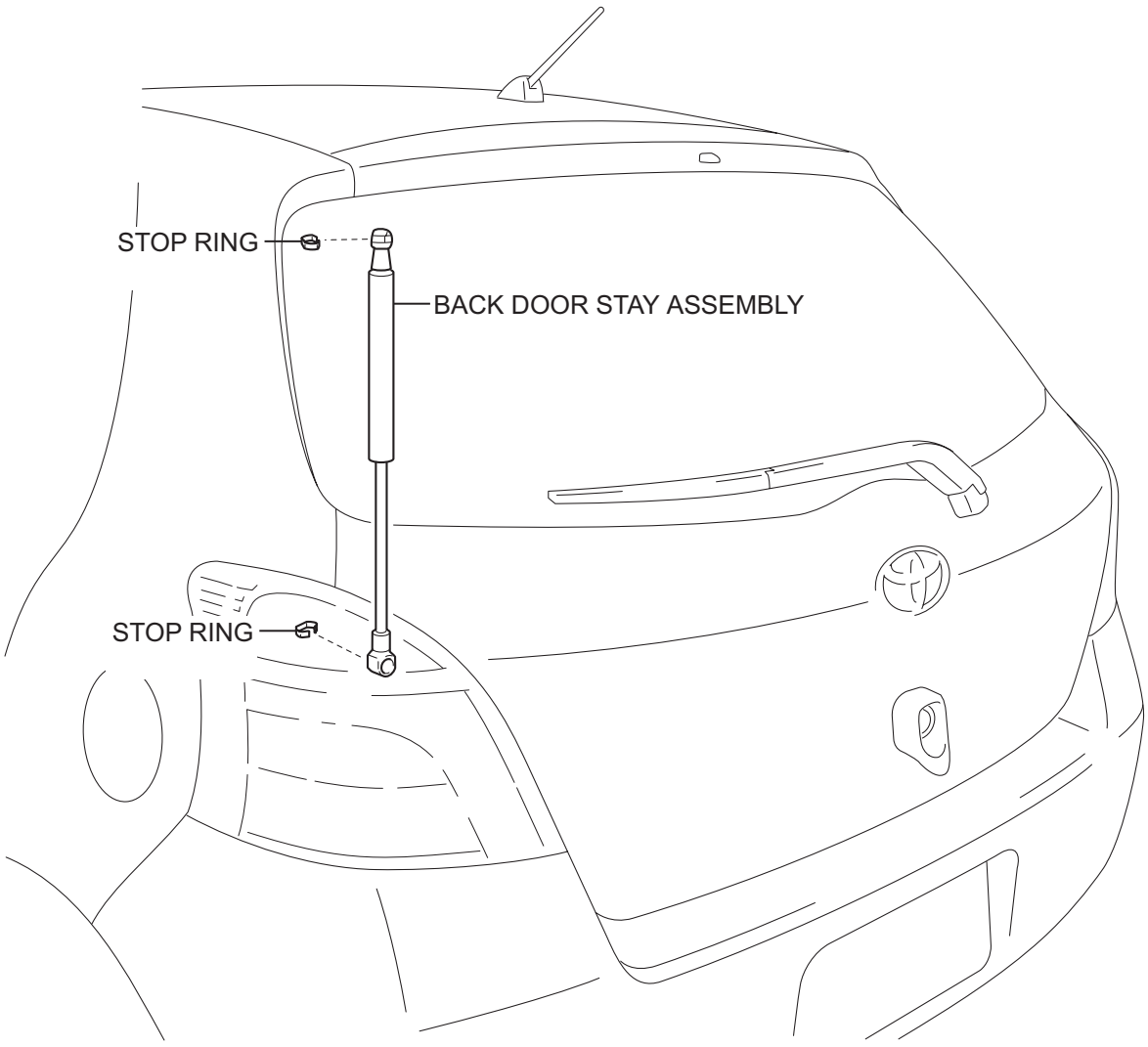

Y

B127223E01

REMOVAL

HINT:

- Use the same procedure for both the RH and LH sides.
- The procedure described below is for the LH side.

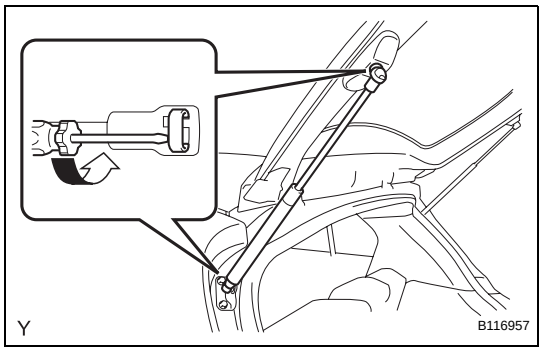

1. REMOVE BACK DOOR STAY ASSEMBLY

(a) Using a screwdriver with its wrapped in protective tape, remove the 2 stop rings and stay.

NOTICE:

- **Do not touch the rod of the stay with gloves to avoid fibers from adhering.**
- **When foreign matter adheres to the rod, it prevents the rod from moving smoothly and reduces its holding power.**

HINT:

Support the back door by hand while removing the door stay.

INSTALLATION

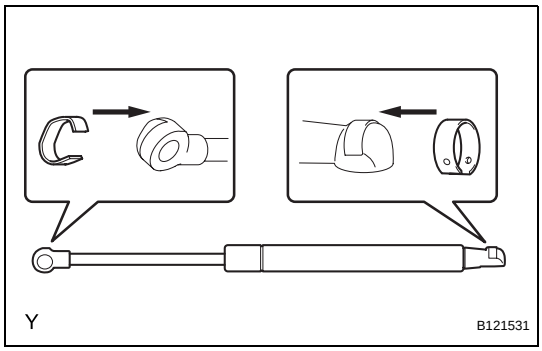

1. INSTALL BACK DOOR STAY ASSEMBLY

(a) Install the 2 stop rings onto the stay.

(b) Install the stay.

DISPOSAL

HINT:

- Use the same procedure for both the RH and LH sides.
- The procedure described below is for the LH side.

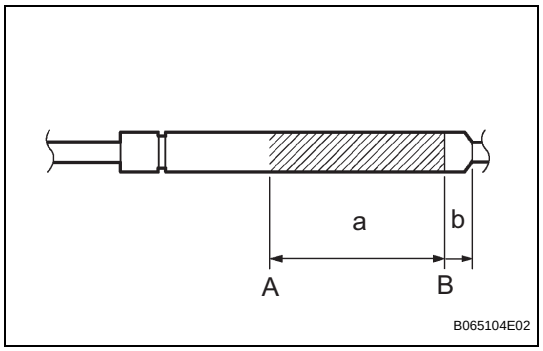

1. DISPOSE OF BACK DOOR STAY ASSEMBLY

(a) Horizontally fix the stay in a vise with the piston-rod pulled out.

(b) Wearing protective glasses, gradually cut the shaded part between A and B, shown in the illustration, using a metal saw to gradually release the gas.

Specification

Area	Measurement
a	80 mm (3.15 in.)
b	20 mm (0.80 in.)

CAUTION:

- **Cover the area that is being cut with a shop rag or a piece of cloth because there is a possibility that metal shards may be dispersed by the gas.**
- **The gas is colorless, odorless and harmless.**

FRONT BUMPER (for Sedan)

COMPONENTS

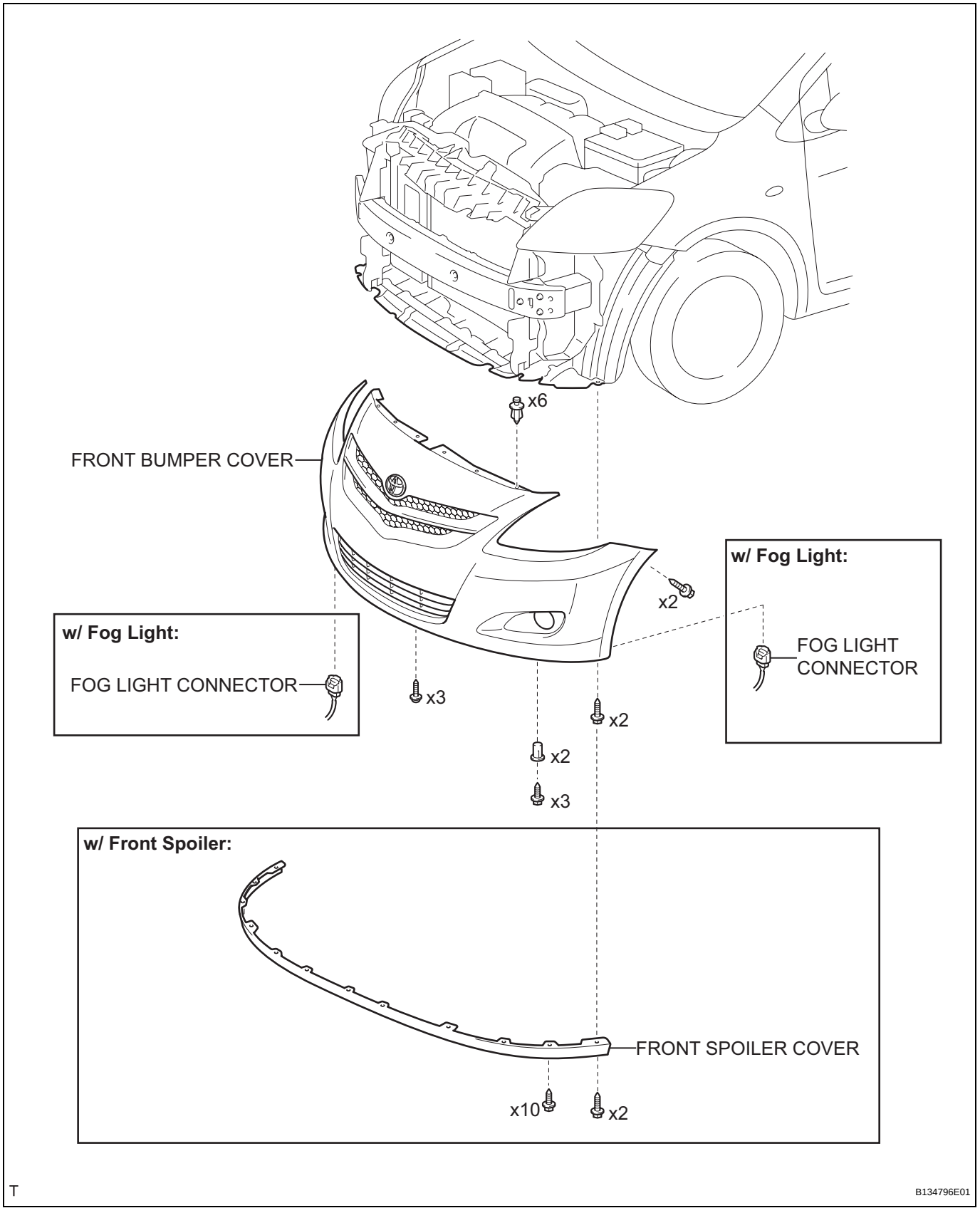

ET

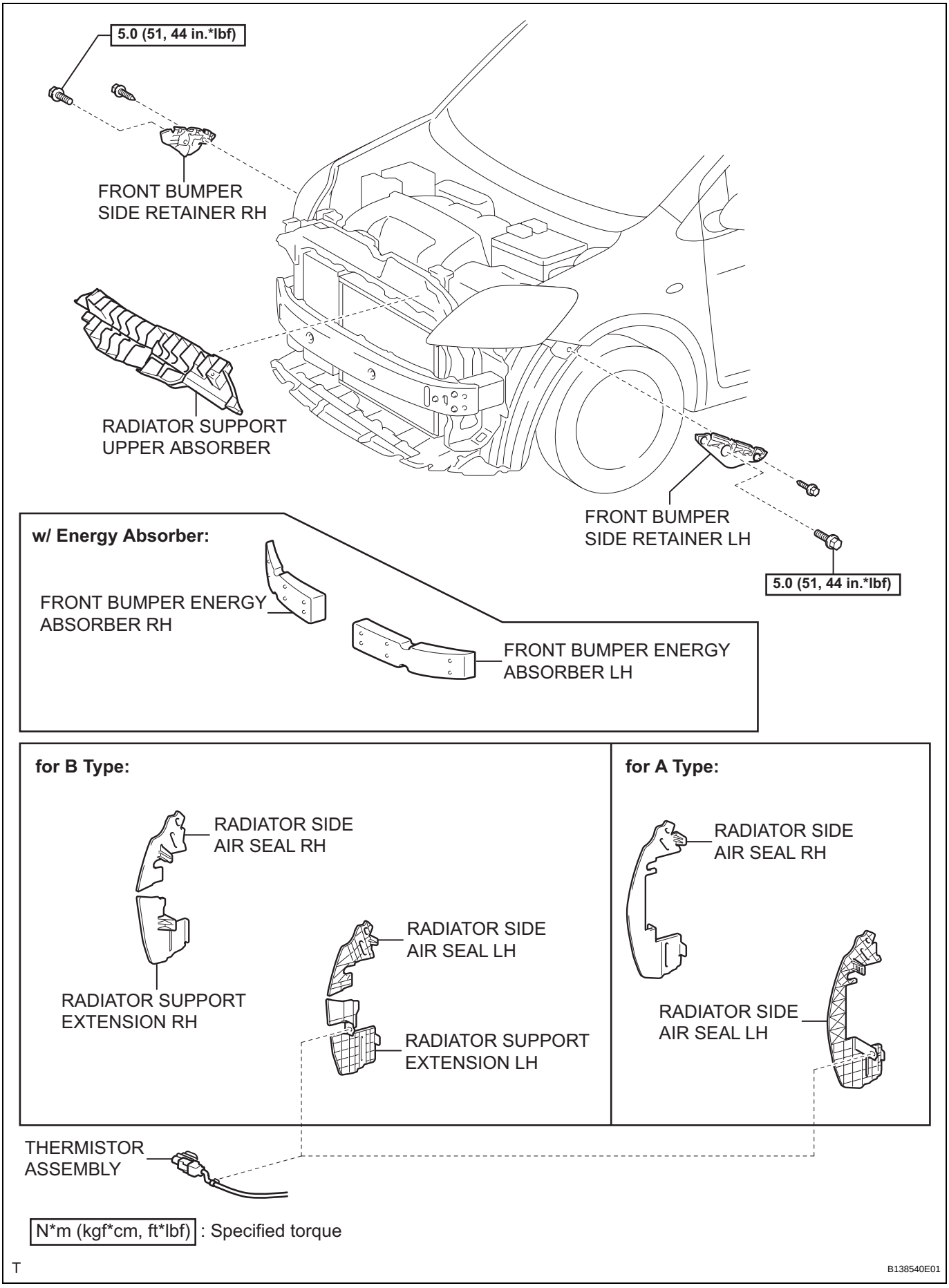

ET

N*m (kgf*cm, ft*lbf) : Specified torque

T

B138540E01

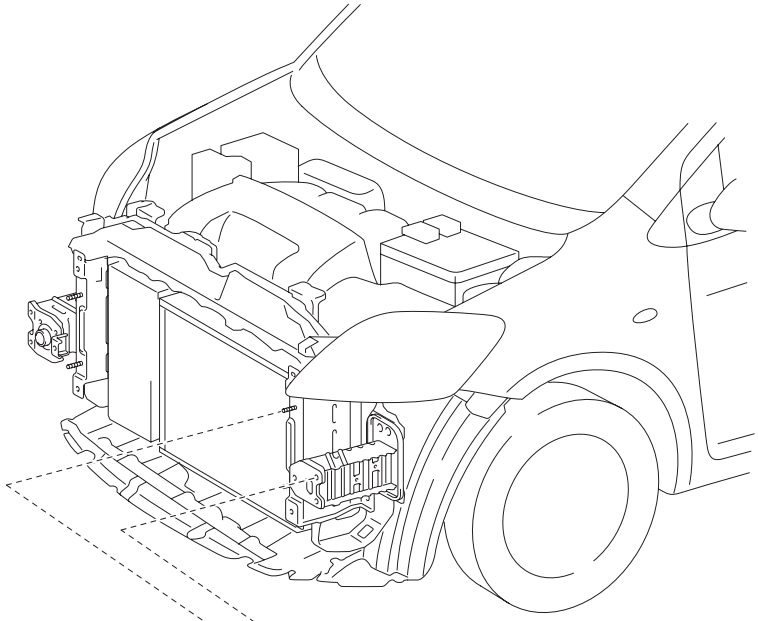

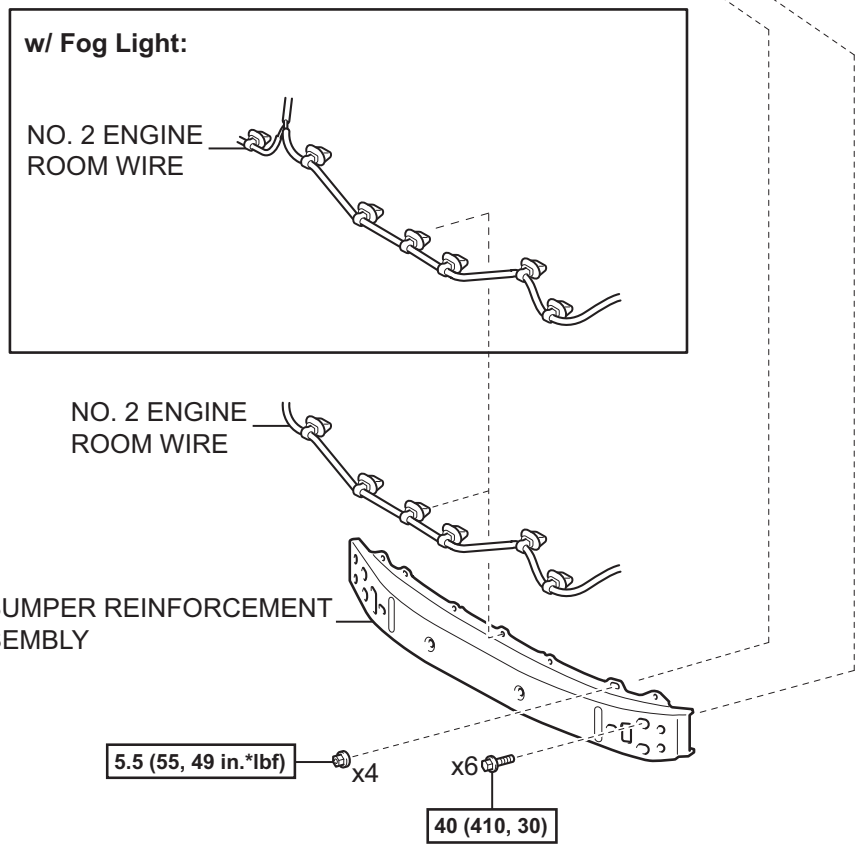

N*m (kgf*cm, ft*lbf) : Specified torque

T

B138609E01

ET

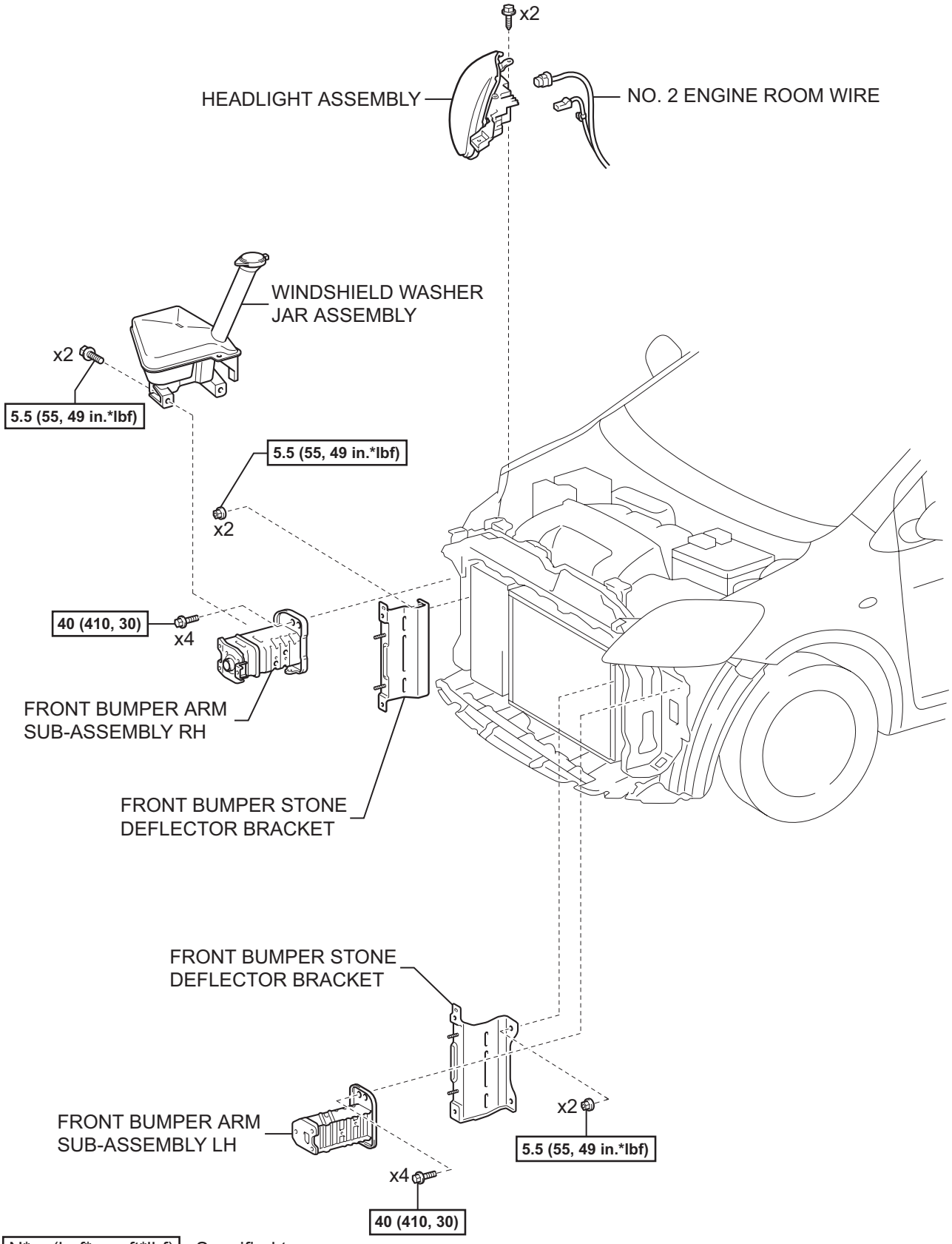
x2
HEADLIGHT ASSEMBLY
NO. 2 ENGINE ROOM WIRE
WINDSHIELD WASHER JAR ASSEMBLY
x2
5.5 (55, 49 in.*lbf)
5.5 (55, 49 in.*lbf)
x2
40 (410, 30)
x4
FRONT BUMPER ARM SUB-ASSEMBLY RH
FRONT BUMPER STONE DEFLECTOR BRACKET
FRONT BUMPER STONE DEFLECTOR BRACKET
FRONT BUMPER ARM SUB-ASSEMBLY LH
x2
5.5 (55, 49 in.*lbf)
x4
40 (410, 30)
N*m (kgf*cm, ft*lbf) : Specified torque
T
B134813E01

ET

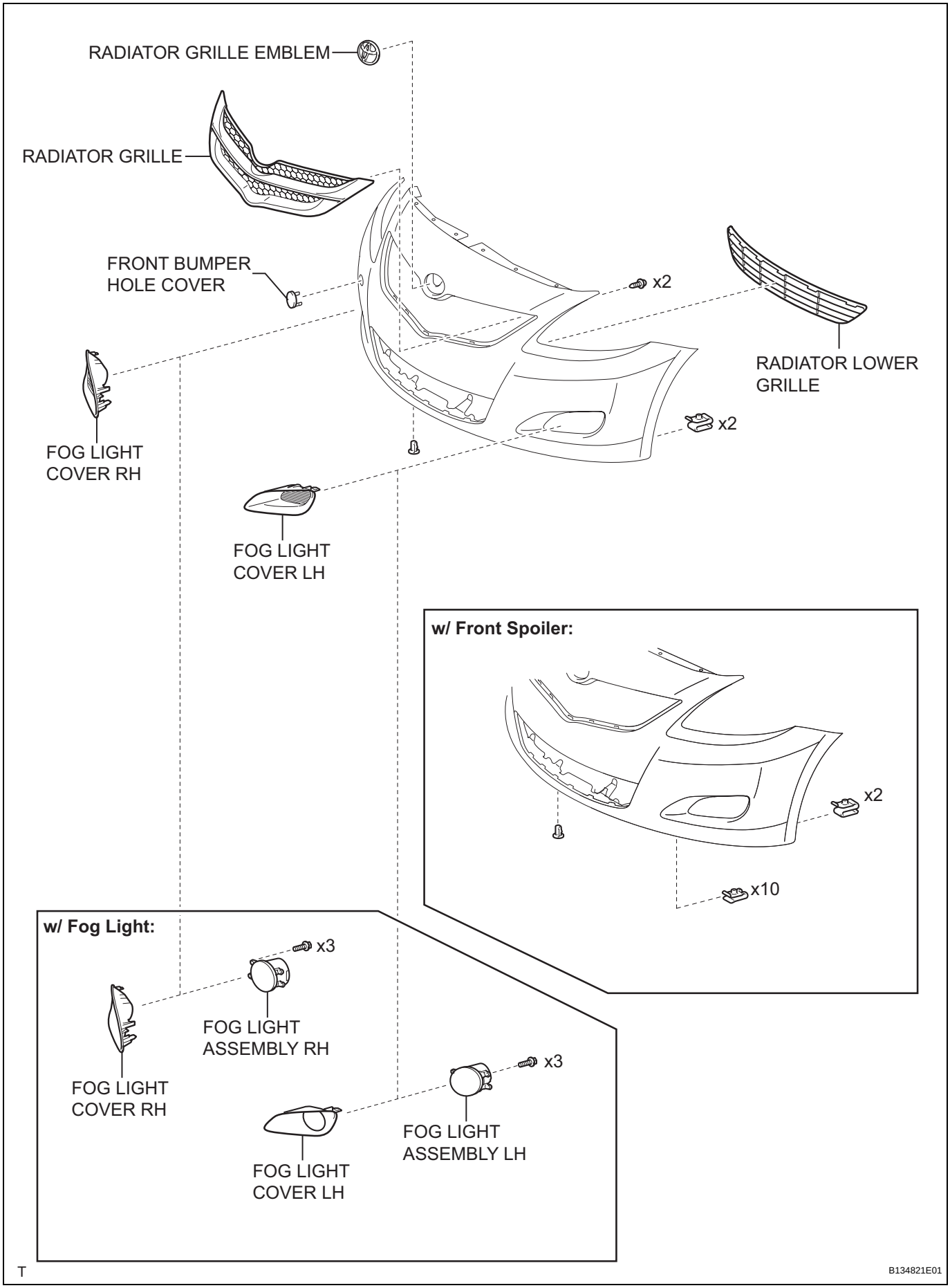
RADIATOR GRILLE EMBLEM
RADIATOR GRILLE
FRONT BUMPER HOLE COVER
x2
RADIATOR LOWER GRILLE
FOG LIGHT COVER RH
x2
FOG LIGHT COVER LH
w/ Front Spoiler:
x2
x10
w/ Fog Light:
x3
FOG LIGHT ASSEMBLY RH
FOG LIGHT COVER RH
x3
FOG LIGHT ASSEMBLY LH
FOG LIGHT COVER LH
T
B134821E01

ET

REMOVAL

1. DISCONNECT CABLE FROM NEGATIVE BATTERY TERMINAL

2. REMOVE FRONT SPOILER COVER (w/ Front Spoiler)

(a) Remove the 2 screws, the 10 bolts and the front spoiler cover.

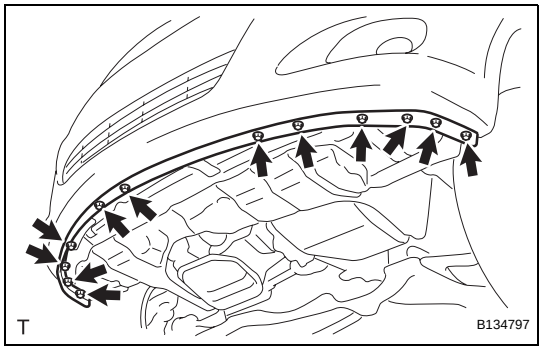

3. REMOVE FRONT BUMPER COVER

(a) Apply protective tape, as shown in the illustration.

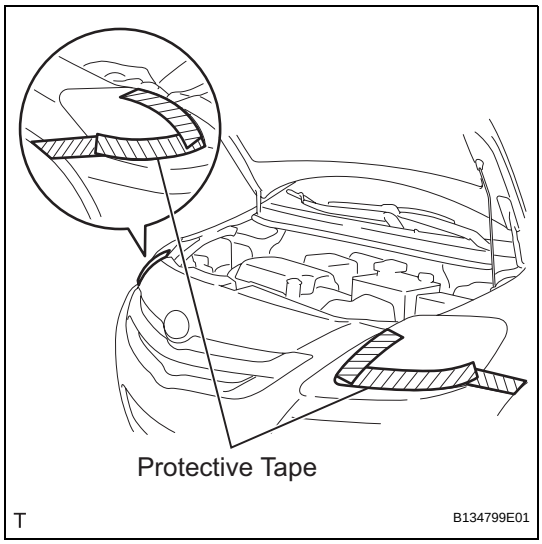

(b) w/ Front Spoiler:

(1) Remove the 5 screws and the 3 bolts.
(2) Remove the 2 screw grommets.
(3) Remove the 6 clips.

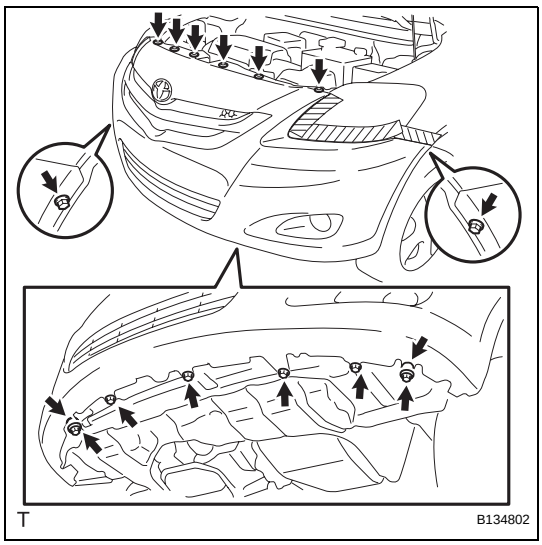

ET

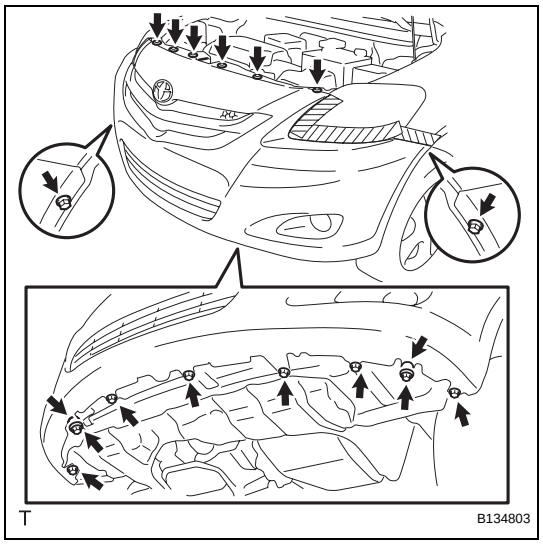

(c) w/o Front Spoiler:
(1) Remove the 7 screws and the 3 bolts.
(2) Remove the 2 screw grommets.
(3) Remove the 6 clips.

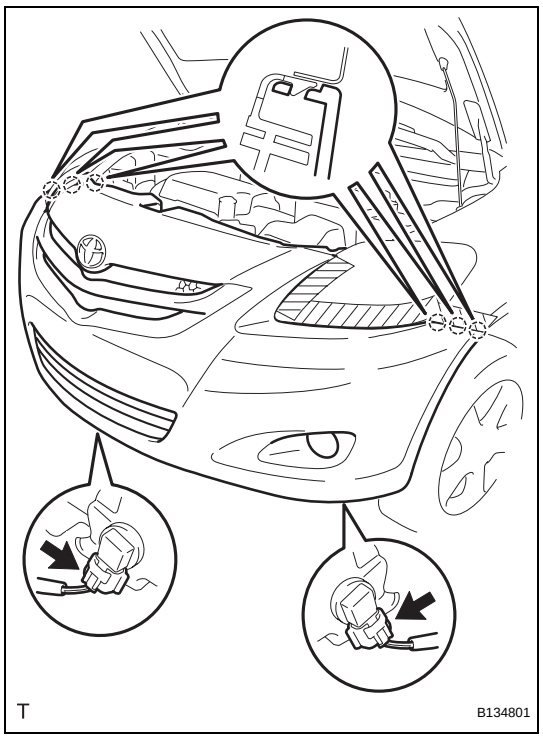

(d) w/ Fog Light:
(1) Disengage the 6 claws and remove the front bumper cover.
(2) Disconnect the 2 fog light connectors.

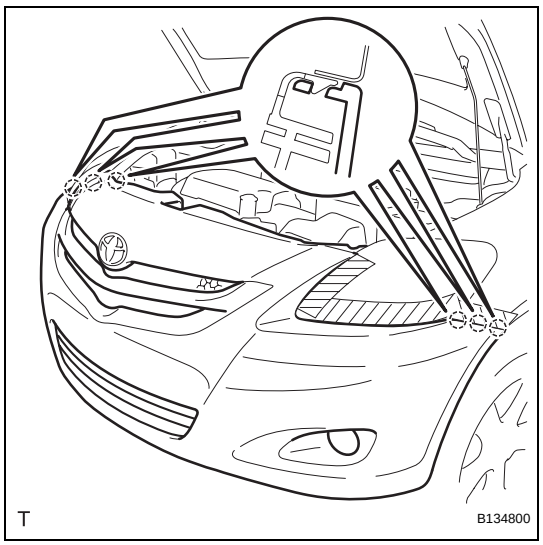

(e) w/o Fog Light:
(1) Disengage the 6 claws and remove the front bumper cover.

ET

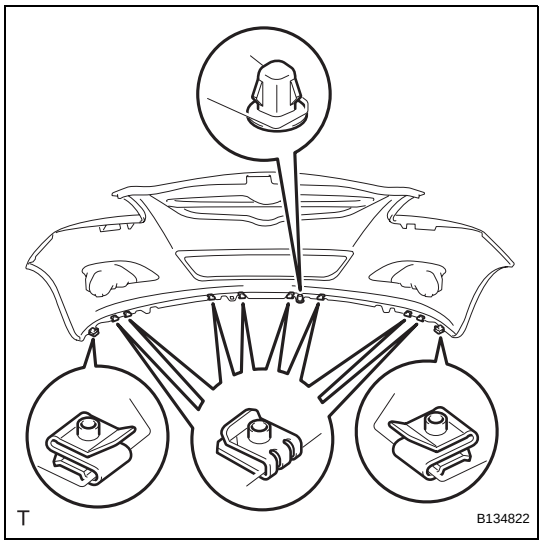

(f) w/ Front Spoiler:
(1) Remove the 2 clips, the screw grommet and the 10 spring nuts.

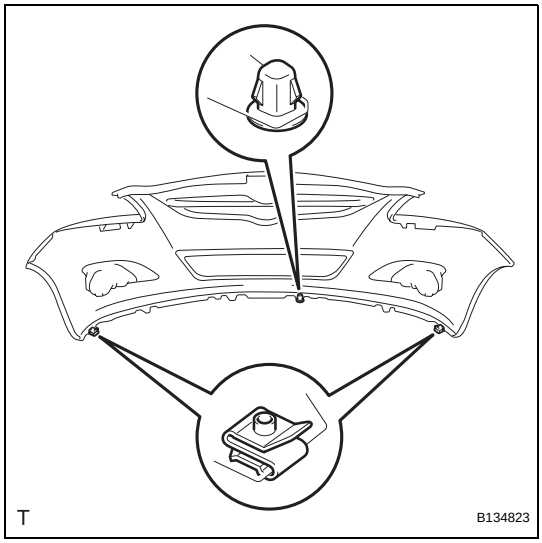

(g) w/o Front Spoiler:
(1) Remove the 2 clips and the screw grommet.

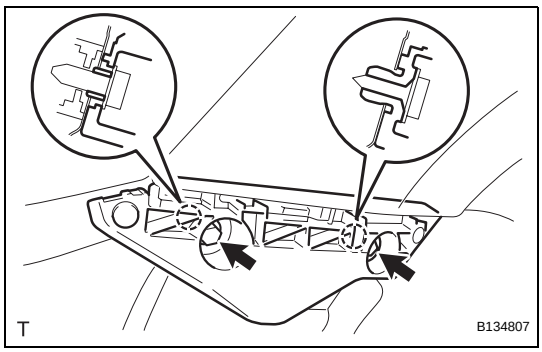

4. REMOVE FRONT BUMPER SIDE RETAINER LH
(a) Remove the screw and the bolt.
(b) Disengage the 2 claws and remove the front bumper side retainer.

5. REMOVE FRONT BUMPER SIDE RETAINER RH
HINT:
Use the same procedure as for the LH side.

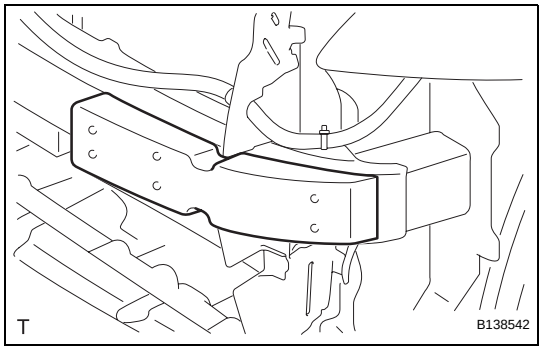

6. REMOVE FRONT BUMPER ENERGY ABSORBER LH (w/ Energy Absorber)
(a) Remove the front bumper energy absorber.

7. REMOVE FRONT BUMPER ENERGY ABSORBER RH (w/ Energy Absorber)
HINT:
Use the same procedure as for the LH side.

ET

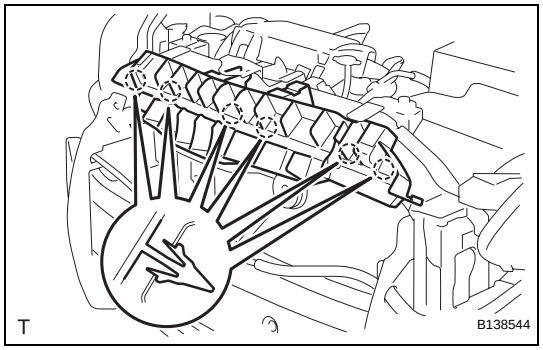

8. REMOVE RADIATOR SUPPORT UPPER ABSORBER

(a) Using a screwdriver, disengage the 6 claws and remove the radiator support upper absorber.

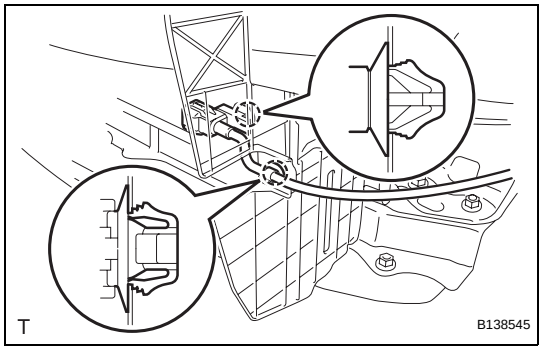

9. REMOVE THERMISTOR ASSEMBLY

(a) Remove the 2 clamps and the thermistor.

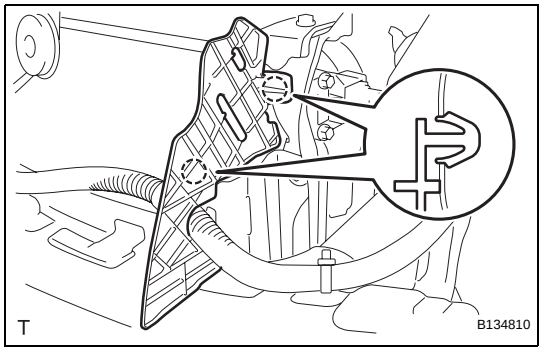

10. REMOVE RADIATOR SIDE AIR SEAL LH

(a) for Type A:

(1) Disengage the 2 claws and remove the radiator side air seal.

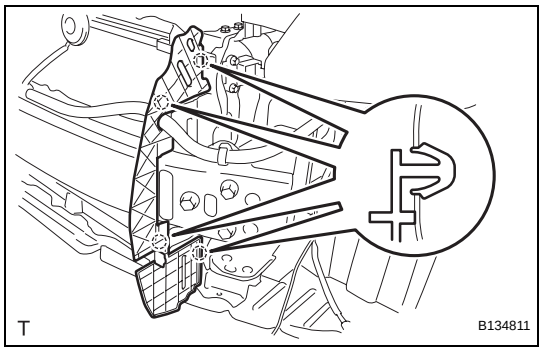

(b) for Type B:

(1) Disengage the 4 claws and remove the radiator side air seal.

11. REMOVE RADIATOR SIDE AIR SEAL RH

HINT:

Use the same procedure as for the LH side.

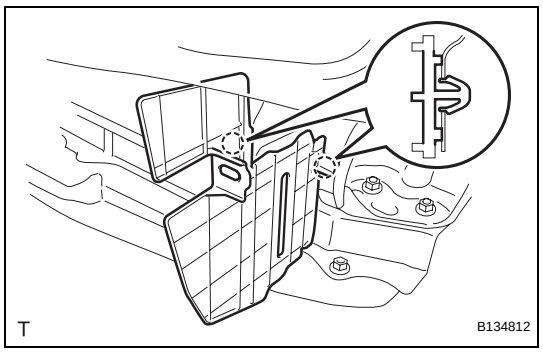

12. REMOVE RADIATOR SUPPORT EXTENSION LH (w/ Radiator Support Extension)

(a) Disengage the 2 claws and remove the radiator extension.

13. REMOVE RADIATOR SUPPORT EXTENSION RH (w/ Radiator Support Extension)

HINT:

Use the same procedure as for the LH side.

ET

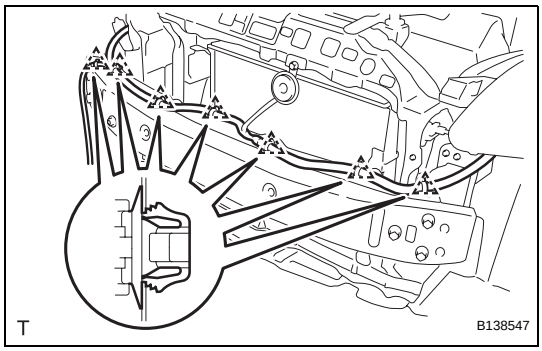

14. REMOVE NO. 2 ENGINE ROOM WIRE

(a) w/ Fog Light:

(1) Using a clip remover, remove the 7 clamps and the No. 2 engine room wire.

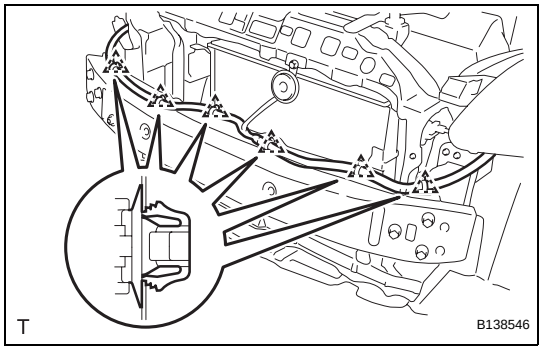

(b) w/o Fog Light:

(1) Using a clip remover, remove the 6 clamps and the No. 2 engine room wire.

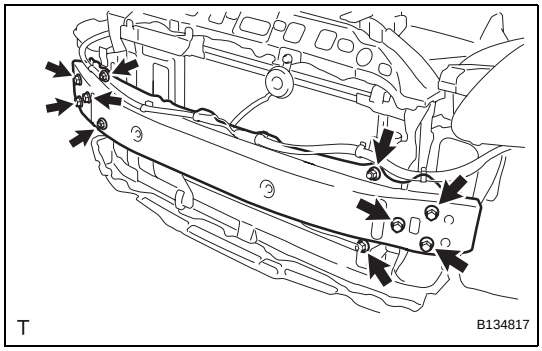

15. REMOVE FRONT BUMPER REINFORCEMENT SUB-ASSEMBLY

(a) Remove the 6 bolts, 4 nuts and the front bumper reinforcement.

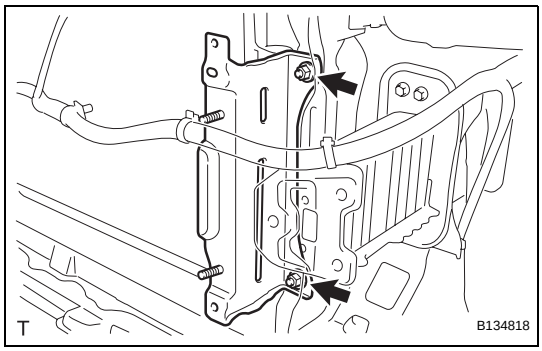

16. REMOVE FRONT BUMPER STONE DEFLECTOR BRACKET

HINT:

Use the same procedure for both sides.

(a) Remove the 2 nuts and the front bumper stone deflector bracket.

17. REMOVE HEADLIGHT ASSEMBLY

HINT:

Use the same procedure as for the LH side (See page LI-86).

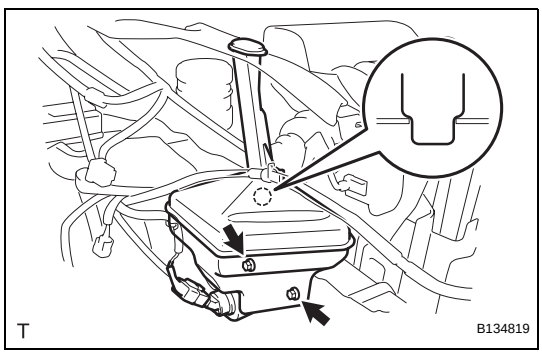

18. REMOVE WINDSHIELD WASHER JAR ASSEMBLY

(a) Remove the 2 bolts and windshield washer jar.

19. REMOVE FRONT BUMPER ARM SUB-ASSEMBLY LH

HINT:

Use the same procedure as for the LH side.

ET

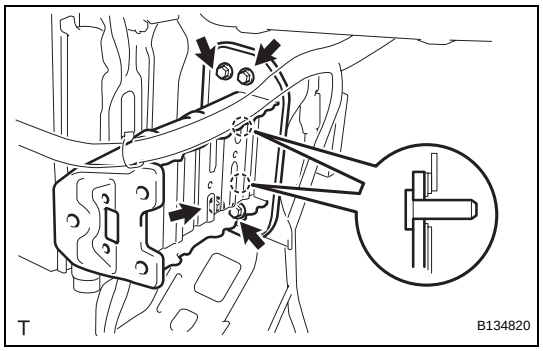

20. REMOVE FRONT BUMPER ARM SUB-ASSEMBLY RH

(a) Remove the 4 bolts and the front bumper arm.

DISASSEMBLY

1. **REMOVE RADIATOR GRILLE EMBLEM (See page ET-57)**

2. **REMOVE RADIATOR GRILLE**
   (a) Remove the 2 screws.
   (b) Using a screwdriver, disengage the 13 claws and remove the radiator grille.

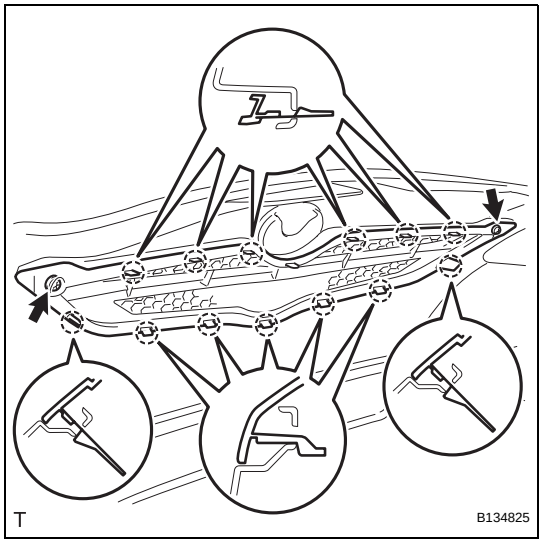

3. **REMOVE RADIATOR LOWER GRILLE**
   (a) Disengage the 12 claws and remove the radiator lower grille.

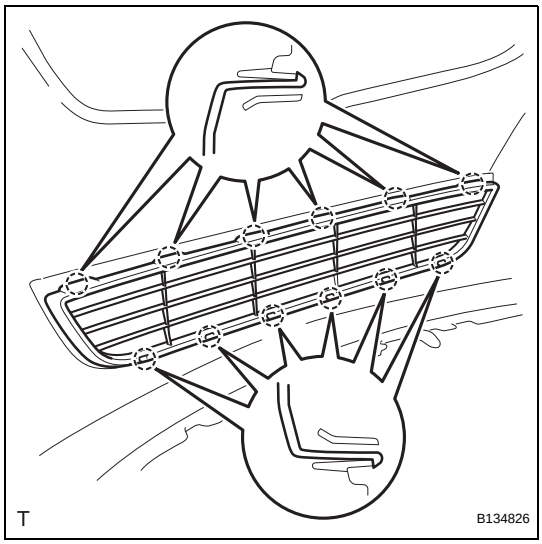

4. **REMOVE FOG LIGHT ASSEMBLY LH (w/ Fog Light)**
   (a) Remove the 3 screws and the fog light.

5. **REMOVE FOG LIGHT ASSEMBLY RH (w/ Fog Light)**
   HINT:
   Use the same procedure as for the LH side.

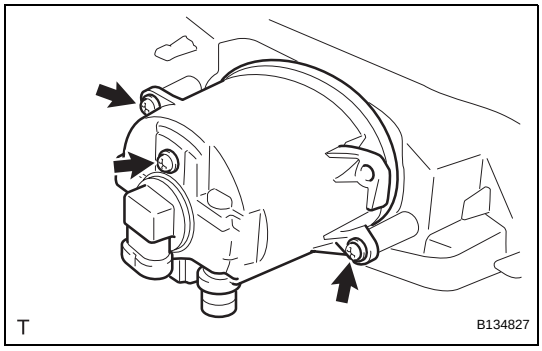

ET

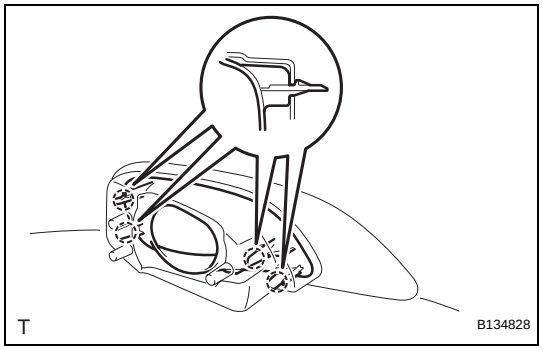

6. REMOVE FOG LIGHT COVER LH

(a) w/ Fog Light:

(1) Disengage the 4 claws and remove the fog light cover.

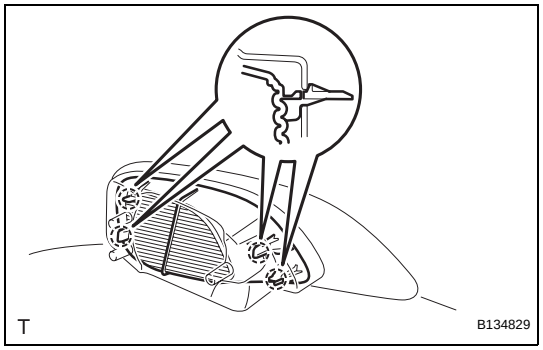

(b) w/o Fog Light:

(1) Disengage the 4 claws and remove the fog light cover.

7. REMOVE FOG LIGHT COVER RH

HINT:

Use the same procedure as for the LH side.

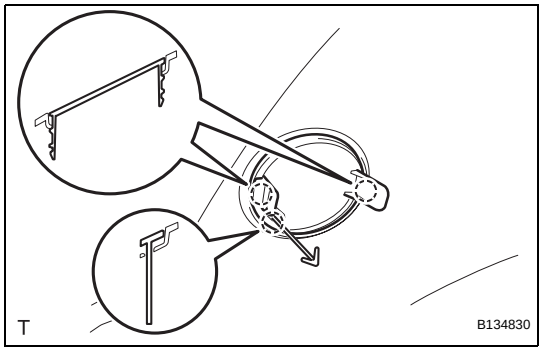

8. REMOVE FRONT BUMPER HOLE COVER

(a) Disengage the 3 claws and remove the front bumper hole cover.

REASSEMBLY

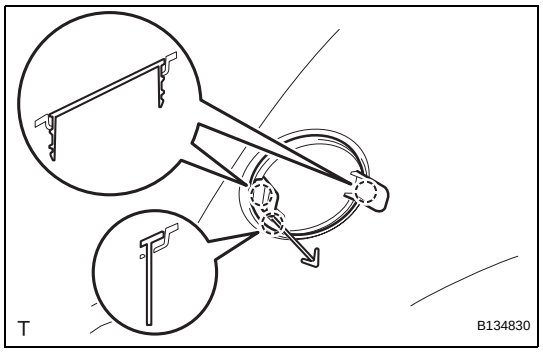

1. INSTALL FRONT BUMPER HOLE COVER

(a) Engage the 3 claws and install the front bumper hole cover.

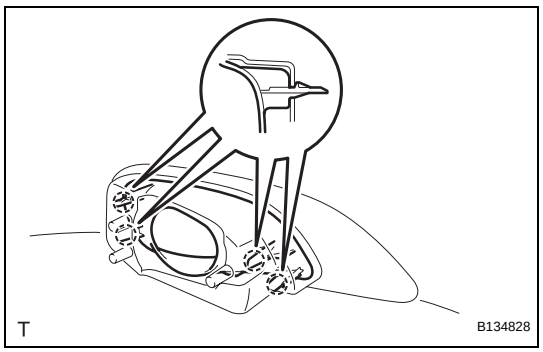

2. INSTALL FOG LIGHT COVER LH

(a) w/ Fog Light:

(1) Engage the 4 claws and install the fog light cover.

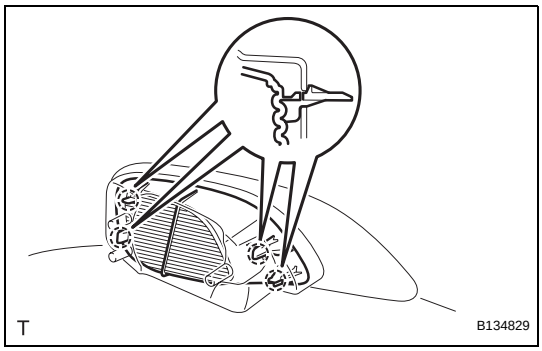

(b) w/o Fog Light:
(1) Engage the 4 claws and install the fog light cover.

3. INSTALL FOG LIGHT COVER RH
HINT:
Use the same procedure as for the LH side.

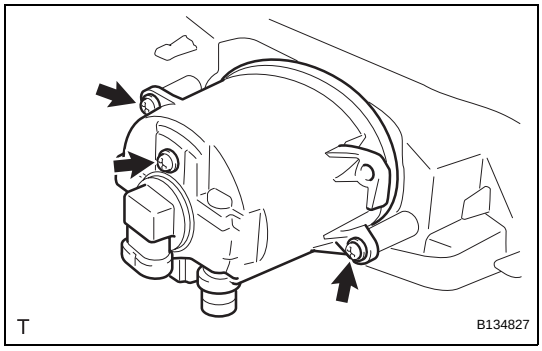

4. INSTALL FOG LIGHT ASSEMBLY LH (w/ Fog Light)
(a) Install the fog light with the 3 screws.

5. INSTALL FOG LIGHT ASSEMBLY RH (w/ Fog Light)
HINT:
Use the same procedure as for the LH side.

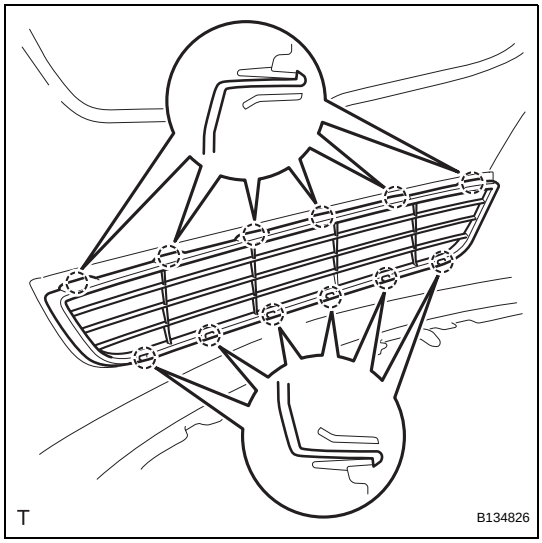

6. INSTALL RADIATOR LOWER GRILLE
(a) Engage the 12 claws and install the radiator lower grille.

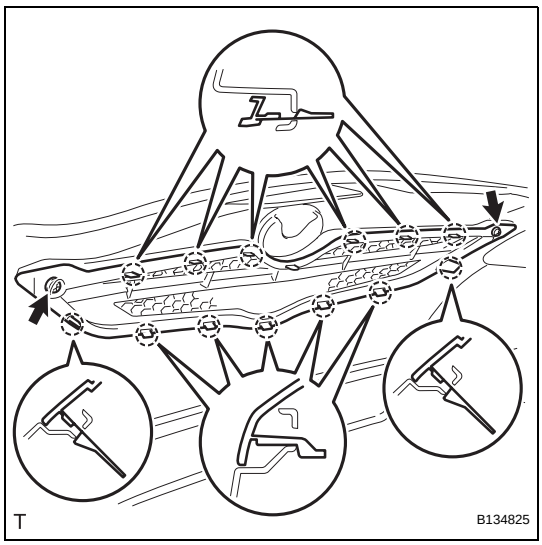

7. INSTALL RADIATOR GRILLE
(a) Engage the 13 claws and install the radiator grille.
(b) Tighten the 2 screws.

8. INSTALL RADIATOR GRILLE EMBLEM (See page ET-60)

ET

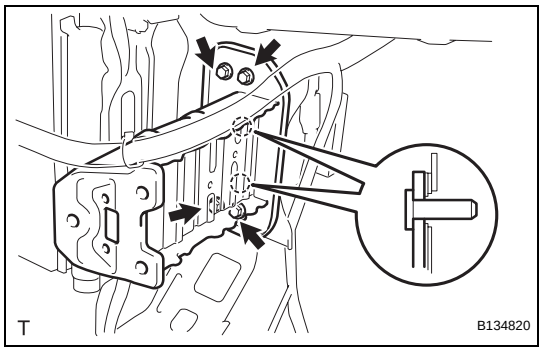

INSTALLATION

1. INSTALL FRONT BUMPER ARM SUB-ASSEMBLY LH

(a) Insert the 2 locating pins into the 2 body holes and install the front bumper arm with the 4 bolts.
Torque: 40 N*m (410 kgf*cm, 30 ft.*lbf)

2. INSTALL FRONT BUMPER ARM SUB-ASSEMBLY RH

HINT:
Use the same procedure as for the LH side.

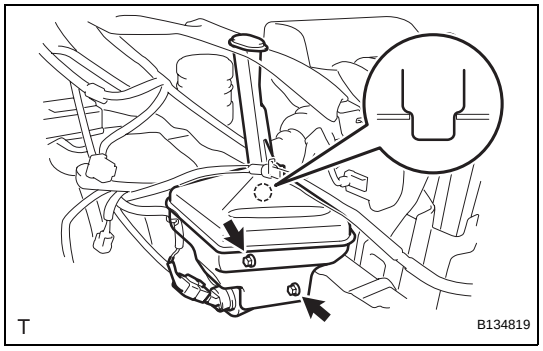

3. INSTALL WINDSHIELD WASHER JAR ASSEMBLY

(a) Insert the location pin into the body hole and install the windshield washer jar with the 2 bolts.
Torque: 5.5 N*m (55 kgf*cm, 49 in.*lbf)

4. INSTALL HEADLIGHT ASSEMBLY

HINT:
Use the same procedure as for the LH side (See page LI-92).

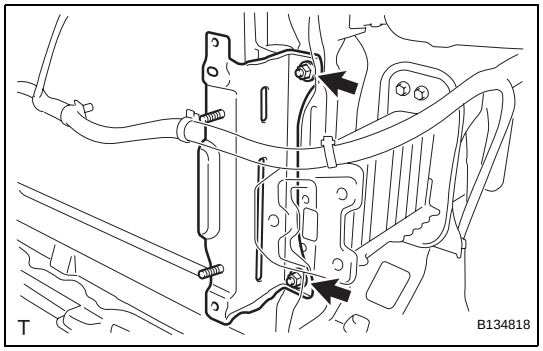

5. INSTALL FRONT BUMPER STONE DEFLECTOR BRACKET

HINT:
Use the same procedure for both sides.

(a) Install the front bumper stone deflector bracket with the 2 nuts.
Torque: 5.5 N*m (55 kgf*cm, 49 in.*lbf)

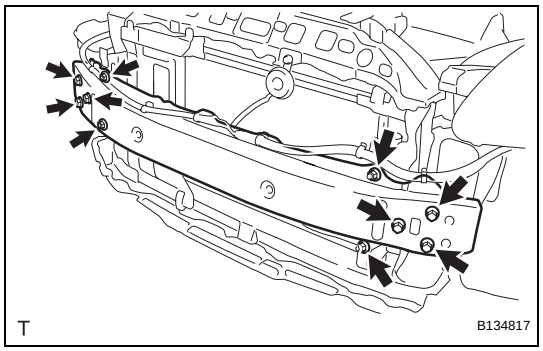

6. INSTALL FRONT BUMPER REINFORCEMENT SUB-ASSEMBLY

(a) Install the front bumper reinforcement with the 4 nuts and 6 bolts.
Torque: 5.5 N*m (55 kgf*cm, 49 in.*lbf) for nut
40 N*m (410 kgf*cm, 30 ft.*lbf) for bolt

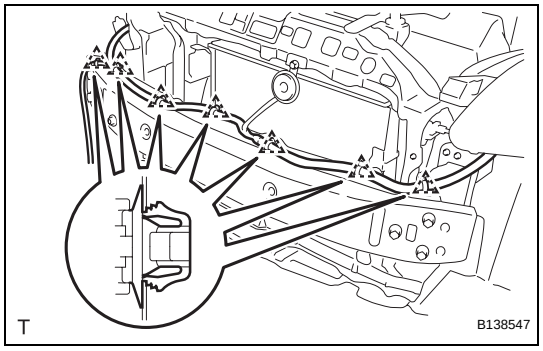

7. INSTALL NO. 2 ENGINE ROOM WIRE

(a) w/ Fog Light:
(1) Install the No. 2 engine room wire with the 7 clamps.

ET

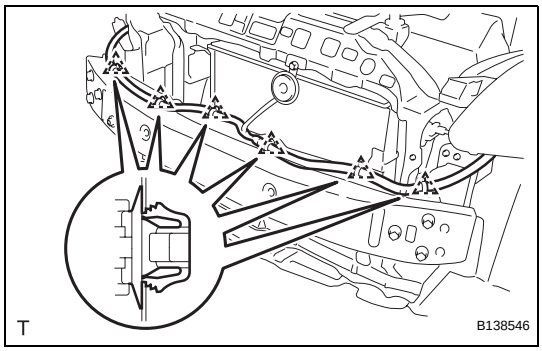

(b) w/o Fog Light:
(1) Install the No. 2 engine room wire with the 6 clamps.

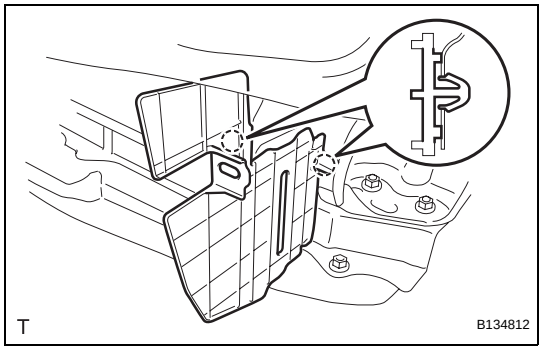

8. INSTALL RADIATOR SUPPORT EXTENSION LH (w/ Radiator Support Extension)
(a) Engage the 2 claws and install the radiator support extension.

9. INSTALL RADIATOR SUPPORT EXTENSION RH (w/ Radiator Support Extension)
HINT:
Use the same procedure as for the LH side.

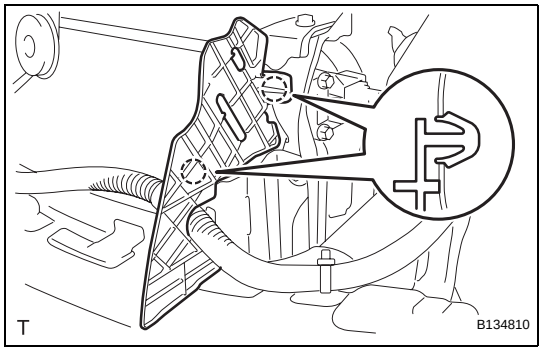

10. INSTALL RADIATOR SIDE AIR SEAL LH
(a) for Type A:
(1) Engage the 2 claws and install the radiator side air seal.

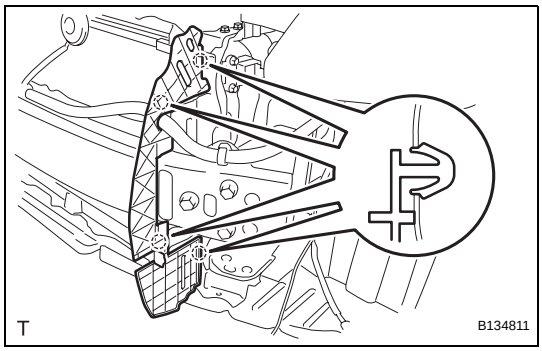

(b) for Type B:
(1) Engage the 4 claws and install the radiator side air seal.

11. INSTALL RADIATOR SIDE AIR SEAL RH
HINT:
Use the same procedure as for the LH side.

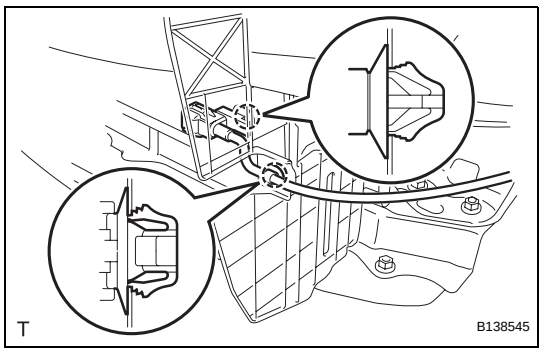

12. INSTALL THERMISTOR ASSEMBLY
(a) Install the thermistor with the 2 clamps.

ET

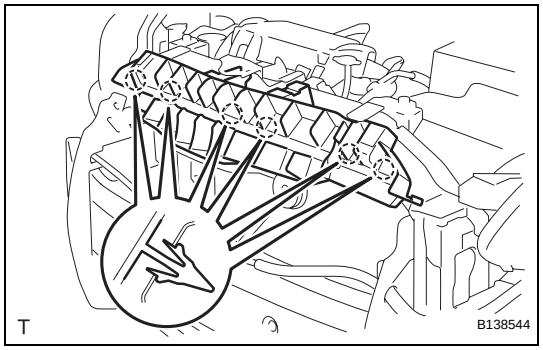

13. INSTALL RADIATOR SUPPORT UPPER ABSORBER

(a) Engage the 6 claws and install the radiator support absorber.

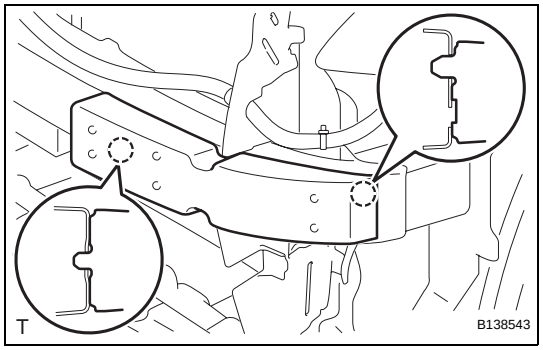

14. INSTALL FRONT BUMPER ENERGY ABSORBER LH (w/ Energy Absorber)

(a) Insert the 2 bosses into the hole of the front bumper reinforcement and install the front bumper energy absorber.

15. INSTALL FRONT BUMPER ENERGY ABSORBER RH (w/ Energy Absorber)

HINT:

Use the same procedure as for the LH side.

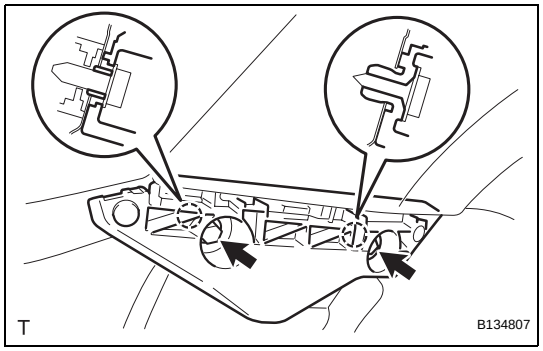

16. INSTALL FRONT BUMPER SIDE RETAINER LH

(a) Engage the 2 claws and install the front bumper side retainer.

(b) Tighten the screw and the bolt.

Torque: 5.0 N*m (51 kgf*cm, 44 in.*lbf) for bolt

17. INSTALL FRONT BUMPER SIDE RETAINER RH

HINT:

Use the same procedure as for the LH side.

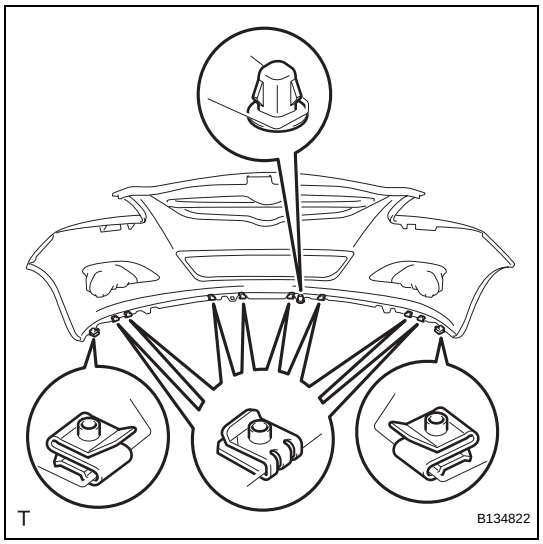

18. INSTALL FRONT BUMPER COVER

(a) w/ Front Spoiler:

(1) Install the 2 clips, screw grommet and the 10 spring nuts.

ET

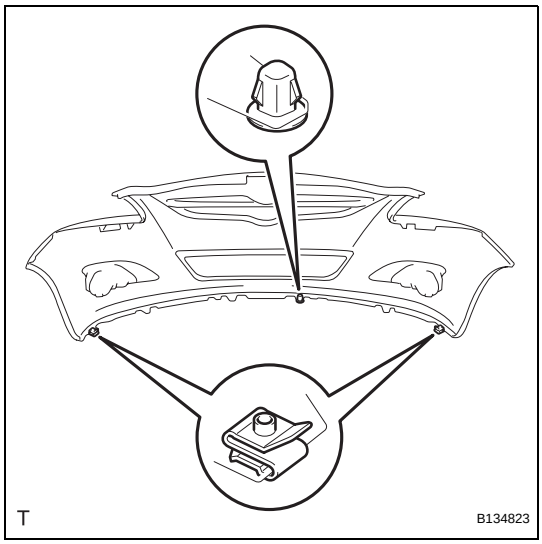

(b) w/o Front spoiler:
(1) Install the 2 clips and the screw grommet.

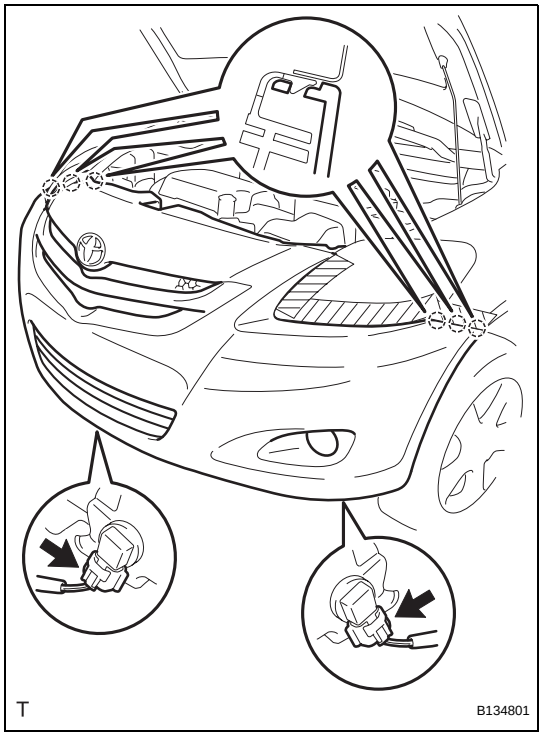

(c) w/ Fog Light:
(1) Connect the 2 fog light connectors.
(2) Engage the 6 claws and install the front bumper cover.

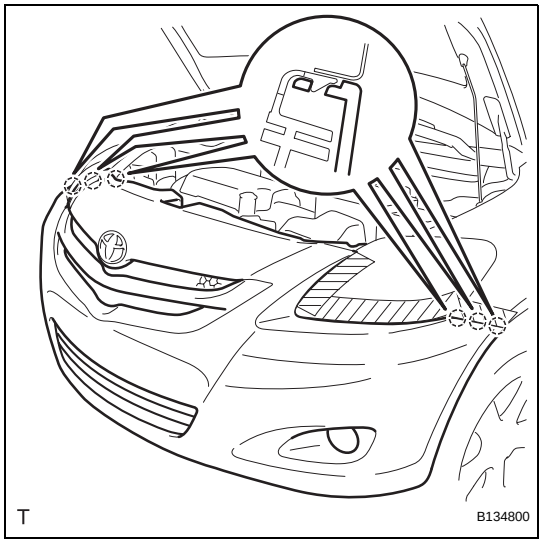

(d) w/o Fog Light:
(1) Engage the 6 claws and install the front bumper cover.

ET

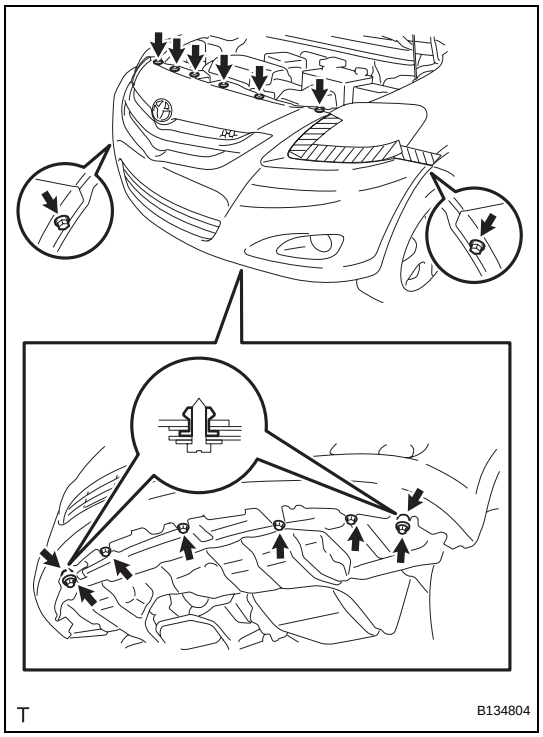

(e) w/ Front Spoiler:
(1) Install the 6 clips.
(2) Install the 2 screw grommets.
(3) Tighten the 5 screws and the 3 bolts.

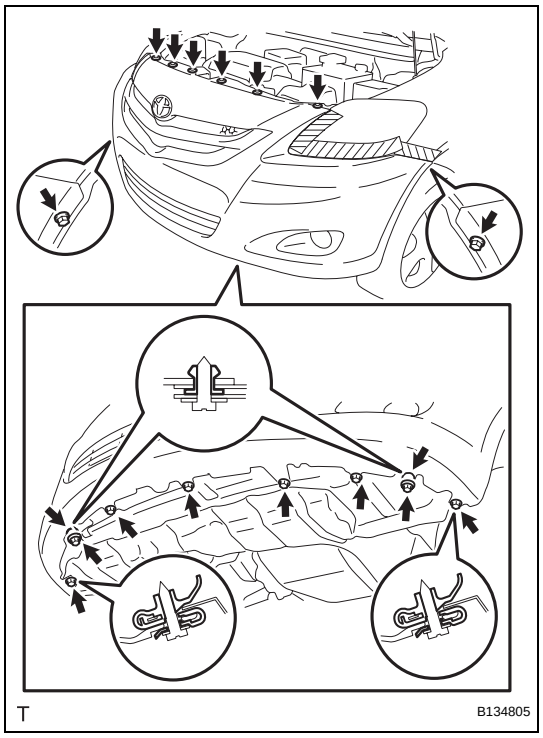

(f) w/o Front Spoiler:
(1) Install the 6 clips.
(2) Install the 2 screw grommets.
(3) Tighten the 7 screws and the 3 bolts.

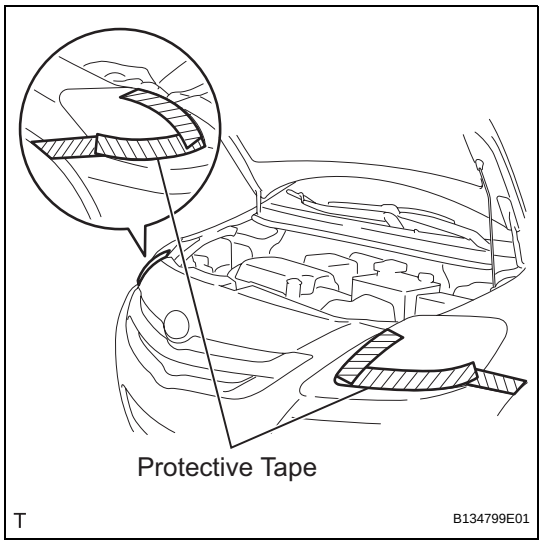

(g) Remove the protective tape.

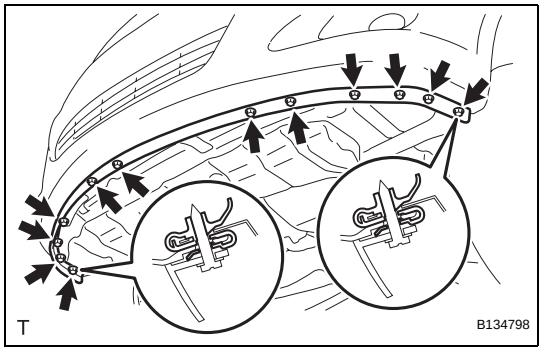

19. **INSTALL FRONT SPOILER COVER (w/ Front Spoiler)**
    (a) Install the front spoiler cover with the 2 screws and the 10 bolts.
20. **CONNECT CABLE TO NEGATIVE BATTERY TERMINAL**
    Torque: 5.4 N*m (55 kgf*cm, 48 in.*lbf)
21. **PREPARE VEHICLE FOR HEADLIGHT AIMING ADJUSTMENT (See page LI-87)**
22. **PREPARE FOR HEADLIGHT AIMING (for Using a Screen) (See page LI-88)**
23. **INSPECT HEADLIGHT AIMING (See page LI-90)**
24. **ADJUST HEADLIGHT AIMING (See page LI-91)**
25. **PREPARE VEHICLE FOR FOG LIGHT AIMING ADJUSTMENT (w/ Fog Light) (See page LI-109)**
26. **PREPARE FOR FOG LIGHT AIMING (w/ Fog Light) (See page LI-110)**
27. **INSPECT FOG LIGHT AIMING (w/ Fog Light) (See page LI-111)**
28. **ADJUST FOG LIGHT AIMING (w/ Fog Light) (See page LI-112)**

FRONT BUMPER (for Hatchback)

COMPONENTS

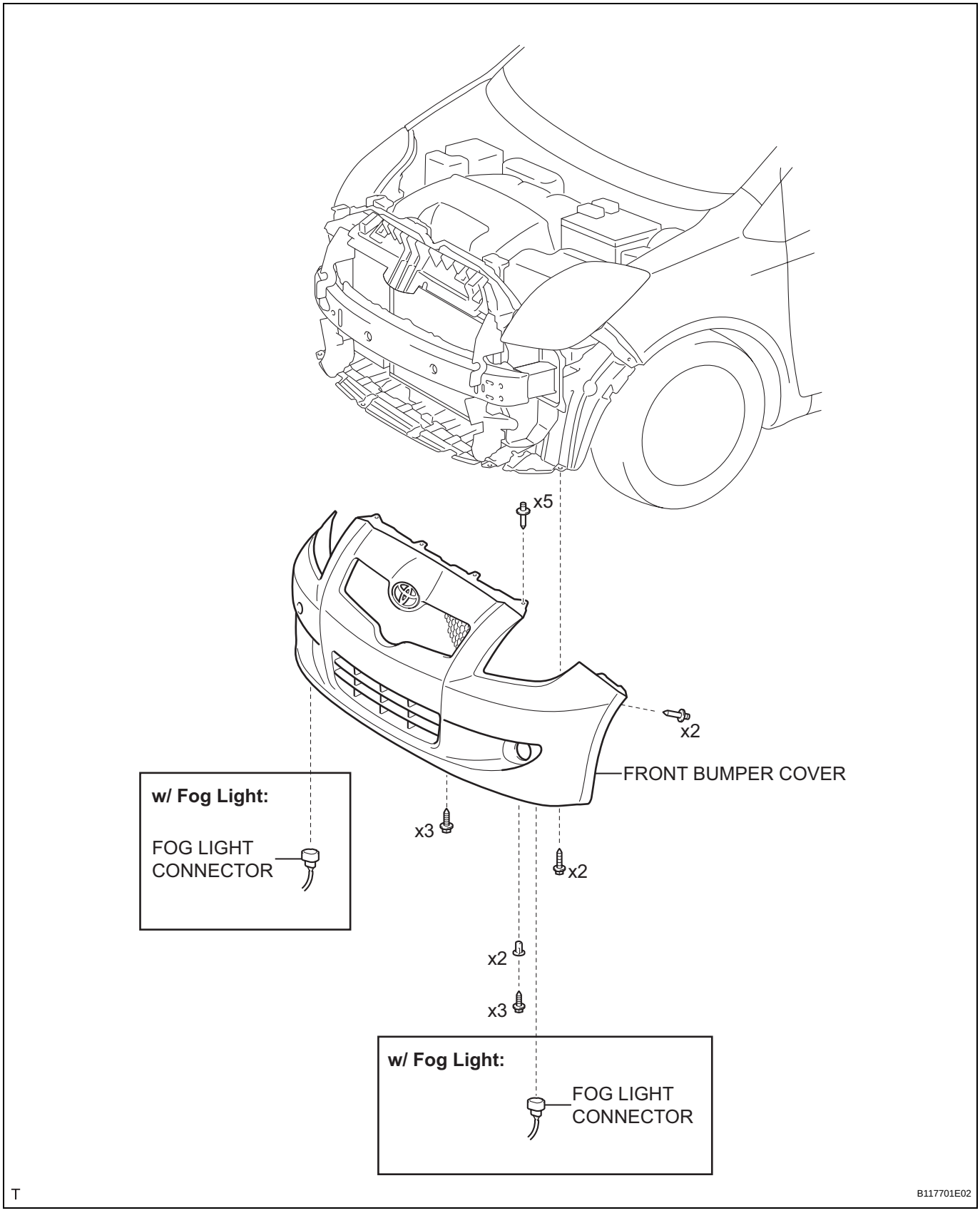

ET

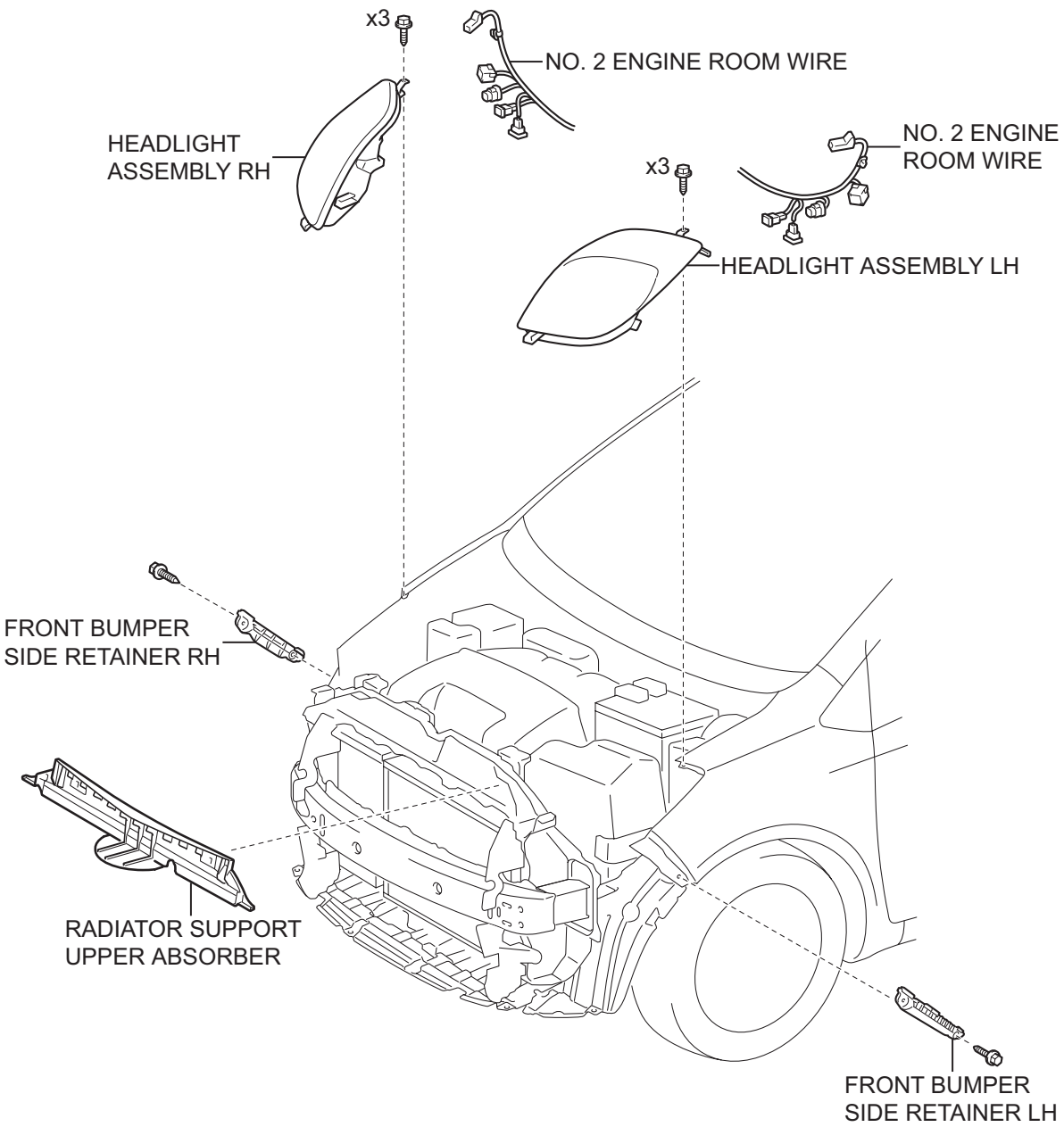

T

B117702E01

ET

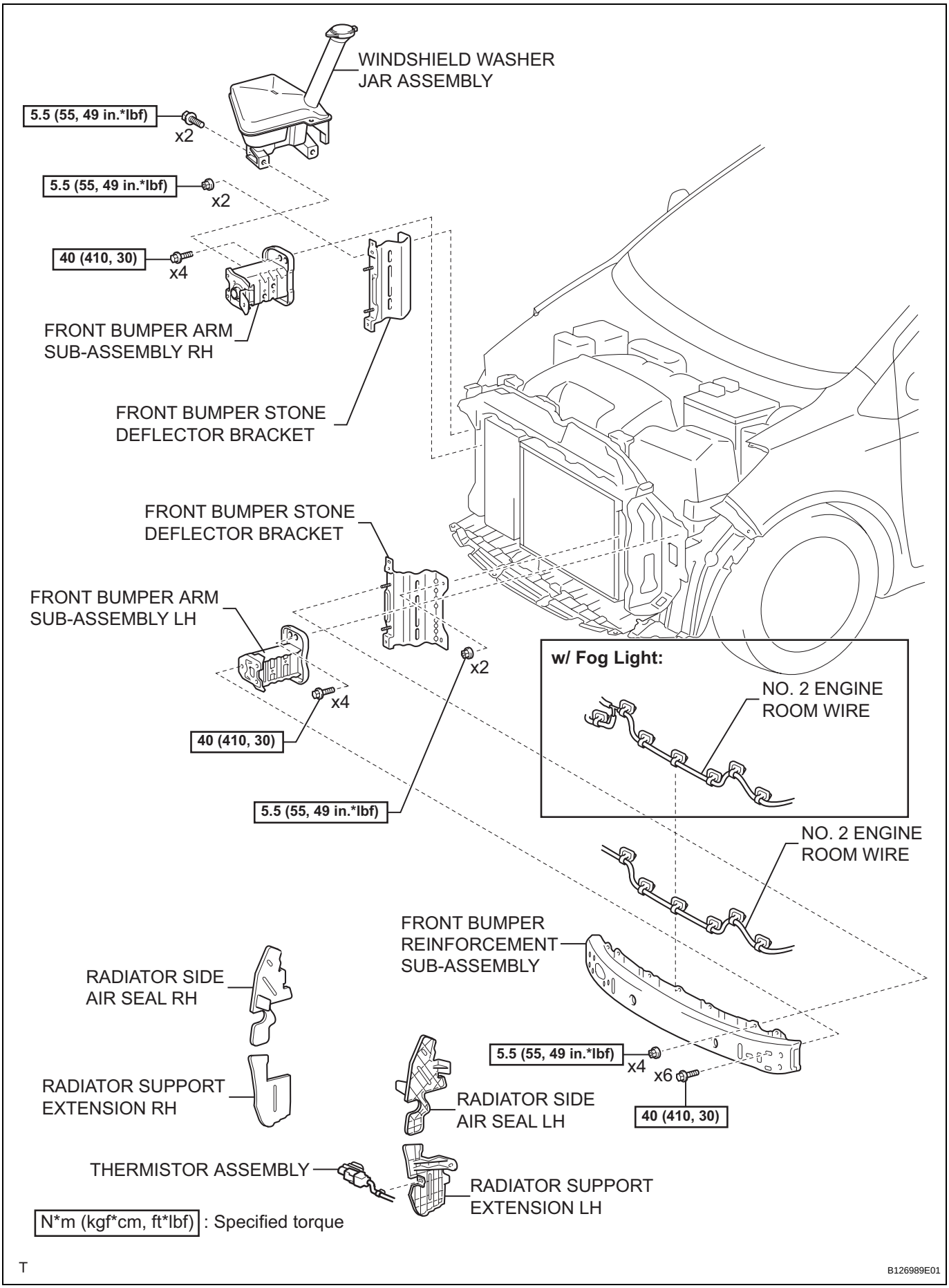
WINDSHIELD WASHER JAR ASSEMBLY
5.5 (55, 49 in.*lbf)
x2
5.5 (55, 49 in.*lbf)
x2
40 (410, 30)
x4
FRONT BUMPER ARM SUB-ASSEMBLY RH
FRONT BUMPER STONE DEFLECTOR BRACKET
FRONT BUMPER STONE DEFLECTOR BRACKET
FRONT BUMPER ARM SUB-ASSEMBLY LH
x2
x4
40 (410, 30)
5.5 (55, 49 in.*lbf)
w/ Fog Light:
NO. 2 ENGINE ROOM WIRE
NO. 2 ENGINE ROOM WIRE
FRONT BUMPER REINFORCEMENT SUB-ASSEMBLY
RADIATOR SIDE AIR SEAL RH
RADIATOR SUPPORT EXTENSION RH
5.5 (55, 49 in.*lbf)
x4
x6
40 (410, 30)
RADIATOR SIDE AIR SEAL LH
THERMISTOR ASSEMBLY
RADIATOR SUPPORT EXTENSION LH
N*m (kgf*cm, ft*lbf) : Specified torque
T
B126989E01

ET

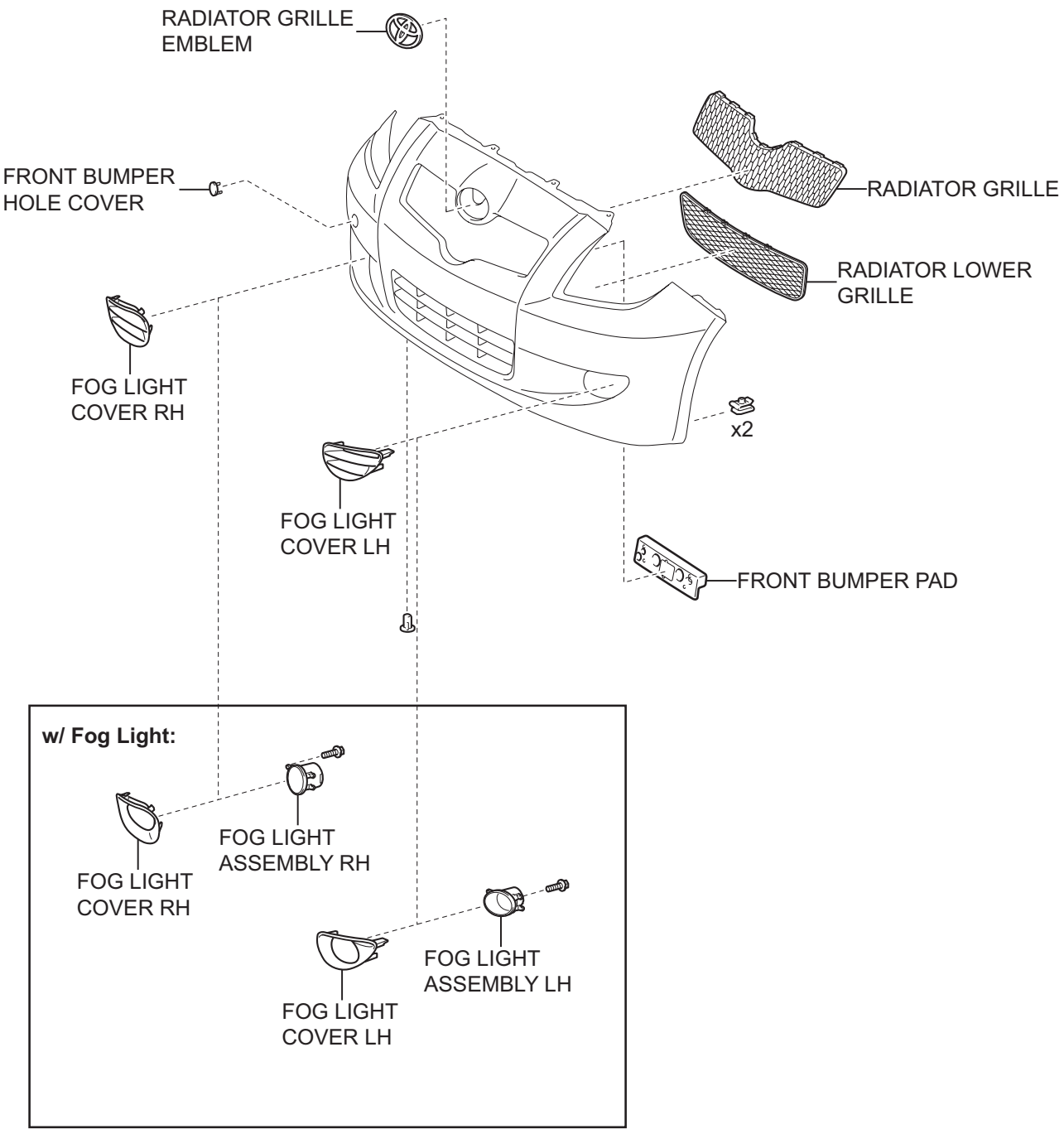

ET

T

B117773E02

REMOVAL

1. DISCONNECT CABLE FROM NEGATIVE BATTERY TERMINAL

2. REMOVE FRONT BUMPER COVER

(a) Apply protective tape, as shown in the illustration.

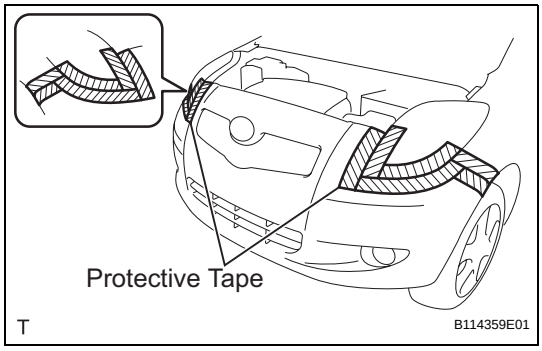

(b) Remove the 8 screws.
(c) Remove the 2 screw grommets.
(d) Remove the 7 clips.

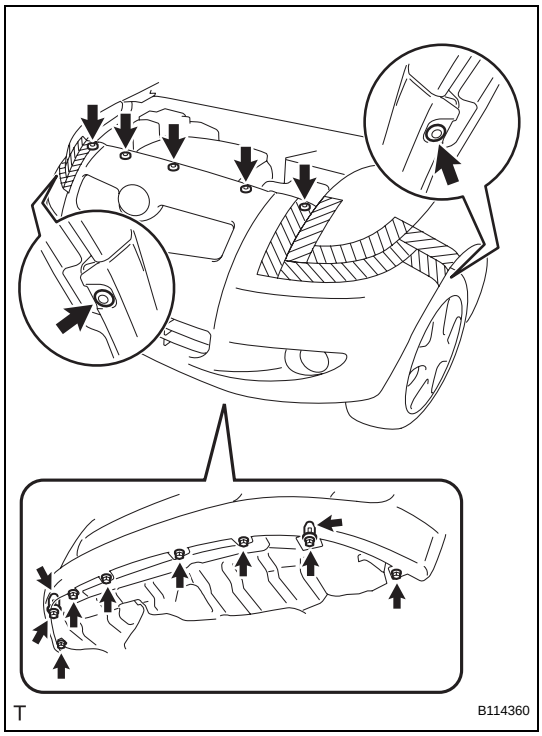

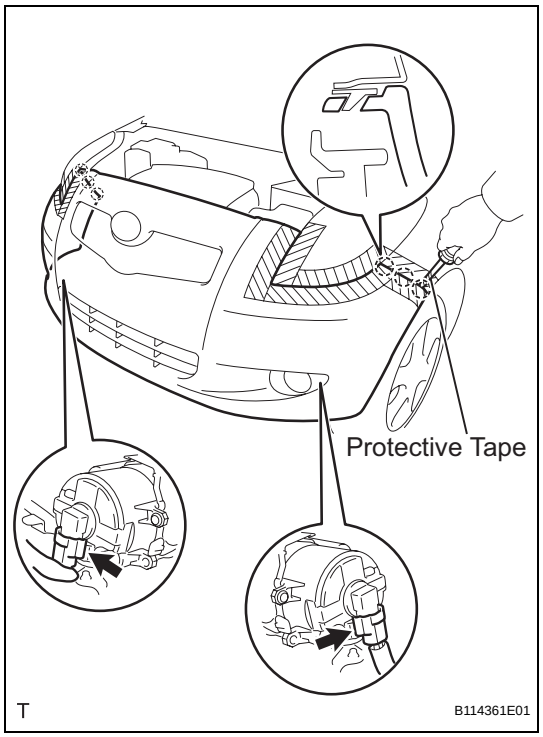

(e) w/ Fog Light:
(1) Using a screwdriver with its tip wrapped in protective tape, disengage the 6 claws.
(2) Disconnect the 2 fog light connectors and remove the front bumper cover.

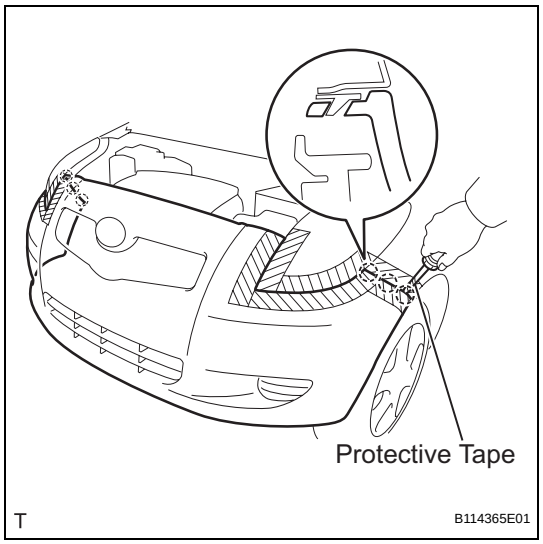

(f) w/o Fog Light:
(1) Using a screwdriver with its tip wrapped in protective tape, disengage the 6 claws and remove the front bumper cover.

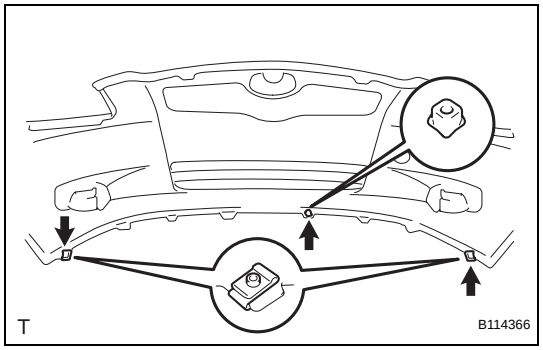

(g) Remove the 2 clips and the screw grommet.

3. REMOVE HEADLIGHT ASSEMBLY LH (See page LI-97)

4. REMOVE HEADLIGHT ASSEMBLY RH
HINT:
Use the same procedure as for the LH side.

ET

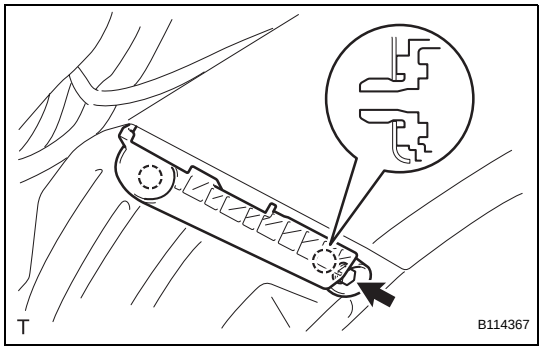

5. REMOVE FRONT BUMPER SIDE RETAINER LH
(a) Remove the screw.
(b) Using a clip remover, disengage the 2 claws and remove the front bumper side retainer.

6. REMOVE FRONT BUMPER SIDE RETAINER RH
HINT:
Use the same procedure as for the LH side.

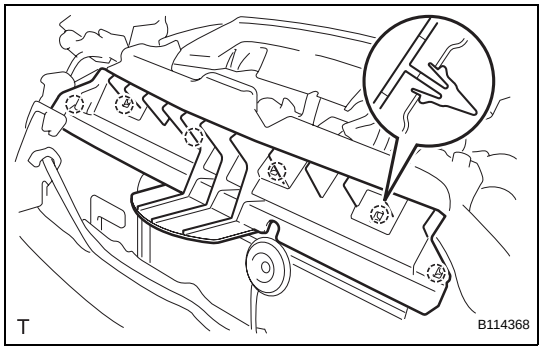

7. REMOVE RADIATOR SUPPORT UPPER ABSORBER
(a) Using a screwdriver, disengage the 6 claws and remove the radiator support upper absorber.

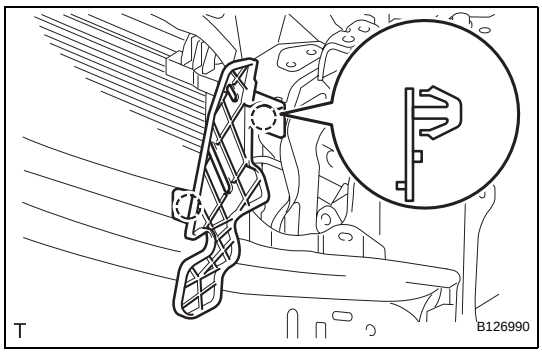

8. REMOVE RADIATOR SIDE AIR SEAL LH
(a) Disengage the 2 claws and remove the radiator side air seal.

9. REMOVE RADIATOR SIDE AIR SEAL RH
HINT:
Use the same procedure as for the LH side.

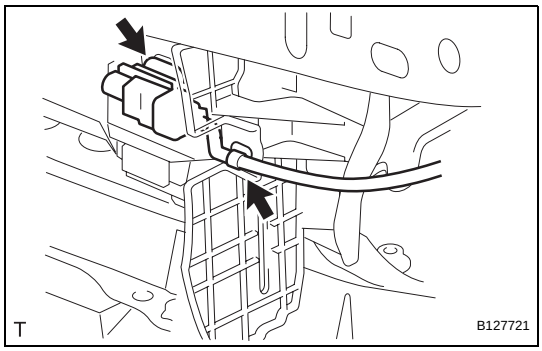

10. REMOVE THERMISTOR ASSEMBLY
(a) Remove the wiring harness clamp.
(b) Remove the thermistor.

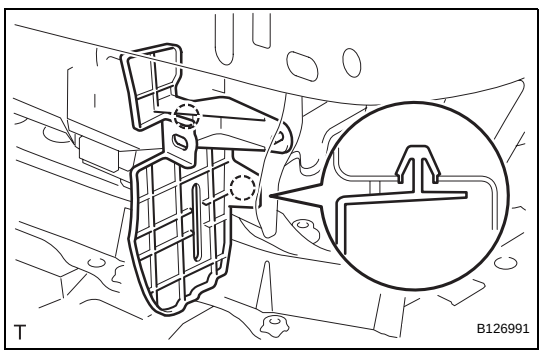

11. REMOVE RADIATOR SUPPORT EXTENSION LH
(a) Disengage the 2 claws and remove the radiator support extension.

12. REMOVE RADIATOR SUPPORT EXTENSION RH
HINT:
Use the same procedure as for the LH side.

ET

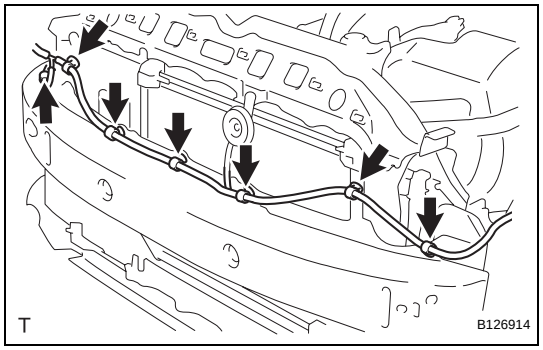

13. REMOVE NO. 2 ENGINE ROOM WIRE

(a) w/ Fog Light:

(1) Using a clip remover, remove the 7 wiring harness clamps.

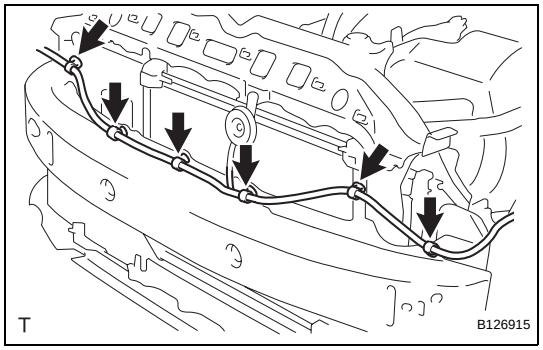

(b) w/o Fog Light:

(1) Using a clip remover, remove the 6 wiring harness clamps.

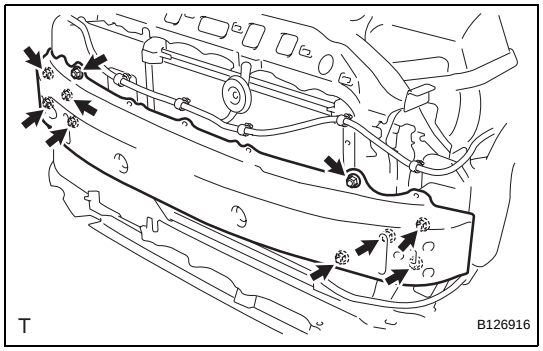

14. REMOVE FRONT BUMPER REINFORCEMENT SUB-ASSEMBLY

(a) Remove the 4 nuts, the 6 bolts and the front bumper reinforcement.

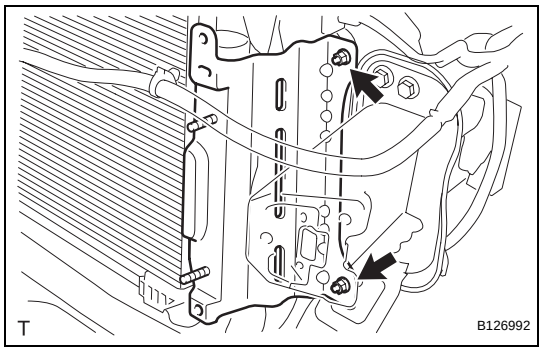

15. REMOVE FRONT BUMPER STONE DEFLECTOR BRACKET

HINT:

Use the same procedure for both sides.

(a) Remove the 2 nuts and the front bumper stone deflector bracket.

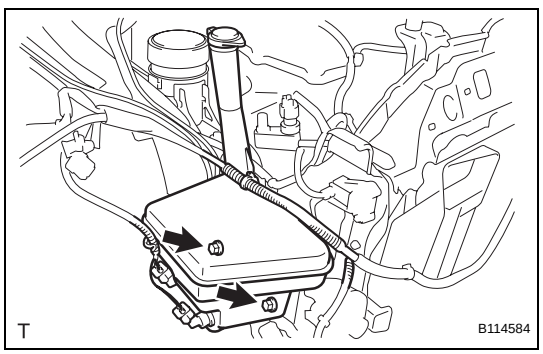

16. REMOVE WINDSHIELD WASHER JAR ASSEMBLY

(a) Remove the 2 bolts and the windshield washer jar.

ET

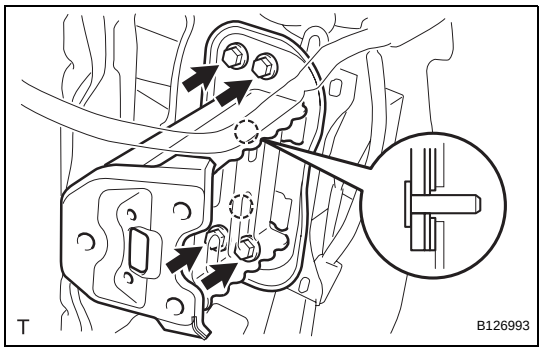

17. REMOVE FRONT BUMPER ARM SUB-ASSEMBLY LH
(a) Remove the 4 bolts and the front bumper arm.

18. REMOVE FRONT BUMPER ARM SUB-ASSEMBLY RH
HINT:
Use the same procedure as for the LH side.

DISASSEMBLY

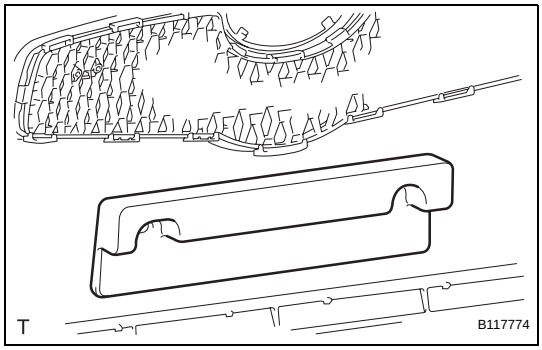

1. REMOVE FRONT BUMPER PAD
(a) Remove the front bumper pad.

2. REMOVE RADIATOR GRILLE EMBLEM (See page ET-67)

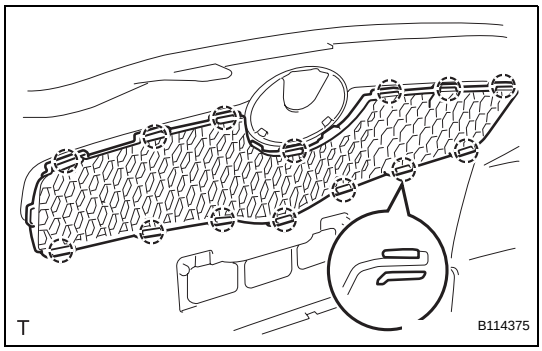

3. REMOVE RADIATOR GRILLE
(a) Using a screwdriver, disengage the 14 claws and remove the radiator grille.

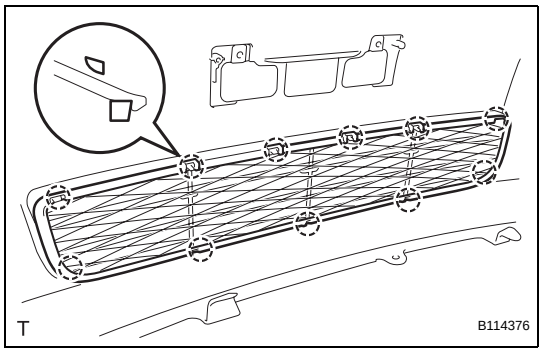

4. REMOVE RADIATOR LOWER GRILLE
(a) Disengage the 11 claws and remove the radiator lower grille.

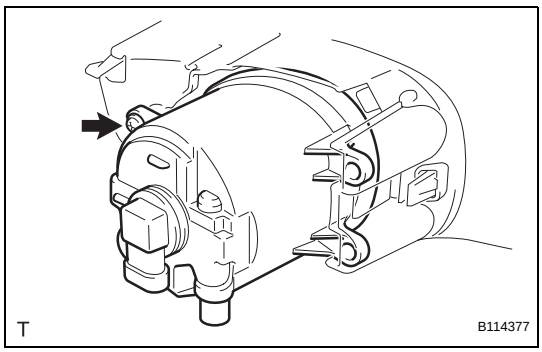

5. REMOVE FOG LIGHT ASSEMBLY LH
(a) Remove the screw and the fog light.

6. REMOVE FOG LIGHT ASSEMBLY RH
HINT:
Use the same procedure as for the LH side.

ET

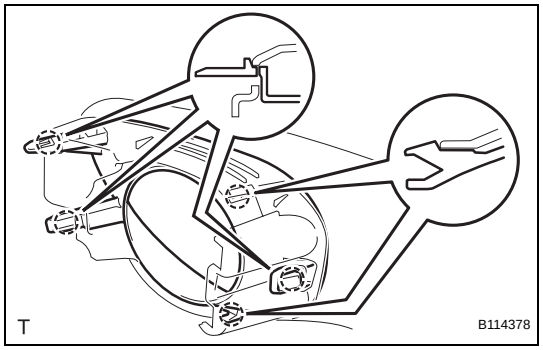

7. REMOVE FOG LIGHT COVER LH

(a) w/ Fog Light:

(1) Disengage the 5 claws and remove the fog light cover.

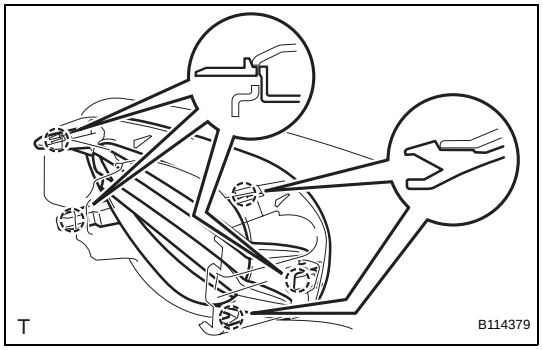

(b) w/o Fog Light:

(1) Disengage the 5 claws and remove the fog light cover.

8. REMOVE FOG LIGHT COVER RH

HINT:

Use the same procedure as for the LH side.

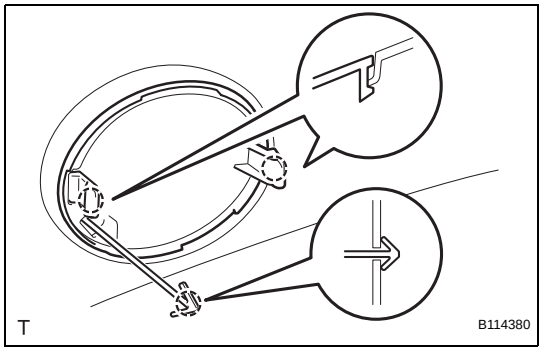

9. REMOVE FRONT BUMPER HOLE COVER

(a) Disengage the 3 claws and remove the front bumper hole cover.

REASSEMBLY

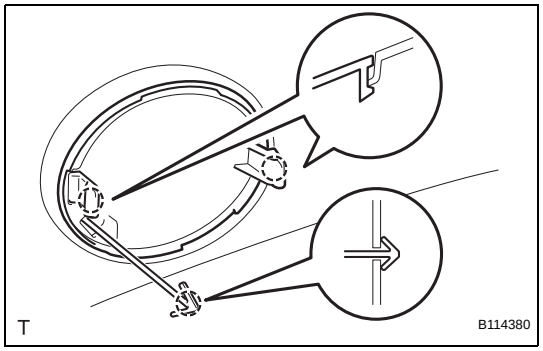

1. INSTALL FRONT BUMPER HOLE COVER

(a) Engage the 3 claws and install the front bumper hole cover.

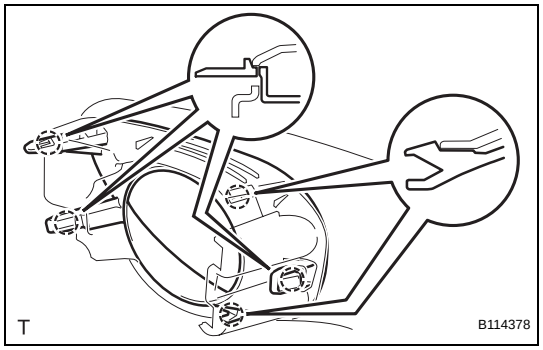

2. INSTALL FOG LIGHT COVER LH

(a) w/ Fog Light:

(1) Engage the 5 claws and install the fog light cover.

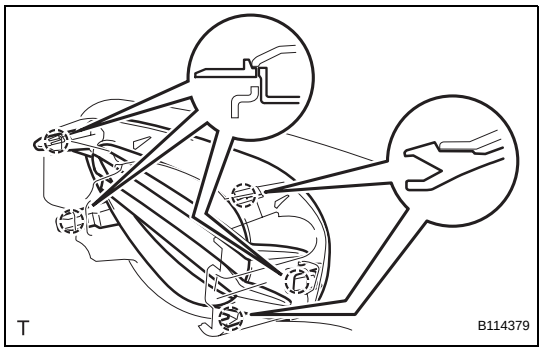

(b) w/o Fog Light:
(1) Engage the 5 claws and install the fog light cover.

3. INSTALL FOG LIGHT COVER RH
HINT:
Use the same procedure as for the LH side.

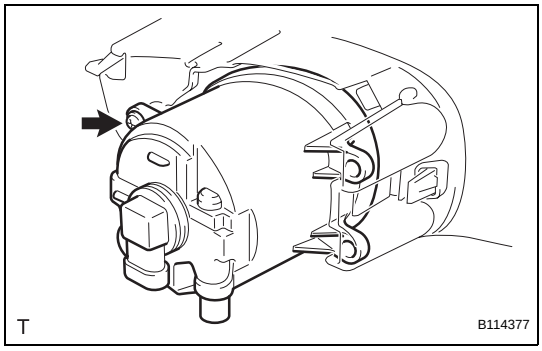

4. INSTALL FOG LIGHT ASSEMBLY LH
(a) Install the fog light with the screw.

5. INSTALL FOG LIGHT ASSEMBLY RH
HINT:
Use the same procedure as for the LH side.

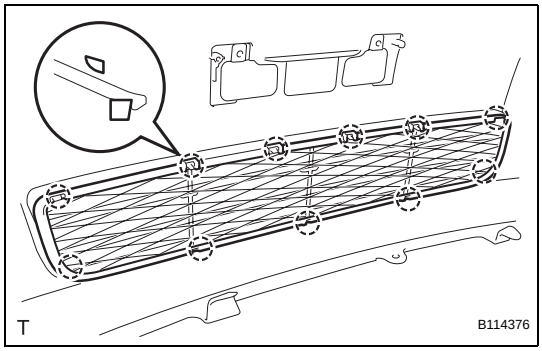

6. INSTALL RADIATOR LOWER GRILLE
(a) Engage the 11 claws and install the radiator lower grille.

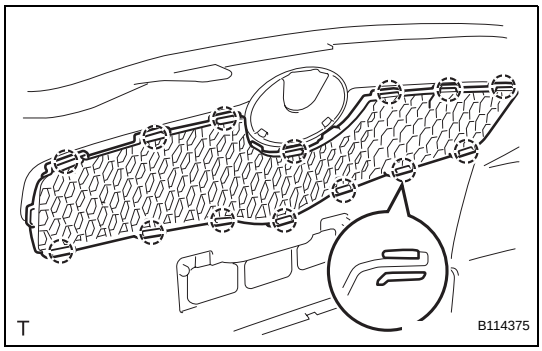

7. INSTALL RADIATOR GRILLE
(a) Engage the 14 claws and install the radiator grille.

8. INSTALL RADIATOR GRILLE EMBLEM (See page ET-72)

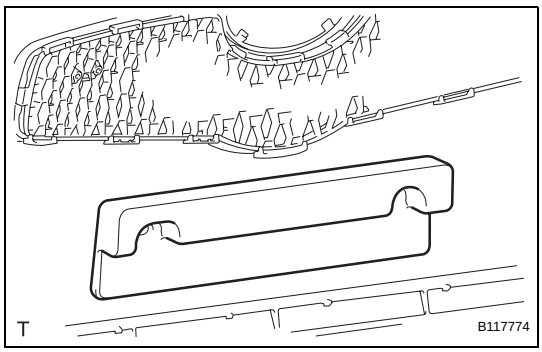

9. INSTALL FRONT BUMPER PAD
(a) Install the front bumper pad.

ET

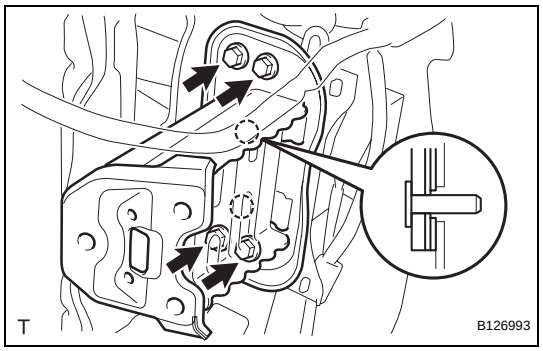

INSTALLATION

1. INSTALL FRONT BUMPER ARM SUB-ASSEMBLY LH

(a) Install the front bumper arm with the 4 bolts.
Torque: 40 N*m (410 kgf*cm, 30 ft.*lbf)

2. INSTALL FRONT BUMPER ARM SUB-ASSEMBLY RH

HINT:
Use the same procedure as for the LH side.

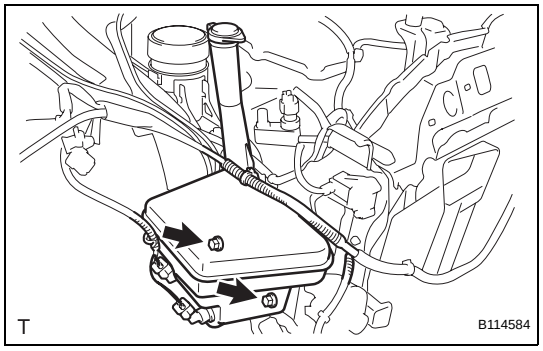

3. INSTALL WINDSHIELD WASHER JAR ASSEMBLY

(a) Install the windshield washer jar with the 2 bolts.
Torque: 5.5 N*m (55 kgf*cm, 49 in.*lbf)

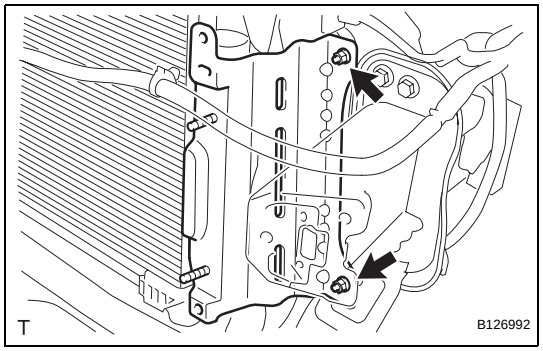

4. INSTALL FRONT BUMPER STONE DEFLECTOR BRACKET

HINT:
Use the same procedure for both sides.

(a) Install the front bumper stone deflector bracket with the 2 nuts.
Torque: 5.5 N*m (55 kgf*cm, 49 in.*lbf)

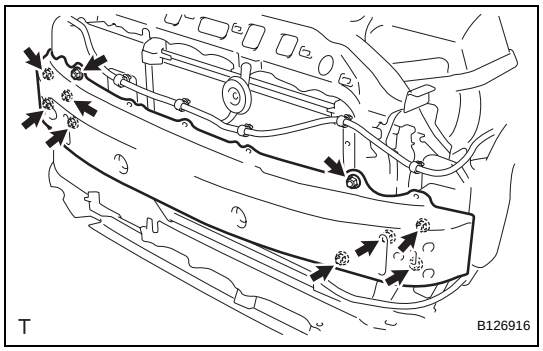

5. INSTALL FRONT BUMPER REINFORCEMENT SUB-ASSEMBLY

(a) Install the front bumper reinforcement with the 4 nuts and the 6 bolts.
Torque: 5.5 N*m (55 kgf*cm, 49 in.*lbf) for nut
40 N*m (410 kgf*cm, 30 ft.*lbf) for bolt

ET

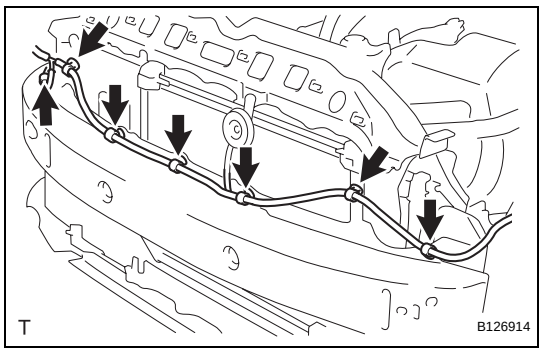

6. INSTALL NO. 2 ENGINE ROOM WIRE

(a) w/ Fog Light:
(1) Install the 7 wiring harness clamps.

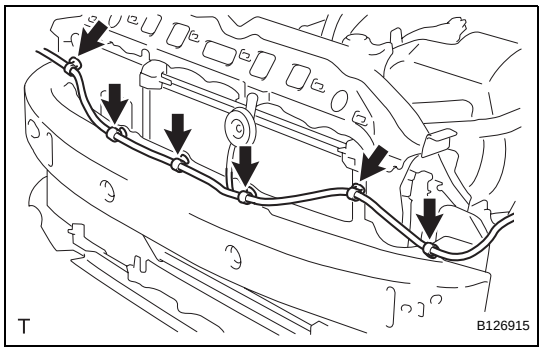

(b) w/o Fog Light:
(1) Install the 6 wiring harness clamps.

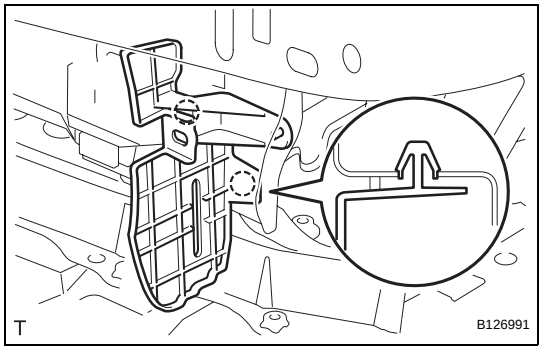

7. INSTALL RADIATOR SUPPORT EXTENSION LH
(a) Engage the 2 claws and install the radiator support extension.

8. INSTALL RADIATOR SUPPORT EXTENSION RH
HINT:
Use the same procedure as for the LH side.

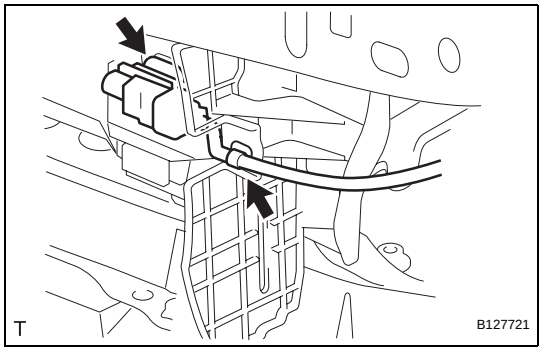

9. INSTALL THERMISTOR ASSEMBLY
(a) Install the thermistor.
(b) Install the wiring harness clamp.

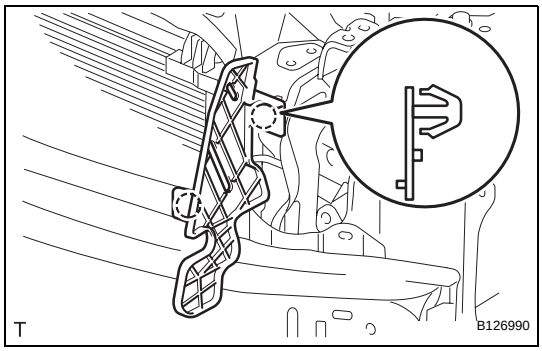

10. INSTALL RADIATOR SIDE AIR SEAL LH
(a) Engage the 2 claws and install the radiator side air seal.

11. INSTALL RADIATOR SIDE AIR SEAL RH
HINT:
Use the same procedure as for the LH side.

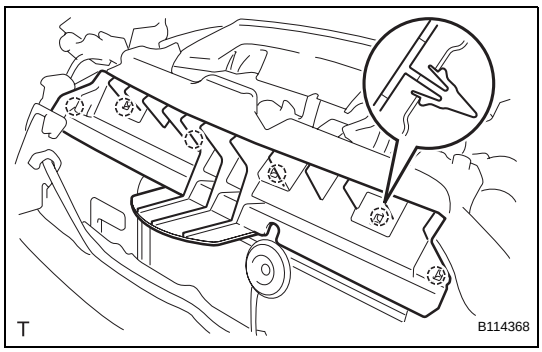

12. INSTALL RADIATOR SUPPORT UPPER ABSORBER
(a) Engage the 6 claws and install the radiator support upper absorber.

ET

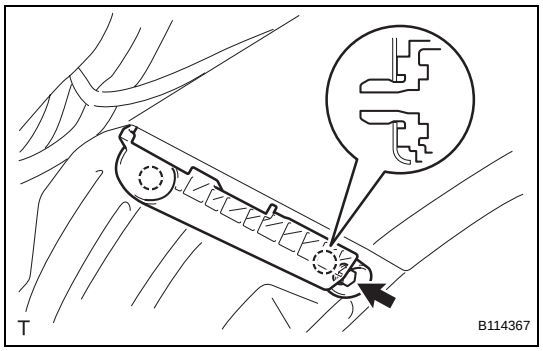

13. INSTALL FRONT BUMPER SIDE RETAINER LH

(a) Engage the 2 claws and install the front bumper side retainer.

(b) Tighten the screw.

14. INSTALL FRONT BUMPER SIDE RETAINER RH

HINT:

Use the same procedure as for the LH side.

15. INSTALL HEADLIGHT ASSEMBLY LH (See page LI-104)

16. INSTALL HEADLIGHT ASSEMBLY RH

HINT:

Use the same procedure as for the LH side.

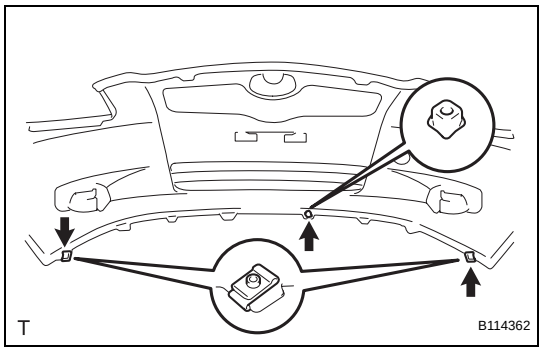

17. INSTALL FRONT BUMPER COVER

(a) Install the 2 clips and the screw grommet.

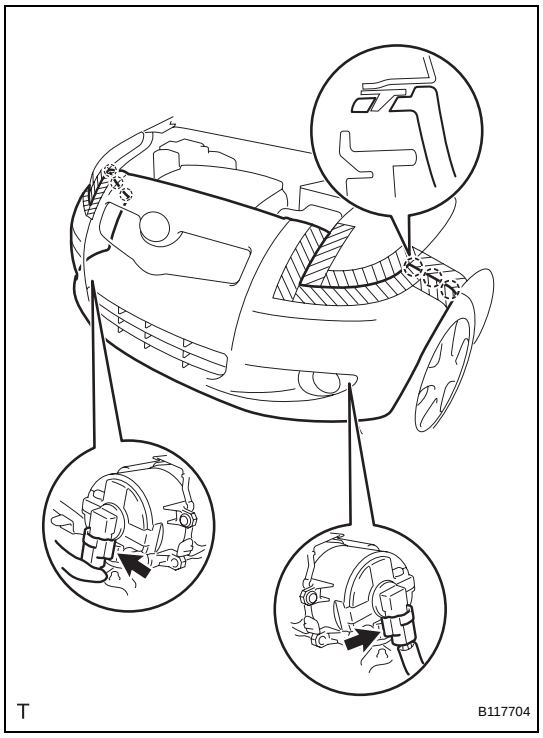

(b) w/ Fog Light:

(1) Connect the 2 fog light connectors.

(2) Engage the 6 claws and install the front bumper cover.

ET

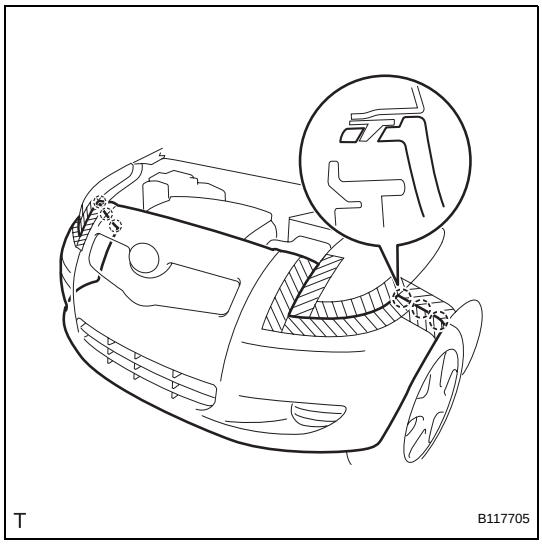

(c) w/o Fog Light:
(1) Engage the 6 claws and install the front bumper cover.

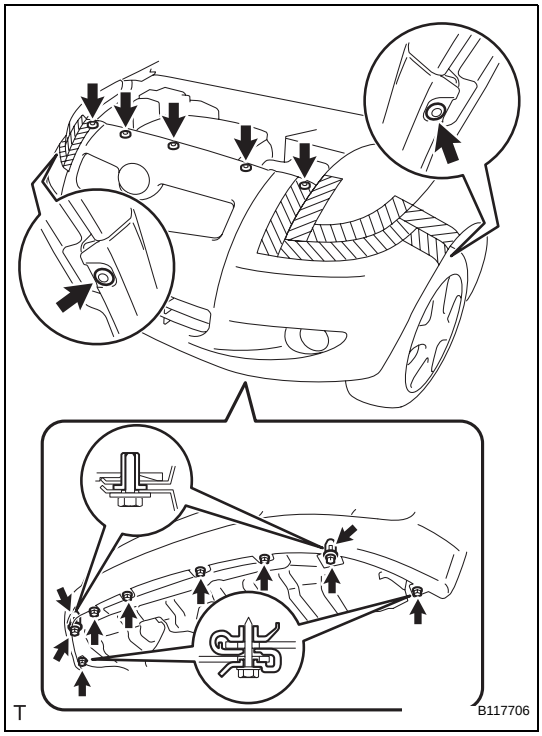

(d) Install the 7 clips.
(e) Install the 2 screw grommets.
(f) Tighten the 8 screws.

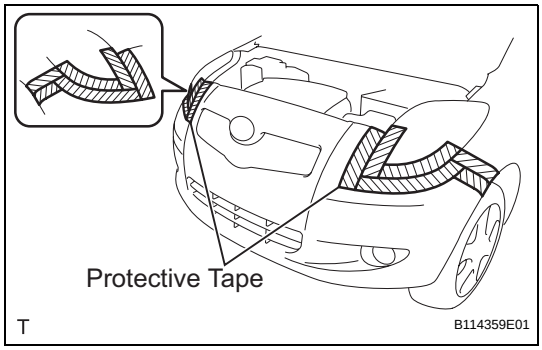

(g) Remove the protective tape.

18. **CONNECT CABLE TO NEGATIVE BATTERY TERMINAL**
Torque: 5.4 N*m (55 kgf*cm, 48 in.*lbf)

19. **PREPARE VEHICLE FOR HEADLIGHT AIMING ADJUSTMENT (See page LI-98)**

20. **PREPARE FOR HEADLIGHT AIMING (for Using a Tester) (See page LI-98)**

21. **PREPARE FOR HEADLIGHT AIMING (for Using a Screen) (See page LI-99)**

22. **INSPECT HEADLIGHT AIMING (See page LI-101)**

23. **ADJUST HEADLIGHT AIMING (See page LI-102)**

ET

24. **PREPARE VEHICLE FOR FOG LIGHT AIMING ADJUSTMENT (w/ Fog Light) (See page LI-115)**
25. **PREPARE FOR FOG LIGHT AIMING (w/ Fog Light) (See page LI-116)**
26. **INSPECT FOG LIGHT AIMING (w/ Fog Light) (See page LI-118)**
27. **ADJUST FOG LIGHT AIMING (w/ Fog Light) (See page LI-118)**

REAR BUMPER (for Sedan)

COMPONENTS

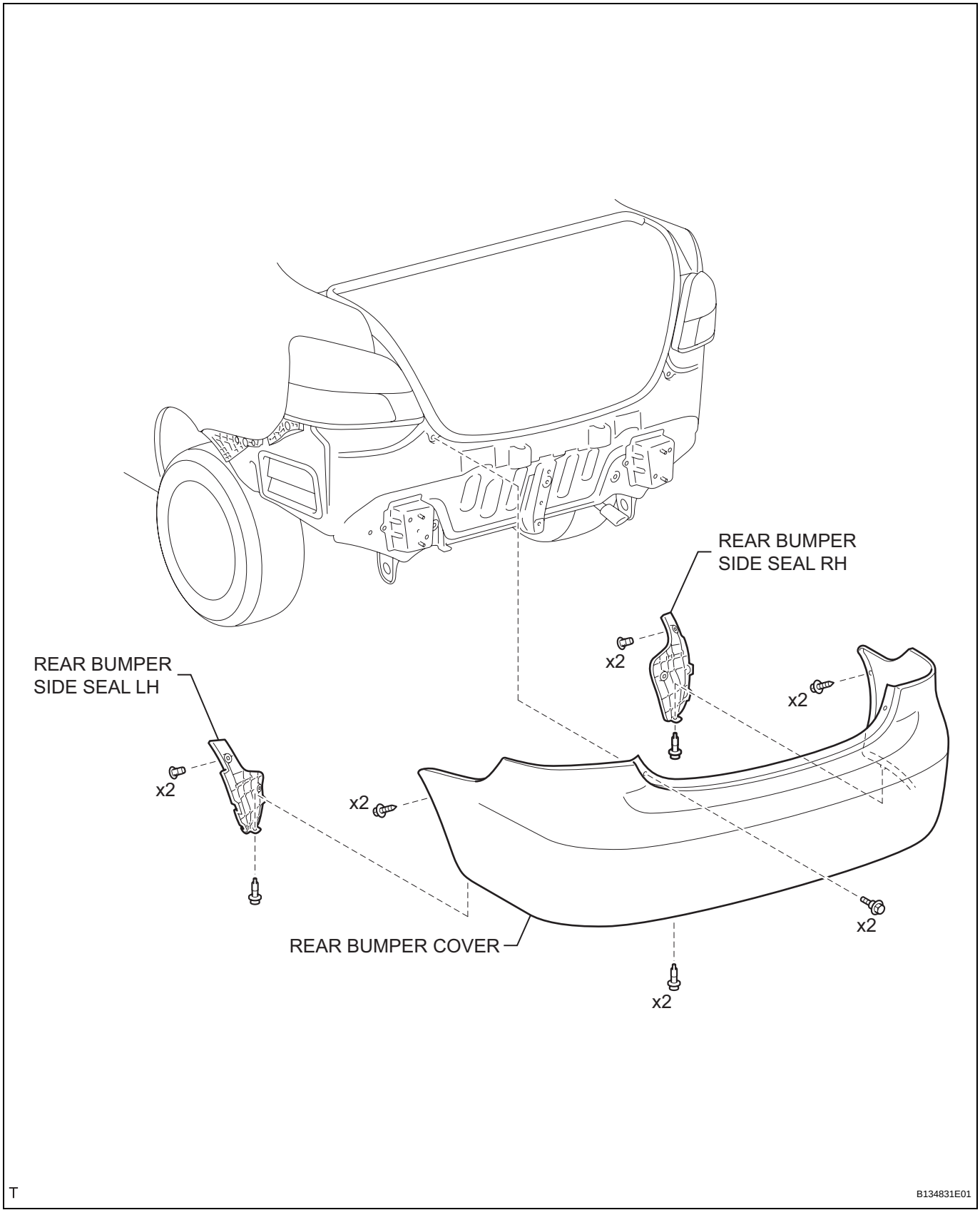

ET

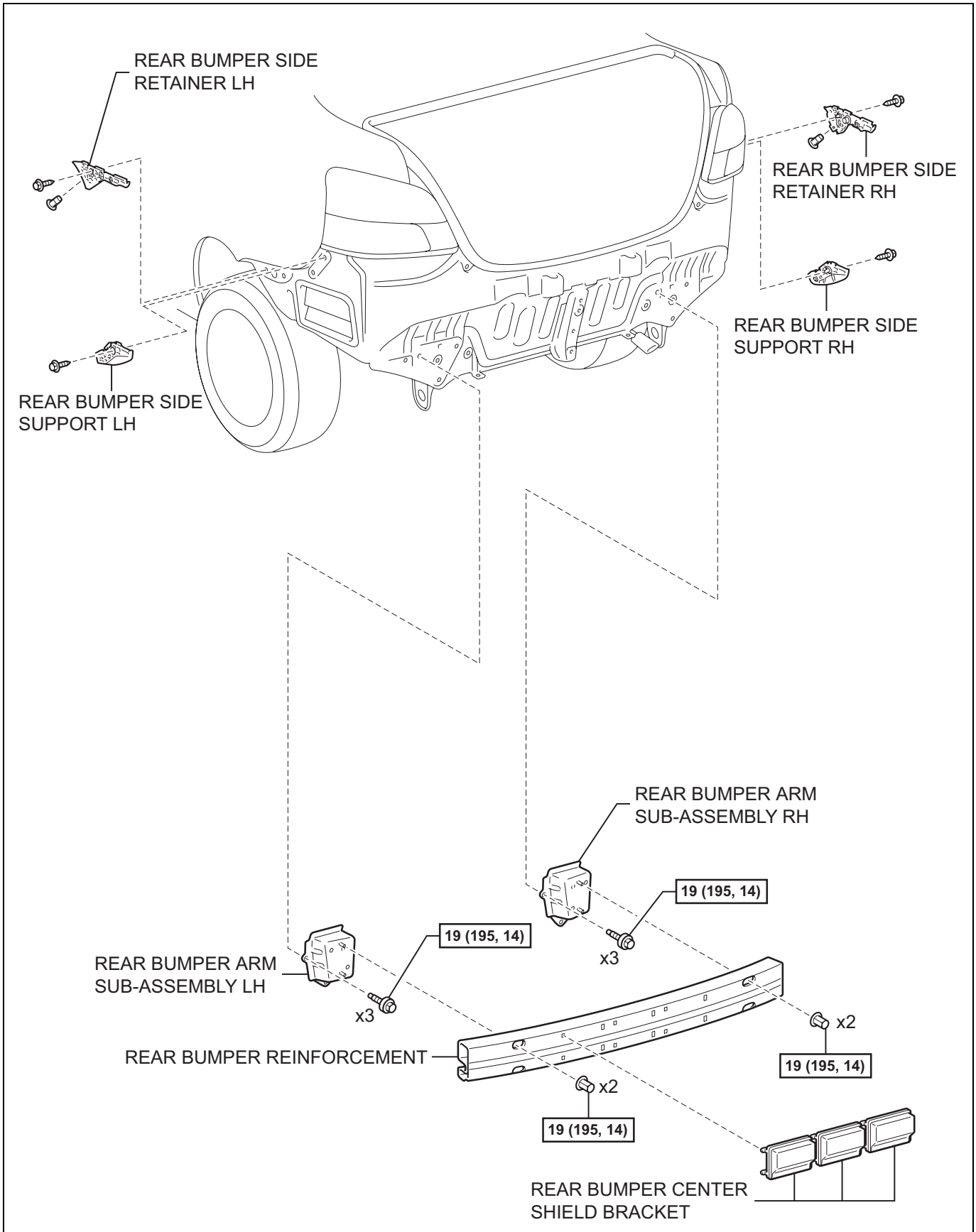

N*m (kgf*cm, ft*lbf) : Specified torque

T

B138610E01

ET

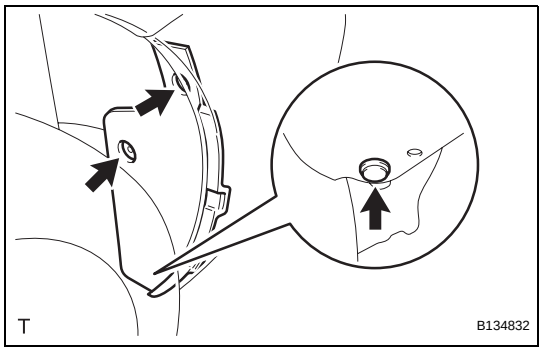

REMOVAL

1. REMOVE REAR BUMPER SIDE SEAL LH

(a) Using a clip remover, remove the 3 clips and the rear bumper side seal.

2. REMOVE REAR BUMPER SIDE SEAL RH

HINT:

Use the same procedure as for the LH side.

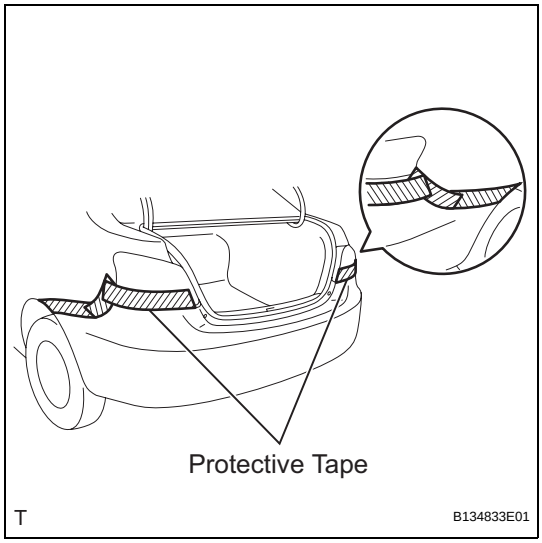

3. REMOVE REAR BUMPER COVER

(a) Apply protective tape as shown in the illustration.

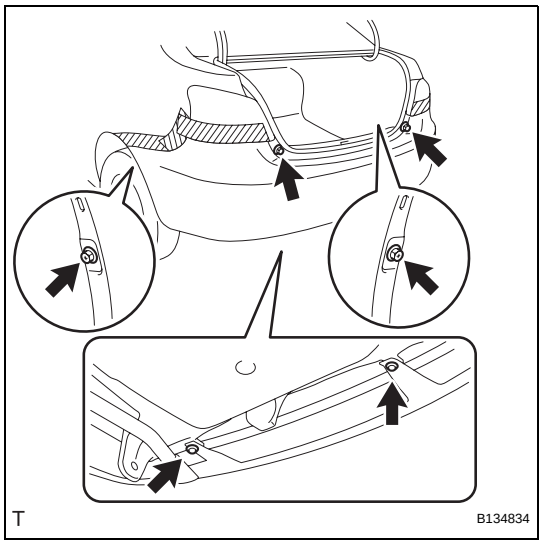

(b) Using a clip remover, remove the 2 clips.

(c) Remove the 2 bolts and the 2 screws.

ET

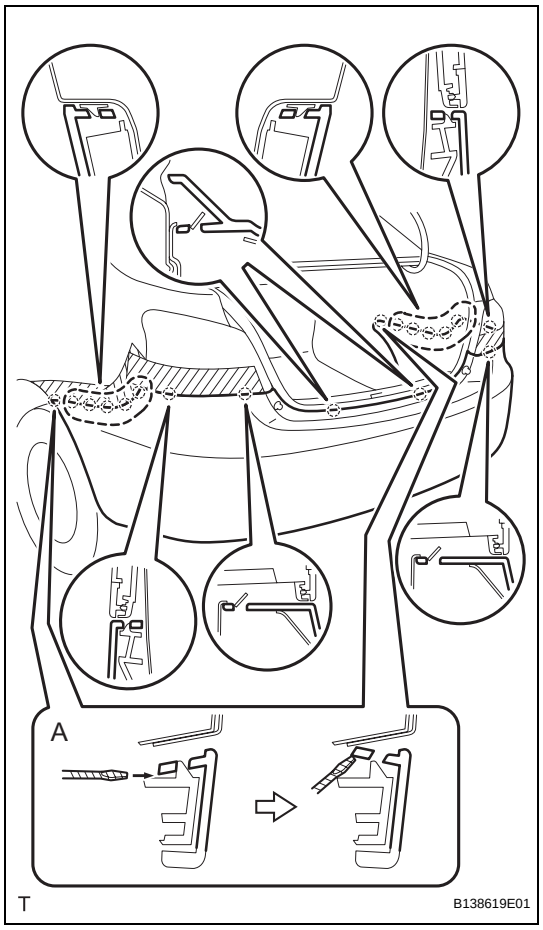

(d) Insert a screwdriver into portion A shown in the illustration, then lift the rear bumper cover up using it and disengage the 2 claws.
(e) Disengage the 16 claws and remove the rear bumper cover.

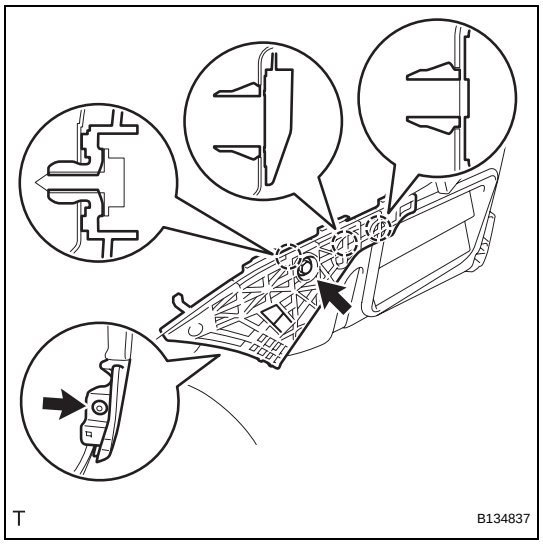

4. REMOVE REAR BUMPER SIDE RETAINER LH
(a) Using a clip remover, remove the clip.
(b) Remove the screw.
(c) Disengage the 3 claws and remove the rear bumper side retainer.

5. REMOVE REAR BUMPER SIDE RETAINER RH
HINT:
Use the same procedure as for the LH side.

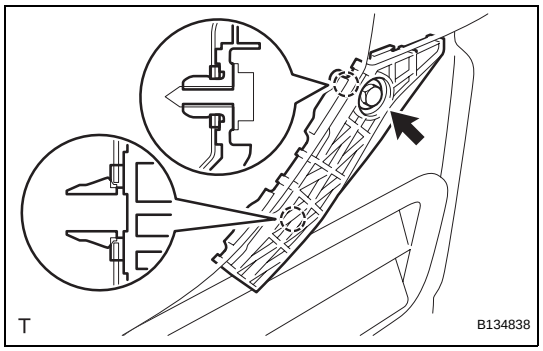

6. REMOVE REAR BUMPER SIDE SUPPORT LH
(a) Remove the screw.
(b) Disengage the 2 claws and remove the rear bumper side support.

7. REMOVE REAR BUMPER SIDE SUPPORT RH
HINT:
Use the same procedure as for the LH side.

ET

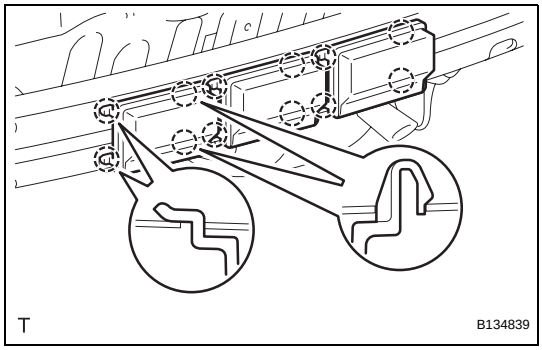

8. REMOVE REAR BUMPER CENTER SHIELD BRACKET

HINT:

Use the same procedure to remove all the rear bumper center shield brackets.

(a) Disengage the 4 claws and remove the rear bumper center shield bracket.

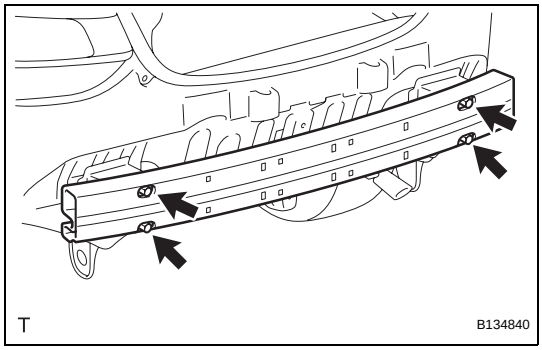

9. REMOVE REAR BUMPER REINFORCEMENT

(a) Remove the 4 nuts and rear bumper reinforcement.

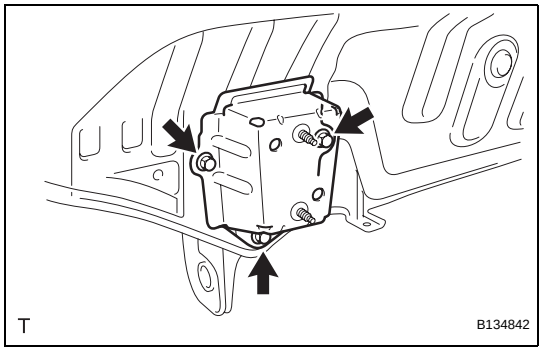

10. REMOVE REAR BUMPER ARM SUB-ASSEMBLY LH

(a) Remove the 3 bolts and the rear bumper arm.

11. REMOVE REAR BUMPER ARM SUB-ASSEMBLY RH

HINT:

Use the same procedure as for the LH side.

INSTALLATION

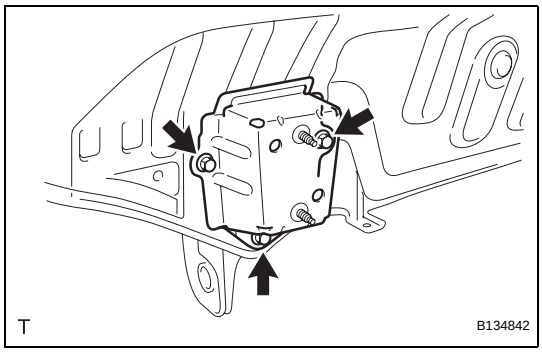

1. INSTALL REAR BUMPER ARM SUB-ASSEMBLY LH

(a) Install the rear bumper arm with the 3 bolts.
Torque: 19 N*m (195 kgf*cm, 14 ft.*lbf)

2. INSTALL REAR BUMPER ARM SUB-ASSEMBLY RH

HINT:

Use the same procedure as for the LH side.

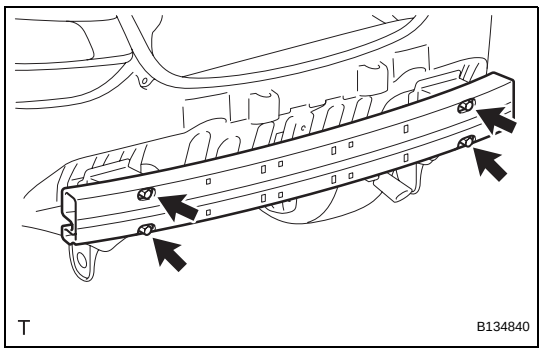

3. INSTALL REAR BUMPER REINFORCEMENT

(a) Install the rear bumper reinforcement with the 4 nuts.
Torque: 19 N*m (195 kgf*cm, 14 ft.*lbf)

ET

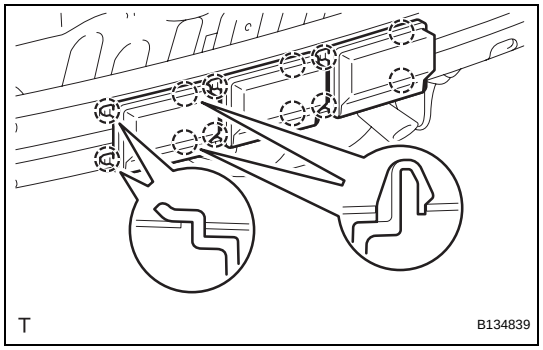

4. INSTALL REAR BUMPER CENTER SHIELD BRACKET

HINT:

Use the same procedure to install all the rear bumper center shield brackets.

(a) Engage the 4 claws and install the rear bumper center shield bracket.

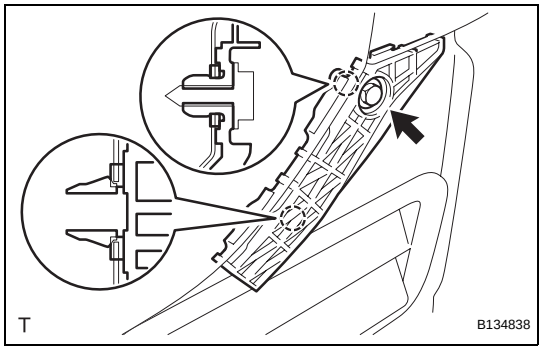

5. INSTALL REAR BUMPER SIDE SUPPORT LH

(a) Engage the 2 claws and install the rear bumper side support.

(b) Tighten the screw.

6. INSTALL REAR BUMPER SIDE SUPPORT RH

HINT:

Use the same procedure as for the LH side.

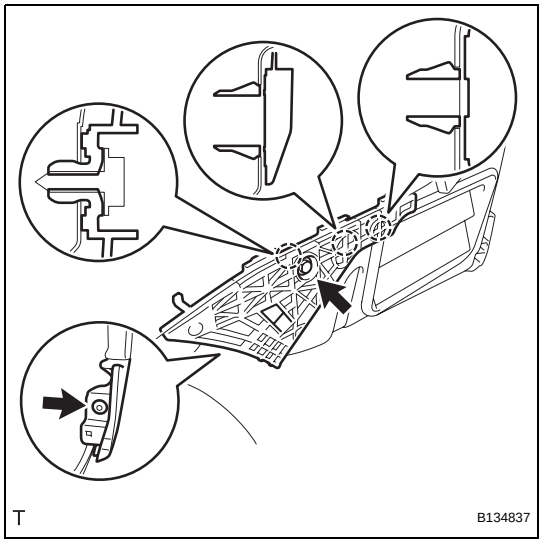

7. INSTALL REAR BUMPER SIDE RETAINER LH

(a) Engage the 3 claws and install the rear bumper side retainer.

(b) Tighten the screw.

(c) Install the clip.

8. INSTALL REAR BUMPER SIDE RETAINER RH

HINT:

Use the same procedure as for the LH side.

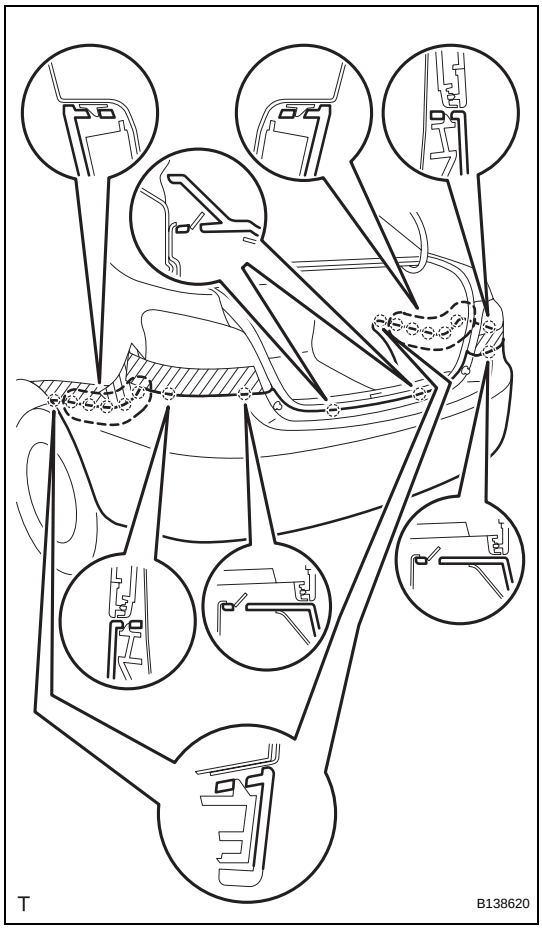

9. INSTALL REAR BUMPER COVER

(a) Engage the 18 claws and install the rear bumper cover.

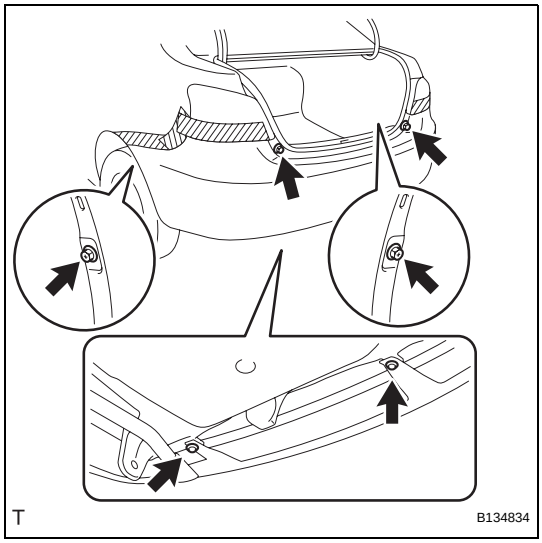

(b) Tighten the 2 bolts and the 2 screws.
(c) Install the 2 clips.

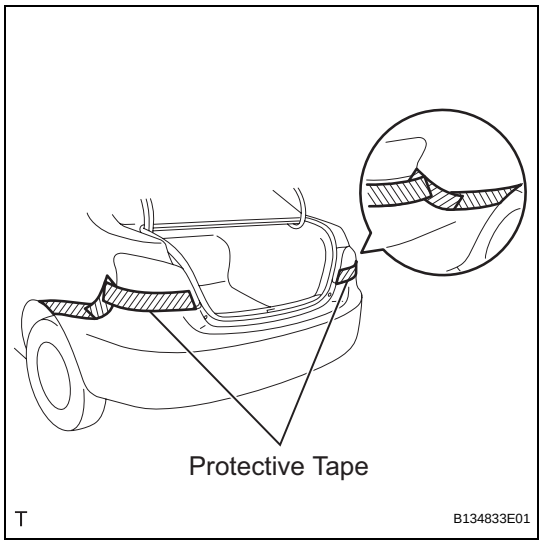

(d) Remove the protective tape.

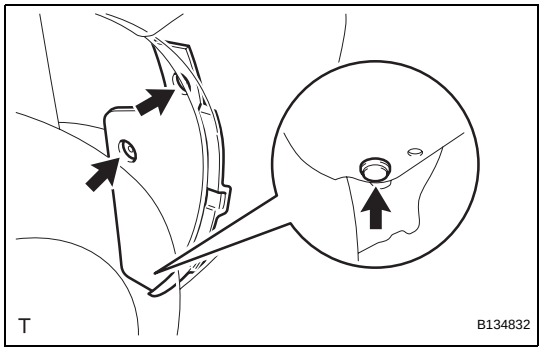

10. INSTALL REAR BUMPER SIDE SEAL LH

(a) Install the rear bumper side seal with the 3 clips.

11. INSTALL REAR BUMPER SIDE SEAL RH

HINT:

Use the same procedure as for the LH side.

REAR BUMPER (for Hatchback)

COMPONENTS

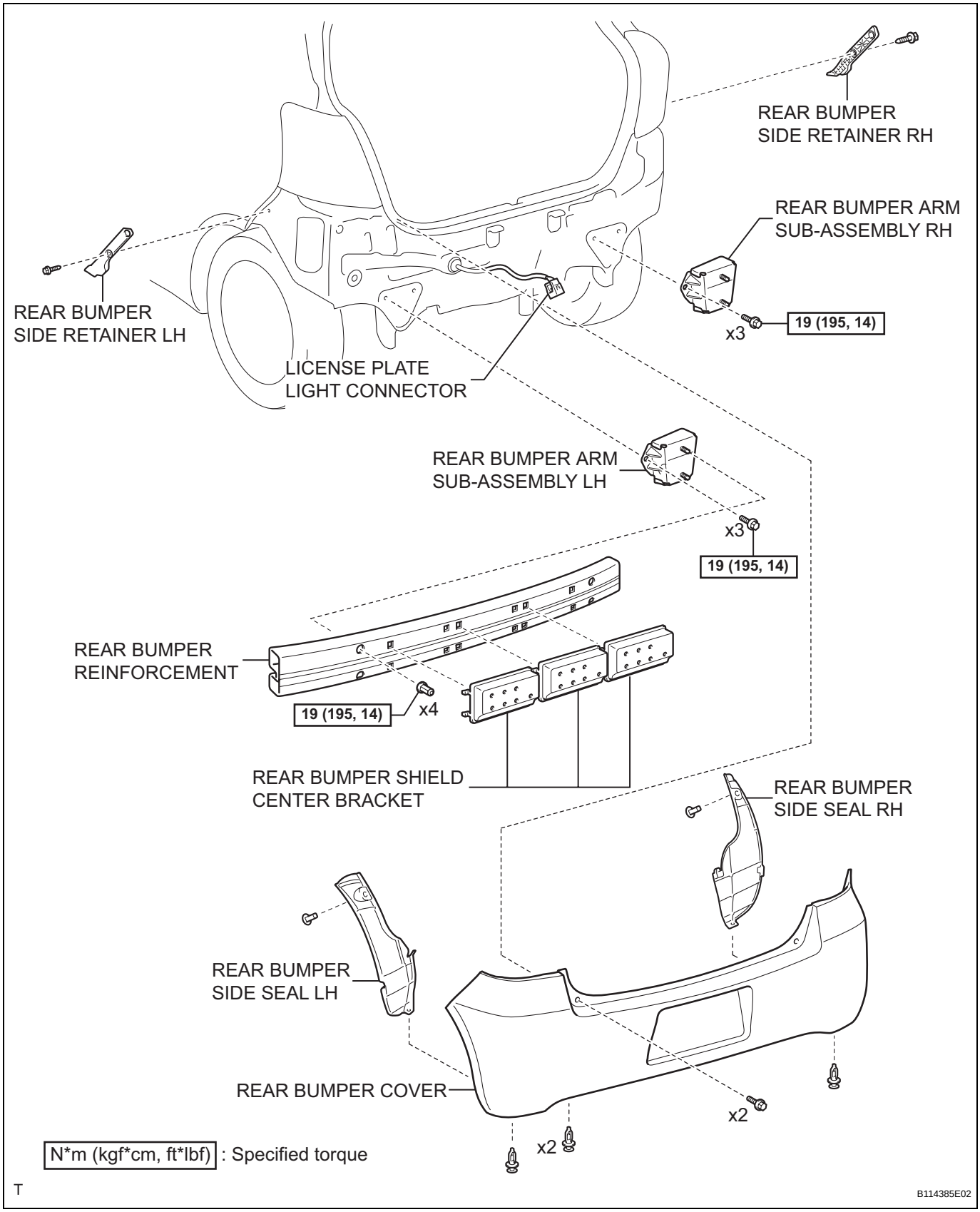

ET

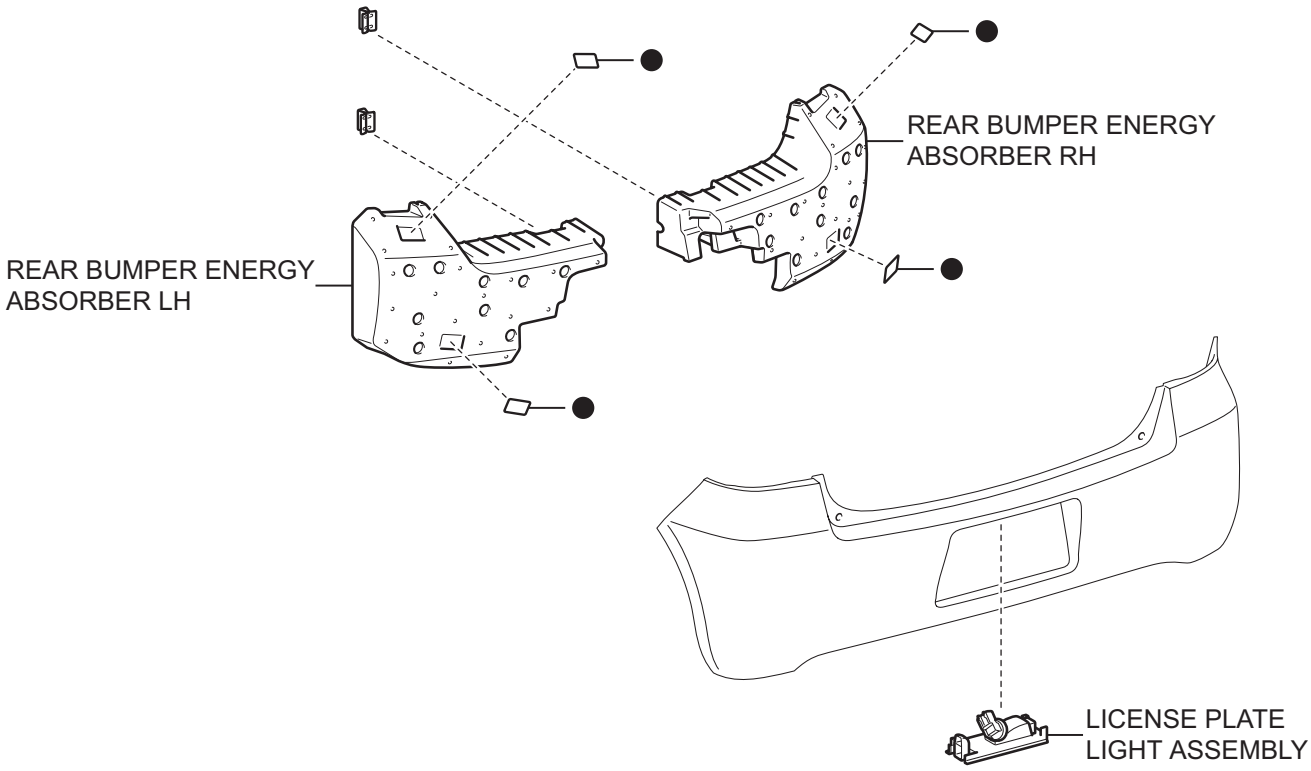

● Non-reusable part

T

B119895E02

REMOVAL

1. DISCONNECT CABLE FROM NEGATIVE BATTERY TERMINAL

2. REMOVE REAR BUMPER SIDE SEAL LH

(a) Using a clip remover, remove the 2 clips and the rear bumper side seal.

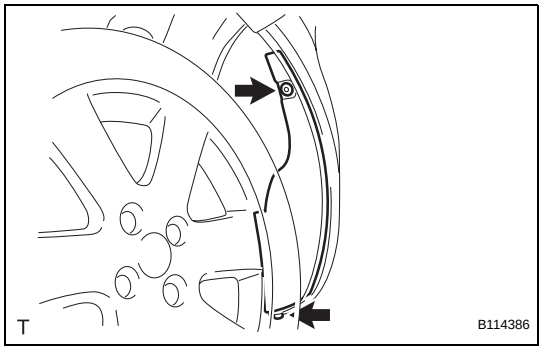

3. REMOVE REAR BUMPER SIDE SEAL RH

HINT:

Use the same procedure as for the LH side.

4. REMOVE REAR BUMPER COVER

(a) Apply protective tape as shown in the illustration.

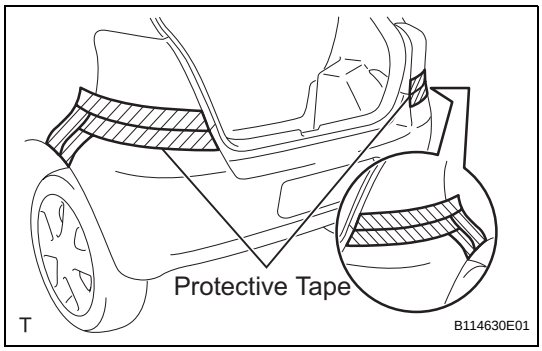

(b) Using a clip remover, remove the 2 clips.

(c) Remove the 2 bolts.

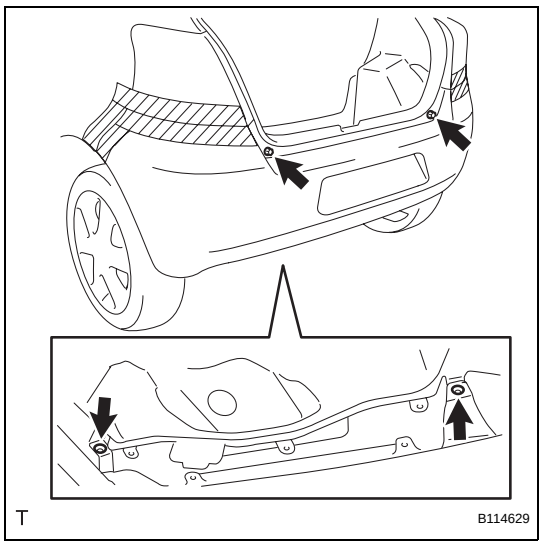

ET

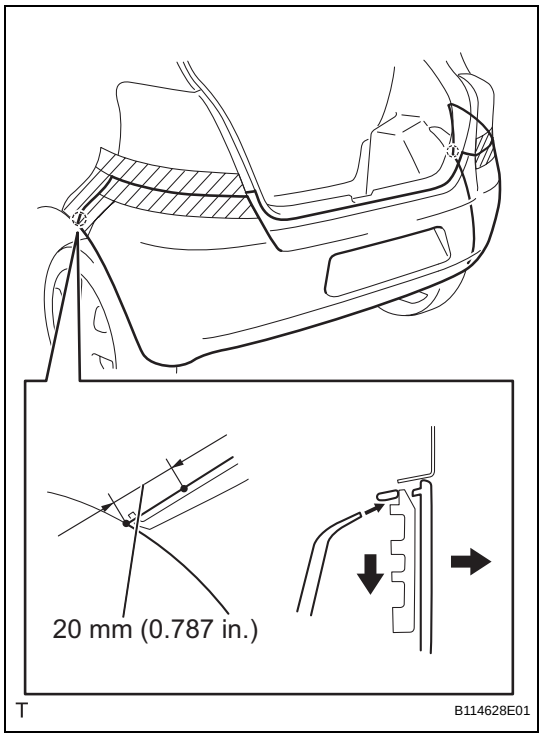

(d) Insert a clip remover into the engaged portion between the rear bumper and rear bumper side retainer, 20 mm (0.787 in.) from the end of the rear bumper arch.

(e) Pull the rear bumper outward while pushing the rear bumper side retainer downward.

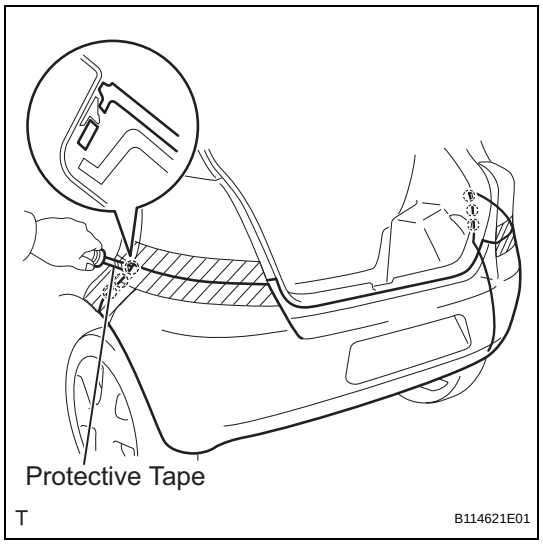

(f) Using a screwdriver with its tip wrapped in protective tape, disengage the 6 claws.

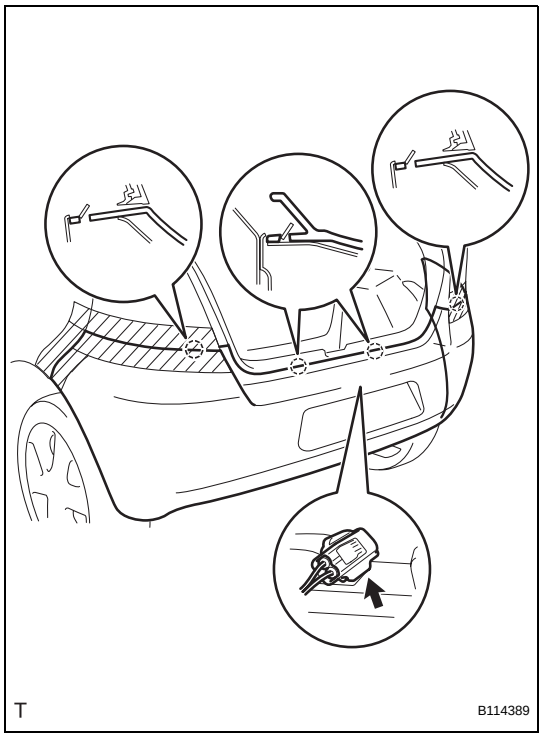

(g) Disengage the 4 claws.
(h) Disconnect the license plate light connector and remove the rear bumper cover.

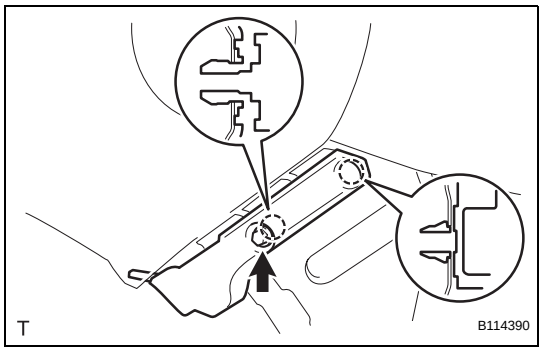

5. REMOVE REAR BUMPER SIDE RETAINER LH
(a) Remove the screw.
(b) Using a clip remover, disengage the 2 claws and remove the rear bumper side retainer.

6. REMOVE REAR BUMPER SIDE RETAINER RH
HINT:
Use the same procedure as for the LH side.

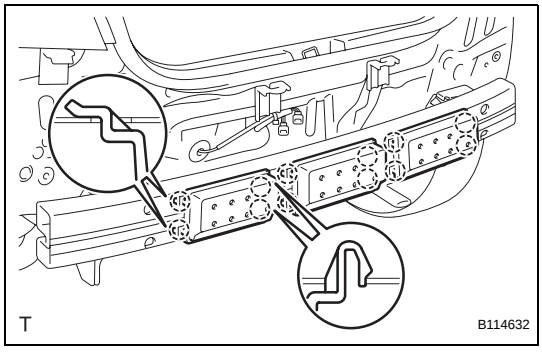

7. REMOVE REAR BUMPER SHIELD CENTER BRACKET
HINT:
Use the same procedure to remove all the rear bumper shield center brackets.
(a) Disengage the 4 claws and the rear bumper shield center bracket.

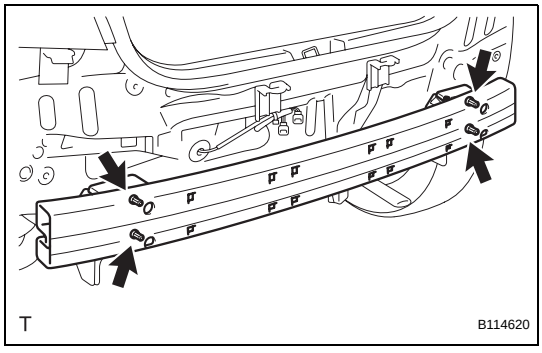

8. REMOVE REAR BUMPER REINFORCEMENT
(a) Remove the 4 nuts and the rear bumper reinforcement.

ET

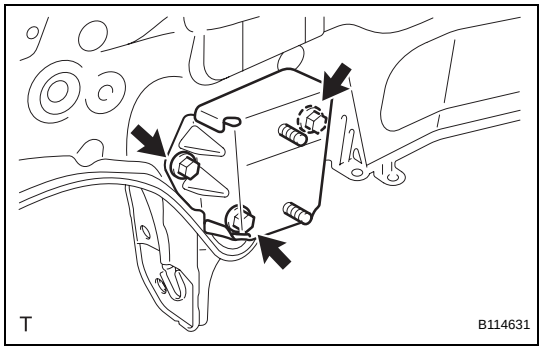

9. REMOVE REAR BUMPER ARM SUB-ASSEMBLY LH
(a) Remove the 3 bolts and the rear bumper arm.

10. REMOVE REAR BUMPER ARM SUB-ASSEMBLY RH
HINT:
Use the same procedure as for the LH side.

DISASSEMBLY

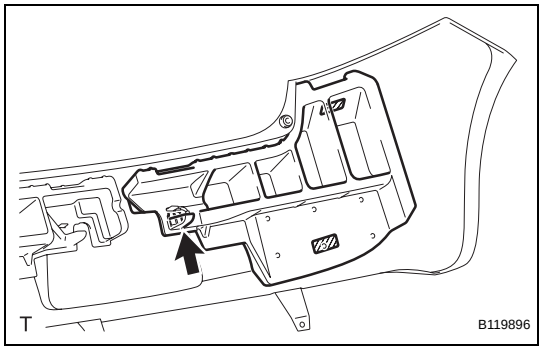

1. REMOVE REAR BUMPER ENERGY ABSORBER LH
(a) Remove the clip.
(b) Remove the 2 pieces of tape and the rear bumper energy absorber.

2. REMOVE REAR BUMPER ENERGY ABSORBER RH
HINT:
Use the same procedure as for the LH side.

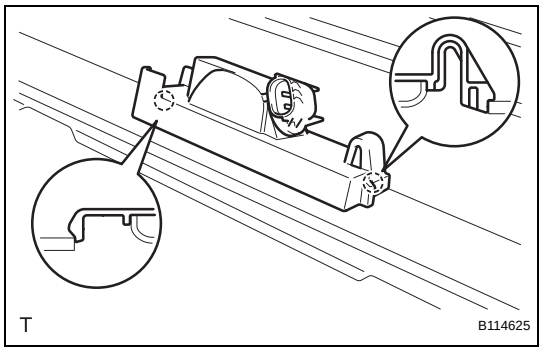

3. REMOVE LICENSE PLATE LIGHT ASSEMBLY
(a) Disengage the 2 claws and remove the license plate light.

REASSEMBLY

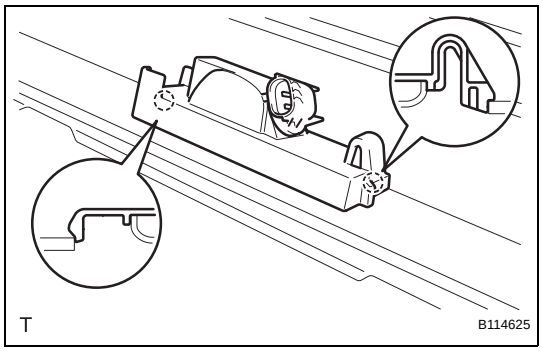

1. INSTALL LICENSE PLATE LIGHT ASSEMBLY
(a) Engage the 2 claws and install the license plate light.

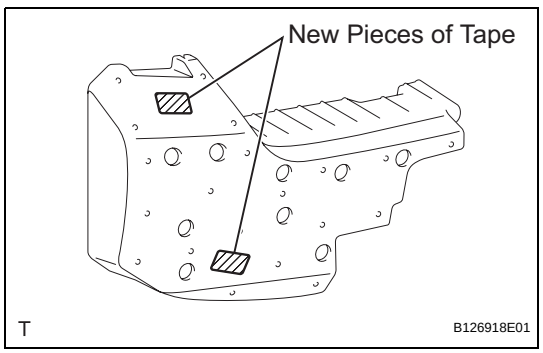

2. INSTALL REAR BUMPER ENERGY ABSORBER LH
(a) Apply 2 new pieces of tape.

ET

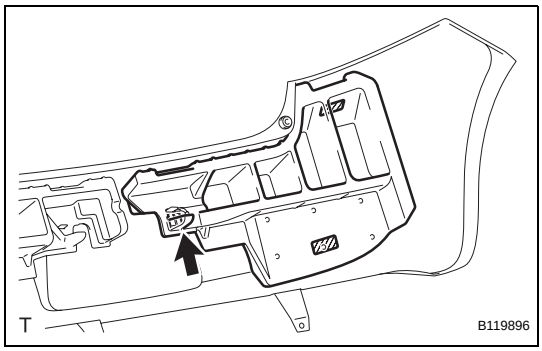

(b) Install the rear bumper energy absorber with the clip.

3. INSTALL REAR BUMPER ENERGY ABSORBER RH
HINT:
Use the same procedure as for the LH side.

INSTALLATION

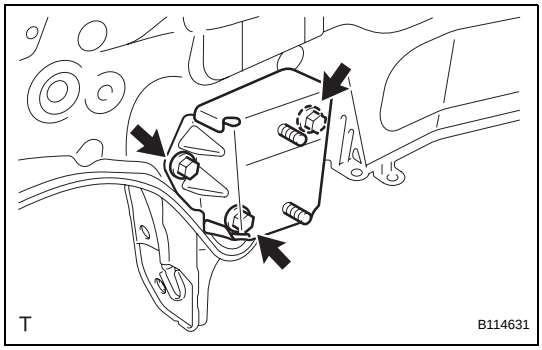

1. INSTALL REAR BUMPER ARM SUB-ASSEMBLY LH
(a) Install the rear bumper arm with the 3 bolts.
Torque: 19 N*m (195 kgf*cm, 14 ft.*lbf)

2. INSTALL REAR BUMPER ARM SUB-ASSEMBLY RH
HINT:
Use the same procedure as for the LH side.

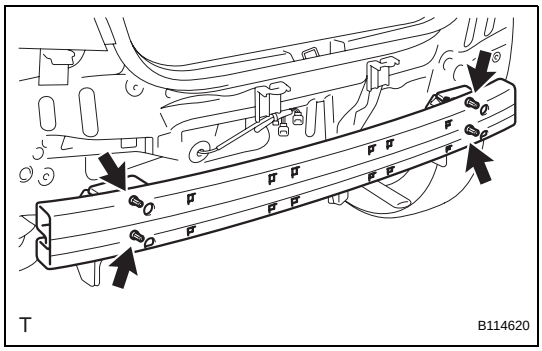

3. INSTALL REAR BUMPER REINFORCEMENT
(a) Install the rear bumper reinforcement with the 4 nuts.
Torque: 19 N*m (195 kgf*cm, 14 ft.*lbf)

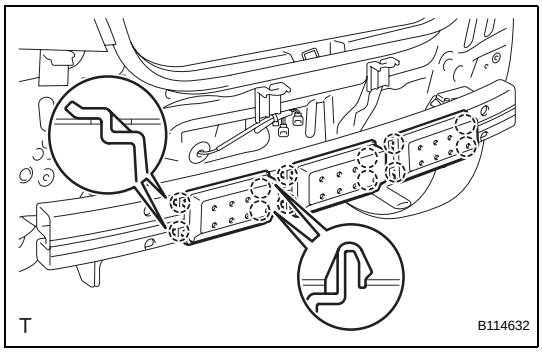

4. INSTALL REAR BUMPER SHIELD CENTER BRACKET
HINT:
Use the same procedure to install all the rear bumper shield center brackets.
(a) Engage the 4 claws and install the rear bumper shield center bracket.

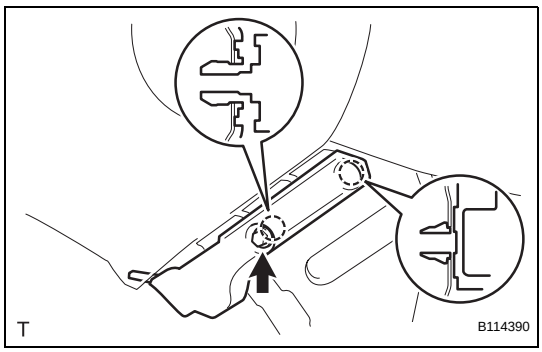

5. INSTALL REAR BUMPER SIDE RETAINER LH
(a) Engage the 2 claws and install the rear bumper side retainer.
(b) Tighten the screw.

6. INSTALL REAR BUMPER SIDE RETAINER RH
HINT:
Use the same procedure as for the LH side.

ET

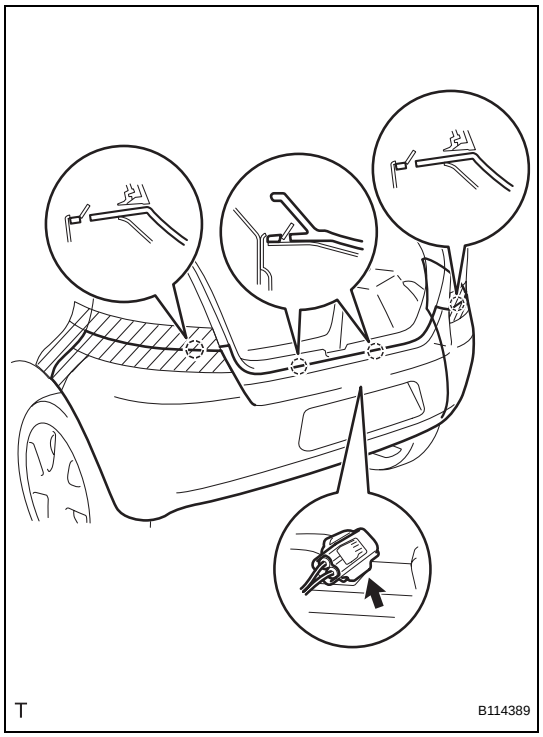

7. INSTALL REAR BUMPER COVER

(a) Connect the license plate light connector.

(b) Engage the 4 claws and install the rear bumper.

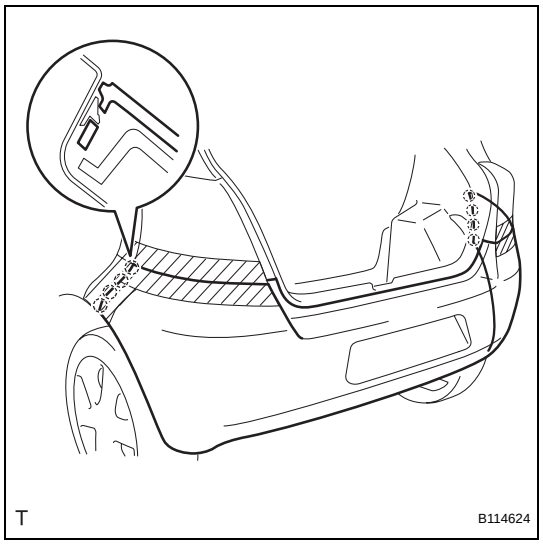

(c) Engage the 8 claws.

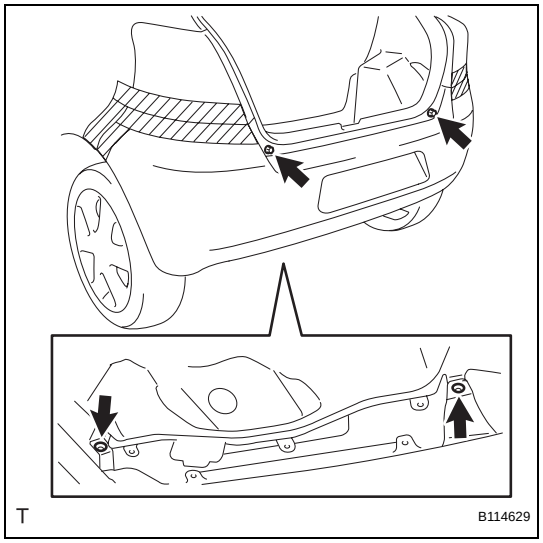

(d) Tighten the 2 bolts.

(e) Install the 2 clips.

ET

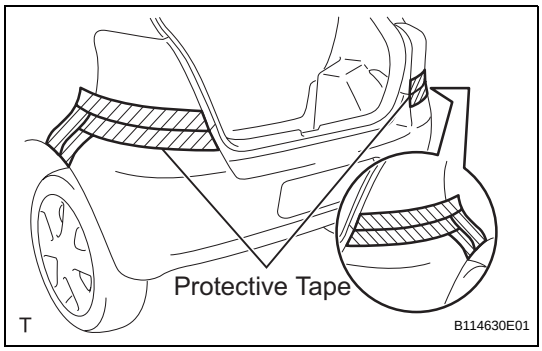

(f) Remove the protective tape.

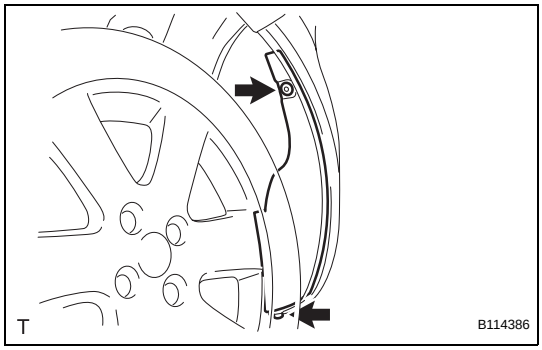

8. INSTALL REAR BUMPER SIDE SEAL LH

(a) Install the rear bumper side seal with the 2 clips.

9. INSTALL REAR BUMPER SIDE SEAL RH

HINT:
Use the same procedure as for the LH side.

10. CONNECT CABLE TO NEGATIVE BATTERY TERMINAL

Torque: 5.4 N*m (55 kgf*cm, 48 in.*lbf)

NAME PLATE (for Sedan)

COMPONENTS

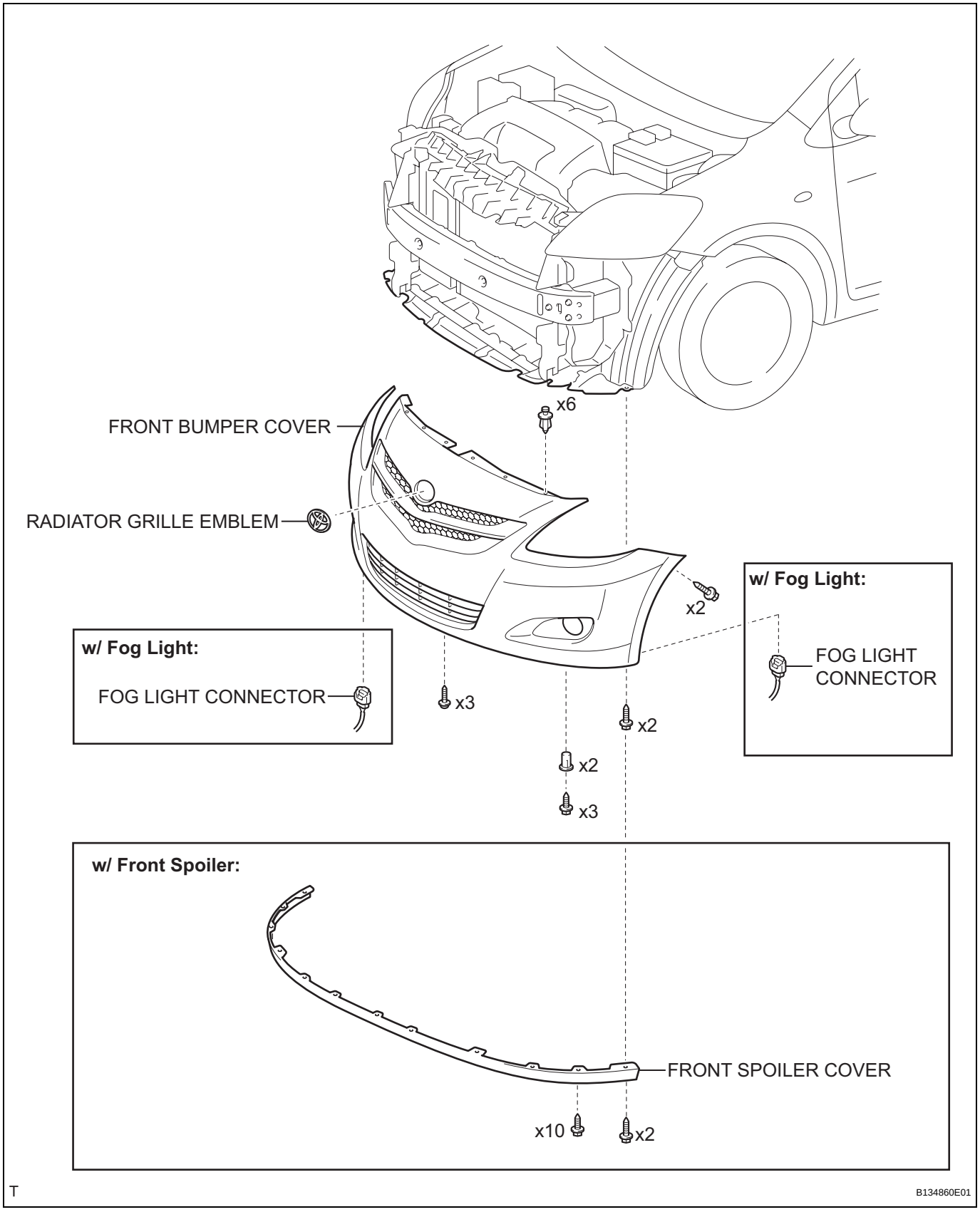

ET

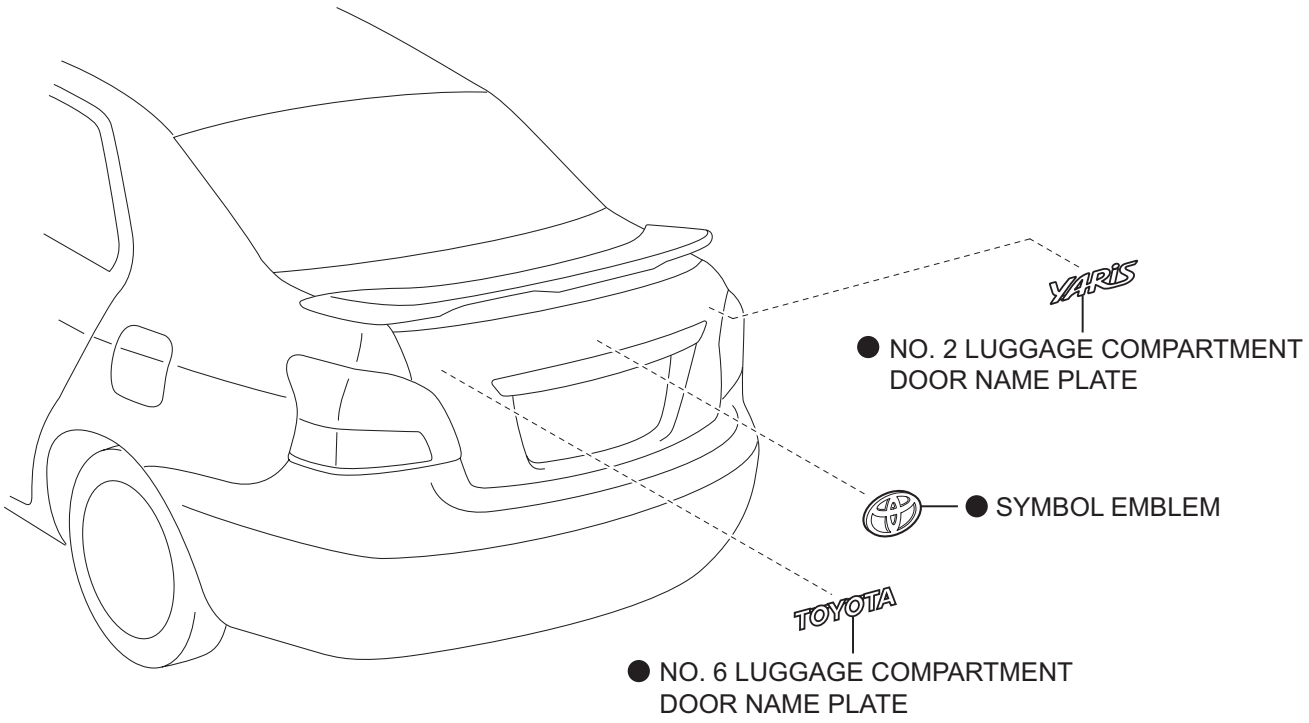

● Non-reusable part

T

B134861E01

ET

REMOVAL

1. **DISCONNECT CABLE FROM NEGATIVE BATTERY TERMINAL (w/ Fog Light)**
2. **REMOVE FRONT SPOILER COVER (w/ Front Spoiler) (See page ET-6)**
3. **REMOVE FRONT BUMPER COVER**
   (a) Apply protective tape, as shown in the illustration.

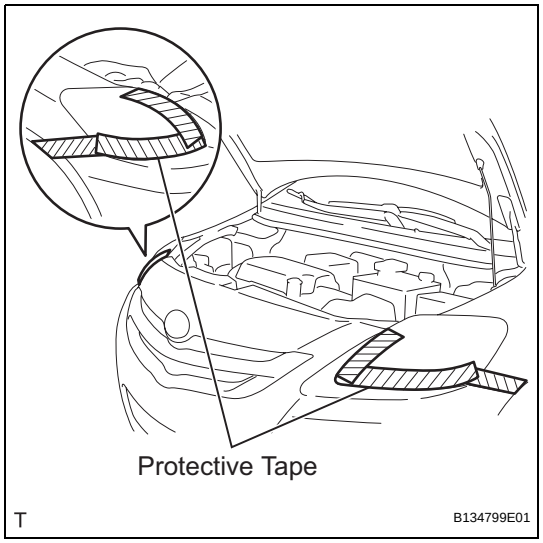

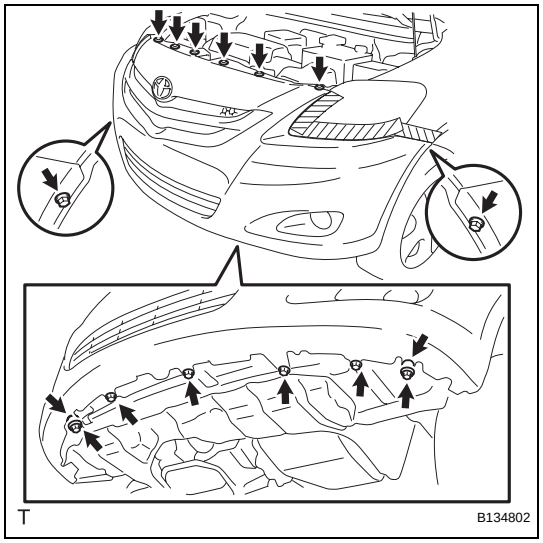

(b) w/ Front Spoiler:
   (1) Remove the 5 screws and the 3 bolts.
   (2) Remove the 2 screw grommets.
   (3) Remove the 6 clips.

ET

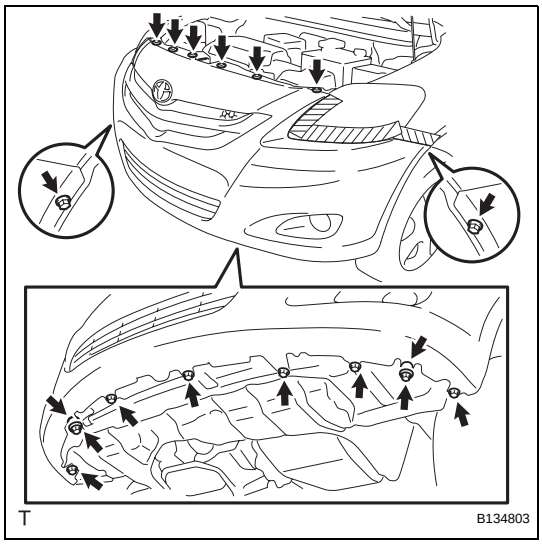

(c) w/o Front Spoiler:
(1) Remove the 7 screws and the 3 bolts.
(2) Remove the 2 screw grommets.
(3) Remove the 6 clips.

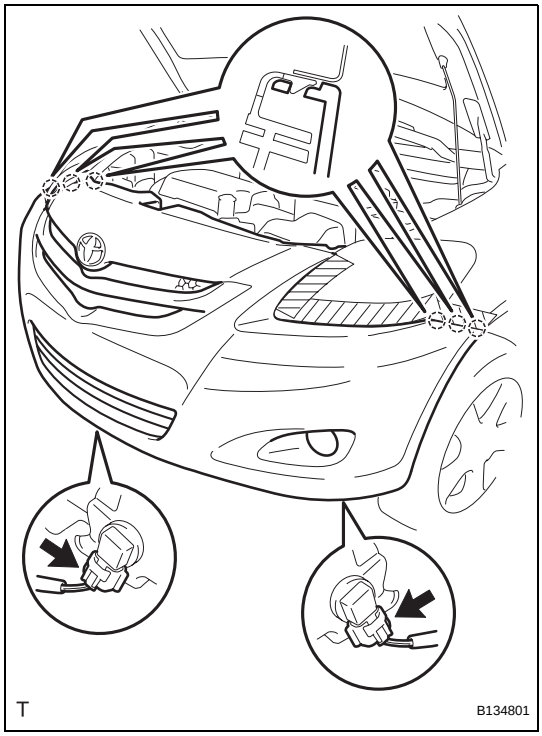

(d) w/ Fog Light:
(1) Disengage the 6 claws and remove the front bumper cover.
(2) Disconnect the 2 fog light connectors.

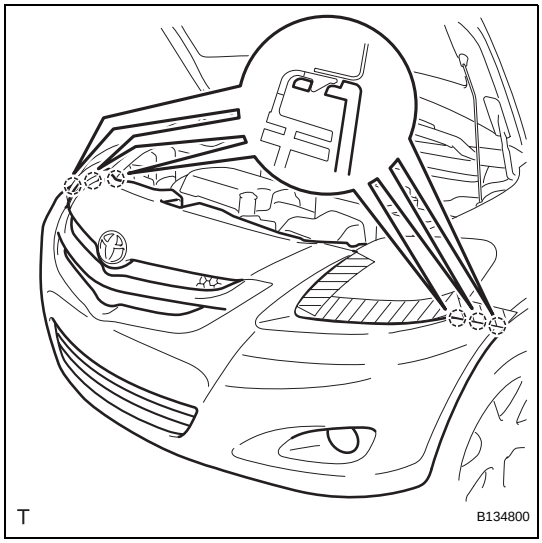

(e) w/o Fog Light:
(1) Disengage the 6 claws and remove the front bumper cover.

ET

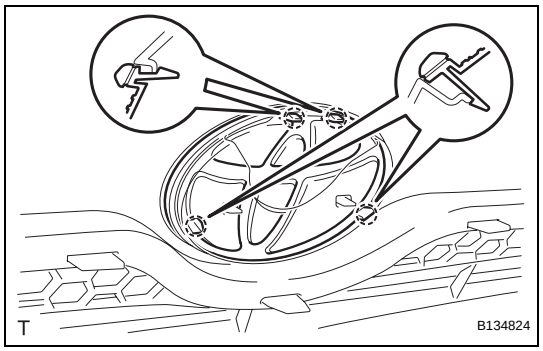

4. REMOVE RADIATOR GRILLE EMBLEM

(a) Disengage the 4 claws and remove the radiator grille emblem.

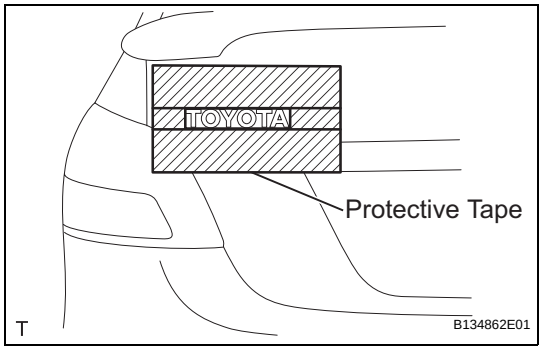

5. REMOVE NO. 6 LUGGAGE COMPARTMENT DOOR NAME PLATE

(a) Apply protective tape, as shown in the illustration.

(b) Using an infrared light, heat the No. 6 luggage compartment door name plate.

CAUTION:
Do not burn yourself with the heated luggage compartment door panel or infrared light.

HINT:
Heat at 40 to 60°C (104 to 140°F) for 1 to 2 minutes.

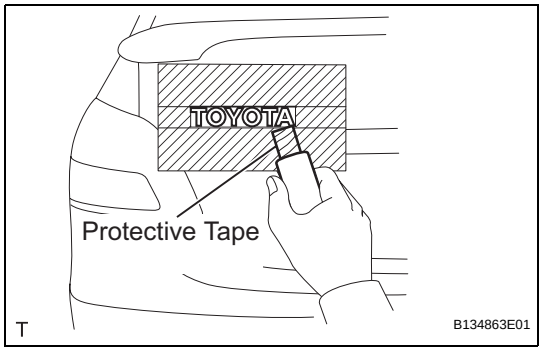

(c) Using a gasket scraper with its tip wrapped in protective tape, gradually peel the adhesive surface and remove the No. 6 luggage compartment door name plate.

(d) Remove the protective tape.

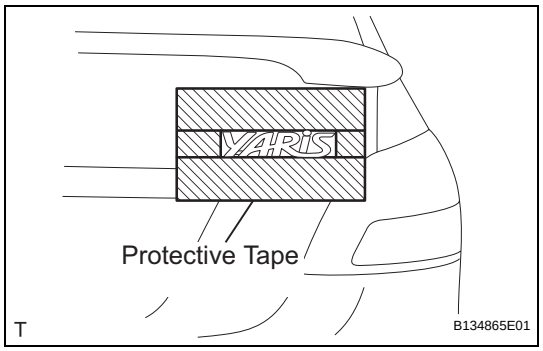

6. REMOVE NO. 2 LUGGAGE COMPARTMENT DOOR NAME PLATE

(a) Apply protective tape, as shown in the illustration.

(b) Using an infrared light, heat the No. 2 luggage compartment door name plate.

CAUTION:
Do not burn yourself with the heated luggage compartment door panel or infrared light.

HINT:
Heat at 40 to 60°C (104 to 140°F) for 1 to 2 minutes.

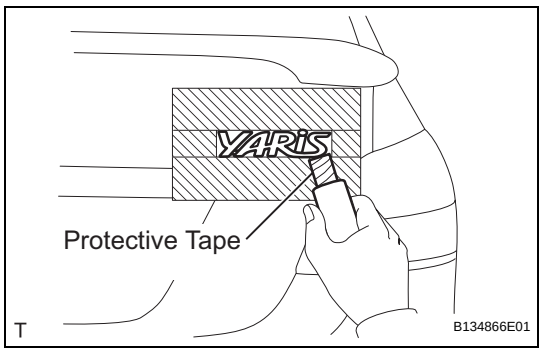

(c) Using a gasket scraper with its tip wrapped in protective tape, gradually peel the adhesive surface and remove the No. 2 luggage compartment door name plate.

(d) Remove the protective tape.

ET

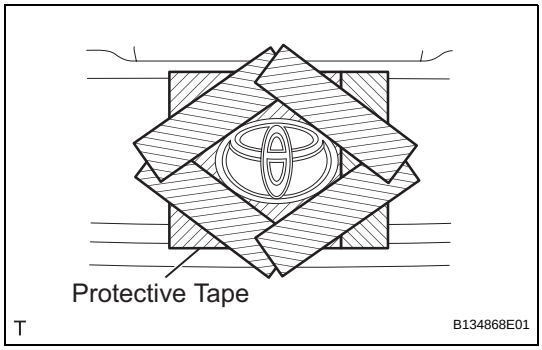

7. REMOVE SYMBOL EMBLEM

(a) Apply protective tape, as shown in the illustration.

(b) Using an infrared light, heat the symbol emblem.

CAUTION:
Do not burn yourself with the heated luggage compartment door panel or infrared light.

HINT:
Heat at 40 to 60°C (104 to 140°F) for 1 to 2 minutes.

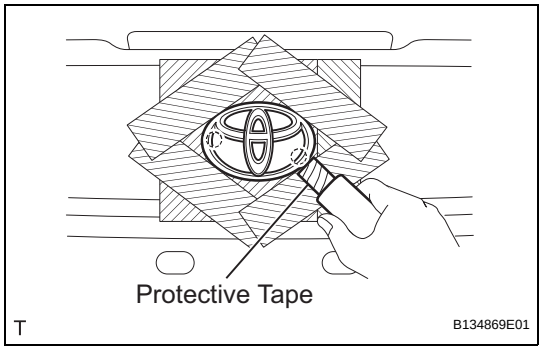

(c) Using a gasket scraper with its tip wrapped in protective tape, gradually peel the adhesive surface and remove the symbol emblem.

(d) Remove the protective tape.

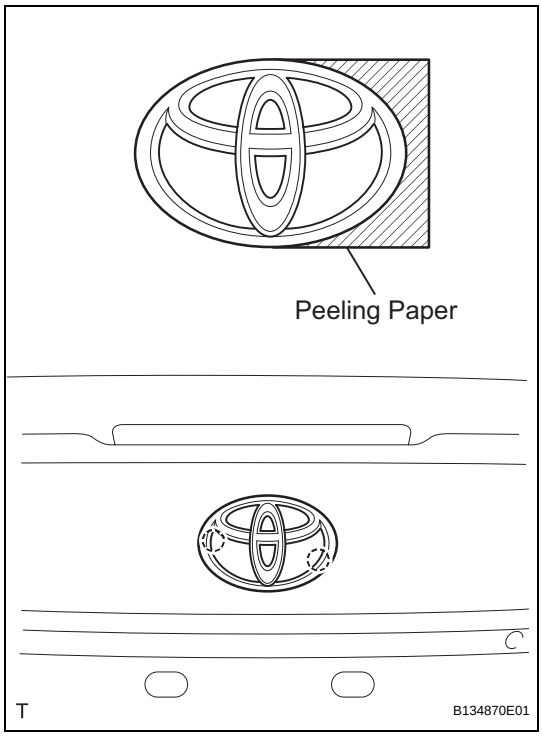

INSTALLATION

1. INSTALL SYMBOL EMBLEM

(a) Clean the attachment surface.

(1) Using an infrared light, heat the double-sided adhesive tape remaining on the luggage compartment door panel.

HINT:
Heat at 40 to 60°C (104 to 140°F) for 1 to 2 minutes.

(2) Using a shop rag or piece of cloth, rub the remaining double-sided adhesive tape off the back door panel while it is hot from the infrared light.

NOTICE:
Installing the symbol while any double-sided adhesive tape remains on the luggage compartment door panel may cause adhesion failure. Therefore, completely remove the double-sided adhesive tape.

(3) Using a non-residue solvent, clean the attachment surface.

(b) Align the 2 pins and install a new symbol emblem.

NOTICE:
Install the symbol emblem in an environment where the ambient temperature is over 20°C (68°F). If it is below 20°C (68°F), using an infrared light, heat the luggage compartment door panel and the symbol emblem up to 20 to 30°C (68 to 86°F) and install the symbol emblem.

ET

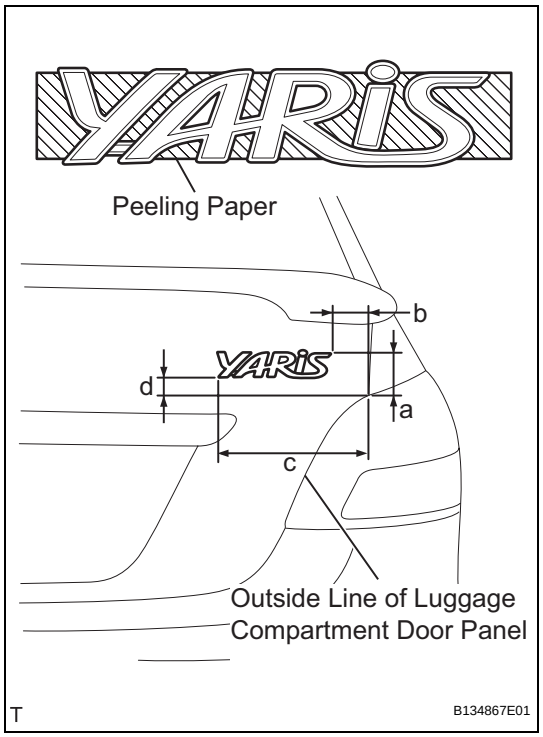

2. INSTALL NO. 2 LUGGAGE COMPARTMENT DOOR NAME PLATE

(a) Clean the attachment surface.

(1) Using an infrared light, heat the double-sided adhesive tape remaining on the luggage compartment door panel.
HINT:
Heat at 40 to 60°C (104 to 140°F) for 1 to 2 minutes.

(2) Using a shop rag or piece of cloth, rub the remaining double-sided adhesive tape off the luggage compartment door panel while it is hot from the infrared light.
NOTICE:
Installing the No. 2 luggage compartment door name plate while any double-sided adhesive tape remains on the luggage compartment door panel may cause adhesion failure. Therefore, completely remove the double-sided adhesive tape.

(3) Using a non-residue solvent, clean the attachment surface.

(b) Install a new No. 2 luggage compartment door name plate as shown in the illustration.
Installation position

Mark	Measurement (along surface)
a	39.4 mm (1.551 in.)
b	44.7 mm (1.760 in.)
c	162.4 mm (6.394 in.)
d	17.8 mm (0.701 in.)

NOTICE:
Install the No. 2 luggage compartment door name plate in an environment where the ambient temperature is over 20°C (68°F). If it is below 20°C (68°F), using an infrared light, heat the luggage compartment door panel and the No. 2 luggage compartment door name plate up to 20 to 30°C (68 to 86°F) and install the No. 2 luggage compartment door name plate.

ET

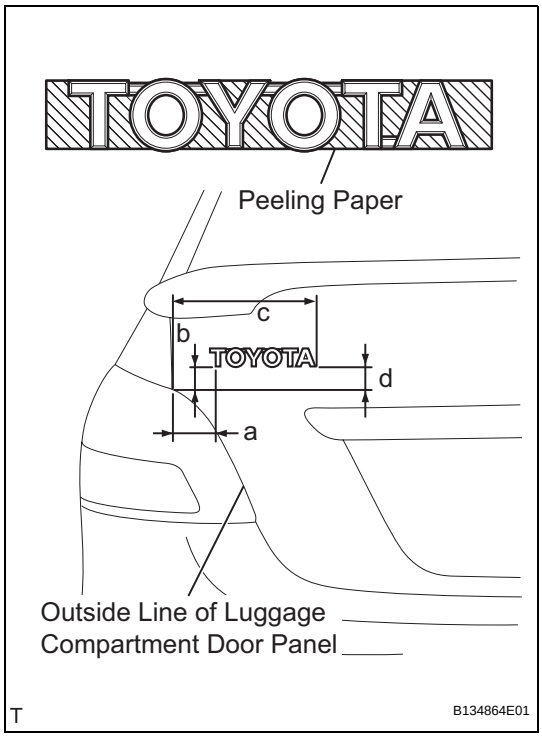

3. INSTALL NO. 6 LUGGAGE COMPARTMENT DOOR NAME PLATE

(a) Clean the attachment surface.

(1) Using an infrared light, heat the double-sided adhesive tape remaining on the luggage compartment door panel.
HINT:
Heat at 40 to 60°C (104 to 140°F) for 1 to 2 minutes.

(2) Using a shop rag or piece of cloth, rub the remaining double-sided adhesive tape off the luggage compartment door panel while it is hot from the infrared light.
NOTICE:
Installing the No. 6 luggage compartment door name plate while any double-sided adhesive tape remains on the luggage compartment door panel may cause adhesion failure. Therefore, completely remove the double-sided adhesive tape.

(3) Using a non-residue solvent, clean the attachment surface.

(b) Install a new No. 6 luggage compartment door name plate as shown in the illustration.
Installation position

Mark	Measurement (along surface)
a	52.8 mm (2.079 in.)
b	17.1 mm (0.673 in.)
c	162.3 mm (0.390 in.)
d	20 mm (0.787 in.)

NOTICE:
Install the No. 6 luggage compartment door name plate in an environment where the ambient temperature is over 20°C (68°F). If it is below 20°C (68°F), using an infrared light, heat the luggage compartment door panel and the No. 6 luggage compartment door name plate up to 20 to 30°C (68 to 86°F) and install the No. 6 luggage compartment door name plate.

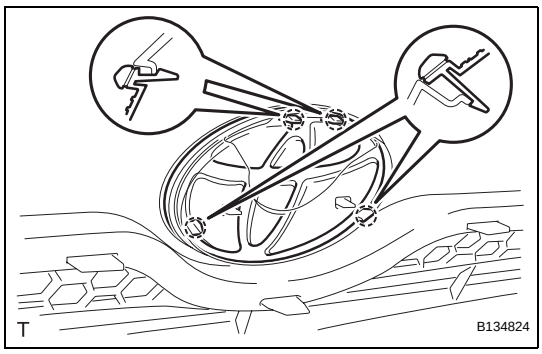

4. INSTALL RADIATOR GRILLE EMBLEM

(a) Engage the 4 claws and install the radiator grille emblem.

ET

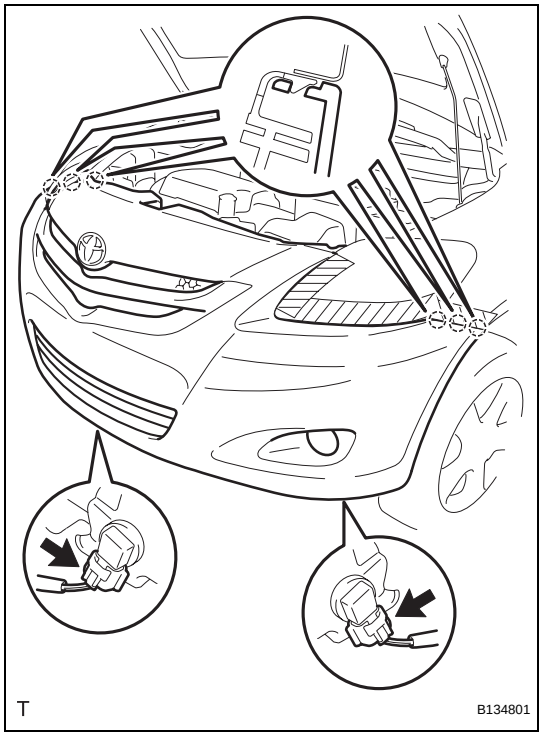

5. INSTALL FRONT BUMPER COVER

(a) w/ Fog Light:

(1) Connect the 2 fog light connectors.

(2) Engage the 6 claws and install the front bumper cover.

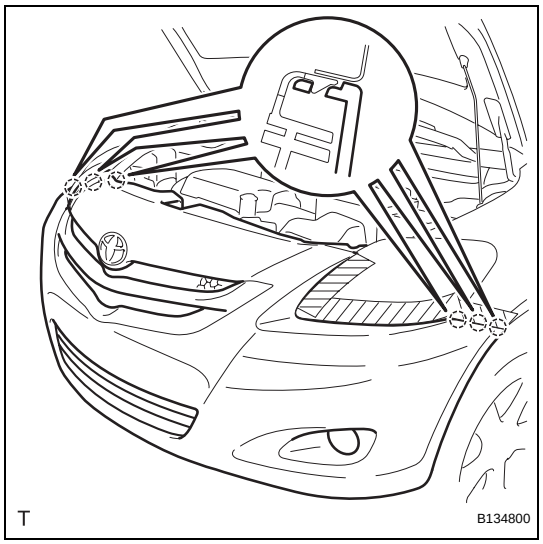

(b) w/o Fog Light:

(1) Engage the 6 claws and install the front bumper cover.

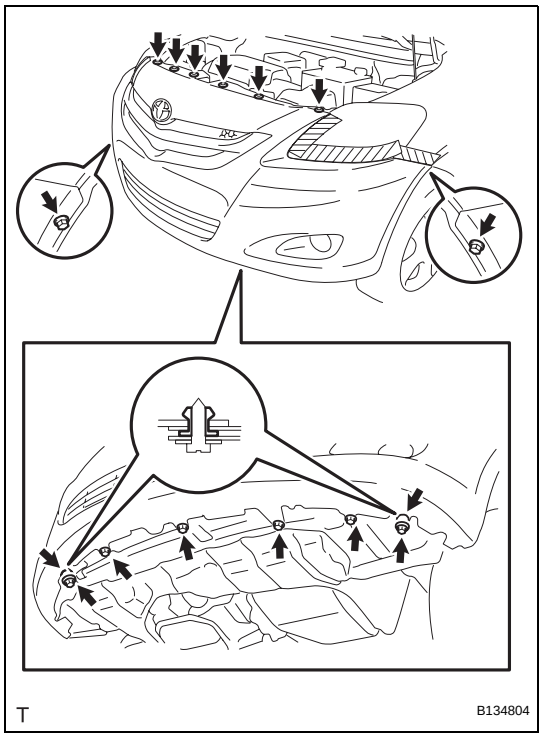

(c) w/ Front Spoiler:
(1) Install the 6 clips.
(2) Install the 2 screw grommets.
(3) Tighten the 5 screws and the 3 bolts.

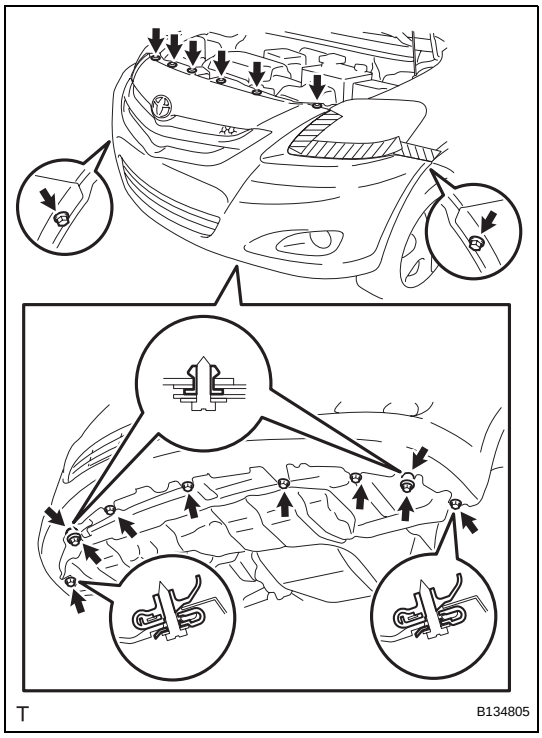

(d) w/o Front Spoiler:
(1) Install the 6 clips.
(2) Install the 2 screw grommets.
(3) Tighten the 7 screw and the 3 bolts.

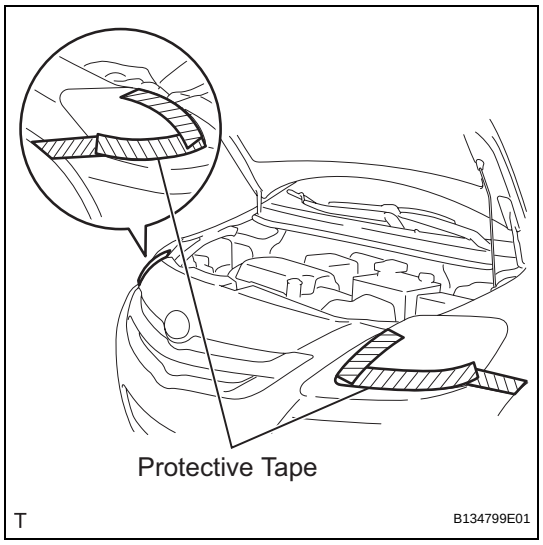

(e) Remove the protective tape.

6. **INSTALL FRONT SPOILER COVER (w/ Front Spoiler) (See page ET-19)**

7. **CONNECT CABLE TO NEGATIVE BATTERY TERMINAL (w/ Fog Light)**
Torque: 5.4 N*m (55 kgf*cm, 48 in.*lbf)

NAME PLATE (for Hatchback)

COMPONENTS

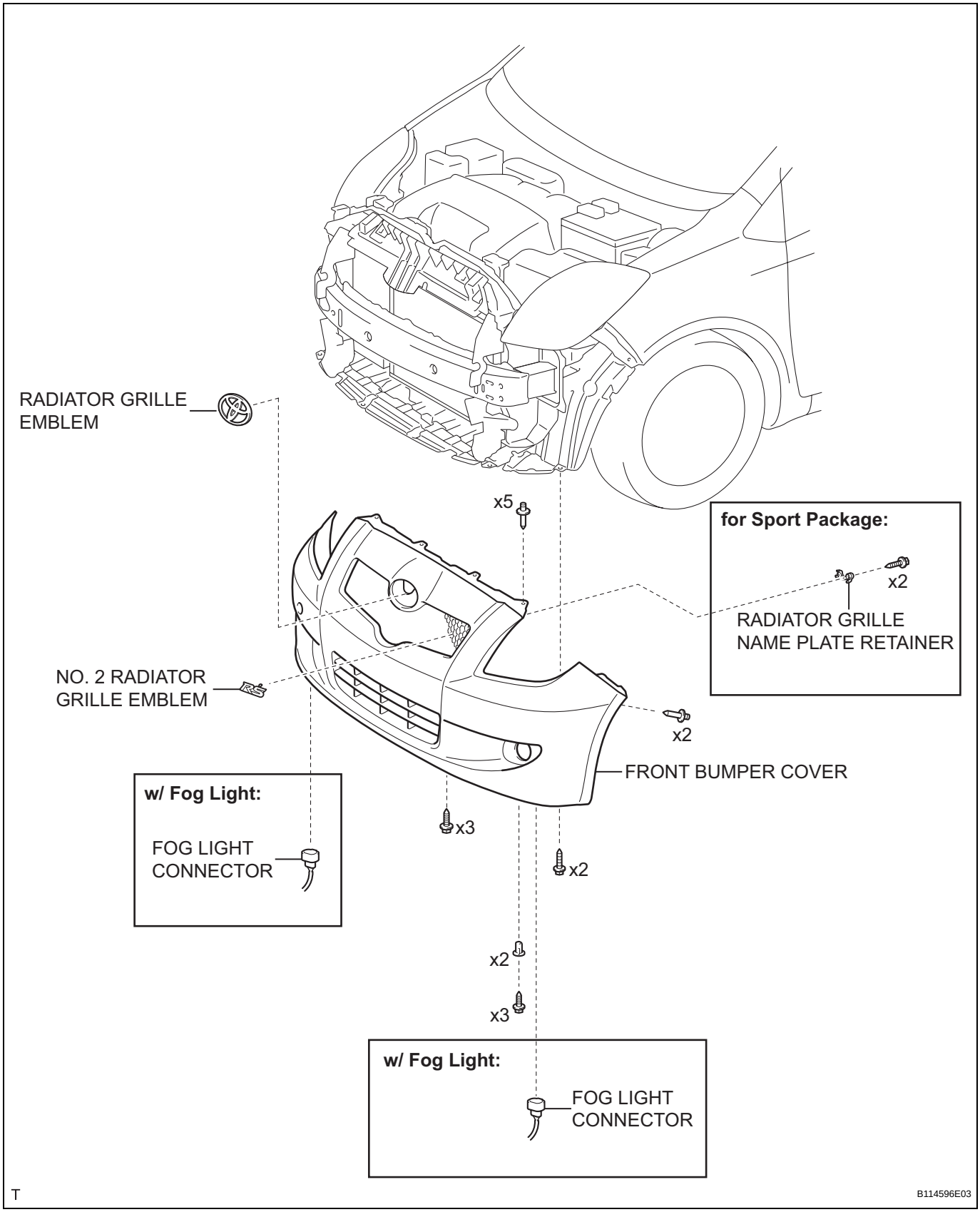

ET

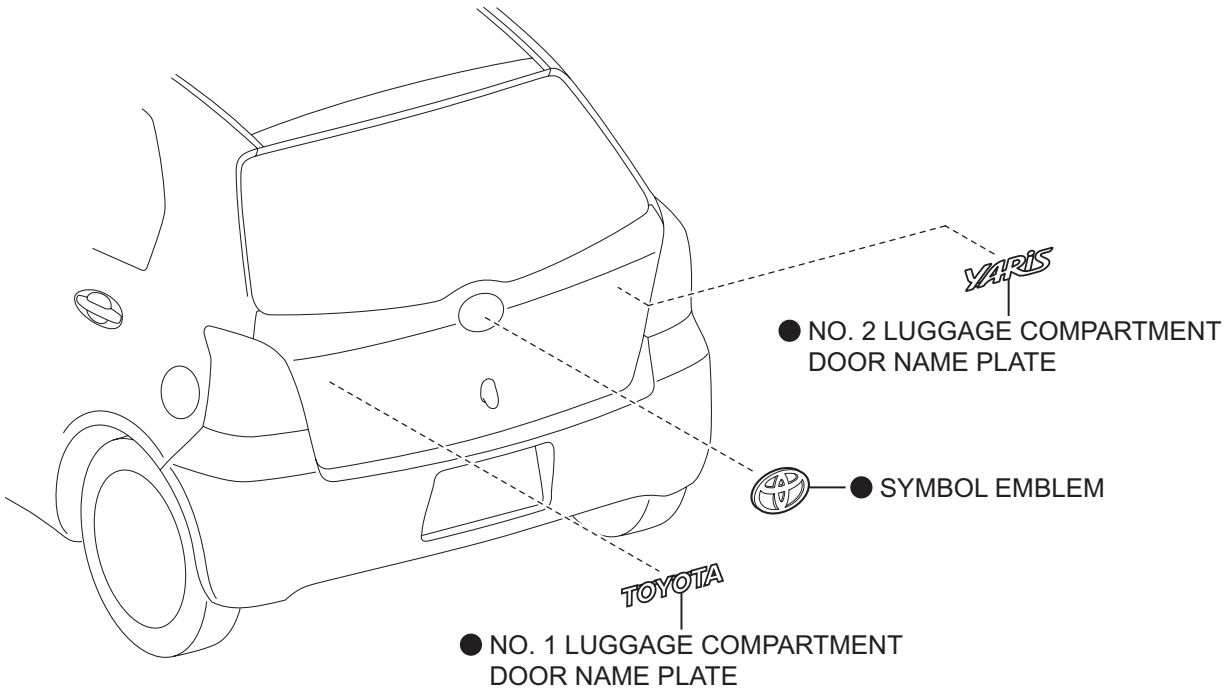

● Non-reusable part

T

B114598E01

ET

REMOVAL

1. DISCONNECT CABLE FROM NEGATIVE BATTERY TERMINAL (w/ Fog Light)

2. REMOVE FRONT BUMPER COVER

(a) Apply protective tape as shown in the illustration.

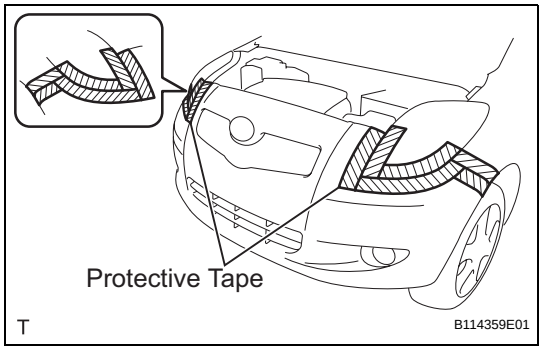

(b) Remove the 8 screws.
(c) Remove the 2 screw grommets.
(d) Remove the 7 clips.

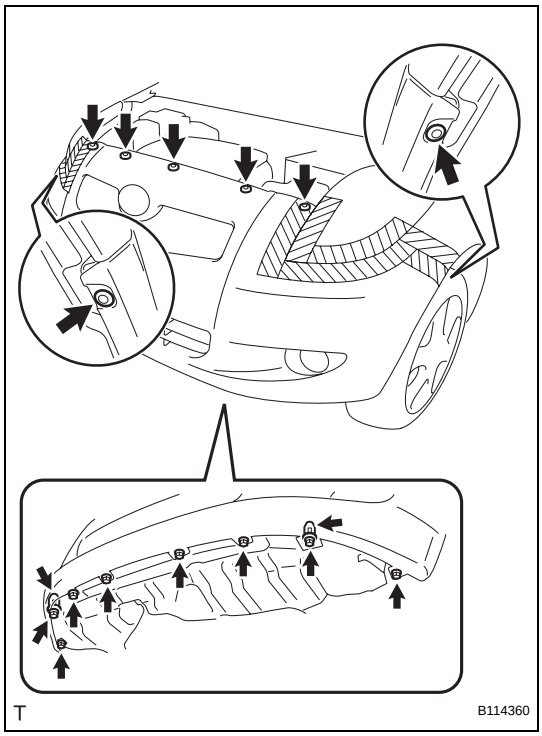

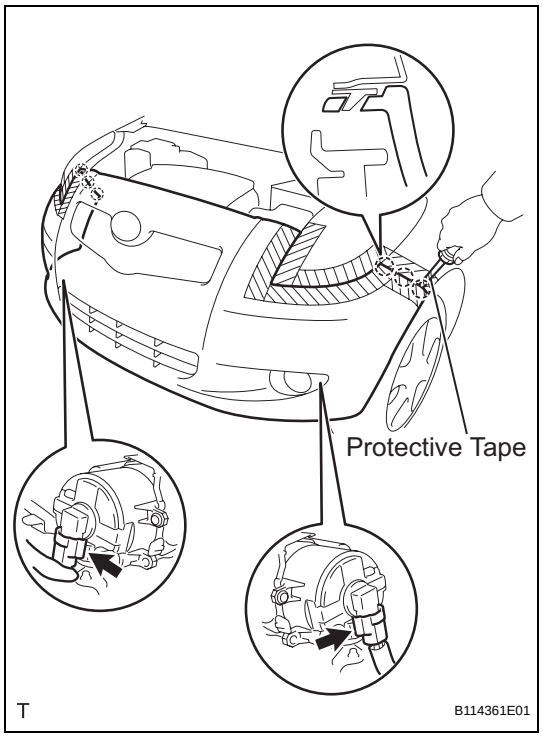

(e) w/ Fog Light:
  (1) Using a screwdriver with its tip wrapped in protective tape, disengage the 6 claws.
  (2) Disconnect the 2 fog light connectors and remove the front bumper.

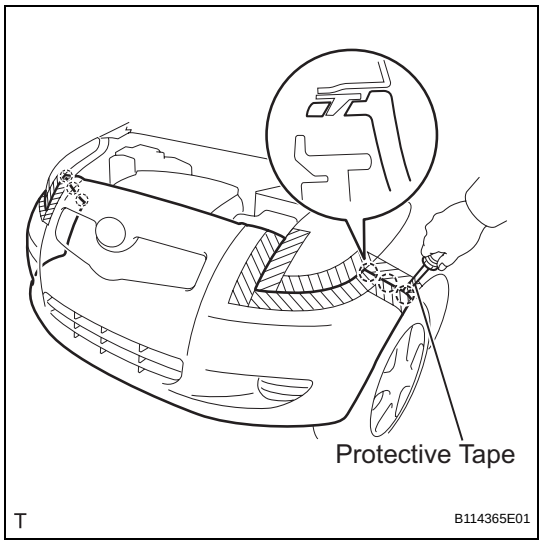

(f) w/o Fog Light:
  (1) Using a screwdriver with its tip wrapped in protective tape, disengage the 6 claws and remove the front bumper.

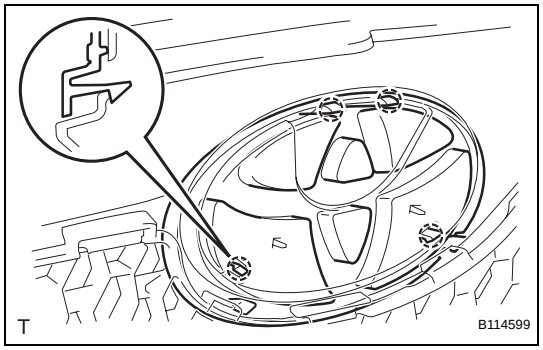

3. REMOVE RADIATOR GRILLE EMBLEM

(a) Disengage the 4 claws and remove the radiator grille emblem.

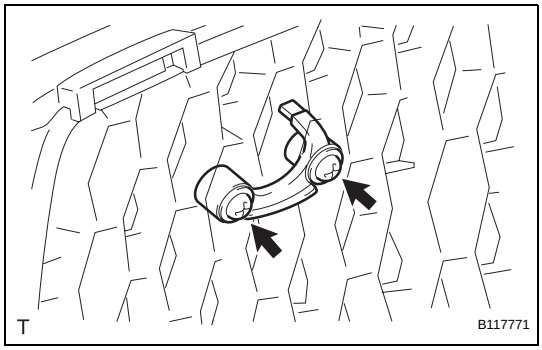

4. REMOVE RADIATOR GRILLE NAME PLATE RETAINER (for Sport Package)

(a) Remove the 2 screws and the radiator grille name plate retainer.

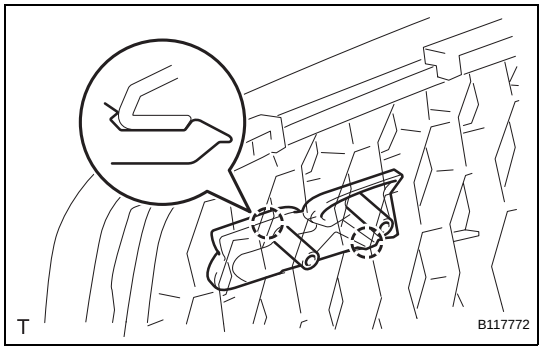

5. REMOVE NO. 2 RADIATOR GRILLE EMBLEM (for Sport Package)

(a) Disengage the 2 claws and remove the No. 2 radiator grille emblem.

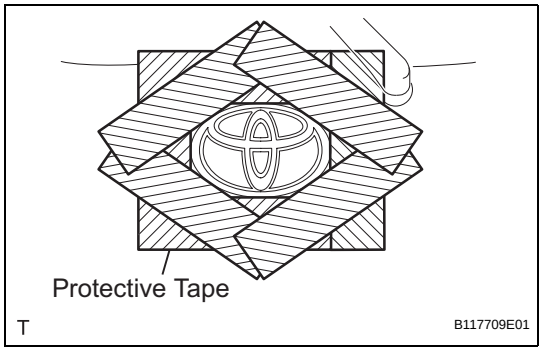

6. REMOVE SYMBOL EMBLEM

(a) Apply protective tape to the back door panel in the area around the symbol emblem.

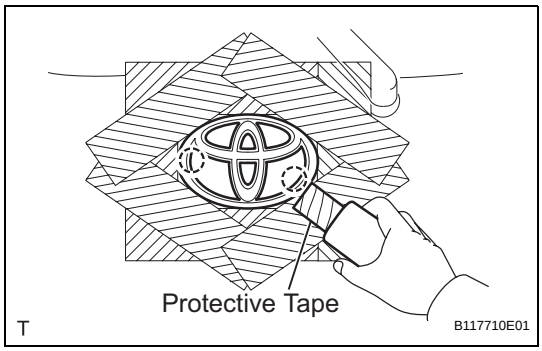

(b) Using an infrared light, heat the symbol emblem.
CAUTION:
Do not burn yourself with the heated back door panel or infrared light.
HINT:
Heat at 40 to 60°C (104 to 140°F) for 1 to 2 minutes.

(c) Using a gasket scraper with its tip wrapped in protective tape, gradually peel the adhesive surface and remove the symbol emblem.

(d) Remove the protective tape.

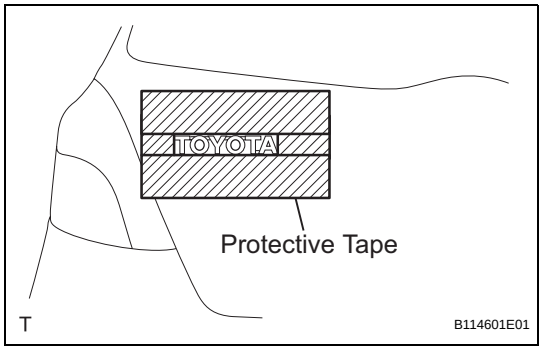

7. REMOVE NO. 1 LUGGAGE COMPARTMENT DOOR NAME PLATE

(a) Apply protective tape to the back door panel in the area around the No. 1 luggage compartment door name plate.

ET

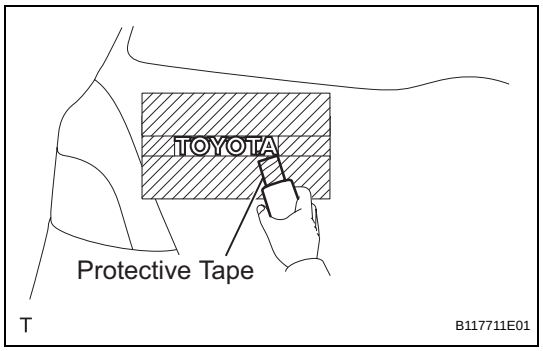

(b) Using an infrared light, heat the No. 1 luggage compartment door name plate.
CAUTION:
Do not burn yourself with the heated back door panel or infrared light.
HINT:
Heat at 40 to 60°C (104 to 140°F) for 1 to 2 minutes.
(c) Using a gasket scraper with its tip wrapped in protective tape, gradually peel the adhesive surface and remove the No. 1 luggage compartment door name plate.
(d) Remove the protective tape.

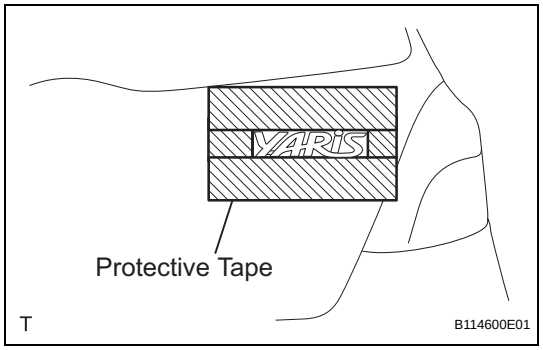

8. REMOVE NO. 2 LUGGAGE COMPARTMENT DOOR NAME PLATE

(a) Apply protective tape to the back door panel in the area around the No. 2 luggage compartment door name plate.

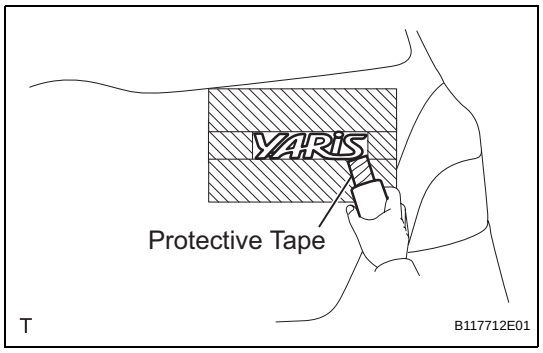

(b) Using an infrared light, heat the No. 2 luggage compartment door name plate.
CAUTION:
Do not burn yourself with the heated back door panel or infrared light.
HINT:
Heat at 40 to 60°C (104 to 140°F) for 1 to 2 minutes.
(c) Using a gasket scraper with its tip wrapped in protective tape, gradually peel the adhesive surface and remove the No. 2 luggage compartment door name plate.
(d) Remove the protective tape.

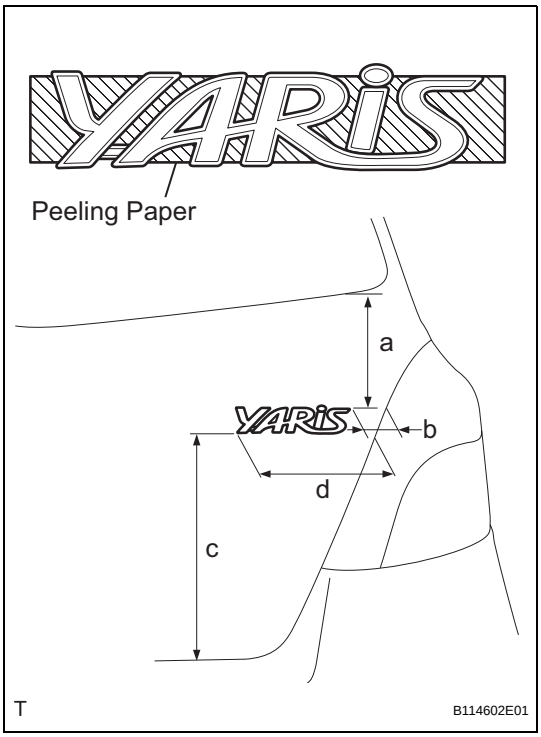

INSTALLATION

1. INSTALL NO. 2 LUGGAGE COMPARTMENT DOOR NAME PLATE

(a) Clean the attachment surface.

(1) Using an infrared light, heat the double-sided adhesive tape remaining on the back door panel.
HINT:
Heat at 40 to 60°C (104 to 140°F) for 1 to 2 minutes.

(2) Using a shop rag or piece of cloth, rub the double-sided adhesive tape off the back door panel while it is hot from the infrared light.
NOTICE:
Installing the No. 2 luggage compartment door name plate while any double-sided tape remains on the back door panel may cause adhesion failure. Therefore, completely remove the double-sided tape.

(3) Using a non-residue solvent, clean the attachment surface.

(b) Install a new No. 2 luggage compartment door name plate as shown in the illustration.
Installation position

Mark	Measurement (along surface)
a	158.8 mm (6.252 in.)
b	40.3 mm (1.587 in.)
c	255.9 mm (10.075 in.)
d	157.6 mm (6.205 in.)

NOTICE:
Install the No. 2 luggage compartment door name plate in an environment where the ambient temperature is over 20°C (68°F). If it is below 20°C (68°F), using an infrared light, heat the back door panel and the No. 2 luggage compartment door name plate up to 20 to 30°C (68 to 86°F) and install the No. 2 luggage compartment door name plate.

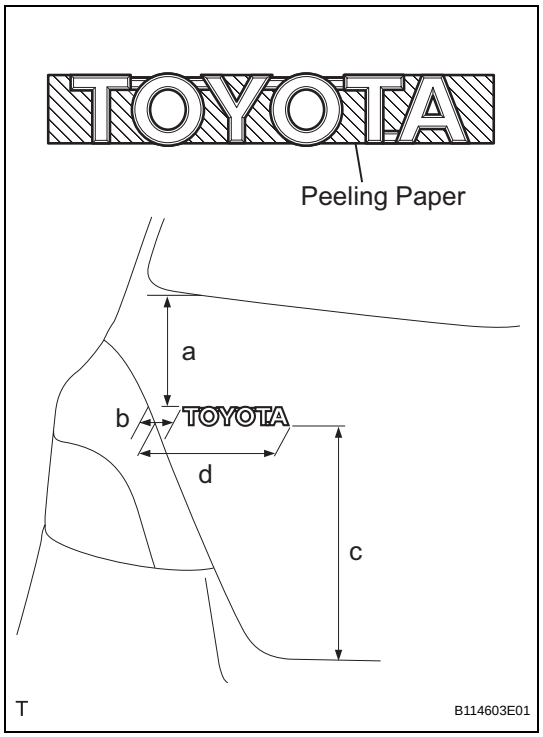

2. INSTALL NO. 1 LUGGAGE COMPARTMENT DOOR NAME PLATE

(a) Clean the attachment surface.

(1) Using an infrared light, heat the double-sided adhesive tape remaining on the back door panel.
HINT:
Heat at 40 to 60°C (104 to 140°F) for 1 to 2 minutes.

(2) Using a shop rag or piece of cloth, rub the double-sided adhesive tape off the back door panel while it is hot from the infrared light.
NOTICE:
Installing the No. 1 luggage compartment door name plate while any double-sided tape remains on the back door panel may cause adhesion failure. Therefore, completely remove the double-sided tape.

(3) Using a non-residue solvent, clean the attachment surface.

(b) Install a new No. 1 luggage compartment door name plate as shown in the illustration.
Installation position

Mark	Measurement (along surface)
a	158.5 mm (6.24 in.)
b	41.7 mm (1.642 in.)
c	266.1 mm (10.476 in.)
d	156.4 mm (6.157 in.)

NOTICE:
Install the No. 1 luggage compartment door name plate in an environment where the ambient temperature is over 20°C (68°F). If it is below 20°C (68°F), using an infrared light, heat the back door panel and the No. 1 luggage compartment door name plate up to 20 to 30°C (68 to 86°F) and install the No. 1 luggage compartment door name plate.

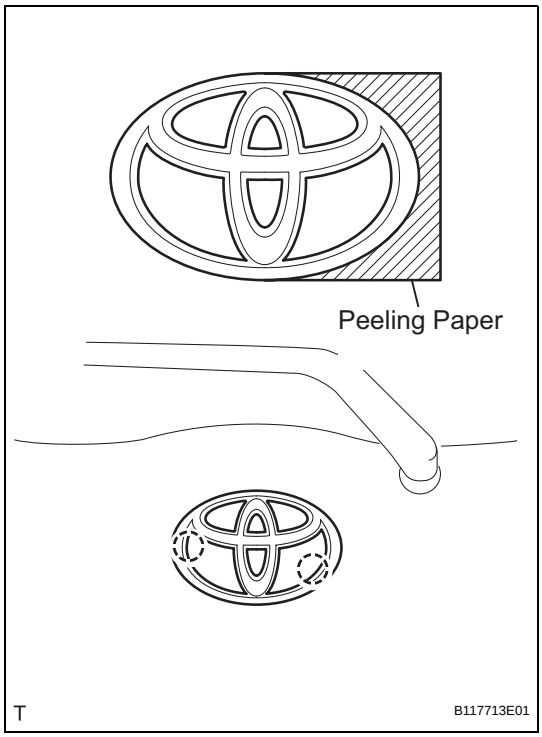

3. INSTALL SYMBOL EMBLEM

(a) Clean the attachment surface.

(1) Using an infrared light, heat the double-sided adhesive tape remaining on the back door panel.
HINT:
Heat at 40 to 60°C (104 to 140°F) for 1 to 2 minutes.

(2) Using a shop rag or piece of cloth, rub the remaining double-sided adhesive tape off the back door panel while it is hot from the infrared light.
NOTICE:
Installing the symbol emblem with any double-sided tape remaining on the back door panel may cause adhesion failure. Therefore, completely remove the double-sided tape.

(3) Using a non-residue solvent, clean the attachment surface.

(b) Insert the 2 bosses into the back door panel and install the symbol emblem.
NOTICE:
Install the symbol emblem in an environment where the ambient temperature is over 20 °C (68°F). If it is below 20°C (68°F), using an infrared light, heat the back door panel and the symbol emblem up to 20 to 30°C (68 to 86°F) and install the symbol emblem.

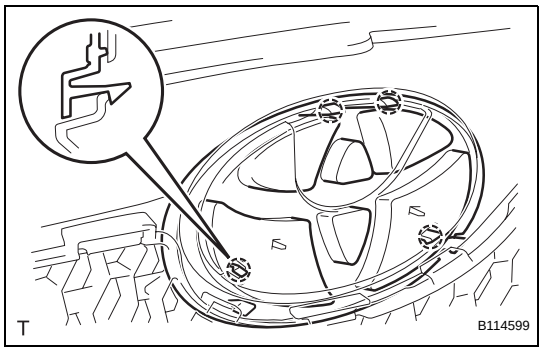

4. INSTALL RADIATOR GRILLE EMBLEM

(a) Engage the 4 claws and install the radiator grille emblem.

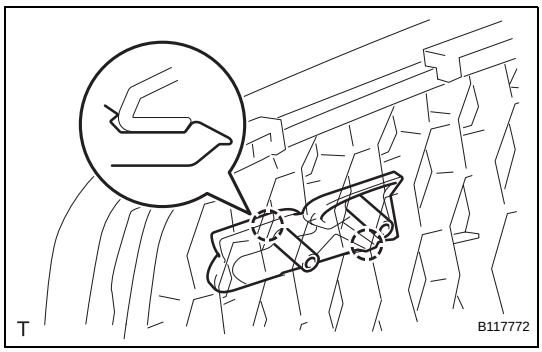

5. INSTALL NO. 2 RADIATOR GRILLE EMBLEM (for Sport Package)

(a) Engage the 2 claws and install the No. 2 radiator grille emblem.

ET

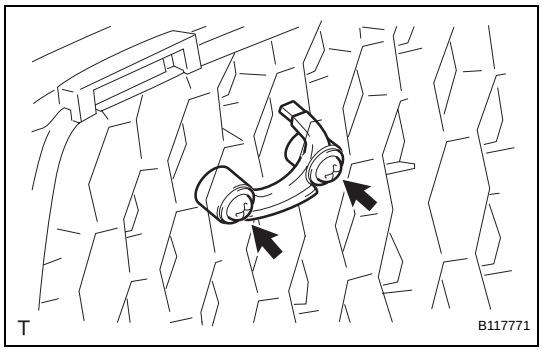

6. INSTALL RADIATOR GRILLE NAME PLATE RETAINER (for Sport Package)

(a) Install the radiator grille name plate retainer with the 2 screws.

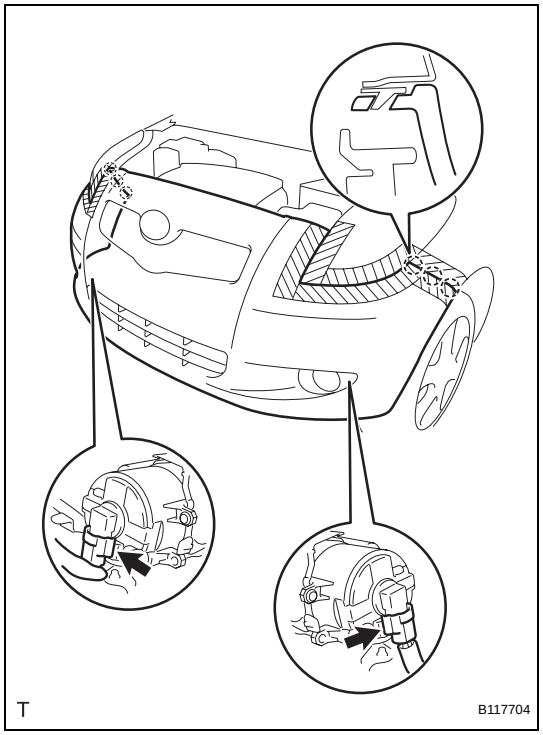

7. INSTALL FRONT BUMPER COVER

(a) w/ Fog Light:
  (1) Connect the 2 fog light connectors.
  (2) Engage the 6 claws and install the front bumper.

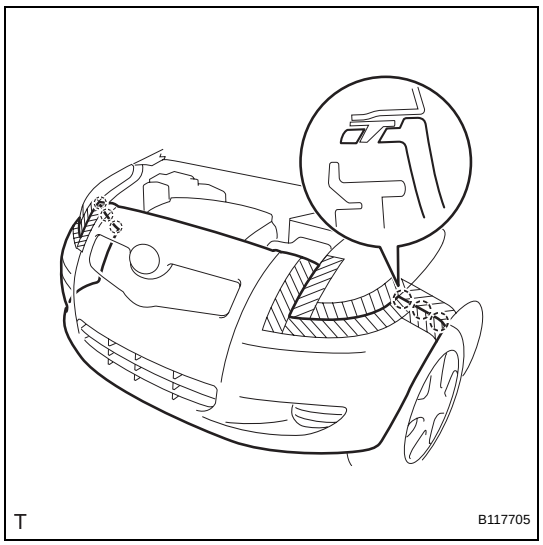

(b) w/o Fog Light:
  (1) Engage the 6 claws and install the front bumper.

ET

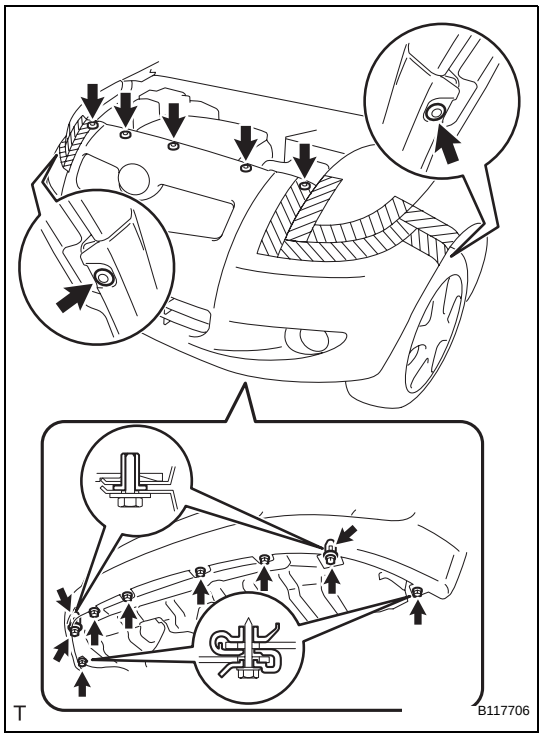

(c) Install the 7 clips.
(d) Install the 2 screw grommets.
(e) Tighten the 8 screws.

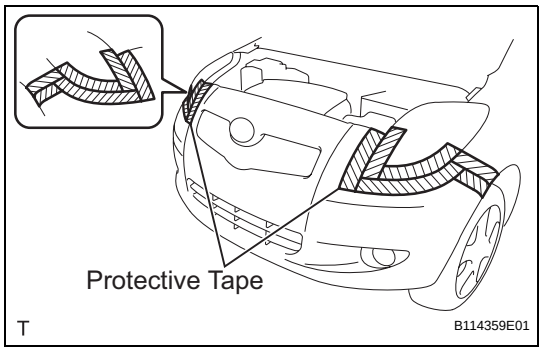

(f) Remove the protective tape.

8. CONNECT CABLE TO NEGATIVE BATTERY TERMINAL (w/ Fog Light)
Torque: 5.4 N*m (55 kgf*cm, 48 in.*lbf)

REAR SPOILER (for Sedan)

COMPONENTS

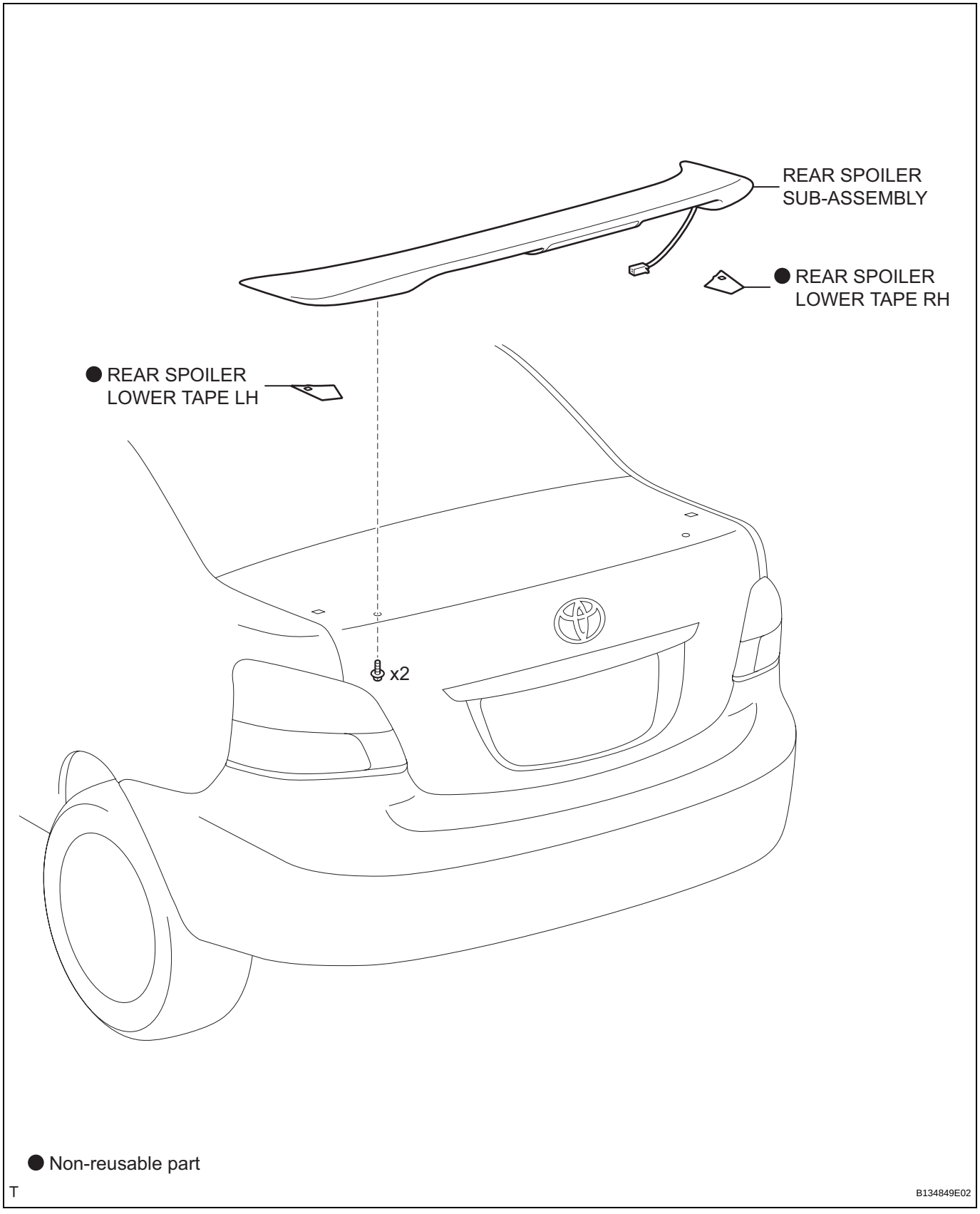

ET

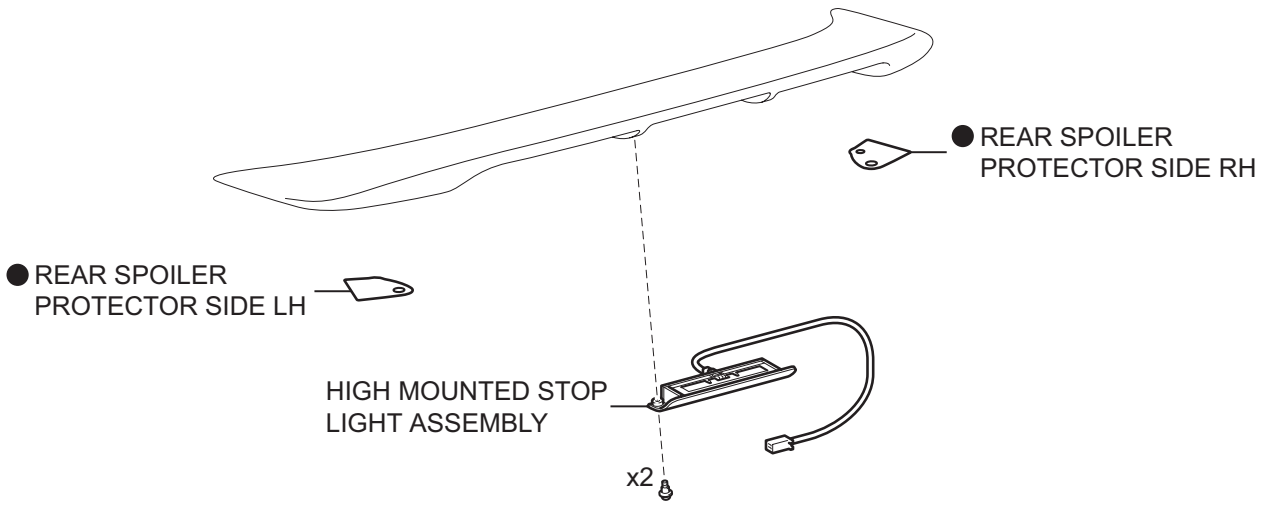

ET

● Non-reusable part

T

B134850E02

REMOVAL

1. DISCONNECT CABLE FROM NEGATIVE BATTERY TERMINAL

2. REMOVE REAR SPOILER SUB-ASSEMBLY

(a) Disconnect the center stop light connector.

(b) Remove the 2 bolts.

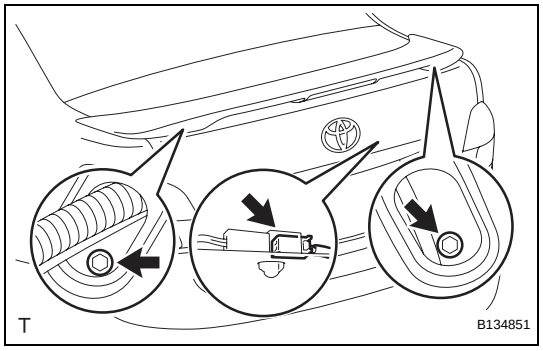

(c) Apply protective tape to the luggage compartment door panel in the periphery of the rear spoiler.

(d) Using an infrared light, heat the adhesive tape remaining on the rear spoiler.
HINT:
Heat at 40 to 60°C (104 to 140°F) for 1 to 2 minutes.

(e) Tie both piano wire ends to wooden blocks or similar objects.

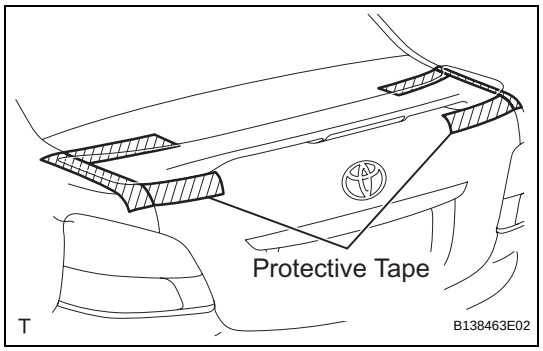

(f) Cut the adhesive tape by pulling the piano wire alternatively toward you.

(g) When reusing the rear spoiler, set the wooden blocks or similar objects along the body to avoid damaging the rear spoiler end portion.

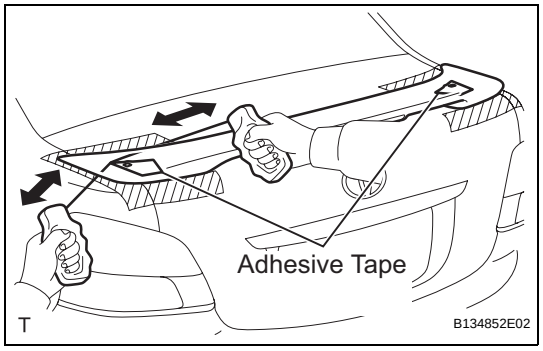

(h) Disengage the 2 clips and remove the rear spoiler.

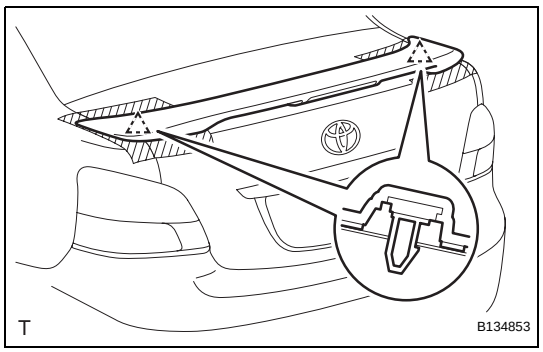

ET

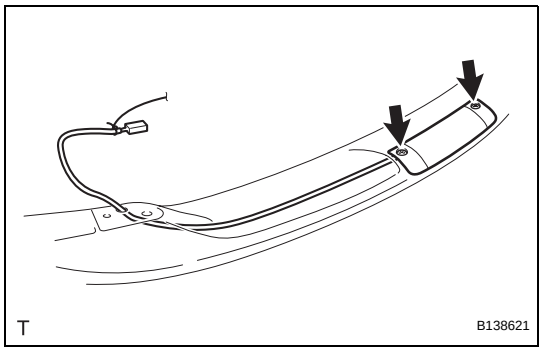

DISASSEMBLY

1. REMOVE HIGH MOUNTED STOP LIGHT ASSEMBLY

(a) Tie a piece of string to the tip of the wire harness.

(b) Remove the 2 screws and the high mounted stop light.

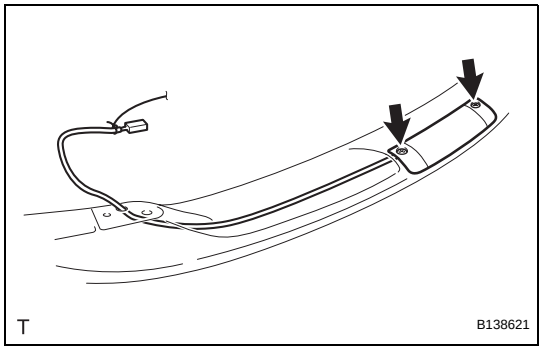

REASSEMBLY

1. INSTALL HIGH MOUNTED STOP LIGHT ASSEMBLY

(a) Install the high mounted stop light with the 2 screws.

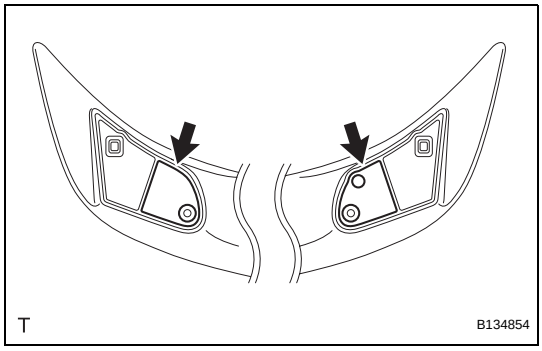

INSTALLATION

1. INSTALL REAR SPOILER PROTECTOR SIDE LH

NOTICE:

Follow these procedures only when replacing the protector.

(a) Apply a new rear spoiler protector to the rear spoiler installation surface as shown in the illustration.

2. INSTALL REAR SPOILER PROTECTOR SIDE RH

HINT:

Use the same procedure as for the LH side.

3. INSTALL REAR SPOILER SUB-ASSEMBLY

(a) Clean the rear spoiler (When reusing the rear spoiler).

(1) Using an infrared light, heat the double-sided adhesive tape remaining on the luggage compartment door panel.

HINT:

Heat at 40 to 60°C (104 to 140°F) for 1 to 2 minutes.

(2) Using a shop rag or piece of cloth, rub the remaining double-sided adhesive tape off the rear spoiler while it is hot from the infrared light.

NOTICE:

Installing the rear spoiler while any double-sided adhesive tape remains on the luggage compartment door panel may cause adhesion failure. Therefore, completely remove the double-sided adhesive tape.

(3) Using white gasoline, clean the rear spoiler.

ET

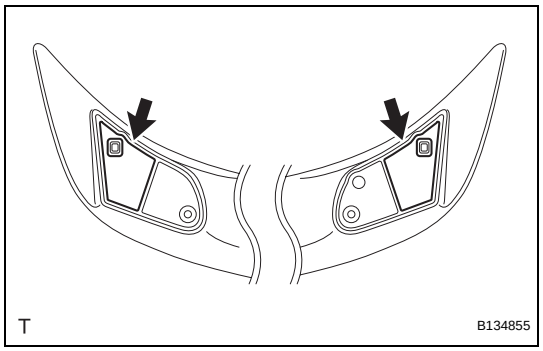

(4) Apply new double-sided adhesive tape to the rear spoiler installation surface as shown in the illustration.

(b) Clean the attachment surface.

(1) Using an infrared light, heat the double-sided adhesive tape remaining on the luggage compartment door panel.
HINT:
Heat at 40 to 60°C (104 to 140°F) for 1 to 2 minutes.

(2) Using a shop rag or piece of cloth, rub the remaining double-sided adhesive tape off the luggage compartment door panel while it is hot from the infrared light.
NOTICE:
Installing the rear spoiler while any double-sided adhesive tape remains on the luggage compartment door panel may cause adhesion failure. Therefore, completely remove the double-sided adhesive tape.

(3) Using white gasoline, clean the attachment surface.

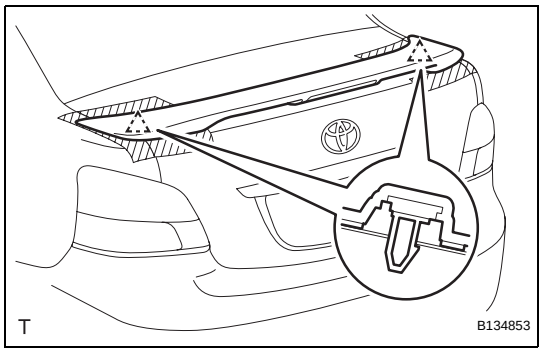

(c) Install the wire harness into the luggage compartment door panel hole.

(d) Engage the 2 clips and install the rear spoiler.

(e) Remove the protective tape.

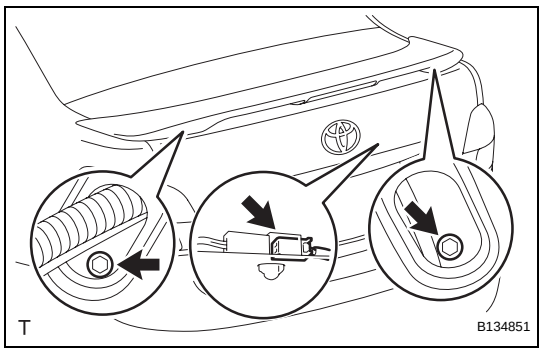

(f) Tighten the 2 bolts.

(g) Connect the center stop light connector.

4. CONNECT CABLE TO NEGATIVE BATTERY TERMINAL
Torque: 5.4 N*m (55 kgf*cm, 48 in.*lbf)

ET

REAR SPOILER (for Hatchback)

COMPONENTS

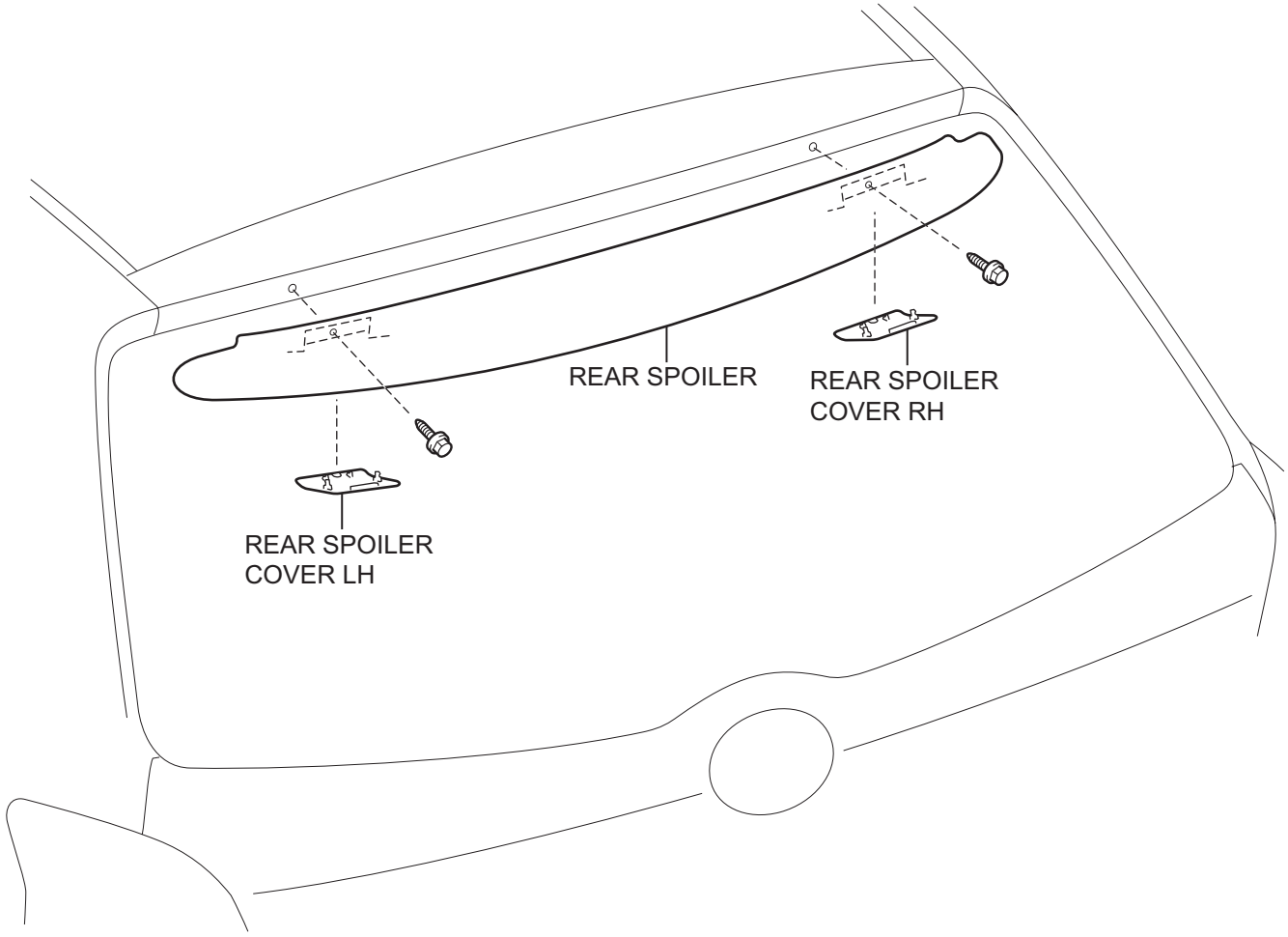

T

B117717E01

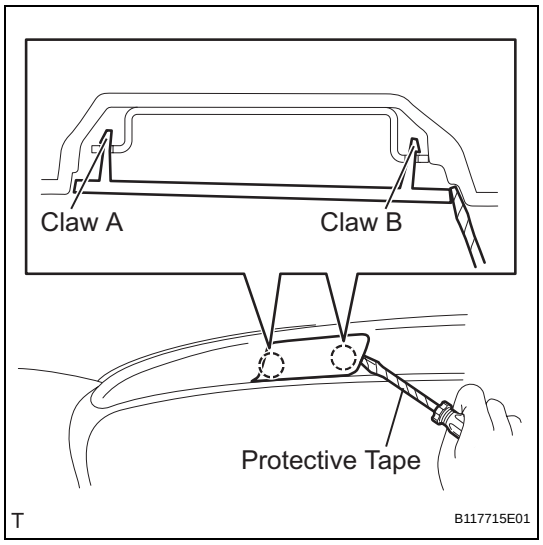

REMOVAL

1. REMOVE REAR SPOILER COVER LH

(a) Using a screwdriver with its tip wrapped in protective tape, disengage the 2 claws and remove the rear spoiler.

NOTICE:

When removing the rear spoiler cover, first disengage claw B nearest the inside of the vehicle and then disengage claw A nearest the outside the vehicle.

2. REMOVE REAR SPOILER COVER RH

HINT:

Use the same procedure as for the LH side.

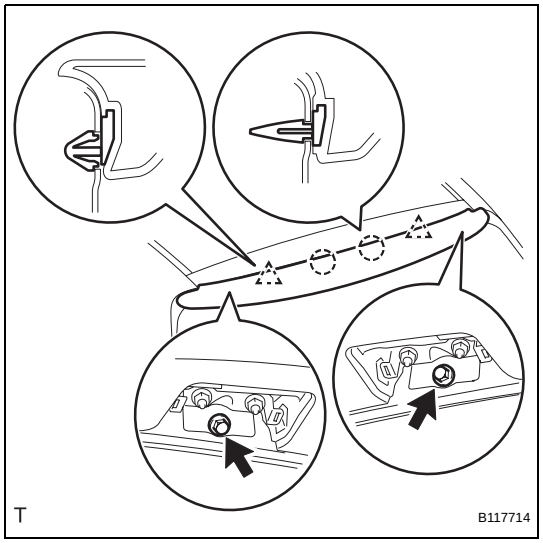

3. REMOVE REAR SPOILER

(a) Remove the 2 screws.

(b) Disengage the 2 clips and the 2 pins and remove the rear spoiler.

INSTALLATION

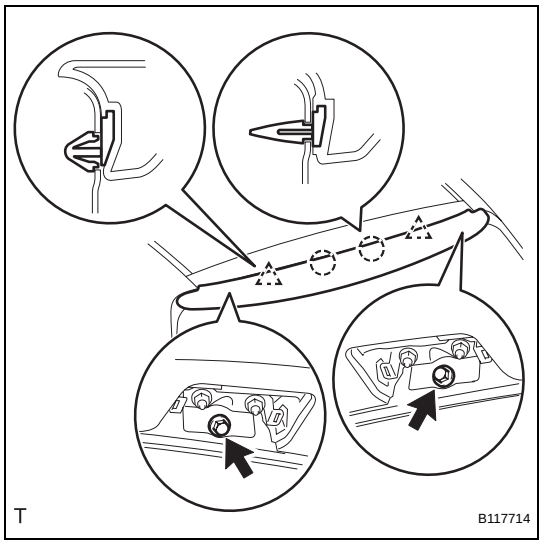

1. INSTALL REAR SPOILER

(a) Engage the 2 clips and the 2 pins and install the rear spoiler.

(b) Tighten the 2 screws.

ET

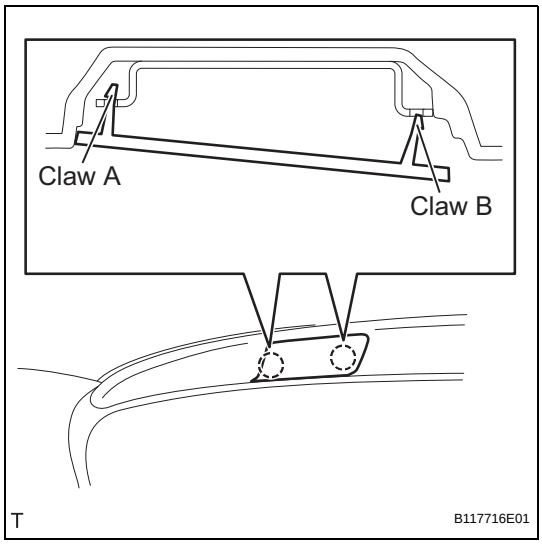

2. INSTALL REAR SPOILER COVER LH

(a) Engage the 2 claws and install the rear spoiler cover.

NOTICE:

When installing the rear spoiler cover, first engage claw A nearest the outside of the vehicle and then push in claw B nearest the inside of the vehicle.

3. INSTALL REAR SPOILER COVER RH

HINT:

Use the same procedure as for the LH side.

FRONT DOOR BELT MOULDING (for Sedan)

COMPONENTS

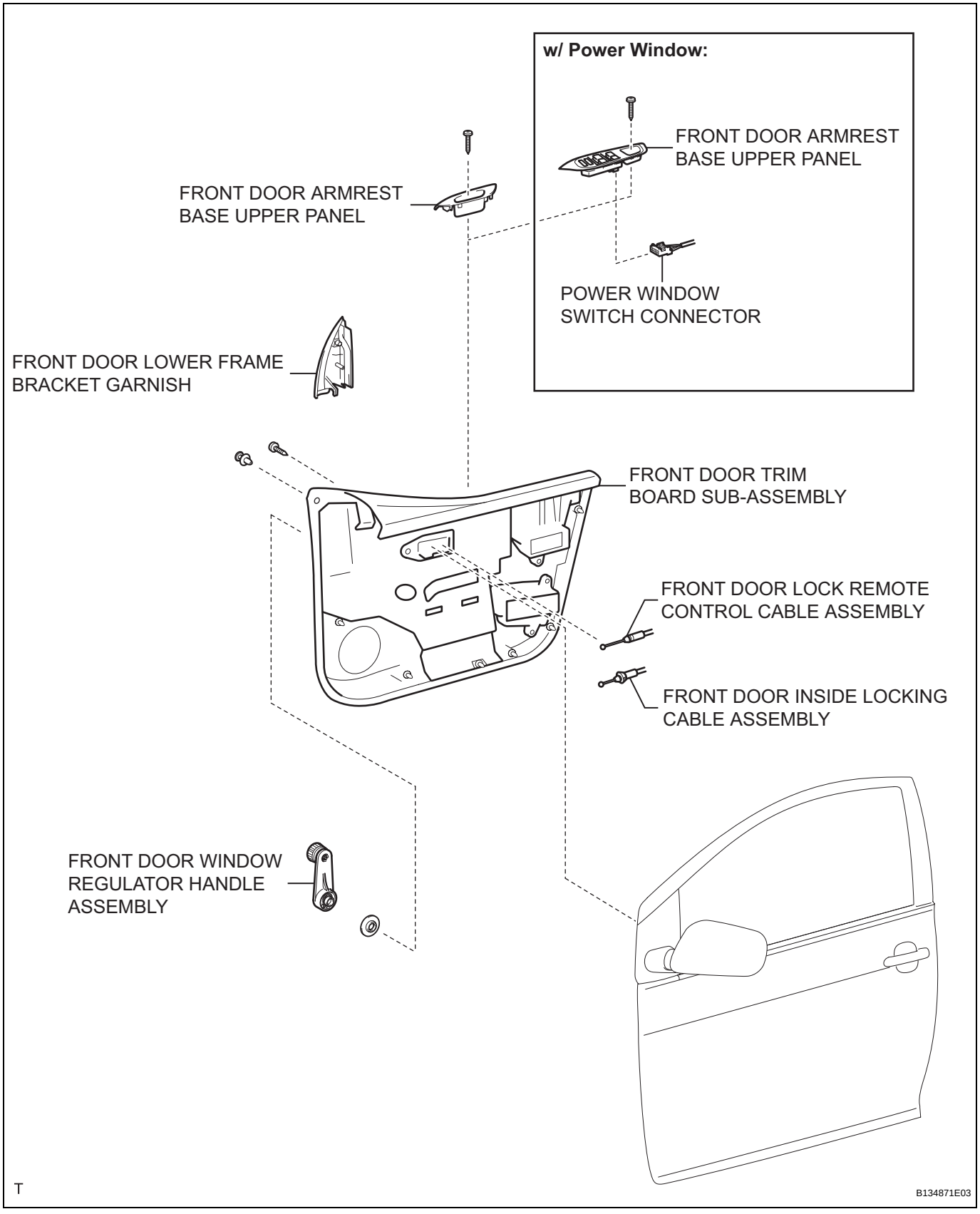

ET

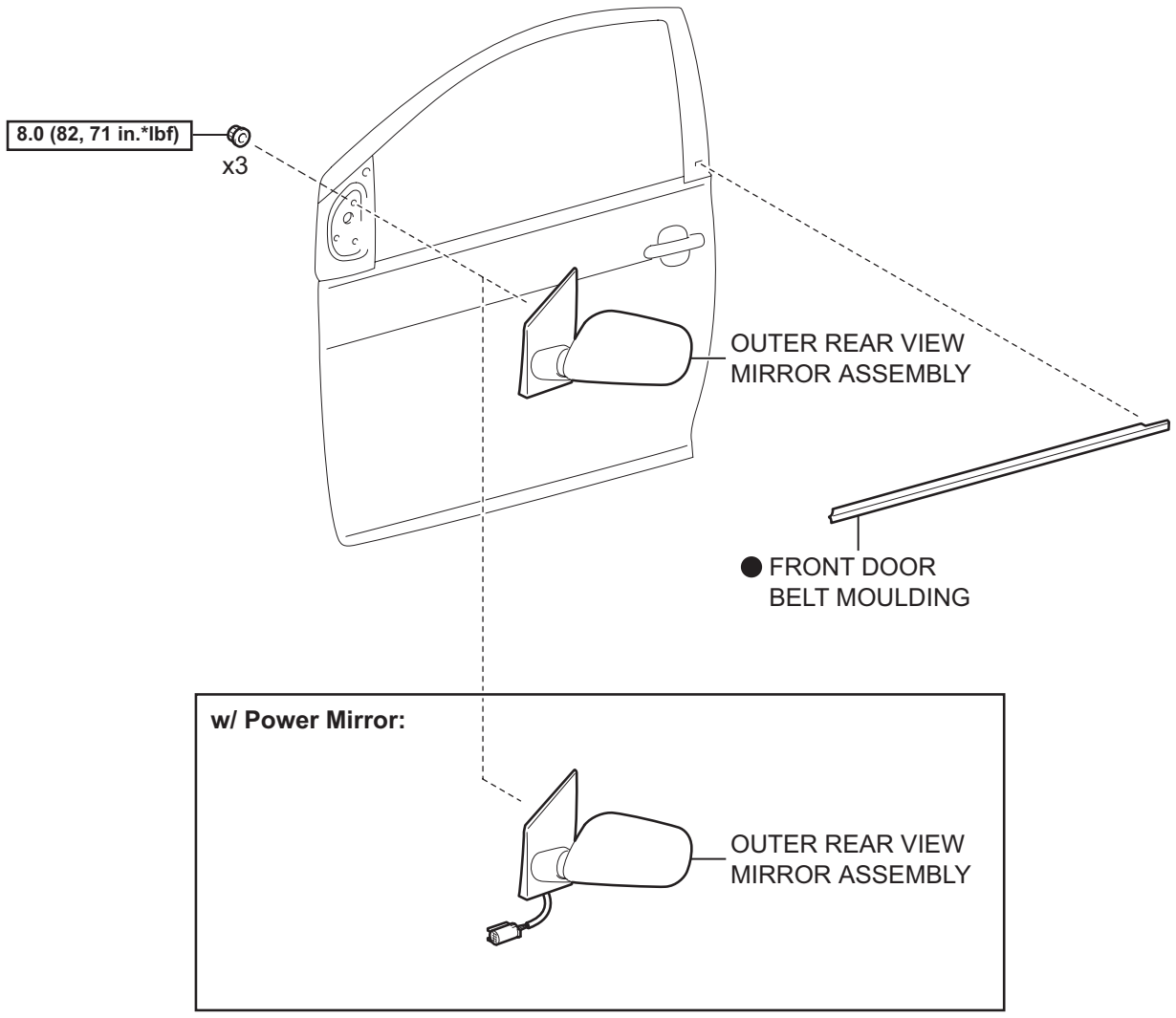

N*m (kgf*cm, ft*lbf) : Specified torque

● Non-reusable part

T

B134872E02

ET

REMOVAL

HINT:
The procedure described below is for the LH side. Use the same procedure for both the RH and LH sides, unless otherwise specified.

1. **DISCONNECT CABLE FROM NEGATIVE BATTERY TERMINAL**
2. **REMOVE FRONT DOOR WINDOW REGULATOR HANDLE ASSEMBLY (w/o Power Window) (See page ED-9)**
3. **REMOVE FRONT DOOR LOWER FRAME BRACKET GARNISH (See page ED-9)**
4. **REMOVE FRONT DOOR ARMREST BASE UPPER PANEL (See page ED-9)**
5. **REMOVE FRONT DOOR TRIM BOARD SUB-ASSEMBLY (See page ED-11)**
6. **REMOVE OUTER REAR VIEW MIRROR ASSEMBLY (See page MI-8)**
7. **REMOVE FRONT DOOR BELT MOULDING**
   (a) Apply protective tape to the door panel in the periphery of the front door belt moulding.

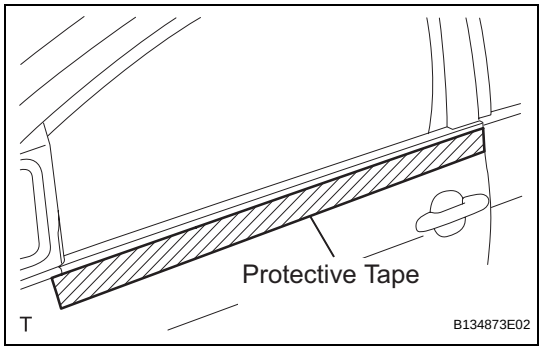

   (b) Using a moulding remover, disengage the 6 claws and remove the front door belt moulding.

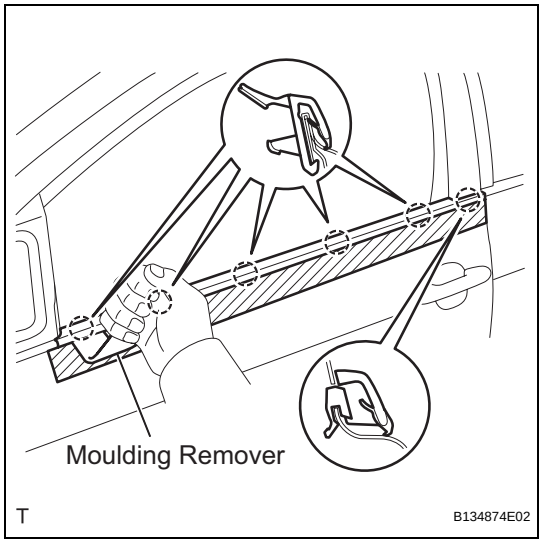

ET

INSTALLATION

HINT:
The procedure described below is for the LH side. Use the same procedure for both the RH and LH sides, unless otherwise specified.

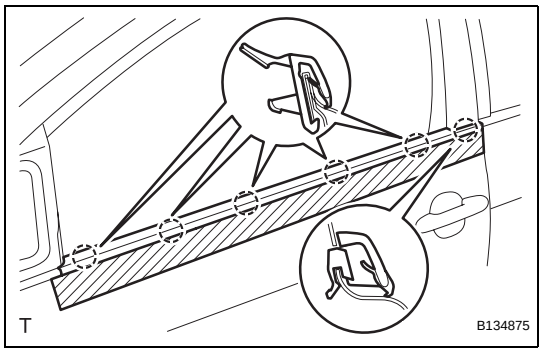

1. INSTALL FRONT DOOR BELT MOULDING

(a) Engage the 6 claws and install a new front door belt moulding.

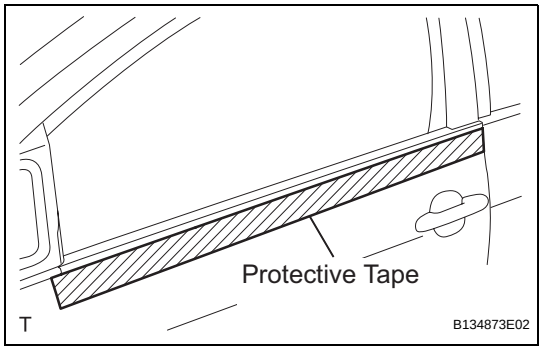

(b) Remove the protective tape.

2. INSTALL OUTER REAR VIEW MIRROR ASSEMBLY (See page MI-11)

3. INSTALL FRONT DOOR TRIM BOARD SUB-ASSEMBLY (See page ED-26)

4. INSTALL FRONT DOOR ARMREST BASE UPPER PANEL (See page ED-28)

5. INSTALL FRONT DOOR LOWER FRAME BRACKET GARNISH (See page ED-28)

6. INSTALL FRONT DOOR WINDOW REGULATOR HANDLE ASSEMBLY (See page ED-29)

7. CONNECT CABLE TO NEGATIVE BATTERY TERMINAL (w/ Power Window)
Torque: 5.4 N*m (55 kgf*cm, 48 in.*lbf)

FRONT DOOR BELT MOULDING (for Hatchback)

COMPONENTS

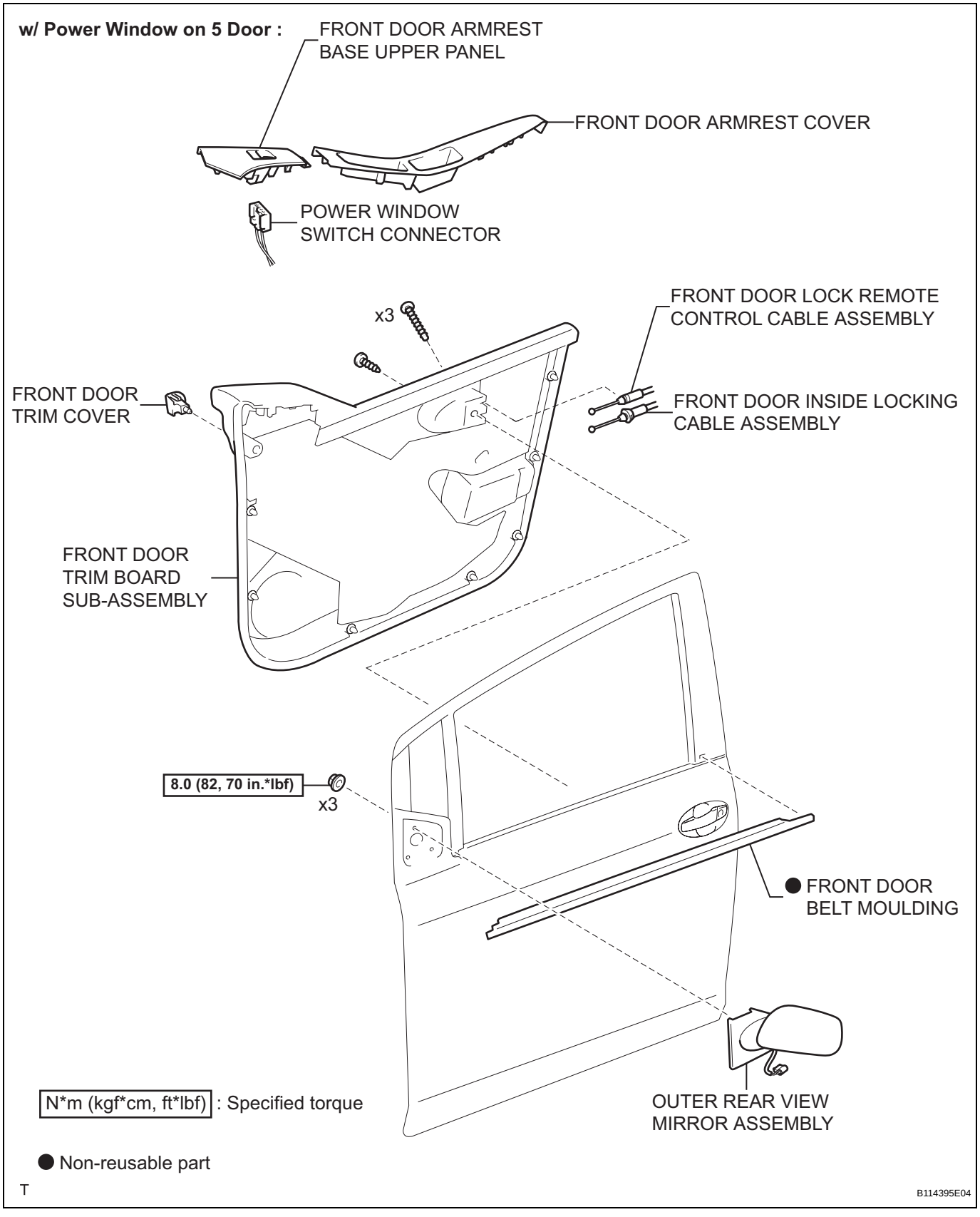

ET

w/o Power Window on 5 Door:

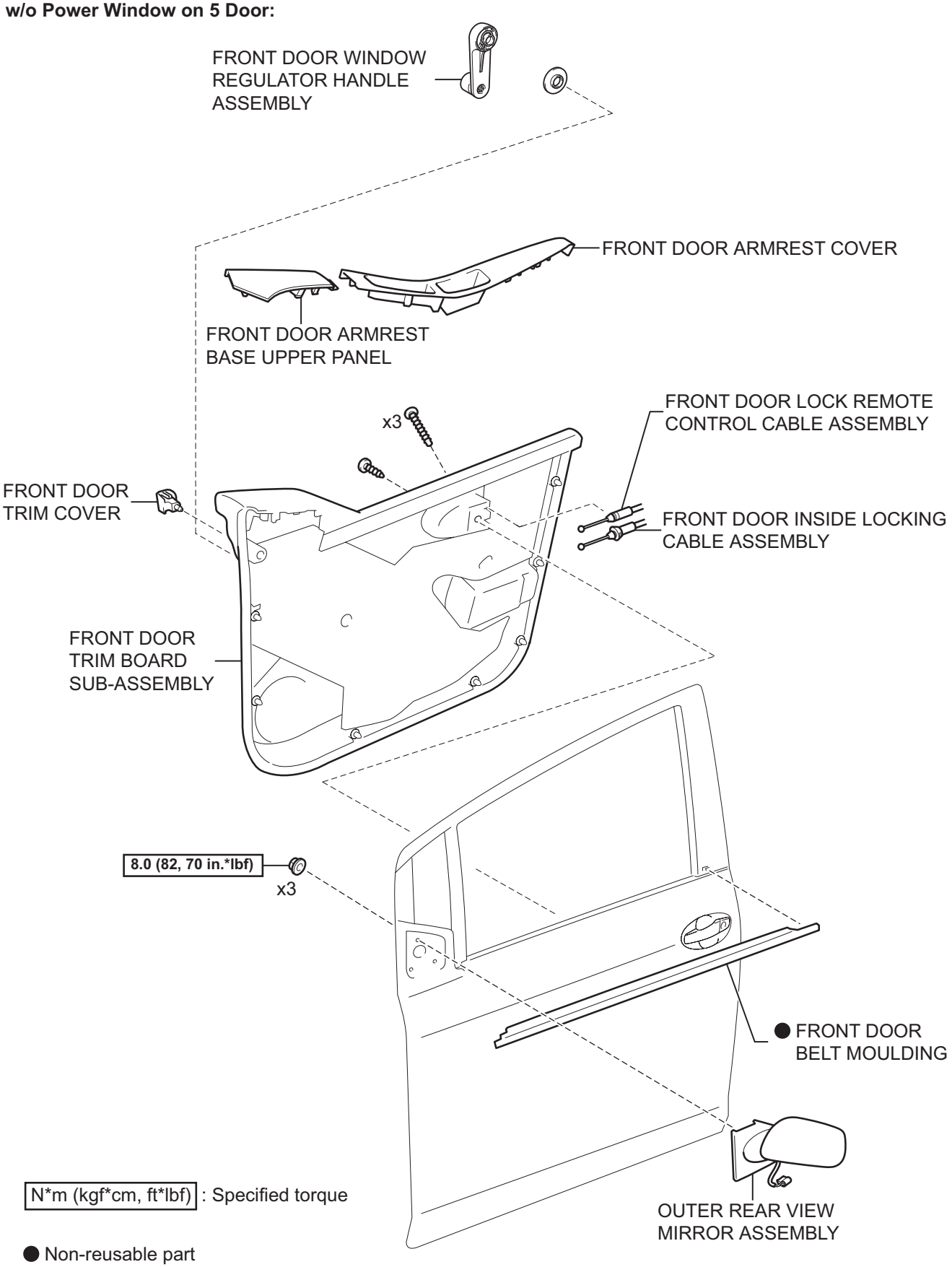

ET

T

B114396E02

w/ Power Window on 3 Door:

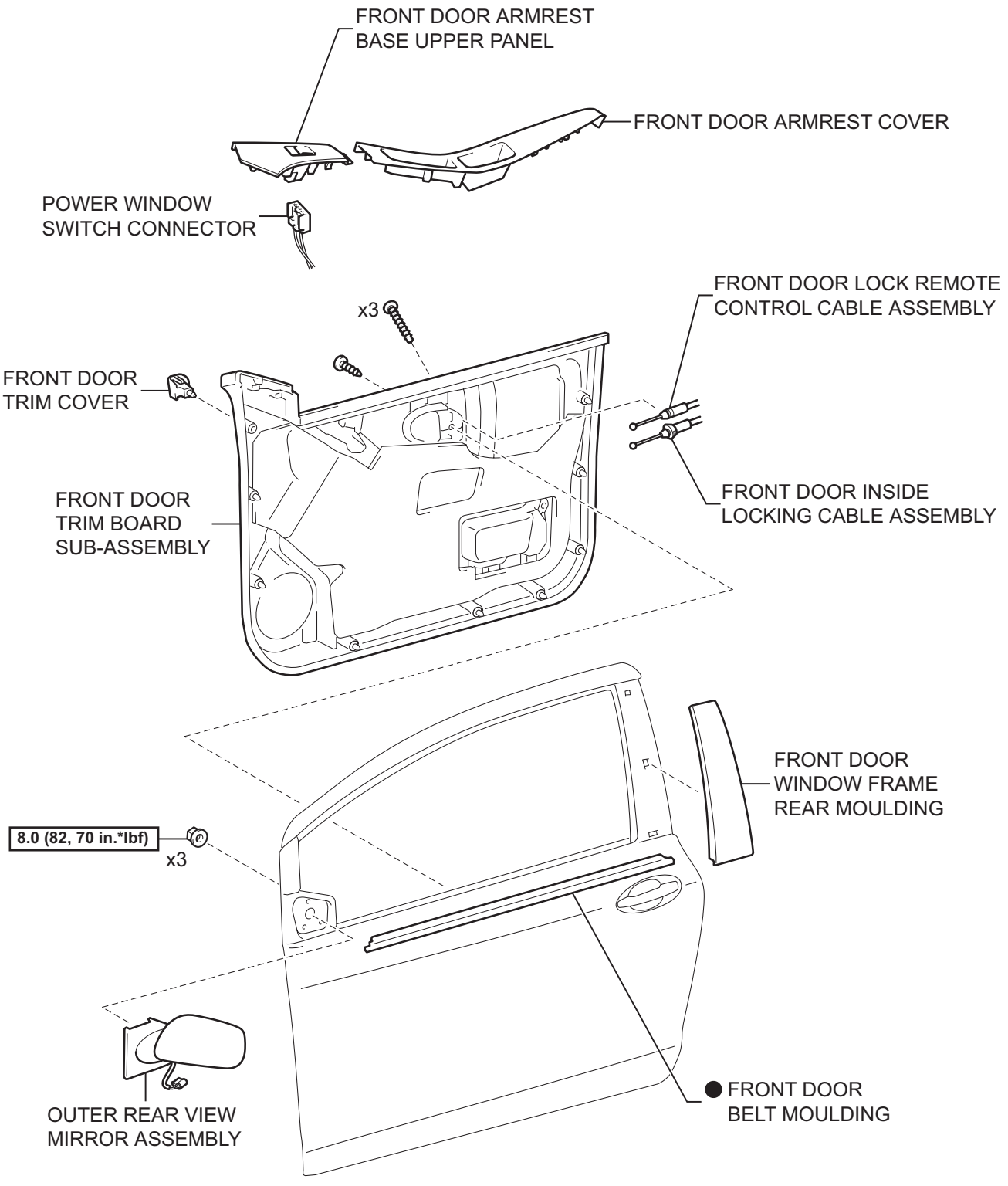

N*m (kgf*cm, ft*lbf) : Specified torque

● Non-reusable part

T

B114610E02

ET

w/o Power Window on 3 Door:

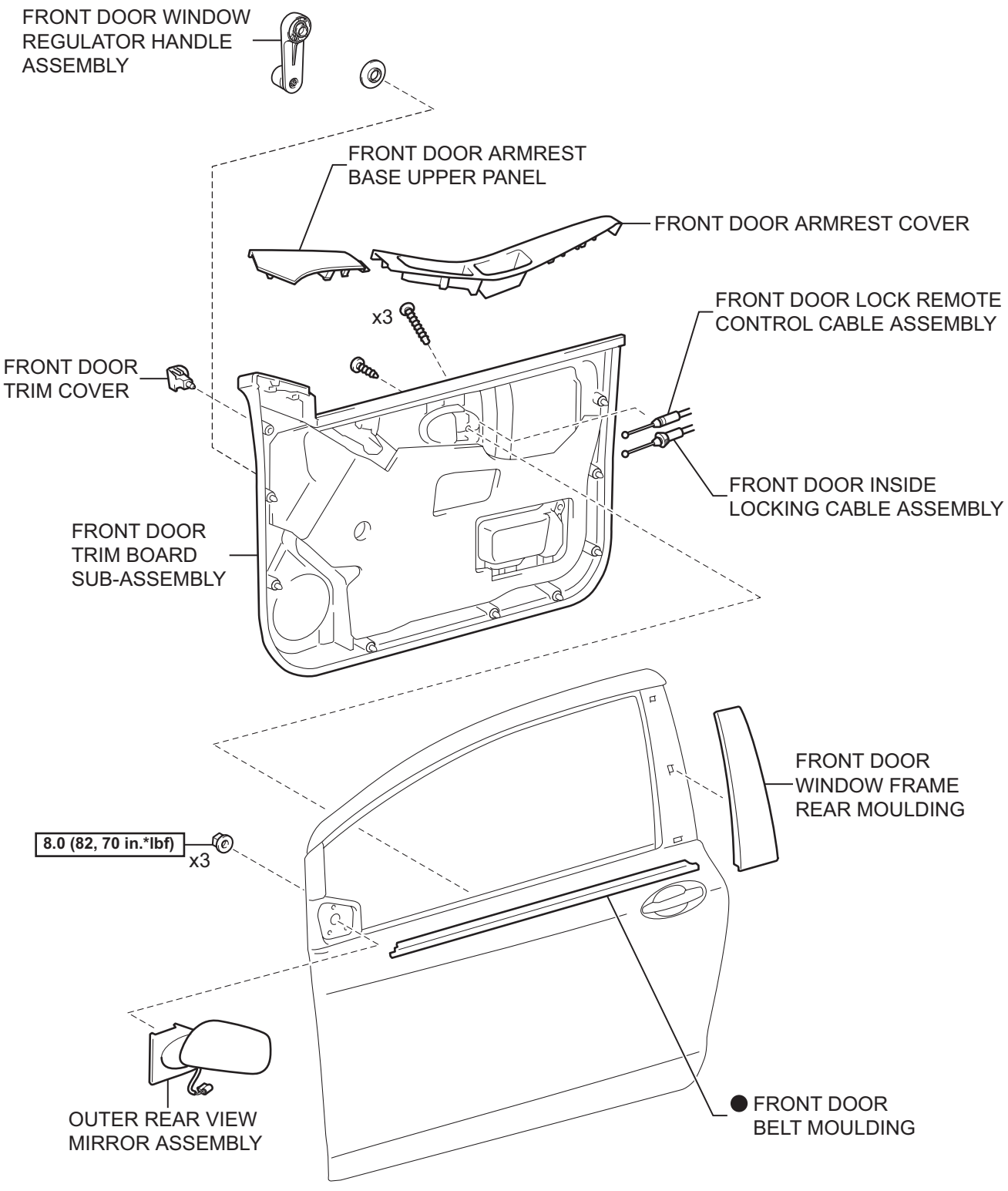

N*m (kgf*cm, ft*lbf) : Specified torque

● Non-reusable part

T

B114611E02

ET

REMOVAL

HINT:
The procedure described below is for the LH side. Use the same procedure for both the RH and LH sides, unless otherwise specified.

1. **DISCONNECT CABLE FROM NEGATIVE BATTERY TERMINAL (w/ Power Window)**
2. **REMOVE FRONT DOOR ARMREST COVER (See page ED-33)**
3. **REMOVE FRONT DOOR ARMREST BASE UPPER PANEL**
   (a) w/ Power Window:
      (1) Remove the front door armrest base upper panel (See page ED-33).
   (b) w/o Power Window:
      (1) Remove the front door armrest base upper panel (See page ED-57).
4. **REMOVE FRONT DOOR WINDOW REGULATOR HANDLE ASSEMBLY (w/o Power Window) (See page ED-57)**
5. **REMOVE FRONT DOOR TRIM BOARD SUB-ASSEMBLY**
   (a) w/ Power Window:
      (1) Remove the front door trim board sub-assembly (See page ED-34).
   (b) w/o Power Window:
      (1) Remove the front door trim board sub-assembly (See page ED-58).
6. **REMOVE OUTER REAR VIEW MIRROR ASSEMBLY (See page MI-13)**
7. **REMOVE FRONT DOOR WINDOW FRAME REAR MOULDING (for 3 Door) (See page ET-114)**
8. **REMOVE FRONT DOOR BELT MOULDING**
   (a) for 5 Door:
      (1) Apply protective tape to the door panel in the area around the front door belt moulding.

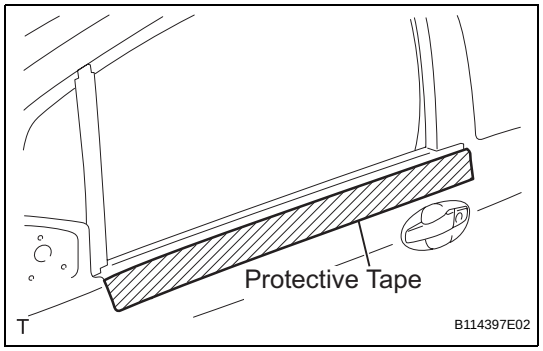

ET

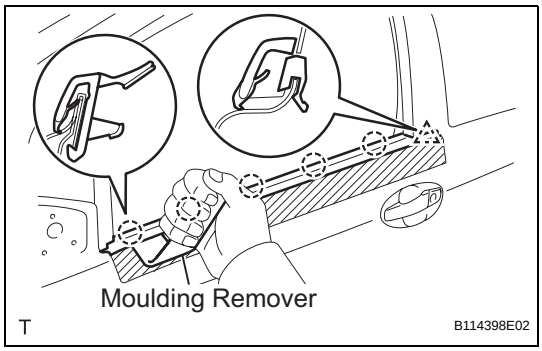

(2) Using a moulding remover, disengage the 5 claws and the clip and remove the front door belt moulding.

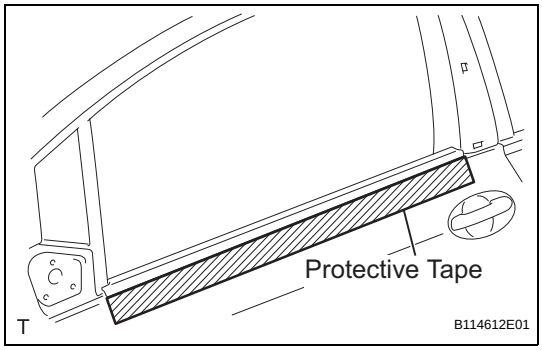

(b) for 3 Door:

(1) Apply protective tape to the door panel in the area around the front door belt moulding.

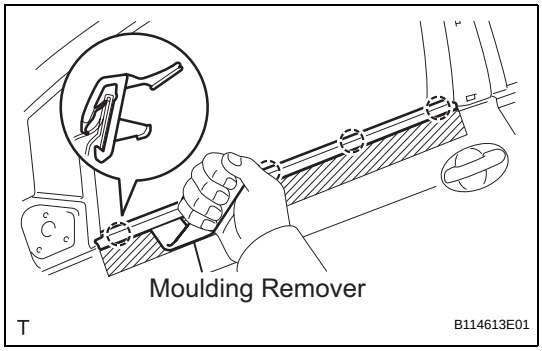

(2) Using a moulding remover, disengage the 5 claws and remove the front door belt moulding.

INSTALLATION

HINT:
The procedure described below is for the LH side. Use the same procedure for both the RH and LH sides, unless otherwise specified.

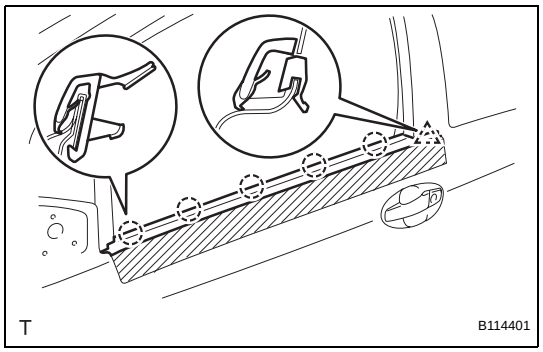

1. INSTALL FRONT DOOR BELT MOULDING

(a) for 5 Door:

(1) Engage the 5 claws and the clip and install a new front door belt moulding.

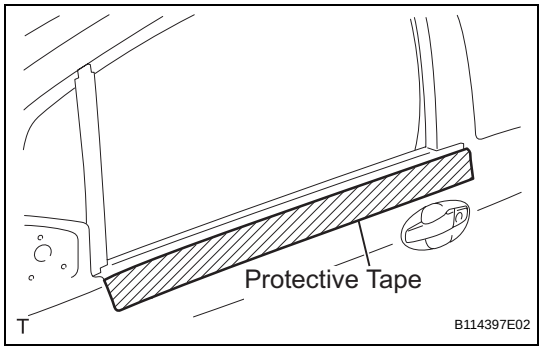

(2) Remove the protective tape.

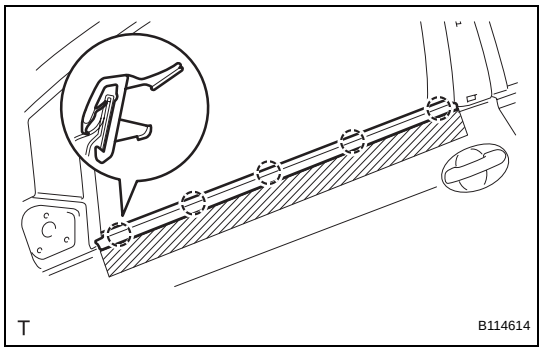

(b) for 3 Door:

(1) Engage the 5 claws and the clip and install a new front door belt moulding.

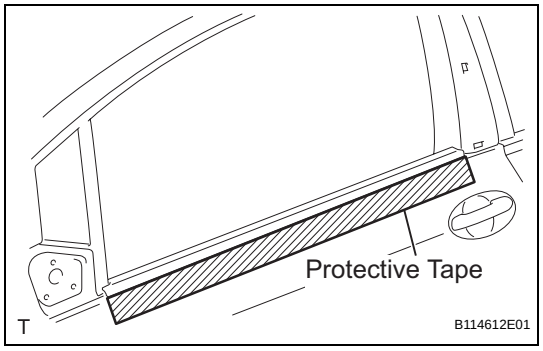

(2) Remove the protective tape.

2. INSTALL FRONT DOOR WINDOW FRAME REAR MOULDING (for 3 Door) (See page ET-114)

3. INSTALL OUTER REAR VIEW MIRROR ASSEMBLY (See page MI-16)

4. INSTALL FRONT DOOR TRIM BOARD SUB-ASSEMBLY

(a) w/ Power Window:

(1) Install the front door trim board sub-assembly (See page ED-51).

(b) w/o Power Window:

(1) Install the front door trim board sub-assembly (See page ED-74).

5. **INSTALL FRONT DOOR WINDOW REGULATOR HANDLE ASSEMBLY (w/o Power Window) (See page ED-75)**

6. **INSTALL FRONT DOOR ARMREST BASE UPPER PANEL**
   (a) w/ Power Window:
      (1) Install the front door armrest base upper panel (See page ED-53).
   (b) w/o Power Window:
      (1) Install the front door armrest base upper panel (See page ED-74).

7. **INSTALL FRONT DOOR ARMREST COVER (See page ED-53)**

8. **CONNECT CABLE TO NEGATIVE BATTERY TERMINAL (w/ Power Window)**
   Torque: 5.4 N*m (55 kgf*cm, 48 in.*lbf)

REAR DOOR BELT MOULDING (for Sedan)

COMPONENTS

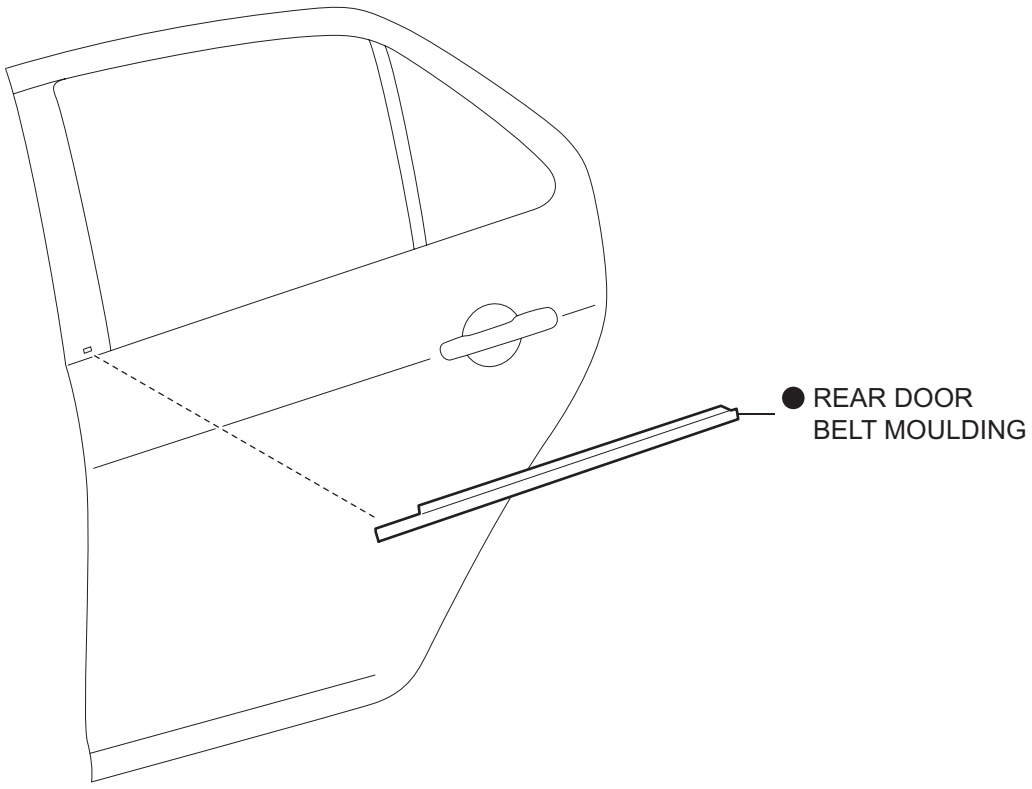

● Non-reusable part

T

B134879E02

ET

REMOVAL

HINT:
The procedure described below is for the LH side. Use the same procedure for both the RH and LH sides, unless otherwise specified.

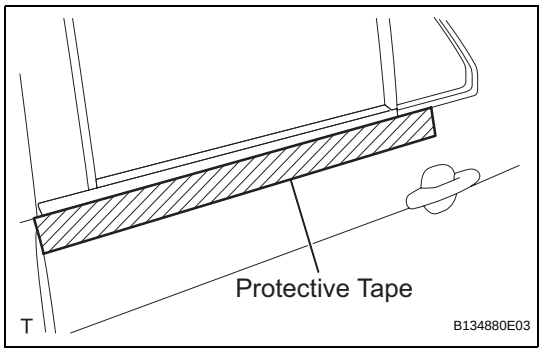

1. REMOVE REAR DOOR BELT MOULDING

(a) Apply protective tape to the door panel in the periphery of the rear door belt moulding.

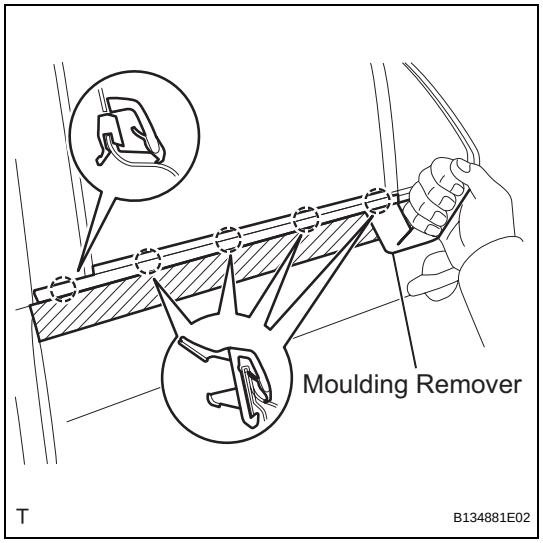

(b) Using a moulding remover, disengage the 5 claws and remove the rear door belt moulding.

INSTALLATION

HINT:
The procedure described below is for the LH side. Use the same procedure for both the RH and LH sides, unless otherwise specified.

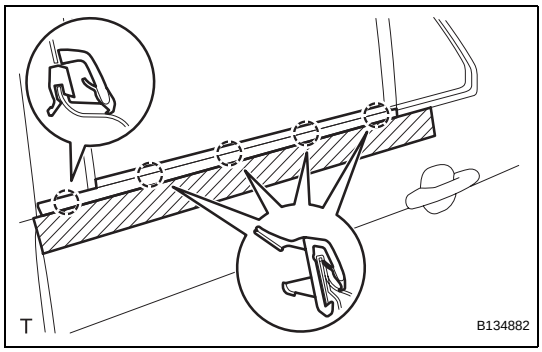

1. INSTALL REAR DOOR BELT MOULDING

(a) Engage the 5 claws and install a new rear door belt moulding.

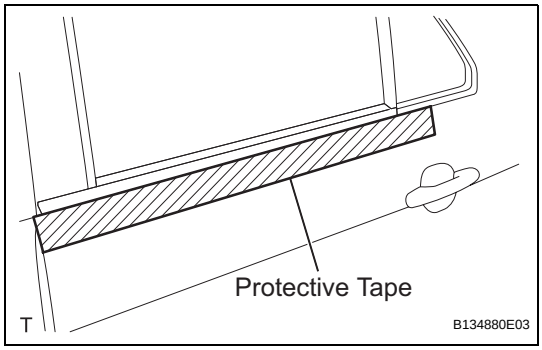

(b) Remove the protective tape.

REAR DOOR BELT MOULDING (for Hatchback)

COMPONENTS

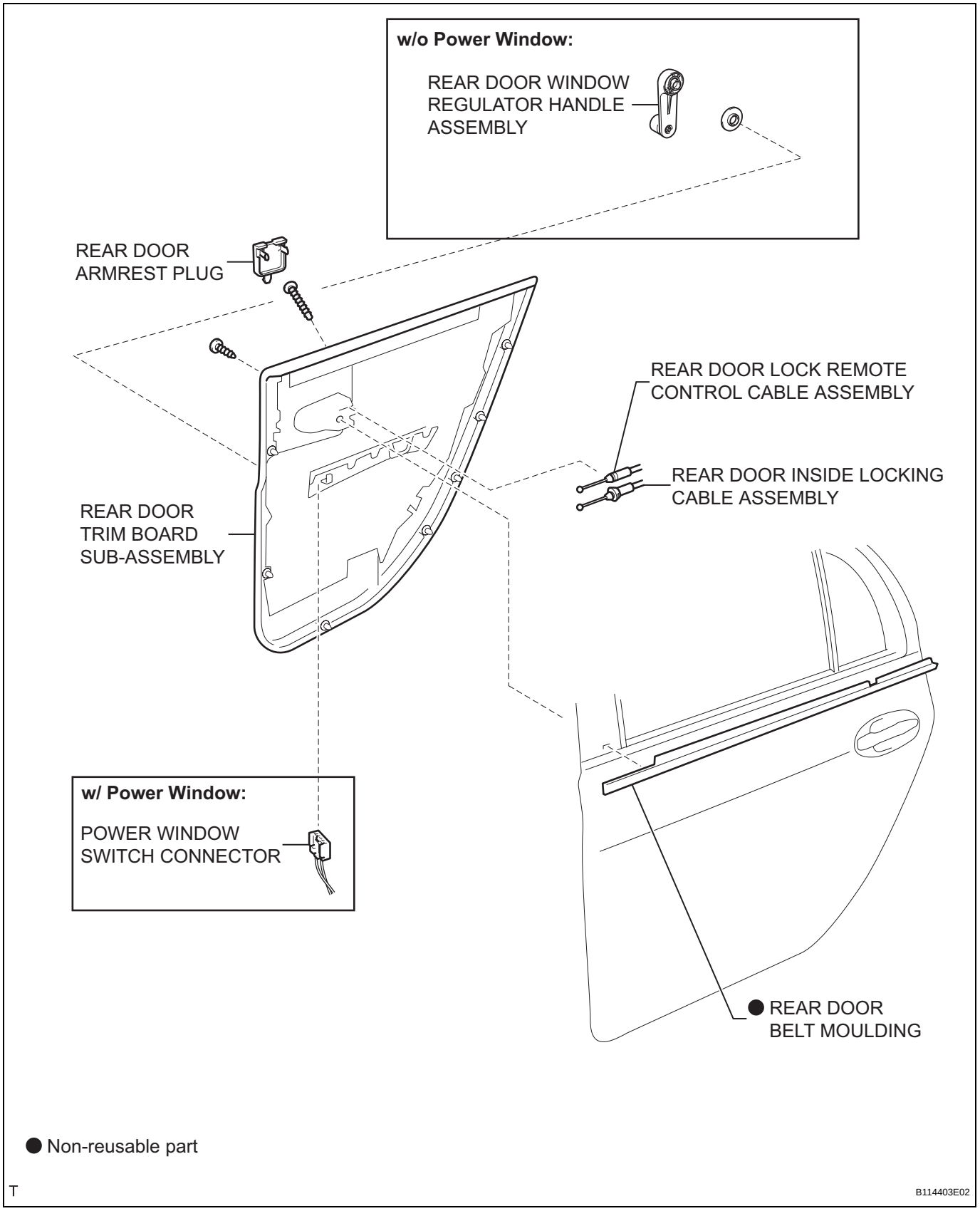

ET

REMOVAL

HINT:
The procedure described below is for the LH side. Use the same procedure for both the RH and LH sides, unless otherwise specified.

1. **DISCONNECT CABLE FROM NEGATIVE BATTERY TERMINAL (w/ Power Window)**

2. **REMOVE REAR DOOR WINDOW REGULATOR HANDLE ASSEMBLY (w/o Power Window) (See page ED-115)**

3. **REMOVE REAR DOOR TRIM BOARD SUB-ASSEMBLY**
   (a) w/ Power Window:
      (1) Remove the rear door trim board sub-assembly (See page ED-98).
   (b) w/o Power Window:
      (1) Remove the rear door trim board sub-assembly (See page ED-115).

4. **REMOVE REAR DOOR BELT MOULDING**
   (a) Apply protective tape to the door panel in the area around the rear door belt moulding.

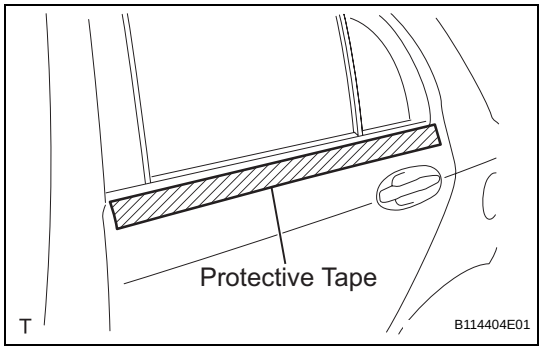

   (b) Using a moulding remover, disengage the 5 claws and the clip and remove the rear door belt moulding.

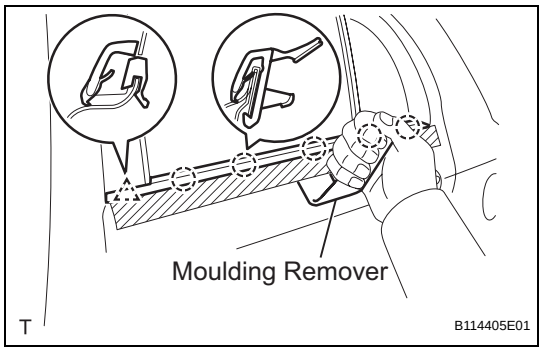

ET

INSTALLATION

HINT:
The procedure described below is for the LH side. Use the same procedure for both the RH and LH sides, unless otherwise specified.

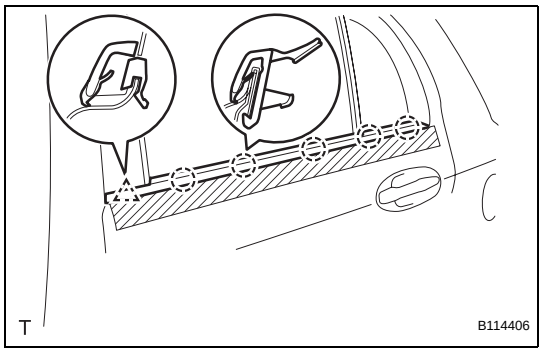

1. INSTALL REAR DOOR BELT MOULDING

(a) Engage the 5 claws and the clip and install a new rear door belt moulding.

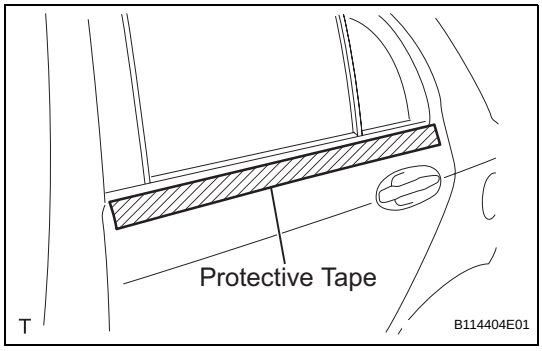

(b) Remove the protective tape.

2. INSTALL REAR DOOR TRIM BOARD SUB-ASSEMBLY

(a) w/ Power Window:
  (1) Install the rear door trim board sub-assembly (See page ED-111).

(b) w/o Power Window:
  (1) Install the rear door trim board sub-assembly (See page ED-127).

3. INSTALL REAR DOOR WINDOW REGULATOR HANDLE ASSEMBLY (w/o Power Window) (See page ED-128)

4. CONNECT CABLE TO NEGATIVE BATTERY TERMINAL (w/ Power Window)
Torque: 5.4 N*m (55 kgf*cm, 48 in.*lbf)

FRONT PILLAR UPPER COVER (for Sedan)

COMPONENTS

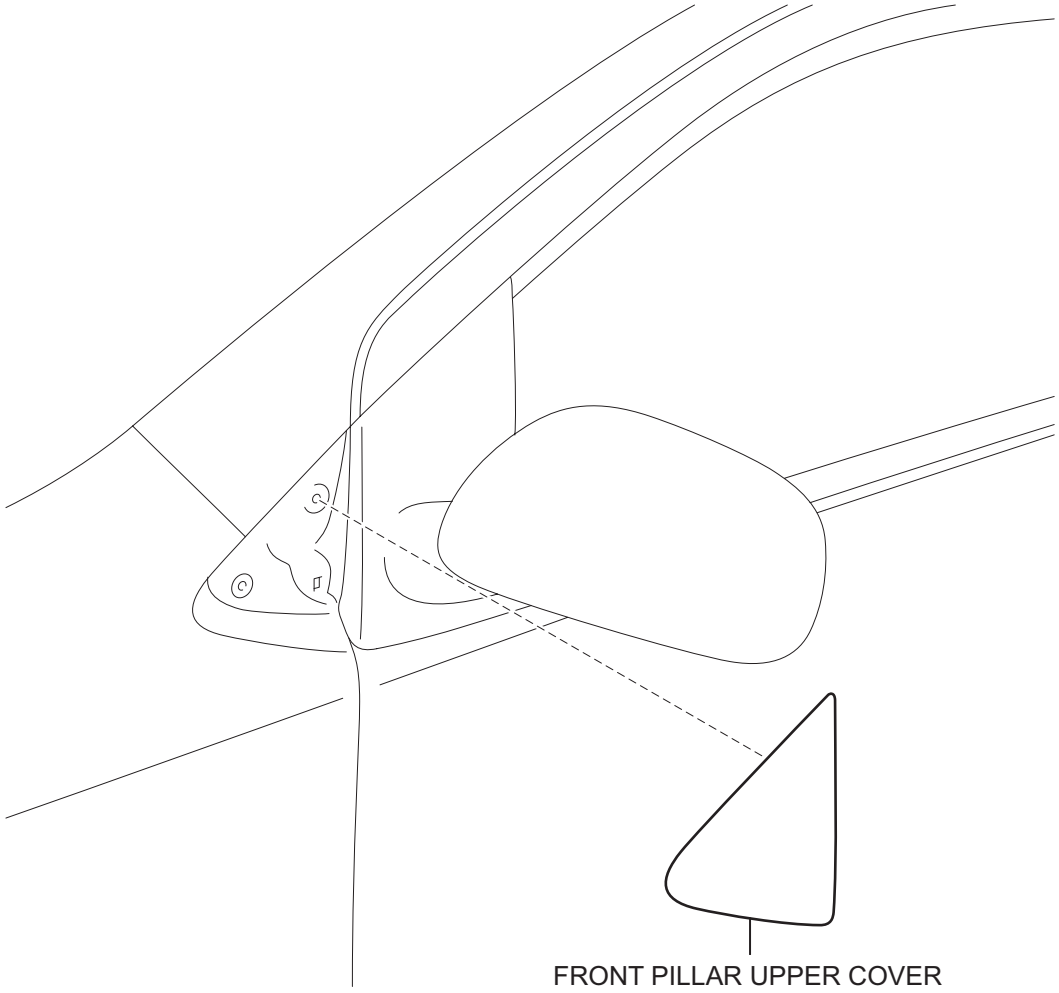

T

B134845E01

REMOVAL

HINT:
The procedure described below is for the LH side. Use the same procedure for both the RH and LH sides, unless otherwise specified.

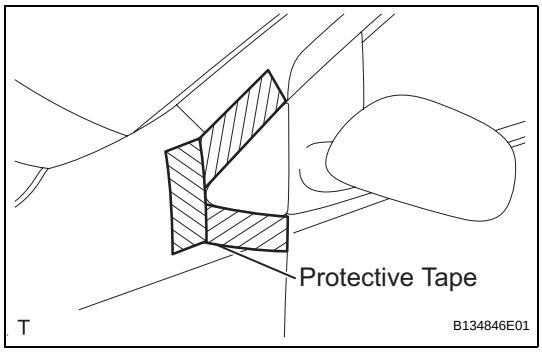

1. REMOVE FRONT PILLAR UPPER COVER

(a) Apply protective tape, as shown in the illustration.

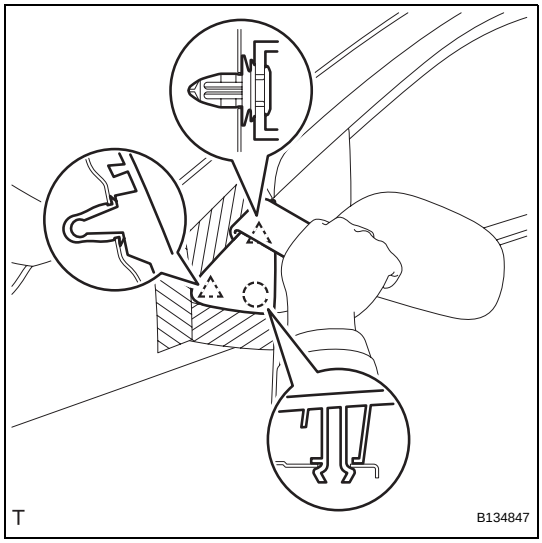

(b) Using a moulding remover, disengage the 2 clips and the claw and remove the front pillar upper cover.

INSTALLATION

HINT:
The procedure described below is for the LH side. Use the same procedure for both the RH and LH sides, unless otherwise specified.

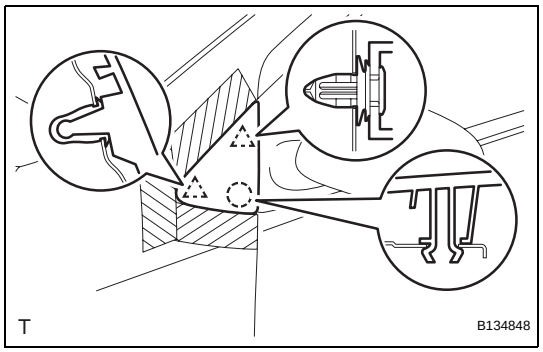

1. INSTALL FRONT PILLAR UPPER COVER

(a) Engage the 2 clips and the claw and install the front pillar upper cover.

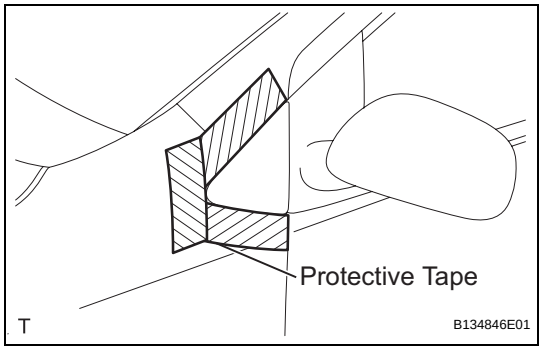

(b) Remove the protective tape.

FRONT PILLAR UPPER COVER (for Hatchback)

COMPONENTS

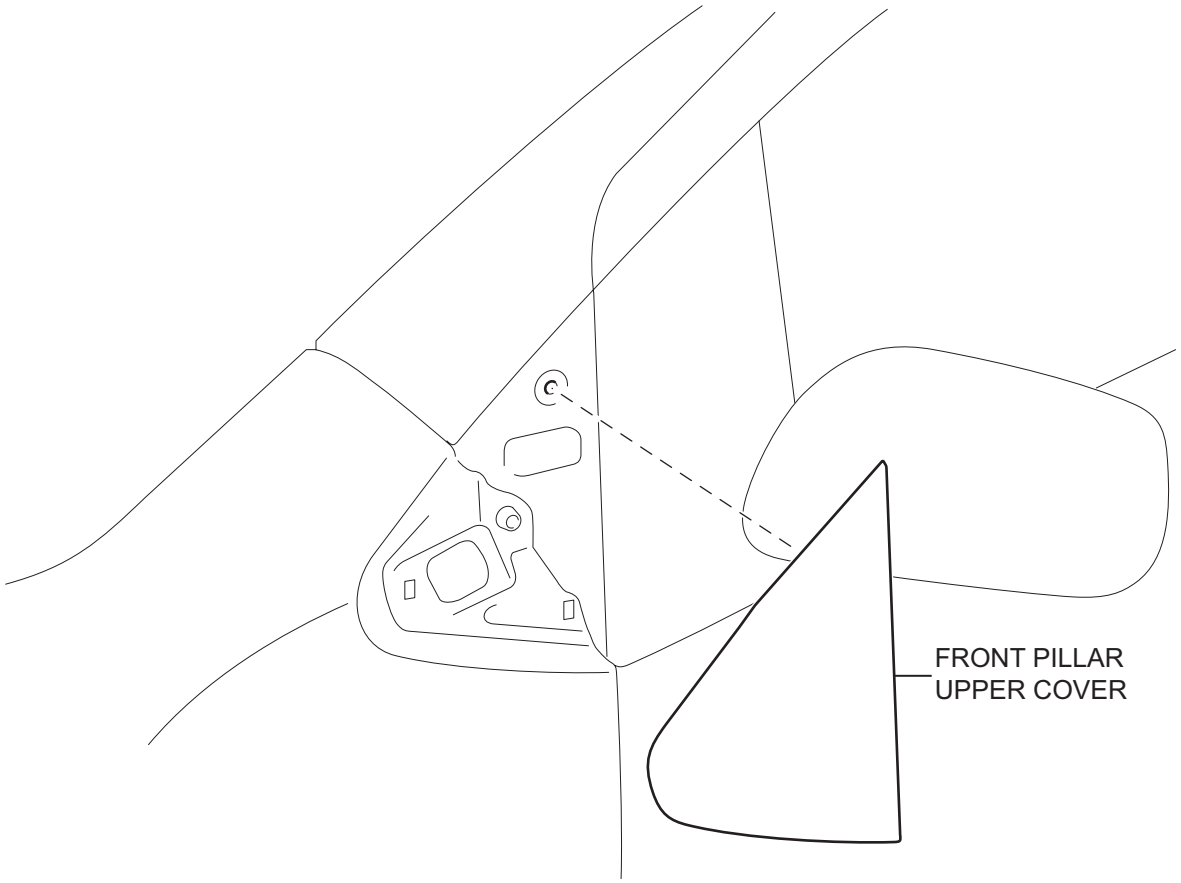

T

B114407E01

ET

REMOVAL

HINT:
The procedure described below is for the LH side. Use the same procedure for both the RH and LH sides, unless otherwise specified.

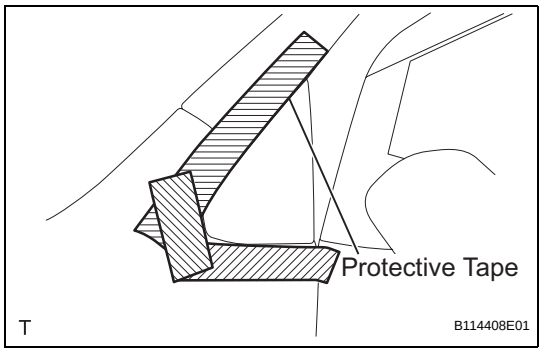

1. REMOVE FRONT PILLAR UPPER COVER

(a) Apply protective tape to the body panel in the area around the front pillar upper cover.

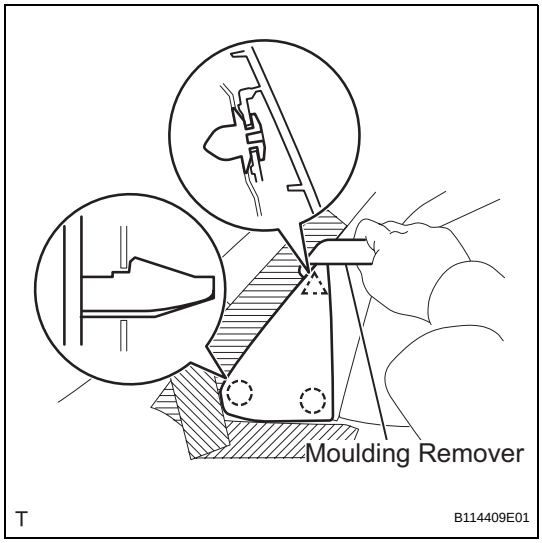

(b) Using a moulding remover, disengage the 2 claws and the clip and remove the front pillar upper cover.

INSTALLATION

HINT:
The procedure described below is for the LH side. Use the same procedure for both the RH and LH sides, unless otherwise specified.

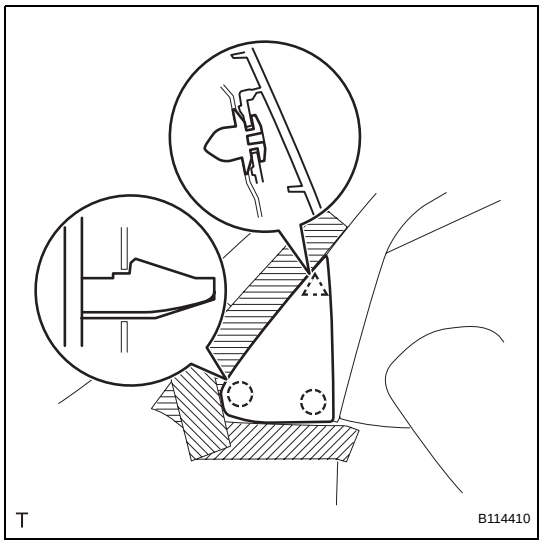

1. INSTALL FRONT PILLAR UPPER COVER

(a) Engage the 2 claws and the clip and install the front pillar upper cover.

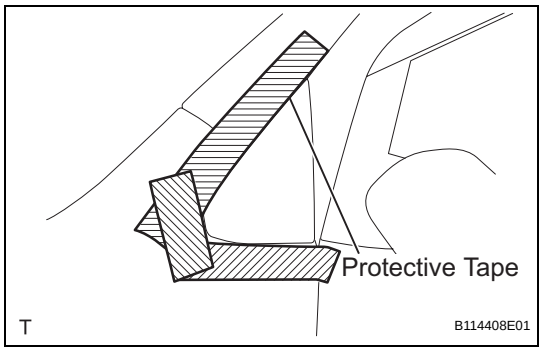

(b) Remove the protective tape.

ET

ROOF DRIP SIDE FINISH MOULDING (for Sedan)

COMPONENTS

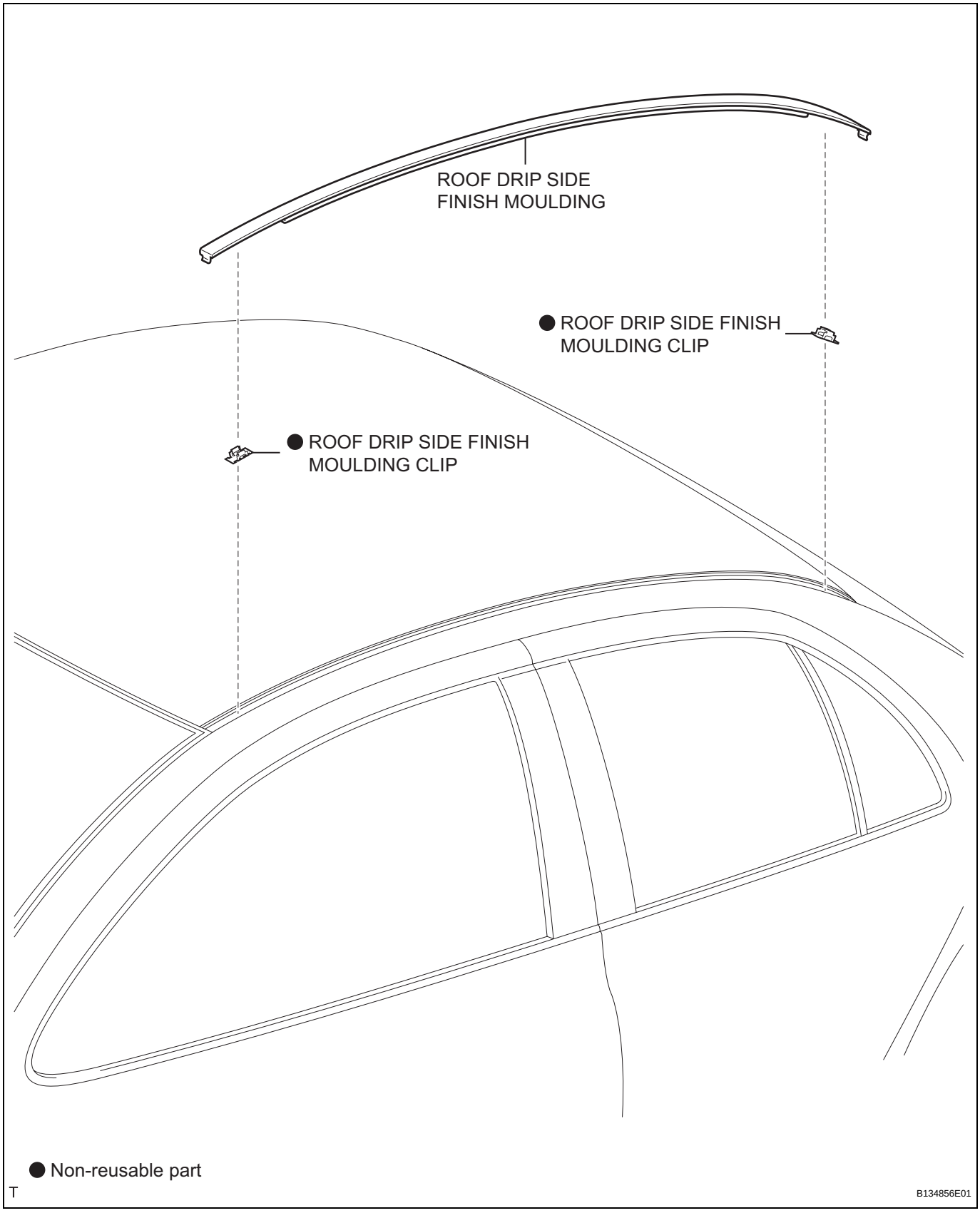

ET

REMOVAL

HINT:
The procedure described below is for LH side. Use the same procedure for both the RH and LH sides, unless otherwise specified.

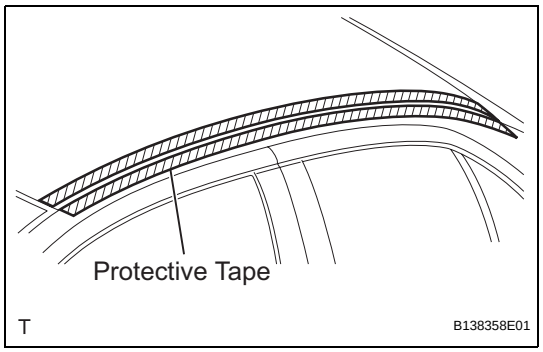

1. REMOVE ROOF DRIP SIDE FINISH MOULDING

(a) Apply protective tape, as shown in the illustration.

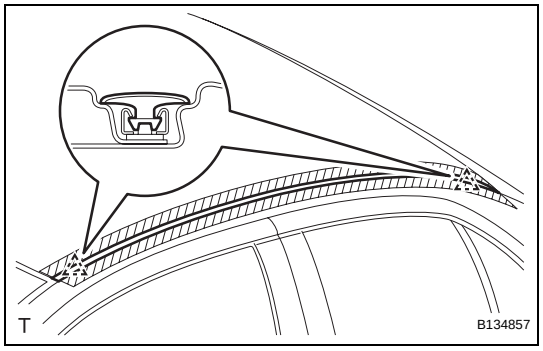

(b) Disengage the 2 clips and remove the roof drip side finish moulding.
NOTICE:
- **Do not remove the clips.**
- **Replace the clips with supply clips if damaged.**

INSTALLATION

HINT:
The procedure described below is for LH side. Use the same procedure for both the RH and LH sides, unless otherwise specified.

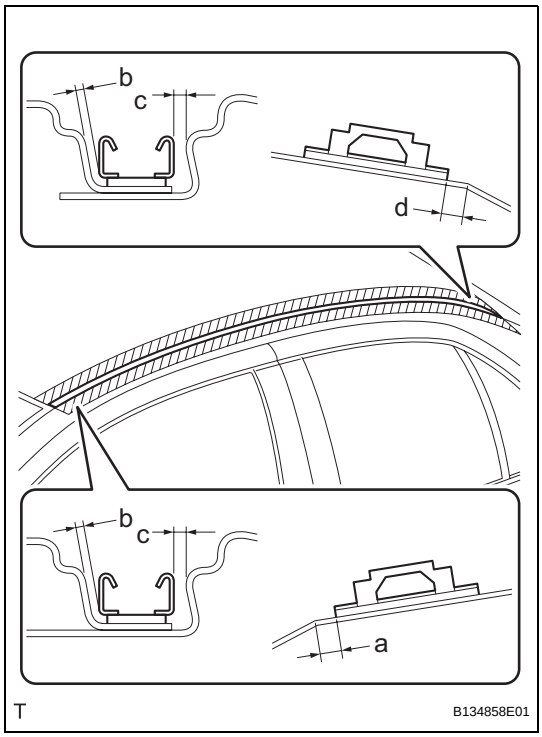

1. INSTALL ROOF DRIP SIDE FINISH MOULDING CLIP

NOTICE:
Follow these procedures only when replacing the clips.

(a) Remove the tape that remains on the moulding surface of the vehicle body, then clean the surface with a non-residue solvent.

(b) Using an infrared light, heat the clip installation surface of the vehicle body.

Heating Temperature

Area	Temperature
Vehicle Body	40 to 60°C (104 to 140°F)

NOTICE:
Do not excessively heat the vehicle body.

(c) Install new clips in the positions shown in the illustration. Press in the clips by hand.

Specification

Area	Measurement
a	3.5 mm (0.138 in.)
b	1.1 mm (0.043 in.)
c	1.8 mm (0.071 in.)
d	2.3 mm (0.091 in.)

NOTICE:
After pressing in the clips, wait 30 minutes or more before installing the roof drip side finish moulding.

HINT:
- Minimum hardening time: 30 minutes
- Time needed for complete hardening: 24 hours

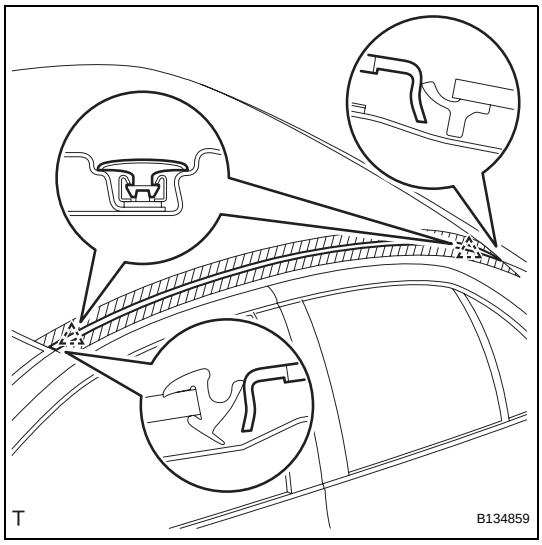

2. INSTALL ROOF DRIP SIDE FINISH MOULDING

(a) Engage the 2 clips and install the roof drip side finish moulding.

ET

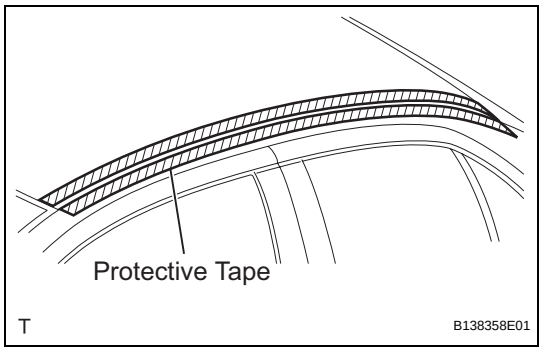

(b) Remove the protective tape.

ROOF DRIP SIDE FINISH MOULDING (for Hatchback)

COMPONENTS

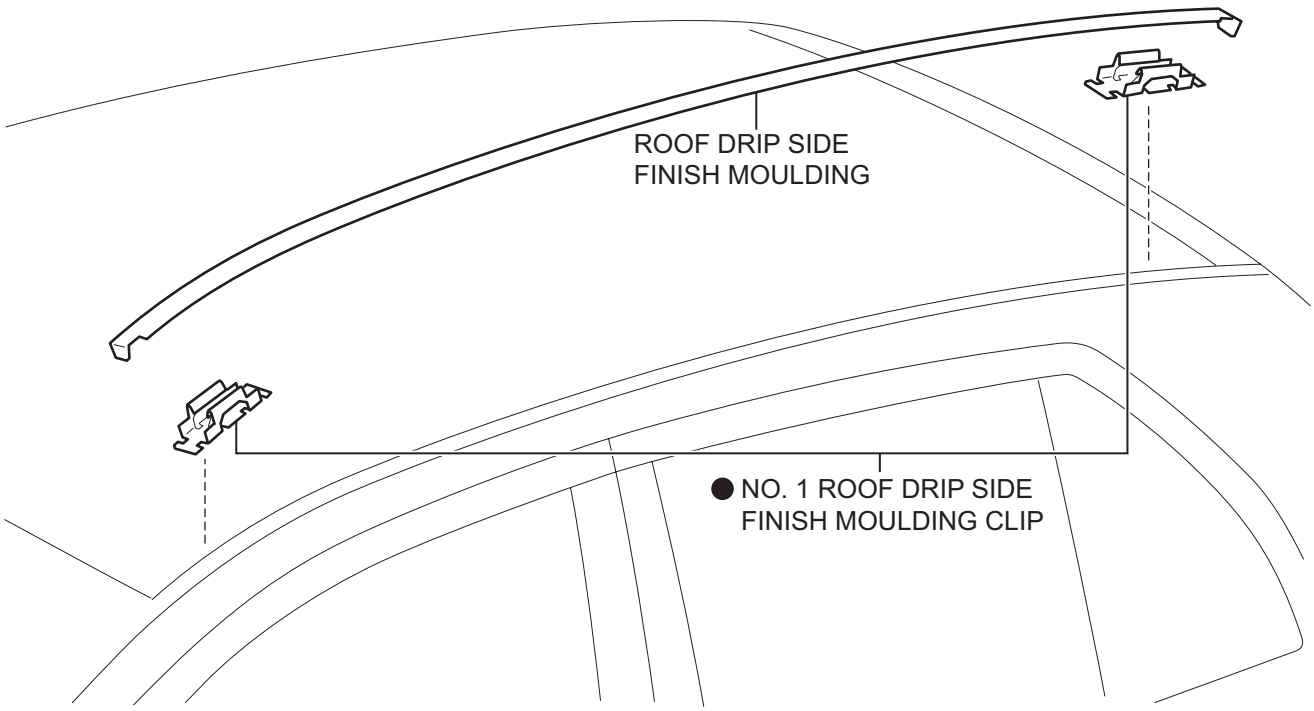

● Non-reusable part

T

B114411E01

ET

REMOVAL

HINT:
The procedure described below is for the LH side. Use the same procedure for both the RH and LH sides, unless otherwise specified.

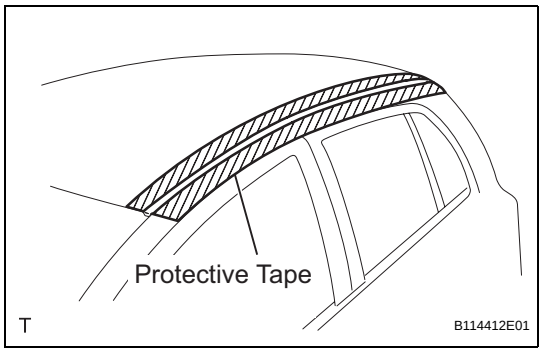

1. REMOVE ROOF DRIP SIDE FINISH MOULDING

(a) Apply protective tape to the roof panel in the area around the roof drip side finish moulding.

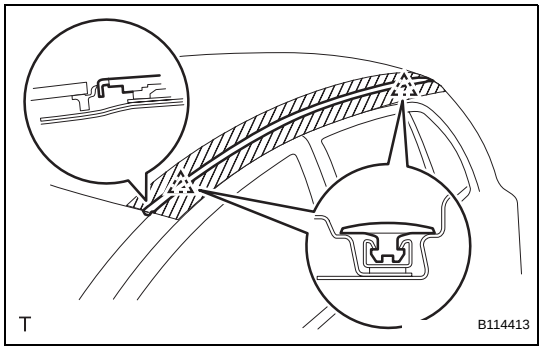

(b) Disengage the 2 clips and remove the roof drip side finish moulding.
NOTICE:
- **Do not remove the clips.**
- **Replace the clips with supply clips if damaged.**

INSTALLATION

HINT:
The procedure described below is for the LH side. Use the same procedure for both the RH and LH sides, unless otherwise specified.

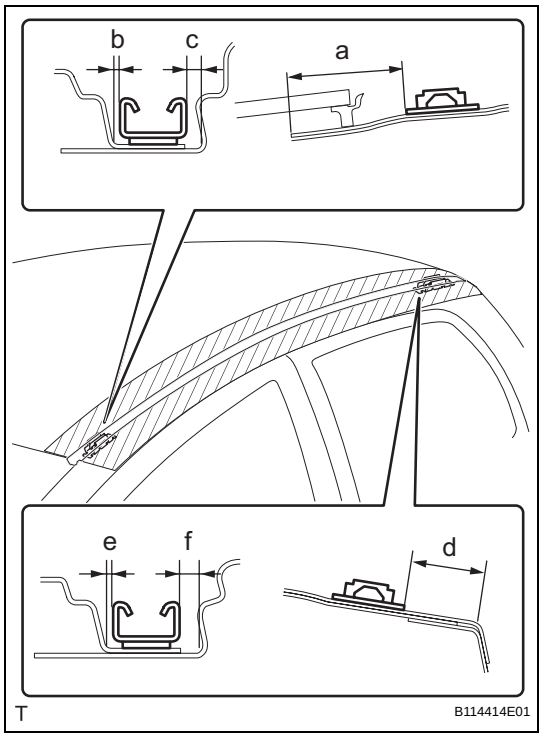

1. INSTALL NO. 1 ROOF DRIP SIDE FINISH MOULDING CLIP

NOTICE:

Only follow this procedure when replacing the clips.

(a) Remove the tape that remains on the moulding surface of the vehicle body, then clean the surface with a non-residue solvent.

(b) Using an infrared light, heat the clip installation surface of the vehicle body and roof drip side finish moulding.

Heating Temperature

Area	Temperature
Vehicle Body	40 to 60°C (104 to 140°F)
Roof Drip Side Finish Moulding	20 to 30°C (68 to 86°F)

NOTICE:

Do not excessively heat the vehicle body or roof drip side finish moulding.

(c) Install new clips in the positions shown in the illustration. Press in the clips by hand.

Specification

Area	Measurement
a	35.4 mm (1.394 in.)
b	0.8 mm (0.032 in.)
c	1.6 mm (0.063 in.)
d	24 mm (0.945 in.)
e	0.5 mm (0.02 in.)
f	2.7 mm (0.106 in.)

NOTICE:

After pressing in the clips, wait 30 minutes or more before installing the roof drip side finish moulding.

HINT:

- Minimum hardening time: 30 minutes
- Time needed for complete hardening: 24 hours

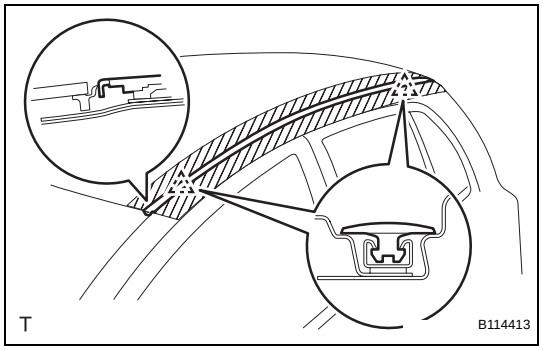

2. INSTALL ROOF DRIP SIDE FINISH MOULDING

(a) Engage the 2 clips and install the roof drip side finish moulding.

ET

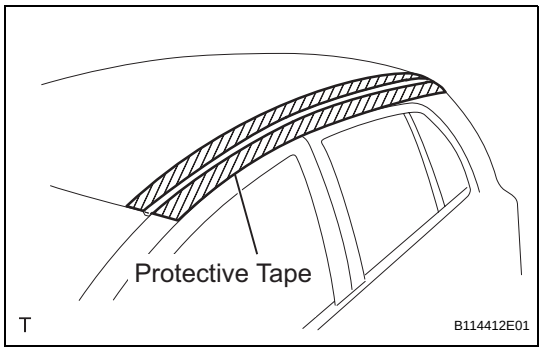

(b) Remove the protective tape.

SIDE MUDGUARD (for Hatchback)

COMPONENTS

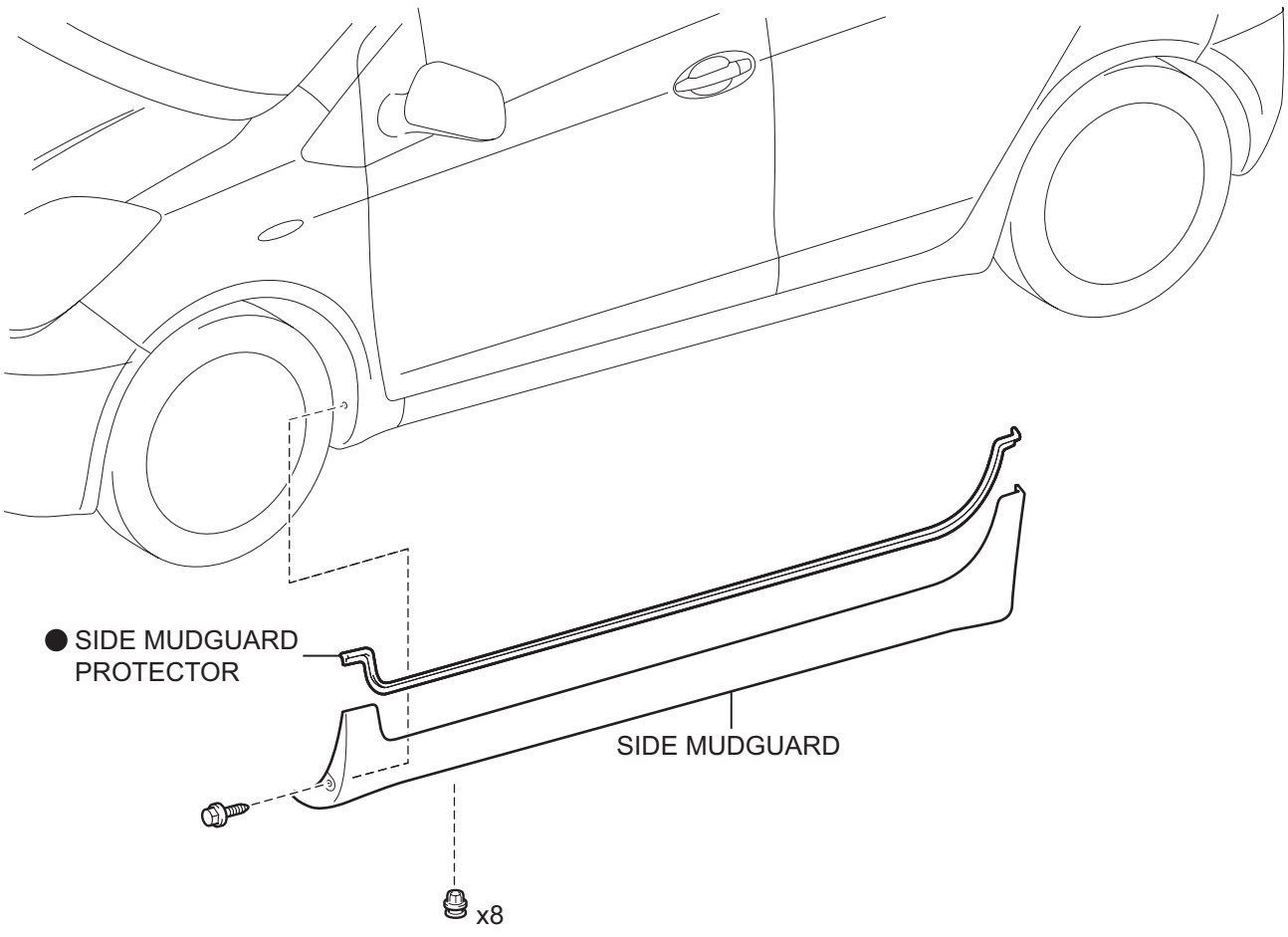

● Non-reusable part

T

B114586E02

ET

REMOVAL

HINT:
The procedure described below is for the LH side. Use the same procedure for both the RH and LH sides, unless otherwise specified.

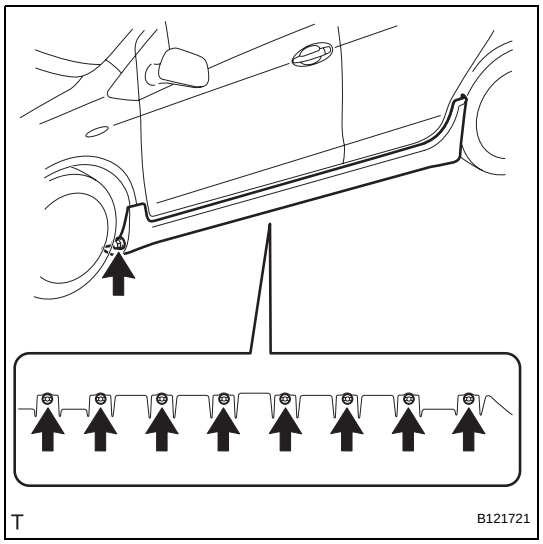

1. REMOVE SIDE MUDGUARD

(a) Remove the screw.
(b) Using a clip remover, remove the 8 retainers.

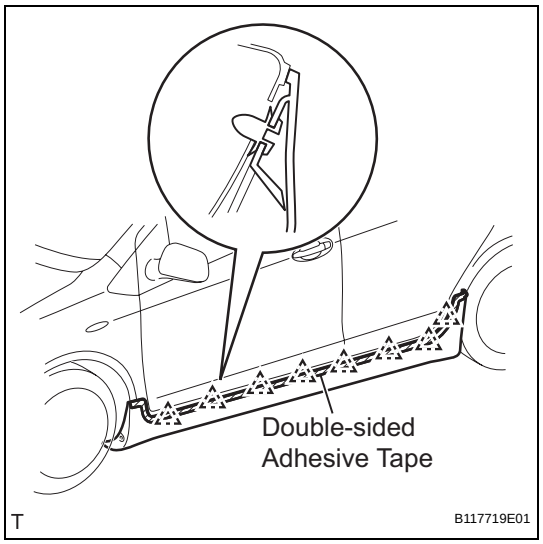

(c) Using an infrared light, heat the side mudguard protector.
(d) Disengage the 8 clips and remove the double-sided adhesive tape of the side mudguard protector, and remove the side mudguard.

INSTALLATION

HINT:
The procedure described below is for the LH side. Use the same procedure for both the RH and LH sides, unless otherwise specified.

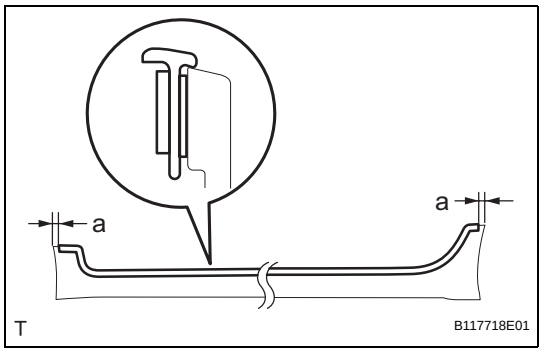

1. INSTALL SIDE MUDGUARD PROTECTOR

(a) Install a new side mudguard protector onto the side mudguard.

Installation position:

Mark	Measurement
a	1 mm (0.039 in.)

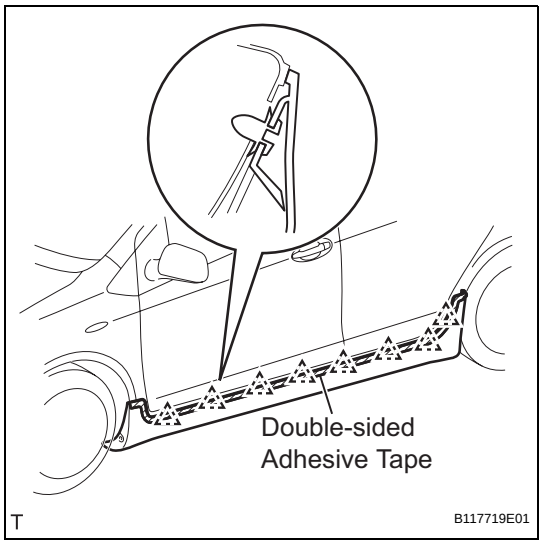

2. INSTALL SIDE MUDGUARD

(a) Engage the 8 clips and install the side mudguard.
(b) Press the double-sided adhesive tape of the side mudguard protector.

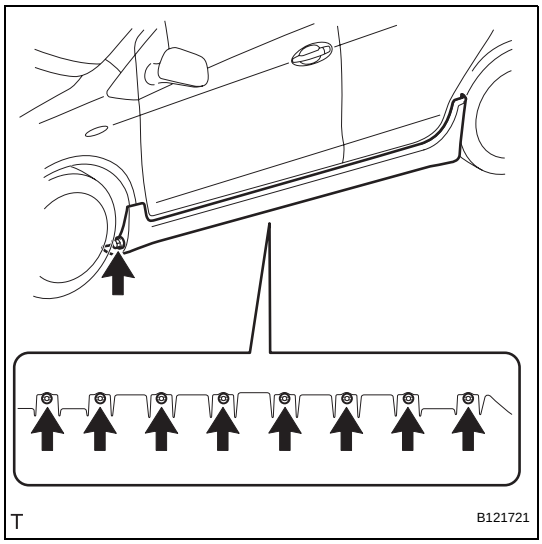

(c) Install the 8 retainers.
(d) Tighten the screw.

ET

FRONT DOOR WINDOW FRAME MOULDING (for Hatchback)

COMPONENTS

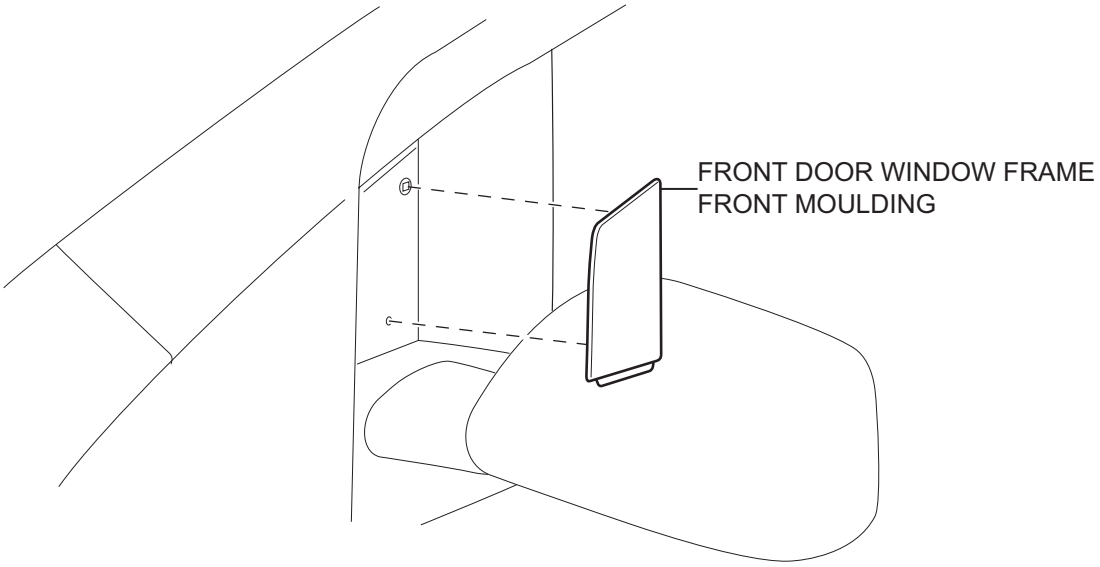

for 3 Door:

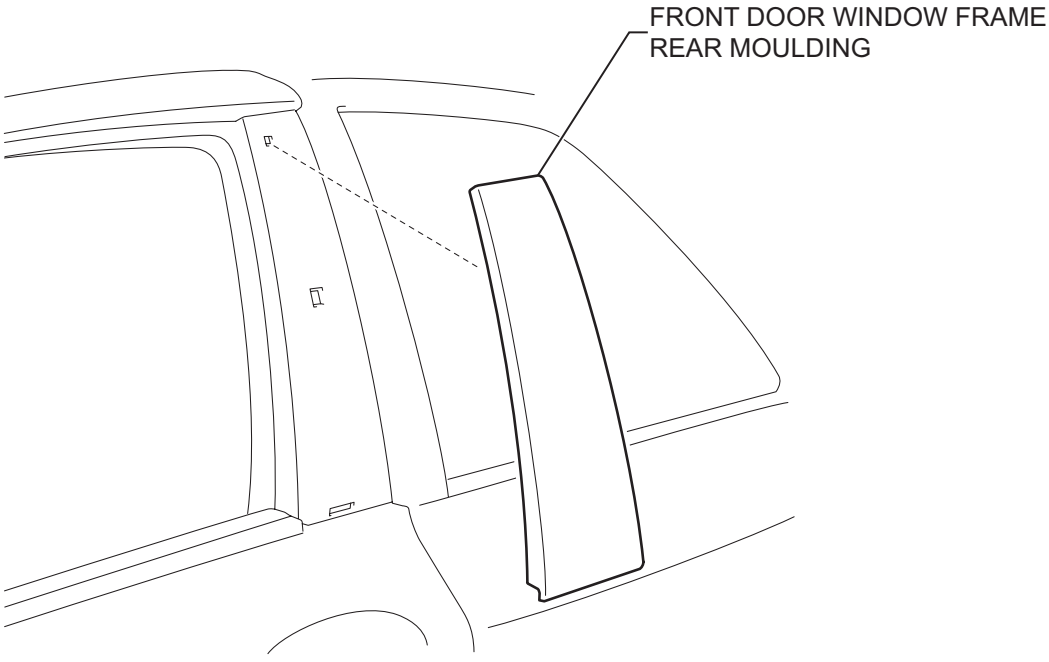

T

B114604E01

ET

REMOVAL

HINT:
The procedure described below is for the LH side. Use the same procedure for both the RH and LH sides, unless otherwise specified.

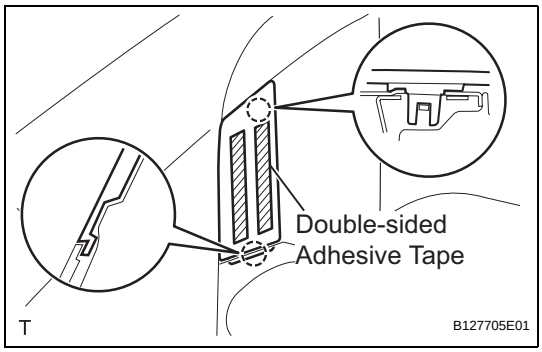

1. REMOVE FRONT DOOR WINDOW FRAME FRONT MOULDING

(a) Using an infrared light, heat the front door window frame front moulding.
NOTICE:
Do not burn yourself with the heated front door panel or infrared light.
HINT:
Heat at 40 to 60°C (104 to 140°F) for 3 to 5 minutes.

(b) Disengage the 2 claws and remove the double-sided adhesive tape and the front door window frame front moulding.

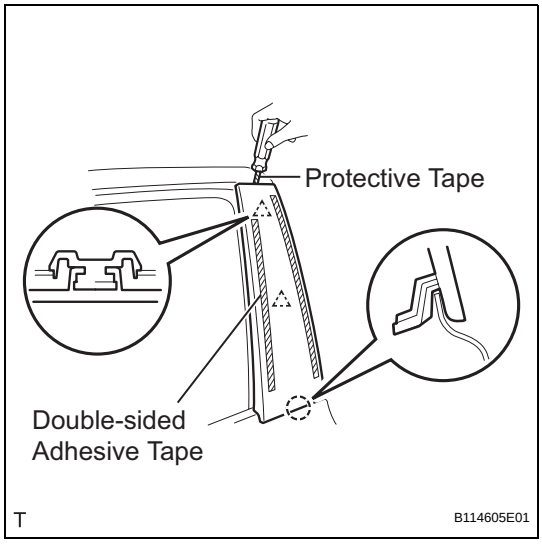

2. REMOVE FRONT DOOR WINDOW FRAME REAR MOULDING (for 3 Door)

(a) Using an infrared light, heat the front door window frame rear moulding.
NOTICE:
Do not burn yourself with the heated front door panel or infrared light.
HINT:
Heat at 40 to 60°C (104 to 140°F) for 3 to 5 minutes.

(b) Using a screwdriver with its tip wrapped in protective tape, disengage the 2 clips and the claw and remove the double-sided adhesive tape and the front door window frame rear moulding.

INSTALLATION

HINT:
The procedure described below is for the LH side. Use the same procedure for both the RH and LH sides, unless otherwise specified.

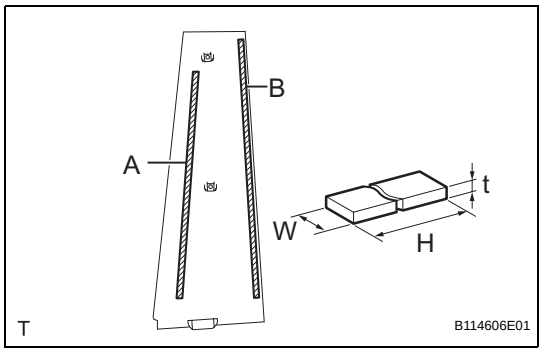

1. INSTALL FRONT DOOR WINDOW FRAME REAR MOULDING (for 3 Door)

(a) Clean the attachment surface.
  (1) Using an infrared light, heat the adhesive remaining on the body.
  NOTICE:
  Do not burn yourself with the heated body or infrared light.
  (2) Using a shop rag or piece of cloth, rub the remaining adhesive off the body.
  (3) Using a non-residue solvent, clean the attachment surface.

(b) Apply new double-sided adhesive tape to the front door window frame rear moulding.
  Tape Size:

Area	t	W	H
A	0.8 mm (0.032 in.)	5 mm (0.197 in.)	340 mm (13.386 in.)
B	0.8 mm (0.032 in.)	5 mm (0.197 in.)	376 mm (14.803 in.)

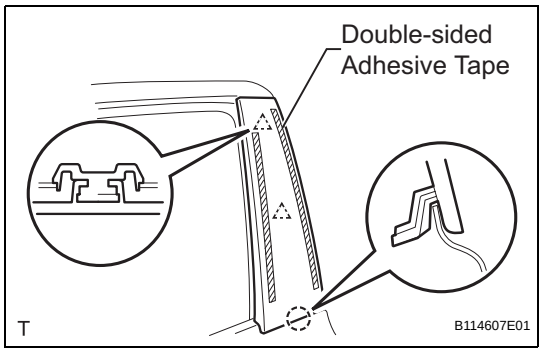

(c) Engage the 2 clips and the claw and install the front door window frame rear moulding.

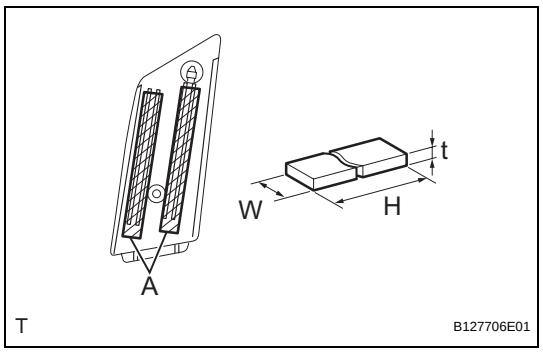

2. INSTALL FRONT DOOR WINDOW FRAME FRONT MOULDING

(a) Clean the attachment surface.
  (1) Using an infrared light, heat the adhesive remaining on the body.
  NOTICE:
  Do not burn yourself with the heated body or infrared light.
  (2) Using a shop rag or piece of cloth, rub the remaining adhesive off the body.
  (3) Using a non-residue solvent, clean the attachment surface.

(b) Apply new double-sided adhesive tape to the front door window frame front moulding.
  Tape Size:

Area	t	W	H
A	1.2 mm (0.047 in.)	7 mm (0.276 in.)	88 mm (3.465 in.)

ET

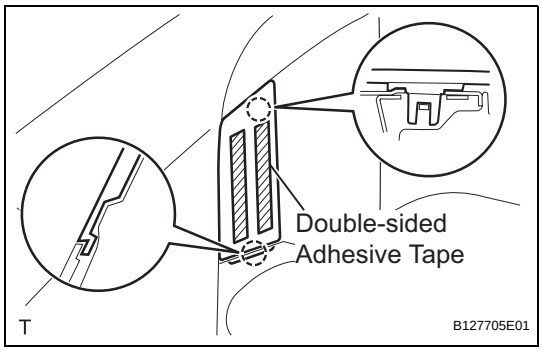

(c) Engage the 2 claws and install the front door window frame front moulding.

LUGGAGE COMPARTMENT DOOR GARNISH (for Sedan)

COMPONENTS

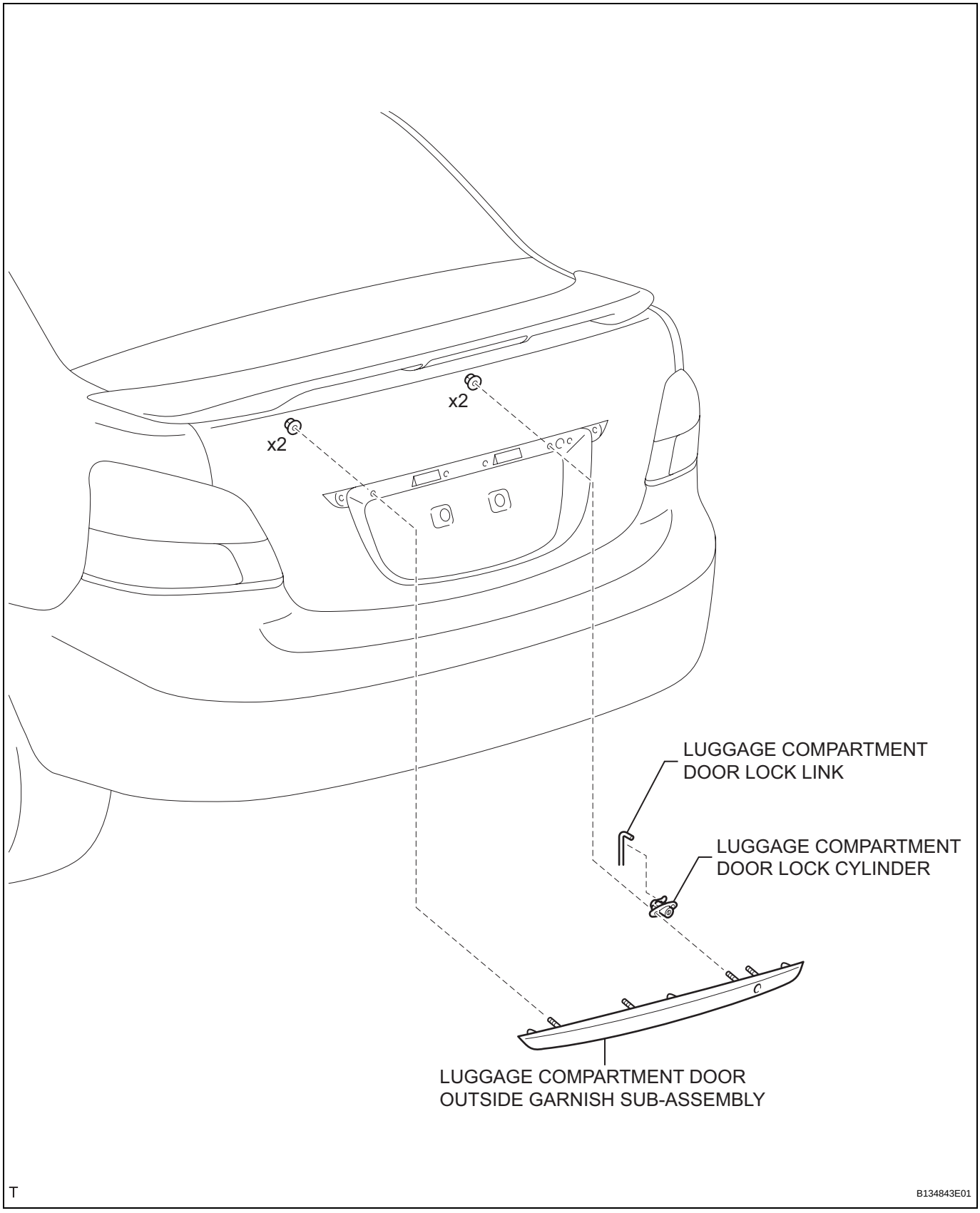

ET

REMOVAL

1. **REMOVE LUGGAGE COMPARTMENT DOOR LOCK CYLINDER (See page ED-132)**

2. **REMOVE LUGGAGE COMPARTMENT DOOR OUTSIDE GARNISH SUB-ASSEMBLY**
   (a) Remove the 2 nuts.
   (b) Disengage the 3 clips and remove the luggage compartment door outside garnish.

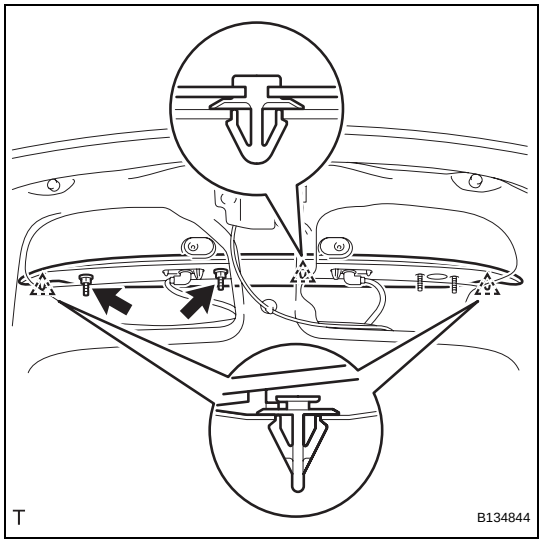

INSTALLATION

1. **INSTALL LUGGAGE COMPARTMENT DOOR OUTSIDE GARNISH SUB-ASSEMBLY**
   (a) Engage the 3 clips and install the luggage compartment door outside garnish.
   (b) Tighten the 2 nuts.

2. **INSTALL LUGGAGE COMPARTMENT DOOR LOCK CYLINDER (See page ED-138)**

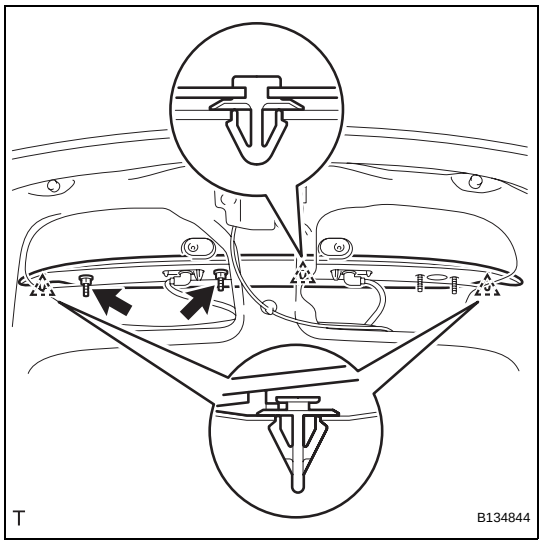

ET

NO. 1 BLACK OUT TAPE (for Sedan)

COMPONENTS

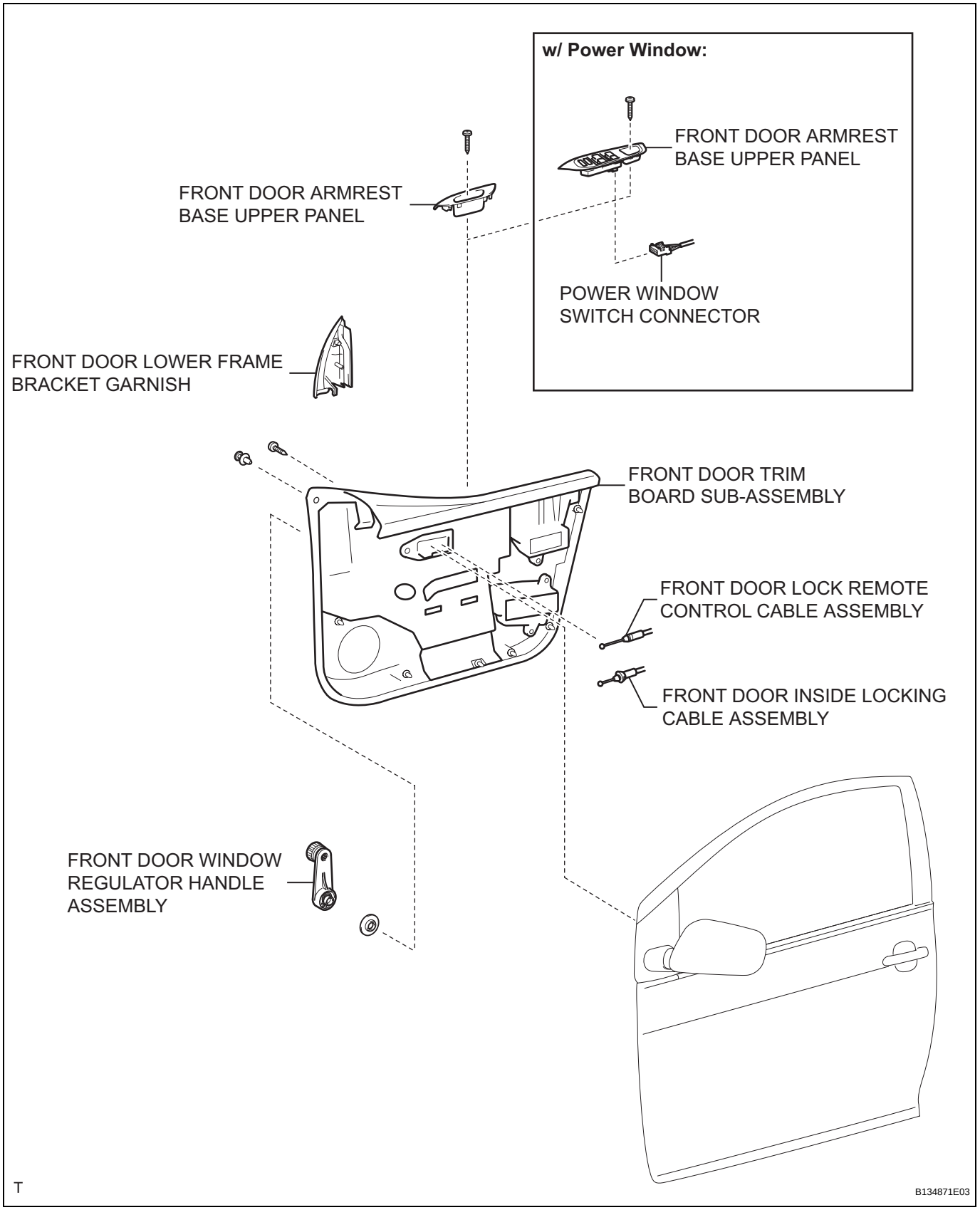

ET

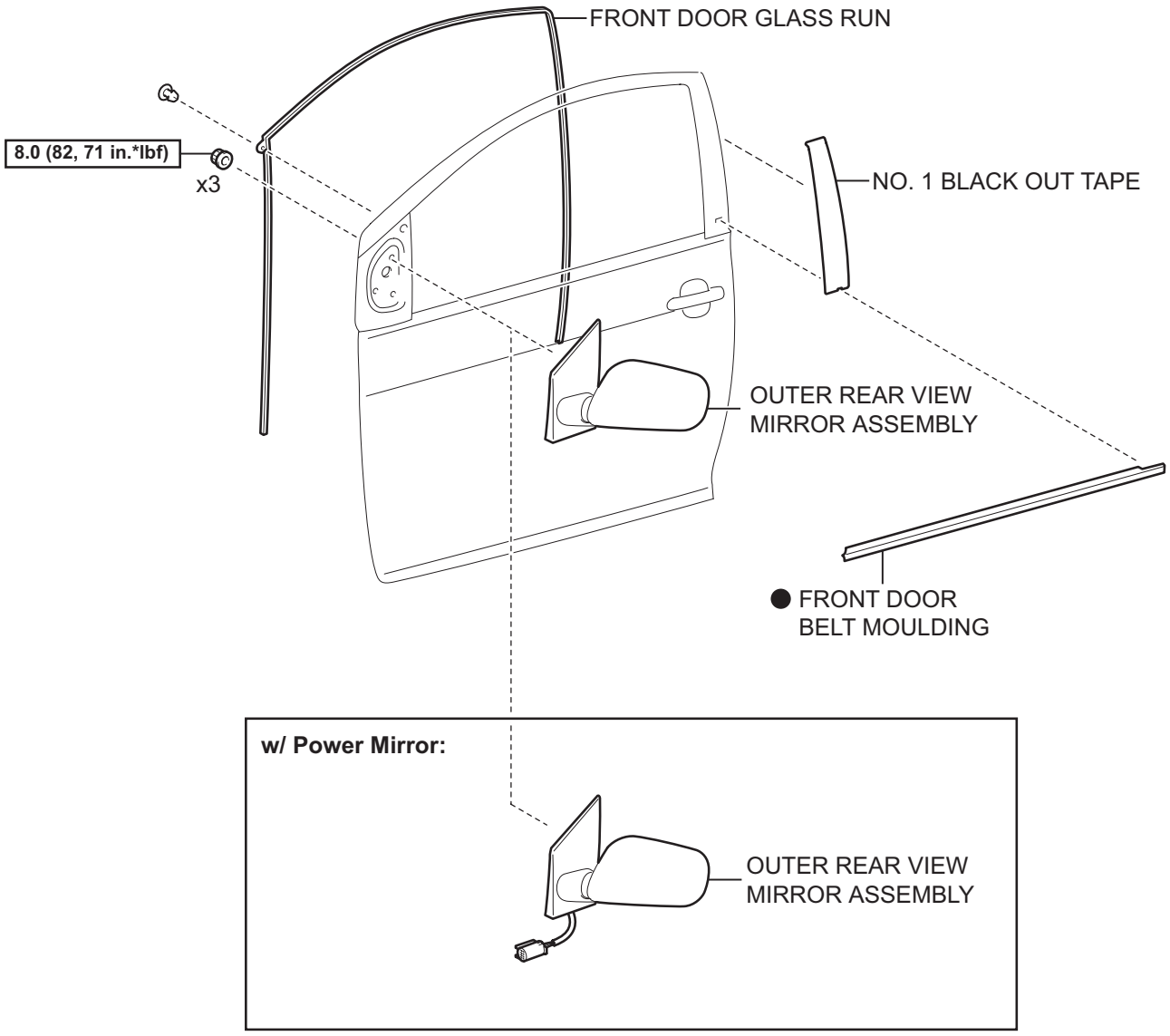

N*m (kgf*cm, ft*lbf) : Specified torque

● Non-reusable part

T

B134876E02

ET

REMOVAL

HINT:
The procedure described below is for the LH side. Use the same procedure for the RH and LH sides, unless otherwise specified.

1. **DISCONNECT CABLE FROM NEGATIVE BATTERY TERMINAL**
2. **REMOVE FRONT DOOR WINDOW REGULATOR HANDLE ASSEMBLY (w/o Power Window) (See page ED-9)**
3. **REMOVE FRONT DOOR LOWER FRAME BRACKET GARNISH (See page ED-9)**
4. **REMOVE FRONT DOOR ARMREST BASE UPPER PANEL (See page ED-9)**
5. **REMOVE FRONT DOOR TRIM BOARD SUB-ASSEMBLY (See page ED-11)**
6. **REMOVE OUTER REAR VIEW MIRROR ASSEMBLY (See page MI-8)**
7. **REMOVE FRONT DOOR BELT MOULDING (See page ET-85)**
8. **REMOVE FRONT DOOR GLASS RUN (See page ED-14)**
9. **REMOVE NO. 1 BLACK OUT TAPE**
   (a) Using an infrared light, heat the black out tape.
   NOTICE:
   Do not burn yourself with the heated front door panel or infrared light.
   HINT:
   Heat at 40 to 60°C (104 to 140°F) for 3 to 5 minutes.
   (b) Lift the end portion with your nail and peel it parallel to the attachment surface.

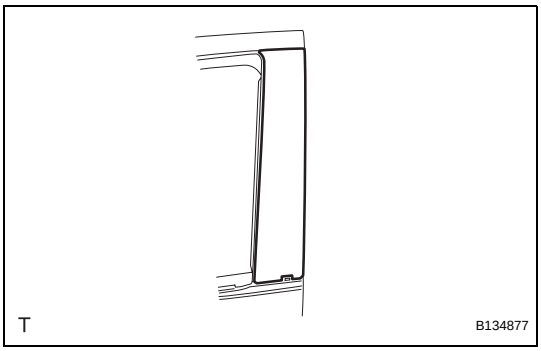

ET

INSTALLATION

HINT:
The procedure described below is for the LH side. Use the same procedure for the RH and LH sides, unless otherwise specified.

1. INSTALL NO. 1 BLACK OUT TAPE

(a) Application precautions:

(1) Application temperature:

1. If the temperature is below 15°C (59°F), using an infrared light, heat the base (body attachment surface) and black out tape up to between 20 and 30°C (68 and 86°F). If the temperature is over 35°C (95°F), perform the operation after lowering the temperature to below 35°C (95°F).

HINT:

- The most suitable temperature for applying the black out tape is 25°C (77°F).
- The black out tape cannot be applied correctly at low temperature due to its stiffness and weak adhesion. The tape loses its consistency at high temperature.

(2) Pre-application procedure:

1. Any uneven twisting or dust on the base (body attachment surface) causes a defective appearance due to air being trapped under the black out tape during application. Make sure there is no uneven twisting or dust on or around the base or black out tape.

HINT:
When the air is dry in winter, put cardboard between the pieces of black out tape and keep them in a dry flat place.

(3) Handling:

1. Keep the black out tape in a dry flat level place because it is easily deformed.

NOTICE:
Do not fold, bend or expose the tape to high temperatures.

(4) Application method (Method of squeegee operation and application for general portions):

NOTICE:

- **The positioning accuracy must be within 1 mm (0.039 in.) when starting the application, otherwise, poor appearance and adhesion will result.**
- **Do not reuse black out tape that has been removed. It causes deformation and weak adhesion.**

1. In order to suppress bubble formation, slightly raise the portion not being pressed by the squeegee away from the base. Tilt the squeegee between 40 and 50° (in the pushing direction) and between 30 and 45° (in the pulling direction), and apply 20 to 30 N (2 to 3 kg, 4 to 6 lb) of pressure at a velocity of 3 to 7 cm/sec. while pushing out the air.

Pushing Direction:

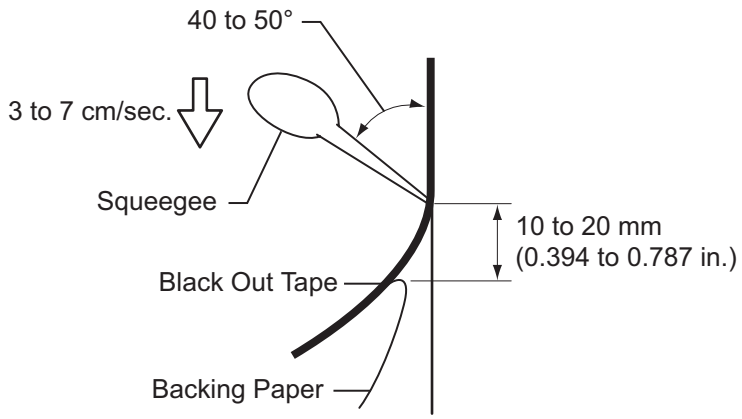

Pulling Direction:

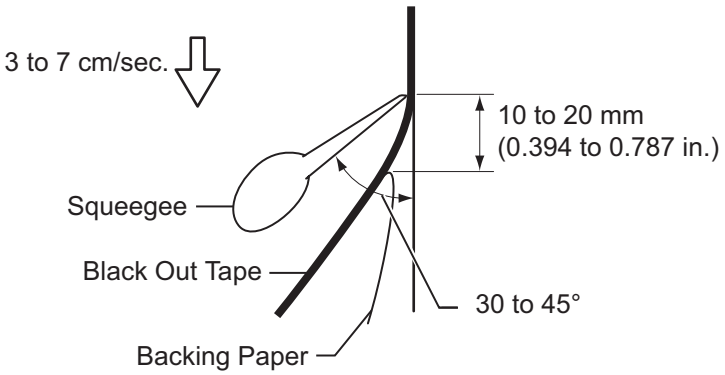

T

B114637E01

NOTICE:
While using the squeegee, do not change the speed, stop the operation or change the force of the application. Doing so could cause a streak across the surface of the black out tape called a shock line. While using the squeegee, keep the speed and force of application constant and the angle correct.

ET

HINT:
- The squeegee can be tilted in either the pushing direction or in the pulling direction against the attachment portion.
- Perform the procedure while peeling the backing paper off the black out tape, 10 to 20 mm (0.394 to 0.787 in.) from the end of the squeegee.

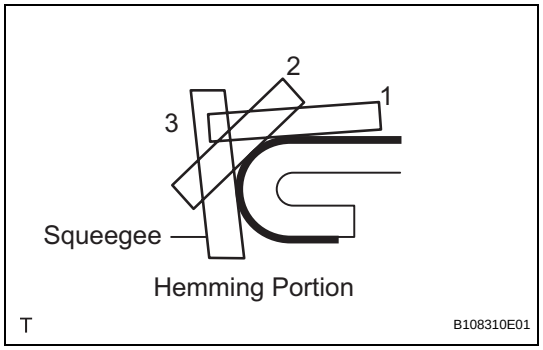

(5) Application method (Method of squeegee operation and application method for hemming portions):
1. If the tape cannot be pressed in one step using the squeegee, perform the application in several steps. Using your finger or a thicker part of the squeegee, gradually apply the tape to the small R portion of the hemming portion in 2 or 3 steps.

HINT:
Peel off the backing paper at the hemming portion and apply the black out tape with your finger or a thicker part of the squeegee.

(6) Application method (Method of squeegee operation and application method for corner sections):
1. Carefully apply the tape using a finger after peeling the backing paper off the corner section.
2. In order to prevent appearance deterioration caused by the tape pin angle, turn in the tape at the corner after heating the black out tape with a dryer.

(7) Inspection:
1. Repeat the application using new black out tape.

NOTICE:
Do not use a needle to rectify bubbles in any glazed tape being applied to the outer panel, in order to make scratches virtually imperceptible.

HINT:
Use an instant adhesive if the hemming or corner portions of the black out tape are partially peeled off.

(b) Clean the attachment surface (Using an infrared light):

(1) Using an infrared light, heat any black out tape and adhesive remaining on the body.

CAUTION:
Do not burn yourself with the heated body or infrared light.

(2) Using a shop rag or piece of cloth, rub the remaining black out tape and adhesive off the body.

ET

(3) Using a non-residue solvent, clean the attachment surface.

(c) Clean the attachment surface (Using a tape removal disc):

(1) Set the 8 discs in the holder and insert the removal disc into an air drill or electric drill.
NOTICE:
Use an electric drill of which the no-load operation is 2,000 to 3,000 r/min.

(2) Using a tape removal disc, rub the remaining black out tape and adhesive off the body.
NOTICE:
- **Wear protective glasses during the operation.**
- **Rotate and operate the disc in the correct direction.**
- **Visually check that the cutting portion is not damaged while rubbing the remaining black out tape and adhesive off the body.**

(3) Using a non-residue solvent, clean the attachment surface.

(d) Apply new No. 1 black out tape to the positions shown in the illustration.

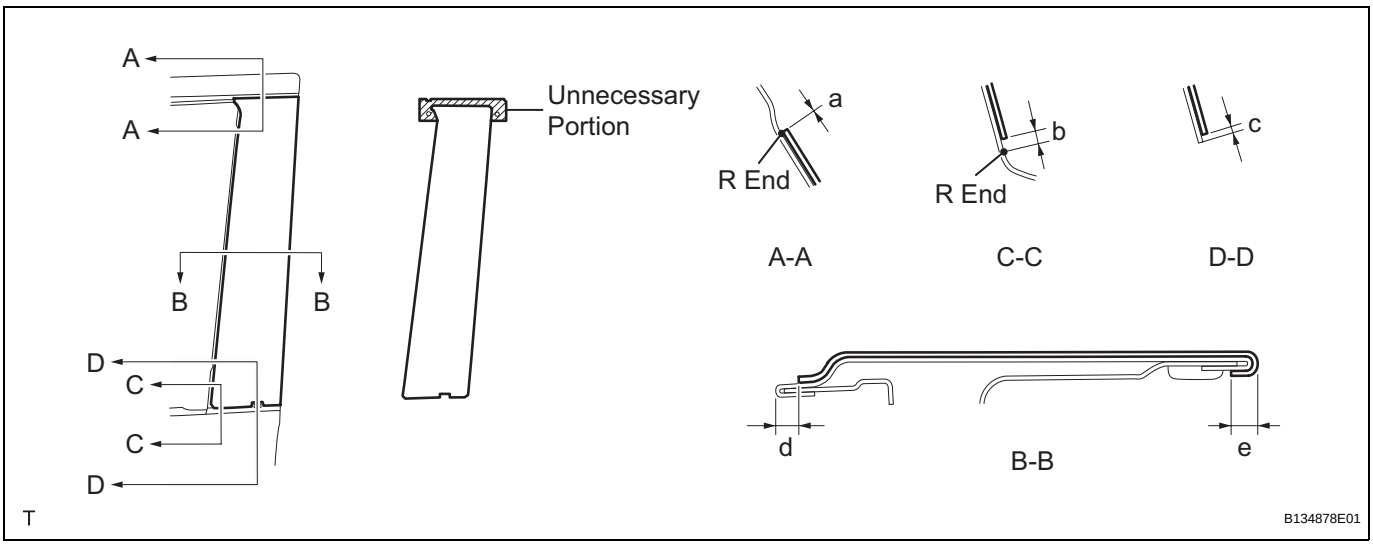

Installation position

Mark	Measurement (along surface)
a	+-1 mm (+-0.039 in.)
b	2 mm (0.079 in.)
c	0 to 1.8 mm (0 to 0.071 in.)
d	3 to 5 mm (0.118 to 0.197 in.)
e	2 to 4 mm (0.079 to 0.157 in.)

2. **INSTALL FRONT DOOR GLASS RUN (See page ED-23)**

3. **INSTALL FRONT DOOR BELT MOULDING (See page ET-86)**

ET

4. **INSTALL OUTER REAR VIEW MIRROR ASSEMBLY (See page MI-11)**
5. **INSTALL FRONT DOOR TRIM BOARD SUB-ASSEMBLY (See page ED-26)**
6. **INSTALL FRONT DOOR ARMREST BASE UPPER PANEL (See page ED-28)**
7. **INSTALL FRONT DOOR LOWER FRAME BRACKET GARNISH (See page ED-28)**
8. **INSTALL FRONT DOOR WINDOW REGULATOR HANDLE ASSEMBLY (w/o Power Window) (See page ED-29)**
9. **CONNECT CABLE TO NEGATIVE BATTERY TERMINAL**
   Torque: 5.4 N*m (55 kgf*cm, 48 in.*lbf)

NO. 1 BLACK OUT TAPE (for Hatchback)

COMPONENTS

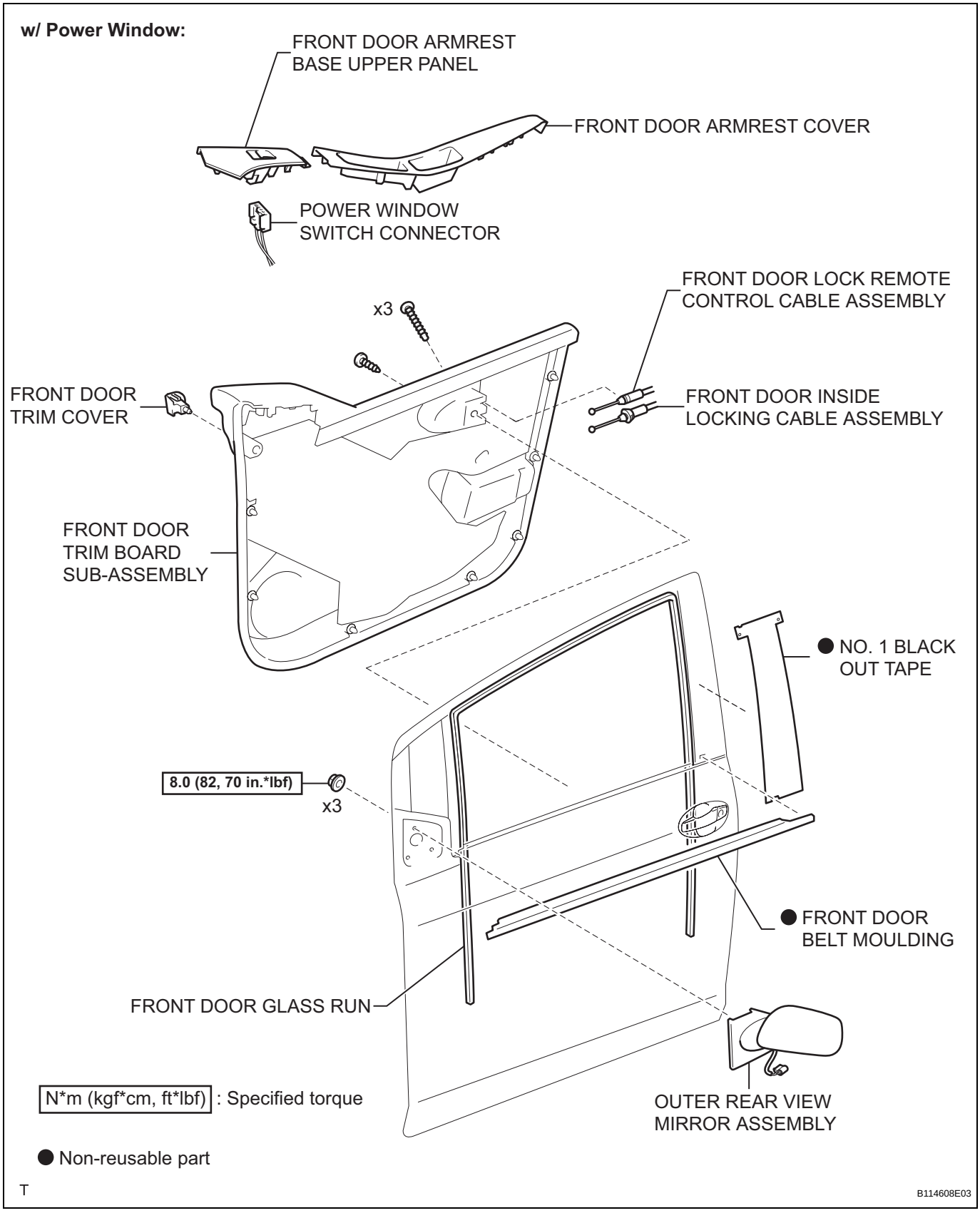

ET

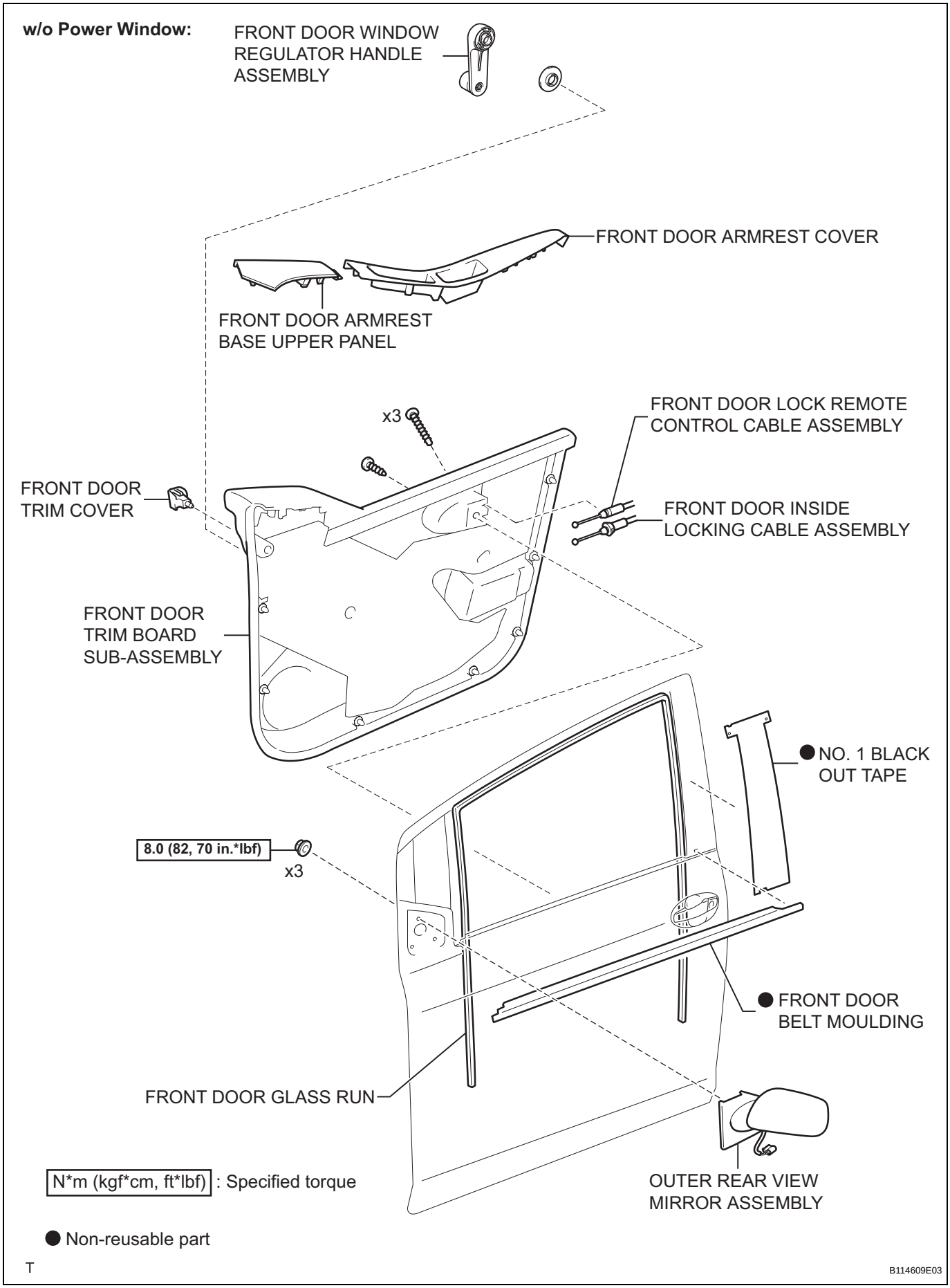
w/o Power Window:
FRONT DOOR WINDOW REGULATOR HANDLE ASSEMBLY
FRONT DOOR ARMREST COVER
FRONT DOOR ARMREST BASE UPPER PANEL
x3
FRONT DOOR LOCK REMOTE CONTROL CABLE ASSEMBLY
FRONT DOOR TRIM COVER
FRONT DOOR INSIDE LOCKING CABLE ASSEMBLY
FRONT DOOR TRIM BOARD SUB-ASSEMBLY
● NO. 1 BLACK OUT TAPE
8.0 (82, 70 in.*lbf)
x3
● FRONT DOOR BELT MOULDING
FRONT DOOR GLASS RUN
OUTER REAR VIEW MIRROR ASSEMBLY
N*m (kgf*cm, ft*lbf) : Specified torque
● Non-reusable part
T
B114609E03

ET

REMOVAL

HINT:
The procedure described below is for the LH side. Use the same procedure for both the RH and LH sides, unless otherwise specified.

1. **DISCONNECT CABLE FROM NEGATIVE BATTERY TERMINAL (w/ Power Window)**
2. **REMOVE FRONT DOOR ARMREST COVER (See page ED-33)**
3. **REMOVE FRONT DOOR ARMREST BASE UPPER PANEL**
   (a) w/ Power Window:
      (1) Remove the front door armrest base upper panel (See page ED-33).
   (b) w/o Power Window:
      (1) Remove the front door armrest base upper panel (See page ED-57).
4. **REMOVE FRONT DOOR WINDOW REGULATOR HANDLE ASSEMBLY (w/o Power Window) (See page ED-58)**
5. **REMOVE FRONT DOOR TRIM BOARD SUB-ASSEMBLY**
   (a) w/ Power Window:
      (1) Remove the front door trim board sub-assembly (See page ED-34).
   (b) w/o Power Window:
      (1) Remove the front door trim board sub-assembly (See page ED-58).
6. **REMOVE OUTER REAR VIEW MIRROR ASSEMBLY (See page MI-13)**
7. **REMOVE FRONT DOOR BELT MOULDING (See page ET-91)**
8. **REMOVE FRONT DOOR GLASS RUN (See page ED-37)**
9. **REMOVE NO. 1 BLACK OUT TAPE**
   (a) Using an infrared light, heat the black out tape.
   NOTICE:
   Do not burn yourself with the heated front door panel or infrared light.
   HINT:
   Heat at 40 to 60°C (104 to 140°F) for 3 to 5 minutes.
   (b) Lift the end portion with your nail and peel it parallel to the attachment surface.

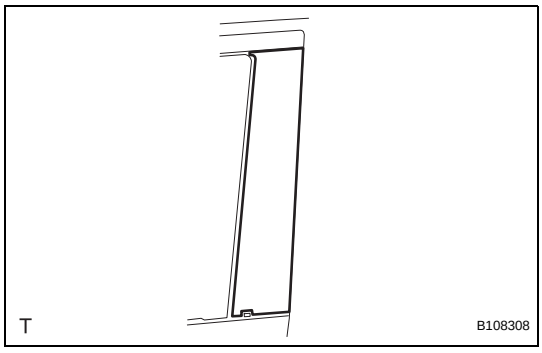

ET

INSTALLATION

HINT:
The procedure described below is for the LH side. Use the same procedure for both the RH and LH sides, unless otherwise specified.

1. INSTALL NO. 1 BLACK OUT TAPE

(a) Application precautions:

(1) Application temperature:
If the temperature is below 15°C (59°F), using an infrared light, heat the base (body attachment surface) and black out tape up to between 20 and 30°C (68 and 86°F). If the temperature is over 35°C (95°F), perform the operation after lowering the temperature to below 35°C (95°F).
HINT:
- The most suitable temperature for applying the black out tape is 25°C (77°F).
- The black out tape cannot be applied correctly at low temperatures due to its stiffness and weak adhesion. The tape loses its consistency at high temperatures.

(2) Pre-application procedure:
Any uneven twisting or dust on the base (body attachment surface) causes a defective appearance due to air being trapped under the black out tape during application. Make sure there is no uneven twisting or dust on or around the base or black out tape.
HINT:
When the air is dry in winter, put cardboard between the piece of black out tape and keep it in a dry flat place.

(3) Handling:
Keep the black out tape in a dry flat level place because it is easily deformed.
NOTICE:
Do not fold, bend or expose the tape to high temperatures.

(4) Application method (Method of squeegee operation and application for general portions):
NOTICE:
- **The positioning accuracy must be within 1mm (0.039 in.) when starting the application, otherwise, poor appearance and adhesion will result.**
- **Do not reuse black out tape that has been removed. It causes deformation and weak adhesion.**

1. In order to suppress bubble formation, slightly raise the portion not being pressed by the squeegee away from the base. Tilt the squeegee between 40 and 50° (in the pushing direction) and between 30 and 45° (in the pulling direction), and apply 20 to 30 N (2 to 3 kg, 4 to 6 lb) of pressure at a velocity of 3 to 7 cm/sec. while pushing out the air.

Pushing Direction:

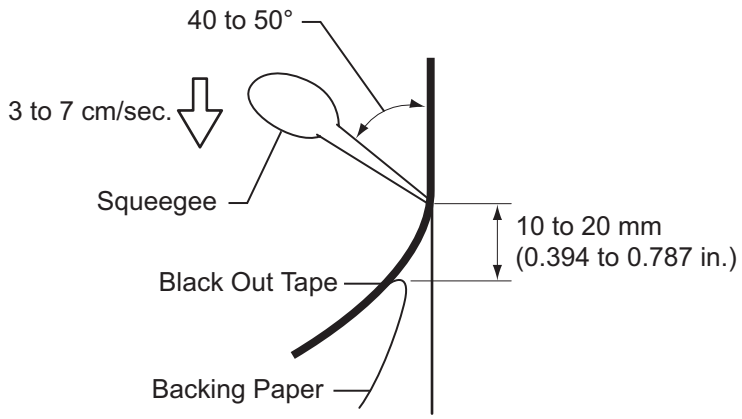

Pulling Direction:

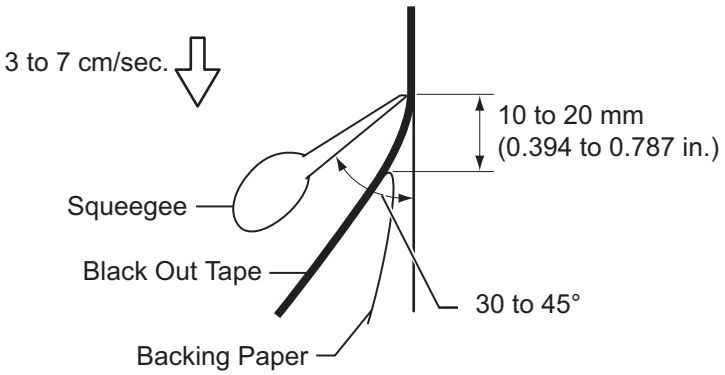

T

B114637E01

NOTICE:
While using the squeegee, do not change the speed, stop the operation or change the force of the application. Doing so could cause a streak across the surface of the black out tape called a shock line. While using the squeegee, keep the speed and force of application constant and the angle correct.

ET

HINT:
- The squeegee can be tilted in either the pushing direction or in the pulling direction against the attachment portion.
- Perform the procedure while peeling the backing paper off the black out tape, 10 to 20 mm (0.394 to 0.787 in.) from the end of the squeegee.

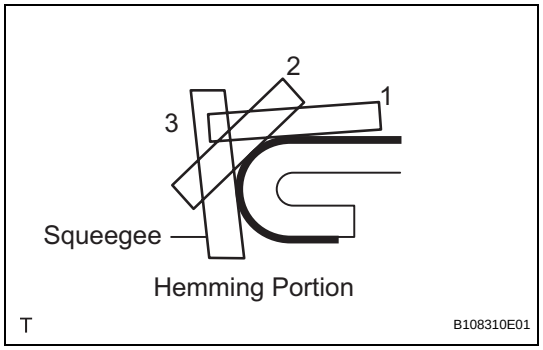

(5) Application method (Method of squeegee operation and application method for hemming portions):
If the tape cannot be pressed in one step using the squeegee, perform the application in several steps. Using your finger or a thicker part of the squeegee, gradually apply the tape to the small R portion of the hemming portion in 2 or 3 steps.
HINT:
Peel off the backing paper at the hemming portion and apply the black out tape with your finger or thicker part of the squeegee.

(6) Application method (Method of squeegee operation and application method for corner sections):
- Carefully apply the tape using a finger after peeling the backing paper off the corner section.
- In order to prevent appearance deterioration caused by the tape pin angle, turn in the tape at the corner after heating the black out tape with a dryer.

(7) Inspection:
Repeat the application using new black out tape if any visual defects are found after completing the application.
NOTICE:
Do not use a needle to rectify bubbles in any glazed tape being applied to the outer panel, in order to make scratches virtually imperceptible.
HINT:
Use an instant adhesive if the hemming or corner portions of the black out tape are partially peeled off.

(b) Clean the attachment surface (using an infrared light):

(1) Using an infrared light, heat any black out tape and adhesive remaining on the body.
CAUTION:
Do not burn yourself with the heated body or infrared light.

(2) Using a shop rag or piece of cloth, rub the remaining black out tape and adhesive off the body.

(3) Using a non-residue solvent, clean the attachment surface.

(c) Clean the attachment surface (using a tape removal disc):

(1) Set the 8 discs in the holder and insert the removal disc into an air drill or electric drill.
NOTICE:
Use an electric drill of which the no-load operation is 2,000 to 3,000 r/min.

(2) Using a tape removal disc, rub the remaining black out tape and adhesive off the body.
NOTICE:
- **Wear protective glasses during the operation.**
- **Rotate and operate the disc in the correct direction.**
- **Visually check that the cutting portion is not damaged while rubbing the remaining black out tape and adhesive off the body.**

(3) Using a non-residue solvent, clean the attachment surface.

(d) Apply new black out tape to the positions shown in the illustration.

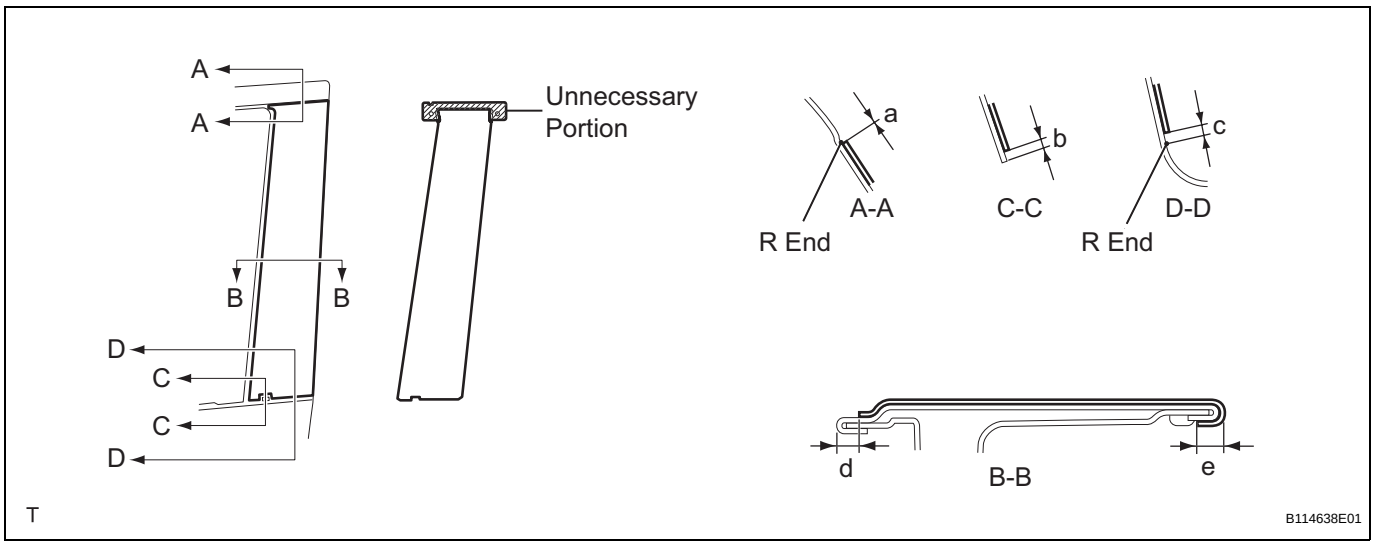

Installation position

Mark	Measurement (along surface)
a	+-1 mm (+-0.039 in.)
b	0 to 1.8 mm (0 to 0.071 in.)
c	2 mm (0.079 in.)
d	1.2 to 3.2 mm (0.047 to 0.126 in.)
e	2 to 4 mm (0.079 to 0.157 in.)

2. **INSTALL FRONT DOOR GLASS RUN (See page ED-49)**

3. **INSTALL FRONT DOOR BELT MOULDING (See page ET-92)**

4. **INSTALL OUTER REAR VIEW MIRROR ASSEMBLY (See page MI-16)**

5. **INSTALL FRONT DOOR TRIM BOARD SUB-ASSEMBLY**
   (a) w/ Power Window:
      (1) Install the front door trim board sub-assembly (See page ED-51).
   (b) w/o Power Window:
      (1) Install the front door trim board sub-assembly (See page ED-74).

6. **INSTALL FRONT DOOR WINDOW REGULATOR HANDLE ASSEMBLY (w/o Power Window) (See page ED-75)**

7. **INSTALL FRONT DOOR ARMREST BASE UPPER PANEL**
   (a) w/ Power Window:
      (1) Install the front door armrest base upper panel (See page ED-53).
   (b) w/o Power Window:
      (1) Install the front door armrest base upper panel (See page ED-74).

8. **INSTALL FRONT DOOR ARMREST COVER (See page ED-53)**

9. **CONNECT CABLE TO NEGATIVE BATTERY TERMINAL (w/ Power Window)**
   Torque: 5.4 N*m (55 kgf*cm, 48 in.*lbf)

NO. 2 BLACK OUT TAPE (for Sedan)

COMPONENTS

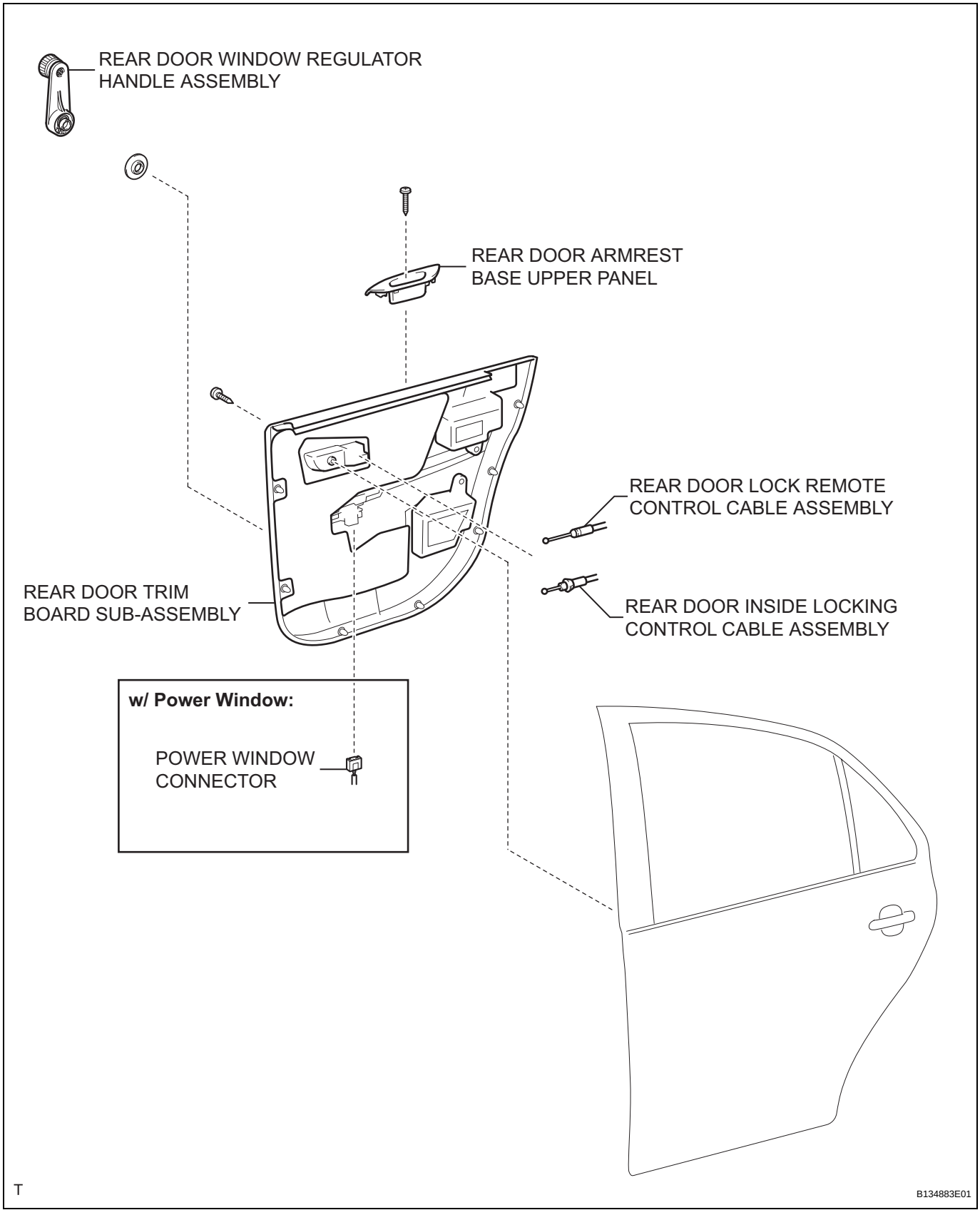

ET

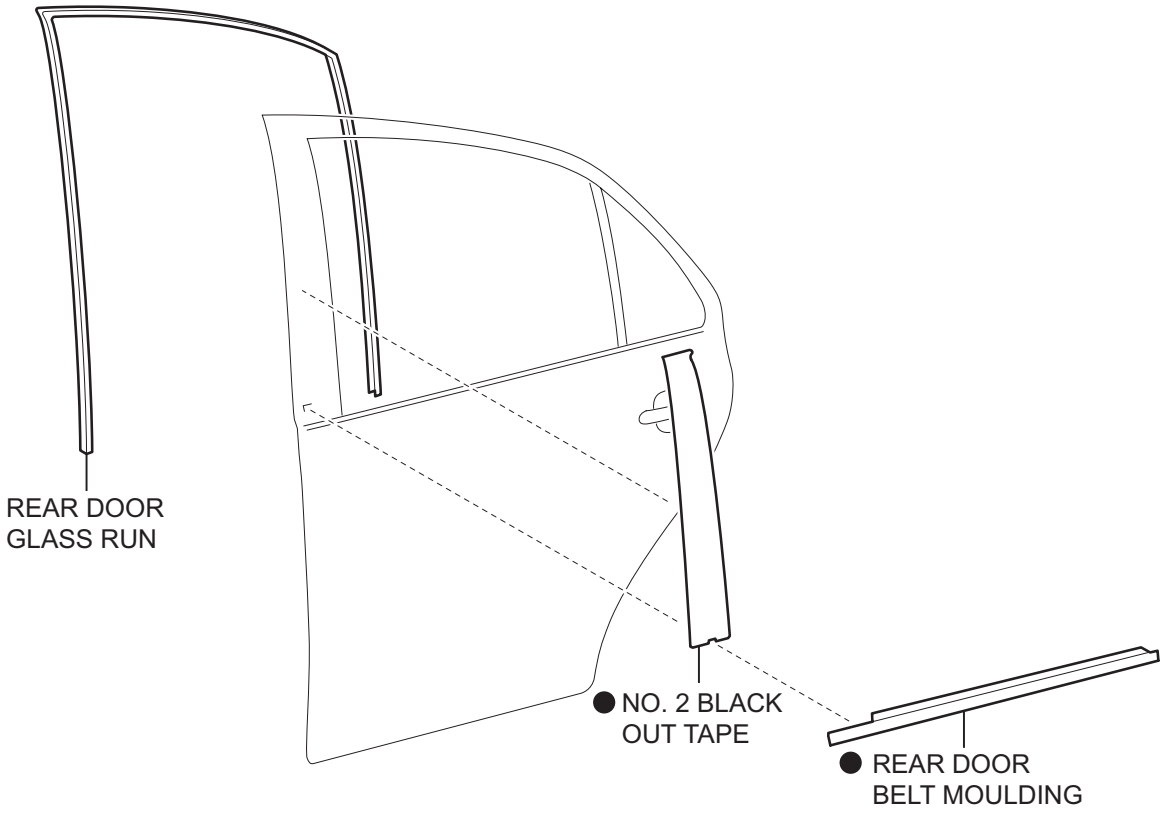

● Non-reusable part

T

B134884E01

REMOVAL

HINT:
The procedure described below is for the LH side. Use the same procedure for the RH and LH sides, unless otherwise specified.

1. **DISCONNECT CABLE FROM NEGATIVE BATTERY TERMINAL (w/ Power Window)**
2. **REMOVE REAR DOOR WINDOW REGULATOR HANDLE ASSEMBLY (w/o Power Window) (See page ED-79)**
3. **REMOVE REAR DOOR ARMREST BASE UPPER PANEL (See page ED-79)**
4. **REMOVE REAR DOOR TRIM BOARD SUB-ASSEMBLY (See page ED-79)**
5. **REMOVE REAR DOOR BELT MOULDING (See page ET-95)**
6. **REMOVE REAR DOOR GLASS RUN (See page ED-81)**
7. **REMOVE NO. 2 BLACK OUT TAPE**
   (a) Using an infrared light, heat the No. 2 black out tape.
   NOTICE:
   Do not burn yourself with the heated front door panel or infrared light.
   HINT:
   Heat at 40 to 60°C (104 to 140°F) for 3 to 5 minutes.
   (b) Lift the end portion with your nail and peel it parallel to the attachment surface.

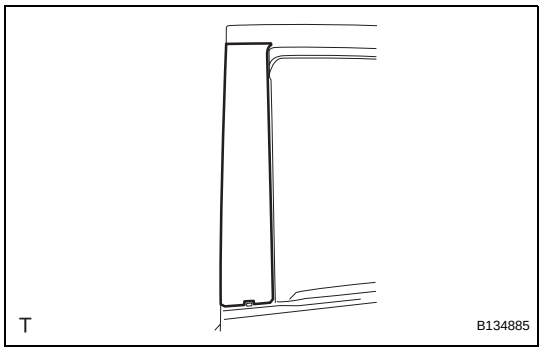

INSTALLATION

HINT:
The procedure described below is for the LH side. Use the same procedure for the RH and LH sides, unless otherwise specified.

1. INSTALL NO. 2 BLACK OUT TAPE

(a) Application precautions (See page ET-120).
(b) Clean the attachment surface (Using an infrared light) (See page ET-120).
(c) Clean the attachment surface (Using a tape removal disc) (See page ET-120).
(d) Apply new No. 1 black out tape to the positions shown in the illustration.

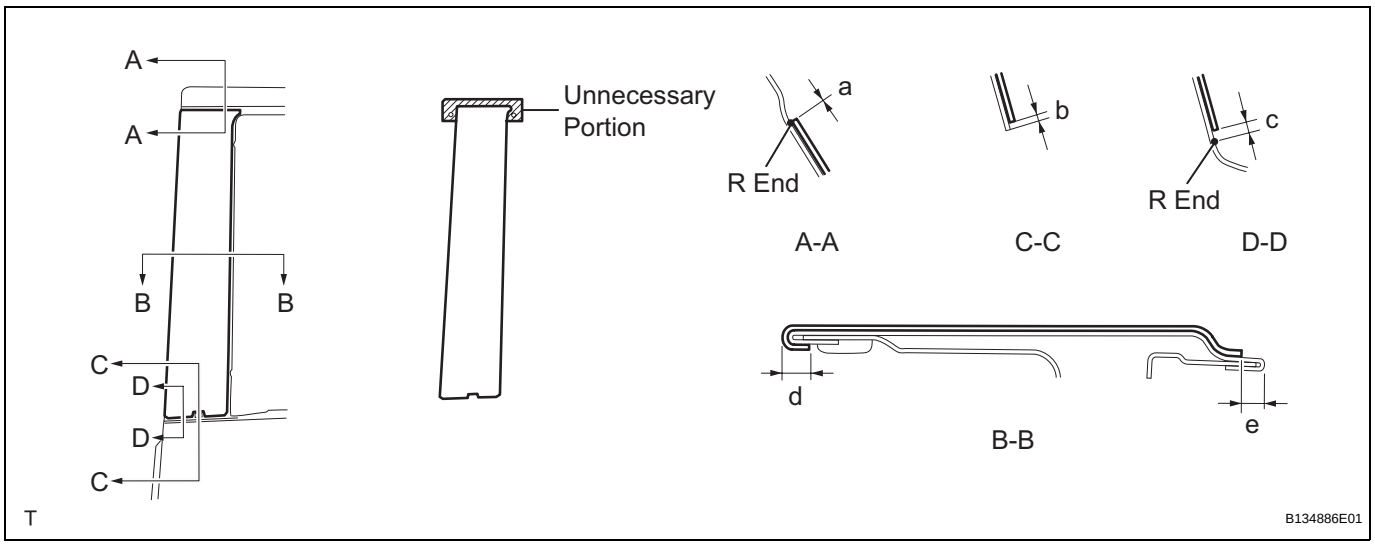

Installation position

Mark	Measurement (along surface)
a	+-1 mm (+-0.039 in.)
b	0 to 0.8 mm (0 to 0.032 in.)
c	2 mm (0.079 in.)
d	2 to 4mm (0.079 to 0.157 in.)
e	3 to 5 mm (0.118 to 0.197 in.)

2. INSTALL REAR DOOR GLASS RUN (See page ED-91)

3. INSTALL REAR DOOR BELT MOULDING (See page ET-95)

4. INSTALL REAR DOOR TRIM BOARD SUB-ASSEMBLY (See page ED-93)

5. INSTALL REAR DOOR ARMREST BASE UPPER PANEL (See page ED-94)

6. INSTALL REAR DOOR WINDOW REGULATOR HANDLE ASSEMBLY (w/o Power Window) (See page ED-94)

7. CONNECT CABLE TO NEGATIVE BATTERY TERMINAL (w/ Power Window)
Torque: 5.4 N*m (55 kgf*cm, 48 in.*lbf)

NO. 2 BLACK OUT TAPE (for Hatchback)

COMPONENTS

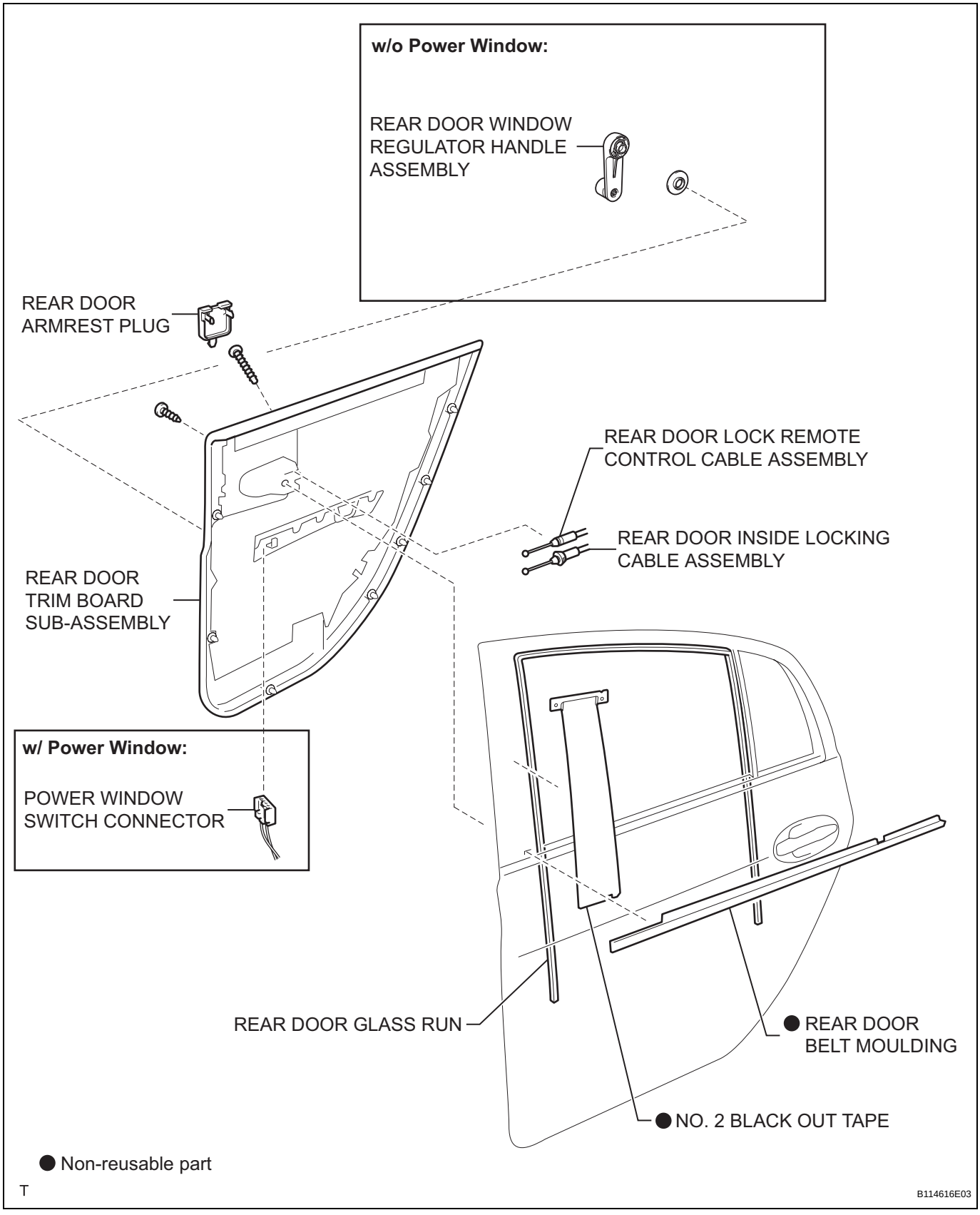

ET

REMOVAL

HINT:
The procedure described below is for the LH side. Use the same procedure for both the RH and LH sides, unless otherwise specified.

1. **DISCONNECT CABLE FROM NEGATIVE BATTERY TERMINAL (w/ Power Window)**
2. **REMOVE REAR DOOR WINDOW REGULATOR HANDLE ASSEMBLY (w/o Power Window) (See page ED-115)**
3. **REMOVE REAR DOOR TRIM BOARD SUB-ASSEMBLY**
   (a) w/ Power Window:
      (1) Remove the rear door trim board sub-assembly (See page ED-98).
   (b) w/o Power Window:
      (1) Remove the rear door trim board sub-assembly (See page ED-115).
4. **REMOVE REAR DOOR BELT MOULDING (See page ET-97)**
5. **REMOVE REAR DOOR GLASS RUN (See page ED-100)**
6. **REMOVE NO. 2 BLACK OUT TAPE**
   (a) Using an infrared light, heat the black out tape.
   NOTICE:
   Do not burn yourself with the heated front door panel or infrared light.
   HINT:
   Heat at 40 to 60°C (104 to 140°F) for 3 to 5 minutes.
   (b) Lift the end portion with your nail and peel it parallel to the attachment surface.

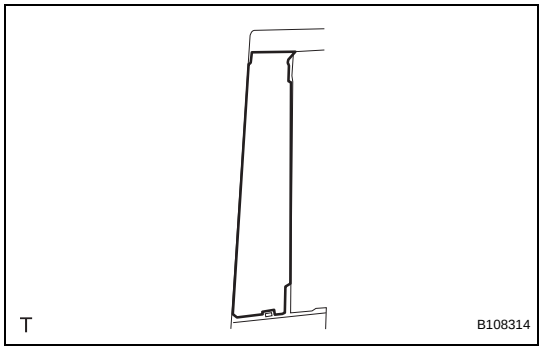

INSTALLATION

HINT:
The procedure described below is for the LH side. Use the same procedure for both the RH and LH sides, unless otherwise specified.

1. INSTALL NO. 2 BLACK OUT TAPE

(a) Precautions during application (See page ET-129).
(b) Clean the attachment surface (using an infrared light) (See page ET-129).
(c) Clean the attachment surface (using a tape removal disc) (See page ET-129).
(d) Apply a new black out tape to the positions shown in the illustration.

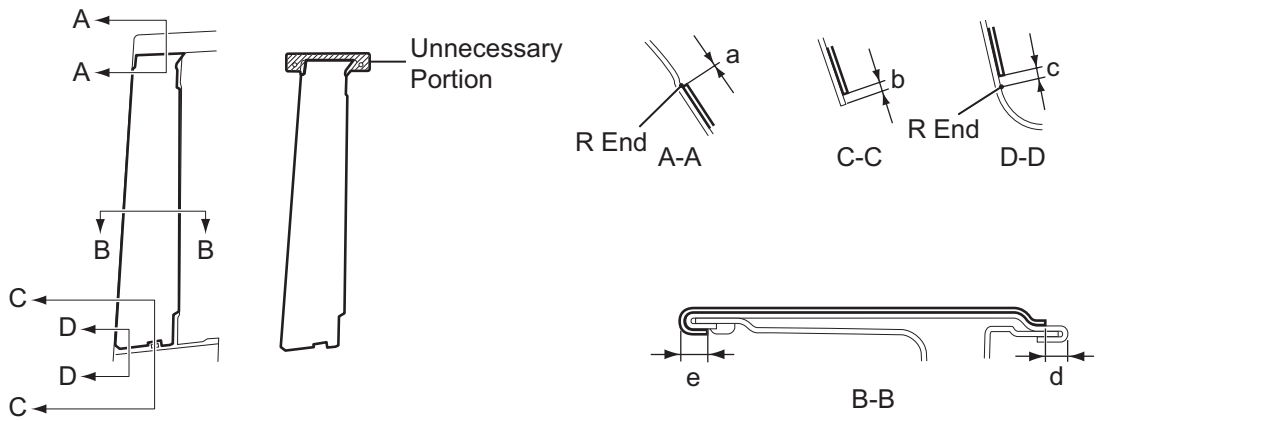

Installation position

Mark	Measurement (along surface)
a	+-1 mm (+-0.039 in.)
b	0 to 1.8 mm (0 to 0.071 in.)
c	2 mm (0.079 in.)
d	1.2 to 3.2 mm (0.047 to 0.126 in.)
e	2 to 4 mm (0.079 to 0.157 in.)

2. INSTALL REAR DOOR GLASS RUN (See page ED-109)

3. INSTALL REAR DOOR BELT MOULDING (See page ET-97)

4. INSTALL REAR DOOR TRIM BOARD SUB-ASSEMBLY

(a) w/ Power Window:
  (1) Install the rear door trim board sub-assembly (See page ED-111).
(b) w/o Power Window:
  (1) Install the rear door trim board sub-assembly (See page ED-127).

ET

5. **INSTALL REAR DOOR WINDOW REGULATOR HANDLE ASSEMBLY (w/o Power Window) (See page ED-128)**

6. **CONNECT CABLE TO NEGATIVE BATTERY TERMINAL (w/ Power Window)**
   Torque: 5.4 N*m (55 kgf*cm, 48 in.*lbf)

NO. 3 BLACK OUT TAPE (for Sedan)

COMPONENTS

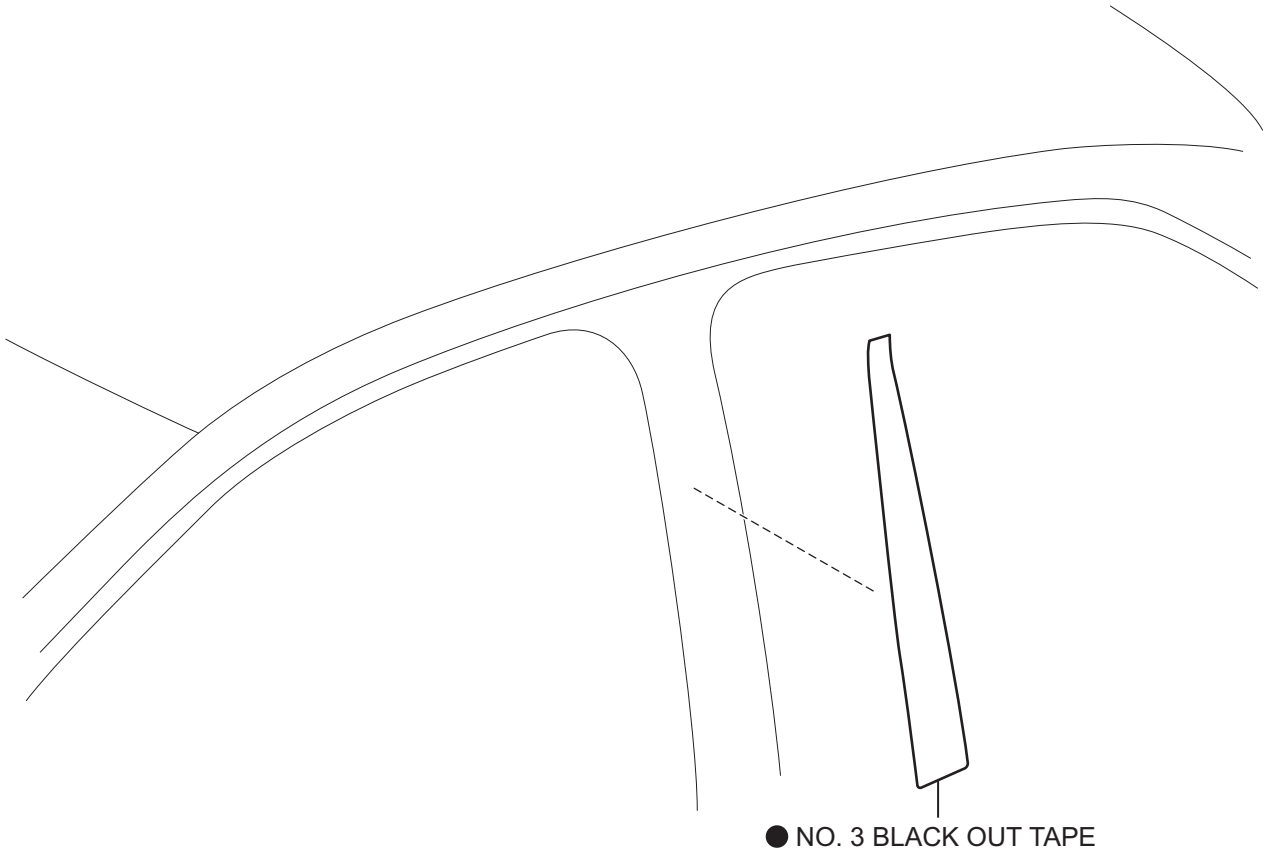

● Non-reusable part

T

B134887E01

ET

REMOVAL

HINT:
The procedure described below is for the LH side. Use the same procedure for the RH and LH sides, unless otherwise specified.

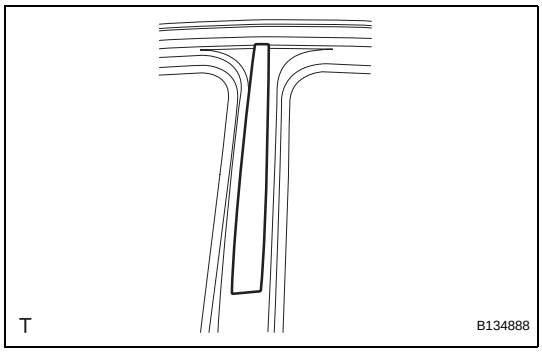

1. REMOVE NO. 3 BLACK OUT TAPE

(a) Using an infrared light, heat the No. 3 black out tape.
NOTICE:
Do not burn yourself with the heated front door panel or infrared light.
HINT:
Heat at 40 to 60°C (104 to 140°F) for 3 to 5 minutes.

(b) Lift the end portion with your nail and peel it parallel to the attachment surface.

INSTALLATION

HINT:
The procedure described below is for the LH side. Use the same procedure for the RH and LH sides, unless otherwise specified.

1. INSTALL NO. 3 BLACK OUT TAPE

(a) Application precautions (See page ET-120).
(b) Clean the attachment surface (Using an infrared light) (See page ET-120).
(c) Clean the attachment surface (Using a tape removal disc) (See page ET-120).
(d) Apply new No. 1 black out tape to the positions shown in the illustration.

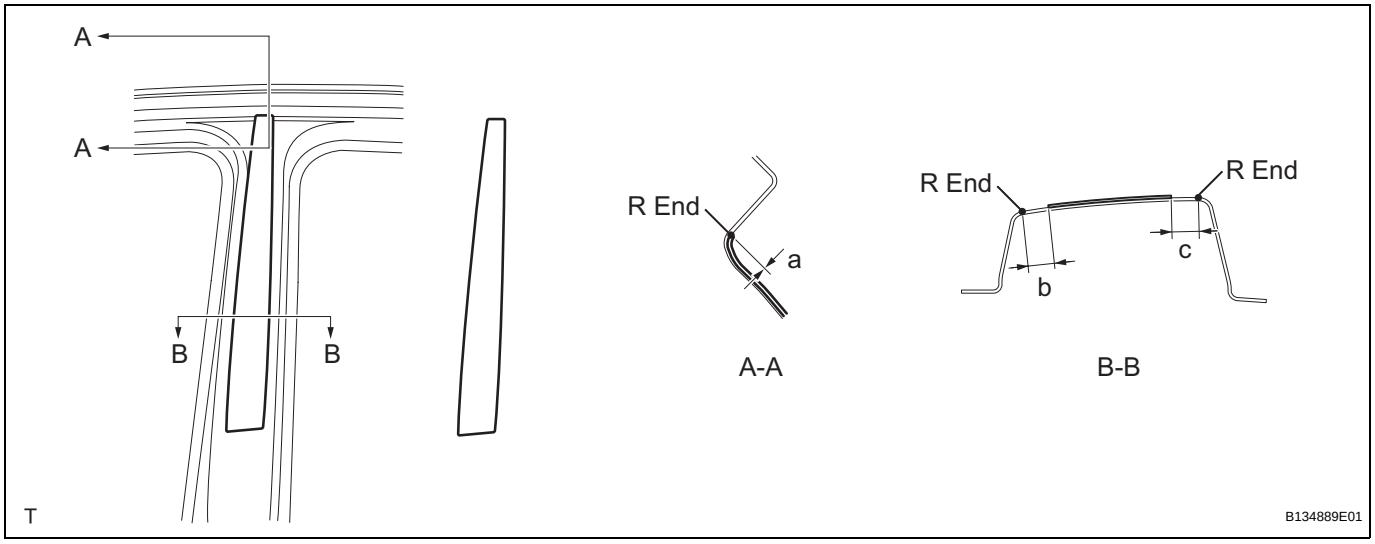

Installation position

Mark	Measurement (along surface)
a	+-1 mm (+-0.039 in.)
b	11 to 13 mm (0.433 to 0.512 in.)
c	10 to 12 mm (0.394 to 0.472 in.)

NO. 3 BLACK OUT TAPE (for Hatchback)

COMPONENTS

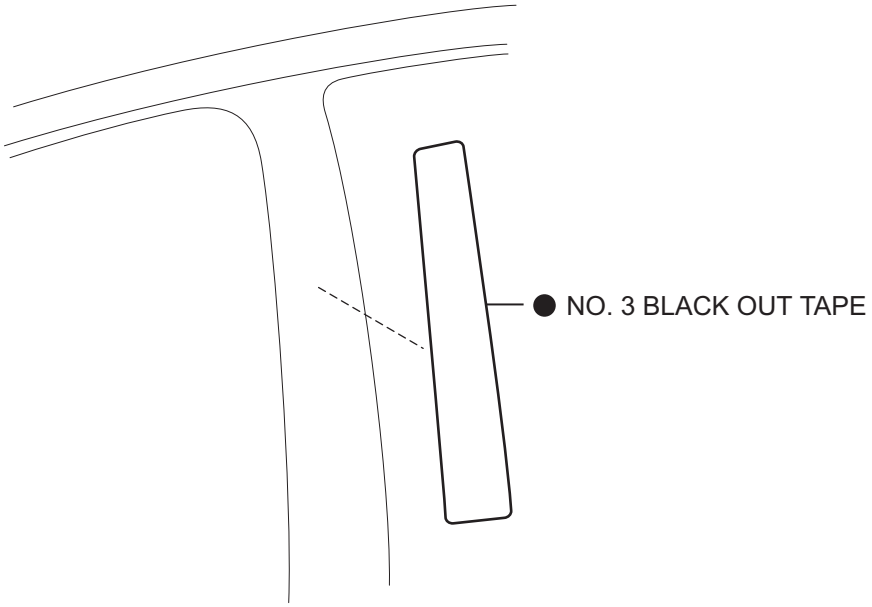

● Non-reusable part

T

B114641E01

REMOVAL

HINT:
The procedure described below is for the LH side. Use the same procedure for the the RH and LH sides, unless otherwise specified.

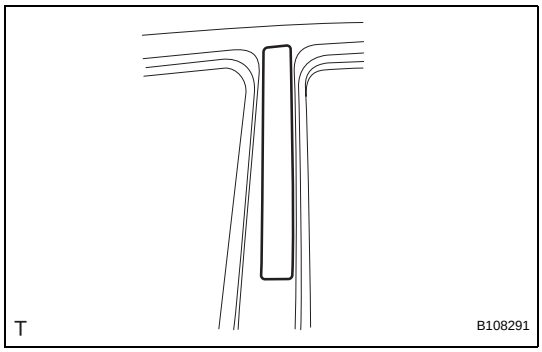

1. REMOVE NO. 3 BLACK OUT TAPE

(a) Using an infrared light, heat the black out tape.
NOTICE:
Do not burn yourself with the heated front door panel or infrared light.
HINT:
Heat at 40 to 60°C (104 to 140°F) for 3 to 5 minutes.

(b) Lift the end portion with your nail and peel it parallel to the attachment surface.

INSTALLATION

HINT:
The procedure described below is for the LH side. Use the same procedure for both the RH and LH sides, unless otherwise specified.

1. INSTALL NO. 3 BLACK OUT TAPE

(a) Application precautions (See page ET-129).
(b) Clean the attachment surface (using an infrared light) (See page ET-129).
(c) Clean the attachment surface (using a tape removal disc) (See page ET-129).
(d) Apply new black out tape to the positions shown in the illustration.

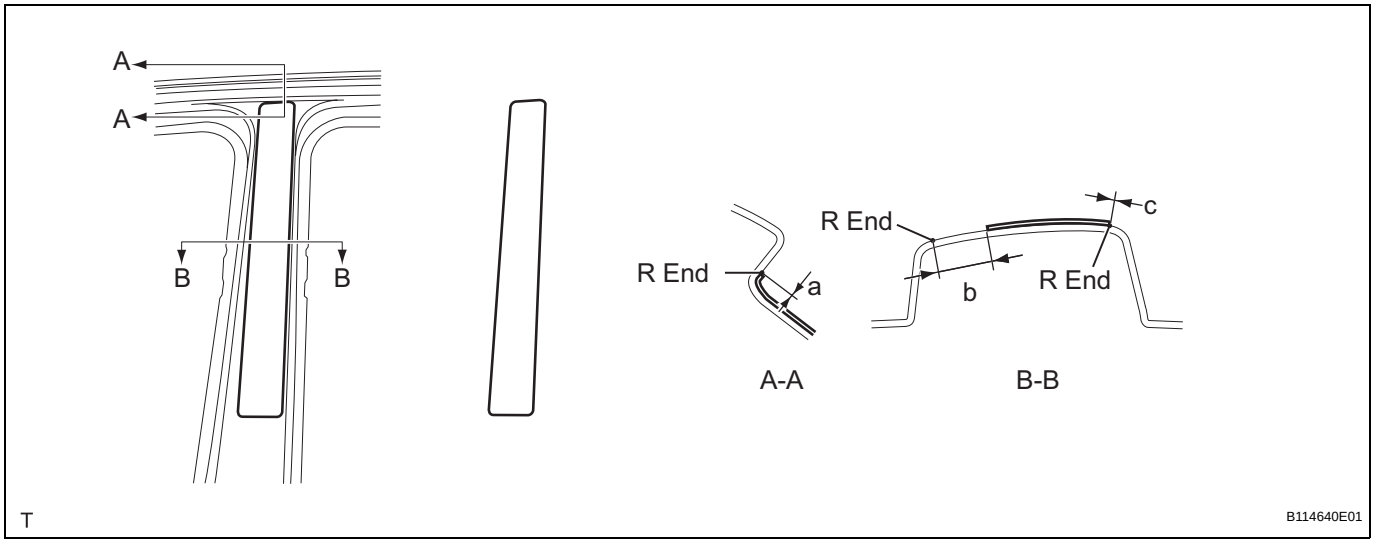

Installation position

Mark	Measurement (along surface)
a	+-1 mm (+-0.039in.)
b	4 mm or more (0.157 in. or more)
c	+-1 mm (+-0.039in.)

ROOF HEADLINING (for Sedan)

COMPONENTS

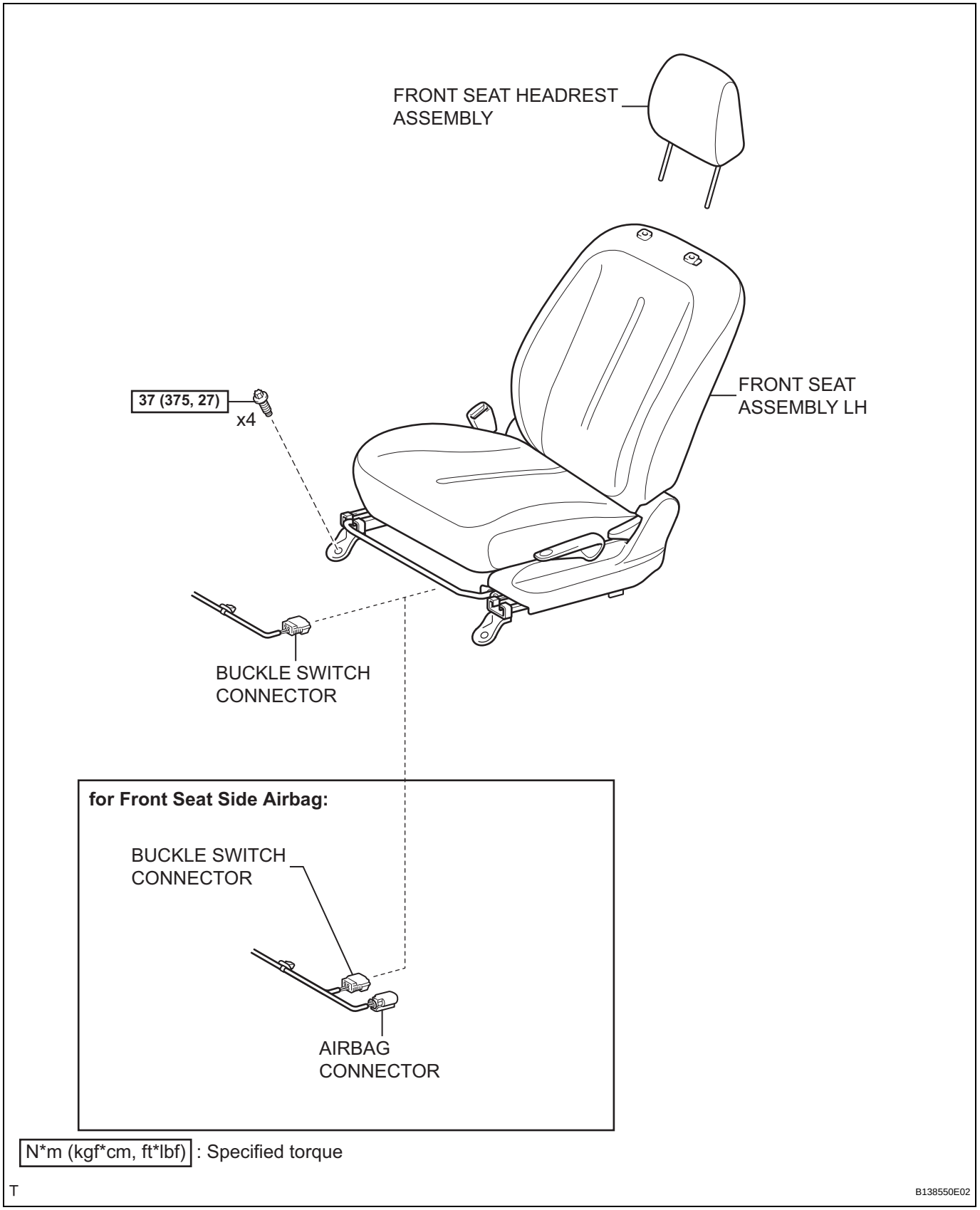

IR

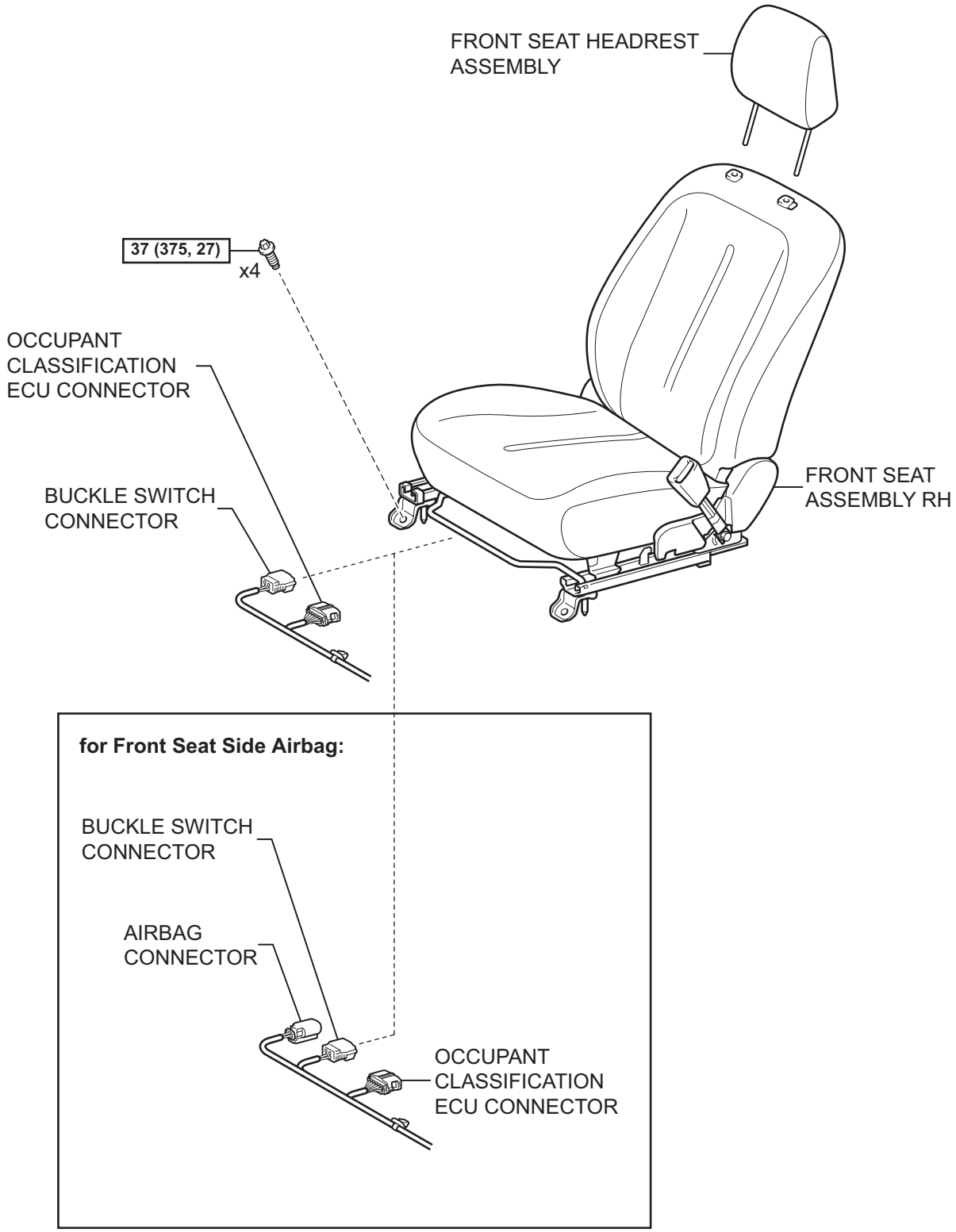

IR

N*m (kgf*cm, ft*lbf) : Specified torque

T

B138551E01

for 60/40 Split Seat Type:

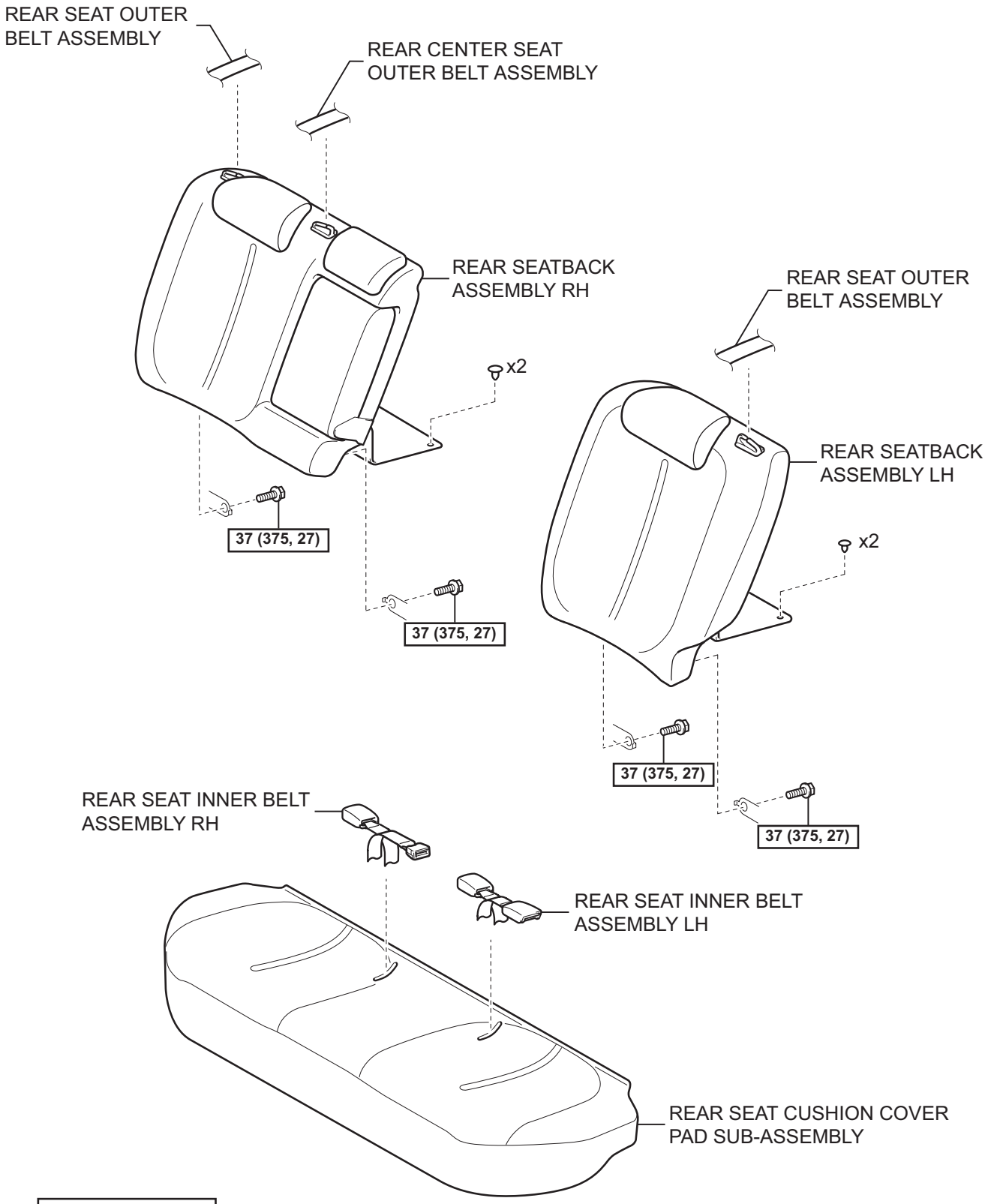

N*m (kgf*cm, ft*lbf) : Specified torque

T

B138442E02

IR

for Fixed Seat Type:

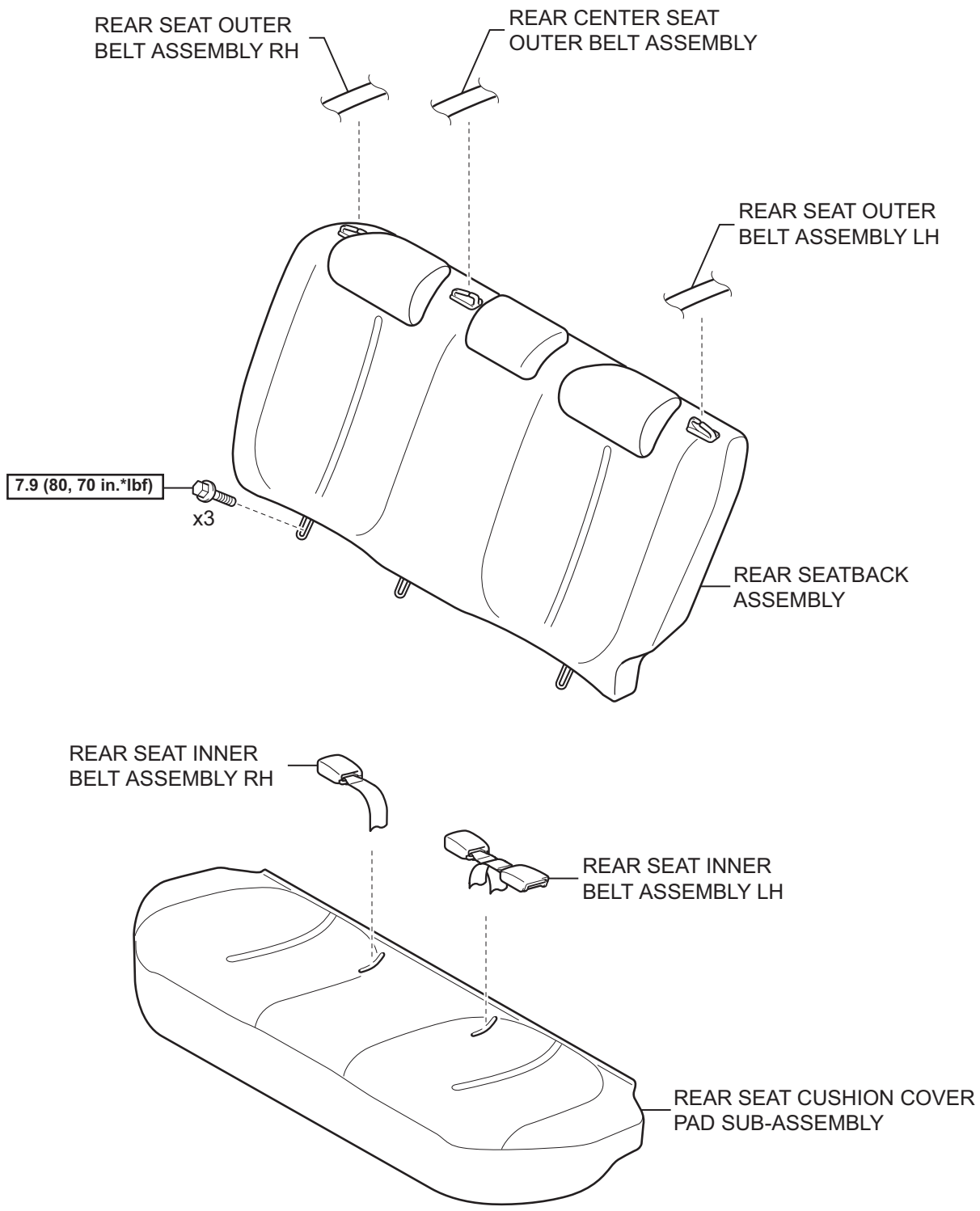

N*m (kgf*cm, ft*lbf) : Specified torque

T

B138611E01

IR

for 60/40 Split Seat Type:

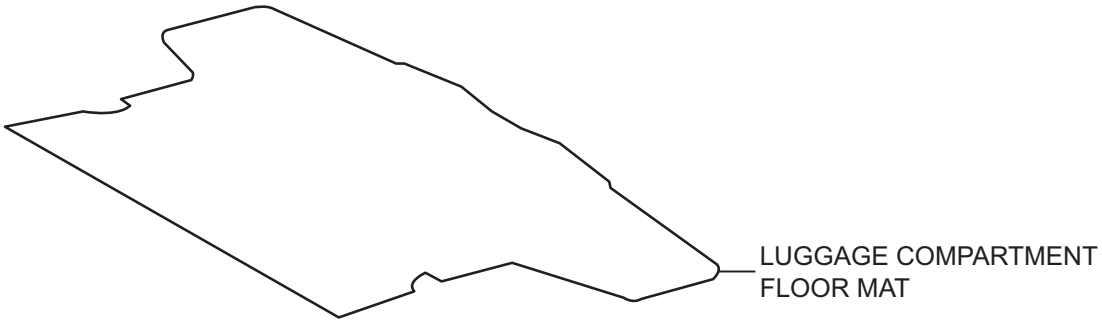

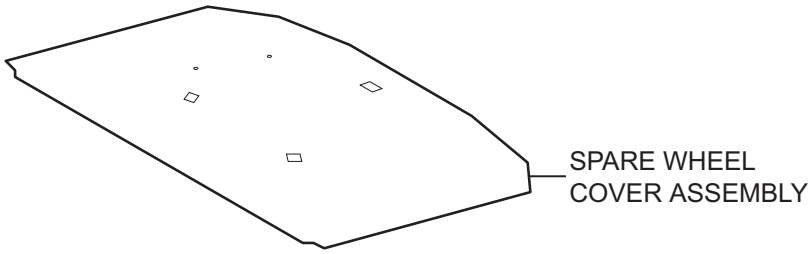

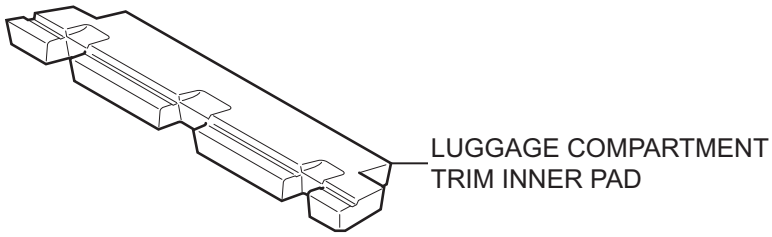

for Grand Tire:

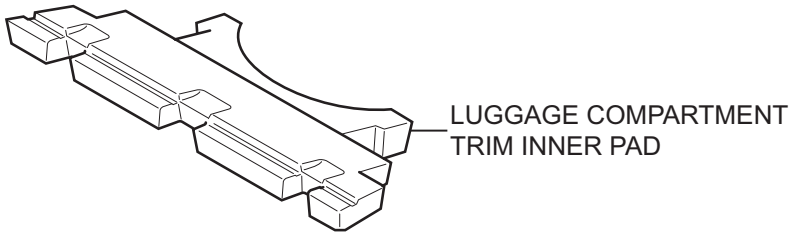

T

B138565E01

IR

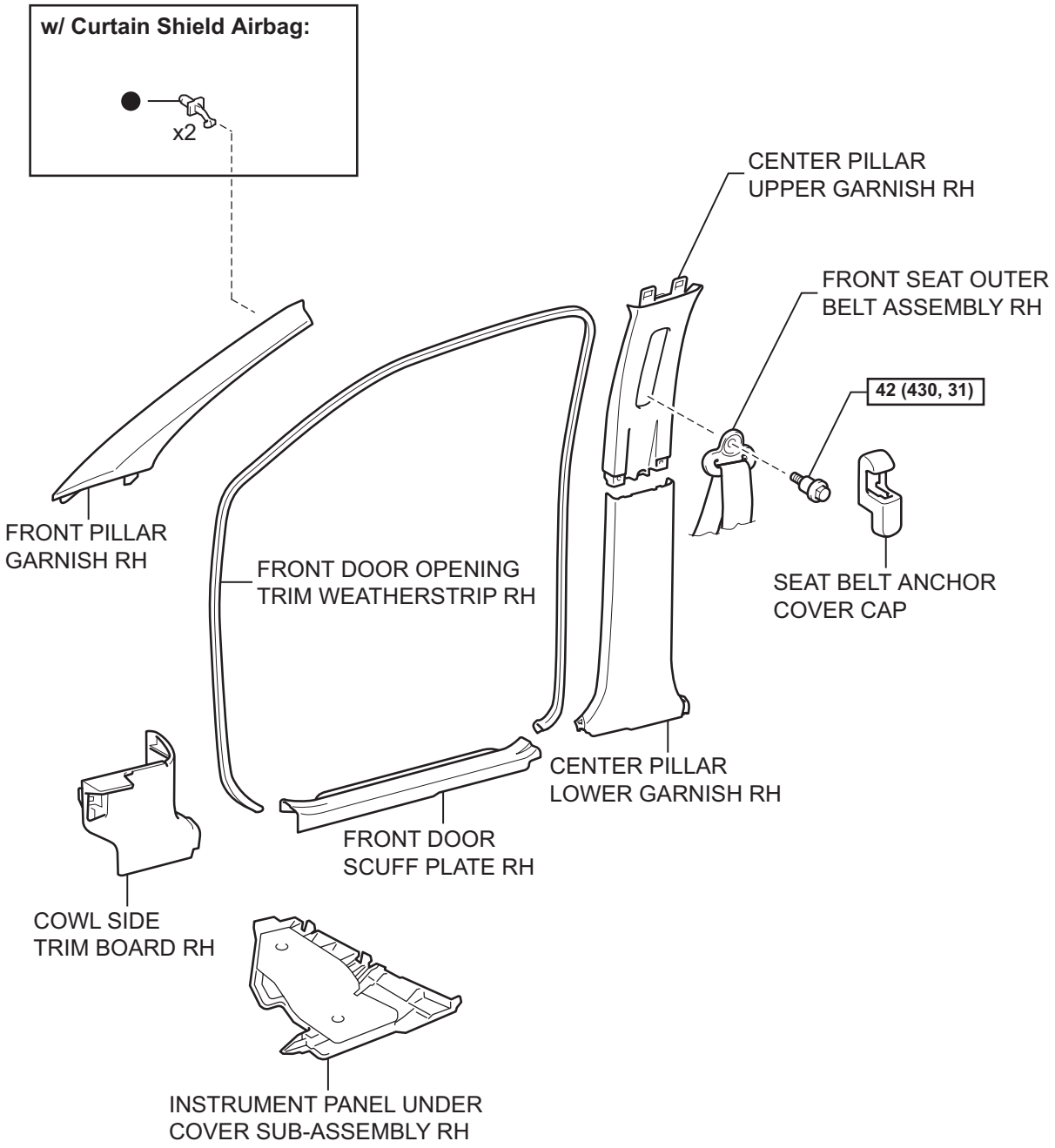

IR

N*m (kgf*cm, ft*lbf) : Specified torque

● Non-reusable part

T

B138593E01

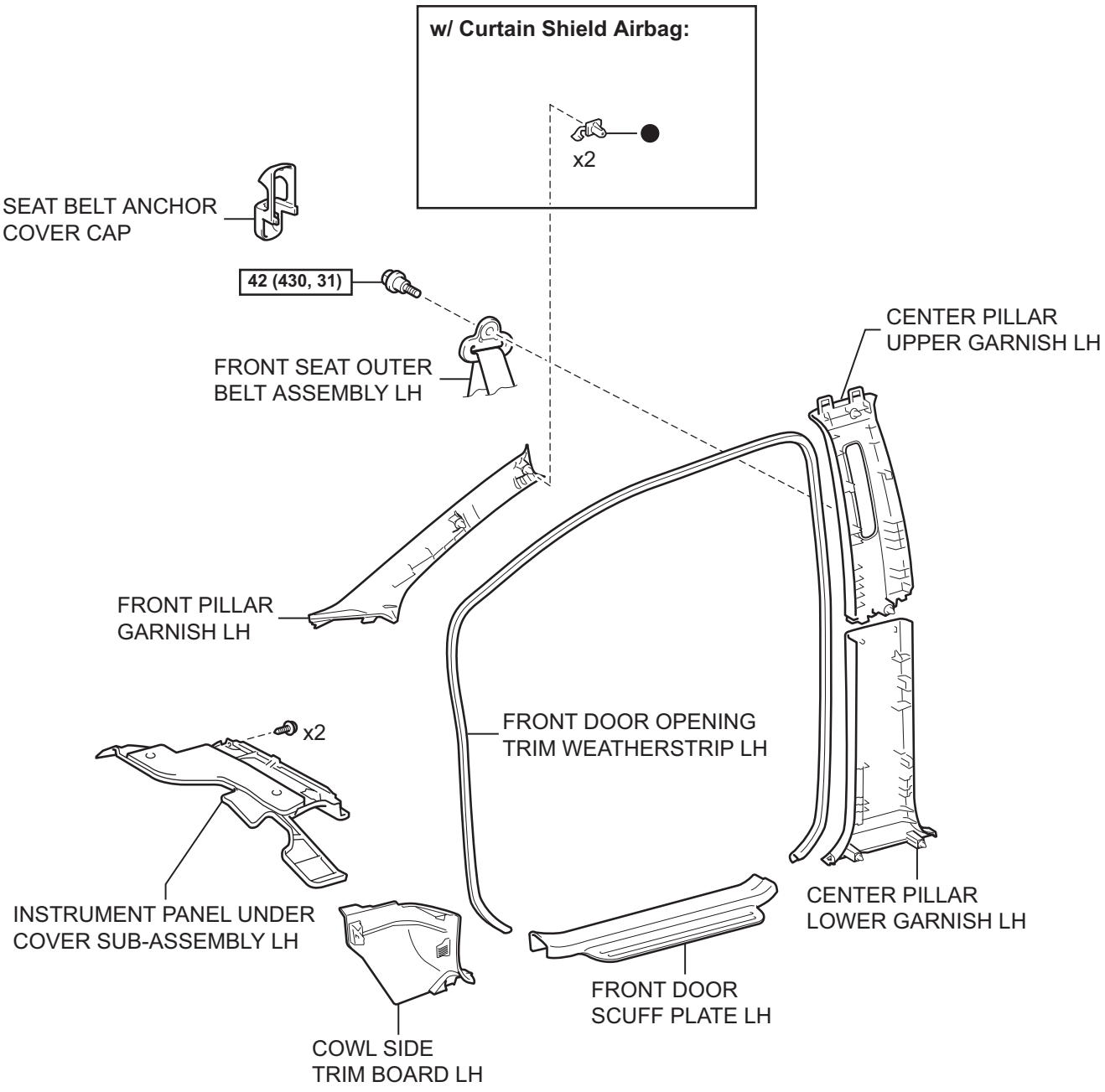

N*m (kgf*cm, ft*lbf) : Specified torque

● Non-reusable part

T

B138594E01

IR

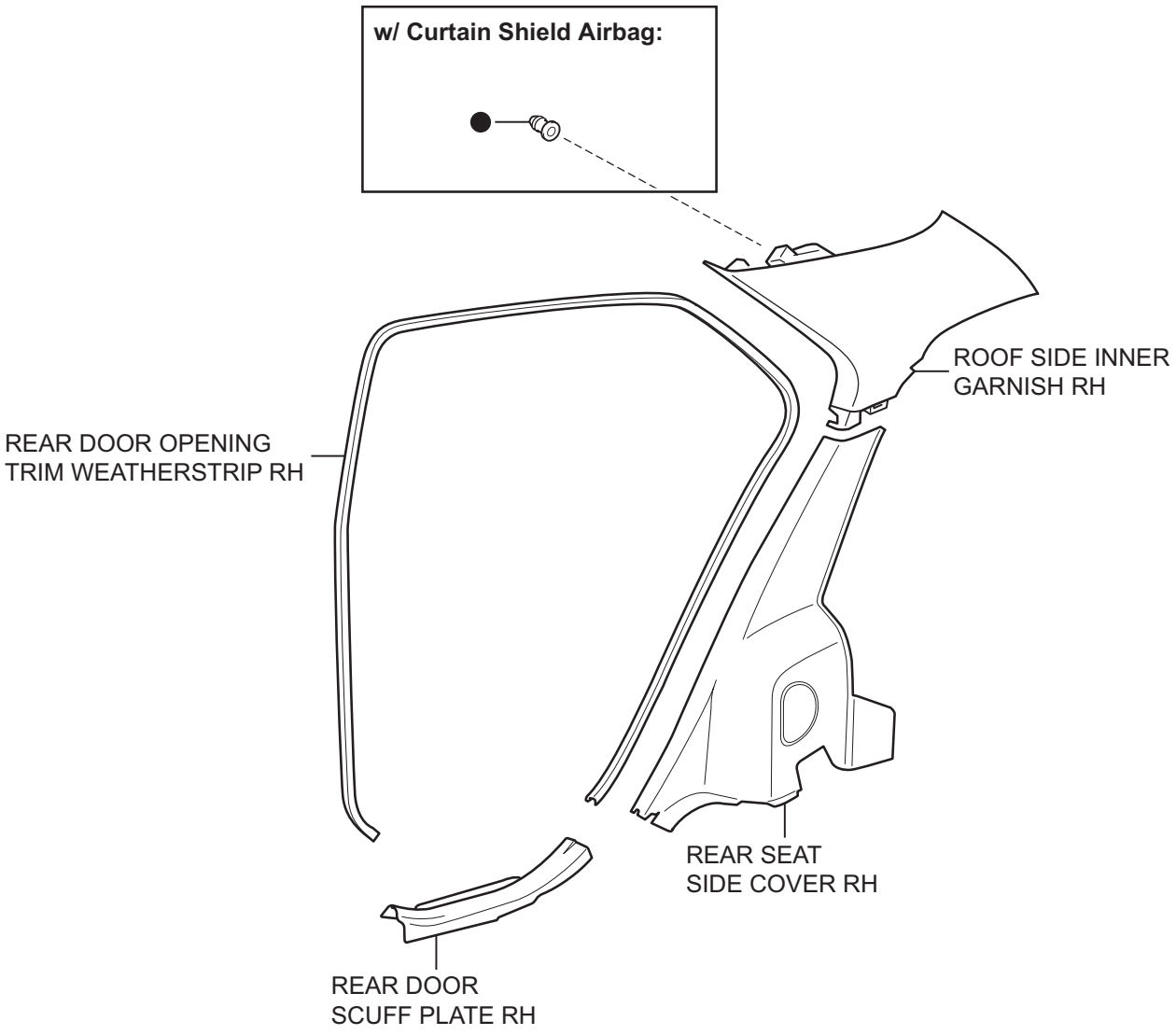

● Non-reusable part

T

B134769E01

IR

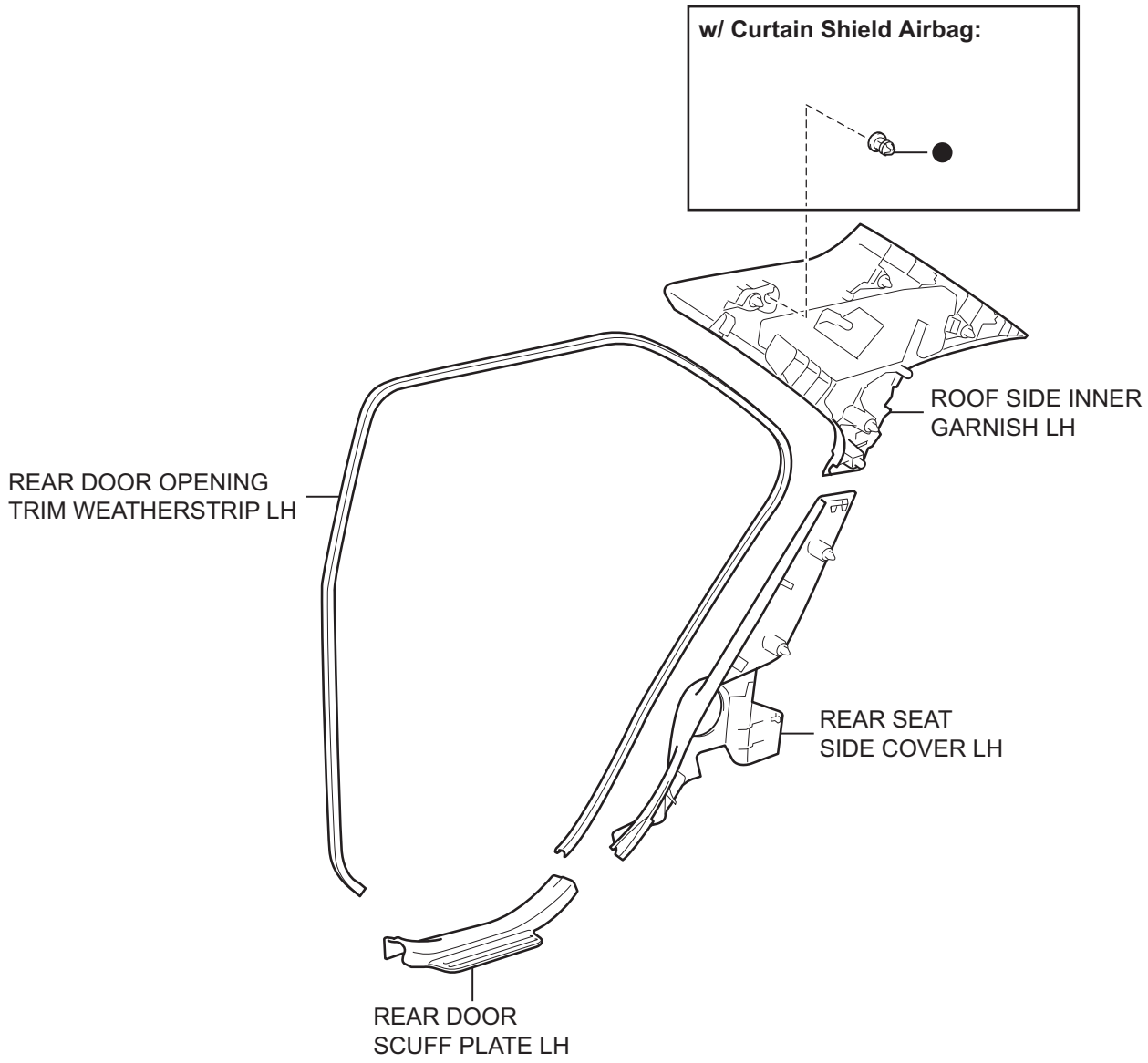

● Non-reusable part

T

B134770E01

IR

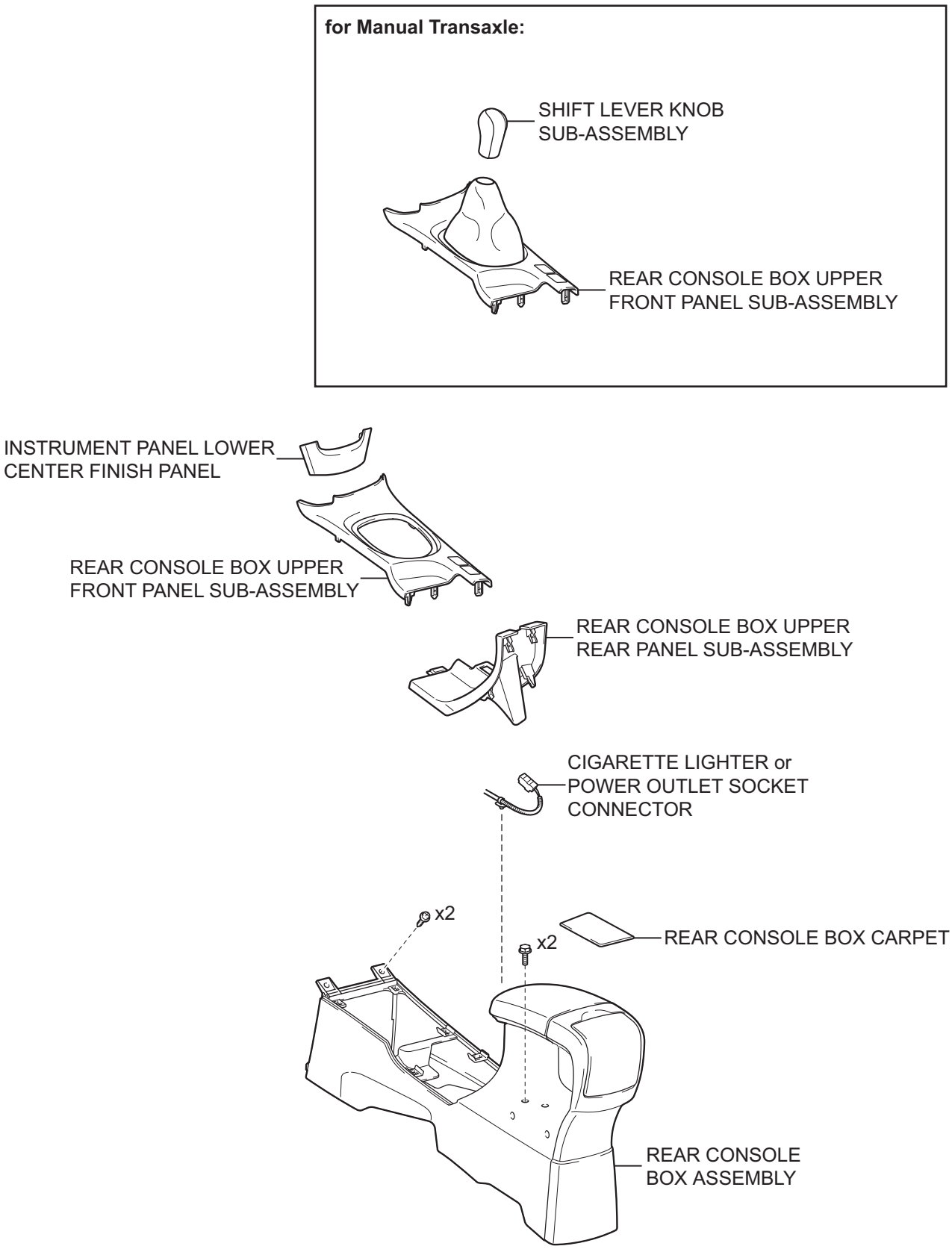

IR

T

B138443E01

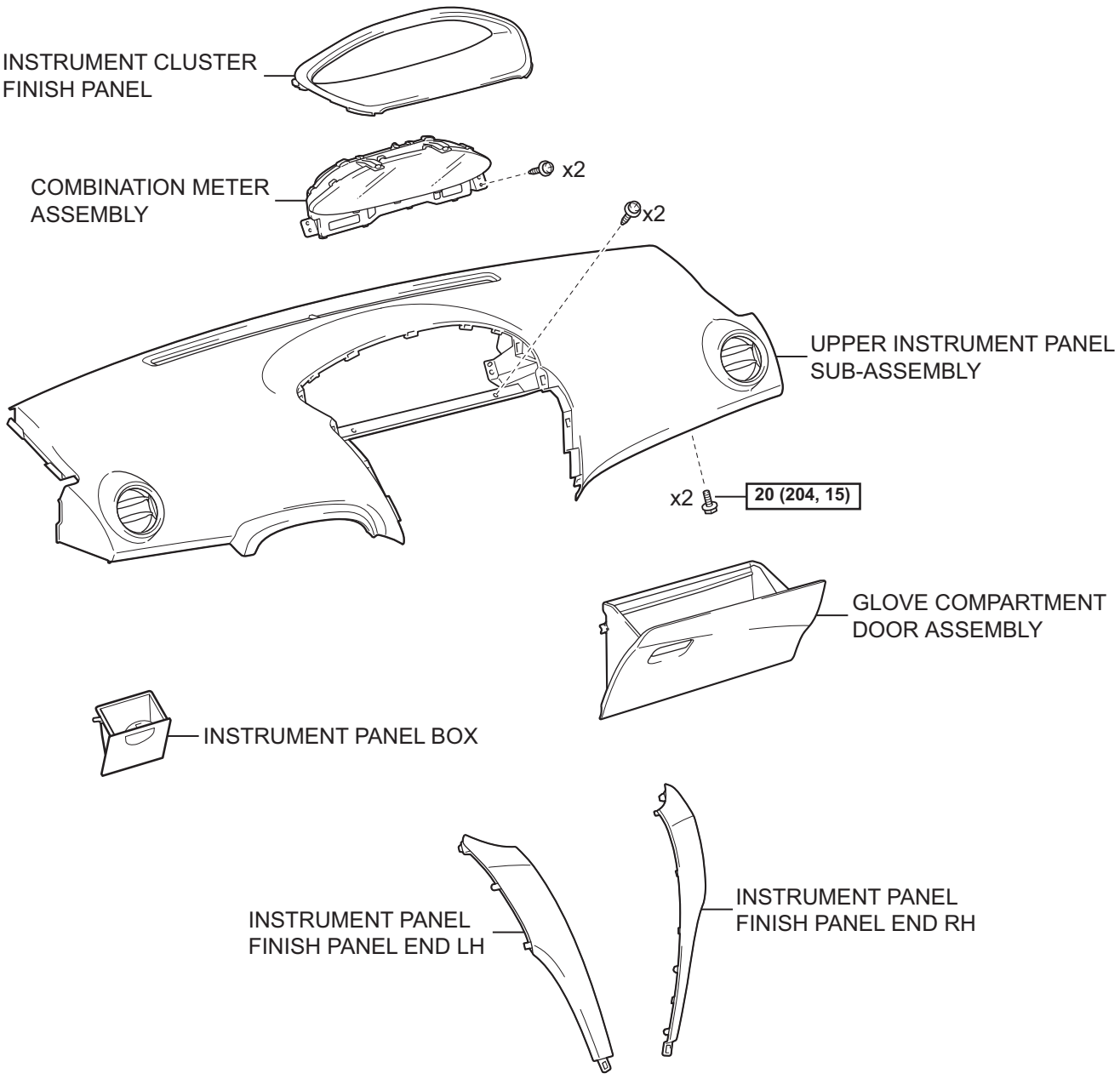

N*m (kgf*cm, ft*lbf) : Specified torque

P

B138444E02

IR

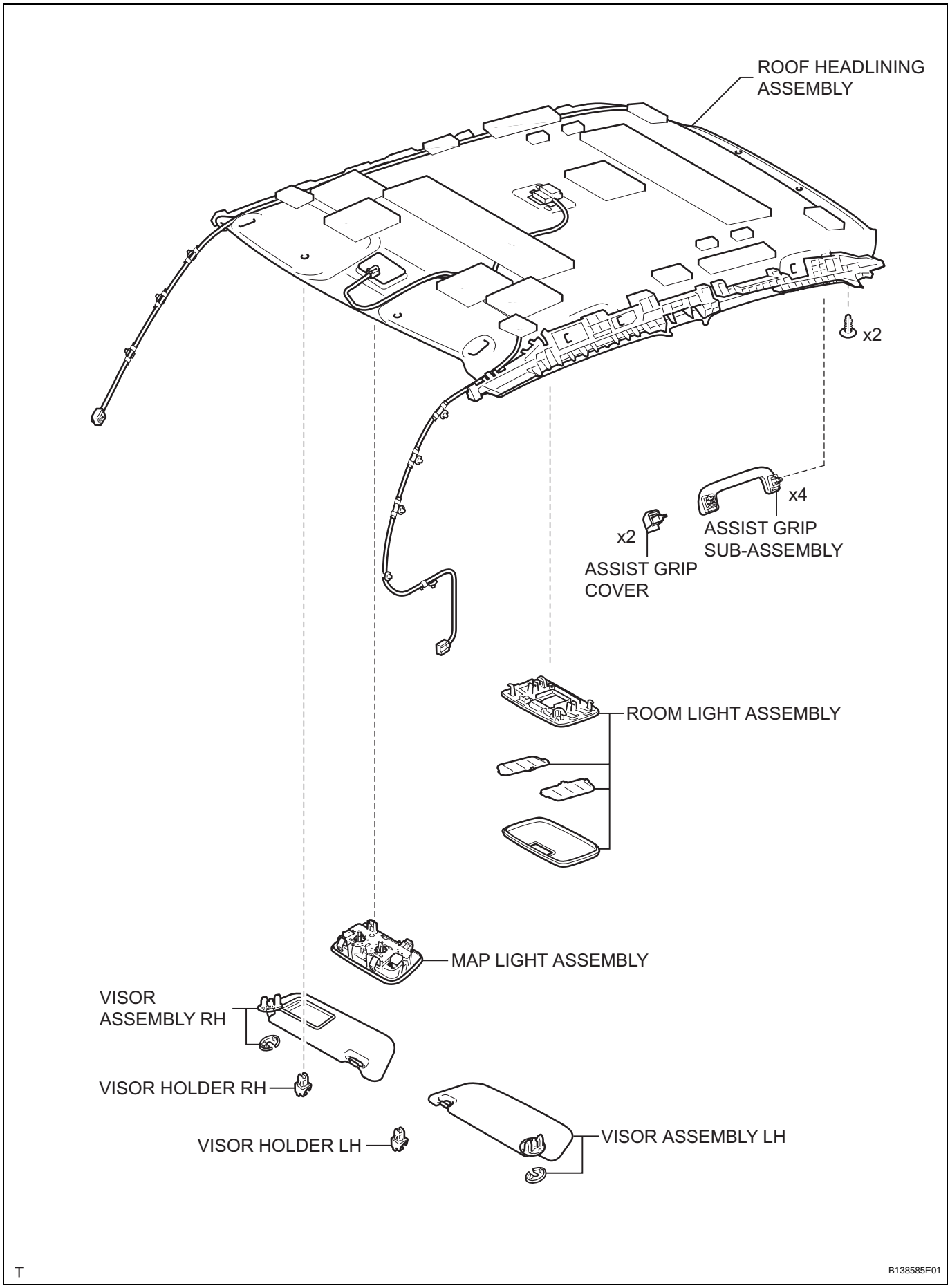
ROOF HEADLINING ASSEMBLY
x2
x4
ASSIST GRIP SUB-ASSEMBLY
x2
ASSIST GRIP COVER
ROOM LIGHT ASSEMBLY
MAP LIGHT ASSEMBLY
VISOR ASSEMBLY RH
VISOR HOLDER RH
VISOR HOLDER LH
VISOR ASSEMBLY LH
T
B138585E01

IR

REMOVAL

CAUTION:
Some of these service operations affect the SRS airbag system. Read the precautionary notices concerning the SRS airbag system before servicing (See page RS-1).
NOTICE:
Always use "Torx" socket wrench E10 when removing the front seat.

1. **DISCONNECT CABLE FROM NEGATIVE BATTERY TERMINAL**
   CAUTION:
   Wait for at least 90 seconds after disconnecting the cable to prevent the airbag from working.

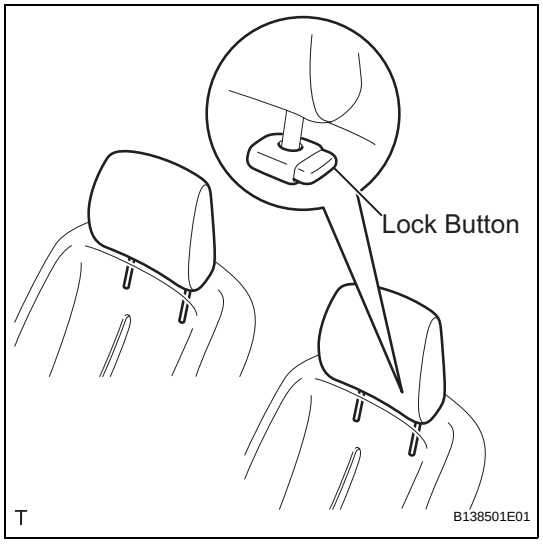

2. **REMOVE FRONT SEAT HEADREST ASSEMBLY**
   HINT:
   Use the same procedure for both sides.
   (a) Push in the lock button of the front seat headrest support and remove the front seat headrest.

3. **REMOVE FRONT SEAT ASSEMBLY LH (See page SE-5)**

4. **REMOVE FRONT SEAT ASSEMBLY RH**
   HINT:
   Use the same procedure as for the LH side.

5. **REMOVE REAR SEAT CUSHION COVER PAD SUB-ASSEMBLY**
   (a) for Fixed Seat Type:
      (1) Remove the rear seat cushion cover pad sub-assembly (See page SE-106).
   (b) for 60/40 Split Seat Type:
      (1) Remove the rear seat cushion cover pad sub-assembly (See page SE-46).

6. **REMOVE REAR SEATBACK ASSEMBLY RH (for 60/40 Split Seat Type) (See page SE-57)**

7. **REMOVE REAR SEATBACK ASSEMBLY LH (for 60/40 Split Seat Type) (See page SE-46)**

8. **REMOVE REAR SEATBACK ASSEMBLY (for Fixed Seat Type) (See page SE-106)**

9. **REMOVE LUGGAGE COMPARTMENT FLOOR MAT (for 60/40 Split Seat Type) (See page ED-133)**

10. **REMOVE SPARE WHEEL COVER ASSEMBLY (for 60/40 Split Seat Type) (See page ED-133)**

11. **REMOVE LUGGAGE COMPARTMENT TRIM INNER PAD (for 60/40 Split Seat Type) (See page ED-134)**

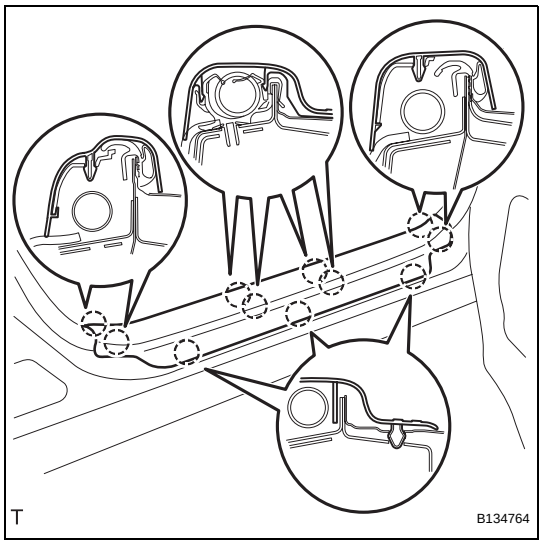

12. REMOVE FRONT DOOR SCUFF PLATE RH

(a) Disengage the 11 claws and remove the front door scuff plate.

13. REMOVE FRONT DOOR SCUFF PLATE LH

HINT:

Use the same procedure as for the RH side.

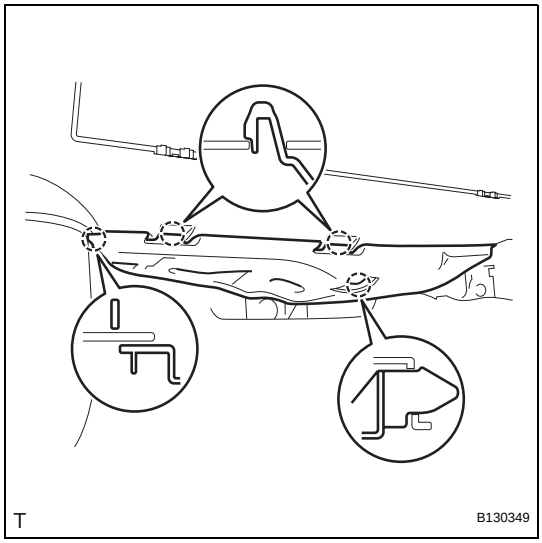

14. REMOVE INSTRUMENT PANEL UNDER COVER SUB-ASSEMBLY RH

(a) Disengage the 4 claws and remove the instrument panel under cover.

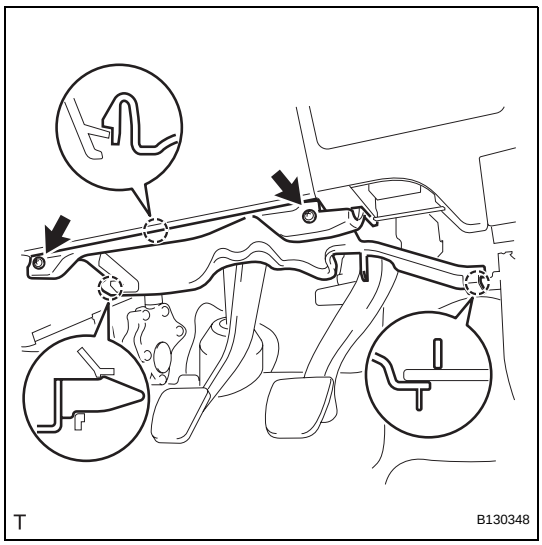

15. REMOVE INSTRUMENT PANEL UNDER COVER SUB-ASSEMBLY LH

(a) Remove the 2 screws.

(b) Disengage the 3 claws and remove the instrument panel under cover.

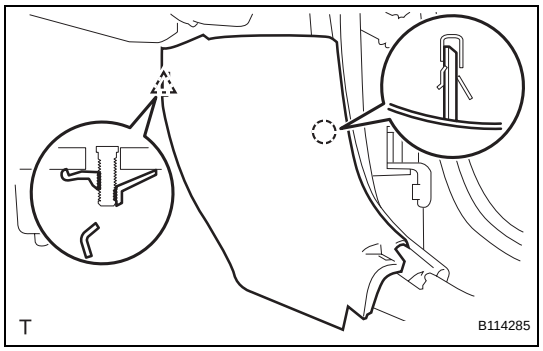

16. REMOVE COWL SIDE TRIM BOARD RH

(a) Disengage the claw and the stud bolt and remove the cowl side trim board.

17. REMOVE COWL SIDE TRIM BOARD LH

HINT:

Use the same procedure as for the RH side.

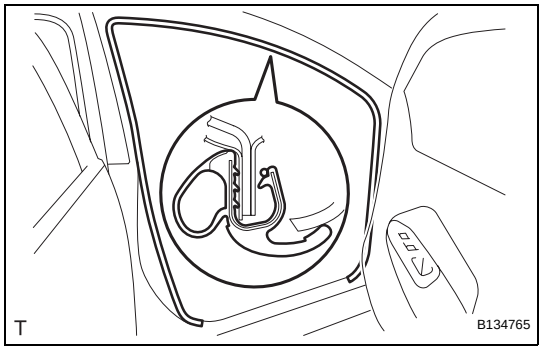

18. REMOVE FRONT DOOR OPENING TRIM WEATHERSTRIP RH

(a) Remove the front door opening trim weatherstrip.

19. REMOVE FRONT DOOR OPENING TRIM WEATHERSTRIP LH

HINT:

Use the same procedure as for the RH side.

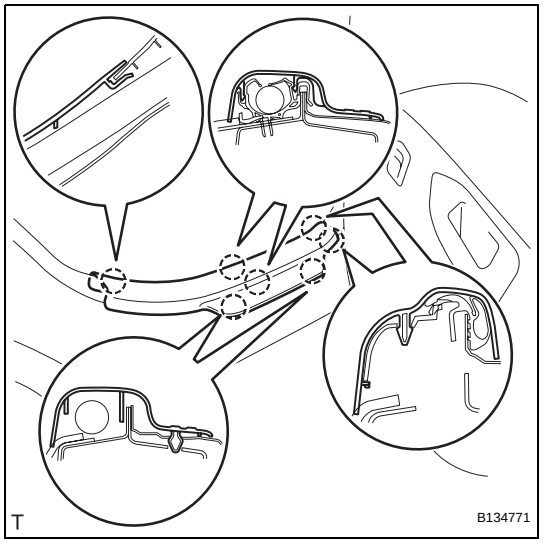

20. REMOVE REAR DOOR SCUFF PLATE RH

(a) Disengage the 7 claws and remove the rear door scuff plate.

21. REMOVE REAR DOOR SCUFF PLATE LH

HINT:

Use the same procedure as for the RH side.

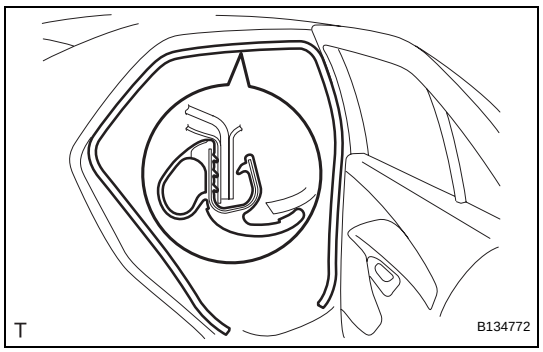

22. REMOVE REAR DOOR OPENING TRIM WEATHERSTRIP RH

(a) Remove the rear door opening trim weatherstrip.

23. REMOVE REAR DOOR OPENING TRIM WEATHERSTRIP LH

HINT:

Use the same procedure as for the RH side.

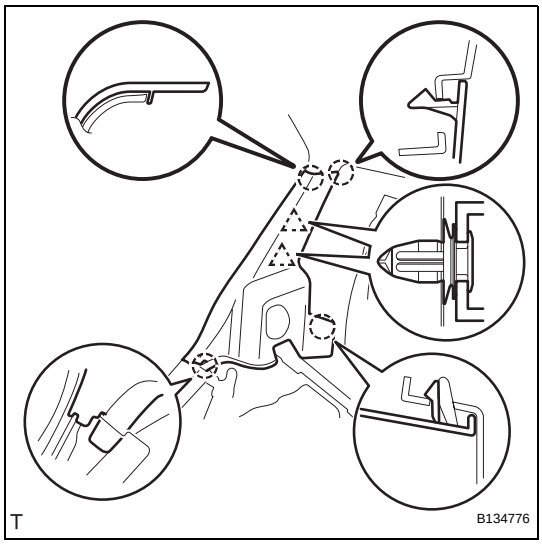

24. REMOVE REAR SEAT SIDE COVER RH

(a) Disengage the 2 clips and the 4 claws and remove the rear seat side cover.

25. REMOVE REAR SEAT SIDE COVER LH

HINT:

Use the same procedure as for the RH side.

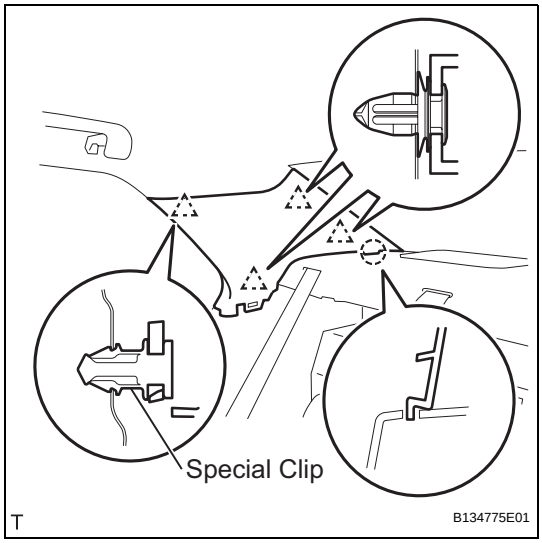

26. REMOVE ROOF SIDE INNER GARNISH RH

(a) w/ Curtain Shield Airbag:

NOTICE:

Replace the special clip with a new one when the roof side inner garnish is removed.

(1) Disengage the 4 clips and the claw and remove the roof side inner garnish.

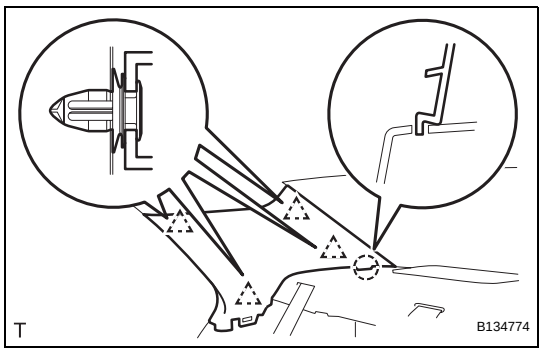

(b) w/o Curtain Shield Airbag:

(1) Disengage the 4 clips and the claw and remove the roof side inner garnish.

27. REMOVE ROOF SIDE INNER GARNISH LH

HINT:

Use the same procedure as for the RH side.

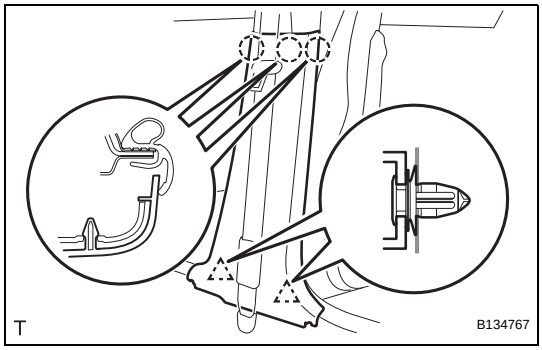

28. REMOVE CENTER PILLAR LOWER GARNISH RH

(a) Disengage the 3 claws and 2 clips and remove the center pillar lower garnish.

29. REMOVE CENTER PILLAR LOWER GARNISH LH

HINT:

Use the same procedure as for the RH side.

IR

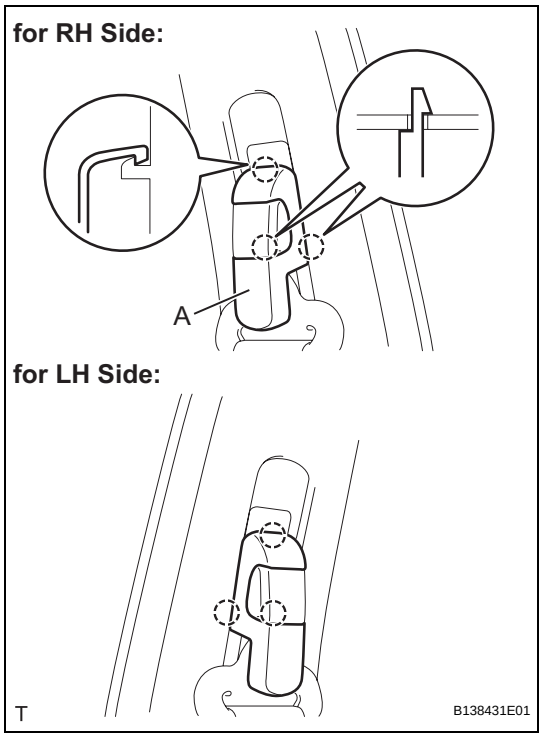

30. REMOVE SEAT BELT ANCHOR COVER CAP

HINT:

Use the same procedure for both sides.

(a) Pull portion A, shown in the illustration, toward you, remove the 2 claws on the lower side followed by the claw on the upper side. Then remove the seat belt anchor cover cap.

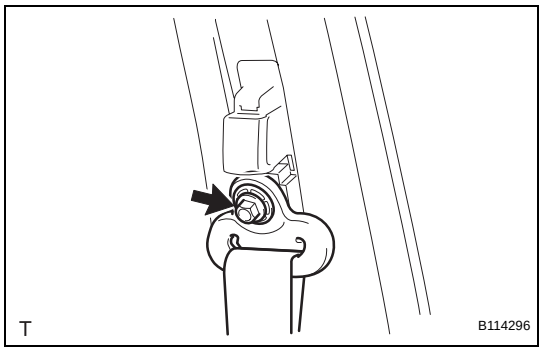

31. REMOVE FRONT SEAT OUTER BELT ASSEMBLY RH

(a) Remove the bolt and the through anchor.

32. REMOVE FRONT SEAT OUTER BELT ASSEMBLY LH

HINT:

Use the same procedure as for the RH side.

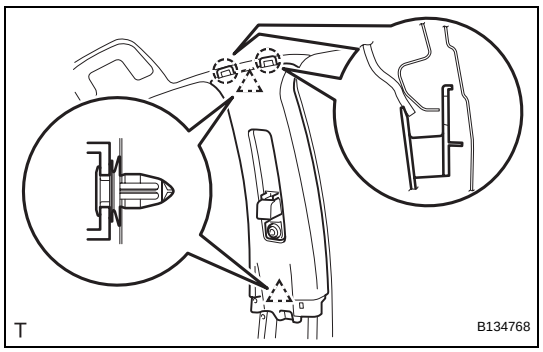

33. REMOVE CENTER PILLAR UPPER GARNISH RH

(a) Disengage the 2 clips and 2 hooks and remove the center pillar upper garnish.

34. REMOVE CENTER PILLAR UPPER GARNISH LH

HINT:

Use the same procedure as for the RH side.

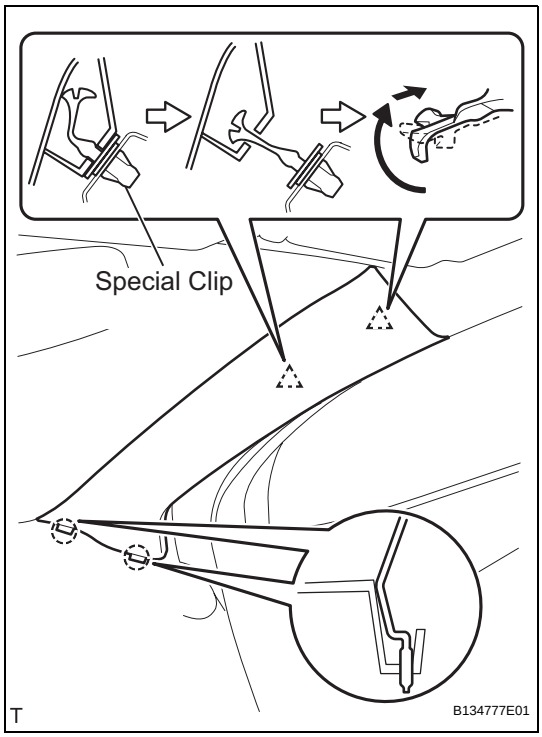

35. REMOVE FRONT PILLAR GARNISH RH

(a) w/ Curtain Shield Airbag:

NOTICE:

- **Install a protective cover onto the curtain shield airbag as soon as the front pillar garnish is removed.**
- **Replace the special clip with a new one when the front pillar garnish is removed.**

(1) Disengage the 2 clips and the 2 claws and remove the front pillar garnish.

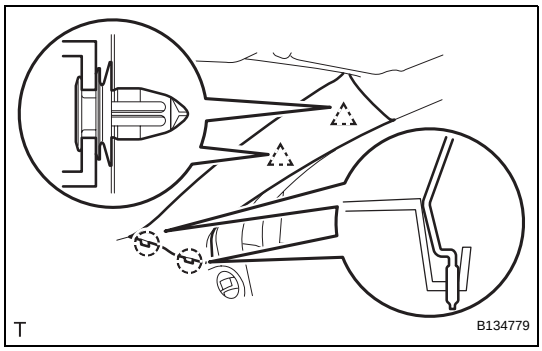

(b) w/o Curtain Shield Airbag:

(1) Disengage the 2 clips and the 2 claws and remove the front pillar garnish.

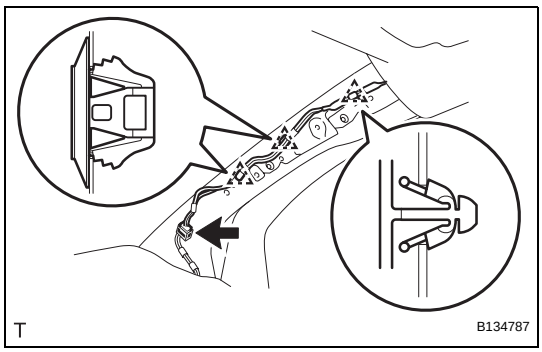

(c) Disconnect the antenna connector.

(d) Using a clip remover, remove the 3 clamps.

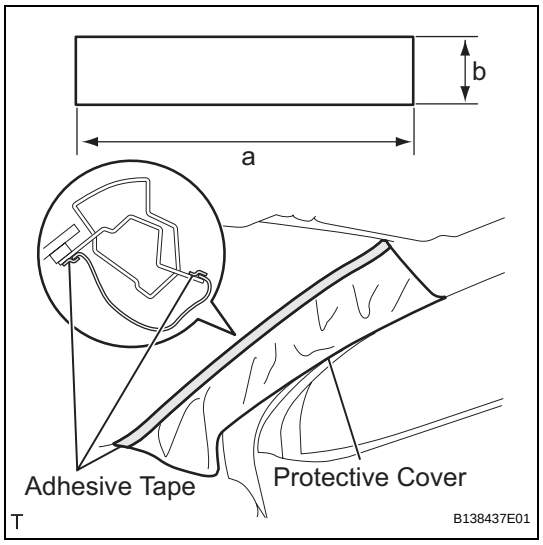

(e) w/ Curtain Shield Airbag:
(1) Completely cover the curtain shield airbag with a piece of cloth or nylon and fix the ends of the fabric with adhesive tape, as shown in the illustration.

Protective cover size

Area	Measurement
a	700 mm (27.56 in.)
b	120 mm (4.72 in.)

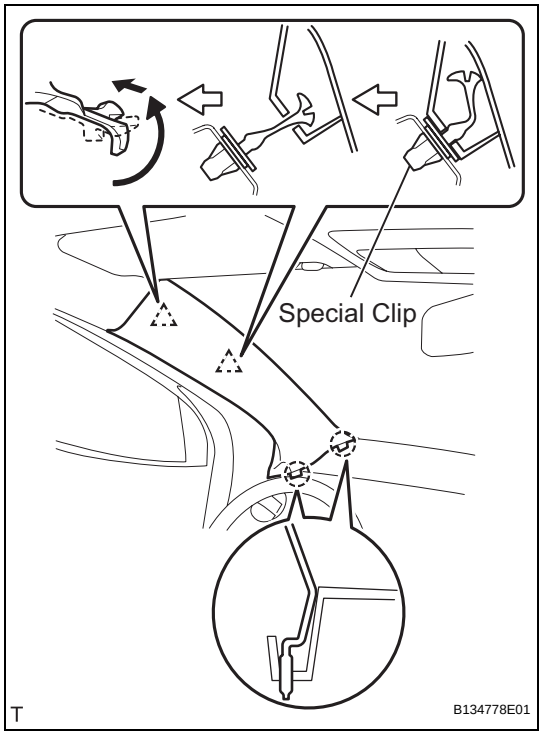

36. REMOVE FRONT PILLAR GARNISH LH

(a) w/ Curtain Shield Airbag:

NOTICE:

- **Install a protective cover onto the curtain shield airbag as soon as the front pillar garnish is removed.**
- **Replace the special clip with a new one when the front pillar garnish is removed.**

(1) Disengage the 2 clips and the 2 claws and remove the front pillar garnish.

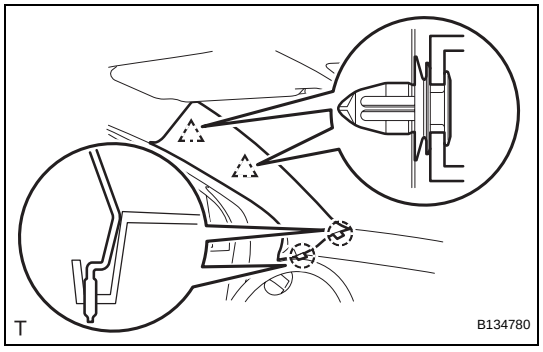

(b) w/o Curtain Shield Airbag:
(1) Disengage the 2 clips and the 2 claws and remove the front pillar garnish.

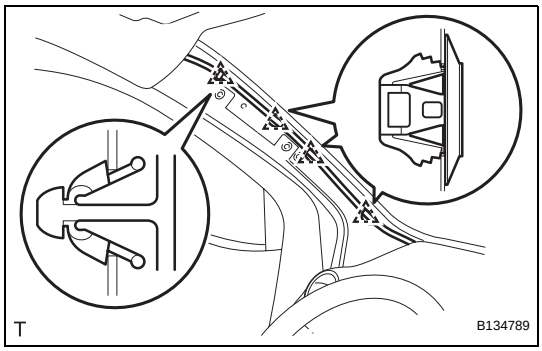

(c) Using a clip remover, remove the 4 clamps.

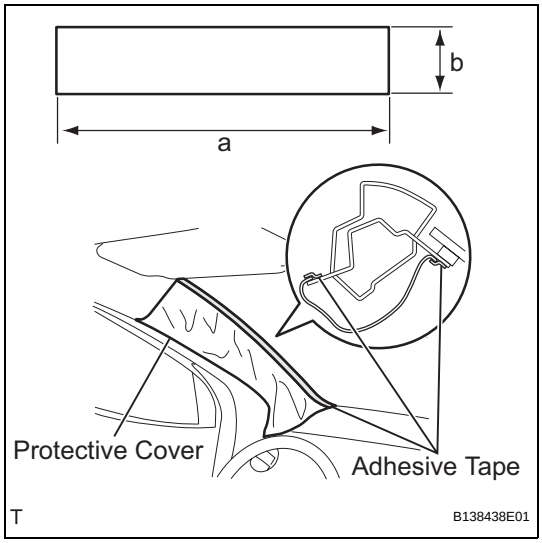

(d) w/ Curtain Shield Airbag:

(1) Completely cover the curtain shield airbag with a piece of cloth or nylon and fix the ends of the fabric with adhesive tape, as shown in the illustration.

Protective cover size

Area	Measurement
a	700 mm (27.56 in.)
b	120 mm (4.72 in.)

37. **REMOVE INSTRUMENT PANEL LOWER CENTER FINISH PANEL (See page ME-138)**
38. **REMOVE SHIFT LEVER KNOB SUB-ASSEMBLY (for Manual Transaxle) (See page IP-84)**
39. **REMOVE REAR CONSOLE BOX UPPER FRONT PANEL SUB-ASSEMBLY (See page IP-84)**
40. **REMOVE REAR CONSOLE BOX UPPER REAR PANEL SUB-ASSEMBLY (See page IP-84)**
41. **REMOVE REAR CONSOLE BOX CARPET (See page IP-85)**
42. **REMOVE REAR CONSOLE BOX ASSEMBLY (See page IP-85)**
43. **REMOVE INSTRUMENT PANEL FINISH PANEL END RH (See page ME-138)**
44. **REMOVE INSTRUMENT PANEL FINISH PANEL END LH (See page ME-138)**
45. **REMOVE INSTRUMENT CLUSTER FINISH PANEL (See page ME-139)**
46. **REMOVE COMBINATION METER ASSEMBLY (See page ME-139)**
47. **REMOVE GLOVE COMPARTMENT DOOR ASSEMBLY (See page IP-6)**
48. **REMOVE UPPER INSTRUMENT PANEL SUB-ASSEMBLY (See page IP-6)**
49. **REMOVE INSTRUMENT PANEL BOX (See page IP-45)**

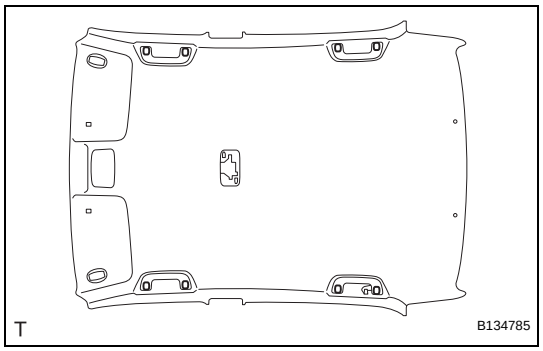

50. REMOVE ASSIST GRIP COVER

HINT:

Use the same procedure to remove all the assist grip covers.

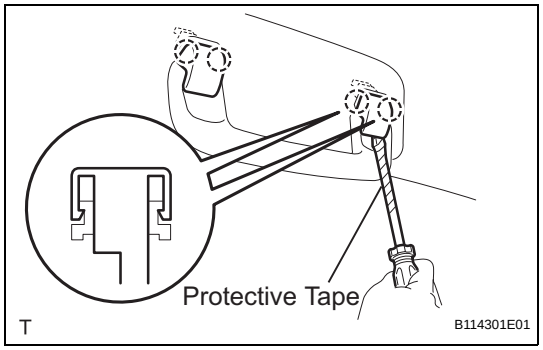

(a) Using a screwdriver with its tip wrapped in protective tape, disengage the 2 claws and remove the assist grip cover.

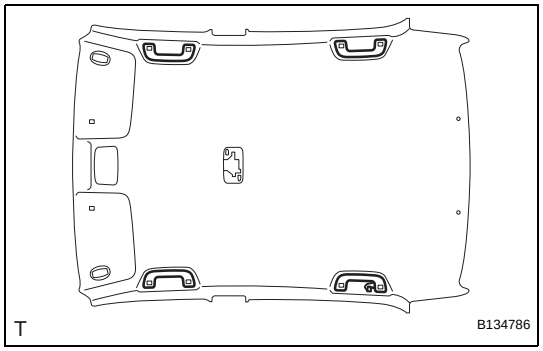

51. REMOVE ASSIST GRIP SUB-ASSEMBLY

HINT:

Use the same procedure to remove all the assist grips.

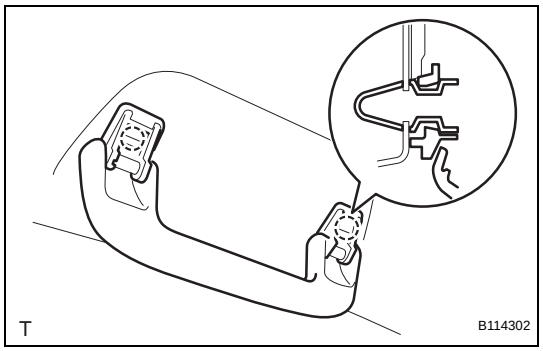

(a) Disengage the 2 springs and remove the assist grip.

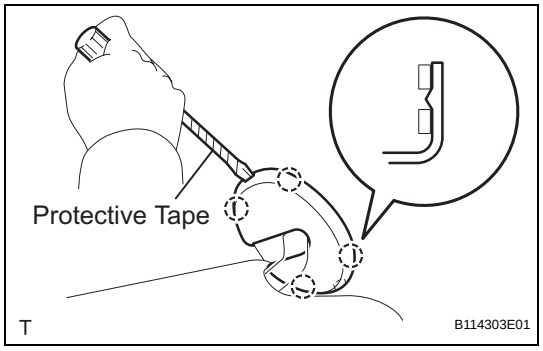

52. REMOVE VISOR ASSEMBLY RH

(a) Using a screwdriver with its tip wrapped in protective tape, disengage the 4 claws and remove the visor bracket cover.

IR

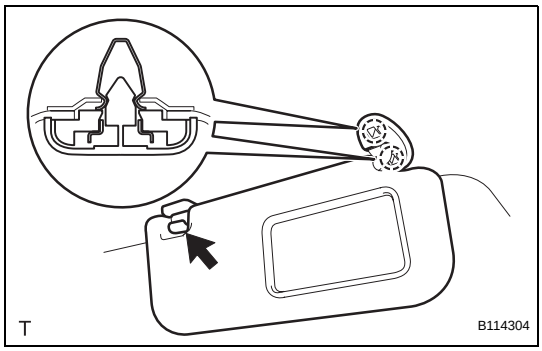

(b) Remove the visor shaft from the visor holder.
(c) Disengage the 2 springs and remove the visor.

53. REMOVE VISOR ASSEMBLY LH

HINT:
Use the same procedure as for the RH side.

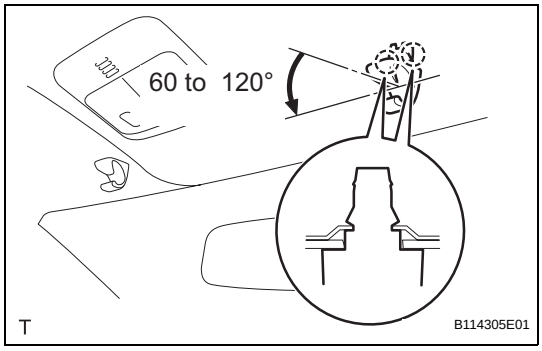

54. REMOVE VISOR HOLDER RH

(a) Disengage the 2 claws by turning the visor counterclockwise between 60 to 120° and remove the visor holder.
HINT:
The claw may be damaged during removal. However, it is reusable because this does not effect its function.

55. REMOVE VISOR HOLDER LH

HINT:
Use the same procedure as for the RH side.

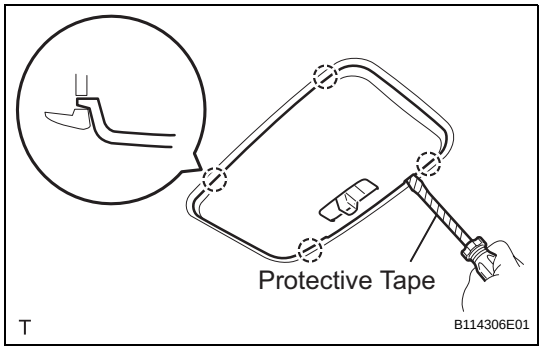

56. REMOVE ROOM LIGHT ASSEMBLY

(a) Using a screwdriver with its tip wrapped in protective tape, disengage the 4 claws and remove the room light lens.

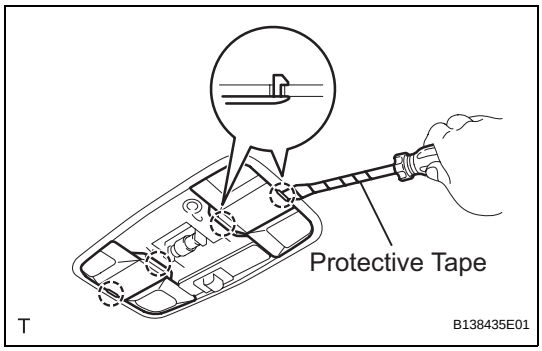

(b) Using a screwdriver with its tip wrapped in protective tape, disengage the 2 claws and remove the cover.
HINT:
Use the same procedure for both sides.

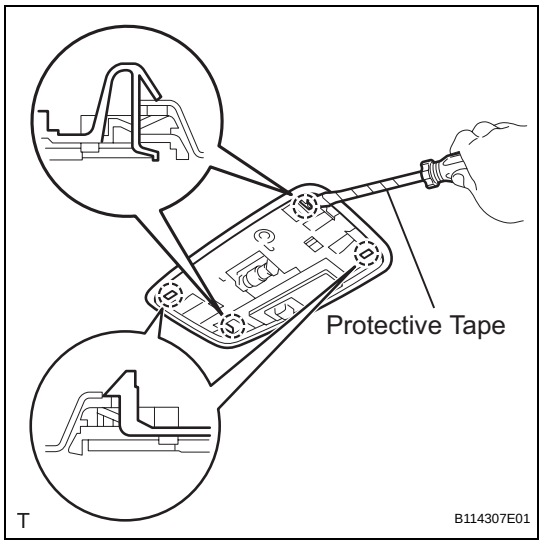

(c) Using a screwdriver with its tip wrapped in protective tape, disengage the 4 claws and remove the room light.

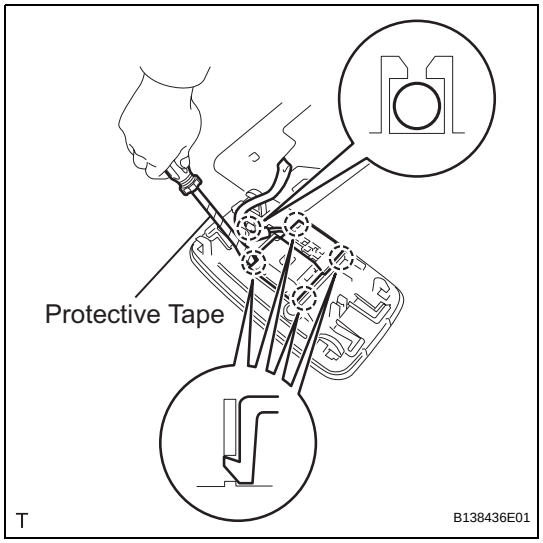

(d) Remove the roof wire from the claw of the room light.

(e) Using a screwdriver with its tip wrapped in protective tape, disengage the 4 claws and disconnect the room light switch base.

57. REMOVE MAP LIGHT ASSEMBLY

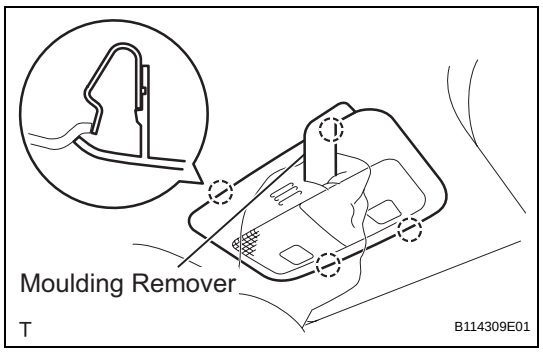

(a) Using a moulding remover, disengage the 4 claws and remove the map light.

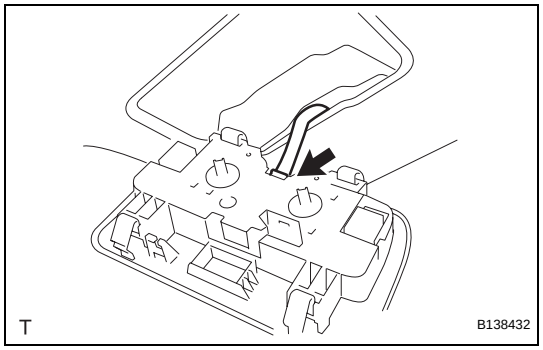

(b) Disconnect the map light connector.

IR

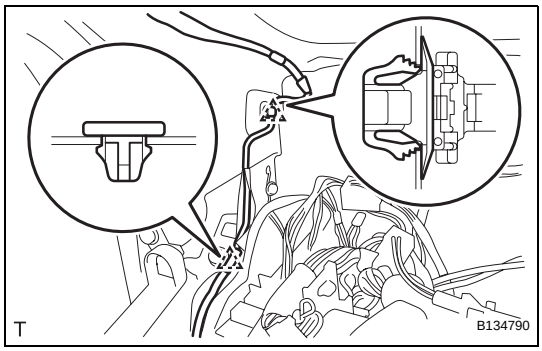

58. REMOVE ROOF HEADLINING ASSEMBLY

(a) Using a clip remover, remove the 2 clamps.

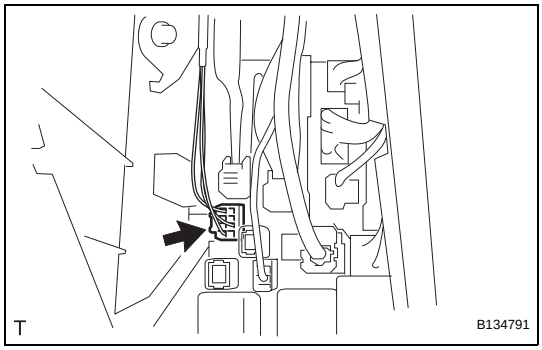

(b) Disconnect the roof wire connector.

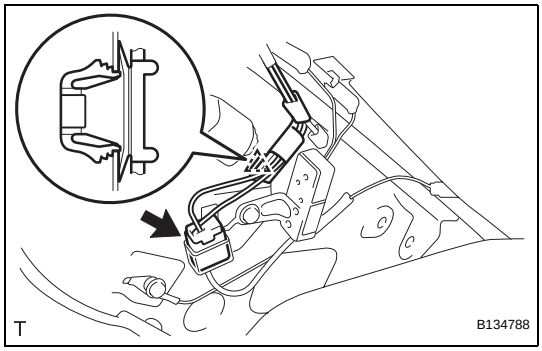

(c) Using a clip remover, remove the clamp.
(d) Disconnect the antenna connector.

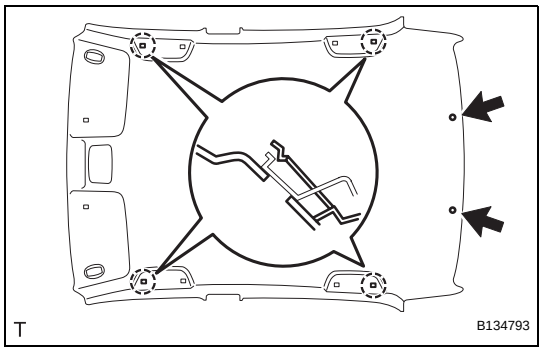

(e) w/ Curtain Shield Airbag:
  (1) Using a clip remover, remove the 2 clips.
  (2) Disengage the 4 hooks.

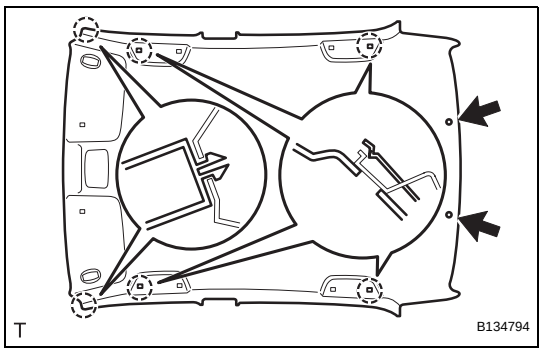

(f) w/o Curtain Shield Airbag:
  (1) Using a clip remover, remove the 2 clips.
  (2) Disengage the 2 claws and 4 hooks.

IR

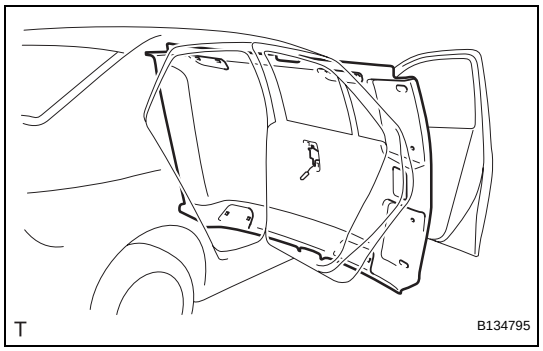

(g) Remove the roof headlining from the front door.

INSTALLATION

CAUTION:
Some of these service operations affect the SRS airbag system. Read the precautionary notices concerning the SRS airbag system before servicing (See page RS-1).
NOTICE:
Always use "Torx" socket wrench E10 when installing the front seat.

1. INSTALL ROOF HEADLINING ASSEMBLY

(a) Install the roof headlining into the front door.

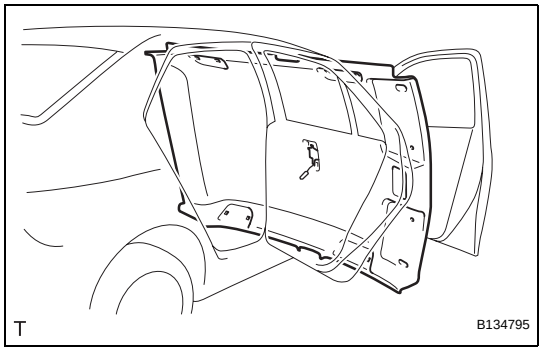

(b) w/ Curtain Shield Airbag:
(1) Engage the 4 hooks.
(2) Install the 2 clips.

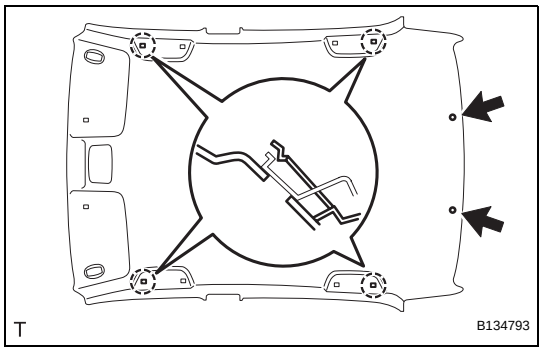

(c) w/o Curtain Shield Airbag:
(1) Engage the 2 claws and 4 hooks.
(2) Install the 2 clips.

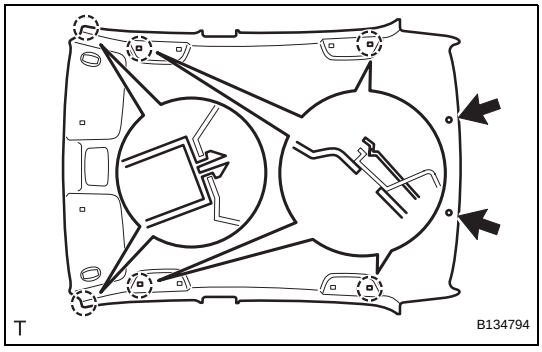

(d) Connect the antenna connector.
(e) Install the clamp.

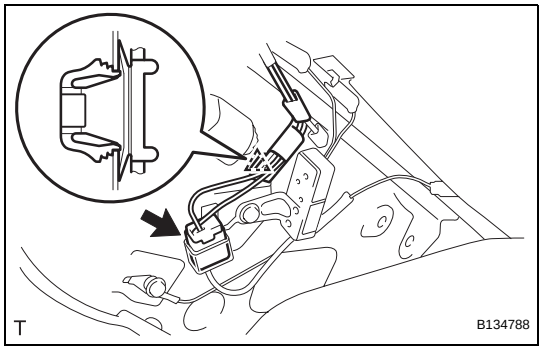

IR

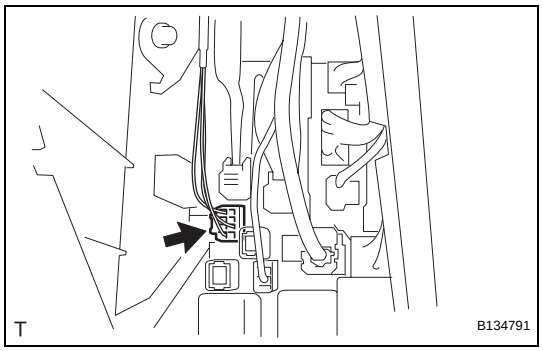

(f) Connect the roof wire connector.

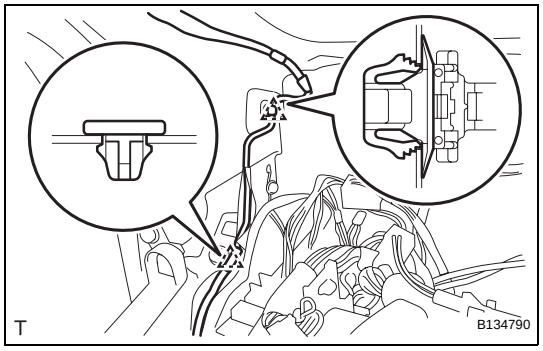

(g) Install the 2 clamps.

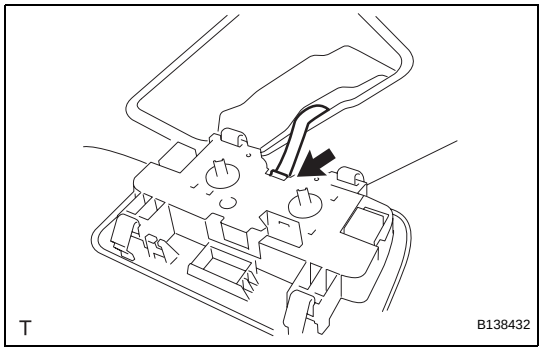

2. INSTALL MAP LIGHT ASSEMBLY

(a) Connect the map light connector.

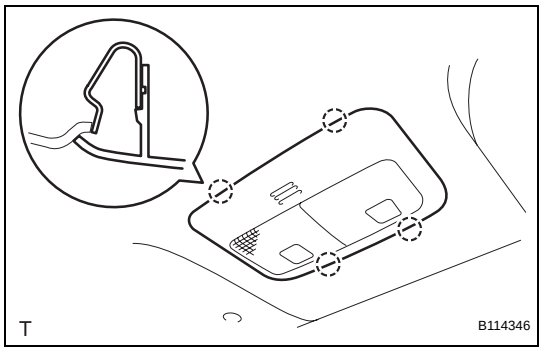

(b) Engage the 4 claws and install the map light.

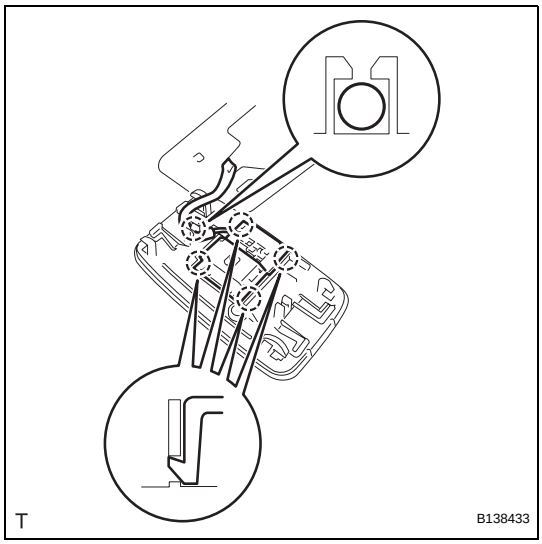

3. INSTALL ROOM LIGHT ASSEMBLY

(a) Engage the 4 claws and install the room light switch base.

(b) Install the roof wire into the claw of the room light.

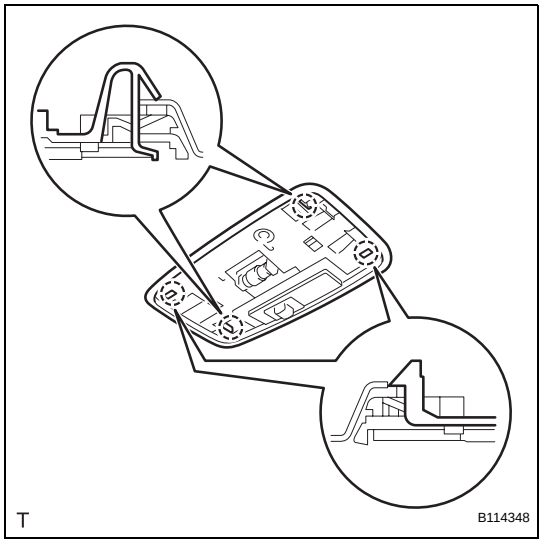

(c) Engage the 4 claws and install the room light.

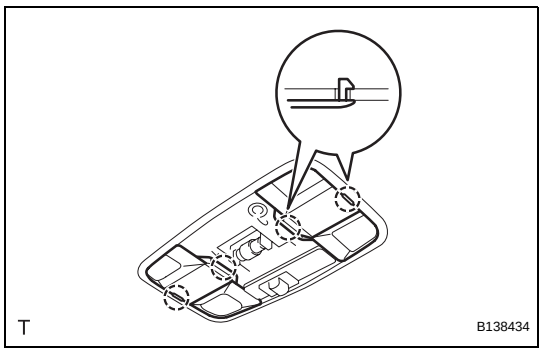

(d) Engage the 2 claws and install the cover.
HINT:
Use the same procedure for both sides.

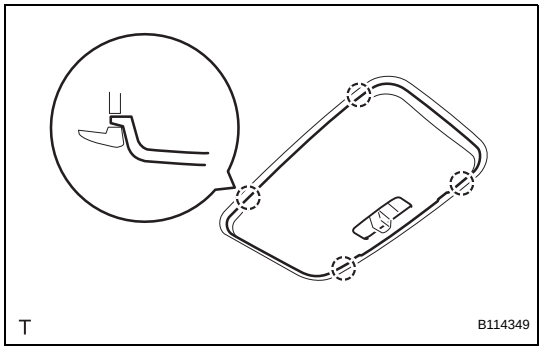

(e) Engage the 4 claws and install the room light lens.

IR

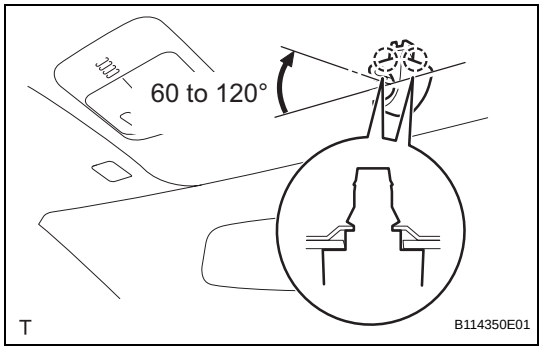

4. INSTALL VISOR HOLDER RH

(a) Engage the 2 claws by turning the visor holder clockwise between 60 to 120° and install the visor holder.

5. INSTALL VISOR HOLDER LH

HINT:
Use the same procedure as for the RH side.

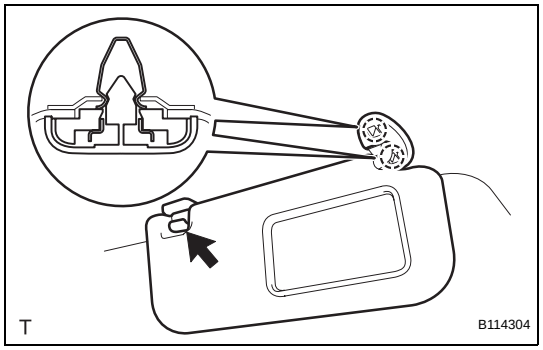

6. INSTALL VISOR ASSEMBLY RH

(a) Engage the 2 springs and install the visor.
(b) Install the visor shaft into the visor holder.

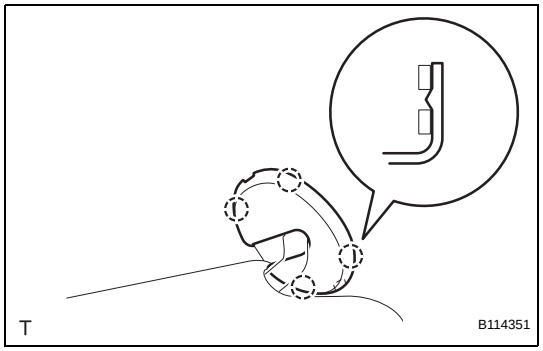

(c) Engage the 4 claws and install the visor bracket cover.

7. INSTALL VISOR ASSEMBLY LH

HINT:
Use the same procedure as for the RH side.

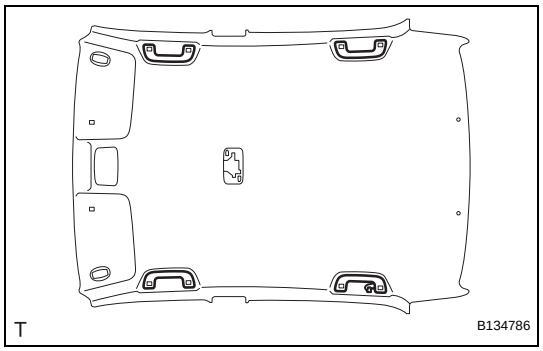

8. INSTALL ASSIST GRIP SUB-ASSEMBLY

HINT:
Use the same procedure to install all the assist grips.

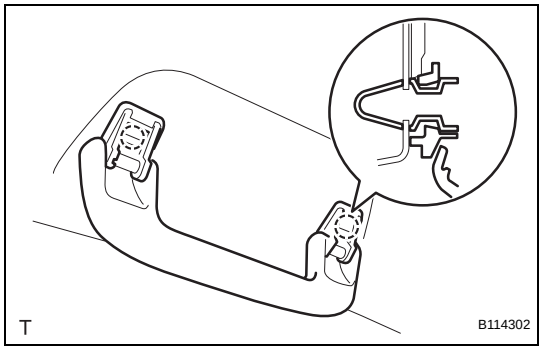

(a) Engage the 2 springs and install the assist grip.

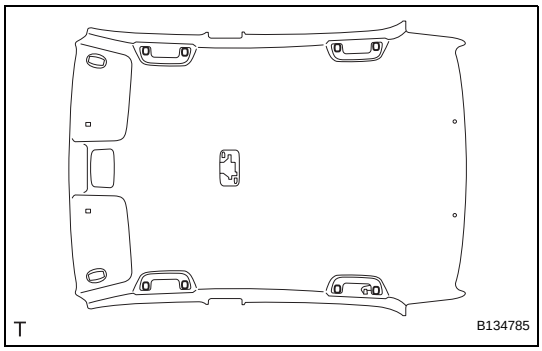

9. INSTALL ASSIST GRIP COVER

HINT:

Use the same procedure to install all the assist grip covers.

(a) Engage the 2 claws and install the assist grip cover.

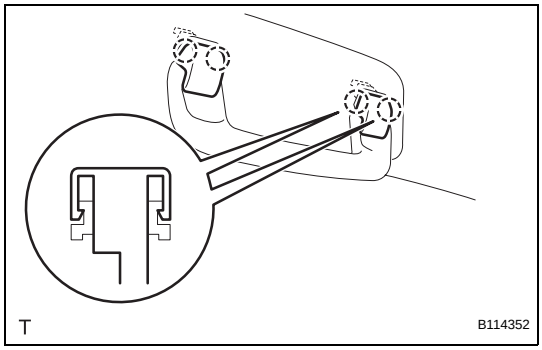

10. INSTALL INSTRUMENT PANEL BOX (See page IP-53)

11. INSTALL UPPER INSTRUMENT PANEL SUB-ASSEMBLY (See page IP-11)

12. INSTALL GLOVE COMPARTMENT DOOR ASSEMBLY (See page IP-13)

13. INSTALL COMBINATION METER ASSEMBLY (See page ME-140)

14. INSTALL INSTRUMENT CLUSTER FINISH PANEL (See page ME-140)

15. INSTALL INSTRUMENT PANEL FINISH PANEL END RH (See page ME-141)

16. INSTALL INSTRUMENT PANEL FINISH PANEL END LH (See page ME-141)

17. INSTALL REAR CONSOLE BOX ASSEMBLY (See page IP-88)

18. INSTALL REAR CONSOLE BOX CARPET (See page IP-88)

19. INSTALL REAR CONSOLE BOX UPPER REAR PANEL SUB-ASSEMBLY (See page IP-89)

20. INSTALL REAR CONSOLE BOX UPPER FRONT PANEL SUB-ASSEMBLY (See page IP-89)

21. INSTALL SHIFT LEVER KNOB SUB-ASSEMBLY (for Manual Transaxle) (See page IP-89)

22. INSTALL INSTRUMENT PANEL LOWER CENTER FINISH PANEL (See page ME-142)

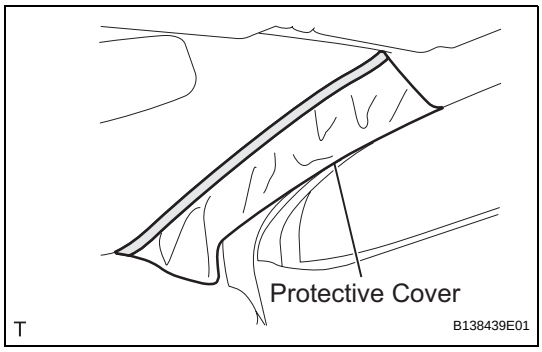

23. INSTALL FRONT PILLAR GARNISH RH

(a) w/ Curtain Shield Airbag:

(1) Remove the piece of cloth or nylon.

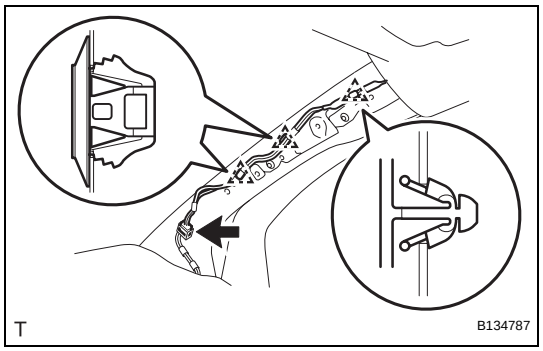

(b) Install the 3 clamps.
(c) Connect the antenna connector.

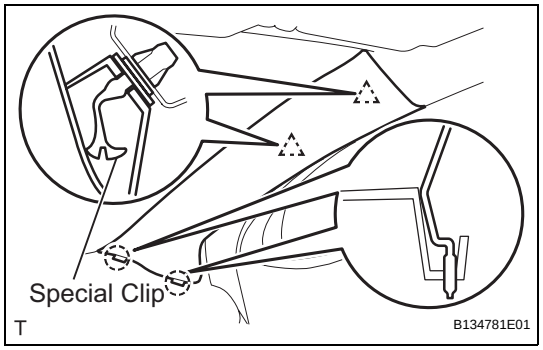

(d) w/ Curtain Shield Airbag:
  (1) Install 2 new special clips and the clip onto the front pillar garnish.
  (2) Engage the 2 clips and the 2 claws and install the front pillar garnish.

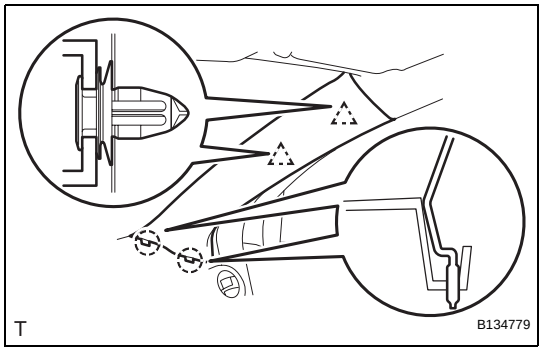

(e) w/o Curtain Shield Airbag:
  (1) Engage the 2 clips and the 2 claws and install the front pillar garnish.

24. INSTALL FRONT PILLAR GARNISH LH

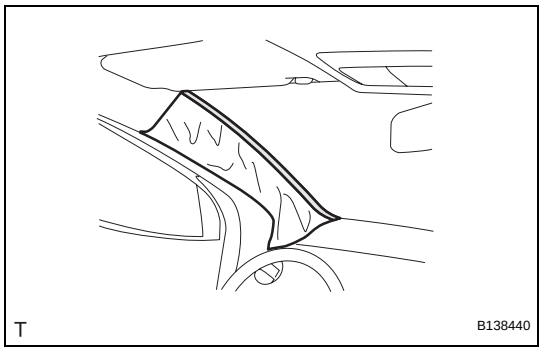

(a) w/ Curtain Shield Airbag:
  (1) Remove the piece of cloth or nylon.

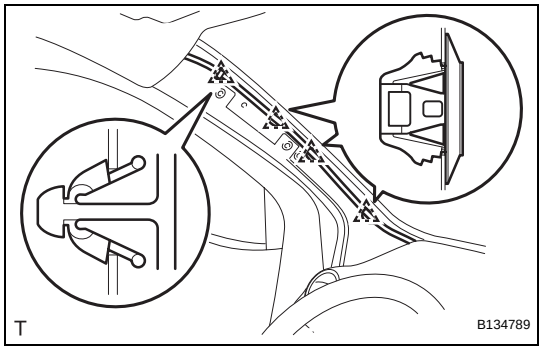

(b) Install the 4 clamps.

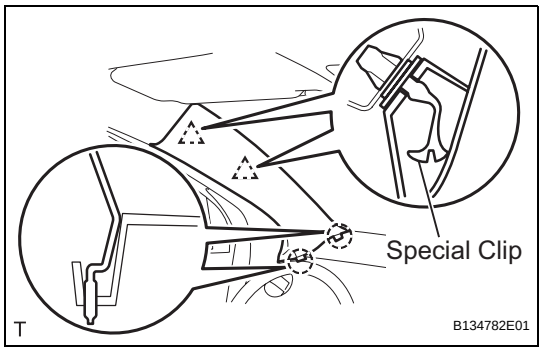

(c) w/ Curtain Shield Airbag:
(1) Install 2 new special clips and the clip onto the front pillar garnish.
(2) Engage the 2 clips and the 2 claws and install the front pillar garnish.

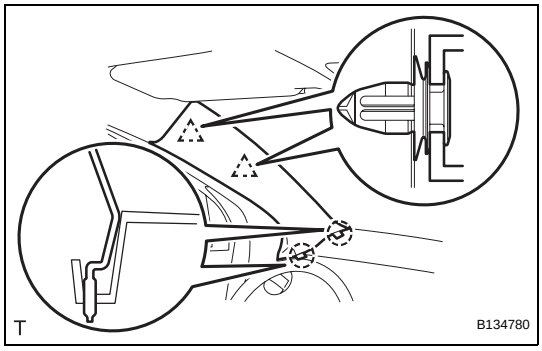

(d) w/o Curtain Shield Airbag:
(1) Engage the 2 clips and the 2 claws and install the front pillar garnish.

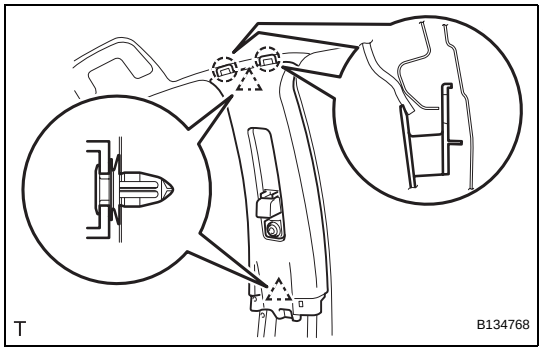

25. INSTALL CENTER PILLAR UPPER GARNISH RH
(a) Engage the 2 hooks and 2 clips and install the center pillar upper garnish.

26. INSTALL CENTER PILLAR UPPER GARNISH LH
HINT:
Use the same procedure as for the RH side.

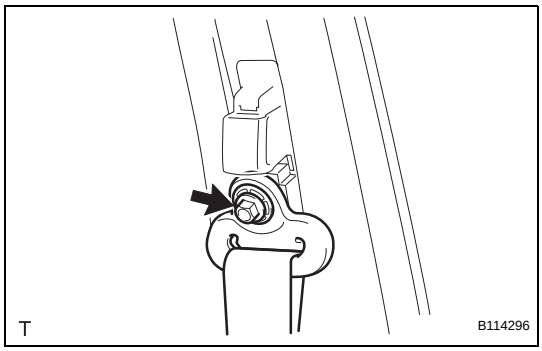

27. INSTALL FRONT SEAT OUTER BELT ASSEMBLY RH
(a) Install the through anchor with the bolt.
Torque: 42 N*m (430 kgf*cm, 31 ft.*lbf)

28. INSTALL FRONT SEAT OUTER BELT ASSEMBLY LH
HINT:
Use the same procedure as for the RH side.

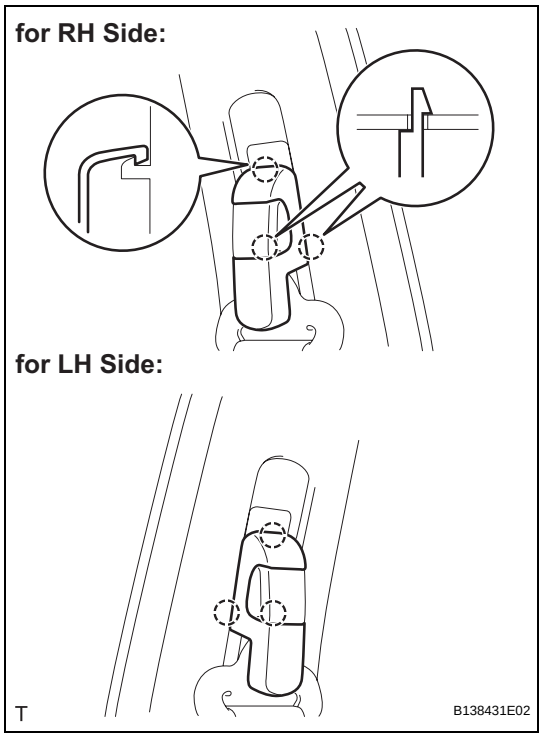

29. INSTALL SEAT BELT ANCHOR COVER CAP

HINT:

Use the same procedure for both sides.

(a) Engage the 3 claws and install the seat belt anchor cover cap.

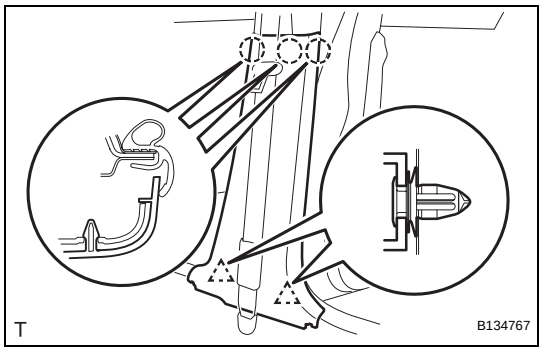

30. INSTALL CENTER PILLAR LOWER GARNISH RH

(a) Engage the 2 clips and 3claws and install the center pillar lower garnish.

31. INSTALL CENTER PILLAR LOWER GARNISH LH

HINT:

Use the same procedure as for the RH side.

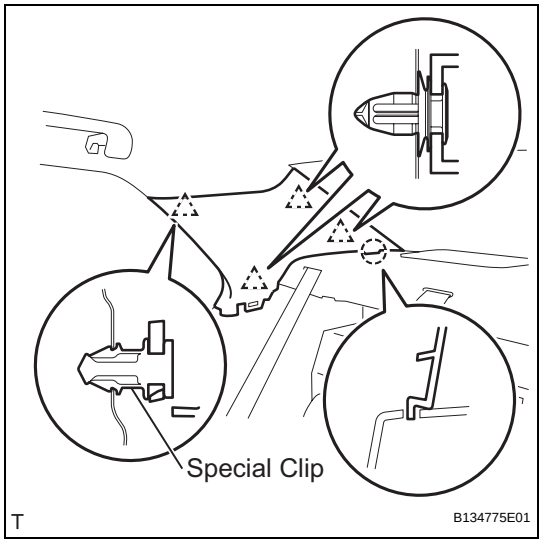

32. INSTALL ROOF SIDE INNER GARNISH RH

(a) w/ Curtain Shield Airbag:

(1) Install a new special clip and the clip onto the roof side inner garnish.

(2) Engage the 4 clips and the claw and install the roof side inner garnish.

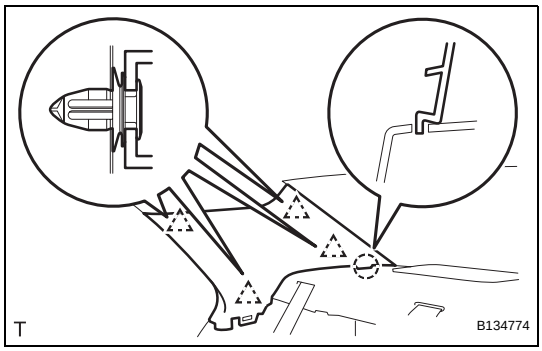

(b) w/o Curtain Shield Airbag:
(1) Engage the 4 clips and the claw and install the roof side inner garnish.

33. INSTALL ROOF SIDE INNER GARNISH LH
HINT:
Use the same procedure as for the RH side.

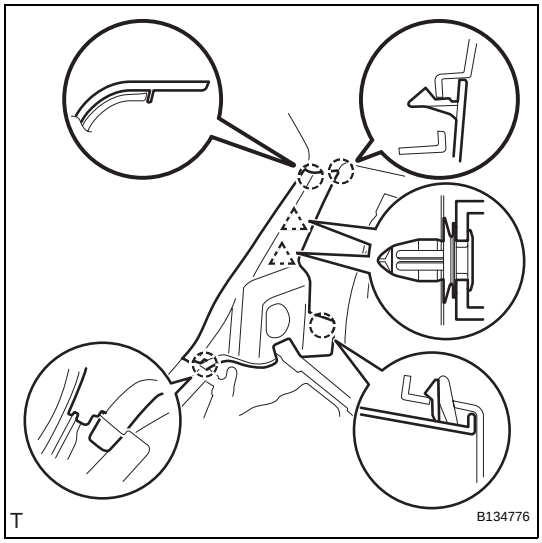

34. INSTALL REAR SEAT SIDE COVER RH
(a) Engage the 2 clips and the 4 claws and install the rear seat side cover.

35. INSTALL REAR SEAT SIDE COVER LH
HINT:
Use the same procedure as for the RH side.

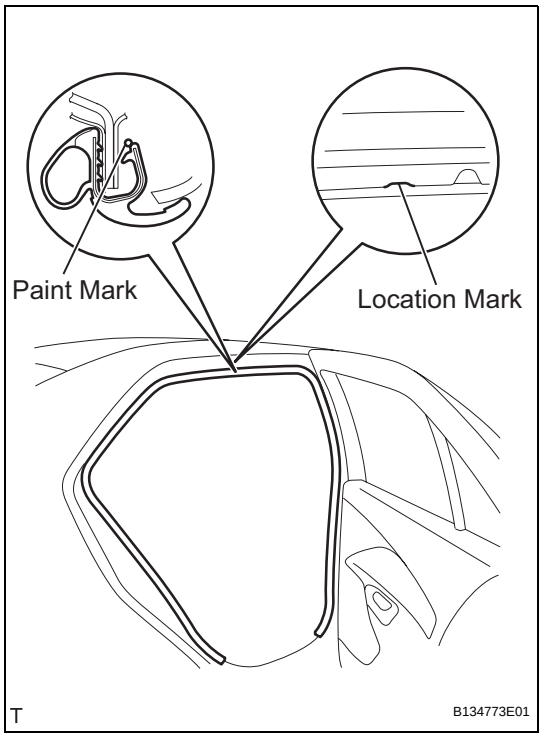

36. INSTALL REAR DOOR OPENING TRIM WEATHERSTRIP RH
(a) Align the location mark with the paint mark first, and install the rear door opening trim weatherstrip, as shown in the illustration.
Paint mark

Area	Color
RH side	Green
LH side	Red

37. INSTALL REAR DOOR OPENING TRIM WEATHERSTRIP LH
HINT:
Use the same procedure as for the RH side.

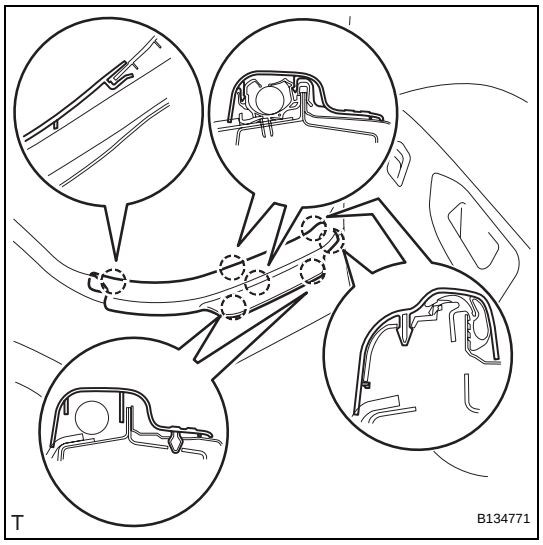

38. INSTALL REAR DOOR SCUFF PLATE RH

(a) Engage the 7 claws and install the rear door scuff plate.

39. INSTALL REAR DOOR SCUFF PLATE LH

HINT:

Use the same procedure as for the RH side.

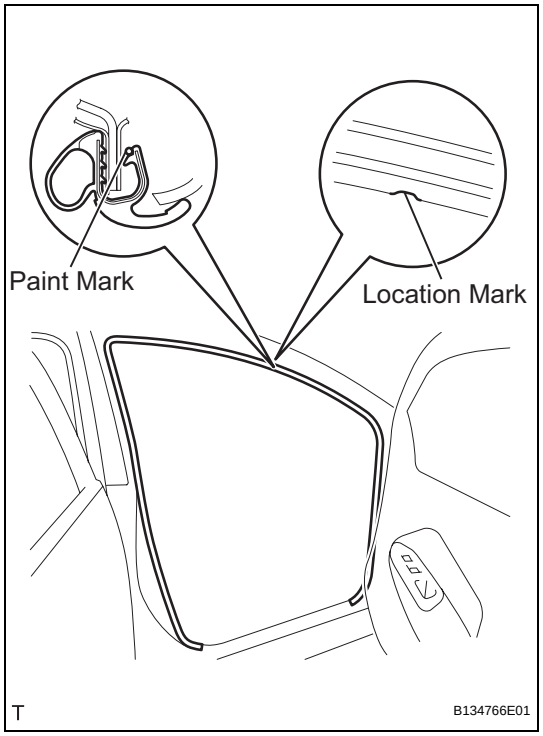

40. INSTALL FRONT DOOR OPENING TRIM WEATHERSTRIP RH

(a) Align the location mark with the paint mark first, and install the front door opening trim weatherstrip, as shown in the illustration.

Paint mark

Area	Color
RH side	Blue
LH side	Pink

41. INSTALL FRONT DOOR OPENING TRIM WEATHERSTRIP LH

HINT:

Use the same procedure as for the RH side.

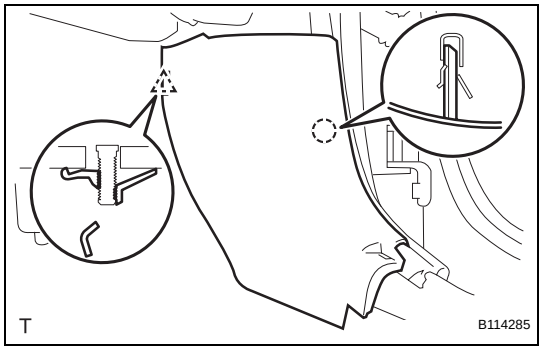

42. INSTALL COWL SIDE TRIM BOARD RH

(a) Engage the stud bolt and the claw and install the cowl side trim board.

43. INSTALL COWL SIDE TRIM BOARD LH

HINT:

Use the same procedure as for the RH side.

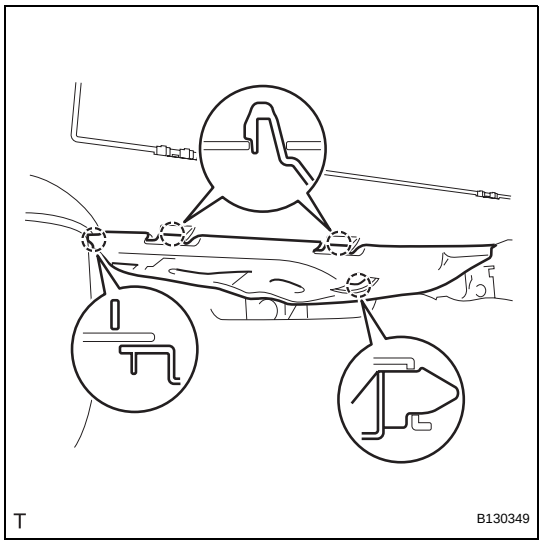

44. INSTALL INSTRUMENT PANEL UNDER COVER SUB-ASSEMBLY RH

(a) Engage the 4 claws and install the instrument panel under cover.

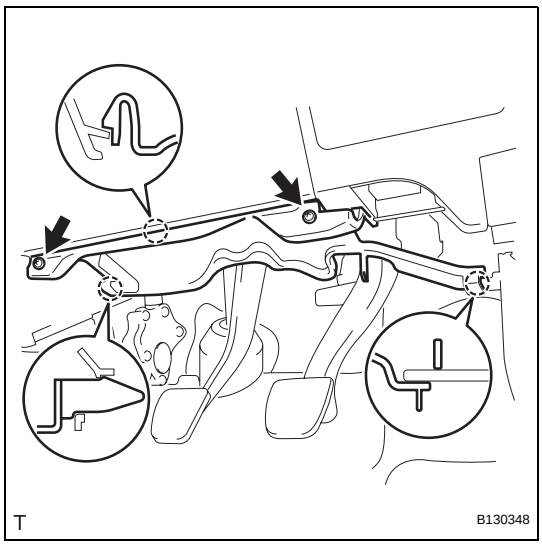

45. INSTALL INSTRUMENT PANEL UNDER COVER SUB-ASSEMBLY LH

(a) Engage the 3 claws and install the instrument panel under cover.

(b) Tighten the 2 screws.

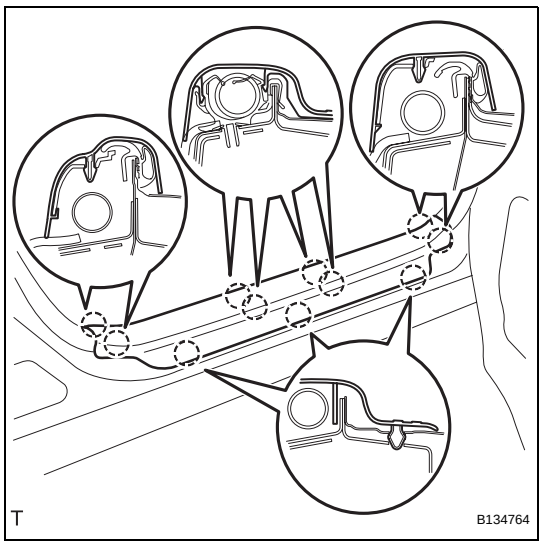

46. INSTALL FRONT DOOR SCUFF PLATE RH

(a) Engage the 11 claws and install the front door scuff plate.

47. INSTALL FRONT DOOR SCUFF PLATE LH

HINT:

Use the same procedure as for the RH side.

48. INSTALL LUGGAGE COMPARTMENT TRIM INNER PAD (for 60/40 Split Seat Type) (See page ED-136)

49. INSTALL SPARE WHEEL COVER ASSEMBLY (for 60/40 Split Seat Type) (See page ED-137)

50. INSTALL LUGGAGE COMPARTMENT FLOOR MAT (for 60/40 Split Seat Type) (See page ED-137)

51. INSTALL REAR SEATBACK ASSEMBLY RH (for 60/40 Split Seat Type) (See page SE-65)

52. INSTALL REAR SEATBACK ASSEMBLY LH (for 60/40 Split Seat Type) (See page SE-52)

53. INSTALL REAR SEATBACK ASSEMBLY (for Fixed Seat Type) (See page SE-108)

54. INSTALL REAR SEAT CUSHION COVER PAD SUB-ASSEMBLY

(a) for 60/40 Split Seat Type:

(1) Install the rear seat cushion cover pad sub-assembly (See page SE-53).

(b) for Fixed Seat Type:

(1) Install the rear seat cushion cover pad sub-assembly (See page SE-109).

55. INSTALL FRONT SEAT ASSEMBLY LH (See page SE-20)

56. INSTALL FRONT SEAT ASSEMBLY RH

HINT:

Use the same procedure as for the LH side.

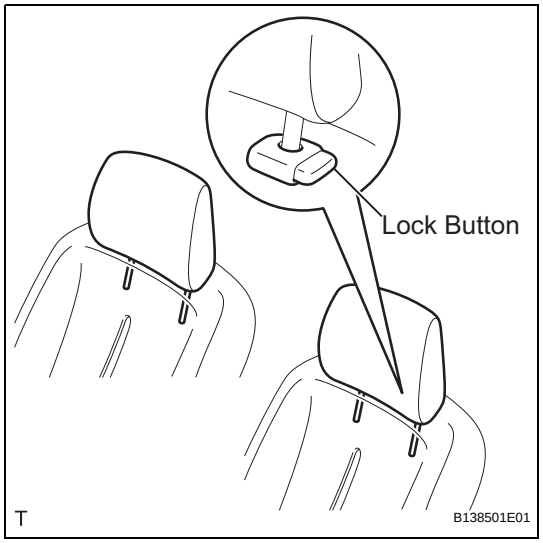

57. INSTALL FRONT SEAT HEADREST ASSEMBLY

HINT:

Use the same procedure for both sides.

(a) Push in the lock button of the front seat headrest support and install the front seat headrest.

58. CONNECT CABLE TO NEGATIVE BATTERY TERMINAL

Torque: 5.4 N*m (55 kgf*cm, 48 in.*lbf)

59. INSPECT SRS WARNING LIGHT

(See page RS-31)

ROOF HEADLINING (for Hatchback 5 Door)

COMPONENTS

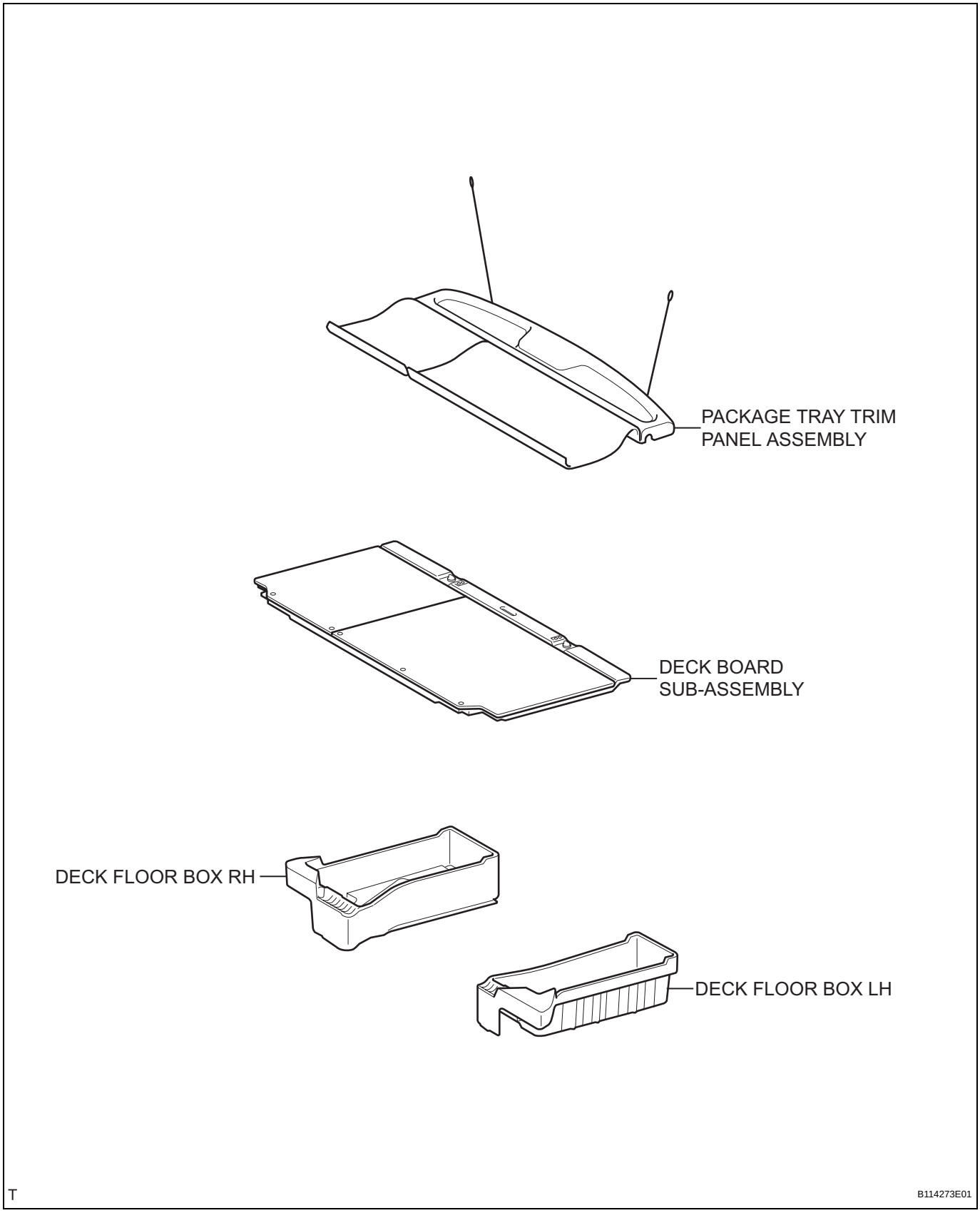

for 60/40 Split Seat Type:

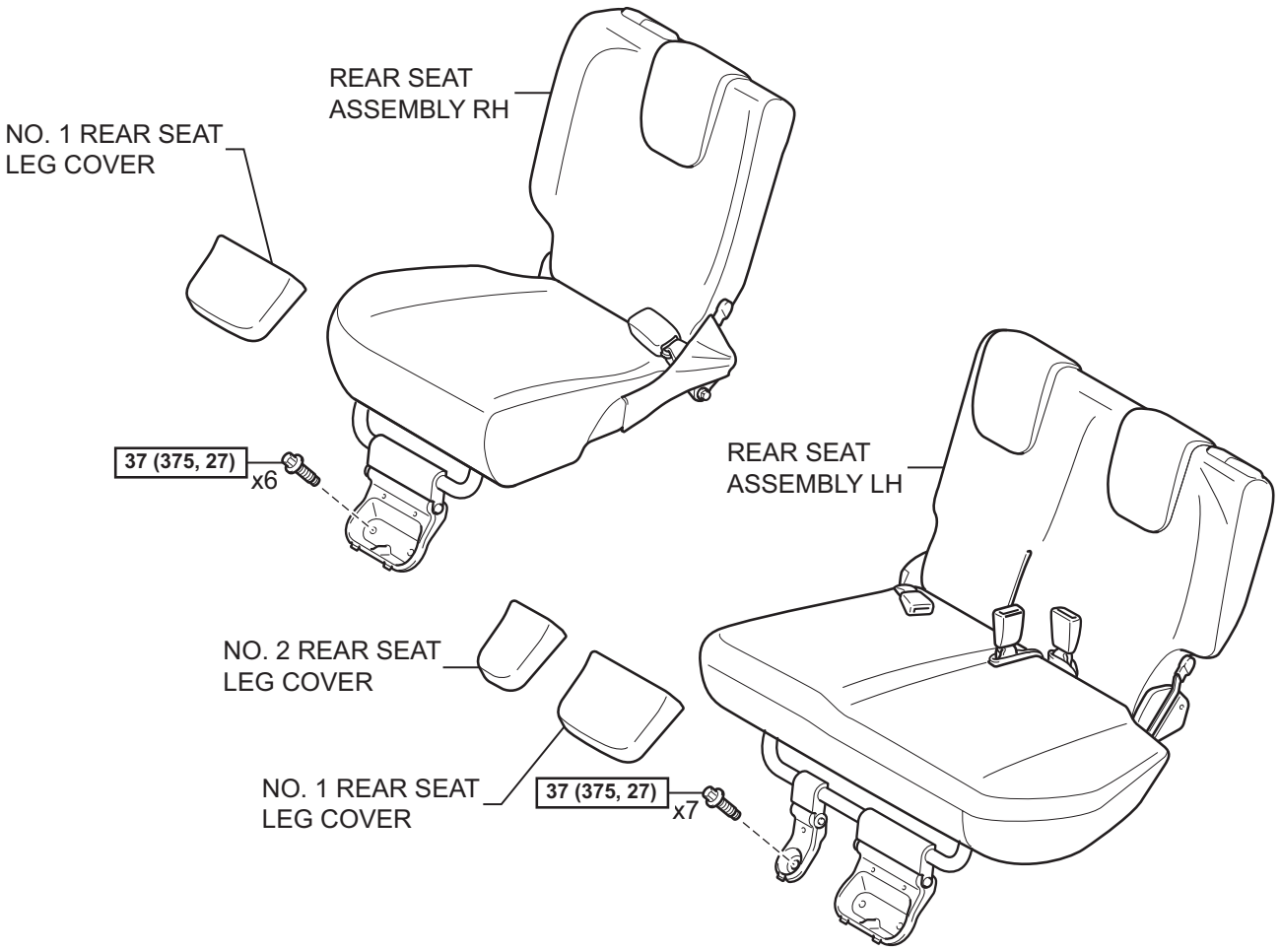

for Hold Down Seat Type:

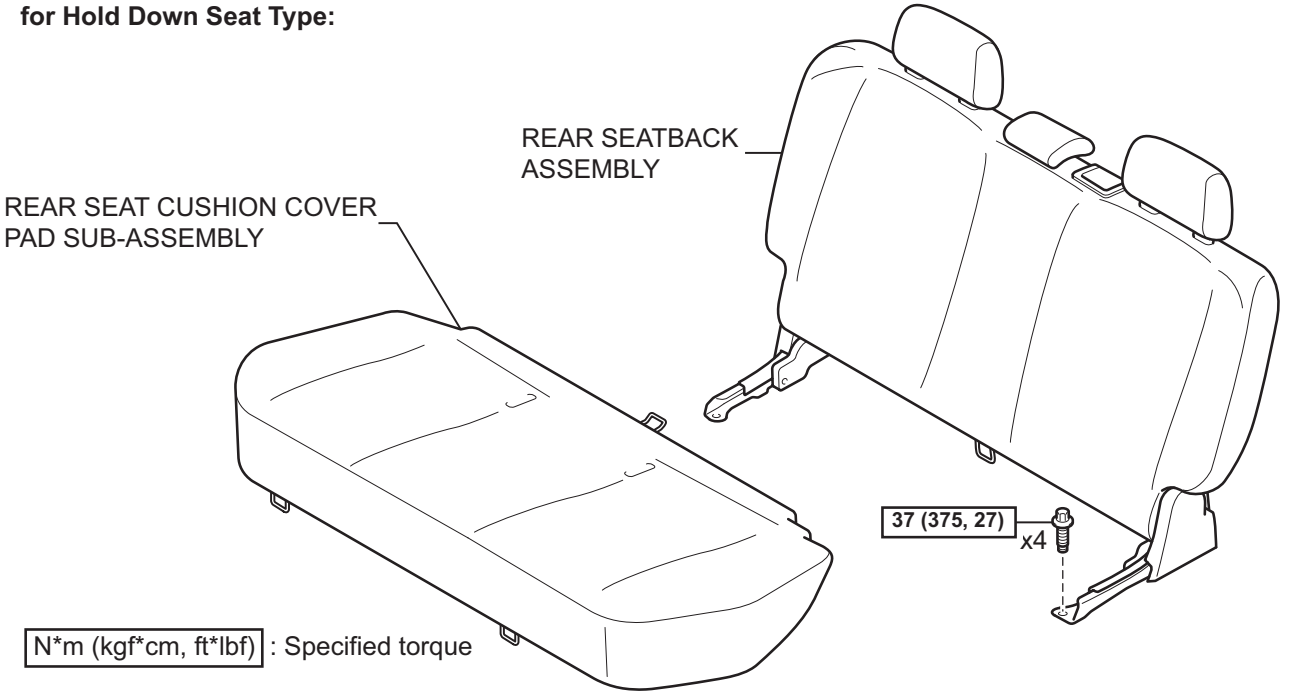

IR

T

B121713E03

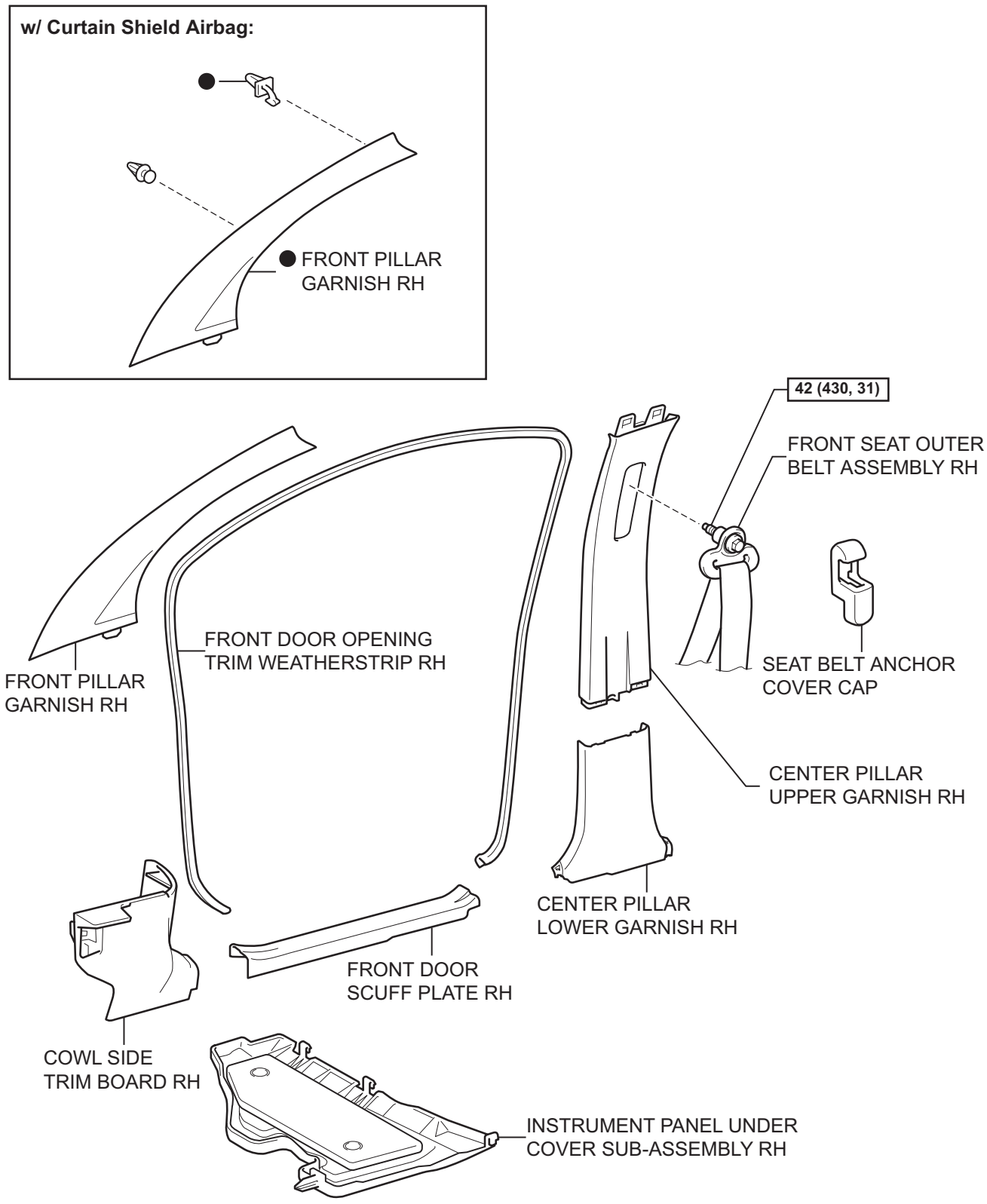

N*m (kgf*cm, ft*lbf) : Specified torque

● Non-reusable part

T

B114276E02

IR

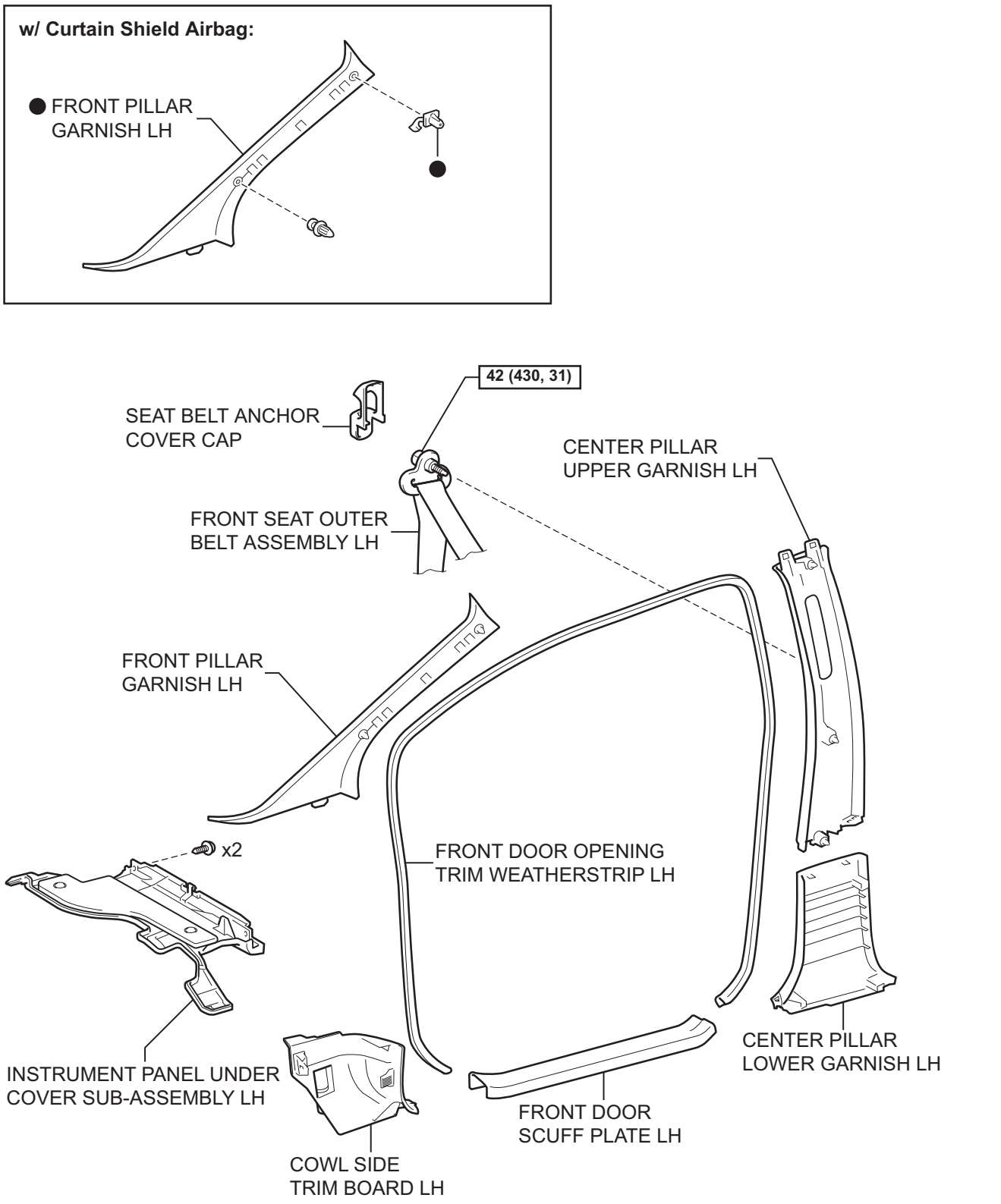

IR

N*m (kgf*cm, ft*lbf) : Specified torque

● Non-reusable part

T

B114277E02

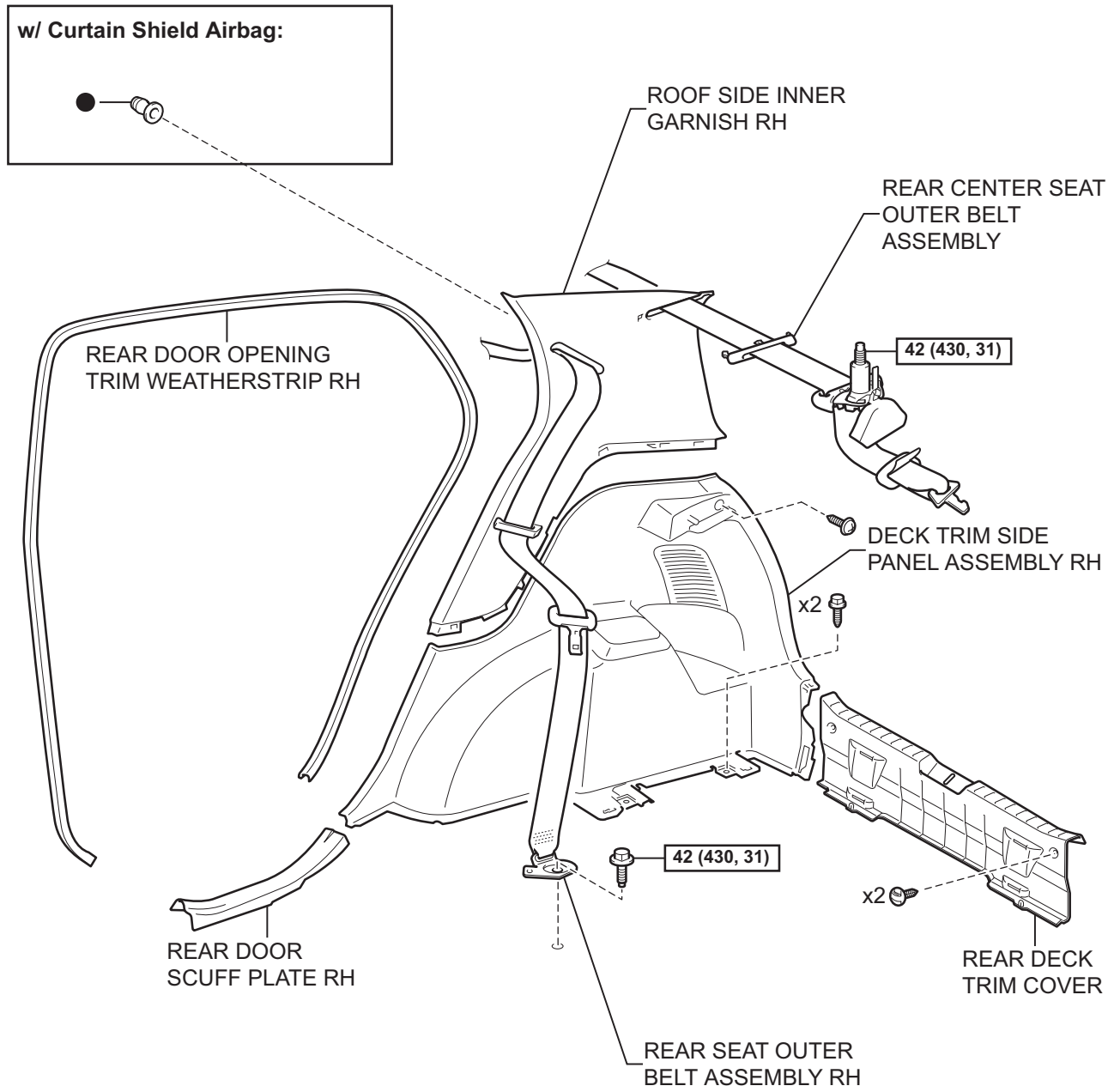

N*m (kgf*cm, ft*lbf) : Specified torque

● Non-reusable part

T

B114274E07

IR

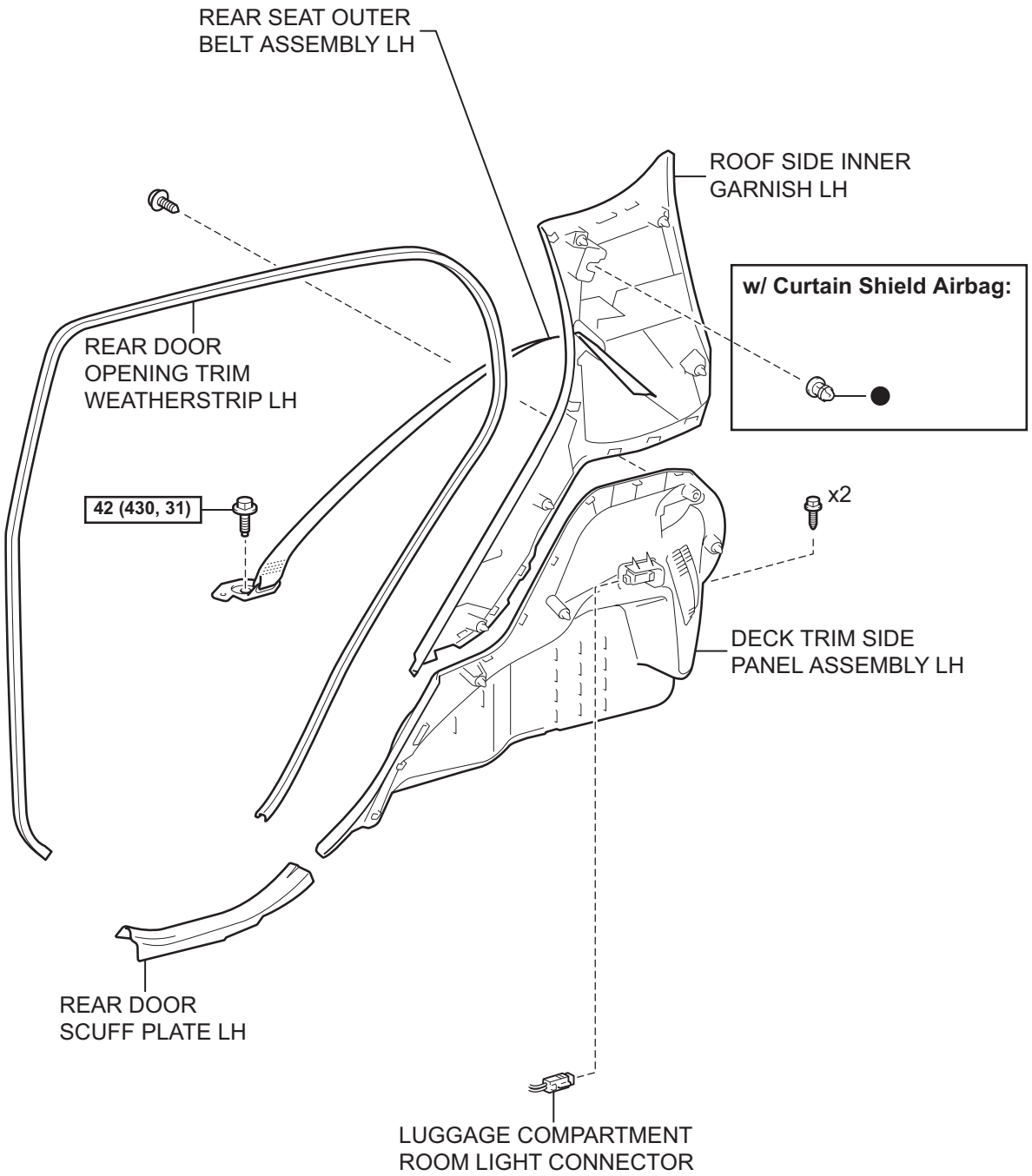

N*m (kgf*cm, ft*lbf) : Specified torque

● Non-reusable part

T

B114275E11

IR

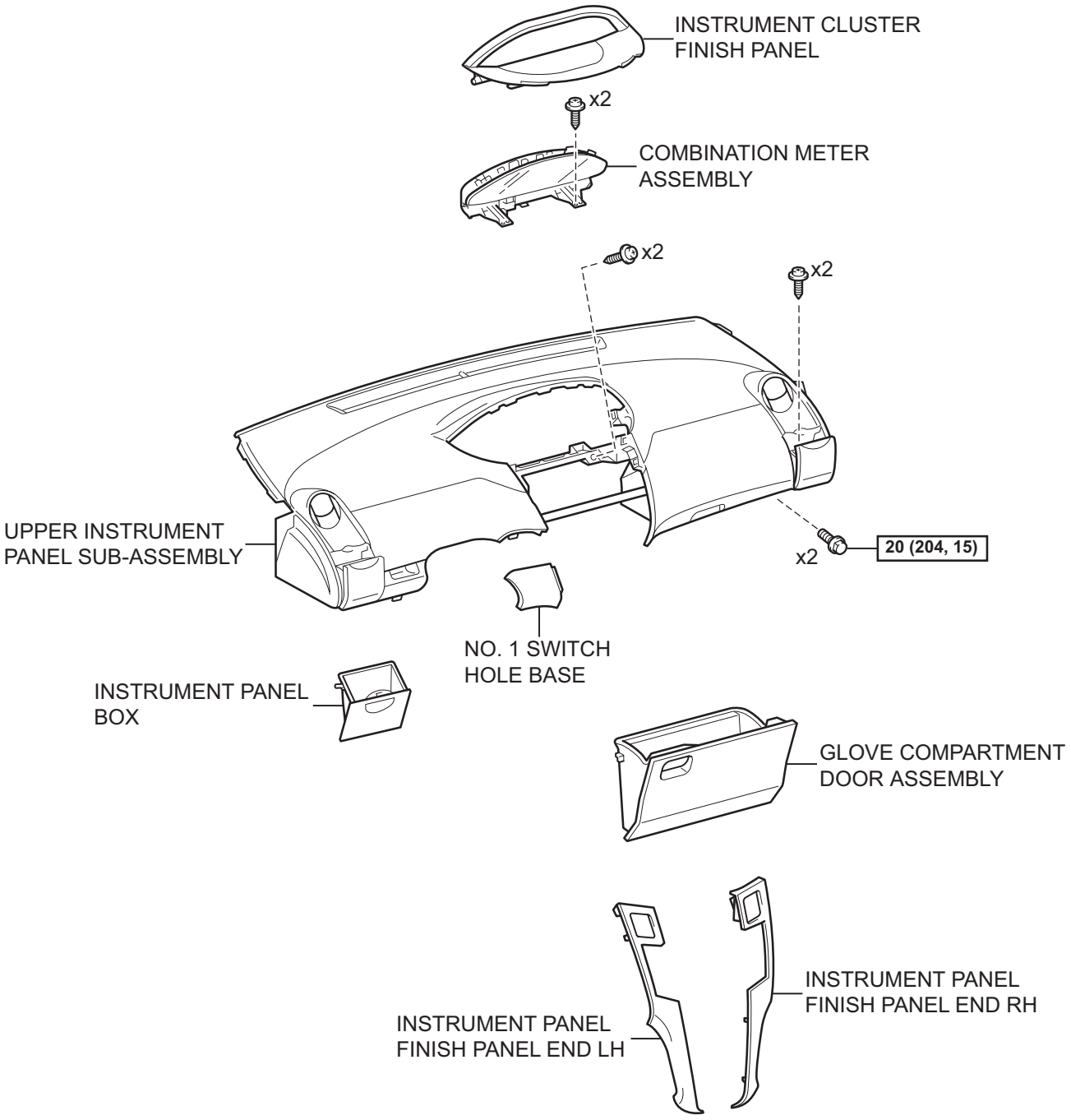

N*m (kgf*cm, ft*lbf) : Specified torque

T

B117770E02

IR

w/ Curtain Shield Airbag:

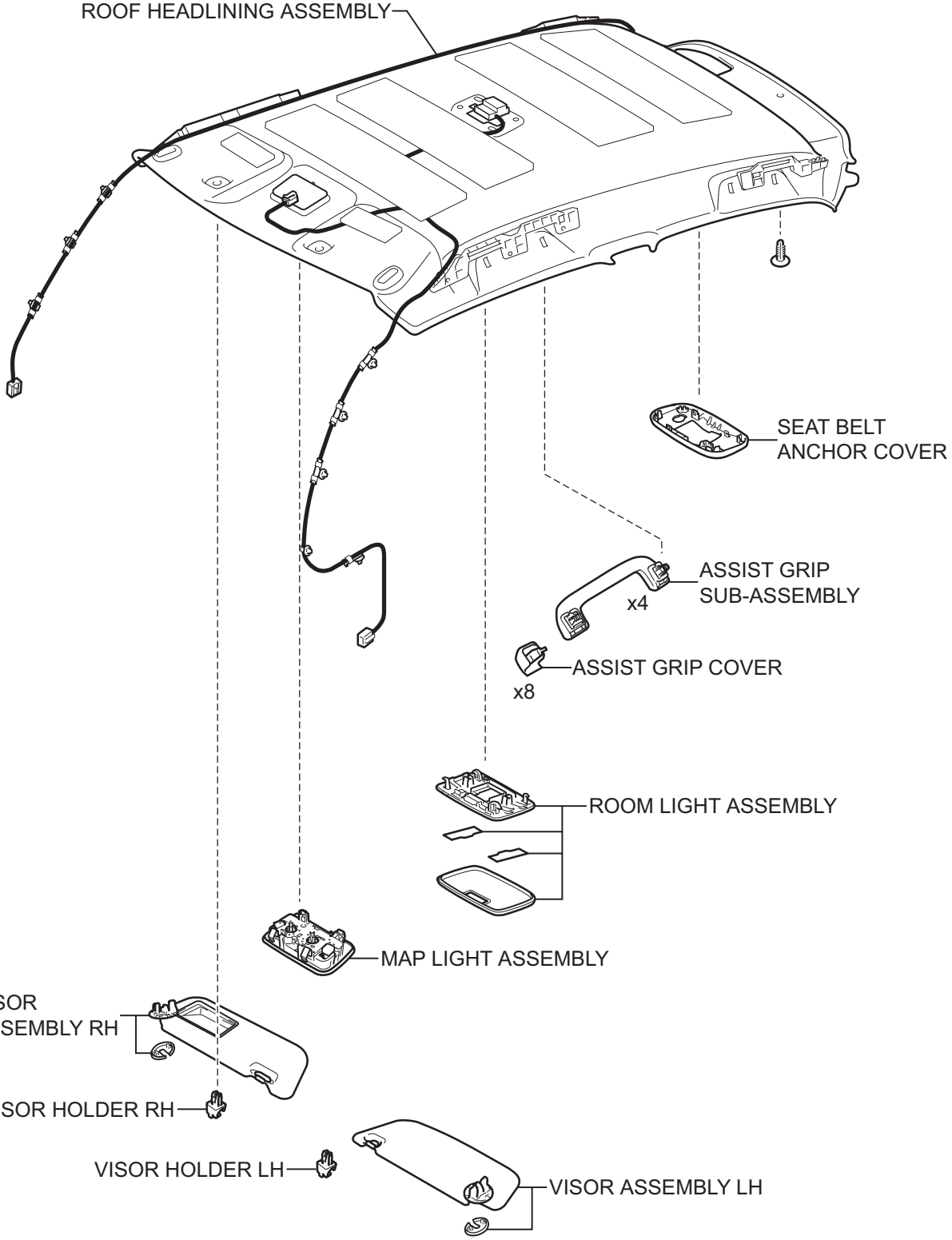

IR

T

B114279E08

w/o Curtain Shield Airbag:

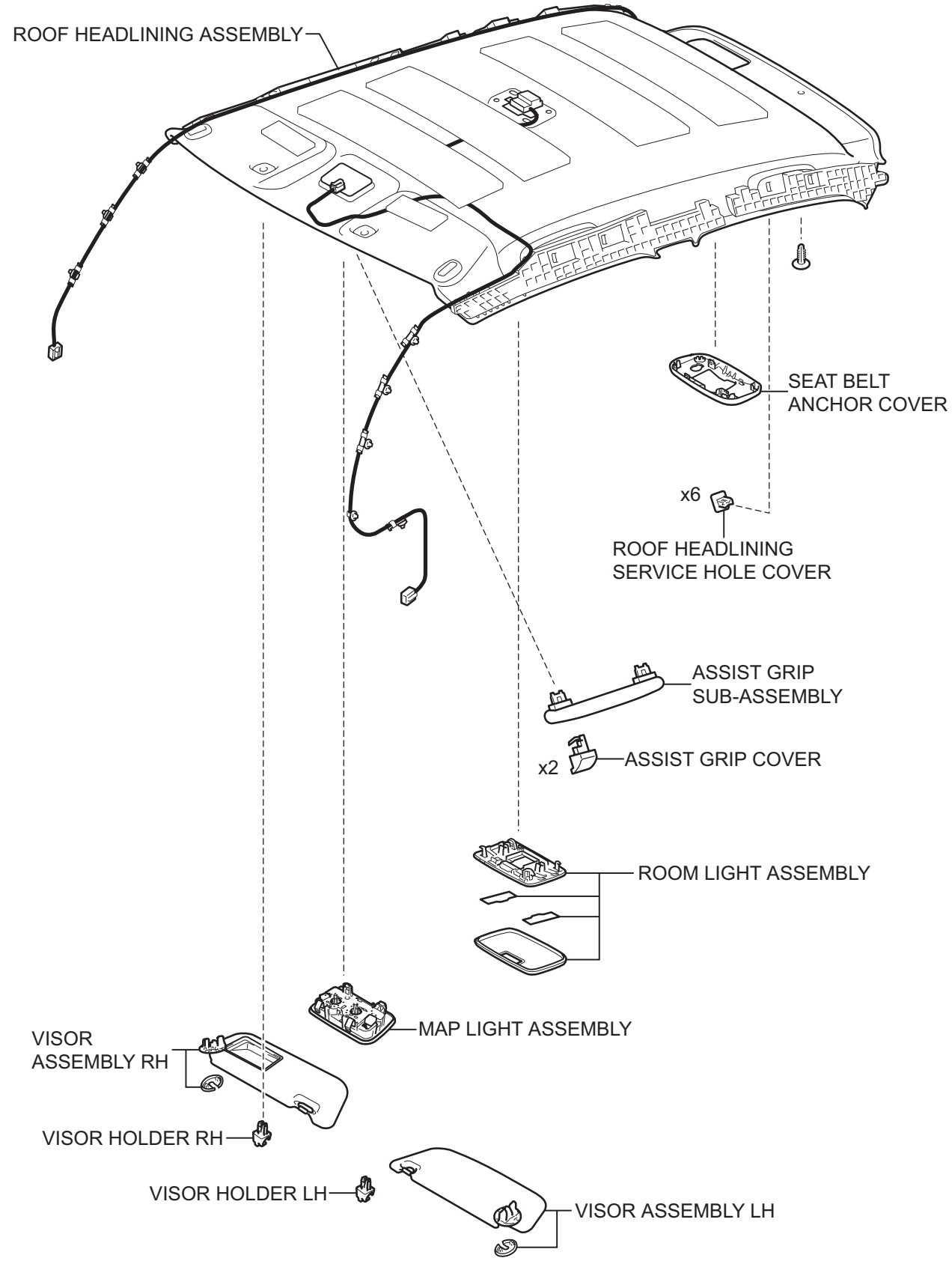

T

B114280E02

IR

w/ Curtain Shield Airbag:

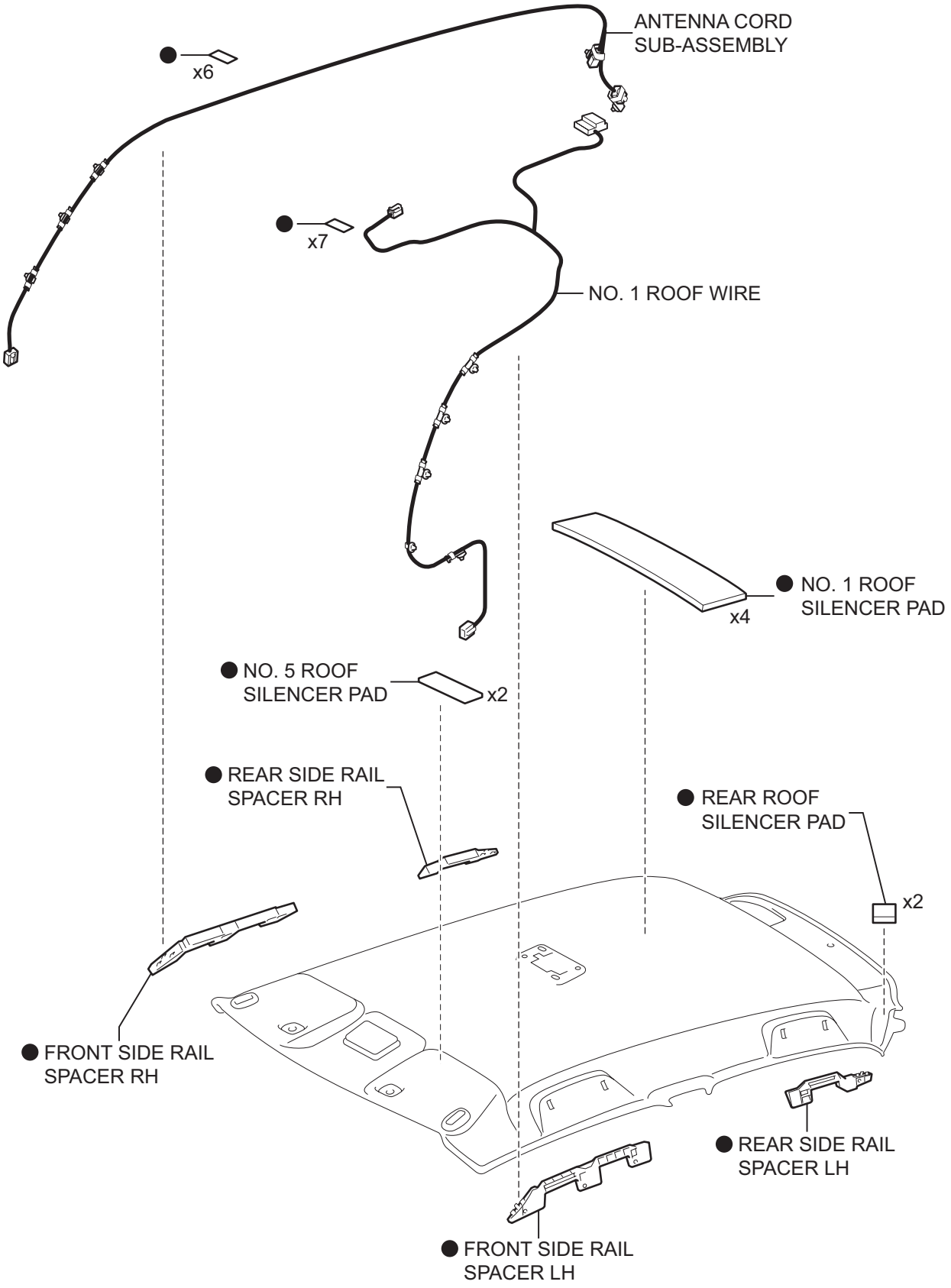

● Non-reusable part

T

B114281E02

IR

w/o Curtain Shield Airbag:

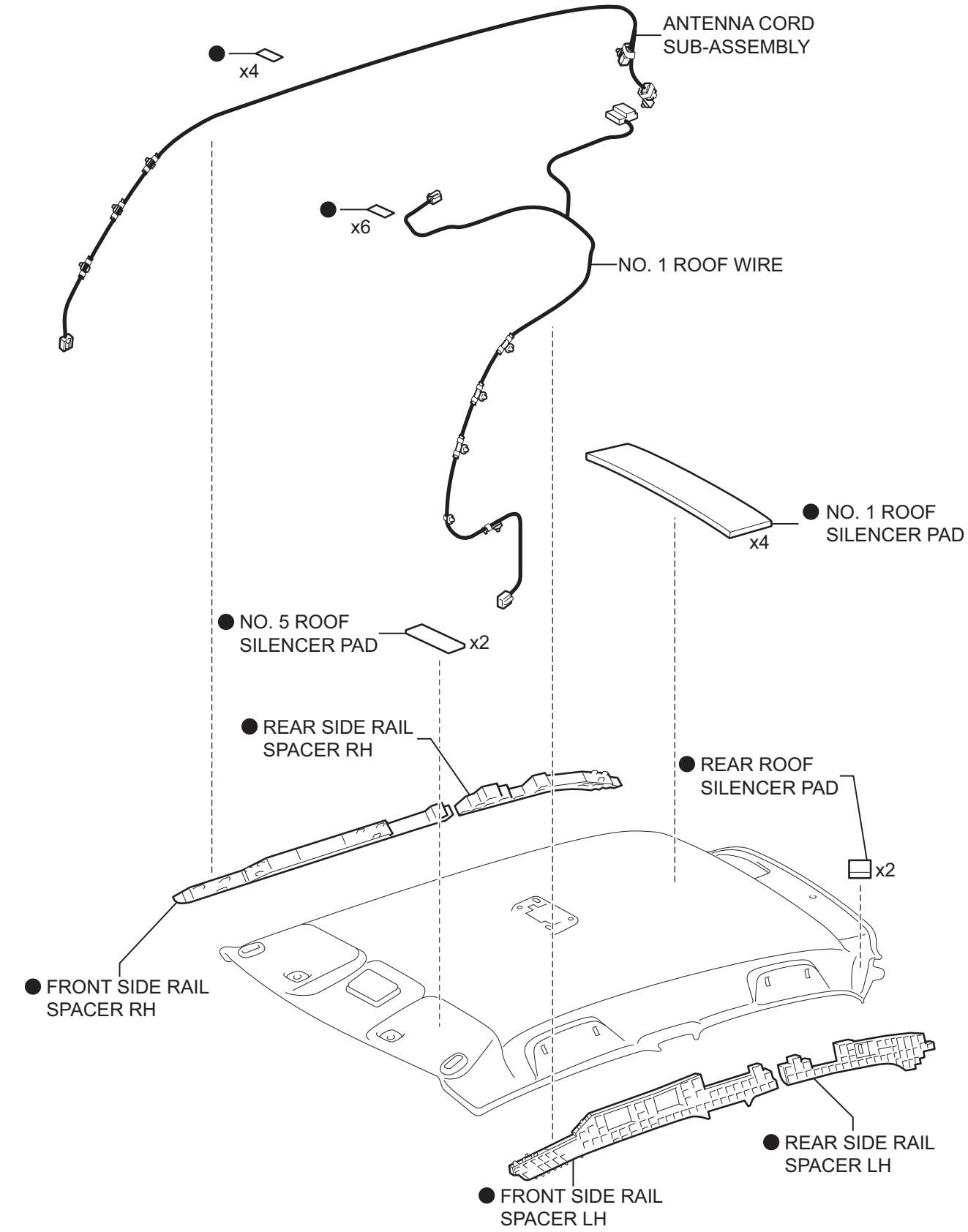

T

B114282E02

IR

REMOVAL

CAUTION:
Some of these service operations affect the SRS airbag system. Read the precautionary notices concerning the SRS airbag system before servicing (See page RS-1).
NOTICE:
Always use "Torx" socket wrench E10 when removing the rear seat.

1. **DISCONNECT CABLE FROM NEGATIVE BATTERY TERMINAL**
   CAUTION:
   Wait for at least 90 seconds after disconnecting the cable to prevent the airbag from working.

2. **REMOVE PACKAGE TRAY TRIM PANEL ASSEMBLY**
   (a) Remove the 2 package tray trim suspenders.
   (b) Remove the 5 pieces of hook tape.
   (c) Disengage the 2 claws and remove the package tray trim.

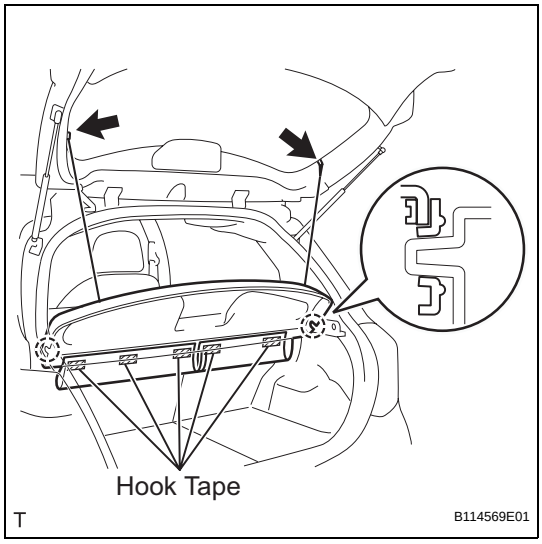

3. **REMOVE DECK BOARD SUB-ASSEMBLY**
   (a) Release the 2 knobs and remove the deck board.

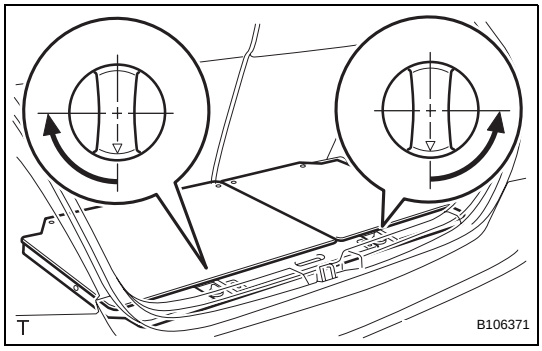

4. **REMOVE DECK FLOOR BOX RH**
   (a) Release the 2 knobs and remove the deck floor box.

5. **REMOVE DECK FLOOR BOX LH**
   HINT:
   Use the same procedure as for the RH side.

6. **REMOVE NO. 1 REAR SEAT LEG COVER (for 60/40 Split Seat Type)**
   (a) for RH Side:
      (1) Remove the No. 1 rear seat leg cover (See page SE-89).

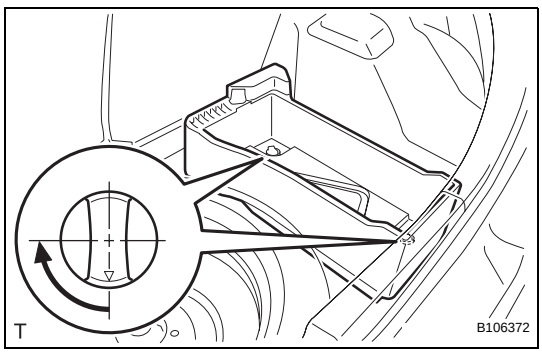

IR

(b) for LH Side:
(1) Remove the No. 1 rear seat leg cover (See page SE-70).

7. REMOVE NO. 2 REAR SEAT LEG COVER (for 60/40 Split Seat Type) (See page SE-85)

8. REMOVE REAR SEAT ASSEMBLY RH (for 60/40 Split Seat Type) (See page SE-89)

9. REMOVE REAR SEAT ASSEMBLY LH (for 60/40 Split Seat Type) (See page SE-71)

10. REMOVE REAR SEAT CUSHION COVER PAD SUB-ASSEMBLY (for Hold Down Seat Type) (See page SE-114)

11. REMOVE REAR SEATBACK ASSEMBLY (for Hold Down Seat Type) (See page SE-115)

12. REMOVE REAR DECK TRIM COVER
(a) Using a clip remover, remove the 2 clips.
(b) Disengage the 8 claws and remove the rear deck trim cover.

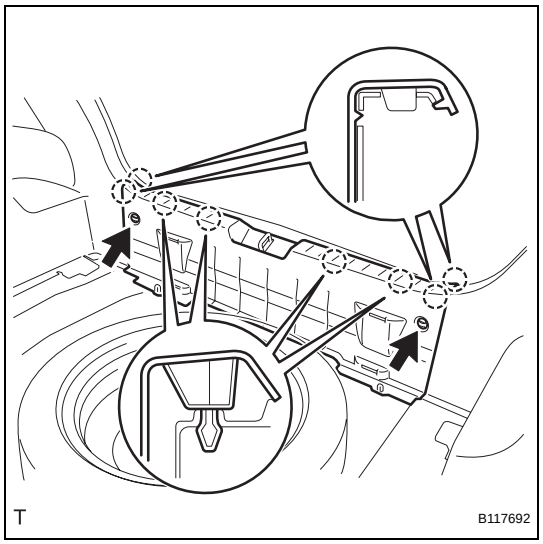

13. REMOVE FRONT DOOR SCUFF PLATE RH
(a) Disengage the 8 claws and remove the front door scuff plate.

14. REMOVE FRONT DOOR SCUFF PLATE LH
HINT:
Use the same procedure as for the RH side.

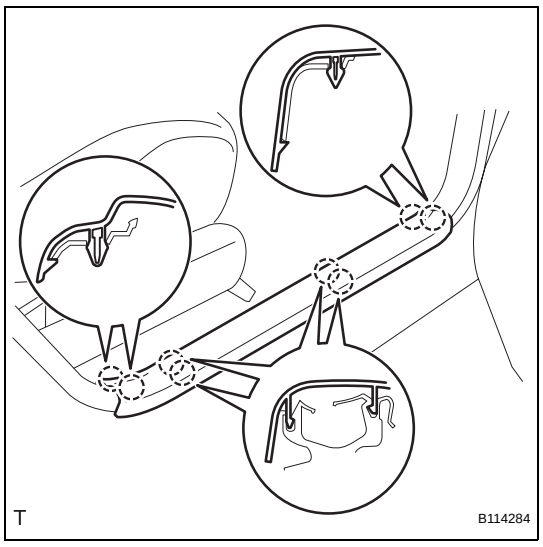

IR

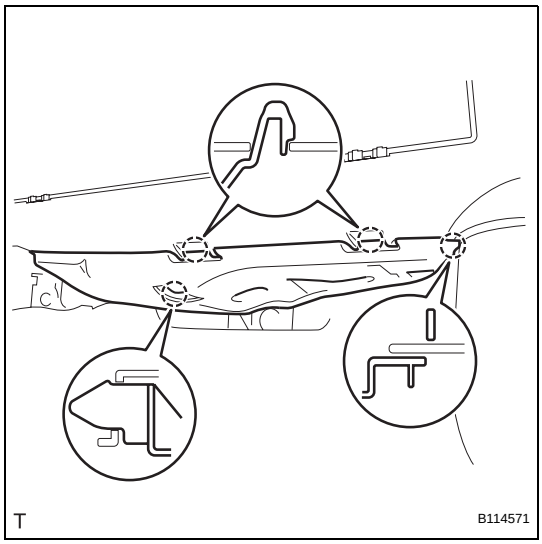

15. REMOVE INSTRUMENT PANEL UNDER COVER SUB-ASSEMBLY RH

(a) Disengage the 4 claws and remove the instrument panel under cover.

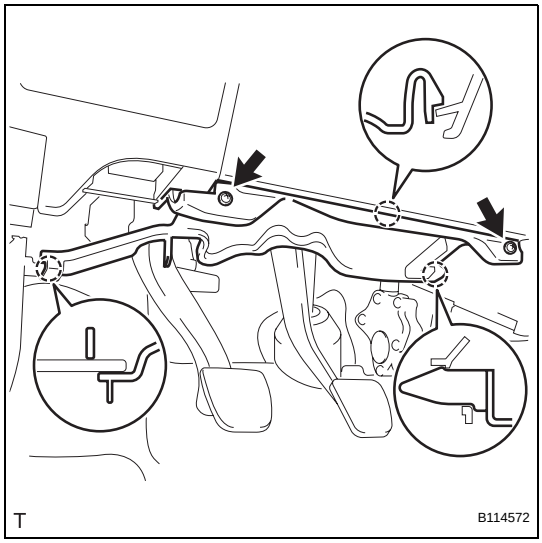

16. REMOVE INSTRUMENT PANEL UNDER COVER SUB-ASSEMBLY LH

(a) Remove the 2 screws.

(b) Disengage the 3 claws and remove the instrument panel under cover.

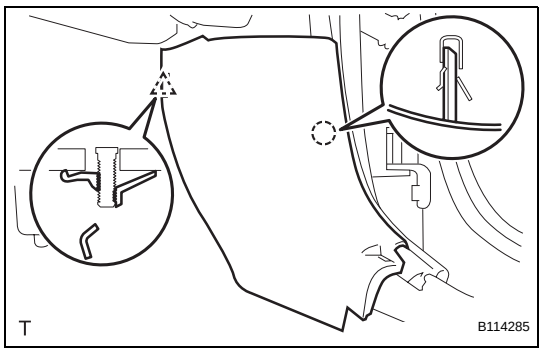

17. REMOVE COWL SIDE TRIM BOARD RH

(a) Disengage the claw and the stud bolt and remove the cowl side trim board.

18. REMOVE COWL SIDE TRIM BOARD LH

HINT:

Use the same procedure as for the RH side.

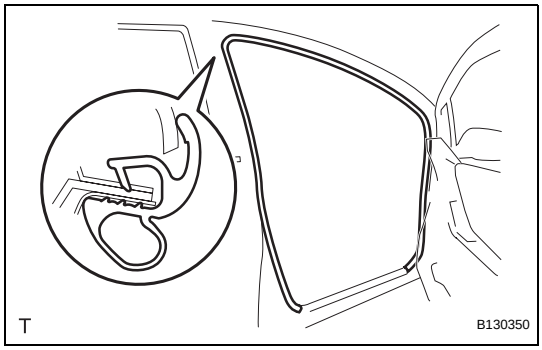

19. REMOVE FRONT DOOR OPENING TRIM WEATHERSTRIP RH

(a) Remove the front door opening trim weatherstrip.

20. REMOVE FRONT DOOR OPENING TRIM WEATHERSTRIP LH

HINT:

Use the same procedure as for the RH side.

IR

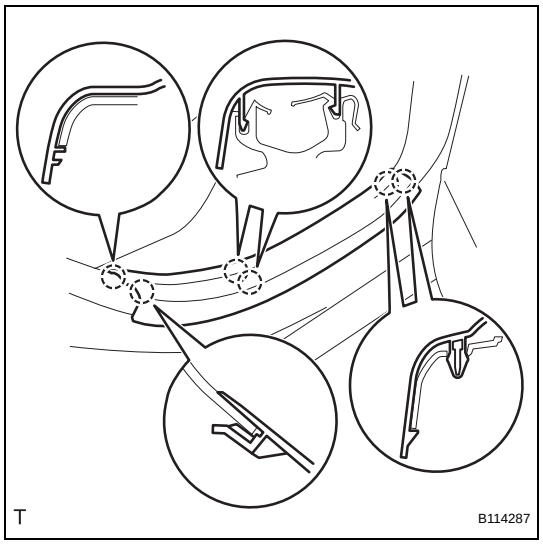

21. REMOVE REAR DOOR SCUFF PLATE RH

(a) Disengage the 6 claws and remove the rear door scuff plate.

22. REMOVE REAR DOOR SCUFF PLATE LH

HINT:

Use the same procedure as for the RH side.

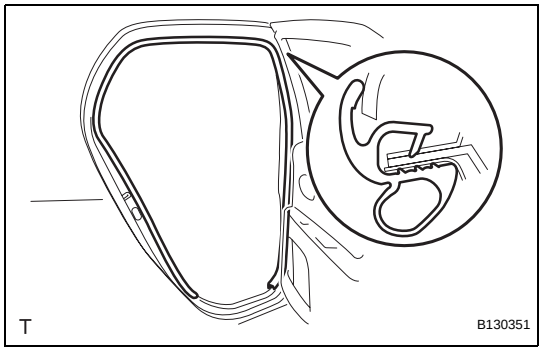

23. REMOVE REAR DOOR OPENING TRIM WEATHERSTRIP RH

(a) Remove the rear door opening trim weatherstrip.

24. REMOVE REAR DOOR OPENING TRIM WEATHERSTRIP LH

HINT:

Use the same procedure as for the RH side.

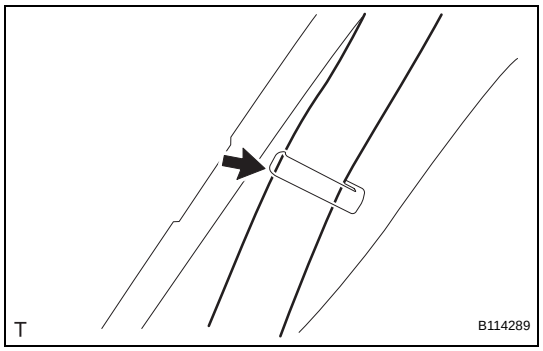

25. REMOVE REAR SEAT OUTER BELT ASSEMBLY RH

(a) Remove the belt from the rear seat shoulder belt hanger.

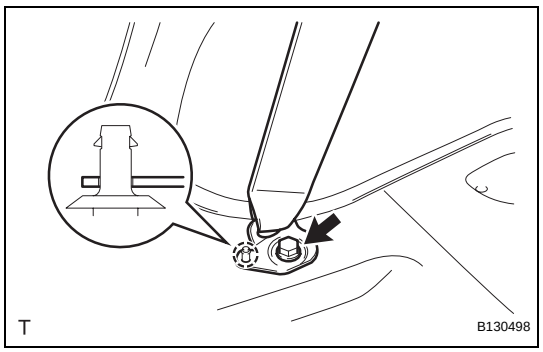

(b) Remove the bolt.

(c) Disengage the clip and remove the anchor plate.

26. REMOVE REAR SEAT OUTER BELT ASSEMBLY LH

HINT:

Use the same procedure as for the RH side.

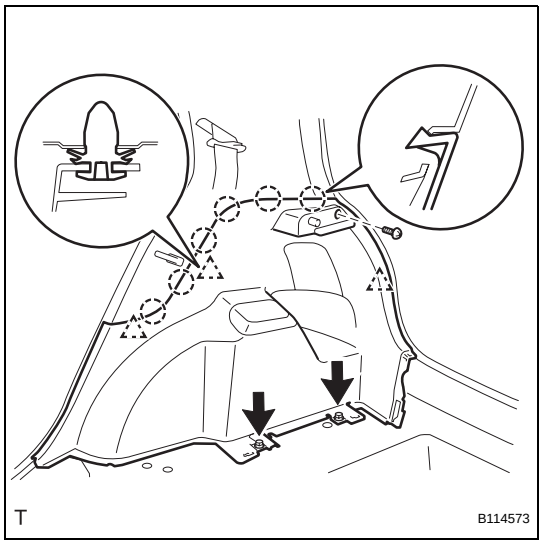

27. REMOVE DECK TRIM SIDE PANEL ASSEMBLY RH

(a) Remove the 3 screws.
(b) Disengage the 3 clips and the 6 claws and remove the deck trim side panel.

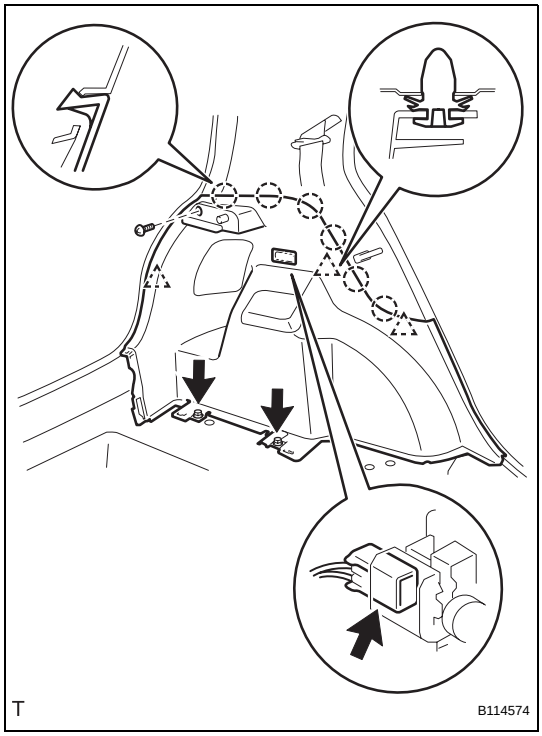

28. REMOVE DECK TRIM SIDE PANEL ASSEMBLY LH

(a) Remove the 3 screws.
(b) Disengage the 3 clips and the 6 claws.
(c) Disconnect the luggage compartment room light connector and remove the deck trim side panel.

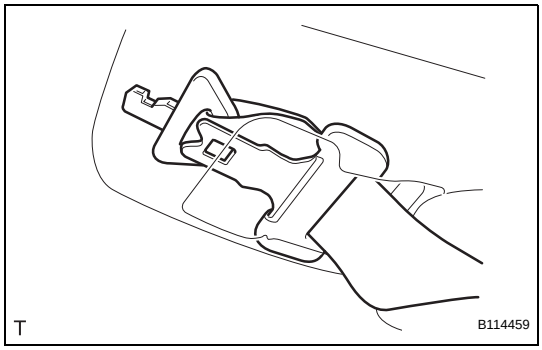

29. REMOVE REAR CENTER SEAT OUTER BELT ASSEMBLY

(a) Remove the 2 tongue plates.

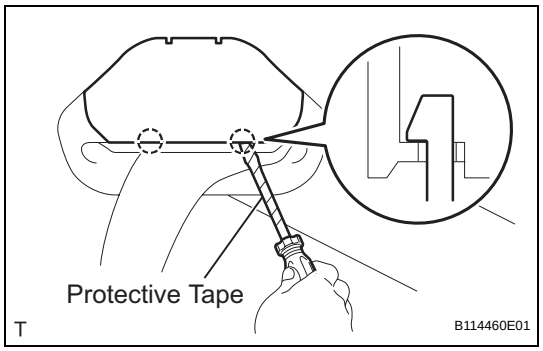

(b) Using a screwdriver with its tip wrapped in protective tape, disengage the 2 claws and open the slip joint cover.

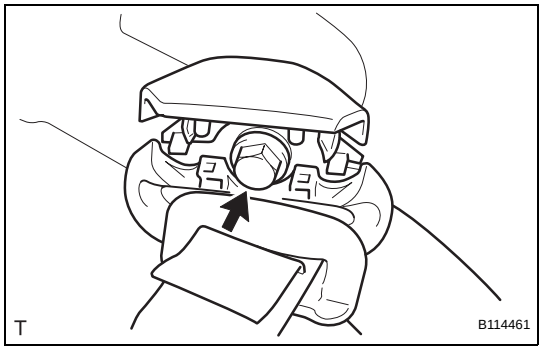

(c) Remove the bolt and the through anchor.

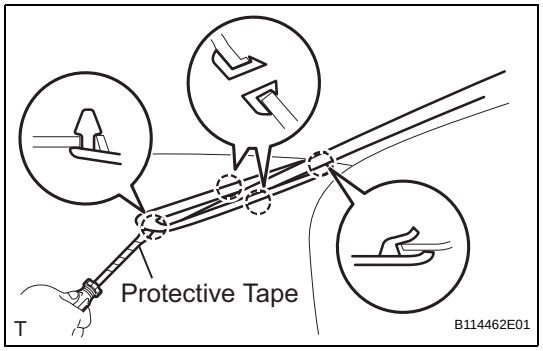

(d) Using a screwdriver with its tip wrapped in protective tape, disengage the 4 claws and remove the center belt guide.

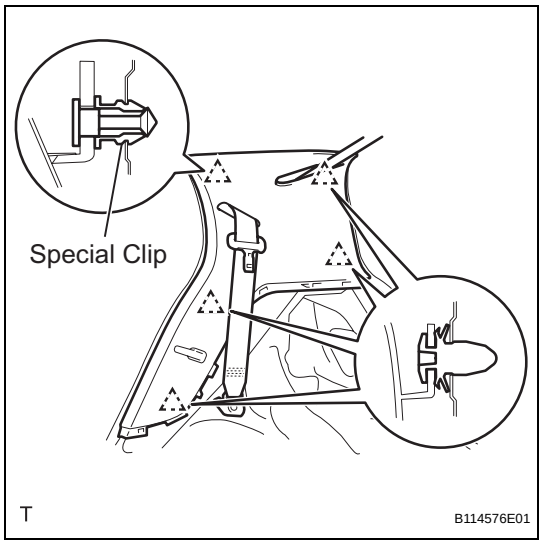

30. REMOVE ROOF SIDE INNER GARNISH RH

(a) w/ Curtain Shield Airbag:

NOTICE:

Replace the special clip with a new one when the roof side inner garnish is removed.

(1) Disengage the 5 clips.

(2) Pass the rear seat outer belt and the rear center seat outer belt through the slit in the roof side inner garnish and remove the roof side inner garnish.

IR

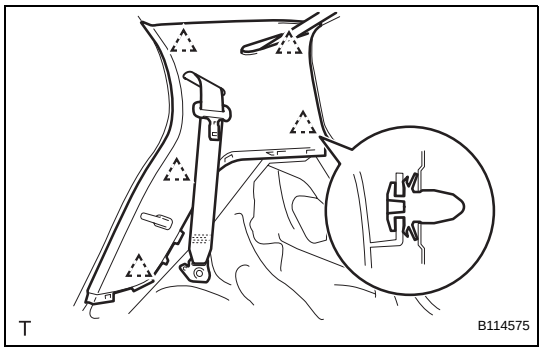

(b) w/o Curtain Shield Airbag:
(1) Disengage the 5 clips.
(2) Pass the rear seat outer belt and the rear center seat outer belt through the slit in the roof side inner garnish and remove the roof side garnish.

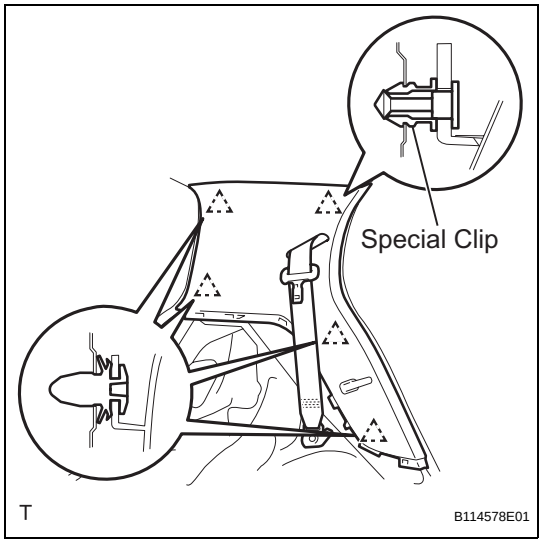

31. REMOVE ROOF SIDE INNER GARNISH LH

(a) w/ Curtain Shield Airbag:
NOTICE:
Replace the special clip with a new one when the roof side garnish inner is removed.
(1) Disengage the 5 clips.
(2) Pass the rear seat outer belt through the slit in the roof side inner garnish and remove the roof side inner garnish.

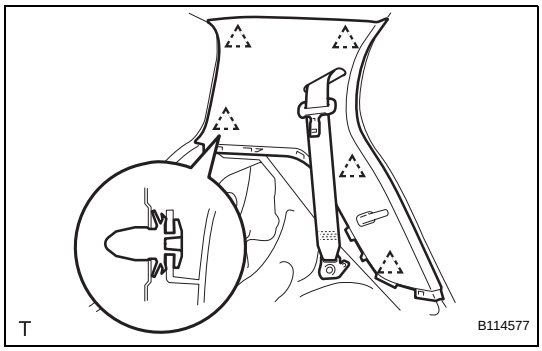

(b) w/o Curtain Shield Airbag:
(1) Disengage the 5 clips.
(2) Pass the rear seat outer belt through the slit in the roof side inner garnish and remove the roof side inner garnish.

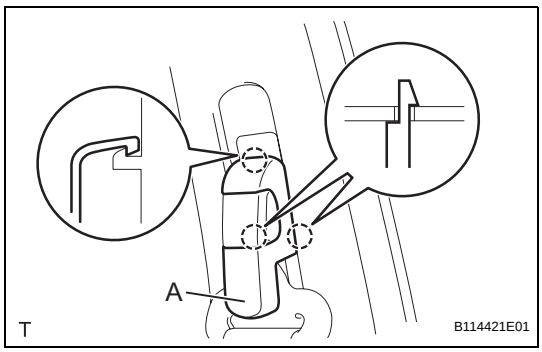

32. REMOVE SEAT BELT ANCHOR COVER CAP

HINT:
Use the same procedure for both sides.
(a) Pull portion A, shown in the illustration, toward you, remove the 2 claws on the lower side followed by the claw on the upper side. Then remove the seat belt anchor cover cap.

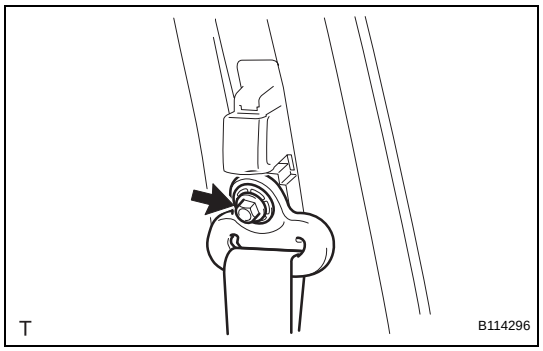

33. REMOVE FRONT SEAT OUTER BELT ASSEMBLY RH

(a) Remove the bolt and the through anchor.

34. REMOVE FRONT SEAT OUTER BELT ASSEMBLY LH

HINT:

Use the same procedure as for the RH side.

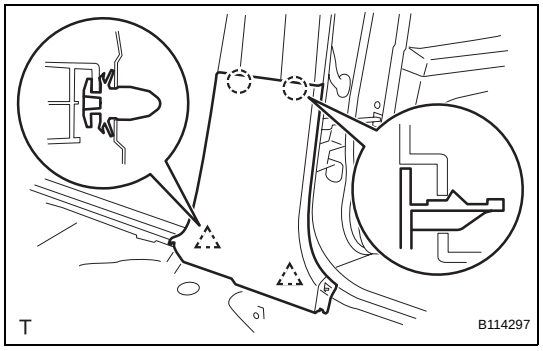

35. REMOVE CENTER PILLAR LOWER GARNISH RH

(a) Disengage the 2 clips and the 2 claws and remove the center pillar lower garnish.

36. REMOVE CENTER PILLAR LOWER GARNISH LH

HINT:

Use the same procedure as for the RH side.

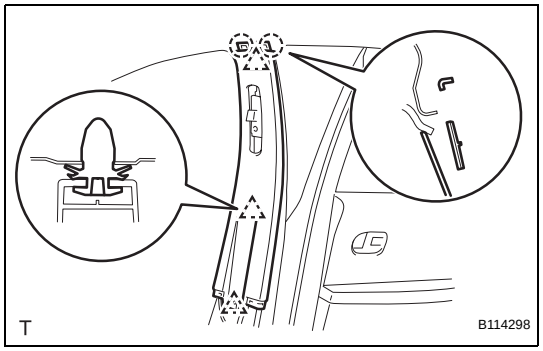

37. REMOVE CENTER PILLAR UPPER GARNISH RH

(a) Disengage the 3 clips and the 2 hooks and remove the center pillar upper garnish.

38. REMOVE CENTER PILLAR UPPER GARNISH LH

HINT:

Use the same procedure as for the RH side.

39. REMOVE SEAT BELT ANCHOR COVER (See page SB-159)

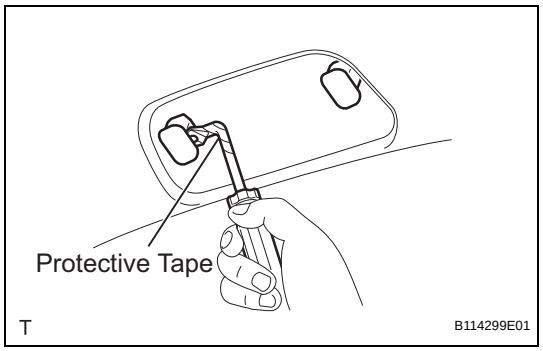

40. REMOVE ROOF HEADLINING SERVICE HOLE COVER (w/o Curtain Shield Airbag)

HINT:

Use the same procedure to remove all the roof headlining service hole covers.

(a) Using a clip remover with its tip wrapped in protective tape, remove the 6 roof headlining service hole covers.

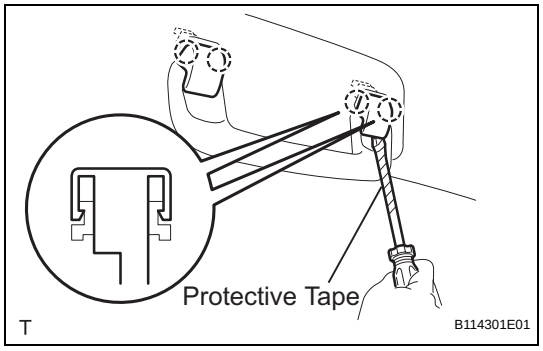

41. REMOVE ASSIST GRIP COVER

HINT:

The fitting number of the assist grip covers varies with the specifications.

(a) Using a screwdriver with its tip wrapped in protective tape, disengage the 2 claws and remove the assist grip cover.

IR

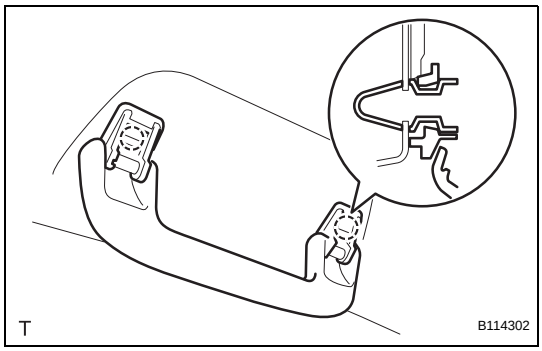

42. REMOVE ASSIST GRIP SUB-ASSEMBLY

HINT:

The fitting number of the assist grips varies with the specifications.

(a) Disengage the 2 springs and remove the assist grip.

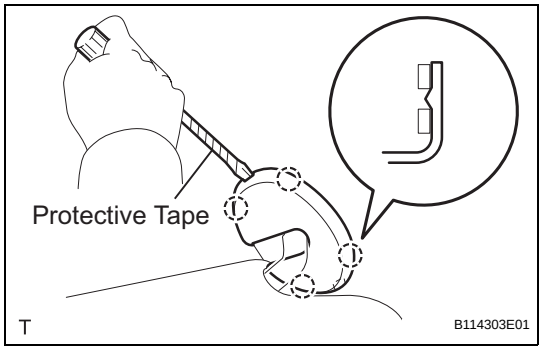

43. REMOVE VISOR ASSEMBLY RH

(a) Using a screwdriver with its tip wrapped in protective tape, disengage the 4 claws and remove the visor bracket cover.

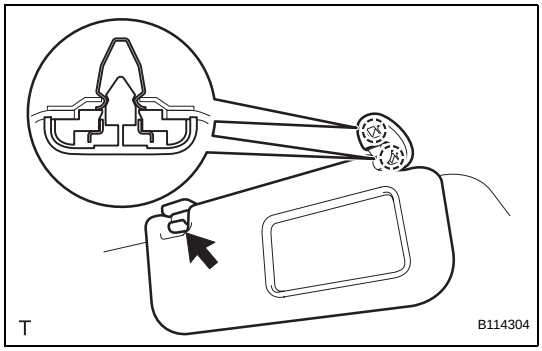

(b) Remove the visor shaft from the visor holder.

(c) Disengage the 2 springs and remove the visor.

44. REMOVE VISOR ASSEMBLY LH

HINT:

Use the same procedure as for the RH side.

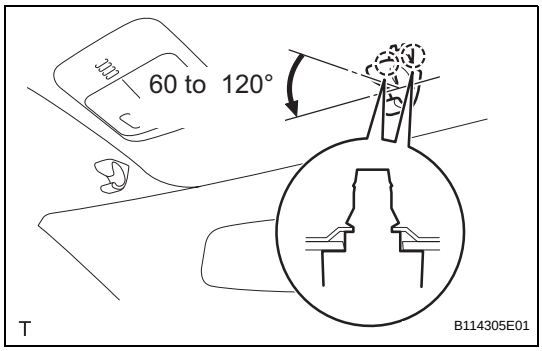

45. REMOVE VISOR HOLDER RH

(a) Disengage the 2 claws by turning the visor counterclockwise between 60 to 120° and remove the visor holder.

HINT:

The claw may be damaged during removal. However, it is reusable because this does not effect its function.

46. REMOVE VISOR HOLDER LH

HINT:

Use the same procedure as for the RH side.

IR

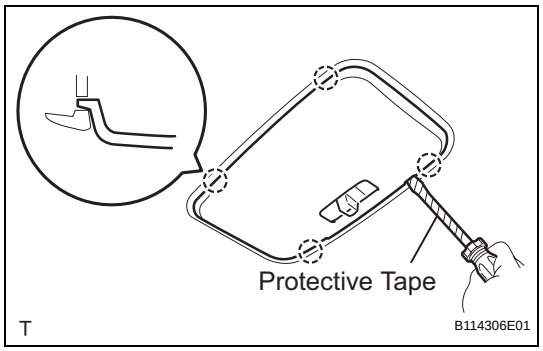

47. REMOVE ROOM LIGHT ASSEMBLY

(a) Using a screwdriver with its tip wrapped in protective tape, disengage the 4 claws and remove the room light lens.

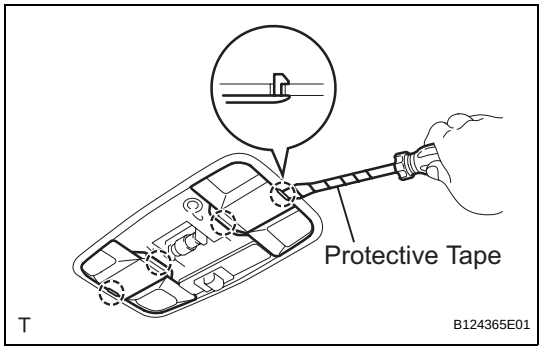

(b) Using a screwdriver with its tip wrapped in protective tape, disengage the 4 claws and remove the 2 covers.

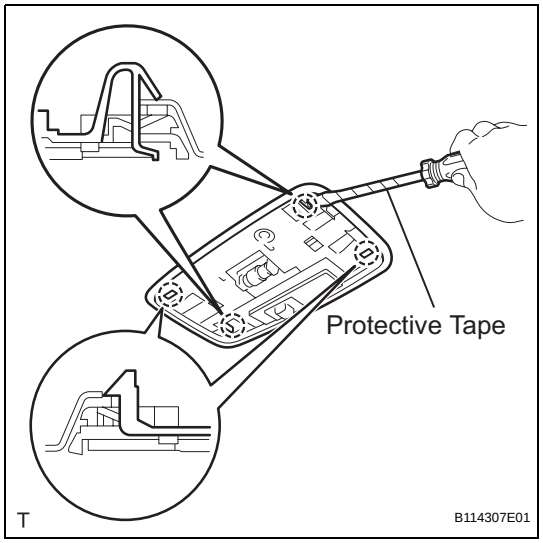

(c) Using a screwdriver with its tip wrapped in protective tape, disengage the 4 claws.

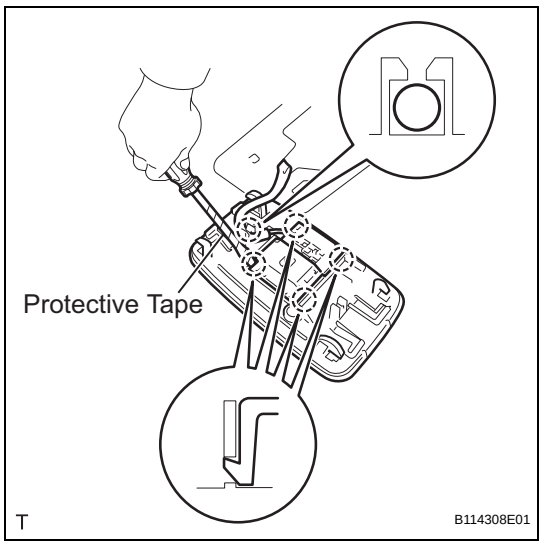

(d) Remove the No. 1 roof wire from the claw of the room light.

(e) Using a screwdriver with its tip wrapped in protective tape, disengage the 4 claws and remove the room light switch base and the room light.

IR

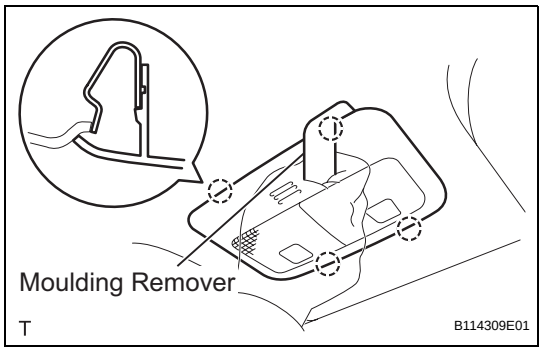

48. REMOVE MAP LIGHT ASSEMBLY

(a) Using a roof moulding remover, disengage the 4 claws.

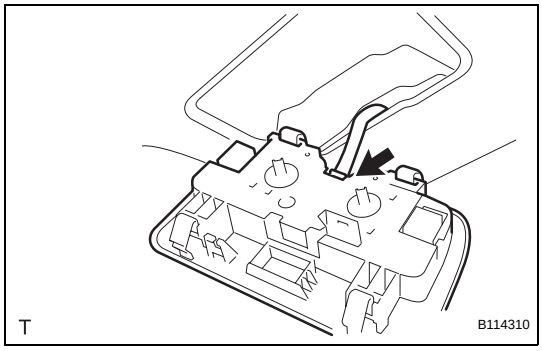

(b) Disconnect the map light connector and remove the map light.

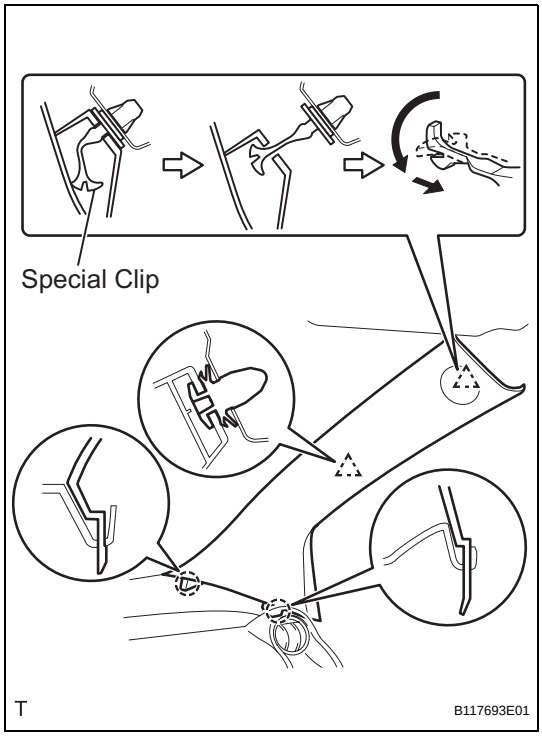

49. REMOVE FRONT PILLAR GARNISH RH

(a) w/ Curtain Shield Airbag:

NOTICE:

- **Install a protective cover onto the curtain shield airbag as soon as the front pillar garnish is removed.**
- **Replace the special clip with a new one when the front pillar garnish is removed.**

(1) Disengage the 2 clips and the 2 claws and remove the front pillar garnish.

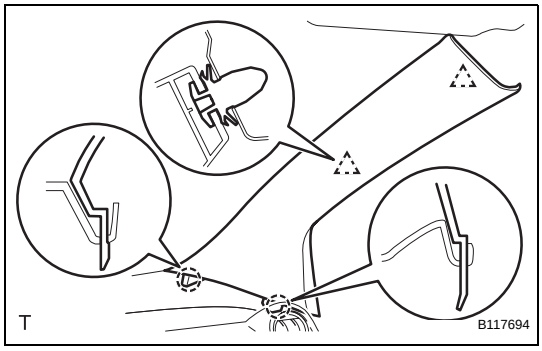

(b) w/o Curtain Shield Airbag:

(1) Disengage the 2 clips and the 2 claws and remove the front pillar garnish.

IR

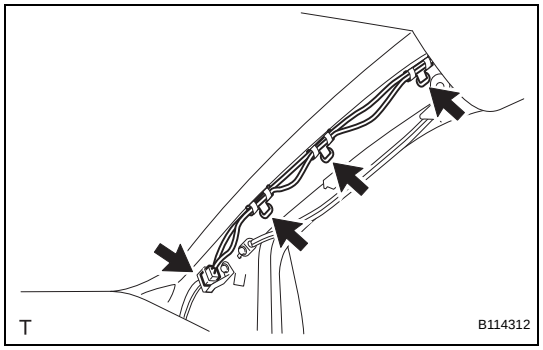

(c) Disconnect the connector.
(d) Using a clip remover, remove the 3 antenna cord clamps.

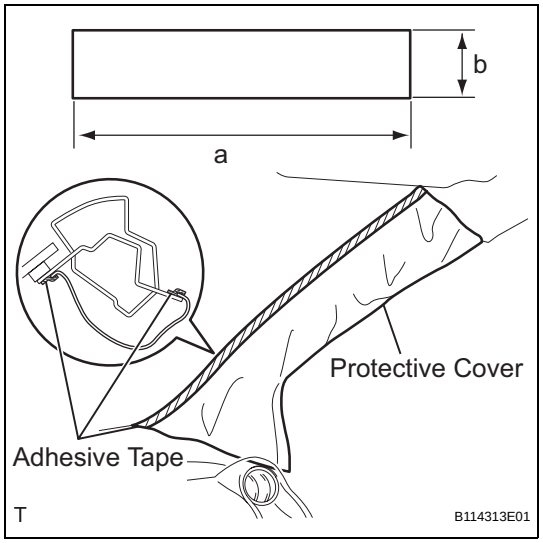

(e) w/ Curtain Shield Airbag:
(1) Completely cover the curtain shield airbag with a piece of cloth or nylon and fix the ends of the fabric with adhesive tape, as shown in the illustration.

Protective cover size:

Area	Measurement
a	700 mm (27.56 in.)
b	120 mm (4.72 in.)

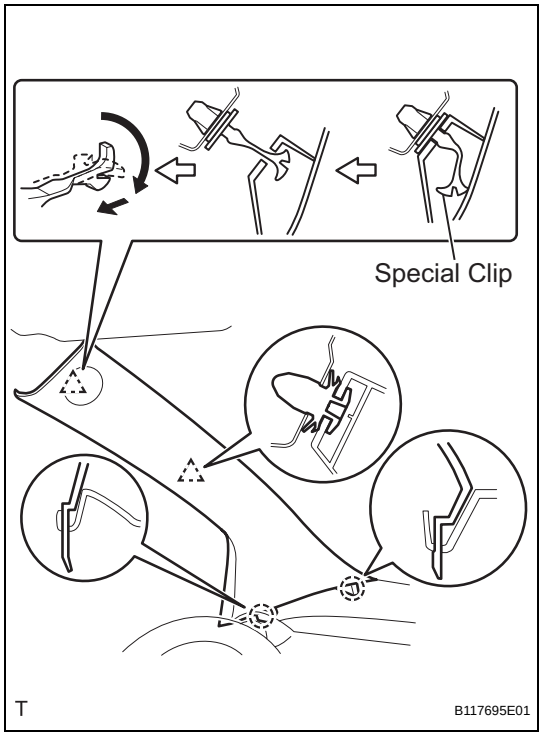

50. REMOVE FRONT PILLAR GARNISH LH

(a) w/ Curtain Shield Airbag:

NOTICE:

- **Install a protective cover onto the curtain shield airbag as soon as the front pillar garnish is removed.**
- **Replace the special clip with a new one when the front pillar garnish is removed.**

(1) Disengage the 2 clips and the 2 claws and remove the front pillar garnish.

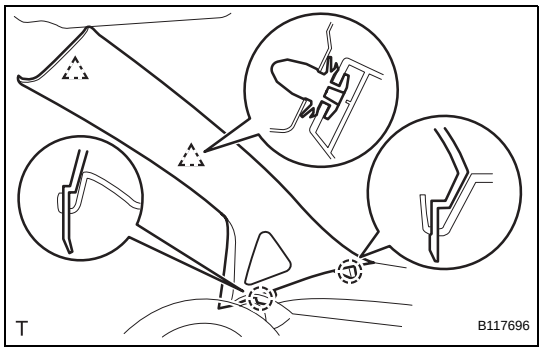

(b) w/o Curtain Shield Airbag:
(1) Disengage the 2 clips and the 2 claws and remove the front pillar garnish.

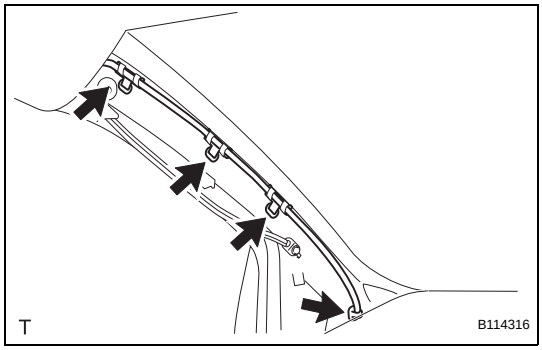

(c) Using a clip remover, remove the 4 wiring harness clamps.

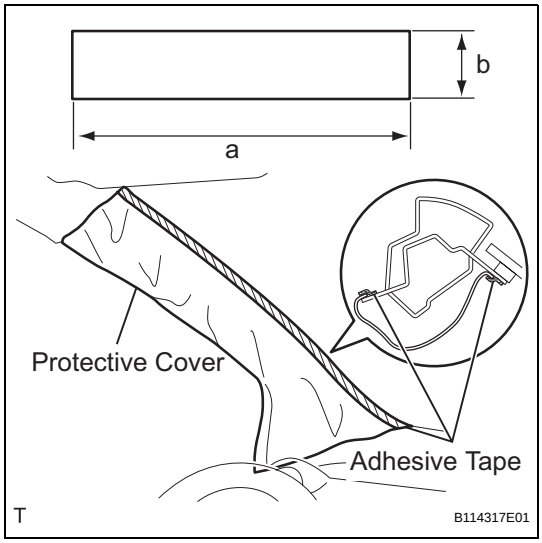

(d) w/ Curtain Shield Airbag:
(1) Completely cover the curtain shield airbag with a piece of cloth or nylon and fix the ends of the fabric with adhesive tape, as shown in the illustration.
Protective cover size:

Area	Measurement
a	700 mm (27.56 in.)
b	120 mm (4.72 in.)

51. REMOVE INSTRUMENT PANEL FINISH PANEL END RH (See page ME-145)

52. REMOVE INSTRUMENT PANEL FINISH PANEL END LH (See page ME-145)

53. REMOVE INSTRUMENT CLUSTER FINISH PANEL (See page ME-145)

54. REMOVE COMBINATION METER ASSEMBLY (See page ME-146)

55. REMOVE GLOVE COMPARTMENT DOOR ASSEMBLY (See page IP-20)

56. REMOVE NO. 1 SWITCH HOLE BASE (See page IP-20)

57. REMOVE UPPER INSTRUMENT PANEL SUB-ASSEMBLY (See page IP-21)

58. REMOVE INSTRUMENT PANEL BOX (See page IP-70)

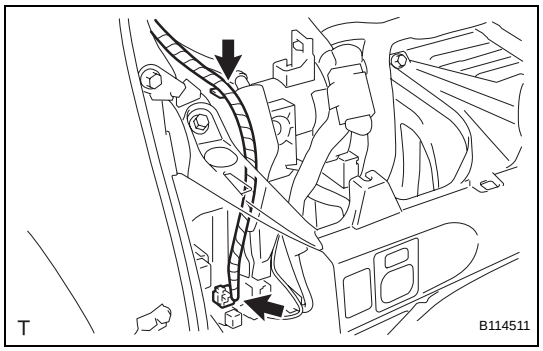

59. REMOVE ROOF HEADLINING ASSEMBLY

(a) Using a screwdriver, remove the wiring harness clamp.
(b) Disconnect the connector.

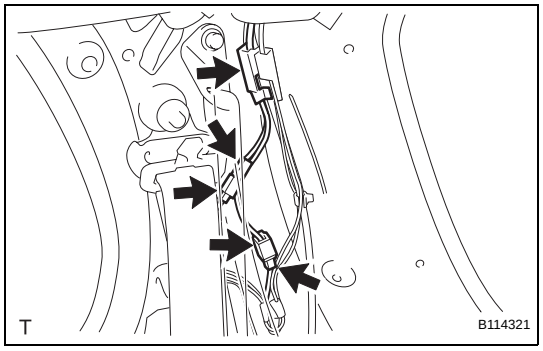

(c) Remove the antenna cord from the antenna cord clamp.
(d) Disconnect the 2 connectors.
(e) Using a clip remover, remove the 2 connectors.
(f) w/ Curtain Shield Airbag:
  (1) Using a clip remover, remove the clip.
  (2) Disengage the 4 hooks.

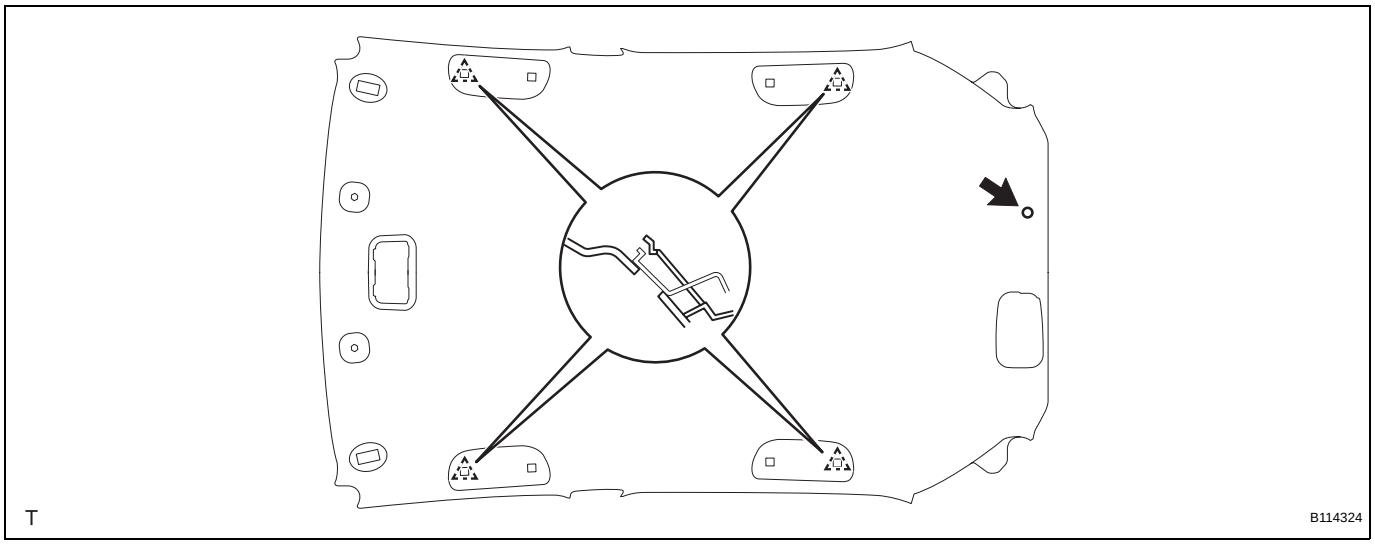

(g) w/o Curtain Shield Airbag:
  (1) Using a clip remover, remove the clip.

(2) Disengage the 2 claws and 4 hooks.

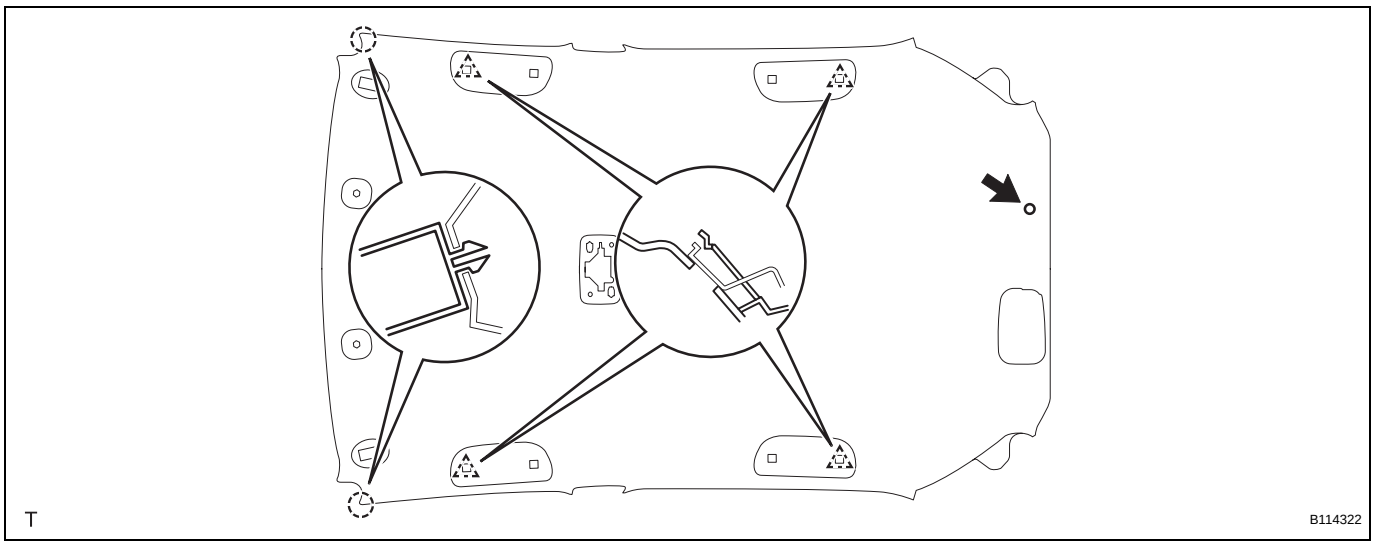

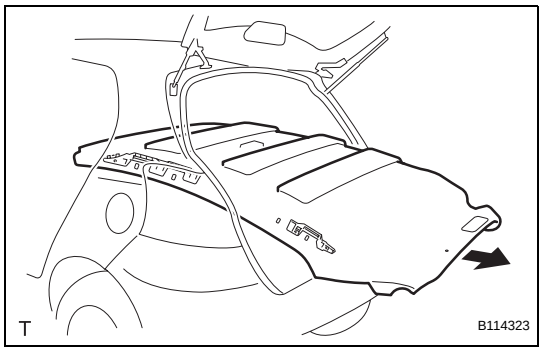

(h) Remove the roof headlining from the back door.

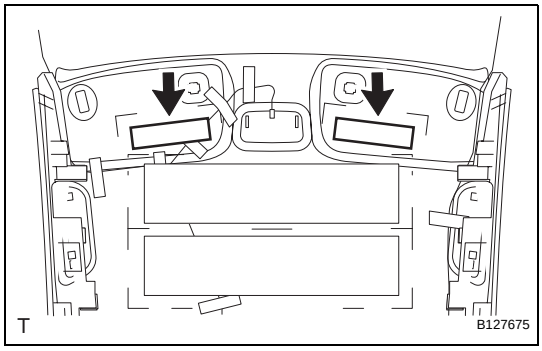

60. REMOVE NO. 5 ROOF SILENCER PAD

HINT:
Only remove the No. 5 roof silencer pad when the No. 1 roof wire and roof headlining are replaced.

(a) Remove the 2 No. 5 roof silencer pads.

61. REMOVE NO. 1 ROOF SILENCER PAD

HINT:
Only remove the No. 1 roof silencer pad when the No. 1 roof wire and roof headlining are replaced.

(a) Remove the 4 No. 1 roof silencer pads.

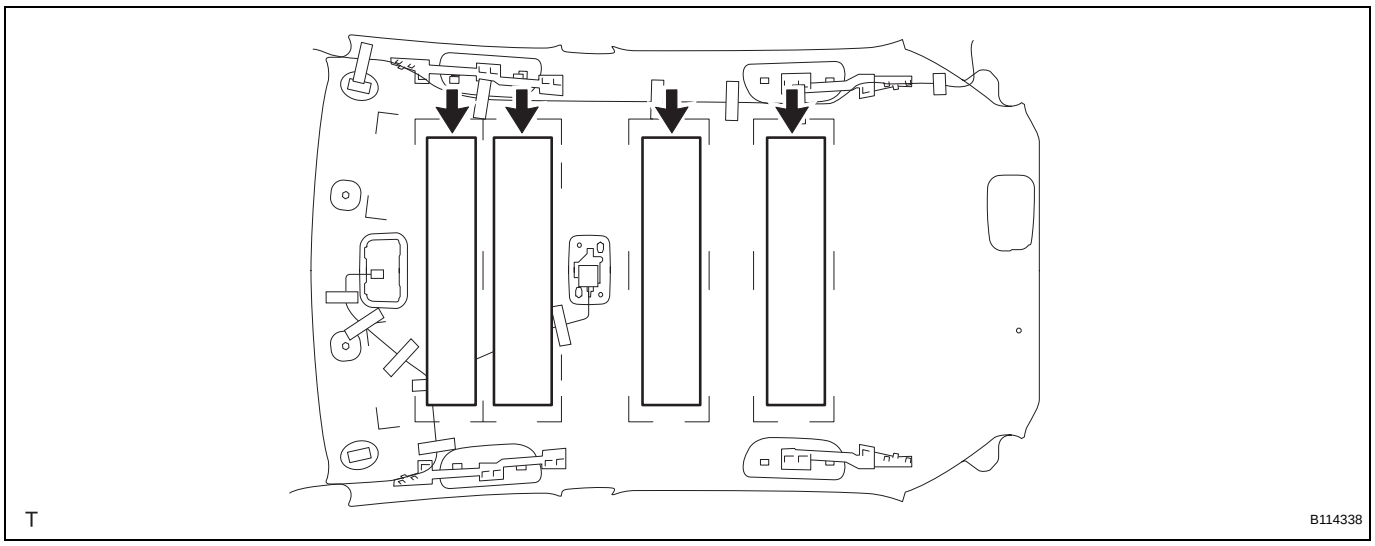

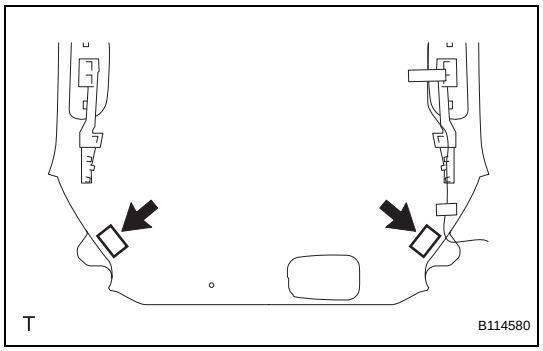

62. REMOVE REAR ROOF SILENCER PAD

HINT:
Only remove the rear roof silencer pad when the roof headlining is replaced.

(a) Remove the 2 rear roof silencer pads.

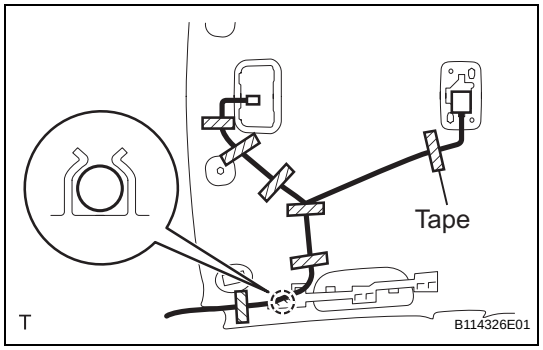

63. REMOVE NO. 1 ROOF WIRE

HINT:
Only remove the No. 1 roof wire when the roof headlining is replaced.

(a) w/ Curtain Shield Airbag:
  (1) Remove the 7 pieces of tape.
  (2) Remove the No. 1 roof wire from the claw of the side rail spacer.

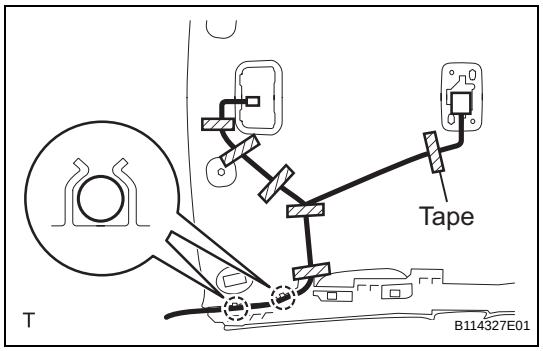

(b) w/o Curtain Shield Airbag:
  (1) Remove the 6 pieces of tape.
  (2) Remove the No. 1 roof wire from the 2 claws of the side rail spacer.

64. REMOVE ANTENNA CORD SUB-ASSEMBLY

HINT:
Only remove the antenna cord when the roof headlining is replaced.

(a) w/ Curtain Shield Airbag:
  (1) Remove the 6 pieces of tape.
  (2) Remove the antenna cord from the cutout of the roof headlining.

(3) Remove the antenna cord from the 3 claws of the side rail spacer.

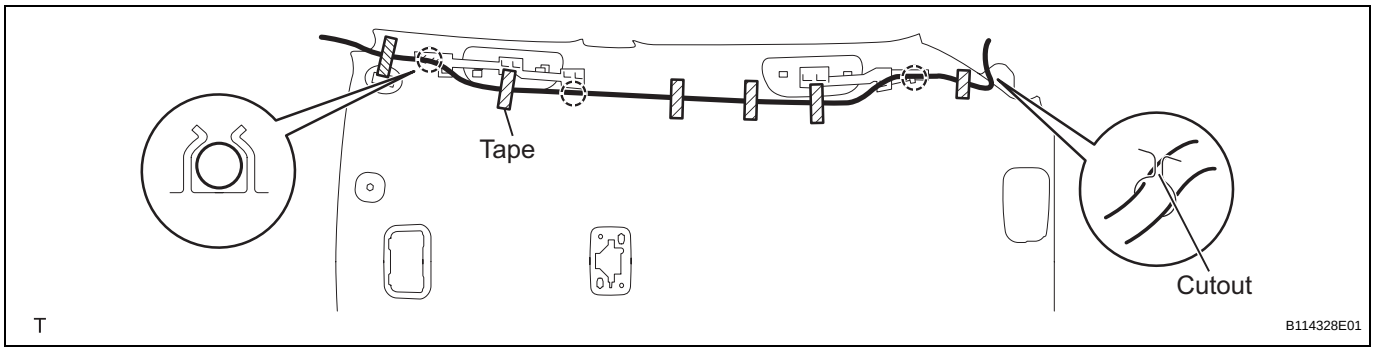

(b) w/o Curtain Shield Airbag:
(1) Remove the 4 pieces of tape.
(2) Remove the antenna cord from the cutout of the roof headlining.
(3) Remove the antenna cord from the 5 claws of the side rail spacer.

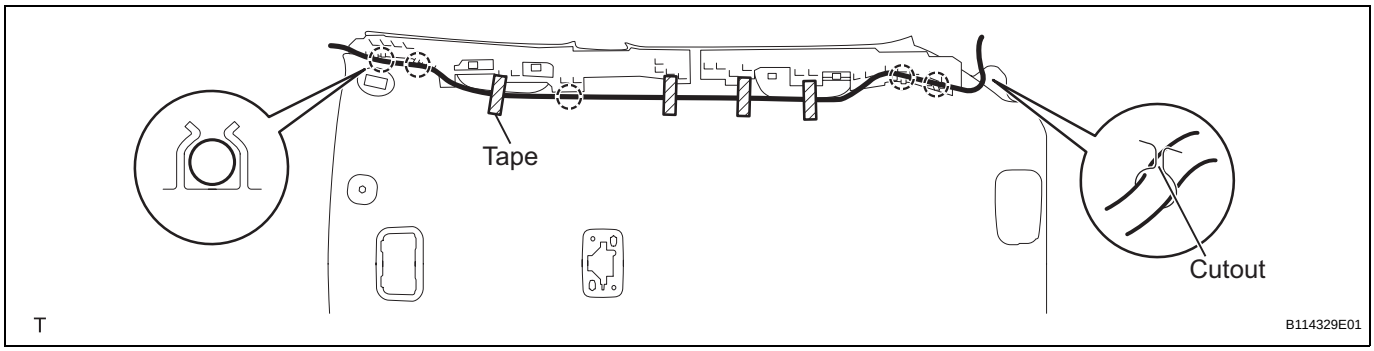

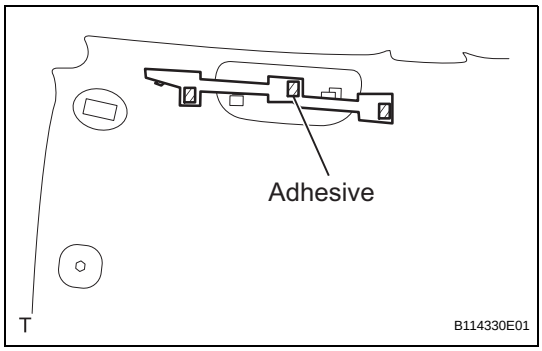

65. REMOVE FRONT SIDE RAIL SPACER RH

HINT:
Only remove the front side rail spacer when the roof headlining is replaced.

(a) w/ Curtain Shield Airbag:
(1) Remove the 3 adhesion portions and the front side rail spacer.

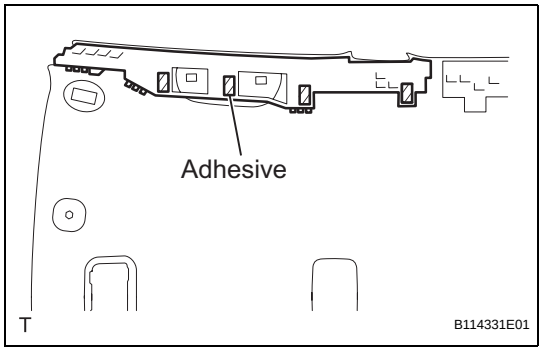

(b) w/o Curtain Shield Airbag:
(1) Remove the 4 adhesion portions and the front side rail spacer.

66. REMOVE FRONT SIDE RAIL SPACER LH

HINT:
Use the same procedure as for the RH side.

IR

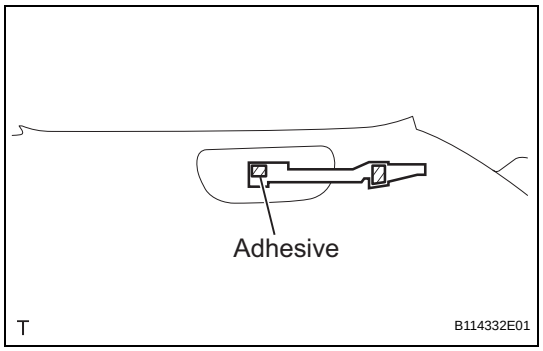

67. REMOVE REAR SIDE RAIL SPACER RH

HINT:

Only remove the rear side rail spacer when the roof headlining is replaced.

(a) w/ Curtain Shield Airbag:

(1) Remove the 2 adhesion portions and the rear side rail spacer.

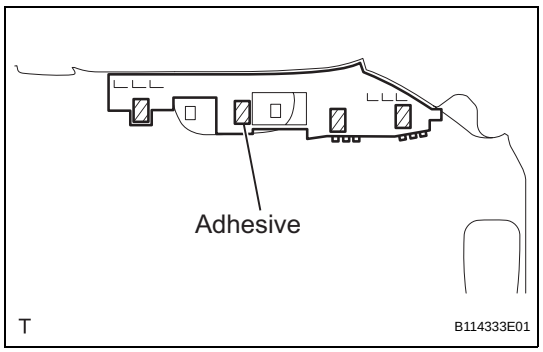

(b) w/o Curtain Shield Airbag:

(1) Remove the 4 adhesion portions and the rear side rail spacer.

68. REMOVE REAR SIDE RAIL SPACER LH

HINT:

Use the same procedure as for the RH side.

INSTALLATION

CAUTION:
Some of these service operations affect the SRS airbag system. Read the precautionary notices concerning the SRS airbag system before servicing (See page RS-1).
NOTICE:
Always use "Torx" socket wrench E10 when installing the rear seat.

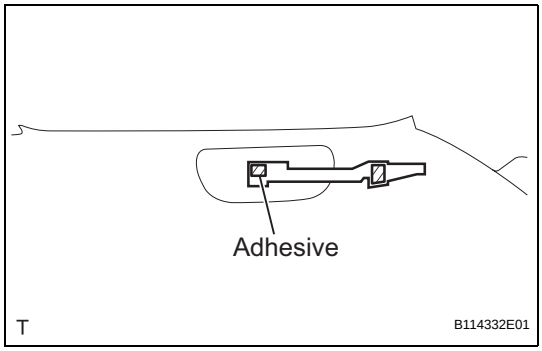

1. INSTALL REAR SIDE RAIL SPACER RH
(a) w/ Curtain Shield Airbag:
(1) Align a new rear side rail spacer with the markings of the roof headlining and install it onto the roof headlining.

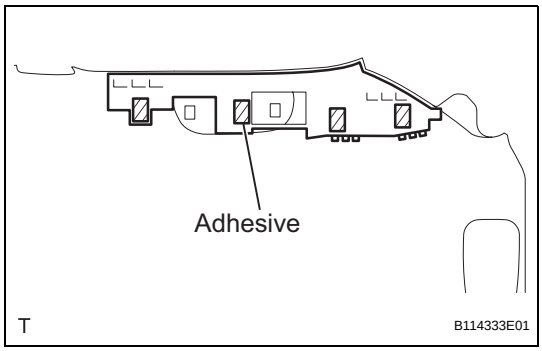

(b) w/o Curtain Shield Airbag:
(1) Align a new rear side rail spacer with the markings of the roof headlining and install it onto the roof headlining.

2. INSTALL REAR SIDE RAIL SPACER LH
HINT:
Use the same procedure as for the RH side.

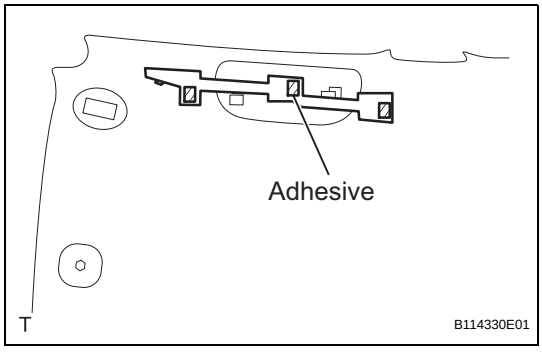

3. INSTALL FRONT SIDE RAIL SPACER RH
(a) w/ Curtain Shield Airbag:
(1) Align a new front side rail spacer with the markings of the roof headlining and install it onto the roof headlining.

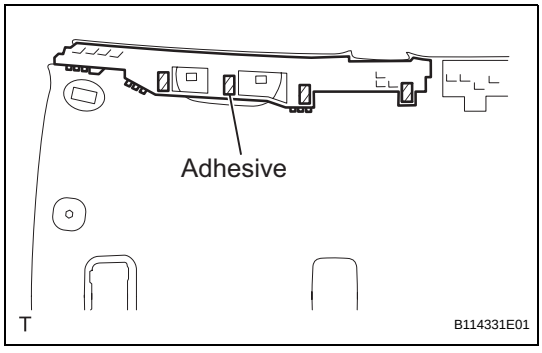

(b) w/o Curtain Shield Airbag:
(1) Align a new front side rail spacer with the markings of the roof headlining and install it onto the roof headlining.

4. INSTALL FRONT SIDE RAIL SPACER LH
HINT:
Use the same procedure as for the RH side.

5. INSTALL ANTENNA CORD SUB-ASSEMBLY
(a) w/ Curtain Shield Airbag:
(1) Install the part of the antenna cord marked with red positioning tape into claw A of the front side rail spacer.

IR

(2) Install the antenna cord positioning tapes into the 2 claws of the front and rear side rail spacers.
(3) Insert the antenna cord positioning tape into the cutout of the roof headlining.
(4) Align the antenna cord positioning tapes with the markings of the roof headlining.
(5) Install the antenna cord onto the roof headlining with 6 new pieces of tape.

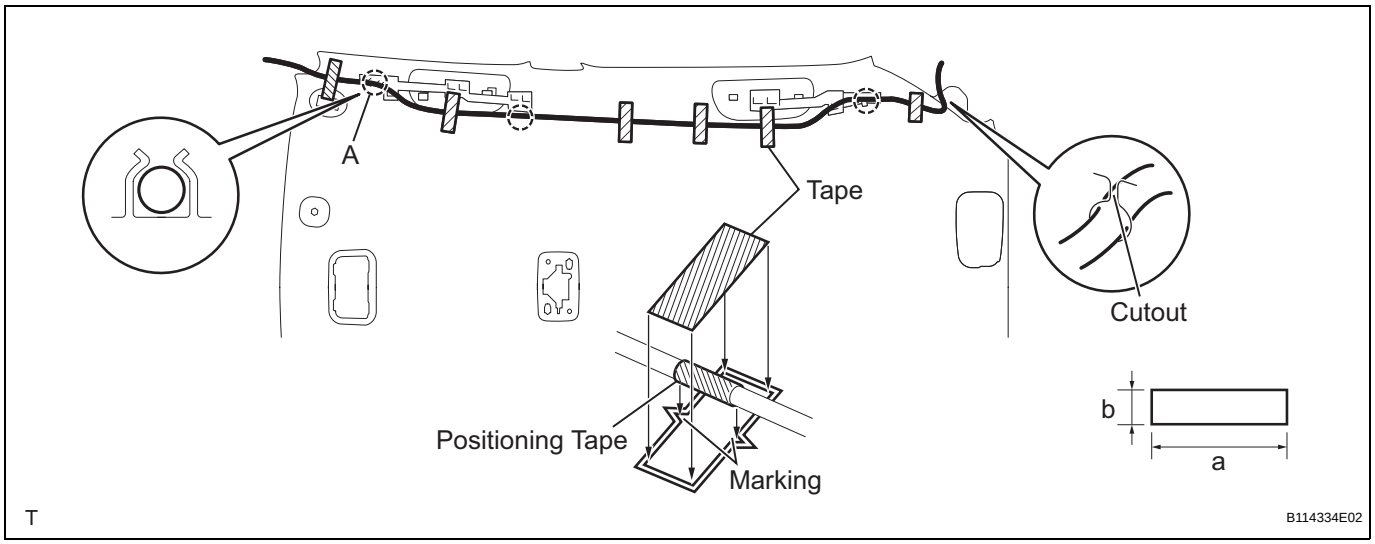

Tape size:

Mark	Measurement
a	80 mm (3.15 in.)
b	20 mm (0.787 in.)

NOTICE:
- **Apply the tape securely in place.**
- **Do not touch the adhesive surface when applying the tape to prevent adhesion failure.**

(b) w/o Curtain Shield Airbag:
(1) Install the part of the antenna cord marked with red positioning tape into claw A of the front side rail spacer.
(2) Install the antenna cord positioning tapes into the 4 claws of the front and rear side rail spacers.
(3) Insert the antenna cord positioning tape into the cutout of the roof headlining.
(4) Align the antenna cord positioning tapes with the markings of the roof headlining.

(5) Install the antenna cord onto the roof headlining with 4 new pieces of tape.

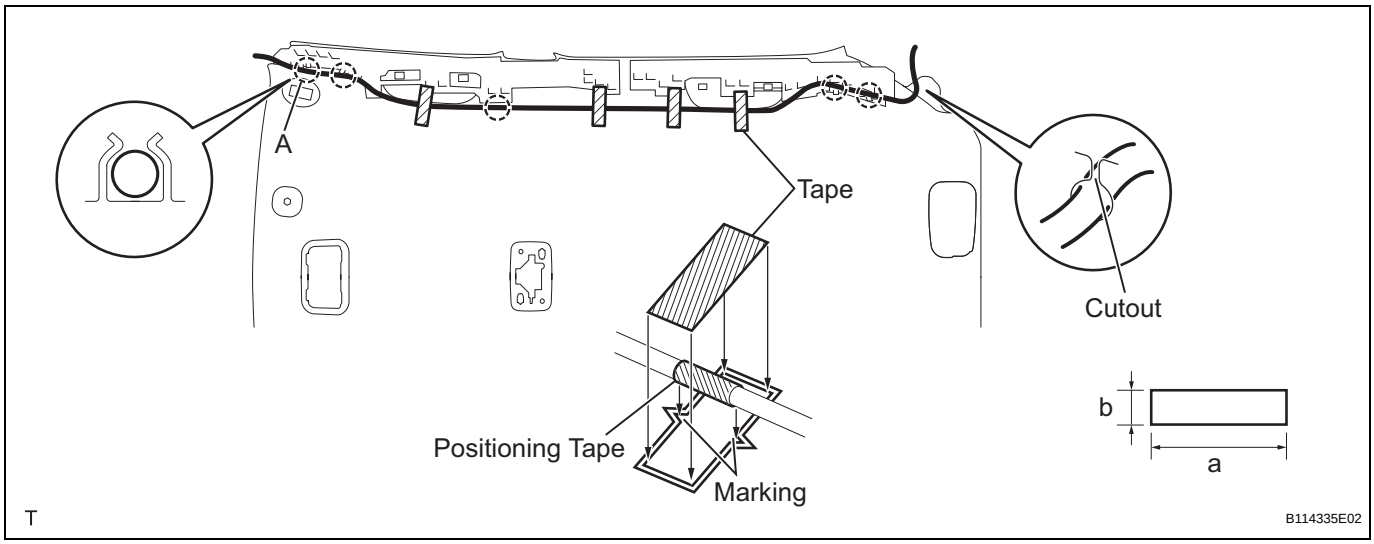

Tape size:

Mark	Measurement
a	80 mm (3.15 in.)
b	20 mm (0.787 in.)

NOTICE:

- **Apply the tape securely in place.**
- **Do not touch the adhesive surface when applying the tape to prevent adhesion failure.**

6. INSTALL NO. 1 ROOF WIRE

(a) w/ Curtain Shield Airbag:

(1) Install the part of the No. 1 roof wire marked with red positioning tape into claw A of the front side rail spacer.

(2) Align the No. 1 roof wire positioning tapes with the markings of the roof headlining.

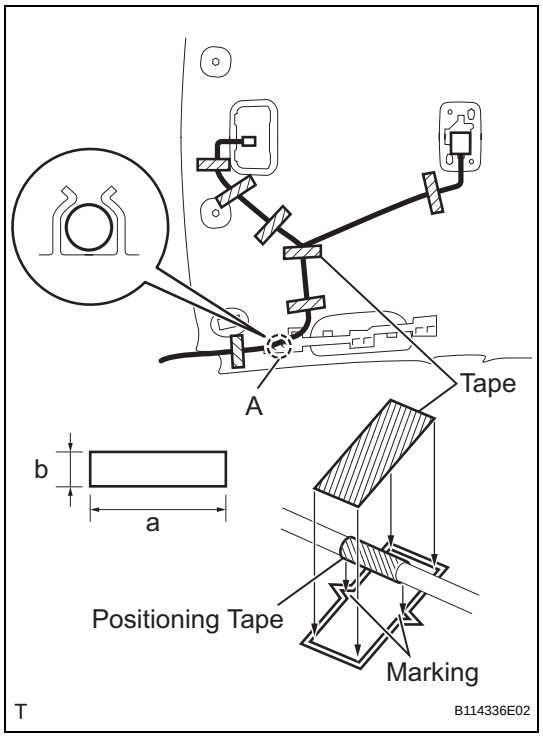

(3) Install the No. 1 roof wire onto the roof headlining with 7 new pieces of tape.
Tape size:

Mark	Measurement
a	80 mm (3.15 in.)
b	20 mm (0.787 in.)

NOTICE:
- **Apply the tape securely in place.**
- **Do not touch the adhesive surface when applying the tape to prevent adhesion failure.**

(b) w/o Curtain Shield Airbag:
(1) Install the part of the No. 1 roof wire marked with red positioning tape into claw A of the front side rail spacer.
(2) Install the No. 1 roof wire positioning tape into the claw of the front side rail spacer.
(3) Align the No. 1 roof wire positioning tapes with the markings of the roof headlining.

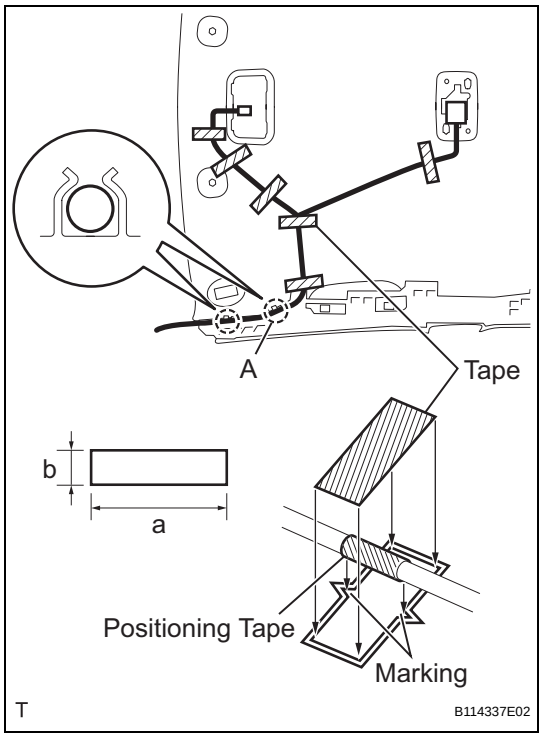

(4) Install the No. 1 roof wire onto the roof headlining with 6 new pieces of tape.
Tape size:

Mark	Measurement
a	80 mm (3.15 in.)
b	20 mm (0.787 in.)

NOTICE:
- **Apply the tape securely in place.**
- **Do not touch the adhesive surface when applying the tape to prevent adhesion failure.**

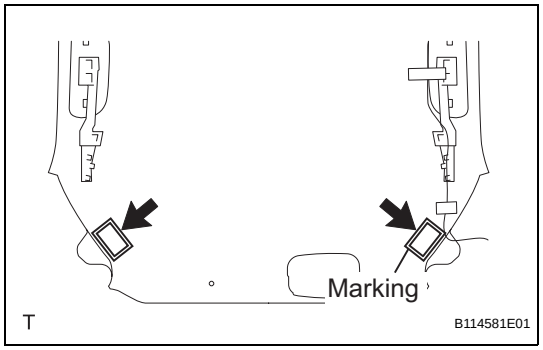

7. INSTALL REAR ROOF SILENCER PAD

(a) Align 2 new rear roof silencer pads with the markings of the roof headlining and install them onto the roof headlining.

IR

8. INSTALL NO. 1 ROOF SILENCER PAD

(a) Align 4 new No. 1 roof silencer pads with the markings of the roof headlining and install them onto the roof headlining.

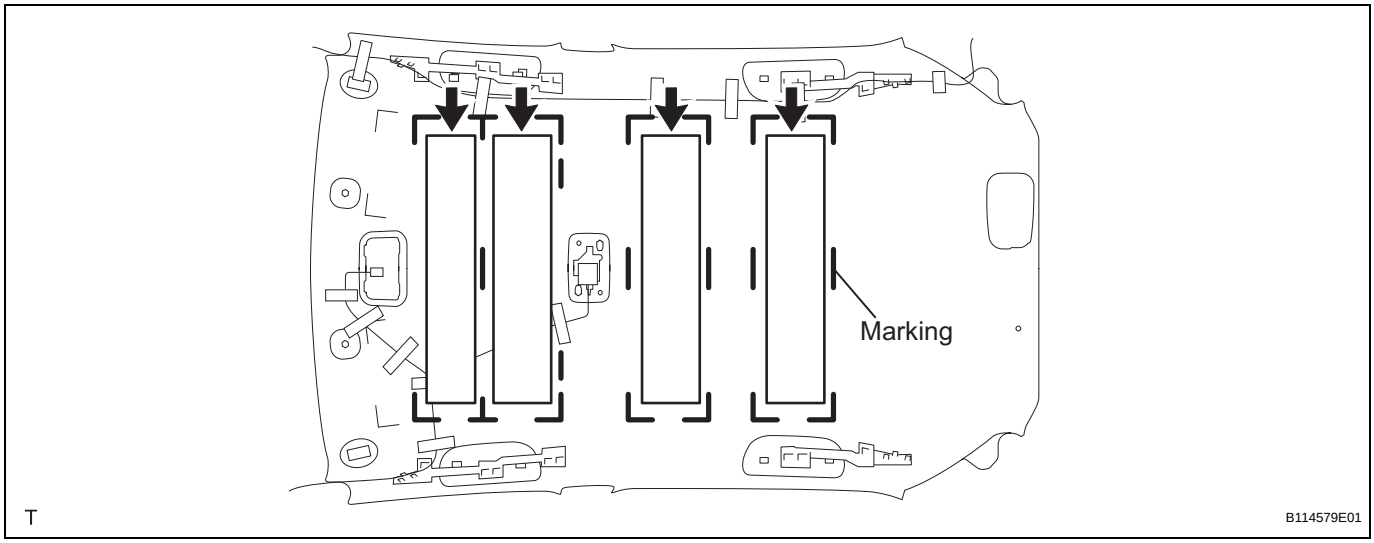

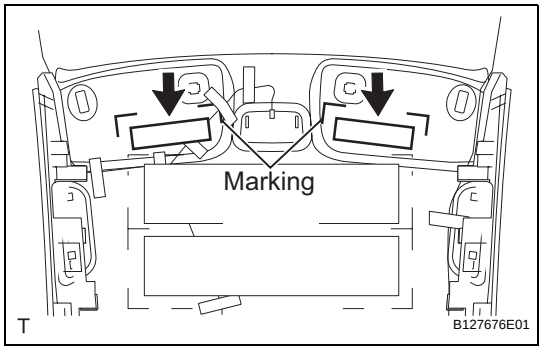

9. INSTALL NO. 5 ROOF SILENCER PAD

(a) Align 2 new No. 5 roof silencer pads with the markings of the roof headlining and install them onto the roof headlining.

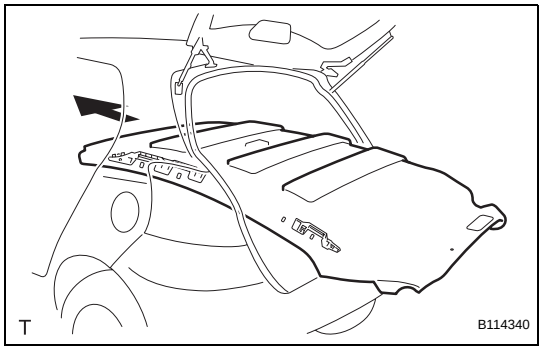

10. INSTALL ROOF HEADLINING ASSEMBLY

(a) Pull the roof headlining back into the vehicle through the back door.

(b) w/ Curtain Shield Airbag:

(1) Engage the 4 hooks and install the roof headlining.

(2) Install the clip.

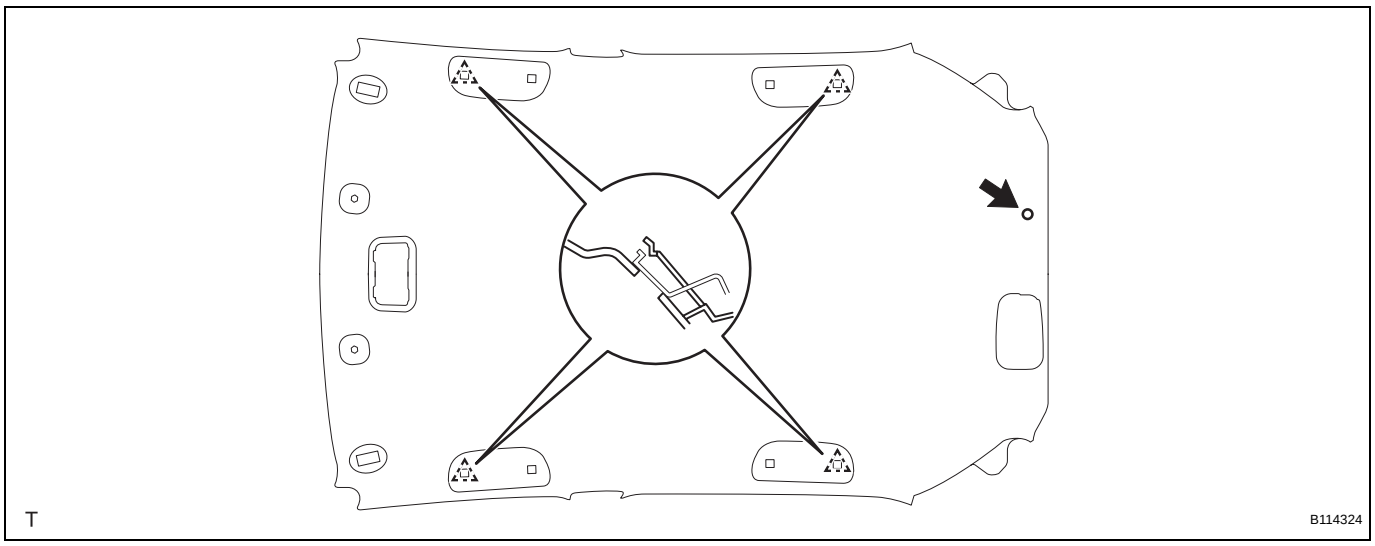

(c) w/o Curtain Shield Airbag:
(1) Engage the 2 claws and the 4 hooks and install the roof headlining.
(2) Install the clip.

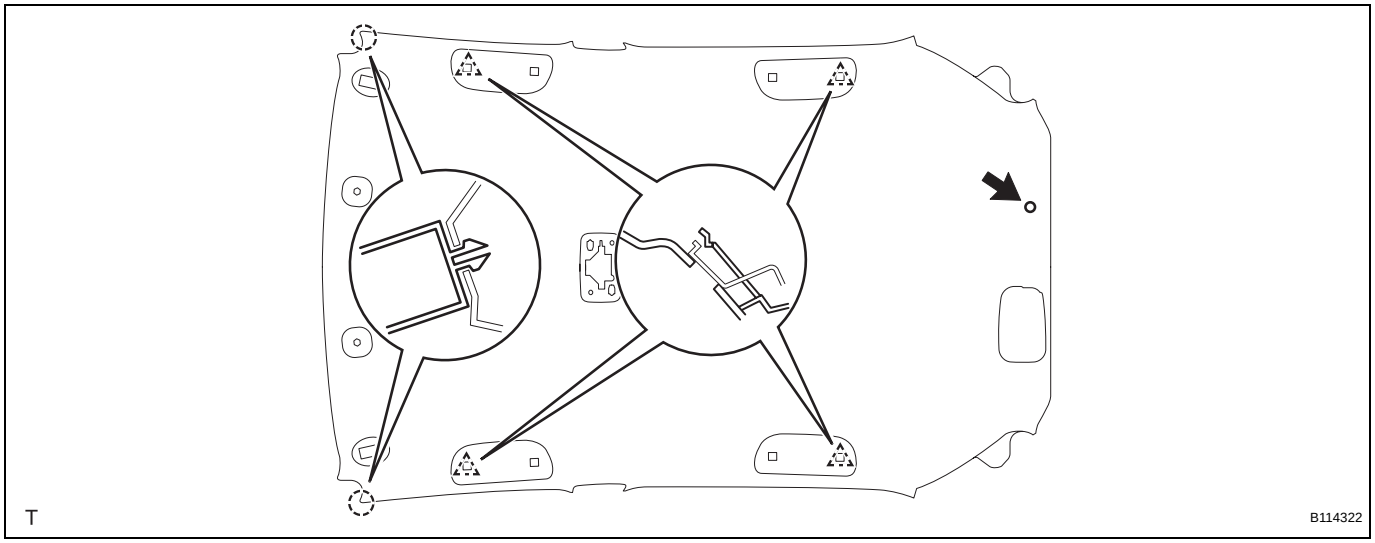

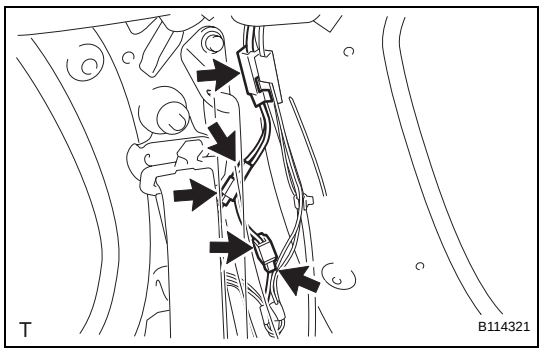

(d) Install the 2 connectors.
(e) Connect the 2 connectors.
(f) Install the antenna cord onto the antenna cord clamp.

IR

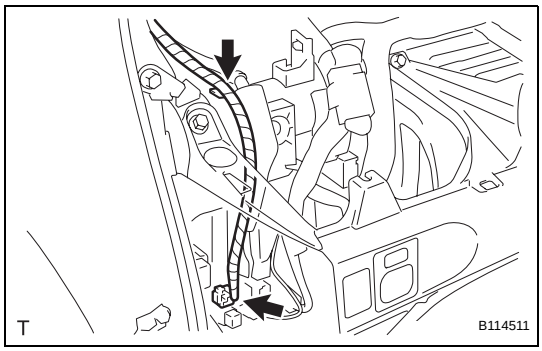

(g) Connect the connector.
(h) Install the wiring harness clamp.

11. INSTALL INSTRUMENT PANEL BOX (See page IP-78)

12. INSTALL UPPER INSTRUMENT PANEL SUB-ASSEMBLY (See page IP-29)

13. INSTALL NO. 1 SWITCH HOLE BASE (See page IP-32)

14. INSTALL GLOVE COMPARTMENT DOOR ASSEMBLY (See page IP-32)

15. INSTALL COMBINATION METER ASSEMBLY (See page ME-148)

16. INSTALL INSTRUMENT CLUSTER FINISH PANEL (See page ME-148)

17. INSTALL INSTRUMENT PANEL FINISH PANEL END RH (See page ME-149)

18. INSTALL INSTRUMENT PANEL FINISH PANEL END LH (See page ME-149)

19. INSTALL FRONT PILLAR GARNISH RH

(a) w/ Curtain Shield Airbag:
(1) Remove the piece of cloth or nylon.

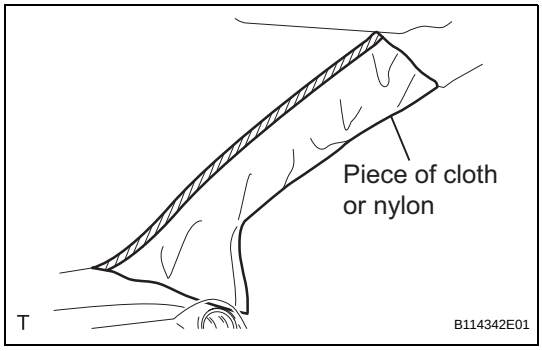

(b) Install the 3 antenna cord clamps.
(c) Connect the connector.

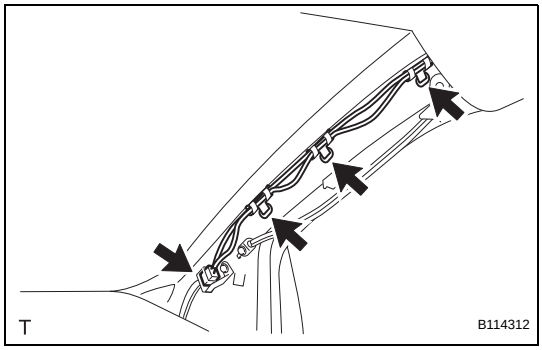

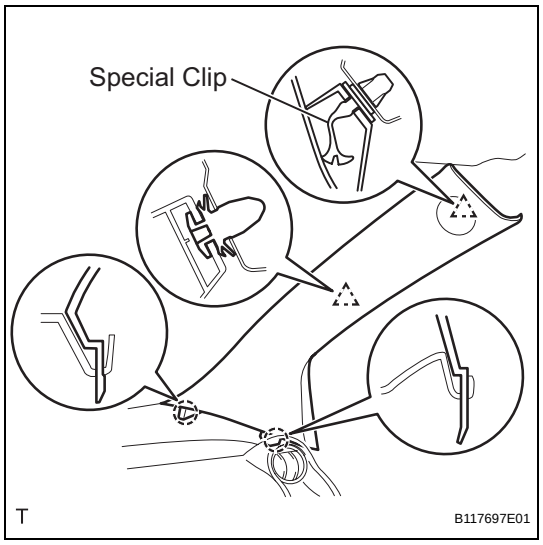

(d) w/ Curtain Shield Airbag:
  (1) Install a new special clip and the clip onto a new front pillar garnish.
  (2) Engage the 2 clips and the 2 claws and install the front pillar garnish.

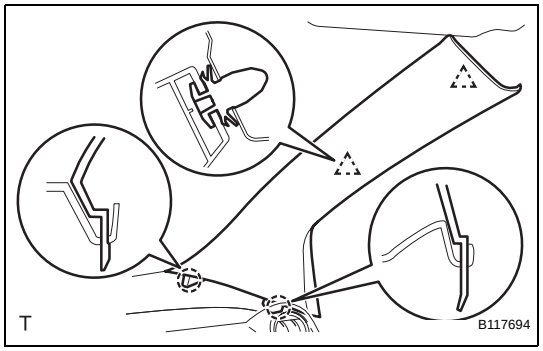

(e) w/o Curtain Shield Airbag:
  (1) Engage the 2 clips and the 2 claws and install the front pillar garnish.

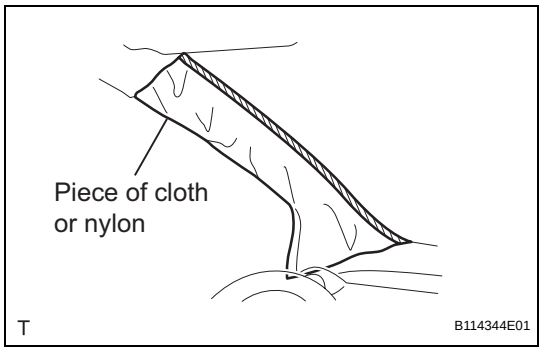

20. INSTALL FRONT PILLAR GARNISH LH

(a) w/ Curtain Shield Airbag:
  (1) Remove the piece of cloth or nylon.

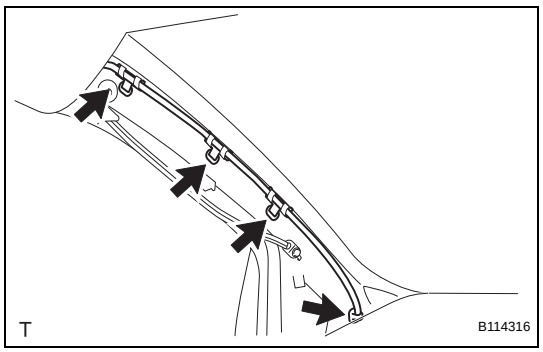

(b) Install the 4 wiring harness clamps.

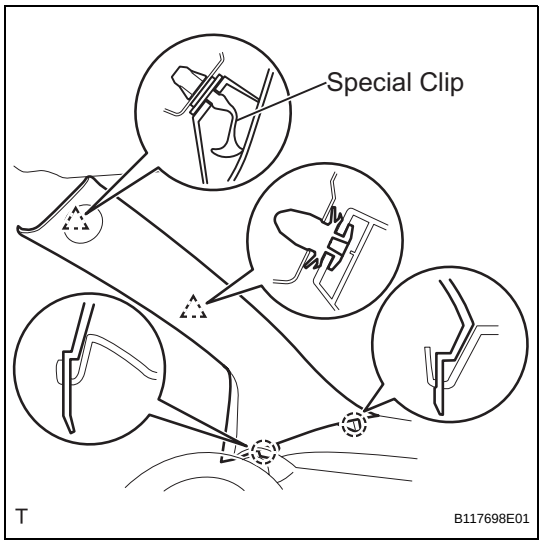

(c) w/ Curtain Shield Airbag:
(1) Install a new special clip and the clip onto a new front pillar garnish.
(2) Engage the 2 clips and the 2 claws and install the front pillar garnish.

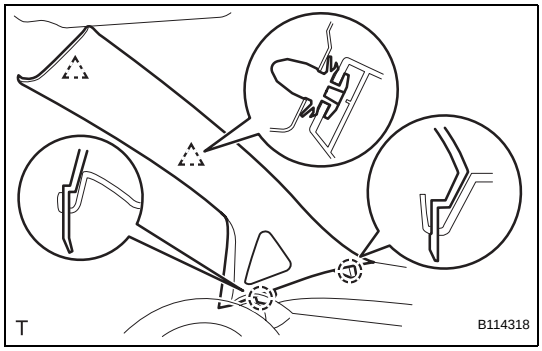

(d) w/o Curtain Shield Airbag:
(1) Engage the 2 clips and the 2 claws and install the front pillar garnish.

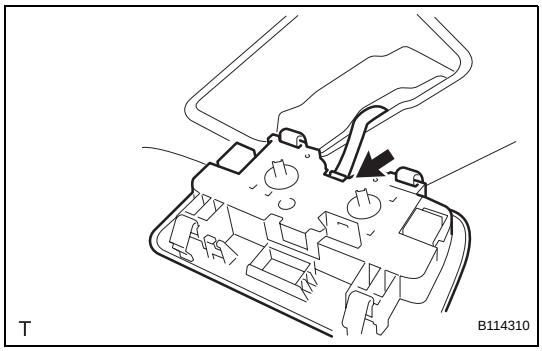

21. INSTALL MAP LIGHT ASSEMBLY

(a) Connect the map light connector.

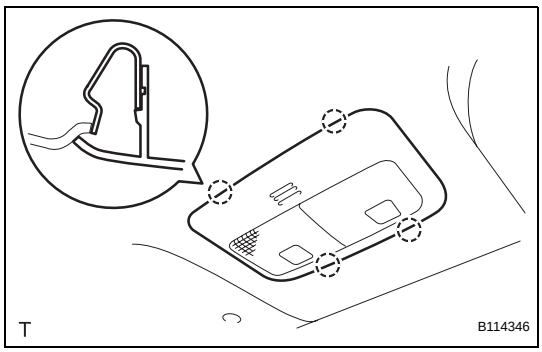

(b) Engage the 4 claws and install the map light.

IR

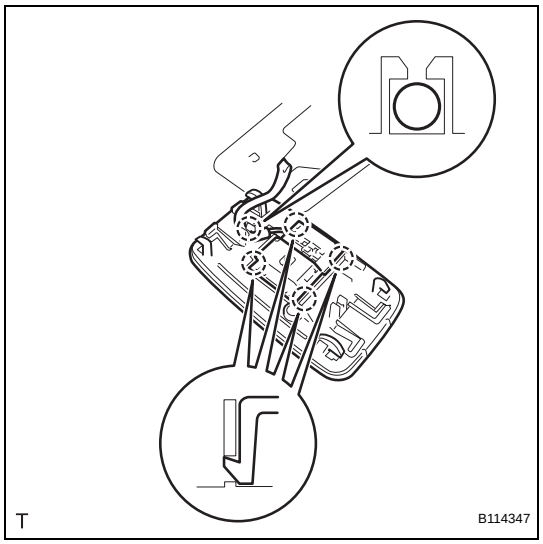

22. INSTALL ROOM LIGHT ASSEMBLY

(a) Engage the 4 claws and install the room light switch base.

(b) Install the No. 1 roof wire onto the claw of the room light.

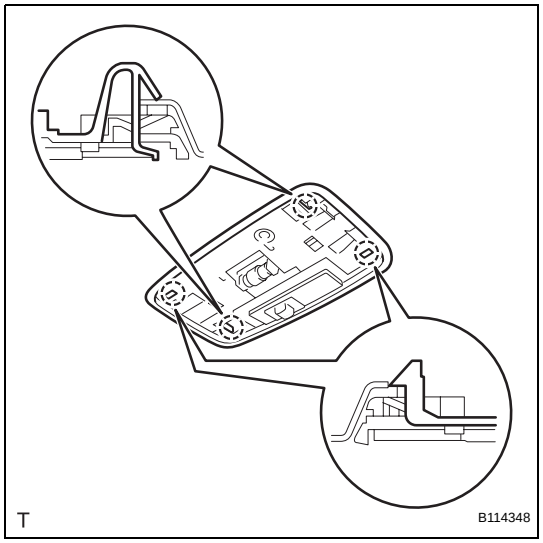

(c) Engage the 4 claws and install the room light.

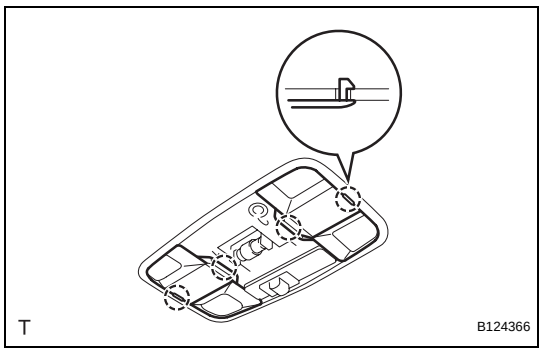

(d) Engage the 4 claws and install the 2 covers.

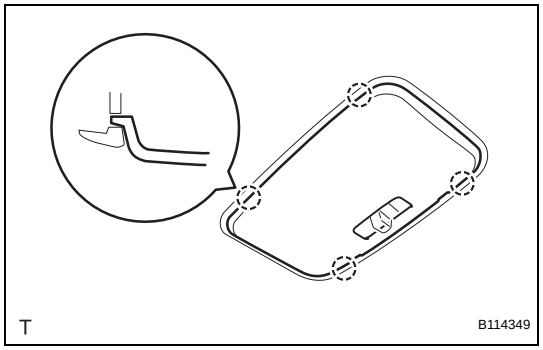

(e) Engage the 4 claws and install the room light lens.

IR

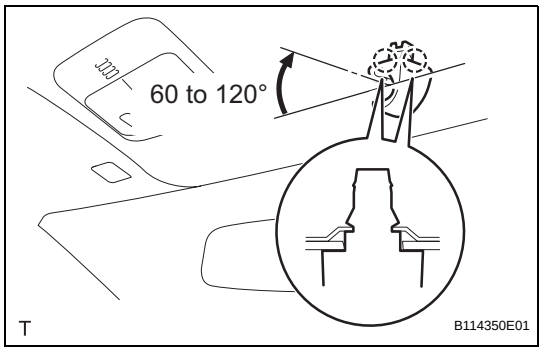

23. INSTALL VISOR HOLDER RH

(a) Engage the 2 claws by turning the visor holder clockwise between 60 to 120° and install the visor holder.

24. INSTALL VISOR HOLDER LH

HINT:
Use the same procedure as for the RH side.

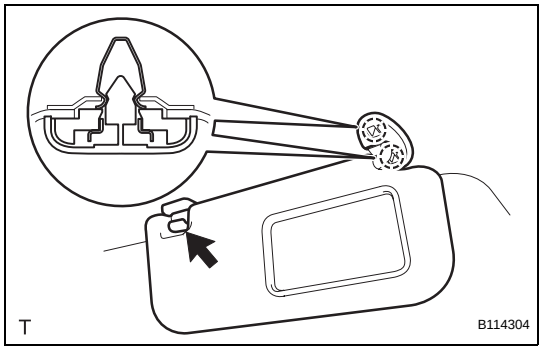

25. INSTALL VISOR ASSEMBLY RH

(a) Engage the 2 springs and install the visor.
(b) Install the visor shaft into the visor holder.

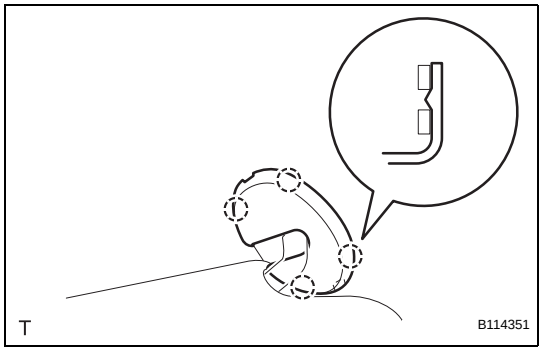

(c) Engage the 4 claws and install the visor bracket cover.

26. INSTALL VISOR ASSEMBLY LH

HINT:
Use the same procedure as for the RH side.

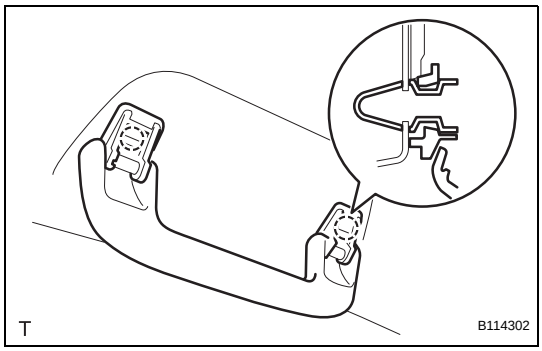

27. INSTALL ASSIST GRIP SUB-ASSEMBLY

HINT:
The fitting number of the assist grips varies with the specifications.

(a) Engage the 2 springs and install the assist grip.

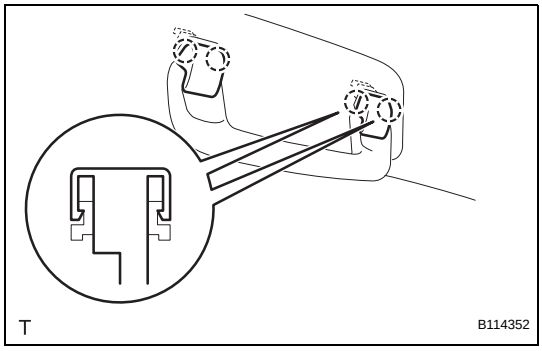

28. INSTALL ASSIST GRIP COVER

HINT:
The fitting number of the assist grip covers varies with the specifications.

(a) Engage the 2 claws and install the assist grip cover.

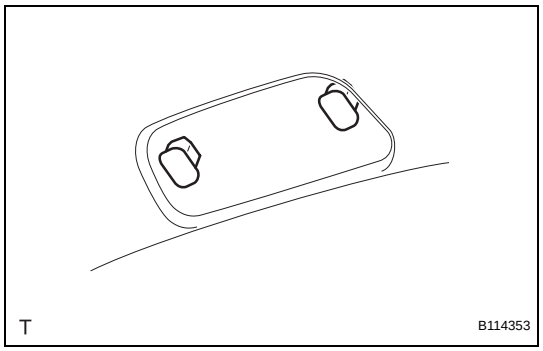

29. INSTALL ROOF HEADLINING SERVICE HOLE COVER (w/o Curtain Shield Airbag)

HINT:

The fitting number of the roof headlining service hole covers varies with the specifications.

(a) Install the roof headlining service hole cover.

30. INSTALL SEAT BELT ANCHOR COVER (See page SB-160)

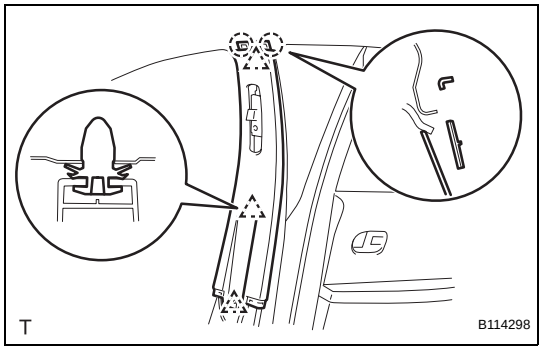

31. INSTALL CENTER PILLAR UPPER GARNISH RH

(a) Engage the 3 clips and the 2 hooks and install the center pillar upper garnish.

32. INSTALL CENTER PILLAR UPPER GARNISH LH

HINT:

Use the same procedure as for the RH side.

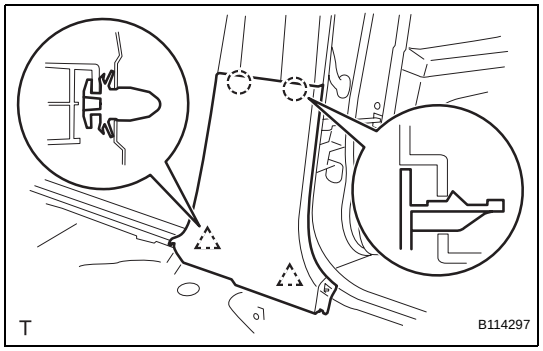

33. INSTALL CENTER PILLAR LOWER GARNISH RH

(a) Engage the 2 clips and the 2 claws and install the center pillar lower garnish.

34. INSTALL CENTER PILLAR LOWER GARNISH LH

HINT:

Use the same procedure as for the RH side.

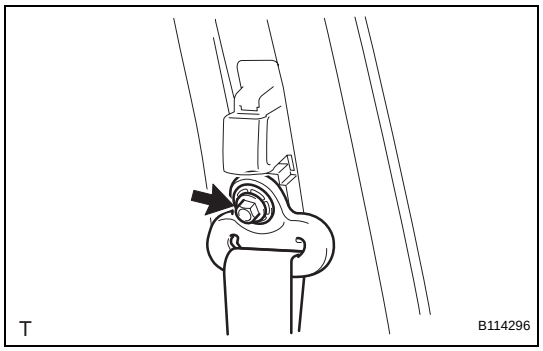

35. INSTALL FRONT SEAT OUTER BELT ASSEMBLY RH

(a) Install the shoulder anchor with the bolt.
Torque: 42 N*m (430 kgf*cm, 31 ft.*lbf)

36. INSTALL FRONT SEAT OUTER BELT ASSEMBLY LH

HINT:

Use the same procedure as for the RH side.

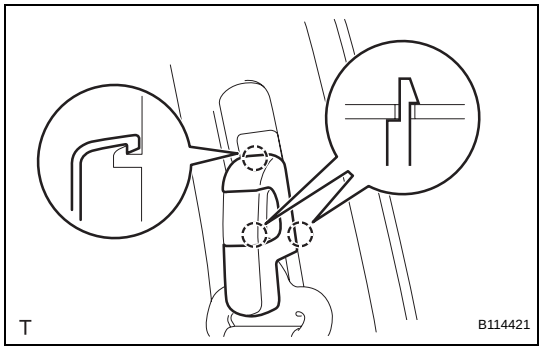

37. INSTALL SEAT BELT ANCHOR COVER CAP

HINT:

Use the same procedure for both sides.

(a) Engage the 3 claws and install the seat belt anchor cover cap.

IR

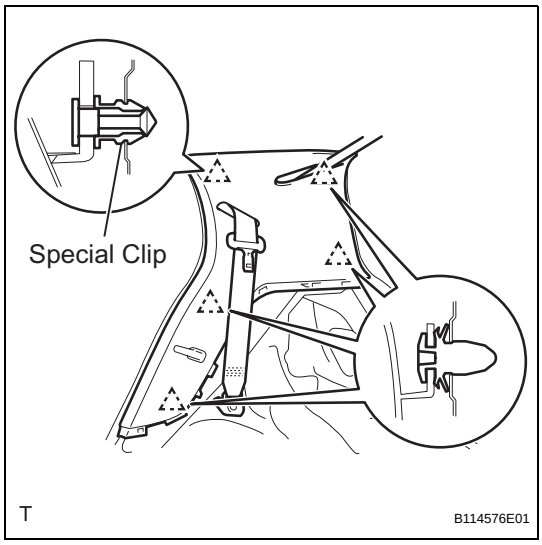

38. INSTALL ROOF SIDE INNER GARNISH RH

(a) w/ Curtain Shield Airbag:
  (1) Install a new special clip onto the roof side inner garnish.
  (2) Pass the rear seat outer belt and the rear center seat outer belt through the slit in the roof side inner garnish.
  (3) Engage the 5 clips and install the roof side inner garnish.

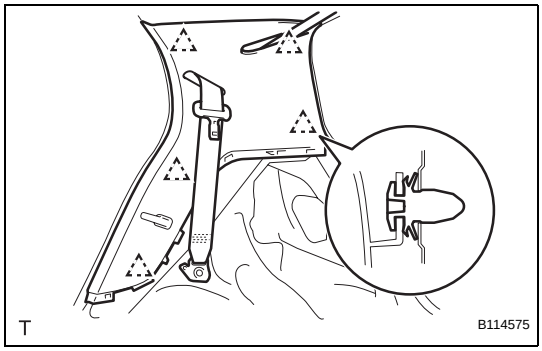

(b) w/ Curtain Shield Airbag:
  (1) Pass the rear seat outer belt and the rear center seat outer belt through the slit in the roof side inner garnish.
  (2) Engage the 5 clips and install the roof side inner garnish.

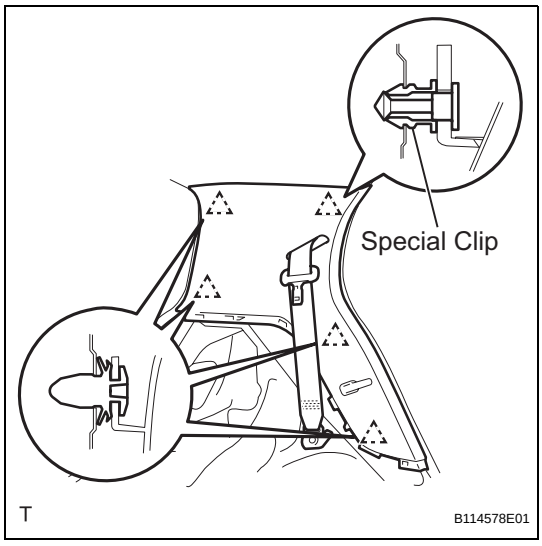

39. INSTALL ROOF SIDE INNER GARNISH LH

(a) w/ Curtain Shield Airbag:
  (1) Install a new special clip onto the roof side inner garnish.
  (2) Pass the rear seat outer belt through the slit in the roof side inner garnish.
  (3) Engage the 5 clips and install the roof side inner garnish.

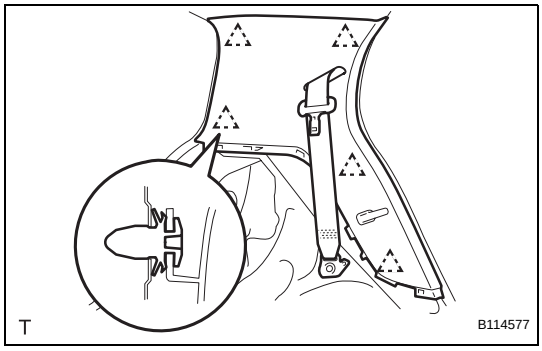

(b) w/ Curtain Shield Airbag:
  (1) Pass the rear seat outer belt through the slit in the roof side inner garnish.
  (2) Engage the 5 clips and install the roof side inner garnish.

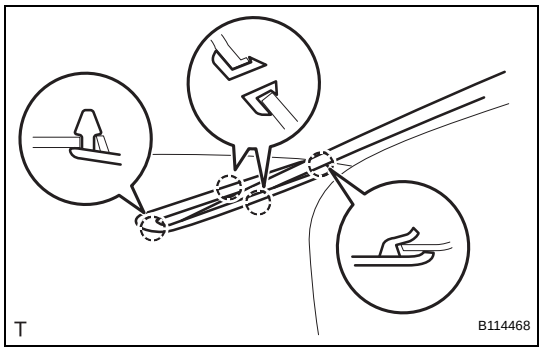

40. INSTALL REAR CENTER SEAT OUTER BELT ASSEMBLY

(a) Engage the 4 claws and install the center belt guide.

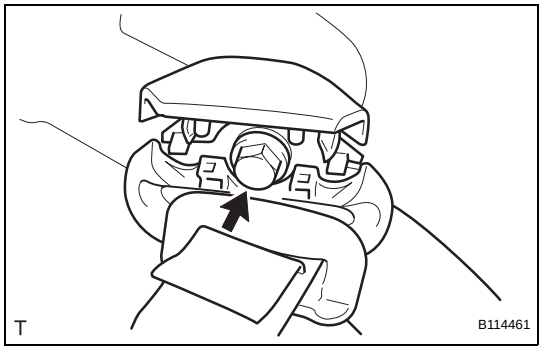

(b) Install the through anchor with the bolt.
Torque: 42 N*m (430 kgf*cm, 31 ft.*lbf)

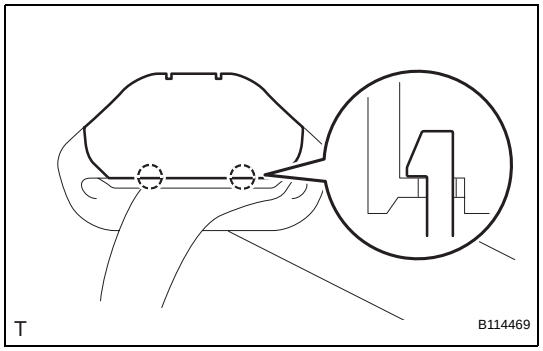

(c) Engage the 2 claws and close the slip joint cover.

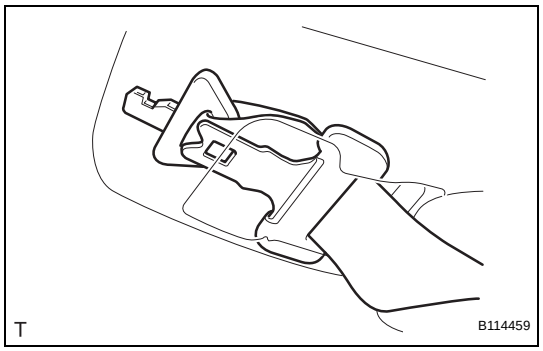

(d) Install the 2 tongue plates.

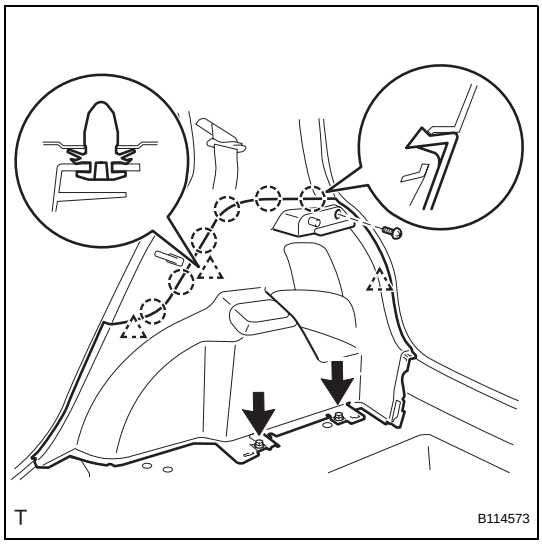

41. INSTALL DECK TRIM SIDE PANEL ASSEMBLY RH

(a) Engage the 3 clips and the 6 claws and install the deck trim side panel.

(b) Tighten the 3 screws.

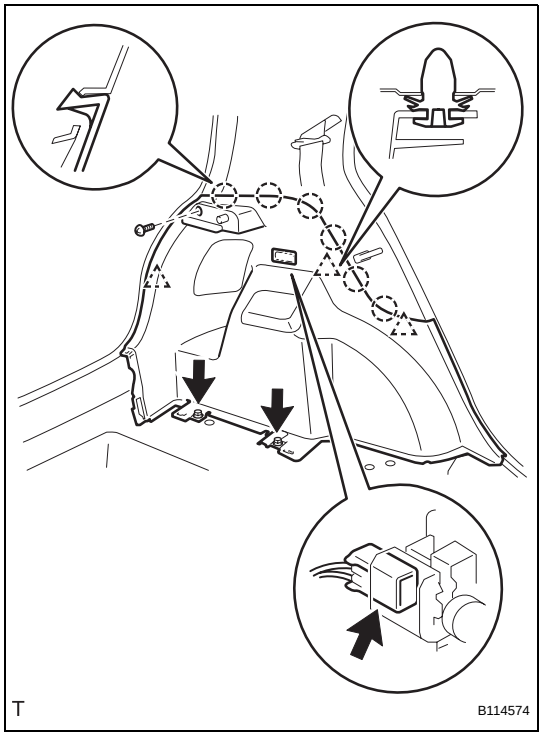

42. INSTALL DECK TRIM SIDE PANEL ASSEMBLY LH

(a) Connect the luggage compartment room light connector.

(b) Engage the 3 clips and the 6 claws and install the deck trim side board.

(c) Tighten the 3 screws.

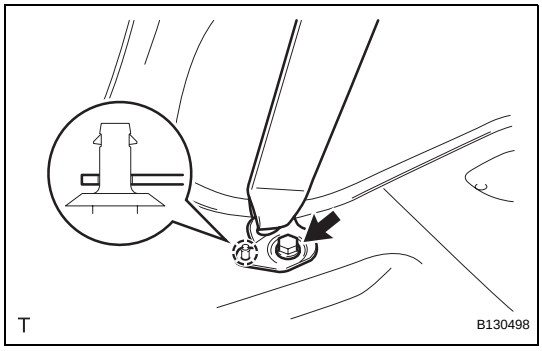

43. INSTALL REAR SEAT OUTER BELT ASSEMBLY RH

(a) Engage the clip and install the anchor plate.

(b) Tighten the bolt.

Torque: 42 N*m (430 kgf*cm, 31 ft.*lbf)

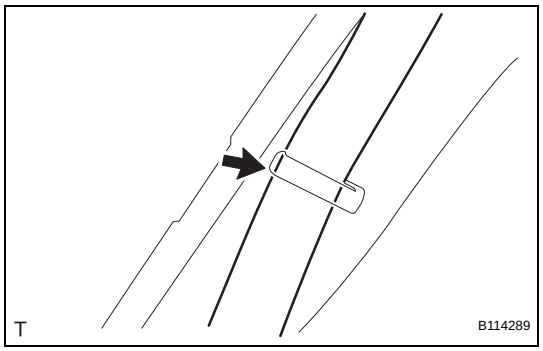

(c) Install the belt into the rear seat shoulder belt hanger.

44. INSTALL REAR SEAT OUTER BELT ASSEMBLY LH

HINT:

Use the same procedure as for the RH side.

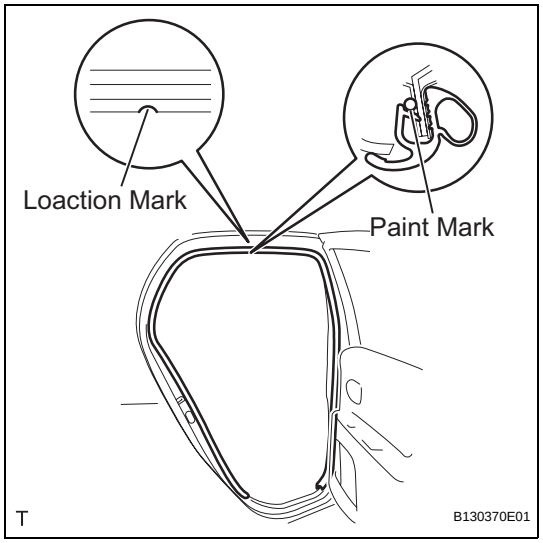

45. INSTALL REAR DOOR OPENING TRIM WEATHERSTRIP RH

(a) Align the location mark with the paint mark first, and install the rear door opening trim weatherstrip, as shown in the illustration.

Paint mark:

Area	Color
RH side	Purple
LH side	Pink

46. INSTALL REAR DOOR OPENING TRIM WEATHERSTRIP LH

HINT:

Use the same procedure as for the RH side.

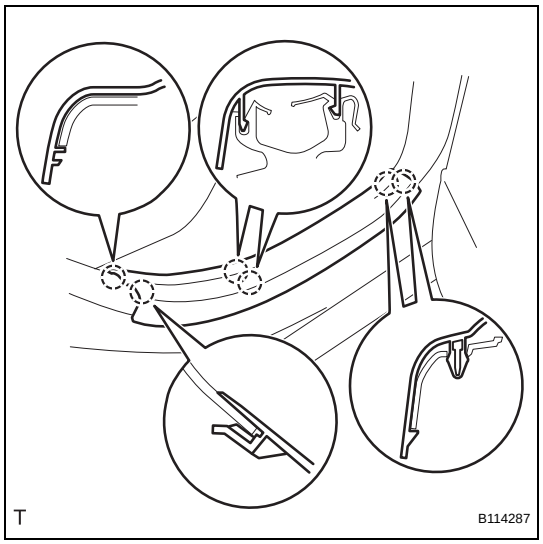

47. INSTALL REAR DOOR SCUFF PLATE RH

(a) Engage the 6 claws and install the rear door scuff plate.

48. INSTALL REAR DOOR SCUFF PLATE LH

HINT:

Use the same procedure as for the RH side.

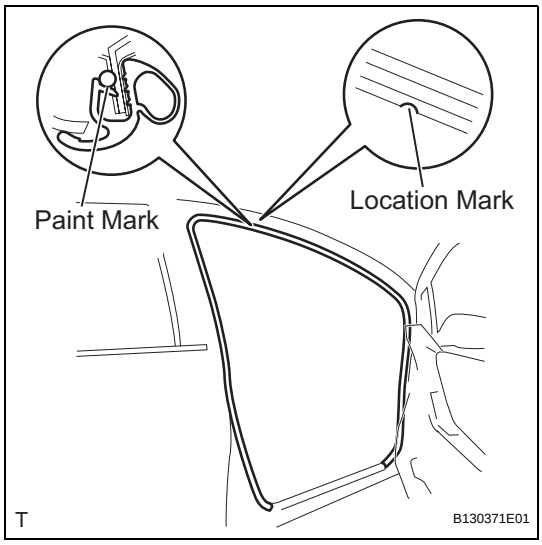

49. INSTALL FRONT DOOR OPENING TRIM WEATHERSTRIP RH

(a) Align the location mark with the paint mark first, and install the front door opening trim weatherstrip, as shown in the illustration.

Paint mark:

Area	Color
RH side	Gold
LH side	Silver

50. INSTALL FRONT DOOR OPENING TRIM WEATHERSTRIP LH

HINT:

Use the same procedure as for the RH side.

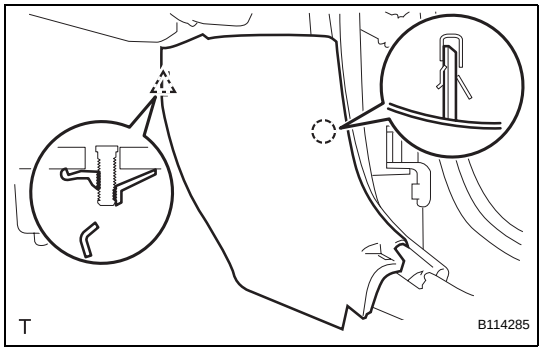

51. INSTALL COWL SIDE TRIM BOARD RH

(a) Engage the claw and the stud bolt and install the cowl side trim board.

52. INSTALL COWL SIDE TRIM BOARD LH

HINT:

Use the same procedure as for the RH side.

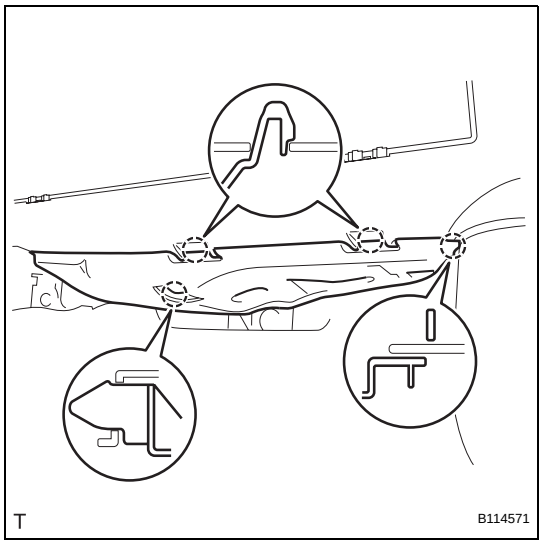

53. INSTALL INSTRUMENT PANEL UNDER COVER SUB-ASSEMBLY RH

(a) Engage the 4 claws and install the instrument panel under cover.

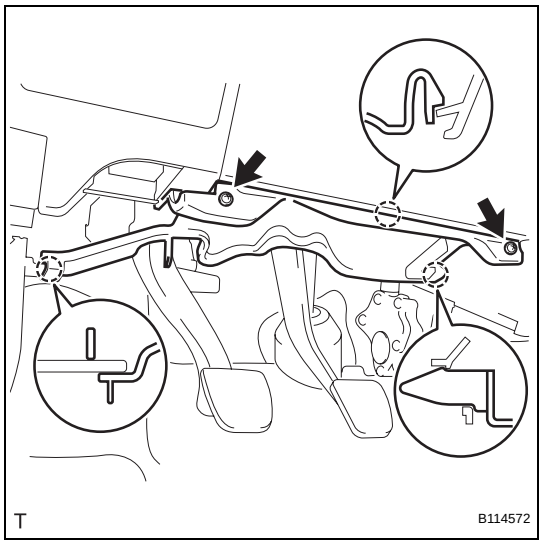

54. INSTALL INSTRUMENT PANEL UNDER COVER SUB-ASSEMBLY LH

(a) Engage the 3 claws and install the instrument panel under cover.

(b) Tighten the 2 screws.

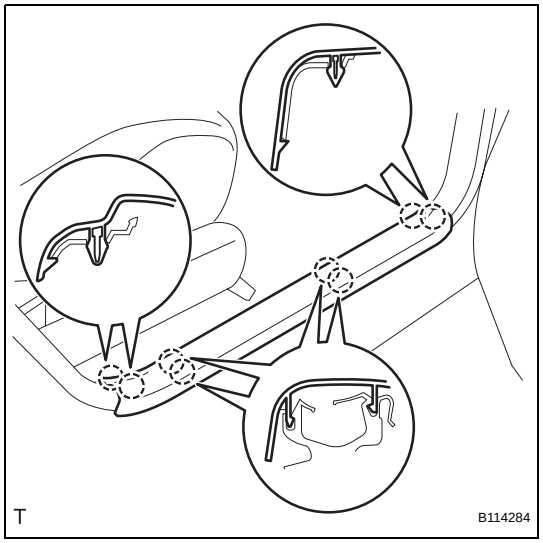

55. INSTALL FRONT DOOR SCUFF PLATE RH

(a) Engage the 8 claws and install the front door scuff plate.

56. INSTALL FRONT DOOR SCUFF PLATE LH

HINT:

Use the same procedure as for the RH side.

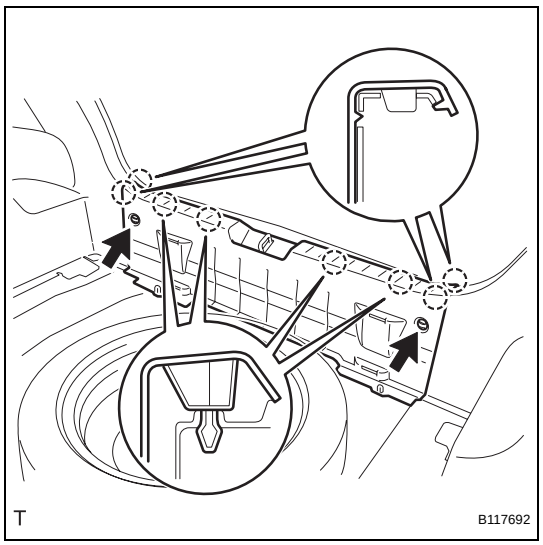

57. INSTALL REAR DECK TRIM COVER

(a) Engage the 8 claws and install the rear deck trim cover.

(b) Install the 2 clips.

58. INSTALL REAR SEAT ASSEMBLY RH (for 60/40 Split Seat Type) (See page SE-102)

59. INSTALL REAR SEAT ASSEMBLY LH (for 60/40 Split Seat Type) (See page SE-84)

60. INSTALL NO. 1 REAR SEAT LEG COVER (for 60/40 Split Seat Type)

(a) for RH Side:

(1) Install the No. 1 rear seat leg cover (See page SE-103).

(b) for LH Side:

(1) Install the No. 1 rear seat leg cover (See page SE-85).

61. INSTALL NO. 2 REAR SEAT LEG COVER (for 60/40 Split Seat Type) (See page SE-85)

IR

62. INSTALL REAR SEATBACK ASSEMBLY (for Hold Down Seat Type) (See page SE-122)

63. INSTALL REAR SEAT CUSHION COVER PAD SUB-ASSEMBLY (for Hold Down Seat Type) (See page SE-123)

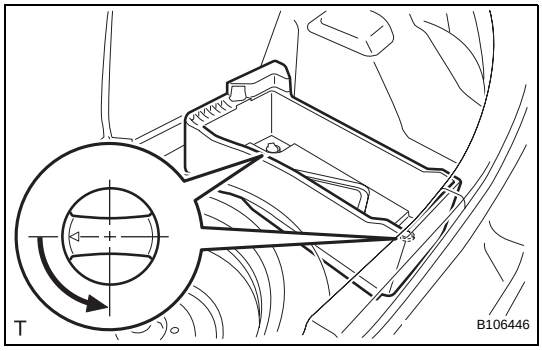

64. INSTALL DECK FLOOR BOX RH
(a) Set the deck floor box and lock the 2 knobs.

65. INSTALL DECK FLOOR BOX LH
HINT:
Use the same procedure as for the RH side.

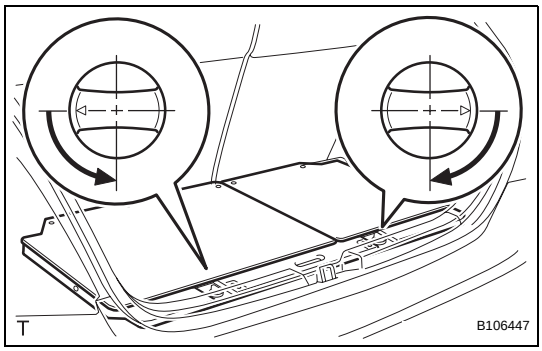

66. INSTALL DECK BOARD SUB-ASSEMBLY
(a) Set the deck board and lock the 2 knobs.

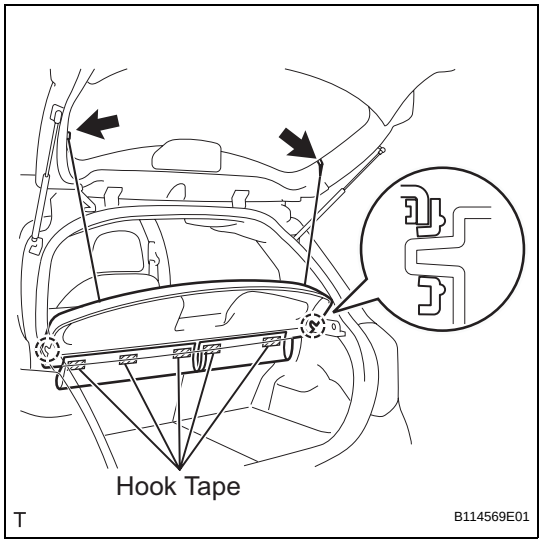

67. INSTALL PACKAGE TRAY TRIM PANEL ASSEMBLY
(a) Engage the 2 claws and install the package tray trim panel.
(b) Install the 5 pieces of hook tape.
(c) Install the 2 package tray trim suspenders.

68. CONNECT CABLE TO NEGATIVE BATTERY TERMINAL
Torque: 5.4 N*m (55 kgf*cm, 48 in.*lbf)

69. INSPECT SRS WARNING LIGHT
(See page RS-31)

IR

ROOF HEADLINING (for Hatchback 3 Door)

COMPONENTS

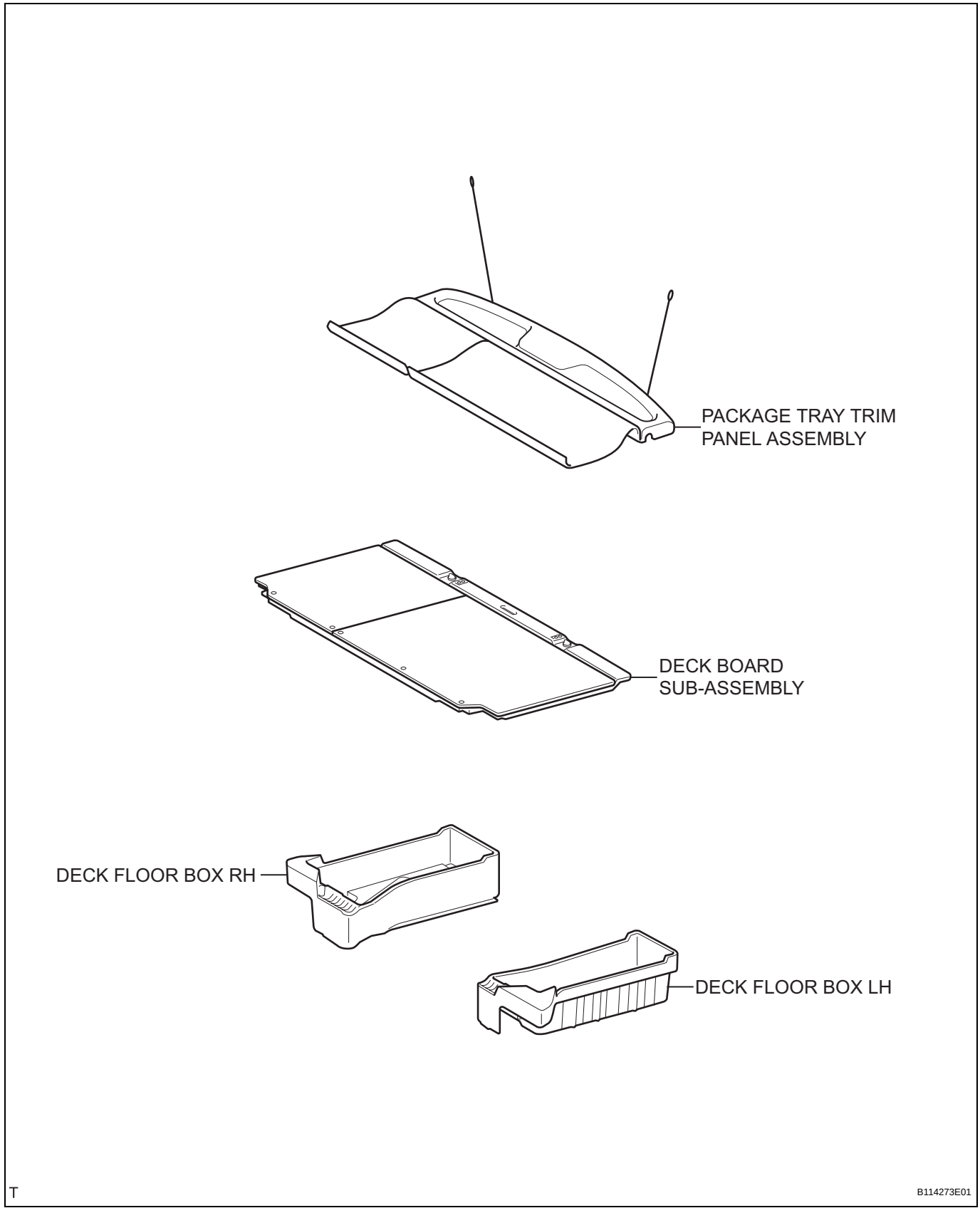

for 60/40 Split Seat Type:

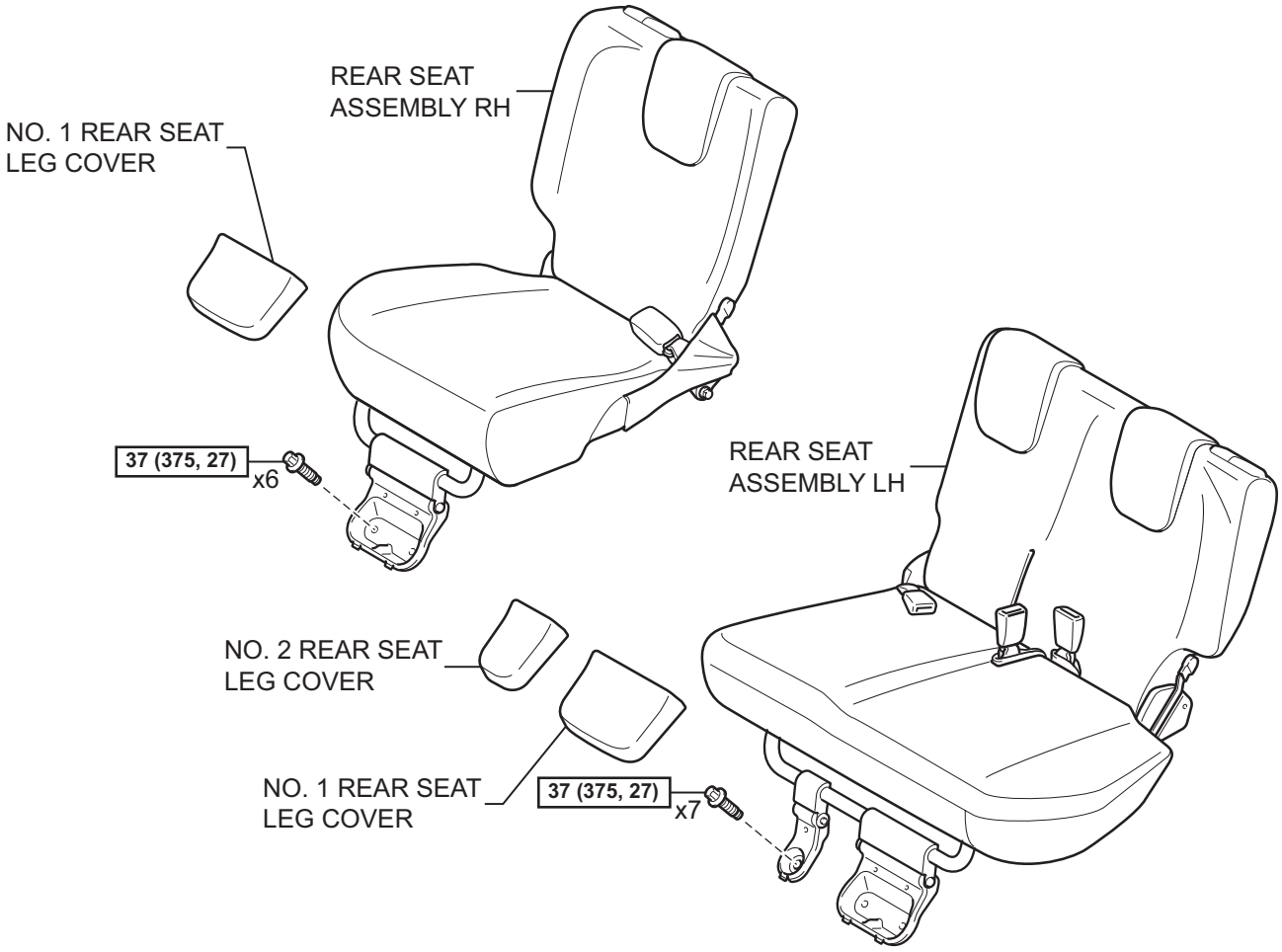

for Hold Down Seat Type:

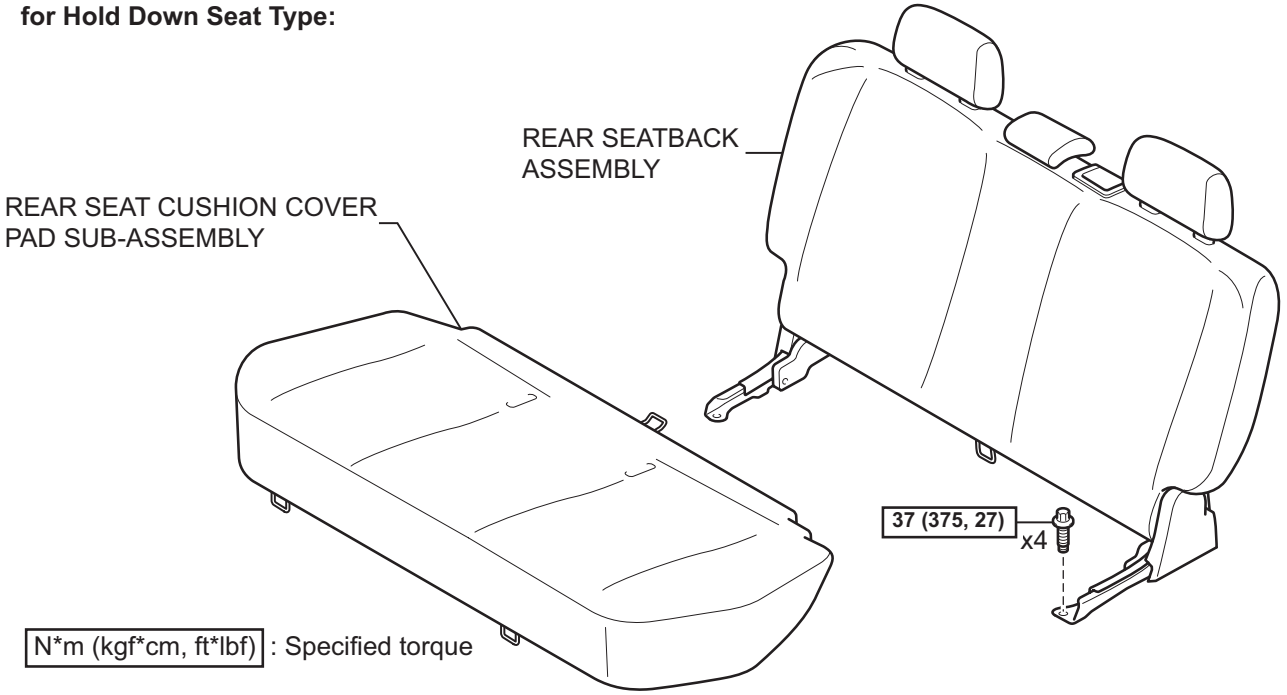

T

B121713E03

IR

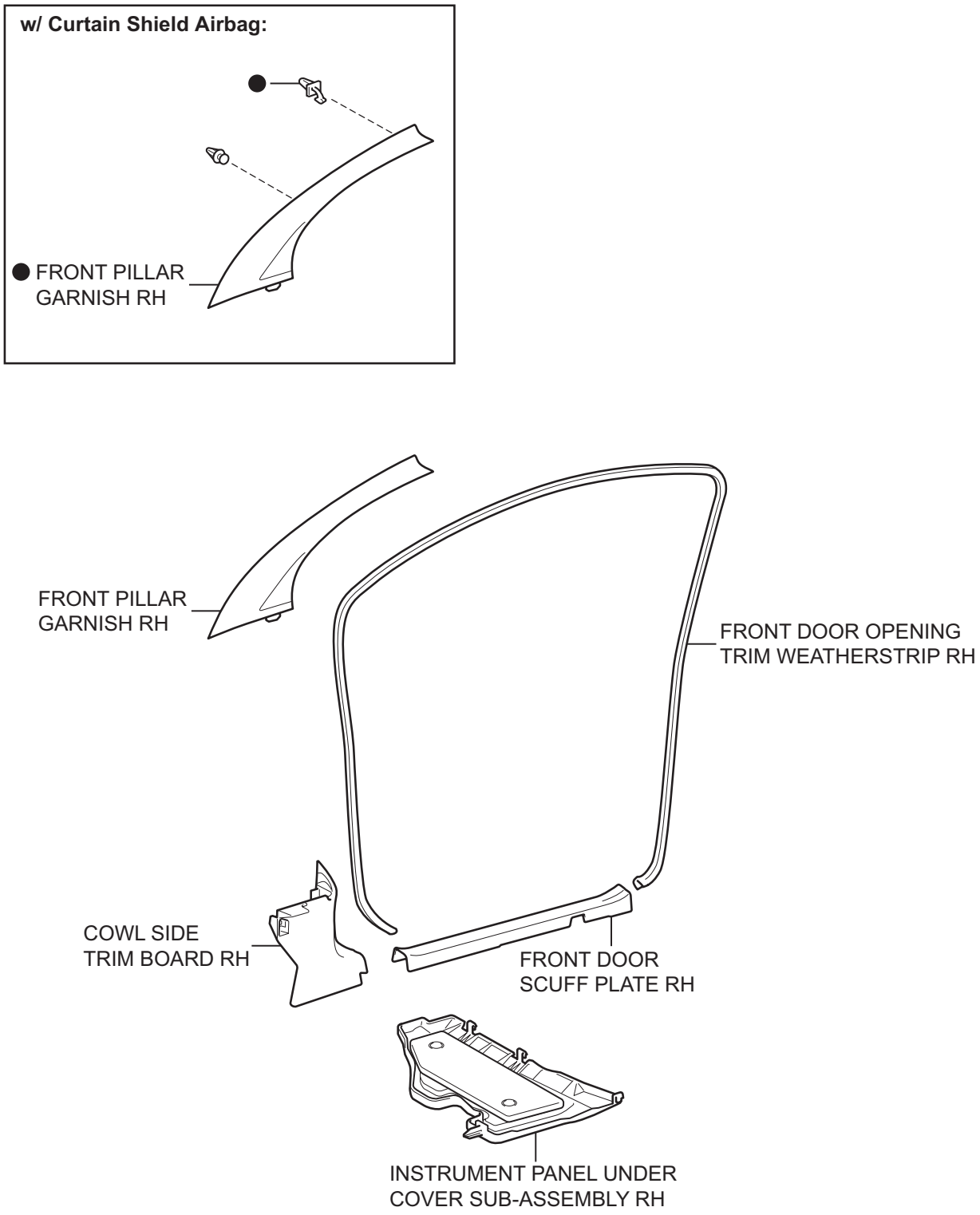

● Non-reusable part

T

B114488E02

w/ Curtain Shield Airbag:

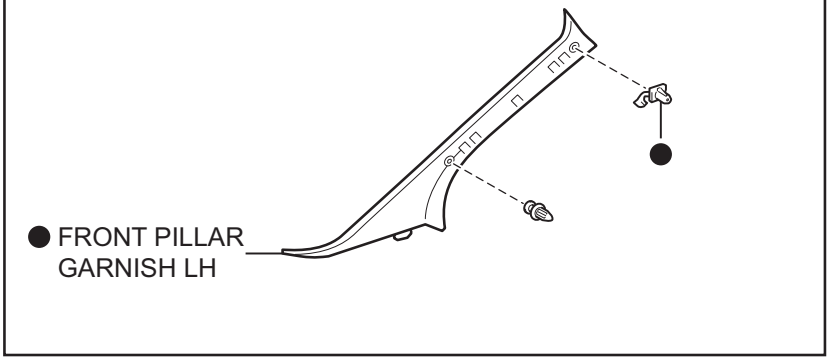

● FRONT PILLAR GARNISH LH

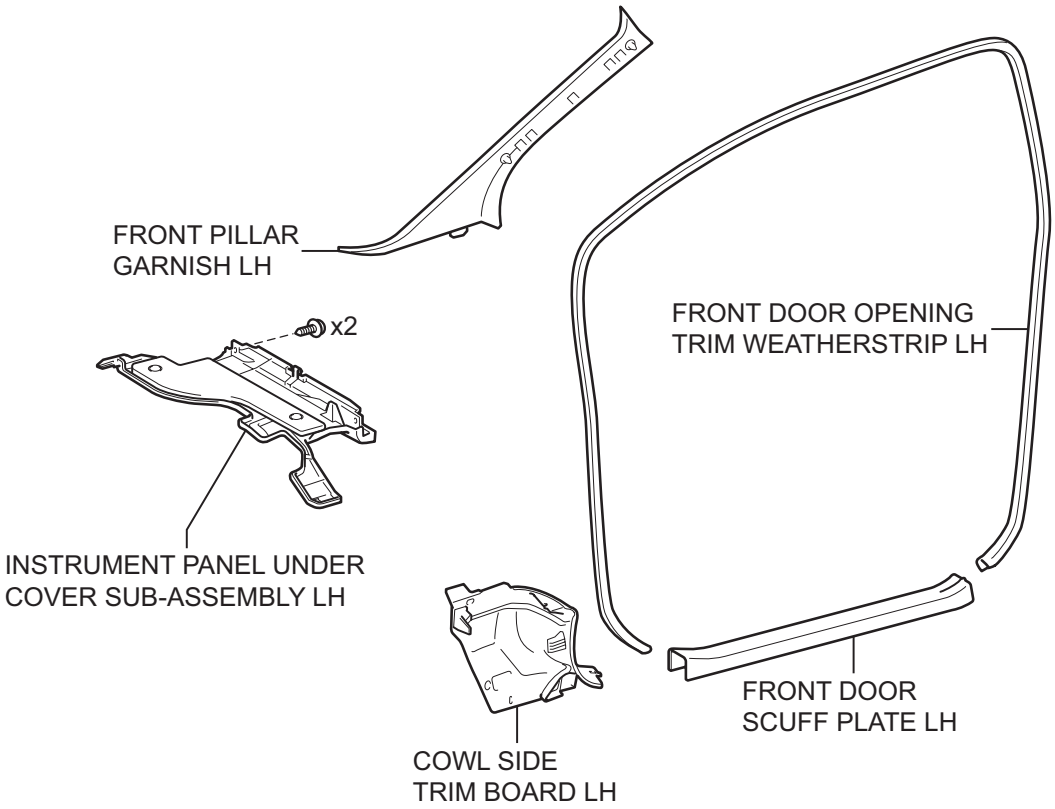

● Non-reusable part

T

B114489E02

IR

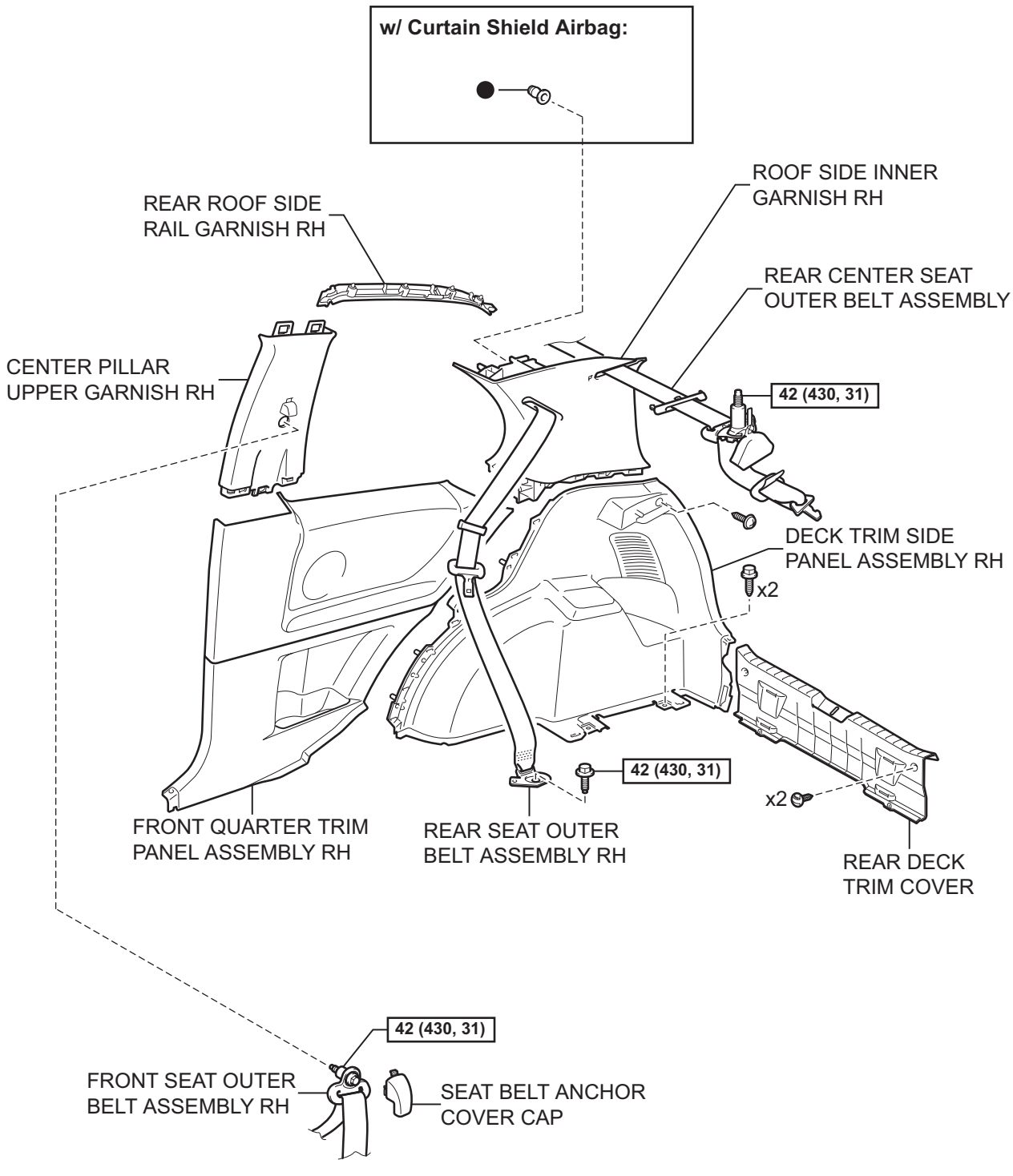

N*m (kgf*cm, ft*lbf) : Specified torque

● Non-reusable part

T

B117699E06

IR

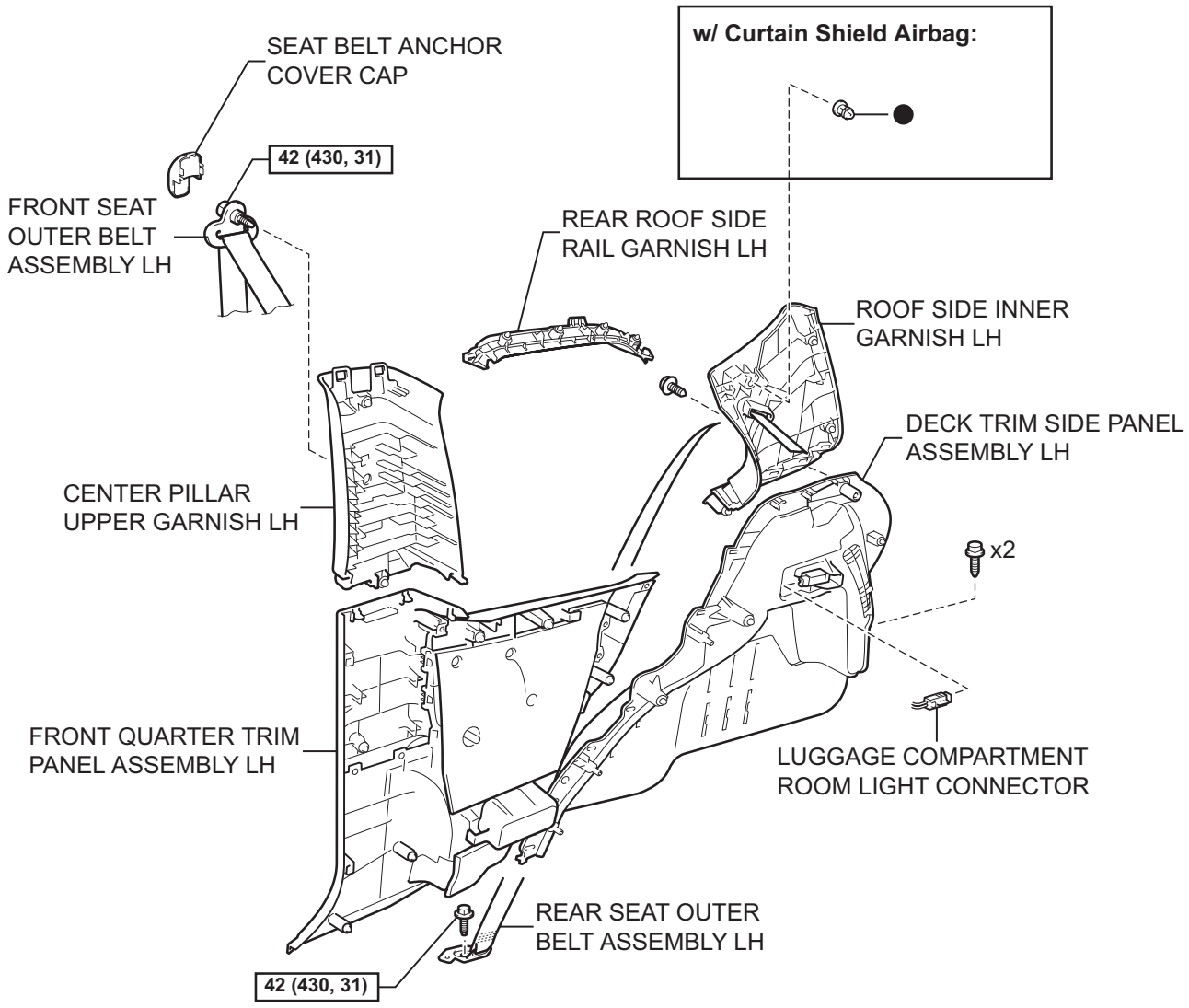

N*m (kgf*cm, ft*lbf) : Specified torque

● Non-reusable part

T

B117700E07

IR

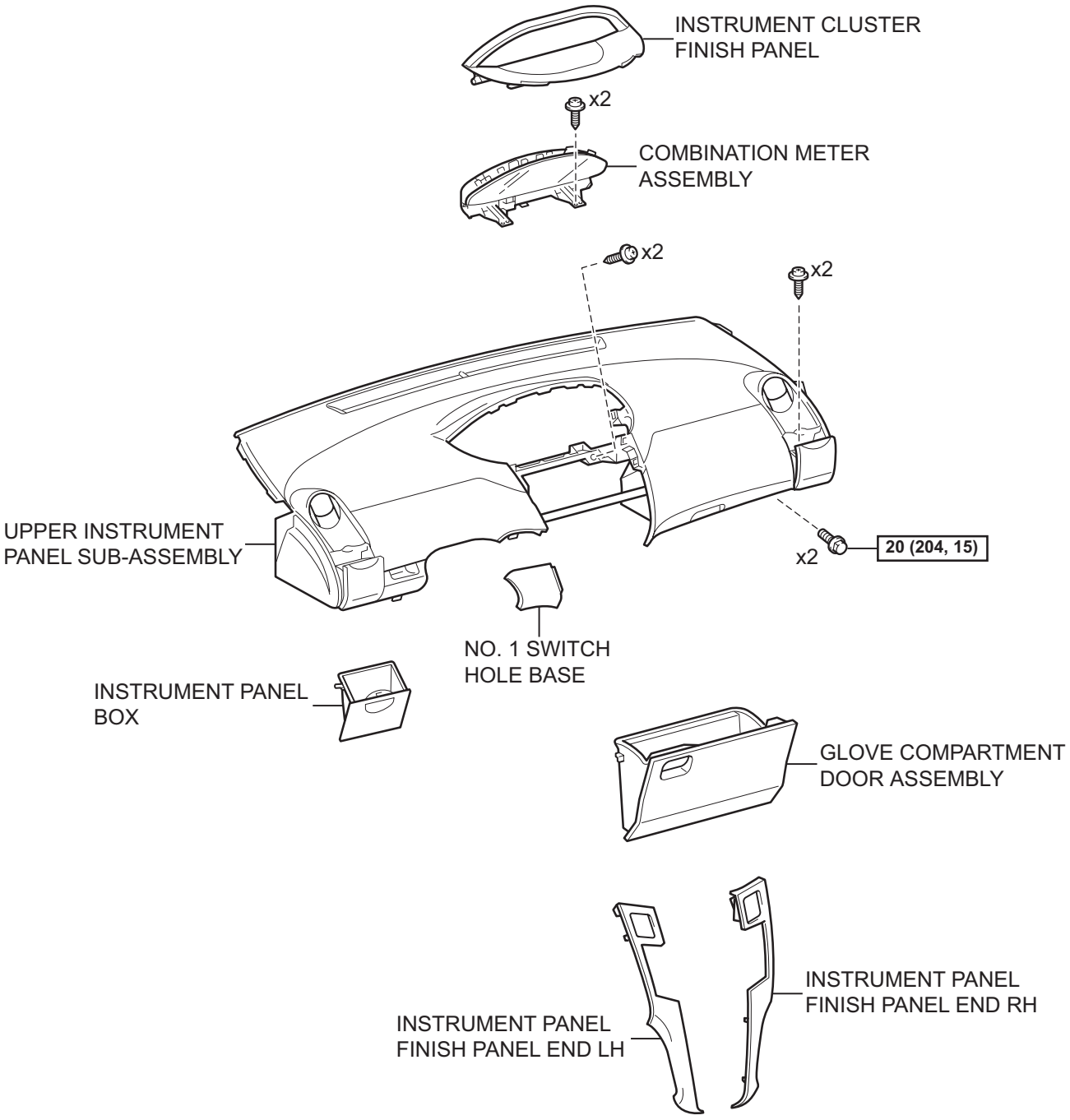

N*m (kgf*cm, ft*lbf) : Specified torque

T

B117770E02

IR

w/ Curtain Shield Airbag:

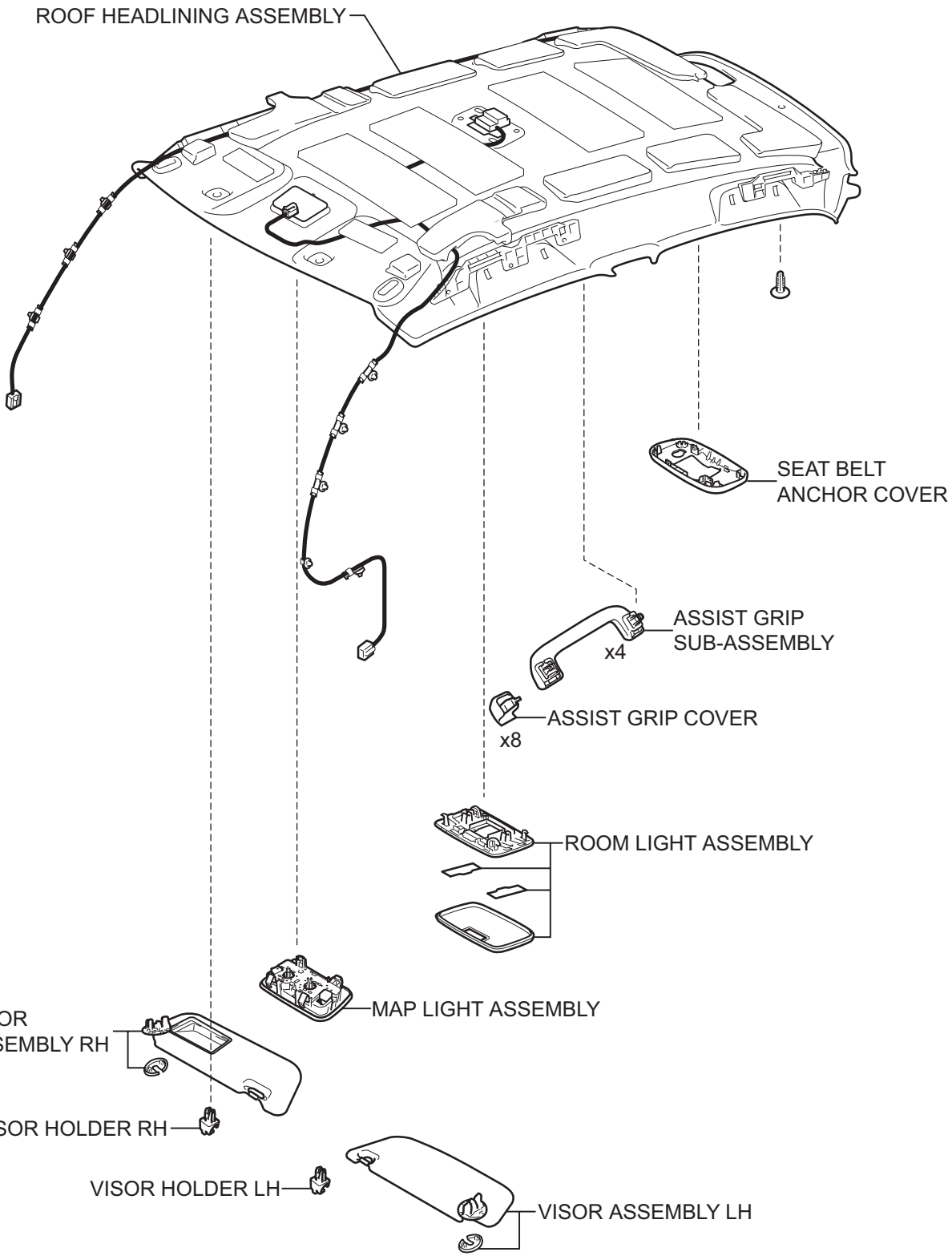

IR

T

B114490E05

w/o Curtain Shield Airbag:

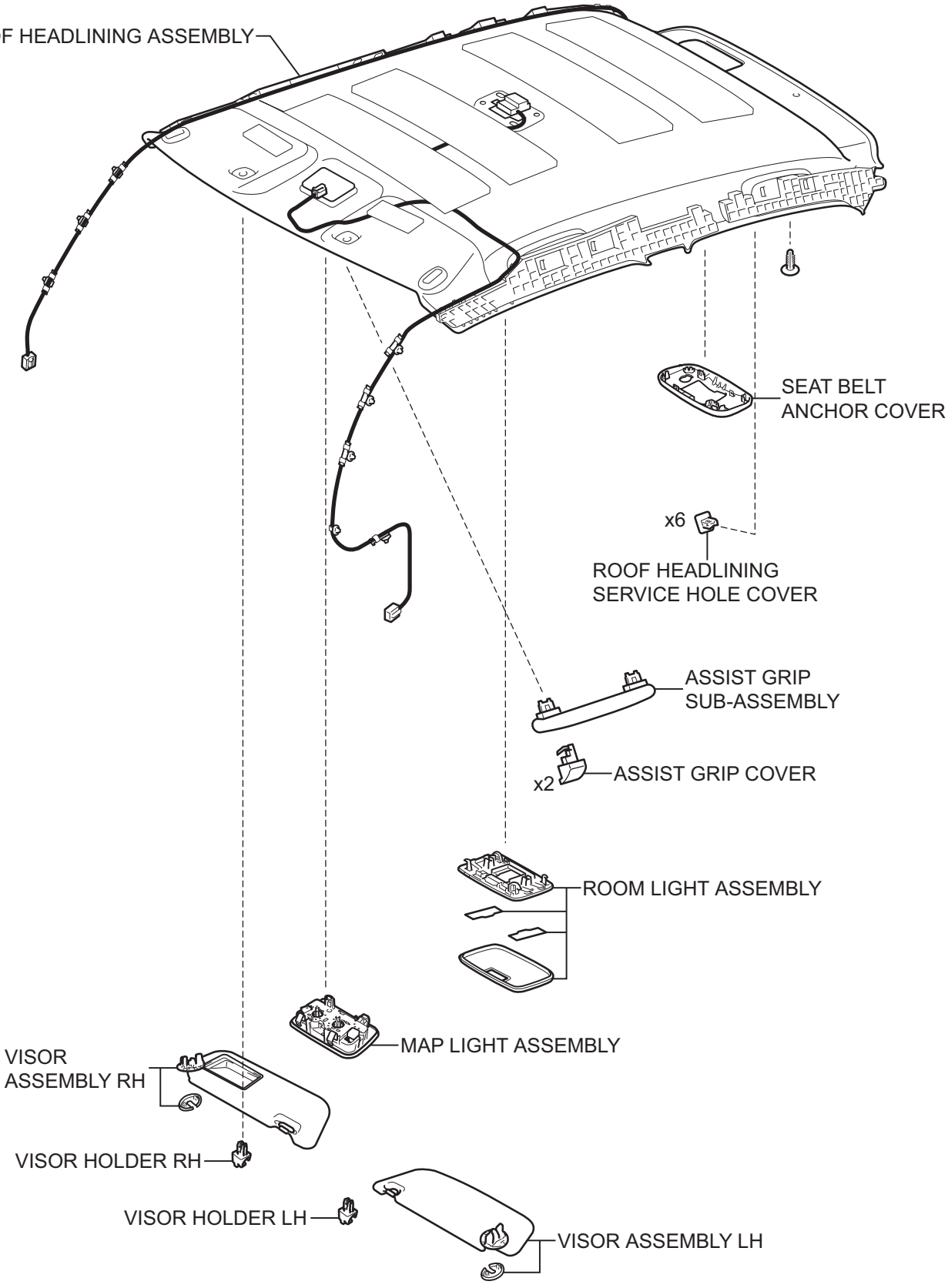

IR

T

B114491E03

w/ Curtain Shield Airbag:

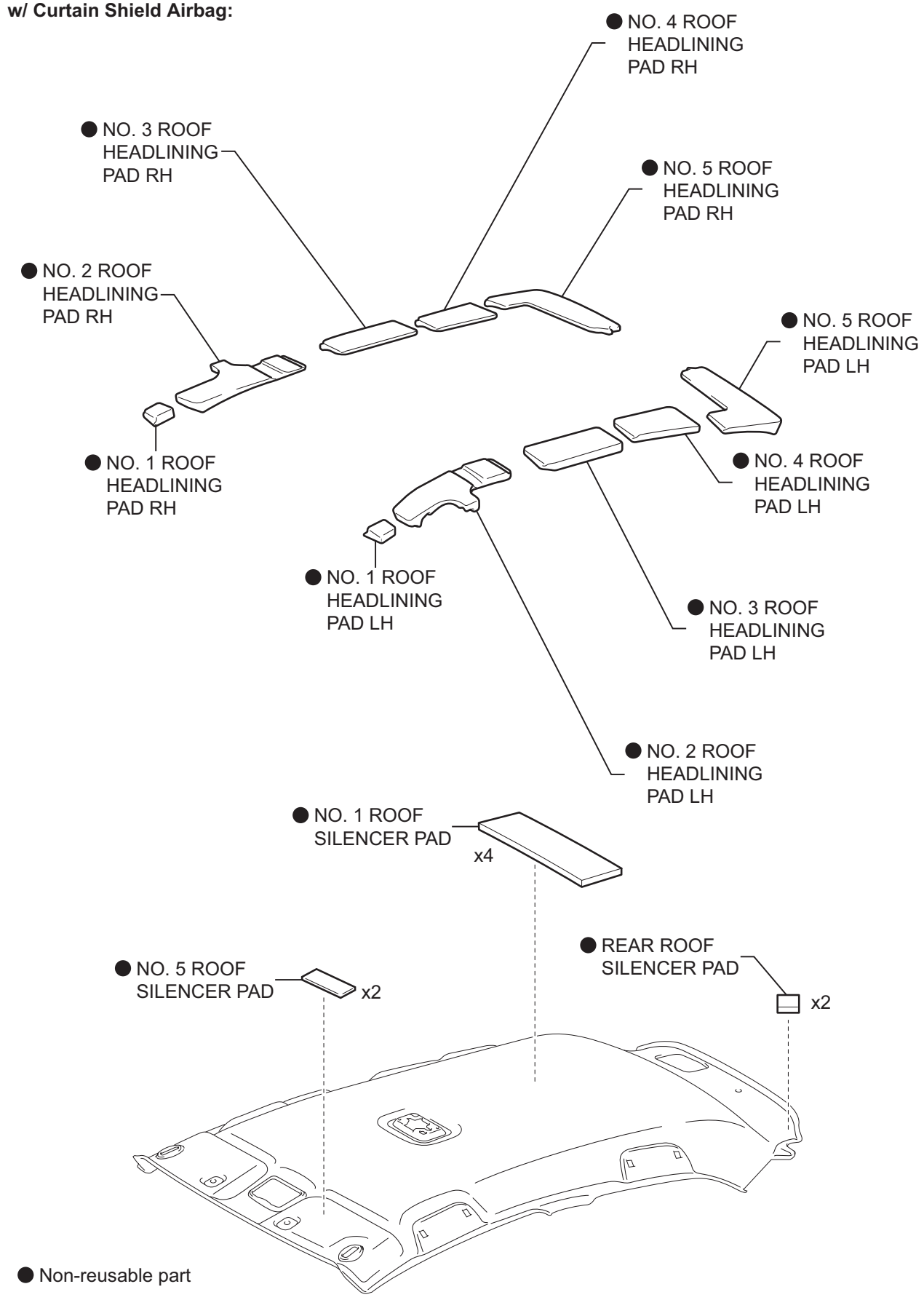

T

B114547E01

IR

w/ Curtain Shield Airbag:

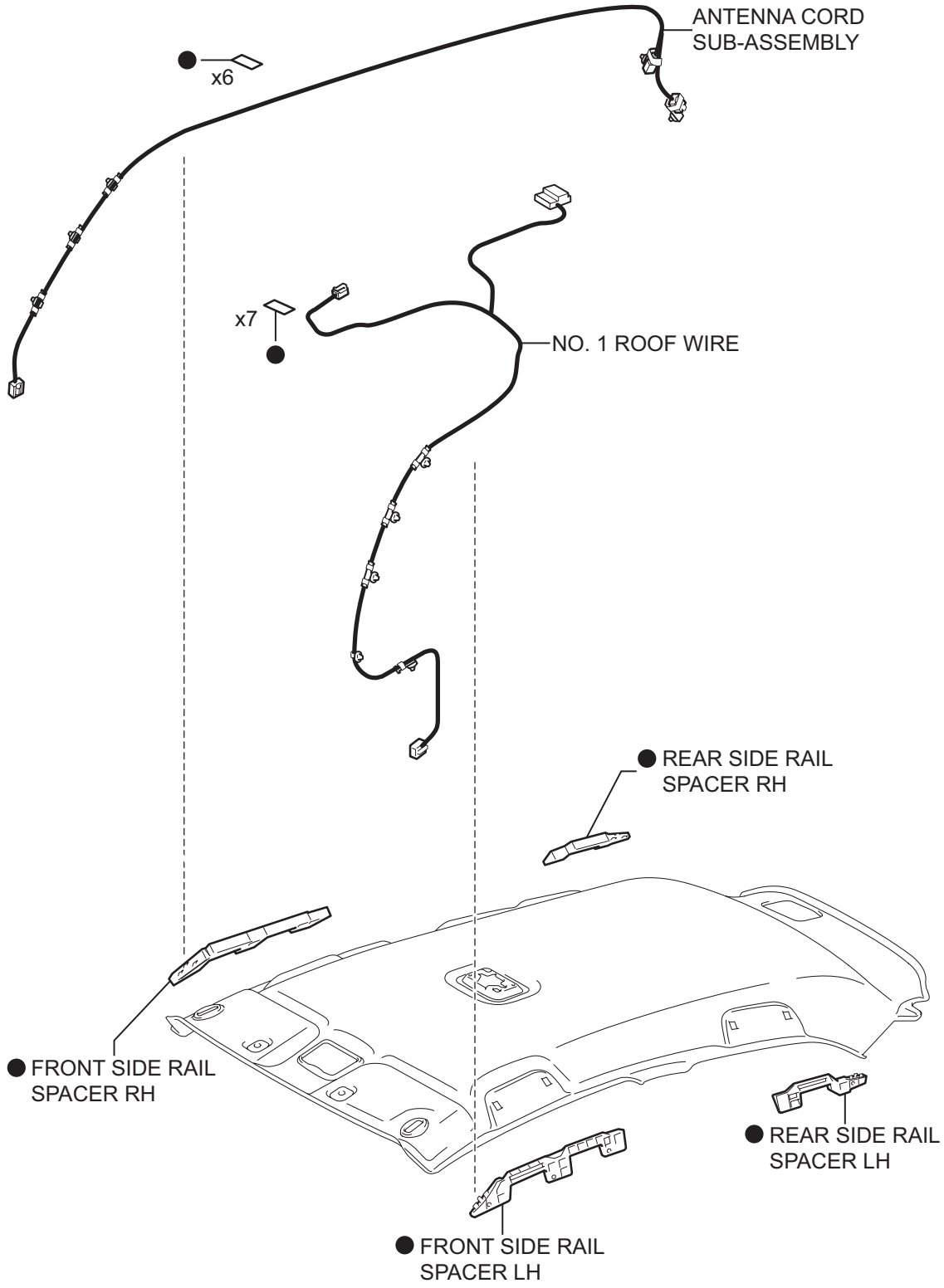

● Non-reusable part

T

B114492E02

IR

w/o Curtain Shield Airbag:

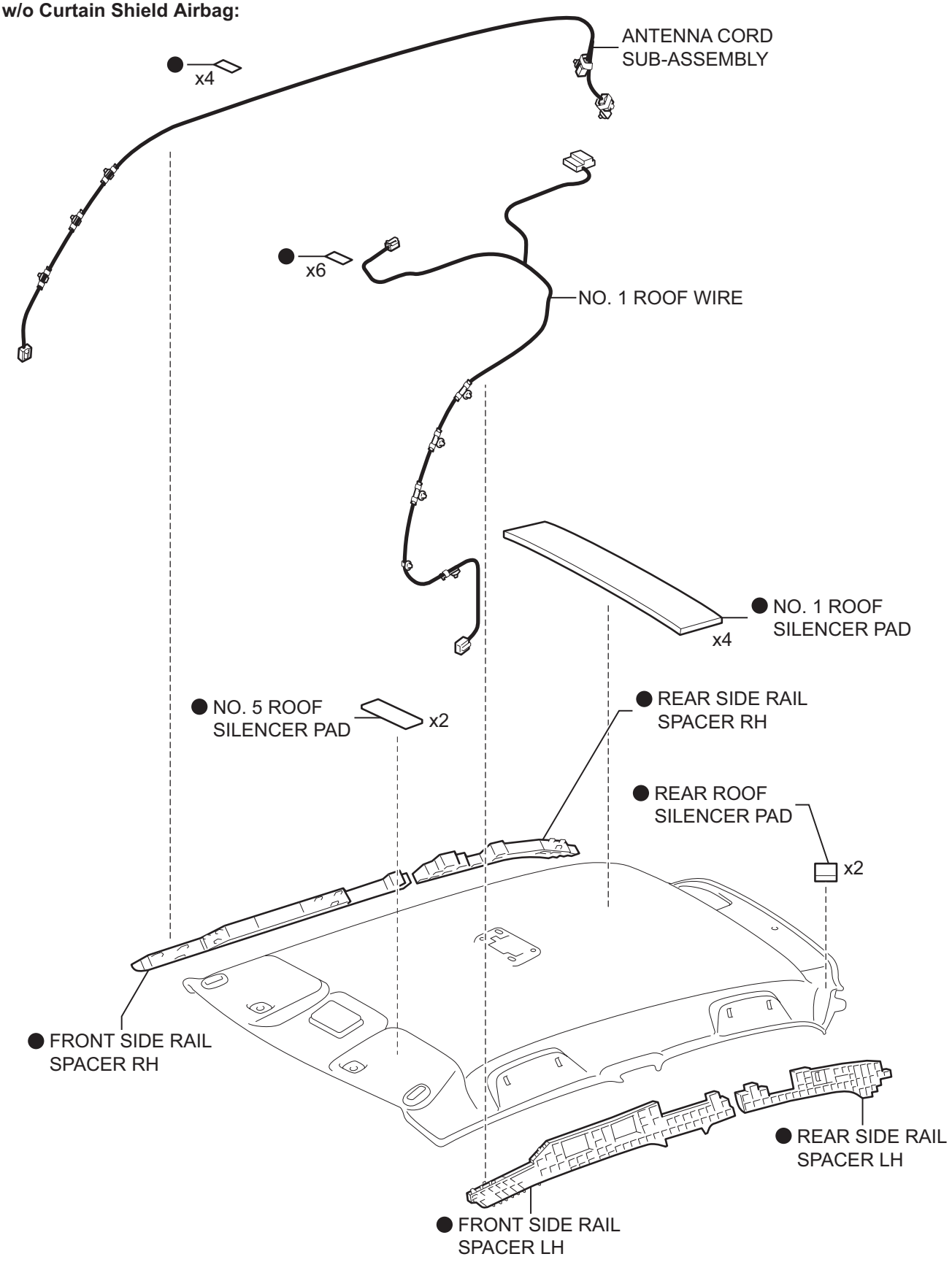

● Non-reusable part

T

B114548E02

IR

REMOVAL

CAUTION:
Some of these service operations affect the SRS airbag system. Read the precautionary notices concerning the SRS airbag system before servicing (See page RS-1).
NOTICE:
Always use "Torx" socket wrench E10 when removing the rear seat.

1. **DISCONNECT CABLE FROM NEGATIVE BATTERY TERMINAL**
   CAUTION:
   Wait for at least 90 seconds after disconnecting the cable to prevent the airbag from working.
2. **REMOVE PACKAGE TRAY TRIM PANEL ASSEMBLY (See page IR-48)**
3. **REMOVE DECK BOARD SUB-ASSEMBLY (See page IR-48)**
4. **REMOVE DECK FLOOR BOX RH (See page IR-48)**
5. **REMOVE DECK FLOOR BOX LH (See page IR-48)**
6. **REMOVE NO. 1 REAR SEAT LEG COVER (for 60/40 Split Seat Type)**
   (a) for RH Side:
   (1) Remove the No. 1 rear seat leg cover (See page SE-89).
   (b) for LH Side:
   (1) Remove the No. 1 rear seat leg cover (See page SE-70).
7. **REMOVE NO. 2 REAR SEAT LEG COVER (for 60/40 Split Seat Type) (See page SE-70)**
8. **REMOVE REAR SEAT ASSEMBLY RH (for 60/40 Split Seat Type) (See page SE-89)**
9. **REMOVE REAR SEAT ASSEMBLY LH (for 60/40 Split Seat Type) (See page SE-71)**
10. **REMOVE REAR SEAT CUSHION COVER PAD SUB-ASSEMBLY (for Hold Down Seat Type) (See page SE-114)**
11. **REMOVE REAR SEATBACK ASSEMBLY (for Hold Down Seat Type) (See page SE-115)**

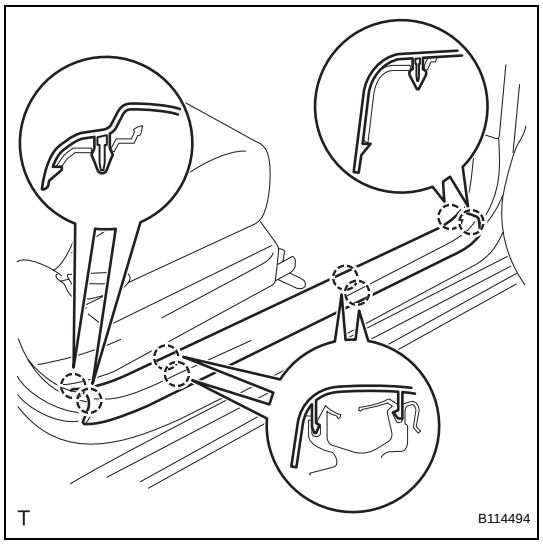

12. REMOVE FRONT DOOR SCUFF PLATE RH

(a) Disengage the 8 claws and remove the front door scuff plate.

13. REMOVE FRONT DOOR SCUFF PLATE LH

HINT:

Use the same procedure as for the RH side.

14. REMOVE INSTRUMENT PANEL UNDER COVER SUB-ASSEMBLY RH (See page IR-50)

15. REMOVE INSTRUMENT PANEL UNDER COVER SUB-ASSEMBLY LH (See page IR-50)

16. REMOVE COWL SIDE TRIM BOARD RH (See page IR-50)

17. REMOVE COWL SIDE TRIM BOARD LH (See page IR-50)

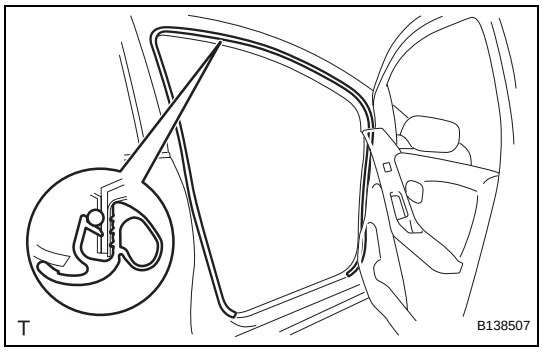

18. REMOVE FRONT DOOR OPENING TRIM WEATHERSTRIP RH

(a) Remove the front door opening trim weatherstrip.

19. REMOVE FRONT DOOR OPENING TRIM WEATHERSTRIP LH

HINT:

Use the same procedure as for the RH side.

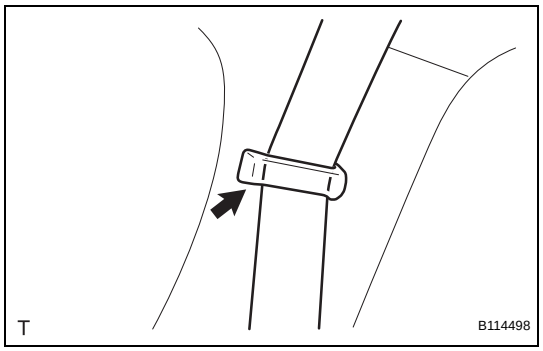

20. REMOVE FRONT QUARTER TRIM PANEL ASSEMBLY RH

(a) Remove the belt of the rear seat outer belt from the rear seat shoulder belt hanger.

(b) Disengage the 8 clips, the retainer and the 10 claws and remove the front quarter trim panel.

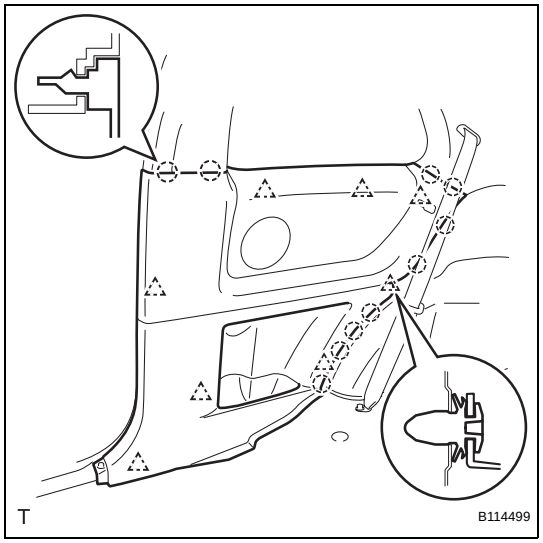

21. REMOVE FRONT QUARTER TRIM PANEL ASSEMBLY LH

HINT:

Use the same procedure as for the RH side.

22. REMOVE REAR DECK TRIM COVER (See page IR-49)

IR

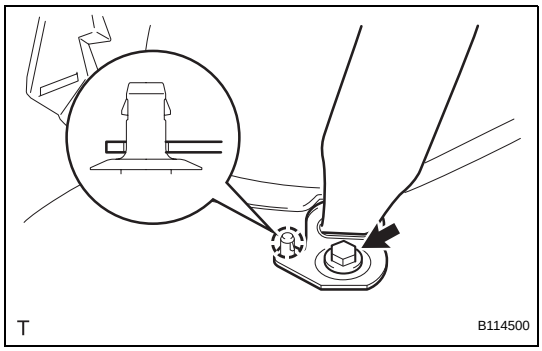

23. REMOVE REAR SEAT OUTER BELT ASSEMBLY RH
(a) Remove the bolt.
(b) Disengage the clip and remove the anchor plate.

24. REMOVE REAR SEAT OUTER BELT ASSEMBLY LH
HINT:
Use the same procedure as for the RH side.

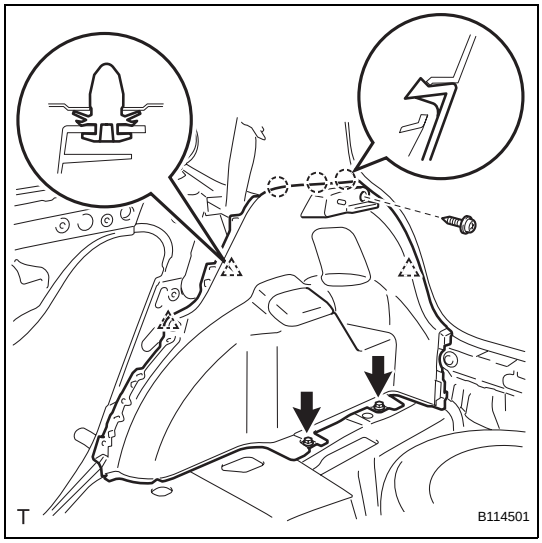

25. REMOVE DECK TRIM SIDE PANEL ASSEMBLY RH
(a) Remove the 3 screws.
(b) Disengage the 3 clips and the 3 claws and remove the deck trim side panel.

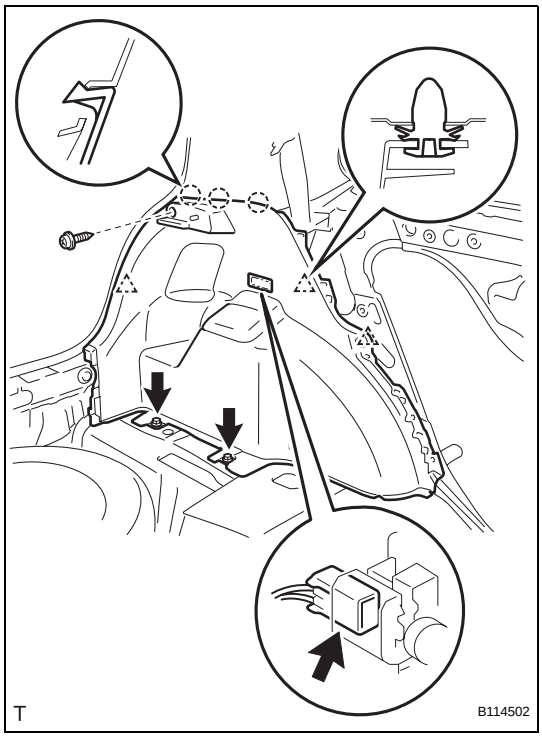

26. REMOVE DECK TRIM SIDE PANEL ASSEMBLY LH
(a) Remove the 3 screws.
(b) Disengage the 3 clips and 3 claws.
(c) Disconnect the deck side room light connector and remove the deck trim side panel.

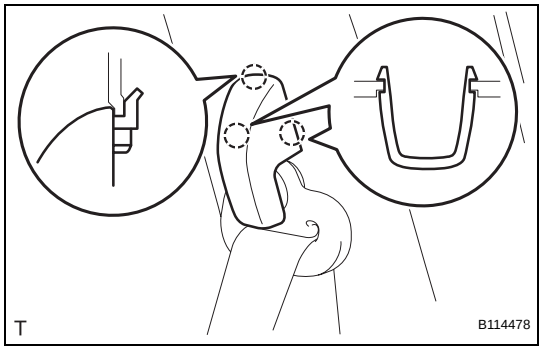

27. REMOVE SEAT BELT ANCHOR COVER CAP

HINT:

Use the same procedure for both sides.

(a) Disengage the 3 claws and remove the seat belt anchor cover cap.

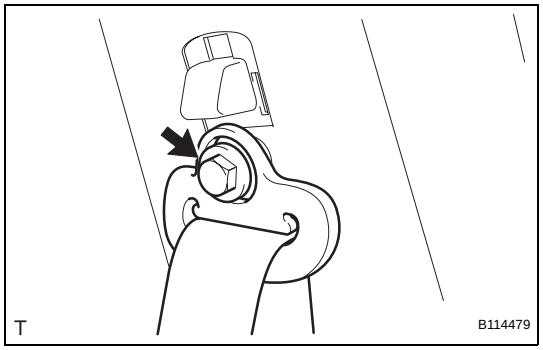

28. REMOVE FRONT SEAT OUTER BELT ASSEMBLY RH

(a) Remove the bolt and the through anchor.

29. REMOVE FRONT SEAT OUTER BELT ASSEMBLY LH

HINT:

Use the same procedure as for the RH side.

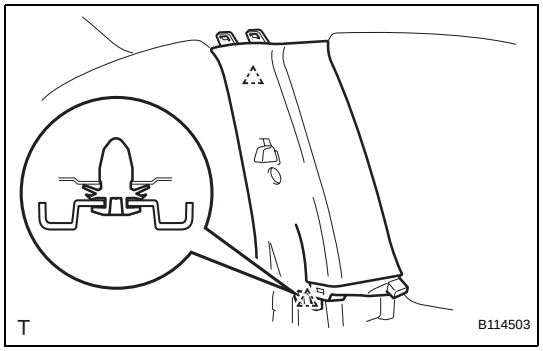

30. REMOVE CENTER PILLAR UPPER GARNISH RH

(a) Disengage the 2 clips and remove the center pillar upper garnish.

31. REMOVE CENTER PILLAR UPPER GARNISH LH

HINT:

Use the same procedure as for the RH side.

32. REMOVE REAR CENTER SEAT OUTER BELT ASSEMBLY (See page IR-52)

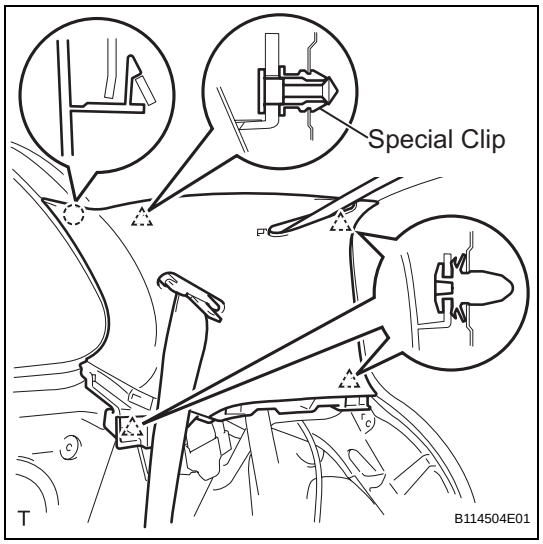

33. REMOVE ROOF SIDE INNER GARNISH RH

(a) w/ Curtain Shield Airbag:

NOTICE:

Replace the special clip with a new one when the roof side inner garnish is removed.

(1) Disengage the 4 clips and the claw.

(2) Pass the rear seat outer belt and the rear center seat outer belt through the slit in the roof side inner garnish and remove the roof side inner garnish.

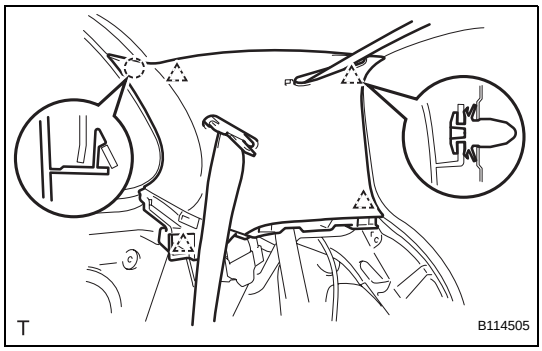

(b) w/o Curtain Shield Airbag:
(1) Disengage the 4 clips and the claw.
(2) Pass the rear seat outer belt and the rear center seat outer belt through the slit in the roof side inner garnish and remove the roof side inner garnish.

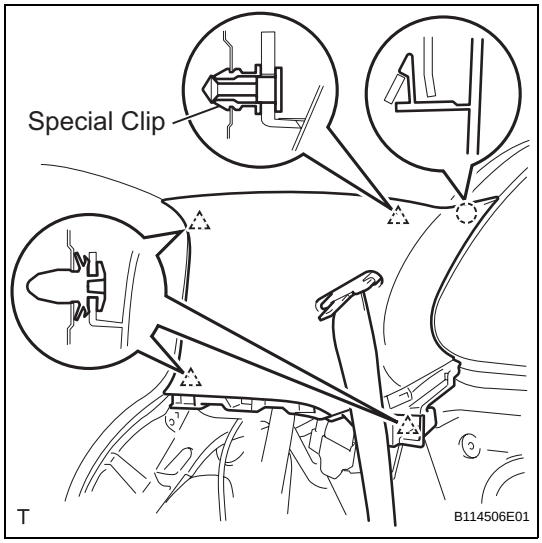

34. REMOVE ROOF SIDE INNER GARNISH LH

(a) w/ Curtain Shield Airbag:
NOTICE:
Replace the special clip with a new one when the roof side inner garnish is removed.
(1) Disengage the 4 clips and the claw.
(2) Pass the rear seat outer belt through the slit in the roof side inner garnish and remove the roof side inner garnish.

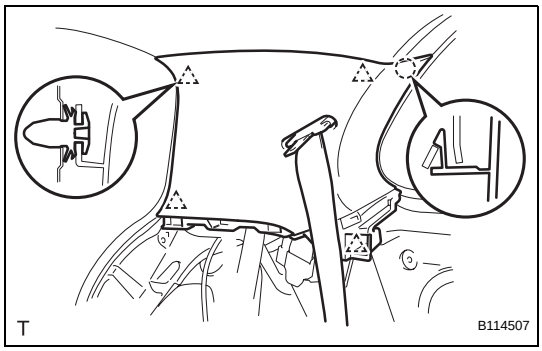

(b) w/o Curtain Shield Airbag:
(1) Disengage the 4 clips and the claw.
(2) Pass the rear seat outer belt through the slit in the roof side inner garnish and remove the roof side inner garnish.

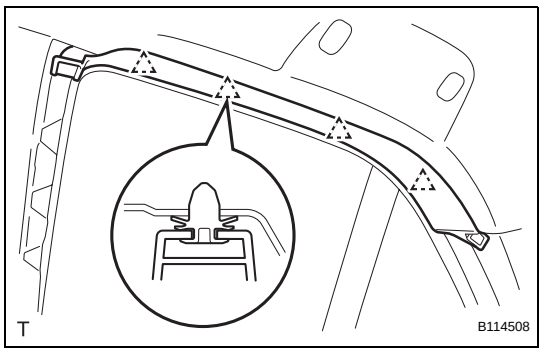

35. REMOVE REAR ROOF SIDE RAIL GARNISH RH

(a) Disengage the 4 clips and remove the rear roof side rail garnish.

36. REMOVE REAR ROOF SIDE RAIL GARNISH LH

HINT:
Use the same procedure as for the RH side.

37. REMOVE SEAT BELT ANCHOR COVER (See page SB-159)

38. REMOVE ROOF HEADLINING SERVICE HOLE COVER (w/o Curtain Shield Airbag) (See page IR-55)

39. REMOVE ASSIST GRIP COVER (See page IR-55)

40. REMOVE ASSIST GRIP SUB-ASSEMBLY (See page IR-56)

41. **REMOVE VISOR ASSEMBLY RH (See page IR-56)**
42. **REMOVE VISOR ASSEMBLY LH (See page IR-56)**
43. **REMOVE VISOR HOLDER RH (See page IR-56)**
44. **REMOVE VISOR HOLDER LH (See page IR-56)**
45. **REMOVE ROOM LIGHT ASSEMBLY (See page IR-57)**
46. **REMOVE MAP LIGHT ASSEMBLY (See page IR-58)**
47. **REMOVE FRONT PILLAR GARNISH RH (See page IR-58)**
48. **REMOVE FRONT PILLAR GARNISH LH (See page IR-59)**
49. **REMOVE INSTRUMENT PANEL FINISH PANEL END RH (See page ME-145)**
50. **REMOVE INSTRUMENT PANEL FINISH PANEL END LH (See page ME-145)**
51. **REMOVE INSTRUMENT CLUSTER FINISH PANEL (See page ME-145)**
52. **REMOVE COMBINATION METER ASSEMBLY (See page ME-146)**
53. **REMOVE GLOVE COMPARTMENT DOOR ASSEMBLY (See page IP-20)**
54. **REMOVE NO. 1 SWITCH HOLE BASE (See page IP-20)**
55. **REMOVE UPPER INSTRUMENT PANEL SUB-ASSEMBLY (See page IP-21)**
56. **REMOVE INSTRUMENT PANEL BOX (See page IP-70)**
57. **REMOVE ROOF HEADLINING ASSEMBLY**
    (a) Using a screwdriver, remove the wiring harness clamp.
    (b) Disconnect the connector.

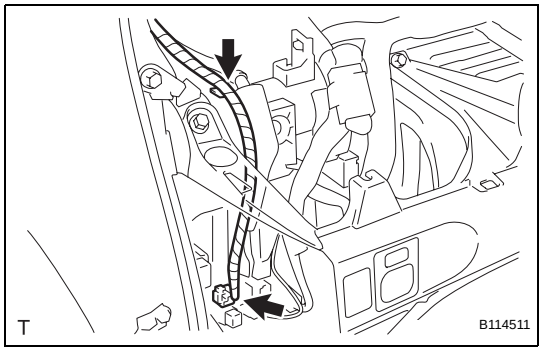

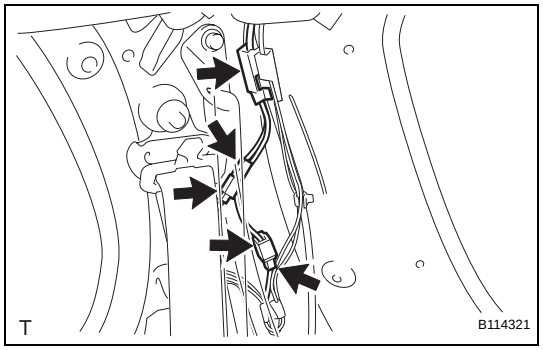

    (c) Remove the antenna cord from the antenna cord clamp.
    (d) Disconnect the 2 connectors.
    (e) Using a clip remover, remove the 2 connectors.
    (f) w/ Curtain Shield Airbag:
        (1) Using a clip remover, remove the clip.

(2) Disengage the 4 hooks.

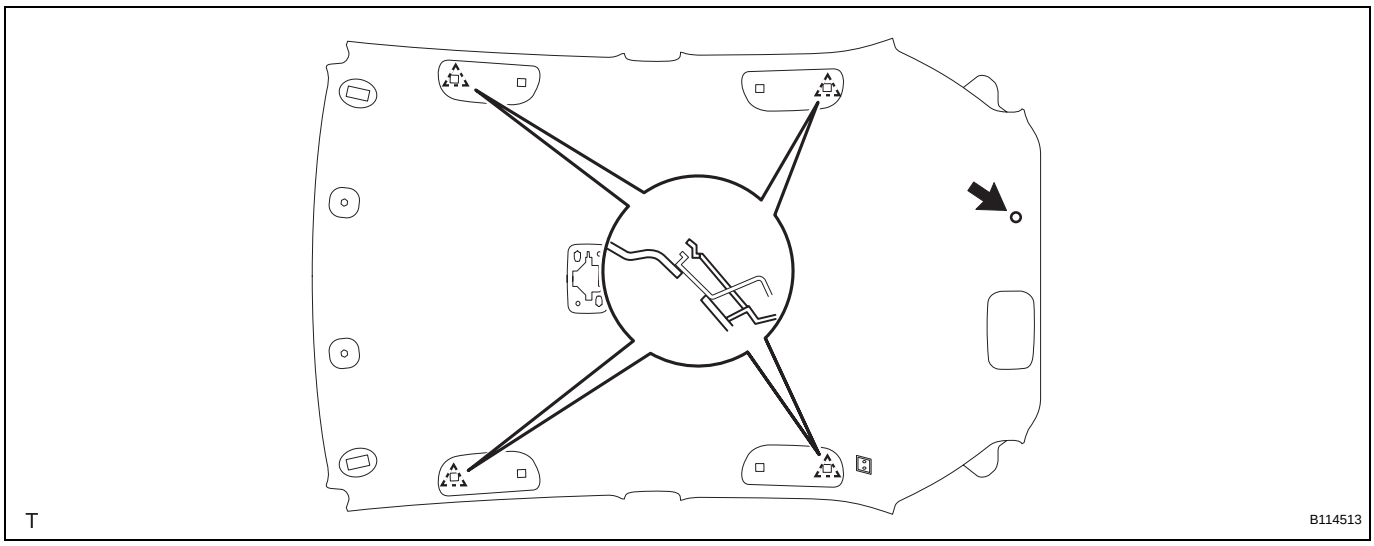

(g) w/o Curtain Shield Airbag:
(1) Using a clip remover, remove the clip.
(2) Disengage the 2 claws and the 4 hooks.

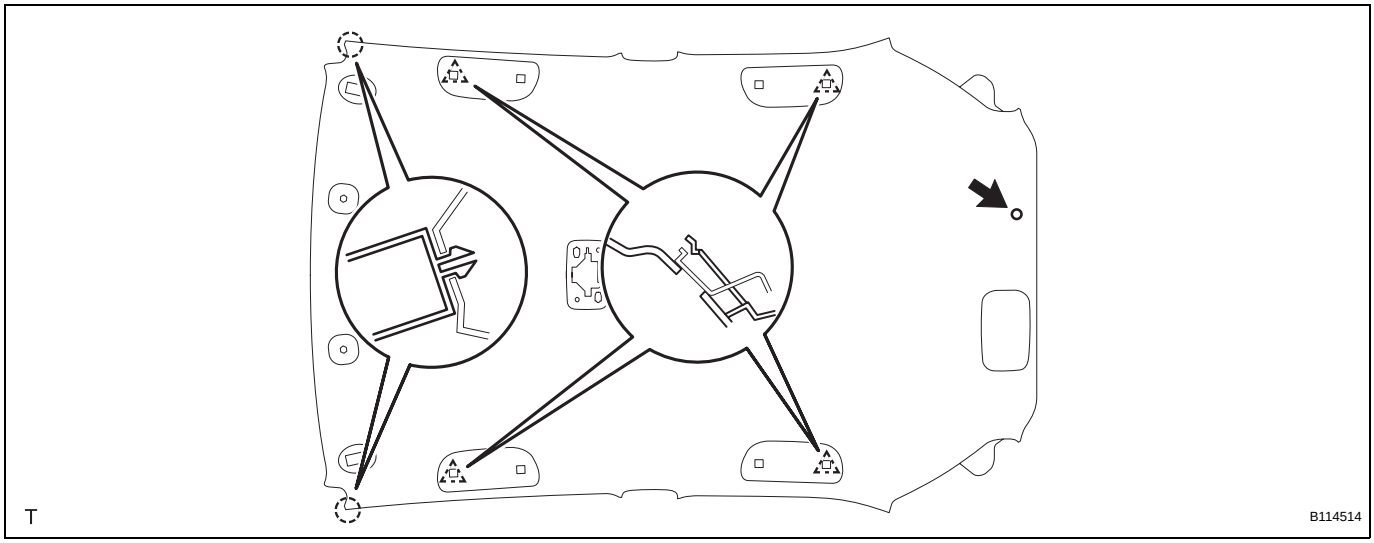

(h) Remove the roof headlining from the back door.

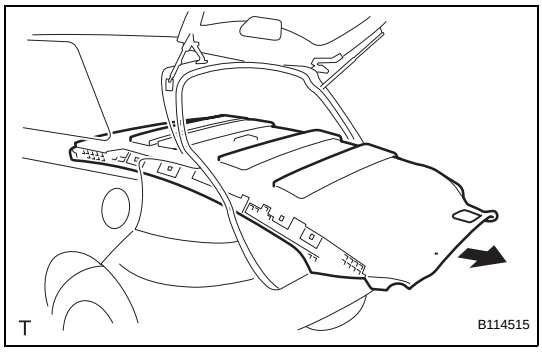

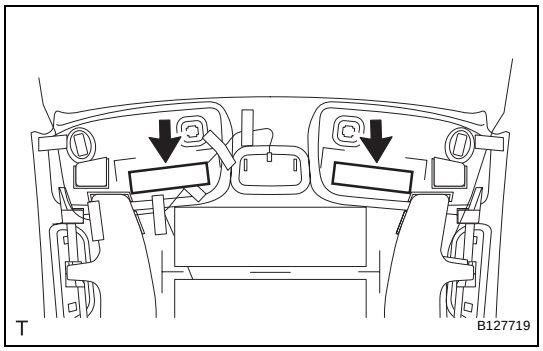

58. REMOVE NO. 5 ROOF SILENCER PAD

HINT:

Only remove the No. 5 roof silencer pad when the No. 1 roof wire and the roof headlining are replaced.

(a) Remove the 2 No. 5 roof silencer pads.

59. REMOVE NO. 1 ROOF SILENCER PAD

HINT:

Only remove the No. 1 roof silencer pad when the No. 1 roof wire and the roof headlining are replaced.

(a) w/ Curtain Shield Airbag:

(1) Remove the 4 No. 1 roof silencer pads.

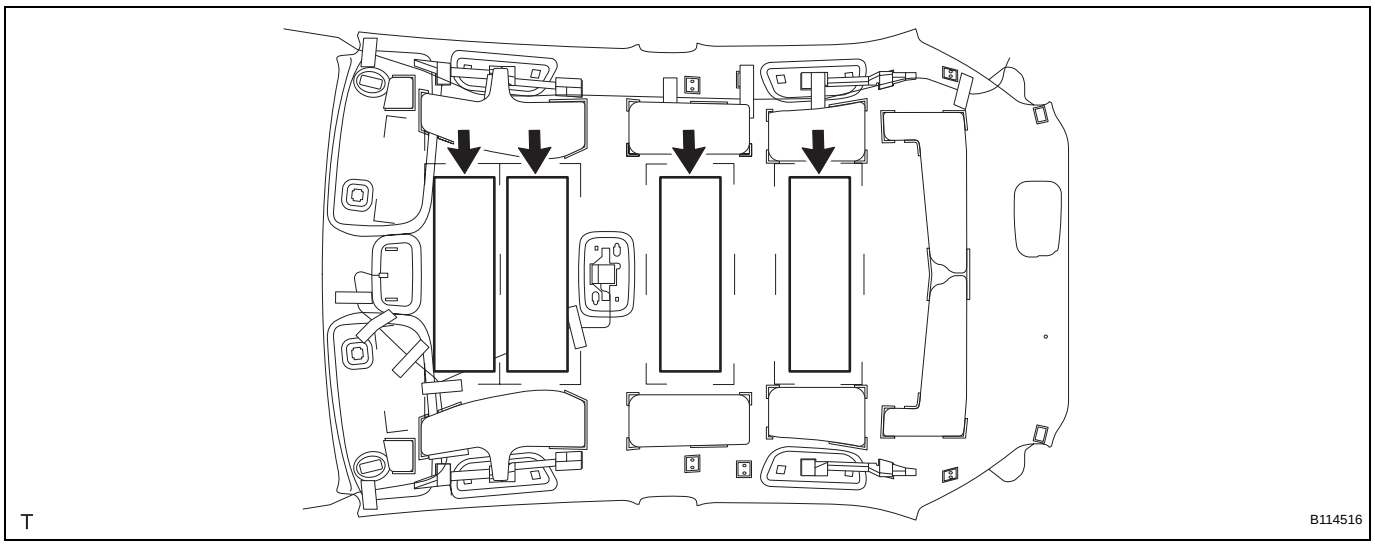

(b) w/o Curtain Shield Airbag:

(1) Remove the 4 No. 1 roof silencer pads.

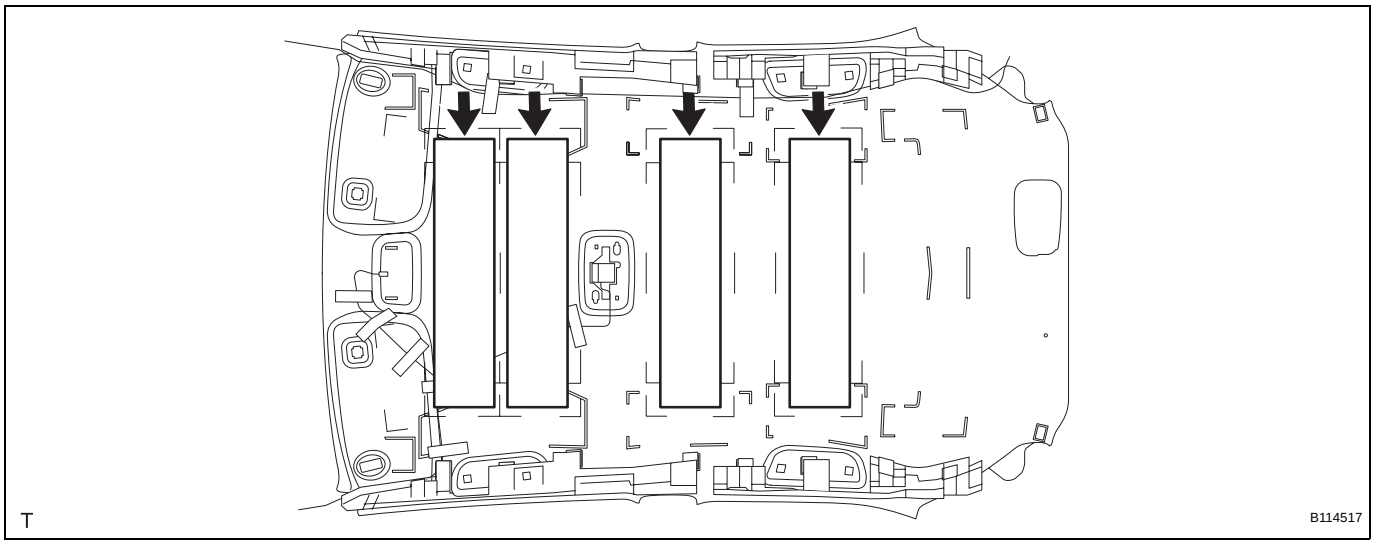

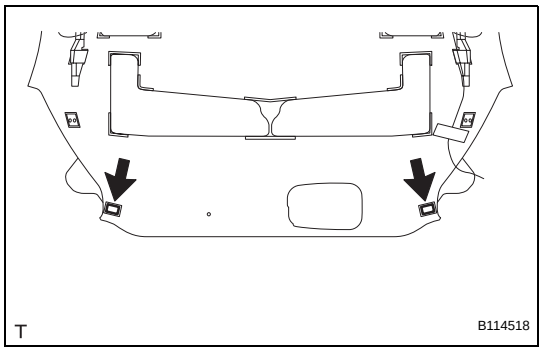

60. REMOVE REAR ROOF SILENCER PAD

HINT:
Only remove the rear roof silencer pad when the roof headlining is replaced.

(a) Remove the 2 rear roof silencer pads.

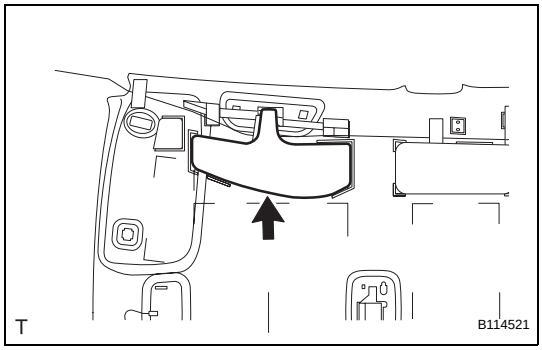

61. REMOVE NO. 2 ROOF HEADLINING PAD RH (w/ Curtain Shield Airbag)

HINT:
Only remove the No. 2 roof headlining pad when the roof headlining is replaced.

(a) Remove the No. 2 roof headlining pad.

62. REMOVE NO. 2 ROOF HEADLINING PAD LH (w/ Curtain Shield Airbag)

HINT:
Use the same procedure as for the RH side.

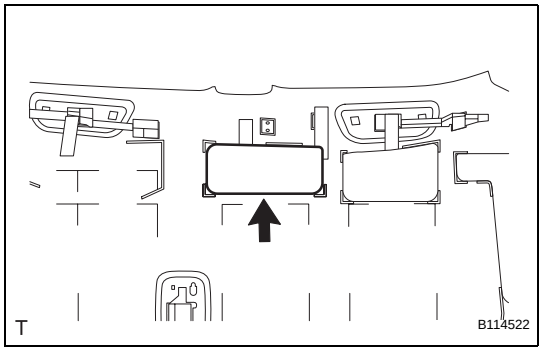

63. REMOVE NO. 3 ROOF HEADLINING PAD RH (w/ Curtain Shield Airbag)

HINT:
Only remove the No. 3 roof headlining pad when the roof headlining is replaced.

(a) Remove the No. 3 roof headlining pad.

64. REMOVE NO. 3 ROOF HEADLINING PAD LH (w/ Curtain Shield Airbag)

HINT:
Use the same procedure as for the RH side.

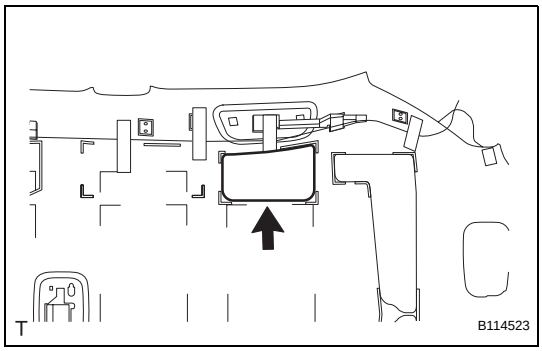

65. REMOVE NO. 4 ROOF HEADLINING PAD RH (w/ Curtain Shield Airbag)

HINT:
Only remove the No. 4 roof headlining pad when the roof headlining is replaced.

(a) Remove the No. 4 roof headlining pad.

66. REMOVE NO. 4 ROOF HEADLINING PAD LH (w/ Curtain Shield Airbag)

HINT:
Use the same procedure as for the RH side.

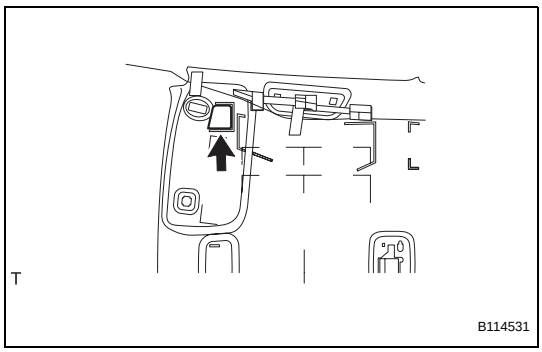

67. REMOVE NO. 1 ROOF HEADLINING PAD RH (w/ Curtain Shield Airbag)

HINT:
Only remove the No. 1 roof headlining pad when the roof headlining is replaced.

(a) Remove the No. 1 roof headlining pad.

68. REMOVE NO. 1 ROOF HEADLINING PAD LH (w/ Curtain Shield Airbag)

HINT:
Use the same procedure as for the RH side.

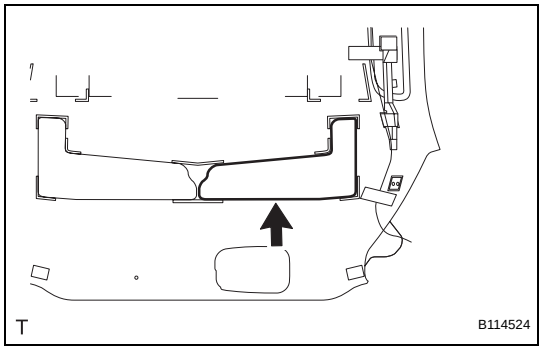

69. REMOVE NO. 5 ROOF HEADLINING PAD RH (w/ Curtain Shield Airbag)

HINT:

Only remove the No. 5 roof headlining pad when the roof headlining is replaced.

(a) Remove the No. 5 roof headlining pad.

70. REMOVE NO. 5 ROOF HEADLINING PAD LH (w/ Curtain Shield Airbag)

HINT:

Use the same procedure as for the RH side.

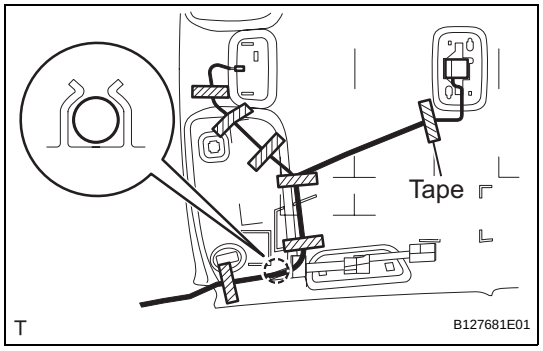

71. REMOVE NO. 1 ROOF WIRE

HINT:

Only remove the No. 1 roof wire when the roof headlining is replaced.

(a) w/ Curtain Shield Airbag:
  (1) Remove the 7 pieces of tape.
  (2) Remove the No. 1 roof wire from the claw of the side rail spacer.

(b) w/o Curtain Shield Airbag:
  (1) Remove the 6 pieces of tape.
  (2) Remove the No. 1 roof wire from the 2 claws of the side rail spacer.

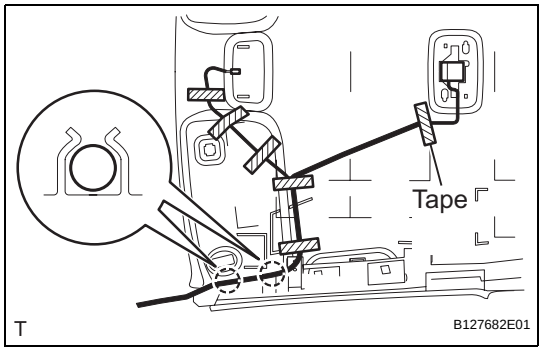

72. REMOVE ANTENNA CORD SUB-ASSEMBLY

HINT:

Only remove the antenna cord when the roof headlining is replaced.

(a) w/ Curtain Shield Airbag:
  (1) Remove the 6 pieces of tape.
  (2) Remove the antenna cord from the cutout of the roof headlining.
  (3) Remove the antenna cord from the 3 claws of the side rail spacer.

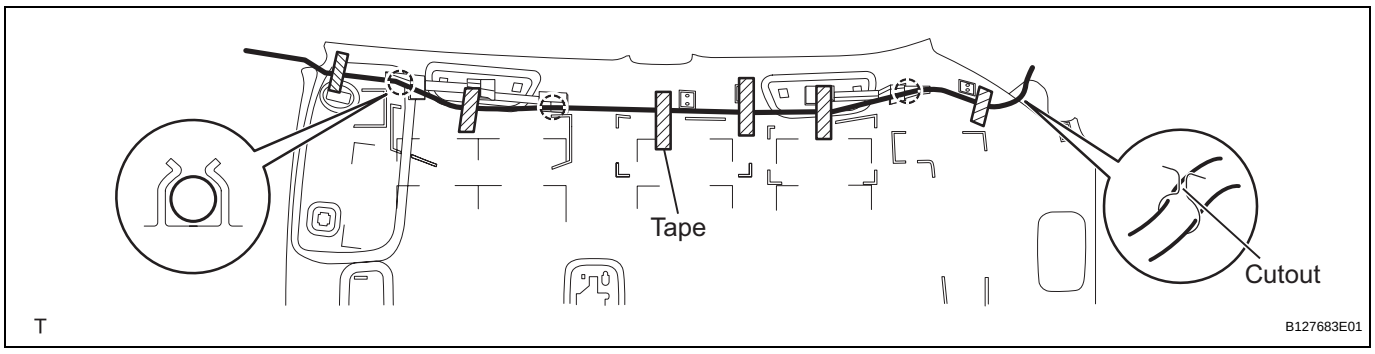

(b) w/o Curtain Shield Airbag:
  (1) Remove the 5 pieces of tape.
  (2) Remove the antenna cord from the cutout of the roof headlining.

(3) Remove the antenna cord from the 5 claws of the side rail spacer.

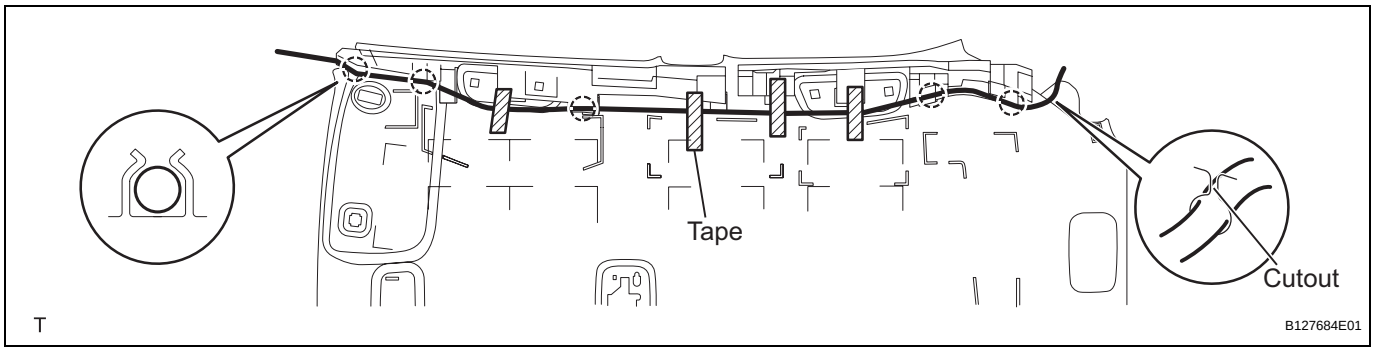

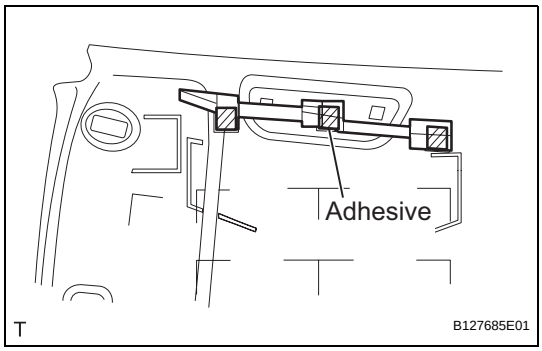

73. REMOVE FRONT SIDE RAIL SPACER RH

HINT:

Only remove the front side rail spacer when the roof headlining is replaced.

(a) w/ Curtain Shield Airbag:

(1) Remove the 3 adhesion portions and the front side rail spacer.

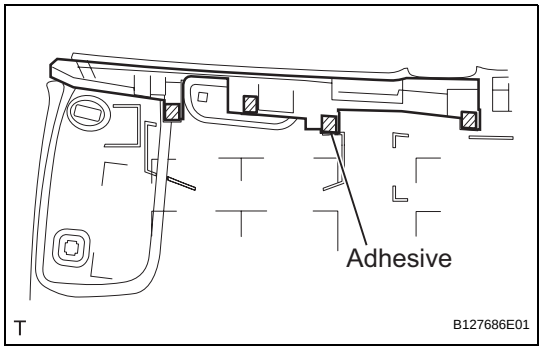

(b) w/o Curtain Shield Airbag:

(1) Remove the 4 adhesion portions and the front side rail spacer.

74. REMOVE FRONT SIDE RAIL SPACER LH

HINT:

Use the same procedure as for the RH side.

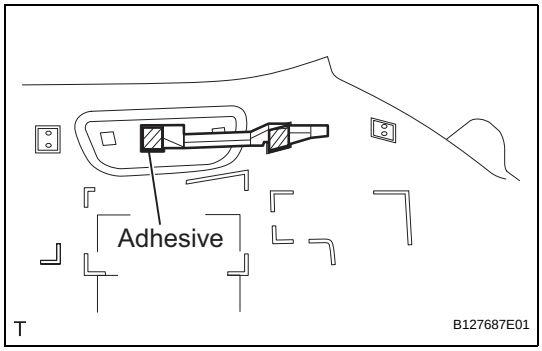

75. REMOVE REAR SIDE RAIL SPACER RH

HINT:

Only remove the rear side rail spacer when the roof headlining is replaced.

(a) w/ Curtain Shield Airbag:

(1) Remove the 2 adhesion portions and the rear side rail spacer.

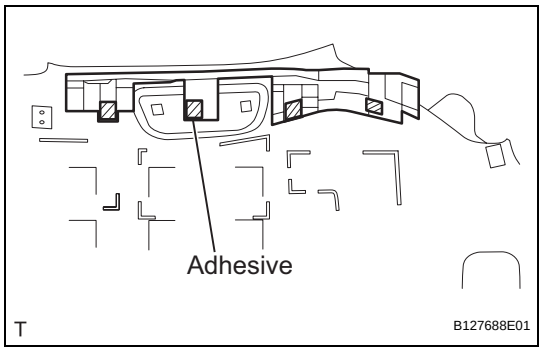

(b) w/o Curtain Shield Airbag:
(1) Remove the 4 adhesion portions and the rear side rail spacer.

76. REMOVE REAR SIDE RAIL SPACER LH

HINT:
Use the same procedure as for the RH side.

INSTALLATION

CAUTION:
Some of these service operations affect the SRS airbag system. Read the precautionary notices concerning the SRS airbag system before servicing (See page RS-1).
NOTICE:
Always use "Torx" socket wrench E10 when installing the rear seat.

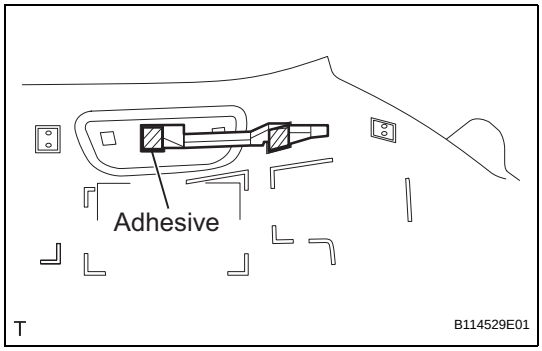

1. INSTALL REAR SIDE RAIL SPACER RH
(a) w/ Curtain Shield Airbag:
(1) Align a new rear side rail spacer with the markings of the roof headlining and install it onto the roof headlining.

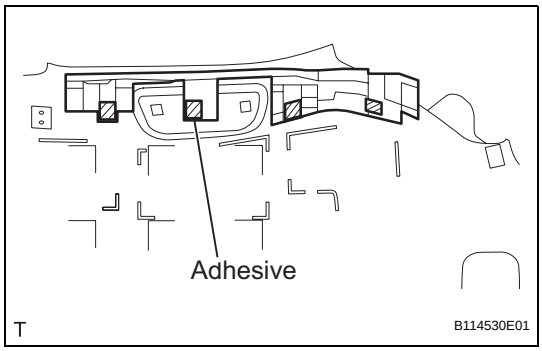

(b) w/o Curtain Shield Airbag
(1) Align a new rear side rail spacer with the markings of the roof headlining and install it onto the roof headlining.

2. INSTALL REAR SIDE RAIL SPACER LH
HINT:
Use the same procedure as for the RH side.

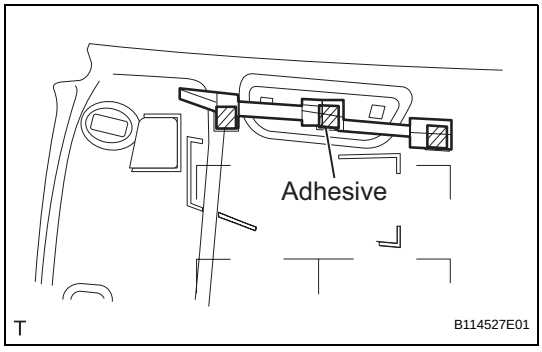

3. INSTALL FRONT SIDE RAIL SPACER RH
(a) w/ Curtain Shield Airbag:
(1) Align a new front side rail spacer with the markings of the roof headlining and install it onto the roof headlining.

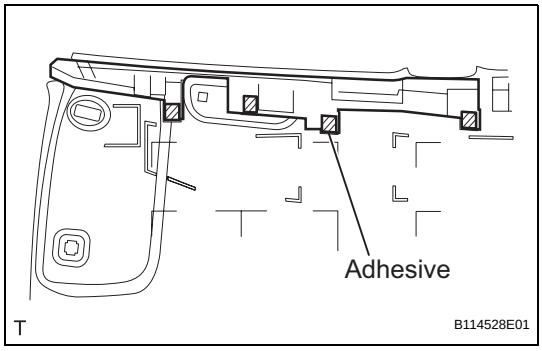

(b) w/o Curtain Shield Airbag
(1) Align a new front side rail spacer with the markings of the roof headlining and install it onto the roof headlining.

4. INSTALL FRONT SIDE RAIL SPACER LH
HINT:
Use the same procedure as for the RH side.

5. INSTALL ANTENNA CORD SUB-ASSEMBLY
(a) w/ Curtain Shield Airbag:
(1) Install the part of the antenna cord marked with red positioning tape into claw A of the front side rail spacer.

(2) Install the antenna cord positioning tapes into the 2 claws of the front and rear side rail spacers.
(3) Insert the antenna cord positioning tape into the cutout of the roof headlining.
(4) Align the antenna cord positioning tapes with the markings of the roof headlining.
(5) Install the antenna cord onto the roof headlining with 6 new pieces of tape.

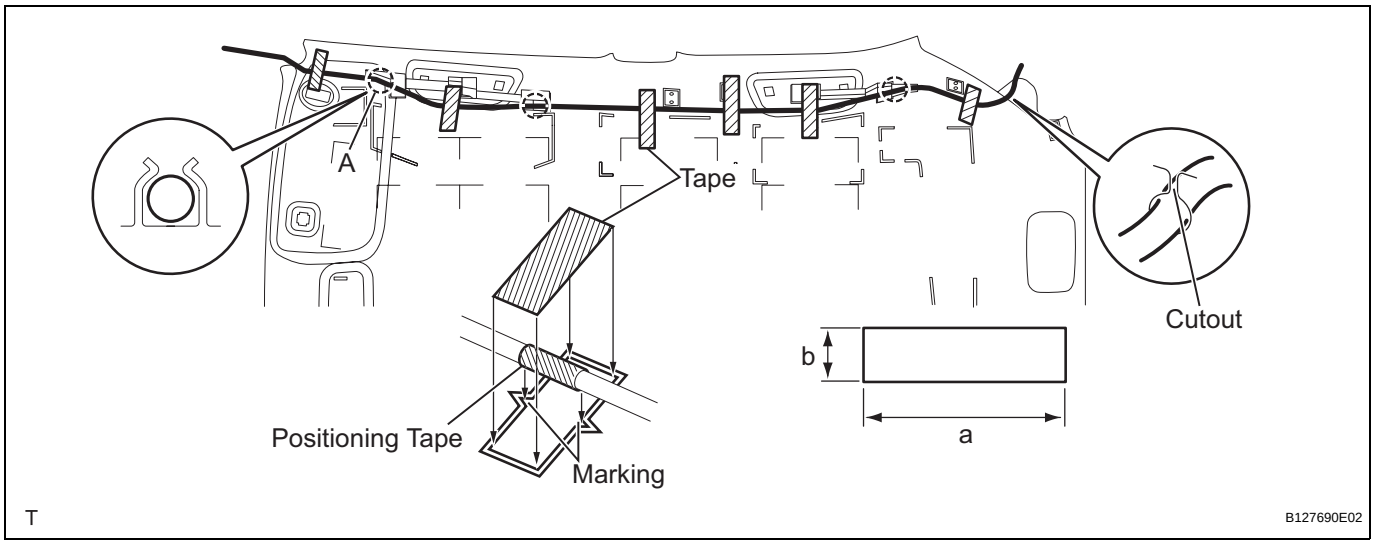

Tape size:

Mark	Measurement
a	80 mm (3.15 in.)
b	20 mm (0.787 in.)

NOTICE:
- **Apply the tape securely in place.**
- **Do not touch the adhesive surface when applying the tape to prevent adhesion failure.**

(b) w/o Curtain Shield Airbag:
(1) Install the part of the antenna cord marked with red positioning tape into claw A of the front side rail spacer.
(2) Install the antenna cord positioning tapes into the 4 claws of the front and rear side rail spacers.
(3) Insert the antenna cord positioning tape into the cutout of the roof headlining.
(4) Align the antenna cord positioning tapes with the markings of the roof headlining.

(5) Install the antenna cord onto the roof headlining with 5 new pieces of tape.

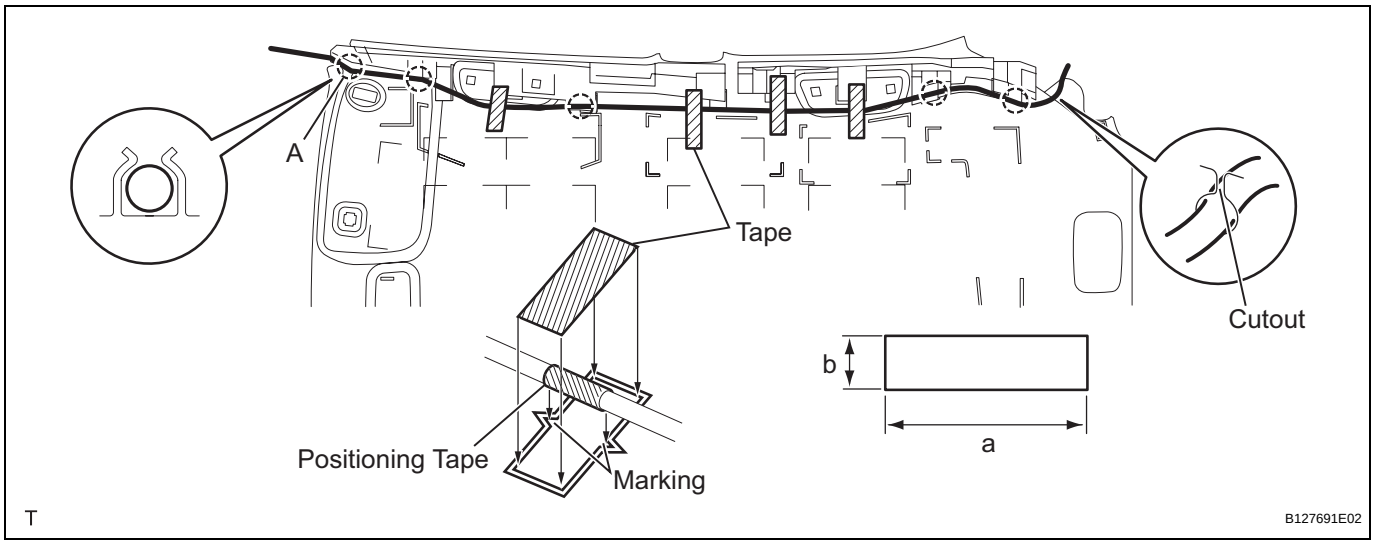

Tape size:

Mark	Measurement
a	80 mm (3.15 in.)
b	20 mm (0.787 in.)

NOTICE:
- **Apply the tape securely in place.**
- **Do not touch the adhesive surface when applying the tape to prevent adhesion failure.**

6. INSTALL NO. 1 ROOF WIRE

(a) w/ Curtain Shield Airbag:

(1) Install the part of the No. 1 roof wire cord marked with red positioning tape into claw A of the front side rail spacer.

(2) Align the No. 1 roof wire positioning tapes with the markings of the roof headlining.

(3) Install the No. 1 roof wire onto the roof headlining with 8 new pieces of tape.

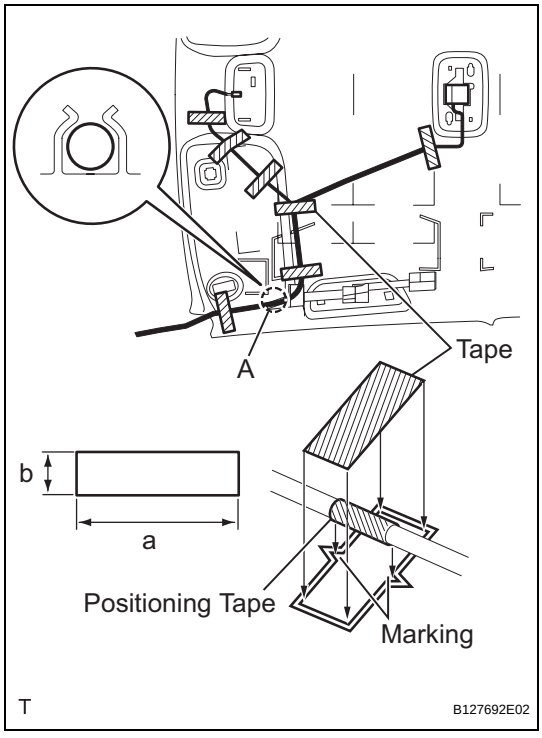

Tape size:

Mark	Measurement
a	80 mm (3.15 in.)
b	20 mm (0.787 in.)

NOTICE:
- **Apply the tape securely in place.**
- **Do not touch the adhesive surface when applying the tape to prevent adhesion failure.**

(b) w/o Curtain Shield Airbag:

(1) Install the part of the No. 1 roof wire cord marked with red positioning tape into claw A of the front side rail spacer.

(2) Install the No. 1 roof wire positioning tape into the claw of the front rear side rail spacers.

IR

(3) Align the No. 1 roof wire positioning tapes with the markings of the roof headlining.

(4) Install the No. 1 roof wire onto the roof headlining with 7 new pieces of tape.

Tape size:

Mark	Measurement
a	80 mm (3.15 in.)
b	20 mm (0.787 in.)

NOTICE:

- **Apply the tape securely in place.**
- **Do not touch the adhesive surface when applying the tape to prevent adhesion failure.**

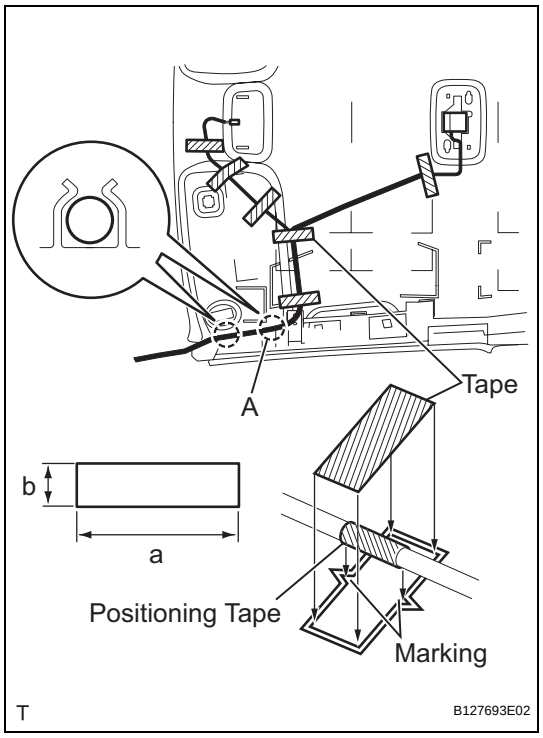

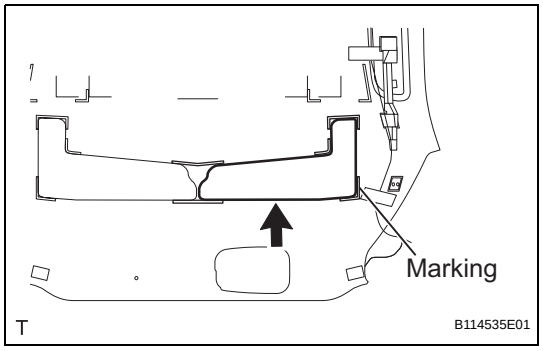

7. INSTALL NO. 5 ROOF HEADLINING PAD RH (w/ Curtain Shield Airbag)

(a) Align a new No. 5 roof headlining pad with the markings of the roof headlining and install it onto the roof headlining.

8. INSTALL NO. 5 ROOF HEADLINING PAD LH (w/ Curtain Shield Airbag)

HINT:

Use the same procedure as for the RH side.

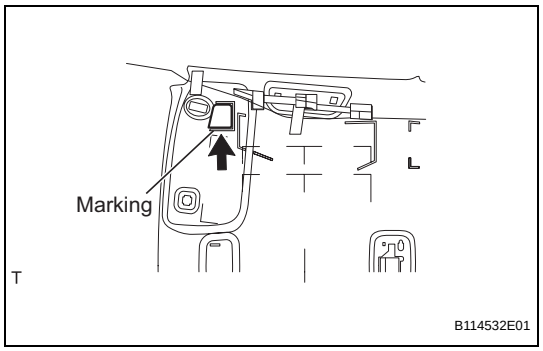

9. INSTALL NO. 1 ROOF HEADLINING PAD RH (w/ Curtain Shield Airbag)

(a) Align a new No. 1 roof headlining pad with the marking of the roof headlining and install it onto the roof headlining.

10. INSTALL NO. 1 ROOF HEADLINING PAD LH (w/ Curtain Shield Airbag)

HINT:

Use the same procedure as for the RH side.

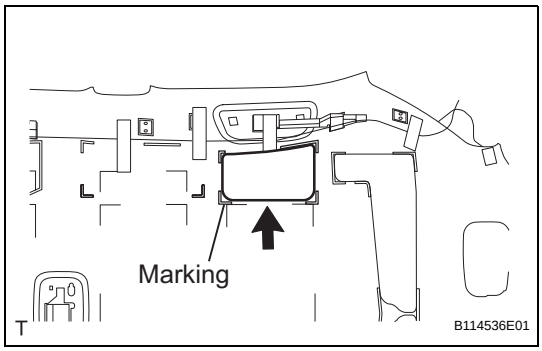

11. INSTALL NO. 4 ROOF HEADLINING PAD RH (w/ Curtain Shield Airbag)

(a) Align a new No. 4 roof headlining pad with the markings of the roof headlining and install it onto the roof headlining.

12. INSTALL NO. 4 ROOF HEADLINING PAD LH (w/ Curtain Shield Airbag)

HINT:

Use the same procedure as for the RH side.

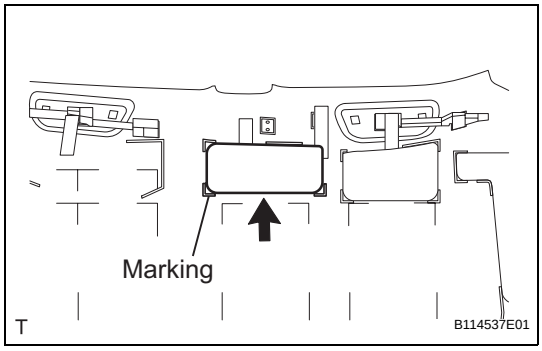

13. INSTALL NO. 3 ROOF HEADLINING PAD RH (w/ Curtain Shield Airbag)

(a) Align a new No. 3 roof headlining pad with the markings of the roof headlining and install it onto the roof headlining.

14. INSTALL NO. 3 ROOF HEADLINING PAD LH (w/ Curtain Shield Airbag)

HINT:

Use the same procedure as for the RH side.

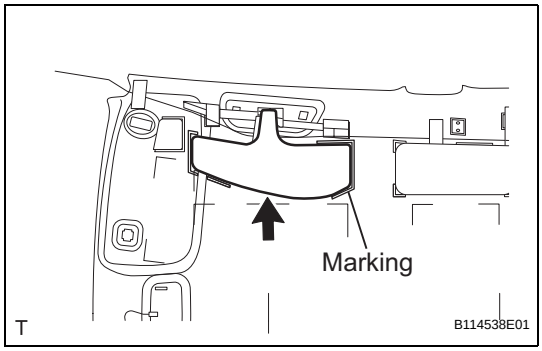

15. INSTALL NO. 2 ROOF HEADLINING PAD RH (w/ Curtain Shield Airbag)

(a) Align a new No. 2 roof headlining pad with the markings of the roof headlining and install it onto the roof headlining.

16. INSTALL NO. 2 ROOF HEADLINING PAD LH (w/ Curtain Shield Airbag)

HINT:

Use the same procedure as for the RH side.

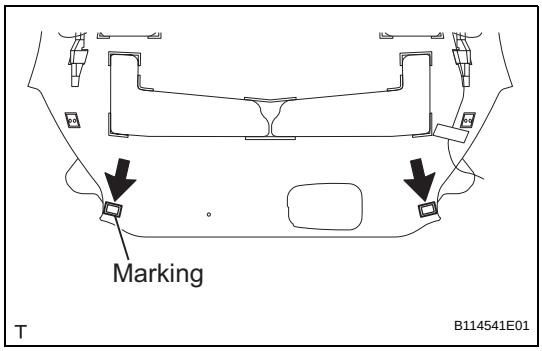

17. INSTALL REAR ROOF SILENCER PAD (w/ Curtain Shield Airbag)

(a) Align 2 new rear roof silencer pads with the markings of the roof headlining and install them onto the roof headlining.

18. INSTALL NO. 1 ROOF SILENCER PAD

(a) w/ Curtain Shield Airbag:

(1) Align 4 new No. 1 roof silencer pads with the markings of the roof headlining and install them onto the roof headlining.

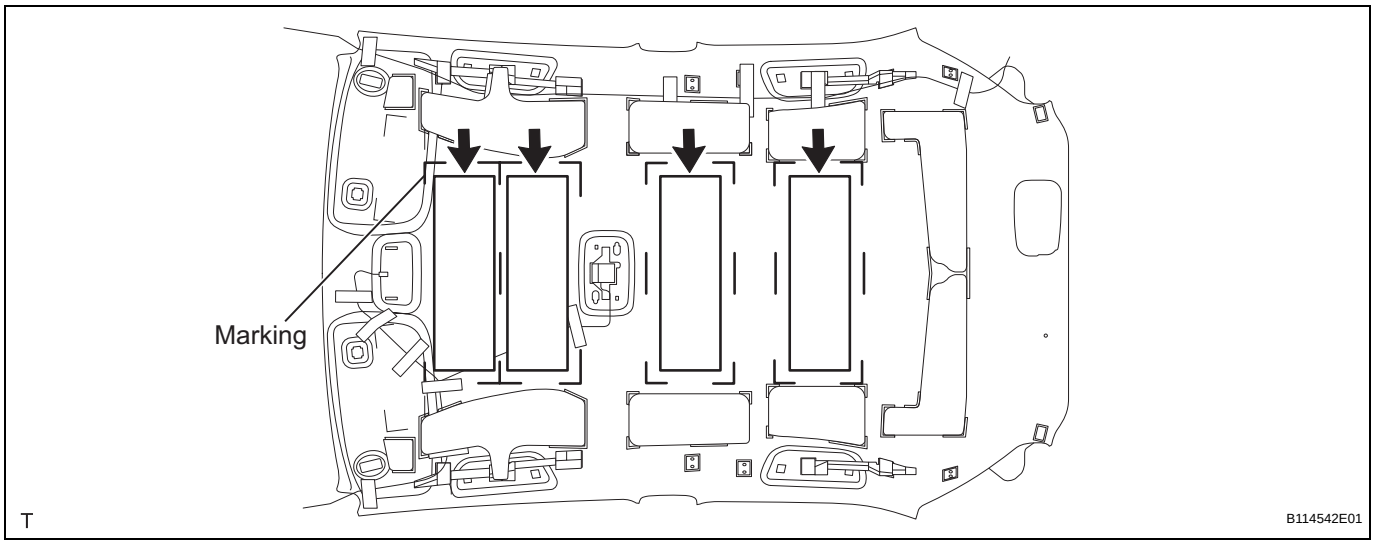

(b) w/o Curtain Shield Airbag:

(1) Align 4 new No. 1 roof silencer pads with the markings of the roof headlining and install them onto the roof headlining.

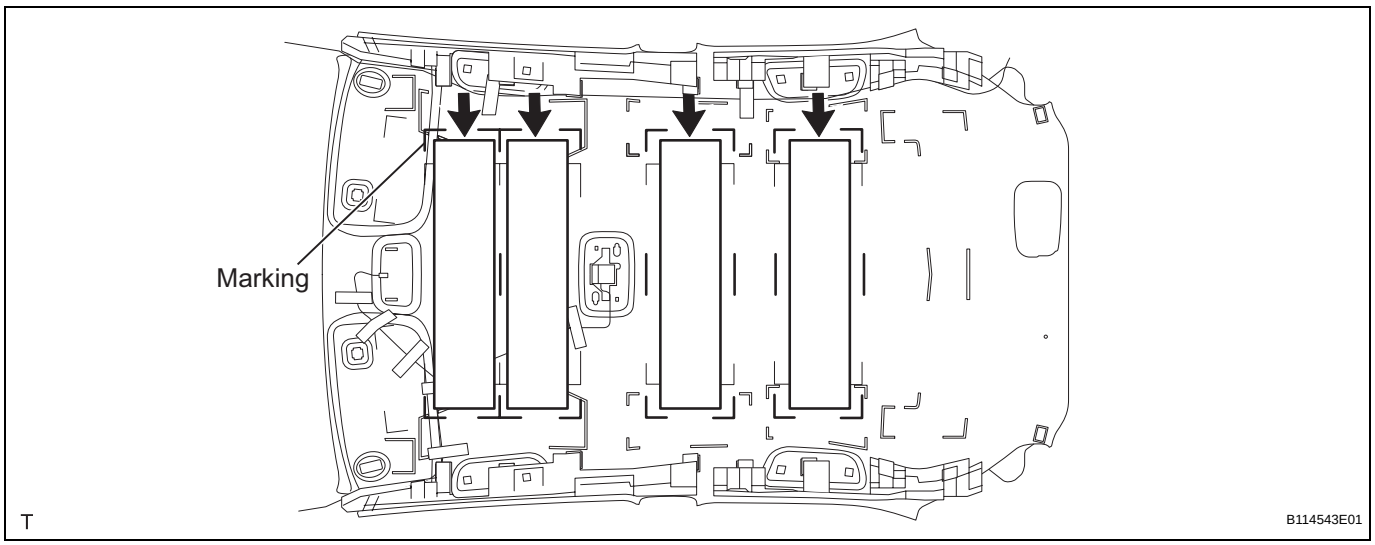

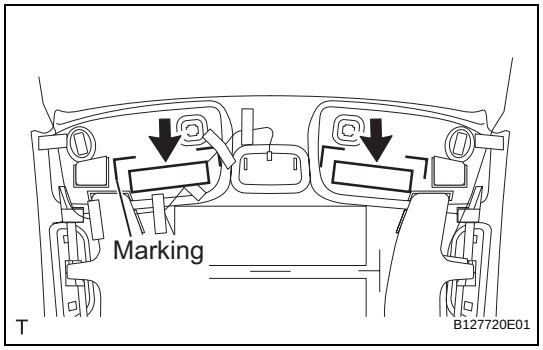

19. INSTALL NO. 5 ROOF SILENCER PAD

(a) Align 2 new No. 5 roof silencer pads with the markings of the roof headlining and install them onto the roof headlining.

IR

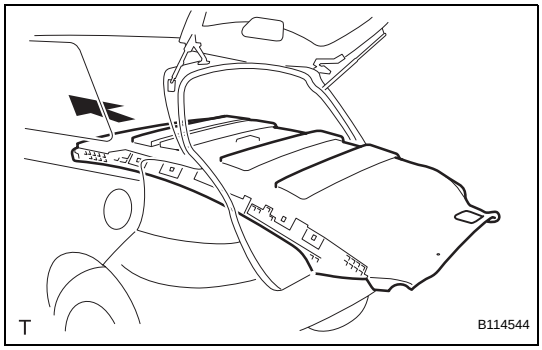

20. INSTALL ROOF HEADLINING ASSEMBLY

(a) Pull the roof headlining back into the vehicle through the back door.

(b) w/ Curtain Shield Airbag:

(1) Engage the 4 hooks and install the roof headlining.

(2) Install the clip.

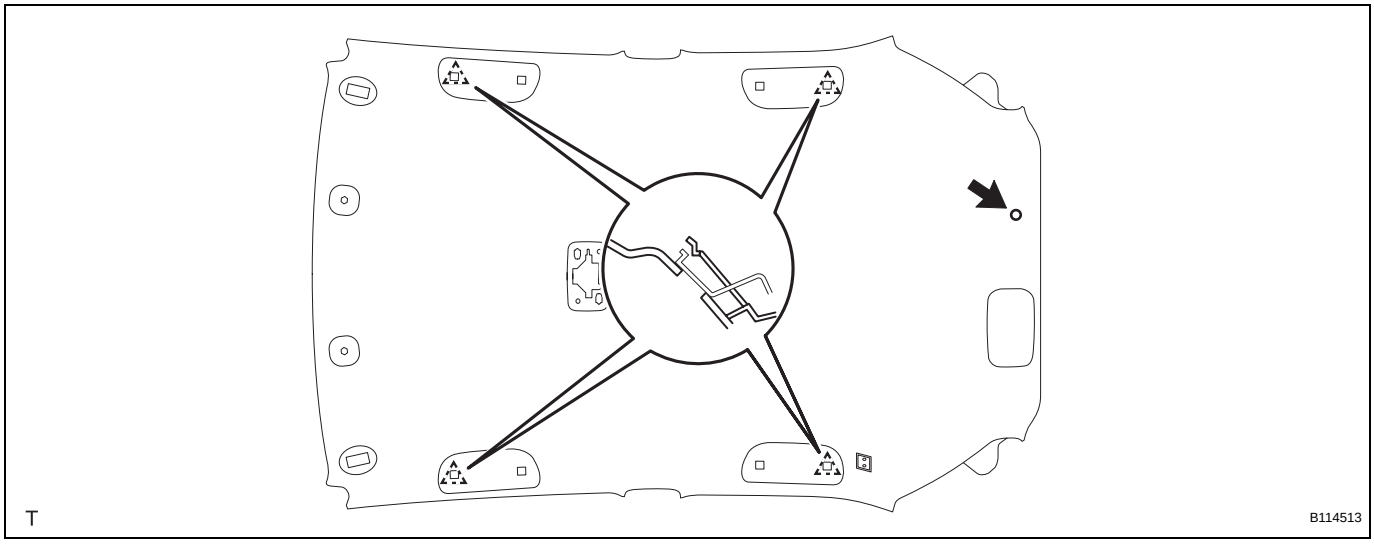

(c) w/o Curtain Shield Airbag:

(1) Engage the 2 claws and the 4 hooks and install the roof headlining.

(2) Install the clip.

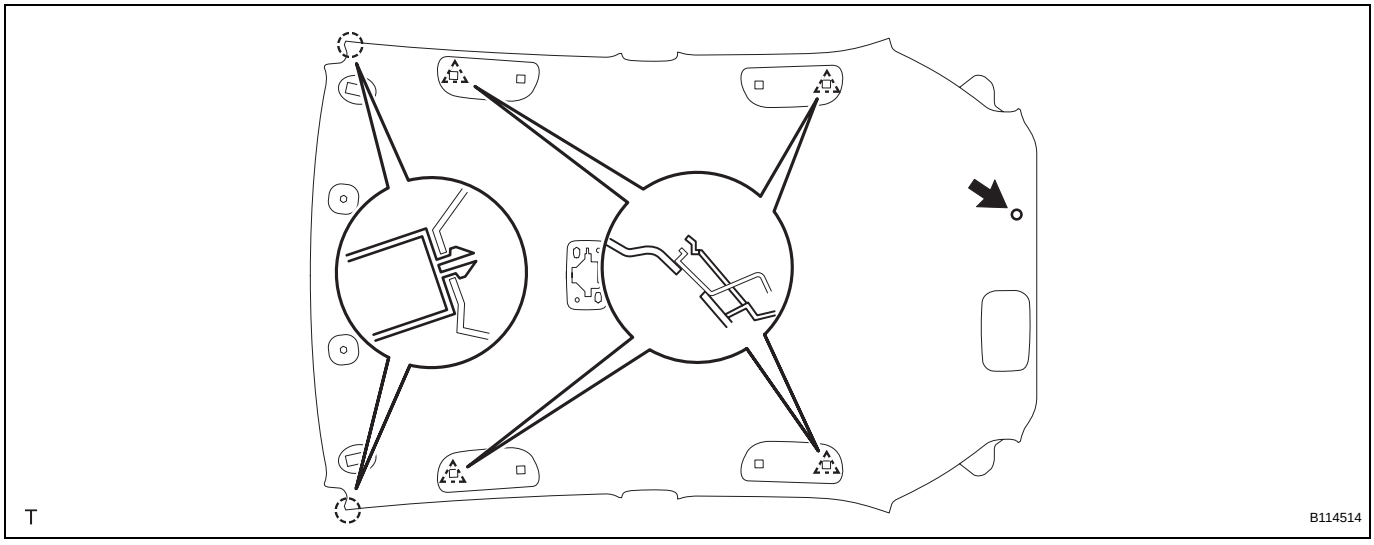

IR

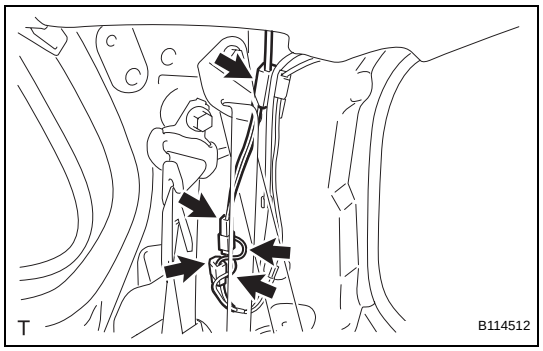

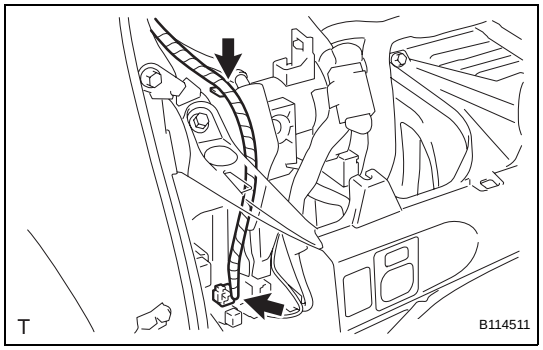

(d) Install the 2 connectors.
(e) Connect the 2 connectors.
(f) Install the antenna cord onto the antenna cord clamp.

(g) Connect the connector.
(h) Install the wiring harness clamp.

21. **INSTALL INSTRUMENT PANEL BOX (See page IP-78)**
22. **INSTALL UPPER INSTRUMENT PANEL SUB-ASSEMBLY (See page IP-29)**
23. **INSTALL NO. 1 SWITCH HOLE BASE (See page IP-32)**
24. **INSTALL GLOVE COMPARTMENT DOOR ASSEMBLY (See page IP-32)**
25. **INSTALL COMBINATION METER ASSEMBLY (See page ME-148)**
26. **INSTALL INSTRUMENT CLUSTER FINISH PANEL (See page ME-148)**
27. **INSTALL INSTRUMENT PANEL FINISH PANEL END RH (See page ME-149)**
28. **INSTALL INSTRUMENT PANEL FINISH PANEL END LH (See page ME-149)**
29. **INSTALL FRONT PILLAR GARNISH RH (See page IR-71)**
30. **INSTALL FRONT PILLAR GARNISH LH (See page IR-72)**
31. **INSTALL MAP LIGHT ASSEMBLY (See page IR-73)**
32. **INSTALL ROOM LIGHT ASSEMBLY (See page IR-74)**
33. **INSTALL VISOR HOLDER RH (See page IR-75)**
34. **INSTALL VISOR HOLDER LH (See page IR-75)**
35. **INSTALL VISOR ASSEMBLY RH (See page IR-75)**
36. **INSTALL VISOR ASSEMBLY LH (See page IR-75)**
37. **INSTALL ASSIST GRIP SUB-ASSEMBLY (See page IR-75)**
38. **INSTALL ASSIST GRIP COVER (See page IR-75)**
39. **INSTALL ROOF HEADLINING SERVICE HOLE COVER (w/o Curtain Shield Airbag) (See page IR-76)**
40. **INSTALL SEAT BELT ANCHOR COVER (See page SB-160)**

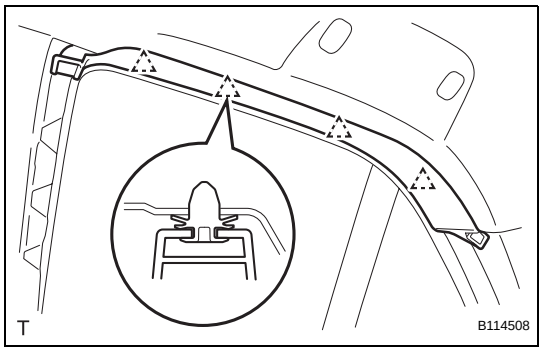

41. INSTALL REAR ROOF SIDE RAIL GARNISH RH

(a) Engage the 4 clips and install the rear roof side rail garnish.

42. INSTALL REAR ROOF SIDE RAIL GARNISH LH

HINT:

Use the same procedure as for the RH side.

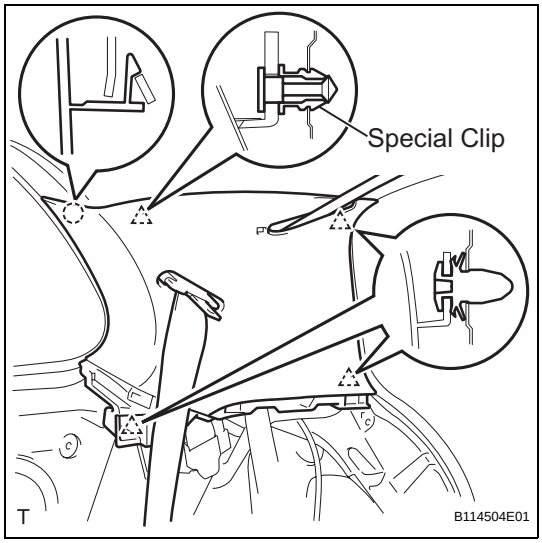

43. INSTALL ROOF SIDE INNER GARNISH RH

(a) w/ Curtain Shield Airbag:

(1) Install a new special clip onto the roof side inner garnish.

(2) Pass the rear seat outer belt and the rear center seat outer belt through the slit in the roof side inner garnish.

(3) Engage the 4 clips and the claw and install the roof side inner garnish.

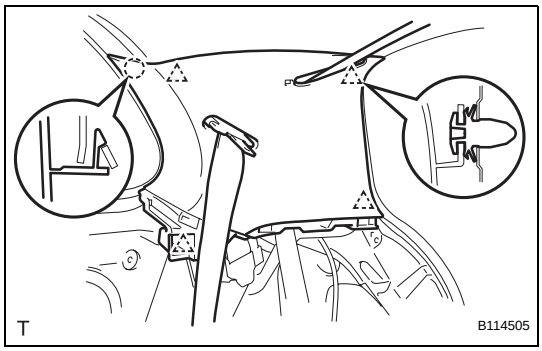

(b) w/o Curtain Shield Airbag:

(1) Pass the rear seat outer belt and the rear center seat outer belt through the slit in the roof side inner garnish.

(2) Engage the 4 clips and the claw and install the roof side inner garnish.

IR

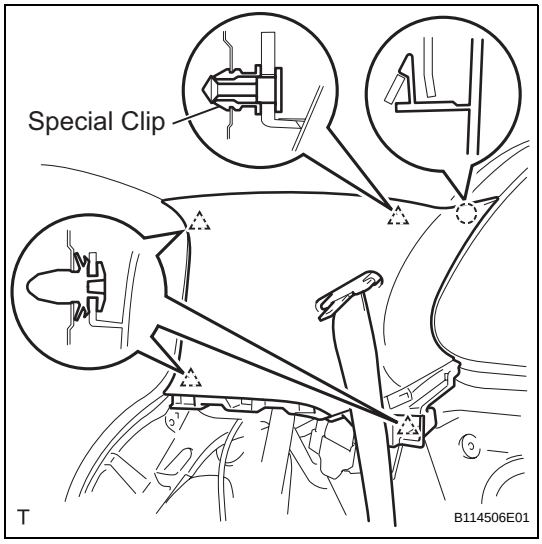

44. INSTALL ROOF SIDE INNER GARNISH LH

(a) w/ Curtain Shield Airbag:

(1) Install a new special clip onto the roof side inner garnish.

(2) Pass the rear seat outer belt through the slit in the roof side inner garnish.

(3) Engage the 4 clips and the claw and install the roof side inner garnish.

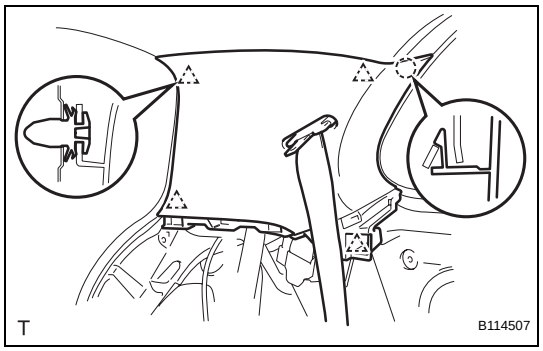

(b) w/o Curtain Shield Airbag:
(1) Pass the rear seat outer belt through the slit in the roof side inner garnish.
(2) Engage the 4 clips and the claw and install the roof side inner garnish.

45. INSTALL REAR CENTER SEAT OUTER BELT ASSEMBLY (See page IR-78)

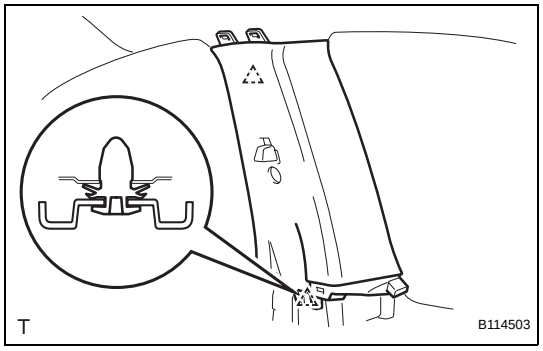

46. INSTALL CENTER PILLAR UPPER GARNISH RH
(a) Engage the 2 clips and install the center pillar upper garnish.

47. INSTALL CENTER PILLAR UPPER GARNISH LH
HINT:
Use the same procedure as for the RH side.

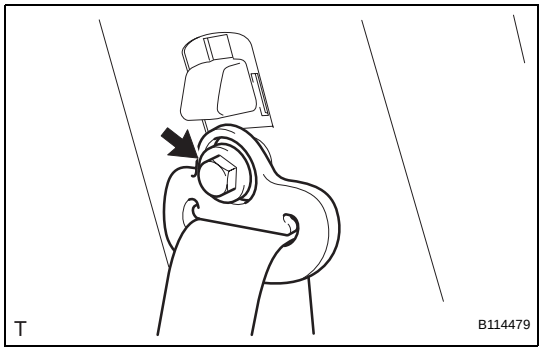

48. INSTALL FRONT SEAT OUTER BELT ASSEMBLY RH
(a) Install the through anchor with the bolt.
Torque: 42 N*m (430 kgf*cm, 31 ft.*lbf)

49. INSTALL FRONT SEAT OUTER BELT ASSEMBLY LH
HINT:
Use the same procedure as for the RH side.

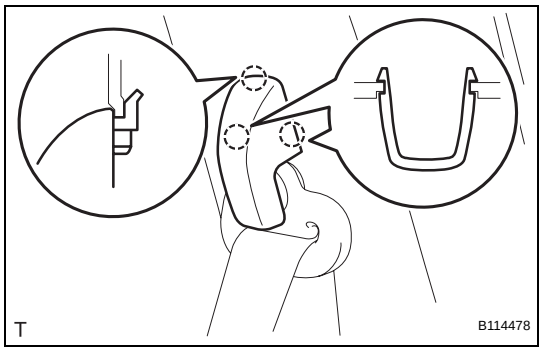

50. INSTALL SEAT BELT ANCHOR COVER CAP
HINT:
Use the same procedure for both sides.
(a) Engage the 3 claws and install the seat belt anchor cover cap.

IR

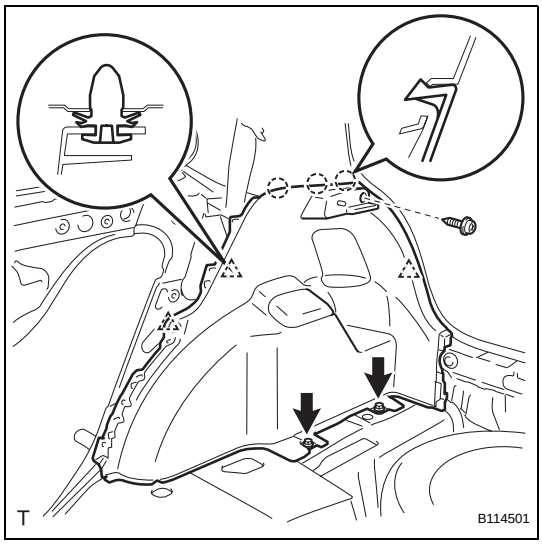

51. INSTALL DECK TRIM SIDE PANEL ASSEMBLY RH

(a) Engage the 3 clips and the 3 claws and install the deck trim side panel.

(b) Tighten the 3 screws.

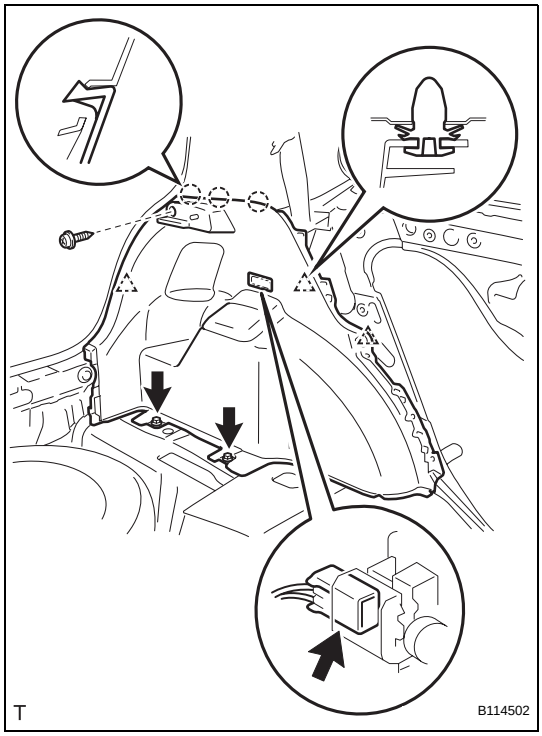

52. INSTALL DECK TRIM SIDE PANEL ASSEMBLY LH

(a) Connect the deck side room light connector.

(b) Engage the 3 clips and the 3 claws and install the deck trim side panel.

(c) Tighten the 3 screws.

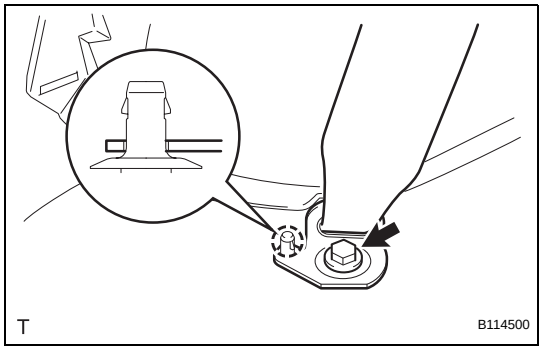

53. INSTALL REAR SEAT OUTER BELT ASSEMBLY RH

(a) Engage the clip and install the anchor plate.

(b) Tighten the bolt.

Torque: 42 N*m (430 kgf*cm, 31 ft.*lbf)

54. INSTALL REAR SEAT OUTER BELT ASSEMBLY LH

HINT:

Use the same procedure as for the RH side.

55. INSTALL REAR DECK TRIM COVER (See page IR-82)

IR

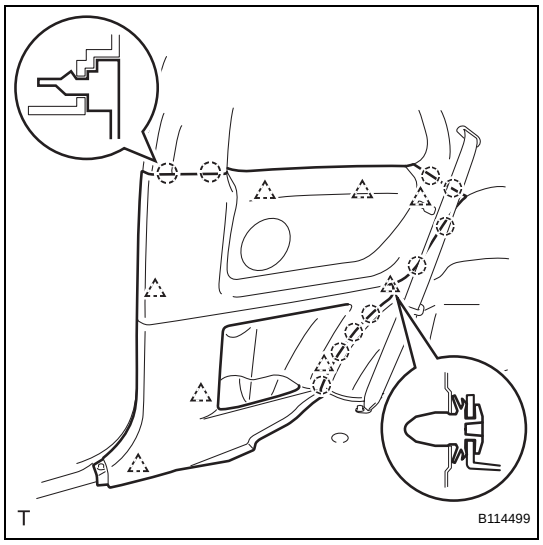

56. INSTALL FRONT QUARTER TRIM PANEL ASSEMBLY RH

(a) Engage the 8 clips, the retainer and the 10 claws and install the front quarter trim panel.

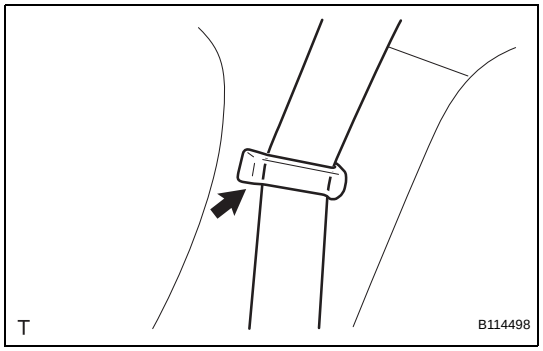

(b) Install the belt of the rear seat outer belt onto the rear seat shoulder belt hanger.

57. INSTALL FRONT QUARTER TRIM PANEL ASSEMBLY LH

HINT:
Use the same procedure as for the RH side.

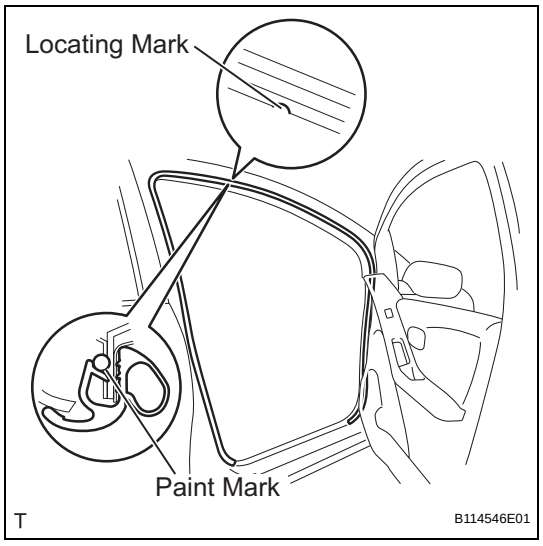

58. INSTALL FRONT DOOR OPENING TRIM WEATHERSTRIP RH

(a) Align the location mark with the paint mark first, and install the front door opening trim weatherstrip, as shown in the illustration.

Paint mark:

Area	Color
RH side	Yellow
LH side	White

59. INSTALL FRONT DOOR OPENING TRIM WEATHERSTRIP LH

HINT:
Use the same procedure as for the RH side.

60. INSTALL COWL SIDE TRIM BOARD RH (See page IR-81)

61. INSTALL COWL SIDE TRIM BOARD LH (See page IR-81)

62. INSTALL INSTRUMENT PANEL UNDER COVER SUB-ASSEMBLY RH (See page IR-81)

63. INSTALL INSTRUMENT PANEL UNDER COVER SUB-ASSEMBLY LH (See page IR-82)

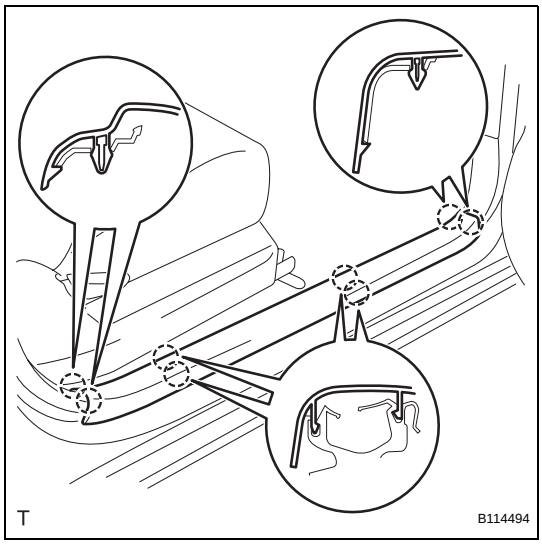

64. **INSTALL FRONT DOOR SCUFF PLATE RH**
    (a) Engage the 8 claws and install the front door scuff plate.

65. **INSTALL FRONT DOOR SCUFF PLATE LH**
    HINT:
    Use the same procedure as for the RH side.

66. **INSTALL REAR SEAT ASSEMBLY RH (for 60/40 Split Seat Type) (See page SE-102)**

67. **INSTALL REAR SEAT ASSEMBLY LH (for 60/40 Split Seat Type) (See page SE-84)**

68. **INSTALL NO. 1 REAR SEAT LEG COVER (for 60/40 Split Seat Type)**
    (a) for RH Side:
        (1) Install the No. 1 rear seat leg cover (See page SE-103).
    (b) for LH Side:
        (1) Install the No. 1 rear seat leg cover (See page SE-85).

69. **INSTALL NO. 2 REAR SEAT LEG COVER (for 60/40 Split Seat Type) (See page SE-85)**

70. **INSTALL REAR SEATBACK ASSEMBLY (for Hold Down Seat Type) (See page SE-122)**

71. **INSTALL REAR SEAT CUSHION COVER PAD SUB-ASSEMBLY (for Hold Down Seat Type) (See page SE-123)**

72. **INSTALL DECK FLOOR BOX RH (See page IR-83)**

73. **INSTALL DECK FLOOR BOX LH (See page IR-83)**

74. **INSTALL DECK BOARD SUB-ASSEMBLY (See page IR-83)**

75. **INSTALL PACKAGE TRAY TRIM PANEL ASSEMBLY (See page IR-83)**

76. **CONNECT CABLE TO NEGATIVE BATTERY TERMINAL**
    Torque: 5.4 N*m (55 kgf*cm, 48 in.*lbf)

77. **INSPECT SRS WARNING LIGHT**
    (See page RS-31)

CAN COMMUNICATION SYSTEM

PRECAUTION

1. PRECAUTION

(a) Turn the ignition switch off before measuring the resistances of the CAN main wire and the CAN branch wire.

(b) After the ignition switch is turned off, check that the key reminder warning system and light reminder warning system are not in operation.

(c) Before measuring the resistance, leave the vehicle as is for at least 1 minute and do not operate the ignition switch, any other switches or the doors. If doors need to be opened in order to check connectors, open the doors and leave them open.
HINT:
Operating the ignition switch, any switches or any doors triggers related ECU and sensor communication with the CAN, which causes resistance variation.

2. STEERING SYSTEM HANDLING PRECAUTIONS

(a) Care must be taken when replacing parts. Incorrect replacement could affect the performance of the steering system and result in hazards when driving.

3. SRS AIRBAG SYSTEM HANDLING PRECAUTIONS

(a) This vehicle is equipped with an SRS (Supplemental Restraint System) such as the driver airbag and front passenger airbag. Failure to carry out service operations in the correct sequence could cause unexpected SRS deployment during servicing and may lead to a serious accident. Before servicing (including removal or installation of parts, inspection or replacement), be sure to read the precautionary notice for the Supplemental Restraint System (See page RS-1).

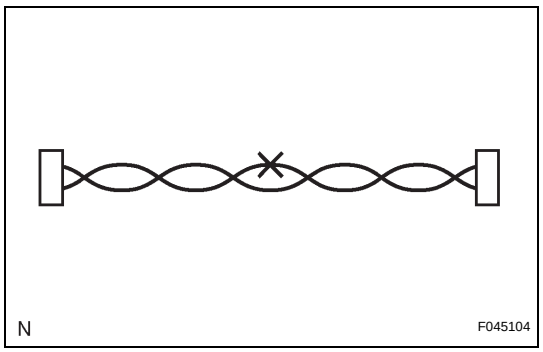

4. BUS LINE REPAIR

(a) After repairing the bus line with solder, wrap the repaired part with vinyl tape (See page IN-34).
NOTICE:

- **The CANL bus line and CANH bus line must always be installed together.**
- **When installing, twist them together.**
- **CAN bus lines are likely to be influenced by noise if the bus lines are not twisted together.**
- **The difference in length between the CANL bus line and CANH bus line should be less than 100 mm (3.937 in.).**
- **Leave approximately 80 mm (3.150 in.) loose in the twisted wires around the connectors.**

CA

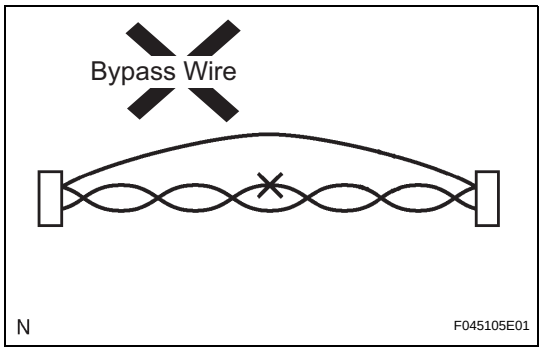

(b) Do not use bypass wiring between the connectors.
NOTICE:
The feature of the twisted wire harness will be lost if bypass wiring is used.

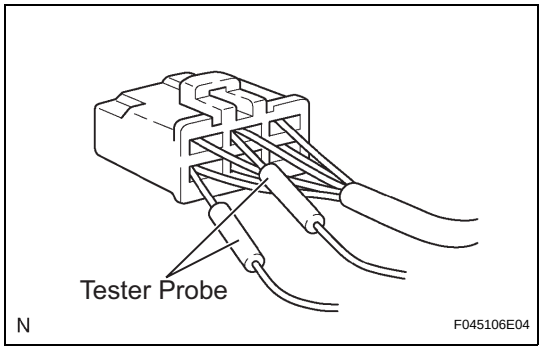

5. CONNECTOR HANDLING

(a) When inserting tester probes into a connector, insert them from the rear of the connector.

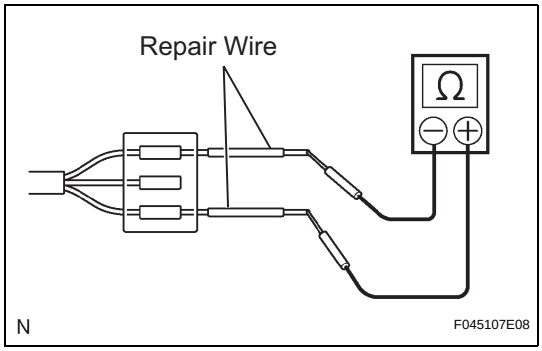

(b) Use a repair wire to check the connector if it is impossible to check resistance from the rear of the connector.

PARTS LOCATION

HATCHBACK:

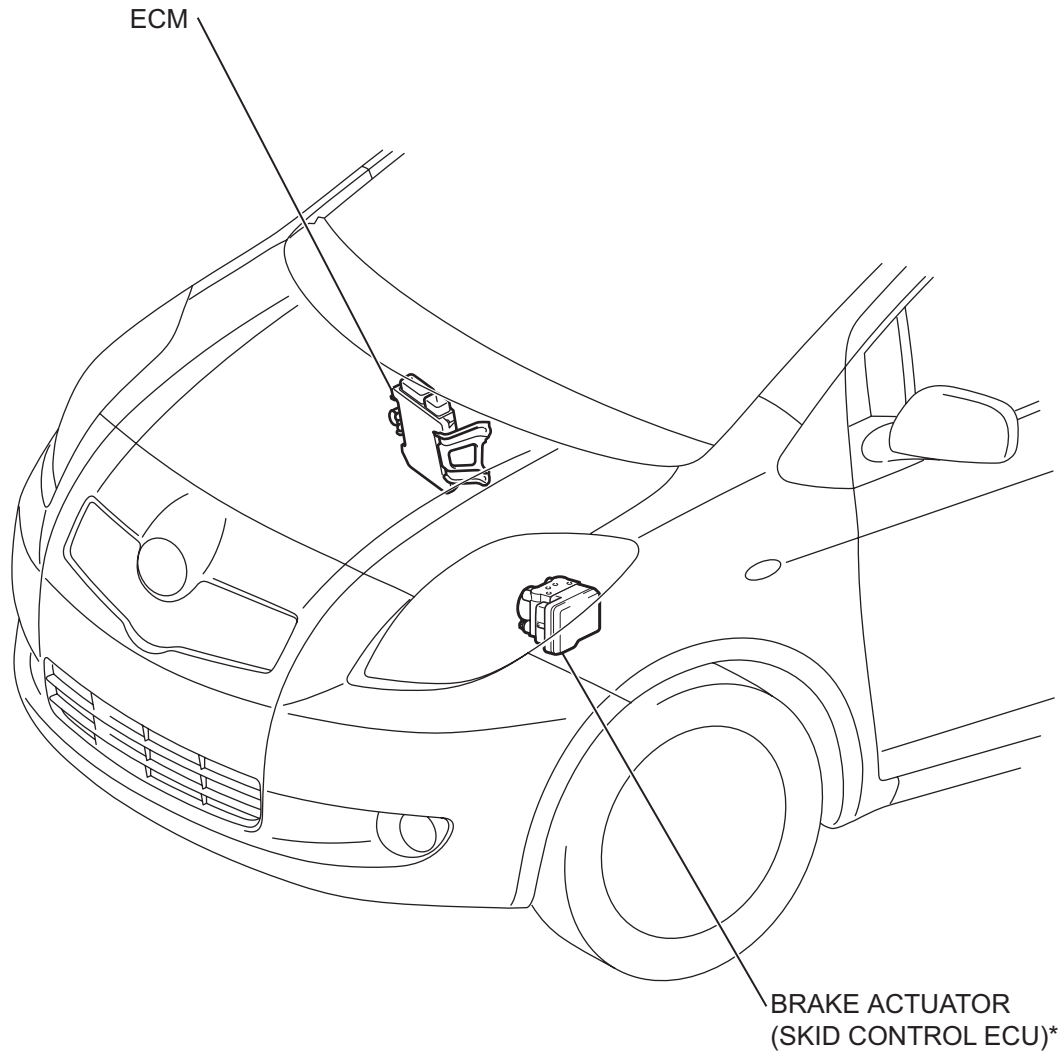

*: W/ ABS

H

C126027E02

SEDAN:

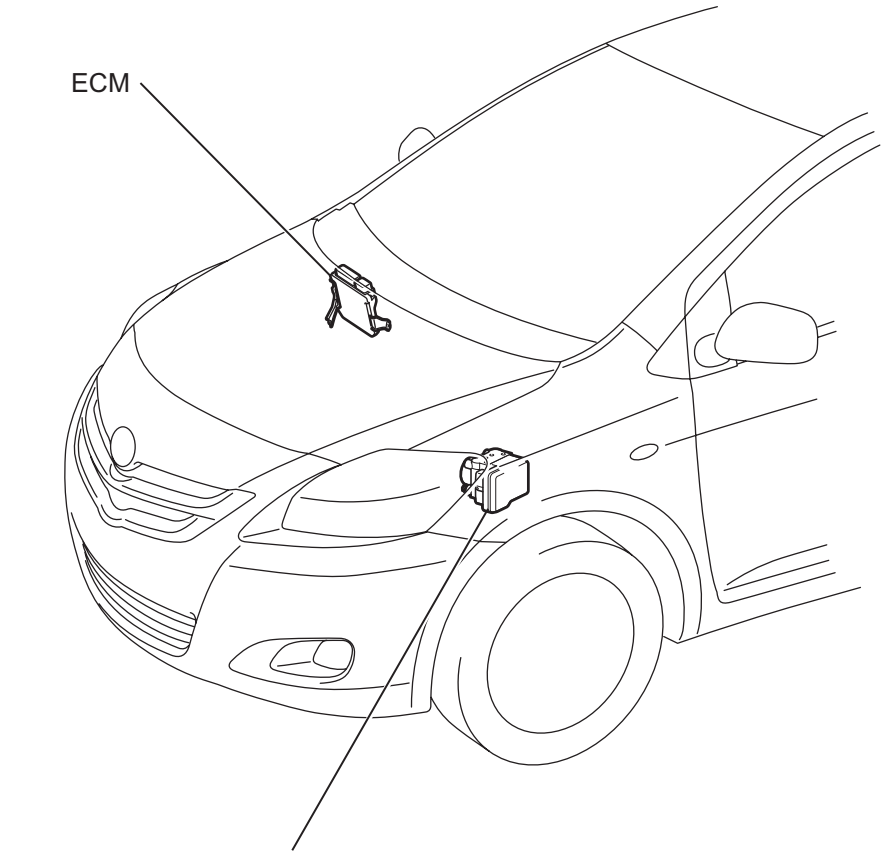

*: W/ ABS

C139123E02

HATCHBACK:

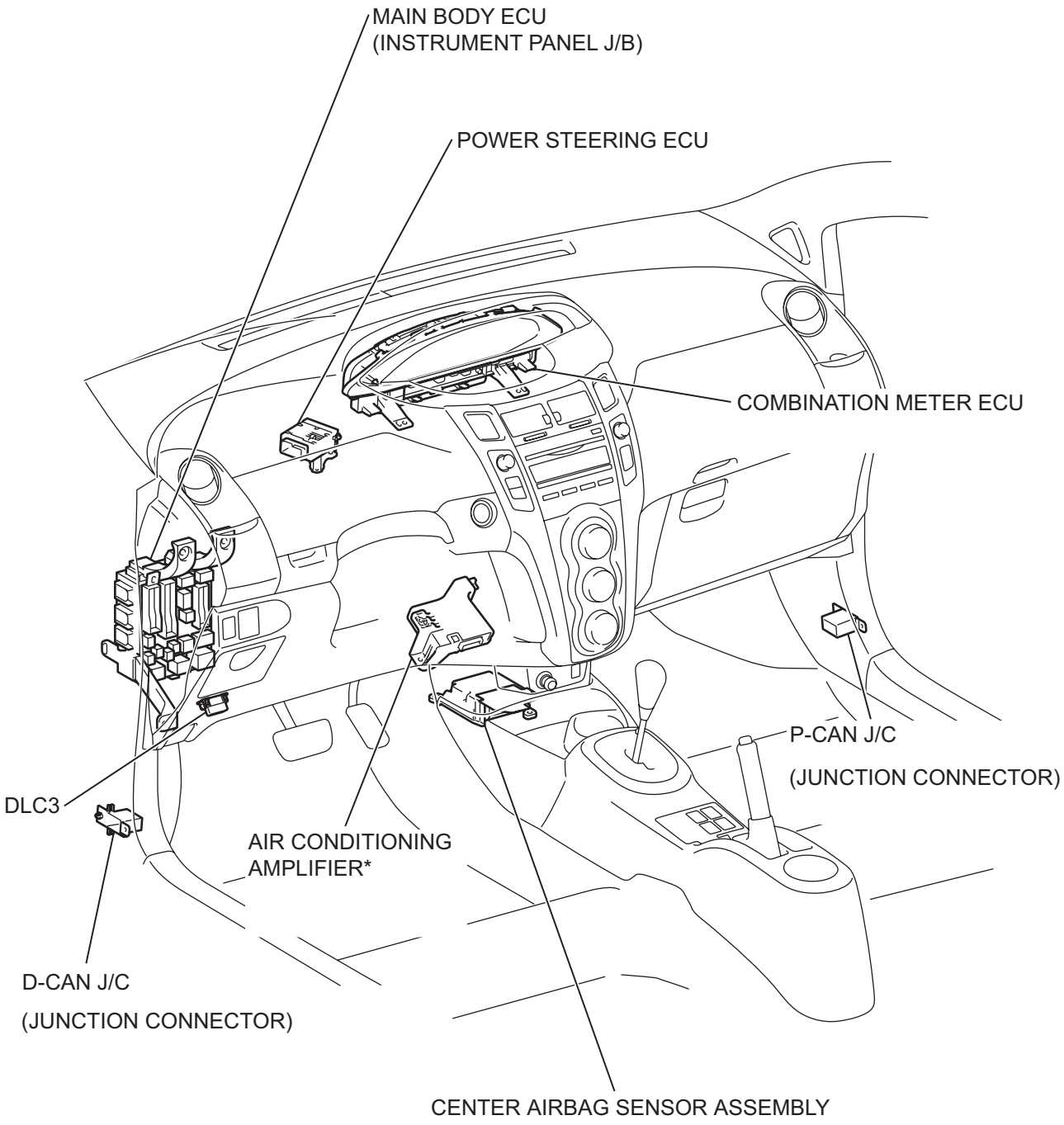

*: W/ AIR CONDITIONING OR PTC HEATER

H

C118152E03

CA

SEDAN:

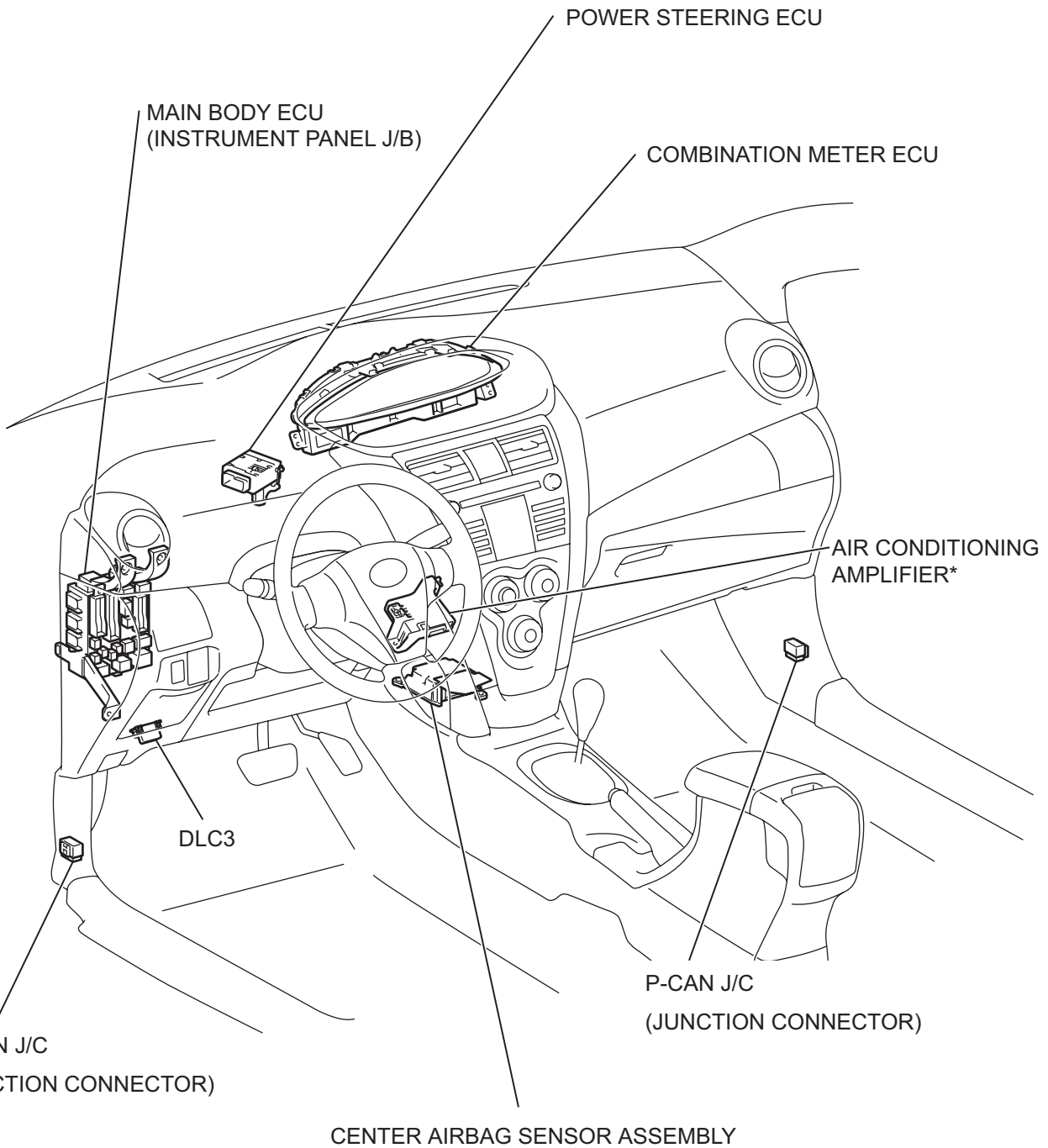

*: W/ AIR CONDITIONING OR PTC HEATER

C139125E02

CA

SYSTEM DIAGRAM

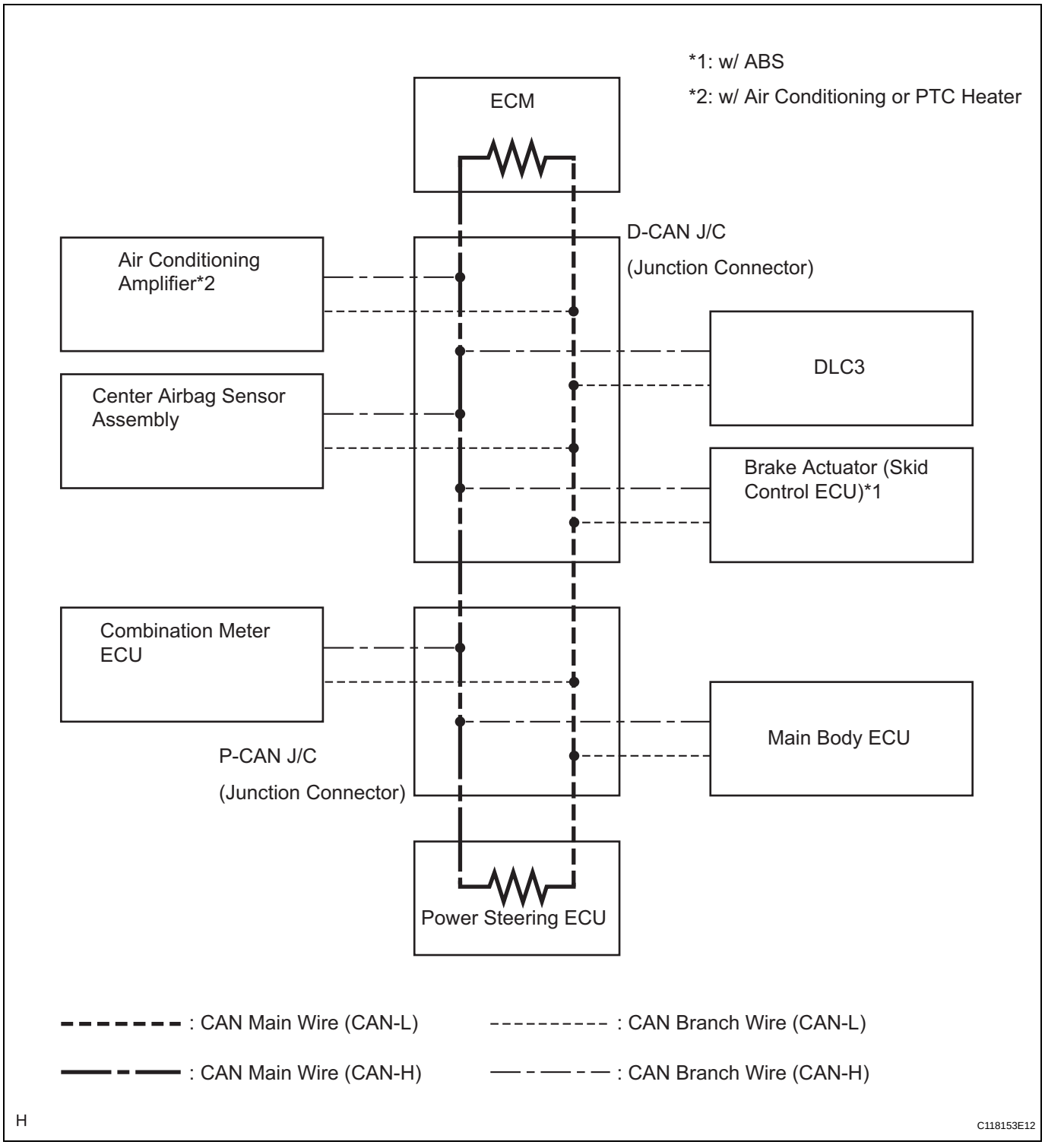

HINT:
The power steering ECU and center airbag sensor assembly use the CAN communication system to perform DTC communication instead of the conventional communication line (SIL).

SYSTEM DESCRIPTION

1. BRIEF DESCRIPTION

(a) The CAN (Control Area Network) is a serial data communication system for real time application. It is a vehicle multiplex communication system which has a high communication speed (500 kbps) and the ability to detect malfunctions.

(b) By pairing the CANH and CANL bus lines, the CAN performs communication based on differential voltages.

(c) Many ECUs (sensors) installed on the vehicle operate by sharing information and communicating with each other.

(d) The CAN has two 120 Ω resistors which are necessary to communicate with the main wire.

2. DEFINITION OF TERMS

(a) Main wire

(1) The main wire is a wire harness between the two terminus circuits on the bus (communication line). This is the main bus in the CAN communication system.

(b) Branch wire

(1) The branch wire is a wire harness which diverges from the main wire to an ECU or sensor.

(c) Terminus circuit

(1) The terminus circuit is a circuit which converts the communication current of the CAN communication into the bus voltage. It consists of a resistor and condenser. Two terminus circuits are necessary on a bus.

(d) CAN J/C

(1) The CAN J/C is a junction designed for CAN communication.

3. ECUs OR SENSORS WHICH COMMUNICATE VIA CAN COMMUNICATION SYSTEM

(a) Brake actuator (Skid control ECU)*1

(b) Power steering ECU

(c) ECM

(d) Center airbag sensor assembly

(e) Air conditioning amplifier*2

(f) Combination meter ECU

(g) Main body ECU

HINT:

*1: w/ ABS

*2: w/ Air conditioning or PTC heater

4. DIAGNOSTIC CODES FOR CAN COMMUNICATION SYSTEM

(a) DTCs for the CAN communication system are as follows: U0073, U0100, U0105, U0121, U0129 and B1499.

5. NOTES REGARDING TROUBLESHOOTING

(a) Trouble in the CAN bus (communication line) can be checked through the DLC3 (except when there is a wire break other than in the branch wire of the DLC3).

NOTICE:

Do not connect the tester directly to the DLC3 connector. Be sure to use a service wire.

(b) DTCs regarding the CAN communication system can be checked using the intelligent tester via the CAN VIM.

(c) The CAN communication system cannot detect trouble in the branch wire of the DLC3 even though the DLC3 is also connected to the CAN communication system.

HOW TO PROCEED WITH TROUBLESHOOTING

NOTICE:

- **DTCs for the CAN communication system are as follows: U0073, U0100, U0105, U0121, U0129 and B1499.**
- **Refer to the troubleshooting section for each system if DTCs regarding the CAN communication system are not output.**
- **Turn the ignition switch off before measuring the resistances of the CAN main wire and the CAN branch wire.**
- **After the ignition switch is turned off, check that the key reminder warning system and light reminder warning system are not in operation.**
- **Before measuring the resistance, leave the vehicle as is for at least 1 minute and do not operate the ignition switch, any other switches or the doors. If doors need to be opened in order to check connectors, open the doors and leave them open.**
  HINT:
  Operating the ignition switch, any switches or any doors triggers related ECU and sensor communication with the CAN, which causes resistance variation.

1	**CHECK CAN BUS LINE**

(a) Check the CAN bus line (See page CA-42).

NEXT

2	**CHECK INSTALLED SYSTEMS (ECUs AND SENSORS) THAT ADOPT CAN COMMUNICATION**

NEXT

CA

3	**CHECK AND CLEAR DTCs**

NEXT

4	**CHECK CAN COMMUNICATION USING INTELLIGENT TESTER VIA CAN VIM**

(a) Select "BUS CHECK" (See page CA-22).

Result

All ECUs and sensors connected to CAN communication system displayed on screen.	A
One ECU or sensor connected to CAN communication system not displayed on screen.	B

2 or more ECUs and sensors connected to CAN communication system not displayed on screen.	C

NOTICE:

- **The systems (ECUs and sensors) that adopt CAN communication vary depending on the vehicle and option settings. Check which systems (ECUs and sensors) are installed on the vehicle (See page CA-22).**
- **Non-installed ECUs or sensors are not displayed. Do not mistake them for being in communication stop mode.**
- **If 2 or more ECUs or sensors are not displayed on the intelligent tester via the CAN VIM, perform troubleshooting for open in one side of CAN bus line for each undisplayed ECU or sensor.**

B	GO TO COMMUNICATION STOP MODE TABLE
C	GO TO OPEN IN ONE SIDE OF CAN BRANCH WIRE

A

5	DTC COMBINATION TABLE

(a) Confirm trouble according to the combination of output DTCs regarding the CAN communication system.
HINT:
Previous CAN communication system DTCs may be the cause if CAN communication system DTCs are output and all ECUs and sensors connected to the CAN communication system are displayed on the intelligent tester's "BUS CHECK" screen via the CAN VIM.

NEXT

6	INSPECT CIRCUIT

NEXT

7	IDENTIFY PROBLEM

NEXT

8	REPAIR OR REPLACE

NEXT

CA

9	**PERFORM CONFIRMATION TEST**

NEXT

END

PROBLEM SYMPTOMS TABLE

RESULT LIST OF CHECK CAN BUS LINE

Symptom	Suspected area	See page
Open in CAN Main Wire	Check CAN Main Wire for Disconnection	CA-46
Short in CAN Bus Line	Check CAN Bus Lines for Short Circuit	CA-52
Short to +B in CAN Bus Line	Check CAN Bus Line for Short to +B	CA-67
Short to GND in CAN Bus Line	Check CAN Bus Line for Short to GND	CA-82
Open in One Side of CAN Branch Wire	Check for Open in One Side of Branch Wire	CA-97

COMMUNICATION STOP MODE TABLE

Symptom	Suspected area	See page
"EPS" not displayed on intelligent tester via CAN VIM.	Power Steering ECU Communication Stop Mode	CA-31
"ENGINE" not displayed on intelligent tester via CAN VIM.	ECM Communication Stop Mode	CA-33
"SRS AIRBAG" not displayed on intelligent tester via CAN VIM.	Center Airbag Sensor Communication Stop Mode	CA-40
"A/C*1" not displayed on intelligent tester via CAN VIM.	Air Conditioning Amplifier Communication Stop Mode	CA-29
"MAIN BODY" not displayed on intelligent tester via CAN VIM.	Main Body ECU Communication Stop Mode	CA-35
"ABS/VSC/TRAC*2" not displayed on intelligent tester via CAN VIM.	Brake Actuator (Skid Control ECU) Communication Stop Mode	CA-27
"METER" not displayed on intelligent tester via CAN VIM.	Combination Meter ECU Communication Stop Mode	CA-38

*1: w/ Air conditioning or PTC heater
*2: w/ ABS

TERMINALS OF ECU

NOTICE:

- **Turn the ignition switch off before measuring the resistances of the CAN main wire and the CAN branch wire.**
- **After the ignition switch is turned off, check that the key reminder warning system and light reminder warning system are not in operation.**
- **Before measuring the resistance, leave the vehicle as is for at least 1 minute and do not operate the ignition switch, any other switches or the doors. If doors need to be opened in order to check connectors, open the doors and leave them open.**

  HINT:

  Operating the ignition switch, any switches or any doors triggers related ECU and sensor communication with the CAN, which causes resistance variation.

Wire Harness Side:

D-CAN J/C Connector

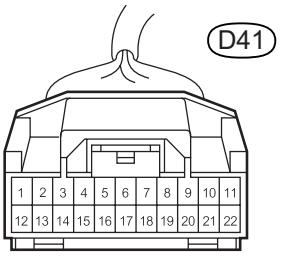

Front View

H

C118162E06

1. JUNCTION CONNECTOR

(a) D-CAN J/C

D-CAN J/C connectors	Terminal	Color
Brake actuator (Skid control ECU*1 (CAN-H))	D41-1 (ABS)	G
Brake actuator (Skid control ECU*1 (CAN-L))	D41-12 (ABS)	W
DLC3 (CAN-H)	D41-3 (OBD)	V
DLC3 (CAN-L)	D41-14 (OBD)	W
ECM (CAN-H)	D41-4 (EFI)	L
ECM (CAN-L)	D41-15 (EFI)	W
Air Conditioning Amplifier*2 (CAN-H)	D41-6 (A/C)	V
Air Conditioning Amplifier*2 (CAN-L)	D41-17 (A/C)	W
Center Airbag Sensor Assembly (CAN-H)	D41-8 (A/B)	B
Center Airbag Sensor Assembly (CAN-L)	D41-19 (A/B)	W
CAN main wire (between D-CAN and P-CAN J/C)	D41-11 (TORH)	Y
CAN main wire (between D-CAN and P-CAN J/C)	D41-22 (TORH)	W

HINT:

*1: w/ ABS

*2: w/ Air conditioning or PTC heater

CA

Wire Harness Side:

P-CAN J/C Connector

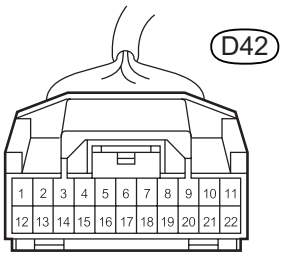

Front View

H

C118162E07

2. JUNCTION CONNECTOR

(a) P-CAN J/C

P-CAN J/C connectors	Terminal	Color
Power Steering ECU (CAN-H)	D42-4 (EPS)	SB
Power Steering ECU (CAN-L)	D42-15 (EPS)	W
Main Body ECU (CAN-H)	D42-5 (JB)	R
Main Body ECU (CAN-L)	D42-16 (JB)	W
Combination Meter ECU (CAN-H)	D42-7 (MET)	G
Combination Meter ECU (CAN-L)	D42-18 (MET)	W
CAN main wire (between P-CAN and D-CAN J/C)	D42-11 (TOLH)	Y
CAN main wire (between P-CAN and D-CAN J/C)	D42-22 (TOLH)	W

(b) Wiring diagram for identifying CAN J/C connectors

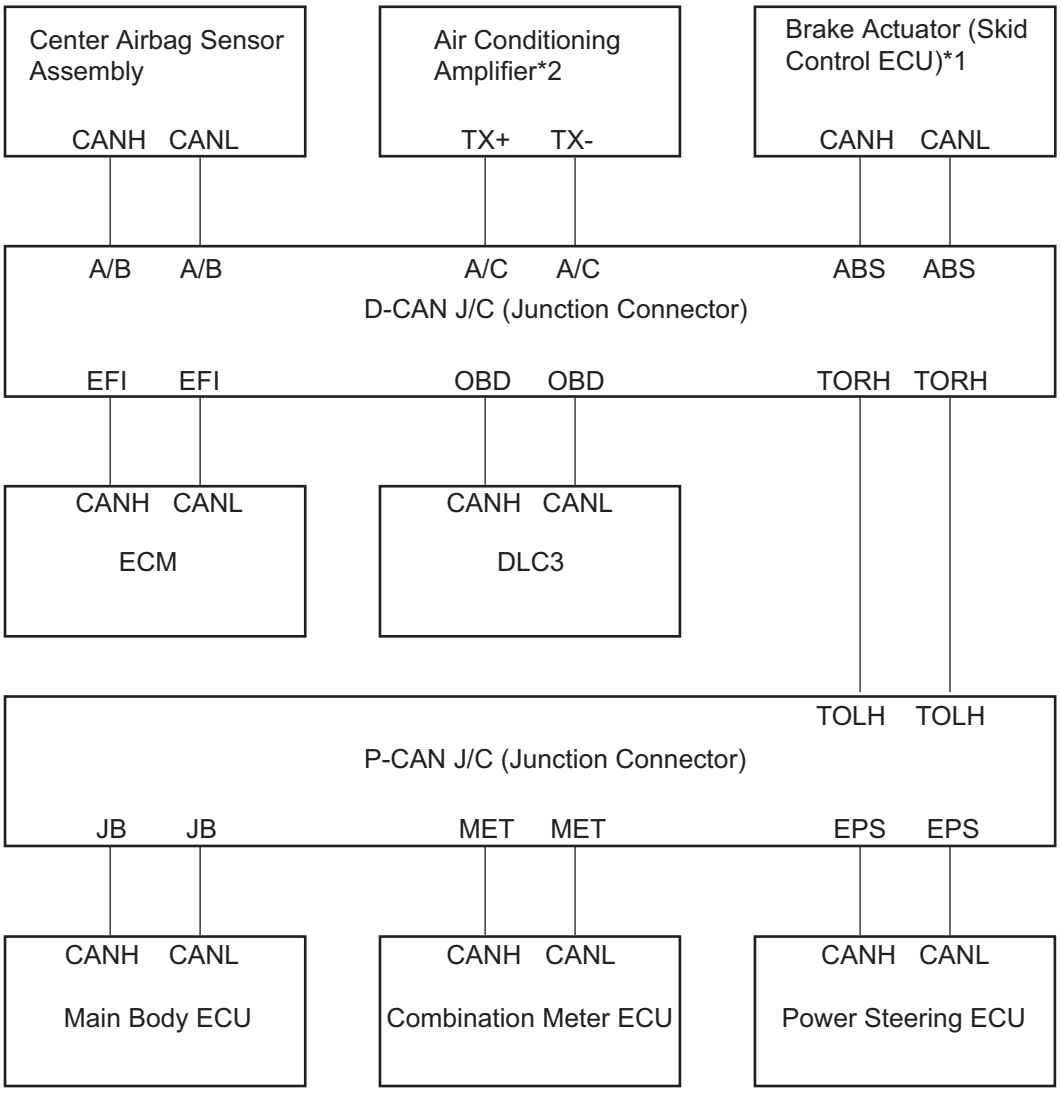

*1: w/ ABS

*2: w/ Air Conditioning or PTC Heater

H

C118154E01

CA

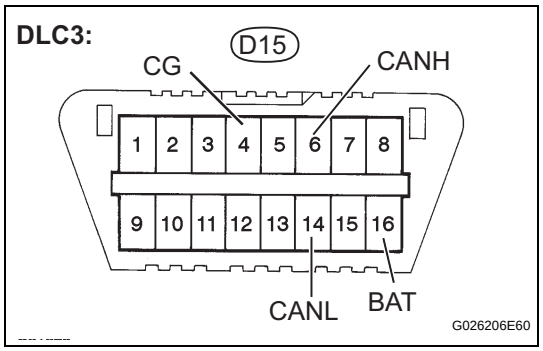

3. DLC3

(a) Turn the ignition switch OFF.

(b) Measure the resistance.

Standard resistance

Terminals	Wiring Color	Condition	Specified Condition
D15-6 (CANH) - D15-14 (CANL)	V - W	Ignition Switch OFF	54 to 69 Ω
D15-6 (CANH) - D15-4 (CG)	V - W-B	Ignition Switch OFF	200 Ω or higher
D15-14 (CANL) - D15-4 (CG)	W - W-B	Ignition Switch OFF	200 Ω or higher
D15-6 (CANH) - D15-16 (BAT)	V - SB	Ignition Switch OFF	6 kΩ or higher
D15-14 (CANL) - D15-16 (BAT)	W - SB	Ignition Switch OFF	6 kΩ or higher

4. BRAKE ACTUATOR (SKID CONTROL ECU)

HINT:

For vehicle with ABS only.

(a) Turn the ignition switch OFF.

(b) Disconnect the A15 brake actuator (skid control ECU) connector.

(c) Measure the resistance.

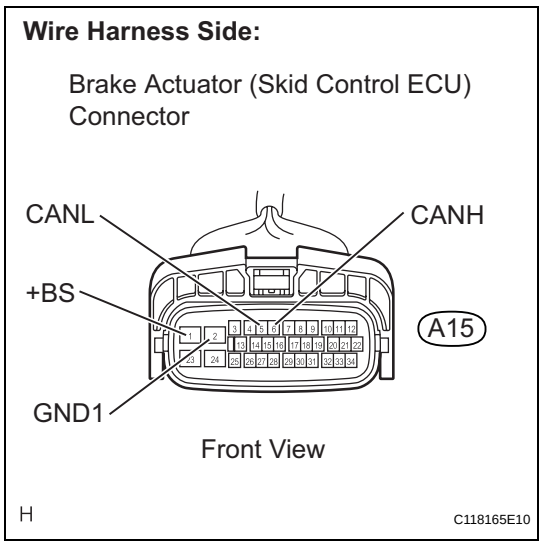

Standard resistance

Terminals	Wiring Color	Condition	Specified Condition
A15-6 (CANH) - A15-5 (CANL)	G - W	Ignition Switch OFF	54 to 69 Ω
A15-6 (CANH) - A15-2 (GND1)	G - W-B	Ignition Switch OFF	200 Ω or higher
A15-5 (CANL) - A15-2 (GND1)	W - W-B	Ignition Switch OFF	200 Ω or higher
A15-6 (CANH) - A15-1 (+BS)	G - W	Ignition Switch OFF	6 kΩ or higher
A15-5 (CANL) - A15-1 (+BS)	W - W	Ignition Switch OFF	6 kΩ or higher

CA

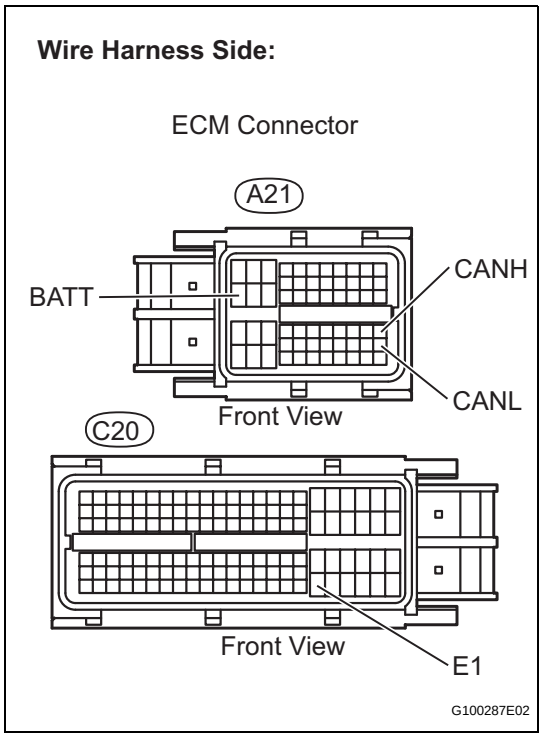

5. ECM

(a) Turn the ignition switch OFF.
(b) Disconnect the A21 and C20 ECM connectors.
(c) Measure the resistance.

Standard resistance

Terminals	Wiring Color	Condition	Specified Condition
A21-41 (CANH) - A21-49 (CANL)	L - W	Ignition switch OFF	108 to 132 Ω
A21-41 (CANH) - C20-104 (E1)	L - W	Ignition switch OFF	200 Ω or higher
A21-49 (CANL) - C20-104 (E1)	W - W	Ignition switch OFF	200 Ω or higher
A21-41 (CANH) - A21-20 (BATT)	L - Y	Ignition switch OFF	6 kΩ or higher
A21-49 (CANL) - A21-20 (BATT)	W - Y	Ignition switch OFF	6 kΩ or higher

Wire Harness Side:

Center Airbag Sensor Assembly Connector

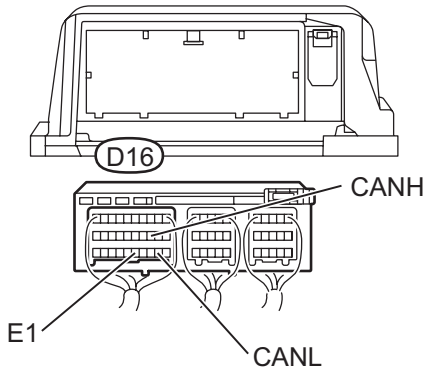

DLC3:

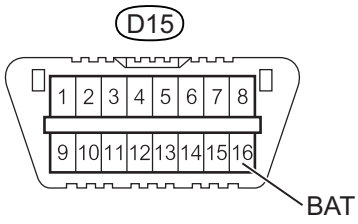

C131070E05

6. CENTER AIRBAG SENSOR ASSEMBLY

(a) Turn the ignition switch OFF.

(b) Disconnect the D16 center airbag sensor assembly connector.

(c) Measure the resistance.

Standard resistance

Terminals	Wiring Color	Condition	Specified Condition
D16-13 (CANH) - D16-22 (CANL)	B - W	Ignition switch OFF	54 to 69 Ω
D16-13 (CANH) - D16-25 (E1)	B - W-B	Ignition switch OFF	200 Ω or higher
D16-22 (CANL) - D16-25 (E1)	W - W-B	Ignition switch OFF	200 Ω or higher
D16-13 (CANH) - D15-16 (BAT)	B - SB	Ignition switch OFF	6 kΩ or higher
D16-22 (CANL) - D15-16 (BAT)	W - SB	ignition switch OFF	6 kΩ or higher

7. AIR CONDITIONING AMPLIFIER

HINT:

For vehicle with air conditioning or PTC heater only.

CA

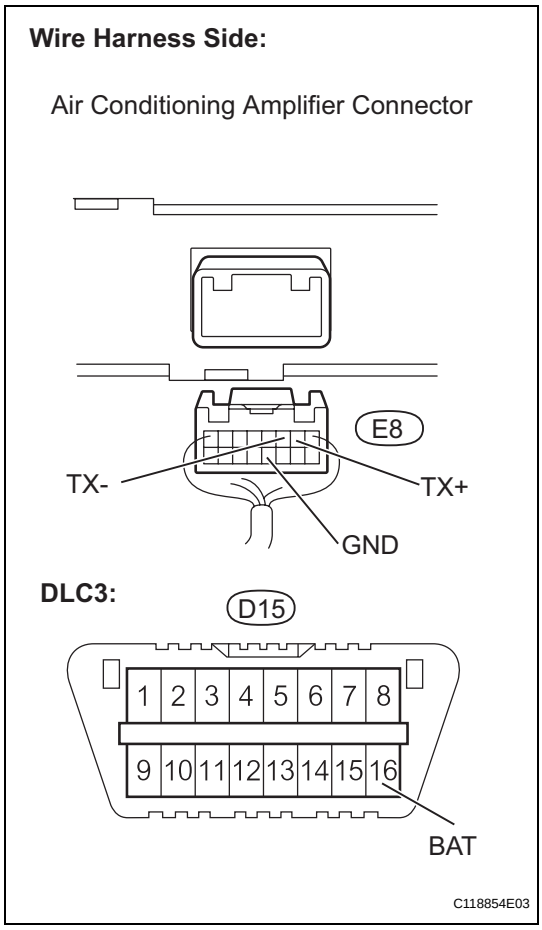

(a) Turn the ignition switch OFF.
(b) Disconnect the E8 air conditioning amplifier connector.
(c) Measure the resistance.

Standard resistance

Terminals	Wiring Color	Condition	Specified Condition
E8-2 (TX+) - E8-3 (TX-)	V - W	Ignition switch OFF	54 to 69 Ω
E8-2 (TX+) - E8-12 (GND)	V - W-B	Ignition switch OFF	200 Ω or higher
E8-3 (TX-) - E8-12 (GND)	W - W-B	Ignition switch OFF	200 Ω or higher
E8-2 (TX+) - D15-16 (BAT)	V - SB	Ignition switch OFF	6 kΩ or higher
E8-3 (TX-) - D15-16 (BAT)	W - SB	Ignition switch OFF	6 kΩ or higher

8. MAIN BODY ECU

Main Body ECU (Rear View):

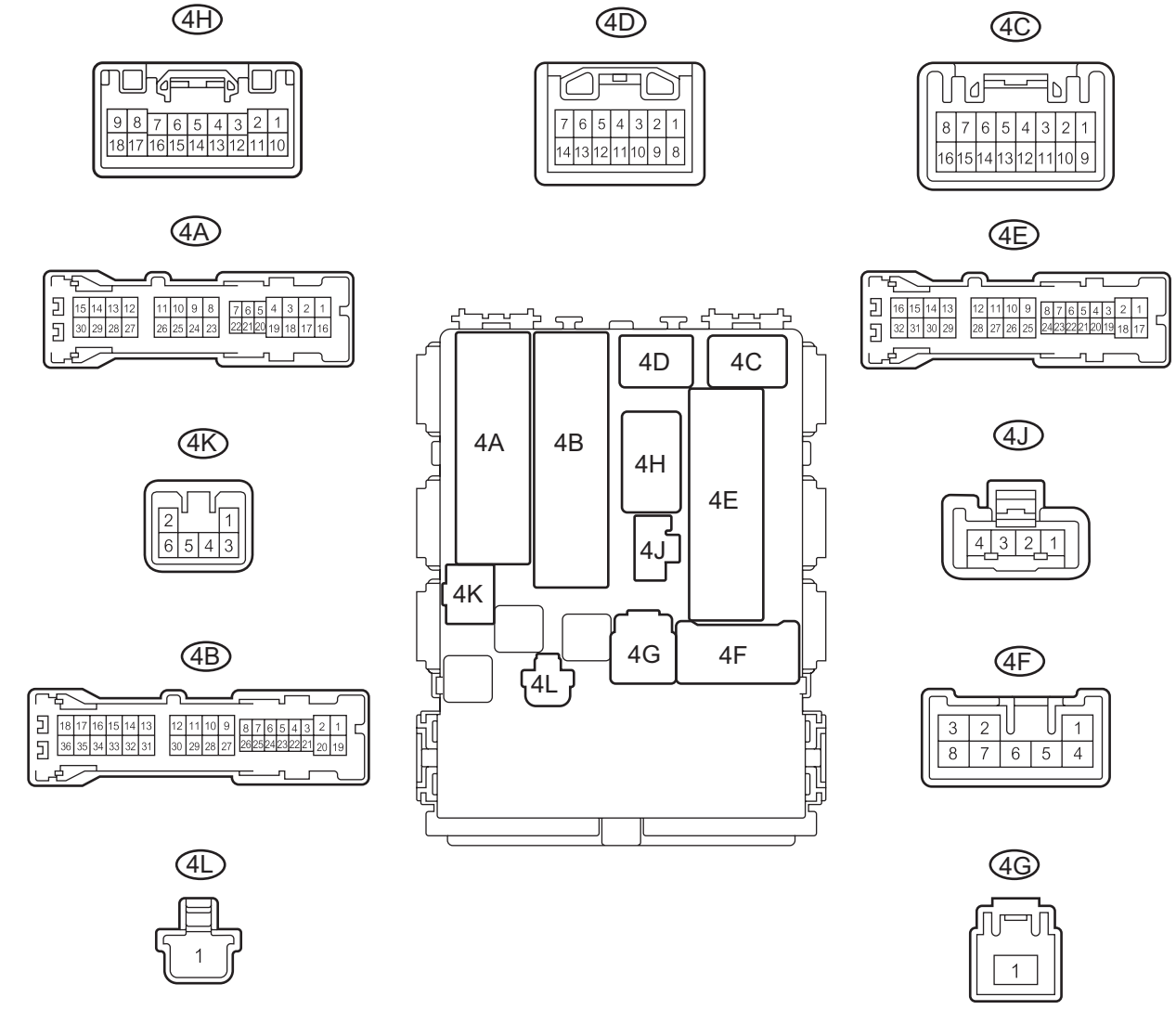

H

E114510E13

CA

Main Body ECU (Front View):

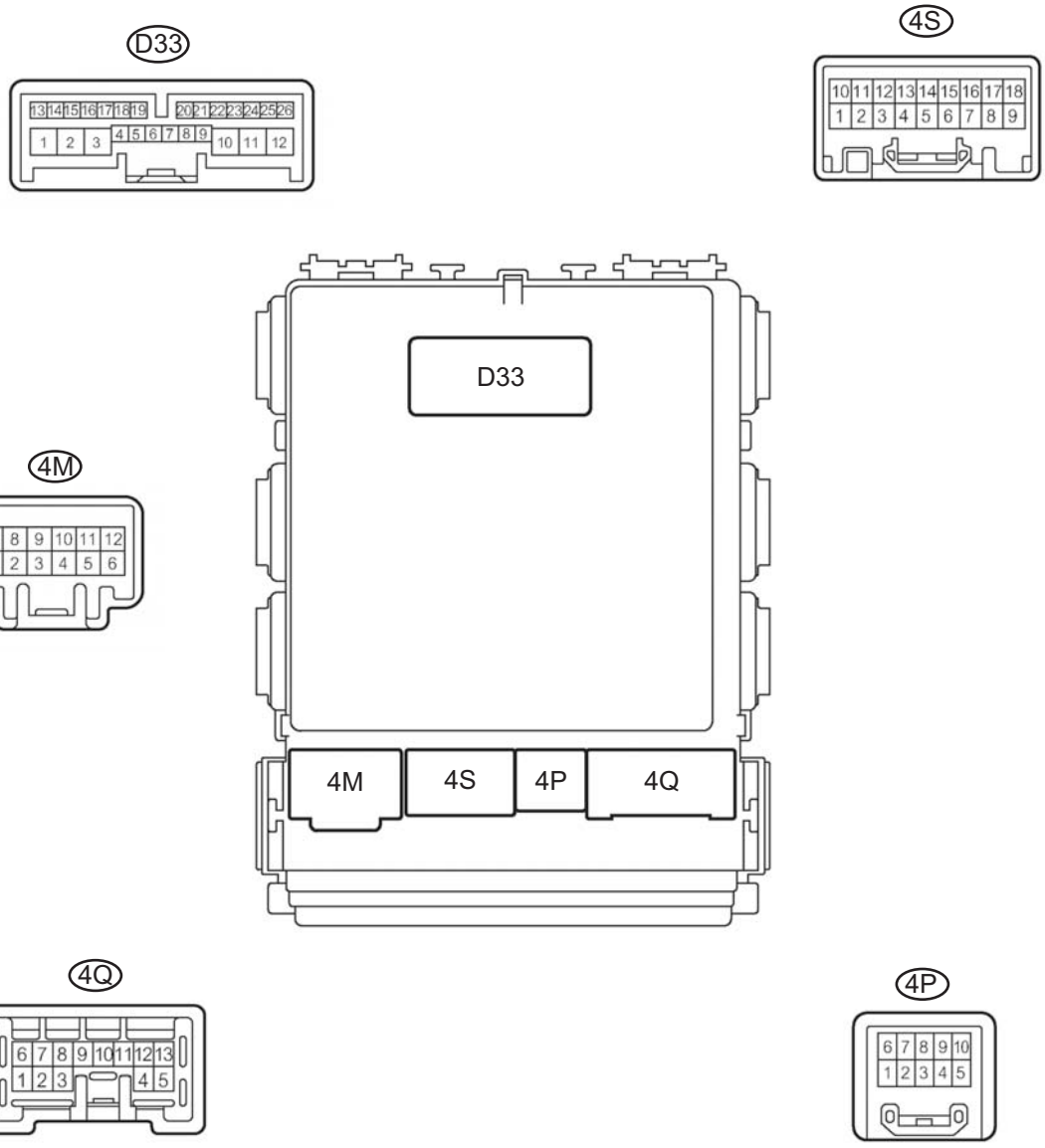

CA

(a) Turn the ignition switch OFF.
(b) Disconnect the 4B and 4E main body ECU connectors.
(c) Measure the resistance.

Standard resistance

Terminals	Wiring Color	Condition	Specified Condition
D33-23 (CANH) - D33-22 (CANL)	R - W	Ignition switch OFF	54 to 69 Ω
D33-23 (CANH) - 4E-17 (GND1)	R - W-B	Ignition switch OFF	200 Ω or higher
D33-22 (CANL) - 4E-17 (GND1)	W - W-B	Ignition switch OFF	200 Ω or higher
D33-23 (CANH) - 4B-30 (BECU)	R - L	Ignition switch OFF	6 kΩ or higher
D33-22 (CANL) - 4B-30 (BECU)	W - L	Ignition switch OFF	6 kΩ or higher

Wire Harness Side:

Combination Meter ECU Connector

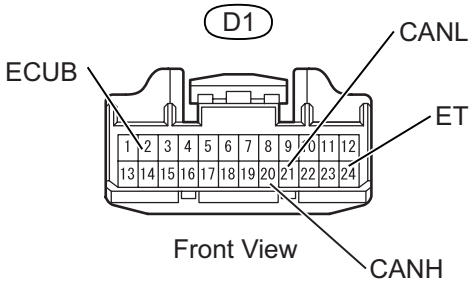

C139156E05

9. COMBINATION METER ECU

(a) Turn the ignition switch OFF.
(b) Disconnect the D1 combination meter ECU connector.
(c) Measure the resistance.

Standard resistance

Terminals	Wiring Color	Condition	Specified Condition
D1-20 (CANH) - D1-21 (CANL)	G - W	Ignition switch OFF	54 to 69 Ω
D1-20 (CANH) - D1-24 (ET)	G - BR	Ignition switch OFF	200 Ω or higher
D1-21 (CANL) - D1-24 (ET)	W - BR	Ignition switch OFF	200 Ω or higher
D1-20 (CANH) - D1-2 (ECUB)	G - L	Ignition switch OFF	6 kΩ or higher
D1-21 (CANL) - D1-2 (ECUB)	W - L	Ignition switch OFF	6 kΩ or higher

Wire Harness Side:

Power Steering ECU Connector

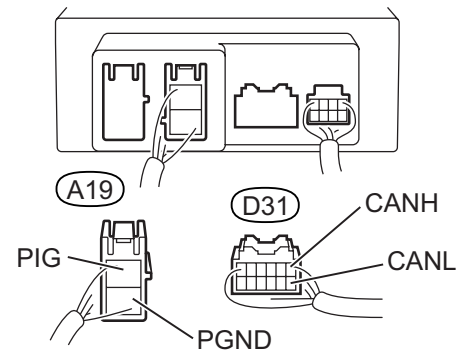

H

C118163E03

10. POWER STEERING ECU

(a) Turn the ignition switch OFF.
(b) Disconnect the A19 and D31 power steering ECU connectors.
(c) Measure the resistance.

Standard resistance

Terminals	Wiring Color	Condition	Specified Condition
D31-1 (CANH) - D31-7 (CANL)	SB - W	Ignition switch OFF	108 to 132 Ω
D31-1 (CANH) - A19-2 (PGND)	SB - W-B	Ignition switch OFF	200 Ω or higher
D31-7 (CANL) - A19-2 (PGND)	W - W-B	Ignition switch OFF	200 Ω or higher
D31-1 (CANH) - A19-1 (PIG)	SB - W	Ignition switch OFF	6 kΩ or higher
D31-7 (CANL) - A19-1 (PIG)	W - W	Ignition switch OFF	6 kΩ or higher

CA

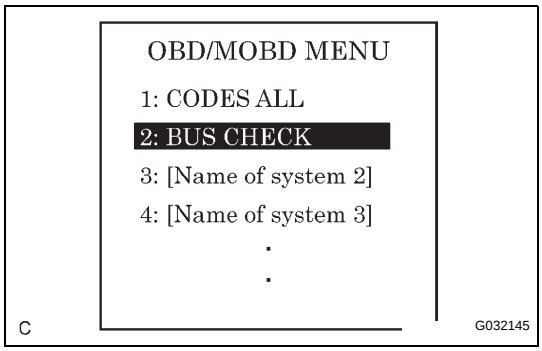

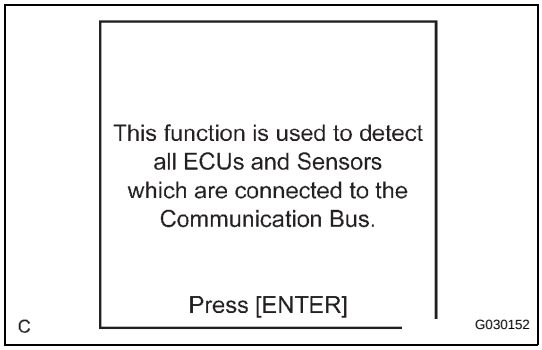

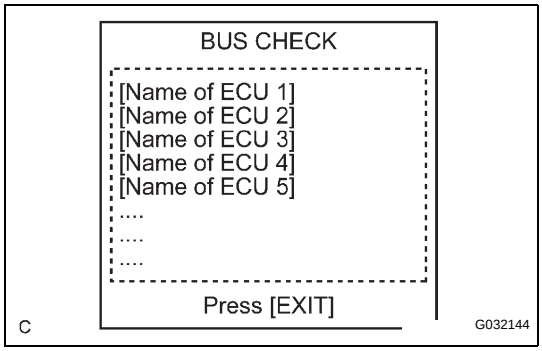

DIAGNOSIS SYSTEM

1. BUS CHECK

(a) Select "BUS CHECK" from the "OBD/MOBD MENU" screen.
HINT:
The ECUs and sensors that are properly connected to the CAN communication system can be displayed using the intelligent tester via the CAN VIM.

(b) Press "ENTER" on the intelligent tester via the CAN VIM.

(c) The screen displays the ECUs and sensors that are properly connected to the CAN communication system.
HINT:
- If any properly connected ECUs or sensors are not displayed, there is a communication stop in the system (See page CA-11).
- Display the "BUS CHECK" screen for approximately 1 minute and check for ECUs and sensors that a not indicated on the screen.

2. CHECK INSTALLED SYSTEMS (ECUs AND SENSORS) THAT ADOPT CAN COMMUNICATION

(a) Systems (ECUs and sensors) that adopt CAN communication vary depending on the vehicle's optional settings. Check which systems (ECUs, sensors) are installed on the vehicle.

CA

ECU/Sensor name	Check method
Brake actuator (Skid control ECU)	with ABS
Power steering ECU	Installed on all vehicles
ECM	Installed on all vehicles
Center airbag sensor assembly	Installed on all vehicles
Air conditioning amplifier	with air conditioning or PTC heater
Combination meter ECU	Installed on all vehicles
Main body ECU	Installed on all vehicles

3. DTC TABLE BY ECU

HINT:
- In the CAN communication system, CAN communication system DTCs output by the ECU can be displayed by using the intelligent tester.

- If CAN communication system DTCs are output, trouble cannot be determined solely from the DTCs. Perform troubleshooting according to "HOW TO PROCEED WITH TROUBLESHOOTING" (See page CA-9).

(a) BRAKE ACTUATOR (SKID CONTROL ECU)
HINT:
DTC communication uses the CAN communication system.

DTC No.	Detection Item
U0073/94	Control Module Communication Bus OFF

(b) POWER STEERING ECU
HINT:
DTC communication uses the SIL Line.

DTC No.	Detection Item
U0073	Control Module Communication Bus OFF
U0105	Lost Communication with ECM
U0121*	Lost Communication with Anti-lock Brake System (ABS) Control Module

*: For vehicle with ABS only.

(c) COMBINATION METER ASSEMBLY
HINT:
DTC communication uses the CAN communication system.

DTC No.	Detection Item
U0100	Lost Communication with ECM/PCM "A"
U0129*	Lost Communication with Brake System Control Module

*: For vehicle with ABS only.

(d) AIR CONDITIONING AMPLIFIER
HINT:
DTC communication uses the CAN communication system.

DTC No.	Detection Item
B1499/99	Multiplex Communication Circuit

(e) MAIN BODY ECU
HINT:
- The main body ECU is connected to the CAN communication system but CAN communication DTCs are not output.
- If "MAIN BODY" is not displayed on the "BUS CHECK" screen on the intelligent tester, proceed to "Main Body ECU Communication Stop Mode." (See page CA-35)

(f) CENTER AIRBAG SENSOR ASSEMBLY
HINT:
- The center airbag sensor assembly is connected to the CAN communication system but CAN communication DTCs are not output.

CA

- If "SRS AIRBAG" is not displayed on the "BUS CHECK" screen on the intelligent tester, proceed to "Center Airbag Sensor Communication Stop Mode." (See page CA-40)

(g) ECM

HINT:

- The ECM is connected to the CAN communication system but CAN communication DTCs are not output.
- If "ENGINE" is not displayed on the "BUS CHECK" screen on the intelligent tester, proceed to "ECM Communication Stop Mode." (See page CA-33)

4. DTC COMBINATION TABLE

DTC		Trouble Mode						
Output from	Output DTC	Brake Actuator (Skid Control ECU) Communication Stop Mode	Power Steering ECU Communication Stop Mode	ECM Communication Stop Mode	Center Airbag Sensor Communication Stop Mode	Air Conditioning Amplifier Communication Stop Mode	Combination Meter ECU Communication Stop Mode	Main Body ECU Communication Stop Mode
Brake Actuator (Skid Control ECU)	U0073/94	O*1	X	X	X	X	X	X
Power Steering ECU	U0073	X	O	X	X	X	X	X
	U0105	X	O	O	X	X	X	X
	U0121	O	O	X	X	X	X	X
Combination Meter ECU	U0100	X	X	O	X	X	X	X
	U0129	O	X	X	X	X	X	X
Air Conditioning Amplifier	B1499/99	X	X	O*2	X	X	O*2	X
No DTC		X	X	X	O	O	X	O

HINT:

- O: It is necessary to check for the trouble mode.
- X: Not output
- *1: The brake actuator (skid control ECU) detects U0073/94 when DTC communication fails in succession. However, this DTC may not be output when the CAN communication system malfunctions.
- *2: This DTC is output when communication failures from the ECM and the combination meter ECU occur.

(a) Perform troubleshooting according to the combination of DTCs output.

HINT:

- Brake Actuator (Skid Control ECU) Communication Stop Mode: (See page CA-27)
- Power Steering ECU Communication Stop Mode: (See page CA-31)
- ECM Communication Stop Mode: (See page CA-33)
- Center Airbag Sensor Communication Stop Mode: (See page CA-40)

CA

- Air Conditioning Amplifier Communication Stop Mode: (See page CA-29)
- Combination Meter ECU Communication Stop Mode: (See page CA-38)
- Main Body ECU Communication Stop Mode: (See page CA-35)

FAIL-SAFE CHART

1. FAIL-SAFE FUNCTION

(a) When communication fails in any of the CAN bus lines (communication lines) due to a short circuit or other causes, the fail-safe function, which is specified for each system, operates to prevent the system from malfunctioning.

(b) Relationships between components and system functions and effects of communication failure on these functions. (For further details, see the pages for each system.)

Function	ECM	Brake Actuator (Skid Control ECU)	Power Steering ECU	Center Airbag Sensor Assembly	Air conditioning Amplifier	Combination Meter ECU	Main Body ECU	Condition when communication impossible	DTC detection (Driver detectable)
ABS control (Controls driving force while ABS in operation)	○*1	●						Control inoperative (Gradually stops controlling during ABS control)	Detectable (Light comes on)
Electric power steering (Outputs assist current)	○	○	●					Steering force slightly increased at less than 43.5 mph (70 km/h) Steering force slightly reduced at 43.5 mph (70 km/h) or more	Detectable (Light comes on)
Event recorder (Tracks event data such as vehicle speed and accelerator opening angle and records data)	○			●		○		Data not recorded	None
Air conditioning control PTC heater control	○				●	○*2		Air conditioning function stops PCT heater function stops	None (Air conditioning inoperative)
Meter Display (Displays operation condition and DTCs)	○	○	○	○		●	○	Light dose not come on, illuminates abnormally, or blinks abnormally	Detectable (Abnormal display)

CA

Function	ECM	Brake Actuator (Skid Control ECU)	Power Steering ECU	Center Airbag Sensor Assembly	Air conditioning Amplifier	Combination Meter ECU	Main Body ECU	Condition when communication impossible	DTC detection (Driver detectable)
Buzzer control	○					●	○	Buzzer function stops	None (Buzzer does not sound)
Illumination control						○	●	Light illumination rheostat inoperative	None (Rheostat inoperative)
Power door lock control	○			○		○	●	Unlock permitted	None (Wireless door lock operation)

HINT:
- ●: Control master
- ○: System related
- *1: Hatchback
- *2: Sedan

CA

Brake Actuator (Skid Control ECU) Communication Stop Mode

DESCRIPTION

Detection Item	Symptom	Trouble Area
Brake Actuator (Skid Control ECU) Communication Stop Mode	• "ABS/VSC/TRAC" not displayed on "BUS CHECK" screen of intelligent tester via the CAN VIM • Applies to "Brake Actuator (Skid Control ECU) Communication Stop Mode" in "DTC combination table"	• Power source circuit of brake actuator (skid control ECU) • Brake actuator (skid control ECU) branch wire or connector • Brake actuator (Skid control ECU)

HINT:
For vehicle with ABS only.

WIRING DIAGRAM

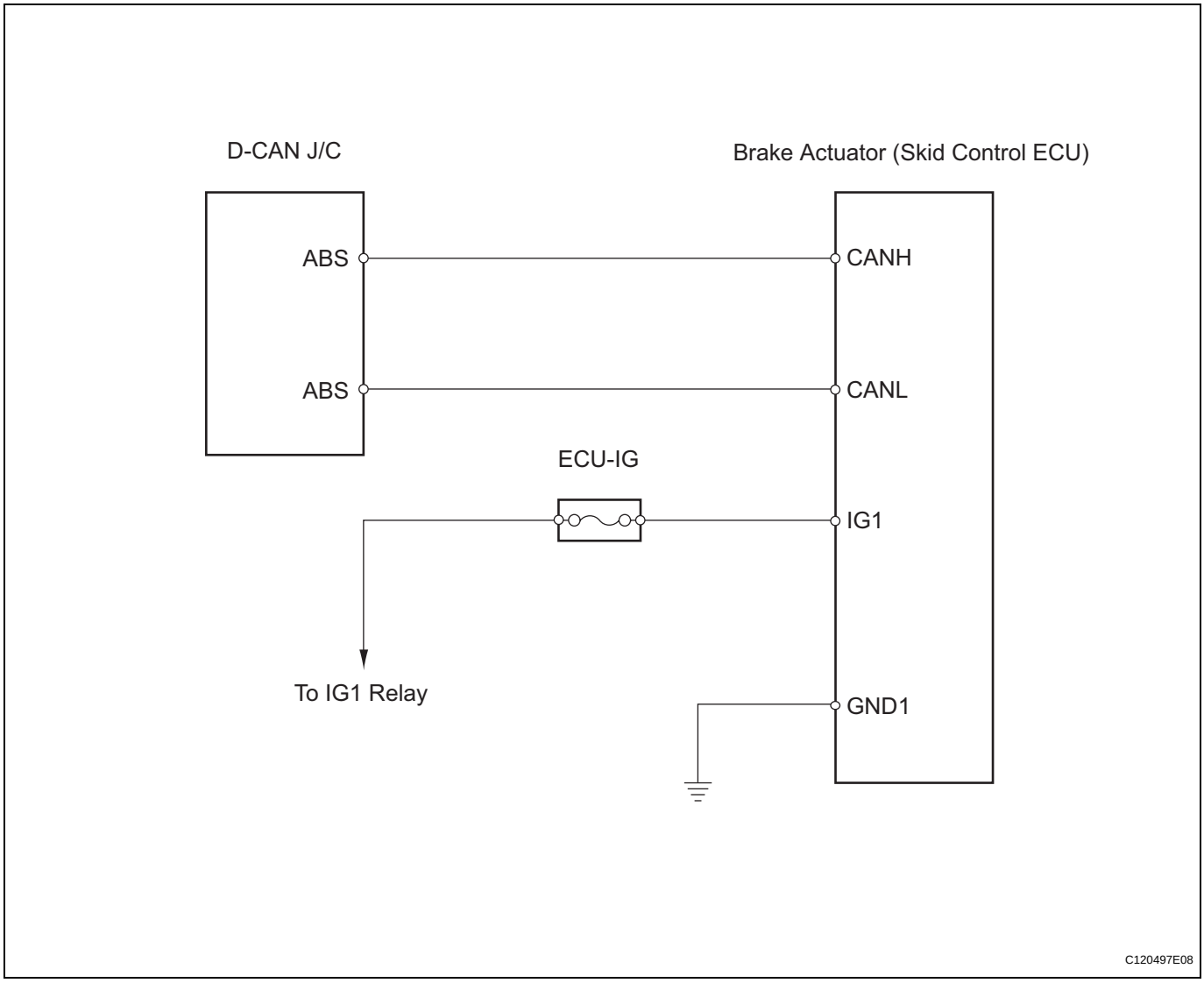

INSPECTION PROCEDURE

NOTICE:

- **Turn the ignition switch OFF before measuring the resistances of the CAN main wire and the CAN branch wire.**

CA

- **After the ignition switch is turned off, check that the key reminder warning system and light reminder warning system are not in operation.**
- **Before measuring the resistance, leave the vehicle as is for at least 1 minute and do not operate the ignition switch, any other switches or the doors. If doors need to be opened in order to check connectors, open the doors and leave them open.**
  HINT:
  Operating the ignition switch, any switches or any doors triggers related ECU and sensor communication with the CAN, which causes resistance variation.

1	CHECK CAN BUS LINE FOR DISCONNECTION (BRAKE ACTUATOR (SKID CONTROL ECU) BRANCH WIRE)

Wire Harness Side:

Brake Actuator (Skid Control ECU) Connector

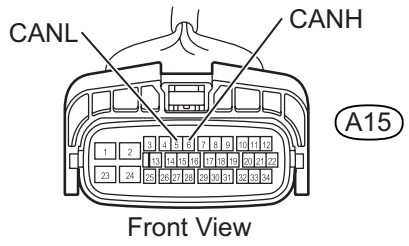

H C118165E11

(a) Turn the ignition switch OFF.
(b) Disconnect the A15 brake actuator (skid control ECU) connector.
(c) Measure the resistance.
Standard resistance

Tester Connection	Condition	Specified Condition
A15-6 (CANH) - A15-5 (CANL)	Ignition switch OFF	54 to 69 Ω

NG → **REPAIR OR REPLACE CAN BRANCH WIRE CONNECTED TO BRAKE ACTUATOR (CAN-H, CAN-L)**

OK

2	CHECK HARNESS AND CONNECTOR (IG1, GND1)

Wire Harness Side:

Brake Actuator (Skid Control ECU) Connector

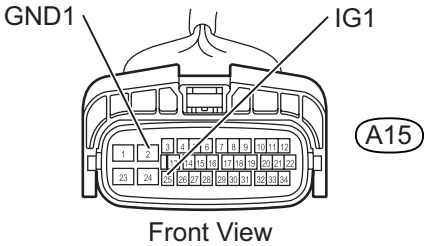

H C118165E12

(a) Disconnect the A15 brake actuator (skid control ECU) connector.
(b) Measure the resistance.
Standard resistance

Tester Connection	Condition	Specified Condition
A15-2 (GND1) - Body ground	Always	Below 1 Ω

(c) Measure the voltage.
Standard voltage

Tester Connection	Condition	Specified Condition
A15-25 (IG1) - Body ground	Ignition switch ON	11 to 14 V

NG → **REPAIR OR REPLACE HARNESS OR CONNECTOR**

OK

REPLACE BRAKE ACTUATOR (SKID CONTROL ECU)

CA

Air Conditioning Amplifier Communication Stop Mode

DESCRIPTION

Detection Item	Symptom	Trouble Area
Air Conditioning Amplifier Communication Stop Mode	• "A/C" not displayed on "BUS CHECK" screen of intelligent tester via the CAN VIM • Applies to "Air Conditioning Amplifier Communication Stop Mode" in "DTC combination table"	• Power source circuit of air conditioning amplifier • Air conditioning amplifier branch wire or connector • Air conditioning amplifier

HINT:
For vehicle with air conditioning or PTC heater only.

WIRING DIAGRAM

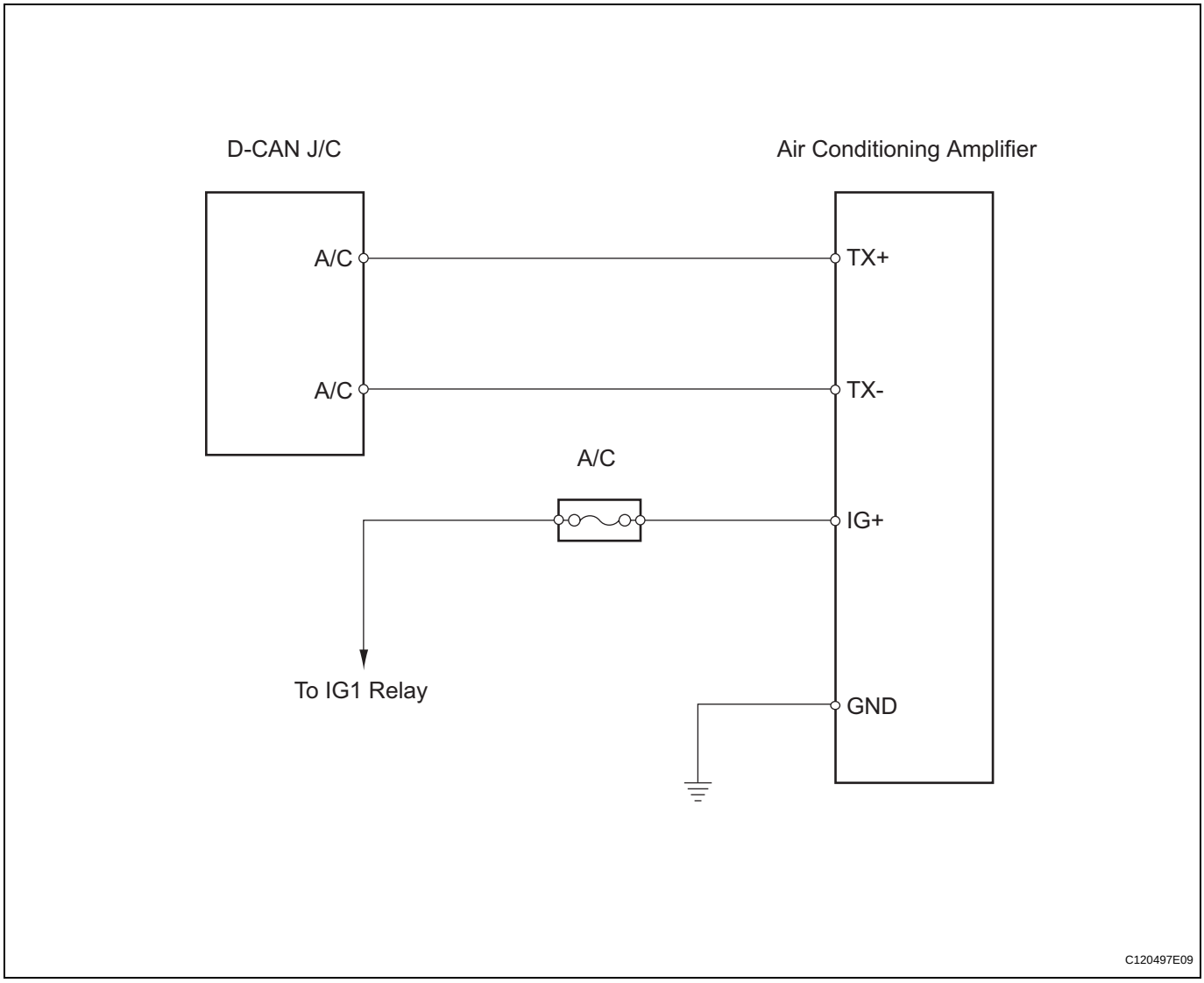

INSPECTION PROCEDURE

NOTICE:

- **Turn the ignition switch OFF before measuring the resistances of the CAN main wire and the CAN branch wire.**

- **After the ignition switch is turned off, check that the key reminder warning system and light reminder warning system are not in operation.**
- **Before measuring the resistance, leave the vehicle as is for at least 1 minute and do not operate the ignition switch, any other switches or the doors. If doors need to be opened in order to check connectors, open the doors and leave them open.**
  HINT:
  Operating the ignition switch, any switches or any doors triggers related ECU and sensor communication with the CAN, which causes resistance variation.

1	CHECK CAN BUS LINE FOR DISCONNECTION (AIR CONDITIONING AMPLIFIER BRANCH WIRE)

Wire Harness Side:

Air Conditioning Amplifier Connector

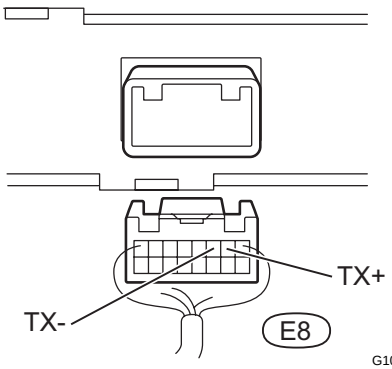

(a) Turn the ignition switch OFF.
(b) Disconnect the E8 air conditioning amplifier connector.
(c) Measure the resistance.
Standard resistance

Tester Connection	Condition	Specified Condition
E8-2 (TX+) - E8-3 (TX-)	Ignition switch OFF	54 to 69 Ω

NG → **REPAIR OR REPLACE CAN BRANCH WIRE CONNECTED TO AIR CONDITIONING AMPLIFIER (CAN-H, CAN-L)**

OK

2	CHECK HARNESS AND CONNECTOR (IG+, GND)

Wire Harness Side:

Air Conditioning Amplifier Connector

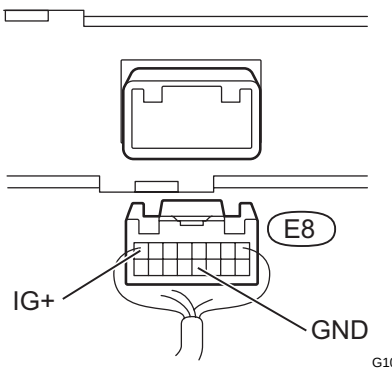

(a) Disconnect the E8 air conditioning amplifier connector.
(b) Measure the resistance.
Standard resistance

Tester Connection	Condition	Specified Condition
E8-12 (GND) - Body ground	Always	Below 1 Ω

(c) Measure the voltage.
Standard voltage

Tester Connection	Condition	Specified Condition
E8-8 (IG+) - Body ground	Ignition switch ON	11 to 14 V

NG → **REPAIR OR REPLACE HARNESS OR CONNECTOR**

OK

REPLACE AIR CONDITIONING AMPLIFIER

CA

Power Steering ECU Communication Stop Mode

DESCRIPTION

Detection Item	Symptom	Trouble Area
Power Steering ECU Communication Stop Mode	• "EPS" not displayed on "BUS CHECK" screen of intelligent tester via the CAN VIM • Applies to "Power Steering ECU Communication Stop Mode" in "DTC combination table"	• Power source circuit of power steering ECU • Power steering ECU main wire or connector • Power steering ECU

WIRING DIAGRAM

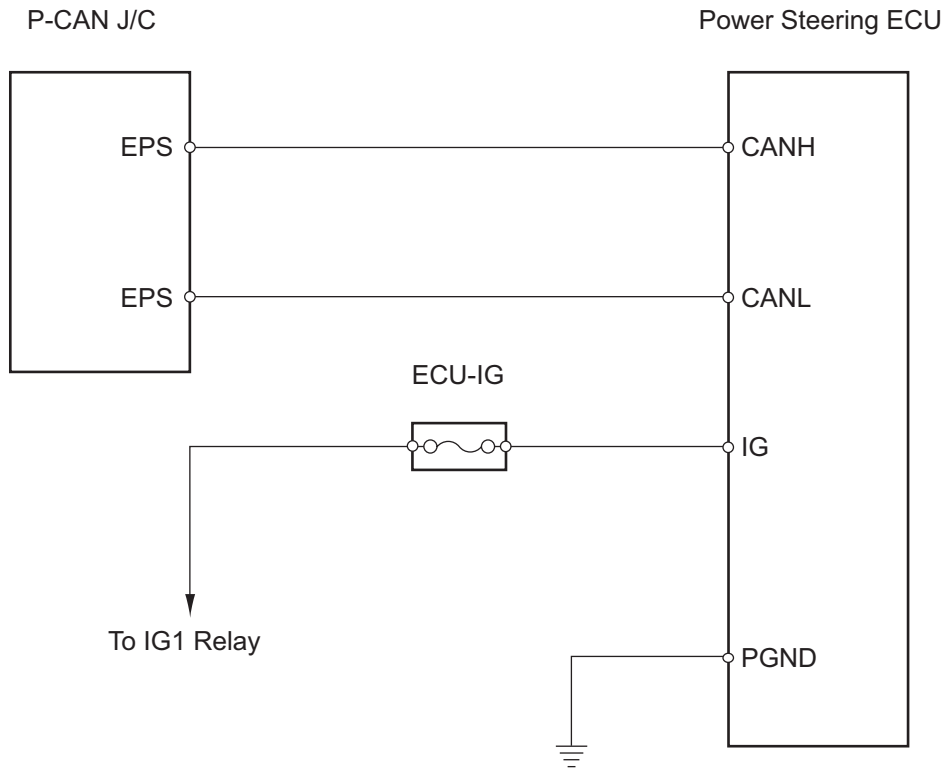

C120497E10

CA

INSPECTION PROCEDURE

NOTICE:

- **Turn the ignition switch OFF before measuring the resistances of the CAN main wire and the CAN branch wire.**
- **After the ignition switch is turned off, check that the key reminder warning system and light reminder warning system are not in operation.**

- **Before measuring the resistance, leave the vehicle as is for at least 1 minute and do not operate the ignition switch, any other switches or the doors. If doors need to be opened in order to check connectors, open the doors and leave them open.**
  HINT:
  Operating the ignition switch, any switches or any doors triggers related ECU and sensor communication with the CAN, which causes resistance variation.

1	CHECK HARNESS AND CONNECTOR (IG, PGND)

Wire Harness Side:

Power Steering ECU Connector

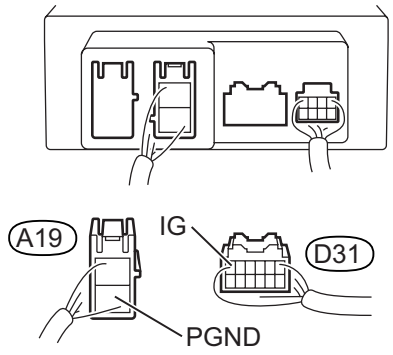

H

C118163E04

(a) Disconnect the A19 and D31 power steering ECU connectors.

(b) Measure the resistance.

Standard resistance

Tester Connection	Condition	Specified Condition
A19-2 (PGND) - Body ground	Always	Below 1 Ω

(c) Measure the voltage.

Standard voltage

Tester Connection	Condition	Specified Condition
D31-6 (IG) - Body ground	Ignition switch ON	11 to 14 V

NG → **REPAIR OR REPLACE HARNESS OR CONNECTOR**

OK

REPLACE POWER STEERING ECU

ECM Communication Stop Mode

DESCRIPTION

Detection Item	Symptom	Trouble Area
ECM Communication Stop Mode	• "ENGINE" not displayed on "BUS CHECK" screen of intelligent tester via the CAN VIM • Applies to "ECM Communication Stop Mode" in "DTC combination table"	• Power source circuit of ECM • ECM main wire or connector • ECM

WIRING DIAGRAM

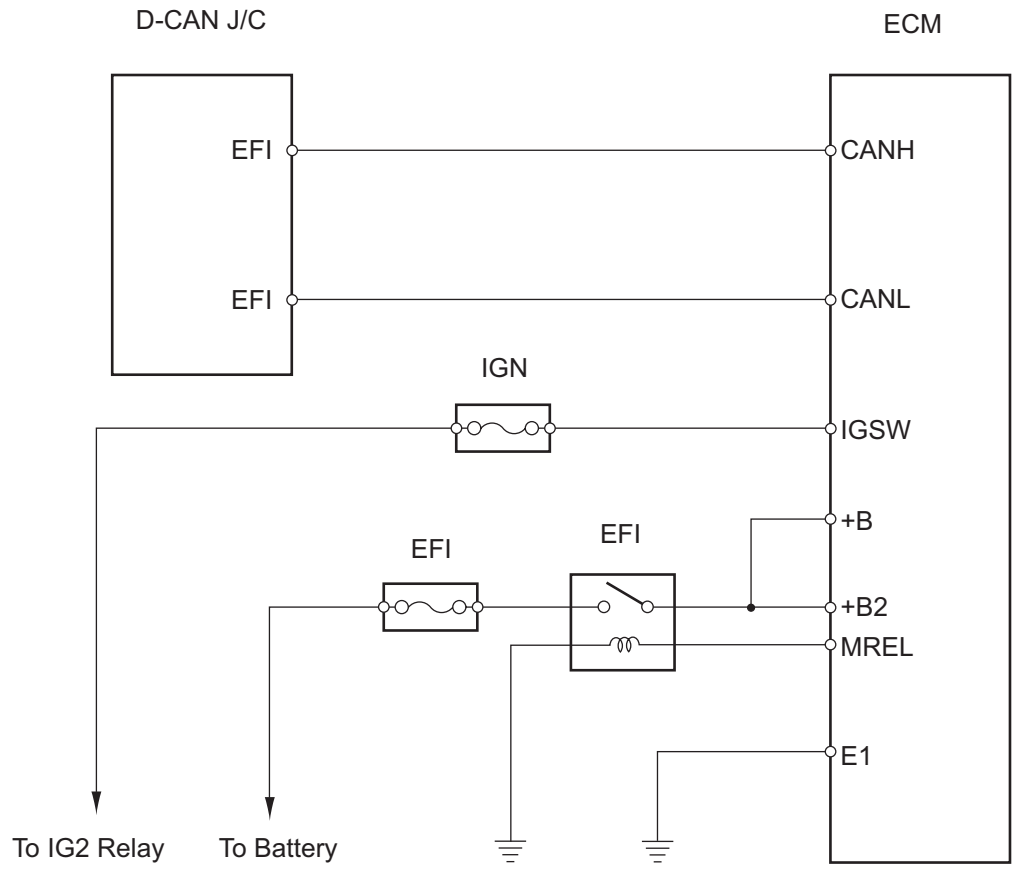

C126001E10

INSPECTION PROCEDURE

NOTICE:

- **Turn the ignition switch OFF before measuring the resistances of the CAN main wire and the CAN branch wire.**
- **After the ignition switch is turned off, check that the key reminder warning system and light reminder warning system are not in operation.**

CA

- **Before measuring the resistance, leave the vehicle as is for at least 1 minute and do not operate the ignition switch, any other switches or the doors. If doors need to be opened in order to check connectors, open the doors and leave them open.**
  HINT:
  Operating the ignition switch, any switches or any doors triggers related ECU and sensor communication with the CAN, which causes resistance variation.

1	**INSPECT ECM POWER SOURCE CIRCUIT**

(a) Inspect the power source circuit (See page ES-352).

NG → **GO TO POWER SOURCE CIRCUIT**

OK

REPLACE ECM

Main Body ECU Communication Stop Mode

DESCRIPTION

Detection Item	Symptom	Trouble Area
Main Body ECU Communication Stop Mode	• "MAIN BODY" not displayed on "BUS CHECK" screen of intelligent tester via the CAN VIM • Applies to "Main Body ECU Communication Stop Mode" in "DTC combination table"	• Power source circuit of main body ECU • Main body ECU branch wire or connector • Main body ECU

WIRING DIAGRAM

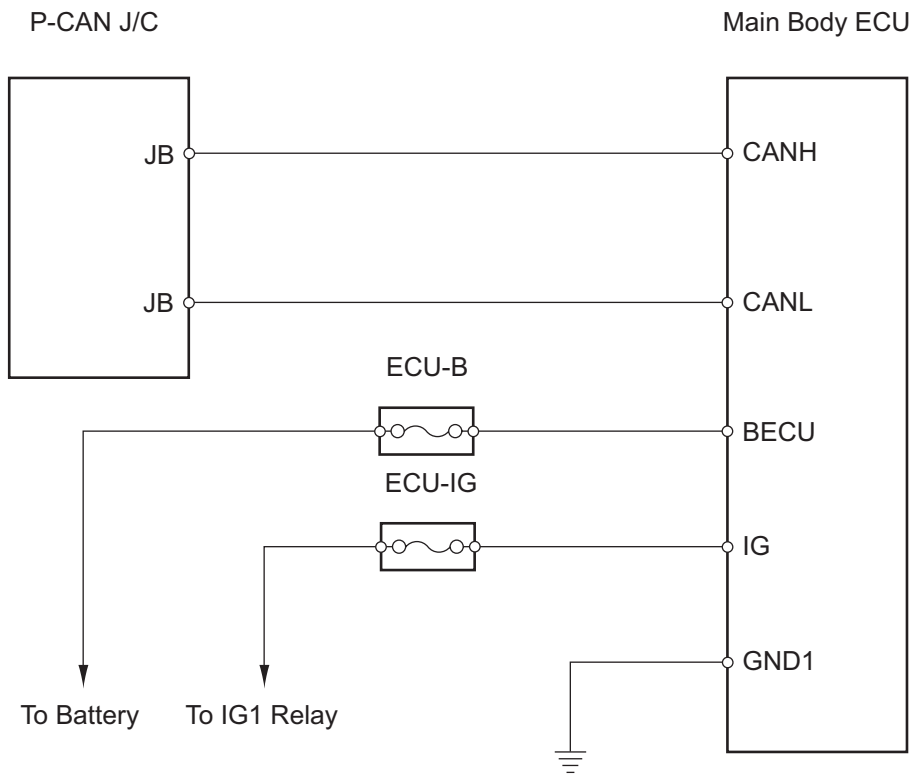

C118189E09

INSPECTION PROCEDURE

NOTICE:

- **Turn the ignition switch OFF before measuring the resistances of the CAN main wire and the CAN branch wire.**
- **After the ignition switch is turned off, check that the key reminder warning system and light reminder warning system are not in operation.**

CA

- **Before measuring the resistance, leave the vehicle as is for at least 1 minute and do not operate the ignition switch, any other switches or the doors. If doors need to be opened in order to check connectors, open the doors and leave them open.**
  HINT:
  Operating the ignition switch, any switches or any doors triggers related ECU and sensor communication with the CAN, which causes resistance variation.

1 CHECK CAN BUS LINE FOR DISCONNECTION (MAIN BODY ECU BRANCH WIRE)

Wire Harness Side:

Main Body ECU Connector

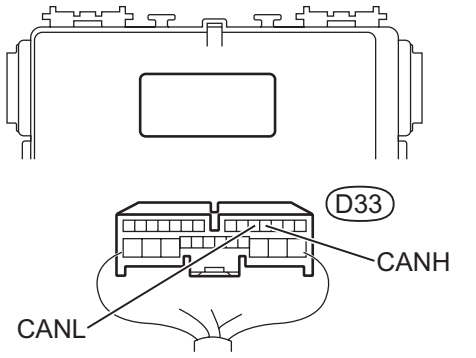

C118857E01

(a) Turn the ignition switch OFF.
(b) Disconnect the D33 main body ECU connector.
(c) Measure the resistance.
Standard resistance

Tester Connection	Condition	Specified Condition
D33-23 (CANH) - D33-22 (CANL)	Ignition switch OFF	54 to 69 Ω

NG → **REPAIR OR REPLACE CAN BRANCH WIRE CONNECTED TO MAIN BODY ECU (CAN-H, CAN-L)**

OK

2 CHECK HARNESS AND CONNECTOR (BECU, IG, GND1)

Wire Harness Side:

Main Body ECU Connector

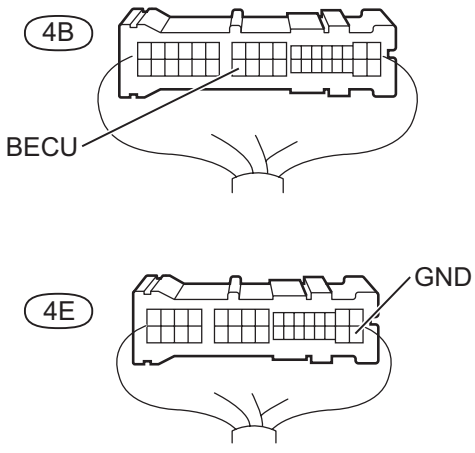

G100284E03

(a) Disconnect the 4B and 4E main body ECU connectors.
(b) Measure the resistance.
Standard resistance

Tester Connection	Condition	Specified Condition
4E-17 (GND1) - Body ground	Always	Below 1 Ω

(c) Measure the voltage.
Standard voltage

Tester Connection	Condition	Specified Condition
4B-30 (BECU) - Body ground	Always	11 to 14 V

(d) Reconnect the main body ECU connectors.

CA

Main Body ECU Rear Side:

Main Body ECU Connector

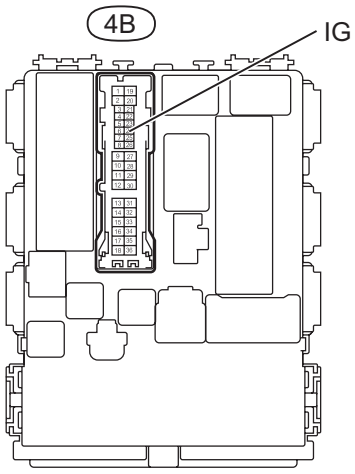

C127390E01

(e) Measure the voltage.
Standard voltage

Tester Connection	Condition	Specified Condition
4B-24 (IG) - Body ground	Ignition switch ON	11 to 14 V

NG → **REPAIR OR REPLACE HARNESS OR CONNECTOR**

OK

REPLACE MAIN BODY ECU

Combination Meter ECU Communication Stop Mode

DESCRIPTION

Detection Item	Symptom	Trouble Area
Combination Meter ECU Communication Stop Mode	• "METER" not displayed on "BUS CHECK" screen of intelligent tester via the CAN VIM • Applies to "Combination Meter ECU Communication Stop Mode" in "DTC combination table"	• Power source circuit of combination meter ECU • Combination meter ECU branch wire or connector • Combination meter ECU

WIRING DIAGRAM

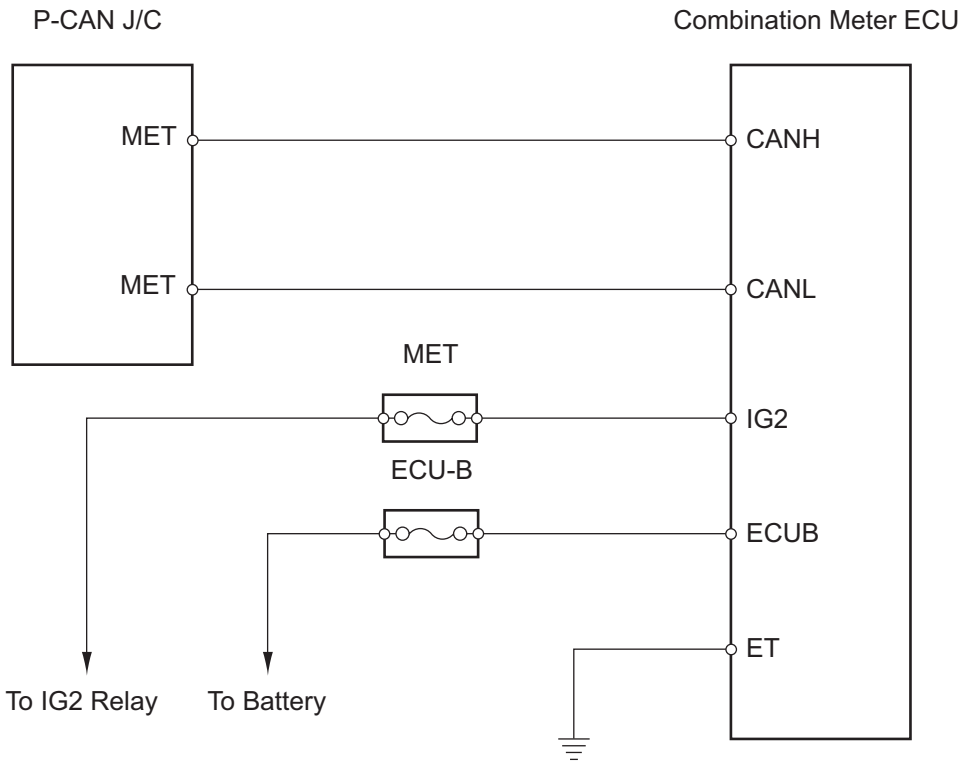

C118189E10

INSPECTION PROCEDURE

NOTICE:

- **Turn the ignition switch OFF before measuring the resistances of the CAN main wire and the CAN branch wire.**
- **After the ignition switch is turned off, check that the key reminder warning system and light reminder warning system are not in operation.**

CA

- **Before measuring the resistance, leave the vehicle as is for at least 1 minute and do not operate the ignition switch, any other switches or the doors. If doors need to be opened in order to check connectors, open the doors and leave them open.**
  HINT:
  Operating the ignition switch, any switches or any doors triggers related ECU and sensor communication with the CAN, which causes resistance variation.

1	CHECK CAN BUS LINE FOR DISCONNECTION (COMBINATION METER ECU BRANCH WIRE)

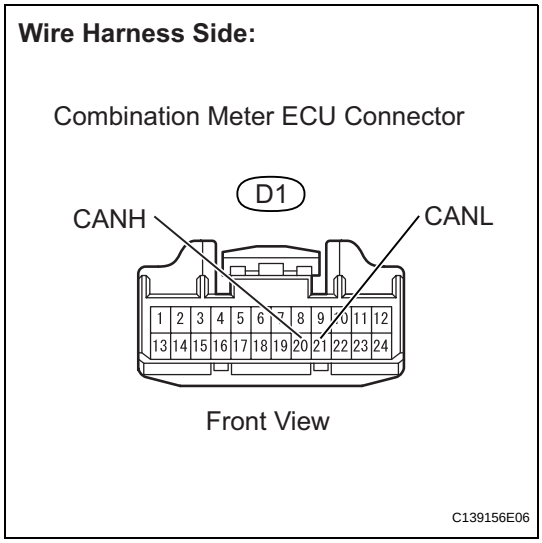

(a) Turn the ignition switch OFF.
(b) Disconnect the D1 combination meter ECU connector.
(c) Measure the resistance.
Standard resistance

Tester Connection	Condition	Specified Condition
D1-20 (CANH) - D1-21 (CANL)	Ignition switch OFF	54 to 69 Ω

NG → **REPAIR OR REPLACE CAN BRANCH WIRE CONNECTED TO COMBINATION METER ECU (CAN-H, CAN-L)**

OK

2	CHECK HARNESS AND CONNECTOR (IG2, ECUB, ET)

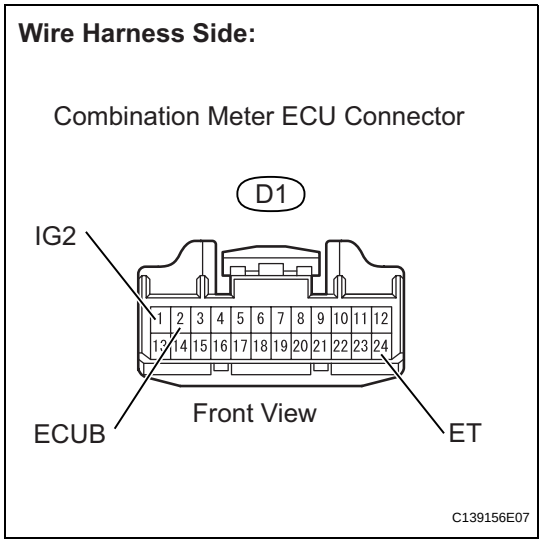

(a) Disconnect the D1 combination meter ECU connector.
(b) Measure the resistance.
Standard resistance

Tester Connection	Condition	Specified Condition
D1-24 (ET) - Body ground	Always	Below 1 Ω

(c) Measure the voltage.
Standard voltage

Tester Connection	Condition	Specified Condition
D1-1 (IG2) - Body ground	Ignition switch ON	11 to 14 V
D1-2 (ECUB) - Body ground	Always	11 to 14 V

NG → **REPAIR OR REPLACE HARNESS OR CONNECTOR**

OK

REPLACE COMBINATION METER ECU

CA

Center Airbag Sensor Communication Stop Mode

DESCRIPTION

Detection Item	Symptom	Trouble Area
Center Airbag Sensor Communication Stop Mode	• "SRS AIRBAG" not displayed on "BUS CHECK" screen of intelligent tester via the CAN VIM • Applies to "Center Airbag Sensor Communication Stop Mode" in "DTC combination table"	• Power source circuit of center airbag sensor assembly • Center airbag sensor assembly branch wire or connector • Center airbag sensor assembly

WIRING DIAGRAM

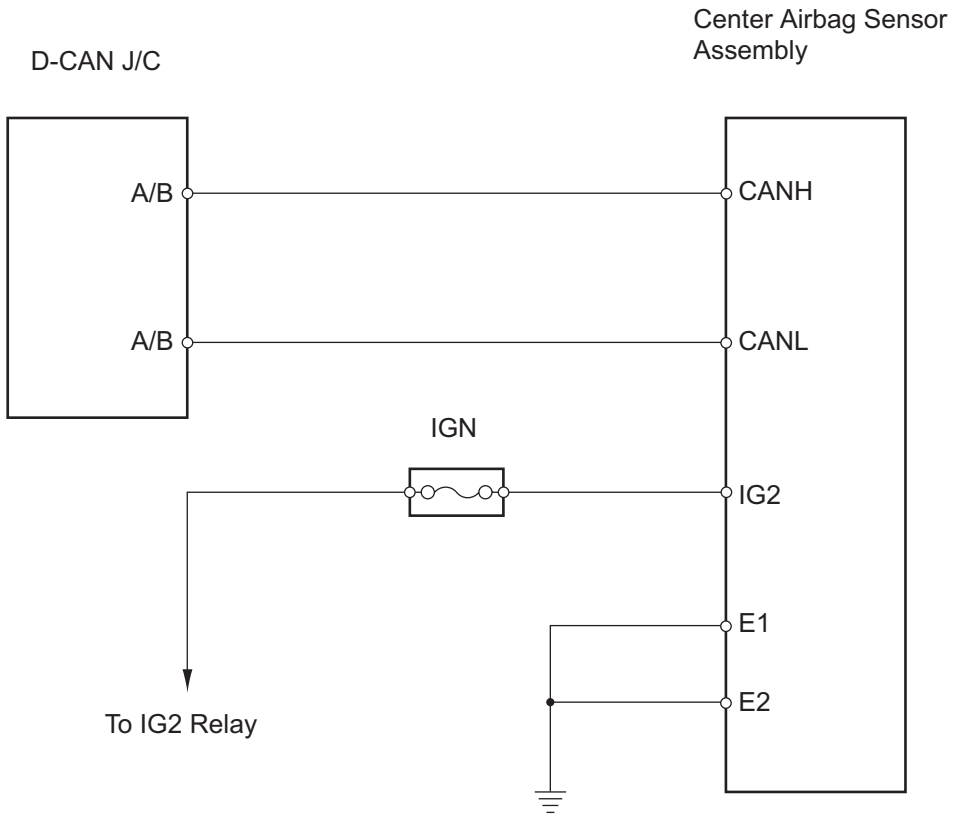

INSPECTION PROCEDURE

NOTICE:

- **Turn the ignition switch OFF before measuring the resistances of the CAN main wire and the CAN branch wire.**
- **After the ignition switch is turned off, check that the key reminder warning system and light reminder warning system are not in operation.**

CA

- **Before measuring the resistance, leave the vehicle as is for at least 1 minute and do not operate the ignition switch, any other switches or the doors. If doors need to be opened in order to check connectors, open the doors and leave them open.**
  HINT:
  Operating the ignition switch, any switches or any doors triggers related ECU and sensor communication with the CAN, which causes resistance variation.

1	CHECK CAN BUS LINE FOR DISCONNECTION (CENTER AIRBAG SENSOR ASSEMBLY BRANCH WIRE)

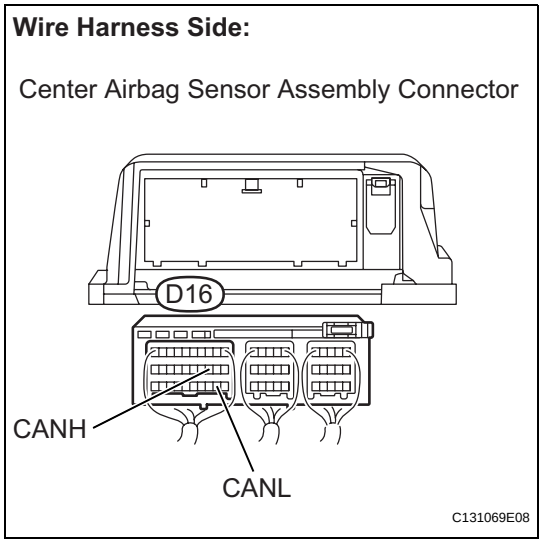

(a) Turn the ignition switch OFF.
(b) Disconnect the D16 center airbag sensor assembly connector.
(c) Measure the resistance.
Standard resistance

Tester Connection	Condition	Specified Condition
D16-13 (CANH) - D16-22 (CANL)	Ignition switch OFF	54 to 69 Ω

NG → **REPAIR OR REPLACE CAN BRANCH WIRE CONNECTED TO CENTER AIRBAG SENSOR ASSEMBLY (CAN-H, CAN-L)**

OK

2	CHECK HARNESS AND CONNECTOR (IG2, E1, E2)

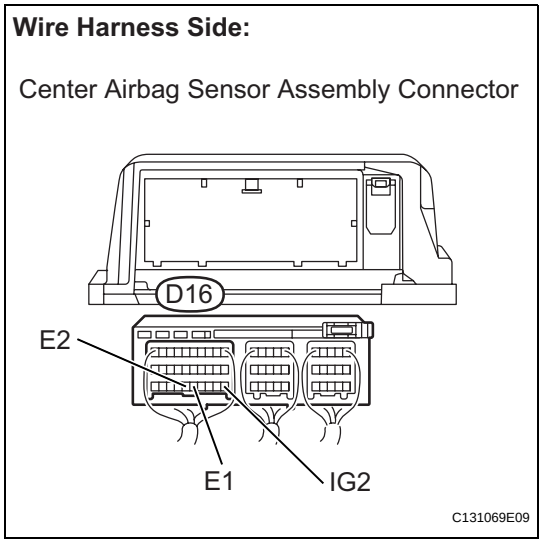

(a) Disconnect the D16 center airbag sensor assembly connector.
(b) Measure the resistance.
Standard resistance

Tester Connection	Condition	Specified Condition
D16-25 (E1) - Body ground	Always	Below 1 Ω
D16-26 (E2) - Body ground	Always	Below 1 Ω

(c) Measure the voltage.
Standard voltage

Tester Connection	Condition	Specified Condition
D16-21 (IG2) - Body ground	Ignition switch ON	11 to 14 V

NG → **REPAIR OR REPLACE HARNESS OR CONNECTOR**

OK

REPLACE CENTER AIRBAG SENSOR ASSEMBLY

CA

CAN Bus Line

DESCRIPTION

When any DTC for the CAN communication system is output, first measure the resistance between the terminals of the DLC3 to specify the trouble area, and check that there is no short in the CAN main wire, between the CAN bus lines, to +B, or to GND.

WIRING DIAGRAM

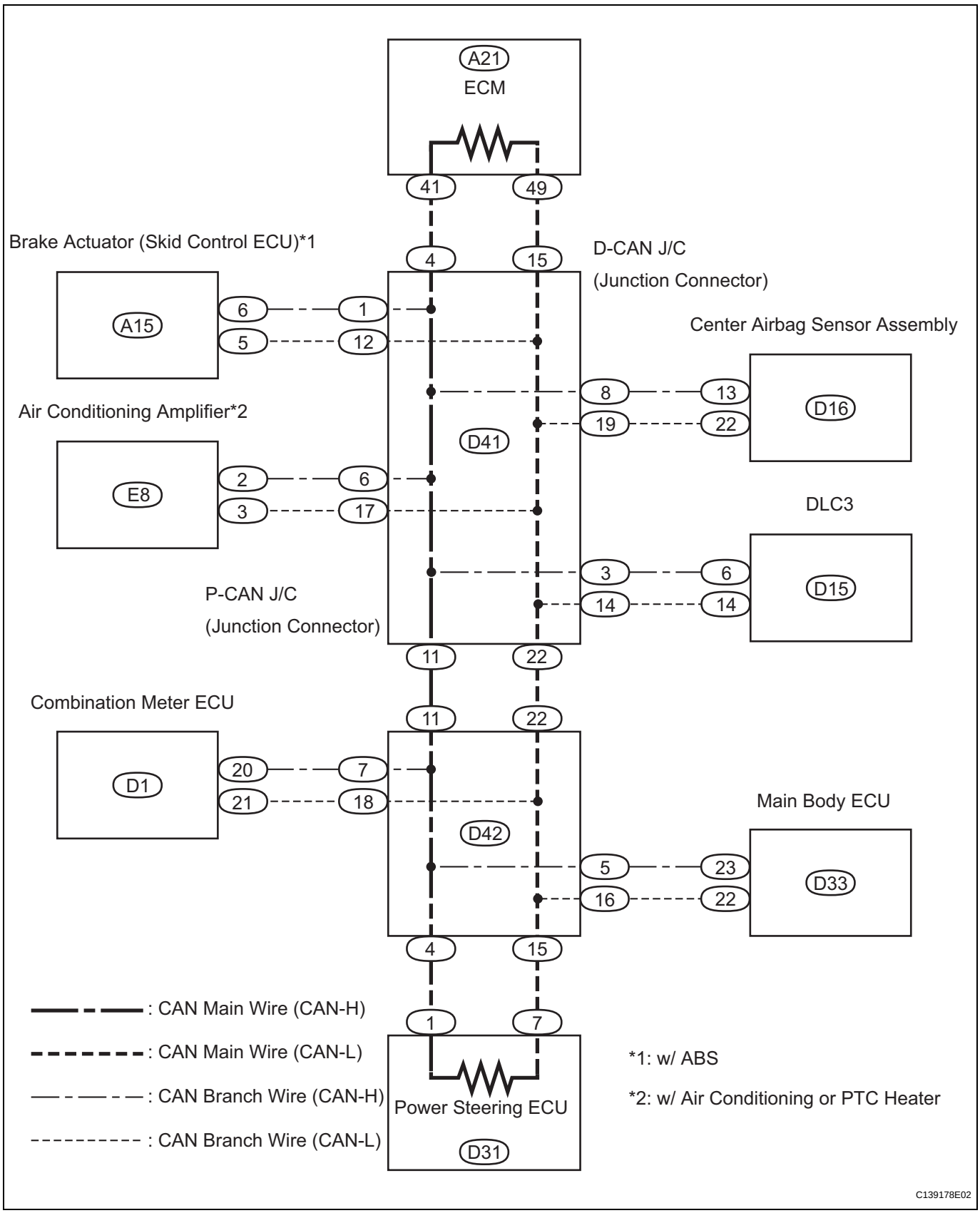

CA

INSPECTION PROCEDURE

NOTICE:

- **Turn the ignition switch OFF before measuring the resistances of the CAN main wire and the CAN branch wire.**
- **After the ignition switch is turned off, check that the key reminder warning system and light reminder warning system are not in operation.**
- **Before measuring the resistance, leave the vehicle as is for at least 1 minute and do not operate the ignition switch, any other switches or the doors. If doors need to be opened in order to check connectors, open the doors and leave them open.**

  HINT:

  Operating the ignition switch, any switches or any doors triggers related ECU and sensor communication with the CAN, which causes resistance variation.

1 CHECK CAN BUS WIRE (MAIN WIRE FOR DISCONNECTION, BUS LINES FOR SHORT CIRCUIT)

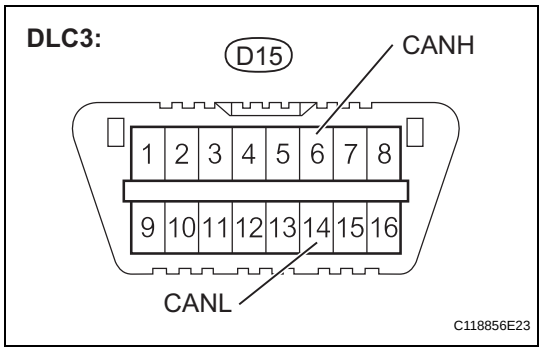

(a) Turn the ignition switch OFF.

(b) Measure the resistance.

Standard resistance

Tester Connection	Condition	Specified Condition	Proceed to
D15-6 (CANH) - D15-14 (CANL)	Ignition switch OFF	54 to 69 Ω	OK
D15-6 (CANH) - D15-14 (CANL)	Ignition switch OFF	69 Ω or higher	NG-A
D15-6 (CANH) - D15-14 (CANL)	Ignition switch OFF	54 Ω or less	NG-B

NG-A → **CHECK CAN MAIN WIRE (FOR OPEN CIRCUIT)**

NG-B → **CHECK CAN BUS WIRE (FOR SHORT CIRCUIT)**

OK

2 CHECK CAN BUS WIRE (FOR SHORT TO +B)

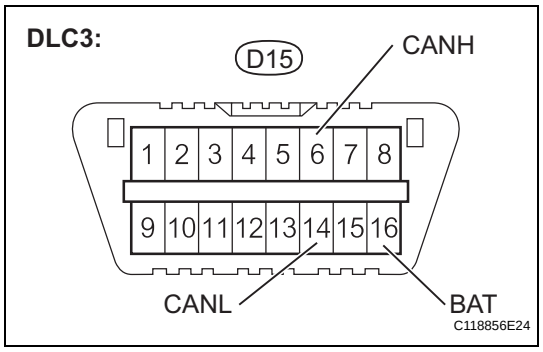

(a) Turn the ignition switch OFF.

(b) Measure the resistance.

Result

Tester Connection	Condition	Specified Condition	Proceed to
D15-6 (CANH) - D15-16 (BAT)	Ignition switch OFF	1 Ω or higher	OK
D15-14 (CANL) - D15-16 (BAT)	Ignition switch OFF	1 Ω or higher	OK
D15-6 (CANH) - D15-16 (BAT)	Ignition switch OFF	Below 1 Ω	NG
D15-14 (CANL) - D15-16 (BAT)	Ignition switch OFF	Below 1 Ω	NG

NG → **CHECK CAN BUS WIRE (FOR SHORT TO +B)**

CA

OK

3	CHECK CAN BUS WIRE (FOR SHORT TO GND)

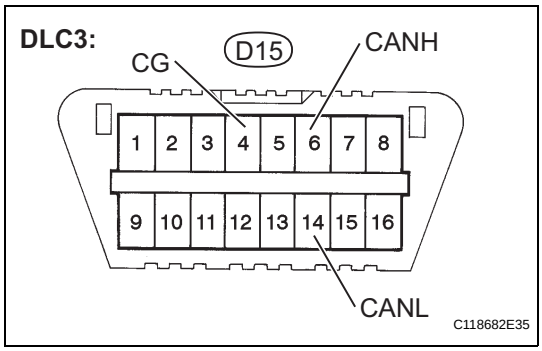

(a) Turn the ignition switch OFF.
(b) Measure the resistance.

Result

Tester Connection	Condition	Specified Condition	Proceed to
D15-6 (CANH) - D15-4 (CG)	Ignition switch OFF	1 Ω or higher	OK
D15-14 (CANL) - D15-4 (CG)	Ignition switch OFF	1 Ω or higher	OK
D15-6 (CANH) - D15-4 (CG)	Ignition switch OFF	Below 1 Ω	NG
D15-14 (CANL) - D15-4 (CG)	Ignition switch OFF	Below 1 Ω	NG

NG → CHECK CAN BUS WIRE (FOR SHORT TO GND)

OK

HOW TO PROCEED WITH TROUBLESHOOTING

Open in CAN Main Wire

DESCRIPTION

There may be an open circuit in the CAN main wire and/or the DLC3 branch wire when the resistance between terminals 6 (CANH) and 14 (CANL) of the DLC3 is 69 Ω or higher.

Symptom	Trouble Area
Resistance between terminals 6 (CANH) and 14 (CANL) of DLC3 is 69 Ω or higher.	• CAN main wire or connector • D-CAN J/C (Junction connector) • P-CAN J/C (Junction connector) • ECM • Power steering ECU

WIRING DIAGRAM

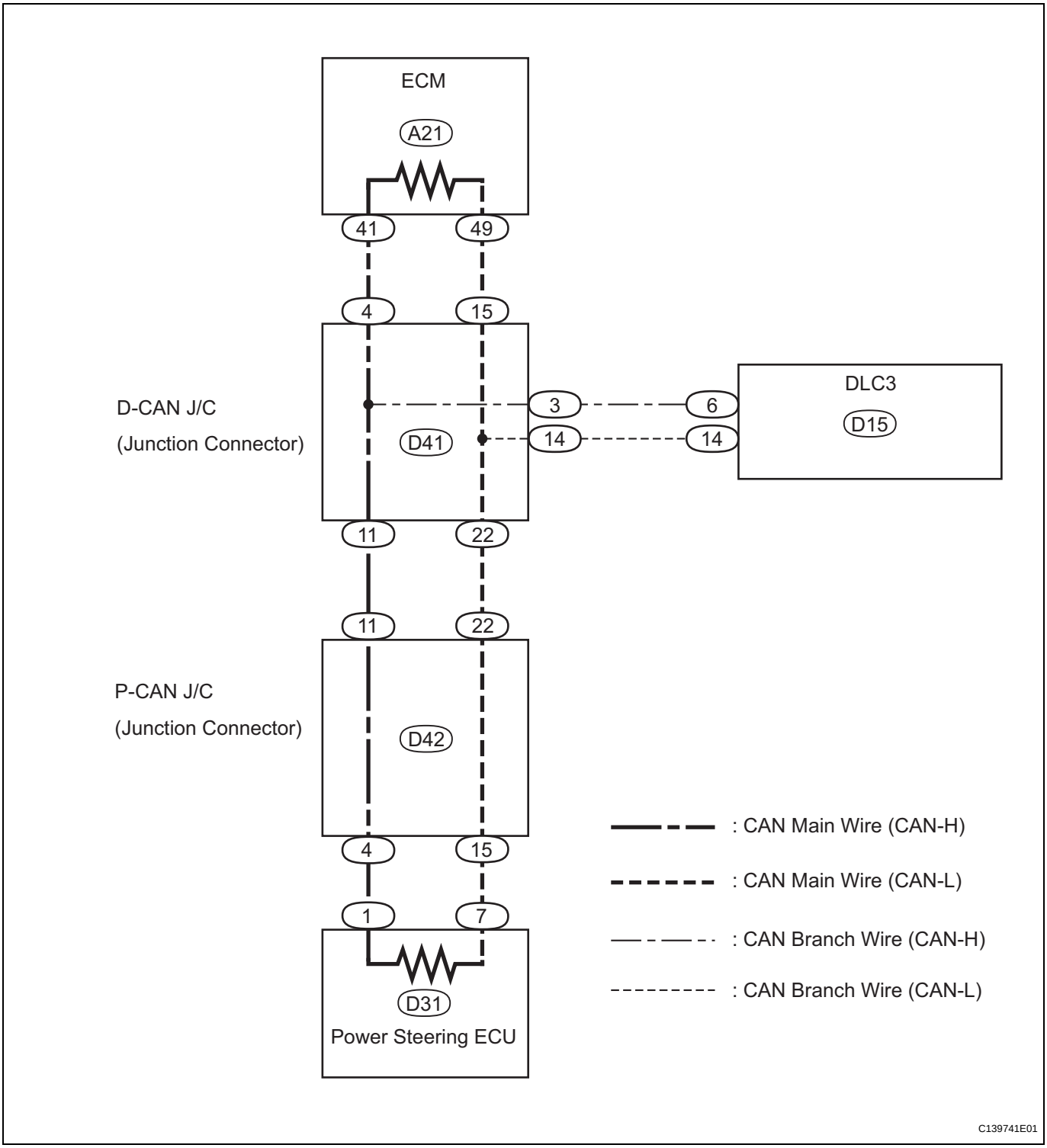

INSPECTION PROCEDURE

NOTICE:

- **Turn the ignition switch OFF before measuring the resistances of the CAN main wire and the CAN branch wire.**
- **After the ignition switch is turned off, check that the key reminder warning system and light reminder warning system are not in operation.**

CA

- **Before measuring the resistance, leave the vehicle as is for at least 1 minute and do not operate the ignition switch, any other switches or the doors. If doors need to be opened in order to check connectors, open the doors and leave them open.**
  HINT:
  Operating the ignition switch, any switches or any doors triggers related ECU and sensor communication with the CAN, which causes resistance variation.

1 CHECK DLC3

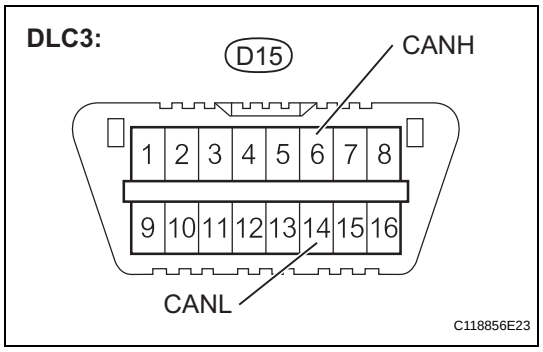

(a) Turn the ignition switch OFF.
(b) Measure the resistance.
Standard resistance

Tester Connection	Condition	Specified Condition	Proceed to
D15-6 (CANH) - D15-14 (CANL)	Ignition switch OFF	108 to 132 Ω	A
D15-6 (CANH) - D15-14 (CANL)	Ignition switch OFF	132 Ω or higher	B

NOTICE:
When the measured value is 132 Ω or higher and a CAN communication system diagnostic trouble code is output, there may be a fault besides disconnection of the DLC3 branch wire. For that reason, troubleshooting should be performed again from "HOW TO PROCEED WITH TROUBLESHOOTING" (See page CA-9) after repairing the trouble area.

B → **REPAIR OR REPLACE CAN BRANCH WIRE CONNECTED TO DLC3 (CAN-H, CAN-L)**

A

2 CHECK CAN MAIN WIRE FOR DISCONNECTION (D-CAN SIDE)

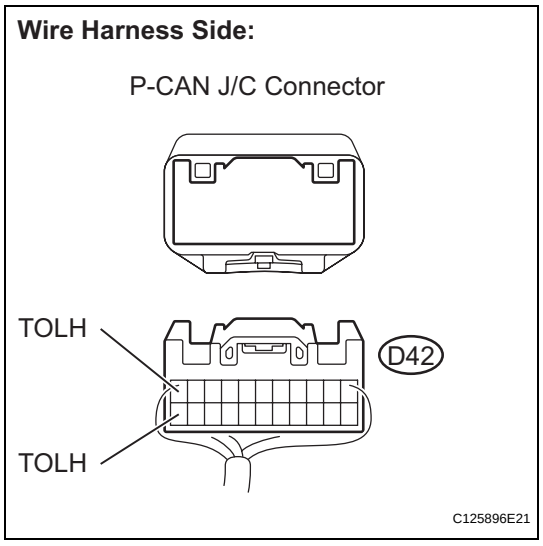

(a) Turn the ignition switch OFF.
(b) Disconnect the D42 P-CAN J/C connector.
(c) Measure the resistance.
Standard resistance

Tester Connection	Condition	Specified Condition
D42-11 (TOLH) - D42-22 (TOLH)	Ignition switch OFF	108 to 132 Ω

OK → **Go to step 8**

NG

CA

3	CONNECT CONNECTOR

(a) Reconnect the P-CAN J/C connector.

NEXT

4	CHECK CAN MAIN WIRE FOR DISCONNECTION (ECM)

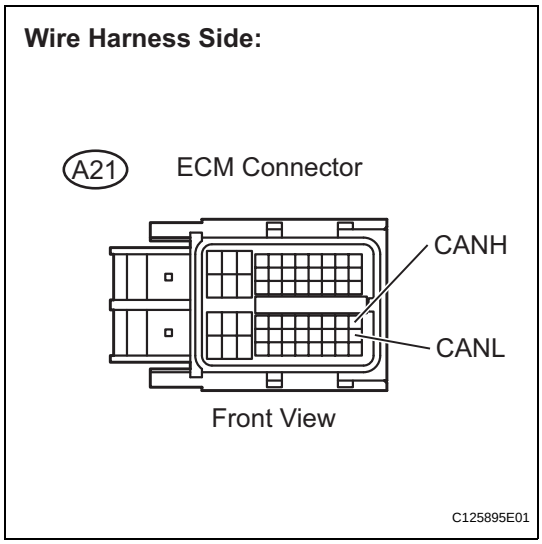

(a) Turn the ignition switch OFF.
(b) Disconnect the A21 ECM connector.
(c) Measure the resistance.
Standard resistance

Tester Connection	Condition	Specified Condition
A21-41 (CANH) - A21-49 (CANL)	Ignition switch OFF	108 to 132 Ω

OK → REPLACE ECM

NG

5	CONNECT CONNECTOR

(a) Reconnect the ECM connector.

NEXT

6	CHECK CAN MAIN WIRE FOR DISCONNECTION (D-CAN J/C - ECM)

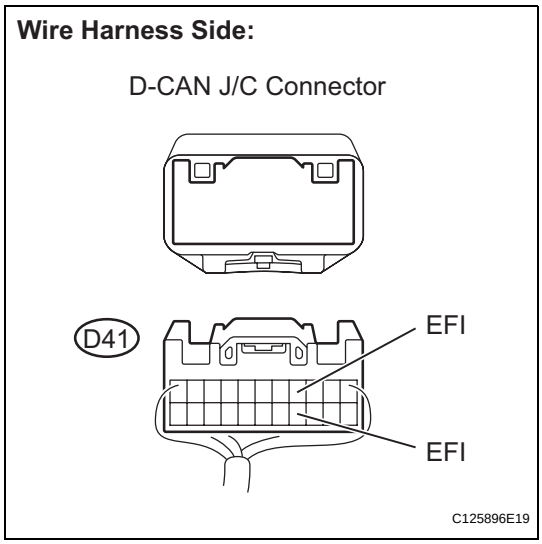

(a) Turn the ignition switch OFF.
(b) Disconnect the D41 D-CAN J/C connector.
(c) Measure the resistance.
Standard resistance

Tester Connection	Condition	Specified Condition
D41-4 (EFI) - D41-15 (EFI)	Ignition switch OFF	108 to 132 Ω

NG → REPAIR OR REPLACE CAN MAIN WIRE OR CONNECTOR (D-CAN J/C - ECM (CAN-H, CAN-L))

CA

OK

7	CHECK CAN MAIN WIRE FOR DISCONNECTION (D-CAN J/C - P-CAN J/C)

Wire Harness Side:

D-CAN J/C Connector

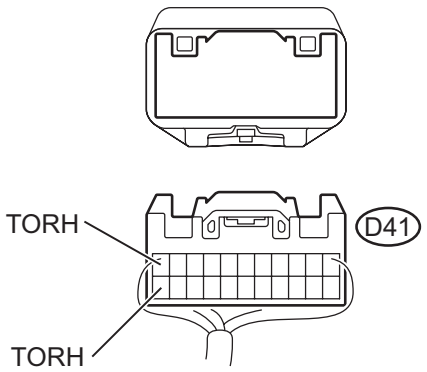

(a) Turn the ignition switch OFF.
(b) Disconnect the D41 D-CAN J/C connector.
(c) Measure the resistance.

Standard resistance

Tester Connection	Condition	Specified Condition
D42-11 (TORH) - D42-22 (TORH)	Ignition switch OFF	108 to 132 Ω

NG → **REPAIR OR REPLACE CAN MAIN WIRE OR CONNECTOR (D-CAN J/C - P-CAN J/C (CAN-H, CAN-L))**

OK

REPLACE D-CAN J/C (JUNCTION CONNECTOR)

8	CONNECT CONNECTOR

(a) Reconnect the P-CAN J/C connector.

NEXT

9	CHECK CAN MAIN WIRE FOR DISCONNECTION (POWER STEERING ECU)

Wire Harness Side:

Power Steering ECU Connector

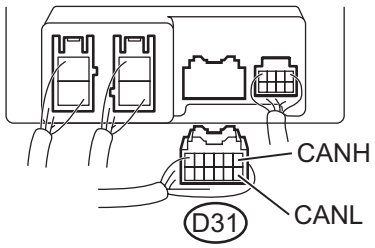

(a) Turn the ignition switch OFF.
(b) Disconnect the D31 power steering ECU connector.
(c) Measure the resistance.

Standard resistance

Tester Connection	Condition	Specified Condition
D31-1 (CANH) - D31-7 (CANL)	Ignition switch OFF	108 to 132 Ω

OK → **REPLACE POWER STEERING ECU**

CA

NG

10	CONNECT CONNECTOR

(a) Reconnect the power steering ECU connector.

NEXT

11	CHECK CAN MAIN WIRE FOR DISCONNECTION (P-CAN J/C - POWER STEERING ECU)

Wire Harness Side:

P-CAN J/C Connector

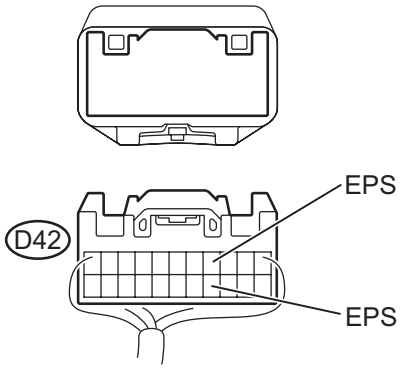

(a) Turn the ignition switch OFF.
(b) Disconnect the D42 P-CAN J/C connector.
(c) Measure the resistance.

Standard resistance

Tester Connection	Condition	Specified Condition
D42-4 (EPS) - D42-15 (EPS)	Ignition switch OFF	108 to 132 Ω

NG → **REPAIR OR REPLACE CAN MAIN WIRE OR CONNECTOR (P-CAN J/C - POWER STEERING ECU (CAN-H, CAN-L))**

OK

REPLACE P-CAN J/C (JUNCTION CONNECTOR)

Short in CAN Bus Lines

DESCRIPTION

There may a short circuit in the CAN main wire and/or CAN branch wire when the resistance between terminals 6 (CANH) and 14 (CANL) of the DLC3 is below 54 Ω.

Symptom	Trouble Area
Resistance between terminals 6 (CANH) and 14 (CANL) of DLC3 below 54 Ω	• Short between CAN bus lines • Brake actuator (Skid control ECU)*1 • Power steering ECU • ECM • Center airbag sensor assembly • Air conditioning amplifier*2 • Combination meter ECU • Main body ECU • D-CAN J/C (Junction connector) • P-CAN J/C (Junction connector)

HINT:

- *1: w/ ABS
- *2: w/ Air conditioning or PTC heater

WIRING DIAGRAM

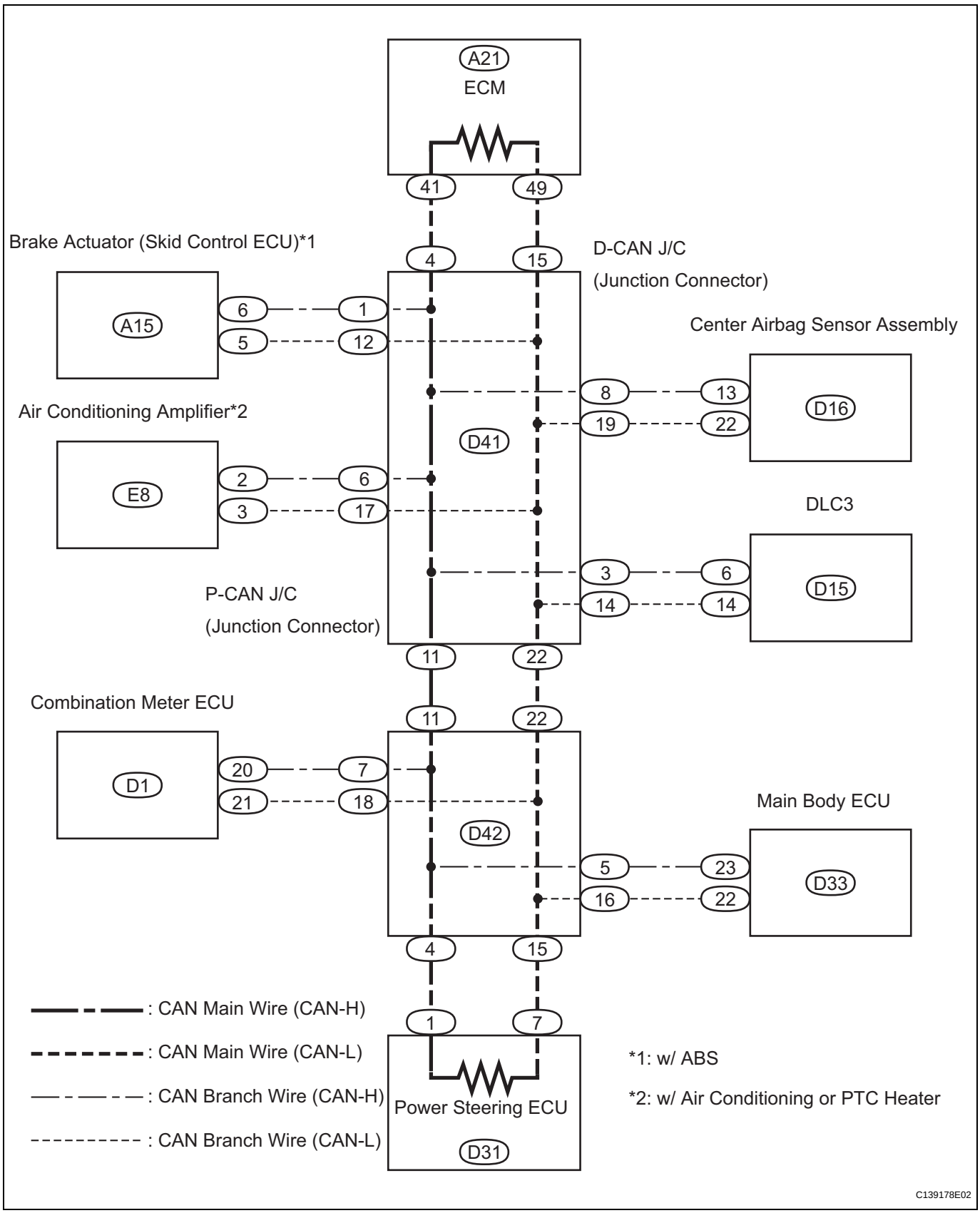

CA

INSPECTION PROCEDURE

NOTICE:

- **Turn the ignition switch OFF before measuring the resistances of the CAN main wire and the CAN branch wire.**
- **After the ignition switch is turned off, check that the key reminder warning system and light reminder warning system are not in operation.**
- **Before measuring the resistance, leave the vehicle as is for at least 1 minute and do not operate the ignition switch, any other switches or the doors. If doors need to be opened in order to check connectors, open the doors and leave them open.**
  HINT:
  Operating the ignition switch, any switches or any doors triggers related ECU and sensor communication with the CAN, which causes resistance variation.

1	CHECK CAN BUS LINES FOR SHORT CIRCUIT (DLC3 BRANCH WIRE)

Wire Harness Side:

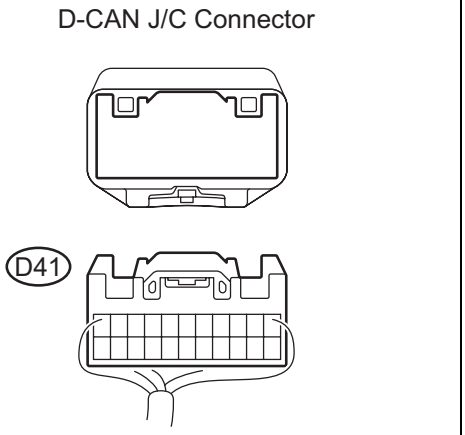

(a) Turn the ignition switch OFF.
(b) Disconnect the D41 D-CAN J/C connector.

DLC3:

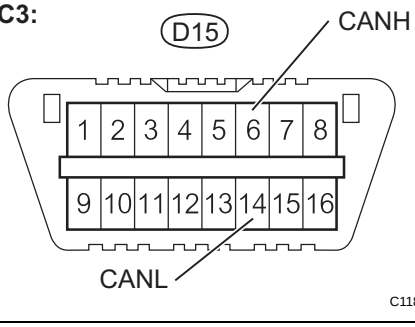

(c) Measure the resistance.
Result

Tester Connection	Condition	Specified Condition	Proceed to
D15-6 (CANH) - D15-14 (CANL)	Ignition switch OFF	1 Ω or higher	OK
D15-6 (CANH) - D15-14 (CANL)	Ignition switch OFF	Below 1 Ω	NG

CA

NG → **REPAIR OR REPLACE CAN BRANCH WIRE CONNECTED TO DLC3 (CAN-H, CAN-L)**

OK

2	CONNECT CONNECTOR

(a) Reconnect the D-CAN J/C connector.

NEXT

3 CHECK CAN BUS LINES FOR SHORT CIRCUIT (P-CAN J/C SIDE)

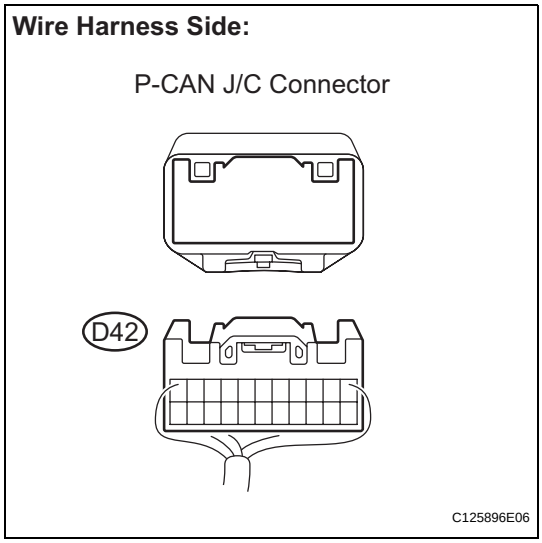

(a) Turn the ignition switch OFF.
(b) Disconnect the D42 P-CAN J/C connector.

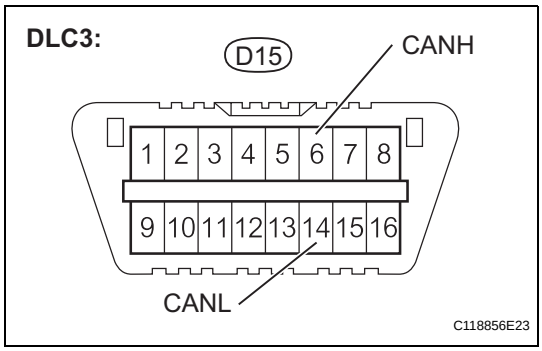

(c) Measure the resistance.
Standard resistance

Tester Connection	Condition	Specified Condition
D15-6 (CANH) - D15-14 (CANL)	Ignition switch OFF	108 to 132 Ω

OK → **Go to step 14**

NG

4 CHECK CAN BUS LINES FOR SHORT CIRCUIT (D-CAN J/C - P-CAN J/C)

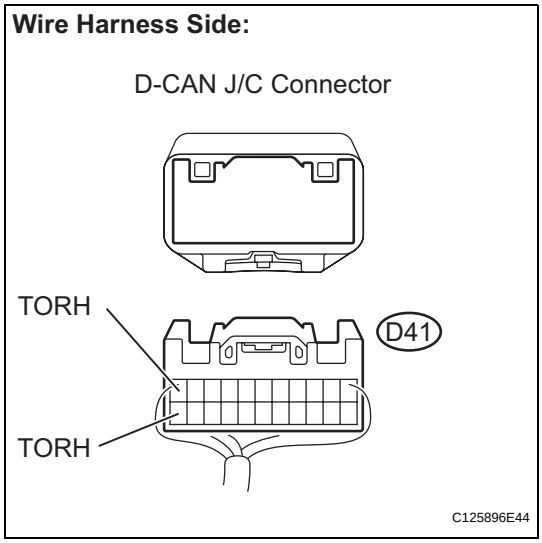

(a) Turn the ignition switch OFF.
(b) Disconnect the D41 D-CAN J/C connector.
(c) Measure the resistance.
HINT:
The resistance must be measured after the D42 P-CAN J/C connector is disconnected.
Result

Tester Connection	Condition	Specified Condition	Proceed to
D41-11 (TORH) - D41-22 (TORH)	Ignition switch OFF	1 Ω or higher	OK
D41-11 (TORH) - D41-22 (TORH)	Ignition switch OFF	Below 1 Ω	NG

NG → **REPAIR OR REPLACE CAN MAIN WIRE OR CONNECTOR (D-CAN J/C - P-CAN J/C (CAN-H, CAN-L))**

CA

OK

5	CONNECT CONNECTOR

(a) Reconnect the P-CAN J/C connector.

NEXT

6	CHECK CAN BUS LINES FOR SHORT CIRCUIT (D-CAN J/C - ECM)

Wire Harness Side:

D-CAN J/C Connector

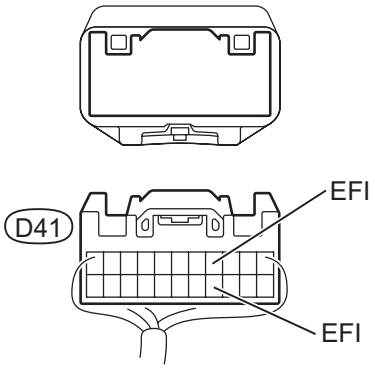

C125896E23

(a) Measure the resistance.
HINT:
The resistance must be measured after the D41 D-CAN J/C connector is disconnected.
Standard resistance

Tester Connection	Condition	Specified Condition
D41-4 (EFI) - D41-15 (EFI)	Ignition switch OFF	108 to 132 Ω

OK → **Go to step 10**

NG

7	CHECK CAN BUS LINES FOR SHORT CIRCUIT (D-CAN J/C - BRAKE ACTUATOR (SKID CONTROL ECU))

NOTICE:
For vehicles without ABS, go to step 8.

Wire Harness Side:

D-CAN J/C Connector

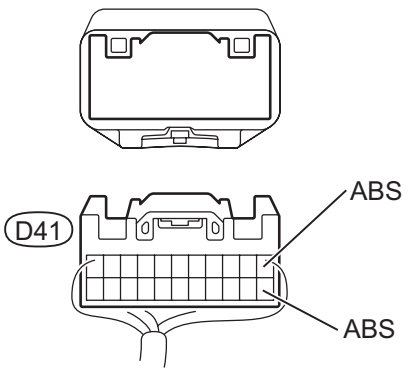

C125896E24

(a) Measure the resistance.
HINT:
The resistance must be measured after the D41 D-CAN J/C connector is disconnected.
Result

Tester Connection	Condition	Specified Condition	Proceed to
D41-1 (ABS) - D41-12 (ABS)	Ignition switch OFF	Below 1 Ω	A
D41-1 (ABS) - D41-12 (ABS)	Ignition switch OFF	1 Ω or higher	B

A → **Go to step 11**

B

CA

8	**CHECK CAN BUS LINES FOR SHORT CIRCUIT (D-CAN J/C - AIR CONDITIONING AMPLIFIER)**

Wire Harness Side:

D-CAN J/C Connector

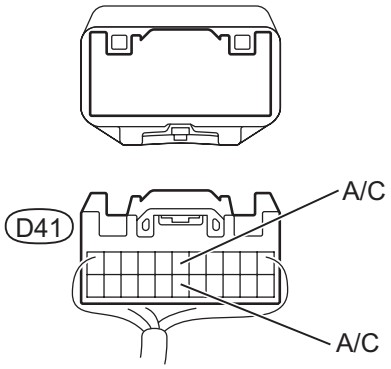

C125896E26

NOTICE:
For vehicles without air conditioning or PTC heater, go to step 9.

(a) Measure the resistance.
HINT:
The resistance must be measured after the D41 D-CAN J/C connector is disconnected.
Result

Tester Connection	Condition	Specified Condition	Proceed to
D41-6 (A/C) - D41-17 (A/C)	Ignition switch OFF	Below 1 Ω	A
D41-6 (A/C) - D41-17 (A/C)	Ignition switch OFF	1 Ω or higher	B

A → **Go to step 12**

B

9	**CHECK CAN BUS LINES FOR SHORT CIRCUIT (D-CAN J/C - CENTER AIRBAG SENSOR ASSEMBLY)**

Wire Harness Side:

D-CAN J/C Connector

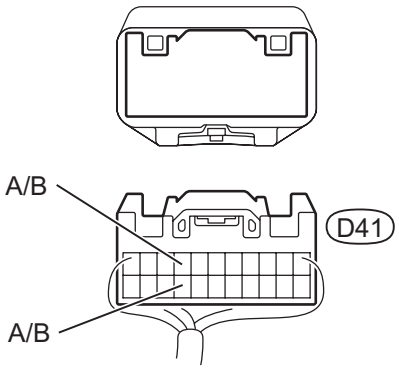

C125896E27

(a) Measure the resistance.
HINT:
The resistance must be measured after the D41 D-CAN J/C connector is disconnected.
Result

Tester Connection	Condition	Specified Condition	Proceed to
D41-8 (A/B) - D41-19 (A/B)	Ignition switch OFF	Below 1 Ω	A
D41-8 (A/B) - D41-19 (A/B)	Ignition switch OFF	1 Ω or higher	B

A → **Go to step 13**

B

REPLACE D-CAN J/C (JUNCTION CONNECTOR)

CA

10	CHECK CAN BUS LINES FOR SHORT CIRCUIT (ECM MAIN WIRE)

Wire Harness Side:

ECM Connector

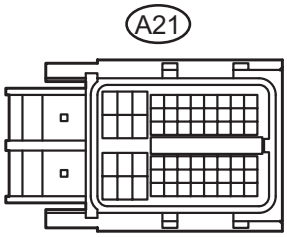

Front View

C125895E08

(a) Disconnect the A21 ECM connector.

Wire Harness Side:

D-CAN J/C Connector

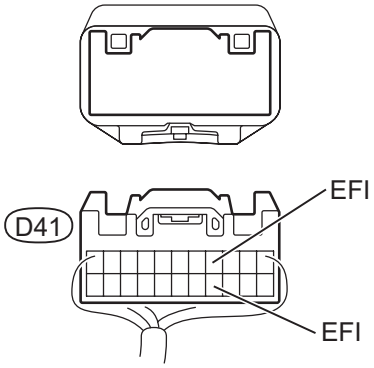

C125896E23

(b) Measure the resistance.
HINT:
The resistance must be measured after the D41 D-CAN J/C connector is disconnected.
Result

Tester Connection	Condition	Specified Condition	Proceed to
D41-4 (EFI) - D41-15 (EFI)	Ignition switch OFF	1 Ω or higher	OK
D41-4 (EFI) - D41-15 (EFI)	Ignition switch OFF	Below 1 Ω	NG

OK → **REPLACE ECM**

NG

REPAIR OR REPLACE CAN MAIN WIRE CONNECTED TO ECM (D-CAN J/C - ECM (CAN-H, CAN-L))

CA

11	CHECK CAN BUS LINES FOR SHORT CIRCUIT (BRAKE ACTUATOR (SKID CONTROL ECU) BRANCH WIRE)

Wire Harness Side:

Brake Actuator (Skid Control ECU) Connector

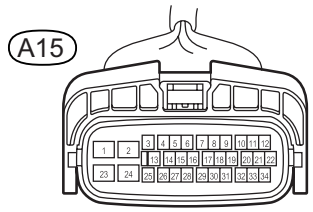

Front View

H

C118165E05

(a) Disconnect the A15 brake actuator (skid control ECU) connector.

Wire Harness Side:

D-CAN J/C Connector

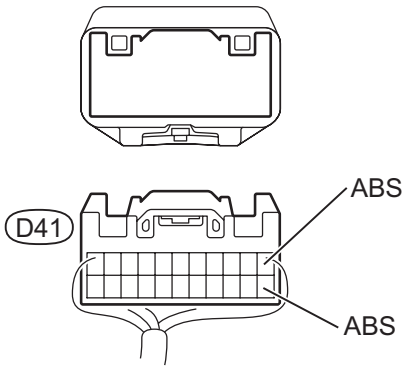

C125896E24

(b) Measure the resistance.
HINT:
The resistance must be measured after the D41 D-CAN J/C connector is disconnected.
Result

Tester Connection	Condition	Specified Condition	Proceed to
D41-1 (ABS) - D41-12 (ABS)	Ignition switch OFF	1 Ω or higher	OK
D41-1 (ABS) - D41-12 (ABS)	Ignition switch OFF	Below 1 Ω	NG

OK → **REPLACE BRAKE ACTUATOR ASSEMBLY (SKID CONTROL ECU)**

NG

REPAIR OR REPLACE CAN BRANCH WIRE CONNECTED TO BRAKE ACTUATOR (D-CAN J/C - BRAKE ACTUATOR (SKID CONTROL ECU) (CAN-H, CAN-L))

CA

12	CHECK CAN BUS LINES FOR SHORT CIRCUIT (AIR CONDITIONING AMPLIFIER BRANCH WIRE)

Wire Harness Side:

Air Conditioning Amplifier Connector

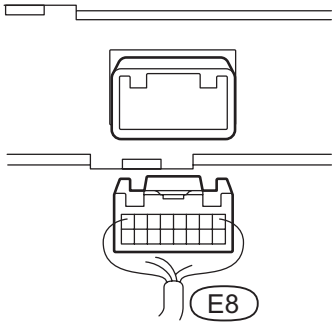

C131847E04

(a) Disconnect the E8 air conditioning amplifier connector.

Wire Harness Side:

D-CAN J/C Connector

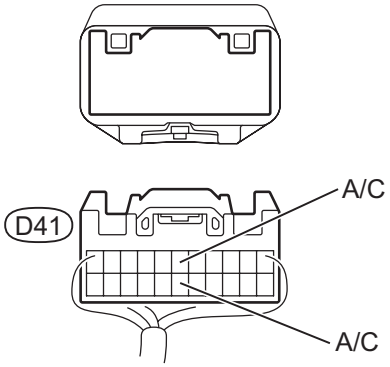

C125896E26

(b) Measure the resistance.
HINT:
The resistance must be measured after the D41 D-CAN J/C connector is disconnected.
Result

Tester Connection	Condition	Specified Condition	Proceed to
D41-6 (A/C) - D41-17 (A/C)	Ignition switch OFF	1 Ω or higher	OK
D41-6 (A/C) - D41-17 (A/C)	Ignition switch OFF	Below 1 Ω	NG

OK → **REPLACE AIR CONDITIONING AMPLIFIER**

NG

REPAIR OR REPLACE CAN BRANCH WIRE CONNECTED TO AIR CONDITIONING AMPLIFIER (D-CAN J/C - AIR CONDITIONING AMPLIFIER (CAN-H, CAN-L))

CA

13	CHECK CAN BUS LINES FOR SHORT CIRCUIT (CENTER AIRBAG SENSOR ASSEMBLY BRANCH WIRE)

Wire Harness Side:

Center Airbag Sensor Assembly Connector

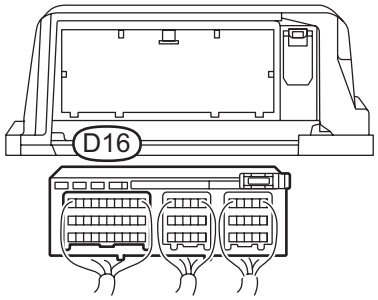

C131069E01

(a) Disconnect the D16 center airbag sensor assembly connector.

Wire Harness Side:

D-CAN J/C Connector

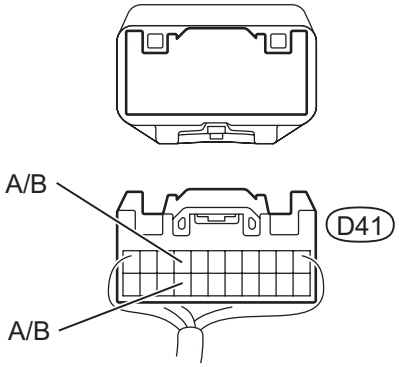

C125896E27

(b) Measure the resistance.
HINT:
The resistance must be measured after the D41 D-CAN J/C connector is disconnected.
Result

Tester Connection	Condition	Specified Condition	Proceed to
D41-8 (A/B) - D41-19 (A/B)	Ignition switch OFF	1 Ω or higher	OK
D41-8 (A/B) - D41-19 (A/B)	Ignition switch OFF	Below 1 Ω	NG

OK → **REPLACE CENTER AIRBAG SENSOR ASSEMBLY**

NG

REPAIR OR REPLACE CAN BRANCH WIRE CONNECTED TO CENTER AIRBAG SENSOR ASSEMBLY (D-CAN J/C - CENTER AIRBAG SENSOR ASSEMBLY (CAN-H, CAN-L))

CA

14 CHECK CAN BUS LINES FOR SHORT CIRCUIT (P-CAN J/C - POWER STEERING ECU)

Wire Harness Side:

P-CAN J/C Connector

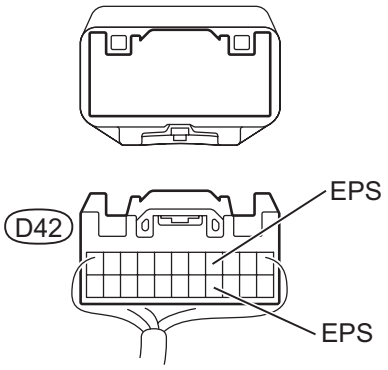

C125896E28

(a) Measure the resistance.
HINT:
The resistance must be measured after the D42 P-CAN J/C connector is disconnected.
Standard resistance

Tester Connection	Condition	Specified Condition
D42-4 (EPS) - D42-15 (EPS)	Ignition switch OFF	108 to 132 Ω

OK → **Go to step 17**

NG

15 CHECK CAN BUS LINES FOR SHORT CIRCUIT (P-CAN J/C - MAIN BODY ECU)

Wire Harness Side:

P-CAN J/C Connector

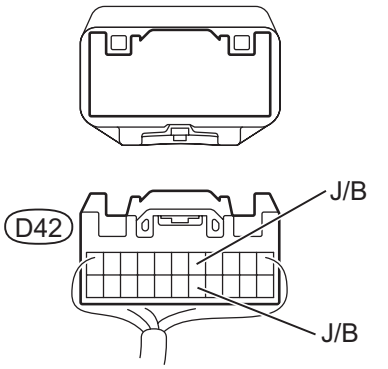

C125896E29

(a) Measure the resistance.
HINT:
The resistance must be measured after the D42 P-CAN J/C connector is disconnected.
Result

Tester Connection	Condition	Specified Condition	Proceed to
D42-5 (J/B) - D42-16 (J/B)	Ignition switch OFF	Below 1 Ω	A
D42-5 (J/B) - D42-16 (J/B)	Ignition switch OFF	1 Ω or higher	B

A → **Go to step 18**

B

CA

16	CHECK CAN BUS LINES FOR SHORT CIRCUIT (P-CAN J/C - COMBINATION METER ECU)

Wire Harness Side:

P-CAN J/C Connector

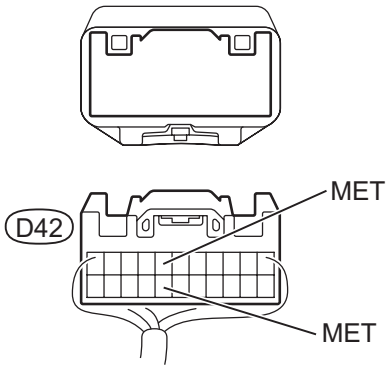

C125896E32

(a) Measure the resistance.
HINT:
The resistance must be measured after the D42 P-CAN J/C connector is disconnected.
Result

Tester Connection	Condition	Specified Condition	Proceed to
D42-7 (MET) - D42-18 (MET)	Ignition switch OFF	Below 1 Ω	A
D42-7 (MET) - D42-18 (MET)	Ignition switch OFF	1 Ω or higher	B

A → **Go to step 19**

B →

REPLACE P-CAN J/C (JUNCTION CONNECTOR)

17	CHECK CAN BUS LINES FOR SHORT CIRCUIT (POWER STEERING ECU MAIN WIRE)

Wire Harness Side:

Power Steering ECU Connector

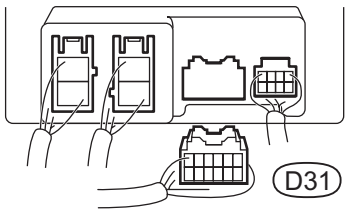

G100242E11

(a) Disconnect the D31 power steering ECU connector.

CA

Wire Harness Side:

P-CAN J/C Connector

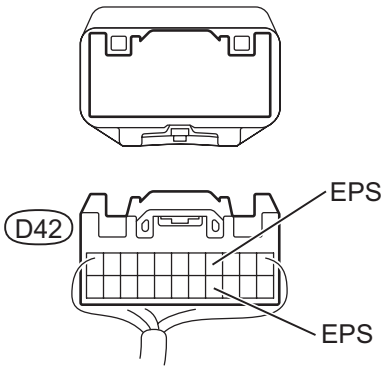

C125896E28

(b) Measure the resistance.
HINT:
The resistance must be measured after the D42 P-CAN J/C connector is disconnected.
Result

Tester Connection	Condition	Specified Condition	Proceed to
D42-4 (EPS) - D42-15 (EPS)	Ignition switch OFF	1 Ω or higher	OK
D42-4 (EPS) - D42-15 (EPS)	Ignition switch OFF	Below 1 Ω	NG

OK → **REPLACE POWER STEERING ECU**

NG

REPAIR OR REPLACE CAN MAIN WIRE CONNECTED TO POWER STEERING ECU (P-CAN J/C - POWER STEERING ECU (CAN-H, CAN-L))

18 CHECK CAN BUS LINES FOR SHORT CIRCUIT (MAIN BODY ECU BRANCH WIRE)

Wire Harness Side:

Main Body ECU Connector

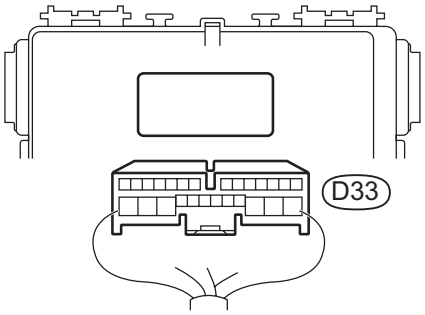

C131840E02

(a) Disconnect the D33 main body ECU connector.

CA

Wire Harness Side:

P-CAN J/C Connector

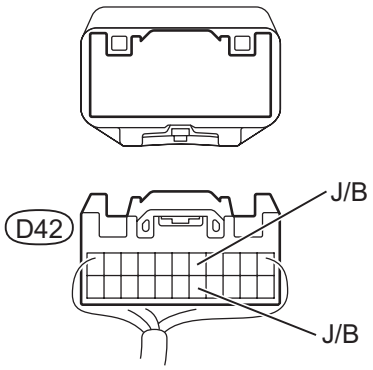

C125896E29

(b) Measure the resistance.
HINT:
The resistance must be measured after the D42 P-CAN J/C connector is disconnected.
Result

Tester Connection	Condition	Specified Condition	Proceed to
D42-5 (J/B) - D42-16 (J/B)	Ignition switch OFF	1 Ω or higher	OK
D42-5 (J/B) - D42-16 (J/B)	Ignition switch OFF	Below 1 Ω	NG

OK → **REPLACE MAIN BODY ECU**

NG

REPAIR OR REPLACE CAN BRANCH WIRE CONNECTED TO MAIN BODY ECU (P-CAN J/C - MAIN BODY ECU (CAN-H, CAN-L))

19	CHECK CAN BUS LINES FOR SHORT CIRCUIT (COMBINATION METER ECU BRANCH WIRE)

Wire Harness Side:

Combination Meter ECU Connector

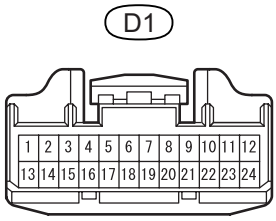

Front View

C139156E04

(a) Disconnect the D1 combination meter ECU connector.

CA

Wire Harness Side:

P-CAN J/C Connector

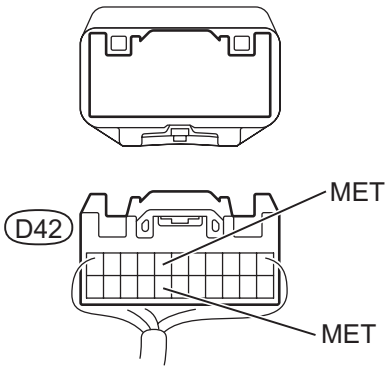

C125896E32

(b) Measure the resistance.
HINT:
The resistance must be measured after the D42 P-CAN J/C connector is disconnected.
Result

Tester Connection	Condition	Specified Condition	Proceed to
D42-7 (MET) - D42-18 (MET)	Ignition switch OFF	1 Ω or higher	OK
D42-7 (MET) - D42-18 (MET)	Ignition switch OFF	Below 1 Ω	NG

OK → **REPLACE COMBINATION METER ECU**

NG

REPAIR OR REPLACE CAN BRANCH WIRE CONNECTED TO COMBINATION METER ECU (P-CAN J/C - COMBINATION METER ECU (CAN-H, CAN-L))

Short to B+ in CAN Bus Line

DESCRIPTION

There may be a short circuit between the CAN bus line and +B when no resistance exists between terminals 6 (CANH) and 16 (BAT) or terminals 14 (CANL) and 16 (BAT) of the DLC3.

Symptom	Trouble Area
No resistance exists between terminals 6 (CANH) and 16 (BAT) or 14 (CANL) and 16 (BAT) of DLC3.	• Short to +B • Brake actuator (Skid control ECU)*1 • Power steering ECU • ECM • Center airbag sensor assembly • Air conditioning amplifier*2 • Combination meter ECU • Main body ECU

HINT:

- *1: w/ ABS
- *2: w/ Air conditioning or PTC heater

WIRING DIAGRAM

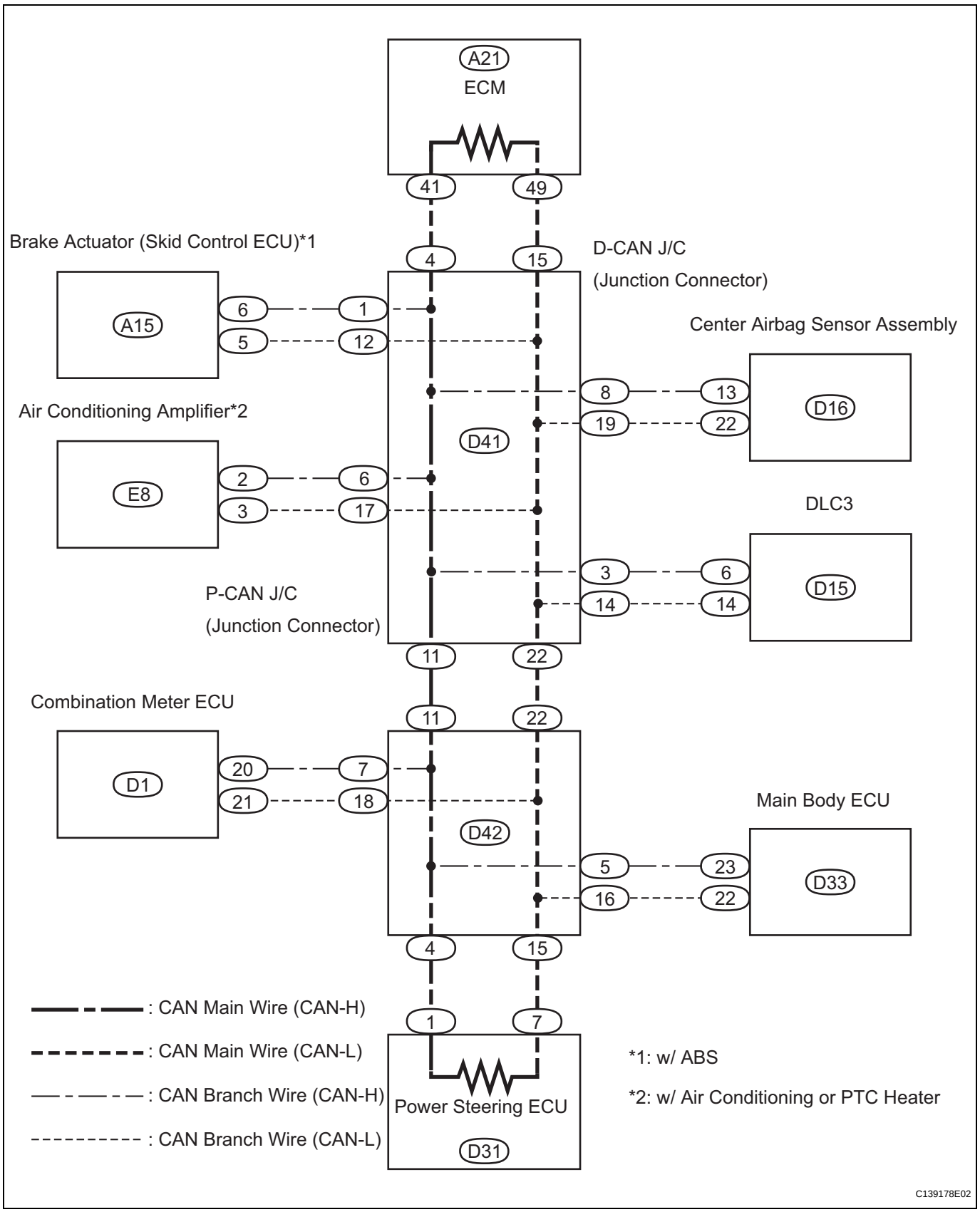

CA

INSPECTION PROCEDURE

NOTICE:

- **Turn the ignition switch OFF before measuring the resistances of the CAN main wire and the CAN branch wire.**
- **After the ignition switch is turned off, check that the key reminder warning system and light reminder warning system are not in operation.**
- **Before measuring the resistance, leave the vehicle as is for at least 1 minute and do not operate the ignition switch, any other switches or the doors. If doors need to be opened in order to check connectors, open the doors and leave them open.**
  HINT:
  Operating the ignition switch, any switches or any doors triggers related ECU and sensor communication with the CAN, which causes resistance variation.

1	CHECK CAN BUS LINE FOR SHORT TO +B (DLC3 BRANCH WIRE)

Wire Harness Side:

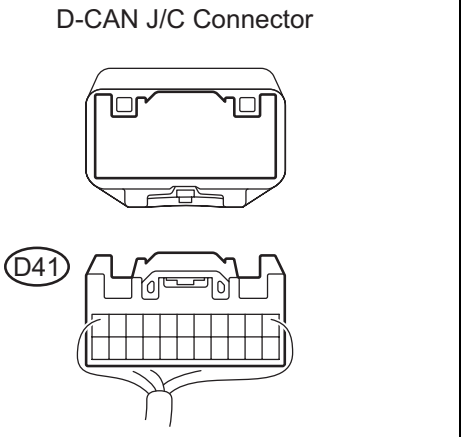

(a) Turn the ignition switch OFF.
(b) Disconnect the D41 D-CAN J/C connector.

DLC3:

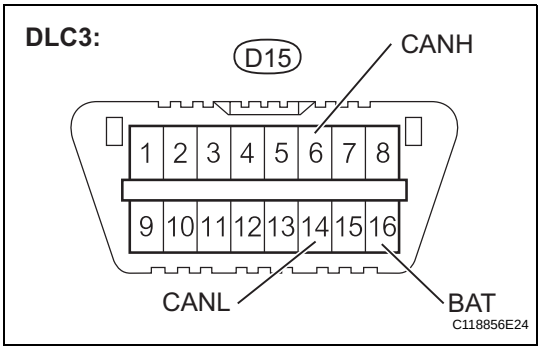

(c) Measure the resistance.
Result

Tester Connection	Condition	Specified Condition	Proceed to
D15-6 (CANH) - D15-16 (BAT)	Ignition switch OFF	1 Ω or higher	OK
D15-14 (CANL) - D15-16 (BAT)	Ignition switch OFF	1 Ω or higher	OK
D15-6 (CANH) - D15-16 (BAT)	Ignition switch OFF	Below 1 Ω	NG
D15-14 (CANL) - D15-16 (BAT)	Ignition switch OFF	Below 1 Ω	NG

NG → **REPAIR OR REPLACE CAN BRANCH WIRE CONNECTED TO DLC3 (CAN-H, CAN-L)**

OK

2	CONNECT CONNECTOR

(a) Reconnect the D-CAN J/C connector.

CA

NEXT

3 CHECK CAN BUS LINE FOR SHORT TO +B (P-CAN J/C SIDE)

Wire Harness Side:

P-CAN J/C Connector

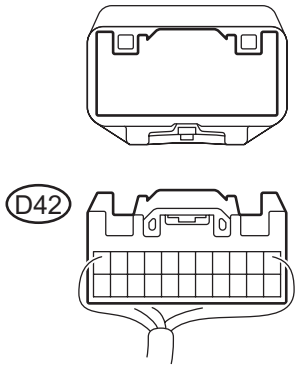

C125896E06

(a) Turn the ignition switch OFF.
(b) Disconnect the D42 P-CAN J/C connector.

DLC3:

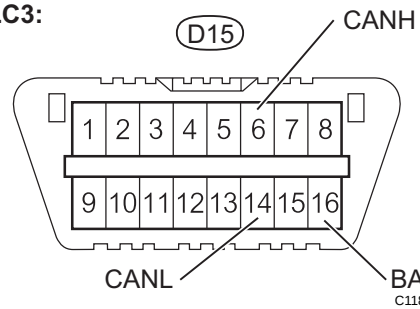

C118856E24

(c) Measure the resistance.
Result

Tester Connection	Condition	Specified Condition	Proceed to
D15-6 (CANH) - D15-16 (BAT)	Ignition switch OFF	1 Ω or higher	OK
D15-14 (CANL) - D15-16 (BAT)	Ignition switch OFF	1 Ω or higher	OK
D15-6 (CANH) - D15-16 (BAT)	Ignition switch OFF	Below 1 Ω	NG
D15-14 (CANL) - D15-16 (BAT)	Ignition switch OFF	Below 1 Ω	NG

OK → **Go to step 13**

NG

4 CONNECT CONNECTOR

(a) Reconnect the P-CAN J/C connector.

NEXT

CA

5 CHECK CAN BUS LINE FOR SHORT TO +B (D-CAN J/C - ECM)

Wire Harness Side:

D-CAN J/C Connector

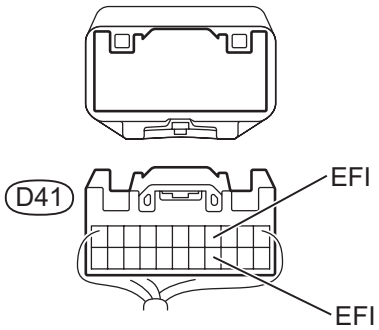

DLC3:

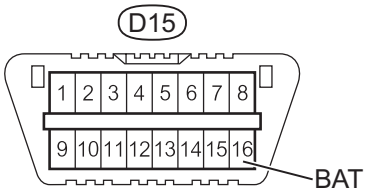

C133293E01

(a) Disconnect the D41 D-CAN J/C connector.
(b) Measure the resistance.
Result

Tester Connection	Condition	Specified Condition	Proceed to
D41-4 (EFI) - D15-16 (BAT)	Ignition switch OFF	1 Ω or higher	OK
D41-15 (EFI) - D15-16 (BAT)	Ignition switch OFF	1 Ω or higher	OK
D41-4 (EFI) - D15-16 (BAT)	Ignition switch OFF	Below 1 Ω	NG
D41-15 (EFI) - D15-16 (BAT)	Ignition switch OFF	Below 1 Ω	NG

NG → **Go to step 9**

OK

6 CHECK CAN BUS LINE FOR SHORT TO +B (D-CAN J/C - BRAKE ACTUATOR (SKID CONTROL ECU))

NOTICE:
For vehicles without ABS, go to step 7.

Wire Harness Side:

D-CAN J/C Connector

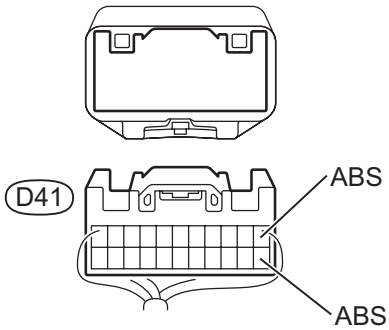

DLC3:

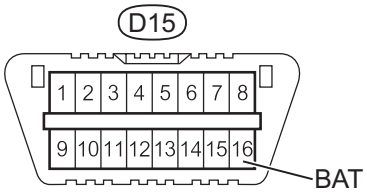

C133293E02

(a) Measure the resistance.
HINT:
The resistance must be measured after the D41 D-CAN J/C connector is disconnected.
Result

Tester Connection	Condition	Specified Condition	Proceed to
D41-1 (ABS) - D15-16 (BAT)	Ignition switch OFF	1 Ω or higher	OK
D41-12 (ABS) - D15-16 (BAT)	Ignition switch OFF	1 Ω or higher	OK
D41-1 (ABS) - D15-16 (BAT)	Ignition switch OFF	Below 1 Ω	NG
D41-12 (ABS) - D15-16 (BAT)	Ignition switch OFF	Below 1 Ω	NG

NG → **Go to step 10**

CA

OK

7	CHECK CAN BUS LINE FOR SHORT TO +B (D-CAN J/C - AIR CONDITIONING AMPLIFIER)

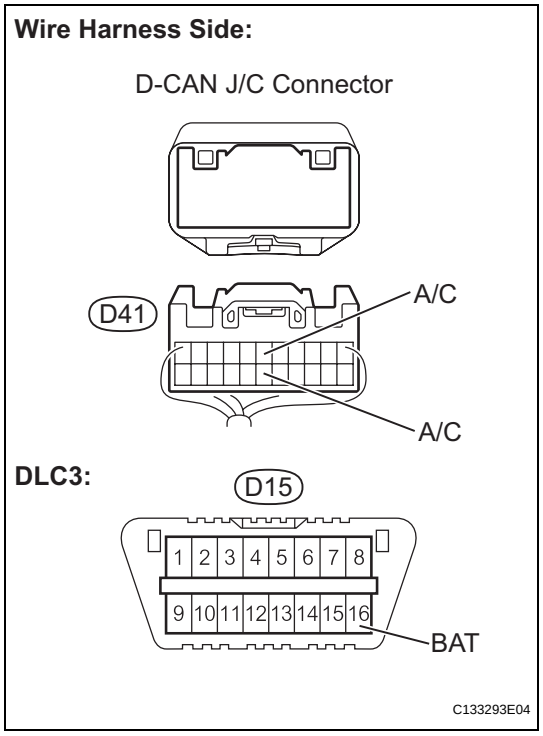

NOTICE:
For vehicles without air conditioning or PTC heater, go to step 8.

(a) Measure the resistance.
HINT:
The resistance must be measured after the D41 D-CAN J/C connector is disconnected.
Result

Tester Connection	Condition	Specified Condition	Proceed to
D41-6 (A/C) - D15-16 (BAT)	Ignition switch OFF	1 Ω or higher	OK
D41-17 (A/C) - D15-16 (BAT)	Ignition switch OFF	1 Ω or higher	OK
D41-6 (A/C) - D15-16 (BAT)	Ignition switch OFF	Below 1 Ω	NG
D41-17 (A/C) - D15-16 (BAT)	Ignition switch OFF	Below 1 Ω	NG

NG → Go to step 11

OK

CA

8	CHECK CAN BUS LINE FOR SHORT TO +B (D-CAN J/C - CENTER AIRBAG SENSOR ASSEMBLY)

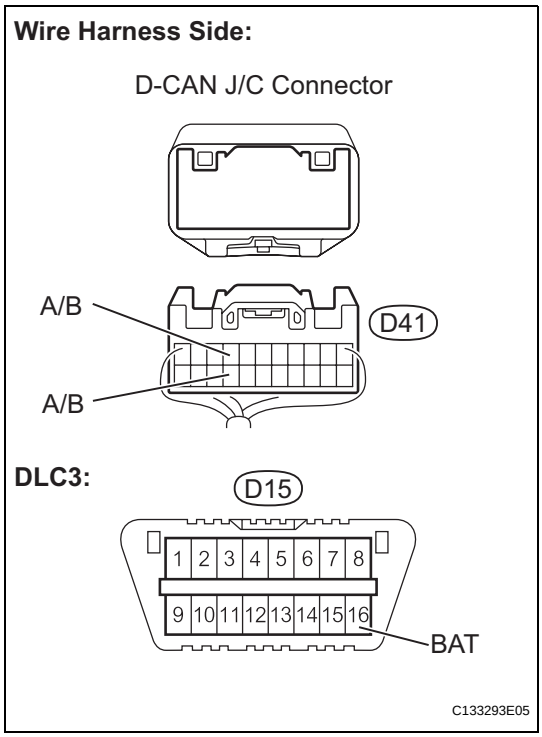

(a) Measure the resistance.
HINT:
The resistance must be measured after the D41 D-CAN J/C connector is disconnected.
Result

Tester Connection	Condition	Specified Condition	Proceed to
D41-8 (A/B) - D15-16 (BAT)	Ignition switch OFF	1 Ω or higher	OK
D41-19 (A/B) - D15-16 (BAT)	Ignition switch OFF	1 Ω or higher	OK
D41-8 (A/B) - D15-16 (BAT)	Ignition switch OFF	Below 1 Ω	NG
D41-19 (A/B) - D15-16 (BAT)	Ignition switch OFF	Below 1 Ω	NG

NG → Go to step 12

OK

REPAIR OR REPLACE CAN MAIN WIRE OR CONNECTOR (D-CAN J/C - P-CAN J/C)

9	CHECK CAN BUS LINE FOR SHORT TO +B (ECM MAIN WIRE)

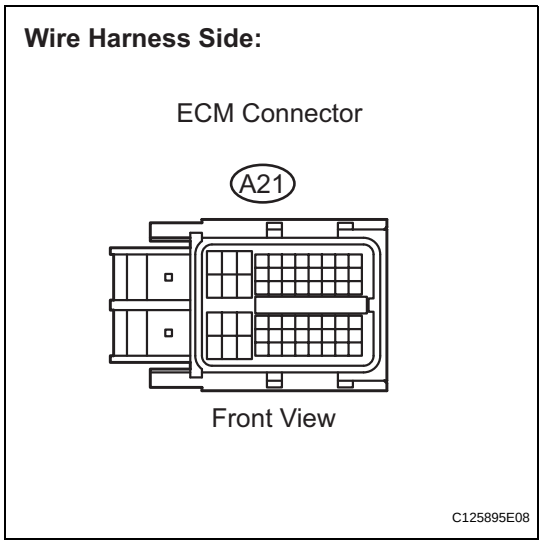

(a) Disconnect the A21 ECM connector.

CA

Wire Harness Side:

D-CAN J/C Connector

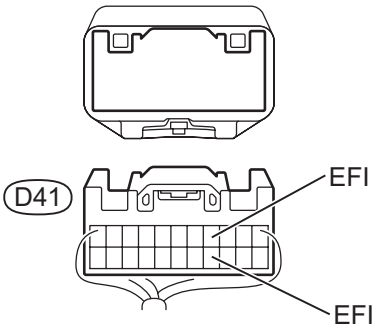

DLC3:

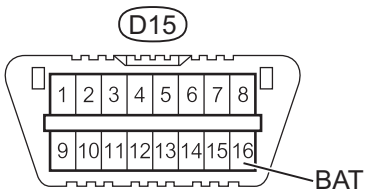

C133293E01

(b) Measure the resistance.
HINT:
The resistance must be measured after the D41 D-CAN J/C connector is disconnected.
Result

Tester Connection	Condition	Specified Condition	Proceed to
D41-4 (EFI) - D15-16 (BAT)	Ignition switch OFF	1 Ω or higher	OK
D41-15 (EFI) - D15-16 (BAT)	Ignition switch OFF	1 Ω or higher	OK
D41-4 (EFI) - D15-16 (BAT)	Ignition switch OFF	Below 1 Ω	NG
D41-15 (EFI) - D15-16 (BAT)	Ignition switch OFF	Below 1 Ω	NG

OK → **REPLACE ECM**

NG

REPAIR OR REPLACE CAN MAIN WIRE CONNECTED TO ECM (D-CAN J/C - ECM (CAN-H, CAN-L))

10 CHECK CAN BUS LINE FOR SHORT TO +B (BRAKE ACTUATOR (SKID CONTROL ECU) BRANCH WIRE)

Wire Harness Side:

Brake Actuator (Skid Control ECU) Connector

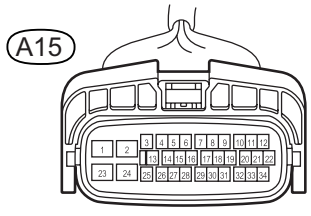

Front View

H

C118165E05

(a) Disconnect the A15 brake actuator (skid control ECU) connector.

CA

Wire Harness Side:

D-CAN J/C Connector

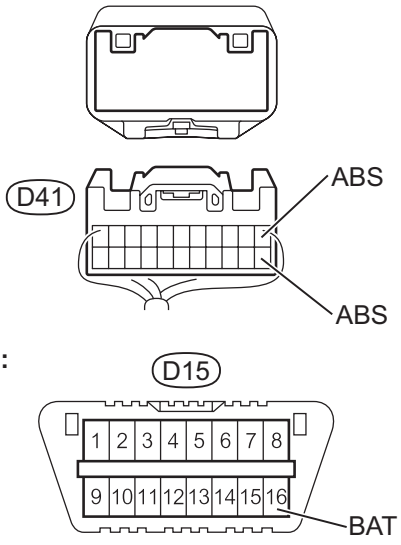

C133293E02

(b) Measure the resistance.
HINT:
The resistance must be measured after the D41 D-CAN J/C connector is disconnected.
Result

Tester Connection	Condition	Specified Condition	Proceed to
D41-1 (ABS) - D15-16 (BAT)	Ignition switch OFF	1 Ω or higher	OK
D41-12 (ABS) - D15-16 (BAT)	Ignition switch OFF	1 Ω or higher	OK
D41-1 (ABS) - D15-16 (BAT)	Ignition switch OFF	Below 1 Ω	NG
D41-12 (ABS) - D15-16 (BAT)	Ignition switch OFF	Below 1 Ω	NG

OK → **REPLACE BRAKE ACTUATOR (SKID CONTROL ECU)**

NG

REPAIR OR REPLACE CAN BRANCH WIRE CONNECTED TO BRAKE ACTUATOR (D-CAN J/C - BRAKE ACTUATOR (SKID CONTROL ECU) (CAN-H, CAN-L))

11	CHECK CAN BUS LINE FOR SHORT TO +B (AIR CONDITIONING AMPLIFIER BRANCH WIRE)

Wire Harness Side:

Air Conditioning Amplifier Connector

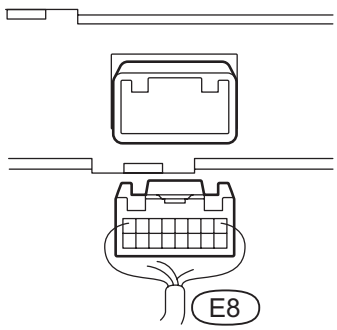

C131847E04

(a) Disconnect the E8 air conditioning amplifier connector.

CA

Wire Harness Side:

D-CAN J/C Connector

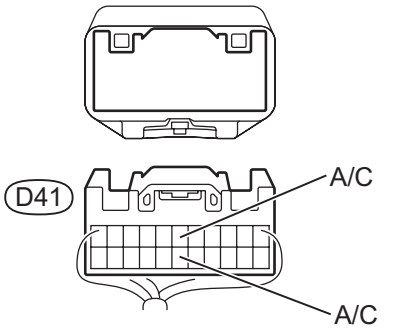

DLC3:

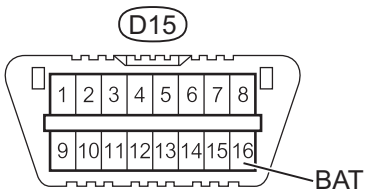

C133293E04

(b) Measure the resistance.
HINT:
The resistance must be measured after the D41 D-CAN J/C connector is disconnected.
Result

Tester Connection	Condition	Specified Condition	Proceed to
D41-6 (A/C) - D15-16 (BAT)	Ignition switch OFF	1 Ω or higher	OK
D41-17 (A/C) - D15-16 (BAT)	Ignition switch OFF	1 Ω or higher	OK
D41-6 (A/C) - D15-16 (BAT)	Ignition switch OFF	Below 1 Ω	NG
D41-17 (A/C) - D15-16 (BAT)	Ignition switch OFF	Below 1 Ω	NG

OK → **REPLACE AIR CONDITIONING AMPLIFIER**

NG

REPAIR OR REPLACE CAN BRANCH WIRE CONNECTED TO AIR CONDITIONING AMPLIFIER (D-CAN J/C - AIR CONDITIONING AMPLIFIER (CAN-H, CAN-L))

12 CHECK CAN BUS LINE FOR SHORT TO +B (CENTER AIRBAG SENSOR ASSEMBLY BRANCH WIRE)

Wire Harness Side:

Center Airbag Sensor Assembly Connector

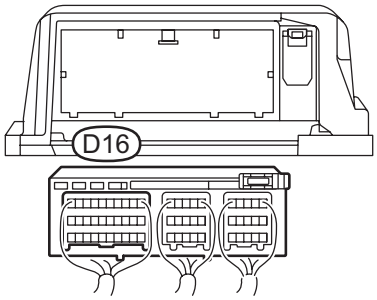

C131069E01

(a) Disconnect the D16 center airbag sensor assembly connector.

CA

Wire Harness Side:

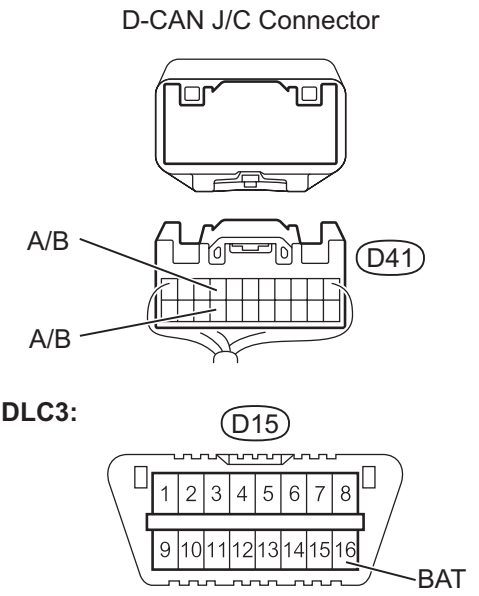

(b) Measure the resistance.
HINT:
The resistance must be measured after the D41 D-CAN J/C connector is disconnected.
Result

Tester Connection	Condition	Specified Condition	Proceed to
D41-8 (A/B) - D15-16 (BAT)	Ignition switch OFF	1 Ω or higher	OK
D41-19 (A/B) - D15-16 (BAT)	Ignition switch OFF	1 Ω or higher	OK
D41-8 (A/B) - D15-16 (BAT)	Ignition switch OFF	Below 1 Ω	NG
D41-19 (A/B) - D15-16 (BAT)	Ignition switch OFF	Below 1 Ω	NG

OK → **REPLACE CENTER AIRBAG SENSOR ASSEMLBY**

NG → **REPLACE CAN BRANCH WIRE CONNECTED TO CENTER AIRBAG SENSOR ASSEMBLY (D-CAN J/C - CENTER AIRBAG SENSOR ASSEMBLY (CAN-H, CAN-L))**

13 CHECK CAN BUS LINE FOR SHORT TO +B (P-CAN J/C - POWER STEERING ECU)

Wire Harness Side:

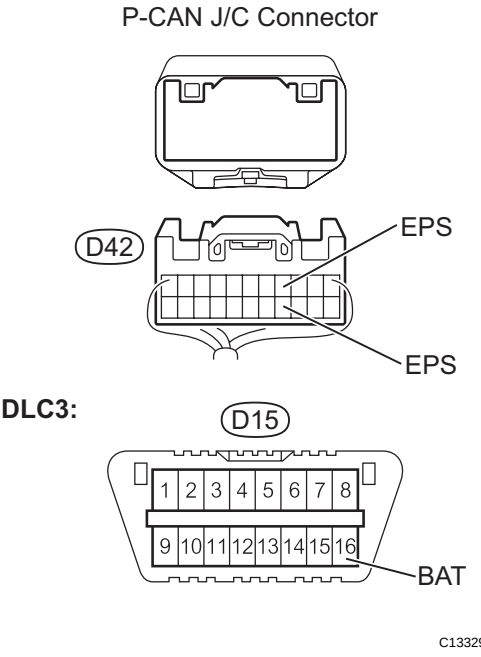

(a) Measure the resistance.
HINT:
The resistance must be measured after the D42 P-CAN J/C connector is disconnected.
Result

Tester Connection	Condition	Specified Condition	Proceed to
D42-4 (EPS) - D15-16 (BAT)	Ignition switch OFF	1 Ω or higher	OK
D42-15 (EPS) - D15-16 (BAT)	Ignition switch OFF	1 Ω or higher	OK
D42-4 (EPS) - D15-16 (BAT)	Ignition switch OFF	Below 1 Ω	NG
D42-15 (EPS) - D15-16 (BAT)	Ignition switch OFF	Below 1 Ω	NG

NG → **Go to step 16**

CA

OK

14 CHECK CAN BUS LINE FOR SHORT TO +B (P-CAN J/C - MAIN BODY ECU)

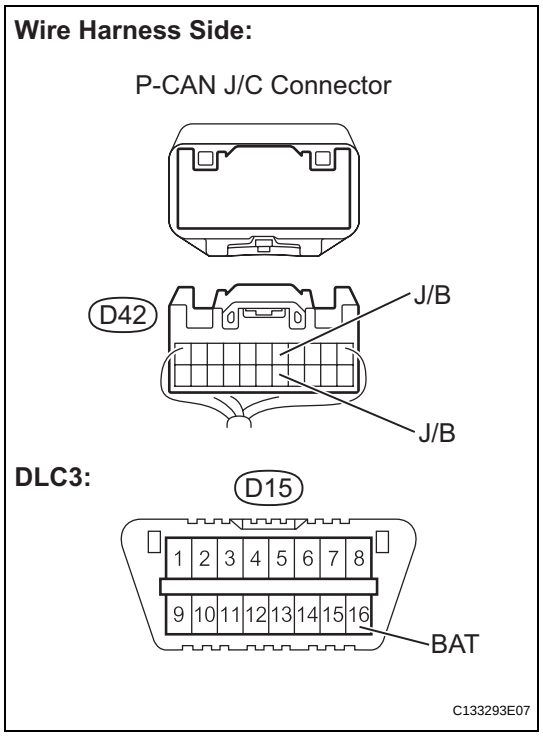

(a) Measure the resistance.
HINT:
The resistance must be measured after the D42 P-CAN J/C connector is disconnected.
Result

Tester Connection	Condition	Specified Condition	Proceed to
D42-5 (J/B) - D15-16 (BAT)	Ignition switch OFF	1 Ω or higher	OK
D42-16 (J/B) - D15-16 (BAT)	Ignition switch OFF	1 Ω or higher	OK
D42-5 (J/B) - D15-16 (BAT)	Ignition switch OFF	Below 1 Ω	NG
D42-16 (J/B) - D15-16 (BAT)	Ignition switch OFF	Below 1 Ω	NG

NG → **Go to step 17**

OK

15 CHECK CAN BUS LINE FOR SHORT TO +B (P-CAN J/C - COMBINATION METER ECU)

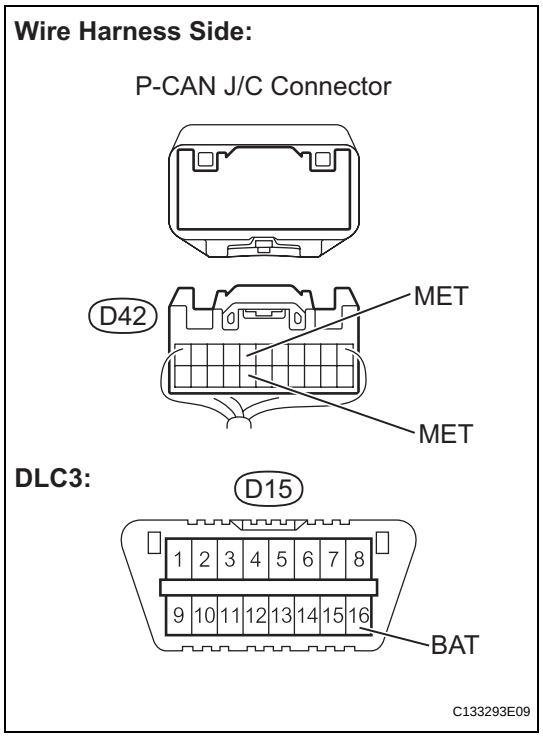

(a) Measure the resistance.
HINT:
The resistance must be measured after the D42 P-CAN J/C connector is disconnected.
Result

Tester Connection	Condition	Specified Condition	Proceed to
D42-7 (MET) - D15-16 (BAT)	Ignition switch OFF	1 Ω or higher	OK
D42-18 (MET) - D15-16 (BAT)	Ignition switch OFF	1 Ω or higher	OK
D42-7 (MET) - D15-16 (BAT)	Ignition switch OFF	Below 1 Ω	NG
D42-18 (MET) - D15-16 (BAT)	Ignition switch OFF	Below 1 Ω	NG

NG → **Go to step 18**

CA

OK

REPAIR OR REPLACE CAN MAIN WIRE OR CONNECTOR (D-CAN J/C - P-CAN J/C (CAN-H, CAN-L))

16	CHECK CAN BUS LINE FOR SHORT TO +B (POWER STEERING ECU MAIN WIRE)

Wire Harness Side:

Power Steering ECU Connector

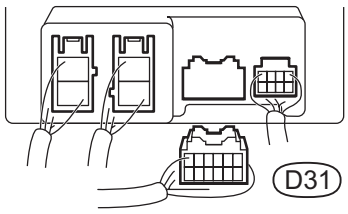

G100242E11

(a) Disconnect the D31 power steering ECU connector.

Wire Harness Side:

P-CAN J/C Connector

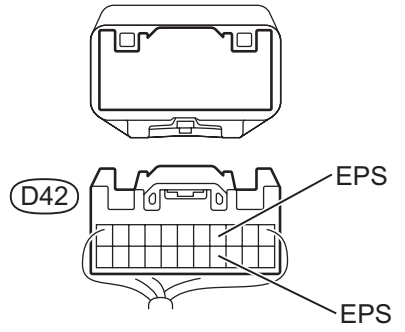

DLC3:

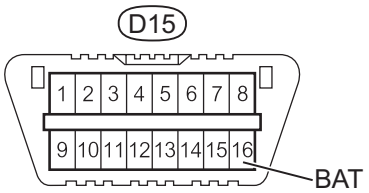

C133293E06

(b) Measure the resistance.
HINT:
The resistance must be measured after the D42 P-CAN J/C connector is disconnected.
Result

Tester Connection	Condition	Specified Condition	Proceed to
D42-4 (EPS) - D15-16 (BAT)	Ignition switch OFF	1 Ω or higher	OK
D42-15 (EPS) - D15-16 (BAT)	Ignition switch OFF	1 Ω or higher	OK
D42-4 (EPS) - D15-16 (BAT)	Ignition switch OFF	Below 1 Ω	NG
D42-15 (EPS) - D15-16 (BAT)	Ignition switch OFF	Below 1 Ω	NG

OK → **REPLACE POWER STEERING ECU**

NG

REPAIR OR REPLACE CAN MAIN WIRE CONNECTED TO POWER STEERING ECU (P-CAN J/C - POWER STEERING ECU (CAN-H, CAN-L))

CA

17	CHECK CAN BUS LINE FOR SHORT TO +B (MAIN BODY ECU BRANCH WIRE)

Wire Harness Side:

Main Body ECU Connector

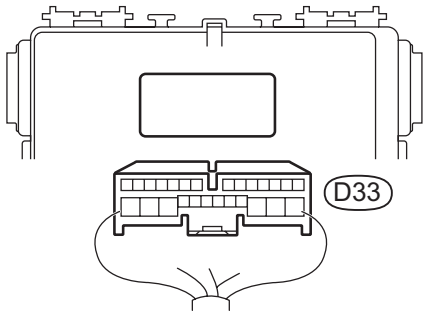

C131840E02

(a) Disconnect the D33 main body ECU connector.

Wire Harness Side:

P-CAN J/C Connector

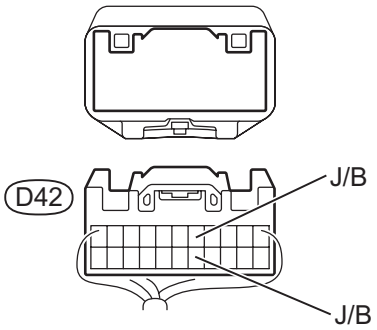

DLC3:

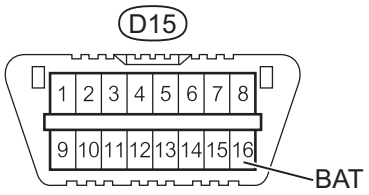

C133293E07

(b) Measure the resistance.
HINT:
The resistance must be measured after the D42 P-CAN J/C connector is disconnected.
Result

Tester Connection	Condition	Specified Condition	Proceed to
D42-5 (J/B) - D15-16 (BAT)	Ignition switch OFF	1 Ω or higher	OK
D42-16 (J/B) - D15-16 (BAT)	Ignition switch OFF	1 Ω or higher	OK
D42-5 (J/B) - D15-16 (BAT)	Ignition switch OFF	Below 1 Ω	NG
D42-16 (J/B) - D15-16 (BAT)	Ignition switch OFF	Below 1 Ω	NG

OK → **REPLACE MAIN BODY ECU**

NG

REPAIR OR REPLACE CAN BRANCH WIRE CONNECTED TO MAIN BODY ECU (P-CAN J/C - MAIN BODY ECU (CAN-H, CAN-L))

CA

18	CHECK CAN BUS LINE FOR SHORT TO +B (COMBINATION METER ECU BRANCH WIRE)

Wire Harness Side:

Combination Meter ECU Connector

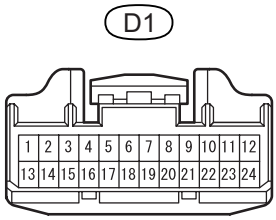

Front View

C139156E04

(a) Disconnect the D1 combination meter ECU connector.

Wire Harness Side:

P-CAN J/C Connector

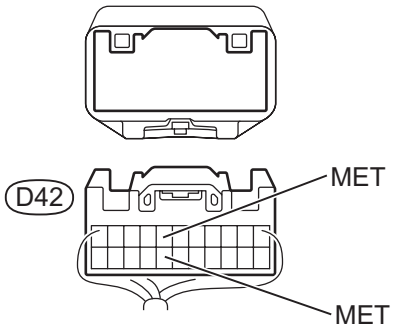

DLC3:

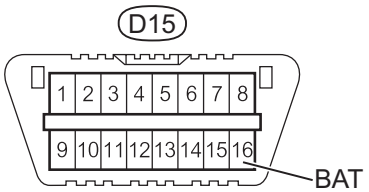

C133293E09

(b) Measure the resistance.
HINT:
The resistance must be measured after the D42 P-CAN J/C connector is disconnected.
Result

Tester Connection	Condition	Specified Condition	Proceed to
D42-7 (MET) - D15-16 (BAT)	Ignition switch OFF	1 Ω or higher	OK
D42-18 (MET) - D15-16 (BAT)	Ignition switch OFF	1 Ω or higher	OK
D42-7 (MET) - D15-16 (BAT)	Ignition switch OFF	Below 1 Ω	NG
D42-18 (MET) - D15-16 (BAT)	Ignition switch OFF	Below 1 Ω	NG

OK → **REPLACE COMBINATION METER ECU**

NG

REPAIR OR REPLACE CAN BRANCH WIRE CONNECTED TO COMBINATION METER (P-CAN J/C - COMBINATION METER ECU (CAN-H, CAN-L))

CA

Short to GND in CAN Bus Line

DESCRIPTION

There may be a short circuit between the CAN bus line and GND when there is resistance between terminals 6 (CANH) and 4 (CG) or terminals 14 (CANL) and 4 (CG) of the DLC3.

Symptom	Trouble Area
Resistance exists between terminals 6 (CANH) and 4 (CG) or terminals 14 (CANL) and 4 (CG) of DLC3.	• Short to GND • Brake actuator (Skid control ECU)*1 • Power steering ECU • ECM • Center airbag sensor assembly • Air conditioning amplifier*2 • Combination meter ECU • Main body ECU

HINT:

- *1: w/ ABS
- *2: w/ Air conditioning or PTC heater

WIRING DIAGRAM

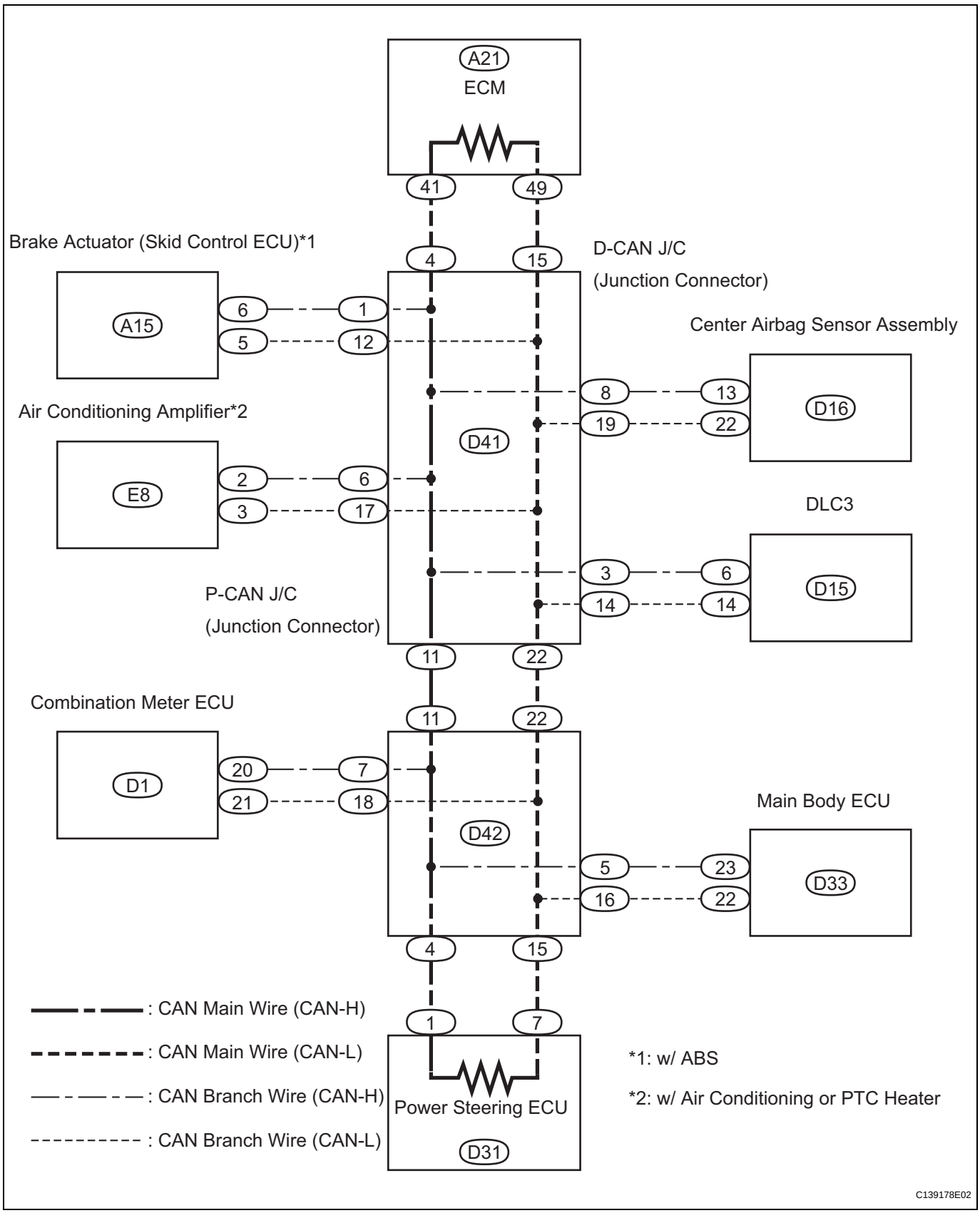

CA

INSPECTION PROCEDURE

NOTICE:

- **Turn the ignition switch OFF before measuring the resistances of the CAN main wire and the CAN branch wire.**
- **After the ignition switch is turned off, check that the key reminder warning system and light reminder warning system are not in operation.**
- **Before measuring the resistance, leave the vehicle as is for at least 1 minute and do not operate the ignition switch, any other switches or the doors. If doors need to be opened in order to check connectors, open the doors and leave them open.**
  HINT:
  Operating the ignition switch, any switches or any doors triggers related ECU and sensor communication with the CAN, which causes resistance variation.

1	CHECK CAN BUS LINE FOR SHORT TO GND (DLC3 BRANCH WIRE)

Wire Harness Side:

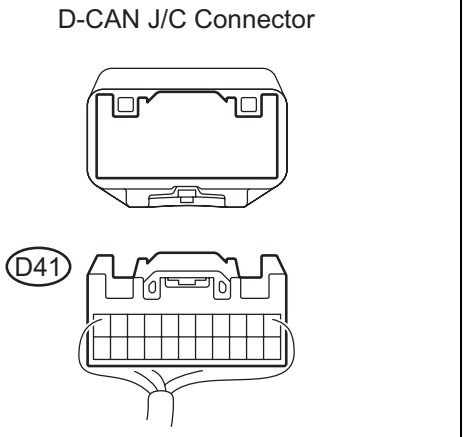

(a) Turn the ignition switch OFF.
(b) Disconnect the D41 D-CAN J/C connector.

DLC3:

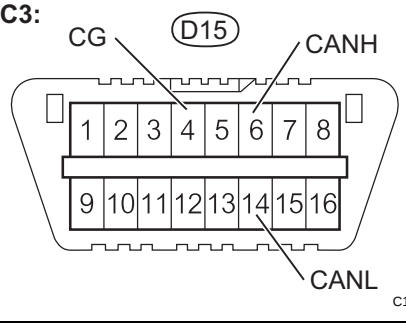

(c) Measure the resistance.
Result

Tester Connection	Condition	Specified Condition	Proceed to
D15-6 (CANH) - D15-4 (CG)	Ignition switch OFF	1 Ω or higher	OK
D15-14 (CANL) - D15-4 (CG)	Ignition switch OFF	1 Ω or higher	OK
D15-6 (CANH) - D15-4 (CG)	Ignition switch OFF	Below 1 Ω	NG
D15-14 (CANL) - D15-4 (CG)	Ignition switch OFF	Below 1 Ω	NG

CA

NG → **REPAIR OR REPLACE CAN BRANCH WIRE CONNECTED TO DLC3 (CAN-H, CAN-L)**

OK

2	CONNECT CONNECTOR

(a) Reconnect the D-CAN J/C connector.

NEXT

3 CHECK CAN BUS LINE FOR SHORT TO GND (P-CAN J/C SIDE)

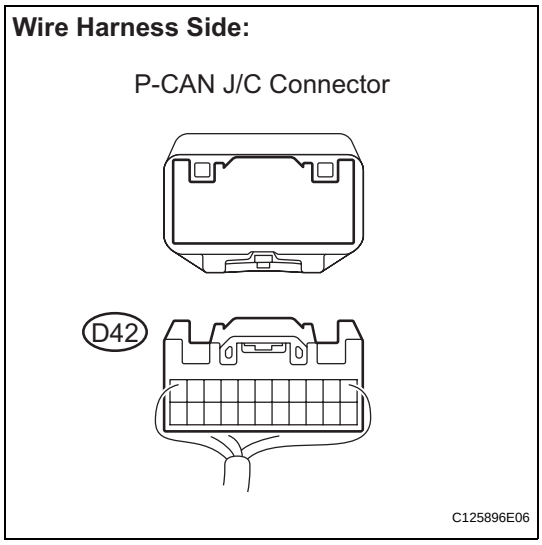

(a) Turn the ignition switch OFF.
(b) Disconnect the D42 P-CAN J/C connector.

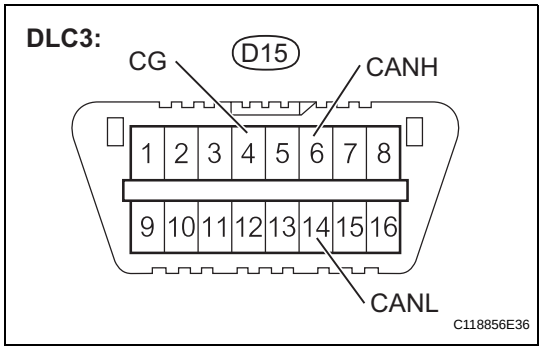

(c) Measure the resistance.
Result

Tester Connection	Condition	Specified Condition	Proceed to
D15-6 (CANH) - D15-4 (CG)	Ignition switch OFF	1 Ω or higher	OK
D15-14 (CANL) - D15-4 (CG)	Ignition switch OFF	1 Ω or higher	OK
D15-6 (CANH) - D15-4 (CG)	Ignition switch OFF	Below 1 Ω	NG
D15-14 (CANL) - D15-4 (CG)	Ignition switch OFF	Below 1 Ω	NG

OK → Go to step 13

NG

CA

4 CONNECT CONNECTOR

(a) Reconnect the P-CAN J/C connector.

NEXT

5 CHECK CAN BUS LINE FOR SHORT TO GND (D-CAN J/C - ECM)

Wire Harness Side:

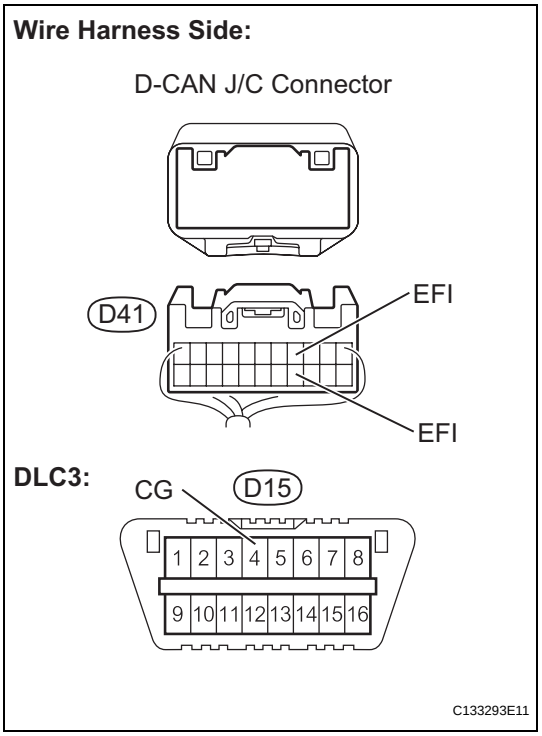

(a) Disconnect the D41 D-CAN J/C connector.
(b) Measure the resistance.

Result

Tester Connection	Condition	Specified Condition	Proceed to
D41-4 (EFI) - D15-4 (CG)	Ignition switch OFF	1 Ω or higher	OK
D41-15 (EFI) - D15-4 (CG)	Ignition switch OFF	1 Ω or higher	OK
D41-4 (EFI) - D15-4 (CG)	Ignition switch OFF	Below 1 Ω	NG
D41-15 (EFI) - D15-4 (CG)	Ignition switch OFF	Below 1 Ω	NG

NG → **Go to step 9**

OK

6 CHECK CAN BUS LINE FOR SHORT TO GND (D-CAN J/C - BRAKE ACTUATOR (SKID CONTROL ECU))

Wire Harness Side:

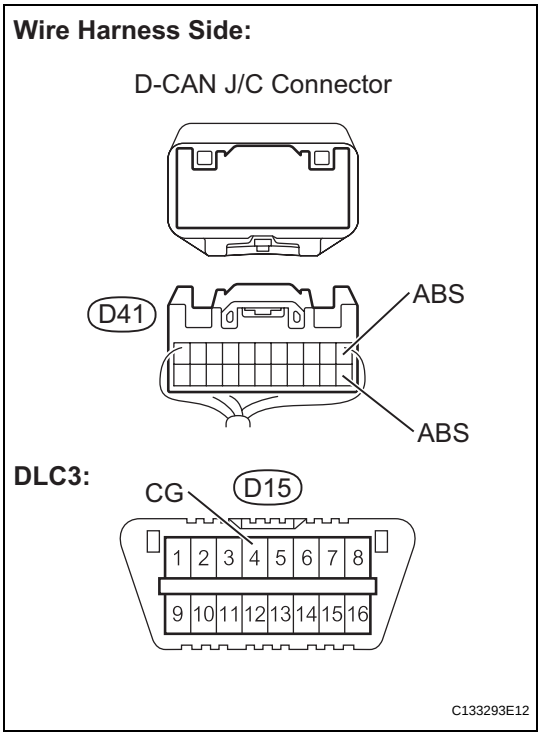

NOTICE:
For vehicles without ABS, go to step 7.

(a) Measure the resistance.
HINT:
The resistance must be measured after the D41 D-CAN J/C connector is disconnected.

Result

Tester Connection	Condition	Specified Condition	Proceed to
D41-1 (ABS) - D15-4 (CG)	Ignition switch OFF	1 Ω or higher	OK
D41-12 (ABS) - D15-4 (CG)	Ignition switch OFF	1 Ω or higher	OK
D41-1 (ABS) - D15-4 (CG)	Ignition switch OFF	Below 1 Ω	NG
D41-12 (ABS) - D15-4 (CG)	Ignition switch OFF	Below 1 Ω	NG

NG → **Go to step 10**

CA

OK

7	CHECK CAN BUS LINE FOR SHORT TO GND (D-CAN J/C - AIR CONDITIONING AMPLIFIER)

Wire Harness Side:

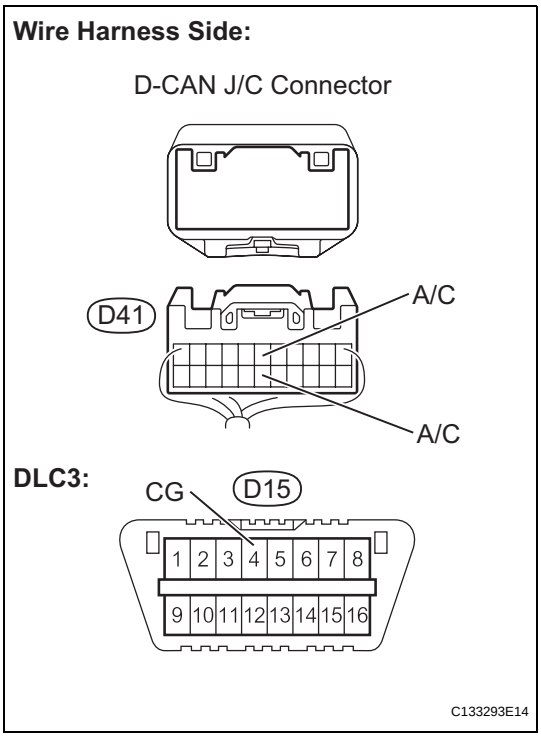

OK

NOTICE:
For vehicles without air conditioning or PTC heater, go to step 8.

(a) Measure the resistance.
HINT:
The resistance must be measured after the D41 D-CAN J/C connector is disconnected.
Result

Tester Connection	Condition	Specified Condition	Proceed to
D41-6 (A/C) - D15-4 (CG)	Ignition switch OFF	1 Ω or higher	OK
D41-17 (A/C) - D15-4 (CG)	Ignition switch OFF	1 Ω or higher	OK
D41-6 (A/C) - D15-4 (CG)	Ignition switch OFF	Below 1 Ω	NG
D41-17 (A/C) - D15-4 (CG)	Ignition switch OFF	Below 1 Ω	NG

NG → **Go to step 11**

CA

8	**CHECK CAN BUS LINE FOR SHORT TO GND (D-CAN J/C - CENTER AIRBAG SENSOR ASSEMBLY)**

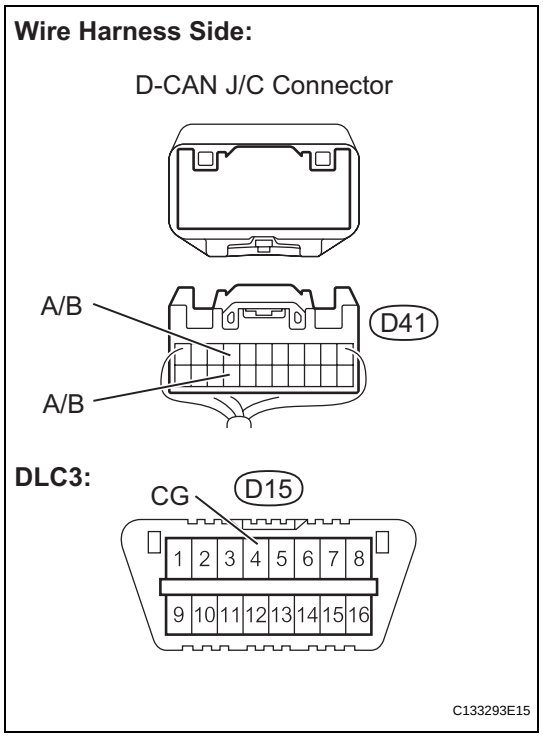

(a) Measure the resistance.
HINT:
The resistance must be measured after the D41 D-CAN J/C connector is disconnected.
Result

Tester Connection	Condition	Specified Condition	Proceed to
D41-8 (A/B) - D15-4 (CG)	Ignition switch OFF	1 Ω or higher	OK
D41-19 (A/B) - D15-4 (CG)	Ignition switch OFF	1 Ω or higher	OK
D41-8 (A/B) - D15-4 (CG)	Ignition switch OFF	Below 1 Ω	NG
D41-19 (A/B) - D15-4 (CG)	Ignition switch OFF	Below 1 Ω	NG

NG → **Go to step 12**

OK

REPAIR OR REPLACE CAN MAIN WIRE OR CONNECTOR (D-CAN J/ C - P-CAN J/C)

9	**CHECK CAN BUS LINE FOR SHORT TO GND (ECM MAIN WIRE)**

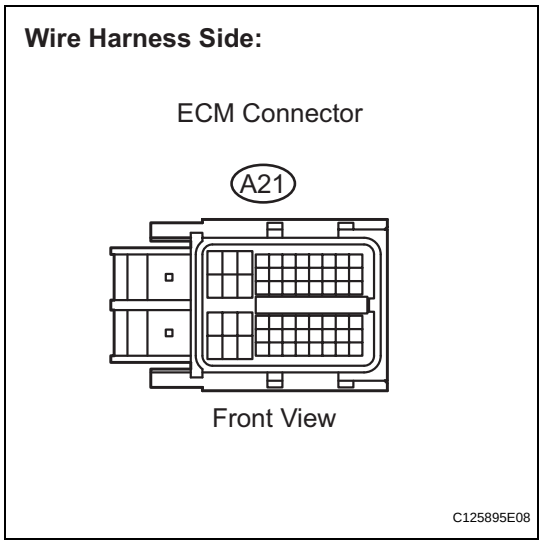

(a) Disconnect the A21 ECM connector.

CA

Wire Harness Side:

D-CAN J/C Connector

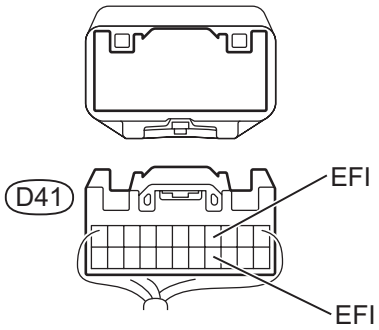

DLC3:

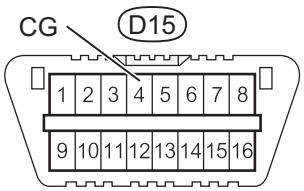

C133293E11

(b) Measure the resistance.
HINT:
The resistance must be measured after the D41 D-CAN J/C connector is disconnected.
Result

Tester Connection	Condition	Specified Condition	Proceed to
D41-4 (EFI) - D15-4 (CG)	Ignition switch OFF	1 Ω or higher	OK
D41-15 (EFI) - D15-4 (CG)	Ignition switch OFF	1 Ω or higher	OK
D41-4 (EFI) - D15-4 (CG)	Ignition switch OFF	Below 1 Ω	NG
D41-15 (EFI) - D15-4 (CG)	Ignition switch OFF	Below 1 Ω	NG

OK → **REPLACE ECM**

NG

REPAIR OR REPLACE CAN MAIN WIRE CONNECTED TO ECM (D-CAN J/C - ECM (CAN-H, CAN-L))

10	CHECK CAN BUS LINE FOR SHORT TO GND (BRAKE ACTUATOR (SKID CONTROL ECU) BRANCH WIRE)

Wire Harness Side:

Brake Actuator (Skid Control ECU) Connector

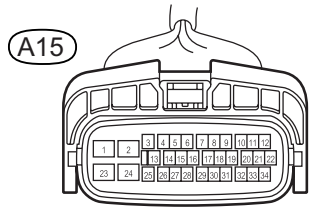

Front View

H

C118165E05

(a) Disconnect the A15 brake actuator (skid control ECU) connector.

CA

Wire Harness Side:

D-CAN J/C Connector

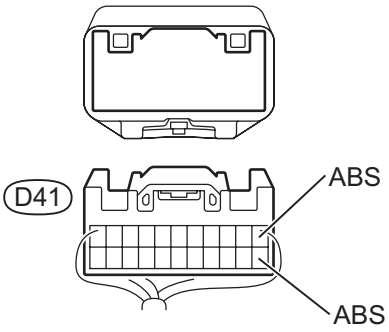

DLC3:

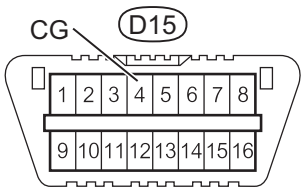

C133293E12

(b) Measure the resistance.
HINT:
The resistance must be measured after the D41 D-CAN J/C connector is disconnected.
Result

Tester Connection	Condition	Specified Condition	Proceed to
D41-1 (ABS) - D15-4 (CG)	Ignition switch OFF	1 Ω or higher	OK
D41-12 (ABS) - D15-4 (CG)	Ignition switch OFF	1 Ω or higher	OK
D41-1 (ABS) - D15-4 (CG)	Ignition switch OFF	Below 1 Ω	NG
D41-12 (ABS) - D15-4 (CG)	Ignition switch OFF	Below 1 Ω	NG

OK → **REPLACE BRAKE ACTUATOR (SKID CONTROL ECU)**

NG

REPAIR OR REPLACE CAN BRANCH WIRE CONNECTED TO BRAKE ACTUATOR (D-CAN J/C - BRAKE ACTUATOR (SKID CONTROL ECU) (CAN-H, CAN-L))

11 CHECK CAN BUS LINE FOR SHORT TO GND (AIR CONDITIONING AMPLIFIER)

Wire Harness Side:

Air Conditioning Amplifier Connector

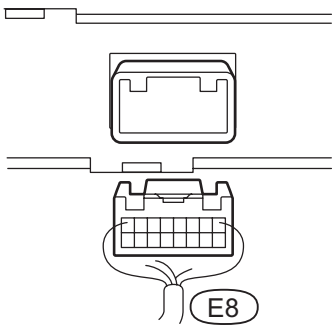

C131847E04

(a) Disconnect the E8 air conditioning amplifier connector.

CA

Wire Harness Side:

D-CAN J/C Connector

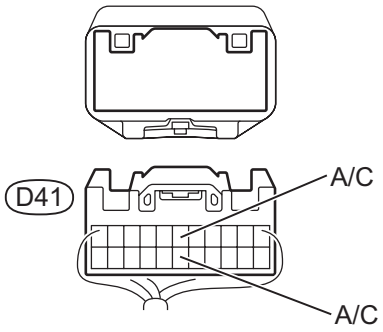

DLC3:

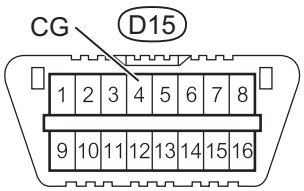

C133293E14

(b) Measure the resistance.
HINT:
The resistance must be measured after the D41 D-CAN J/C connector is disconnected.
Result

Tester Connection	Condition	Specified Condition	Proceed to
D41-6 (A/C) - D15-4 (CG)	Ignition switch OFF	1 Ω or higher	OK
D41-17 (A/C) - D15-4 (CG)	Ignition switch OFF	1 Ω or higher	OK
D41-6 (A/C) - D15-4 (CG)	Ignition switch OFF	Below 1 Ω	NG
D41-17 (A/C) - D15-4 (CG)	Ignition switch OFF	Below 1 Ω	NG

OK → **REPLACE AIR CONDITIONING AMPLIFIER**

NG

REPAIR OR REPLACE CAN BRANCH WIRE CONNECTED TO AIR CONDITIONING AMPLIFIER (D-CAN J/C - AIR CONDITIONING AMPLIFIER (CAN-H, CAN-L))

12	CHECK CAN BUS LINE FOR SHORT TO GND (CENTER AIRBAG SENSOR ASSEMBLY BRANCH WIRE)

Wire Harness Side:

Center Airbag Sensor Assembly Connector

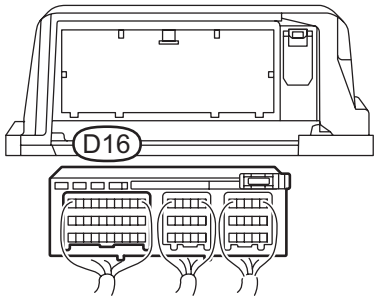

C131069E01

(a) Disconnect the D16 center airbag sensor assembly connector.

CA

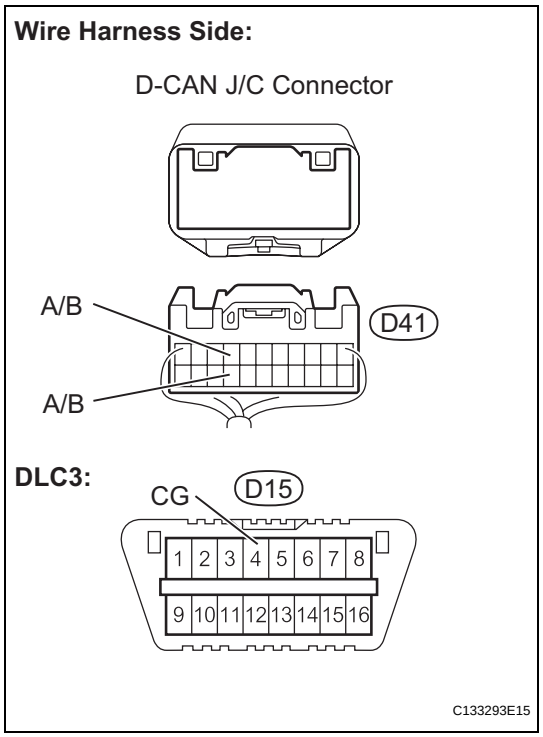

(b) Measure the resistance.
HINT:
The resistance must be measured after the D41 D-CAN J/C connector is disconnected.
Result

Tester Connection	Condition	Specified Condition	Proceed to
D41-8 (A/B) - D15-4 (CG)	Ignition switch OFF	1 Ω or higher	OK
D41-19 (A/B) - D15-4 (CG)	Ignition switch OFF	1 Ω or higher	OK
D41-8 (A/B) - D15-4 (CG)	Ignition switch OFF	Below 1 Ω	NG
D41-19 (A/B) - D15-4 (CG)	Ignition switch OFF	Below 1 Ω	NG

OK → **REPLACE CENTER AIRBAG SENSOR ASSEMBLY**

NG

REPAIR OR REPLACE CAN BRANCH WIRE CONNECTED TO CENTER AIRBAG SENSOR ASSEMBLY (D-CAN J/C - CENTER AIRBAG SENSOR ASSEMBLY (CAN-H, CAN-L))

13 CHECK CAN BUS LINE FOR SHORT TO GND (P-CAN J/C - POWER STEERING ECU)

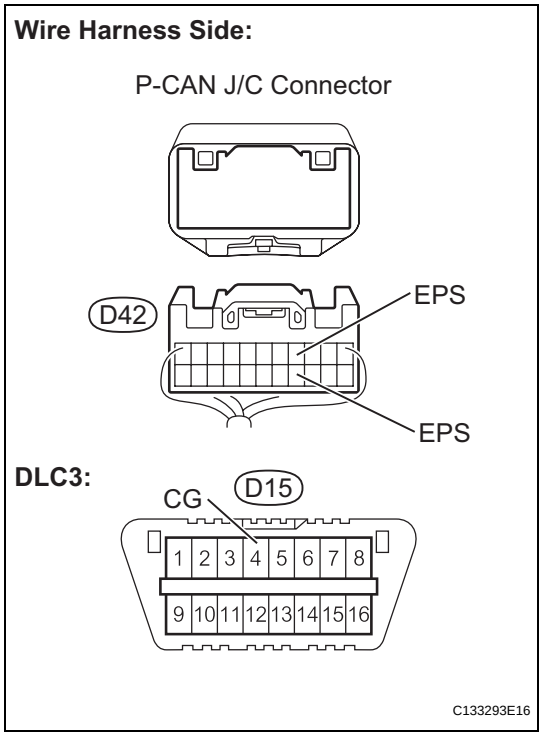

(a) Measure the resistance.
HINT:
The resistance must be measured after the D42 P-CAN J/C connector is disconnected.
Result

Tester Connection	Condition	Specified Condition	Proceed to
D42-4 (EPS) - D15-4 (CG)	Ignition switch OFF	1 Ω or higher	OK
D42-15 (EPS) - D15-4 (CG)	Ignition switch OFF	1 Ω or higher	OK
D42-4 (EPS) - D15-4 (CG)	Ignition switch OFF	Below 1 Ω	NG
D42-15 (EPS) - D15-4 (CG)	Ignition switch OFF	Below 1 Ω	NG

NG → **Go to step 16**

CA

OK

14 CHECK CAN BUS LINE FOR SHORT TO GND (P-CAN J/C - MAIN BODY ECU)

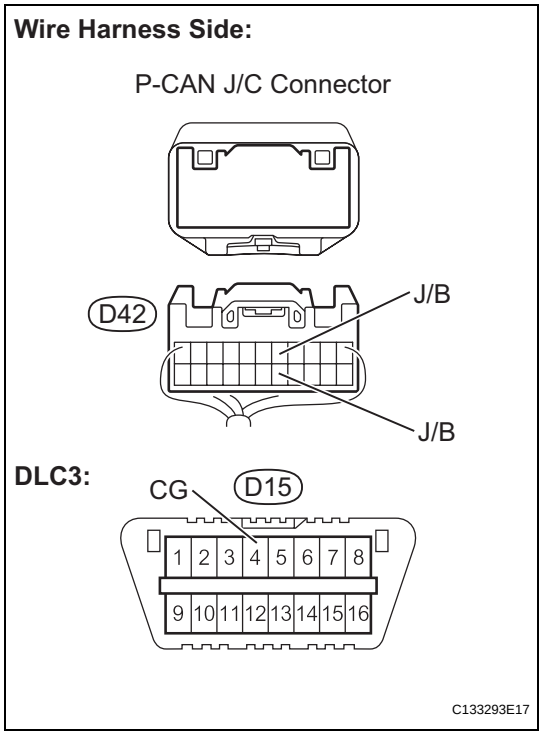

(a) Measure the resistance.
HINT:
The resistance must be measured after the D42 P-CAN J/C connector is disconnected.
Result

Tester Connection	Condition	Specified Condition	Proceed to
D42-5 (J/B) - D15-4 (CG)	Ignition switch OFF	1 Ω or higher	OK
D41-16 (J/B) - D15-4 (CG)	Ignition switch OFF	1 Ω or higher	OK
D42-5 (J/B) - D15-4 (CG)	Ignition switch OFF	Below 1 Ω	NG
D41-16 (J/B) - D15-4 (CG)	Ignition switch OFF	Below 1 Ω	NG

NG → **Go to step 17**

OK

15 CHECK CAN BUS LINE FOR SHORT TO GND (P-CAN J/C - COMBINATION METER ECU)

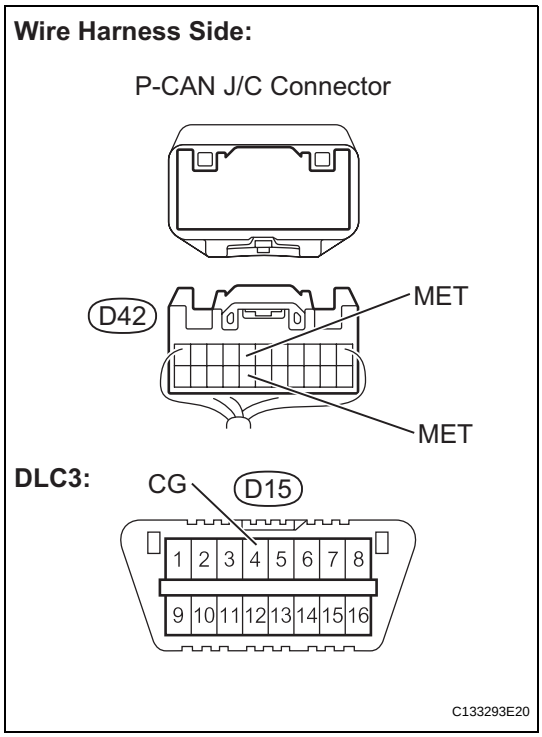

(a) Measure the resistance.
HINT:
The resistance must be measured after the D42 P-CAN J/C connector is disconnected.
Result

Tester Connection	Condition	Specified Condition	Proceed to
D42-7 (MET) - D15-4 (CG)	Ignition switch OFF	1 Ω or higher	OK
D41-18 (MET) - D15-4 (CG)	Ignition switch OFF	1 Ω or higher	OK
D42-7 (MET) - D15-4 (CG)	Ignition switch OFF	Below 1 Ω	NG
D41-18 (MET) - D15-4 (CG)	Ignition switch OFF	Below 1 Ω	NG

NG → **Go to step 18**

CA

OK

REPAIR OR REPLACE CAN MAIN WIRE OR CONNECTOR (D-CAN J/C - P-CAN J/C (CAN-H, CAN-L))

16	CHECK CAN BUS LINE FOR SHORT TO GND (POWER STEERING ECU MAIN WIRE)

Wire Harness Side:

Power Steering ECU Connector

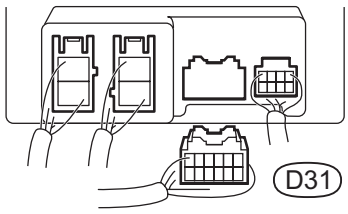

G100242E11

(a) Disconnect the D31 power steering ECU connector.

Wire Harness Side:

P-CAN J/C Connector

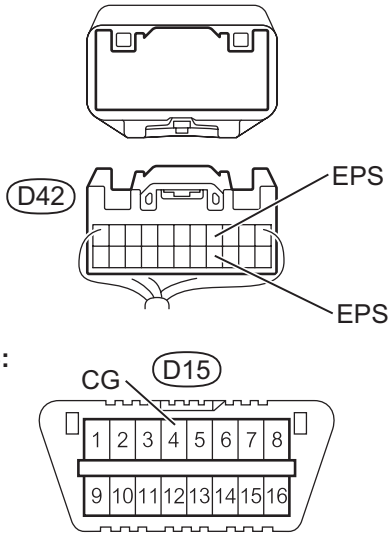

C133293E16

(b) Measure the resistance.
HINT:
The resistance must be measured after the D42 P-CAN J/C connector is disconnected.
Result

Tester Connection	Condition	Specified Condition	Proceed to
D42-4 (EPS) - D15-4 (CG)	Ignition switch OFF	1 Ω or higher	OK
D42-15 (EPS) - D15-4 (CG)	Ignition switch OFF	1 Ω or higher	OK
D42-4 (EPS) - D15-4 (CG)	Ignition switch OFF	Below 1 Ω	NG
D42-15 (EPS) - D15-4 (CG)	Ignition switch OFF	Below 1 Ω	NG

CA

OK → **REPLACE POWER STEERING ECU**

NG

REPAIR OR REPLACE CAN MAIN WIRE CONNECTED TO POWER STEERING ECU (P-CAN J/C - POWER STEERING ECU (CAN-H, CAN-L))

17	CHECK CAN BUS LINE FOR SHORT TO GND (MAIN BODY ECU BRANCH WIRE)

Wire Harness Side:

Main Body ECU Connector

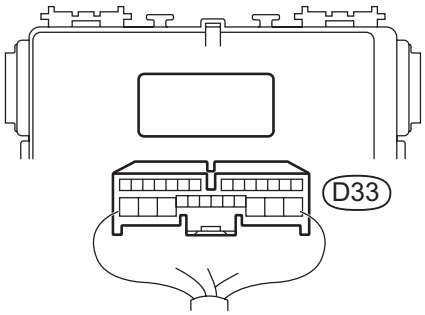

C131840E02

(a) Disconnect the D33 main body ECU connector.

Wire Harness Side:

P-CAN J/C Connector

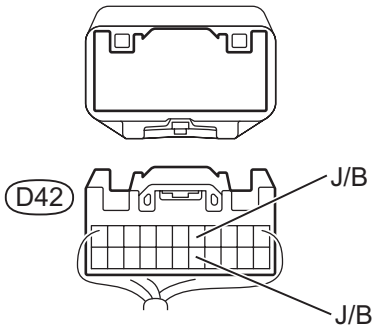

DLC3:

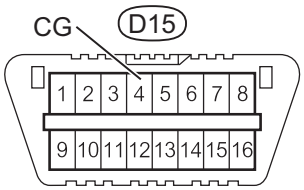

C133293E17

(b) Measure the resistance.
HINT:
The resistance must be measured after the D42 P-CAN J/C connector is disconnected.
Result

Tester Connection	Condition	Specified Condition	Proceed to
D42-5 (J/B) - D15-4 (CG)	Ignition switch OFF	1 Ω or higher	OK
D41-16 (J/B) - D15-4 (CG)	Ignition switch OFF	1 Ω or higher	OK
D42-5 (J/B) - D15-4 (CG)	Ignition switch OFF	Below 1 Ω	NG
D41-16 (J/B) - D15-4 (CG)	Ignition switch OFF	Below 1 Ω	NG

OK → **REPLACE MAIN BODY ECU**

NG

REPAIR OR REPLACE CAN BRANCH WIRE CONNECTED TO MAIN BODY ECU (P-CAN J/C - MAIN BODY ECU (CAN-H, CAN-L))

CA

18	CHECK CAN BUS LINE FOR SHORT TO GND (COMBINATION METER ECU BRANCH WIRE)

Wire Harness Side:

Combination Meter ECU Connector

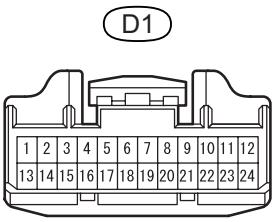

Front View

C139156E04

(a) Disconnect the D1 combination meter ECU connector.

Wire Harness Side:

P-CAN J/C Connector

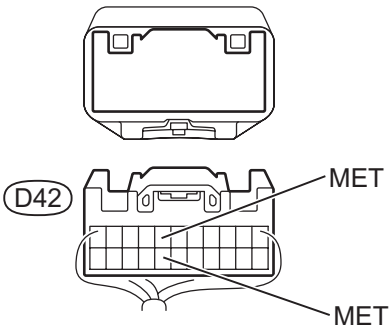

DLC3:

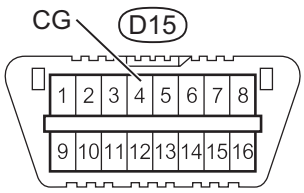

C133293E20

(b) Measure the resistance.
HINT:
The resistance must be measured after the D42 P-CAN J/C connector is disconnected.
Result

Tester Connection	Condition	Specified Condition	Proceed to
D42-7 (MET) - D15-4 (CG)	Ignition switch OFF	1 Ω or higher	OK
D41-18 (MET) - D15-4 (CG)	Ignition switch OFF	1 Ω or higher	OK
D42-7 (MET) - D15-4 (CG)	Ignition switch OFF	Below 1 Ω	NG
D41-18 (MET) - D15-4 (CG)	Ignition switch OFF	Below 1 Ω	NG

OK → REPLACE COMBINATION METER ECU

NG

REPAIR OR REPLACE CAN BRANCH WIRE CONNECTED TO COMBINATION METER ECU (P-CAN J/C - COMBINATION METER ECU (CAN-H, CAN-L))

CA

Open in One Side of CAN Branch Line

DESCRIPTION

If 2 or more ECUs and/or sensors do not appear on the intelligent tester "BUS CHECK" screen via the CAN VIM, one side of the CAN branch wire may be open. (one side of the CAN-H [branch wire] / CANL [branch wire] of the ECU and/or sensor is open.)

Symptom	Trouble Area
2 or more ECUs and/or sensors do not appear on intelligent tester "BUS CHECK" screen via the CAN VIM.	• Open in one side of CAN branch wire • Brake actuator (Skid control ECU)*1 • Power steering ECU • ECM • Center airbag sensor assembly • Air conditioning amplifier ECU*2 • Combination meter ECU • Main body ECU • D-CAN J/C (Junction connector) • P-CAN J/C (Junction connector)

HINT:

- *1: w/ ABS
- *2: w/ Air conditioning or PTC heater

WIRING DIAGRAM

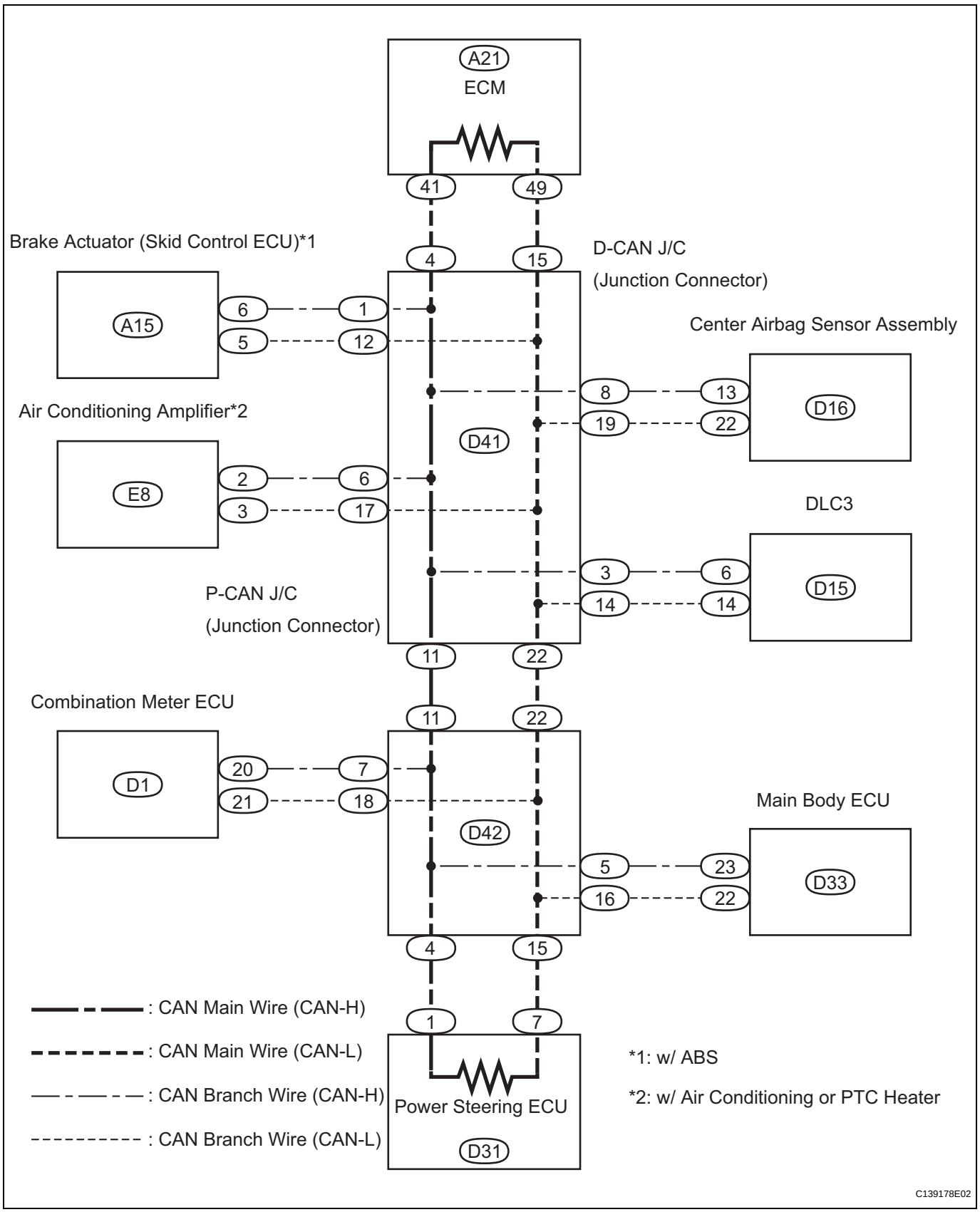

CA

INSPECTION PROCEDURE

NOTICE:

- **Turn the ignition switch OFF before measuring the resistances of the CAN main wire and the CAN branch wire.**
- **After the ignition switch is turned off, check that the key reminder warning system and light reminder warning system are not in operation.**
- **Before measuring the resistance, leave the vehicle as is for at least 1 minute and do not operate the ignition switch, any other switches or the doors. If doors need to be opened in order to check connectors, open the doors and leave them open.**
  HINT:
  Operating the ignition switch, any switches or any doors triggers related ECU and sensor communication with the CAN, which causes resistance variation.

HINT:

- Perform the following inspection for the ECUs (sensors) which are not displayed on the intelligent tester. If malfunction cannot be identified, then perform the following inspections for the ECUs (sensors) connected to CAN communication.
- Do not remove the power steering ECU and ECM, as they are the end parts of the circuit. If removed, CAN communication will not be possible.
- The open circuit confirmation of the power steering ECU, ECM and main wire is performed in the CHECK CAN BUS LINE procedure of HOW TO PROCEED WITH TROUBLESHOOTING. This inspection only has procedures for checking for an open circuit on one side of the CAN branch wire.

1	CHECK OPEN IN ONE SIDE OF CAN BRANCH WIRE (BRAKE ACTUATOR (SKID CONTROL ECU))

Wire Harness Side:

Brake Actuator (Skid Control ECU) Connector

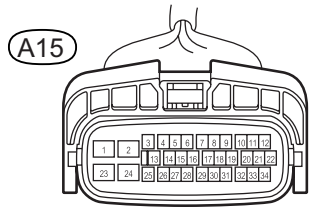

Front View

H

C118165E05

NOTICE:
For vehicles without ABS, go to step 3.

(a) Disconnect the A15 brake actuator (skid control ECU) connector.

(b) Select "BUS CHECK" on the intelligent tester via the CAN VIM (See page CA-22).
Result

Result	Proceed to
"ABS/VSC/TRAC" not displayed on intelligent tester.	**A**
Several ECUs and sensors other than "ABS/VSC/TRAC" not displayed on intelligent tester.	**B**

B → **Go to step 3**

A

CA

2 CHECK OPEN IN ONE SIDE OF CAN BRANCH WIRE (BRAKE ACTUATOR (SKID CONTROL ECU) BRANCH WIRE)

Wire Harness Side:

Brake Actuator (Skid Control ECU) Connector

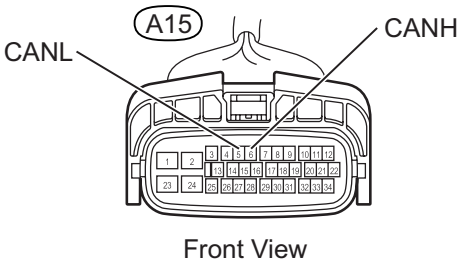

H

C118165E03

(a) Measure the resistance.
HINT:
The resistance must be measured after the A15 brake actuator (skid control ECU) connector is disconnected.
Standard resistance

Tester Connection	Condition	Specified Condition
A15-6 (CANH) - A15-5 (CANL)	Ignition switch OFF	54 to 69 Ω

NG → **REPAIR OR REPLACE CAN BRANCH WIRE CONNECTED TO BRAKE ACTUATOR (SKID CONTROL ECU) (CAN-H, CAN-L)**

OK

REPLACE BRAKE ACTUATOR (SKID CONTROL ECU)

3 CHECK OPEN IN ONE SIDE OF CAN BRANCH WIRE (AIR CONDITIONING AMPLIFIER)

Wire Harness Side:

Air Conditioning Amplifier Connector

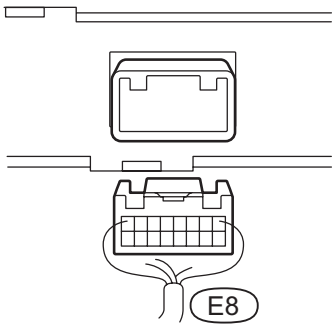

C131847E04

NOTICE:
For vehicles without air conditioning or PTC heater, go to step 5.

(a) Disconnect the E8 air conditioning amplifier connector.
(b) Select "BUS CHECK" on the intelligent tester via the CAN VIM (See page CA-22).
Result

Result	Proceed to
"A/C" not displayed on intelligent tester.	A
Several ECUs and sensors other than "A/C" not displayed on intelligent tester.	B

B → **Go to step 5**

A

CA

4	CHECK OPEN IN ONE SIDE OF CAN BRANCH WIRE (AIR CONDITIONING AMPLIFIER BRANCH WIRE)

Wire Harness Side:

Air Conditioning Amplifier Connector

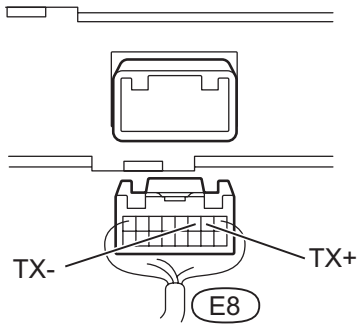

C131847E01

(a) Measure the resistance.
HINT:
The resistance must be measured after the E8 air conditioning amplifier connector is disconnected.
Standard resistance

Tester Connection	Condition	Specified Condition
E8-2 (TX+) - E8-3 (TX-)	Ignition switch OFF	54 to 69 Ω

NG → **REPAIR OR REPLACE CAN BRANCH WIRE CONNECTED TO AIR CONDITIONING AMPLIFIER (CAN-H, CAN-L)**

OK

REPLACE AIR CONDITIONING AMPLIFIER

5	CHECK OPEN IN ONE SIDE OF CAN BRANCH WIRE (CENTER AIRBAG SENSOR ASSEMBLY)

Wire Harness Side:

Center Airbag Sensor Assembly Connector

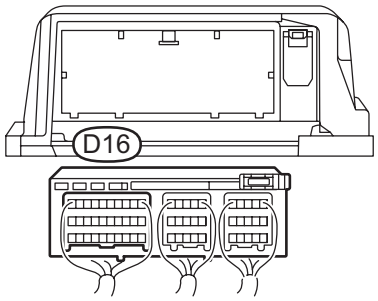

C131069E01

(a) Disconnect the D16 center airbag sensor assembly connector.
(b) Select "BUS CHECK" on the intelligent tester via the CAN VIM (See page CA-22).
Result

Result	Proceed to
"SRS AIRBAG" not displayed on intelligent tester.	A
Several ECUs and sensors other than "SRS AIRBAG" not displayed on intelligent tester.	B

B → **Go to step 7**

A

CA

6	CHECK OPEN IN ONE SIDE OF CAN BRANCH WIRE (CENTER AIRBAG SENSOR ASSEMBLY BRANCH WIRE)

Wire Harness Side:

Center Airbag Sensor Assembly Connector

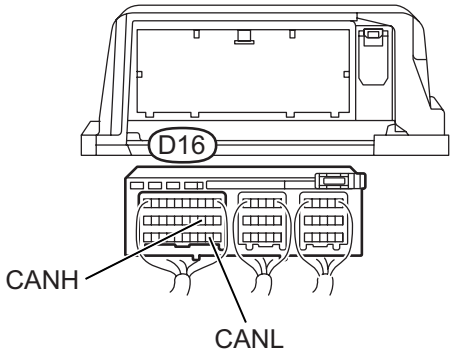

C131069E06

(a) Measure the resistance.
HINT:
The resistance must be measured after the D16 center airbag sensor assembly connector is disconnected.
Standard resistance

Tester Connection	Condition	Specified Condition
D16-13 (CANH) - D16-22 (CANL)	Ignition switch OFF	54 to 69 Ω

NG → **REPAIR OR REPLACE CAN BRANCH WIRE CONNECTED TO CENTER AIRBAG SENSOR ASSEMBLY (CAN-H, CAN-L)**

OK

REPLACE CENTER AIRBAG SENSOR ASSEMBLY

7	CHECK OPEN IN ONE SIDE OF CAN BRANCH WIRE (MAIN BODY ECU)

Wire Harness Side:

Main Body ECU Connector

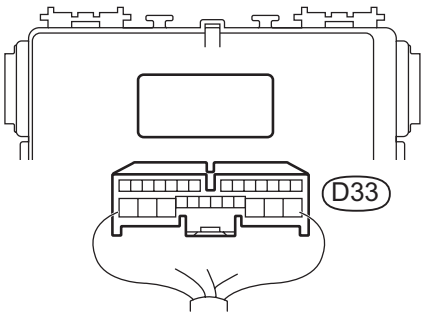

C131840E02

(a) Disconnect the D33 main body ECU connector.
(b) Select "BUS CHECK" on the intelligent tester via the CAN VIM (See page CA-22).
Result

Result	Proceed to
"MAIN BODY" not displayed on intelligent tester.	A
Several ECUs and sensors other than "MAIN BODY" not displayed on intelligent tester.	B

B → **Go to step 9**

A

CA

8	CHECK OPEN IN ONE SIDE OF CAN BRANCH WIRE (MAIN BODY ECU BRANCH WIRE)

Wire Harness Side:

Main Body ECU Connector

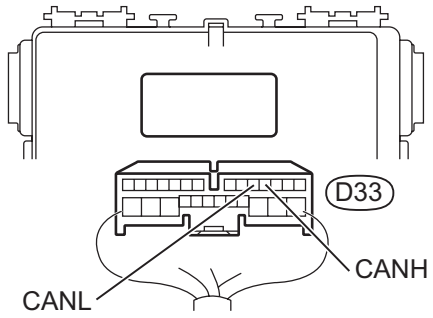

C131840E01

(a) Measure the resistance.
HINT:
The resistance must be measured after the D33 main body ECU connector is disconnected.
Standard resistance

Tester Connection	Condition	Specified Condition
D33-23 (CANH) - D33-22 (CANL)	Ignition switch OFF	54 to 69 Ω

NG → **REPAIR OR REPLACE CAN BRANCH WIRE CONNECTED TO MAIN BODY ECU (CAN-H, CAN-L)**

OK

REPLACE MAIN BODY ECU

9	CHECK OPEN IN ONE SIDE OF CAN BRANCH WIRE (COMBINATION METER ECU)

Wire Harness Side:

Combination Meter ECU Connector

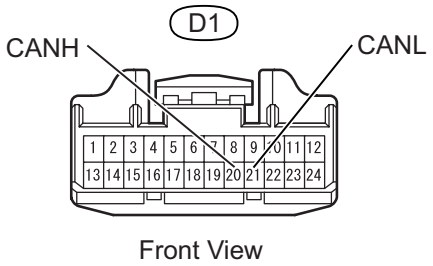

Front View

C139156E02

(a) Disconnect the D1 combination meter ECU connector.
(b) Measure the resistance.
Standard resistance

Tester Connection	Condition	Specified Condition
D1-20 (CANH) - D1-20 (CANL)	Ignition switch OFF	54 to 69 Ω

NG → **REPAIR OR REPLACE CAN BRANCH WIRE CONNECTED TO COMBINATION METER ECU (CAN-H, CAN-L)**

OK

REPLACE COMBINATION METER ECU

CA

FOREWORD

This wiring diagram manual has been prepared to provide information on the electrical system of the 2007 YARIS.

Applicable models: NCP91, 93 Series

Refer to the following manuals for additional service specifications and repair procedures for these models:

Manual Name	Pub. No.
● 2007 YARIS Repair Manual	RM01V0U
● 2007 YARIS New Car Features	NM01V0U

All information in this manual is based on the latest product information at the time of publication. However, specifications and procedures are subject to change without notice.

TOYOTA MOTOR CORPORATION

NOTICE

Always follow the directions given in the above repair manuals when handling supplemental restraint system components (such as removal, installation, inspection, etc.) in order to prevent accidents and supplemental restraint system malfunction.

©2006 TOYOTA MOTOR CORPORATION
All rights reserved. This book may not be reproduced or copied, in whole or in part, without the written permission of Toyota Motor Corporation.
First Printing : Feb. 03, 2006 01–060203–00

2007 YARIS
ELECTRICAL WIRING DIAGRAM

	Section Code	Page
INTRODUCTION	A	2
HOW TO USE THIS MANUAL	B	3
TROUBLESHOOTING	C	12
ABBREVIATIONS	D	17
GLOSSARY OF TERMS AND SYMBOLS	E	18
RELAY LOCATIONS	F	20
ELECTRICAL WIRING ROUTING	G	46
SYSTEM CIRCUITS	H	67
GROUND POINT	I	244
POWER SOURCE (Current Flow Chart)	J	252
CONNECTOR LIST	K	258
PART NUMBER OF CONNECTORS	L	276
OVERALL ELECTRICAL WIRING DIAGRAM	M	280

A INTRODUCTION

This manual consists of the following 13 sections:

No.	Section	Description
A	INDEX	Index of the contents of this manual.
	INTRODUCTION	Brief explanation of each section.
B	HOW TO USE THIS MANUAL	Instructions on how to use this manual.
C	TROUBLE–SHOOTING	Describes the basic inspection procedures for electrical circuits.
D	ABBREVIATIONS	Defines the abbreviations used in this manual.
E	GLOSSARY OF TERMS AND SYMBOLS	Defines the symbols and functions of major parts.
F	RELAY LOCATIONS	Shows position of the Electronic Control Unit, Relays, Relay Block, etc. This section is closely related to the system circuit.
G	ELECTRICAL WIRING ROUTING	Describes position of Parts Connectors, Splice points, Ground points, etc. This section is closely related to the system circuit.
H	INDEX	Index of the system circuits.
	SYSTEM CIRCUITS	Electrical circuits of each system are shown from the power supply through ground points. Wiring connections and their positions are shown and classified by code according to the connection method. (Refer to the section, ”How to use this manual”). The ”System Outline” and ”Service Hints” useful for troubleshooting are also contained in this section.
I	GROUND POINT	Shows ground positions of all parts described in this manual.
J	POWER SOURCE (Current Flow Chart)	Describes power distribution from the power supply to various electrical loads.
K	CONNECTOR LIST	Describes the form of the connectors for the parts appeared in this book. This section is closely related to the system circuit.
L	PART NUMBER OF CONNECTORS	Indicates the part number of the connectors used in this manual.
M	OVERALL ELECTRICAL WIRING DIAGRAM	Provides circuit diagrams showing the circuit connections.

This manual provides information on the electrical circuits installed on vehicles by dividing them into a circuit for each system.

The actual wiring of each system circuit is shown from the point where the power source is received from the battery as far as each ground point. (All circuit diagrams are shown with the switches in the OFF position.)

When troubleshooting any problem, first understand the operation of the circuit where the problem was detected (see System Circuit section), the power source supplying power to that circuit (see Power Source section), and the ground points (see Ground Point section). See the System Outline to understand the circuit operation.

When the circuit operation is understood, begin troubleshooting of the problem circuit to isolate the cause. Use Relay Location and Electrical Wiring Routing sections to find each part, junction block and wiring harness connectors, wiring harness and wiring harness connectors and ground points of each system circuit. Internal wiring for each junction block is also provided for better understanding of connection within a junction block.
Wiring related to each system is indicated in each system circuit by arrows (from__, to__). When overall connections are required, see the Overall Electrical Wiring Diagram at the end of this manual.

* The system shown here is an EXAMPLE ONLY. It is different to the actual circuit shown in the SYSTEM CIRCUITS SECTION.

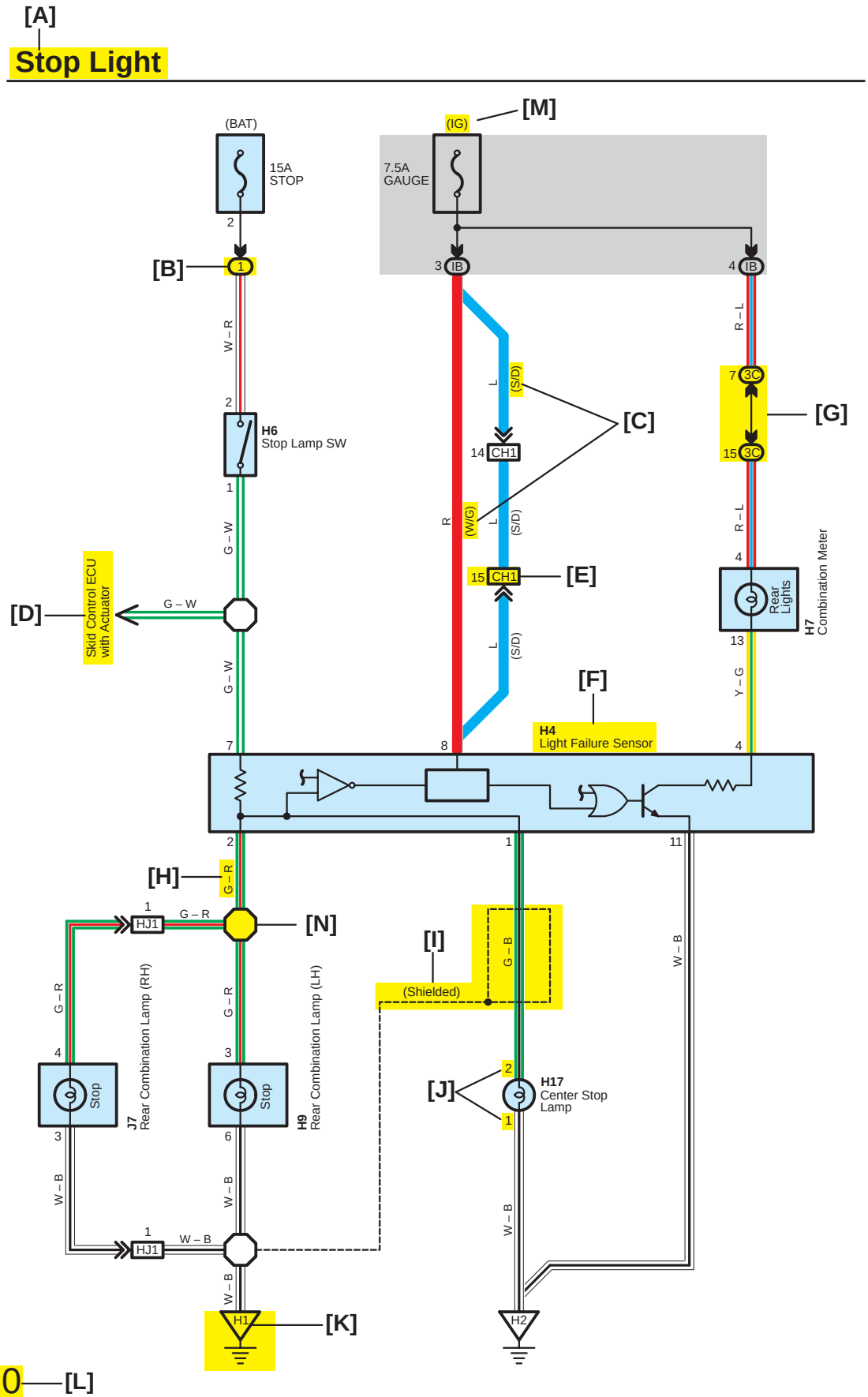

[A] : System Title

[B] : Indicates a Relay Block. No shading is used and only the Relay Block No. is shown to distinguish it from the J/B

Example: (1) Indicates Relay Block No.1

[C] : ( ) is used to indicate different wiring and connector, etc. when the vehicle model, engine type, or specification is different.

[D] : Indicates related system.

[E] : Indicates the code for the (male and female) connectors which are used to join two wire harnesses. The connector code consists of two alphabetical and one numerical characters.

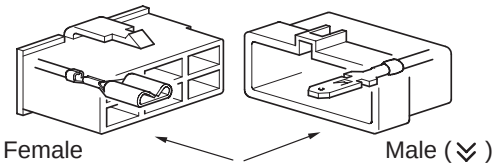

The first character of the connector code indicates the alphabetical code allocated to the wire harness which has the female connector, and the second shows that of the wire harness which has the male connector.
The third character indicates a serial number used to distinguish between the wire harness combinations in cases when more than one of the same combination of wire harnesses exist (e.g. CH1 and CH2).

Symbol ( ) indicates the male terminal connector.
Numbers outside connector codes indicate the pin numbers of both male and female connectors.

[F] : Represents a part (all parts are shown in sky blue). The code is the same as the code used in parts position.

[G] : Junction Block (The number in the circle is the J/B No. and the connector code is shown beside it). Junction Blocks are shaded to clearly separate them from other parts.

Example:

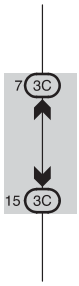

3C indicates that it is inside Junction Block No.3

[H] : Indicates the wiring color.

Wire colors are indicated by an alphabetical code.

B	= Black	W	= White	BR	= Brown
L	= Blue	V	= Violet	SB	= Sky Blue
R	= Red	G	= Green	LG	= Light Green
P	= Pink	Y	= Yellow	GR	= Gray
O	= Orange				

The first letter indicates the basic wire color and the second letter indicates the color of the stripe.

Example: L – Y

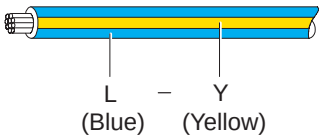

[I] : Indicates a shielded cable.



[J] : Indicates the pin number of the connector.
The numbering system is different for female and male connectors.

Example:

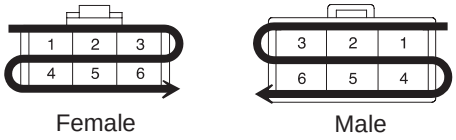

[K] : Indicates the ground point. The code consists of the two characters: A letter and number.
The first character of the code indicates the alphabetical code allocated to the wire harness. The second character indicates a serial number used to distinguish between the ground points in cases when more than one ground point exist on the same wire harness.

[L] : Page No.

[M] : Indicates the ignition key position(s) when the power is supplied to the fuse(s).

[N] : Indicates a wiring Splice Point.

Example:

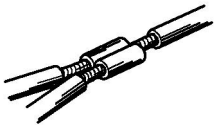

[O] **System Outline**

Current is applied at all times through the STOP fuse to TERMINAL 2 of the stop lamp SW.
When the ignition SW is turned on, current flows from the GAUGE fuse to TERMINAL 8 of the light failure sensor, and also flows through the rear lights warning light to TERMINAL 4 of the light failure sensor.

Stop Light Disconnection Warning

When the ignition SW is turned on and the brake pedal is pressed (Stop lamp SW on), if the stop light circuit is open, the current flowing from TERMINAL 7 of the light failure sensor to TERMINALS 1, 2 changes, so the light failure sensor detects the disconnection and the warning circuit of the light failure sensor is activated.
As a result, the current flows from TERMINAL 4 of the light failure sensor to TERMINAL 11 to GROUND and turns the rear lights warning light on. By pressing the brake pedal, the current flowing to TERMINAL 8 of the light failure sensor keeps the warning circuit on and holds the warning light on until the ignition SW is turned off.

[P] **: Parts Location**

Code	See Page	Code	See Page	Code	See Page
H4	36	H7	36	H17	38
H6	36	H9	38	J7	38

[Q] **: Relay Blocks**

Code	See Page	Relay Blocks (Relay Block Location)
1	18	R/B No.1 (Instrument Panel Brace LH)

[R] **: Junction Block and Wire Harness Connector**

Code	See Page	Junction Block and Wire Harness (Connector Location)
3C	22	Instrument Panel Wire and J/B No.3 (Instrument Panel Brace LH)
IB	20	Instrument Panel Wire and Instrument Panel J/B (Lower Finish Panel)

[S] **: Connector Joining Wire Harness and Wire Harness**

Code	See Page	Joining Wire Harness and Wire Harness (Connector Location)
CH1	42	Engine Room Main Wire and Instrument Panel Wire (Left Kick Panel)
HJ1	50	Instrument Panel Wire and Floor Wire (Right Kick Panel)

[T] **: Ground Points**

Code	See Page	Ground Points Location
H1	50	Under the Left Center Pillar
H2	50	Back Panel Center

[O] : Explains the system outline.

[P] : Indicates reference pages showing the parts locations in the system circuit on the vehicle.

Example : Code ”H4” (Light Failure Sensor) is on page 36 of the manual.
* The first character of the code indicates the alphabetical code allocated to the wire harness, and the second character indicates the serial number of the parts connected to the wire harness.

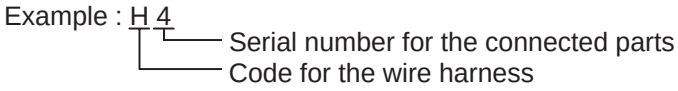

[Q] : Indicates the reference page showing the position on the vehicle of Relay Block Connectors in the system circuit.

Example : Connector ”1” is described on page 18 of this manual and is installed on the left side of the instrument panel.

[R] : Indicates the reference page showing the position on the vehicle of J/B and Wire Harness in the system circuit.

Example : Connector ”3C” connects the Instrument Panel Wire and J/B No.3. It is described on page 22 of this manual, and is installed on the instrument panel left side.

[S] : Indicates the reference page describing the wiring harness and wiring harness connector (the female wiring harness is shown first, followed by the male wiring harness).

Example : Connector ”CH1” connects the Engine Room Main Wire (female) and Instrument Panel Wire (male). It is described on page 42 of this manual, and is installed on the left side kick panel.

[T] : Indicates the reference page showing the position of the ground points on the vehicle.

Example : Ground point ”H2” is described on page 50 of this manual and is installed on the back panel center.

B HOW TO USE THIS MANUAL

The ground points circuit diagram shows the connections from all major parts to the respective ground points. When troubleshooting a faulty ground point, checking the system circuits which use a common ground may help you identify the problem ground quickly. The relationship between ground points (A1 , A2 and D4 shown below) can also be checked this way.

I GROUND POINT

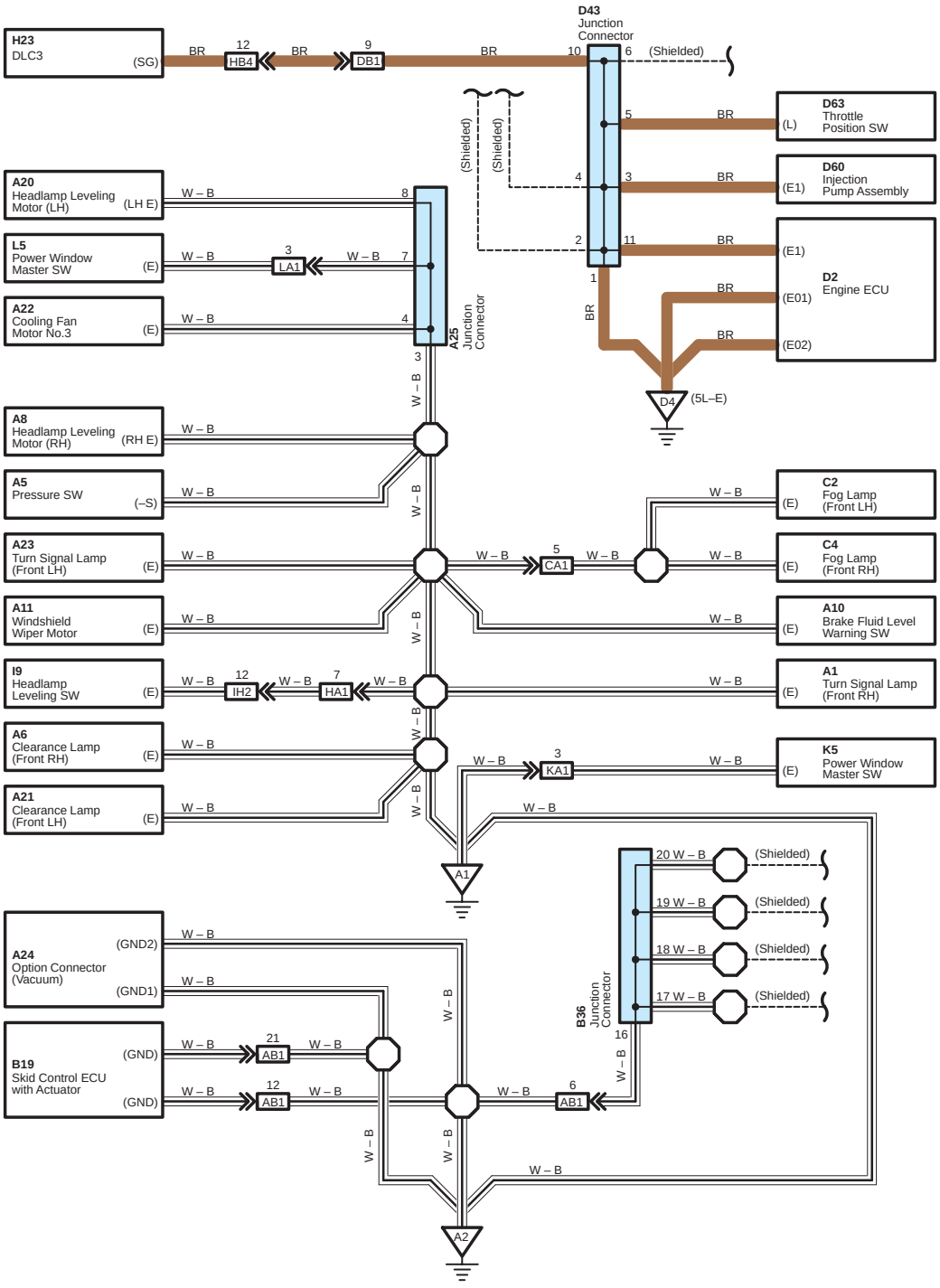

* The system shown here is an EXAMPLE ONLY. It is different to the actual circuit shown in the SYSTEM CIRCUITS SECTION.

The ”Current Flow Chart” section, describes which parts each power source (fuses, fusible links, and circuit breakers) transmits current to. In the Power Source circuit diagram, the conditions when battery power is supplied to each system are explained. Since all System Circuit diagrams start from the power source, the power source system must be fully understood.

J POWER SOURCE (Current Flow Chart)

The chart below shows the route by which current flows from the battery to each electrical source (Fusible Link, Circuit Breaker, Fues, etc.) and other parts

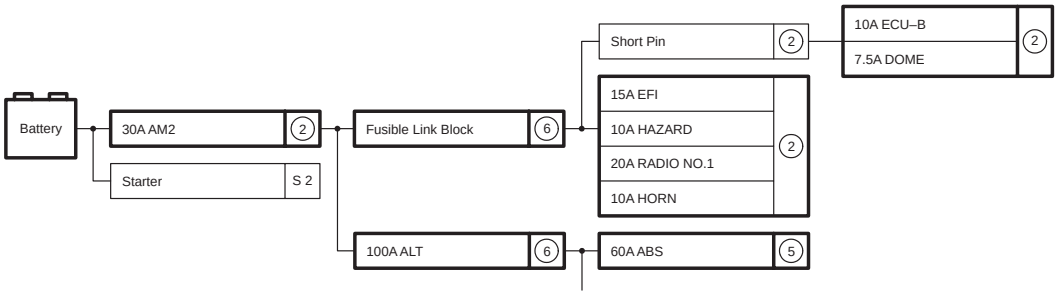

Engine Room R/B (See Page 20)

Fuse		System	Page
20A	STOP	ABS ABS and Traction Control Cruise Control Electronically Controlled Transmission Multiplex Communication System	194 187 180 166 210
10A	DOME	Cigarette Lighter Combination Meter Headlight Interior Light Key Reminder and Seat Belt Warning Light Auto Turn Off System	214 230 112 122

Power Source

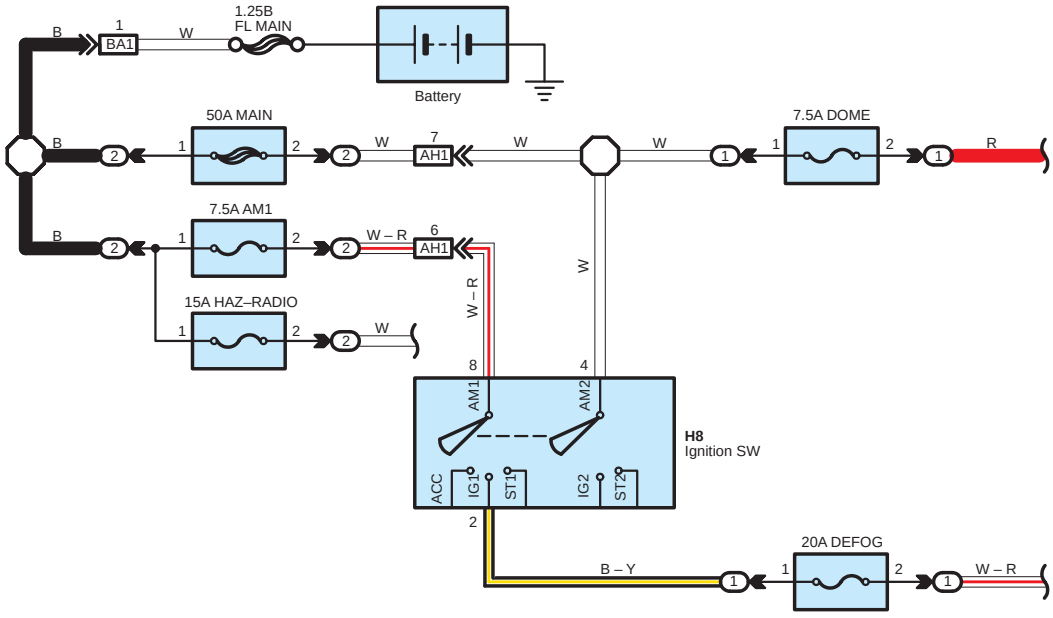

* The system shown here is an EXAMPLE ONLY. It is different to the actual circuit shown in the SYSTEM CIRCUITS SECTION.

K CONNECTOR LIST

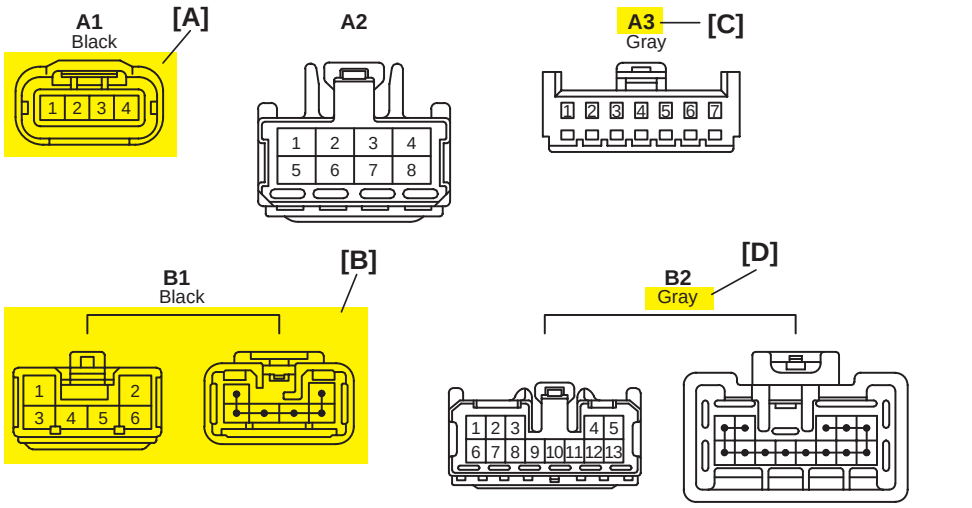

K CONNECTOR LIST

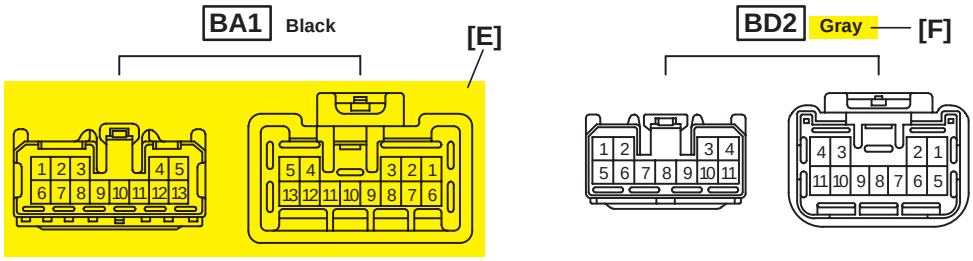

[A] : Indicates connector to be connected to a part. (The numeral indicates the pin No.)

[B] : Junction Connector
Indicates a connector which is connected to a short terminal.

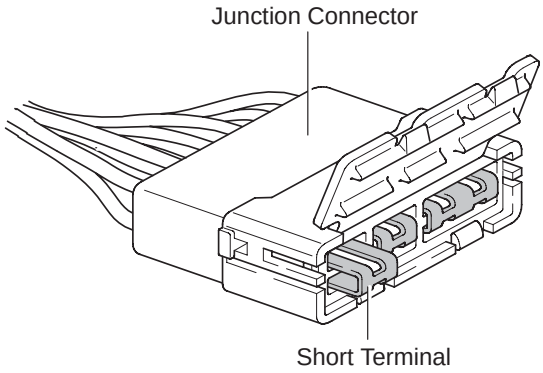

Junction connector in this manual include a short terminal which is connected to a number of wire harnesses. Always perform inspection with the short terminal installed.

[C] : Parts Code
The first letter of the code is taken from the first letter of part, and the numbers indicates its order in parts which start with the same letter.

[D] : Connector Color
Connectors not indicated are milky white in color.

[E] : Indicates the connector shapes which are used to join wire harnesses.
On Left : Female connector shapes
On Right : Male connector shapes
Numbers indicate pin numbers.

[F] : Indicates connector colors. (Connectors with not indicated colors are white)

L PART NUMBER OF CONNECTORS

Code	Part Name	Part Number
A1	Turn Signal Lamp (Front RH)	90980–11019
A2	Inlet Air Temp. Sensor	90980–11163
A3	Air Flow Meter	90980–12292
A4	A/C Pressure Sensor	90980–10845
A5	Pressure SW	90980–10943
A6	Clearance Lamp (Front RH)	90980–11156
[A]	Headla[B]H)	909[C]314
A8	Headlamp Leveling Motor (RH)	90980–11016
A9	Brake Vacuum Warning SW	90980–11252
A10	Brake Fluid Level Warning SW	90980–11207
A11	Windshield Washer Motor	90980–11599
A12	Airbag Sensor (Front RH)	90980–11856
A13	Air[illegible]	90980–12490

Code	Part Name	Part Number
B22	Door Courtesy SW (Front LH)	90980–12470
B23	Front Seat Outer Belt (LH)	90980–12253
B24	Blower SW (Rear Heater)	90980–10463
B25	Front Seat Outer Belt (RH)	90980–12253
B26	Door Courtesy SW (Front RH)	90980–12470
B27	Cooling Fan ECU No.1	90980–10841
B28	Cooling Fan ECU No.2	
B29	Water Temp. Sensor (Radiator)	90980–10735
B30	Fuel Filter Warning SW	90980–11003
B32	Door Control Relay (LH)	90980–10789
B33	Step Lamp (LH)	90980–10121
B34	Junction Connector	90980–11398
B35	Junction Connector	

[A] : Part Code

[B] : Part Name

[C] : Part Number
Toyota Part Number are indicated.

Not all of the above part numbers of the connector are established for the supply.

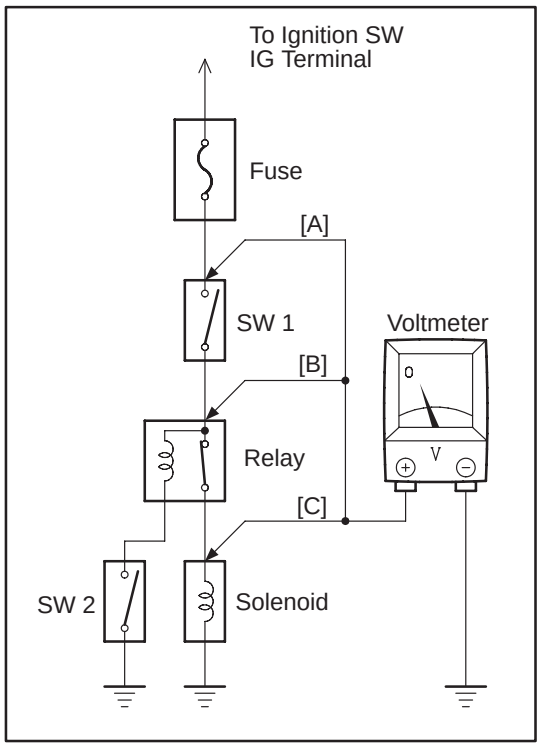

VOLTAGE CHECK

(a) Establish conditions in which voltage is present at the check point.

Example:
[A] – Ignition SW on
[B] – Ignition SW and SW 1 on
[C] – Ignition SW, SW 1 and Relay on (SW 2 off)

(b) Using a voltmeter, connect the negative lead to a good ground point or negative battery terminal, and the positive lead to the connector or component terminal.
This check can be done with a test light instead of a voltmeter.

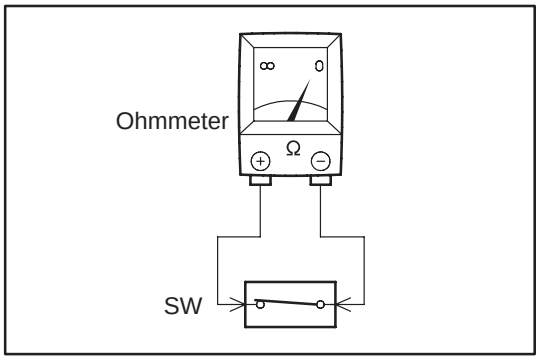

CONTINUITY AND RESISTANCE CHECK

(a) Disconnect the battery terminal or wire so there is no voltage between the check points.

(b) Contact the two leads of an ohmmeter to each of the check points.

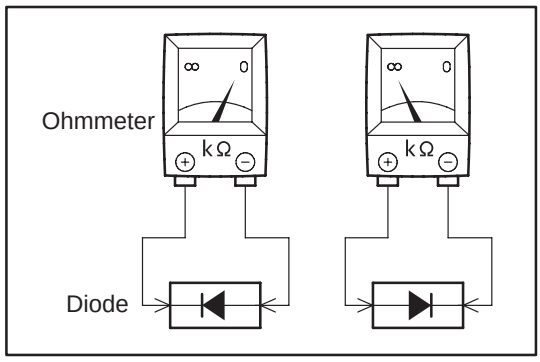

If the circuit has diodes, reverse the two leads and check again.
When contacting the negative lead to the diode positive side and the positive lead to the negative side, there should be continuity.
When contacting the two leads in reverse, there should be no continuity.

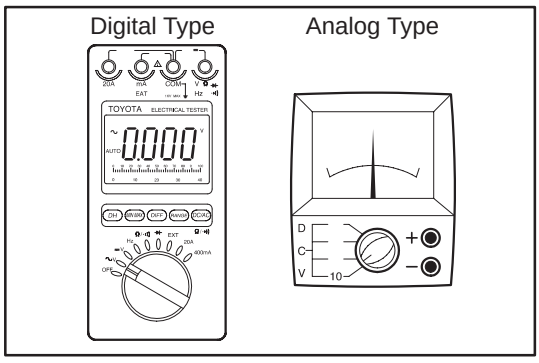

(c) Use a volt/ohmmeter with high impedance (10 kΩ/V minimum) for troubleshooting of the electrical circuit.

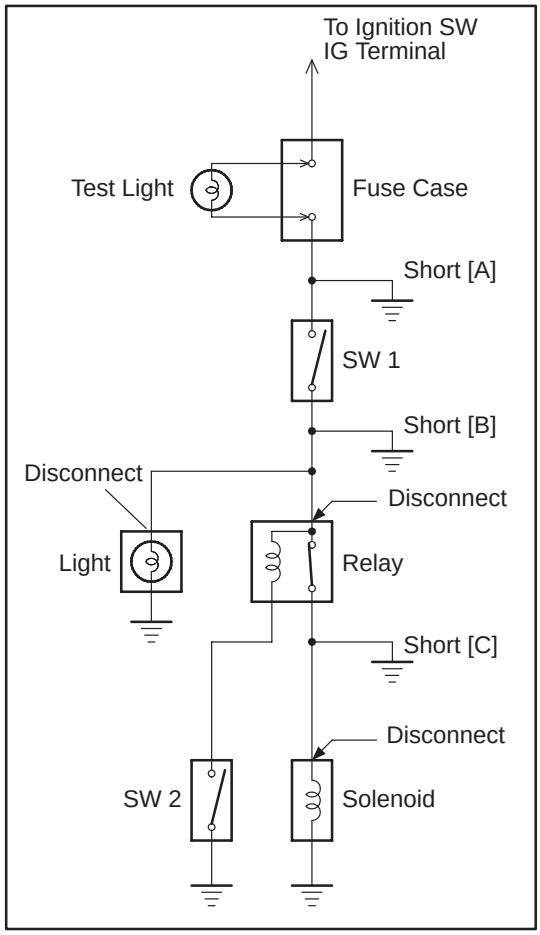

FINDING A SHORT CIRCUIT

(a) Remove the blown fuse and disconnect all loads of the fuse.

(b) Connect a test light in place of the fuse.

(c) Establish conditions in which the test light comes on.

Example:

[A] – Ignition SW on
[B] – Ignition SW and SW 1 on
[C] – Ignition SW, SW 1 and Relay on (Connect the Relay) and SW 2 off (or Disconnect SW 2)

(d) Disconnect and reconnect the connectors while watching the test light.
The short lies between the connector where the test light stays lit and the connector where the light goes out.

(e) Find the exact location of the short by lightly shaking the problem wire along the body.

CAUTION:

(a) Do not open the cover or the case of the ECU unless absolutely necessary. (If the IC terminals are touched, the IC may be destroyed by static electricity.)

(b) When replacing the internal mechanism (ECU part) of the digital meter, be careful that no part of your body or clothing comes in contact with the terminals of leads from the IC, etc. of the replacement part (spare part).

DISCONNECTION OF MALE AND FEMALE CONNECTORS

To pull apart the connectors, pull on the connector itself, not the wire harness.

HINT : Check to see what kind of connector you are disconnecting before pulling apart.

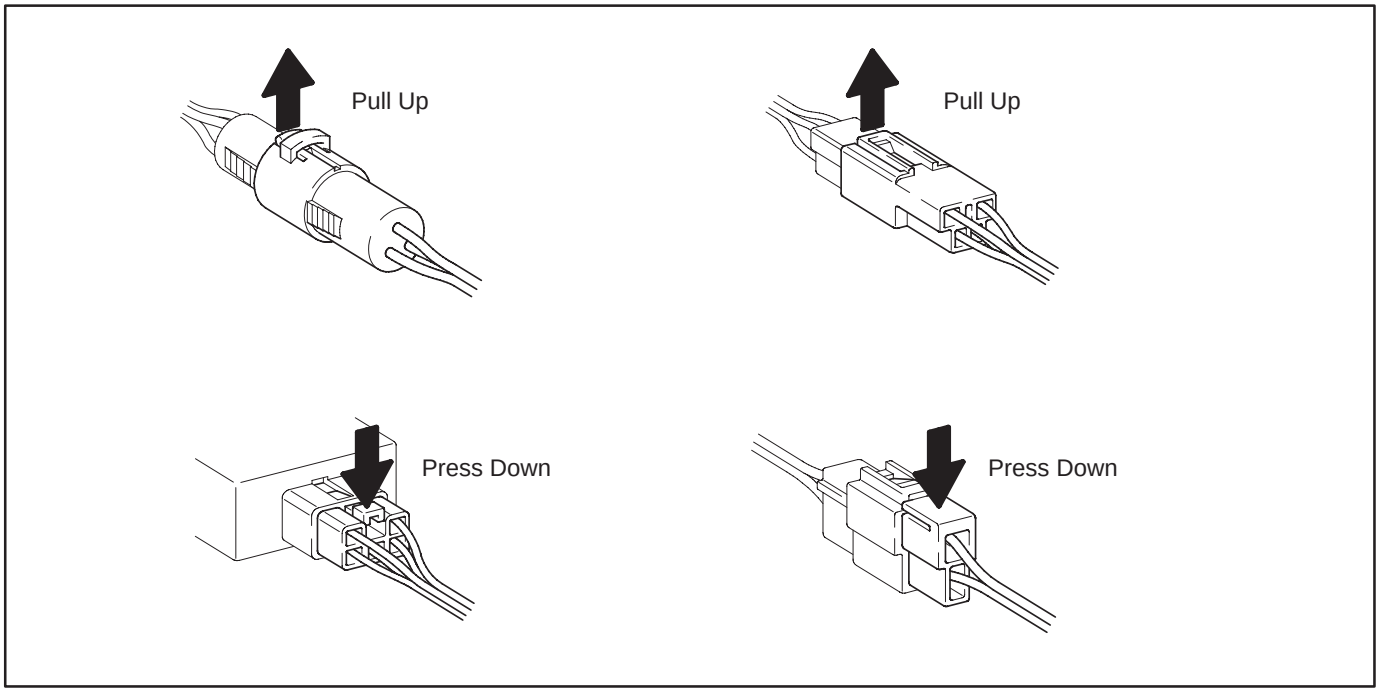

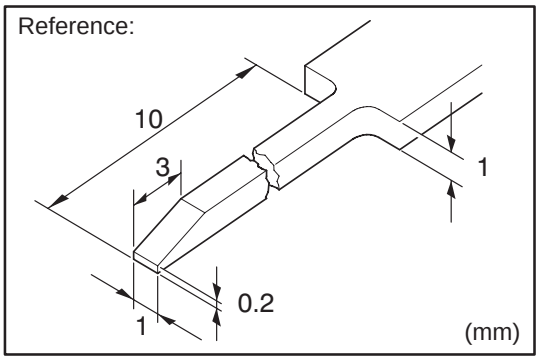

HOW TO REPLACE TERMINAL (with terminal retainer or secondary locking device)

1. PREPARE THE SPECIAL TOOL

   HINT : To remove the terminal from the connector, please construct and use the special tool or like object shown on the left.

2. DISCONNECT CONNECTOR

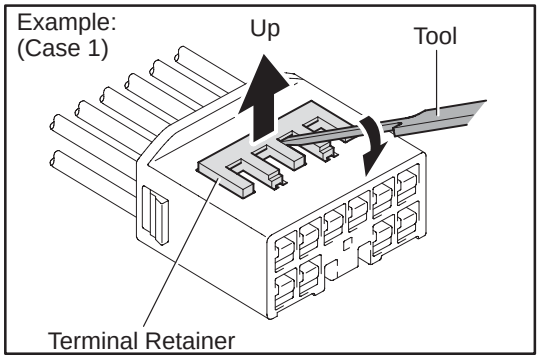

3. DISENGAGE THE SECONDARY LOCKING DEVICE OR TERMINAL RETAINER.

   (a) Locking device must be disengaged before the terminal locking clip can be released and the terminal removed from the connector.

   (b) Use a special tool or the terminal pick to unlock the secondary locking device or terminal retainer.

   NOTICE:
   Do not remove the terminal retainer from connector body.

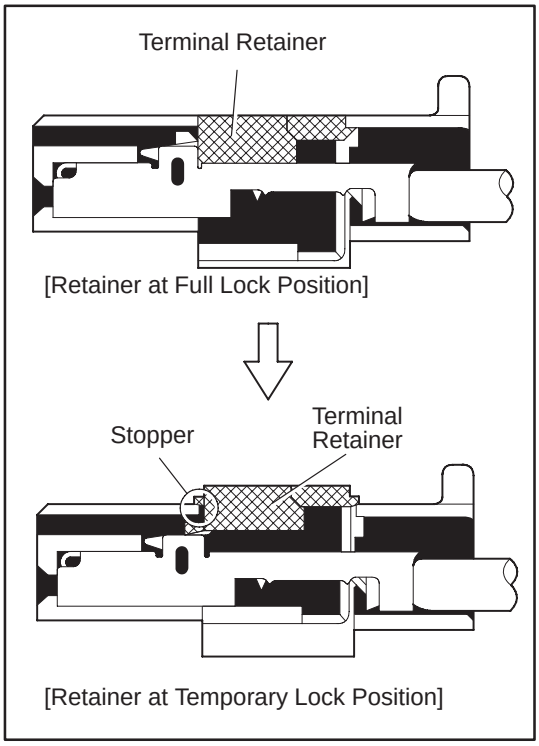

[A] For Non–Waterproof Type Connector

HINT : The needle insertion position varies according to the connector's shape (number of terminals etc.), so check the position before inserting it.

"Case 1"

Raise the terminal retainer up to the temporary lock position.

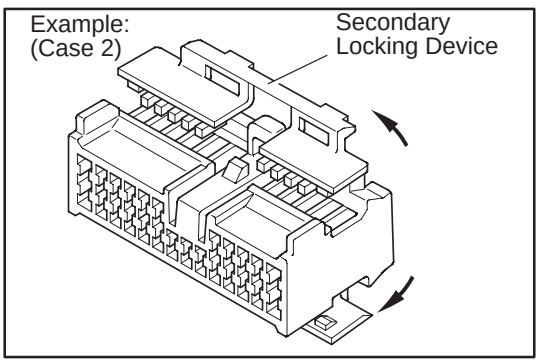

"Case 2"

Open the secondary locking device.

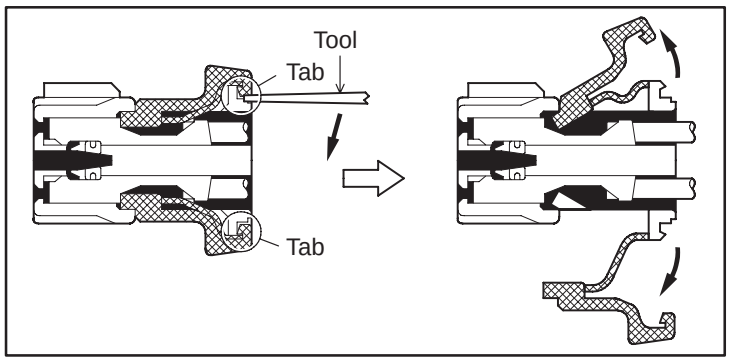

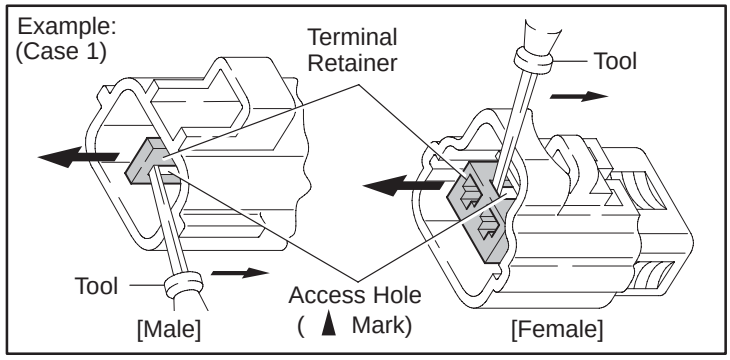

[B] For Waterproof Type Connector

HINT : Terminal retainer color is different according to connector body.

Example:

Terminal Retainer	:	Connector Body
Black or White	:	Gray
Black or White	:	Dark Gray
Gray or White	:	Black

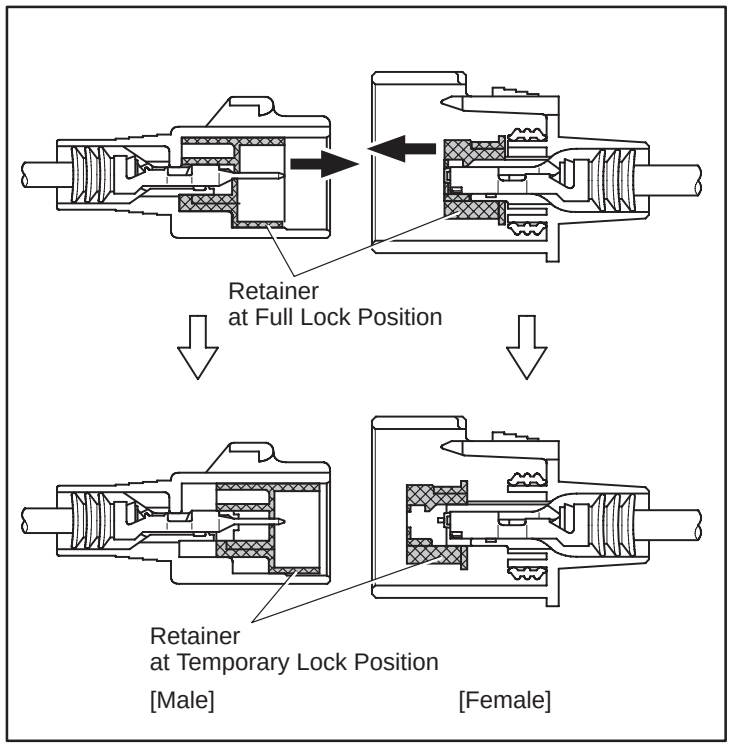

”Case 1”

Type where terminal retainer is pulled up to the temporary lock position (Pull Type).

Insert the special tool into the terminal retainer access hole (▲Mark) and pull the terminal retainer up to the temporary lock position.

HINT : The needle insertion position varies according to the connector’s shape (Number of terminals etc.), so check the position before inserting it.

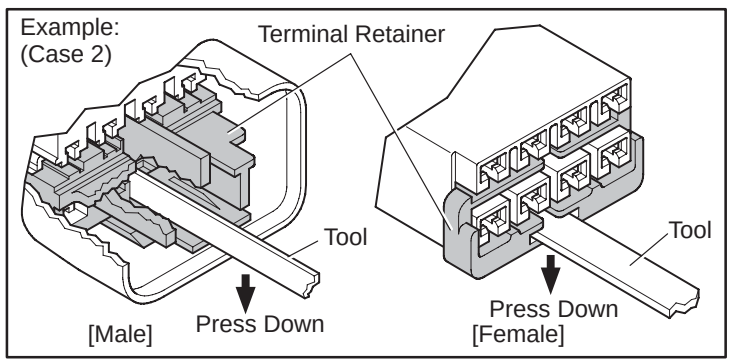

”Case 2”

Type which cannot be pulled as far as Power Lock insert the tool straight into the access hole of terminal retainer as shown.

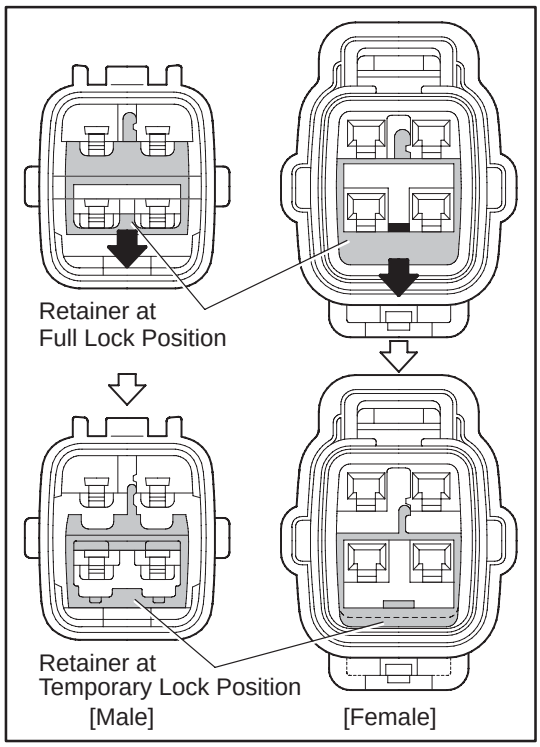

Push the terminal retainer down to the temporary lock position.

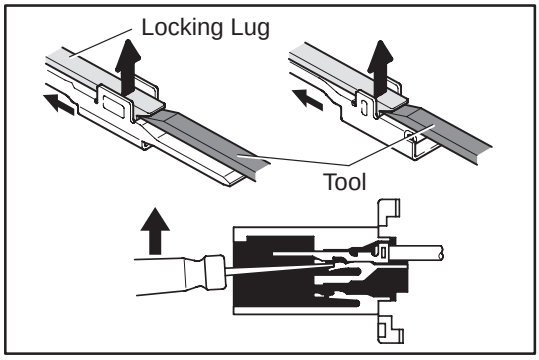

(c) Release the locking lug from terminal and pull the terminal out from rear.

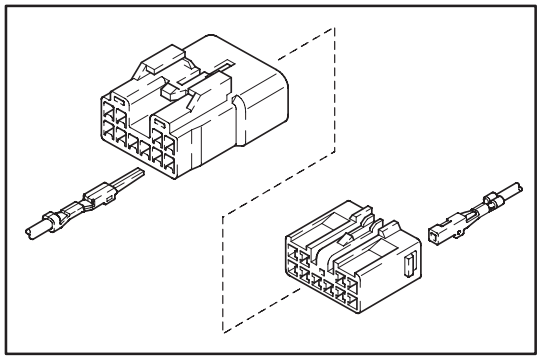

4. INSTALL TERMINAL TO CONNECTOR

(a) Insert the terminal.

HINT:
1. Make sure the terminal is positioned correctly.
2. Insert the terminal until the locking lug locks firmly.
3. Insert the terminal with terminal retainer in the temporary lock position.

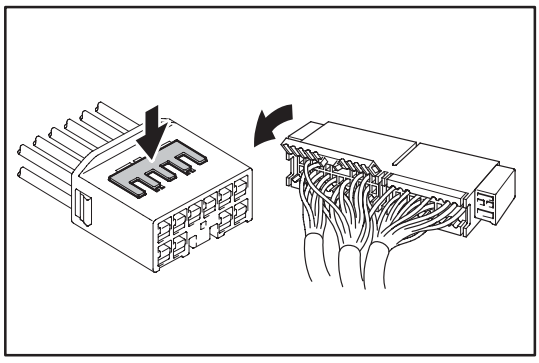

(b) Push the secondary locking device or terminal retainer in to the full lock position.

5. CONNECT CONNECTOR

ABBREVIATIONS

The following abbreviations are used in this manual.

A/C	=	Air Conditioning
A/T	=	Automatic Transaxle
ABS	=	Anti–Lock Brake System
CAN	=	Controller Area Network
CPU	=	Central Processing Unit
EBD	=	Electronic Brake Force Distribution
ECU	=	Electronic Control Unit
EPS	=	Electric Motor Power Steering
H/B	=	Hatchback Type
IC	=	Integrated Circuit
J/B	=	Junction Block
LED	=	Light Emitting Diode
LH	=	Left–Hand
M/T	=	Manual Transaxle
PTC	=	Positive Temperature Coefficient
R/B	=	Relay Block
RH	=	Right–Hand
S/D	=	Sedan Type
SRS	=	Supplemental Restraint System
SW	=	Switch
TEMP.	=	Temperature
VSV	=	Vacuum Switching Valve
w/	=	With
w/o	=	Without

* The titles given inside the components are the names of the terminals (terminal codes) and are not treated as being abbreviations.

E GLOSSARY OF TERMS AND SYMBOLS

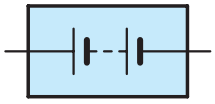

BATTERY
Stores chemical energy and converts it into electrical energy. Provides DC current for the auto's various electrical circuits.

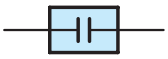

CAPACITOR (Condenser)
A small holding unit for temporary storage of electrical voltage.

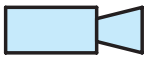

CIGARETTE LIGHTER
An electric resistance heating element.

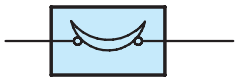

CIRCUIT BREAKER
Basically a reusable fuse, a circuit breaker will heat and open if too much current flows through it. Some units automatically reset when cool, others must be manually reset.



DIODE
A semiconductor which allows current flow in only one direction.



DIODE, ZENER
A diode which allows current flow in one direction but blocks reverse flow only up to a specific voltage. Above that potential, it passes the excess voltage. This acts as a simple voltage regulator.



PHOTODIODE
The photodiode is a semiconductor which controls the current flow according to the amount of light.

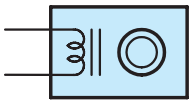

DISTRIBUTOR, IIA
Channels high–voltage current from the ignition coil to the individual spark plugs.

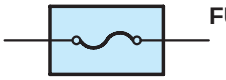

(for Medium Current Fuse)



(for High Current Fuse or Fusible Link)

FUSE
A thin metal strip which burns through when too much current flows through it, thereby stopping current flow and protecting a circuit from damage.

FUSIBLE LINK
A heavy–gauge wire placed in high amperage circuits which burns through on overloads, thereby protecting the circuit. The numbers indicate the crosssection surface area of the wires.



GROUND
The point at which wiring attaches to the Body, thereby providing a return path for an electrical circuit; without a ground, current cannot flow.

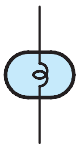

1. SINGLE FILAMENT



2. DOUBLE FILAMENT

HEADLIGHTS
Current flow causes a headlight filament to heat up and emit light. A headlight may have either a single (1) filament or a double (2) filament



HORN
An electric device which sounds a loud audible signal.

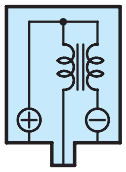

IGNITION COIL
Converts low–voltage DC current into high–voltage ignition current for firing the spark plugs.



LIGHT
Current flow through a filament causes the filament to heat up and emit light.



LED (LIGHT EMITTING DIODE)
Upon current flow, these diodes emit light without producing the heat of a comparable light.



METER, ANALOG
Current flow activates a magnetic coil which causes a needle to move, thereby providing a relative display against a background calibration.



METER, DIGITAL
Current flow activates one or many LED's, LCD's, or fluorescent displays, which provide a relative or digital display.



MOTOR
A power unit which converts electrical energy into mechanical energy, especially rotary motion.

RELAY

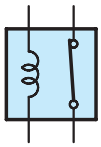

1. NORMALLY CLOSED

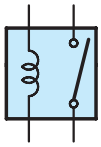

2. NORMALLY OPEN

Basically, an electrically operated switch which may be normally closed (1) or open (2).
Current flow through a small coil creates a magnetic field which either opens or closes an attached switch.

RELAY, DOUBLE THROW

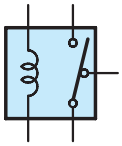

A relay which passes current through one set of contacts or the other.

RESISTOR

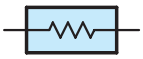

An electrical component with a fixed resistance, placed in a circuit to reduce voltage to a specific value.

RESISTOR, TAPPED

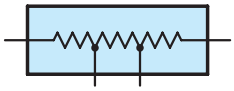

A resistor which supplies two or more different non adjustable resistance values.

RESISTOR, VARIABLE or RHEOSTAT



A controllable resistor with a variable rate of resistance.
Also called a potentiometer or rheostat.

SENSOR (Thermistor)

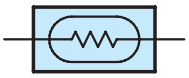

A resistor which varies its resistance with temperature.

SENSOR, SPEED



(Reed Switch Type)

Uses magnetic impulses to open and close a switch to create a signal for activation of other components.

SHORT PIN

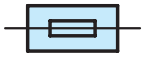

Used to provide an unbroken connection within a junction block.

SOLENOID

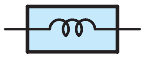

An electromagnetic coil which forms a magnetic field when current flows, to move a plunger, etc.

SPEAKER



An electromechanical device which creates sound waves from current flow.

SWITCH, MANUAL

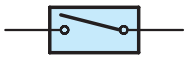

1. NORMALLY OPEN

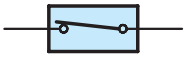

2. NORMALLY CLOSED

Opens and closes circuits, thereby stopping (1) or allowing (2) current flow.

SWITCH, DOUBLE THROW

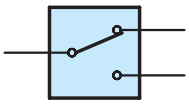

A switch which continuously passes current through one set of contacts or the other.

SWITCH, IGNITION

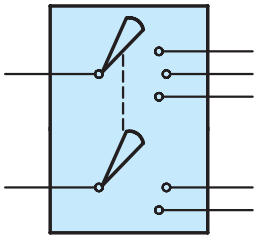

A key operated switch with several positions which allows various circuits, particularly the primary ignition circuit, to become operational.

SWITCH, WIPER PARK

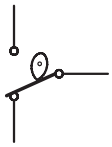

Automatically returns wipers to the stop position when the wiper switch is turned off.

TRANSISTOR

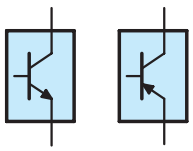

A solidstate device typically used as an electronic relay; stops or passes current depending on the voltage applied at ”base”.

WIRES

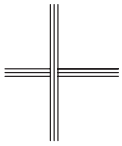

(1) NOT CONNECTED

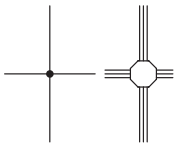

(2) SPLICED

Wires are always drawn as straight lines on wiring diagrams.
Crossed wires (1) without a black dot at the junction are not joined;
crossed wires (2) with a black dot or octagonal (⬡) mark at the junction are spliced (joined) connections.

[Engine Compartment]
(H/B)

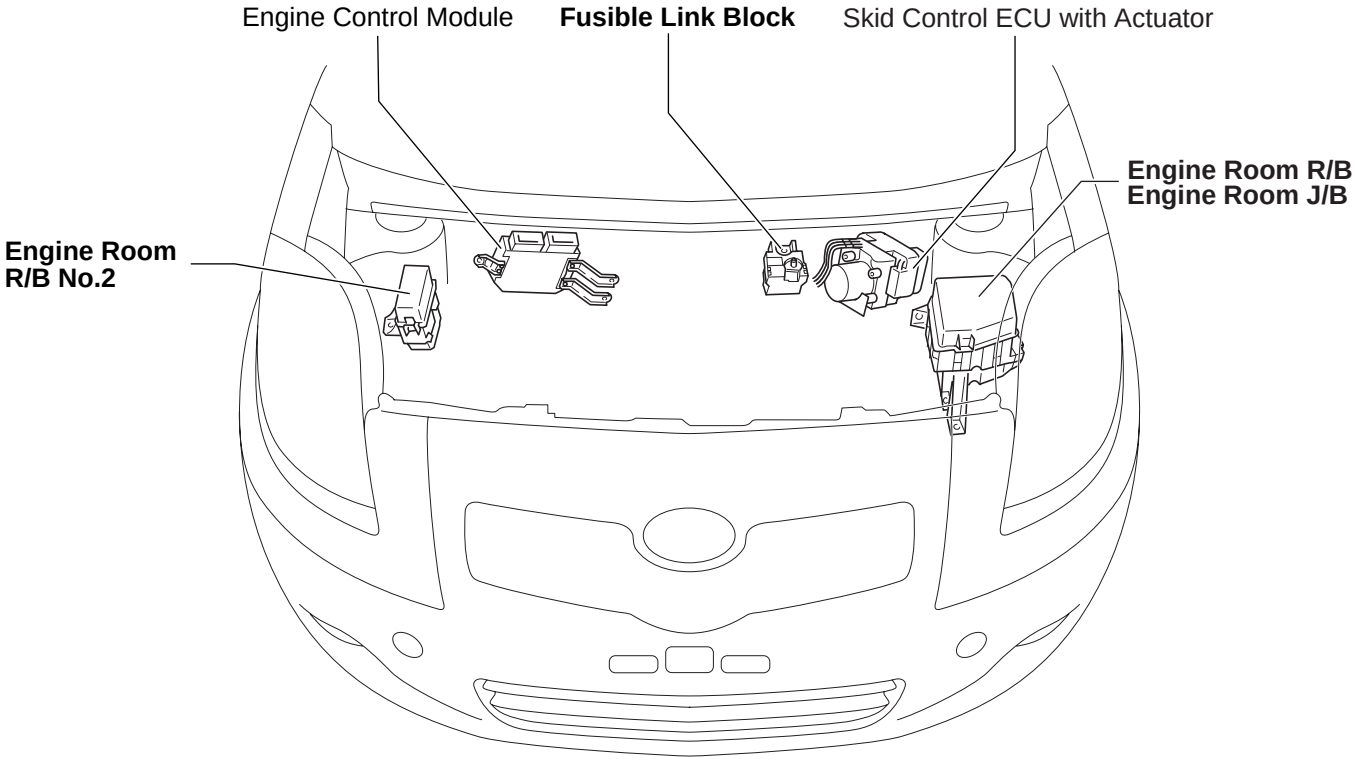

(S/D)

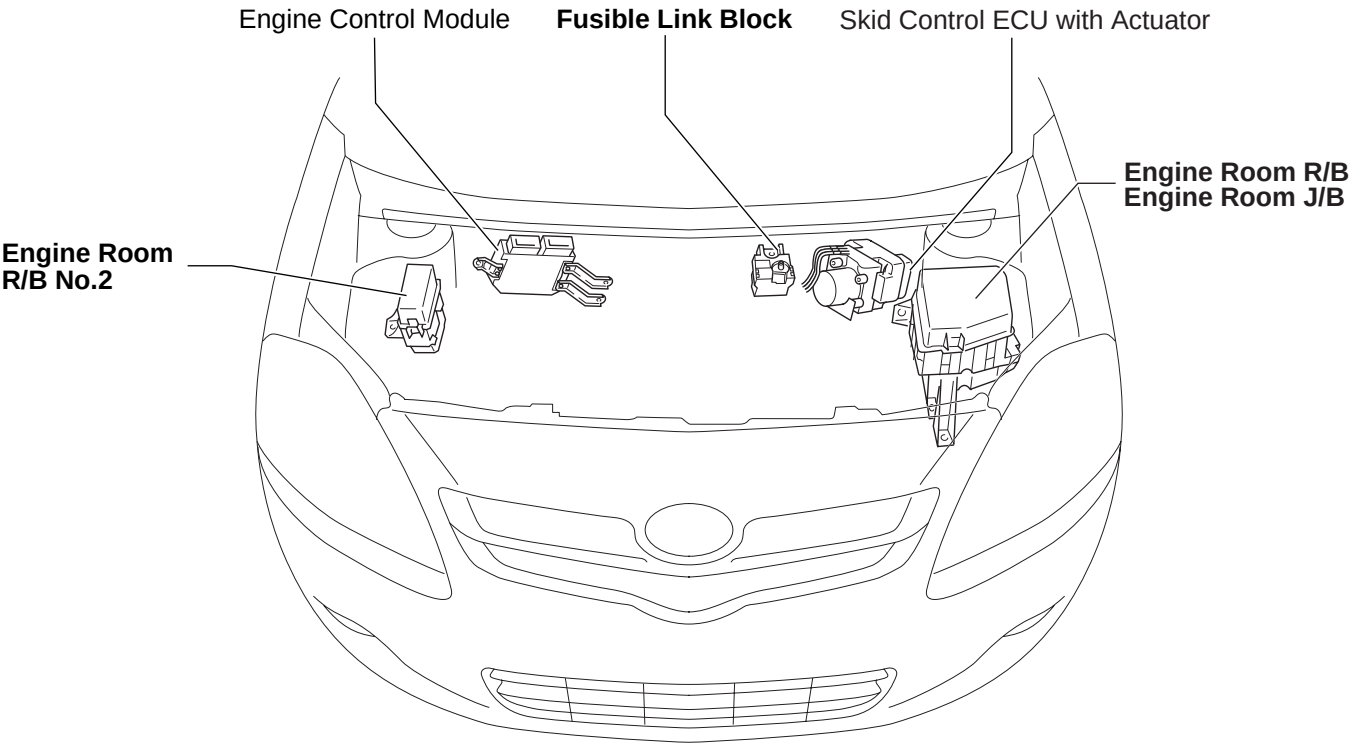

[Instrument Panel]
(H/B)

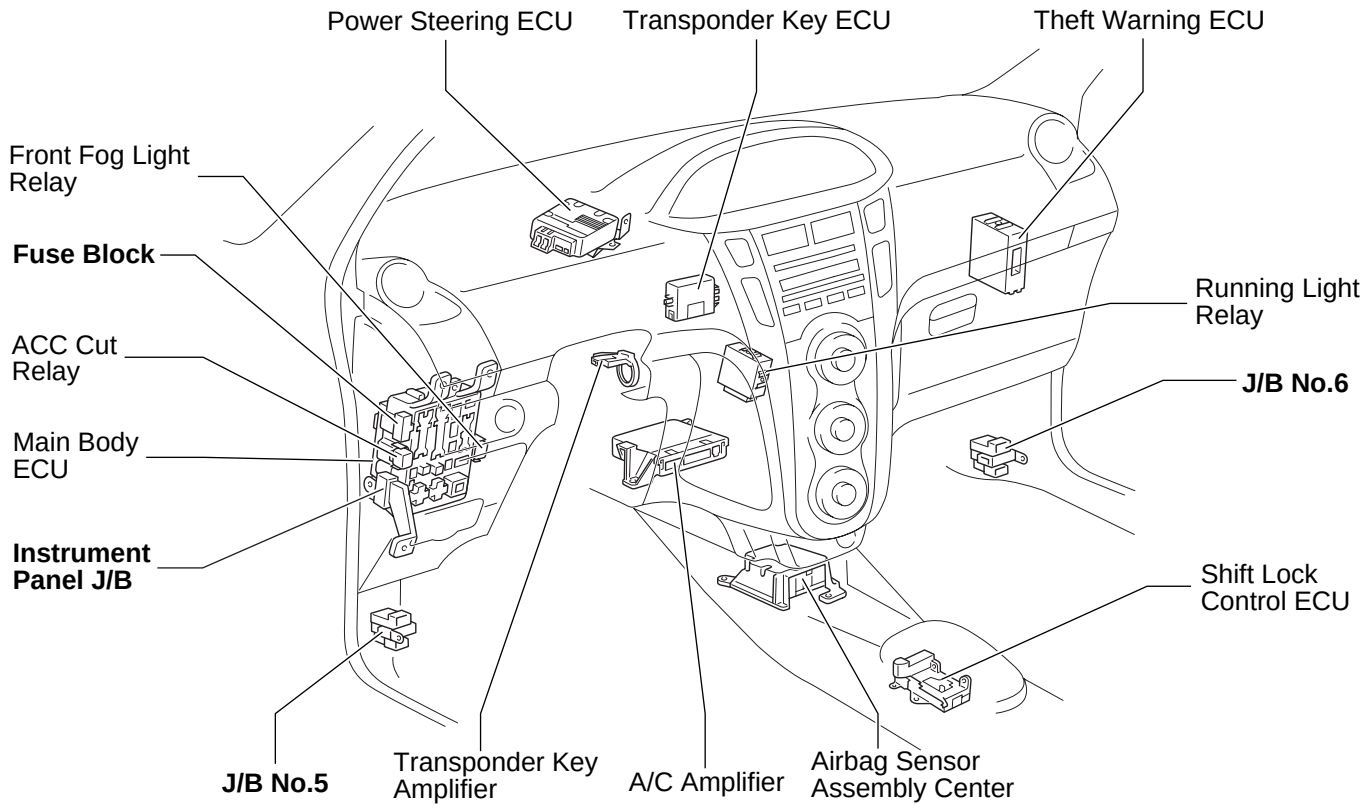

(S/D)

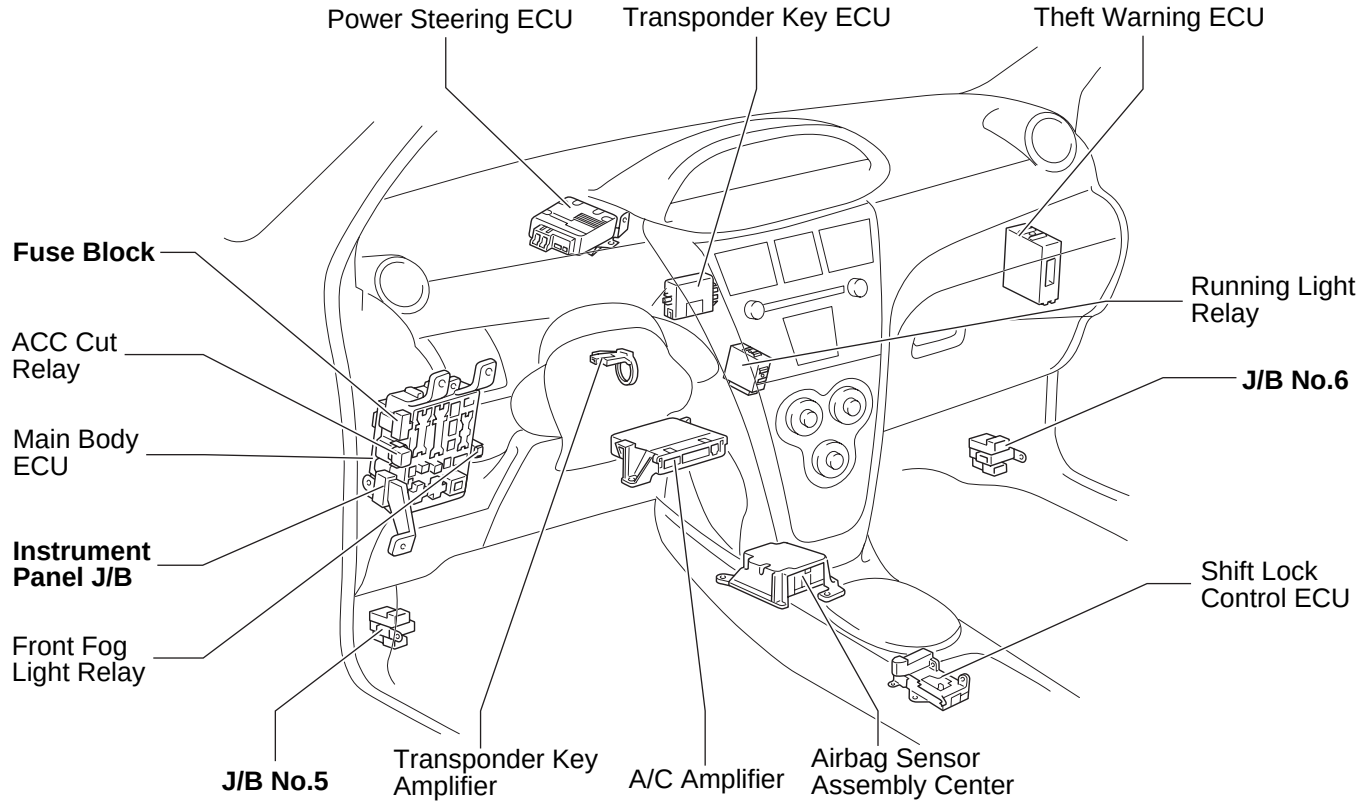

[Body]
(5–Door)

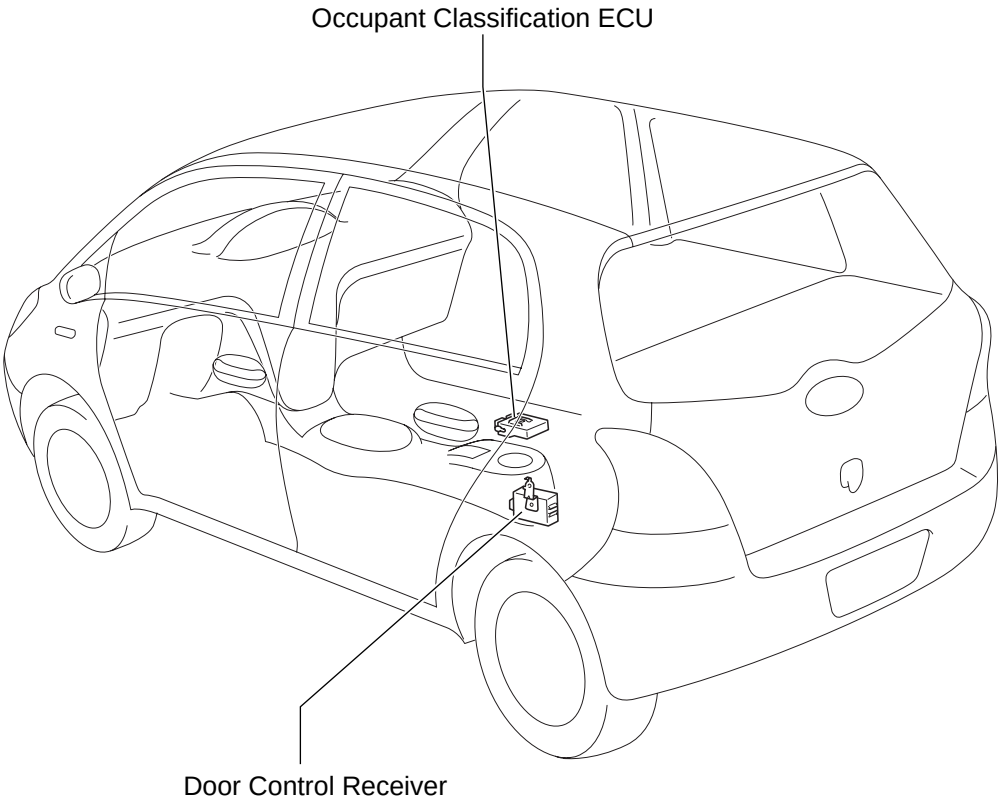

(3–Door)

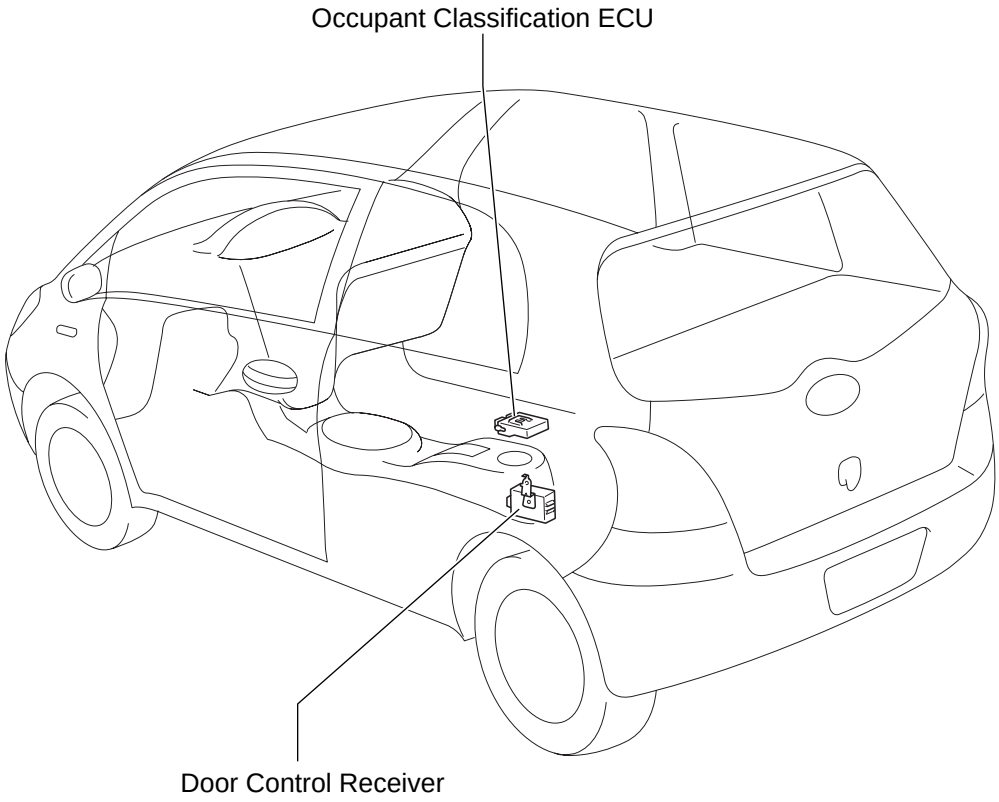

(4–Door)

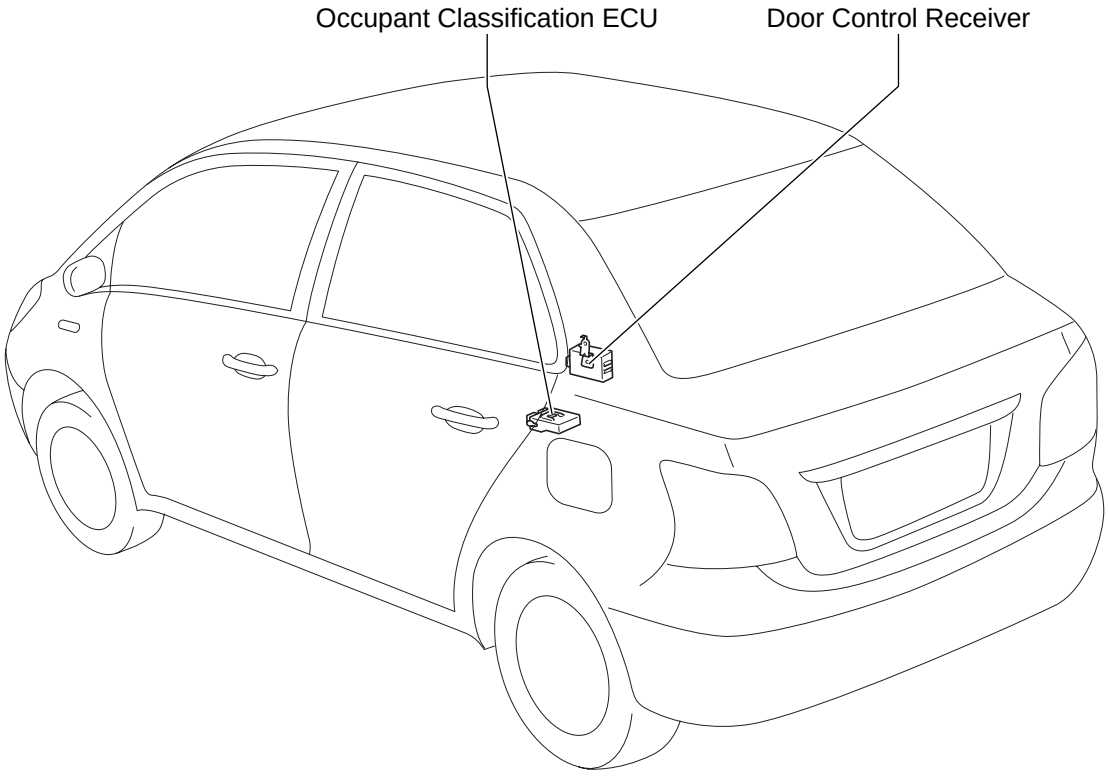

F RELAY LOCATIONS

① : Engine Room R/B ⬭ : Engine Room J/B	Engine Compartment Left (See Page 20)

* 1:H-LP LH/H-LP LO LH
* 2:H-LP RH/H-LP LO RH
* 3:30A HTR SUB1 (for High Current)
* 4:30A RDI (for High Current)
* 5:40A HTR (for High Current)
* 6:50A ABS1/VSC1 (for High Current)
* 7:50A EPS (for High Current)
* 8:40A HTR SUB2 (for High Current)
* 9:FAN NO.2 Relay
* 10:ST Relay

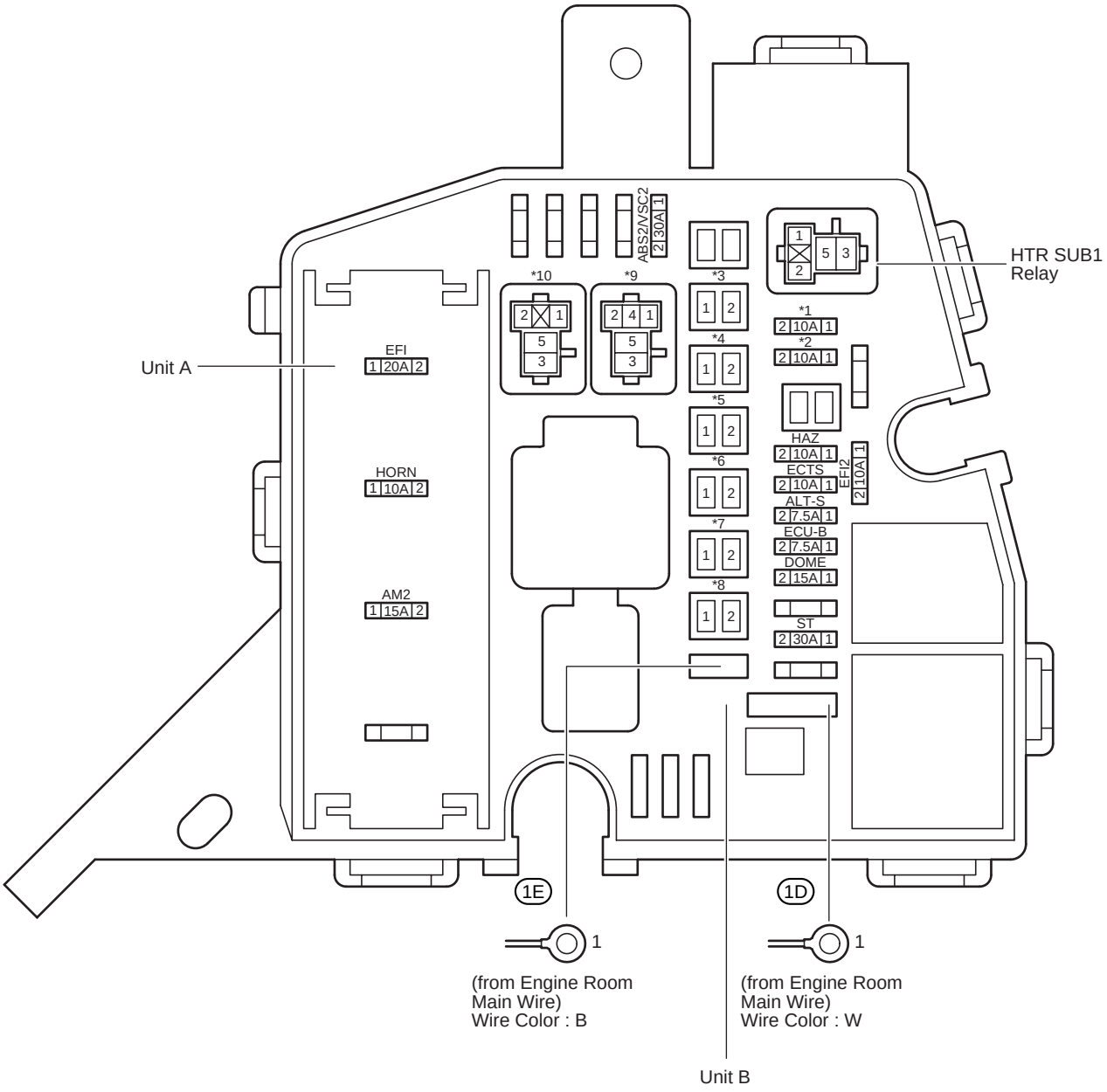

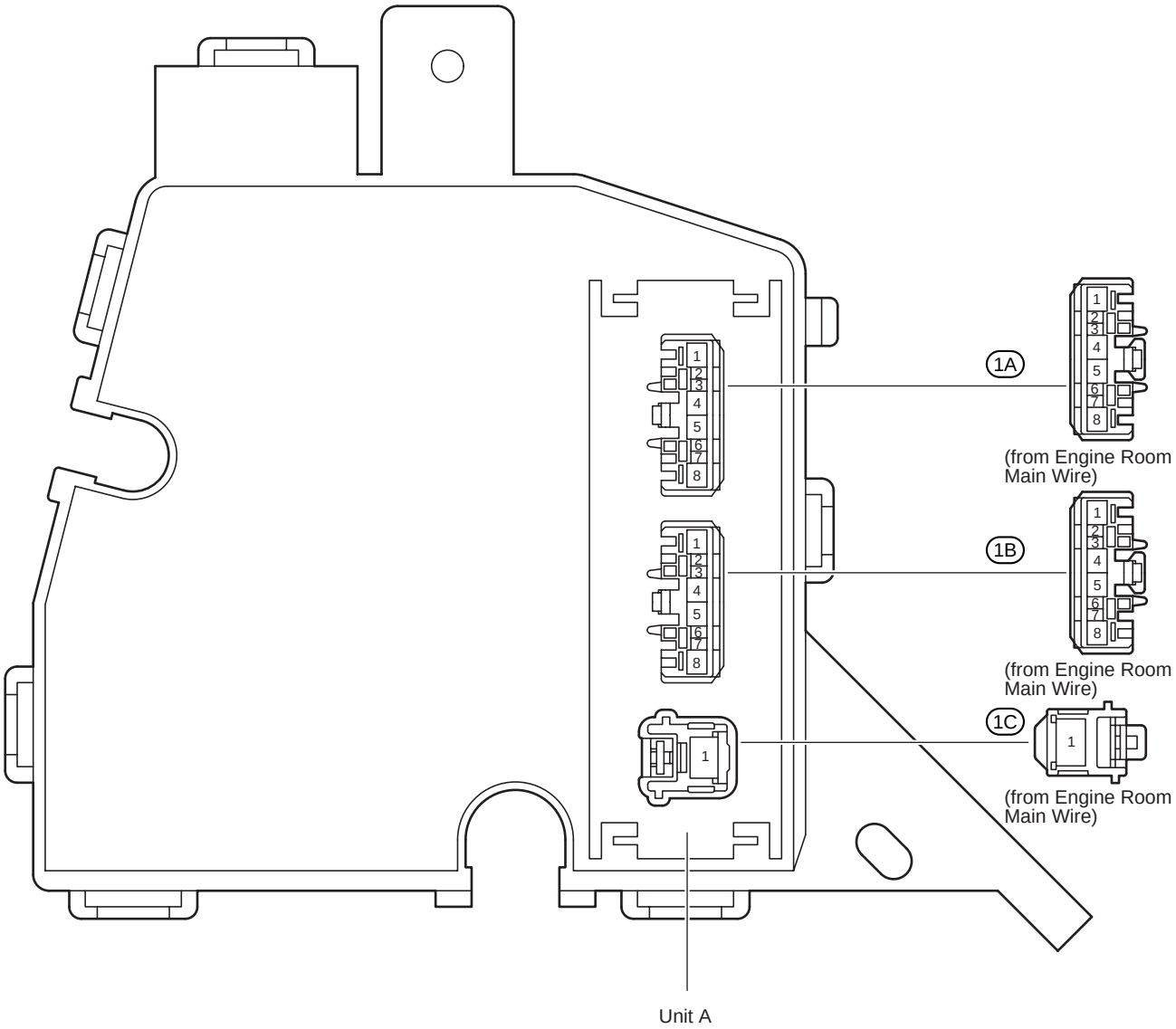
1A
(from Engine Room Main Wire)
1B
(from Engine Room Main Wire)
1C
(from Engine Room Main Wire)
Unit A

[Engine Room R/B and Engine Room J/B Inner Circuit]

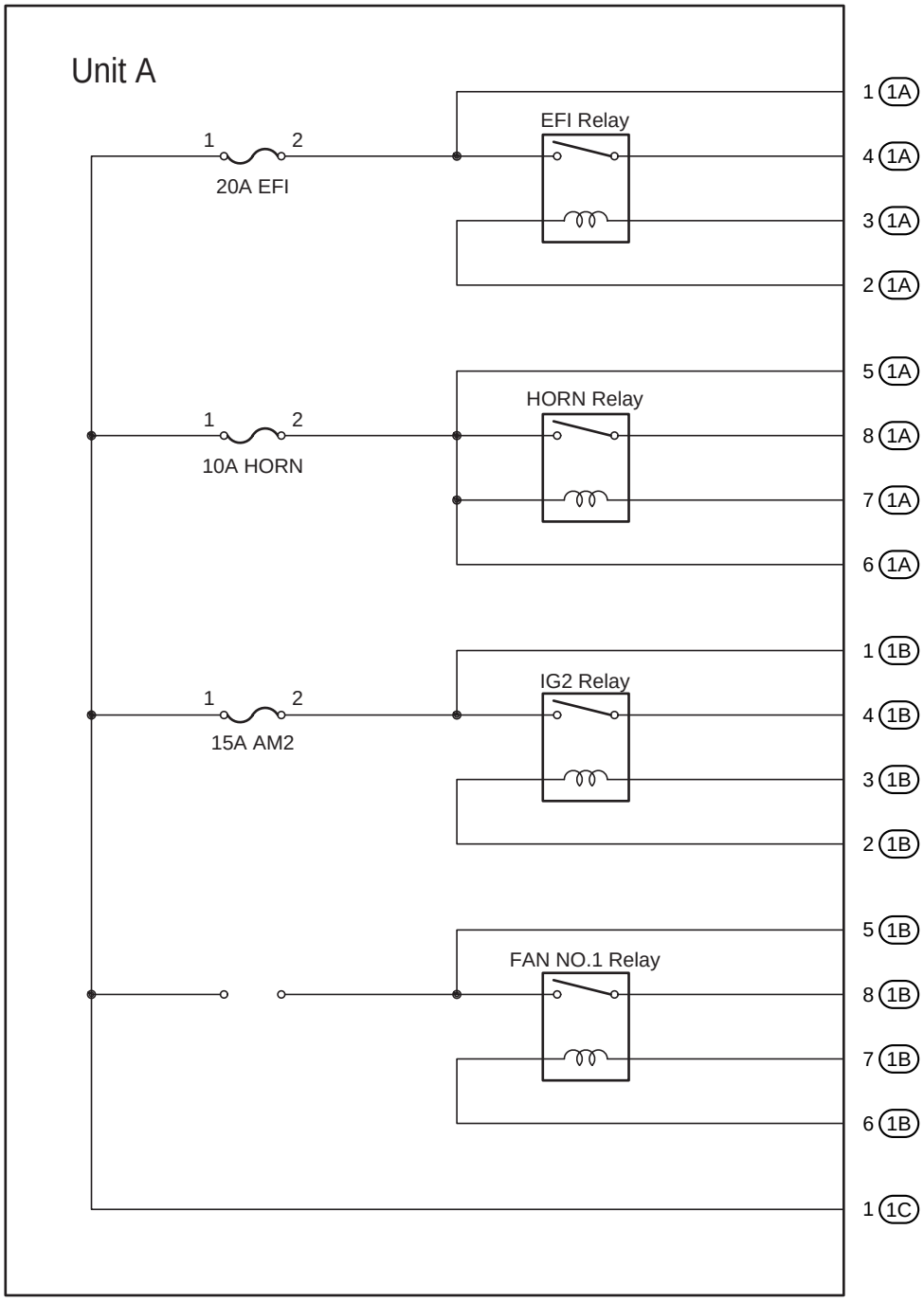

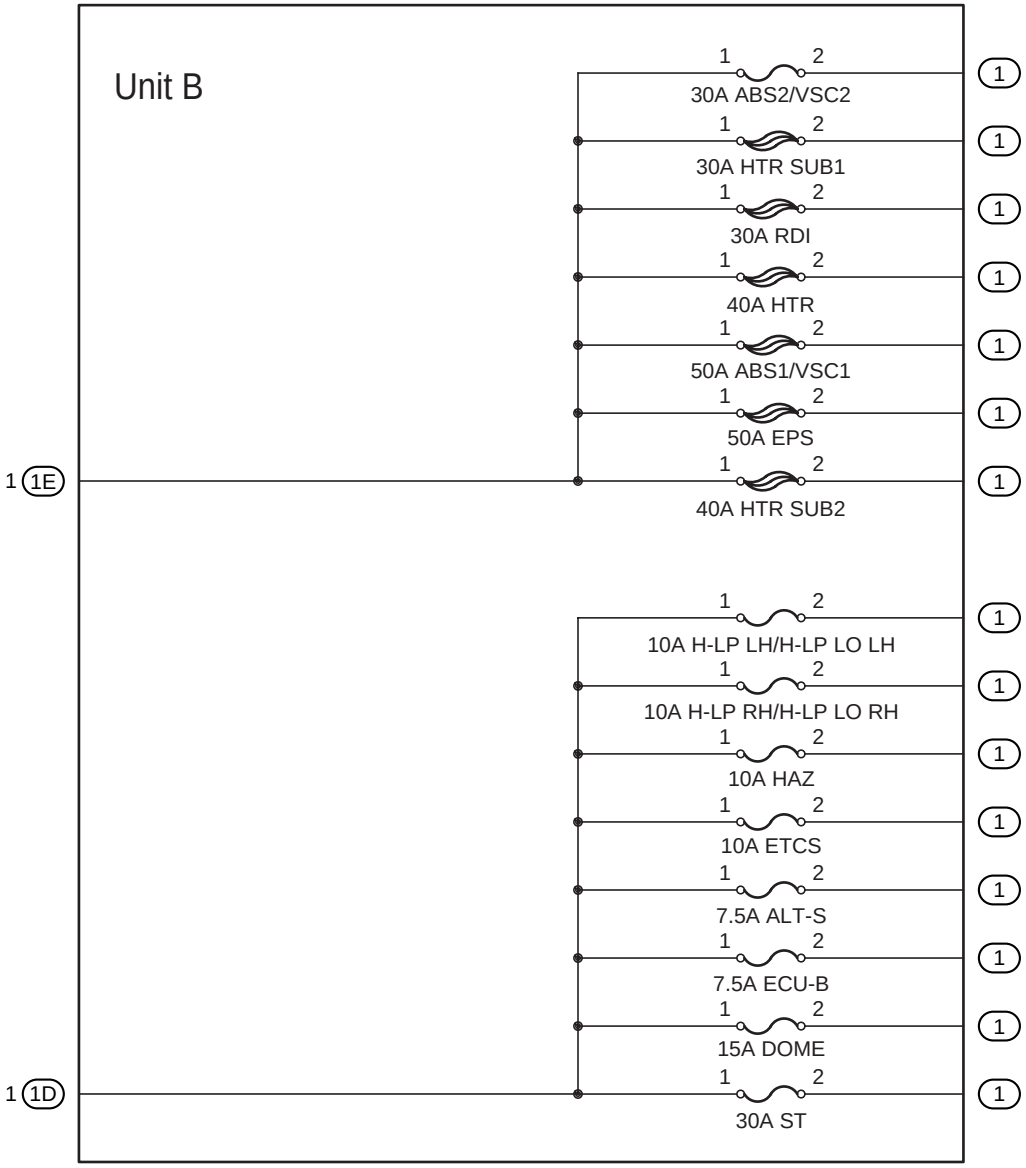
Unit B
1 2
30A ABS2/VSC2
1 2
30A HTR SUB1
1 2
30A RDI
1 2
40A HTR
1 2
50A ABS1/VSC1
1 2
50A EPS
1 2
40A HTR SUB2
1 2
10A H-LP LH/H-LP LO LH
1 2
10A H-LP RH/H-LP LO RH
1 2
10A HAZ
1 2
10A ETCS
1 2
7.5A ALT-S
1 2
7.5A ECU-B
1 2
15A DOME
1 2
30A ST
1 1E
1 1D
1
1
1
1
1
1
1
1
1
1
1
1
1
1

F RELAY LOCATIONS

② : Engine Room R/B No.2	Engine Compartment Right (See Page 20)

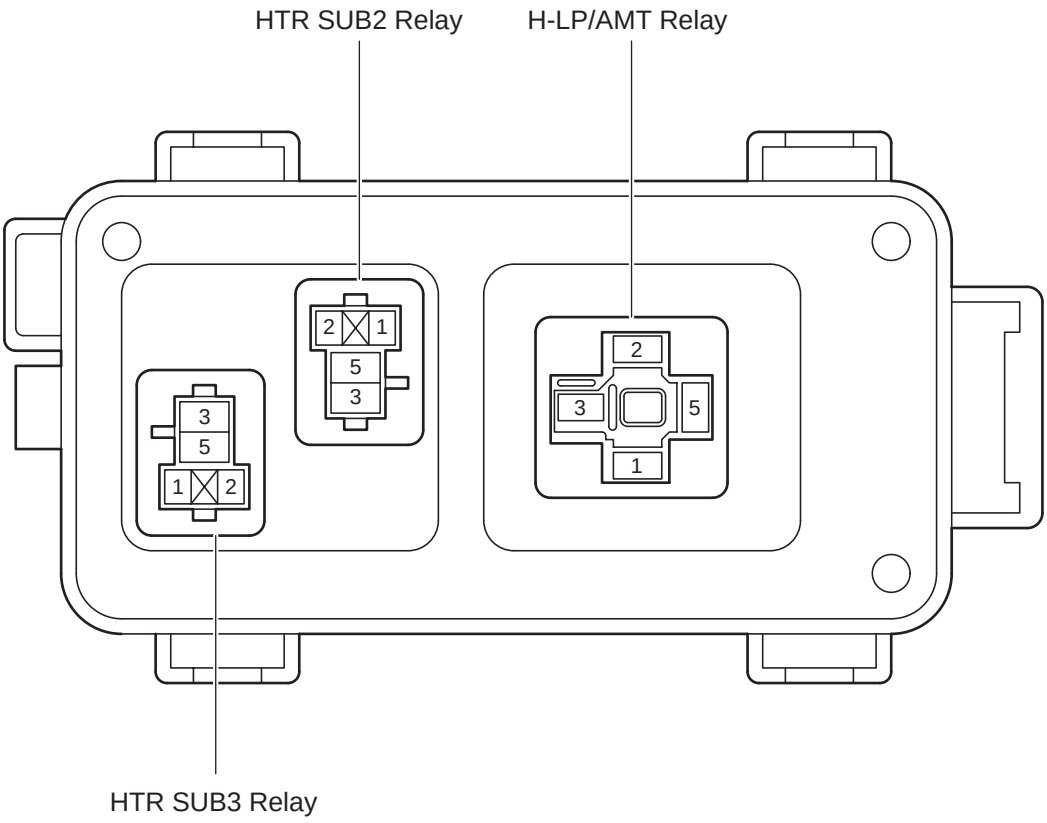

F RELAY LOCATIONS

: Instrument Panel J/B	Lower Finish Panel (See Page 21)

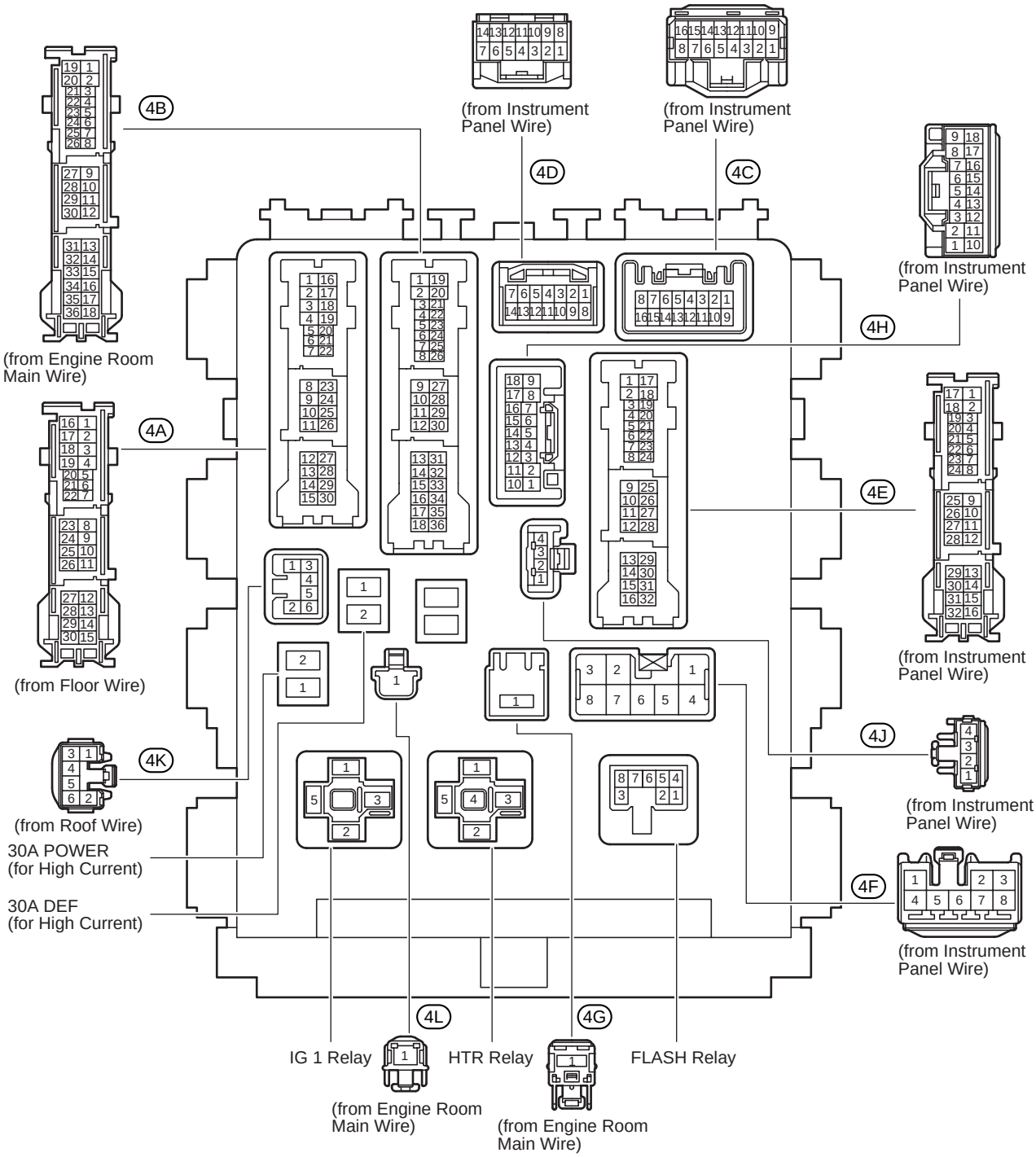

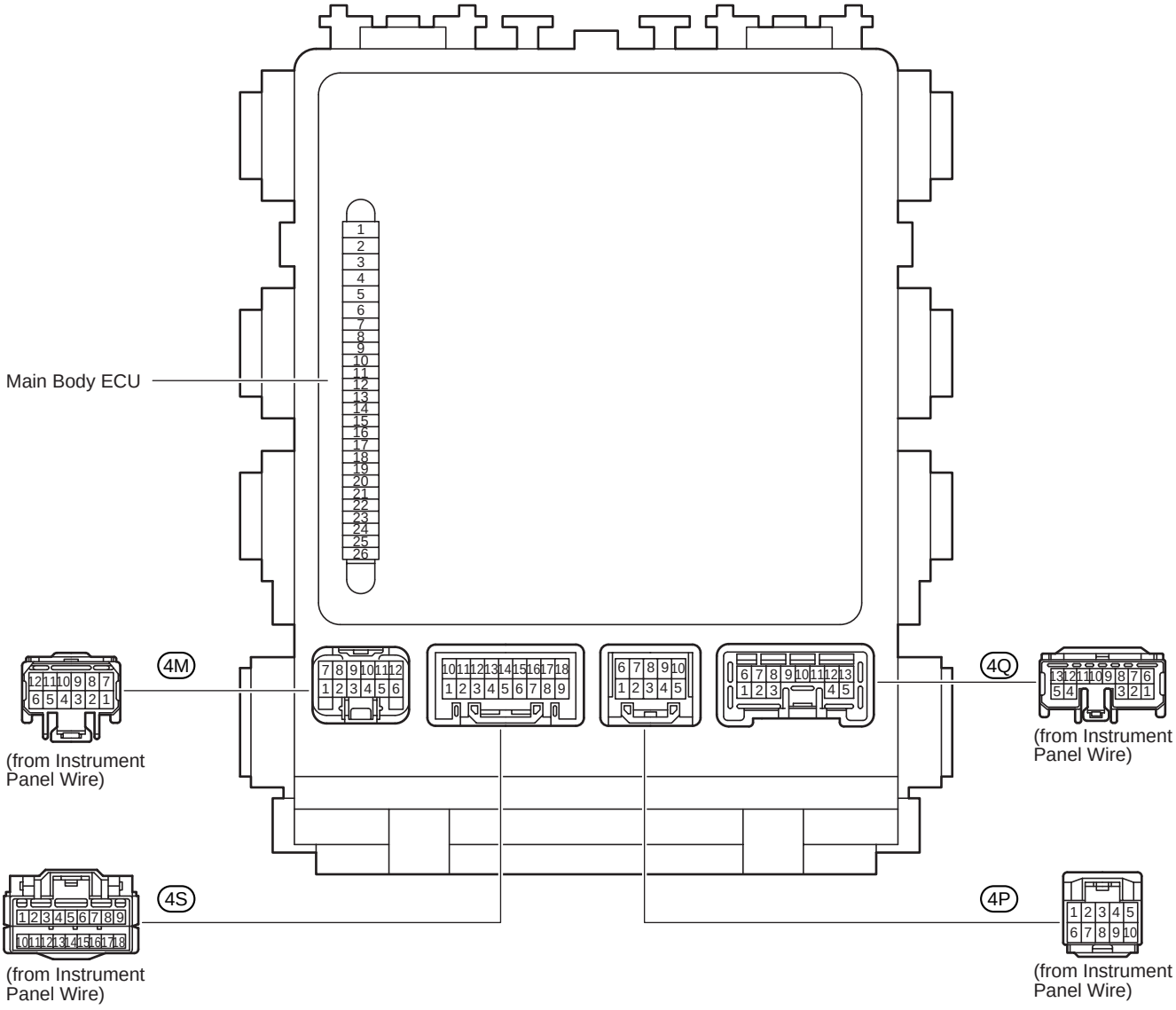
Main Body ECU
4M
(from Instrument Panel Wire)
4Q
(from Instrument Panel Wire)
4S
(from Instrument Panel Wire)
4P
(from Instrument Panel Wire)

F RELAY LOCATIONS

: Instrument Panel J/B	Lower Finish Panel (See Page 21)

* 1:10A TAIL (H/B, S/D *3)
  7.5A PANEL 2 (*4)
* 2:10A TAIL (*4)
* 3:Cold Area Spec., w/ Engine Immobiliser System, w/ ABS, w/ Rear Window Defogger, w/ Door Lock Control, w/ Daytime Running Light, w/ Remote Control Mirror, w/ Air Conditioning
* 4:Except H/B, S/D *3

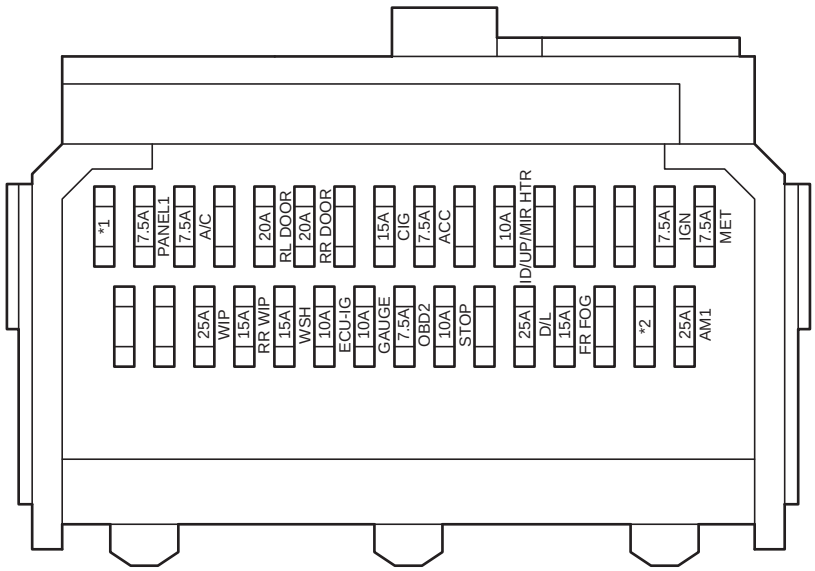

[Instrument Panel J/B Inner Circuit]

* 1:H/B, S/D *3
* 2:Except *1
* 3:Cold Area Spec., w/ Engine Immobiliser System, w/ ABS, w/ Rear Window Defogger, w/ Door Lock Control, w/ Daytime Running Light, w/ Remote Control Mirror, w/ Air Conditioning

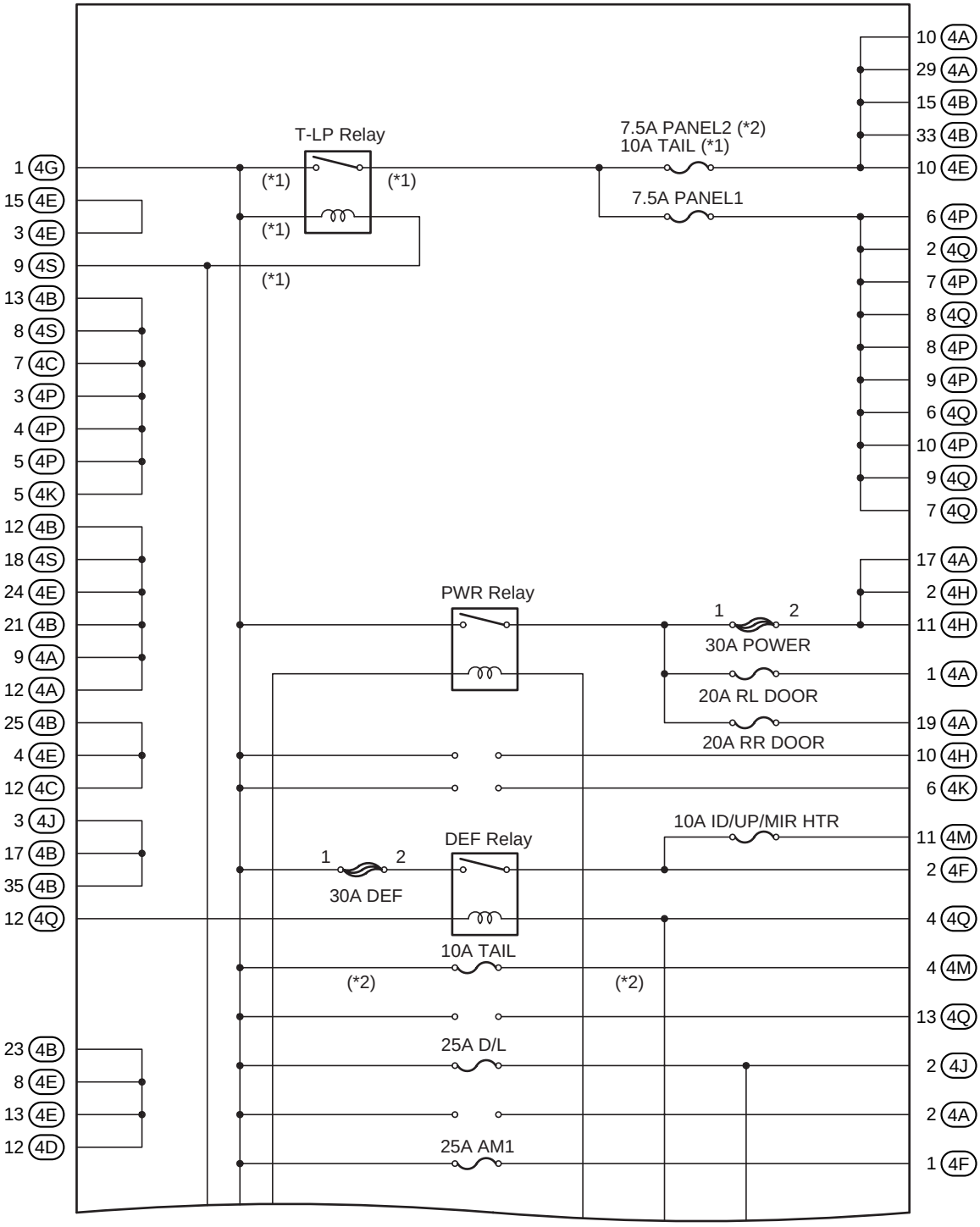

(Cont. Next Page)

(Cont'd)

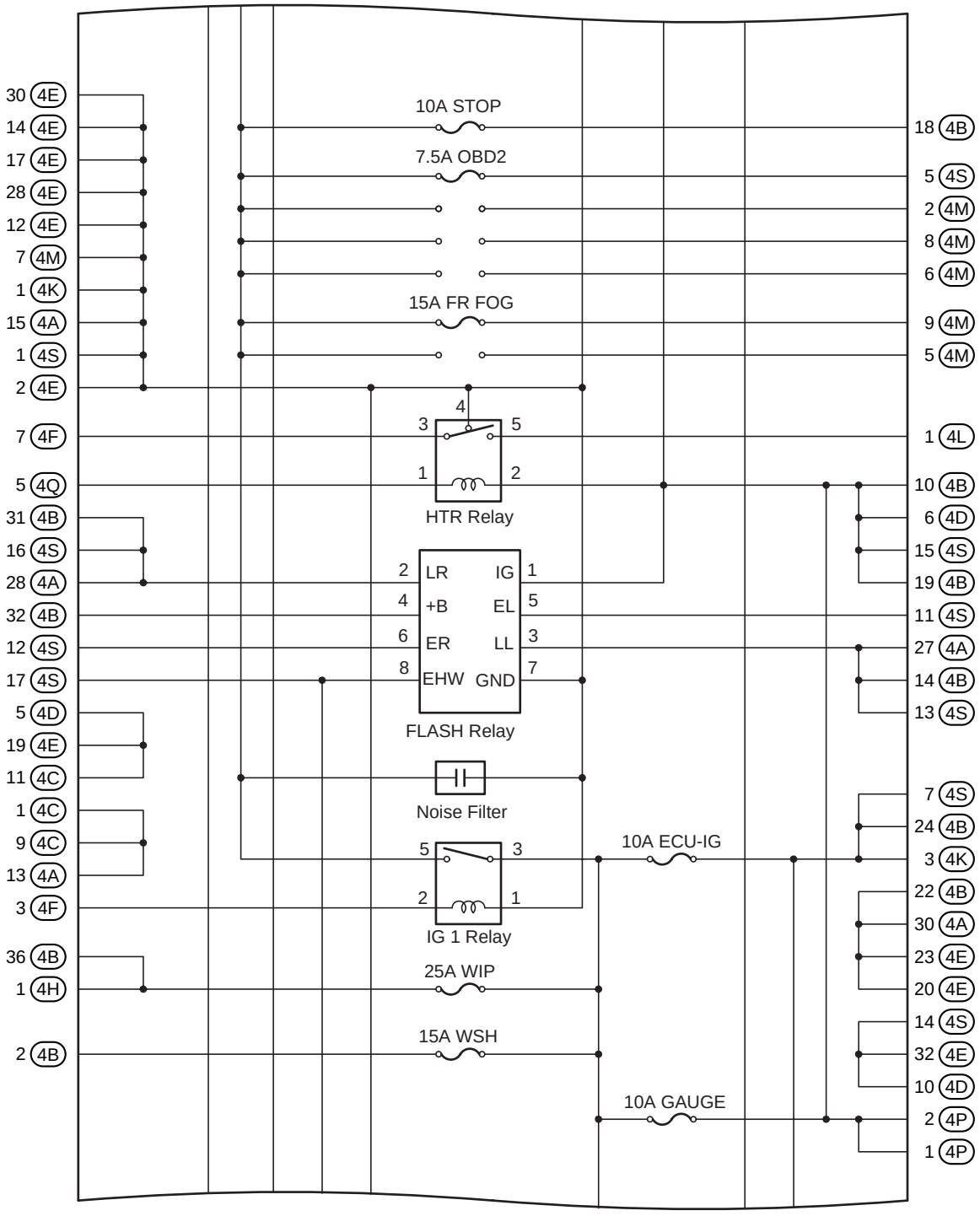

(Cont. Next Page)

[Instrument Panel J/B Inner Circuit]

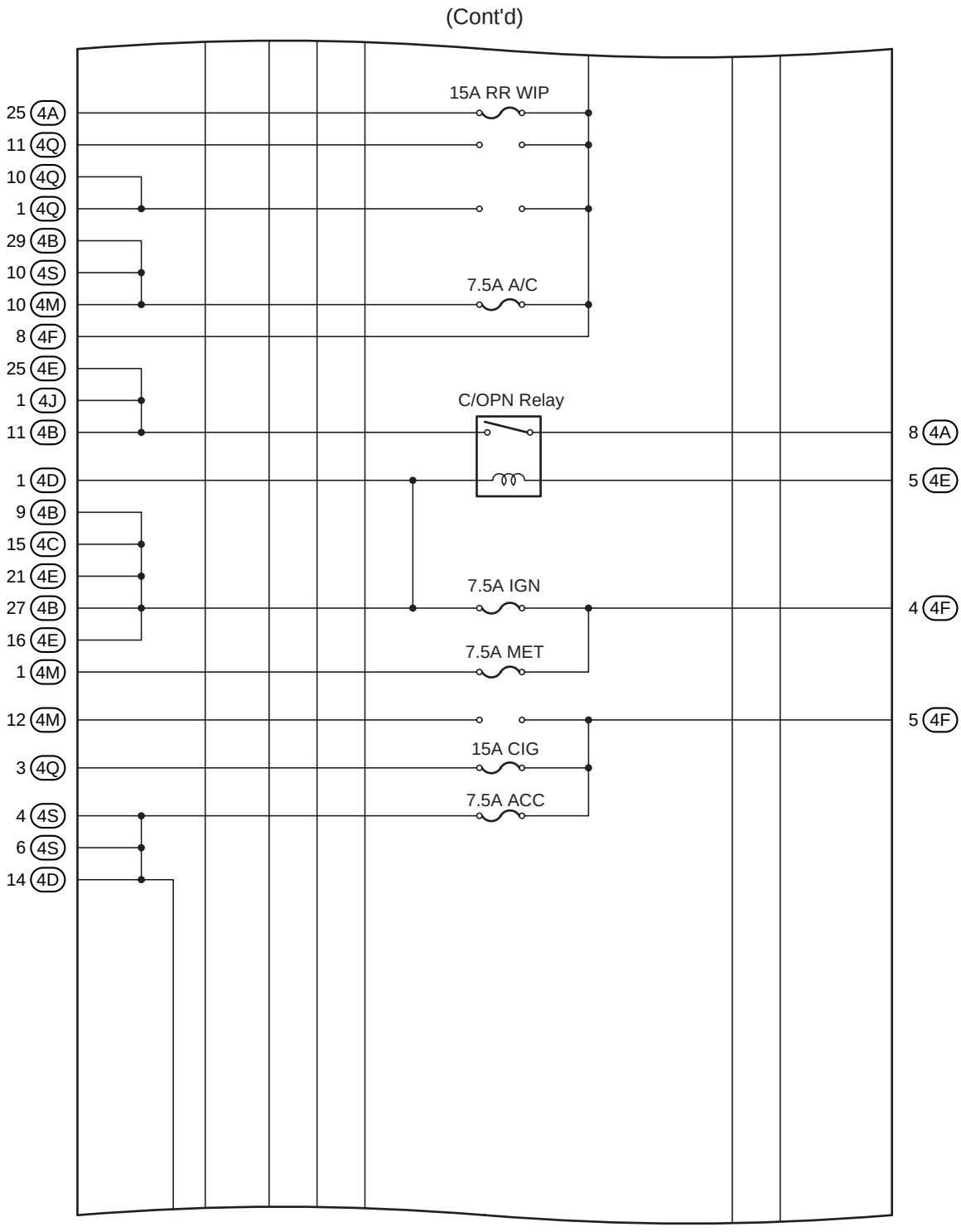

(Cont. Next Page)

(Cont'd)

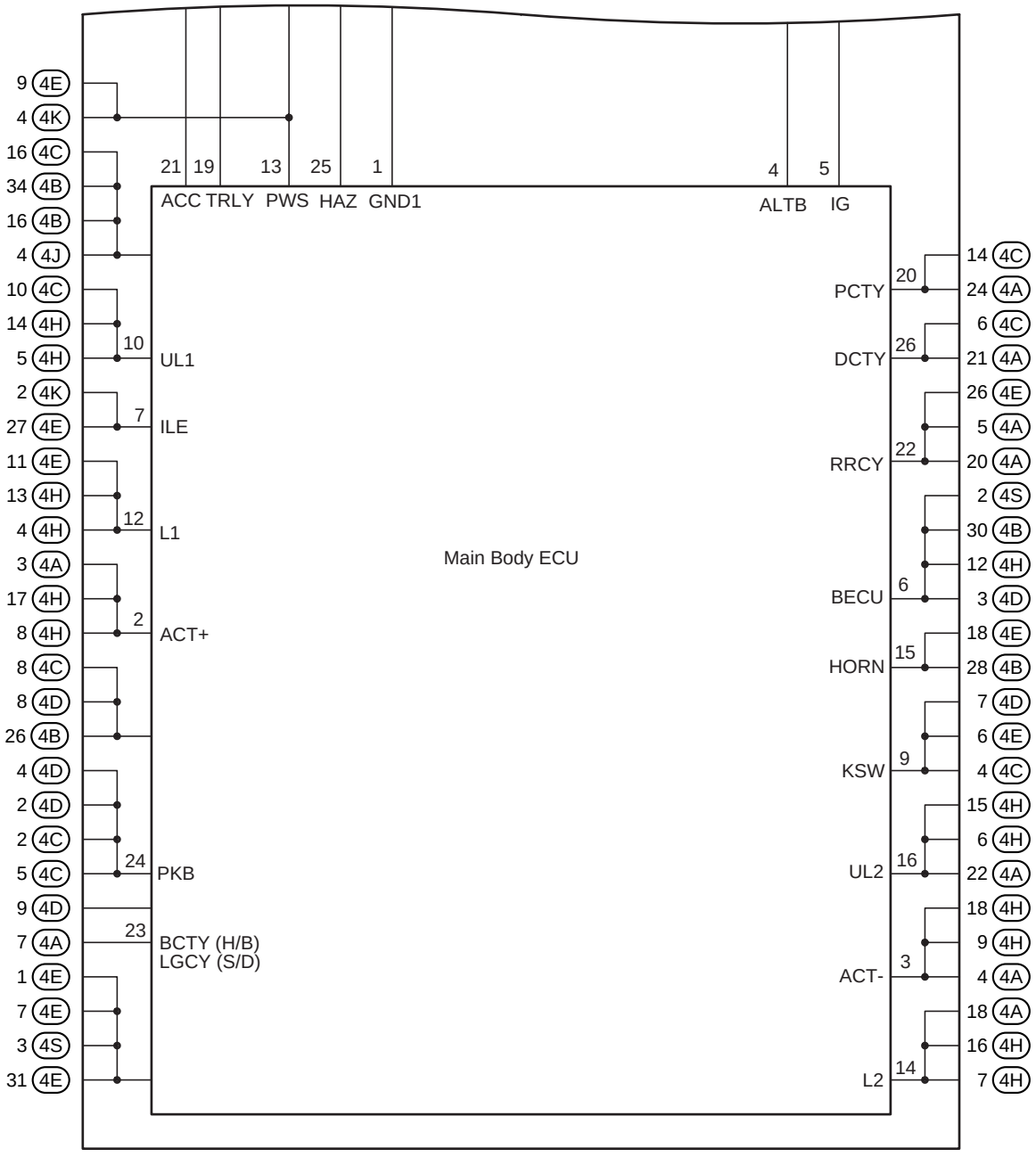
9 4E
4 4K
16 4C
34 4B
16 4B
4 4J
10 4C
14 4H
5 4H
2 4K
27 4E
11 4E
13 4H
4 4H
3 4A
17 4H
8 4H
8 4C
8 4D
26 4B
4 4D
2 4D
2 4C
5 4C
9 4D
7 4A
1 4E
7 4E
3 4S
31 4E
21 19 13 25 1
ACC TRLY PWS HAZ GND1
10 UL1
7 ILE
12 L1
2 ACT+
24 PKB
23 BCTY (H/B)
LGCY (S/D)
4 5
ALTB IG
Main Body ECU
20 PCTY
26 DCTY
22 RRCY
6 BECU
15 HORN
9 KSW
16 UL2
3 ACT-
14 L2
14 4C
24 4A
6 4C
21 4A
26 4E
5 4A
20 4A
2 4S
30 4B
12 4H
3 4D
18 4E
28 4B
7 4D
6 4E
4 4C
15 4H
6 4H
22 4A
18 4H
9 4H
4 4A
18 4A
16 4H
7 4H

F RELAY LOCATIONS

: J/B No.5	Left Kick Panel (See Page 21)

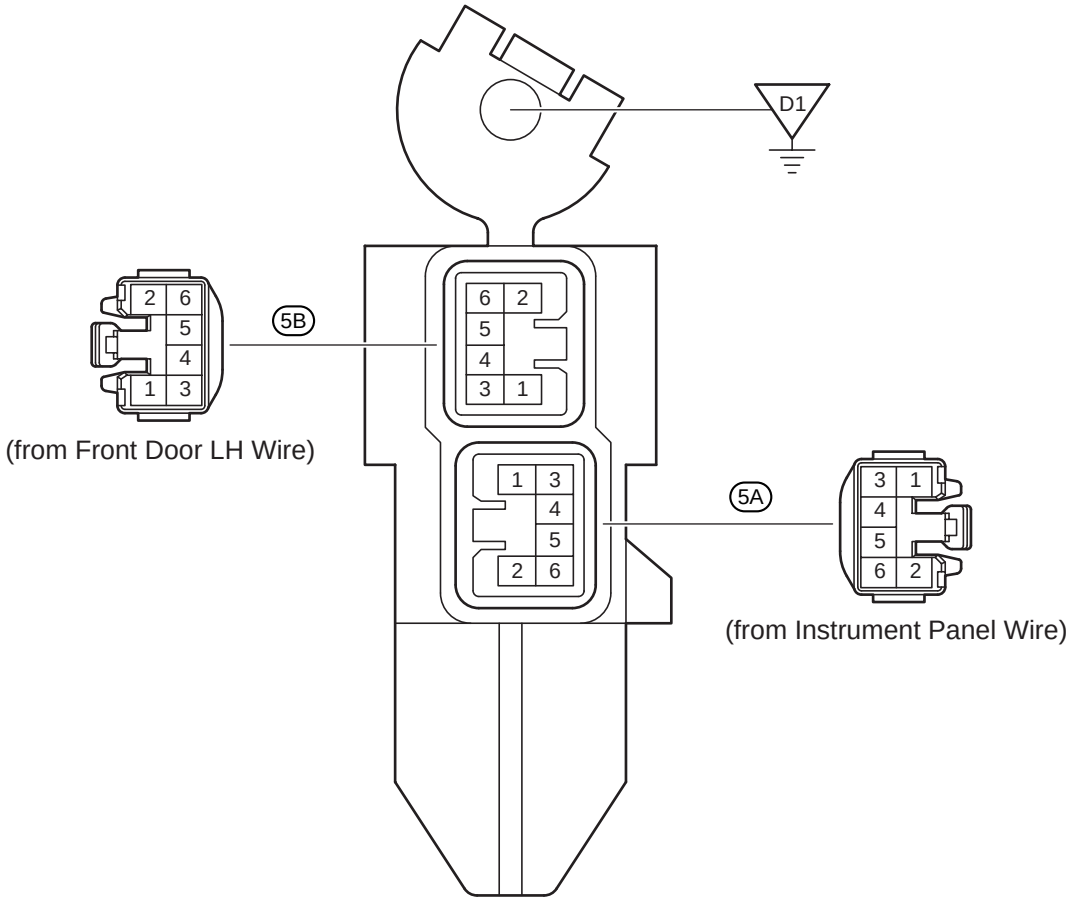

[J/B No.5 Inner Circuit]

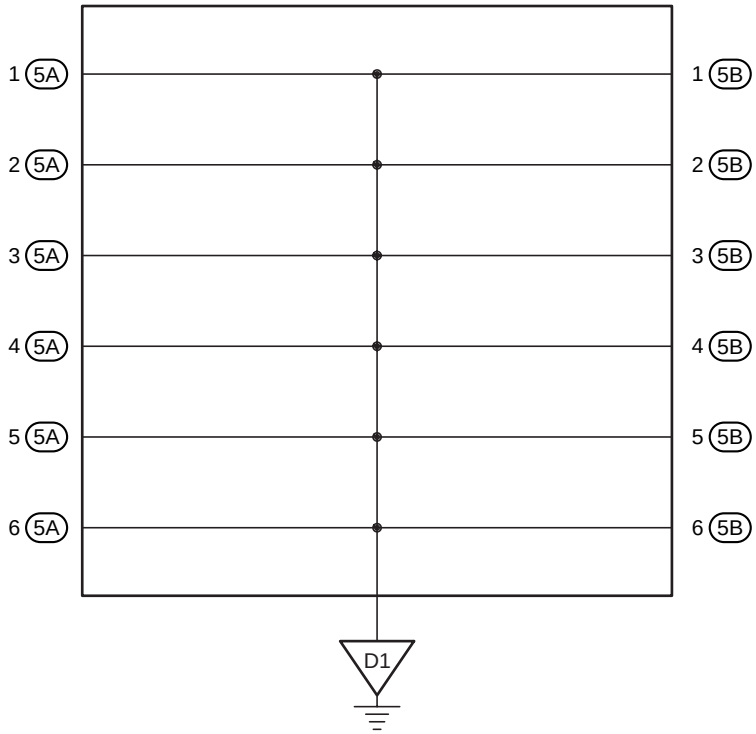

F RELAY LOCATIONS

: J/B No.6	Right Kick Panel (See Page 21)

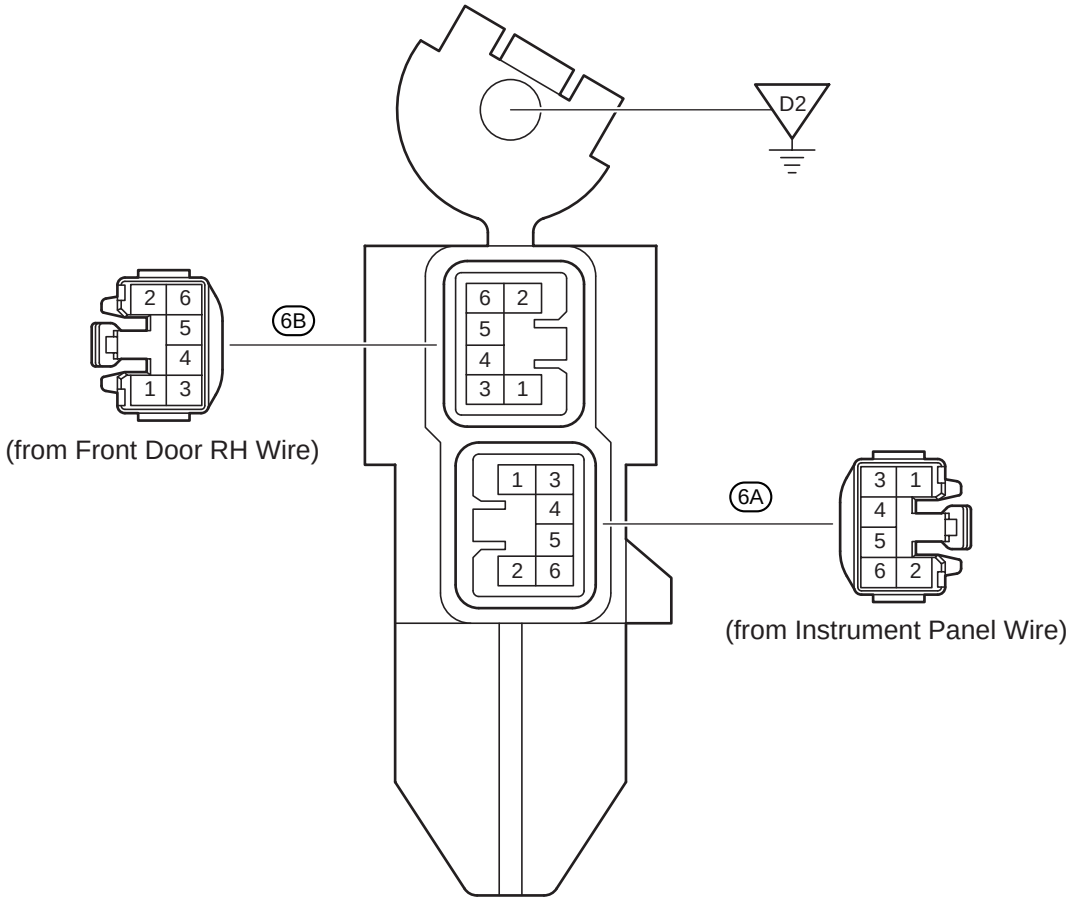

[J/B No.6 Inner Circuit]

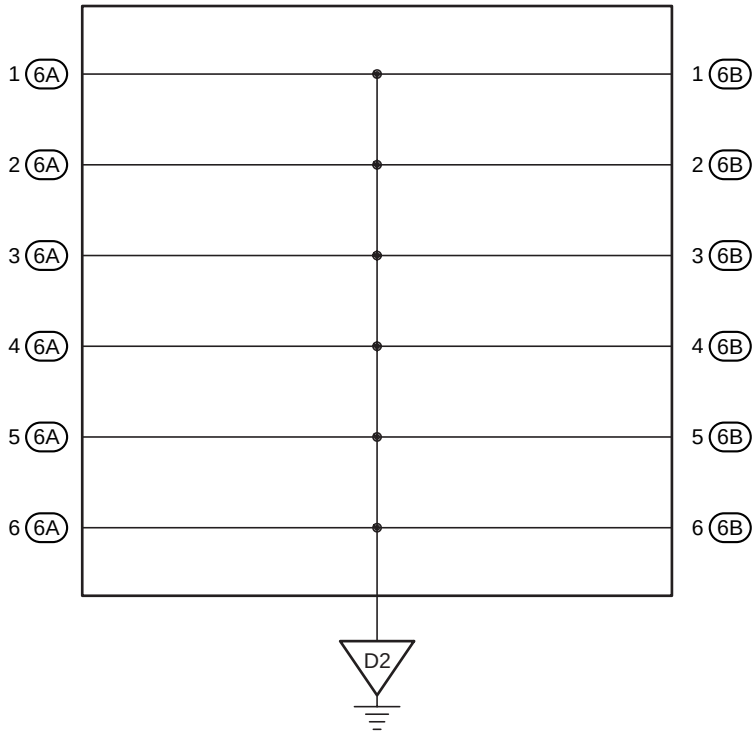

F RELAY LOCATIONS

Fusible Link Block	**Near the Battery (See Page 20)**

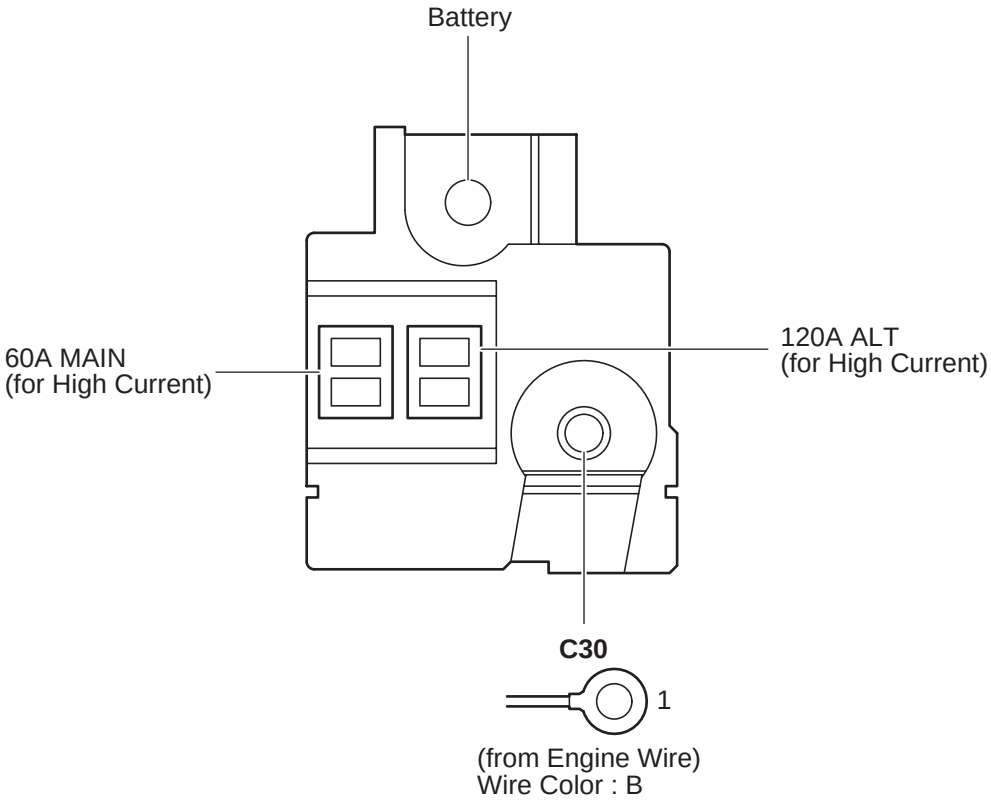

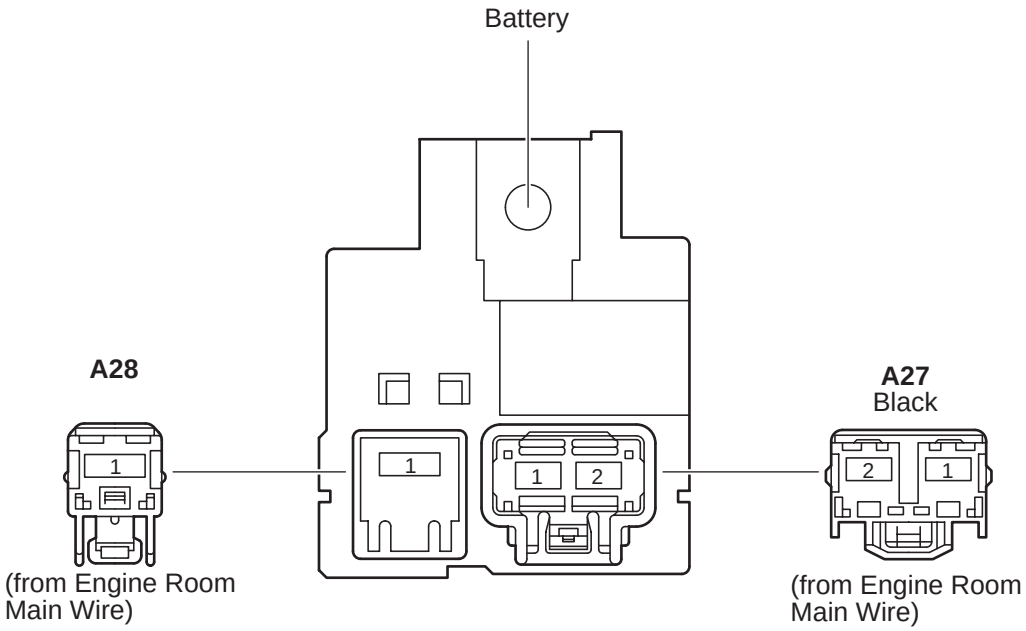
Battery
A28
1
(from Engine Room
Main Wire)
1
1
2
A27
Black
2
1
(from Engine Room
Main Wire)

[Fusible Link Block Inner Circuit]

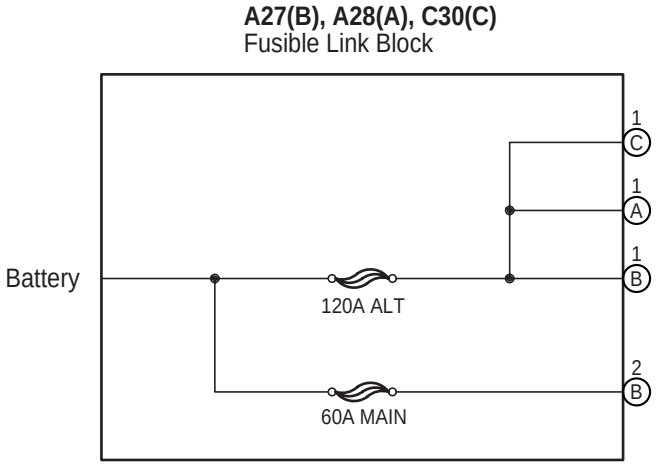

Fuse Block	Near the Instrument Panel J/B (See Page 21)

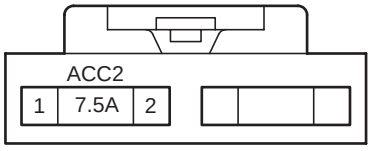

Position of Parts in Engine Compartment

[H/B]

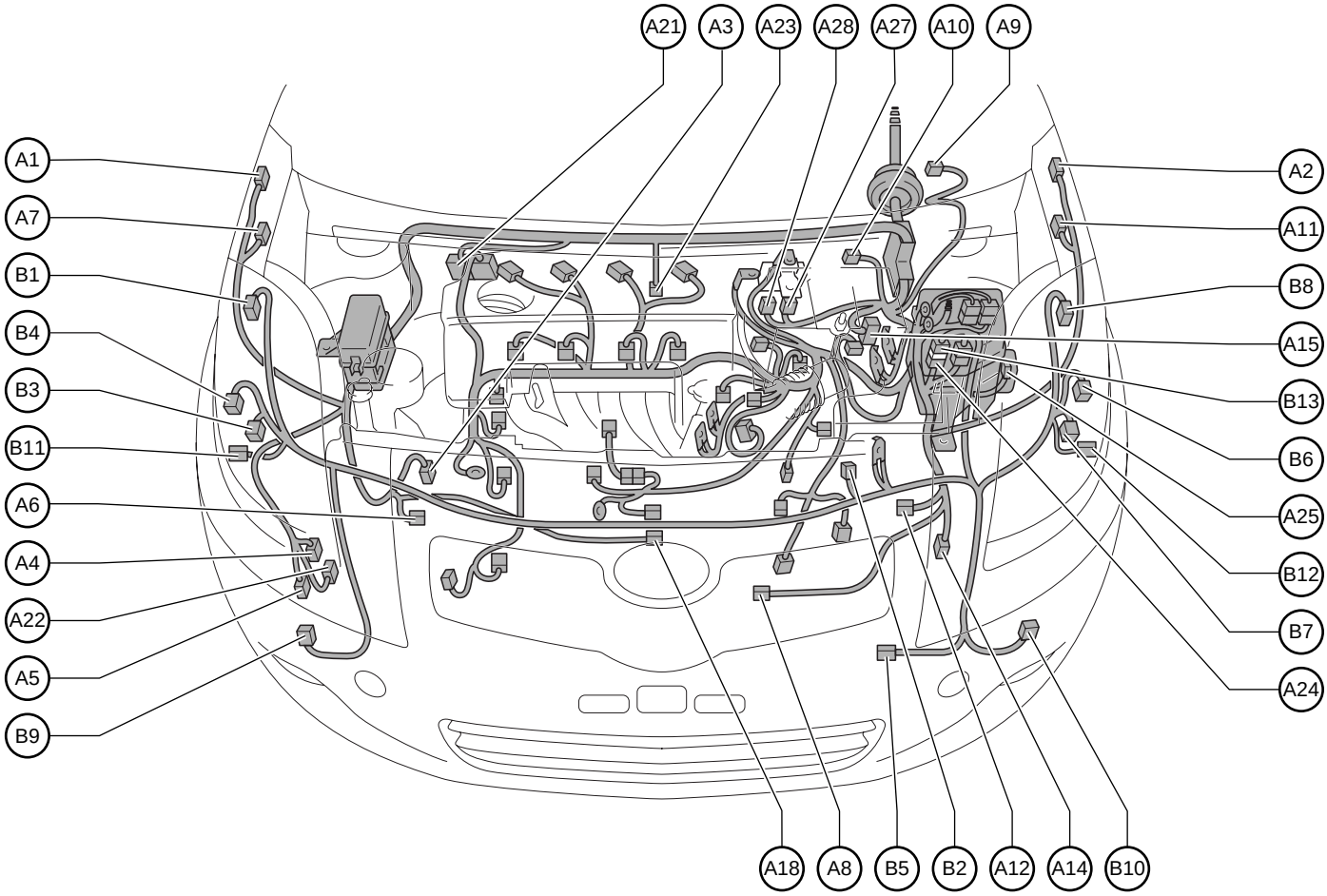

A 1 Turn Signal Lamp (Front Side RH)
A 2 Turn Signal Lamp (Front Side LH)
A 3 A/C Pressure Sensor
A 4 Rear Washer Motor
A 5 Windshield Washer Motor
A 6 Airbag Sensor (Front RH)
A 7 Speed Sensor (Front RH)
A 8 Cooling Fan Motor
A 9 Windshield Wiper Motor
A10 Brake Fluid Level Warning SW
A11 Speed Sensor (Front LH)
A12 Airbag Sensor (Front LH)
A14 Radiator Fan Resistor
A15 Skid Control ECU with Actuator
A18 Engine Hood Courtesy SW
A21 Engine Control Module
A22 Water Level Warning SW
A23 Security Horn
A24 Junction Connector
A25 Junction Connector
A27 Fusible Link Block
A28 Fusible Link Block

B 1 Turn Signal Lamp (Front RH)
B 2 Horn
B 3 Parking Lamp (RH)
B 4 Headlamp (RH)
B 5 Ambient Temp. Sensor
B 6 Headlamp (LH)
B 7 Parking Lamp (LH)
B 8 Turn Signal Lamp (Front LH)
B 9 Fog Lamp (Front RH)
B10 Fog Lamp (Front LH)
B11 Side Marker Lamp (Front RH)
B12 Side Marker Lamp (Front LH)
B13 Junction Connector

Position of Parts in Engine Compartment

[H/B]

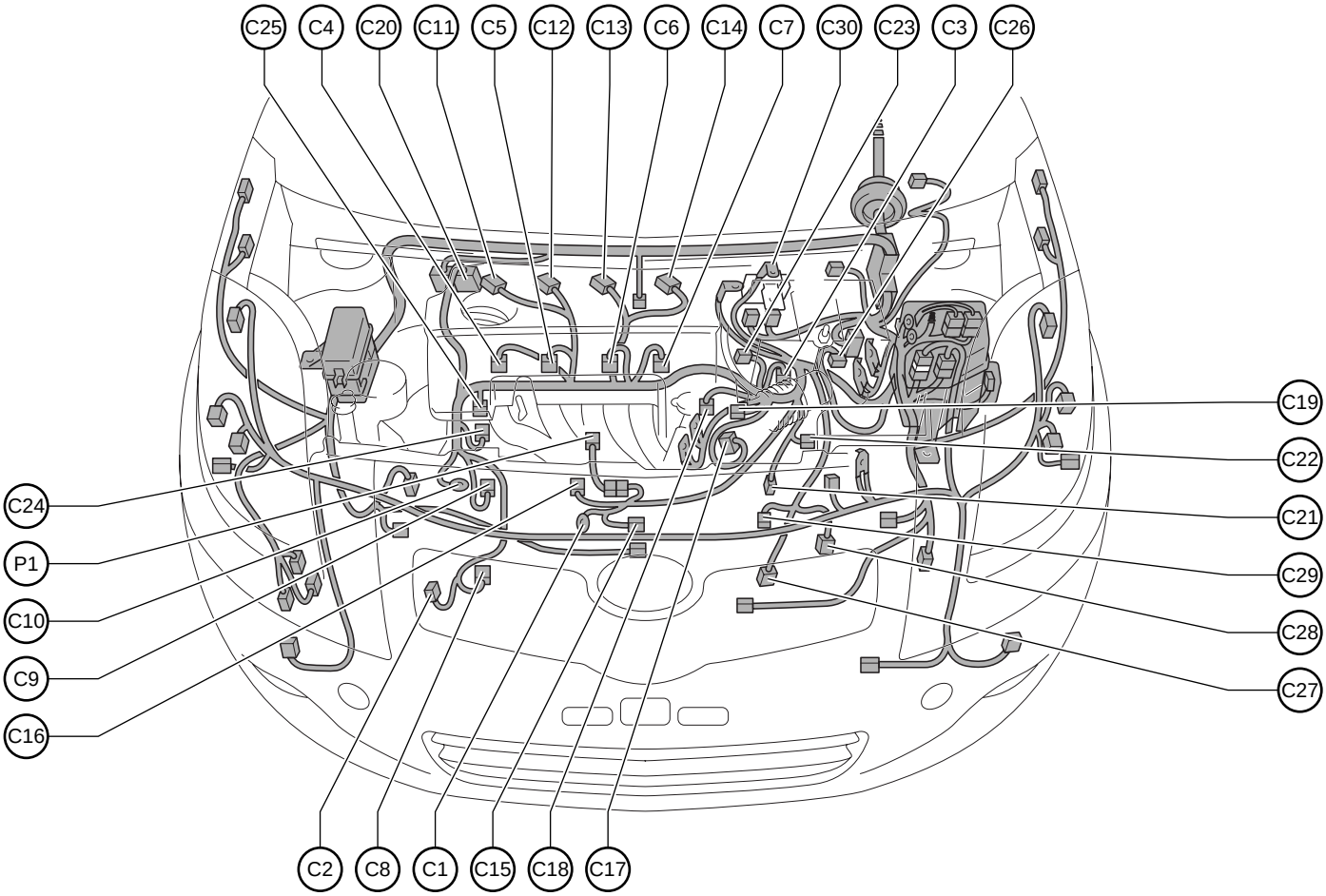

C 1 Starter
C 2 Crankshaft Position Sensor
C 3 VSV (Purge)
C 4 Fuel Injector (No.1)
C 5 Fuel Injector (No.2)
C 6 Fuel Injector (No.3)
C 7 Fuel Injector (No.4)
C 8 A/C Compressor
C 9 Generator
C10 Generator
C11 Ignition Coil (No.1)
C12 Ignition Coil (No.2)
C13 Ignition Coil (No.3)
C14 Ignition Coil (No.4)
C15 Starter
C16 Engine Oil Pressure SW
C17 Throttle Body Assembly
C18 Camshaft Position Sensor
C19 Engine Coolant Temp. Sensor
C20 Engine Control Module
C21 Speed Sensor
C22 Back–Up Lamp SW
C23 Air Fuel Ratio Sensor (Bank 1 Sensor 1)
C24 Camshaft Timing Oil Control Valve
C25 Noise Filter
C26 Mass Air Flow Meter
C27 Park/Neutral Position SW
C28 Electronically Controlled Transmission Solenoid
C29 Speed Sensor (Turbine)
C30 Fusible Link Block

P 1 Knock Control Sensor (Bank 1)

Position of Parts in Engine Compartment

[S/D]

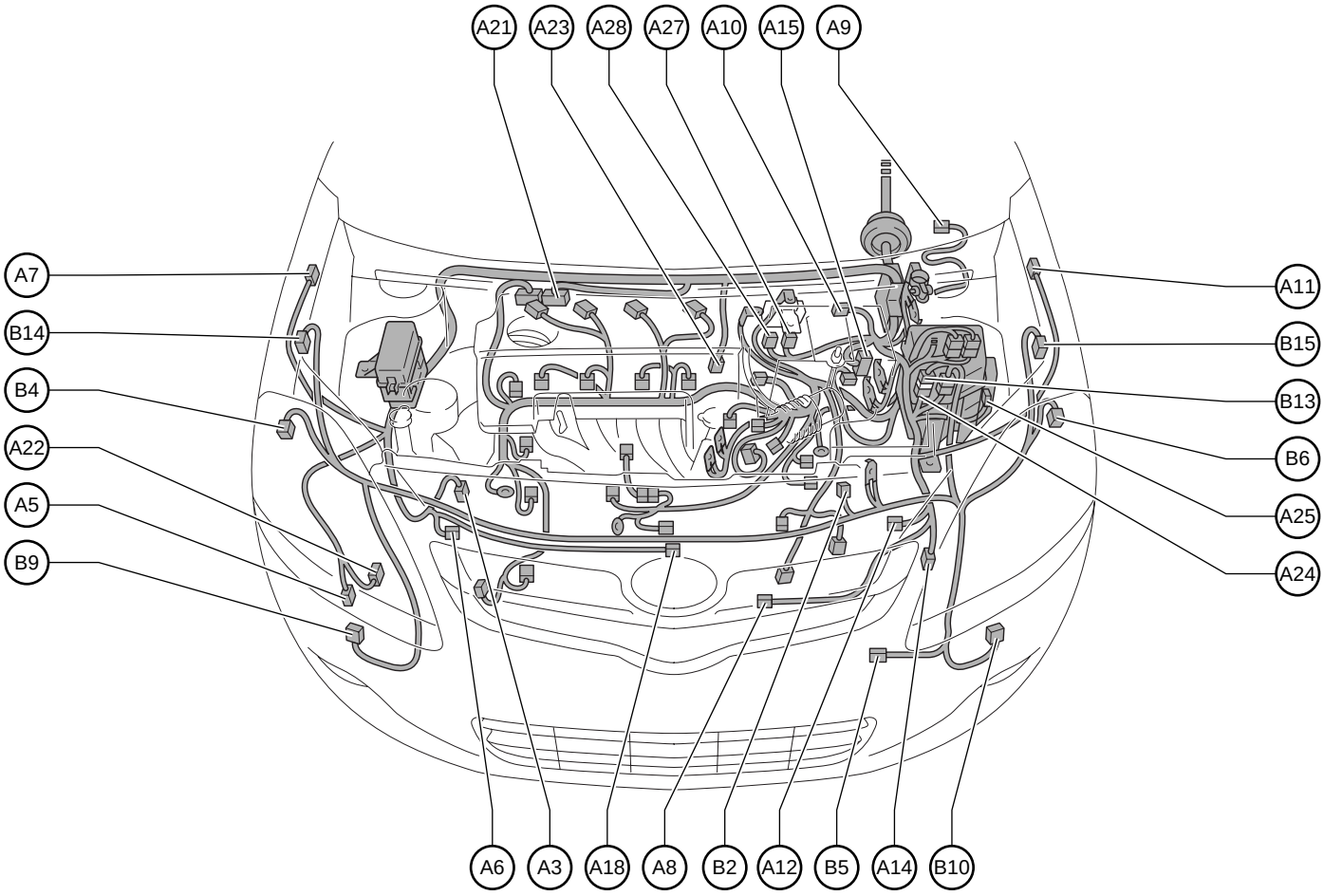

A 3 A/C Pressure Sensor
A 5 Windshield Washer Motor
A 6 Airbag Sensor (Front RH)
A 7 Speed Sensor (Front RH)
A 8 Cooling Fan Motor
A 9 Windshield Wiper Motor
A10 Brake Fluid Level Warning SW
A11 Speed Sensor (Front LH)
A12 Airbag Sensor (Front LH)
A14 Radiator Fan Resistor
A15 Skid Control ECU with Actuator
A18 Engine Hood Courtesy SW
A21 Engine Control Module
A22 Water Level Warning SW
A23 Security Horn
A24 Junction Connector
A25 Junction Connector
A27 Fusible Link Block
A28 Fusible Link Block

B 2 Horn
B 4 Headlamp (RH)
B 5 Ambient Temp. Sensor
B 6 Headlamp (LH)
B 9 Fog Lamp (Front RH)
B10 Fog Lamp (Front LH)
B13 Junction Connector
B14 Turn Signal, Side Marker and Parking Lamp (RH)
B15 Turn Signal, Side Marker and Parking Lamp (LH)

Position of Parts in Engine Compartment

[S/D]

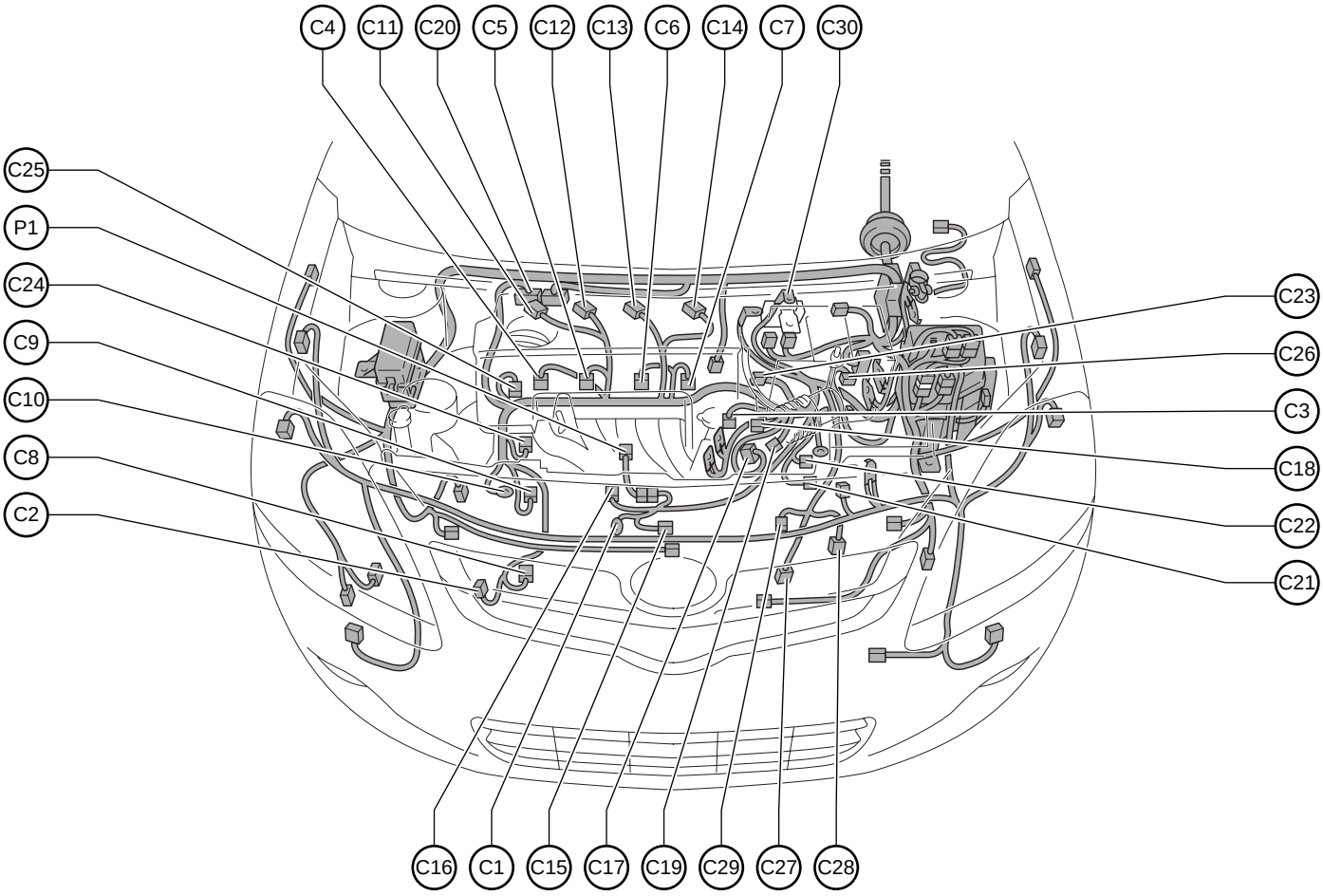

C 1 Starter
C 2 Crankshaft Position Sensor
C 3 VSV (Purge)
C 4 Fuel Injector (No.1)
C 5 Fuel Injector (No.2)
C 6 Fuel Injector (No.3)
C 7 Fuel Injector (No.4)
C 8 A/C Compressor
C 9 Generator
C10 Generator
C11 Ignition Coil (No.1)
C12 Ignition Coil (No.2)
C13 Ignition Coil (No.3)
C14 Ignition Coil (No.4)
C15 Starter
C16 Engine Oil Pressure SW
C17 Throttle Body Assembly
C18 Camshaft Position Sensor
C19 Engine Coolant Temp. Sensor
C20 Engine Control Module
C21 Speed Sensor
C22 Back–Up Lamp SW
C23 Air Fuel Ratio Sensor (Bank 1 Sensor 1)
C24 Camshaft Timing Oil Control Valve
C25 Noise Filter
C26 Mass Air Flow Meter
C27 Park/Neutral Position SW
C28 Electronically Controlled Transmission Solenoid
C29 Speed Sensor (Turbine)
C30 Fusible Link Block

P 1 Knock Control Sensor (Bank 1)

Position of Parts in Instrument Panel

[H/B]

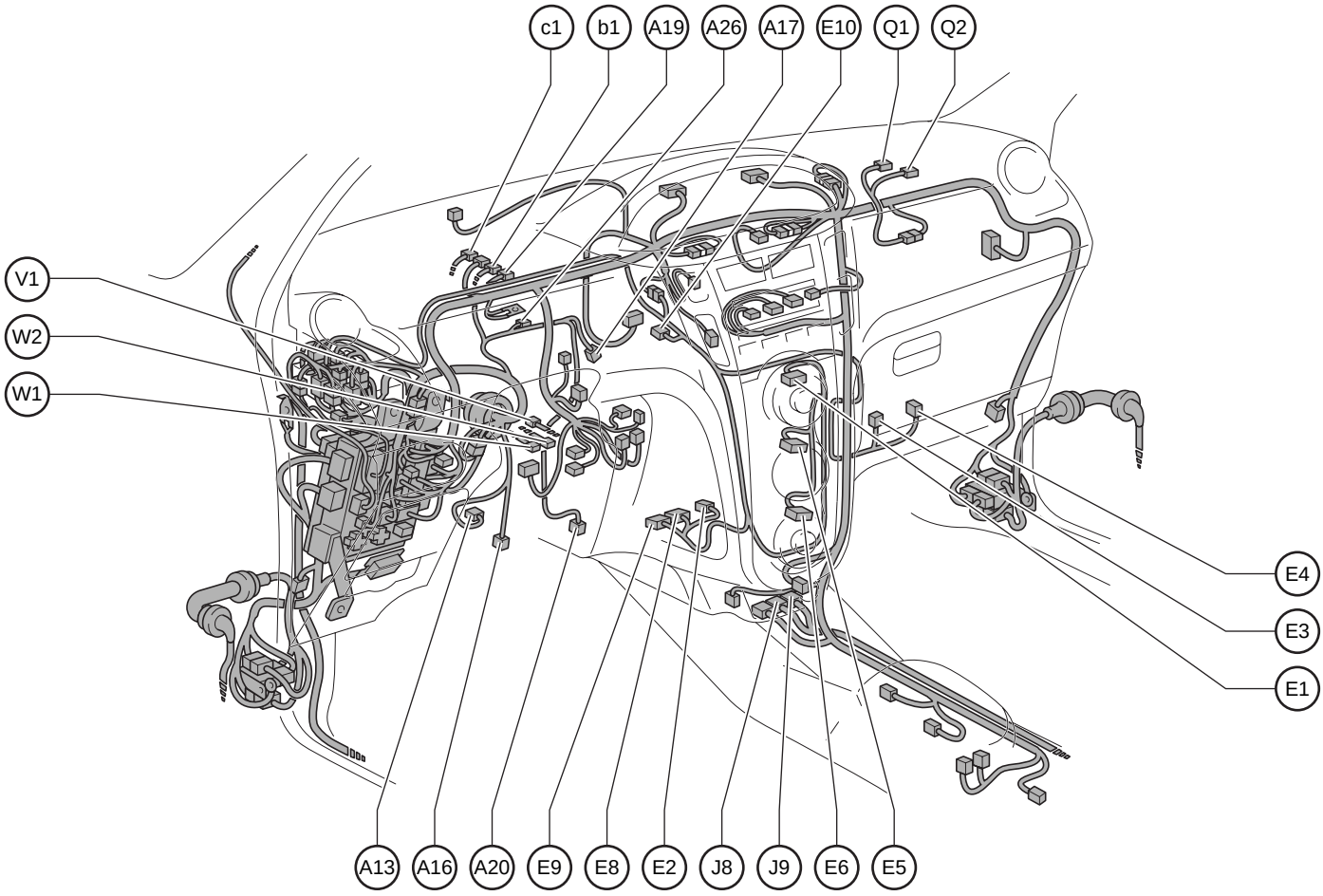

A13 Stop Lamp SW
A16 Clutch Start SW
A17 PTC Heater
A19 Power Steering ECU
A20 Accelerator Position Sensor
A26 Junction Connector

E 1 Blower SW
E 2 A/C Thermistor No.1
E 3 Blower Resistor
E 4 Blower Motor
E 5 A/C SW
E 6 Rear Window Defogger SW
E 8 A/C Amplifier
E 9 A/C Amplifier
E10 Junction Connector

J 8 Airbag Sensor Assembly Center
J 9 Airbag Sensor Assembly Center

Q 1 Airbag Squib (Front Passenger's Airbag Assembly)
Q 2 Airbag Squib (Front Passenger's Airbag Assembly)

V 1 Spiral Cable
Steering Pad SW

W 1 Airbag Squib (Steering Wheel Pad)
Spiral Cable
W 2 Airbag Squib (Steering Wheel Pad)
Spiral Cable

b 1 Power Steering ECU
Power Steering Motor

c 1 Power Steering ECU
Power Steering Torque Sensor

Position of Parts in Instrument Panel

[H/B]

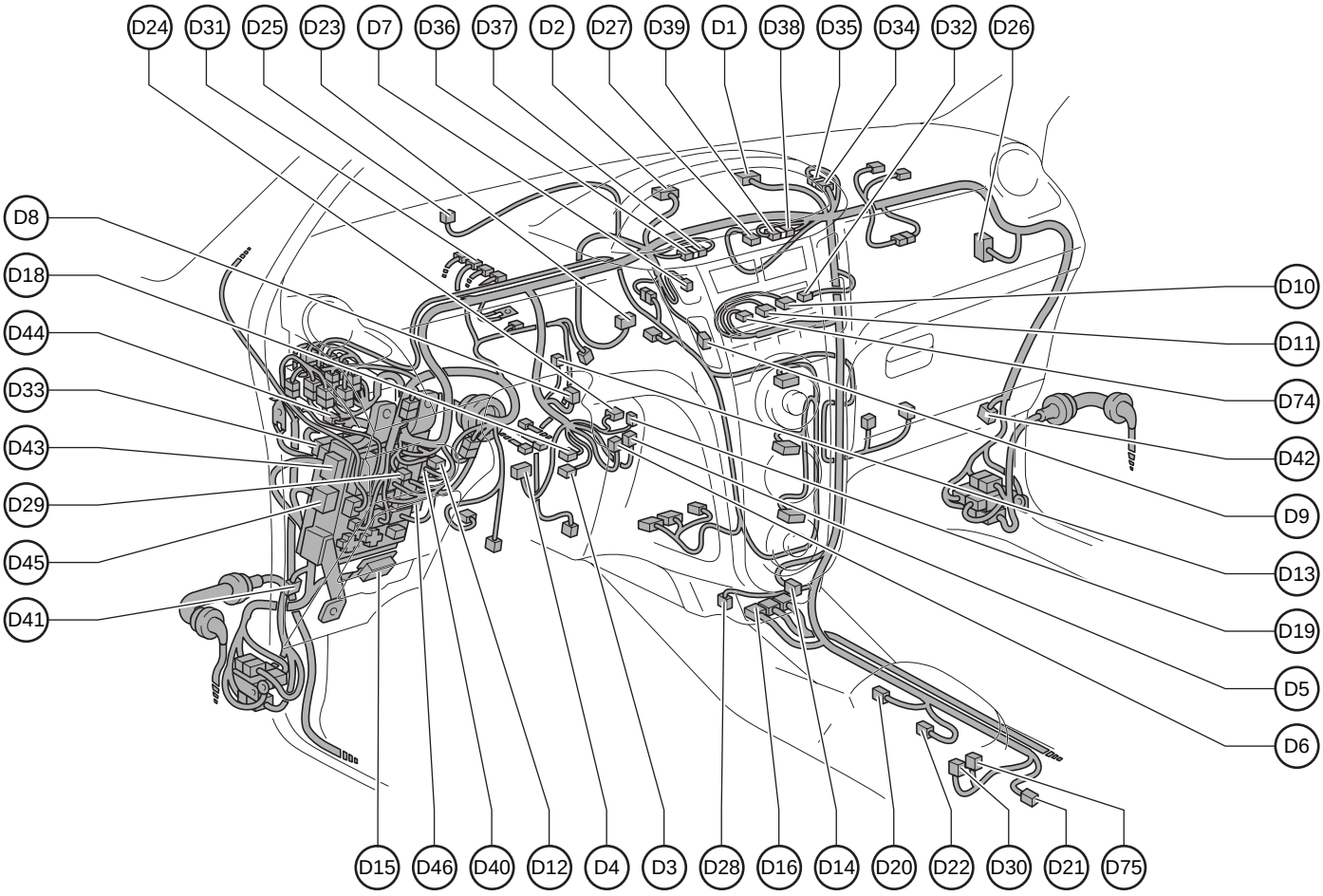

D 1 Combination Meter
D 2 Combination Meter
D 3 Spiral Cable
D 4 Headlamp Dimmer SW Assembly
D 5 Windshield Wiper SW Assembly
D 6 Windshield Wiper SW Assembly
D 7 Hazard Warning Signal SW
D 8 Ignition SW
D 9 Running Light Relay
D10 Radio Receiver Assembly
D11 Radio Receiver Assembly
D12 Outer Mirror SW
D13 Key Interlock Solenoid
D14 Cigarette Lighter or Power Outlet
D15 Data Link Connector 3
D16 Airbag Sensor Assembly Center
D18 Spiral Cable
D19 Unlock Warning SW
D20 A/T Shift Lever Illumination
D21 Parking Brake SW
D22 Shift Lock Control ECU
D23 Transponder Key ECU
D24 Transponder Key Amplifier
D25 Security Indicator Lamp
D26 Theft Warning ECU
D27 Passenger Seat Belt Warning Lamp
D28 Oxygen Sensor (Bank 1 Sensor 2)
D29 Light Control Rheostat
D30 Door Lock Control SW
D31 Power Steering ECU
D32 Antenna Amplifier
D33 Main Body ECU
D34 Junction Connector
D35 Junction Connector
D36 Junction Connector
D37 Junction Connector
D38 Junction Connector
D39 Junction Connector
D40 Junction Connector
D41 Junction Connector
D42 Junction Connector
D43 Fuse Block
D44 Diode (Starter)
D45 ACC Cut Relay
D46 Front Fog Light Relay
D74 Radio Receiver Assembly
D75 Stereo Jack Adapter

Position of Parts in Instrument Panel

[S/D]

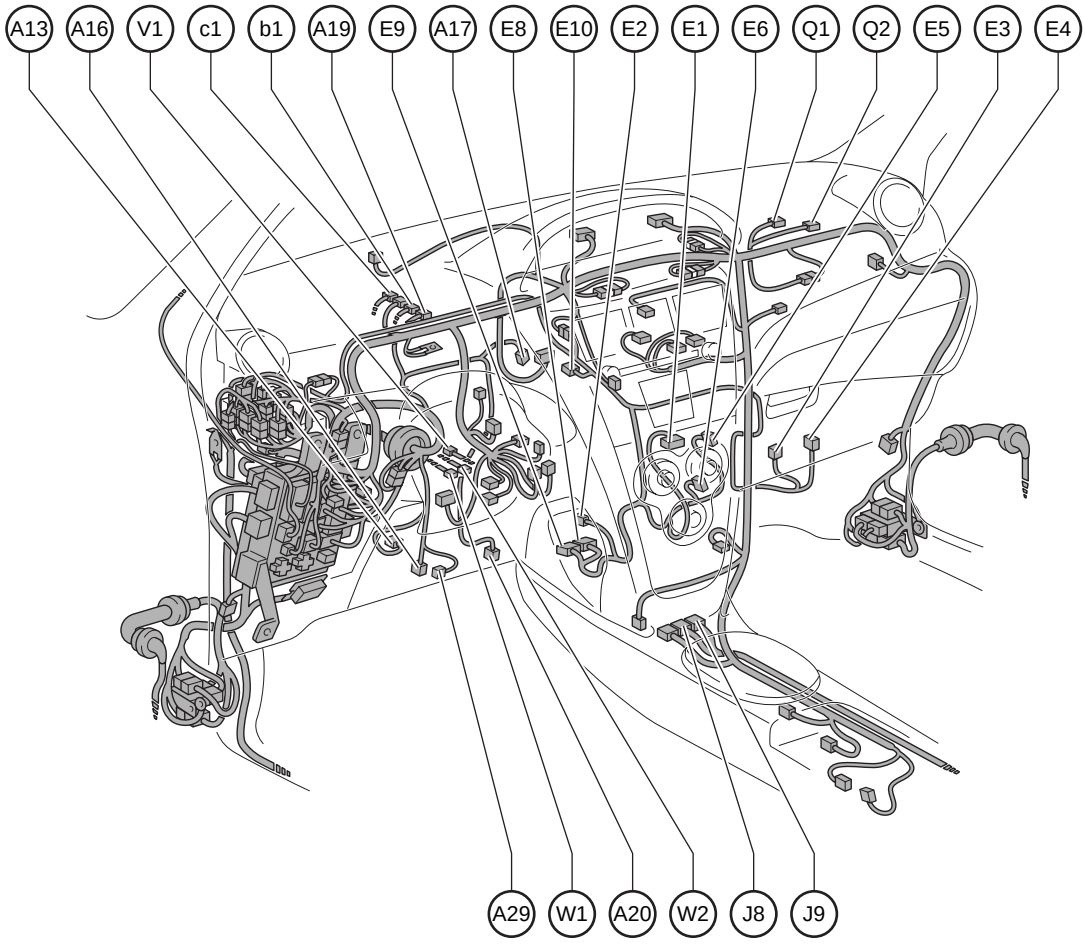

A13 Stop Lamp SW
A16 Clutch Start SW
A17 PTC Heater
A19 Power Steering ECU
A20 Accelerator Position Sensor
A29 Cruise Control Clutch SW

E 1 Blower SW
E 2 A/C Thermistor No.1
E 3 Blower Resistor
E 4 Blower Motor
E 5 A/C SW
E 6 Rear Window Defogger SW
E 8 A/C Amplifier
E 9 A/C Amplifier
E10 Junction Connector

J 8 Airbag Sensor Assembly Center
J 9 Airbag Sensor Assembly Center

Q 1 Airbag Squib (Front Passenger's Airbag Assembly)
Q 2 Airbag Squib (Front Passenger's Airbag Assembly)

V 1 Cruise Control SW
Spiral Cable
Steering Pad SW

W 1 Airbag Squib (Steering Wheel Pad)
Spiral Cable
W 2 Airbag Squib (Steering Wheel Pad)
Spiral Cable

b 1 Power Steering ECU
Power Steering Motor

c 1 Power Steering ECU
Power Steering Torque Sensor

Position of Parts in Instrument Panel

[S/D]

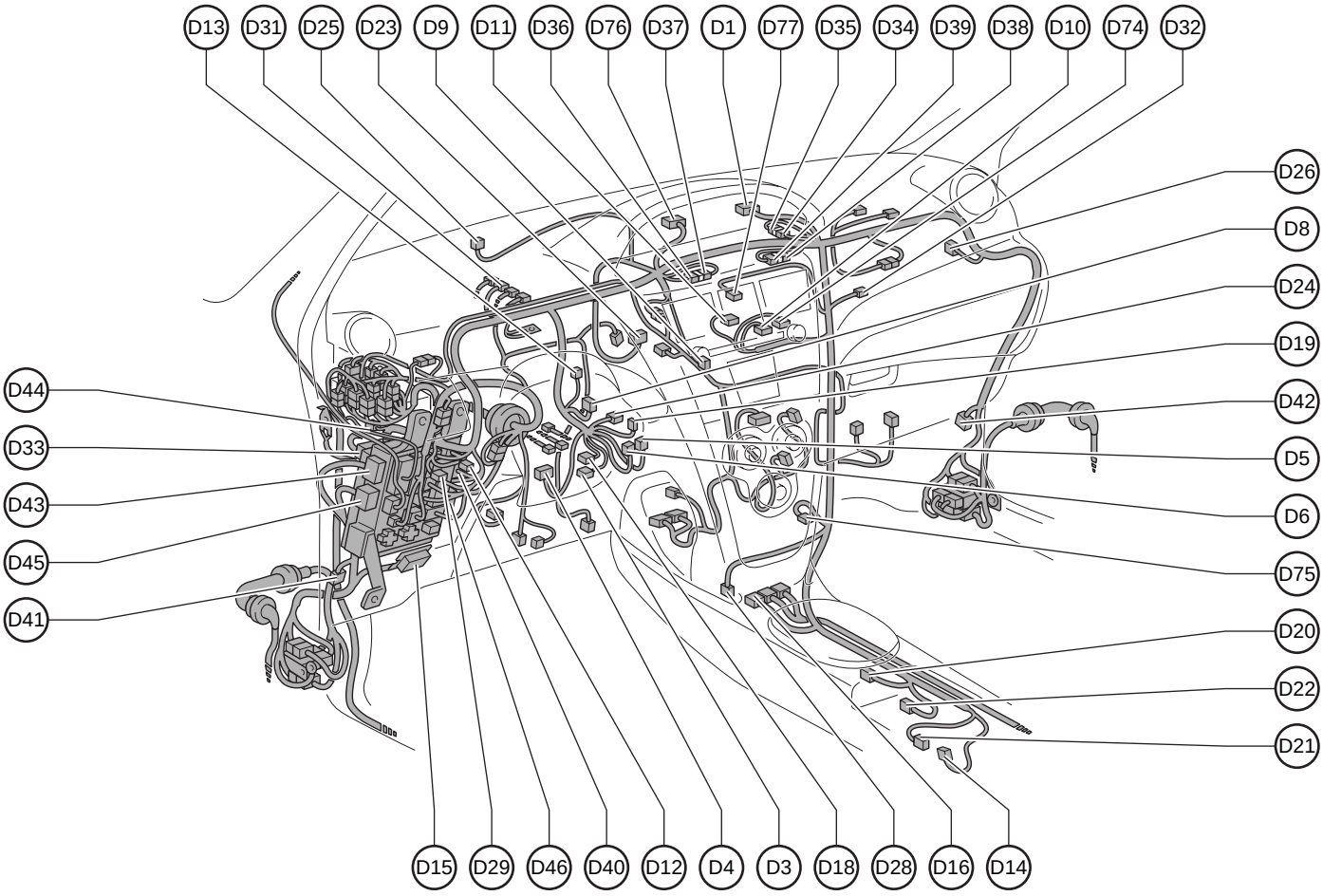

D 1 Combination Meter
D 3 Spiral Cable
D 4 Headlamp Dimmer SW Assembly
D 5 Windshield Wiper SW Assembly
D 6 Windshield Wiper SW Assembly
D 8 Ignition SW
D 9 Running Light Relay
D10 Radio Receiver Assembly
D11 Radio Receiver Assembly
D12 Outer Mirror SW
D13 Key Interlock Solenoid
D14 Cigarette Lighter or Power Outlet
D15 Data Link Connector 3
D16 Airbag Sensor Assembly Center
D18 Spiral Cable
D19 Unlock Warning SW
D20 A/T Shift Lever Illumination
D21 Parking Brake SW
D22 Shift Lock Control ECU
D23 Transponder Key ECU
D24 Transponder Key Amplifier
D25 Security Indicator Lamp
D26 Theft Warning ECU
D28 Oxygen Sensor (Bank 1 Sensor 2)
D29 Light Control Rheostat
D31 Power Steering ECU
D32 Antenna Amplifier
D33 Main Body ECU
D34 Junction Connector
D35 Junction Connector
D36 Junction Connector
D37 Junction Connector
D38 Junction Connector
D39 Junction Connector
D40 Junction Connector
D41 Junction Connector
D42 Junction Connector
D43 Fuse Block
D44 Diode (Starter)
D45 ACC Cut Relay
D46 Front Fog Light Relay
D74 Radio Receiver Assembly
D75 Stereo Jack Adapter
D76 Combination Meter
D77 Hazard Warning Signal SW

Position of Parts in Body

[5–Door]

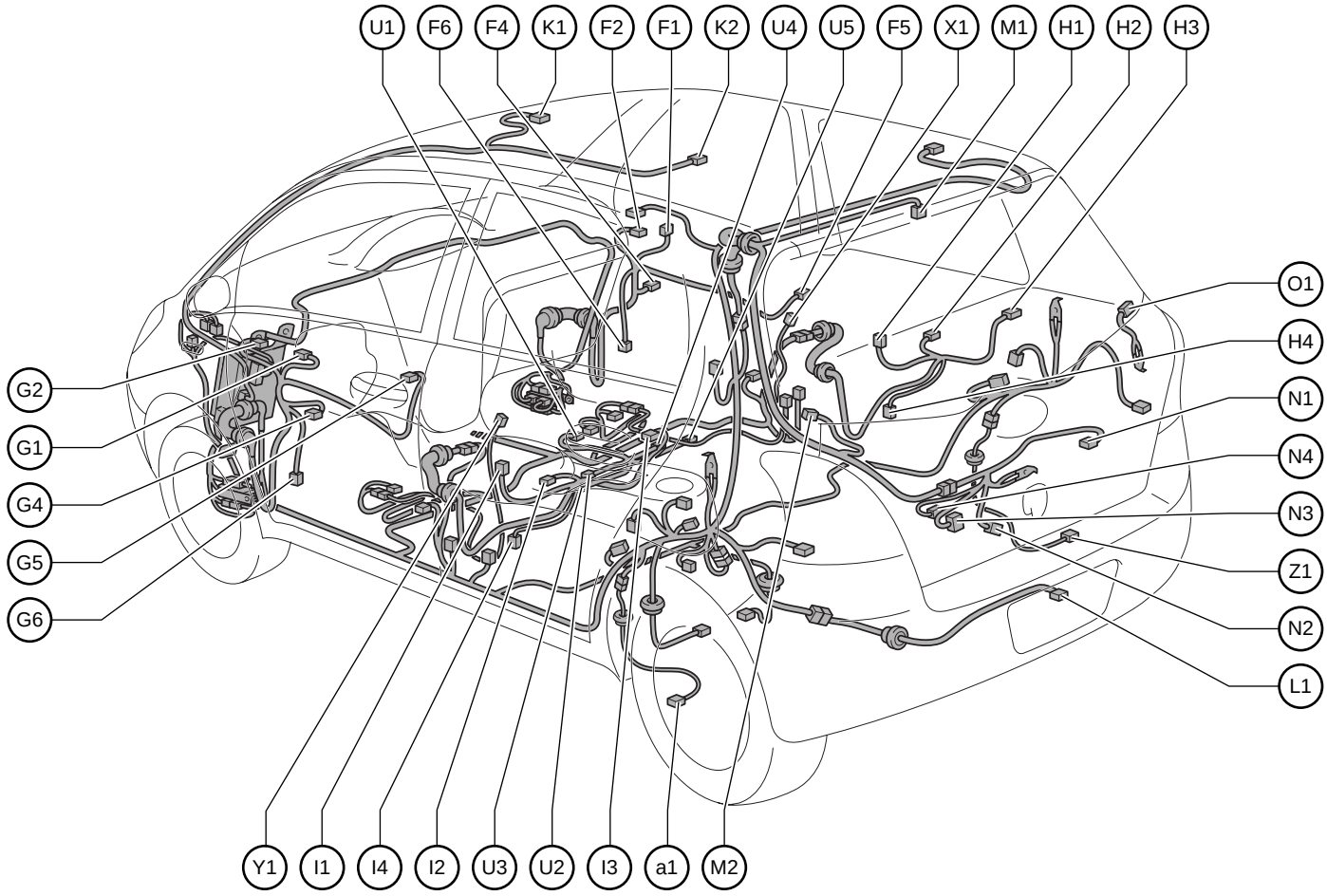

F 1 Power Window SW (Front RH)
F 2 Outer Rear View Mirror (RH)
F 4 Power Window Regulator Motor (Front RH)
F 5 Door Lock Assembly (Front Passenger's Side)
F 6 Speaker (Front Door RH)

G 1 Power Window Master SW
G 2 Outer Rear View Mirror (LH)
G 4 Power Window Regulator Motor (Front LH)
G 5 Door Lock Assembly (Driver's Side)
G 6 Speaker (Front Door LH)

H 1 Power Window SW (Rear RH)
H 2 Power Window Regulator Motor (Rear RH)
H 3 Door Lock Assembly (Rear RH)
H 4 Speaker (Rear RH)

I 1 Power Window SW (Rear LH)
I 2 Power Window Regulator Motor (Rear LH)
I 3 Door Lock Assembly (Rear LH)
I 4 Speaker (Rear LH)

K 1 Map Lamp
K 2 Room Lamp (Center)

L 1 License Plate Lamp

M 1 Center Stop Lamp
M 2 Rear Window Defogger

N 1 Rear Wiper Motor Assembly
N 2 Back Door Courtesy SW
N 3 Back Door Lock Assembly
N 4 Back Door Position SW

O 1 Rear Window Defogger

U 1 Occupant Classification ECU
U 2 Occupant Classification Sensor (Front LH)
U 3 Occupant Classification Sensor (Rear LH)
U 4 Occupant Classification Sensor (Front RH)
U 5 Occupant Classification Sensor (Rear RH)

X 1 Side Airbag Squib (RH)

Y 1 Side Airbag Squib (LH)

Z 1 Speed Sensor (Rear RH)

a 1 Speed Sensor (Rear LH)

Position of Parts in Body

[5–Door]

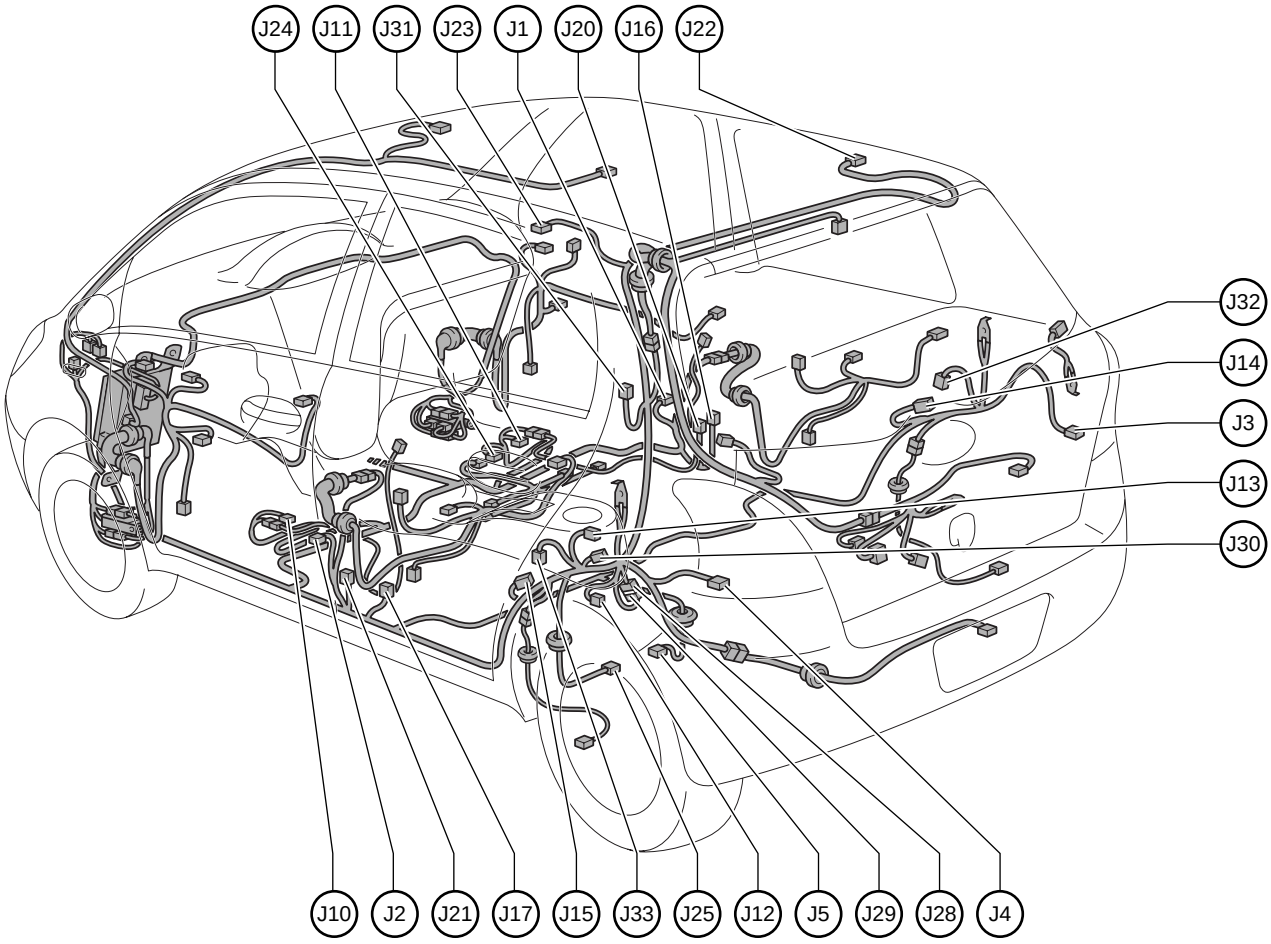

J 1 Door Courtesy SW (Front RH)
J 2 Door Courtesy SW (Front LH)
J 3 Rear Combination Lamp (RH)
J 4 Rear Combination Lamp (LH)
J 5 Fuel Suction Pump and Gage Assembly
J 10 Front Seat Inner Belt (Driver's Side)
J 11 Front Seat Inner Belt Assembly (Front RH)
J 12 Room Lamp (Luggage)
J 13 Door Control Receiver
J 14 Airbag Sensor (Rear RH)
J 15 Airbag Sensor (Rear LH)
J 16 Side Airbag Sensor (RH)
J 17 Side Airbag Sensor (LH)
J 20 Pretensioner (RH)
J 21 Pretensioner (LH)
J 22 Curtain Shield Airbag Squib (RH)
J 23 Curtain Shield Airbag Squib (LH)
J 24 Occupant Classification ECU
J 25 Canister Pump Module
J 28 Junction Connector
J 29 Junction Connector
J 30 Diode (Room Lamp)
J 31 Noise Filter
J 32 Door Courtesy SW (Rear RH)
J 33 Door Courtesy SW (Rear LH)

Position of Parts in Body

[3–Door]

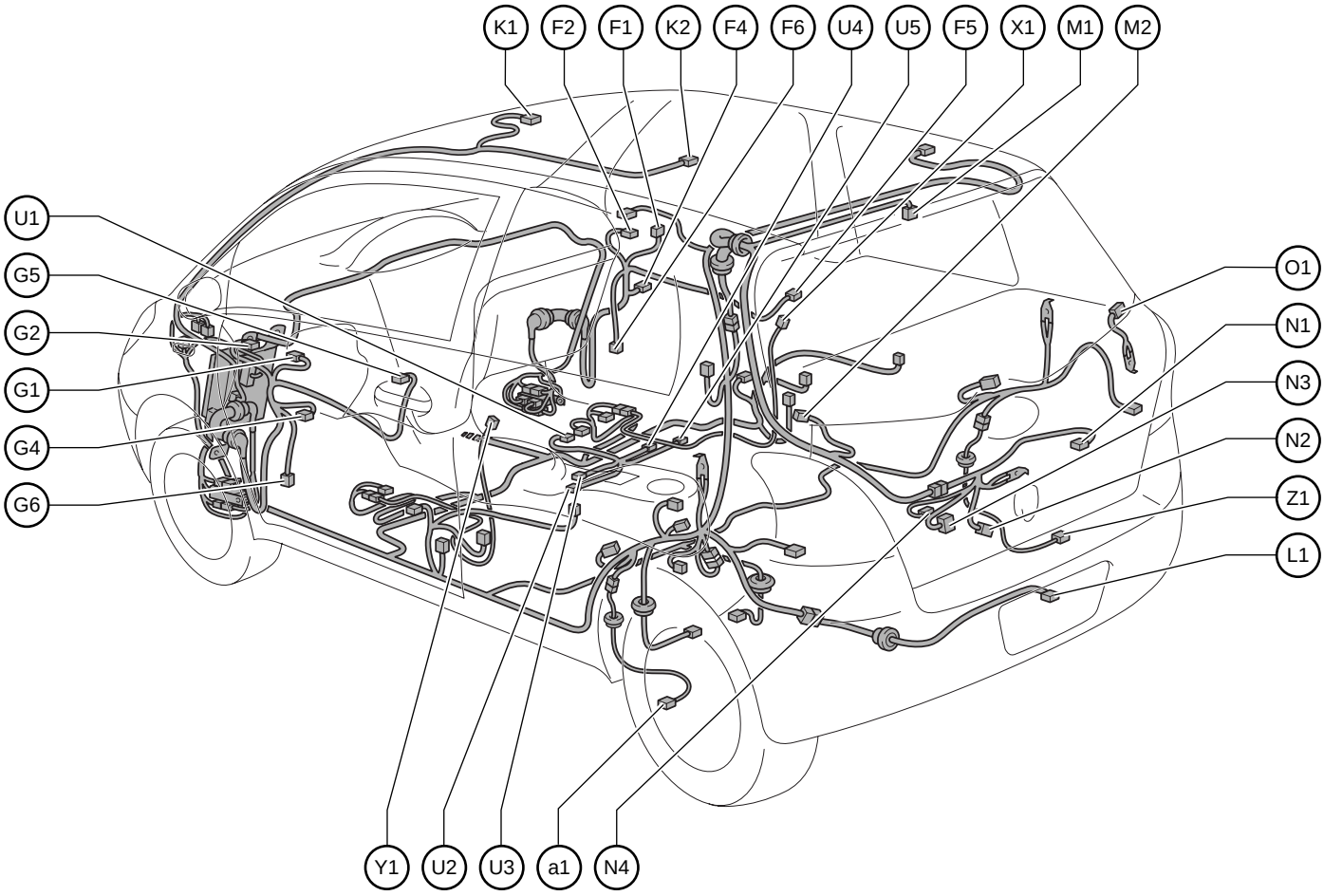

F 1 Power Window SW (Front RH)
F 2 Outer Rear View Mirror (RH)
F 4 Power Window Regulator Motor (Front RH)
F 5 Door Lock Assembly (Front Passenger's Side)
F 6 Speaker (Front Door RH)

G 1 Power Window Master SW
G 2 Outer Rear View Mirror (LH)
G 4 Power Window Regulator Motor (Front LH)
G 5 Door Lock Assembly (Driver's Side)
G 6 Speaker (Front Door LH)

K 1 Map Lamp
K 2 Room Lamp (Center)

L 1 License Plate Lamp

M 1 Center Stop Lamp
M 2 Rear Window Defogger

N 1 Rear Wiper Motor Assembly
N 2 Back Door Courtesy SW
N 3 Back Door Lock Assembly
N 4 Back Door Position SW

O 1 Rear Window Defogger

U 1 Occupant Classification ECU
U 2 Occupant Classification Sensor (Front LH)
U 3 Occupant Classification Sensor (Rear LH)
U 4 Occupant Classification Sensor (Front RH)
U 5 Occupant Classification Sensor (Rear RH)

X 1 Side Airbag Squib (RH)

Y 1 Side Airbag Squib (LH)

Z 1 Speed Sensor (Rear RH)

a 1 Speed Sensor (Rear LH)

Position of Parts in Body

[3–Door]

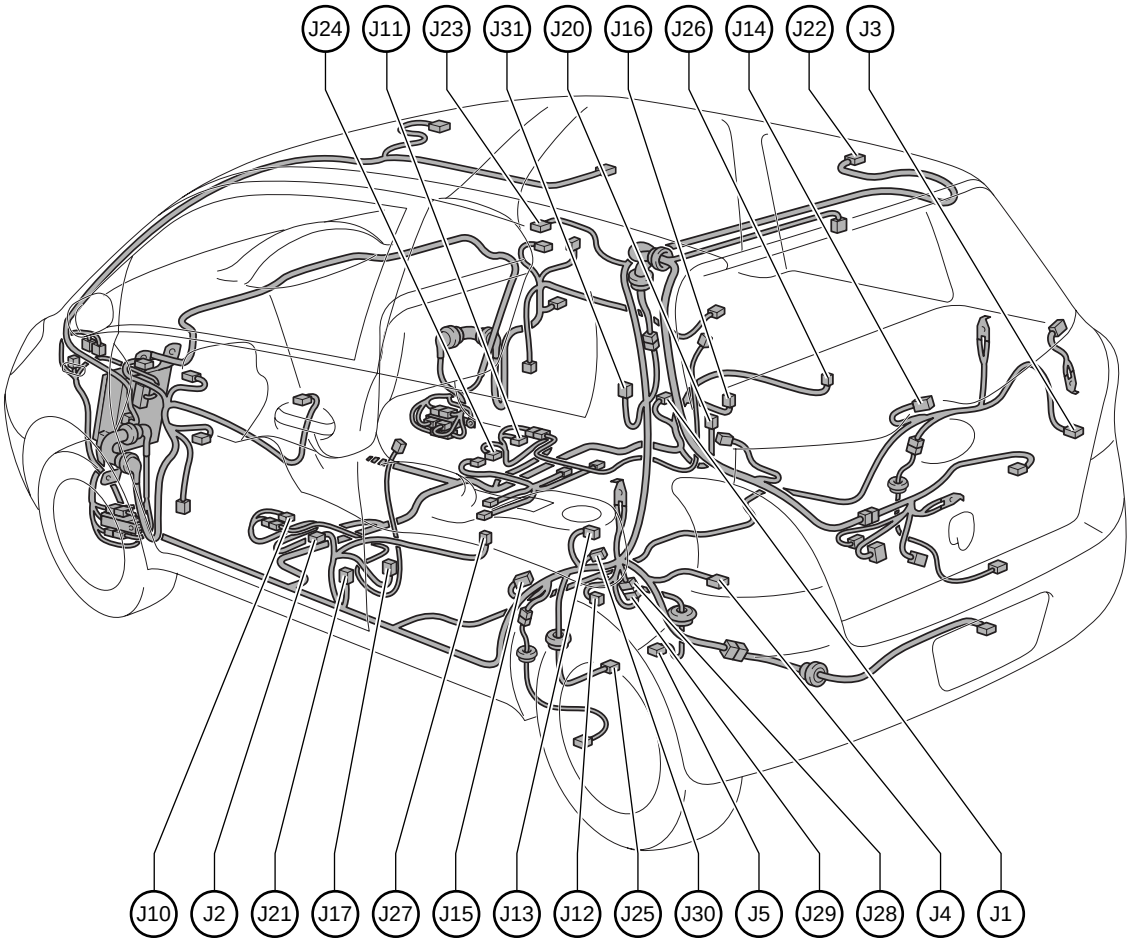

J 1 Door Courtesy SW (Front RH)
J 2 Door Courtesy SW (Front LH)
J 3 Rear Combination Lamp (RH)
J 4 Rear Combination Lamp (LH)
J 5 Fuel Suction Pump and Gage Assembly
J 10 Front Seat Inner Belt (Driver's Side)
J 11 Front Seat Inner Belt Assembly (Front RH)
J 12 Room Lamp (Luggage)
J 13 Door Control Receiver
J 14 Airbag Sensor (Rear RH)
J 15 Airbag Sensor (Rear LH)
J 16 Side Airbag Sensor (RH)
J 17 Side Airbag Sensor (LH)
J 20 Pretensioner (RH)
J 21 Pretensioner (LH)
J 22 Curtain Shield Airbag Squib (RH)
J 23 Curtain Shield Airbag Squib (LH)
J 24 Occupant Classification ECU
J 25 Canister Pump Module
J 26 Speaker (Rear RH)
J 27 Speaker (Rear LH)
J 28 Junction Connector
J 29 Junction Connector
J 30 Diode (Room Lamp)
J 31 Noise Filter

Position of Parts in Body

[4–Door]

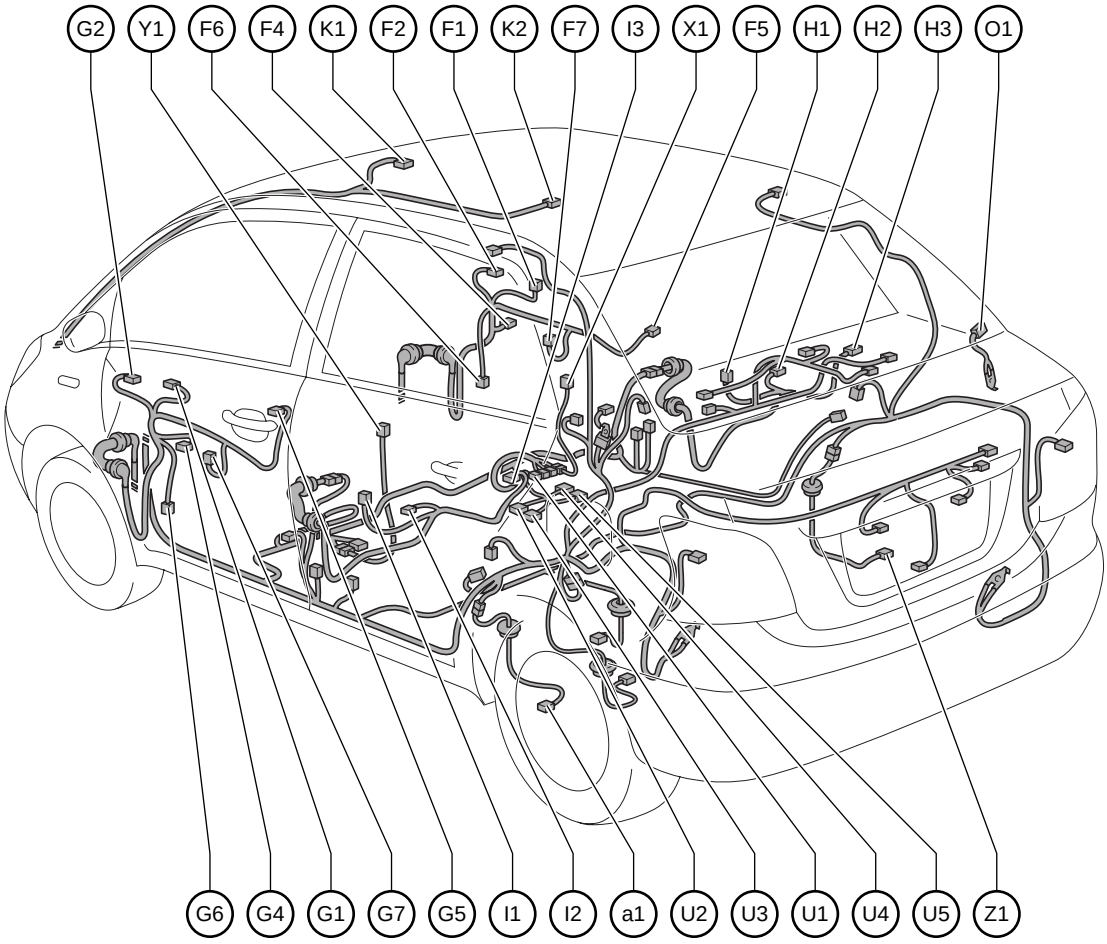

F 1 Power Window SW (Front RH)
F 2 Outer Rear View Mirror (RH)
F 4 Power Window Regulator Motor (Front RH)
F 5 Door Lock Assembly (Front Passenger's Side)
F 6 Speaker (Front Door RH)
F 7 Door Lock Control SW (Front Passenger's Side)

G 1 Power Window Master SW
G 2 Outer Rear View Mirror (LH)
G 4 Power Window Regulator Motor (Front LH)
G 5 Door Lock Assembly (Driver's Side)
G 6 Speaker (Front Door LH)
G 7 Door Lock Control SW (Driver's Side)

H 1 Power Window SW (Rear RH)
H 2 Power Window Regulator Motor (Rear RH)
H 3 Door Lock Assembly (Rear RH)

I 1 Power Window SW (Rear LH)
I 2 Power Window Regulator Motor (Rear LH)
I 3 Door Lock Assembly (Rear LH)

K 1 Map Lamp
K 2 Room Lamp (Center)

O 1 Rear Window Defogger

U 1 Occupant Classification ECU
U 2 Occupant Classification Sensor (Front LH)
U 3 Occupant Classification Sensor (Rear LH)
U 4 Occupant Classification Sensor (Front RH)
U 5 Occupant Classification Sensor (Rear RH)

X 1 Side Airbag Squib (RH)

Y 1 Side Airbag Squib (LH)

Z 1 Speed Sensor (Rear RH)

a 1 Speed Sensor (Rear LH)

Position of Parts in Body

[4–Door]

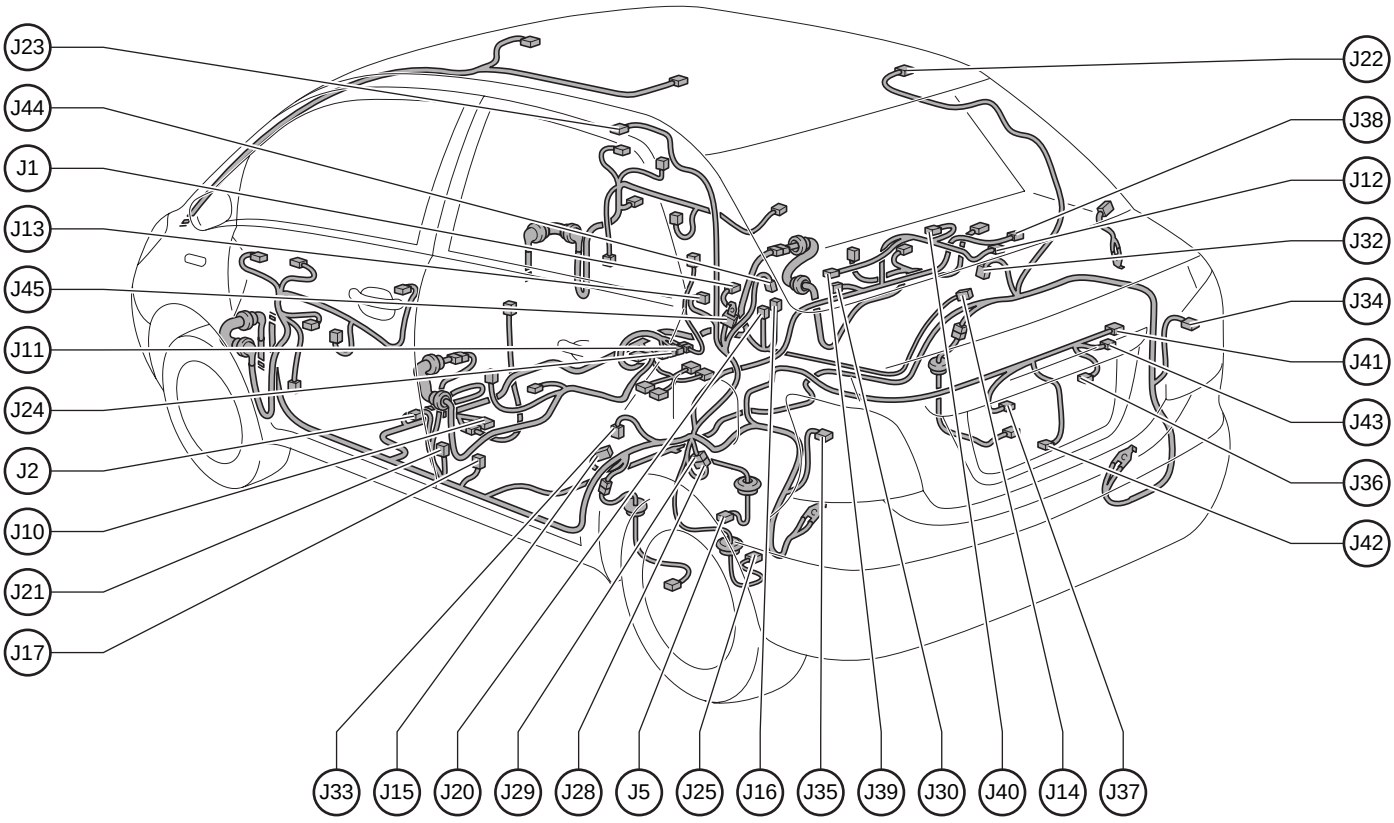

J 1 Door Courtesy SW (Front RH)
J 2 Door Courtesy SW (Front LH)
J 5 Fuel Suction Pump and Gage Assembly
J 10 Front Seat Inner Belt (Driver's Side)
J 11 Front Seat Inner Belt Assembly (Front RH)
J 12 Room Lamp (Luggage)
J 13 Door Control Receiver
J 14 Airbag Sensor (Rear RH)
J 15 Airbag Sensor (Rear LH)
J 16 Side Airbag Sensor (RH)
J 17 Side Airbag Sensor (LH)
J 20 Pretensioner (RH)
J 21 Pretensioner (LH)
J 22 Curtain Shield Airbag Squib (RH)
J 23 Curtain Shield Airbag Squib (LH)
J 24 Occupant Classification ECU
J 25 Canister Pump Module
J 28 Junction Connector
J 29 Junction Connector
J 30 Diode (Room Lamp)
J 32 Door Courtesy SW (Rear RH)
J 33 Door Courtesy SW (Rear LH)
J 34 Rear Combination Lamp (RH)
J 35 Rear Combination Lamp (LH)
J 36 License Plate Lamp (RH)
J 37 License Plate Lamp (LH)
J 38 Speaker (Rear RH)
J 39 Speaker (Rear LH)
J 40 High Mounted Stop Light
J 41 High Mounted Stop Light
J 42 Door Lock Assembly (Luggage)
J 43 Door Lock Assembly (Luggage)
J 44 Rear Window Defogger
J 45 Noise Filter

▭ : Location of Connector Joining Wire Harness and Wire Harness
▽ : Location of Ground Points

[H/B]

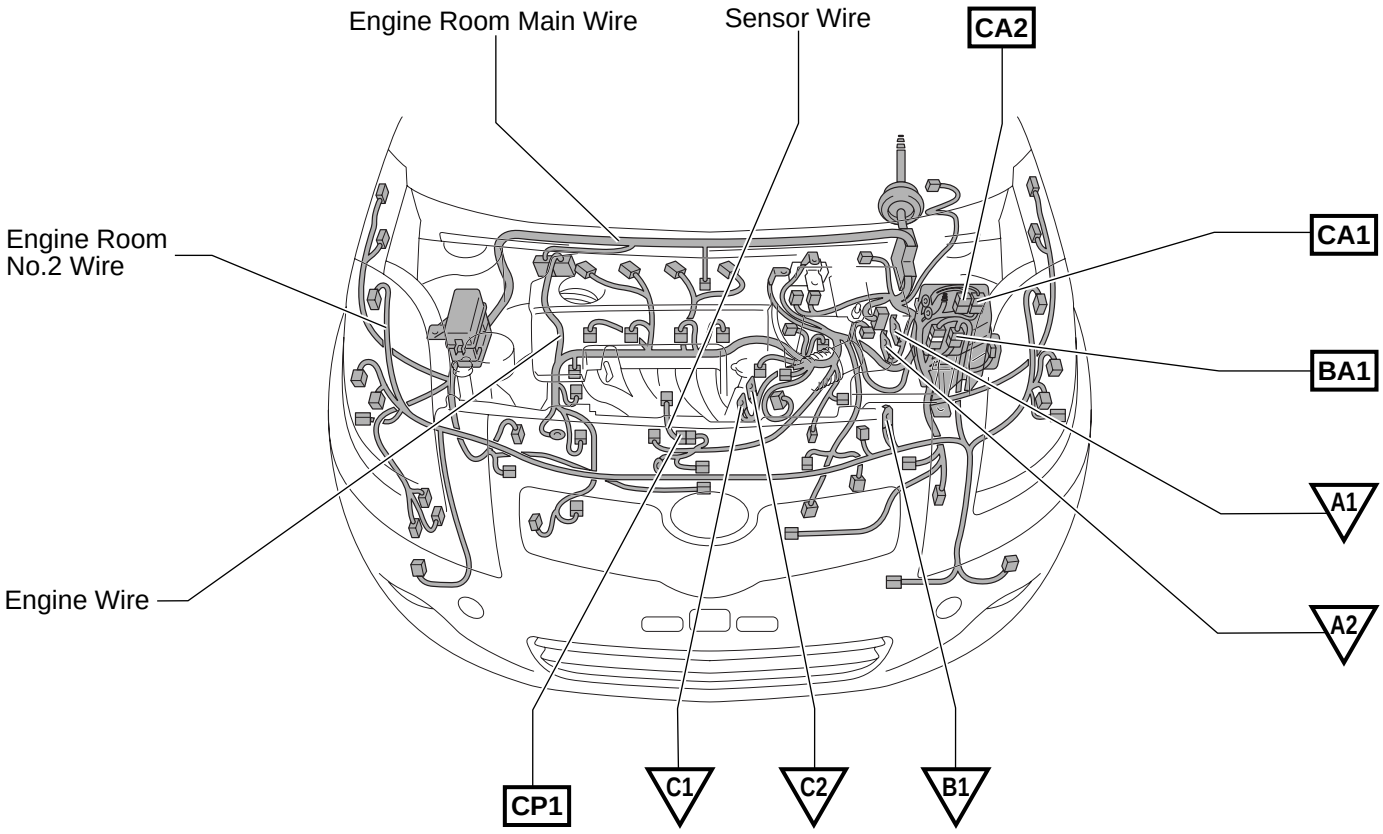

: Location of Connector Joining Wire Harness and Wire Harness
▽ : Location of Ground Points

[S/D]

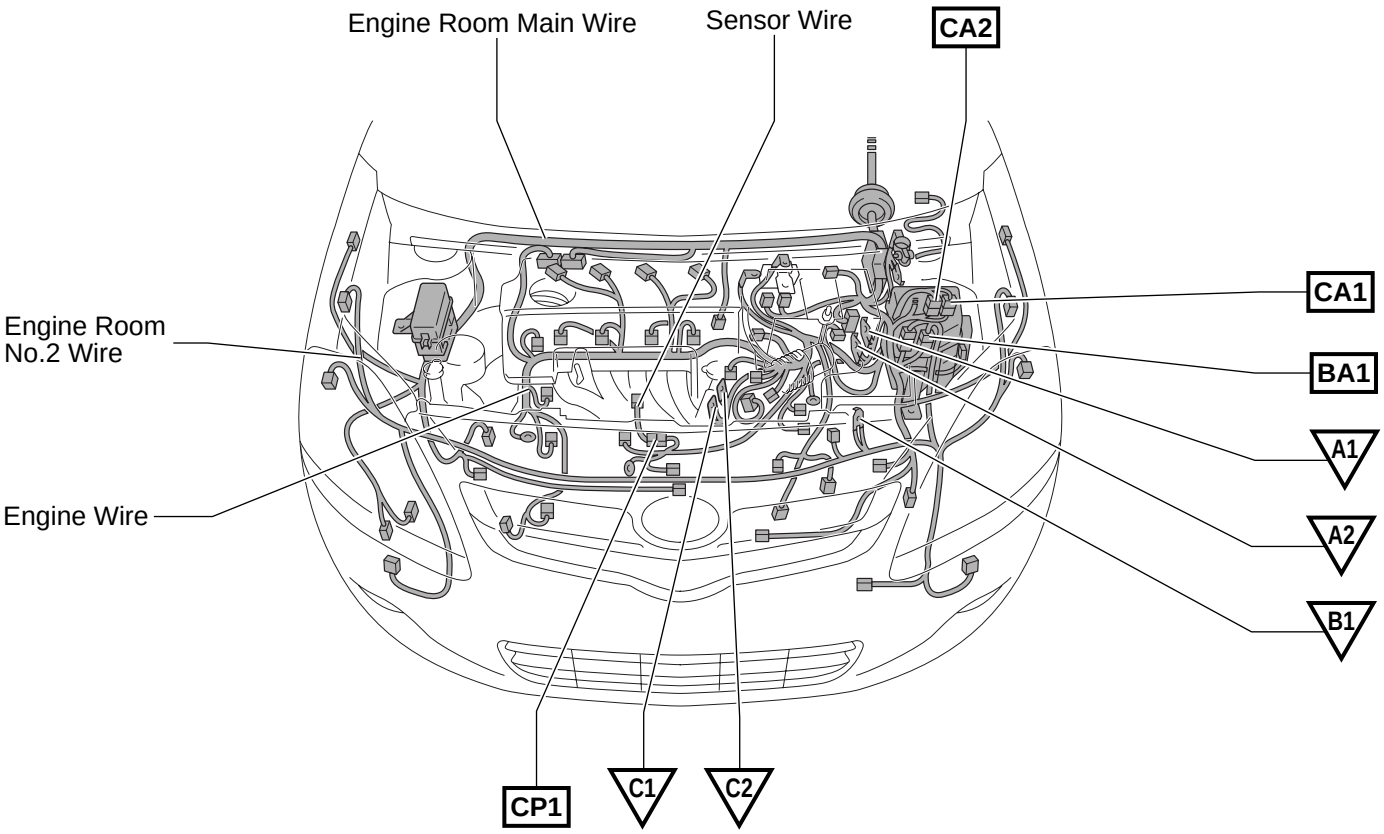

▭ : Location of Connector Joining Wire Harness and Wire Harness

[H/B]

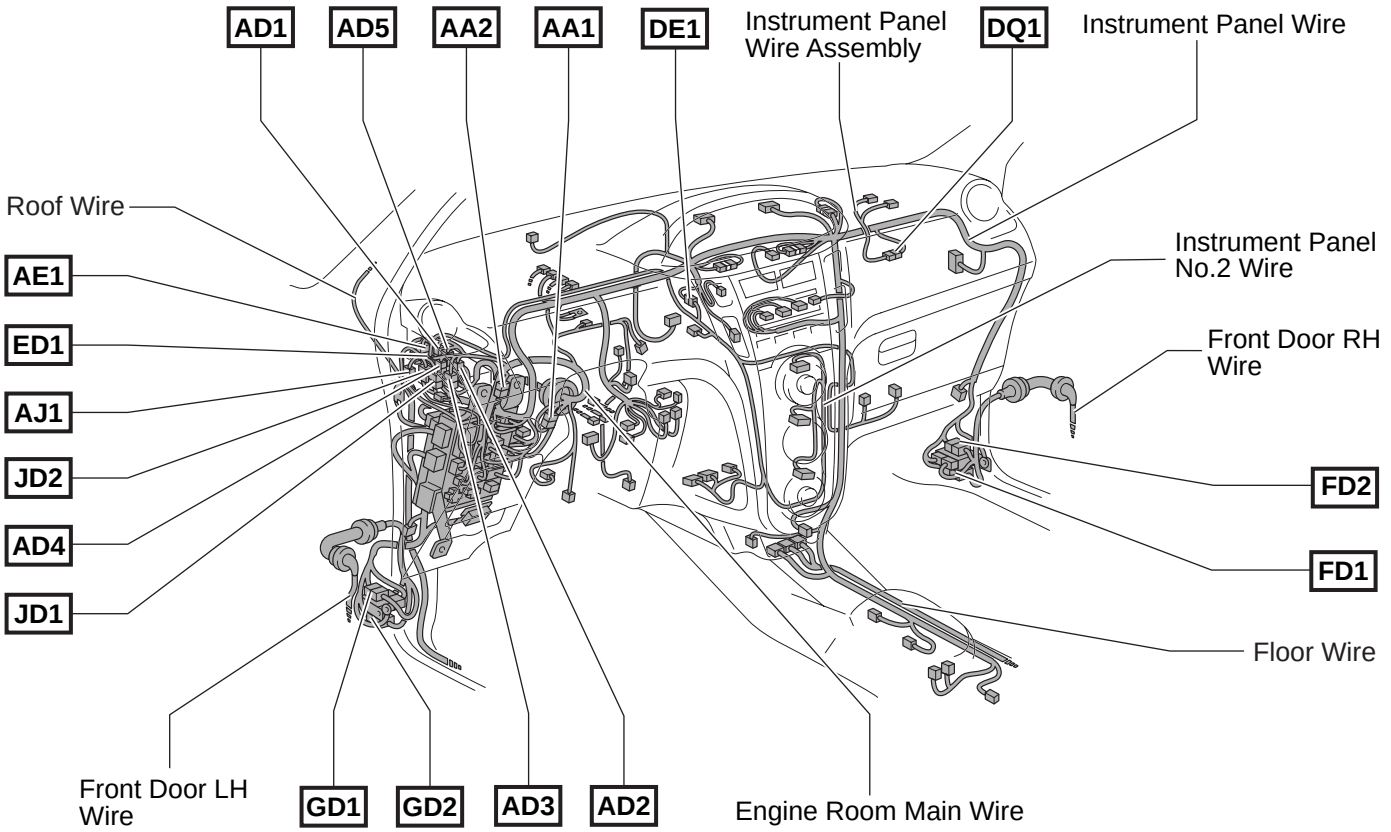

▽ : Location of Ground Points

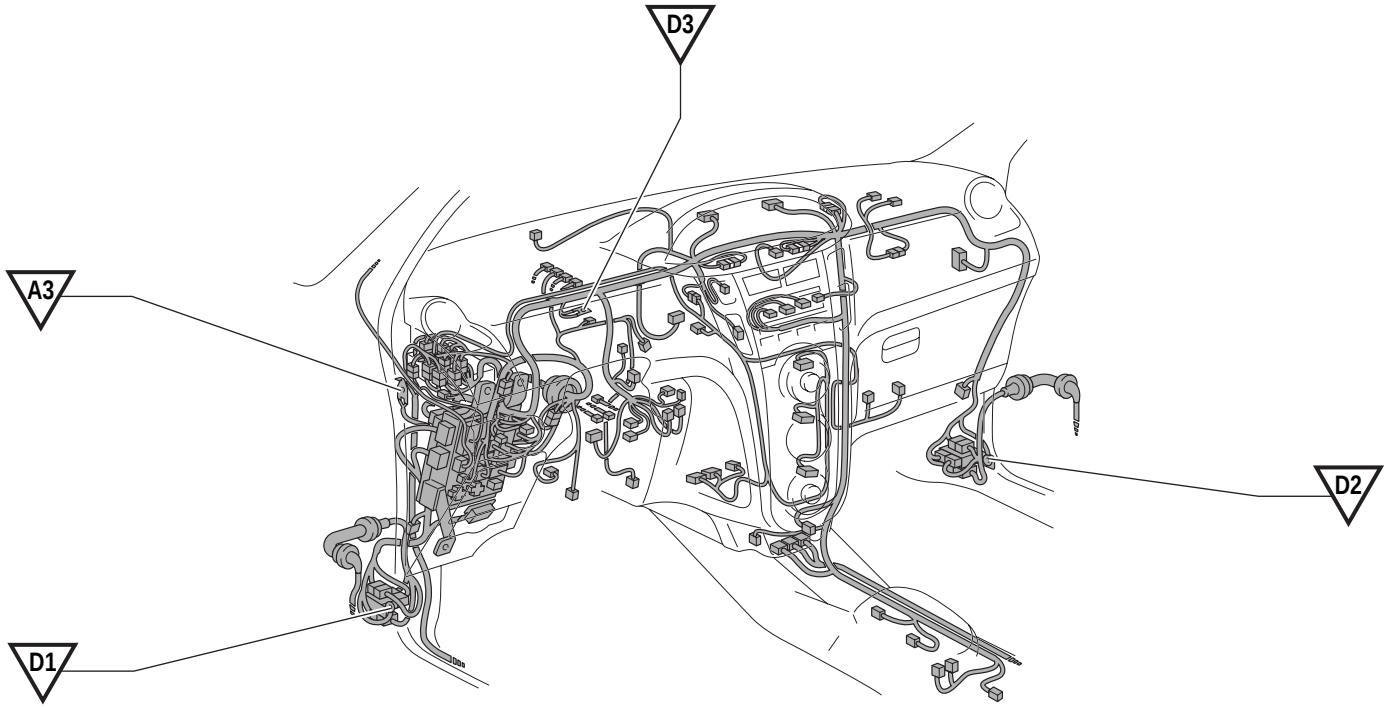

▭ : Location of Connector Joining Wire Harness and Wire Harness

[S/D]

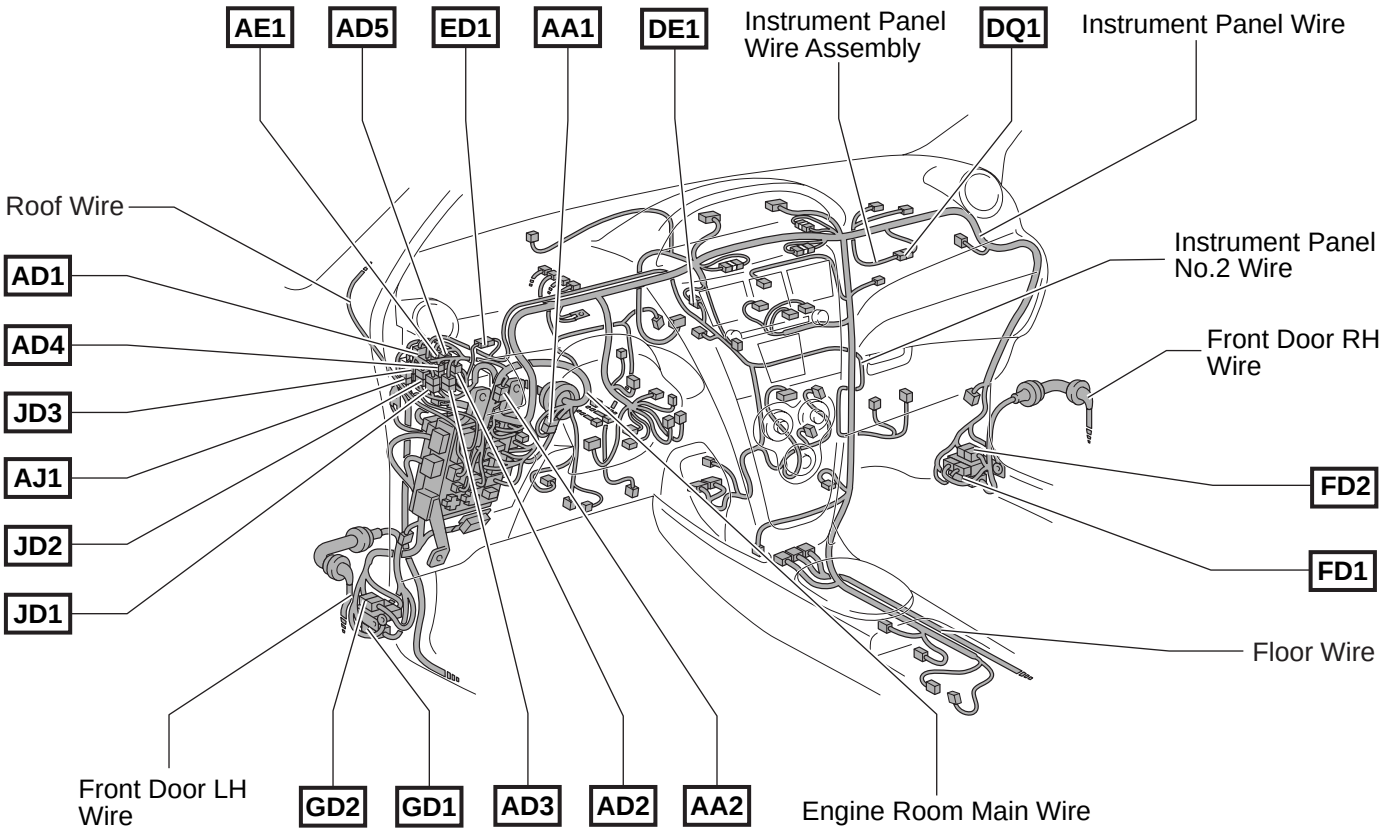

▽ : Location of Ground Points

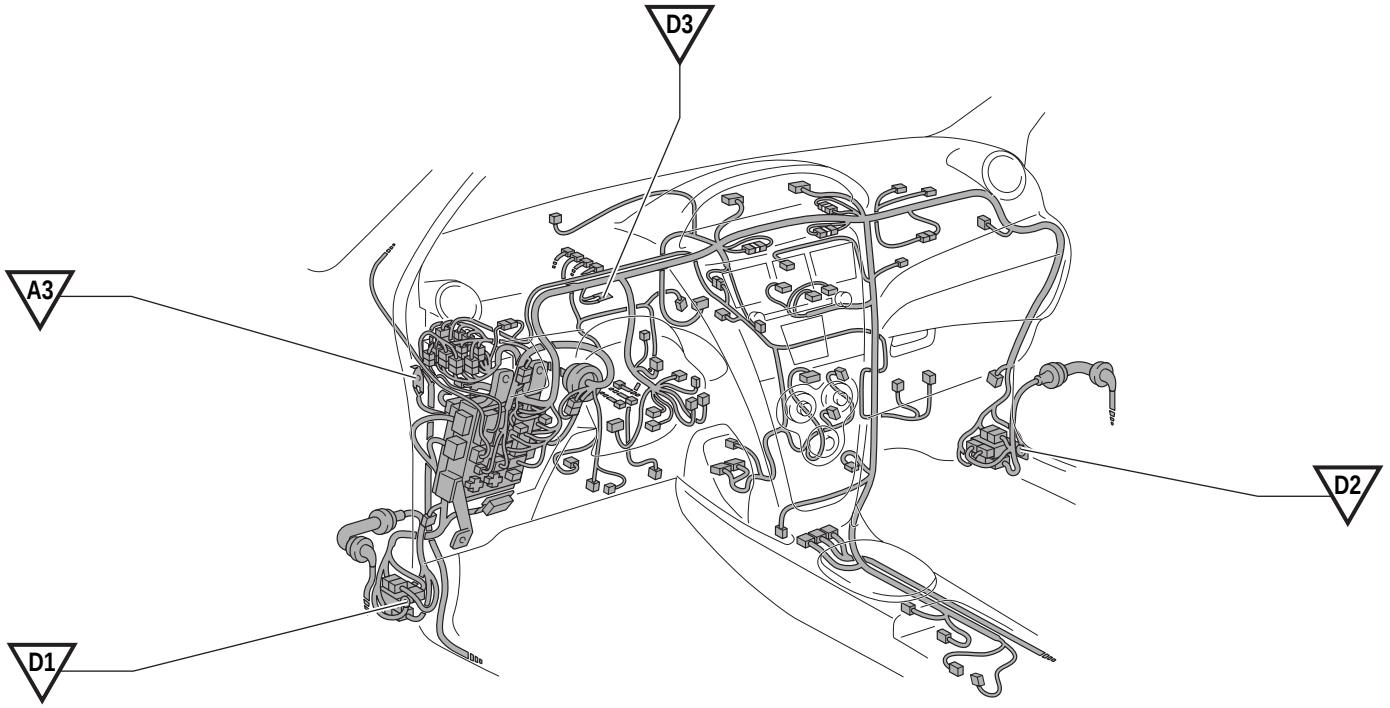

▭ : Location of Connector Joining Wire Harness and Wire Harness
▽ : Location of Ground Points

[5–Door]

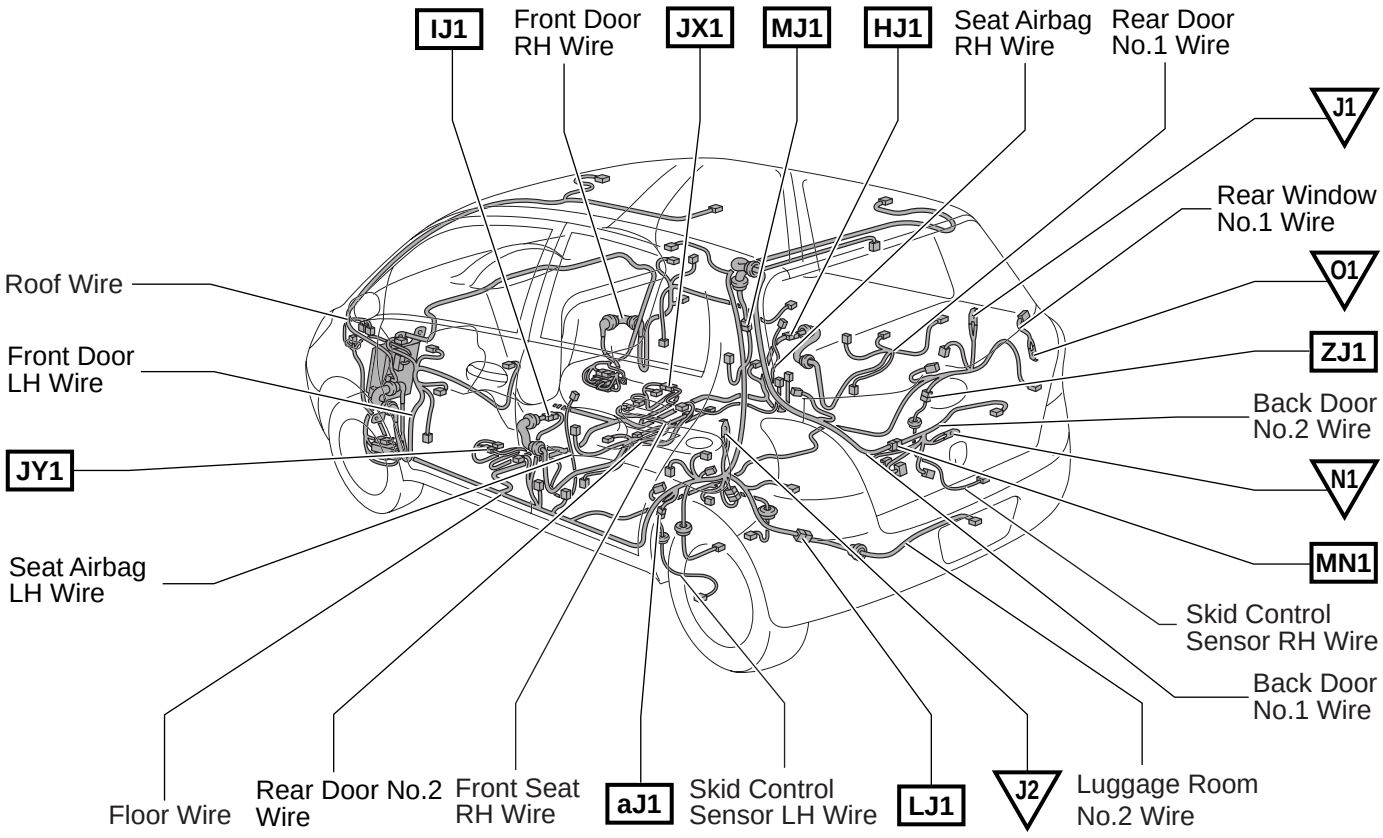

: Location of Connector Joining Wire Harness and Wire Harness
: Location of Ground Points

[3–Door]

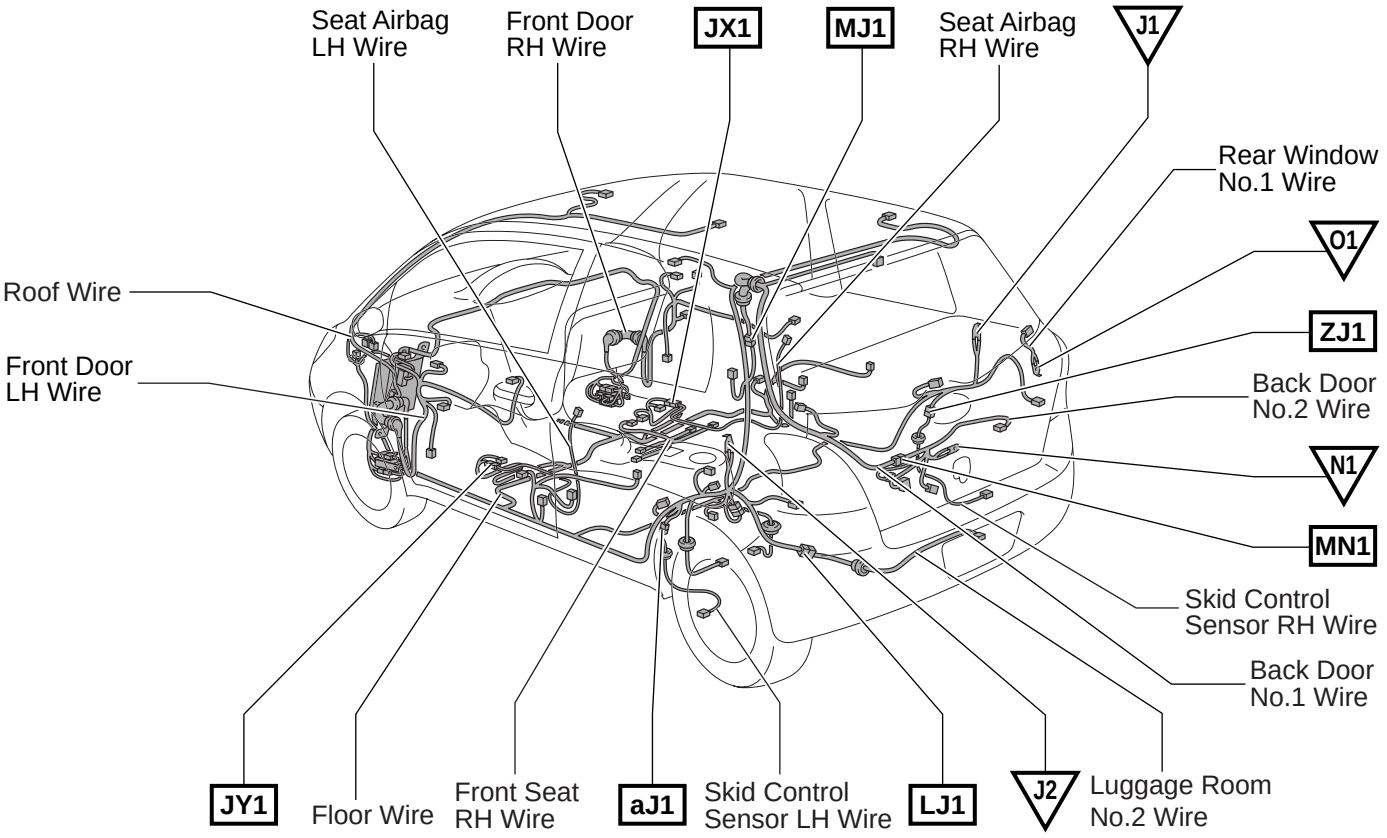

▭ : Location of Connector Joining Wire Harness and Wire Harness
▽ : Location of Ground Points

[4–Door]

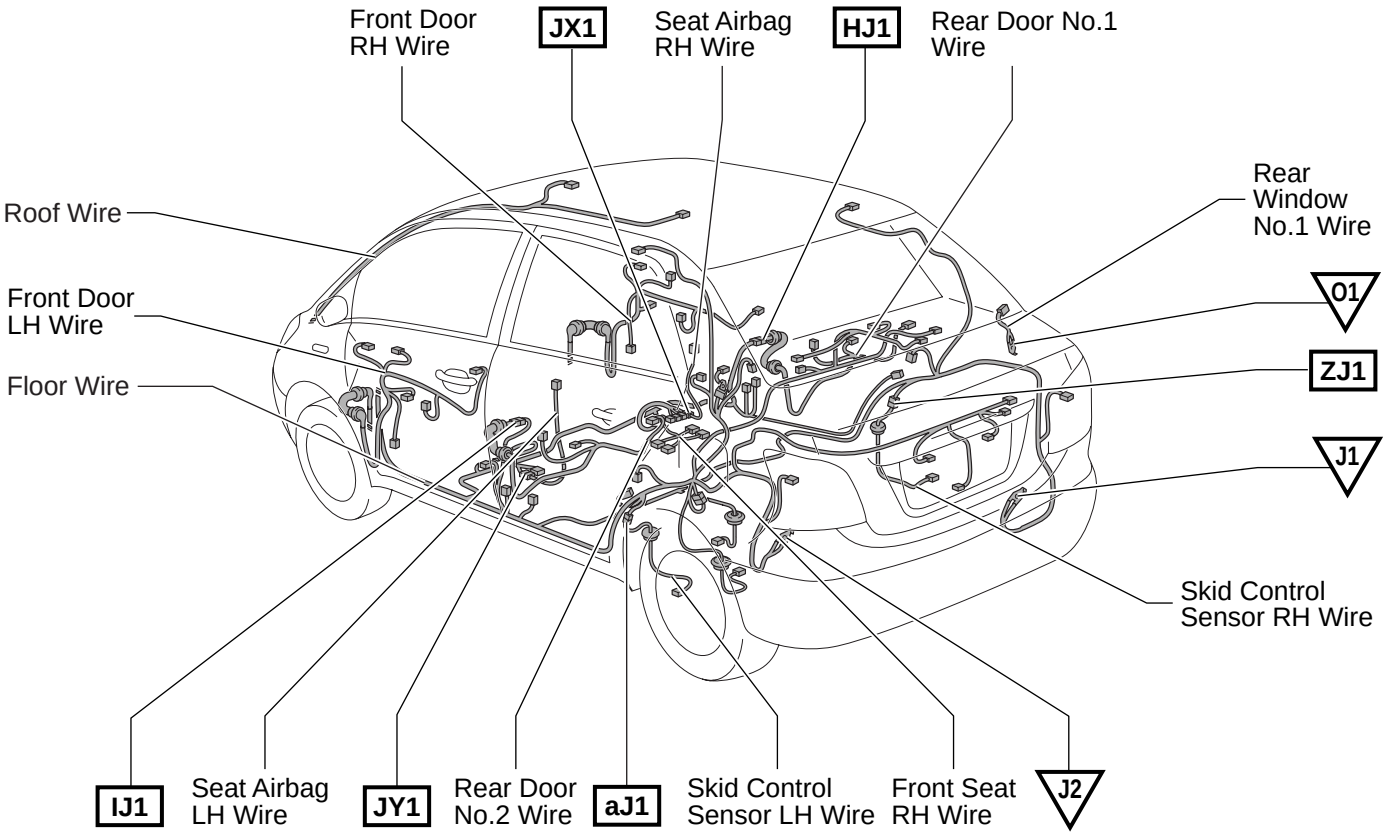

2007 YARIS ELECTRICAL WIRING DIAGRAM SYSTEM CIRCUITS

	Page
ABS	154
Air Conditioning	238
Audio System	222
Back–Up Light	140
Charging	78
Cigarette Lighter	220
Combination Meter	226
Cooling Fan	234
Cruise Control	102
Data Link Connector 3	112
Door Lock Control	184
Electronically Controlled Transmission and A/T Indicator	96
Engine Control	84
Engine Immobiliser System	110
EPS	174
Front Fog Light	146
Front Wiper and Washer	208
Headlight	120
Horn	144
Ignition	80
Illumination	134
Interior Light	128
Key Reminder	150
Light Reminder	150
Multiplex Communication System (CAN)	116
Power Outlet	220
Power Source	68
Power Window	178
Rear Window Defogger	216
Rear Wiper and Washer	212
Remote Control Mirror	218
Seat Belt Warning	168
Shift Lock	214
SRS	159
Starting	74
Stop Light	142
Taillight	134
Theft Deterrent	200
Turn Signal and Hazard Warning Light	124
Wireless Door Lock Control	192

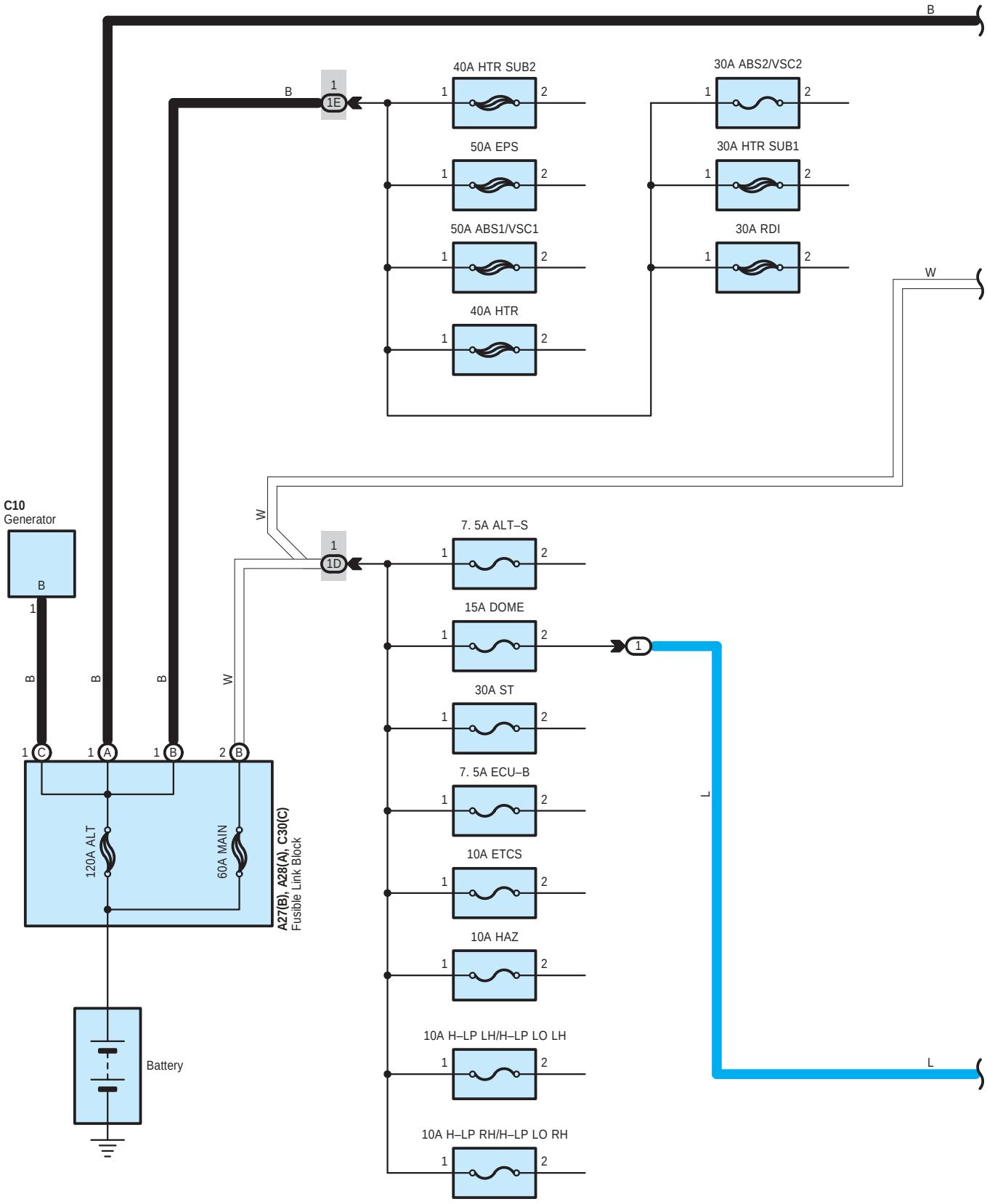
B
40A HTR SUB2
30A ABS2/VSC2
50A EPS
30A HTR SUB1
50A ABS1/VSC1
30A RDI
40A HTR
W
C10
Generator
7. 5A ALT–S
15A DOME
30A ST
7. 5A ECU–B
10A ETCS
10A HAZ
10A H–LP LH/H–LP LO LH
10A H–LP RH/H–LP LO RH
L
120A ALT
60A MAIN
A27(B), A28(A), C30(C)
Fusible Link Block
Battery

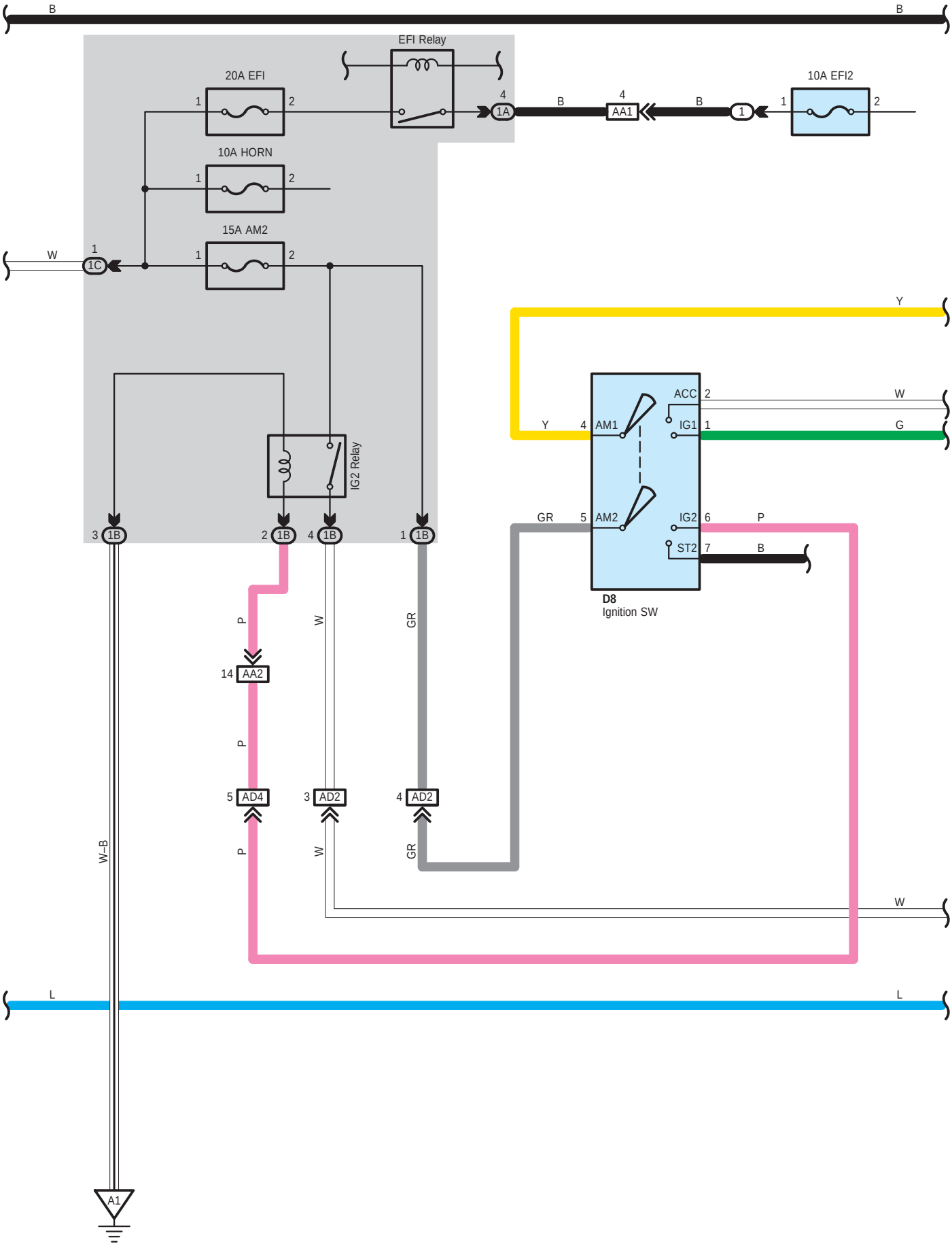
B
B
EFI Relay
20A EFI
10A EFI2
10A HORN
15A AM2
W
1C
1A
AA1
1
Y
ACC
IG1
AM1
AM2
IG2
ST2
D8
Ignition SW
IG2 Relay
GR
P
W
G
B
1B
AA2
AD4
AD2
W–B
L
A1

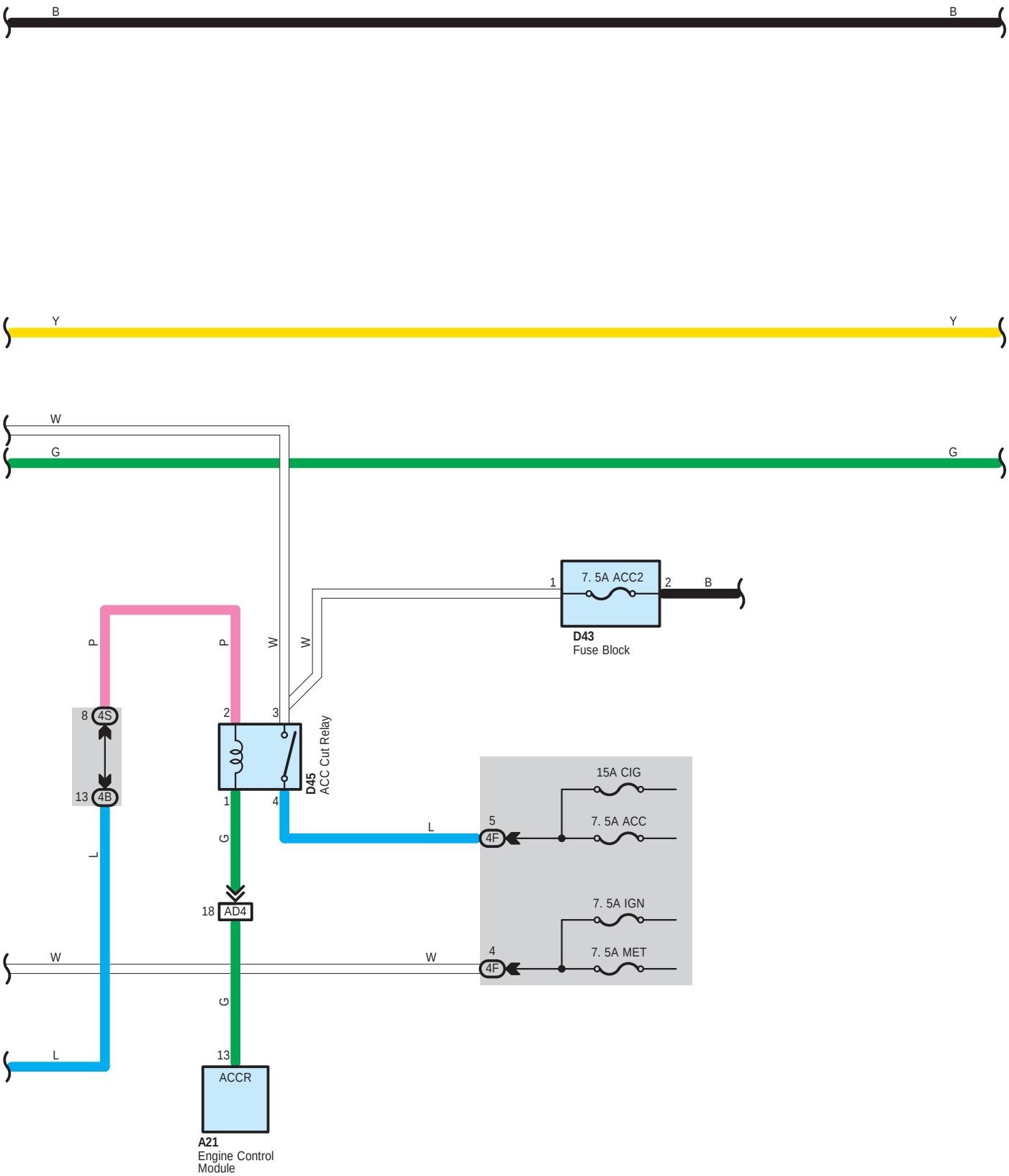
B
B
Y
Y
W
G
G
1
7. 5A ACC2
2
B
D43
Fuse Block
P
P
W
W
8
4S
13
4B
2
3
1
4
D45
ACC Cut Relay
L
G
L
5
4F
15A CIG
7. 5A ACC
7. 5A IGN
7. 5A MET
4
4F
18
AD4
W
W
G
L
13
ACCR
A21
Engine Control
Module

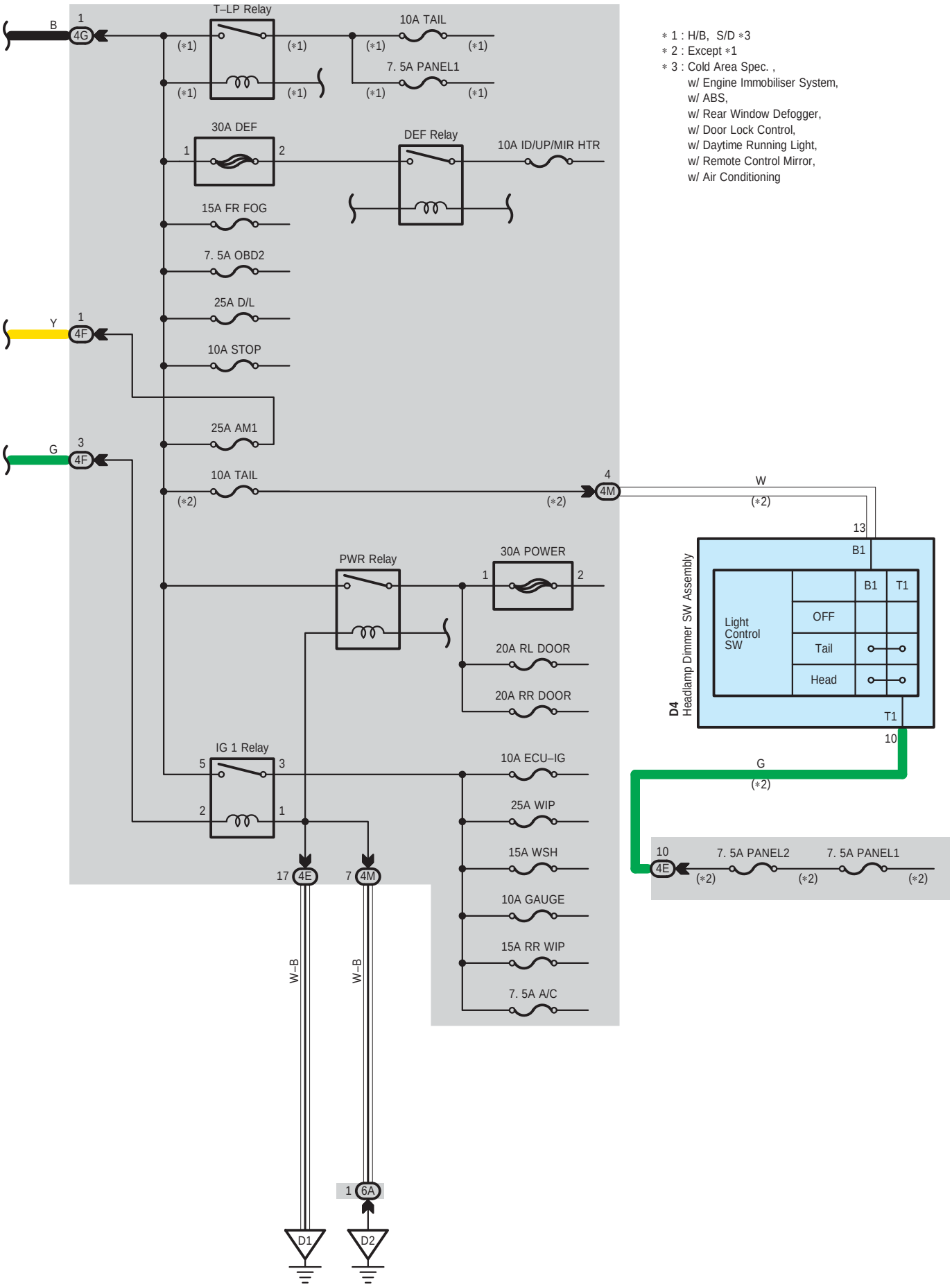
∗1 : H/B, S/D ∗3
∗2 : Except ∗1
∗3 : Cold Area Spec. ,
w/ Engine Immobiliser System,
w/ ABS,
w/ Rear Window Defogger,
w/ Door Lock Control,
w/ Daytime Running Light,
w/ Remote Control Mirror,
w/ Air Conditioning
B
1
4G
T–LP Relay
(∗1)
10A TAIL
7. 5A PANEL1
30A DEF
DEF Relay
10A ID/UP/MIR HTR
15A FR FOG
7. 5A OBD2
25A D/L
Y
1
4F
10A STOP
25A AM1
G
3
4F
10A TAIL
(∗2)
4
4M
W
13
B1
T1
OFF
Tail
Head
Light Control SW
D4
Headlamp Dimmer SW Assembly
10
G
PWR Relay
30A POWER
20A RL DOOR
20A RR DOOR
IG 1 Relay
10A ECU–IG
25A WIP
15A WSH
10A GAUGE
15A RR WIP
7. 5A A/C
7. 5A PANEL2
17
4E
7
4M
W–B
1
6A
D1
D2

Power Source

: Parts Location

Code		See Page	Code		See Page	Code	See Page
A21		46 (H/B) 48 (S/D)	C10		47 (H/B) 49 (S/D)	D8	51 (H/B) 53 (S/D)
A27	B	43, 46 (H/B) 43, 48 (S/D)	C30	C	42, 47 (H/B) 42, 49 (S/D)	D43	45, 51 (H/B) 45, 53 (S/D)
A28	A	43, 46 (H/B) 43, 48 (S/D)	D4		51 (H/B) 53 (S/D)	D45	51 (H/B) 53 (S/D)

: Relay Blocks

Code	See Page	Relay Blocks (Relay Block Location)
1	24	Engine Room R/B (Engine Compartment Left)

: Junction Block and Wire Harness Connector

Code	See Page	Junction Block and Wire Harness (Connector Location)
1A	25	Engine Room Main Wire and Engine Room J/B (Engine Compartment Left)
1B		
1C		
1D	24	
1E		
4B	30	Engine Room Main Wire and Instrument Panel J/B (Lower Finish Panel)
4E	30	Instrument Panel Wire and Instrument Panel J/B (Lower Finish Panel)
4F		
4G	30	Engine Room Main Wire and Instrument Panel J/B (Lower Finish Panel)
4M	31	Instrument Panel Wire and Instrument Panel J/B (Lower Finish Panel)
4S		
6A	40	Instrument Panel Wire and J/B No.6 (Right Kick Panel)

: Connector Joining Wire Harness and Wire Harness

Code	See Page	Joining Wire Harness and Wire Harness (Connector Location)
AA1	62 (H/B) 63 (S/D)	Engine Room Main Wire and Engine Room Main Wire (Instrument Panel Left)
AA2	62 (H/B) 63 (S/D)	
AD2	62 (H/B) 63 (S/D)	Engine Room Main Wire and Instrument Panel Wire (Instrument Panel Left)
AD4	62 (H/B) 63 (S/D)	

: Ground Points

Code	See Page	Ground Points Location
A1	60 (H/B) 61 (S/D)	Left Suspension Tower
D1	62 (H/B) 63 (S/D)	Left Kick Panel
D2	62 (H/B) 63 (S/D)	Right Kick Panel

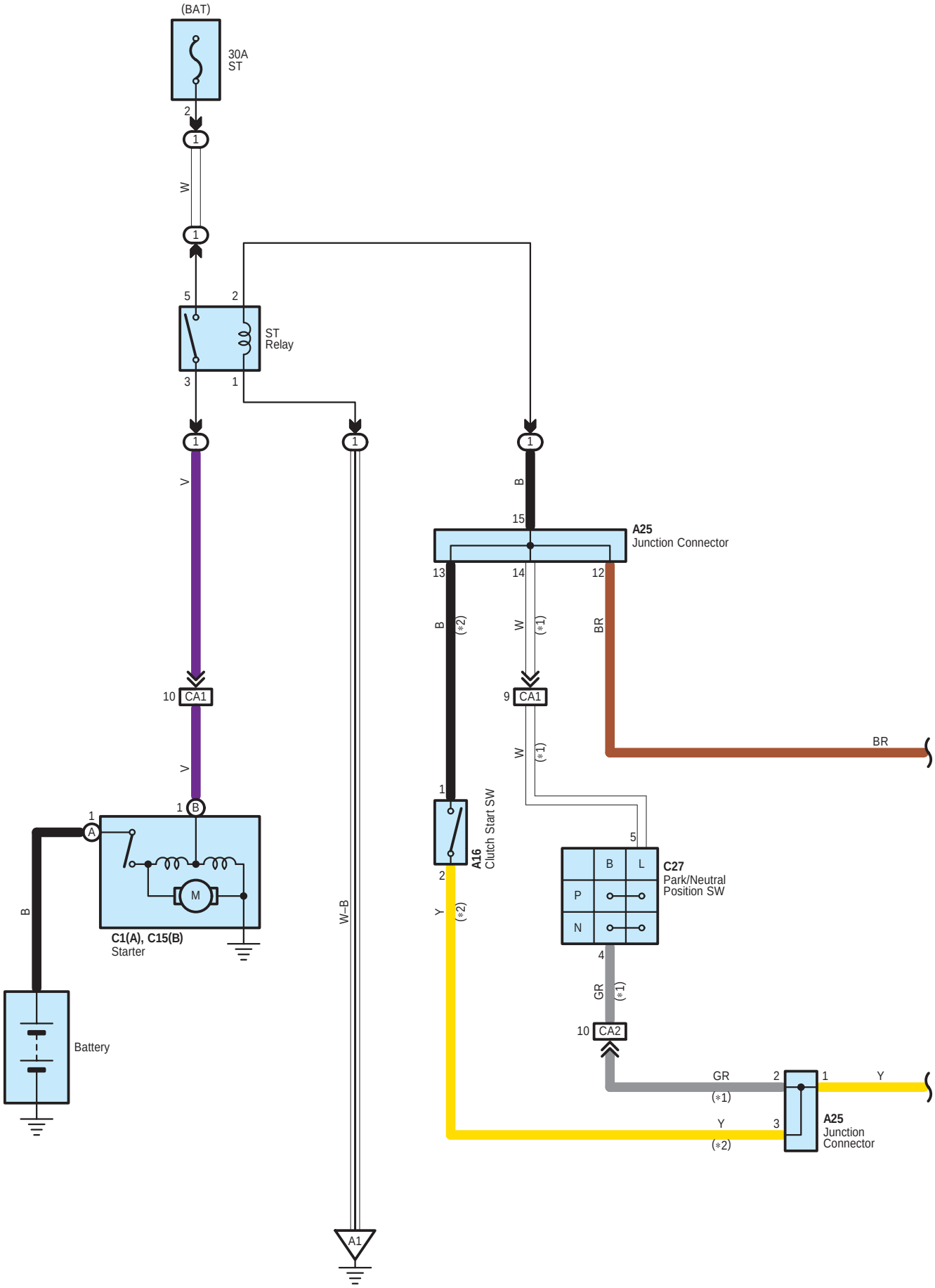
(BAT)
30A
ST
2
1
W
1
5
2
ST
Relay
3
1
1
V
10
CA1
V
1
B
1
A
M
B
C1(A), C15(B)
Starter
Battery
1
W–B
A1
1
B
15
A25
Junction Connector
13
14
12
B
(*2)
W
(*1)
BR
9
CA1
W
(*1)
BR
1
A16
Clutch Start SW
2
Y
(*2)
5
B
L
P
N
C27
Park/Neutral
Position SW
4
GR
(*1)
10
CA2
GR
(*1)
2
1
Y
Y
(*2)
3
A25
Junction
Connector

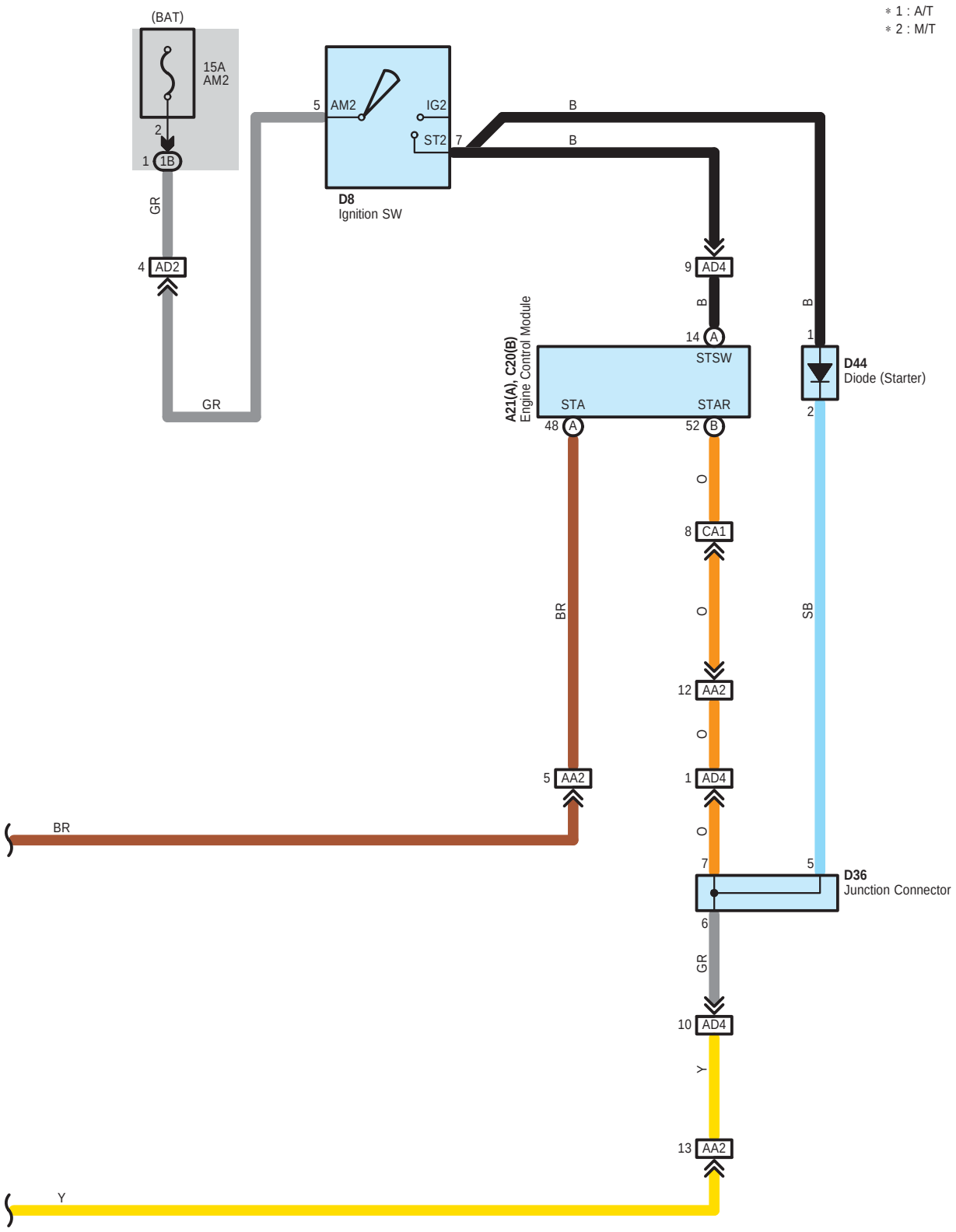
∗ 1 : A/T
∗ 2 : M/T
(BAT)
15A
AM2
2
1
1B
GR
4
AD2
GR
5
AM2
IG2
ST2
7
D8
Ignition SW
B
B
9
AD4
B
14
A
STSW
STA
STAR
48
A
52
B
A21(A), C20(B)
Engine Control Module
B
1
D44
Diode (Starter)
2
O
8
CA1
O
12
AA2
O
1
AD4
O
7
5
D36
Junction Connector
6
GR
10
AD4
Y
13
AA2
BR
5
AA2
BR
BR
SB
Y

: Parts Location

Code		See Page	Code		See Page	Code	See Page
A16		50 (H/B)	C1	A	49 (S/D)	D8	51 (H/B)
		52 (S/D)	C15	B	47 (H/B)		53 (S/D)
A21	A	46 (H/B)			49 (S/D)	D36	51 (H/B)
		48 (S/D)	C20	B	47 (H/B)		53 (S/D)
A25		46 (H/B)			49 (S/D)	D44	51 (H/B)
		48 (S/D)	C27		47 (H/B)		53 (S/D)
C1	A	47 (H/B)			49 (S/D)		

: Relay Blocks

Code	See Page	Relay Blocks (Relay Block Location)
1	24	Engine Room R/B (Engine Compartment Left)

: Junction Block and Wire Harness Connector

Code	See Page	Junction Block and Wire Harness (Connector Location)
1B	25	Engine Room Main Wire and Engine Room J/B (Engine Compartment Left)

: Connector Joining Wire Harness and Wire Harness

Code	See Page	Joining Wire Harness and Wire Harness (Connector Location)
AA2	62 (H/B)	Engine Room Main Wire and Engine Room Main Wire (Instrument Panel Left)
	63 (S/D)	
AD2	62 (H/B)	Engine Room Main Wire and Instrument Panel Wire (Instrument Panel Left)
	63 (S/D)	
AD4	62 (H/B)	
	63 (S/D)	
CA1	60 (H/B)	Engine Wire and Engine Room Main Wire (Engine Compartment Left)
	61 (S/D)	
CA2	60 (H/B)	
	61 (S/D)	

: Ground Points

Code	See Page	Ground Points Location
A1	60 (H/B)	Left Suspension Tower
	61 (S/D)	

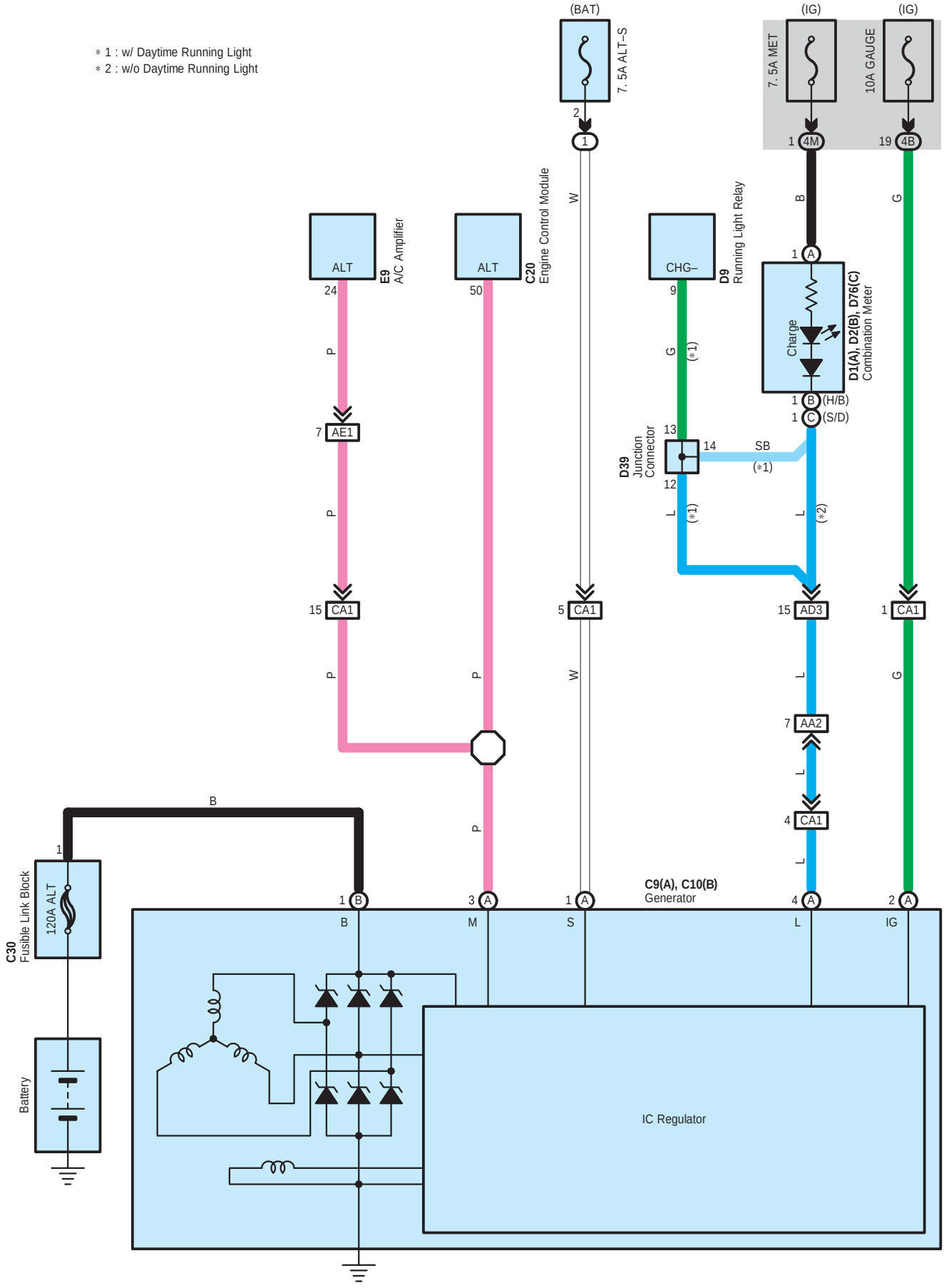
∗ 1 : w/ Daytime Running Light
∗ 2 : w/o Daytime Running Light
(BAT)
7. 5A ALT–S
(IG)
7. 5A MET
(IG)
10A GAUGE
ALT
E9
A/C Amplifier
ALT
C20
Engine Control Module
CHG–
D9
Running Light Relay
D1(A), D2(B), D76(C)
Combination Meter
Charge
D39
Junction Connector
SB
(∗1)
(∗2)
(H/B)
(S/D)
C30
Fusible Link Block
120A ALT
Battery
C9(A), C10(B)
Generator
B
M
S
L
IG
IC Regulator

: Parts Location

Code		See Page	Code		See Page	Code		See Page
C9	A	47 (H/B)	C30		42, 47 (H/B)	D9		53 (S/D)
		49 (S/D)			42, 49 (S/D)	D39		51 (H/B)
C10	B	47 (H/B)	D1	A	51 (H/B)			53 (S/D)
		49 (S/D)			53 (S/D)	D76	C	53 (S/D)
C20		47 (H/B)	D2	B	51 (H/B)	E9		50 (H/B)
		49 (S/D)	D9		51 (H/B)			52 (S/D)

: Relay Blocks

Code	See Page	Relay Blocks (Relay Block Location)
1	24	Engine Room R/B (Engine Compartment Left)

: Junction Block and Wire Harness Connector

Code	See Page	Junction Block and Wire Harness (Connector Location)
4B	30	Engine Room Main Wire and Instrument Panel J/B (Lower Finish Panel)
4M	31	Instrument Panel Wire and Instrument Panel J/B (Lower Finish Panel)

: Connector Joining Wire Harness and Wire Harness

Code	See Page	Joining Wire Harness and Wire Harness (Connector Location)
AA2	62 (H/B)	Engine Room Main Wire and Engine Room Main Wire (Instrument Panel Left)
	63 (S/D)	
AD3	62 (H/B)	Engine Room Main Wire and Instrument Panel Wire (Instrument Panel Left)
	63 (S/D)	
AE1	62 (H/B)	Engine Room Main Wire and Instrument Panel No.2 Wire (Instrument Panel Left)
	63 (S/D)	
CA1	60 (H/B)	Engine Wire and Engine Room Main Wire (Engine Compartment Left)
	61 (S/D)	

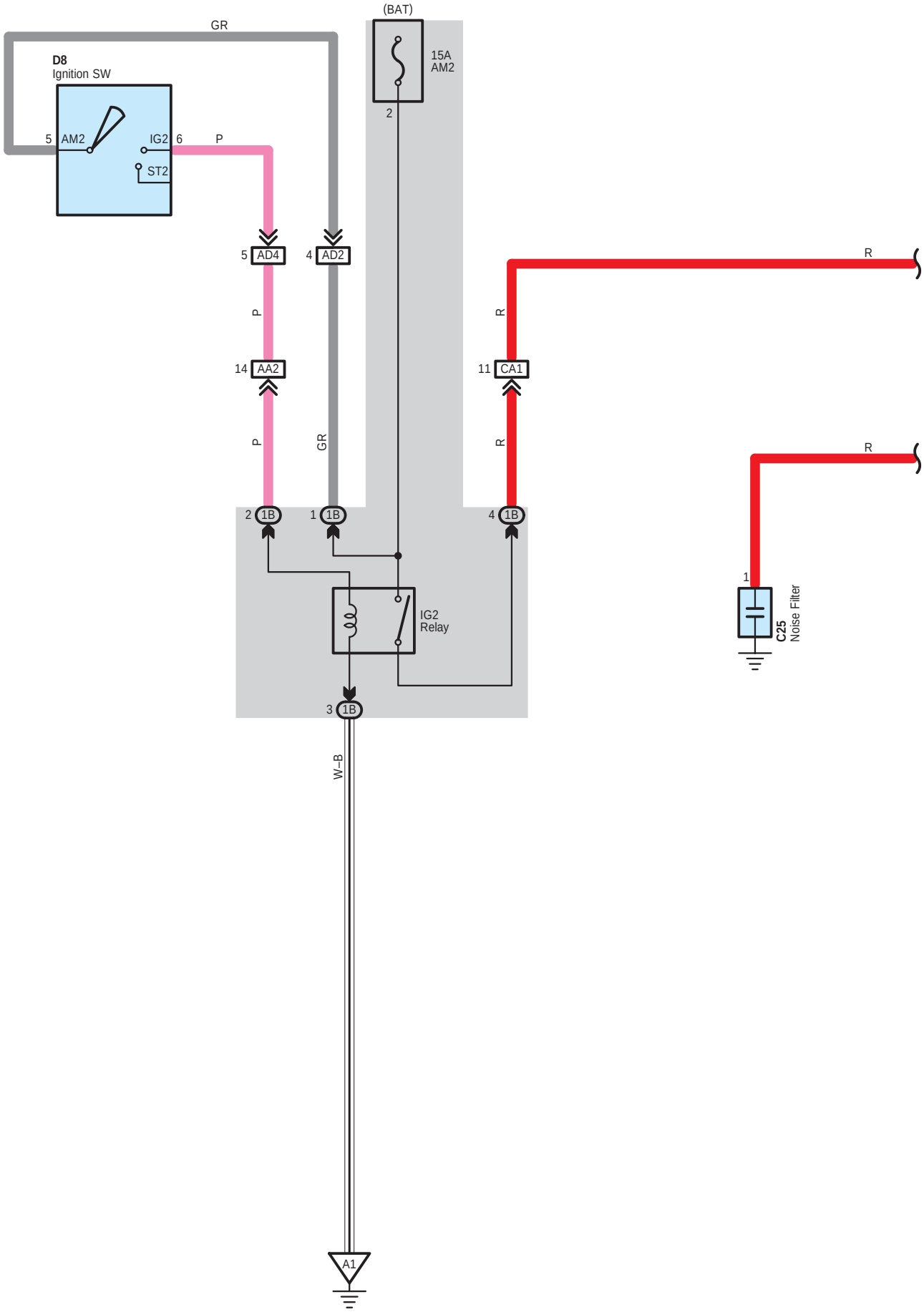
(BAT)
GR
D8
Ignition SW
5 AM2
IG2 6
P
ST2
15A
AM2
2
5 AD4
4 AD2
P
14 AA2
P
GR
2 1B
1 1B
11 CA1
R
R
R
R
4 1B
IG2
Relay
3 1B
W-B
A1
1
C25
Noise Filter

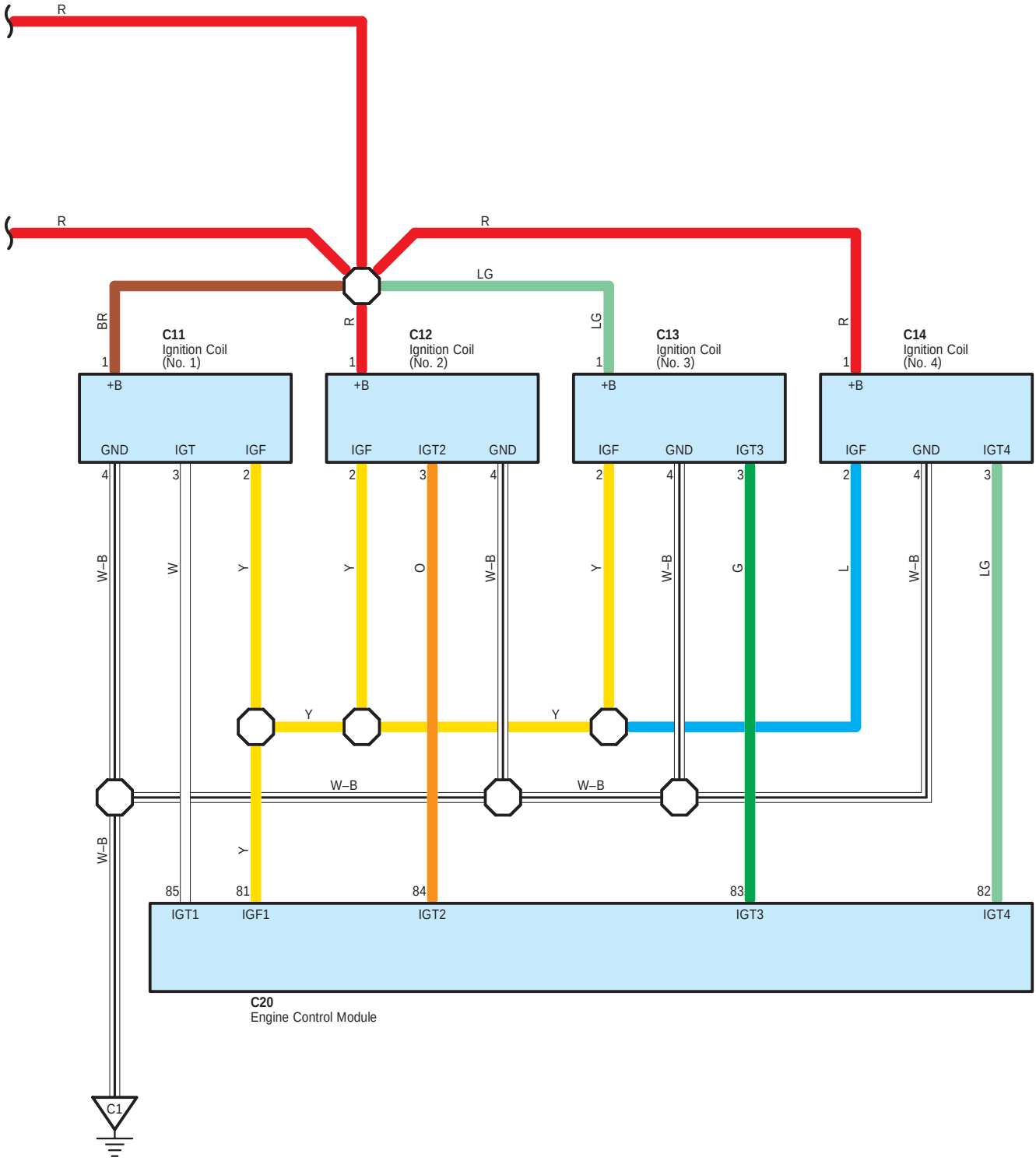
R
R
R
LG
BR
R
LG
R
C11
Ignition Coil
(No. 1)
C12
Ignition Coil
(No. 2)
C13
Ignition Coil
(No. 3)
C14
Ignition Coil
(No. 4)
1
+B
GND
IGT
IGF
IGF
IGT2
GND
IGF
GND
IGT3
IGF
GND
IGT4
4
3
2
2
3
4
2
4
3
2
4
3
W–B
W
Y
Y
O
W–B
Y
W–B
G
L
W–B
LG
Y
Y
W–B
W–B
W–B
Y
85
81
84
83
82
IGT1
IGF1
IGT2
IGT3
IGT4
C20
Engine Control Module
C1

: Parts Location

Code	See Page	Code	See Page	Code	See Page
C11	47 (H/B)	C13	49 (S/D)	C25	47 (H/B)
	49 (S/D)	C14	47 (H/B)		49 (S/D)
C12	47 (H/B)		49 (S/D)	D8	51 (H/B)
	49 (S/D)	C20	47 (H/B)		53 (S/D)
C13	47 (H/B)		49 (S/D)		

: Junction Block and Wire Harness Connector

Code	See Page	Junction Block and Wire Harness (Connector Location)
1B	25	Engine Room Main Wire and Engine Room J/B (Engine Compartment Left)

: Connector Joining Wire Harness and Wire Harness

Code	See Page	Joining Wire Harness and Wire Harness (Connector Location)
AA2	62 (H/B)	Engine Room Main Wire and Engine Room Main Wire (Instrument Panel Left)
	63 (S/D)	
AD2	62 (H/B)	Engine Room Main Wire and Instrument Panel Wire (Instrument Panel Left)
	63 (S/D)	
AD4	62 (H/B)	
	63 (S/D)	
CA1	60 (H/B)	Engine Wire and Engine Room Main Wire (Engine Compartment Left)
	61 (S/D)	

: Ground Points

Code	See Page	Ground Points Location
A1	60 (H/B)	Left Suspension Tower
	61 (S/D)	
C1	60 (H/B)	Engine Block Left
	61 (S/D)	

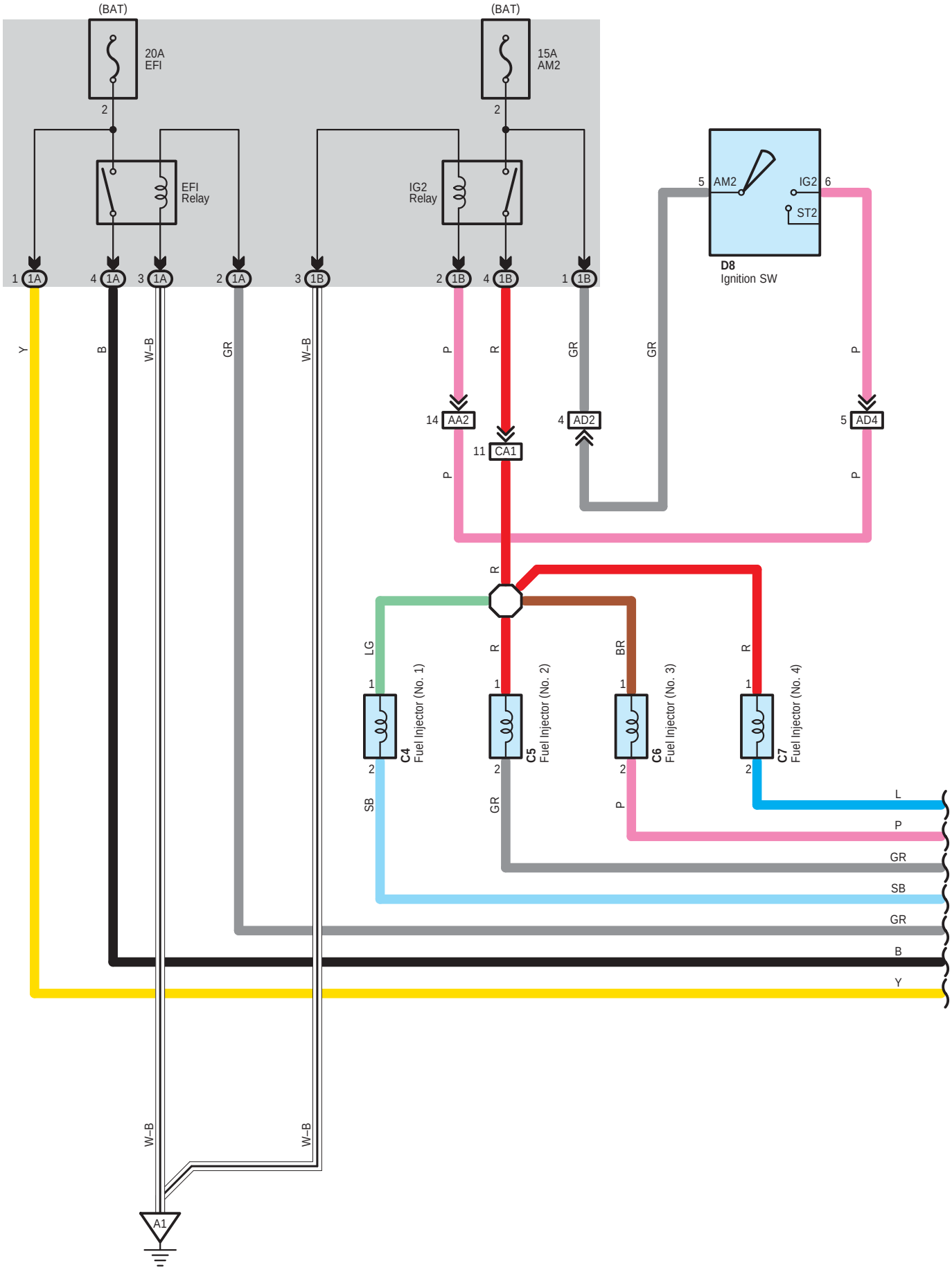
(BAT)
20A
EFI
2
EFI
Relay
(BAT)
15A
AM2
2
IG2
Relay
5 AM2
IG2 6
ST2
D8
Ignition SW
1 1A
4 1A
3 1A
2 1A
3 1B
2 1B
4 1B
1 1B
Y
B
W–B
GR
W–B
P
R
GR
GR
P
14 AA2
11 CA1
4 AD2
5 AD4
P
P
R
LG
R
BR
R
1
2
C4
Fuel Injector (No. 1)
C5
Fuel Injector (No. 2)
C6
Fuel Injector (No. 3)
C7
Fuel Injector (No. 4)
SB
GR
P
L
P
GR
SB
GR
B
Y
W–B
W–B
A1

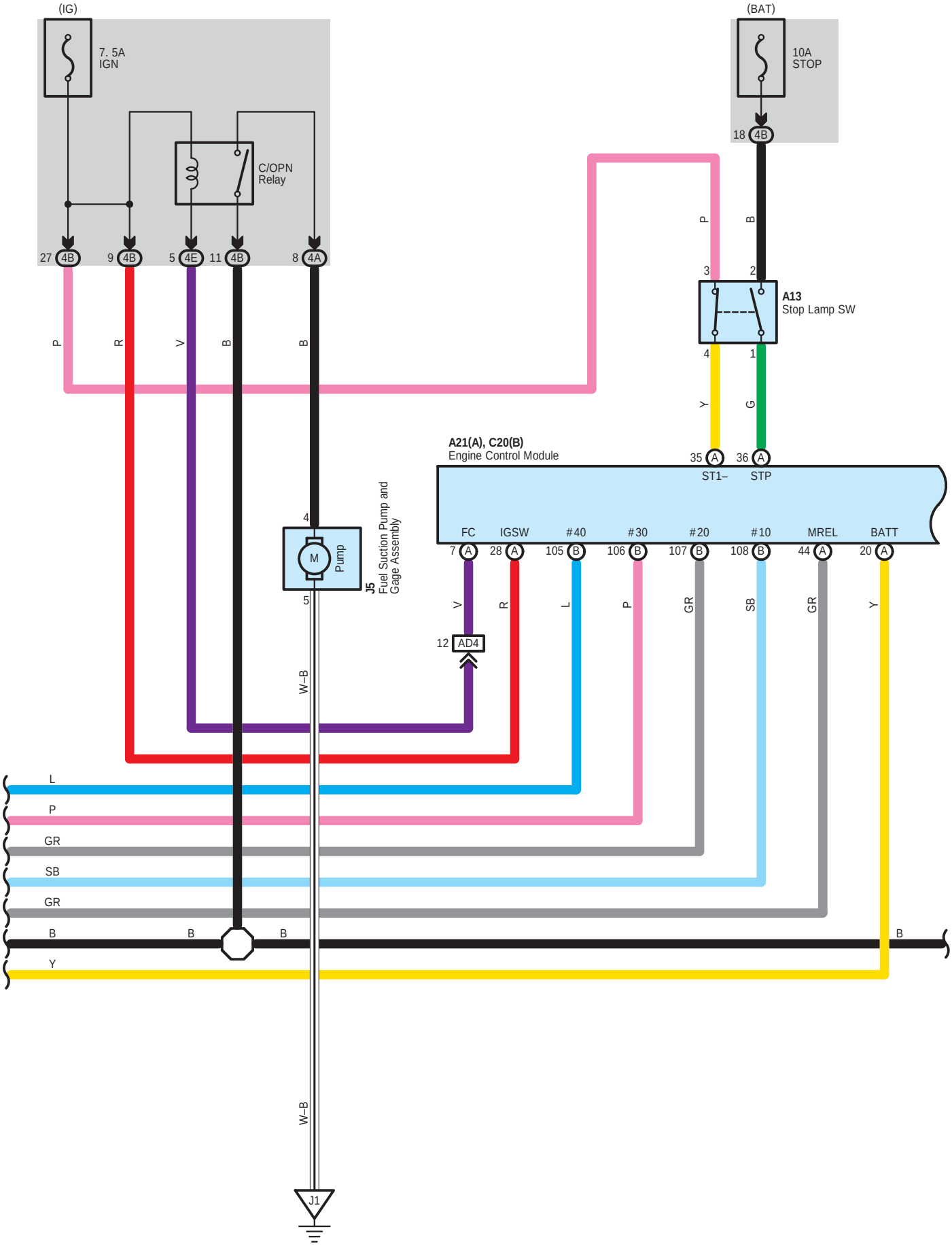
(IG)
7. 5A
IGN
C/OPN
Relay
27 4B
9 4B
5 4E
11 4B
8 4A
(BAT)
10A
STOP
18 4B
A13
Stop Lamp SW
A21(A), C20(B)
Engine Control Module
35 A
36 A
ST1–
STP
FC
IGSW
#40
#30
#20
#10
MREL
BATT
7 A
28 A
105 B
106 B
107 B
108 B
44 A
20 A
J5
Fuel Suction Pump and
Gage Assembly
M
Pump
4
5
12 AD4
J1
P
R
V
B
Y
G
L
GR
SB
W–B

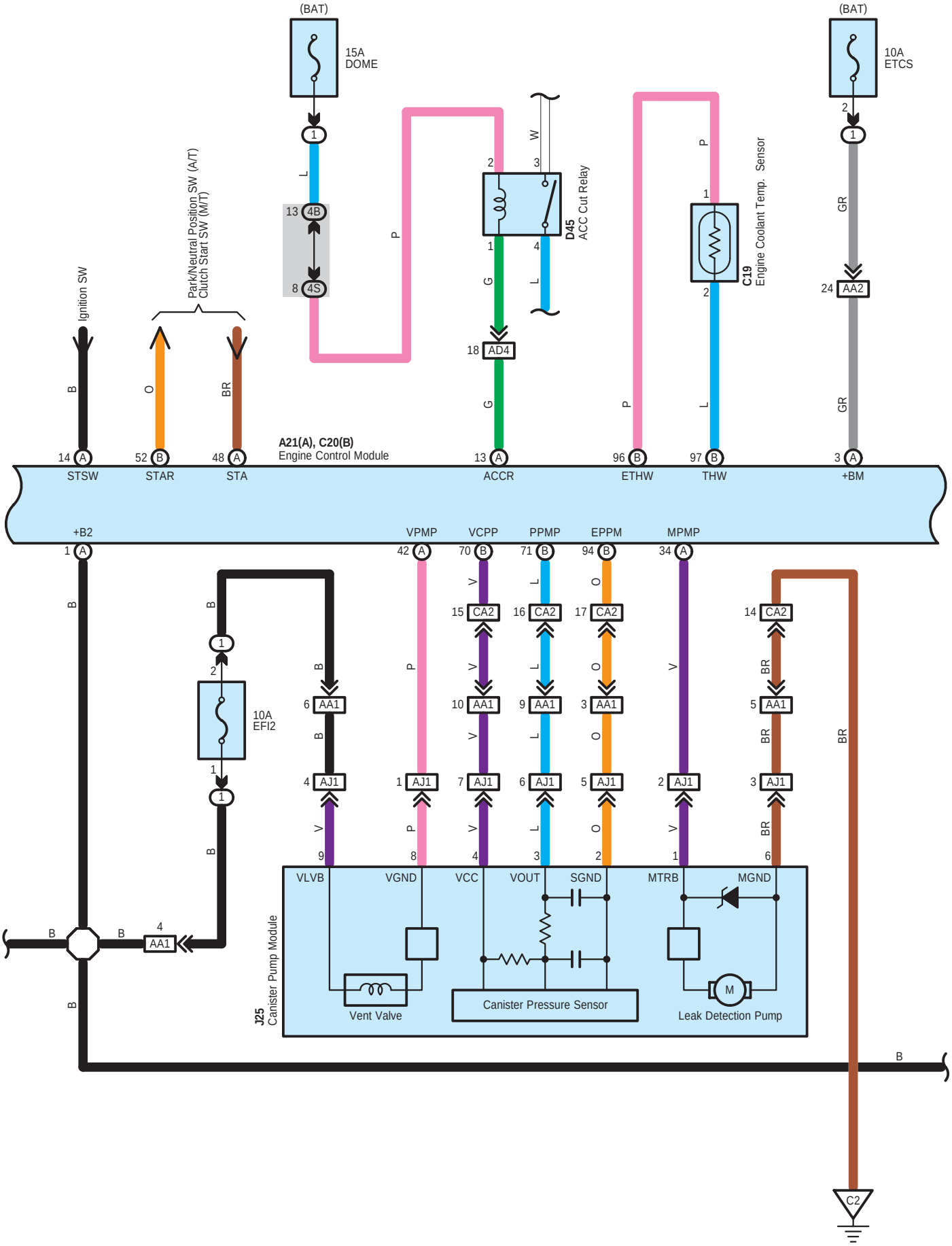
(BAT)
15A
DOME
(BAT)
10A
ETCS
Ignition SW
Park/Neutral Position SW (A/T)
Clutch Start SW (M/T)
D45
ACC Cut Relay
C19
Engine Coolant Temp. Sensor
A21(A), C20(B)
Engine Control Module
STSW
STAR
STA
ACCR
ETHW
THW
+BM
+B2
VPMP
VCPP
PPMP
EPPM
MPMP
10A
EFI2
J25
Canister Pump Module
VLVB
VGND
VCC
VOUT
SGND
MTRB
MGND
Vent Valve
Canister Pressure Sensor
Leak Detection Pump
M
C2

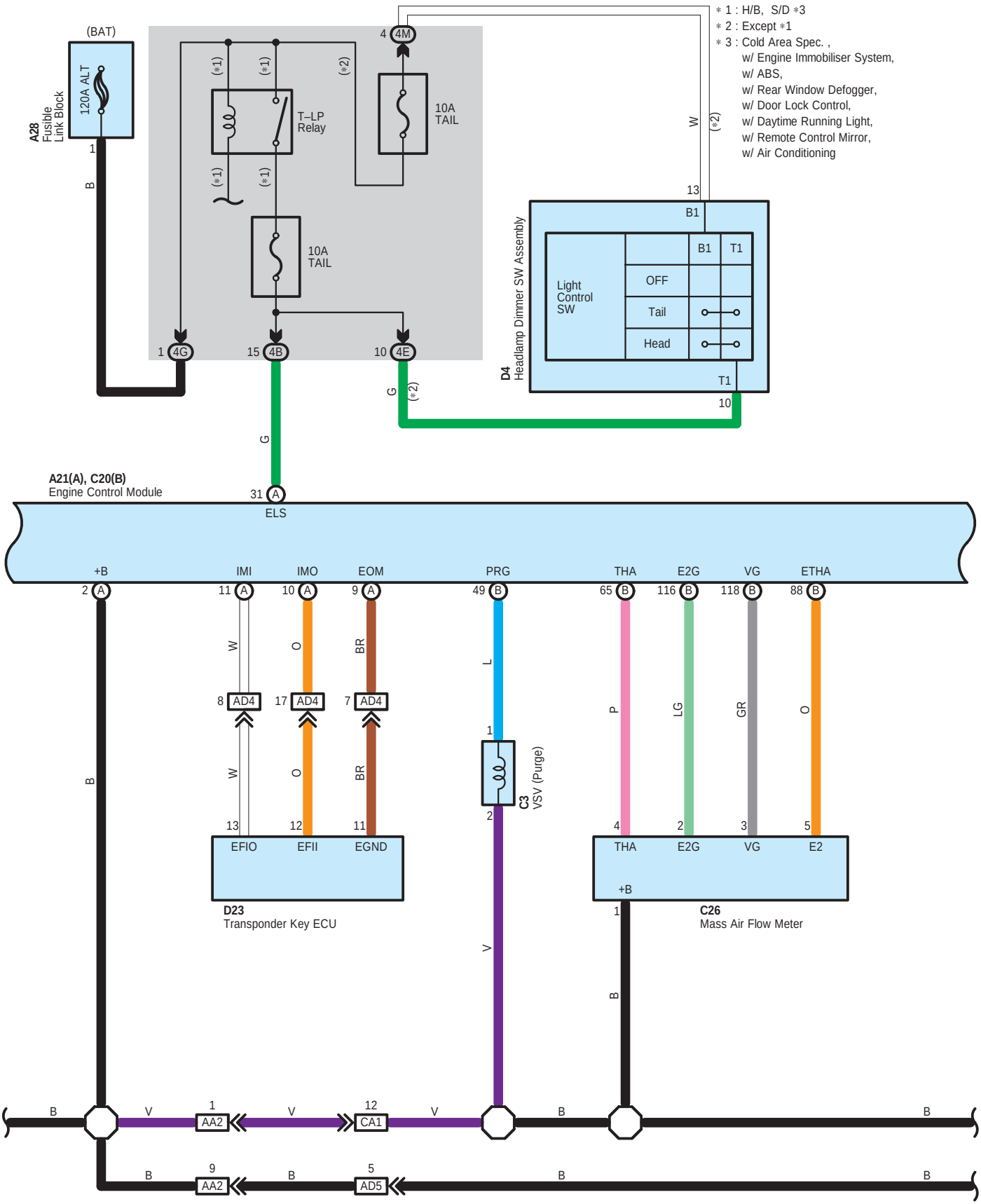
(BAT)
A28
Fusible Link Block
120A ALT
1
B
(*1)
(*1)
(*2)
T–LP Relay
10A TAIL
4 4M
10A TAIL
(*1)
(*1)
W
(*2)
13
B1
D4
Headlamp Dimmer SW Assembly
Light Control SW
B1
T1
OFF
Tail
Head
T1
10
1 4G
15 4B
10 4E
G
(*2)
G
A21(A), C20(B)
Engine Control Module
31 A
ELS
＊1 : H/B, S/D ＊3
＊2 : Except ＊1
＊3 : Cold Area Spec. ,
w/ Engine Immobiliser System,
w/ ABS,
w/ Rear Window Defogger,
w/ Door Lock Control,
w/ Daytime Running Light,
w/ Remote Control Mirror,
w/ Air Conditioning
+B
IMI
IMO
EOM
PRG
THA
E2G
VG
ETHA
2 A
11 A
10 A
9 A
49 B
65 B
116 B
118 B
88 B
B
W
O
BR
L
P
LG
GR
O
8 AD4
17 AD4
7 AD4
W
O
BR
13
12
11
EFIO
EFII
EGND
D23
Transponder Key ECU
1
C3
VSV (Purge)
2
V
4
2
3
5
THA
E2G
VG
E2
+B
1
C26
Mass Air Flow Meter
B
B
V
1
AA2
V
12
CA1
V
B
B
B
B
9
AA2
B
5
AD5
B
B
B

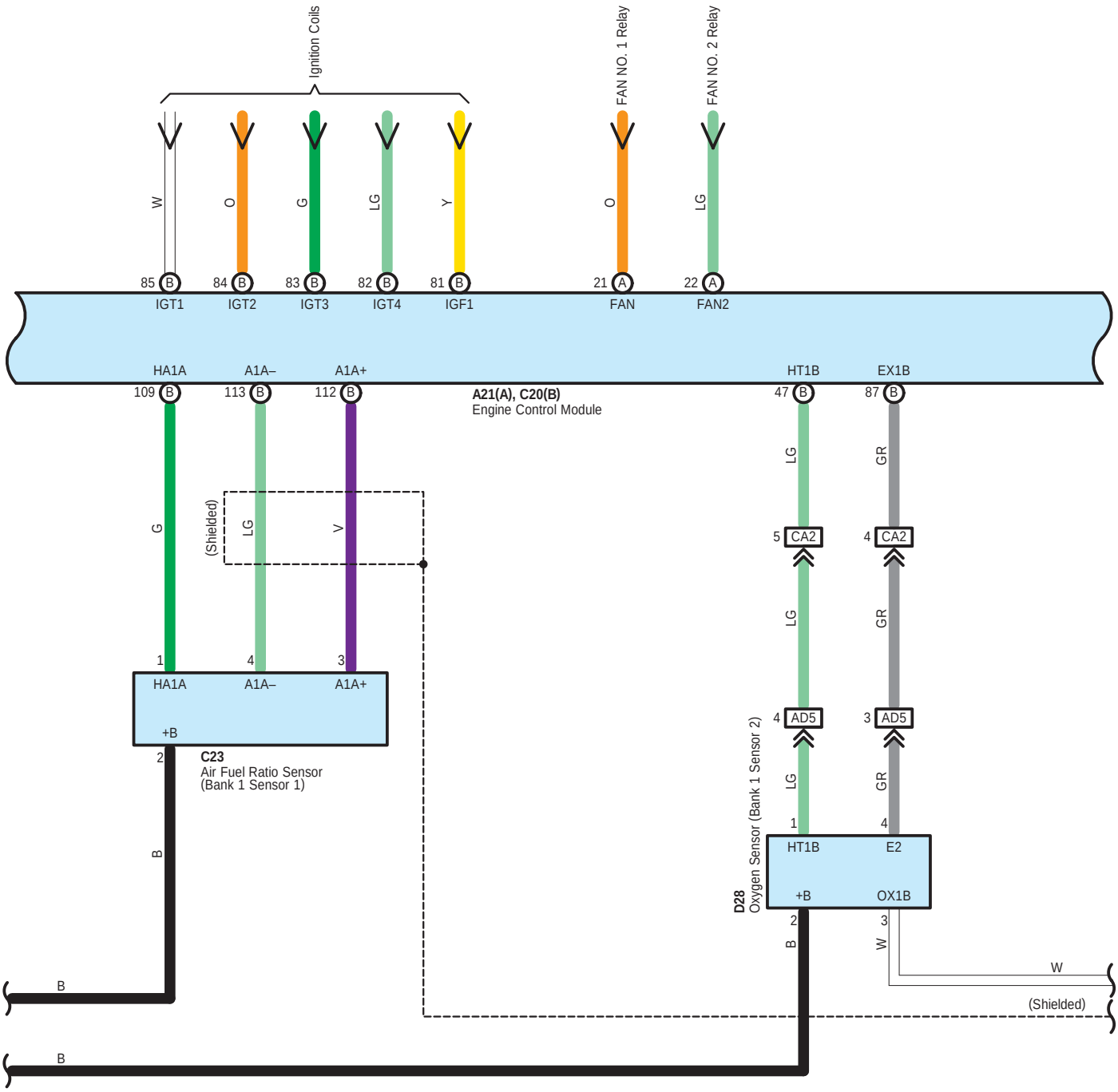
Ignition Coils
FAN NO. 1 Relay
FAN NO. 2 Relay
W
O
G
LG
Y
O
LG
85 B IGT1
84 B IGT2
83 B IGT3
82 B IGT4
81 B IGF1
21 A FAN
22 A FAN2
HA1A
A1A–
A1A+
HT1B
EX1B
109 B
113 B
112 B
47 B
87 B
A21(A), C20(B)
Engine Control Module
G
(Shielded)
LG
V
LG
GR
5 CA2
4 CA2
LG
GR
1
4
3
HA1A
A1A–
A1A+
+B
2
C23
Air Fuel Ratio Sensor
(Bank 1 Sensor 1)
B
4 AD5
3 AD5
LG
GR
1
4
HT1B
E2
+B
OX1B
D28
Oxygen Sensor (Bank 1 Sensor 2)
2
3
B
W
W
(Shielded)
B
B

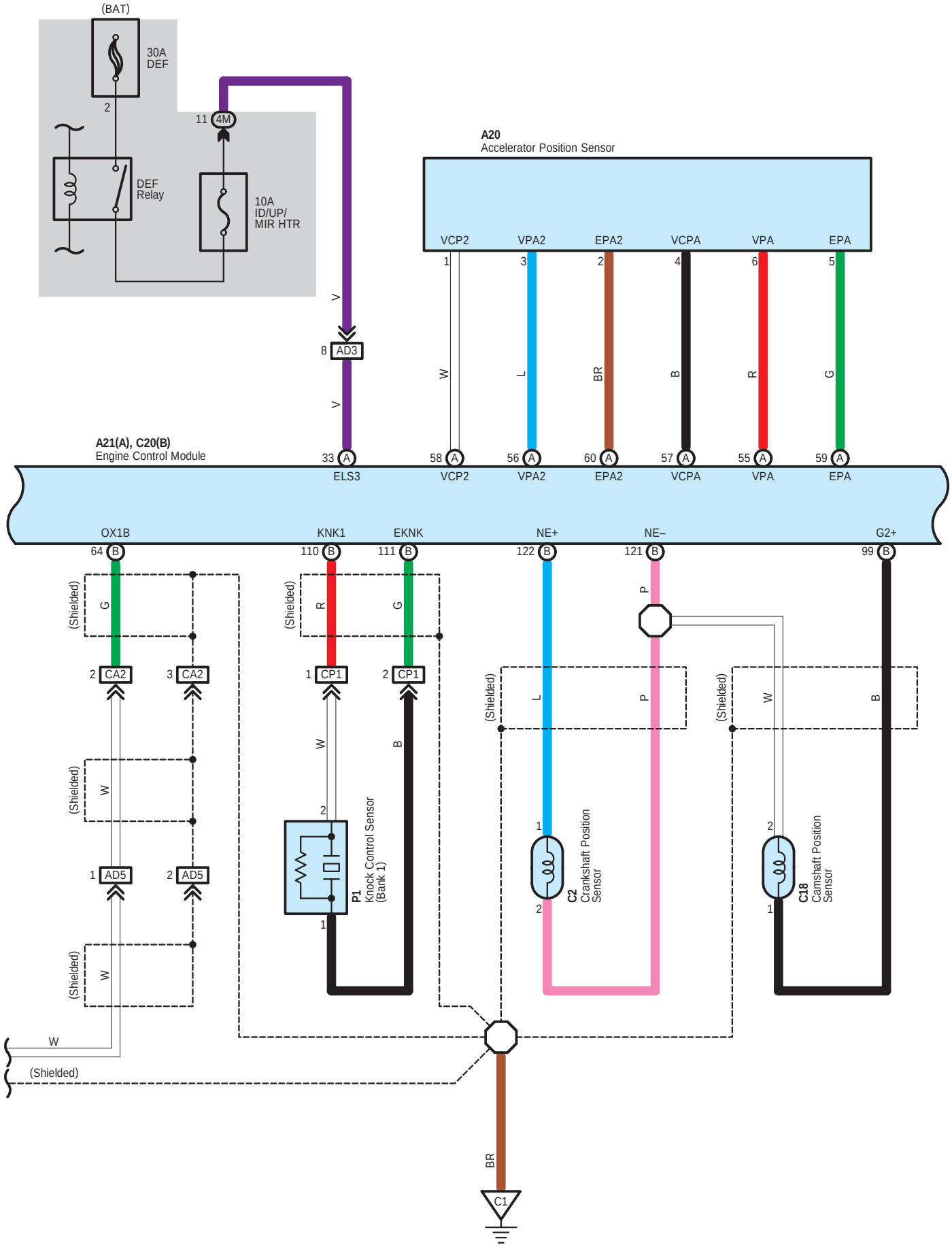
(BAT)
30A
DEF
2
11
4M
DEF
Relay
10A
ID/UP/
MIR HTR
A20
Accelerator Position Sensor
VCP2
VPA2
EPA2
VCPA
VPA
EPA
1
3
2
4
6
5
W
L
BR
B
R
G
V
8
AD3
V
A21(A), C20(B)
Engine Control Module
33
58
56
60
57
55
59
ELS3
VCP2
VPA2
EPA2
VCPA
VPA
EPA
OX1B
KNK1
EKNK
NE+
NE–
G2+
64
110
111
122
121
99
(Shielded)
G
R
G
P
L
P
W
B
2
CA2
3
CA2
1
CP1
2
CP1
1
AD5
2
AD5
P1
Knock Control Sensor
(Bank 1)
C2
Crankshaft Position
Sensor
C18
Camshaft Position
Sensor
W
(Shielded)
BR
C1

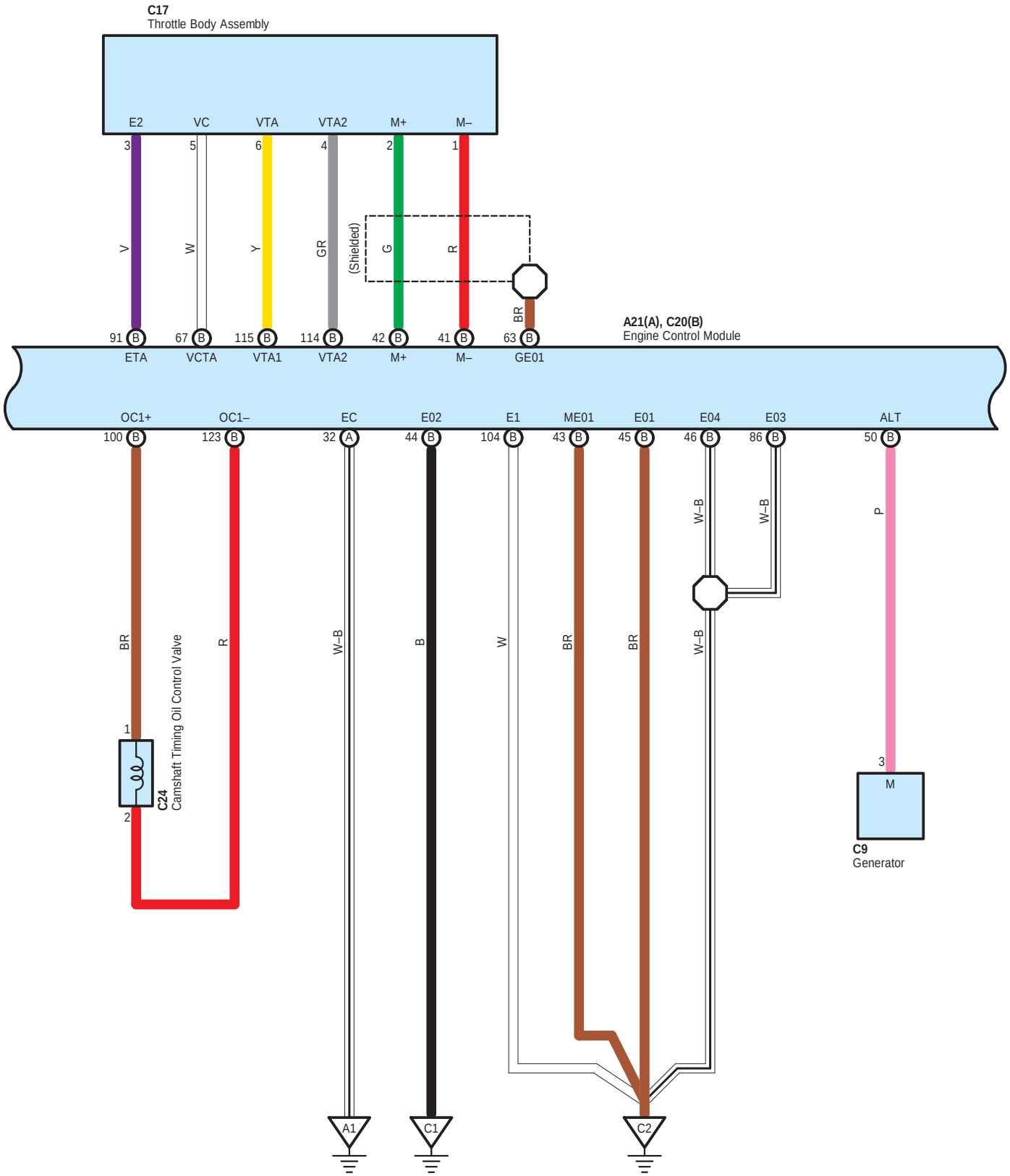
C17
Throttle Body Assembly
E2
VC
VTA
VTA2
M+
M–
3
5
6
4
2
1
V
W
Y
GR
G
R
(Shielded)
BR
91 B
67 B
115 B
114 B
42 B
41 B
63 B
ETA
VCTA
VTA1
VTA2
M+
M–
GE01
A21(A), C20(B)
Engine Control Module
OC1+
OC1–
EC
E02
E1
ME01
E01
E04
E03
ALT
100 B
123 B
32 A
44 B
104 B
43 B
45 B
46 B
86 B
50 B
BR
R
W–B
B
W
BR
BR
W–B
W–B
P
1
2
C24
Camshaft Timing Oil Control Valve
3
M
C9
Generator
A1
C1
C2

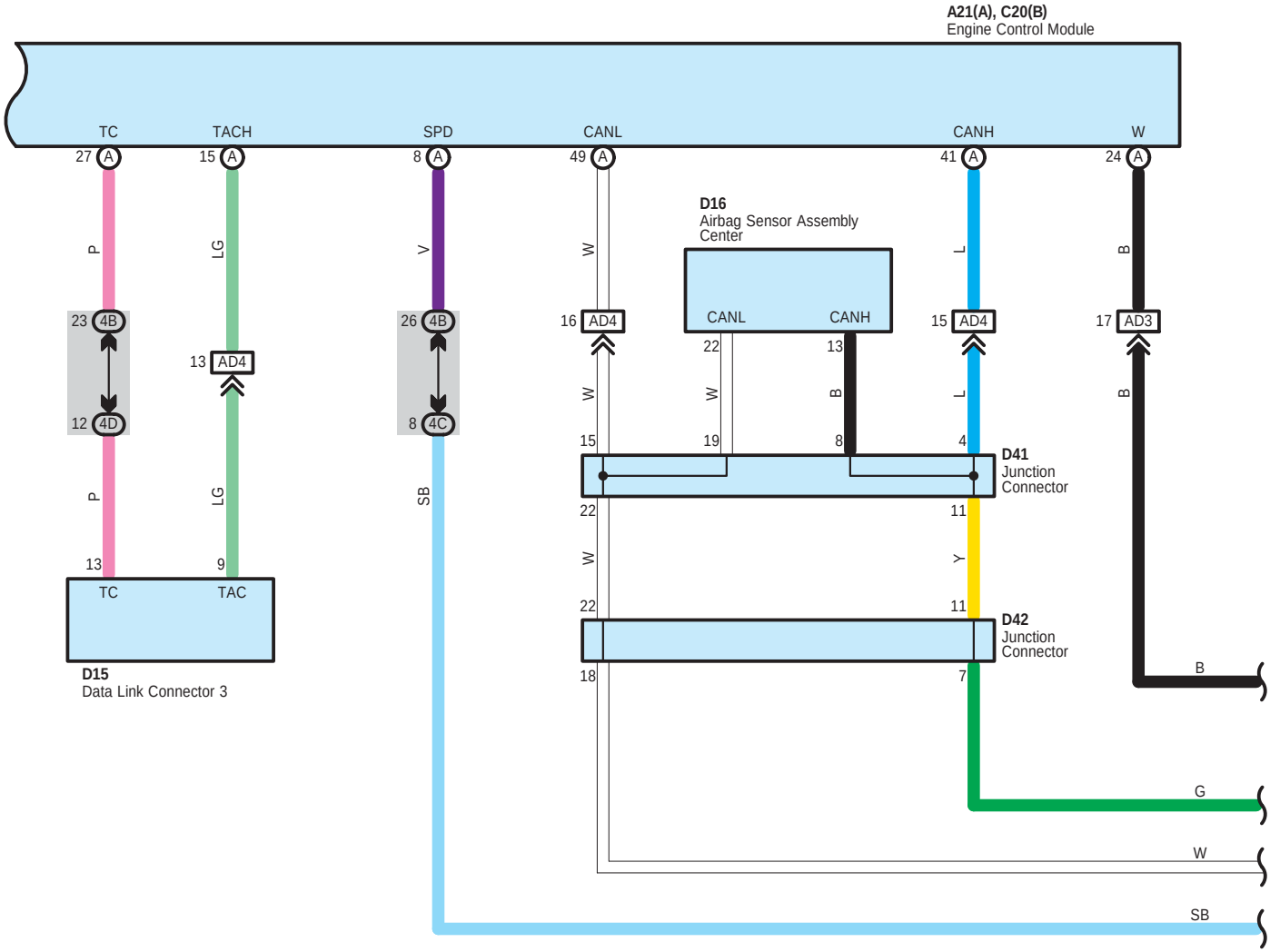
A21(A), C20(B)
Engine Control Module
TC
TACH
SPD
CANL
CANH
W
27 A
15 A
8 A
49 A
41 A
24 A
P
LG
V
W
L
B
23 4B
12 4D
13 AD4
26 4B
8 4C
16 AD4
15 AD4
17 AD3
D16
Airbag Sensor Assembly
Center
CANL
CANH
22
13
W
B
19
8
15
4
D41
Junction
Connector
22
11
Y
22
11
D42
Junction
Connector
18
7
13
9
TC
TAC
D15
Data Link Connector 3
SB
B
G
W
SB

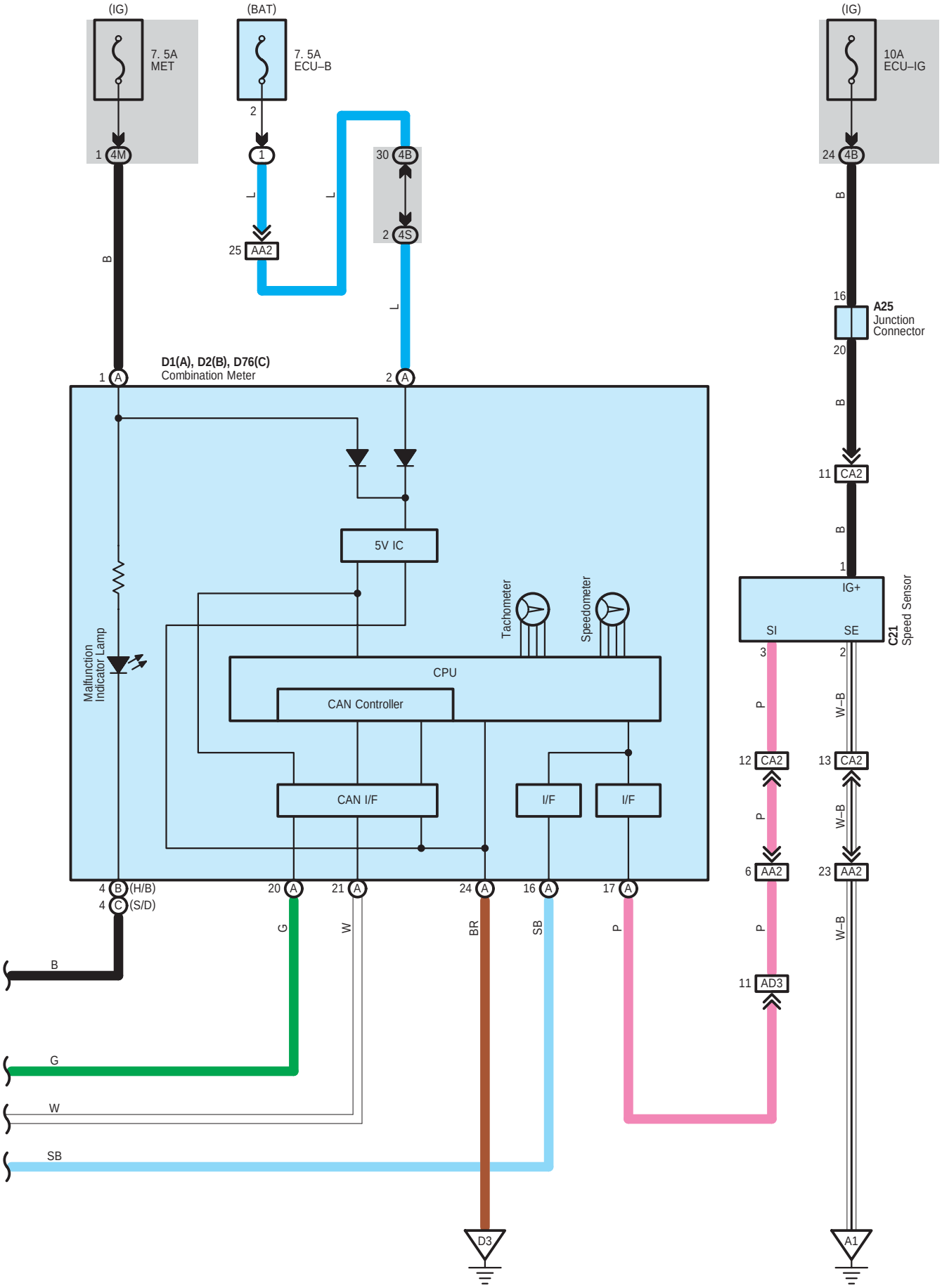
(IG)
7. 5A
MET
1 4M
B
(BAT)
7. 5A
ECU–B
2
1
L
25 AA2
L
30 4B
2 4S
L
(IG)
10A
ECU–IG
24 4B
B
16
A25
Junction
Connector
20
B
11 CA2
B
1
IG+
SI
SE
C21
Speed Sensor
3
2
P
W–B
12 CA2
13 CA2
P
W–B
6 AA2
23 AA2
P
W–B
11 AD3
D1(A), D2(B), D76(C)
Combination Meter
1 A
2 A
5V IC
Tachometer
Speedometer
Malfunction
Indicator Lamp
CPU
CAN Controller
CAN I/F
I/F
I/F
4 B (H/B)
4 C (S/D)
20 A
21 A
24 A
16 A
17 A
B
G
W
SB
G
W
BR
SB
P
D3
A1

System Outline

1. Electronic Fuel Injection

It controls to have appropriate fuel injection according to the basic injection time. The basic injection time is calculated to fit the engine condition and is corrected with signals from various sensors.

2. Electronic Spark Advance

Appropriate ignition is conducted according to the basic ignition timing which is calculated to fit the engine condition after correcting it with signals from various sensors.

3. Electronic Throttle Control System–intelligent

It controls to have appropriate throttle opening according to the throttle opening calculated to fit the engine condition after correcting it with signals from various sensors.

4. Variable Valve Timing–intelligent

It improves engine output, reduces exhaust gas and improves fuel consumption by varying the phase of the intake camshaft in accordance with the engine condition.

5. Electric Fan Control

It controls the switching ON/OFF and fan speed of the cooling fan according to the coolant temperature and air conditioner's condition.

6. Fuel Pump Control

It turns ON/OFF the fuel pump according to the starter signal and engine speed signal. It stops the fuel pump operation according to signals from the airbag sensor assembly center.

7. Air Conditioning Cut–Off Control

It reduces load of the air conditioner's compressor in acceleration in order to secure the drivability.

8. Canister Purge Control

It controls the purge flow volume of the canister according to the coolant temperature and driving condition.

9. Cranking Hold Control

It continues to supply electricity to the starter between the start of cranking and the engine start in order to prevent the engine start failure by the key's switching off just before the engine's complete explosion.

10. Oxygen Sensor Control

It switches ON/OFF the oxygen sensor according to the coolant temperature and driving condition.

11. Diagnosis

It realizes accurate and detailed diagnosis of a failure such as calling the SAE specified diagnosis code data and active test by using the diagnosis tool.

12. Fail–Safe

When the engine control module detects abnormality in signals of the sensors, it stops or continues to control the engine by using the standard values in the engine control module.

: Parts Location

Code	See Page	Code	See Page	Code	See Page
A13	50 (H/B)	C17	47 (H/B)	D15	53 (S/D)
	52 (S/D)		49 (S/D)	D16	51 (H/B)
A20	50 (H/B)	C18	47 (H/B)		53 (S/D)
	52 (S/D)		49 (S/D)	D23	51 (H/B)
A21 A	46 (H/B)	C19	47 (H/B)		53 (S/D)
	48 (S/D)		49 (S/D)	D28	51 (H/B)
A25	46 (H/B)	C20 B	47 (H/B)		53 (S/D)
	48 (S/D)		49 (S/D)	D41	51 (H/B)
A28	43, 46 (H/B)	C21	47 (H/B)		53 (S/D)
	43, 48 (S/D)		49 (S/D)	D42	51 (H/B)
C2	47 (H/B)	C23	47 (H/B)		53 (S/D)
	49 (S/D)		49 (S/D)	D45	51 (H/B)
C3	47 (H/B)	C24	47 (H/B)		53 (S/D)
	49 (S/D)		49 (S/D)	D76 C	53 (S/D)
C4	47 (H/B)	C26	47 (H/B)	J5	55 (5–Door)
	49 (S/D)		49 (S/D)		57 (3–Door)
C5	47 (H/B)	D1 A	51 (H/B)		59 (4–Door)
	49 (S/D)		53 (S/D)	J25	55 (5–Door)
C6	47 (H/B)	D2 B	51 (H/B)		57 (3–Door)
	49 (S/D)	D4	51 (H/B)		59 (4–Door)
C7	47 (H/B)		53 (S/D)	P1	47 (H/B)
	49 (S/D)	D8	51 (H/B)		49 (S/D)
C9	47 (H/B)		53 (S/D)		
	49 (S/D)	D15	51 (H/B)		

: Relay Blocks

Code	See Page	Relay Blocks (Relay Block Location)
1	24	Engine Room R/B (Engine Compartment Left)

: Junction Block and Wire Harness Connector

Code	See Page	Junction Block and Wire Harness (Connector Location)
1A	25	Engine Room Main Wire and Engine Room J/B (Engine Compartment Left)
1B		
4A	30	Floor Wire and Instrument Panel J/B (Lower Finish Panel)
4B	30	Engine Room Main Wire and Instrument Panel J/B (Lower Finish Panel)
4C	30	Instrument Panel Wire and Instrument Panel J/B (Lower Finish Panel)
4D		
4E		
4G	30	Engine Room Main Wire and Instrument Panel J/B (Lower Finish Panel)
4M	31	Instrument Panel Wire and Instrument Panel J/B (Lower Finish Panel)
4S		

: **Connector Joining Wire Harness and Wire Harness**

Code	See Page	Joining Wire Harness and Wire Harness (Connector Location)
AA1	62 (H/B)	Engine Room Main Wire and Engine Room Main Wire (Instrument Panel Left)
	63 (S/D)	
AA2	62 (H/B)	
	63 (S/D)	
AD2	62 (H/B)	Engine Room Main Wire and Instrument Panel Wire (Instrument Panel Left)
	63 (S/D)	
AD3	62 (H/B)	
	63 (S/D)	
AD4	62 (H/B)	
	63 (S/D)	
AD5	62 (H/B)	
	63 (S/D)	
AJ1	62 (H/B)	Engine Room Main Wire and Floor Wire (Instrument Panel Left)
	63 (S/D)	
CA1	60 (H/B)	Engine Wire and Engine Room Main Wire (Engine Compartment Left)
	61 (S/D)	
CA2	60 (H/B)	
	61 (S/D)	
CP1	60 (H/B)	Engine Wire and Sensor Wire (Engine Compartment Center)
	61 (S/D)	

: **Ground Points**

Code	See Page	Ground Points Location
A1	60 (H/B)	Left Suspension Tower
	61 (S/D)	
C1	60 (H/B)	Engine Block Left
	61 (S/D)	
C2	60 (H/B)	
	61 (S/D)	
D3	62 (H/B)	Instrument Panel Reinforcement Left
	63 (S/D)	
J1	64 (5–Door)	Right Rear Quarter Panel
	65 (3–Door)	
	66 (4–Door)	Lower Back Panel Right

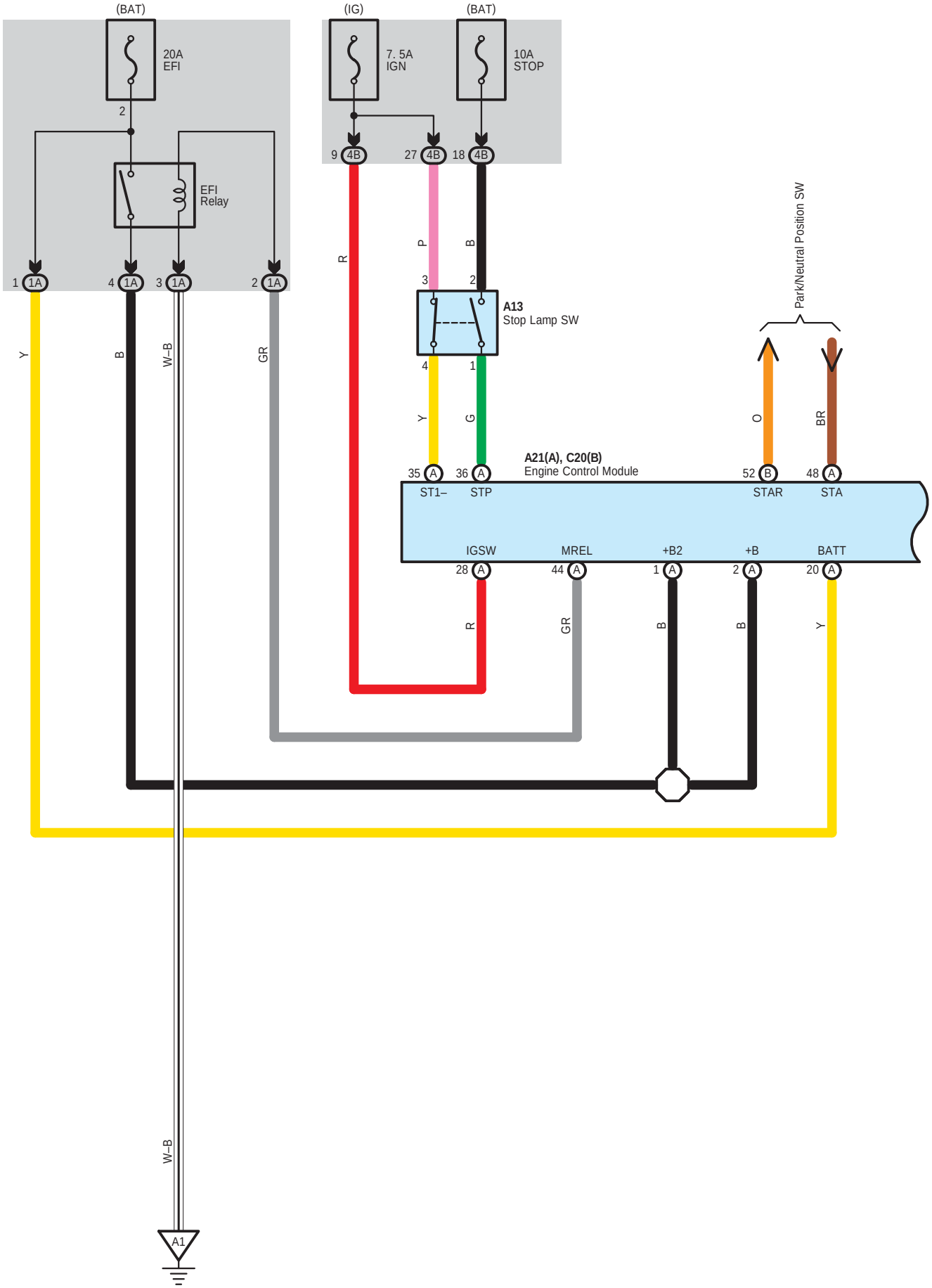
(BAT)
20A
EFI
2
EFI
Relay
1 1A
4 1A
3 1A
2 1A
(IG)
7. 5A
IGN
(BAT)
10A
STOP
9 4B
27 4B
18 4B
R
P
B
3
2
A13
Stop Lamp SW
4
1
Y
G
Park/Neutral Position SW
O
BR
A21(A), C20(B)
Engine Control Module
35 A
36 A
52 B
48 A
ST1–
STP
STAR
STA
IGSW
MREL
+B2
+B
BATT
28 A
44 A
1 A
2 A
20 A
Y
B
W–B
GR
R
B
B
Y
W–B
A1

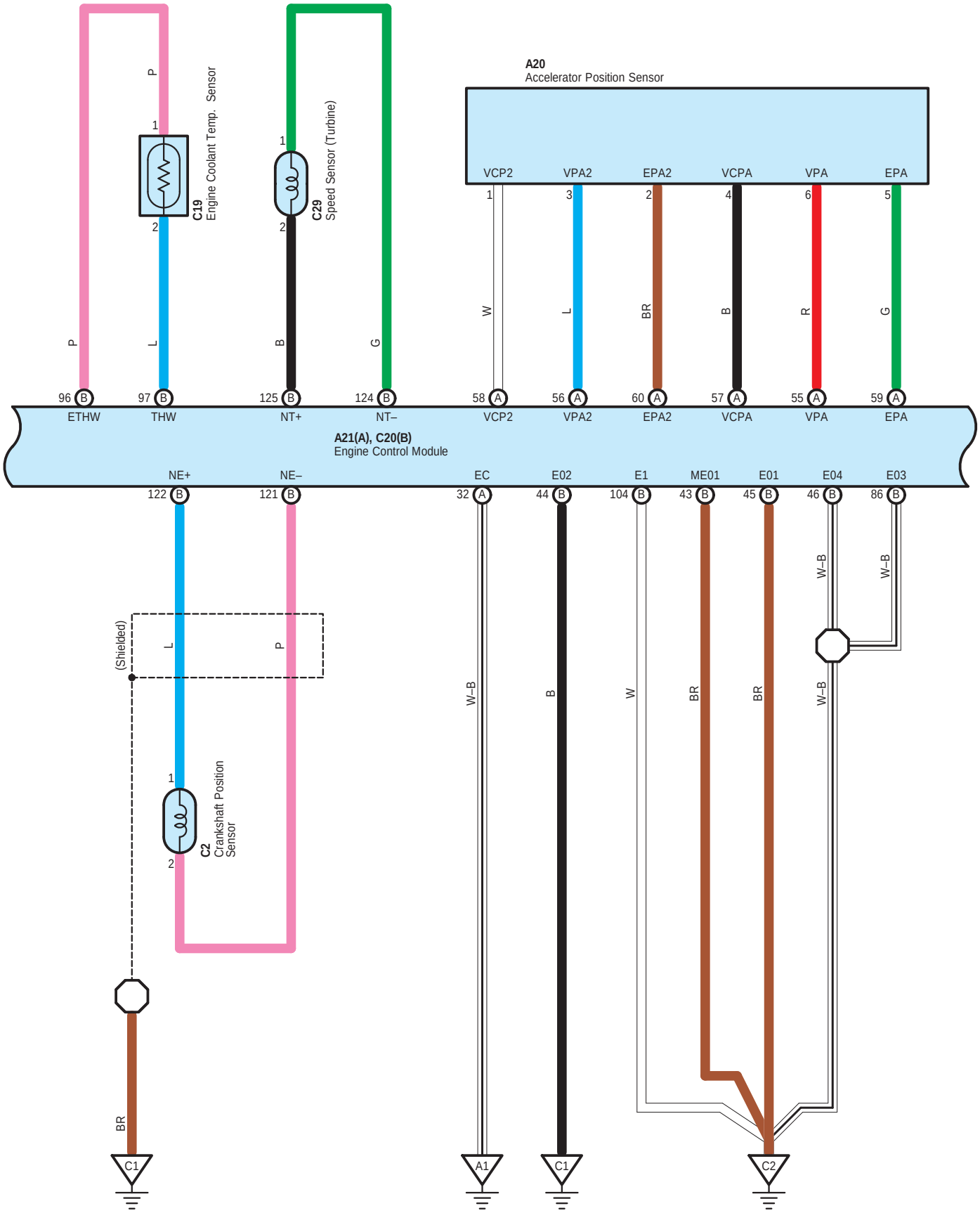
A20
Accelerator Position Sensor
VCP2
VPA2
EPA2
VCPA
VPA
EPA
C19
Engine Coolant Temp. Sensor
C29
Speed Sensor (Turbine)
96 ETHW
97 THW
125 NT+
124 NT–
58 VCP2
56 VPA2
60 EPA2
57 VCPA
55 VPA
59 EPA
A21(A), C20(B)
Engine Control Module
NE+
NE–
EC
E02
E1
ME01
E01
E04
E03
122
121
32
44
104
43
45
46
86
(Shielded)
C2
Crankshaft Position Sensor
C1
A1
C2

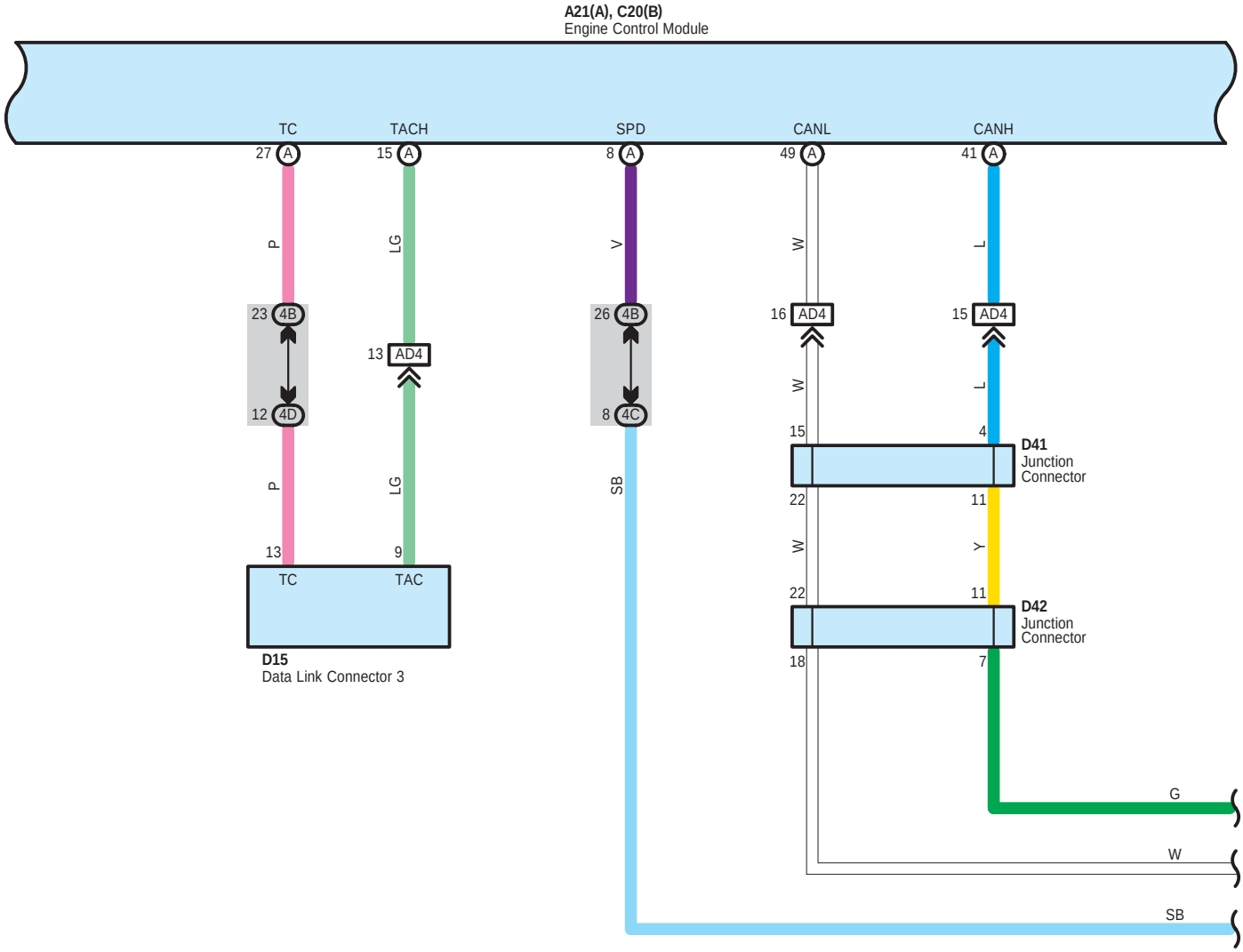
A21(A), C20(B)
Engine Control Module
TC
TACH
SPD
CANL
CANH
27 A
15 A
8 A
49 A
41 A
P
LG
V
W
L
23 4B
12 4D
26 4B
8 4C
16 AD4
15 AD4
13 AD4
W
L
15
4
D41
Junction
Connector
22
11
W
Y
22
11
D42
Junction
Connector
18
7
P
LG
SB
13
9
TC
TAC
D15
Data Link Connector 3
G
W
SB

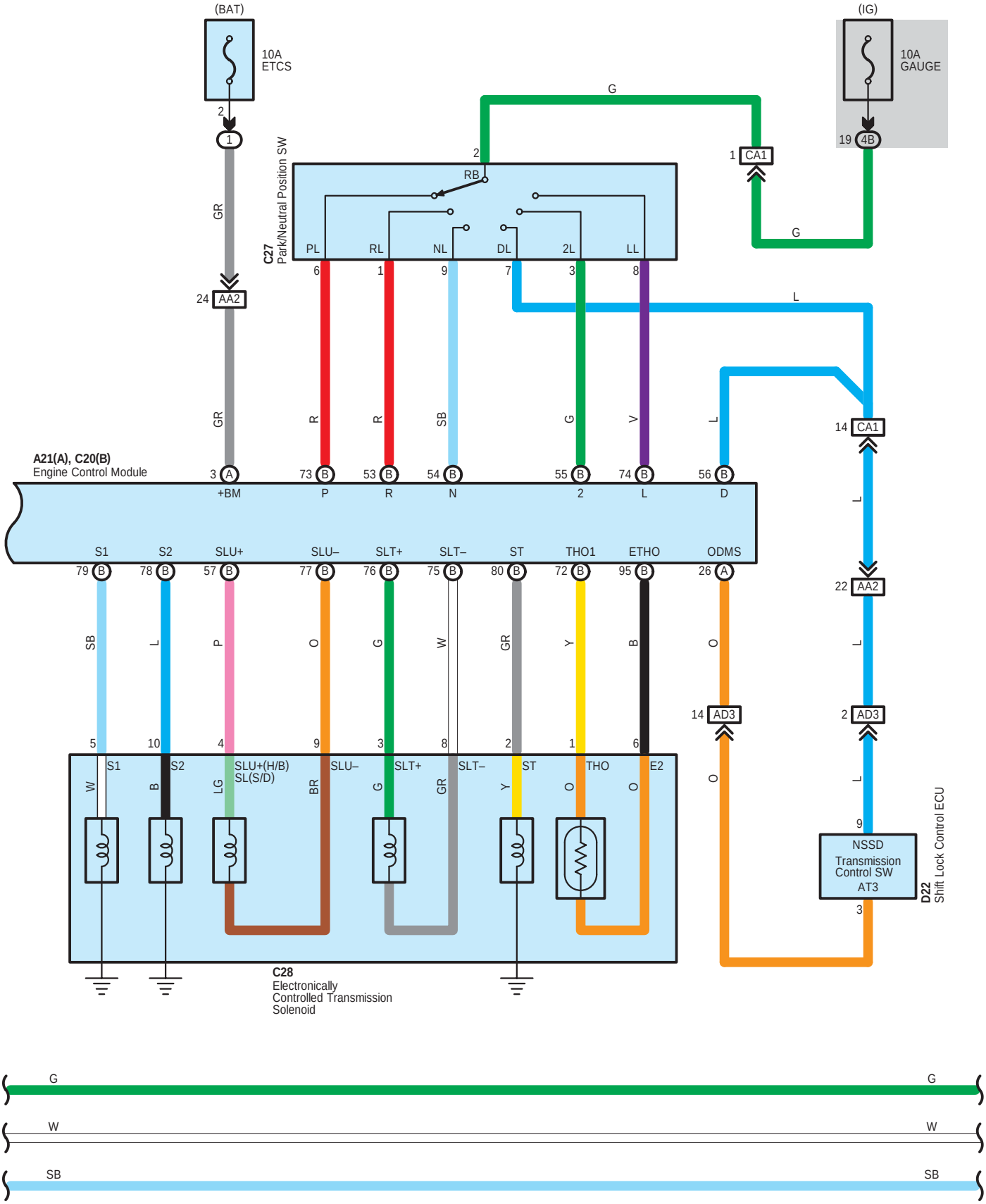
(BAT)
10A
ETCS
2
1
GR
24
AA2
GR
3
A
+BM
A21(A), C20(B)
Engine Control Module
(IG)
10A
GAUGE
19
4B
G
2
RB
1
CA1
G
C27
Park/Neutral Position SW
PL
RL
NL
DL
2L
LL
6
1
9
7
3
8
L
R
R
SB
G
V
L
14
CA1
73
B
P
53
B
R
54
B
N
55
B
2
74
B
L
56
B
D
L
S1
S2
SLU+
SLU–
SLT+
SLT–
ST
THO1
ETHO
ODMS
79
B
78
B
57
B
77
B
76
B
75
B
80
B
72
B
95
B
26
A
SB
L
P
O
G
W
GR
Y
B
O
22
AA2
L
5
10
4
9
3
8
2
1
6
14
AD3
2
AD3
S1
S2
SLU+(H/B)
SL(S/D)
SLU–
SLT+
SLT–
ST
THO
E2
W
B
LG
BR
G
GR
Y
O
O
O
L
9
NSSD
Transmission
Control SW
AT3
3
D22
Shift Lock Control ECU
C28
Electronically
Controlled Transmission
Solenoid
G
G
W
W
SB
SB

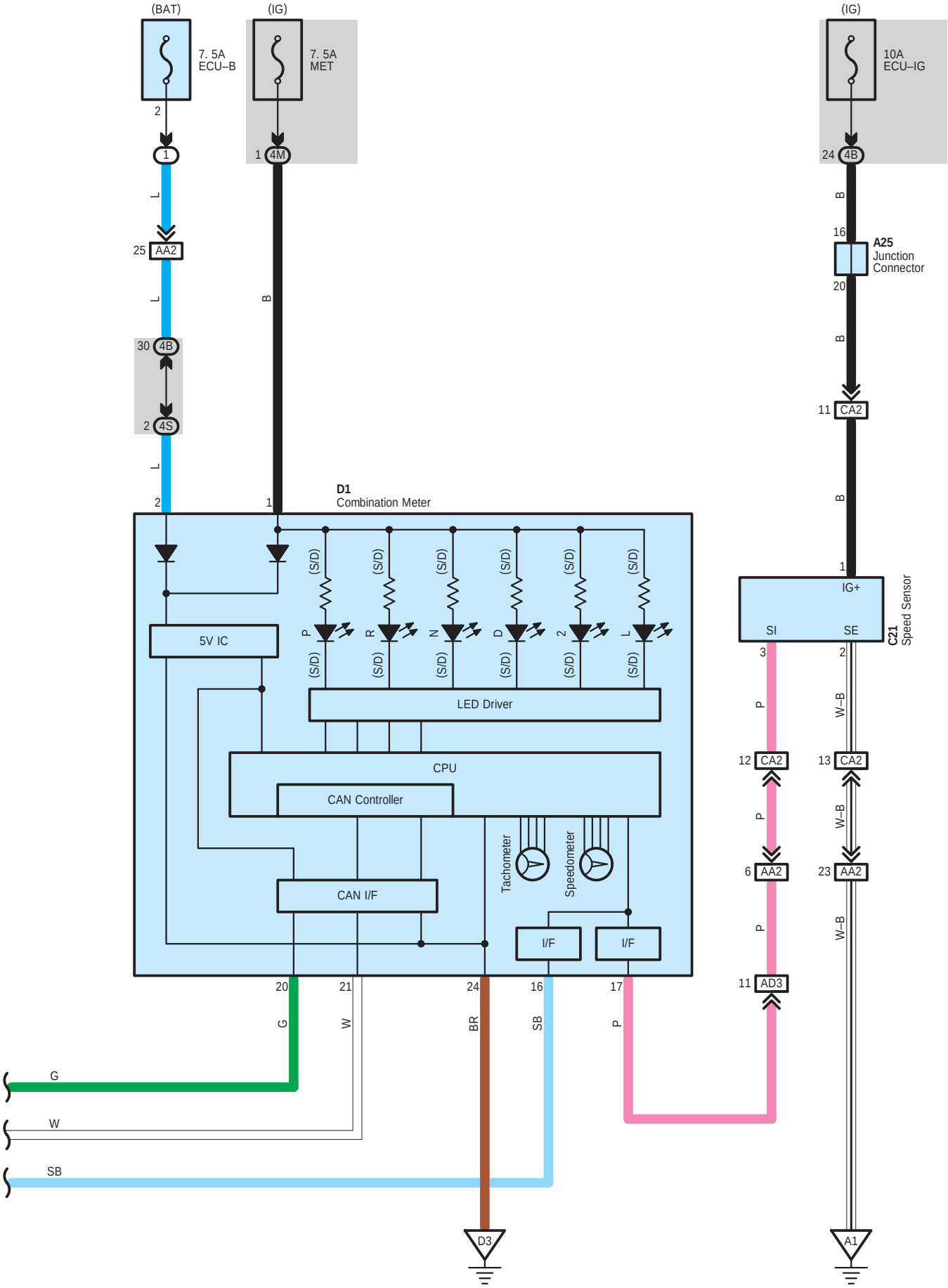
(BAT)
(IG)
(IG)
7. 5A
ECU–B
7. 5A
MET
10A
ECU–IG
2
1
1
4M
24
4B
L
B
B
16
A25
Junction
Connector
20
25
AA2
L
B
30
4B
2
4S
L
11
CA2
B
2
1
D1
Combination Meter
1
IG+
SI
SE
C21
Speed Sensor
3
2
5V IC
(S/D)
P
R
N
D
2
L
LED Driver
CPU
CAN Controller
CAN I/F
Tachometer
Speedometer
I/F
I/F
P
W–B
12
CA2
13
CA2
P
W–B
6
AA2
23
AA2
P
W–B
11
AD3
20
21
24
16
17
G
W
BR
SB
P
G
W
SB
D3
A1

: Parts Location

Code	See Page	Code	See Page	Code	See Page
A13	50 (H/B)	C19	49 (S/D)	D1	51 (H/B)
	52 (S/D)	C20 B	47 (H/B)		53 (S/D)
A20	50 (H/B)		49 (S/D)	D15	51 (H/B)
	52 (S/D)	C21	47 (H/B)		53 (S/D)
A21 A	46 (H/B)		49 (S/D)	D22	51 (H/B)
	48 (S/D)	C27	47 (H/B)		53 (S/D)
A25	46 (H/B)		49 (S/D)	D41	51 (H/B)
	48 (S/D)	C28	47 (H/B)		53 (S/D)
C2	47 (H/B)		49 (S/D)	D42	51 (H/B)
	49 (S/D)	C29	47 (H/B)		53 (S/D)
C19	47 (H/B)		49 (S/D)		

: Relay Blocks

Code	See Page	Relay Blocks (Relay Block Location)
1	24	Engine Room R/B (Engine Compartment Left)

: Junction Block and Wire Harness Connector

Code	See Page	Junction Block and Wire Harness (Connector Location)
1A	25	Engine Room Main Wire and Engine Room J/B (Engine Compartment Left)
4B	30	Engine Room Main Wire and Instrument Panel J/B (Lower Finish Panel)
4C	30	Instrument Panel Wire and Instrument Panel J/B (Lower Finish Panel)
4D		
4M	31	
4S		

: Connector Joining Wire Harness and Wire Harness

Code	See Page	Joining Wire Harness and Wire Harness (Connector Location)
AA2	62 (H/B)	Engine Room Main Wire and Engine Room Main Wire (Instrument Panel Left)
	63 (S/D)	
AD3	62 (H/B)	Engine Room Main Wire and Instrument Panel Wire (Instrument Panel Left)
	63 (S/D)	
AD4	62 (H/B)	
	63 (S/D)	
CA1	60 (H/B)	Engine Wire and Engine Room Main Wire (Engine Compartment Left)
	61 (S/D)	
CA2	60 (H/B)	
	61 (S/D)	

: Ground Points

Code	See Page	Ground Points Location
A1	60 (H/B)	Left Suspension Tower
	61 (S/D)	
C1	60 (H/B)	Engine Block Left
	61 (S/D)	
C2	60 (H/B)	
	61 (S/D)	
D3	62 (H/B)	Instrument Panel Reinforcement Left
	63 (S/D)	

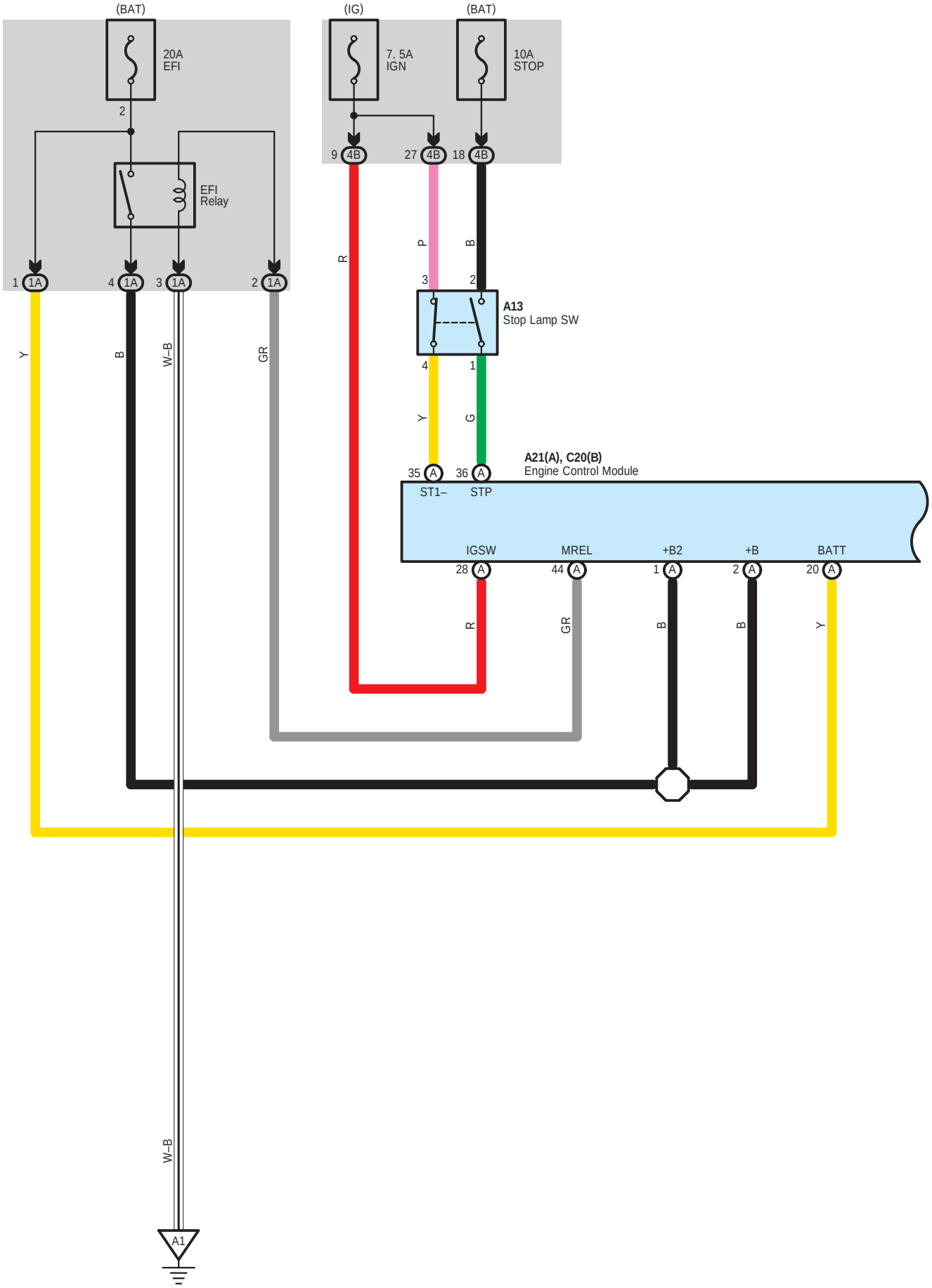
(BAT)
20A
EFI
2
EFI
Relay
1 1A
4 1A
3 1A
2 1A
(IG)
7. 5A
IGN
(BAT)
10A
STOP
9 4B
27 4B
18 4B
R
P
B
3
2
A13
Stop Lamp SW
4
1
Y
G
35 A
36 A
ST1–
STP
A21(A), C20(B)
Engine Control Module
IGSW
MREL
+B2
+B
BATT
28 A
44 A
1 A
2 A
20 A
R
GR
B
B
Y
Y
B
W–B
GR
W–B
A1

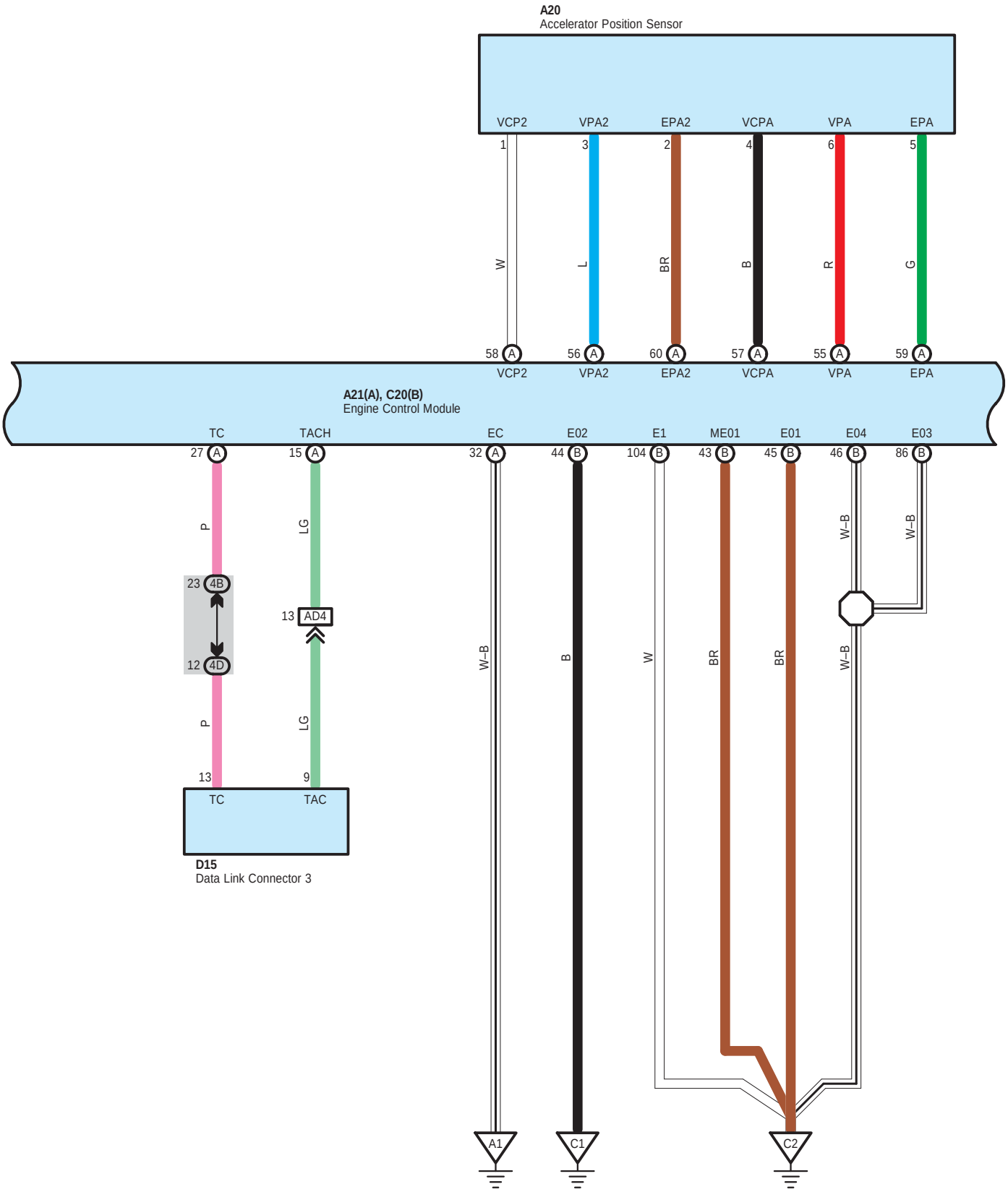
A20
Accelerator Position Sensor
VCP2
VPA2
EPA2
VCPA
VPA
EPA
1
3
2
4
6
5
W
L
BR
B
R
G
58 A
56 A
60 A
57 A
55 A
59 A
VCP2
VPA2
EPA2
VCPA
VPA
EPA
A21(A), C20(B)
Engine Control Module
TC
TACH
EC
E02
E1
ME01
E01
E04
E03
27 A
15 A
32 A
44 B
104 B
43 B
45 B
46 B
86 B
P
LG
W-B
B
W
BR
BR
W-B
W-B
23 4B
12 4D
13 AD4
P
LG
13
9
TC
TAC
D15
Data Link Connector 3
A1
C1
C2

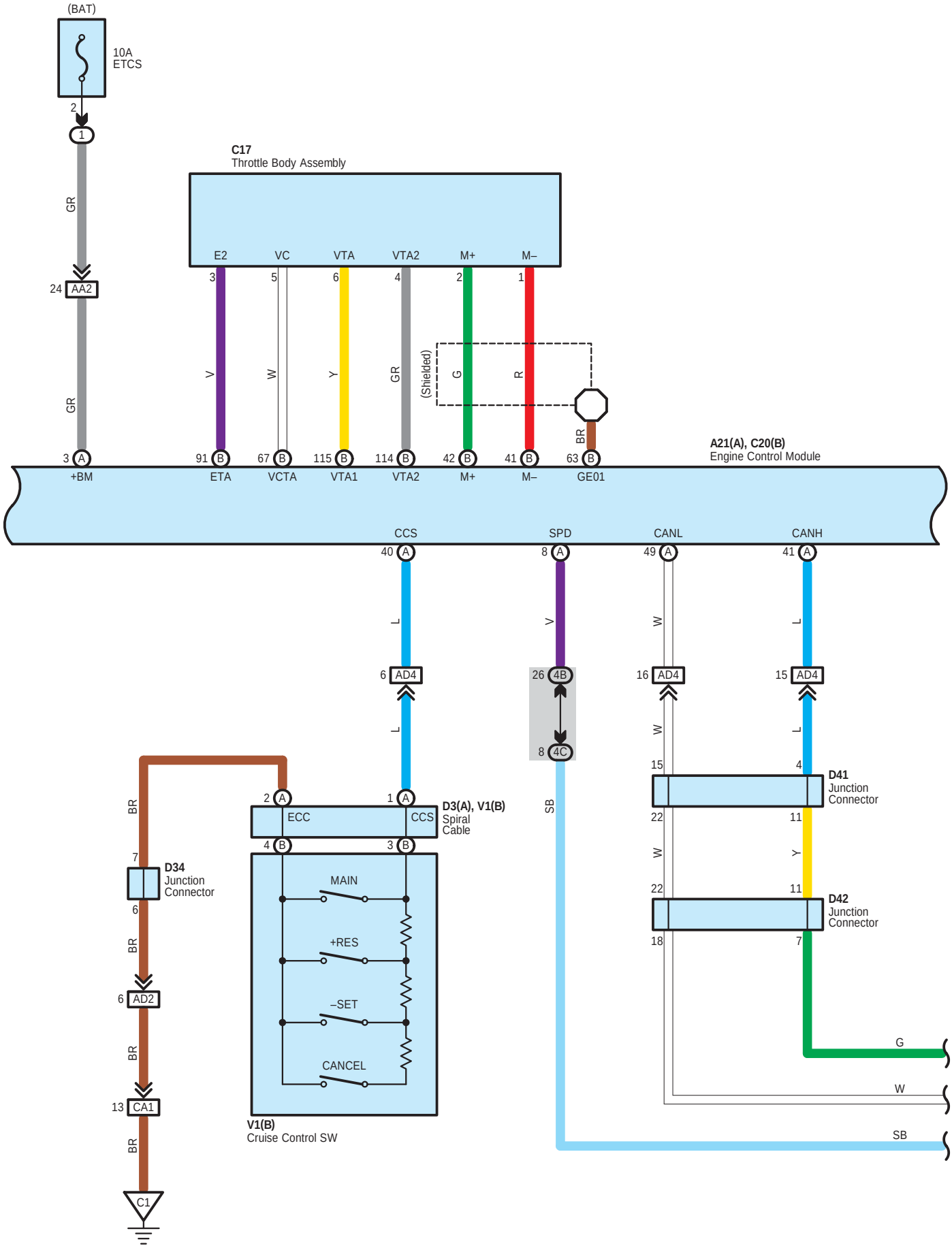
(BAT)
10A
ETCS
2
1
GR
24 AA2
GR
3 A
+BM
C17
Throttle Body Assembly
E2
VC
VTA
VTA2
M+
M–
3
5
6
4
2
1
V
W
Y
GR
G
R
(Shielded)
BR
91 B
ETA
67 B
VCTA
115 B
VTA1
114 B
VTA2
42 B
M+
41 B
M–
63 B
GE01
A21(A), C20(B)
Engine Control Module
CCS
SPD
CANL
CANH
40 A
8 A
49 A
41 A
L
V
W
L
6 AD4
26 4B
16 AD4
15 AD4
8 4C
15
4
D41
Junction
Connector
22
11
Y
22
11
D42
Junction
Connector
18
7
G
W
SB
BR
2 A
1 A
D3(A), V1(B)
Spiral
Cable
ECC
CCS
4 B
3 B
7
D34
Junction
Connector
6
BR
6 AD2
BR
13 CA1
BR
C1
MAIN
+RES
–SET
CANCEL
V1(B)
Cruise Control SW

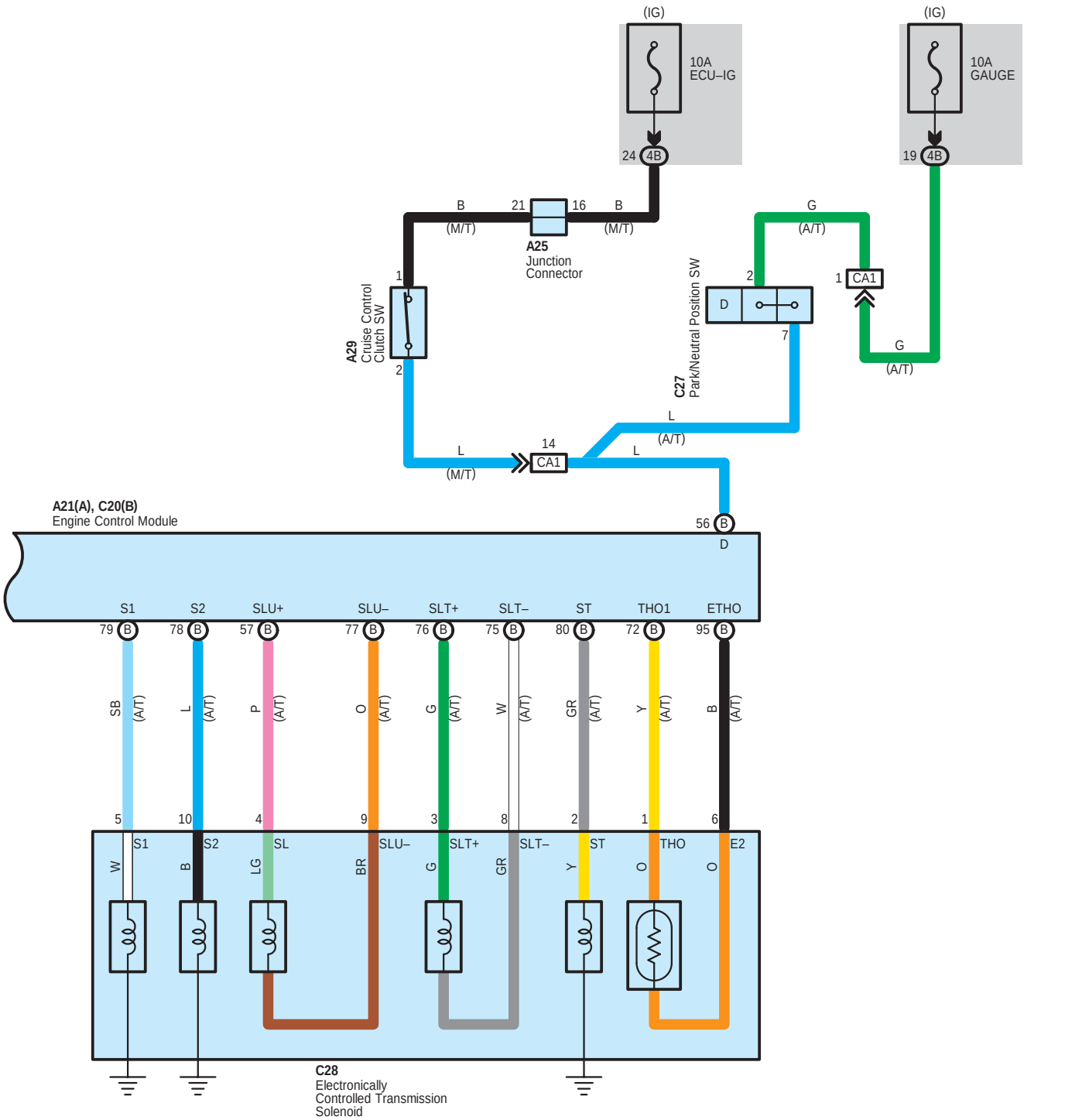
(IG)
10A
ECU–IG
24 4B
(IG)
10A
GAUGE
19 4B
B
(M/T)
21
16
B
(M/T)
A25
Junction
Connector
G
(A/T)
2
D
7
1 CA1
C27
Park/Neutral Position SW
G
(A/T)
1
2
A29
Cruise Control
Clutch SW
L
(A/T)
L
(M/T)
14
CA1
L
A21(A), C20(B)
Engine Control Module
56 B
D
S1
S2
SLU+
SLU–
SLT+
SLT–
ST
THO1
ETHO
79 B
78 B
57 B
77 B
76 B
75 B
80 B
72 B
95 B
SB (A/T)
L (A/T)
P (A/T)
O (A/T)
G (A/T)
W (A/T)
GR (A/T)
Y (A/T)
B (A/T)
5
10
4
9
3
8
2
1
6
S1
S2
SL
SLU–
SLT+
SLT–
ST
THO
E2
W
B
LG
BR
G
GR
Y
O
O
C28
Electronically
Controlled Transmission
Solenoid
G
G
W
W
SB
SB

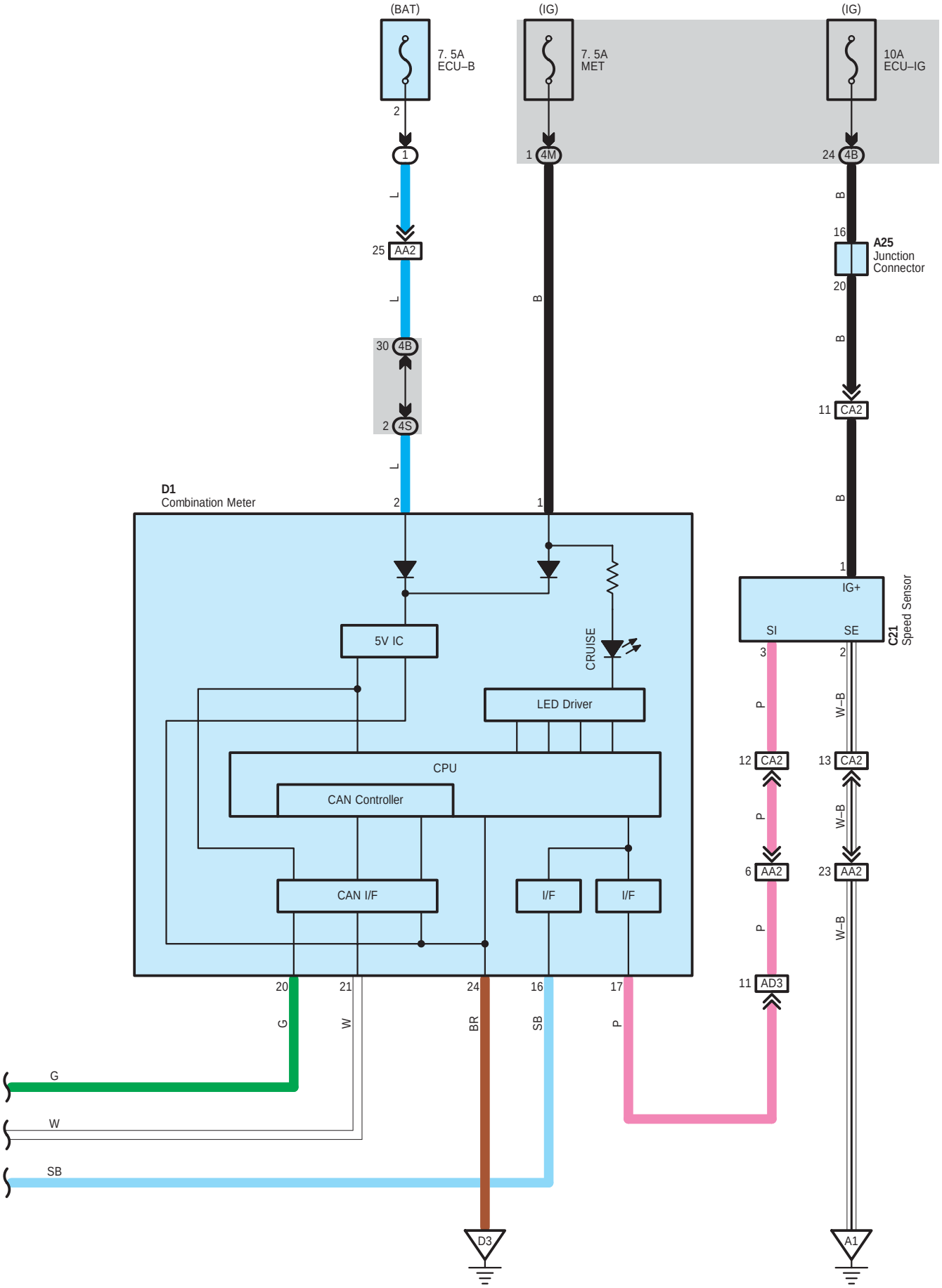
(BAT)
7. 5A
ECU–B
2
1
L
25 AA2
L
30 4B
2 4S
L
2
(IG)
7. 5A
MET
1 4M
B
1
(IG)
10A
ECU–IG
24 4B
B
16
A25
Junction
Connector
20
B
11 CA2
B
1
D1
Combination Meter
5V IC
CRUISE
LED Driver
CPU
CAN Controller
CAN I/F
I/F
I/F
IG+
SI
SE
C21
Speed Sensor
3
2
P
W–B
12 CA2
13 CA2
P
W–B
6 AA2
23 AA2
P
W–B
11 AD3
20
21
24
16
17
G
W
BR
SB
P
G
W
SB
D3
A1

System Outline

The cruise control system is a constant vehicle speed controller in which control of the switch on the instrument panel makes it possible to automatically adjust the opening of the engine throttle valve without depressing of the accel pedal.

1. Set Operation

When the CRUISE SW is turned on and the SET SW is pushed with the vehicle speed within the set limit (Approx. 40 km/h, 25 mph to 200 km/h, 124 mph), a signal is input to TERMINAL CCS of the engine control module, and the vehicle speed at the time the SET SW is released is memorized in the ECU as the set speed.

2. Set Speed Control

During cruise control driving, the ECU compares the set speed memorized in the ECU with the actual vehicle speed input into TERMINAL SPD of the engine control module from the combination meter, and controls the throttle body assembly to maintain the set speed.

When the actual speed is lower than the set speed, the ECU causes the current to the throttle control motor to flow from TERMINAL M+ of the engine control module to TERMINAL 2 of the throttle body assembly to TERMINAL 1 to TERMINAL M– of the engine control module. As a result, the motor in the throttle control motor is rotated to open the throttle valve to increase the vehicle speed. When the actual driving speed is higher than the set speed, the current to the throttle body assembly flows from TERMINAL M– of the ECU to TERMINAL 1 of the throttle control motor to TERMINAL 2 to TERMINAL M+ of the engine control module.

This causes the motor in the throttle body assembly to rotate to close the throttle valve to decrease the vehicle speed.

3. Coast Control

During cruise control driving, while the –SET SW is on, the throttle control motor is rotated to close the throttle valve and decrease the driving speed. The vehicle speed when the –SET SW is turned off is memorized, and the vehicle continues at the new set speed.

4. Accel Control

During cruise control driving, while the +RES SW is turned on, the throttle control motor is rotated to open the throttle valve and increase the driving speed.

The vehicle speed when the +RES SW is turned off is memorized and the vehicle continues at the new set speed.

5. Resume Control

If the vehicle speed is approximately 40 km/h (25 mph) or above after canceling the set speed with the CANCEL SW, pushing the +RES SW will cause the vehicle to resume the speed set before the cancellation.

6. Manual Cancel Mechanism

If any of the following signals is input during cruise control travelling, the cruise control is cancelled.

* Depressing the clutch pedal (Cruise control clutch SW off). ”Signal is not input to TERMINAL D of the ECU” (M/T)
* Placing the shift lever to positions except ”D” position (Park/Neutral position SW except ”D” position) (A/T)
* Pushing the CANCEL SW (CANCEL SW on). ”Signal input to TERMINAL CCS of the ECU”
* Pushing the CRUISE SW off ”signal input to TERMINAL CCS of the ECU”.
* Depressing the brake pedal (Stop light SW on)

7. Tap–Up Control Function

When the difference between the actual vehicle speed and the set speed is less than 5 km/h (3 mph), the set speed can be increased 1.6 km/h (1 mph) each time by operating the +RES SW quickly within 0.6 seconds.

8. Tap–Down Control Function

When the difference between the actual vehicle speed and the set speed is less than 5 km/h (3 mph), the set speed can be lowered 1.6 km/h (1 mph) each time by operating the –SET SW quickly within 0.6 seconds.

9. Auto Cancel Function

A) If any of the following operating conditions occurs during cruise control operation, the set speed is erased and the cruise control is released, (CRUISE SW turns off).

When this occurs, the ignition SW must be turned off once before the CRUISE SW will turn on.

* When abnormality is found in the stop light SW input circuit.
* When abnormality is found in the cancel circuit.

B) If any of the following operating conditions occurs during cruise control operation, the set speed is erased and the cruise control is released. (CRUISE SW turn off).

When this occurs, the cancel state is cleared as the CRUISE SW will turn on again.

* When abnormality is found in electronic throttle parts.
* Open circuit in the stop light SW.
* Momentary interruption of vehicle speed signal.
* Short circuit in the stop light SW.

10. Overdrive Control Function

The overdrive control may be cancelled if the vehicle travels on the slope during cruise control travelling. After the overdrive control has been cancelled it is decided that the slope is finished, the vehicle returns to the overdrive control mode again.

: Parts Location

Code	See Page	Code	See Page	Code	See Page
A13	52 (S/D)	C20 B	49 (S/D)	D15	53 (S/D)
A20	52 (S/D)	C21	49 (S/D)	D34	53 (S/D)
A21 A	48 (S/D)	C27	49 (S/D)	D41	53 (S/D)
A25	48 (S/D)	C28	49 (S/D)	D42	53 (S/D)
A29	52 (S/D)	D1	53 (S/D)	V1 B	52 (S/D)
C17	49 (S/D)	D3 A	53 (S/D)		

: Relay Blocks

Code	See Page	Relay Blocks (Relay Block Location)
1	24	Engine Room R/B (Engine Compartment Left)

: Junction Block and Wire Harness Connector

Code	See Page	Junction Block and Wire Harness (Connector Location)
1A	25	Engine Room Main Wire and Engine Room J/B (Engine Compartment Left)
4B	30	Engine Room Main Wire and Instrument Panel J/B (Lower Finish Panel)
4C	30	Instrument Panel Wire and Instrument Panel J/B (Lower Finish Panel)
4D		
4M	31	
4S		

: Connector Joining Wire Harness and Wire Harness

Code	See Page	Joining Wire Harness and Wire Harness (Connector Location)
AA2	63 (S/D)	Engine Room Main Wire and Engine Room Main Wire (Instrument Panel Left)
AD2	63 (S/D)	Engine Room Main Wire and Instrument Panel Wire (Instrument Panel Left)
AD3		
AD4		
CA1	61 (S/D)	Engine Wire and Engine Room Main Wire (Engine Compartment Left)
CA2		

: Ground Points

Code	See Page	Ground Points Location
A1	61 (S/D)	Left Suspension Tower
C1	61 (S/D)	Engine Block Left
C2		
D3	63 (S/D)	Instrument Panel Reinforcement Left

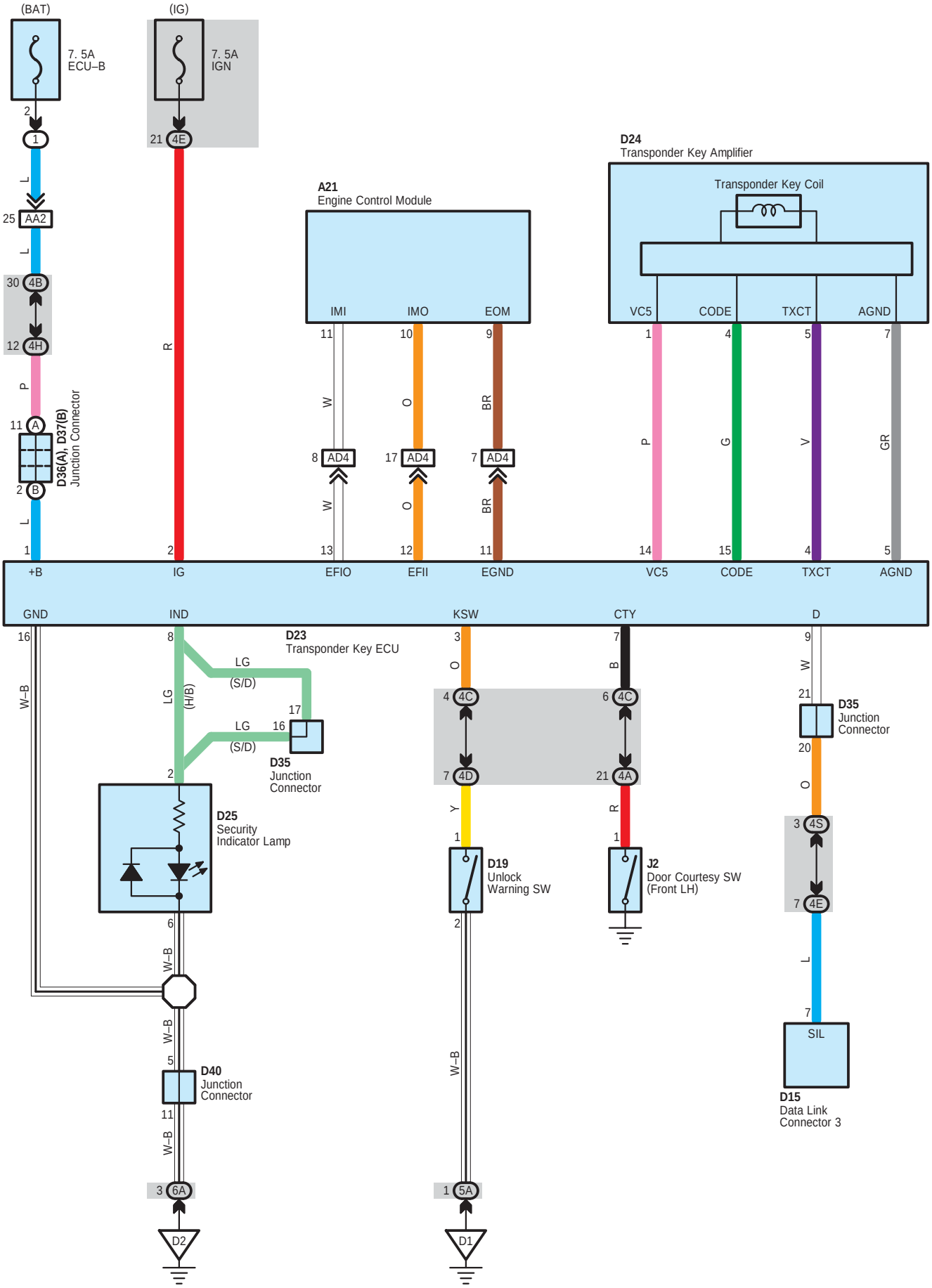
(BAT)
7. 5A
ECU–B
(IG)
7. 5A
IGN
A21
Engine Control Module
IMI
IMO
EOM
D24
Transponder Key Amplifier
Transponder Key Coil
VC5
CODE
TXCT
AGND
+B
IG
EFIO
EFII
EGND
VC5
CODE
TXCT
AGND
D36(A), D37(B)
Junction Connector
GND
IND
KSW
CTY
D
D23
Transponder Key ECU
D35
Junction
Connector
D25
Security
Indicator Lamp
D40
Junction
Connector
D19
Unlock
Warning SW
J2
Door Courtesy SW
(Front LH)
D35
Junction
Connector
SIL
D15
Data Link
Connector 3
D2
D1

: Parts Location

Code	See Page	Code	See Page	Code	See Page
A21	46 (H/B)	D24	51 (H/B)	D37 B	51 (H/B)
	48 (S/D)		53 (S/D)		53 (S/D)
D15	51 (H/B)	D25	51 (H/B)	D40	51 (H/B)
	53 (S/D)		53 (S/D)		53 (S/D)
D19	51 (H/B)	D35	51 (H/B)	J2	55 (5–Door)
	53 (S/D)		53 (S/D)		57 (3–Door)
D23	51 (H/B)	D36 A	51 (H/B)		59 (4–Door)
	53 (S/D)		53 (S/D)		

: Relay Blocks

Code	See Page	Relay Blocks (Relay Block Location)
1	24	Engine Room R/B (Engine Compartment Left)

: Junction Block and Wire Harness Connector

Code	See Page	Junction Block and Wire Harness (Connector Location)
4A	30	Floor Wire and Instrument Panel J/B (Lower Finish Panel)
4B	30	Engine Room Main Wire and Instrument Panel J/B (Lower Finish Panel)
4C	30	Instrument Panel Wire and Instrument Panel J/B (Lower Finish Panel)
4D		
4E		
4H		
4S	31	
5A	38	Instrument Panel Wire and J/B No.5 (Left Kick Panel)
6A	40	Instrument Panel Wire and J/B No.6 (Right Kick Panel)

: Connector Joining Wire Harness and Wire Harness

Code	See Page	Joining Wire Harness and Wire Harness (Connector Location)
AA2	62 (H/B)	Engine Room Main Wire and Engine Room Main Wire (Instrument Panel Left)
	63 (S/D)	
AD4	62 (H/B)	Engine Room Main Wire and Instrument Panel Wire (Instrument Panel Left)
	63 (S/D)	

: Ground Points

Code	See Page	Ground Points Location
D1	62 (H/B)	Left Kick Panel
	63 (S/D)	
D2	62 (H/B)	Right Kick Panel
	63 (S/D)	

Data Link Connector 3

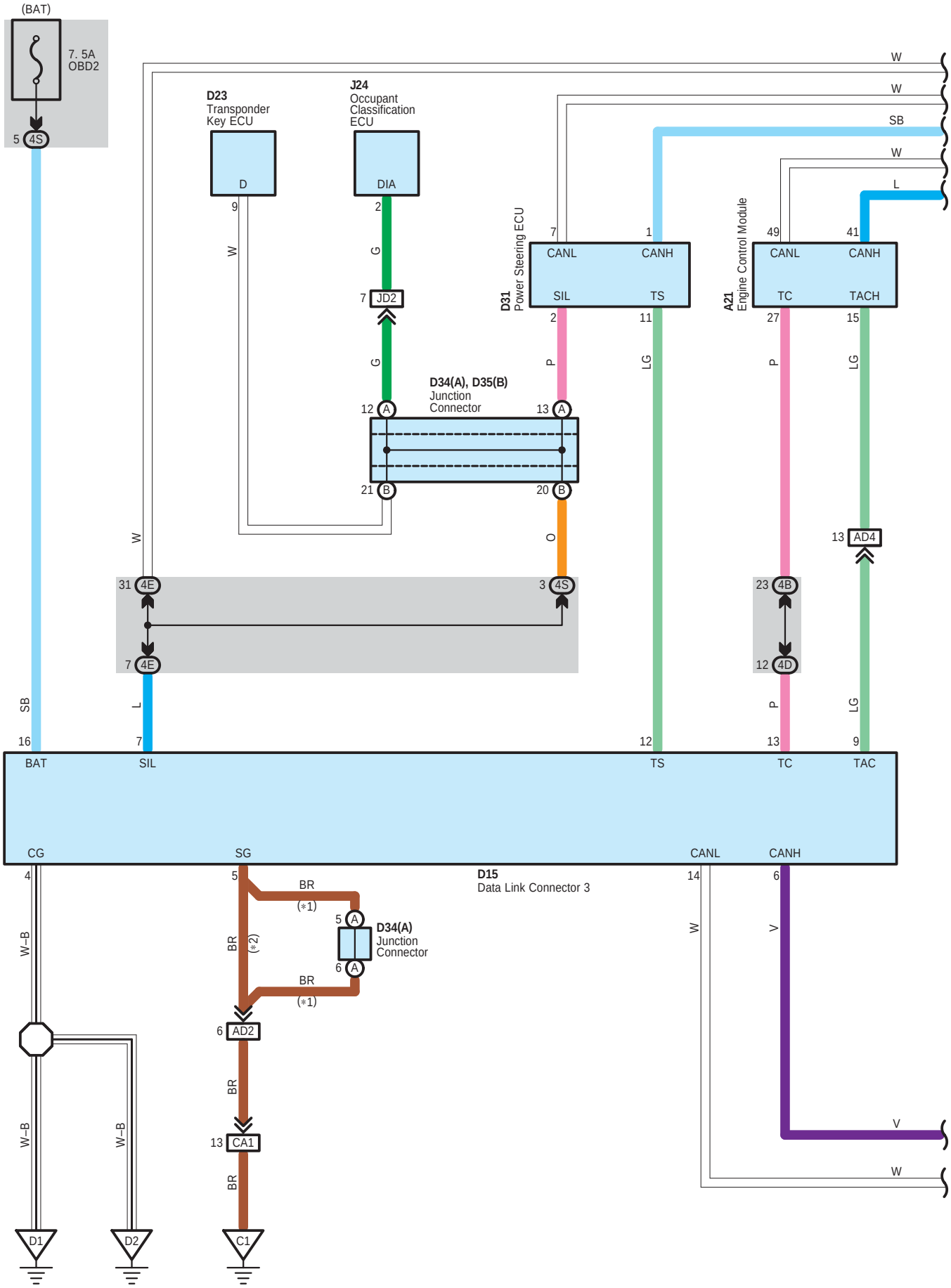

∗ 1 : w/ Cruise Control
∗ 2 : w/o Cruise Control

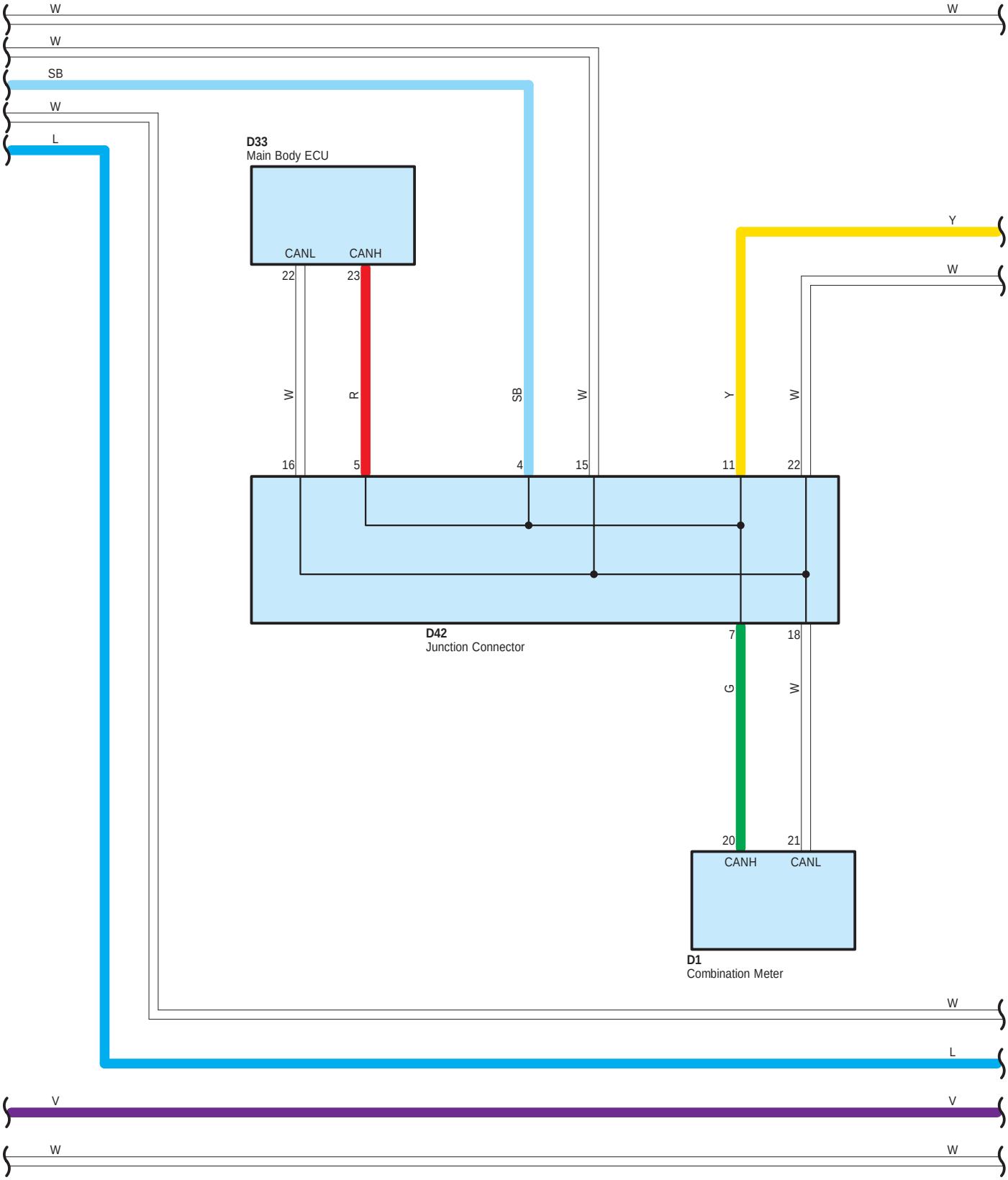

Data Link Connector 3

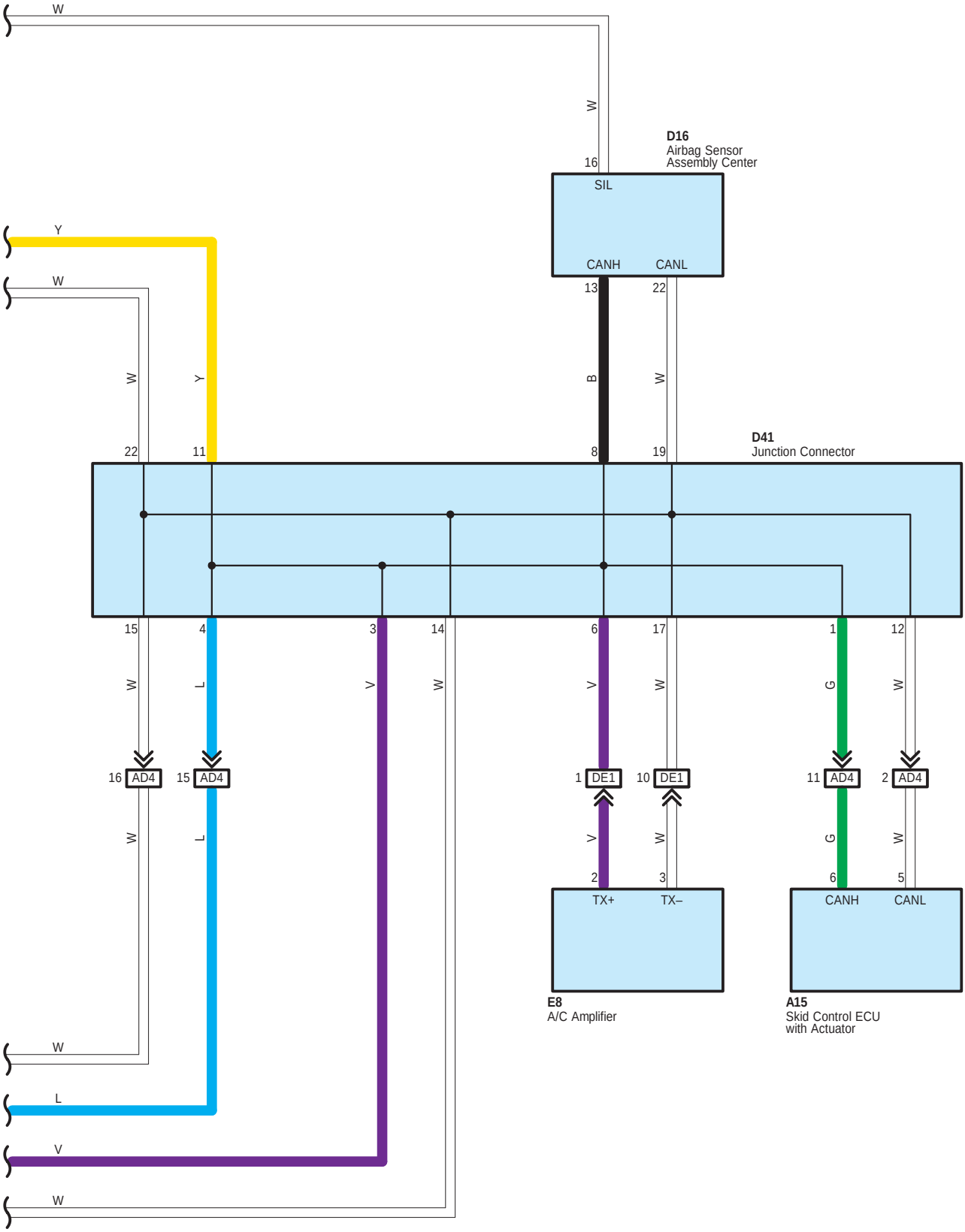

: Parts Location

Code	See Page	Code	See Page	Code	See Page
A15	46 (H/B)	D23	51 (H/B)	D41	51 (H/B)
	48 (S/D)		53 (S/D)		53 (S/D)
A21	46 (H/B)	D31	51 (H/B)	D42	51 (H/B)
	48 (S/D)		53 (S/D)		53 (S/D)
D1	51 (H/B)	D33	51 (H/B)	E8	50 (H/B)
	53 (S/D)		53 (S/D)		52 (S/D)
D15	51 (H/B)	D34 A	51 (H/B)	J24	55 (5–Door)
	53 (S/D)		53 (S/D)		57 (3–Door)
D16	51 (H/B)	D35 B	51 (H/B)		59 (4–Door)
	53 (S/D)		53 (S/D)		

: Junction Block and Wire Harness Connector

Code	See Page	Junction Block and Wire Harness (Connector Location)
4B	30	Engine Room Main Wire and Instrument Panel J/B (Lower Finish Panel)
4D	30	Instrument Panel Wire and Instrument Panel J/B (Lower Finish Panel)
4E		
4S	31	

: Connector Joining Wire Harness and Wire Harness

Code	See Page	Joining Wire Harness and Wire Harness (Connector Location)
AD2	62 (H/B)	Engine Room Main Wire and Instrument Panel Wire (Instrument Panel Left)
	63 (S/D)	
AD4	62 (H/B)	
	63 (S/D)	
CA1	60 (H/B)	Engine Wire and Engine Room Main Wire (Engine Compartment Left)
	61 (S/D)	
DE1	62 (H/B)	Instrument Panel Wire and Instrument Panel No.2 Wire (Instrument Panel Center)
	63 (S/D)	
JD2	62 (H/B)	Floor Wire and Instrument Panel Wire (Instrument Panel Left)
	63 (S/D)	

: Ground Points

Code	See Page	Ground Points Location
C1	60 (H/B)	Engine Block Left
	61 (S/D)	
D1	62 (H/B)	Left Kick Panel
	63 (S/D)	
D2	62 (H/B)	Right Kick Panel
	63 (S/D)	

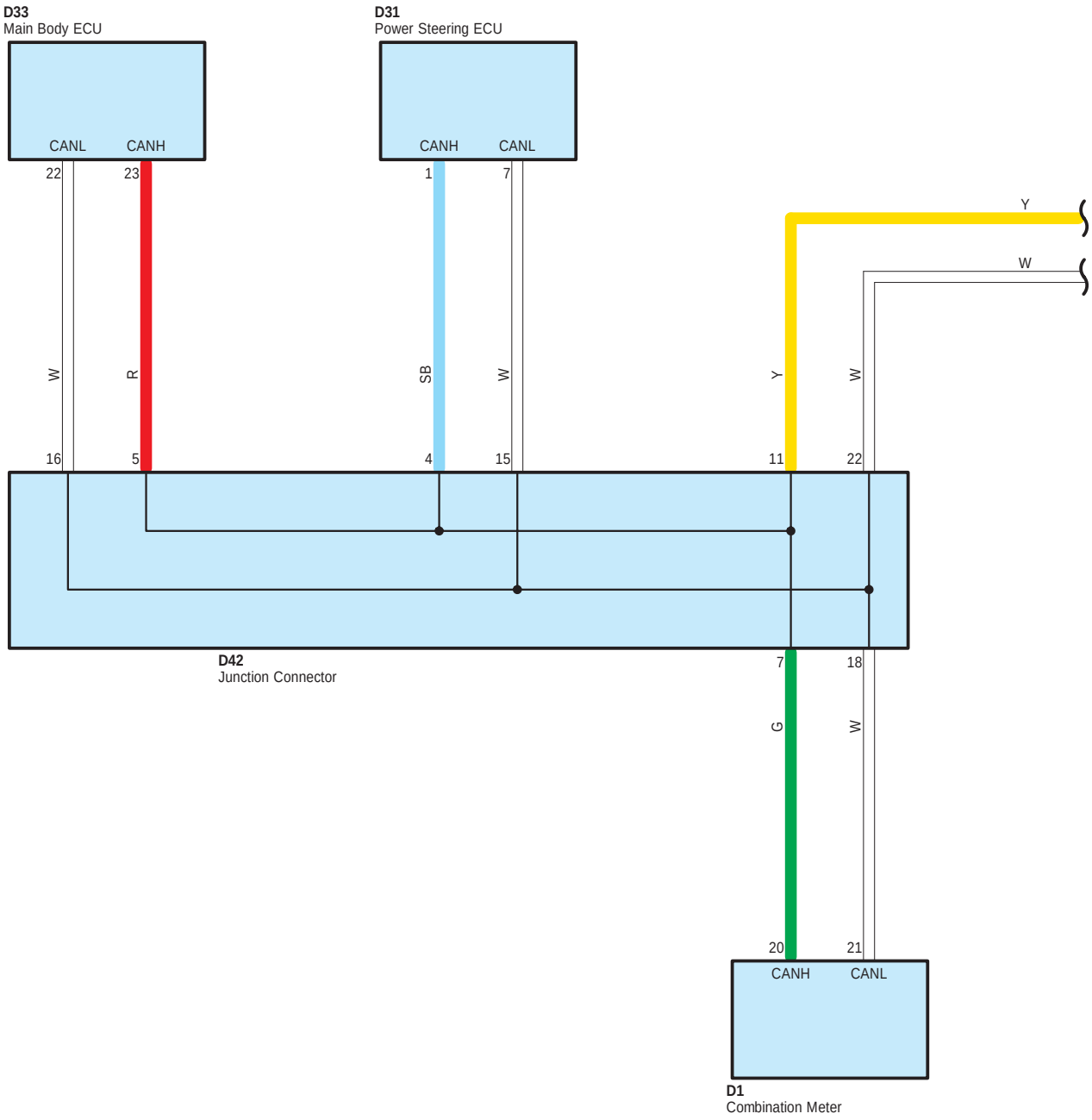
D33
Main Body ECU
CANL
CANH
22
23
W
R
16
5
D31
Power Steering ECU
CANH
CANL
1
7
SB
W
4
15
Y
W
11
22
D42
Junction Connector
7
18
G
W
20
21
CANH
CANL
D1
Combination Meter

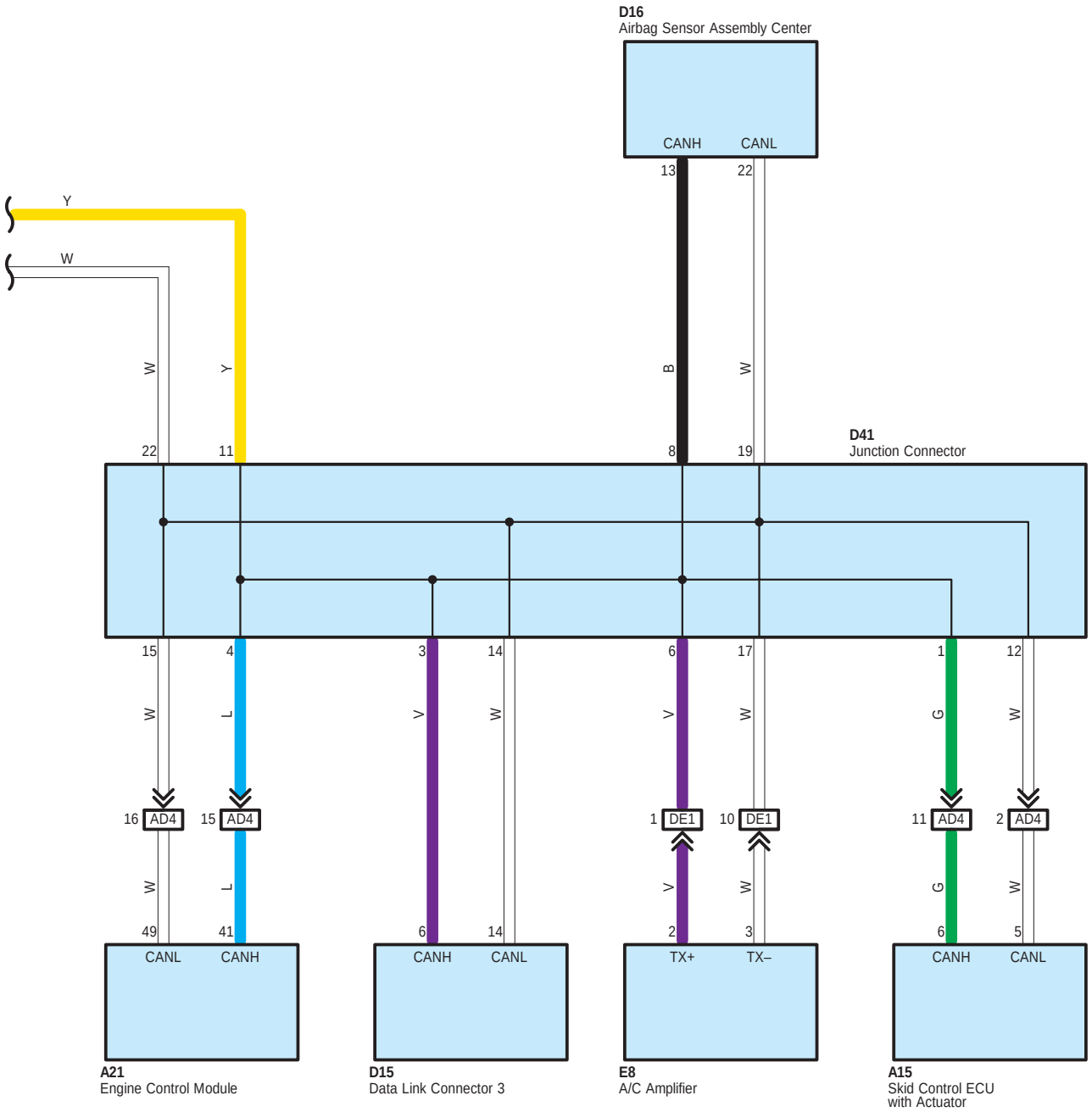
D16
Airbag Sensor Assembly Center
CANH
CANL
13
22
Y
W
B
W
W
Y
D41
Junction Connector
22
11
8
19
15
4
3
14
6
17
1
12
W
L
V
W
V
W
G
W
16 AD4
15 AD4
1 DE1
10 DE1
11 AD4
2 AD4
W
L
V
W
G
W
49
41
6
14
2
3
6
5
CANL
CANH
CANH
CANL
TX+
TX–
CANH
CANL
A21
Engine Control Module
D15
Data Link Connector 3
E8
A/C Amplifier
A15
Skid Control ECU
with Actuator

○ : Parts Location

Code	See Page	Code	See Page	Code	See Page
A15	46 (H/B)	D15	53 (S/D)	D41	51 (H/B)
	48 (S/D)	D16	51 (H/B)		53 (S/D)
A21	46 (H/B)		53 (S/D)	D42	51 (H/B)
	48 (S/D)	D31	51 (H/B)		53 (S/D)
D1	51 (H/B)		53 (S/D)	E8	50 (H/B)
	53 (S/D)	D33	51 (H/B)		52 (S/D)
D15	51 (H/B)		53 (S/D)		

▭ : Connector Joining Wire Harness and Wire Harness

Code	See Page	Joining Wire Harness and Wire Harness (Connector Location)
AD4	62 (H/B)	Engine Room Main Wire and Instrument Panel Wire (Instrument Panel Left)
	63 (S/D)	
DE1	62 (H/B)	Instrument Panel Wire and Instrument Panel No.2 Wire (Instrument Panel Center)
	63 (S/D)	

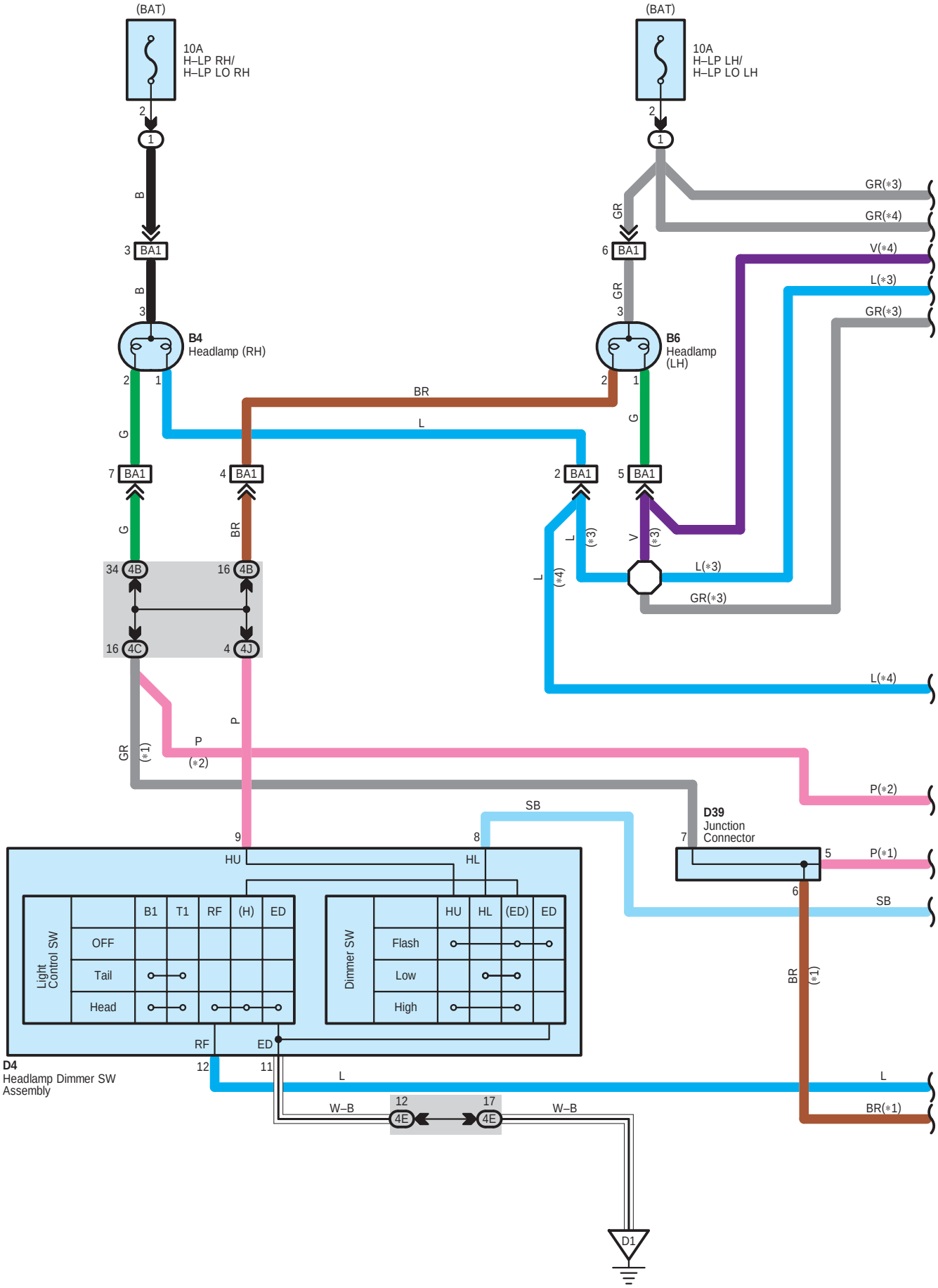
(BAT)
10A
H–LP RH/
H–LP LO RH
(BAT)
10A
H–LP LH/
H–LP LO LH
B4
Headlamp (RH)
B6
Headlamp
(LH)
BA1
4B
4C
4J
4E
GR(∗3)
GR(∗4)
V(∗4)
L(∗3)
GR(∗3)
BR
L
G
B
GR
P
V
L(∗4)
P(∗2)
SB
P(∗1)
BR(∗1)
D39
Junction
Connector
HU
HL
RF
ED
Light
Control SW
B1
T1
RF
(H)
ED
OFF
Tail
Head
Dimmer SW
HU
HL
(ED)
ED
Flash
Low
High
D4
Headlamp Dimmer SW
Assembly
W–B
D1

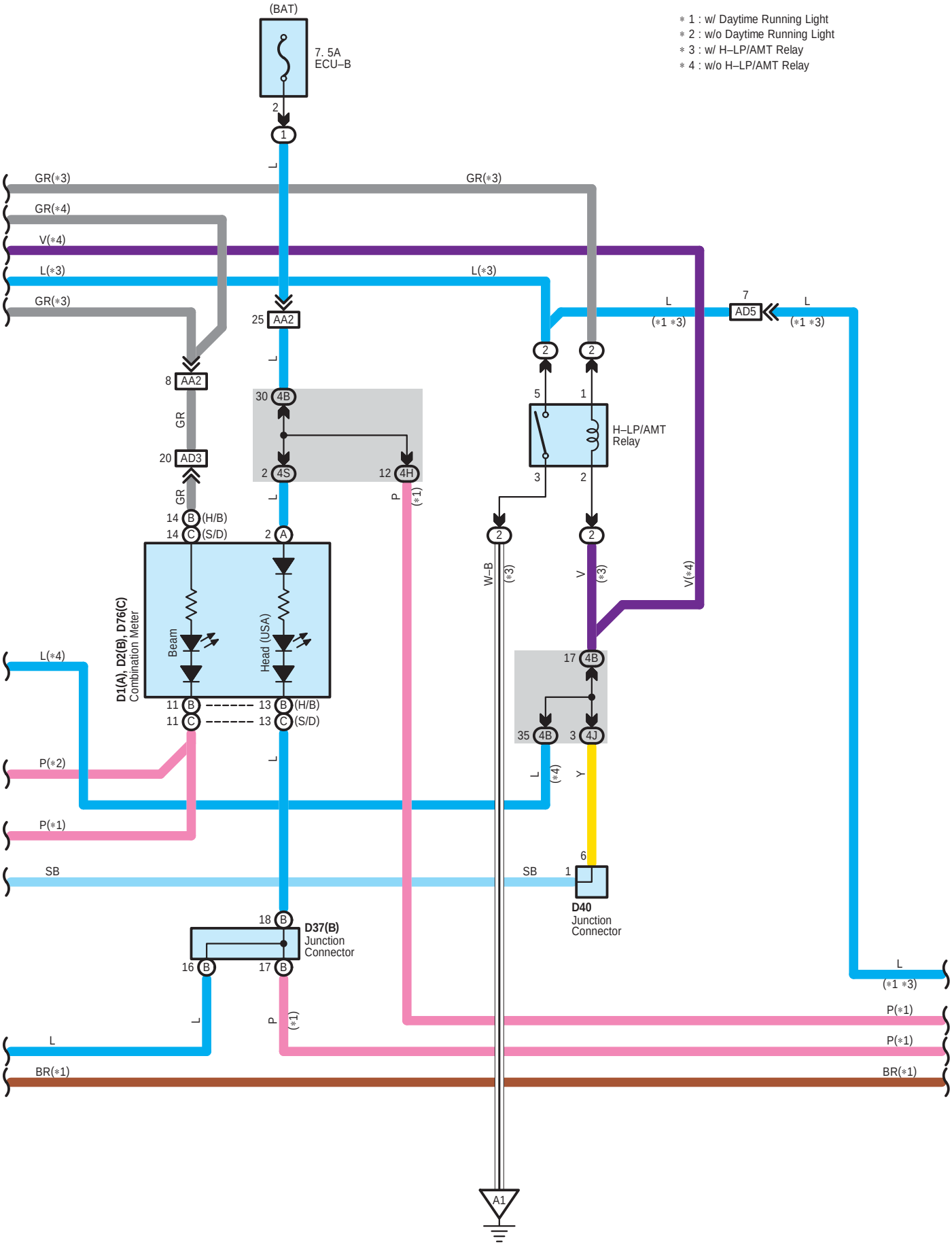
∗ 1 : w/ Daytime Running Light
∗ 2 : w/o Daytime Running Light
∗ 3 : w/ H–LP/AMT Relay
∗ 4 : w/o H–LP/AMT Relay
(BAT)
7. 5A
ECU–B
H–LP/AMT
Relay
D1(A), D2(B), D76(C)
Combination Meter
Beam
Head (USA)
D37(B)
Junction
Connector
D40
Junction
Connector
A1

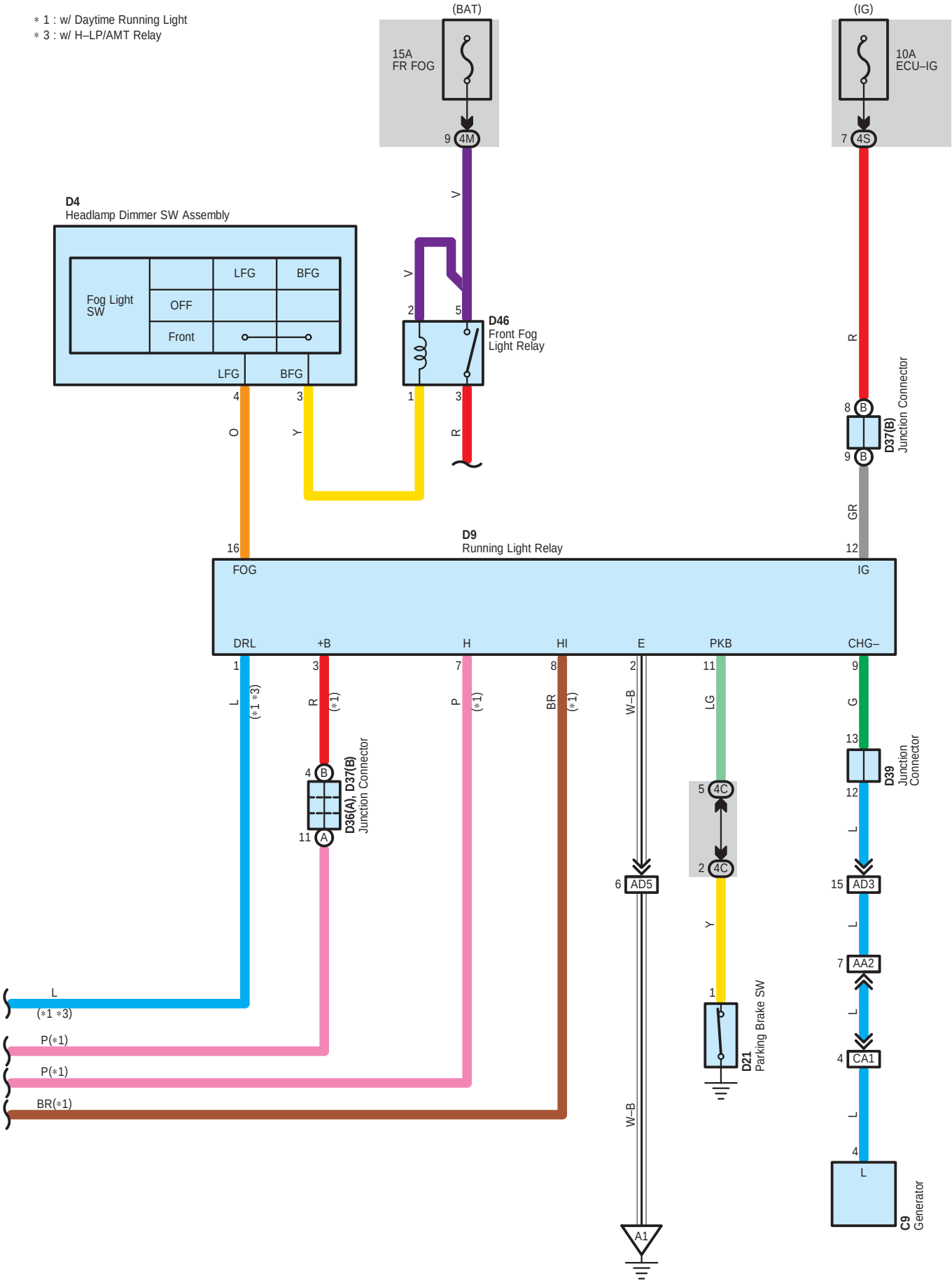
∗ 1 : w/ Daytime Running Light
∗ 3 : w/ H–LP/AMT Relay
(BAT)
15A
FR FOG
9 4M
(IG)
10A
ECU–IG
7 4S
D4
Headlamp Dimmer SW Assembly
Fog Light SW
OFF
Front
LFG
BFG
D46
Front Fog Light Relay
D9
Running Light Relay
FOG
IG
DRL
+B
H
HI
E
PKB
CHG–
D36(A), D37(B) Junction Connector
D37(B) Junction Connector
D39 Junction Connector
D21 Parking Brake SW
C9 Generator
AD5
AD3
AA2
CA1
A1
L
(∗1 ∗3)
P(∗1)
P(∗1)
BR(∗1)

: Parts Location

Code	See Page	Code	See Page	Code	See Page
B4	46 (H/B)	D4	51 (H/B)	D37 B	53 (S/D)
	48 (S/D)		53 (S/D)	D39	51 (H/B)
B6	46 (H/B)	D9	51 (H/B)		53 (S/D)
	48 (S/D)		53 (S/D)	D40	51 (H/B)
C9	47 (H/B)	D21	51 (H/B)		53 (S/D)
	49 (S/D)		53 (S/D)	D46	51 (H/B)
D1 A	51 (H/B)	D36 A	51 (H/B)		53 (S/D)
	53 (S/D)		53 (S/D)	D76 C	53 (S/D)
D2 B	51 (H/B)	D37 B	51 (H/B)		

: Relay Blocks

Code	See Page	Relay Blocks (Relay Block Location)
1	24	Engine Room R/B (Engine Compartment Left)
2	28	Engine Room R/B No.2 (Engine Compartment Right)

: Junction Block and Wire Harness Connector

Code	See Page	Junction Block and Wire Harness (Connector Location)
4B	30	Engine Room Main Wire and Instrument Panel J/B (Lower Finish Panel)
4C	30	Instrument Panel Wire and Instrument Panel J/B (Lower Finish Panel)
4E		
4H		
4J		
4M	31	
4S		

: Connector Joining Wire Harness and Wire Harness

Code	See Page	Joining Wire Harness and Wire Harness (Connector Location)
AA2	62 (H/B)	Engine Room Main Wire and Engine Room Main Wire (Instrument Panel Left)
	63 (S/D)	
AD3	62 (H/B)	Engine Room Main Wire and Instrument Panel Wire (Instrument Panel Left)
	63 (S/D)	
AD5	62 (H/B)	
	63 (S/D)	
BA1	60 (H/B)	Engine Room No.2 Wire and Engine Room Main Wire (Engine Compartment Left)
	61 (S/D)	
CA1	60 (H/B)	Engine Wire and Engine Room Main Wire (Engine Compartment Left)
	61 (S/D)	

: Ground Points

Code	See Page	Ground Points Location
A1	60 (H/B)	Left Suspension Tower
	61 (S/D)	
D1	62 (H/B)	Left Kick Panel
	63 (S/D)	

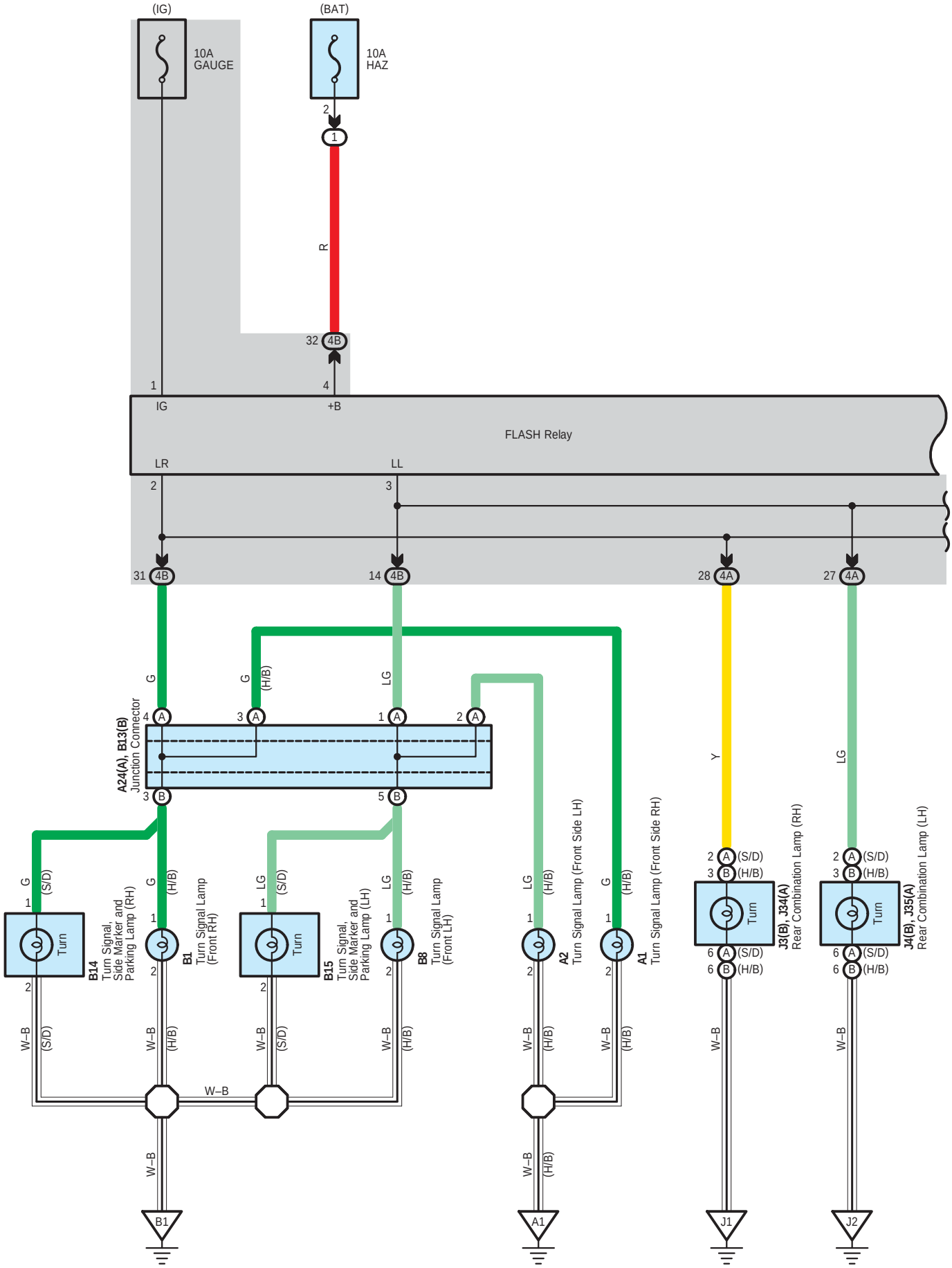
(IG)
(BAT)
10A
GAUGE
10A
HAZ
2
1
R
32 4B
1
4
IG
+B
FLASH Relay
LR
LL
2
3
31 4B
14 4B
28 4A
27 4A
G
G
(H/B)
LG
4 A
3 A
1 A
2 A
A24(A), B13(B)
Junction Connector
3 B
5 B
Y
LG
G (S/D)
1
Turn
2
W–B
(S/D)
B14
Turn Signal,
Side Marker and
Parking Lamp (RH)
G (H/B)
1
2
W–B
(H/B)
B1
Turn Signal Lamp
(Front RH)
LG (S/D)
1
Turn
2
W–B
(S/D)
B15
Turn Signal,
Side Marker and
Parking Lamp (LH)
LG (H/B)
1
2
W–B
(H/B)
B8
Turn Signal Lamp
(Front LH)
W–B
W–B
B1
LG (H/B)
1
2
W–B
(H/B)
A2
Turn Signal Lamp (Front Side LH)
G (H/B)
1
2
W–B
(H/B)
A1
Turn Signal Lamp (Front Side RH)
W–B
(H/B)
A1
2 A (S/D)
3 B (H/B)
Turn
6 A (S/D)
6 B (H/B)
J3(B), J34(A)
Rear Combination Lamp (RH)
W–B
J1
2 A (S/D)
3 B (H/B)
Turn
6 A (S/D)
6 B (H/B)
J4(B), J35(A)
Rear Combination Lamp (LH)
W–B
J2

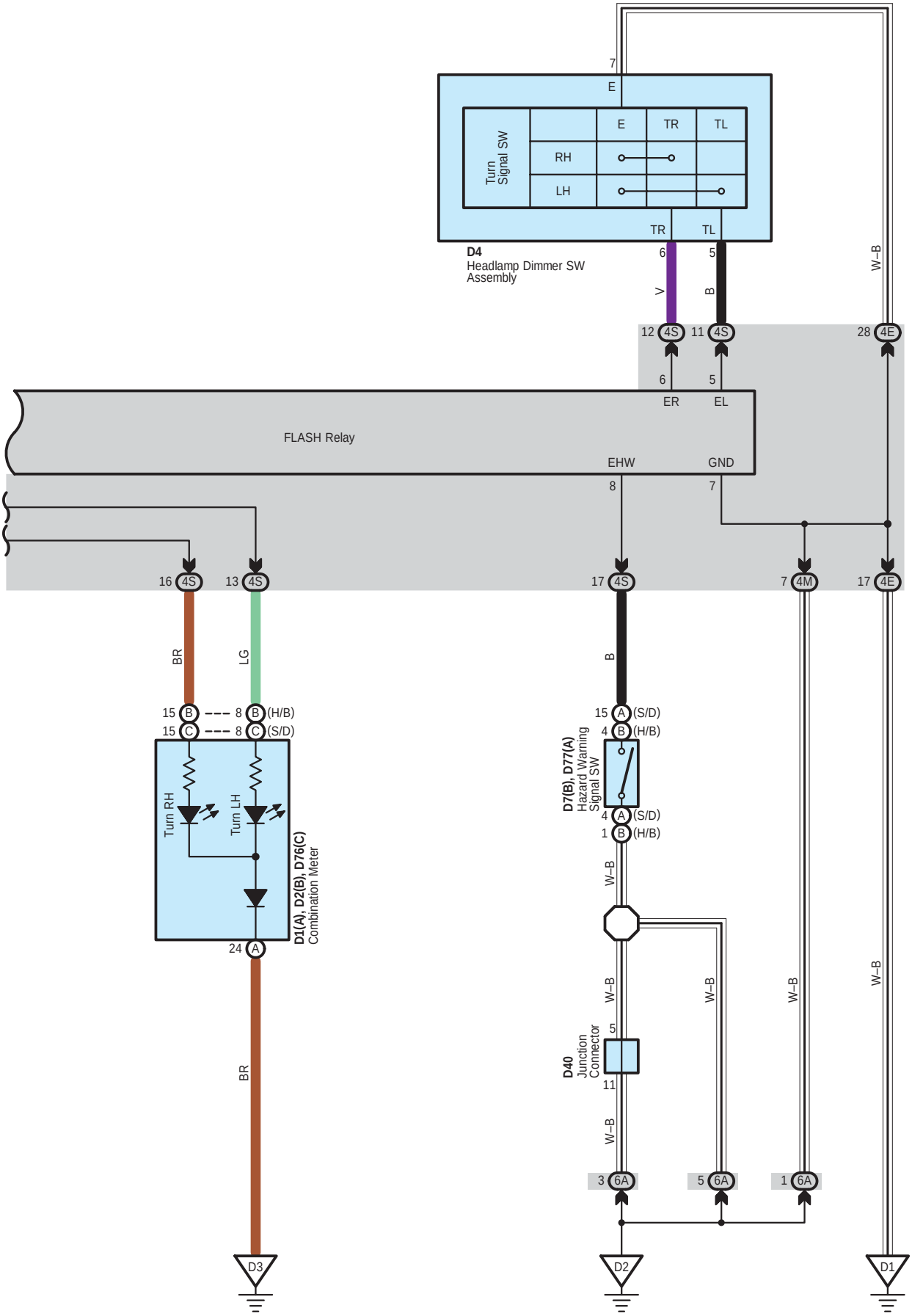
7
E
Turn Signal SW
E
TR
TL
RH
LH
TR
TL
D4
Headlamp Dimmer SW Assembly
6
5
V
B
W–B
12 4S
11 4S
28 4E
6
5
ER
EL
FLASH Relay
EHW
GND
8
7
16 4S
13 4S
17 4S
7 4M
17 4E
BR
LG
B
15 B
8 B (H/B)
15 C
8 C (S/D)
Turn RH
Turn LH
D1(A), D2(B), D76(C)
Combination Meter
24 A
15 A (S/D)
4 B (H/B)
D7(B), D77(A)
Hazard Warning Signal SW
4 A (S/D)
1 B (H/B)
W–B
W–B
W–B
W–B
W–B
5
D40
Junction Connector
11
W–B
3 6A
5 6A
1 6A
BR
D3
D2
D1

Turn Signal and Hazard Warning Light

: Parts Location

Code		See Page	Code		See Page	Code		See Page
A1		46 (H/B)	B15		48 (S/D)	D76	C	53 (S/D)
A2		46 (H/B)	D1	A	51 (H/B)	D77	A	53 (S/D)
A24	A	46 (H/B)			53 (S/D)	J3	B	55 (5–Door)
		48 (S/D)	D2	B	51 (H/B)			57 (3–Door)
B1		46 (H/B)	D4		51 (H/B)	J4	B	55 (5–Door)
B8		46 (H/B)			53 (S/D)			57 (3–Door)
B13	B	46 (H/B)	D7	B	51 (H/B)	J34	A	59 (4–Door)
		48 (S/D)	D40		51 (H/B)	J35	A	59 (4–Door)
B14		48 (S/D)			53 (S/D)			

: Relay Blocks

Code	See Page	Relay Blocks (Relay Block Location)
1	24	Engine Room R/B (Engine Compartment Left)

: Junction Block and Wire Harness Connector

Code	See Page	Junction Block and Wire Harness (Connector Location)
4A	30	Floor Wire and Instrument Panel J/B (Lower Finish Panel)
4B	30	Engine Room Main Wire and Instrument Panel J/B (Lower Finish Panel)
4E	30	Instrument Panel Wire and Instrument Panel J/B (Lower Finish Panel)
4M	31	
4S		
6A	40	Instrument Panel Wire and J/B No.6 (Right Kick Panel)

: Ground Points

Code	See Page	Ground Points Location
A1	60 (H/B)	Left Suspension Tower
B1	60 (H/B)	Radiator Support Left
	61 (S/D)	
D1	62 (H/B)	Left Kick Panel
	63 (S/D)	
D2	62 (H/B)	Right Kick Panel
	63 (S/D)	
D3	62 (H/B)	Instrument Panel Reinforcement Left
	63 (S/D)	
J1	64 (5–Door)	Right Rear Quarter Panel
	65 (3–Door)	
	66 (4–Door)	Lower Back Panel Right
J2	64 (5–Door)	Left Rear Quarter Panel
	65 (3–Door)	
	66 (4–Door)	Lower Back Panel Left

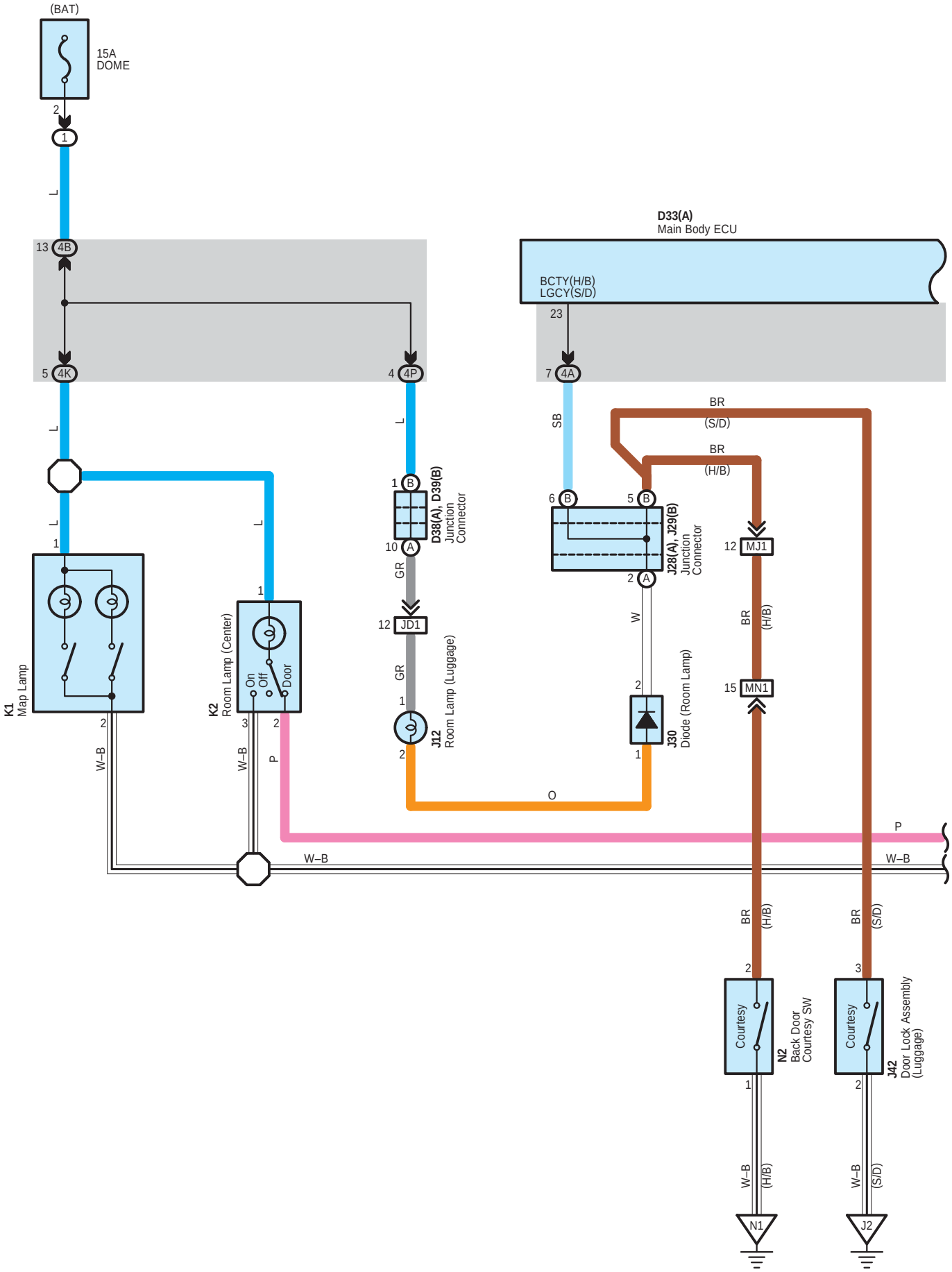
(BAT)
15A
DOME
2
1
L
13 4B
5 4K
4 4P
D33(A)
Main Body ECU
BCTY(H/B)
LGCY(S/D)
23
7 4A
SB
BR
(S/D)
BR
(H/B)
1 B
10 A
D38(A), D39(B)
Junction
Connector
6 B
5 B
2 A
J28(A), J29(B)
Junction
Connector
12 MJ1
15 MN1
GR
12 JD1
J12
Room Lamp (Luggage)
W
J30
Diode (Room Lamp)
O
K1
Map Lamp
K2
Room Lamp (Center)
On
Off
Door
W–B
P
Courtesy
N2
Back Door
Courtesy SW
J42
Door Lock Assembly
(Luggage)
N1
J2

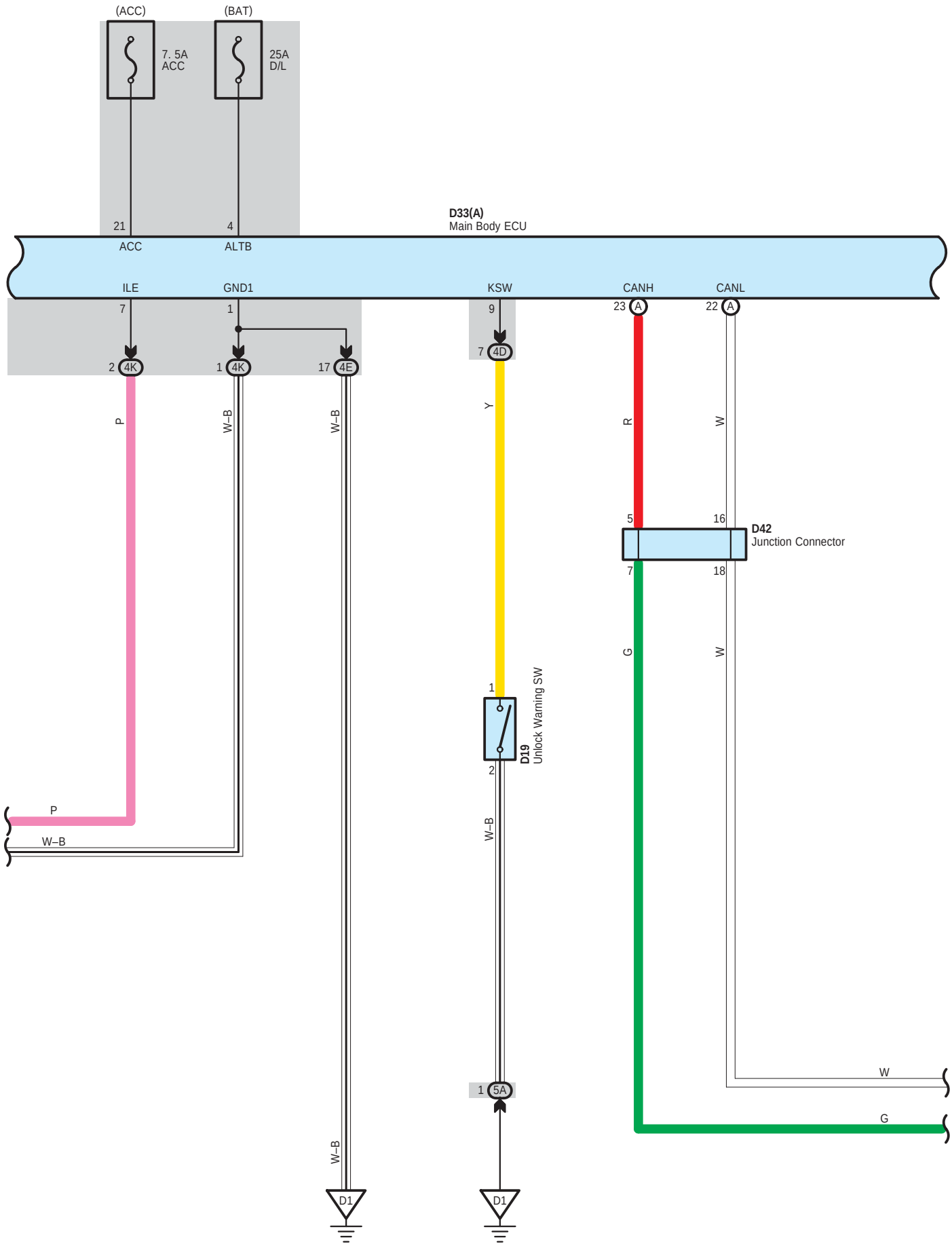
(ACC)
(BAT)
7. 5A
ACC
25A
D/L
21
4
ACC
ALTB
D33(A)
Main Body ECU
ILE
GND1
KSW
CANH
CANL
7
1
9
23 A
22 A
2 4K
1 4K
17 4E
7 4D
P
W–B
Y
R
W
5
16
D42
Junction Connector
7
18
G
W
1
D19
Unlock Warning SW
2
W–B
1 5A
W
G
W–B
D1
D1

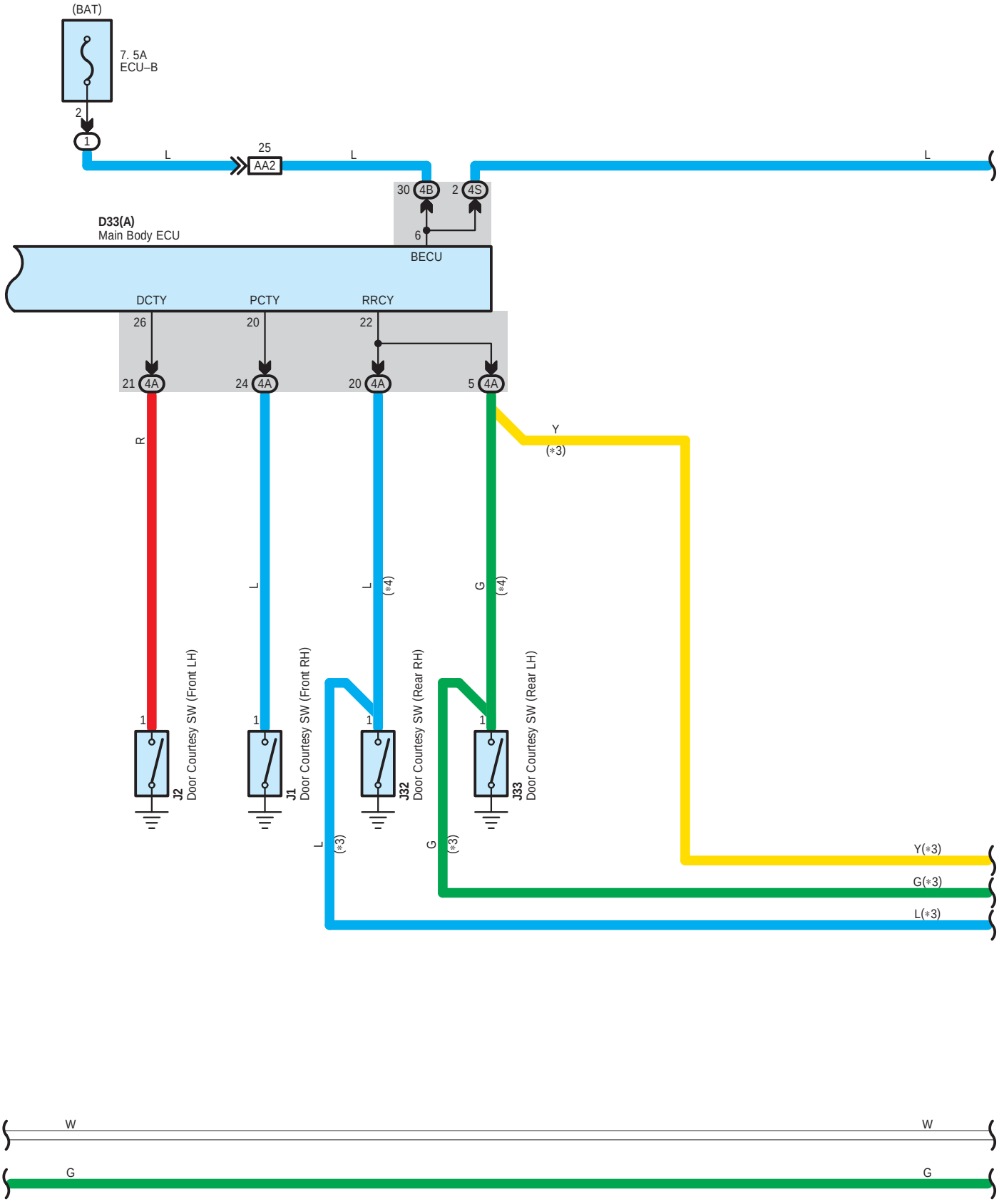
(BAT)
7. 5A
ECU–B
2
1
L
25
AA2
L
L
30 4B
2 4S
6
D33(A)
Main Body ECU
BECU
DCTY
PCTY
RRCY
26
20
22
21 4A
24 4A
20 4A
5 4A
R
L
L
(*4)
G
(*4)
Y
(*3)
1
J2
Door Courtesy SW (Front LH)
J1
Door Courtesy SW (Front RH)
J32
Door Courtesy SW (Rear RH)
J33
Door Courtesy SW (Rear LH)
L
(*3)
G
(*3)
Y(*3)
G(*3)
L(*3)

W
W
G
G

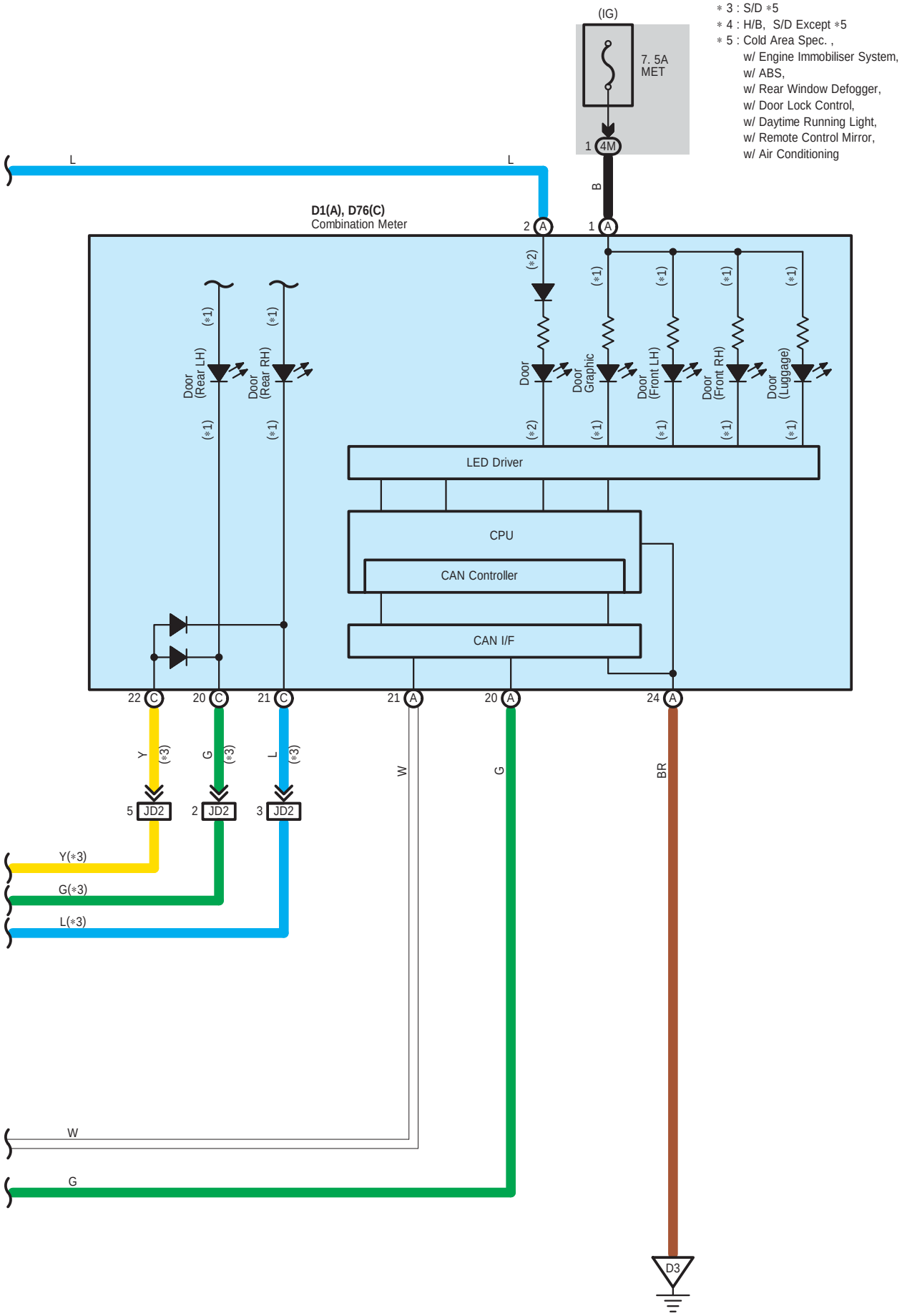
∗ 1 : S/D w/ Tachometer
∗ 2 : S/D w/o Tachometer, H/B
∗ 3 : S/D ∗5
∗ 4 : H/B, S/D Except ∗5
∗ 5 : Cold Area Spec. ,
w/ Engine Immobiliser System,
w/ ABS,
w/ Rear Window Defogger,
w/ Door Lock Control,
w/ Daytime Running Light,
w/ Remote Control Mirror,
w/ Air Conditioning
(IG)
7. 5A
MET
1 4M
B
L
L
D1(A), D76(C)
Combination Meter
2 A
1 A
(∗2)
(∗1)
Door (Rear LH)
Door (Rear RH)
Door
Door Graphic
Door (Front LH)
Door (Front RH)
Door (Luggage)
LED Driver
CPU
CAN Controller
CAN I/F
22 C
20 C
21 C
21 A
20 A
24 A
Y
G
L
W
G
BR
(∗3)
5 JD2
2 JD2
3 JD2
Y(∗3)
G(∗3)
L(∗3)
W
G
D3

Interior Light

: Parts Location

Code		See Page	Code		See Page	Code	See Page
D1	A	51 (H/B)	J1		59 (4–Door)	J30	59 (4–Door)
		53 (S/D)	J2		55 (5–Door)	J32	55 (5–Door)
D19		51 (H/B)			57 (3–Door)		59 (4–Door)
		53 (S/D)			59 (4–Door)	J33	55 (5–Door)
D33	A	51 (H/B)	J12		55 (5–Door)		59 (4–Door)
		53 (S/D)			57 (3–Door)	J42	59 (4–Door)
D38	A	51 (H/B)			59 (4–Door)	K1	54 (5–Door)
		53 (S/D)	J28	A	55 (5–Door)		56 (3–Door)
D39	B	51 (H/B)			57 (3–Door)		58 (4–Door)
		53 (S/D)			59 (4–Door)	K2	54 (5–Door)
D42		51 (H/B)	J29	B	55 (5–Door)		56 (3–Door)
		53 (S/D)			57 (3–Door)		58 (4–Door)
D76	C	53 (S/D)			59 (4–Door)	N2	54 (5–Door)
J1		55 (5–Door)	J30		55 (5–Door)		56 (3–Door)
		57 (3–Door)			57 (3–Door)		

: Relay Blocks

Code	See Page	Relay Blocks (Relay Block Location)
1	24	Engine Room R/B (Engine Compartment Left)

: Junction Block and Wire Harness Connector

Code	See Page	Junction Block and Wire Harness (Connector Location)
4A	30	Floor Wire and Instrument Panel J/B (Lower Finish Panel)
4B	30	Engine Room Main Wire and Instrument Panel J/B (Lower Finish Panel)
4D	30	Instrument Panel Wire and Instrument Panel J/B (Lower Finish Panel)
4E		
4K	30	Roof Wire and Instrument Panel J/B (Lower Finish Panel)
4M	31	Instrument Panel Wire and Instrument Panel J/B (Lower Finish Panel)
4P		
4S		
5A	38	Instrument Panel Wire and J/B No.5 (Left Kick Panel)

: Connector Joining Wire Harness and Wire Harness

Code	See Page	Joining Wire Harness and Wire Harness (Connector Location)
AA2	62 (H/B)	Engine Room Main Wire and Engine Room Main Wire (Instrument Panel Left)
	63 (S/D)	
JD1	62 (H/B)	Floor Wire and Instrument Panel Wire (Instrument Panel Left)
	63 (S/D)	
JD2	63 (S/D)	
MJ1	64 (5–Door)	Back Door No.1 Wire and Floor Wire (Left Rear Quarter Panel)
	65 (3–Door)	
MN1	64 (5–Door)	Back Door No.1 Wire and Back Door No.2 Wire (Back Door Panel Center)
	65 (3–Door)	

▽ : **Ground Points**

Code	See Page	Ground Points Location
D1	62 (H/B)	Left Kick Panel
	63 (S/D)	
D3	62 (H/B)	Instrument Panel Reinforcement Left
	63 (S/D)	
J2	66 (4–Door)	Lower Back Panel Left
N1	64 (5–Door)	Back Door Panel Center
	65 (3–Door)	

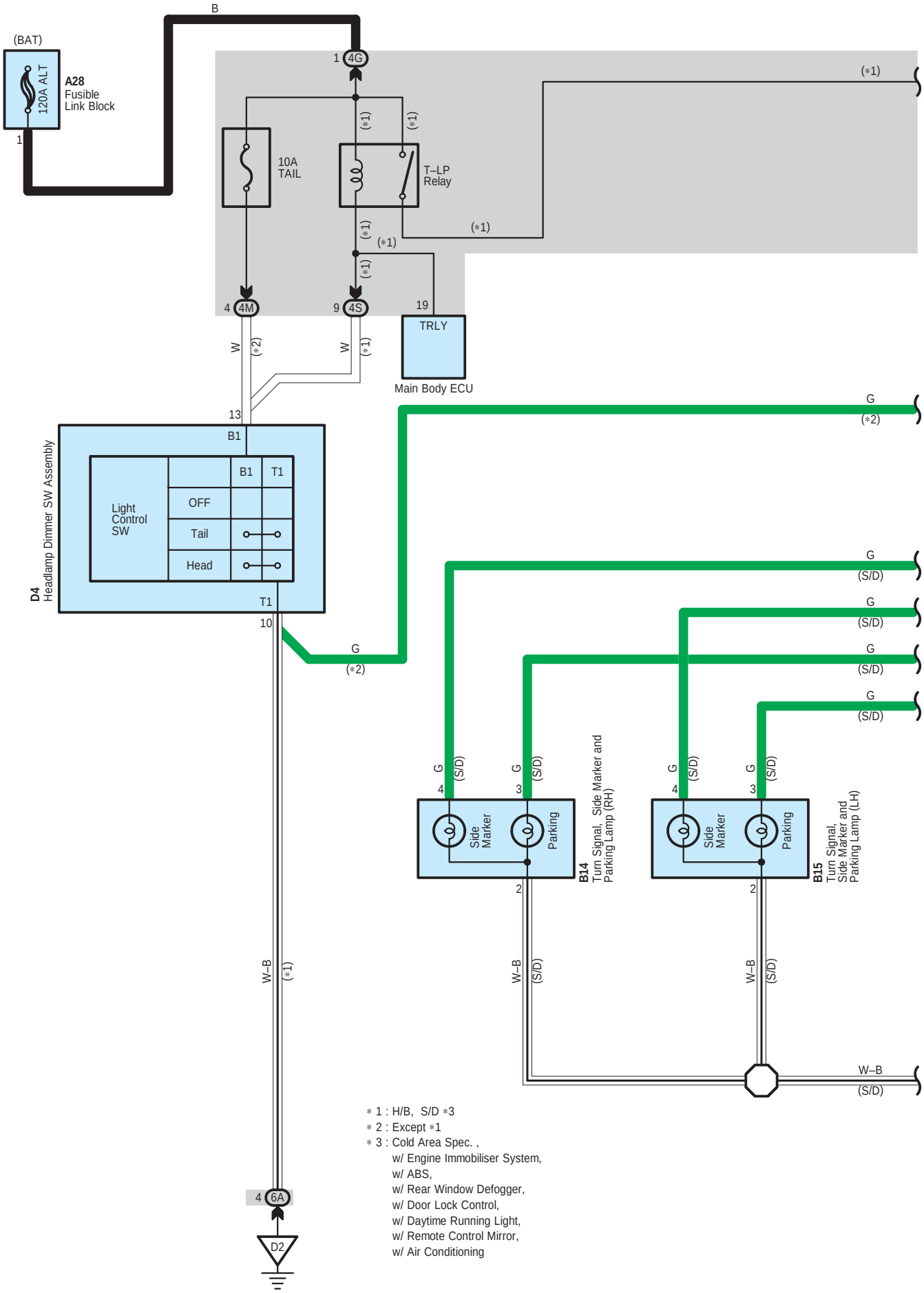
B
(BAT)
A28
Fusible
Link Block
120A ALT
1
1 4G
(*1)
10A
TAIL
T–LP
Relay
(*1)
4 4M
9 4S
19
TRLY
Main Body ECU
W
(*2)
(*1)
13
B1
D4
Headlamp Dimmer SW Assembly
Light
Control
SW
B1
T1
OFF
Tail
Head
T1
10
G
(*2)
G
(S/D)
B14
Turn Signal, Side Marker and
Parking Lamp (RH)
B15
Turn Signal,
Side Marker and
Parking Lamp (LH)
Side
Marker
Parking
W–B
(S/D)
4 6A
D2
* 1 : H/B, S/D *3
* 2 : Except *1
* 3 : Cold Area Spec. ,
w/ Engine Immobiliser System,
w/ ABS,
w/ Rear Window Defogger,
w/ Door Lock Control,
w/ Daytime Running Light,
w/ Remote Control Mirror,
w/ Air Conditioning

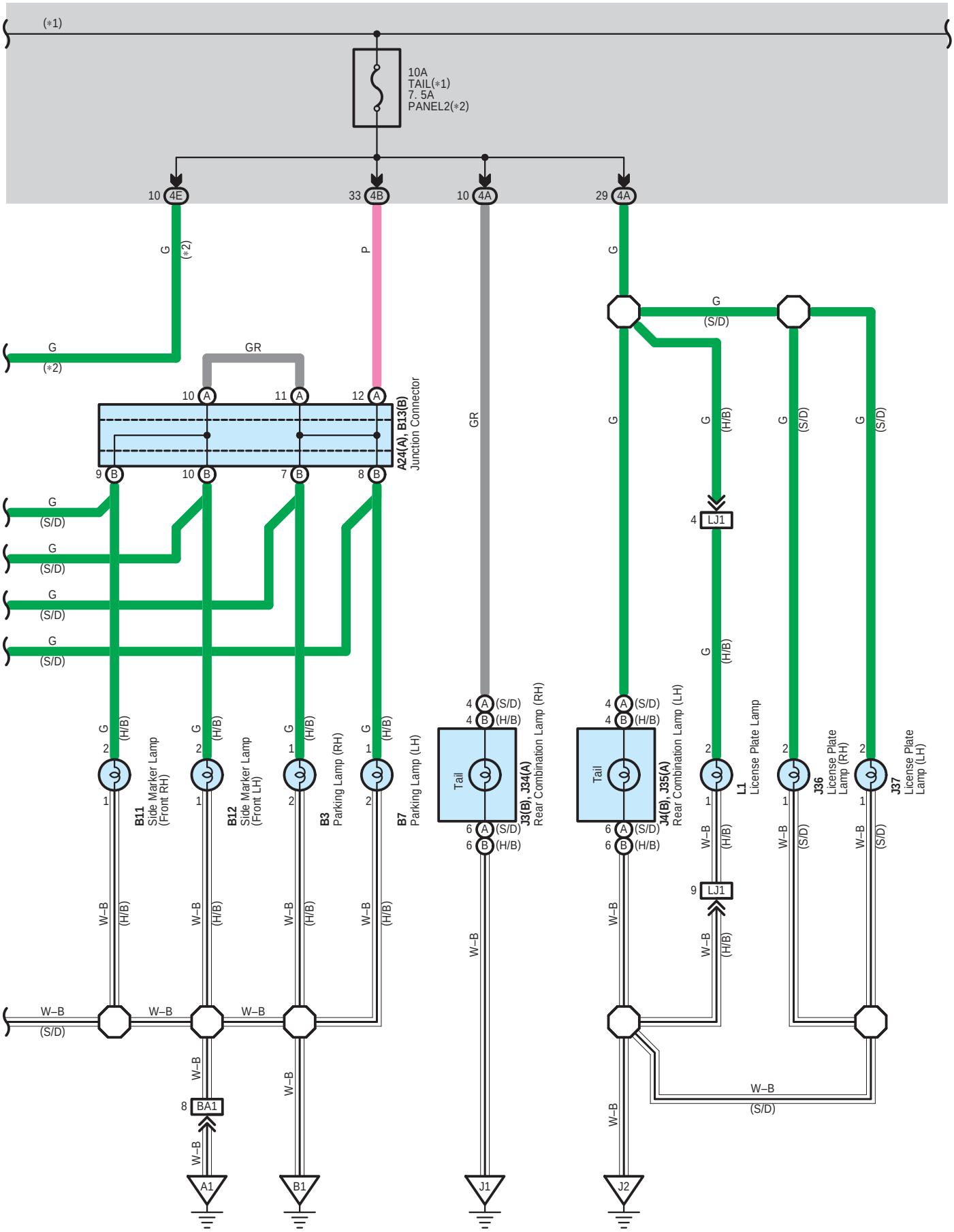
(*1)
10A
TAIL(*1)
7. 5A
PANEL2(*2)
10 4E
33 4B
10 4A
29 4A
G
(*2)
P
GR
A24(A), B13(B)
Junction Connector
B11
Side Marker Lamp
(Front RH)
B12
Side Marker Lamp
(Front LH)
B3
Parking Lamp (RH)
B7
Parking Lamp (LH)
J3(B), J34(A)
Rear Combination Lamp (RH)
J4(B), J35(A)
Rear Combination Lamp (LH)
L1
License Plate Lamp
J36
License Plate
Lamp (RH)
J37
License Plate
Lamp (LH)
Tail
LJ1
BA1
A1
B1
J1
J2
W–B
(S/D)
(H/B)

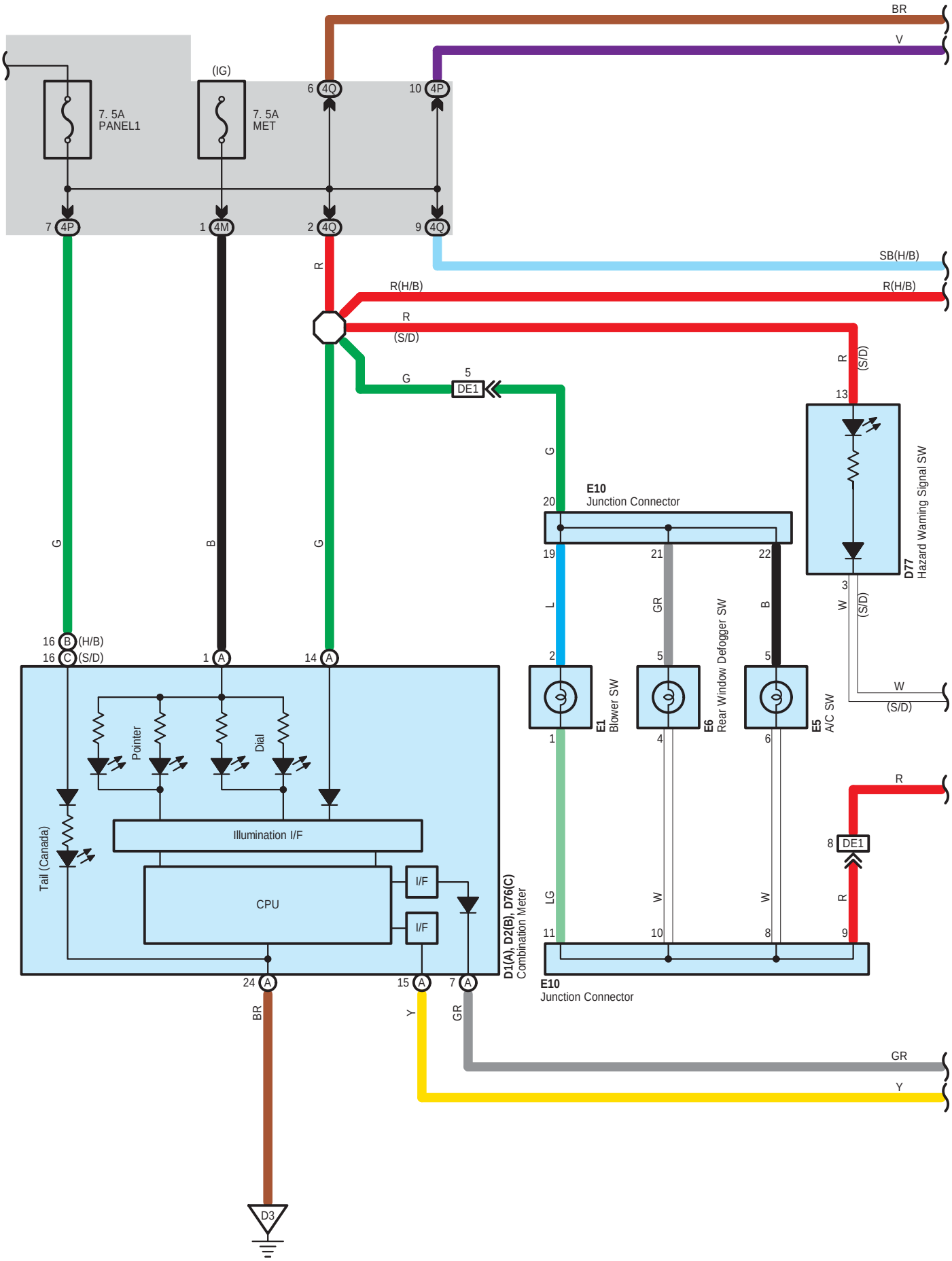
BR
V
(IG)
7. 5A
PANEL1
7. 5A
MET
6 4Q
10 4P
7 4P
1 4M
2 4Q
9 4Q
SB(H/B)
R(H/B)
R(H/B)
R
(S/D)
G
5
DE1
R
(S/D)
13
D77
Hazard Warning Signal SW
3
W
(S/D)
W
(S/D)
G
20
E10
Junction Connector
19
21
22
L
GR
B
2
5
5
E1
Blower SW
E6
Rear Window Defogger SW
E5
A/C SW
1
4
6
G
B
G
16 B (H/B)
16 C (S/D)
1 A
14 A
Pointer
Dial
Tail (Canada)
Illumination I/F
CPU
I/F
I/F
D1(A), D2(B), D76(C)
Combination Meter
R
8 DE1
LG
W
W
R
11
10
8
9
E10
Junction Connector
24 A
15 A
7 A
BR
Y
GR
GR
Y
D3

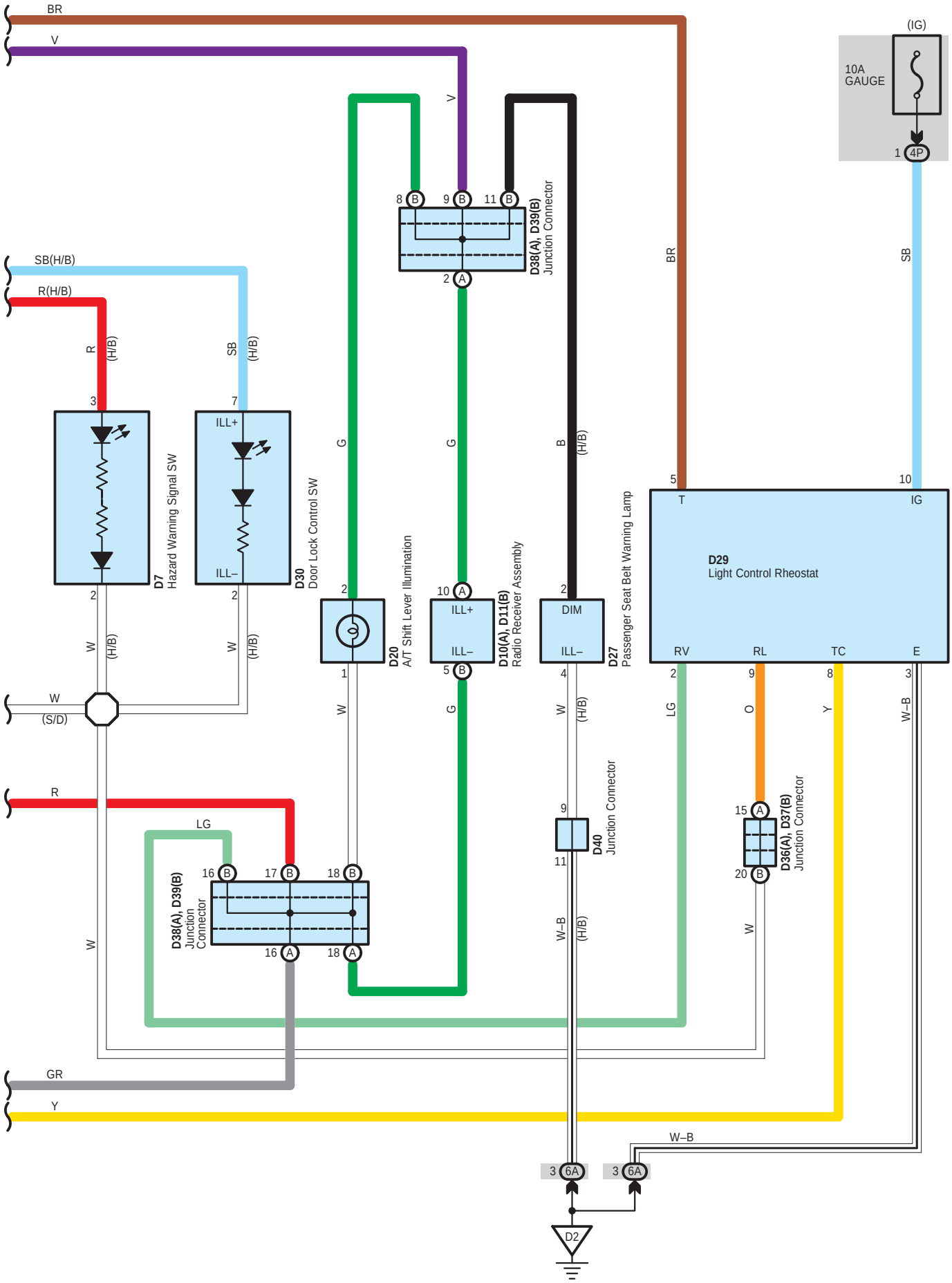
BR
V
(IG)
10A
GAUGE
1 4P
SB
SB(H/B)
R(H/B)
R (H/B)
SB (H/B)
3
7
ILL+
ILL–
D7
Hazard Warning Signal SW
D30
Door Lock Control SW
2
2
W (H/B)
W (H/B)
W
(S/D)
G
G
V
8 B 9 B 11 B
D38(A), D39(B)
Junction Connector
2 A
B (H/B)
BR
5
T
10
IG
D29
Light Control Rheostat
RV RL TC E
2 9 8 3
LG O Y W–B
2
D20
A/T Shift Lever Illumination
1
W
10 A
ILL+
ILL–
5 B
G
D10(A), D11(B)
Radio Receiver Assembly
2
DIM
ILL–
4
W (H/B)
D27
Passenger Seat Belt Warning Lamp
R
LG
16 B 17 B 18 B
D38(A), D39(B)
Junction
Connector
16 A 18 A
W
9
11
D40
Junction Connector
W–B (H/B)
15 A
20 B
D36(A), D37(B)
Junction Connector
W
GR
Y
W–B
3 6A
3 6A
D2

Taillight and Illumination

○ : Parts Location

Code	See Page	Code	See Page	Code	See Page
A24 A	46 (H/B)	D10 A	53 (S/D)	D77	53 (S/D)
	48 (S/D)	D11 B	51 (H/B)	E1	50 (H/B)
A28	43, 46 (H/B)		53 (S/D)		52 (S/D)
	43, 48 (S/D)	D20	51 (H/B)	E5	50 (H/B)
B3	46 (H/B)		53 (S/D)		52 (S/D)
B7	46 (H/B)	D27	51 (H/B)	E6	50 (H/B)
B11	46 (H/B)	D29	51 (H/B)		52 (S/D)
B12	46 (H/B)		53 (S/D)	E10	50 (H/B)
B13 B	46 (H/B)	D30	51 (H/B)		52 (S/D)
	48 (S/D)	D36 A	51 (H/B)	J3 B	55 (5–Door)
B14	48 (S/D)		53 (S/D)		57 (3–Door)
B15	48 (S/D)	D37 B	51 (H/B)	J4 B	55 (5–Door)
D1 A	51 (H/B)		53 (S/D)		57 (3–Door)
	53 (S/D)	D38 A	51 (H/B)	J34 A	59 (4–Door)
D2 B	51 (H/B)		53 (S/D)	J35 A	59 (4–Door)
D4	51 (H/B)	D39 B	51 (H/B)	J36	59 (4–Door)
	53 (S/D)		53 (S/D)	J37	59 (4–Door)
D7	51 (H/B)	D40	51 (H/B)	L1	54 (5–Door)
D10 A	51 (H/B)	D76 C	53 (S/D)		56 (3–Door)

⬭ : Junction Block and Wire Harness Connector

Code	See Page	Junction Block and Wire Harness (Connector Location)
4A	30	Floor Wire and Instrument Panel J/B (Lower Finish Panel)
4B	30	Engine Room Main Wire and Instrument Panel J/B (Lower Finish Panel)
4E	30	Instrument Panel Wire and Instrument Panel J/B (Lower Finish Panel)
4G	30	Engine Room Main Wire and Instrument Panel J/B (Lower Finish Panel)
4M	31	Instrument Panel Wire and Instrument Panel J/B (Lower Finish Panel)
4P		
4Q		
4S		
6A	40	Instrument Panel Wire and J/B No.6 (Right Kick Panel)

▭ : Connector Joining Wire Harness and Wire Harness

Code	See Page	Joining Wire Harness and Wire Harness (Connector Location)
BA1	60 (H/B)	Engine Room No.2 Wire and Engine Room Main Wire (Engine Compartment Left)
	61 (S/D)	
DE1	62 (H/B)	Instrument Panel Wire and Instrument Panel No.2 Wire (Instrument Panel Center)
	63 (S/D)	
LJ1	64 (5–Door)	Luggage Room No.2 Wire and Floor Wire (Luggage Room Left)
	65 (3–Door)	

▽ : **Ground Points**

Code	See Page	Ground Points Location
A1	60 (H/B)	Left Suspension Tower
	61 (S/D)	
B1	60 (H/B)	Radiator Support Left
	61 (S/D)	
D2	62 (H/B)	Right Kick Panel
	63 (S/D)	
D3	62 (H/B)	Instrument Panel Reinforcement Left
	63 (S/D)	
J1	64 (5–Door)	Right Rear Quarter Panel
	65 (3–Door)	
	66 (4–Door)	Lower Back Panel Right
J2	64 (5–Door)	Left Rear Quarter Panel
	65 (3–Door)	
	66 (4–Door)	Lower Back Panel Left

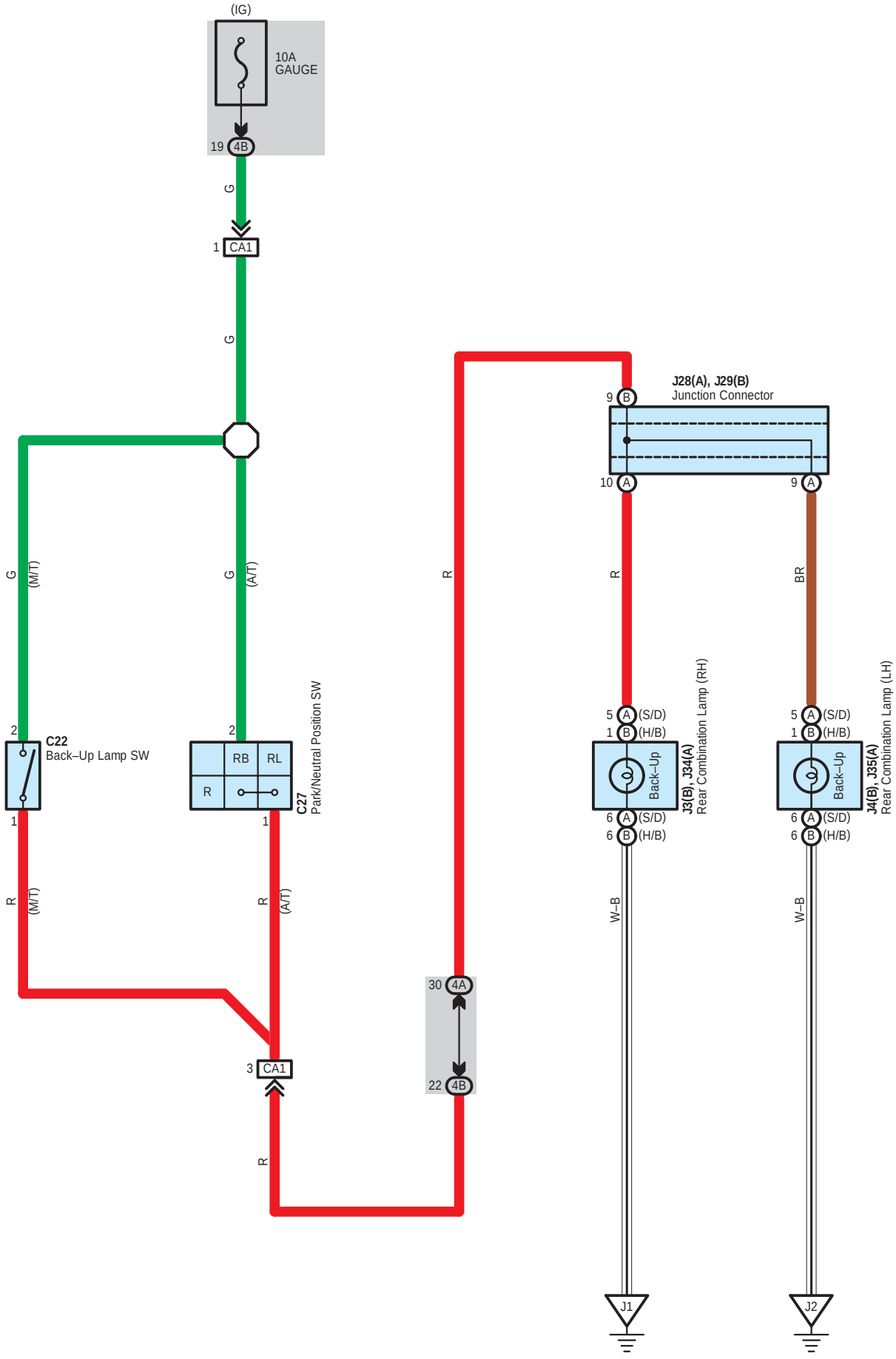
(IG)
10A
GAUGE
19
4B
G
1
CA1
G
G
(M/T)
G
(A/T)
2
C22
Back–Up Lamp SW
1
R
(M/T)
2
RB
RL
R
1
C27
Park/Neutral Position SW
R
(A/T)
3
CA1
R
30
4A
22
4B
R
9
B
J28(A), J29(B)
Junction Connector
10
A
9
A
R
BR
5
A
(S/D)
1
B
(H/B)
Back–Up
6
A
(S/D)
6
B
(H/B)
J3(B), J34(A)
Rear Combination Lamp (RH)
J4(B), J35(A)
Rear Combination Lamp (LH)
W–B
W–B
J1
J2

: Parts Location

Code		See Page	Code		See Page	Code		See Page
C22		47 (H/B)	J4	B	55 (5–Door)	J29	B	57 (3–Door)
		49 (S/D)			57 (3–Door)			59 (4–Door)
C27		47 (H/B)	J28	A	55 (5–Door)	J34	A	59 (4–Door)
		49 (S/D)			57 (3–Door)	J35	A	59 (4–Door)
J3	B	55 (5–Door)			59 (4–Door)			
		57 (3–Door)	J29	B	55 (5–Door)			

: Junction Block and Wire Harness Connector

Code	See Page	Junction Block and Wire Harness (Connector Location)
4A	30	Floor Wire and Instrument Panel J/B (Lower Finish Panel)
4B	30	Engine Room Main Wire and Instrument Panel J/B (Lower Finish Panel)

: Connector Joining Wire Harness and Wire Harness

Code	See Page	Joining Wire Harness and Wire Harness (Connector Location)
CA1	60 (H/B)	Engine Wire and Engine Room Main Wire (Engine Compartment Left)
	61 (S/D)	

: Ground Points

Code	See Page	Ground Points Location
J1	64 (5–Door)	Right Rear Quarter Panel
	65 (3–Door)	
	66 (4–Door)	Lower Back Panel Right
J2	64 (5–Door)	Left Rear Quarter Panel
	65 (3–Door)	
	66 (4–Door)	Lower Back Panel Left

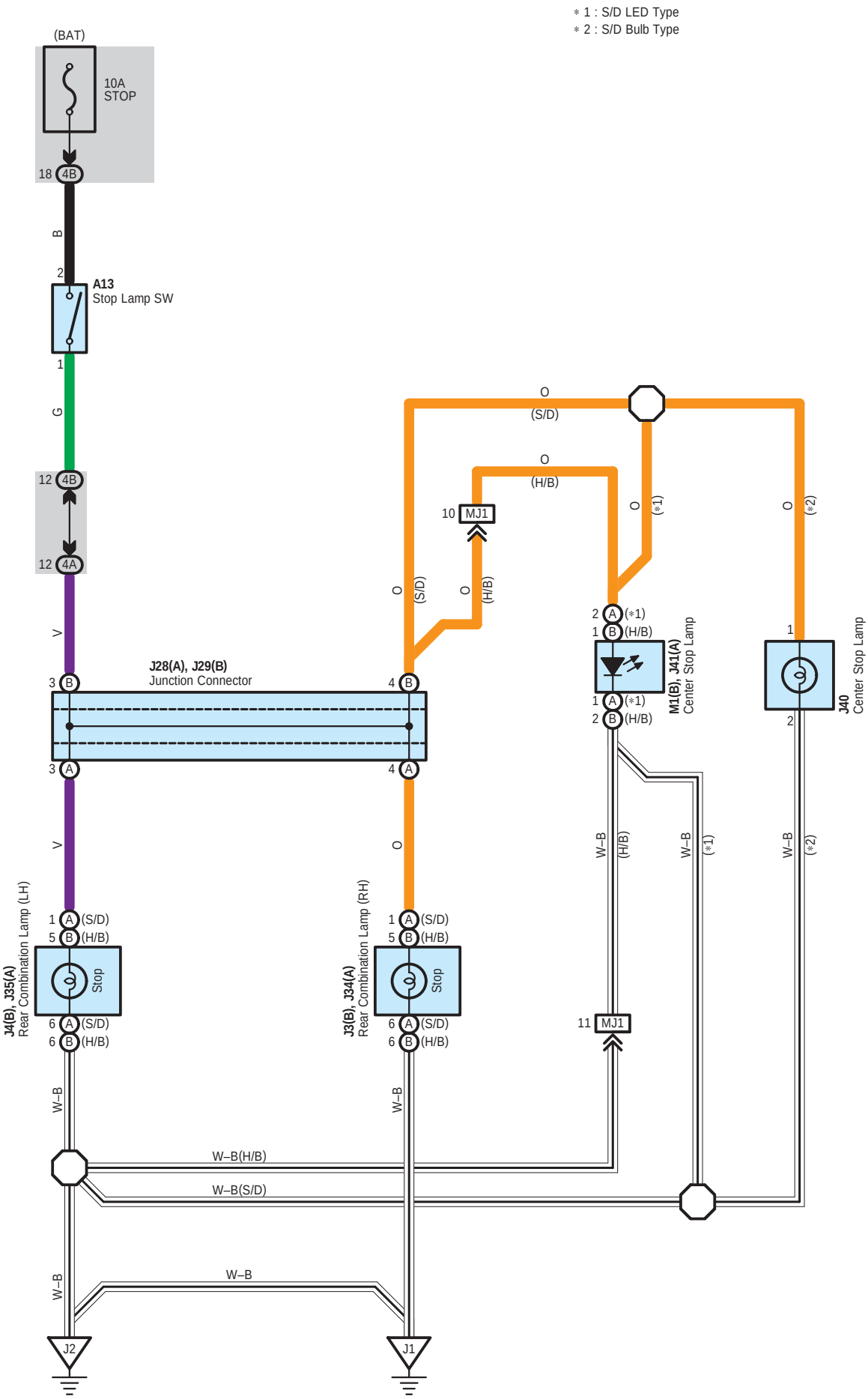
* 1 : S/D LED Type
* 2 : S/D Bulb Type
(BAT)
10A
STOP
18 4B
B
2
A13
Stop Lamp SW
1
G
12 4B
12 4A
V
3 B
3 A
J28(A), J29(B)
Junction Connector
4 B
4 A
O
(S/D)
O
(H/B)
10 MJ1
O
(*1)
O
(*2)
2 A (*1)
1 B (H/B)
1 A (*1)
2 B (H/B)
M1(B), J41(A)
Center Stop Lamp
1
2
J40
Center Stop Lamp
V
O
1 A (S/D)
5 B (H/B)
6 A (S/D)
6 B (H/B)
J4(B), J35(A)
Rear Combination Lamp (LH)
Stop
J3(B), J34(A)
Rear Combination Lamp (RH)
Stop
11 MJ1
W–B
(H/B)
W–B
(*1)
W–B
(*2)
W–B
W–B
W–B(H/B)
W–B(S/D)
W–B
J2
J1

: Parts Location

Code		See Page	Code		See Page	Code		See Page
A13		50 (H/B)	J28	A	55 (5–Door)	J34	A	59 (4–Door)
		52 (S/D)			57 (3–Door)	J35	A	59 (4–Door)
J3	B	55 (5–Door)			59 (4–Door)	J40		59 (4–Door)
		57 (3–Door)	J29	B	55 (5–Door)	J41	A	59 (4–Door)
J4	B	55 (5–Door)			57 (3–Door)	M1	B	54 (5–Door)
		57 (3–Door)			59 (4–Door)			56 (3–Door)

: Junction Block and Wire Harness Connector

Code	See Page	Junction Block and Wire Harness (Connector Location)
4A	30	Floor Wire and Instrument Panel J/B (Lower Finish Panel)
4B	30	Engine Room Main Wire and Instrument Panel J/B (Lower Finish Panel)

: Connector Joining Wire Harness and Wire Harness

Code	See Page	Joining Wire Harness and Wire Harness (Connector Location)
MJ1	64 (5–Door)	Back Door No.1 Wire and Floor Wire (Left Rear Quarter Panel)
	65 (3–Door)	

: Ground Points

Code	See Page	Ground Points Location
J1	64 (5–Door)	Right Rear Quarter Panel
	65 (3–Door)	
	66 (4–Door)	Lower Back Panel Right
J2	64 (5–Door)	Left Rear Quarter Panel
	65 (3–Door)	
	66 (4–Door)	Lower Back Panel Left

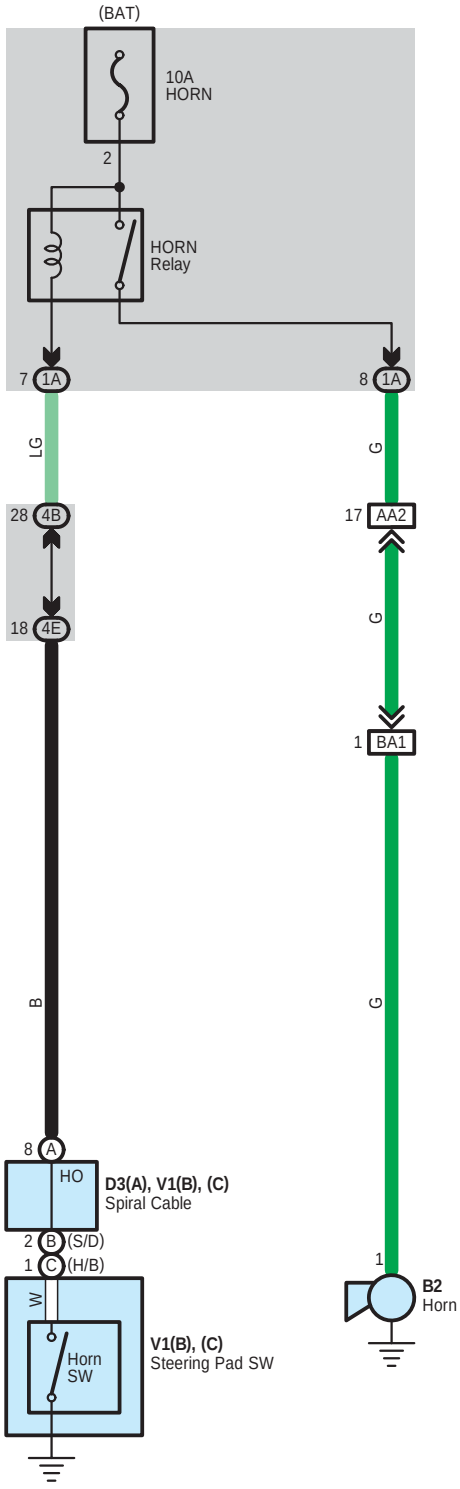
(BAT)
10A
HORN
2
HORN
Relay
7 1A
8 1A
LG
G
28 4B
17 AA2
18 4E
G
1 BA1
B
G
8 A
HO
D3(A), V1(B), (C)
Spiral Cable
2 B (S/D)
1 C (H/B)
W
Horn
SW
V1(B), (C)
Steering Pad SW
1
B2
Horn

○ : Parts Location

Code	See Page	Code		See Page	Code		See Page
B2	46 (H/B)	D3	A	51 (H/B)	V1	B	52 (S/D)
	48 (S/D)			53 (S/D)		C	50 (H/B)

: Junction Block and Wire Harness Connector

Code	See Page	Junction Block and Wire Harness (Connector Location)
1A	25	Engine Room Main Wire and Engine Room J/B (Engine Compartment Left)
4B	30	Engine Room Main Wire and Instrument Panel J/B (Lower Finish Panel)
4E	30	Instrument Panel Wire and Instrument Panel J/B (Lower Finish Panel)

: Connector Joining Wire Harness and Wire Harness

Code	See Page	Joining Wire Harness and Wire Harness (Connector Location)
AA2	62 (H/B)	Engine Room Main Wire and Engine Room Main Wire (Instrument Panel Left)
	63 (S/D)	
BA1	60 (H/B)	Engine Room No.2 Wire and Engine Room Main Wire (Engine Compartment Left)
	61 (S/D)	

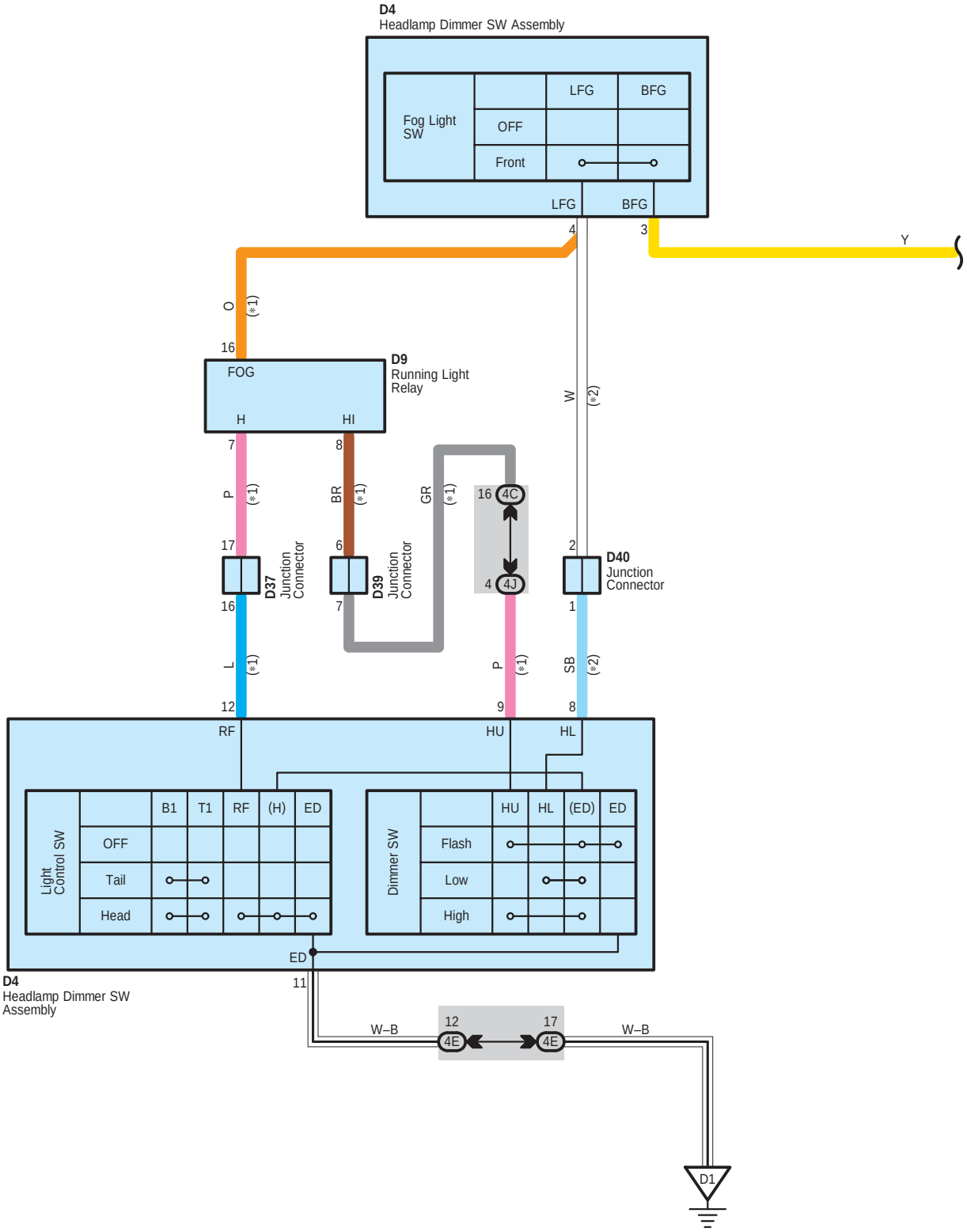
D4
Headlamp Dimmer SW Assembly
Fog Light SW
LFG
BFG
OFF
Front
4
3
Y
O
(*1)
16
D9
Running Light Relay
FOG
H
HI
W
(*2)
7
8
P
BR
GR
16 4C
17
6
2
D40
Junction Connector
D37
Junction Connector
D39
Junction Connector
4 4J
16
7
1
L
P
SB
12
9
8
RF
HU
HL
Light Control SW
B1
T1
RF
(H)
ED
OFF
Tail
Head
Dimmer SW
HU
HL
(ED)
ED
Flash
Low
High
ED
11
W–B
12 4E
17 4E
W–B
D1
D4
Headlamp Dimmer SW Assembly

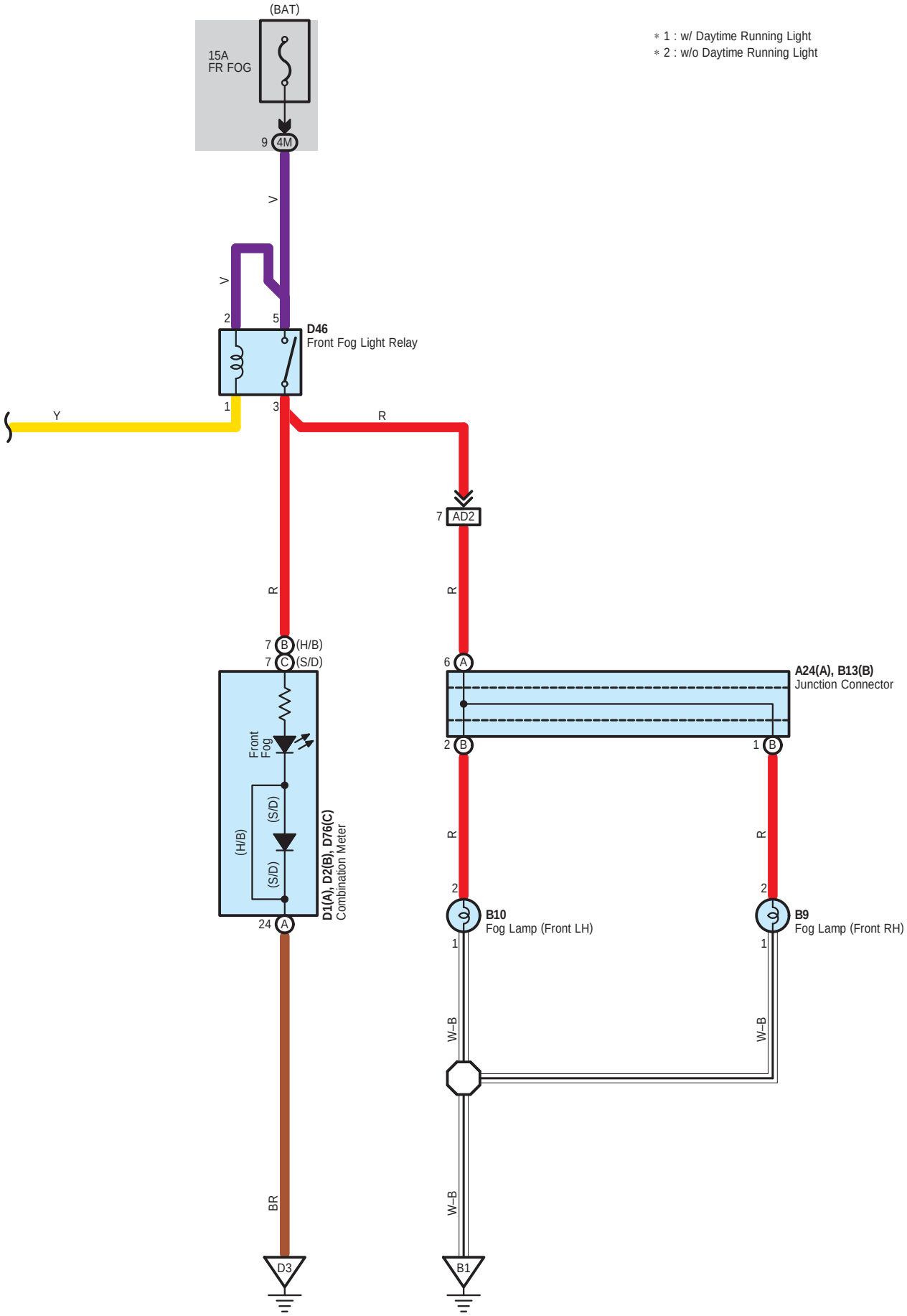
(BAT)
15A
FR FOG
9 4M
V
V
2
5
D46
Front Fog Light Relay
1
3
Y
R
7 AD2
R
R
7 B (H/B)
7 C (S/D)
6 A
A24(A), B13(B)
Junction Connector
2 B
1 B
Front Fog
(H/B)
(S/D)
(S/D)
D1(A), D2(B), D76(C)
Combination Meter
24 A
R
R
2
2
B10
Fog Lamp (Front LH)
B9
Fog Lamp (Front RH)
1
1
W-B
W-B
W-B
BR
D3
B1
∗ 1 : w/ Daytime Running Light
∗ 2 : w/o Daytime Running Light

Front Fog Light

○ : Parts Location

Code		See Page	Code		See Page	Code		See Page
A24	A	46 (H/B)	D1	A	51 (H/B)	D37		53 (S/D)
		48 (S/D)			53 (S/D)	D39		51 (H/B)
B9		46 (H/B)	D2	B	51 (H/B)			53 (S/D)
		48 (S/D)	D4		51 (H/B)	D40		51 (H/B)
B10		46 (H/B)			53 (S/D)			53 (S/D)
		48 (S/D)	D9		51 (H/B)	D46		51 (H/B)
B13	B	46 (H/B)			53 (S/D)			53 (S/D)
		48 (S/D)	D37		51 (H/B)	D76	C	53 (S/D)

⬭ : Junction Block and Wire Harness Connector

Code	See Page	Junction Block and Wire Harness (Connector Location)
4C	30	Instrument Panel Wire and Instrument Panel J/B (Lower Finish Panel)
4E		
4J		
4M	31	

▭ : Connector Joining Wire Harness and Wire Harness

Code	See Page	Joining Wire Harness and Wire Harness (Connector Location)
AD2	62 (H/B)	Engine Room Main Wire and Instrument Panel Wire (Instrument Panel Left)
	63 (S/D)	

▽ : Ground Points

Code	See Page	Ground Points Location
B1	60 (H/B)	Radiator Support Left
	61 (S/D)	
D1	62 (H/B)	Left Kick Panel
	63 (S/D)	
D3	62 (H/B)	Instrument Panel Reinforcement Left
	63 (S/D)	

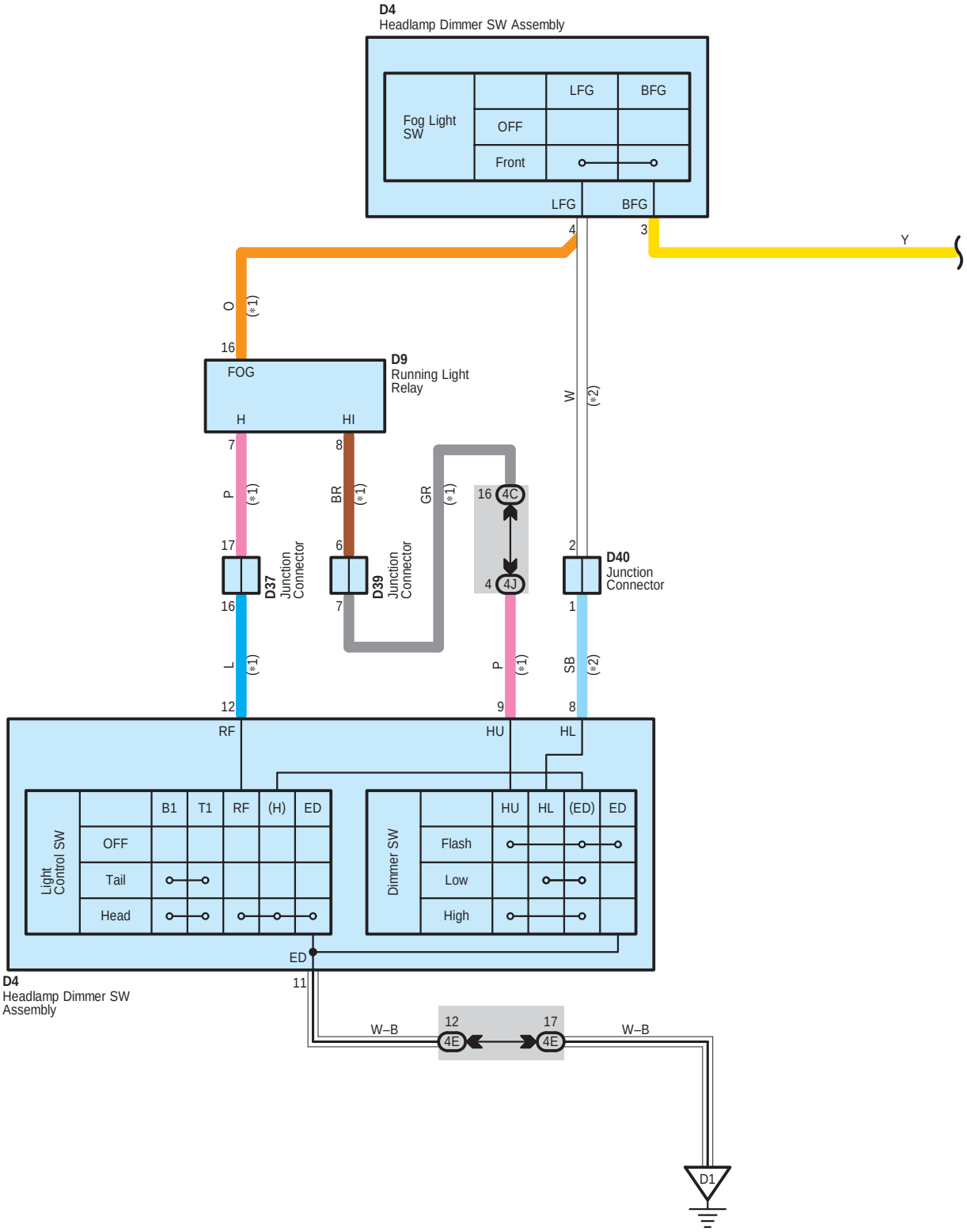
D4
Headlamp Dimmer SW Assembly
Fog Light SW
LFG
BFG
OFF
Front
4
3
Y
O
(*1)
16
D9
Running Light Relay
FOG
H
HI
W
(*2)
7
8
P
BR
GR
16 4C
17
6
2
D40
Junction Connector
D37
Junction Connector
D39
Junction Connector
4 4J
16
7
1
L
P
SB
12
9
8
RF
HU
HL
Light Control SW
B1
T1
RF
(H)
ED
OFF
Tail
Head
Dimmer SW
HU
HL
(ED)
ED
Flash
Low
High
ED
11
W–B
12 4E
17 4E
W–B
D1
D4
Headlamp Dimmer SW Assembly

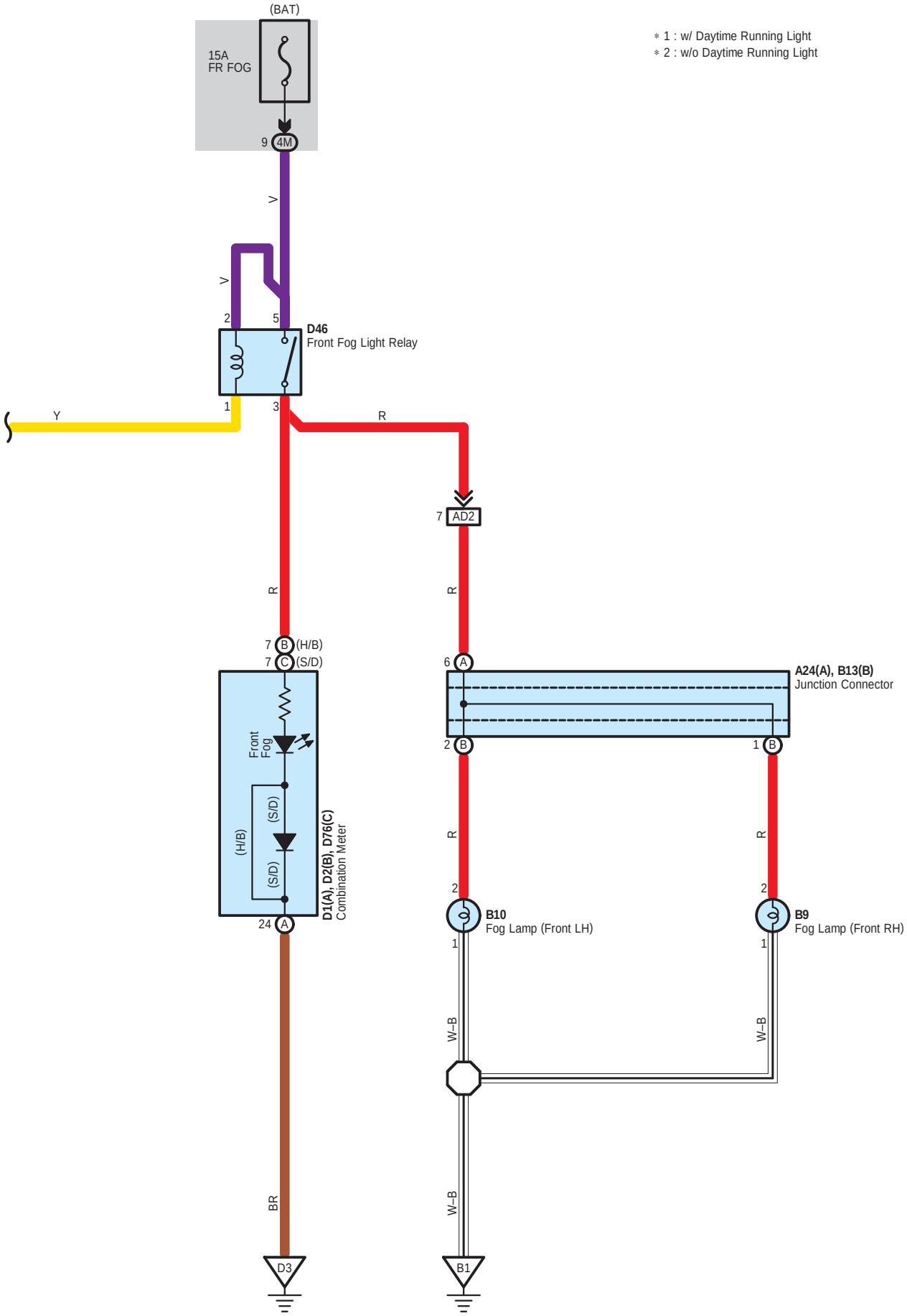
(BAT)
15A
FR FOG
9 4M
V
V
2
5
D46
Front Fog Light Relay
1
3
Y
R
7 AD2
R
R
7 B (H/B)
7 C (S/D)
6 A
A24(A), B13(B)
Junction Connector
2 B
1 B
Front Fog
(H/B)
(S/D)
(S/D)
D1(A), D2(B), D76(C)
Combination Meter
24 A
R
R
2
2
B10
Fog Lamp (Front LH)
B9
Fog Lamp (Front RH)
1
1
W-B
W-B
W-B
BR
D3
B1
∗ 1 : w/ Daytime Running Light
∗ 2 : w/o Daytime Running Light

Front Fog Light

○ : Parts Location

Code		See Page	Code		See Page	Code		See Page
A24	A	46 (H/B)	D1	A	51 (H/B)	D37		53 (S/D)
		48 (S/D)			53 (S/D)	D39		51 (H/B)
B9		46 (H/B)	D2	B	51 (H/B)			53 (S/D)
		48 (S/D)	D4		51 (H/B)	D40		51 (H/B)
B10		46 (H/B)			53 (S/D)			53 (S/D)
		48 (S/D)	D9		51 (H/B)	D46		51 (H/B)
B13	B	46 (H/B)			53 (S/D)			53 (S/D)
		48 (S/D)	D37		51 (H/B)	D76	C	53 (S/D)

⬭ : Junction Block and Wire Harness Connector

Code	See Page	Junction Block and Wire Harness (Connector Location)
4C	30	Instrument Panel Wire and Instrument Panel J/B (Lower Finish Panel)
4E		
4J		
4M	31	

▭ : Connector Joining Wire Harness and Wire Harness

Code	See Page	Joining Wire Harness and Wire Harness (Connector Location)
AD2	62 (H/B)	Engine Room Main Wire and Instrument Panel Wire (Instrument Panel Left)
	63 (S/D)	

▽ : Ground Points

Code	See Page	Ground Points Location
B1	60 (H/B)	Radiator Support Left
	61 (S/D)	
D1	62 (H/B)	Left Kick Panel
	63 (S/D)	
D3	62 (H/B)	Instrument Panel Reinforcement Left
	63 (S/D)	

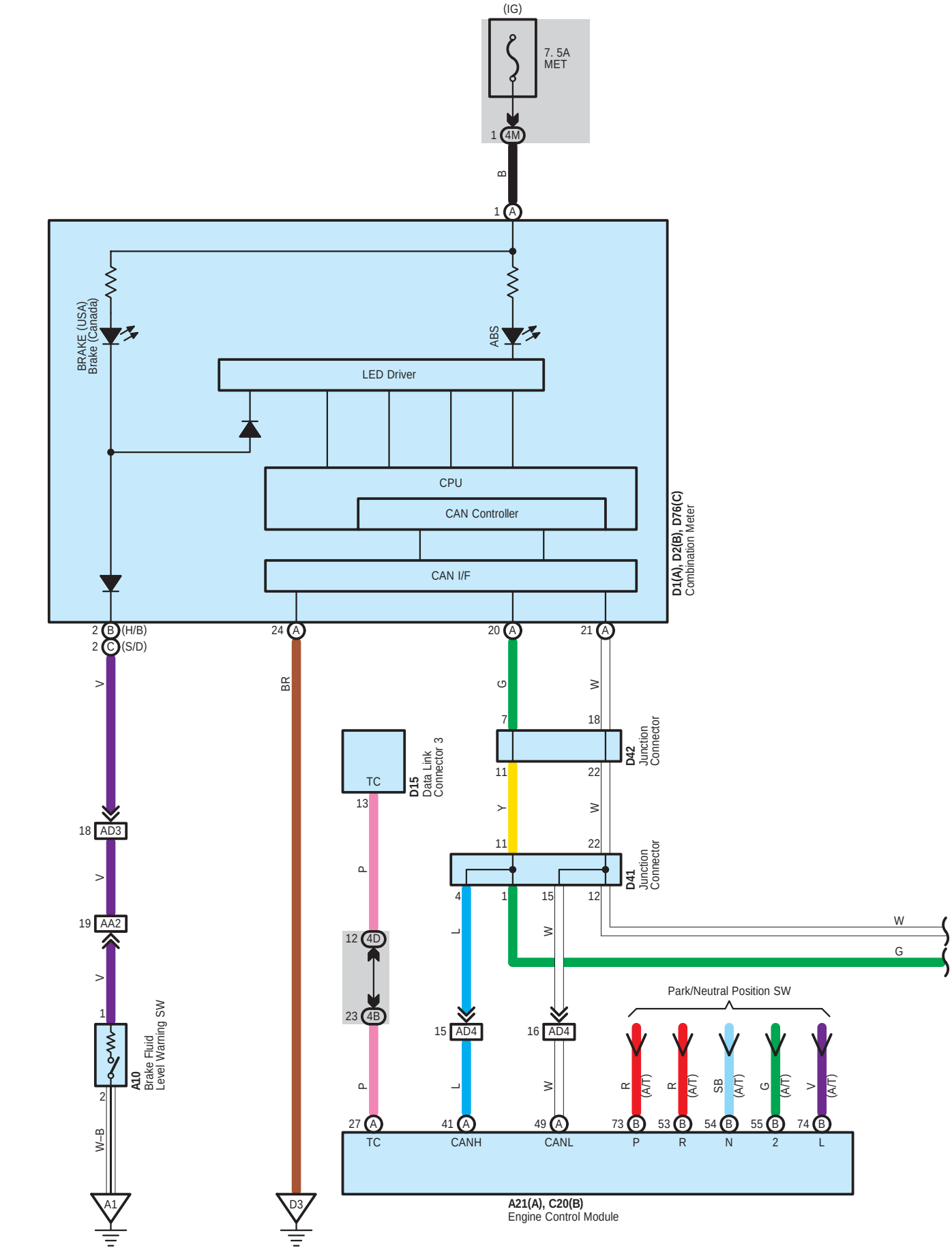
(IG)
7. 5A
MET
1 4M
B
1 A
BRAKE (USA)
Brake (Canada)
ABS
LED Driver
CPU
CAN Controller
CAN I/F
D1(A), D2(B), D76(C)
Combination Meter
2 B (H/B)
2 C (S/D)
24 A
20 A
21 A
V
BR
G
W
7
18
11
22
Y
W
11
22
TC
13
D15
Data Link
Connector 3
D42
Junction
Connector
D41
Junction
Connector
P
4
1
15
12
L
W
W
G
12 4D
23 4B
Park/Neutral Position SW
15 AD4
16 AD4
18 AD3
19 AA2
V
V
1
2
W–B
A10
Brake Fluid
Level Warning SW
A1
D3
R (A/T)
R (A/T)
SB (A/T)
G (A/T)
V (A/T)
27 A
41 A
49 A
73 B
53 B
54 B
55 B
74 B
TC
CANH
CANL
P
R
N
2
L
A21(A), C20(B)
Engine Control Module

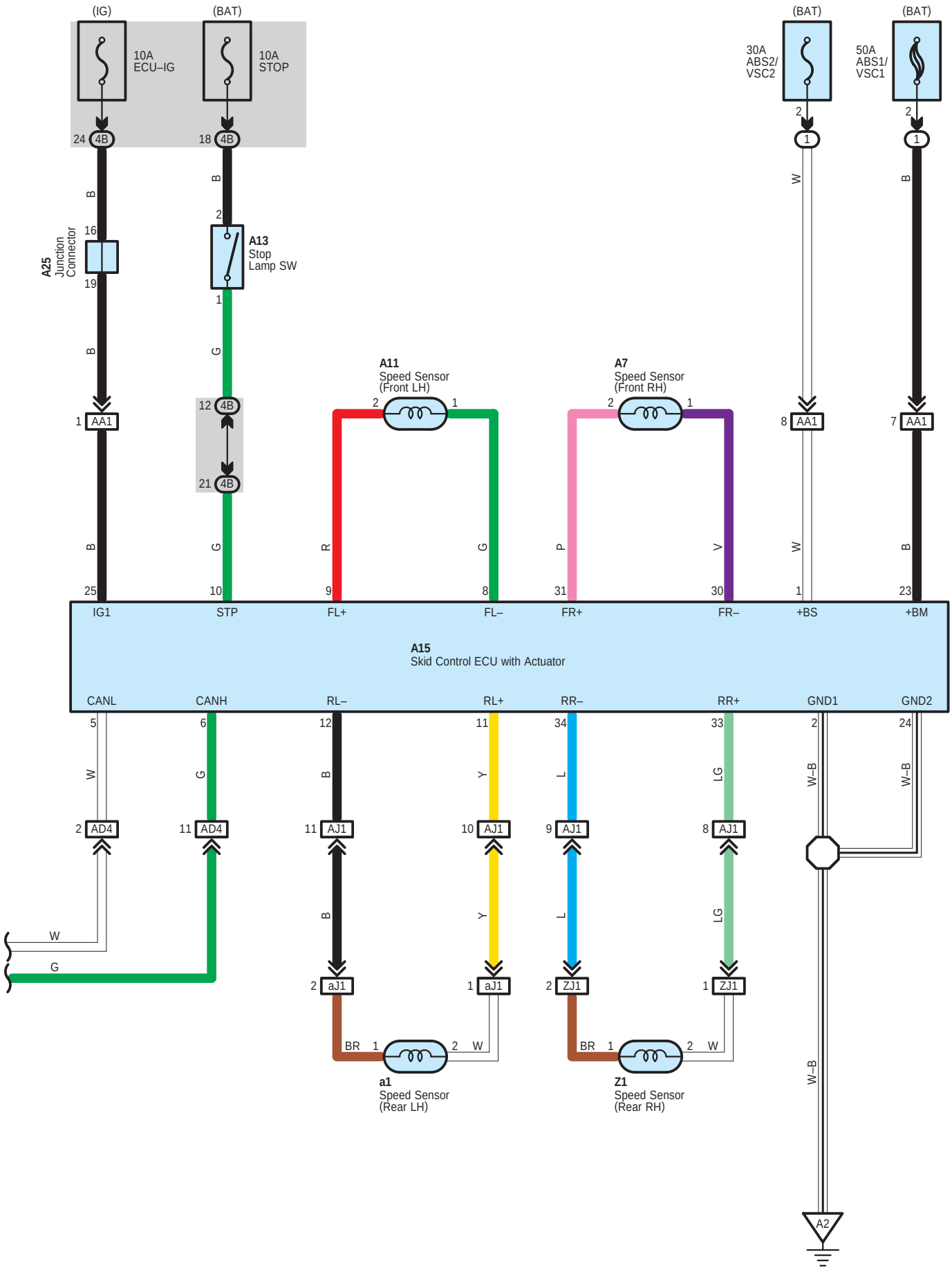
(IG)
(BAT)
10A
ECU–IG
10A
STOP
(BAT)
(BAT)
30A
ABS2/
VSC2
50A
ABS1/
VSC1
24 4B
18 4B
2
1
2
1
B
B
W
B
A25
Junction
Connector
16
19
2
A13
Stop
Lamp SW
1
B
G
W
B
1 AA1
12 4B
21 4B
8 AA1
7 AA1
A11
Speed Sensor
(Front LH)
A7
Speed Sensor
(Front RH)
2
1
2
1
R
G
P
V
W
B
25
10
9
8
31
30
1
23
IG1
STP
FL+
FL–
FR+
FR–
+BS
+BM
A15
Skid Control ECU with Actuator
CANL
CANH
RL–
RL+
RR–
RR+
GND1
GND2
5
6
12
11
34
33
2
24
W
G
B
Y
L
LG
W–B
W–B
2 AD4
11 AD4
11 AJ1
10 AJ1
9 AJ1
8 AJ1
W
G
B
Y
L
LG
2 aJ1
1 aJ1
2 ZJ1
1 ZJ1
BR
1
2
W
BR
1
2
W
a1
Speed Sensor
(Rear LH)
Z1
Speed Sensor
(Rear RH)
W–B
A2

System Outline

1. Speed Sensor
Detects the wheel speed of each of four wheels.

2. Skid Control ECU
Based on signals from the sensors, it judges the vehicle driving condition and sends the brake control signal to the brake actuator.

3. ABS Warning Light
Lights up to alert the driver when the ECU detects a malfunction in the ABS system and stopps the system.

4. Brake Warning Light
Lights up simultaneously with the ABS warning light to alert the driver when the ECU detects a malfunction not only in the ABS but also in the EBD. Single light–up of the brake warning light alerts the driver when the ECU detects a malfunction in the brake system.

5. Engine Control Computer
Sends signals such as park/neutral position SW, TC switch, etc., to the skid control ECU with actuator.

: Parts Location

Code	See Page	Code	See Page	Code	See Page
A7	46 (H/B)	A21 A	48 (S/D)	D41	53 (S/D)
	48 (S/D)	A25	46 (H/B)	D42	51 (H/B)
A10	46 (H/B)		48 (S/D)		53 (S/D)
	48 (S/D)	C20 B	47 (H/B)	D76 C	53 (S/D)
A11	46 (H/B)		49 (S/D)	Z1	54 (5–Door)
	48 (S/D)	D1 A	51 (H/B)		56 (3–Door)
A13	50 (H/B)		53 (S/D)		58 (4–Door)
	52 (S/D)	D2 B	51 (H/B)	a1	54 (5–Door)
A15	46 (H/B)	D15	51 (H/B)		56 (3–Door)
	48 (S/D)		53 (S/D)		58 (4–Door)
A21 A	46 (H/B)	D41	51 (H/B)		

: Relay Blocks

Code	See Page	Relay Blocks (Relay Block Location)
1	24	Engine Room R/B (Engine Compartment Left)

: Junction Block and Wire Harness Connector

Code	See Page	Junction Block and Wire Harness (Connector Location)
4B	30	Engine Room Main Wire and Instrument Panel J/B (Lower Finish Panel)
4D	30	Instrument Panel Wire and Instrument Panel J/B (Lower Finish Panel)
4M	31	

: Connector Joining Wire Harness and Wire Harness

Code	See Page	Joining Wire Harness and Wire Harness (Connector Location)
AA1	62 (H/B)	Engine Room Main Wire and Engine Room Main Wire (Instrument Panel Left)
	63 (S/D)	
AA2	62 (H/B)	
	63 (S/D)	
AD3	62 (H/B)	Engine Room Main Wire and Instrument Panel Wire (Instrument Panel Left)
	63 (S/D)	
AD4	62 (H/B)	
	63 (S/D)	
AJ1	62 (H/B)	Engine Room Main Wire and Floor Wire (Instrument Panel Left)
	63 (S/D)	
ZJ1	64 (5–Door)	Skid Control Sensor RH Wire and Floor Wire (Quarter Wheel House Panel RH)
	65 (3–Door)	
	66 (4–Door)	
aJ1	64 (5–Door)	Skid Control Sensor LH Wire and Floor Wire (Quarter Wheel House Panel LH)
	65 (3–Door)	
	66 (4–Door)	

: Ground Points

Code	See Page	Ground Points Location
A1	60 (H/B)	Left Suspension Tower
	61 (S/D)	
A2	60 (H/B)	
	61 (S/D)	
D3	62 (H/B)	Instrument Panel Reinforcement Left
	63 (S/D)	

NOTICE: When inspecting or repairing the SRS, perform service in accordance with the following precautionary instructions and the procedure, and precautions in the Repair Manual applicable for the model year.

- Malfunction symptoms of the SRS are difficult to confirm, so the DTCs become the most important source of information when troubleshooting. When troubleshooting the SRS, always inspect the DTCs before disconnecting the battery.
- **Work must be started more than 90 seconds after the ignition SW is turned to the "LOCK" position and the negative (–) terminal cable is disconnected from the battery.**
  (The SRS is equipped with a back–up power source so that if work is started within 90 seconds from disconnecting the negative (–) terminal cable of the battery, the SRS may deploy.)
- When the negative (–) terminal cable is disconnected from the battery, the memory of the clock and audio system will be cleared. So before starting work, make a record of the contents in the audio memory system. When work is finished, reset the audio systems as they were before and adjust the clock. Some vehicles have power tilt steering, power telescopic steering, power seat and power outside rear view mirror which are all equipped with memory function. However, it is not possible to make a record of these memory contents. So when the work is finished, it will be necessary to explain it to your customer, and ask the customer to adjust the features and reset the memory. To avoid erasing the memory in each system, never use a back–up power supply from outside the vehicle.
- Before repair, remove the airbag sensor if shocks are likely to be applied to the sensor during repair.
- Do not expose the following parts directly to hot air or flame;
- Even in cases of a minor collision where the SRS does not deploy, the following parts should be inspected;
- Never use SRS parts from another vehicle. When replacing parts, replace with new parts.
- For the purpose of reuse, never disassemble and repair the following parts.
- If the following parts have been dropped, or have cracks, dents and other defects in their case, bracket, and connector, replace with new one.
- Use a volt/ohmmeter with high impedance (10 kΩ/V minimum) for troubleshooting electrical circuits of the system.
- Information labels are attached to the periphery of the SRS components. Follow the instructions of the notice.
- After work on the SRS is completed, check the SRS warning light.
- If the vehicle is equipped with a mobile communication system, refer to the precaution in the IN section of the Repair Manual.

* Steering wheel pad
* Front passenger airbag assembly
* Side airbag assembly
* Curtain shield airbag assembly
* Seat belt pretensioner
* Center airbag sensor assembly
* Front airbag sensor assembly
* Side airbag sensor assembly
* Rear airbag sensor assembly

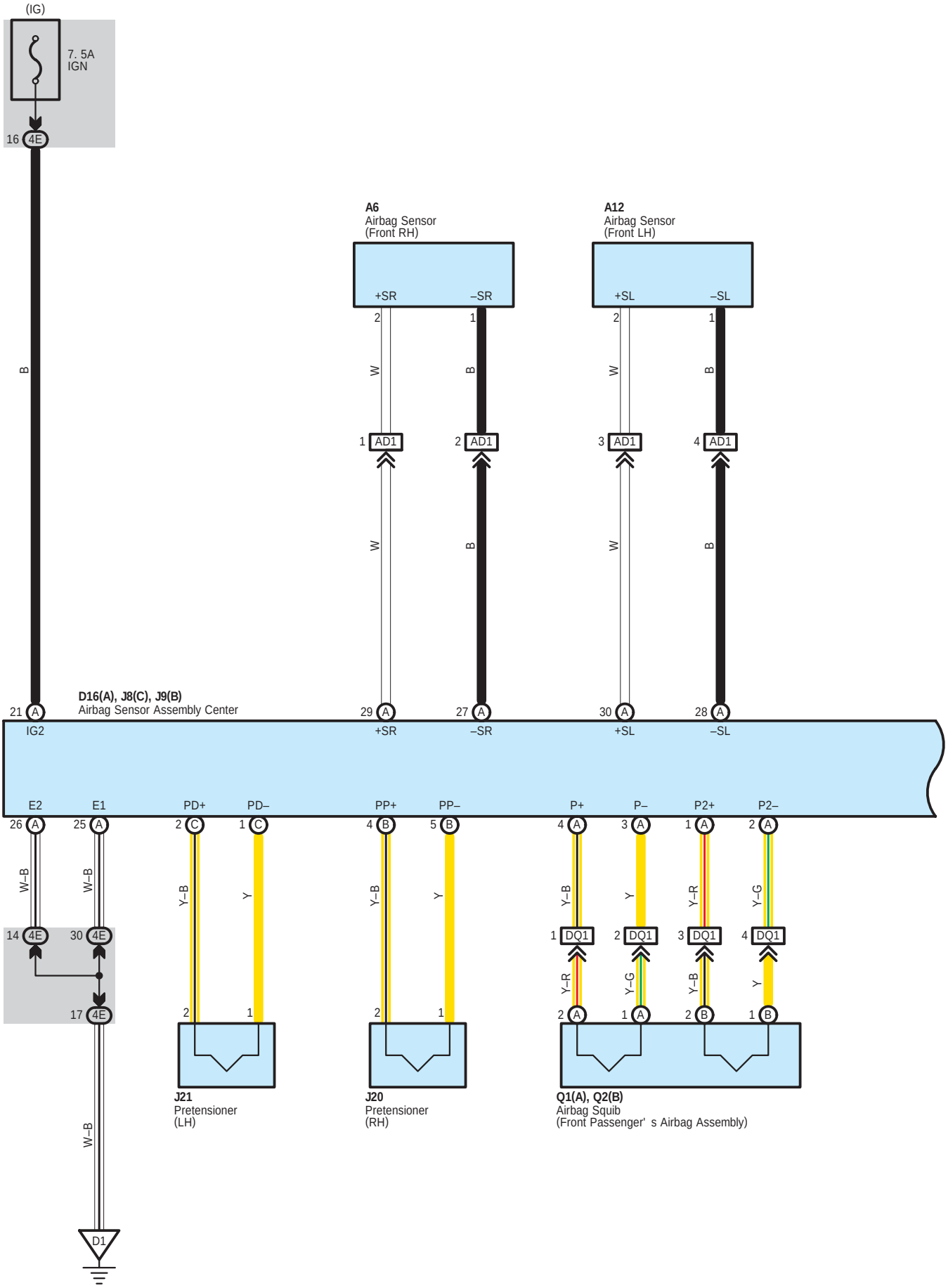
(IG)
7. 5A
IGN
16 4E
B
A6
Airbag Sensor
(Front RH)
+SR
–SR
2
1
W
B
1 AD1
2 AD1
A12
Airbag Sensor
(Front LH)
+SL
–SL
2
1
W
B
3 AD1
4 AD1
D16(A), J8(C), J9(B)
Airbag Sensor Assembly Center
21 A
IG2
29 A
+SR
27 A
–SR
30 A
+SL
28 A
–SL
E2
E1
PD+
PD–
PP+
PP–
P+
P–
P2+
P2–
26 A
25 A
2 C
1 C
4 B
5 B
4 A
3 A
1 A
2 A
W–B
W–B
Y–B
Y
Y–B
Y
Y–B
Y
Y–R
Y–G
14 4E
30 4E
17 4E
1 DQ1
2 DQ1
3 DQ1
4 DQ1
Y–R
Y–G
Y–B
Y
2 A
1 A
2 B
1 B
W–B
D1
J21
Pretensioner
(LH)
J20
Pretensioner
(RH)
Q1(A), Q2(B)
Airbag Squib
(Front Passenger' s Airbag Assembly)

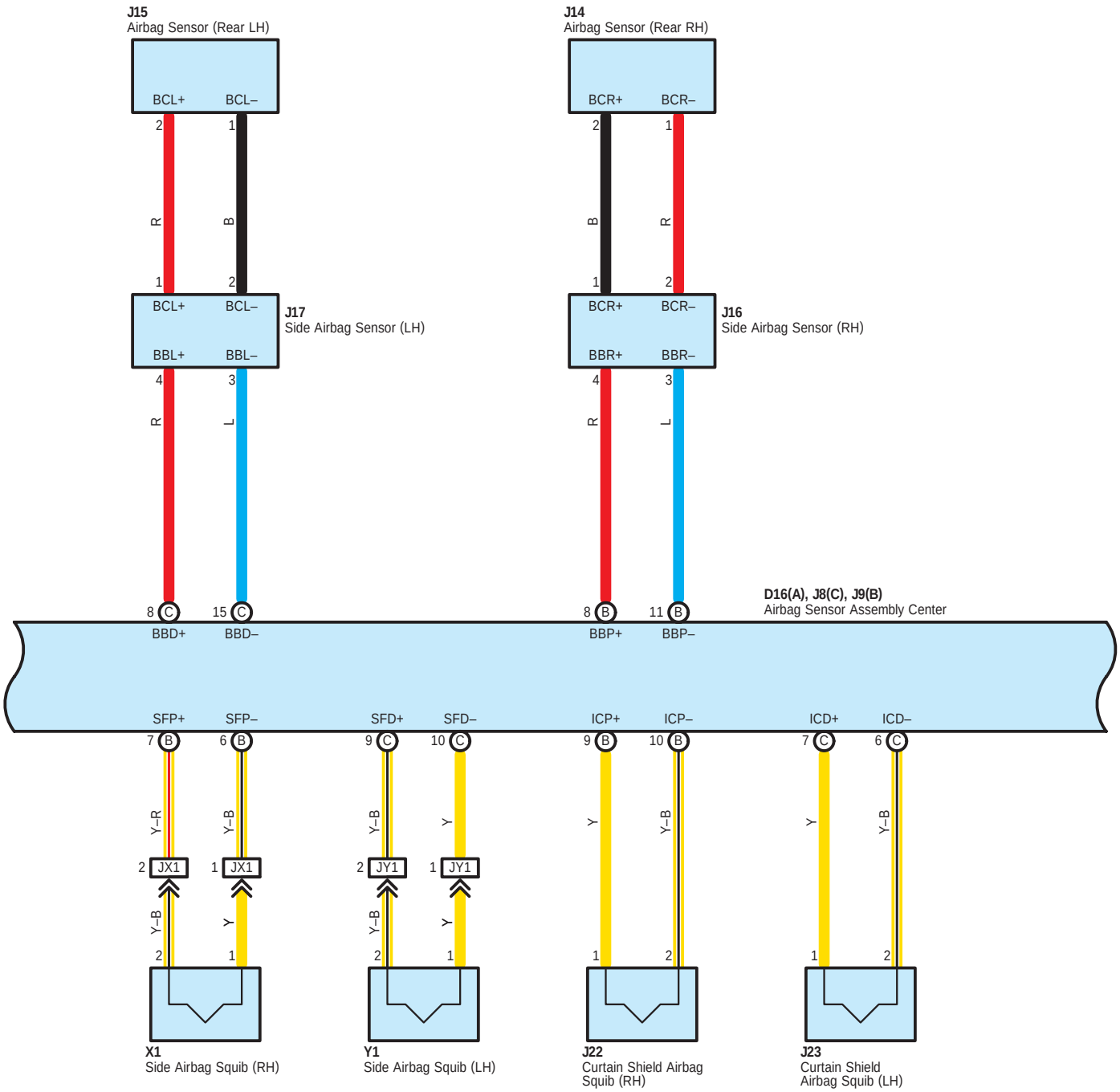
J15
Airbag Sensor (Rear LH)
BCL+
BCL–
2
1
R
B
1
2
BCL+
BCL–
J17
Side Airbag Sensor (LH)
BBL+
BBL–
4
3
R
L
8 C
BBD+
15 C
BBD–
J14
Airbag Sensor (Rear RH)
BCR+
BCR–
2
1
B
R
1
2
BCR+
BCR–
J16
Side Airbag Sensor (RH)
BBR+
BBR–
4
3
R
L
8 B
BBP+
11 B
BBP–
D16(A), J8(C), J9(B)
Airbag Sensor Assembly Center
SFP+
SFP–
7 B
6 B
Y–R
Y–B
2 JX1
1 JX1
Y–B
Y
2
1
X1
Side Airbag Squib (RH)
SFD+
SFD–
9 C
10 C
Y–B
Y
2 JY1
1 JY1
Y–B
Y
2
1
Y1
Side Airbag Squib (LH)
ICP+
ICP–
9 B
10 B
Y
Y–B
1
2
J22
Curtain Shield Airbag
Squib (RH)
ICD+
ICD–
7 C
6 C
Y
Y–B
1
2
J23
Curtain Shield
Airbag Squib (LH)

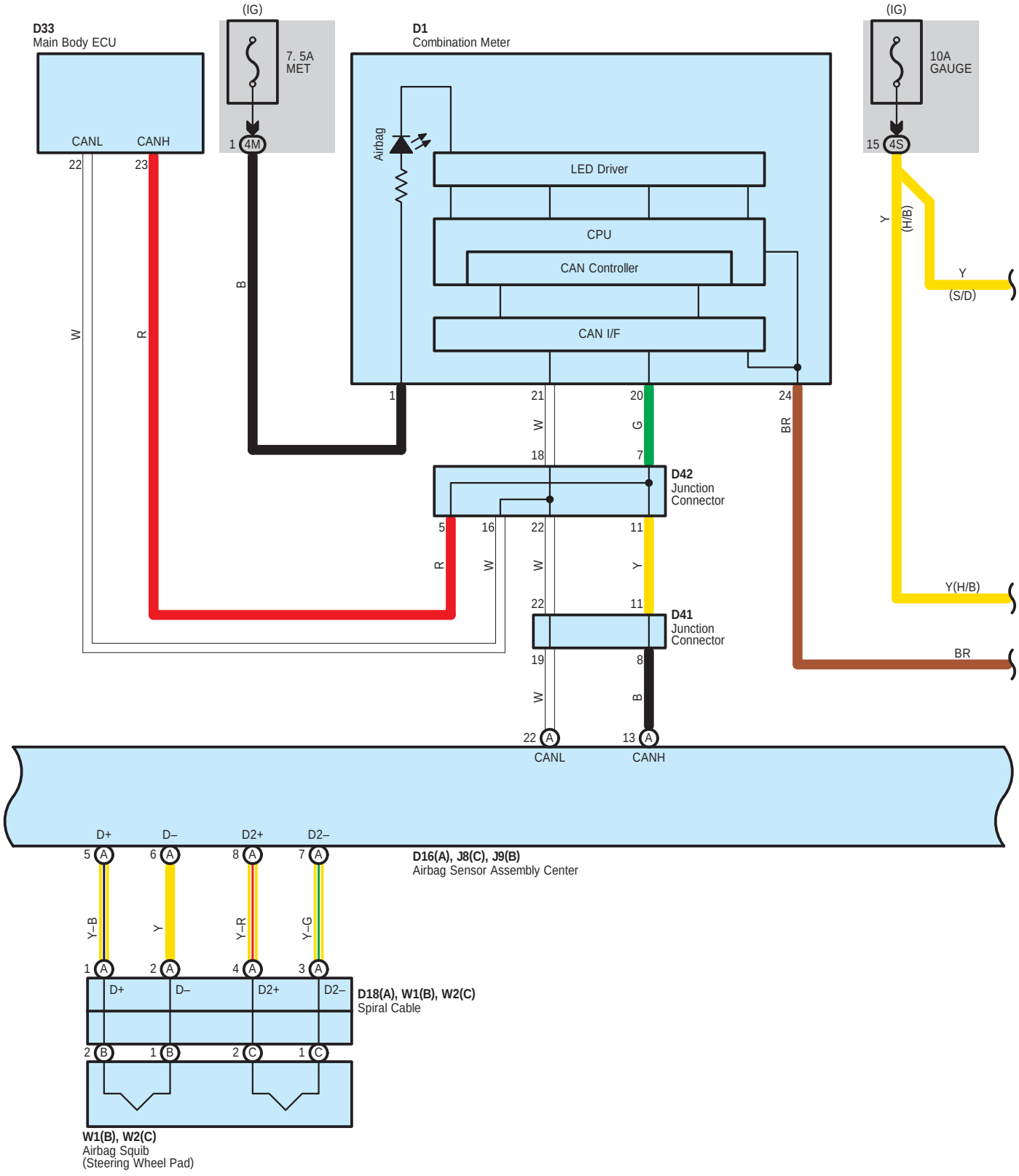
D33
Main Body ECU
CANL
CANH
22
23
W
R
(IG)
7. 5A
MET
1
4M
B
D1
Combination Meter
Airbag
LED Driver
CPU
CAN Controller
CAN I/F
1
21
W
18
20
G
7
24
BR
(IG)
10A
GAUGE
15
4S
Y
(H/B)
Y
(S/D)
Y(H/B)
BR
D42
Junction
Connector
5
R
16
W
22
W
11
Y
D41
Junction
Connector
22
W
19
11
B
8
22
A
CANL
13
A
CANH
D+
D–
D2+
D2–
5
A
6
A
8
A
7
A
Y–B
Y
Y–R
Y–G
1
A
2
A
4
A
3
A
D16(A), J8(C), J9(B)
Airbag Sensor Assembly Center
D+
D–
D2+
D2–
D18(A), W1(B), W2(C)
Spiral Cable
2
B
1
B
2
C
1
C
W1(B), W2(C)
Airbag Squib
(Steering Wheel Pad)

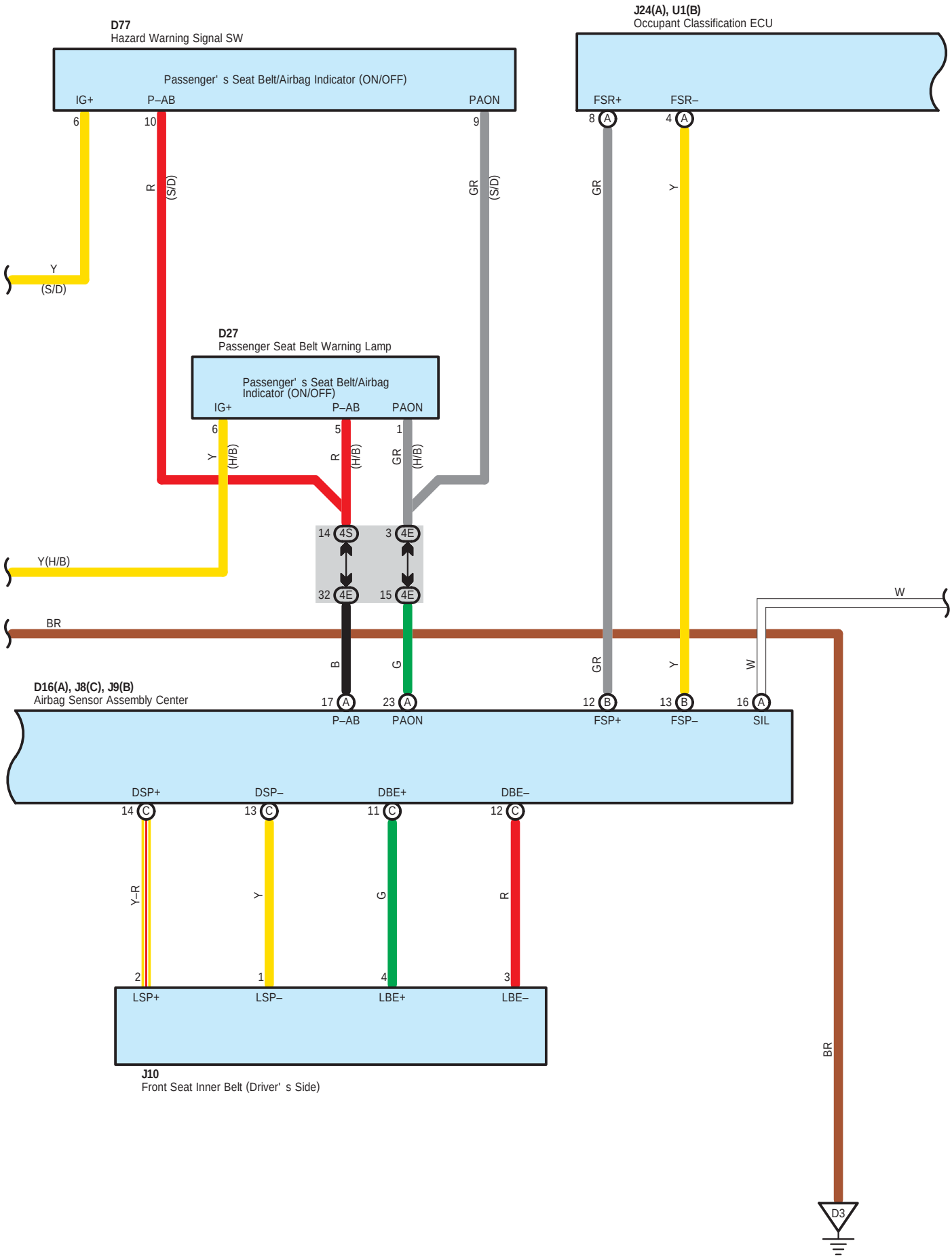
D77
Hazard Warning Signal SW
Passenger' s Seat Belt/Airbag Indicator (ON/OFF)
IG+
P–AB
PAON
6
10
9
R
(S/D)
GR
(S/D)
Y
(S/D)
J24(A), U1(B)
Occupant Classification ECU
FSR+
FSR–
8 A
4 A
GR
Y
D27
Passenger Seat Belt Warning Lamp
Passenger' s Seat Belt/Airbag Indicator (ON/OFF)
IG+
P–AB
PAON
6
5
1
Y
(H/B)
R
(H/B)
GR
(H/B)
14 4S
3 4E
32 4E
15 4E
Y(H/B)
BR
W
B
G
GR
Y
W
D16(A), J8(C), J9(B)
Airbag Sensor Assembly Center
17 A
23 A
12 B
13 B
16 A
P–AB
PAON
FSP+
FSP–
SIL
DSP+
DSP–
DBE+
DBE–
14 C
13 C
11 C
12 C
Y–R
Y
G
R
2
1
4
3
LSP+
LSP–
LBE+
LBE–
J10
Front Seat Inner Belt (Driver' s Side)
BR
D3

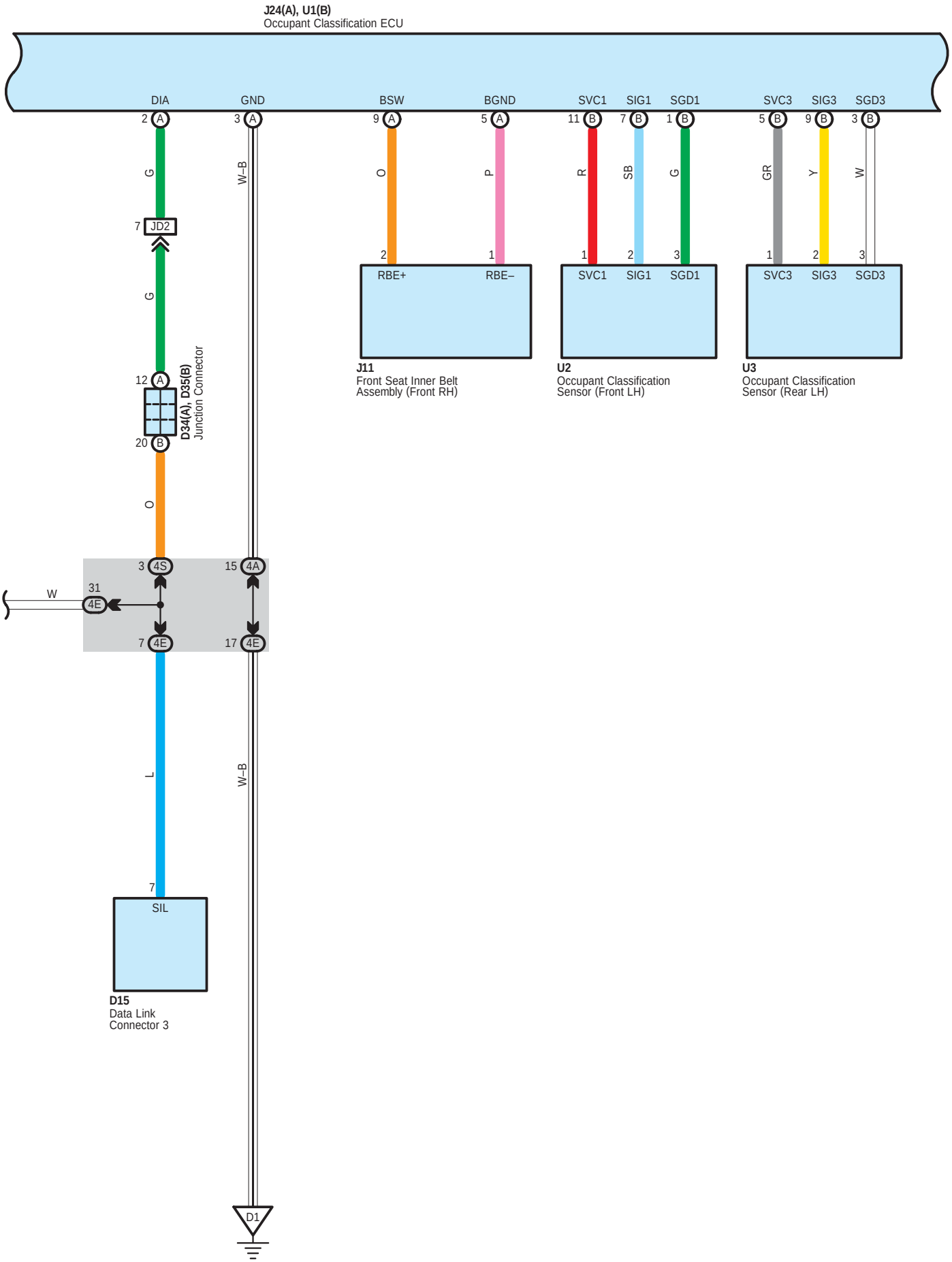
J24(A), U1(B)
Occupant Classification ECU
DIA
GND
BSW
BGND
SVC1
SIG1
SGD1
SVC3
SIG3
SGD3
2 A
3 A
9 A
5 A
11 B
7 B
1 B
5 B
9 B
3 B
G
W–B
O
P
R
SB
G
GR
Y
W
7 JD2
G
12 A
D34(A), D35(B)
Junction Connector
20 B
O
3 4S
15 4A
W
31 4E
7 4E
17 4E
L
W–B
7
SIL
D15
Data Link
Connector 3
D1
2
1
RBE+
RBE–
J11
Front Seat Inner Belt
Assembly (Front RH)
1
2
3
SVC1
SIG1
SGD1
U2
Occupant Classification
Sensor (Front LH)
1
2
3
SVC3
SIG3
SGD3
U3
Occupant Classification
Sensor (Rear LH)

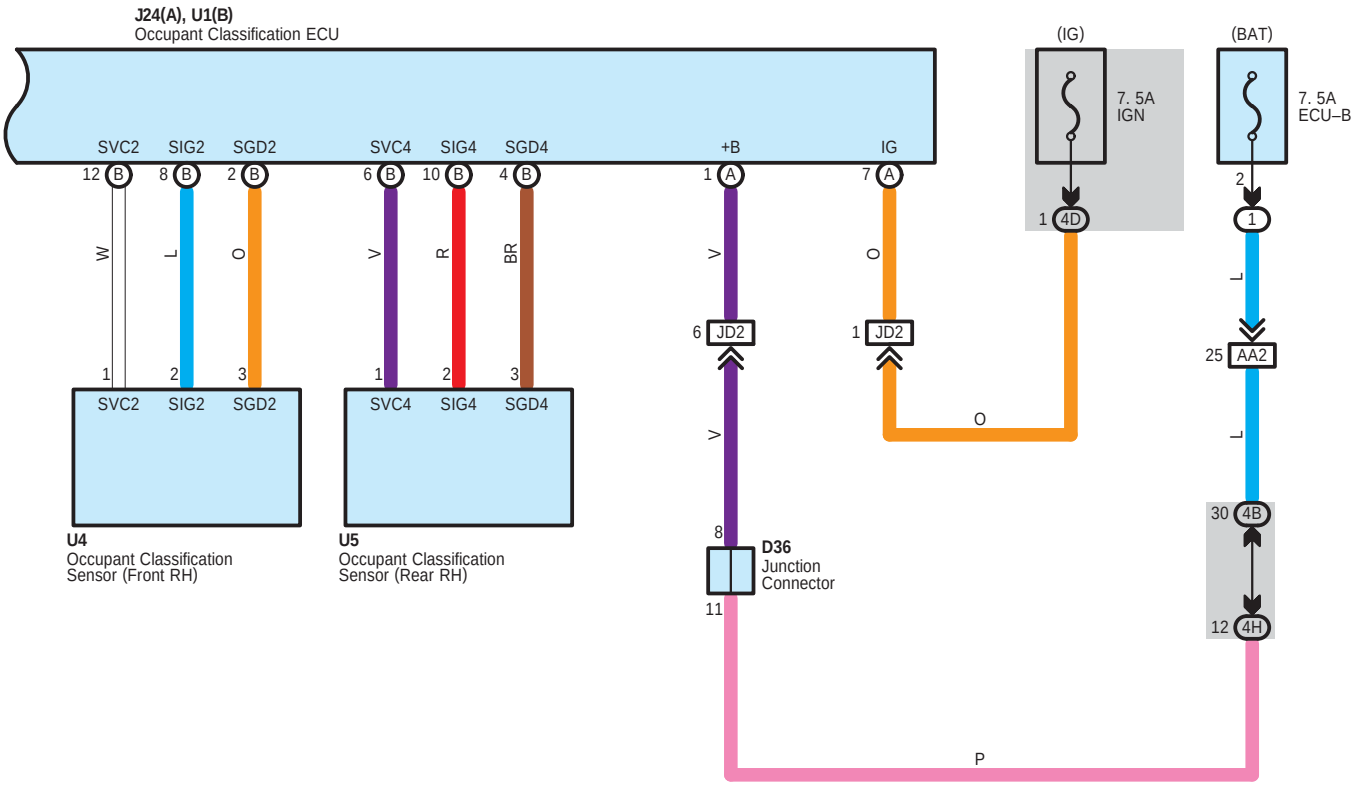
J24(A), U1(B)
Occupant Classification ECU
SVC2
SIG2
SGD2
SVC4
SIG4
SGD4
+B
IG
12 B
8 B
2 B
6 B
10 B
4 B
1 A
7 A
W
L
O
V
R
BR
V
O
1
2
3
1
2
3
SVC2
SIG2
SGD2
SVC4
SIG4
SGD4
U4
Occupant Classification
Sensor (Front RH)
U5
Occupant Classification
Sensor (Rear RH)
6 JD2
1 JD2
V
O
8
D36
Junction
Connector
11
(IG)
7. 5A
IGN
1 4D
(BAT)
7. 5A
ECU–B
2
1
L
25 AA2
L
30 4B
12 4H
O
P

System Outline

* The system reaches an ignition judgment to deploy the following device based on the signals received from the front airbag sensor and deceleration sensor.
  – Driver Airbag
  – Front Passenger Airbag
  – Seat Belt Pretensioner
* The system reaches an ignition judgment to deploy the following device based on the signals received from the side airbag sensors.
  – Side Airbags
  – Curtain Shield Airbags
* The dual–stage SRS airbag system has been used for the driver and front passenger airbags. This system controls the optimal airbag inflation by judging the extent of impact, seat position (driver seat) and whether or not the seat belt is fastened(driver seat) and infomation from the Front Passenger Occupant Classification System.
* The front passenger occupant classification system judges whether the front passenger seat is occupied by an adult or child (with child seat) or is unoccupied, according to the load applied to the front passenger seat and whether the seat belt is buckled. Based on the results, it restricts the deployment of the front passenger airbag, front passenger side airbag, and front passenger seat belt pretensioner. In addition, the system informs the driver of the result of the judgment through the use of the AIRBAG ON/OFF indicator lights.
* The airbag sensor assembly transmits a signal to the engine control module in order to stop the fuel pump.
* The Airbag sensor assembly transmits a signal to the main body ECU in order to release the door lock.

○ : Parts Location

Code		See Page	Code		See Page	Code		See Page
A6		46 (H/B)	J10		57 (3–Door)	J24	A	59 (4–Door)
		48 (S/D)			59 (4–Door)	Q1	A	50 (H/B)
A12		46 (H/B)	J11		55 (5–Door)			52 (S/D)
		48 (S/D)			57 (3–Door)	Q2	B	50 (H/B)
D1		51 (H/B)			59 (4–Door)			52 (S/D)
		53 (S/D)	J14		55 (5–Door)	U1	B	54 (5–Door)
D15		51 (H/B)			57 (3–Door)			56 (3–Door)
		53 (S/D)			59 (4–Door)			58 (4–Door)
D16	A	51 (H/B)	J15		55 (5–Door)	U2		54 (5–Door)
		53 (S/D)			57 (3–Door)			56 (3–Door)
D18	A	51 (H/B)			59 (4–Door)			58 (4–Door)
		53 (S/D)	J16		55 (5–Door)	U3		54 (5–Door)
D27		51 (H/B)			57 (3–Door)			56 (3–Door)
D33		51 (H/B)			59 (4–Door)			58 (4–Door)
		53 (S/D)	J17		55 (5–Door)	U4		54 (5–Door)
D34	A	51 (H/B)			57 (3–Door)			56 (3–Door)
		53 (S/D)			59 (4–Door)			58 (4–Door)
D35	B	51 (H/B)	J20		55 (5–Door)	U5		54 (5–Door)
		53 (S/D)			57 (3–Door)			56 (3–Door)
D36		51 (H/B)			59 (4–Door)			58 (4–Door)
		53 (S/D)	J21		55 (5–Door)	W1	B	50 (H/B)
D41		51 (H/B)			57 (3–Door)			52 (S/D)
		53 (S/D)			59 (4–Door)	W2	C	50 (H/B)
D42		51 (H/B)	J22		55 (5–Door)			52 (S/D)
		53 (S/D)			57 (3–Door)	X1		54 (5–Door)
D77		53 (S/D)			59 (4–Door)			56 (3–Door)
J8	C	50 (H/B)	J23		55 (5–Door)			58 (4–Door)
		52 (S/D)			57 (3–Door)	Y1		54 (5–Door)
J9	B	50 (H/B)			59 (4–Door)			56 (3–Door)
		52 (S/D)	J24	A	55 (5–Door)			58 (4–Door)
J10		55 (5–Door)			57 (3–Door)			

: Relay Blocks

Code	See Page	Relay Blocks (Relay Block Location)
1	24	Engine Room R/B (Engine Compartment Left)

: Junction Block and Wire Harness Connector

Code	See Page	Junction Block and Wire Harness (Connector Location)
4A	30	Floor Wire and Instrument Panel J/B (Lower Finish Panel)
4B	30	Engine Room Main Wire and Instrument Panel J/B (Lower Finish Panel)
4D	30	Instrument Panel Wire and Instrument Panel J/B (Lower Finish Panel)
4E		
4H		
4M	31	
4S		

: Connector Joining Wire Harness and Wire Harness

Code	See Page	Joining Wire Harness and Wire Harness (Connector Location)
AA2	62 (H/B)	Engine Room Main Wire and Engine Room Main Wire (Instrument Panel Left)
	63 (S/D)	
AD1	62 (H/B)	Engine Room Main Wire and Instrument Panel Wire (Instrument Panel Left)
	63 (S/D)	
DQ1	62 (H/B)	Instrument Panel Wire and Instrument Panel Wire Assembly (Instrument Panel Right)
	63 (S/D)	
JD2	62 (H/B)	Floor Wire and Instrument Panel Wire (Instrument Panel Left)
	63 (S/D)	
JX1	64 (5–Door)	Floor Wire and Seat Airbag RH Wire (Front Seat RH)
	65 (3–Door)	
	66 (4–Door)	
JY1	64 (5–Door)	Floor Wire and Seat Airbag LH Wire (Front Seat LH)
	65 (3–Door)	
	66 (4–Door)	

: Ground Points

Code	See Page	Ground Points Location
D1	62 (H/B)	Left Kick Panel
	63 (S/D)	
D3	62 (H/B)	Instrument Panel Reinforcement Left
	63 (S/D)	

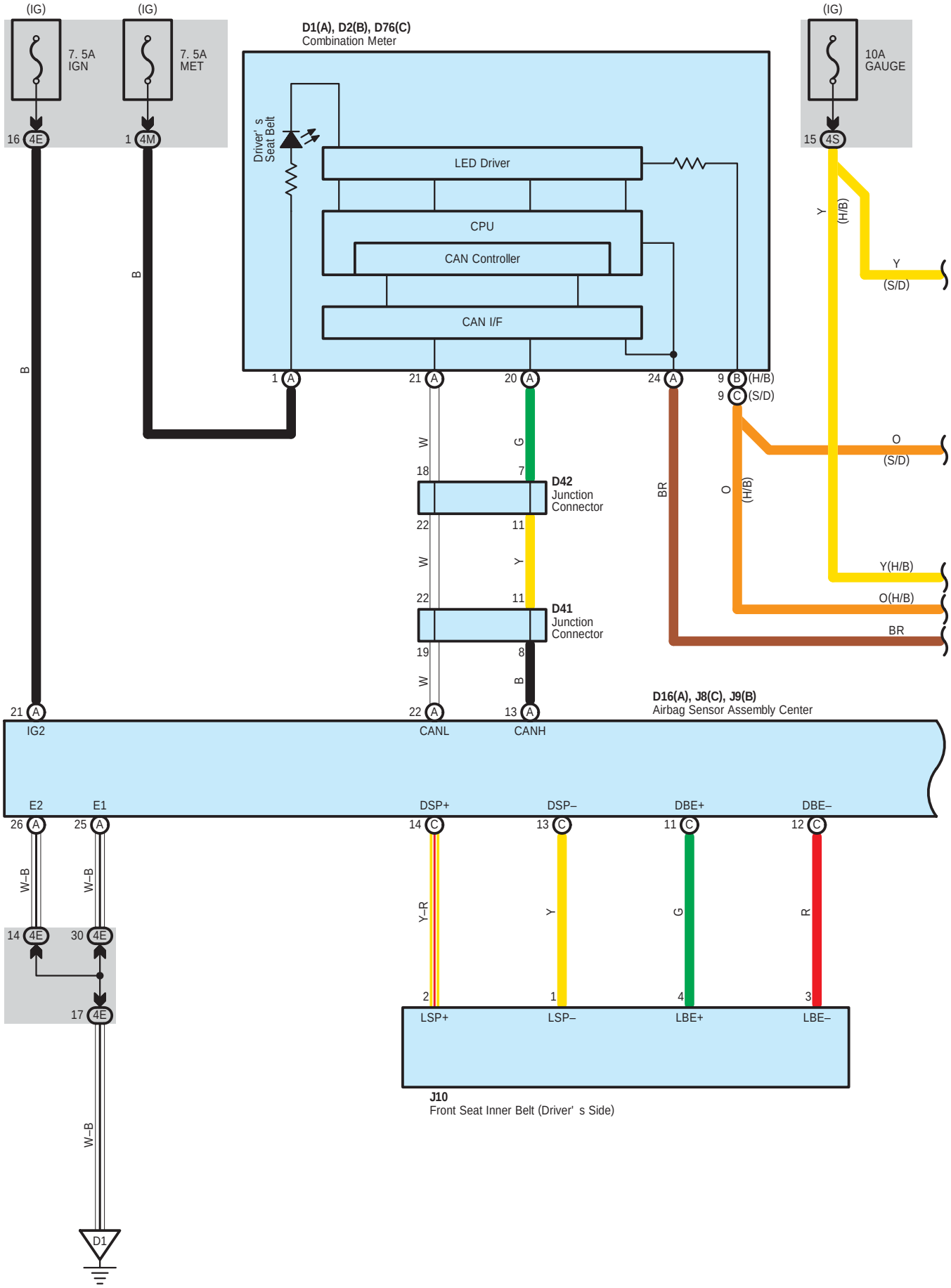
(IG)
7. 5A
IGN
(IG)
7. 5A
MET
D1(A), D2(B), D76(C)
Combination Meter
(IG)
10A
GAUGE
16 4E
1 4M
15 4S
Driver' s
Seat Belt
LED Driver
CPU
CAN Controller
CAN I/F
B
B
Y
(H/B)
Y
(S/D)
1 A
21 A
20 A
24 A
9 B (H/B)
9 C (S/D)
W
G
18
7
D42
Junction
Connector
22
11
W
Y
22
11
D41
Junction
Connector
19
8
W
B
BR
O
(H/B)
O
(S/D)
Y(H/B)
O(H/B)
BR
21 A
IG2
22 A
CANL
13 A
CANH
D16(A), J8(C), J9(B)
Airbag Sensor Assembly Center
E2
E1
DSP+
DSP–
DBE+
DBE–
26 A
25 A
14 C
13 C
11 C
12 C
W–B
W–B
Y–R
Y
G
R
14 4E
30 4E
17 4E
2
1
4
3
LSP+
LSP–
LBE+
LBE–
J10
Front Seat Inner Belt (Driver' s Side)
W–B
D1

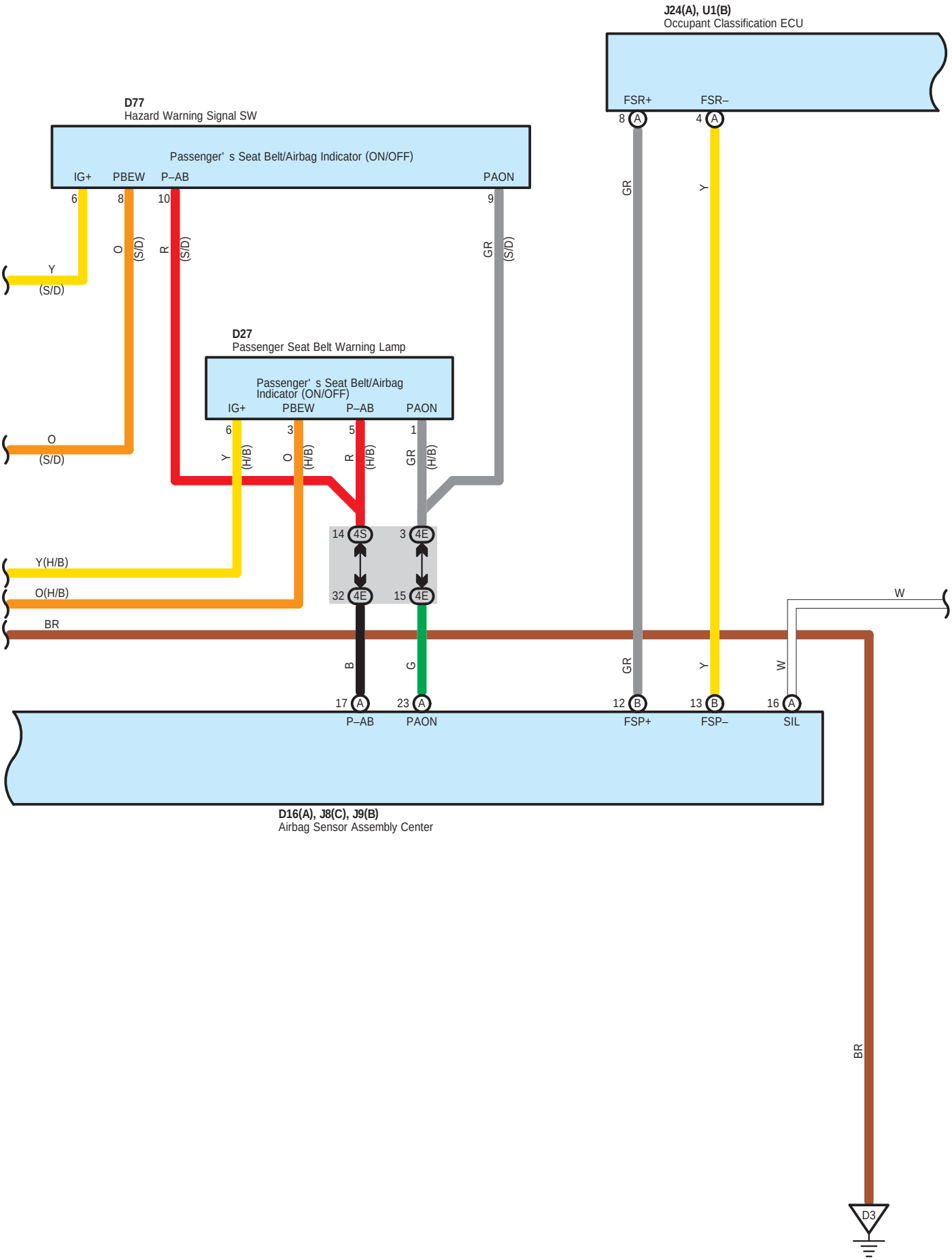
J24(A), U1(B)
Occupant Classification ECU
FSR+
FSR–
8 A
4 A
GR
Y
D77
Hazard Warning Signal SW
Passenger' s Seat Belt/Airbag Indicator (ON/OFF)
IG+
PBEW
P–AB
PAON
6
8
10
9
Y
(S/D)
O
(S/D)
R
(S/D)
GR
(S/D)
D27
Passenger Seat Belt Warning Lamp
Passenger' s Seat Belt/Airbag Indicator (ON/OFF)
IG+
PBEW
P–AB
PAON
6
3
5
1
Y
(H/B)
O
(H/B)
R
(H/B)
GR
(H/B)
O
(S/D)
14 4S
3 4E
32 4E
15 4E
Y(H/B)
O(H/B)
BR
W
B
G
GR
Y
W
17 A
23 A
12 B
13 B
16 A
P–AB
PAON
FSP+
FSP–
SIL
D16(A), J8(C), J9(B)
Airbag Sensor Assembly Center
BR
D3

Seat Belt Warning

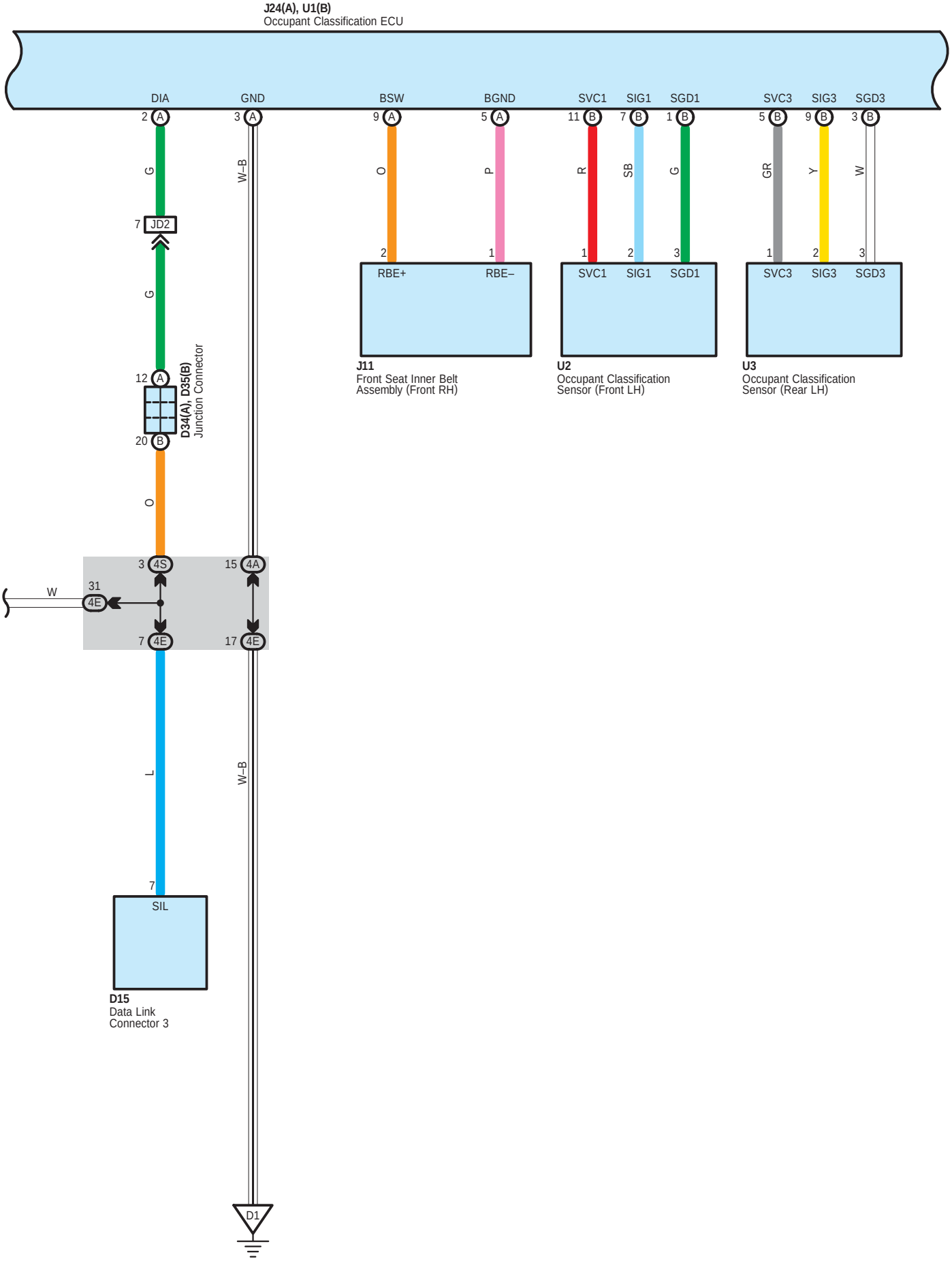

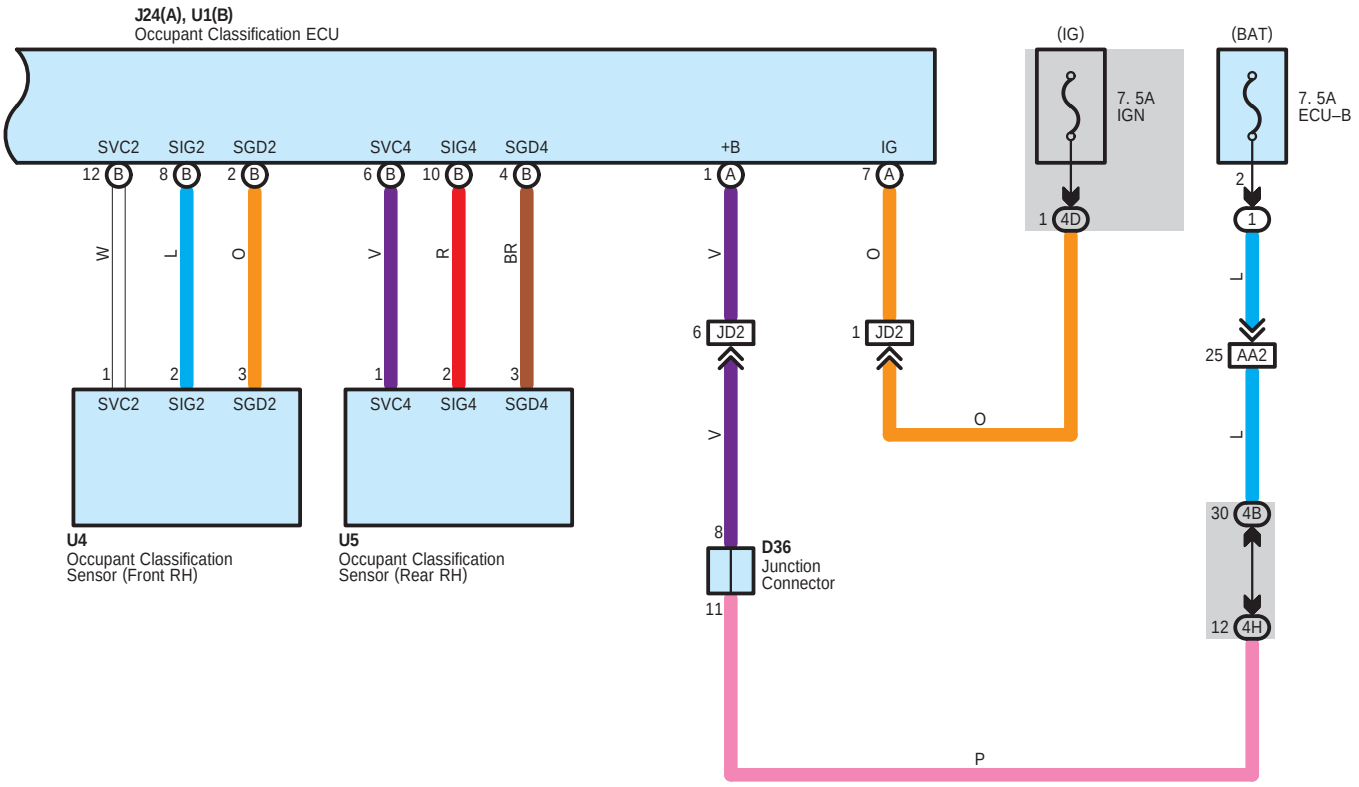
J24(A), U1(B)
Occupant Classification ECU
SVC2
SIG2
SGD2
SVC4
SIG4
SGD4
+B
IG
12 B
8 B
2 B
6 B
10 B
4 B
1 A
7 A
W
L
O
V
R
BR
V
O
1
2
3
1
2
3
SVC2
SIG2
SGD2
SVC4
SIG4
SGD4
U4
Occupant Classification
Sensor (Front RH)
U5
Occupant Classification
Sensor (Rear RH)
6 JD2
1 JD2
V
V
8
D36
Junction
Connector
11
(IG)
7. 5A
IGN
1 4D
O
(BAT)
7. 5A
ECU–B
2
1
L
25 AA2
L
30 4B
12 4H
P

Seat Belt Warning

: Parts Location

Code		See Page	Code		See Page	Code		See Page
D1	A	51 (H/B)	D42		51 (H/B)	J24	A	59 (4–Door)
		53 (S/D)			53 (S/D)	U1	B	54 (5–Door)
D2	B	51 (H/B)	D76	C	53 (S/D)			56 (3–Door)
D15		51 (H/B)	D77		53 (S/D)			58 (4–Door)
		53 (S/D)	J8	C	50 (H/B)	U2		54 (5–Door)
D16	A	51 (H/B)			52 (S/D)			56 (3–Door)
		53 (S/D)	J9	B	50 (H/B)			58 (4–Door)
D27		51 (H/B)			52 (S/D)	U3		54 (5–Door)
D34	A	51 (H/B)	J10		55 (5–Door)			56 (3–Door)
		53 (S/D)			57 (3–Door)			58 (4–Door)
D35	B	51 (H/B)			59 (4–Door)	U4		54 (5–Door)
		53 (S/D)	J11		55 (5–Door)			56 (3–Door)
D36		51 (H/B)			57 (3–Door)			58 (4–Door)
		53 (S/D)			59 (4–Door)	U5		54 (5–Door)
D41		51 (H/B)	J24	A	55 (5–Door)			56 (3–Door)
		53 (S/D)			57 (3–Door)			58 (4–Door)

: Relay Blocks

Code	See Page	Relay Blocks (Relay Block Location)
1	24	Engine Room R/B (Engine Compartment Left)

: Junction Block and Wire Harness Connector

Code	See Page	Junction Block and Wire Harness (Connector Location)
4A	30	Floor Wire and Instrument Panel J/B (Lower Finish Panel)
4B	30	Engine Room Main Wire and Instrument Panel J/B (Lower Finish Panel)
4D	30	Instrument Panel Wire and Instrument Panel J/B (Lower Finish Panel)
4E		
4H		
4M	31	
4S		

: Connector Joining Wire Harness and Wire Harness

Code	See Page	Joining Wire Harness and Wire Harness (Connector Location)
AA2	62 (H/B)	Engine Room Main Wire and Engine Room Main Wire (Instrument Panel Left)
	63 (S/D)	
JD2	62 (H/B)	Floor Wire and Instrument Panel Wire (Instrument Panel Left)
	63 (S/D)	

: Ground Points

Code	See Page	Ground Points Location
D1	62 (H/B)	Left Kick Panel
	63 (S/D)	
D3	62 (H/B)	Instrument Panel Reinforcement Left
	63 (S/D)	

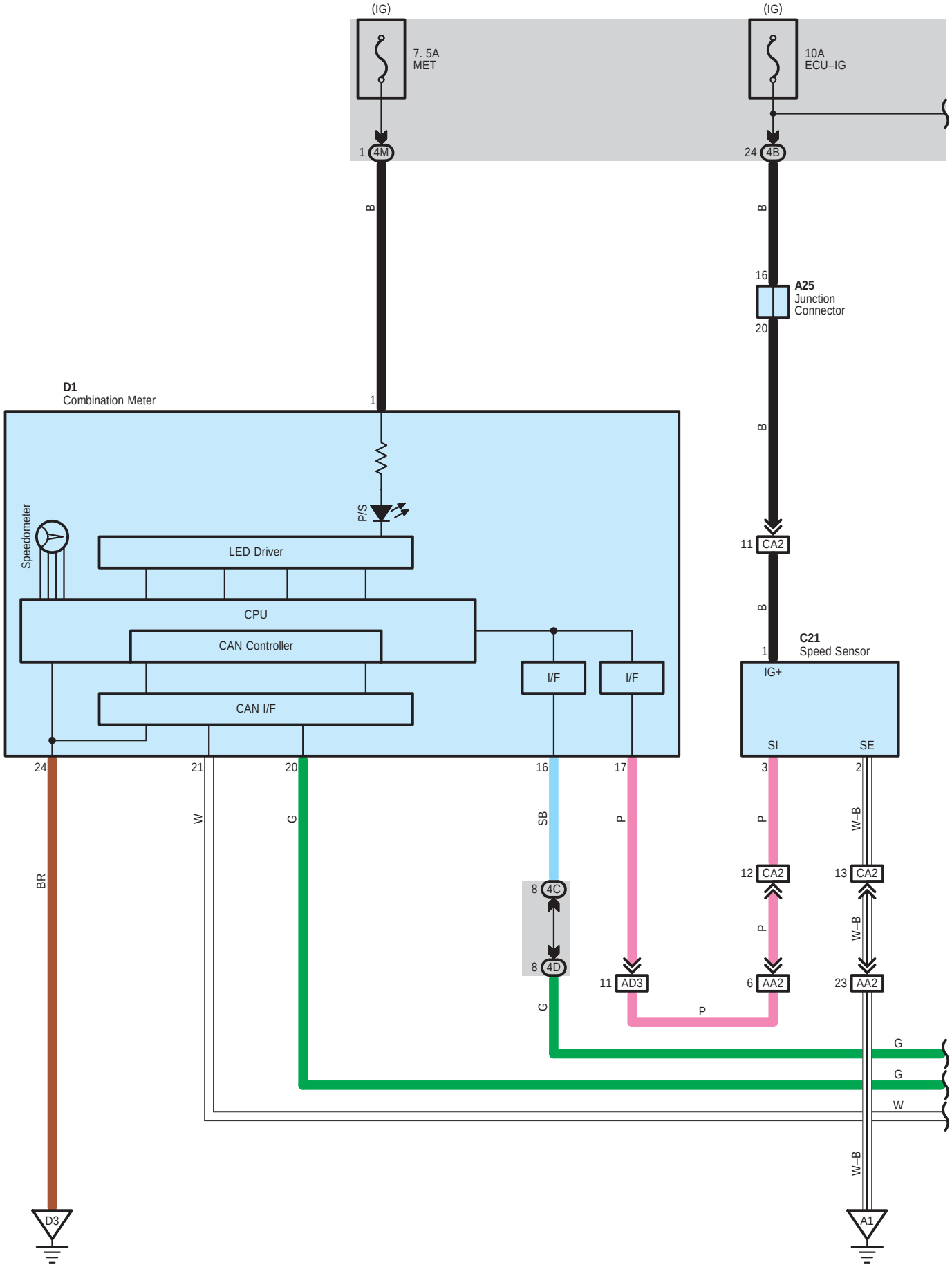
(IG)
7. 5A
MET
(IG)
10A
ECU–IG
1 4M
24 4B
B
B
16
A25
Junction
Connector
20
D1
Combination Meter
1
B
P/S
Speedometer
LED Driver
CPU
CAN Controller
CAN I/F
I/F
I/F
11 CA2
B
1
C21
Speed Sensor
IG+
SI
SE
24
21
20
16
17
3
2
W
G
SB
P
P
W–B
BR
12 CA2
13 CA2
8 4C
8 4D
P
W–B
11 AD3
6 AA2
23 AA2
G
P
G
G
W
W–B
D3
A1

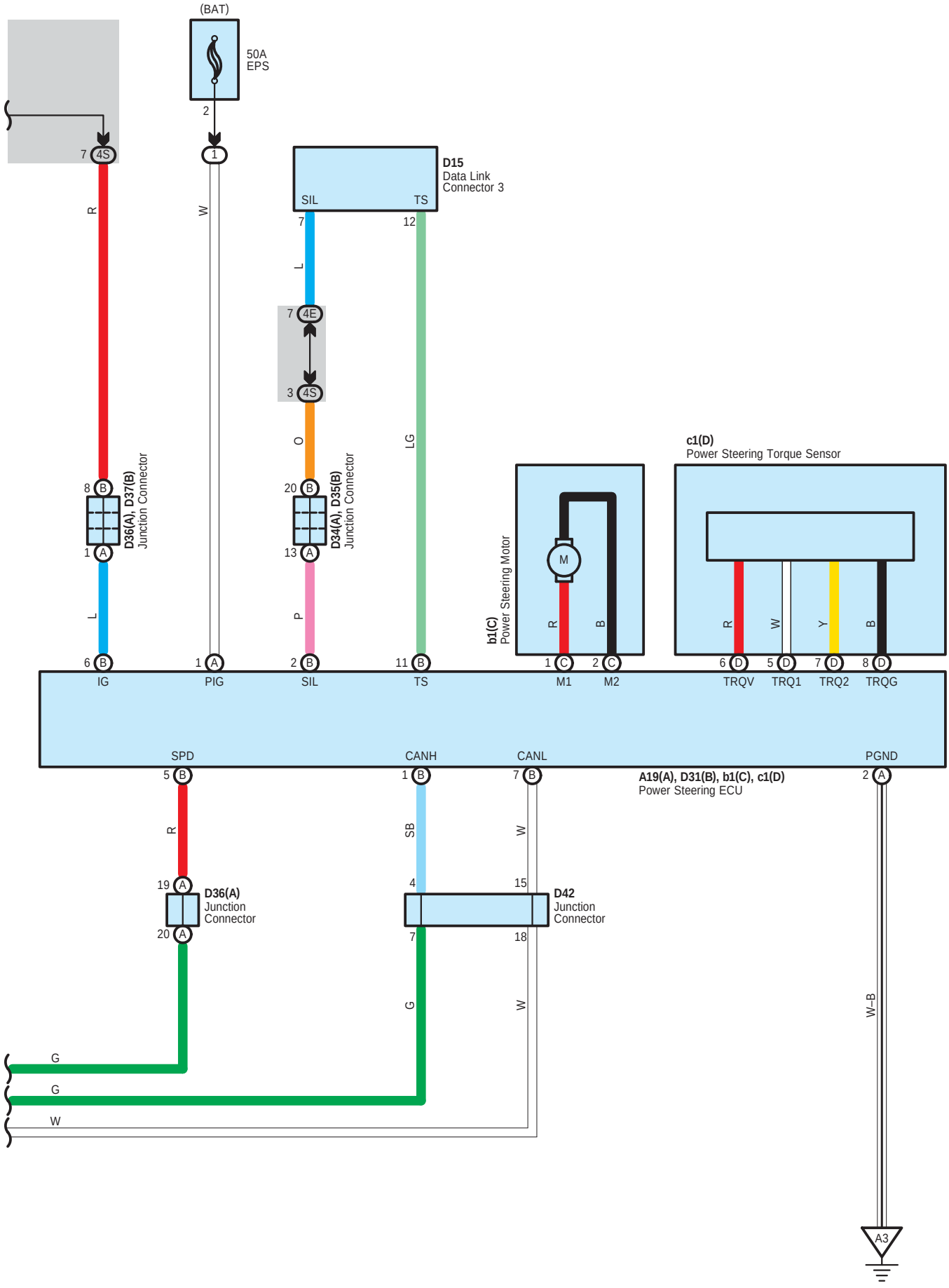
(BAT)
50A
EPS
2
1
7 4S
R
W
D15
Data Link
Connector 3
SIL
TS
7
12
L
7 4E
3 4S
O
LG
8 B
1 A
D36(A), D37(B)
Junction Connector
20 B
13 A
D34(A), D35(B)
Junction Connector
L
P
6 B
1 A
2 B
11 B
IG
PIG
SIL
TS
b1(C)
Power Steering Motor
M
R
B
1 C
2 C
M1
M2
c1(D)
Power Steering Torque Sensor
R
W
Y
B
6 D
5 D
7 D
8 D
TRQV
TRQ1
TRQ2
TRQG
SPD
CANH
CANL
PGND
5 B
1 B
7 B
2 A
A19(A), D31(B), b1(C), c1(D)
Power Steering ECU
R
SB
W
19 A
20 A
D36(A)
Junction
Connector
4
15
7
18
D42
Junction
Connector
G
W
W-B
G
G
W
A3

EPS

System Outline

* In order to reduce driver's steering force, the assist current is calculated from the torque sensor signal and vehicle speed signal of the meter or CAN communication to output to the motor.
* When abnormality occurs in the system, the assist is prohibited by shutting off the power source relay and motor relay in ECU, and the warning light (P/S) in the meter is lit up.

: Parts Location

Code		See Page	Code		See Page	Code		See Page
A19	A	50 (H/B)	D15		53 (S/D)	D37	B	51 (H/B)
		52 (S/D)	D31	B	51 (H/B)			53 (S/D)
A25		46 (H/B)			53 (S/D)	D42		51 (H/B)
		48 (S/D)	D34	A	51 (H/B)			53 (S/D)
C21		47 (H/B)			53 (S/D)	b1	C	50 (H/B)
		49 (S/D)	D35	B	51 (H/B)			52 (S/D)
D1		51 (H/B)			53 (S/D)	c1	D	50 (H/B)
		53 (S/D)	D36	A	51 (H/B)			52 (S/D)
D15		51 (H/B)			53 (S/D)			

: Relay Blocks

Code	See Page	Relay Blocks (Relay Block Location)
1	24	Engine Room R/B (Engine Compartment Left)

: Junction Block and Wire Harness Connector

Code	See Page	Junction Block and Wire Harness (Connector Location)
4B	30	Engine Room Main Wire and Instrument Panel J/B (Lower Finish Panel)
4C	30	Instrument Panel Wire and Instrument Panel J/B (Lower Finish Panel)
4D		
4E		
4M	31	
4S		

: Connector Joining Wire Harness and Wire Harness

Code	See Page	Joining Wire Harness and Wire Harness (Connector Location)
AA2	62 (H/B)	Engine Room Main Wire and Engine Room Main Wire (Instrument Panel Left)
	63 (S/D)	
AD3	62 (H/B)	Engine Room Main Wire and Instrument Panel Wire (Instrument Panel Left)
	63 (S/D)	
CA2	60 (H/B)	Engine Wire and Engine Room Main Wire (Engine Compartment Left)
	61 (S/D)	

: Ground Points

Code	See Page	Ground Points Location
A1	60 (H/B)	Left Suspension Tower
	61 (S/D)	
A3	62 (H/B)	Left Cowl Top Side Panel
	63 (S/D)	
D3	62 (H/B)	Instrument Panel Reinforcement Left
	63 (S/D)	

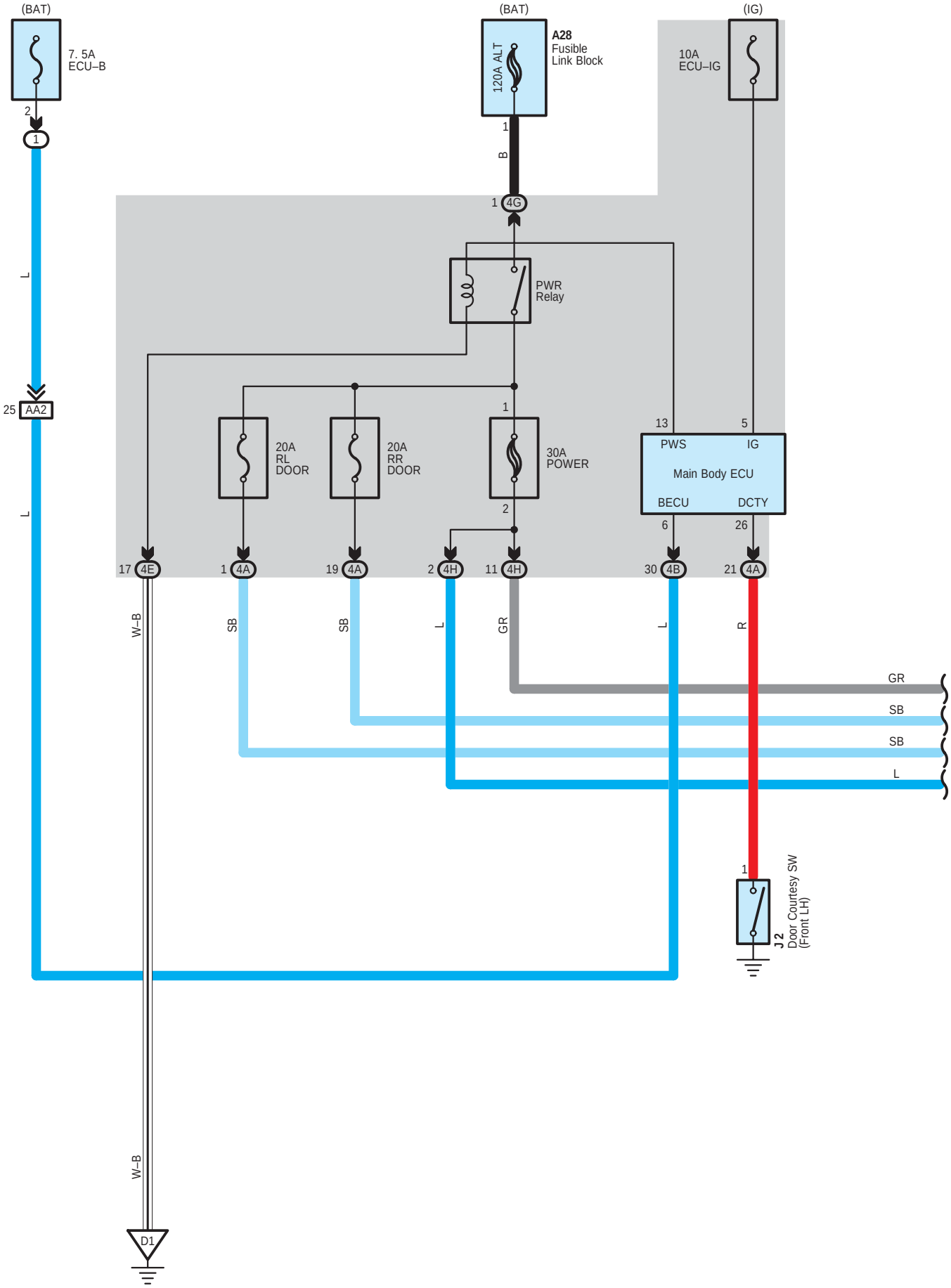
(BAT)
7. 5A
ECU–B
2
1
L
25 AA2
L
(BAT)
120A ALT
A28
Fusible
Link Block
1
B
1 4G
(IG)
10A
ECU–IG
PWR
Relay
20A
RL
DOOR
20A
RR
DOOR
1
30A
POWER
2
13
5
PWS
IG
Main Body ECU
BECU
DCTY
6
26
17 4E
1 4A
19 4A
2 4H
11 4H
30 4B
21 4A
W–B
SB
SB
L
GR
L
R
GR
SB
SB
L
1
J2
Door Courtesy SW
(Front LH)
W–B
D1

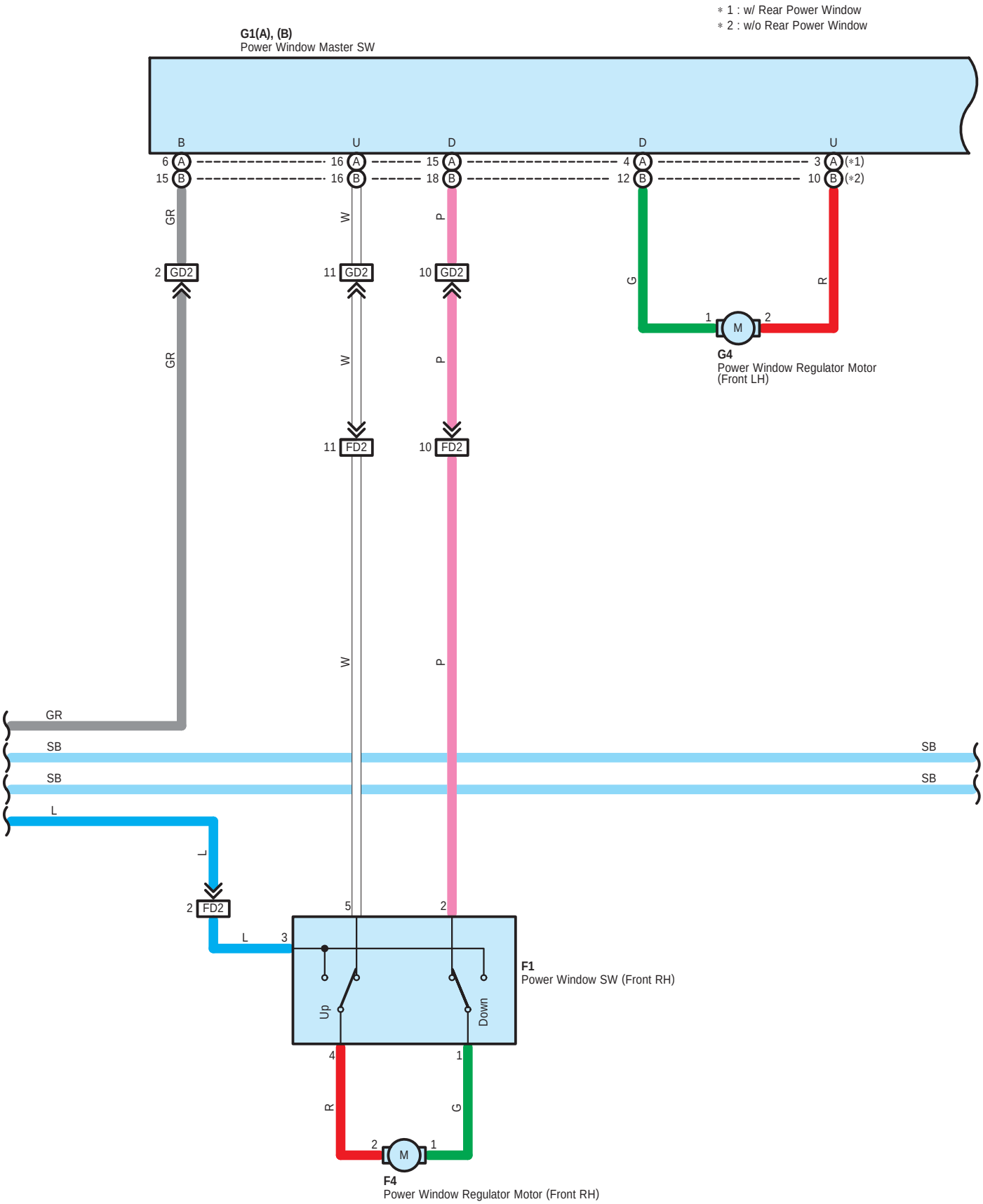
∗ 1 : w/ Rear Power Window
∗ 2 : w/o Rear Power Window
G1(A), (B)
Power Window Master SW
B
U
D
D
U
6 A
15 B
16 A
16 B
15 A
18 B
4 A
12 B
3 A (∗1)
10 B (∗2)
GR
W
P
G
R
2 GD2
11 GD2
10 GD2
1 M 2
G4
Power Window Regulator Motor (Front LH)
11 FD2
10 FD2
GR
SB
SB
SB
SB
L
L
2 FD2
5
2
L
3
F1
Power Window SW (Front RH)
Up
Down
4
1
R
G
2 M 1
F4
Power Window Regulator Motor (Front RH)

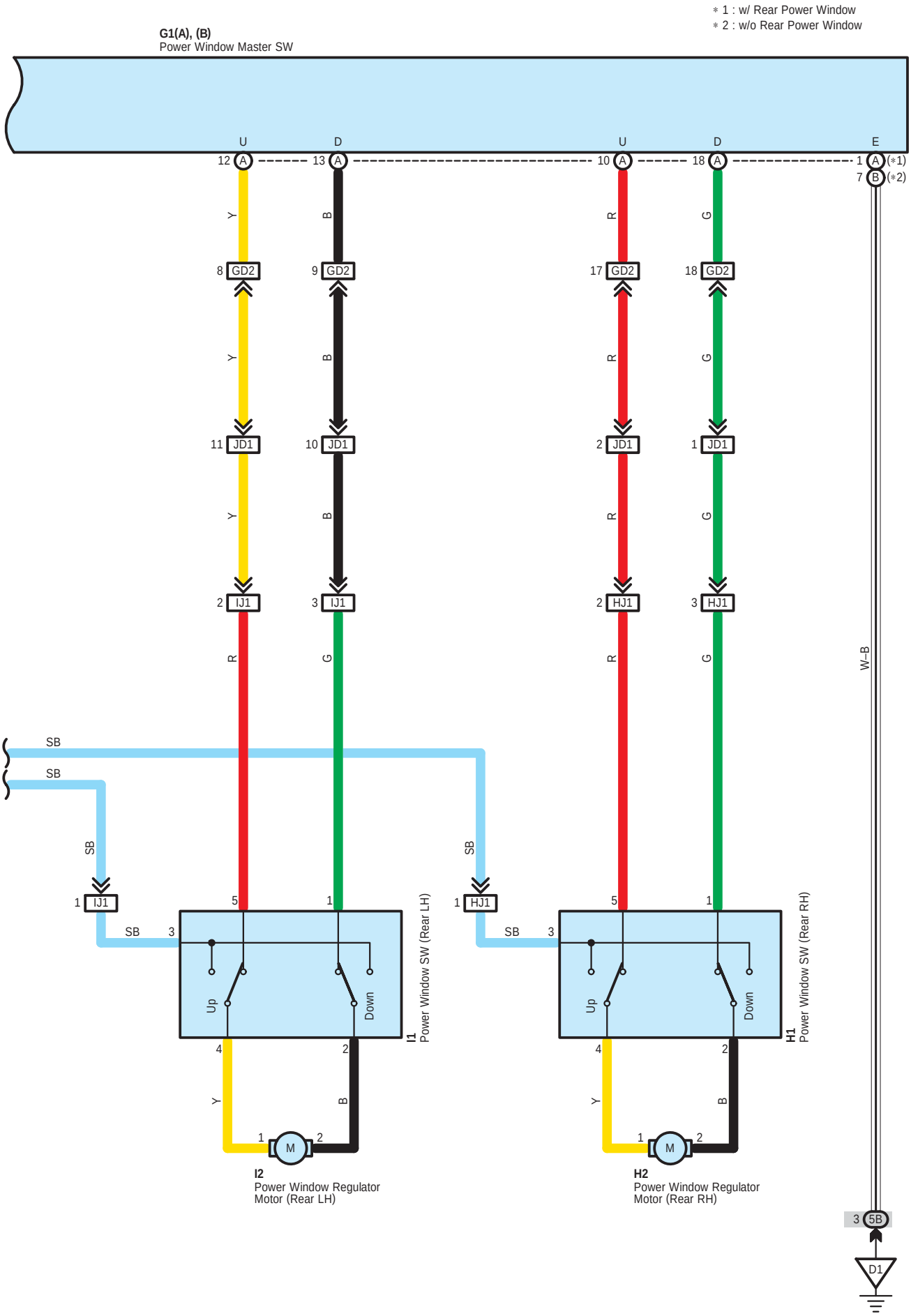
∗ 1 : w/ Rear Power Window
∗ 2 : w/o Rear Power Window
G1(A), (B)
Power Window Master SW
U
D
U
D
E
12 A
13 A
10 A
18 A
1 A (∗1)
7 B (∗2)
Y
B
R
G
8 GD2
9 GD2
17 GD2
18 GD2
11 JD1
10 JD1
2 JD1
1 JD1
2 IJ1
3 IJ1
2 HJ1
3 HJ1
W–B
SB
SB
SB
SB
1 IJ1
1 HJ1
5
1
5
1
SB
3
SB
3
Up
Down
Up
Down
4
2
4
2
Y
B
Y
B
1
M
2
1
M
2
I1
Power Window SW (Rear LH)
H1
Power Window SW (Rear RH)
I2
Power Window Regulator
Motor (Rear LH)
H2
Power Window Regulator
Motor (Rear RH)
3 5B
D1

System Outline

1. Manual Up–and–Down Function

During IG ON, one step operation upward (Pull) or downward (Push) of the door switch makes the door glass move upward or downward. Manual operation of the power window master switch for each window can control operation of each window remotely from the driver's seat. The door glass stops at the position when the switch is released.

2. One–Touch Auto Down Function

During IG ON, two step operation downward (Push) of the master switch of the driver's door glass makes the driver's door glass move automatically downward to the full–open position. The auto operation to either direction can be suspended by one step operation to the opposite side from the operating direction.

3. Power Window Jam Protection Function

If a foreign object gets jammed in the window during the manual operation, the door glass automatically goes down by about 50mm (or for about one second). If the door glass opening is less than 200mm after the move, the glass goes down to reach about 200mm of the opening (or for about 5 seconds).

4. Window Lock

All the power window operations except driver's side are disabled when the window lock switch of the power window master switch is pressed on.

5. Fail Mode LED Blinking

Self–diagnosis switches it to the fail mode and the indicator light (LED) in the switch knob blinks to inform the user under the following conditions.

* When abnormality is found in the hall IC that detects the position, speed and direction of the door glass.
* When there is larger difference than the predetermined one between the position information that the hall IC detects and the position information that the power window switch memorizes.

○ : Parts Location

Code		See Page	Code		See Page	Code	See Page
A28		43, 46 (H/B)	G1	A	58 (4–Door)	H2	58 (4–Door)
		43, 48 (S/D)		B	54 (5–Door)	I1	54 (5–Door)
F1		54 (5–Door)			56 (3–Door)		58 (4–Door)
		56 (3–Door)			58 (4–Door)	I2	54 (5–Door)
		58 (4–Door)	G4		54 (5–Door)		58 (4–Door)
F4		54 (5–Door)			56 (3–Door)	J2	55 (5–Door)
		56 (3–Door)			58 (4–Door)		57 (3–Door)
		58 (4–Door)	H1		54 (5–Door)		59 (4–Door)
G1	A	54 (5–Door)			58 (4–Door)		
		56 (3–Door)	H2		54 (5–Door)		

⬭ : Relay Blocks

Code	See Page	Relay Blocks (Relay Block Location)
1	24	Engine Room R/B (Engine Compartment Left)

⬭ : Junction Block and Wire Harness Connector

Code	See Page	Junction Block and Wire Harness (Connector Location)
4A	30	Floor Wire and Instrument Panel J/B (Lower Finish Panel)
4B	30	Engine Room Main Wire and Instrument Panel J/B (Lower Finish Panel)
4E	30	Instrument Panel Wire and Instrument Panel J/B (Lower Finish Panel)
4G	30	Engine Room Main Wire and Instrument Panel J/B (Lower Finish Panel)
4H	30	Instrument Panel Wire and Instrument Panel J/B (Lower Finish Panel)
5B	38	Front Door LH Wire and J/B No.5 (Left Kick Panel)

: Connector Joining Wire Harness and Wire Harness

Code	See Page	Joining Wire Harness and Wire Harness (Connector Location)
AA2	62 (H/B) 63 (S/D)	Engine Room Main Wire and Engine Room Main Wire (Instrument Panel Left)
FD2	62 (H/B) 63 (S/D)	Front Door RH Wire and Instrument Panel Wire (Right Kick Panel)
GD2	62 (H/B) 63 (S/D)	Front Door LH Wire and Instrument Panel Wire (Left Kick Panel)
HJ1	64 (5–Door) 66 (4–Door)	Rear Door No.1 Wire and Floor Wire (Right Center Pillar)
IJ1	64 (5–Door) 66 (4–Door)	Rear Door No.2 Wire and Floor Wire (Left Center Pillar)
JD1	62 (H/B) 63 (S/D)	Floor Wire and Instrument Panel Wire (Instrument Panel Left)

: Ground Points

Code	See Page	Ground Points Location
D1	62 (H/B) 63 (S/D)	Left Kick Panel

Door Lock Control

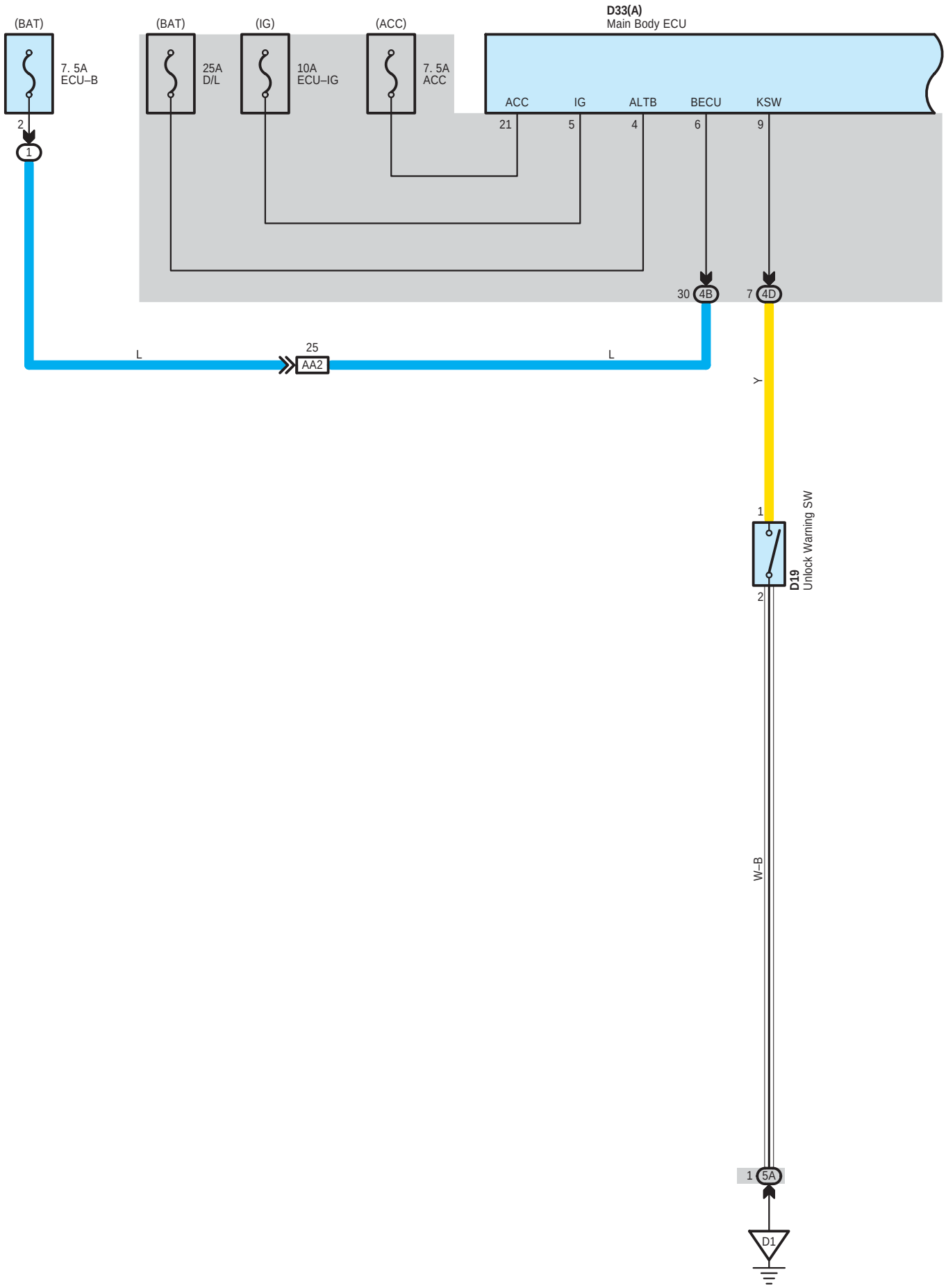

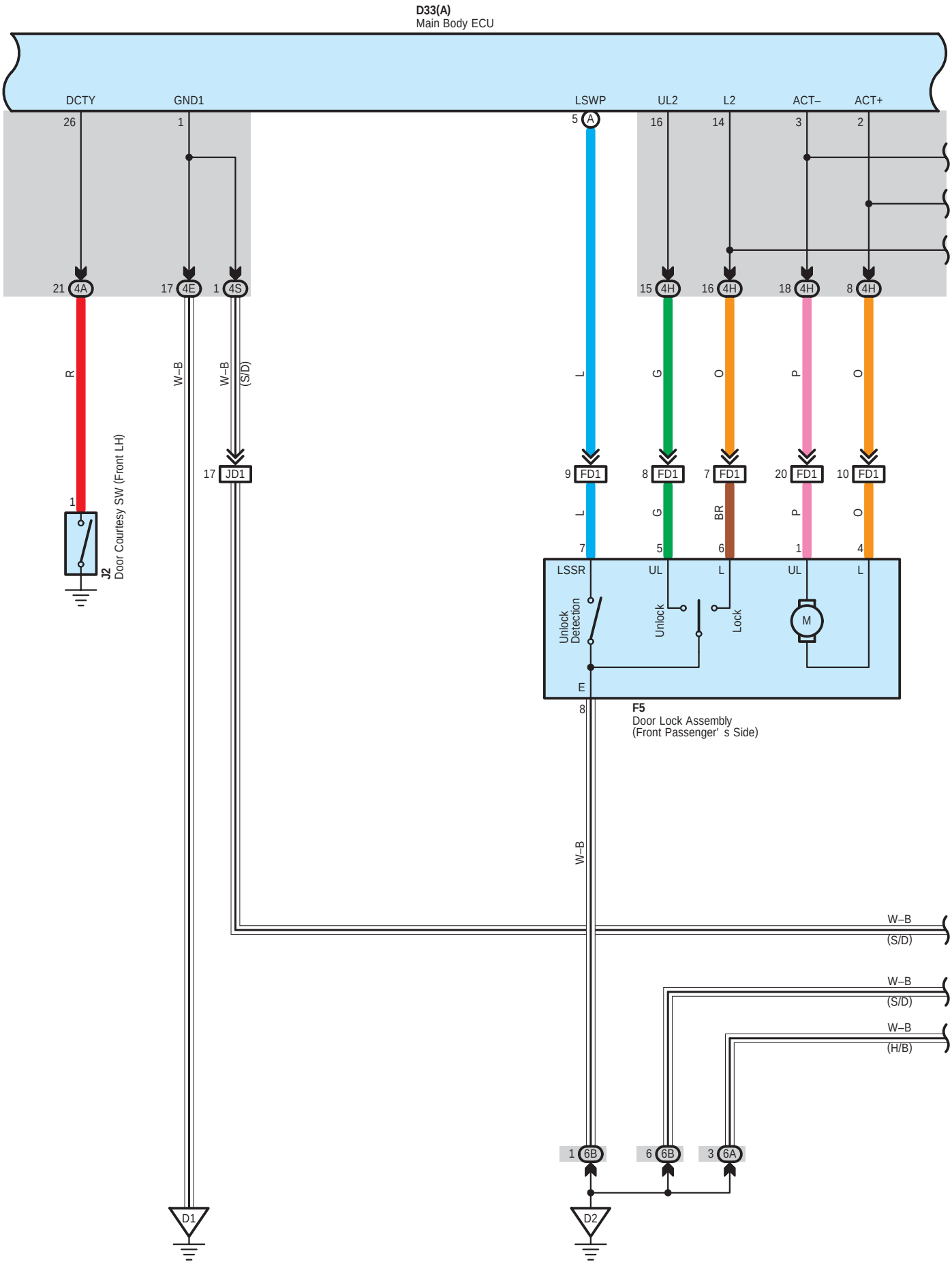
D33(A)
Main Body ECU
DCTY
GND1
LSWP
UL2
L2
ACT–
ACT+
26
1
5 A
16
14
3
2
21 4A
17 4E
1 4S
15 4H
16 4H
18 4H
8 4H
R
W–B
W–B (S/D)
L
G
O
P
O
17 JD1
9 FD1
8 FD1
7 FD1
20 FD1
10 FD1
L
G
BR
P
O
7
5
6
1
4
LSSR
UL
L
UL
L
Unlock Detection
Unlock
Lock
M
E
8
F5
Door Lock Assembly
(Front Passenger' s Side)
J2
Door Courtesy SW (Front LH)
1
W–B
W–B (S/D)
W–B
(S/D)
W–B
(S/D)
W–B
(H/B)
1 6B
6 6B
3 6A
D1
D2

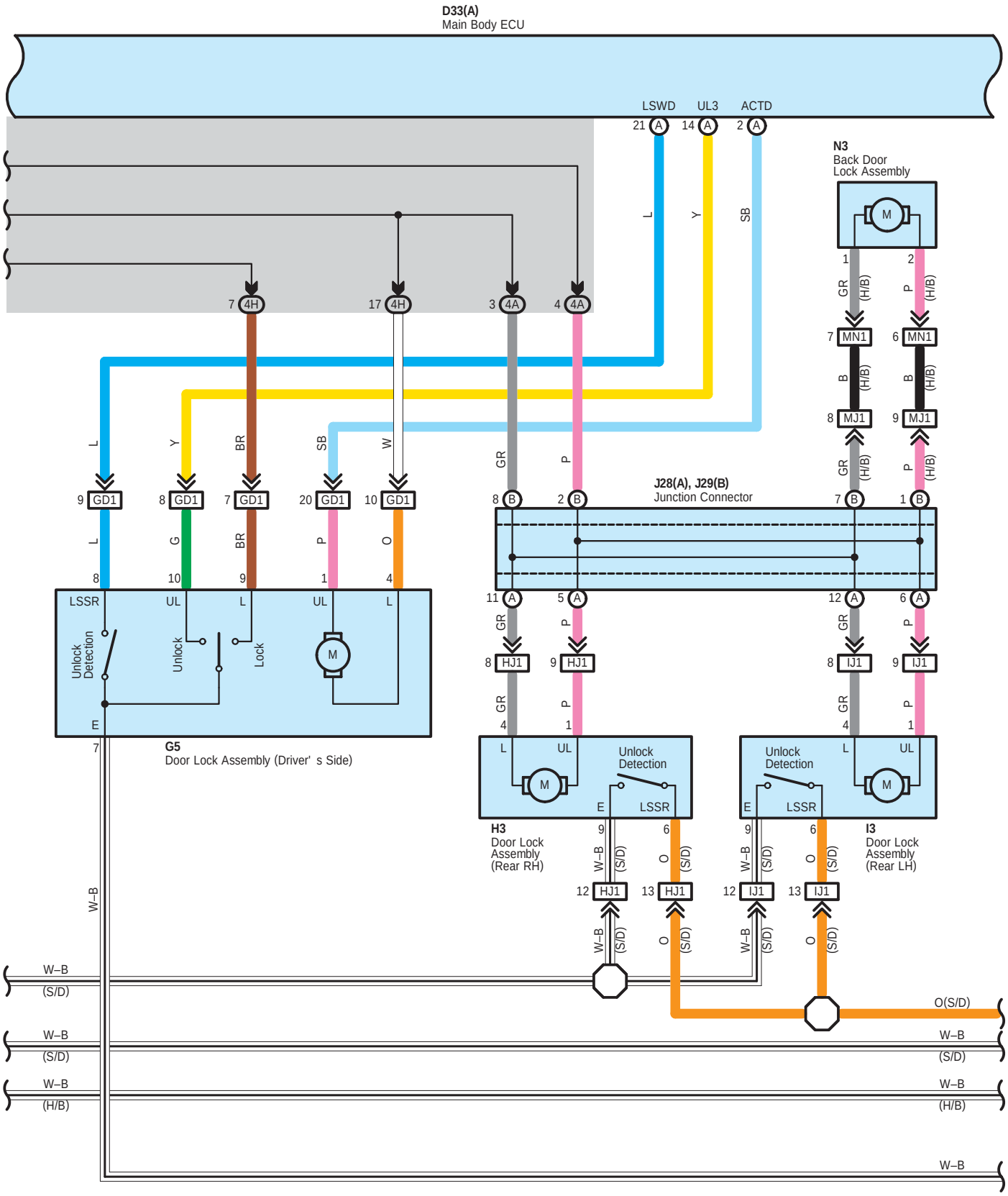
D33(A)
Main Body ECU
LSWD
UL3
ACTD
21 A
14 A
2 A
L
Y
SB
N3
Back Door
Lock Assembly
M
1
2
GR (H/B)
P (H/B)
7 MN1
6 MN1
B (H/B)
8 MJ1
9 MJ1
7 4H
17 4H
3 4A
4 4A
L
Y
BR
SB
W
GR
P
9 GD1
8 GD1
7 GD1
20 GD1
10 GD1
8 B
2 B
J28(A), J29(B)
Junction Connector
7 B
1 B
L
G
BR
P
O
8
10
9
1
4
LSSR
UL
L
UL
L
Unlock Detection
Unlock
Lock
M
E
7
G5
Door Lock Assembly (Driver' s Side)
11 A
5 A
12 A
6 A
GR
P
8 HJ1
9 HJ1
8 IJ1
9 IJ1
4
1
L
UL
Unlock Detection
E
LSSR
H3
Door Lock
Assembly
(Rear RH)
I3
Door Lock
Assembly
(Rear LH)
9
6
W–B
O
(S/D)
12 HJ1
13 HJ1
12 IJ1
13 IJ1
W–B
(S/D)
O(S/D)
W–B
(H/B)

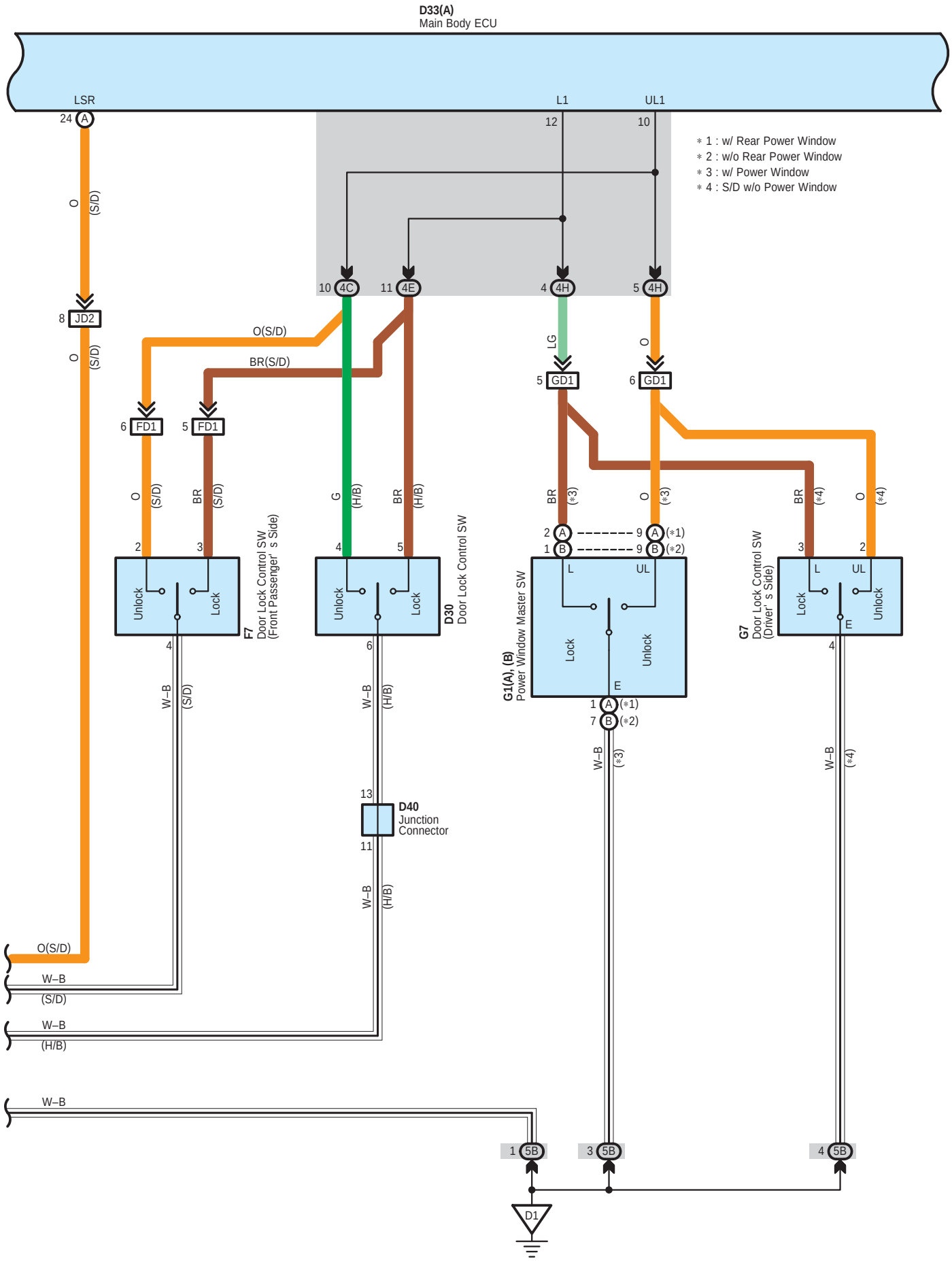
D33(A)
Main Body ECU
LSR
L1
UL1
24 A
12
10
* 1 : w/ Rear Power Window
* 2 : w/o Rear Power Window
* 3 : w/ Power Window
* 4 : S/D w/o Power Window
O (S/D)
8 JD2
O (S/D)
10 4C
11 4E
4 4H
5 4H
O(S/D)
BR(S/D)
LG
O
5 GD1
6 GD1
6 FD1
5 FD1
O (S/D)
BR (S/D)
G (H/B)
BR (H/B)
BR (*3)
O (*3)
BR (*4)
O (*4)
2 A
1 B
9 A (*1)
9 B (*2)
F7
Door Lock Control SW
(Front Passenger' s Side)
Unlock
Lock
D30
Door Lock Control SW
G1(A), (B)
Power Window Master SW
L
UL
G7
Door Lock Control SW
(Driver' s Side)
E
4
6
W–B (S/D)
W–B (H/B)
1 A (*1)
7 B (*2)
W–B (*3)
W–B (*4)
13
D40
Junction
Connector
11
O(S/D)
W–B
(S/D)
W–B
(H/B)
W–B
1 5B
3 5B
4 5B
D1

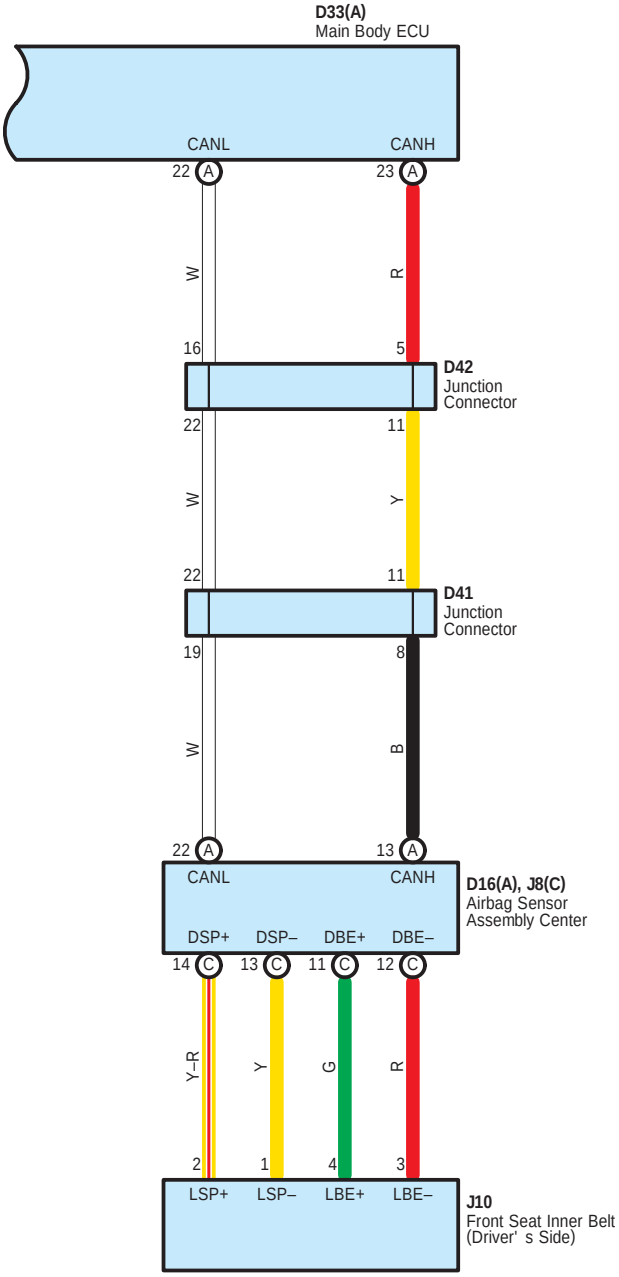
D33(A)
Main Body ECU
CANL
CANH
22 A
23 A
W
R
16
5
D42
Junction
Connector
22
11
W
Y
22
11
D41
Junction
Connector
19
8
W
B
22 A
13 A
CANL
CANH
D16(A), J8(C)
Airbag Sensor
Assembly Center
DSP+
DSP–
DBE+
DBE–
14 C
13 C
11 C
12 C
Y–R
Y
G
R
2
1
4
3
LSP+
LSP–
LBE+
LBE–
J10
Front Seat Inner Belt
(Driver' s Side)

System Outline

1. Manual Lock & Unlock Function

All the doors (Including the back door) are locked or unlocked by operating the door lock control switch (For manual operation) to 'lock' or 'unlock' side.

2. Door Key–Linked Lock & Unlock Function

All the doors (Including the back door) are locked or unlocked by operating the key plate to 'lock' or 'unlock' side after inserting the key plate into driver's door key cylinder.

3. Key Confinement Prevention Function

To prevent the key confinement in the cabin, it controls not to lock the doors with the door lock control switch (For manual operation or for key–linked) or the door lock knob when the key plate is inserted in the ignition key cylinder with the driver's door open.

: Parts Location

Code		See Page	Code		See Page	Code		See Page
D16	A	51 (H/B)	F7		58 (4–Door)	J8	C	50 (H/B)
		53 (S/D)	G1	A	54 (5–Door)			52 (S/D)
D19		51 (H/B)			58 (4–Door)	J10		55 (5–Door)
		53 (S/D)		B	56 (3–Door)			57 (3–Door)
D30		51 (H/B)	G5		54 (5–Door)			59 (4–Door)
D33	A	51 (H/B)			56 (3–Door)	J28	A	55 (5–Door)
		53 (S/D)			58 (4–Door)			57 (3–Door)
D40		51 (H/B)	G7		58 (4–Door)			59 (4–Door)
D41		51 (H/B)	H3		54 (5–Door)	J29	B	55 (5–Door)
		53 (S/D)			58 (4–Door)			57 (3–Door)
D42		51 (H/B)	I3		54 (5–Door)			59 (4–Door)
		53 (S/D)			58 (4–Door)	N3		54 (5–Door)
F5		54 (5–Door)	J2		55 (5–Door)			56 (3–Door)
		56 (3–Door)			57 (3–Door)			
		58 (4–Door)			59 (4–Door)			

: Relay Blocks

Code	See Page	Relay Blocks (Relay Block Location)
1	24	Engine Room R/B (Engine Compartment Left)

: Junction Block and Wire Harness Connector

Code	See Page	Junction Block and Wire Harness (Connector Location)
4A	30	Floor Wire and Instrument Panel J/B (Lower Finish Panel)
4B	30	Engine Room Main Wire and Instrument Panel J/B (Lower Finish Panel)
4C	30	Instrument Panel Wire and Instrument Panel J/B (Lower Finish Panel)
4D		
4E		
4H		
4S	31	
5A	38	Instrument Panel Wire and J/B No.5 (Left Kick Panel)
5B	38	Front Door LH Wire and J/B No.5 (Left Kick Panel)
6A	40	Instrument Panel Wire and J/B No.6 (Right Kick Panel)
6B	40	Front Door RH Wire and J/B No.6 (Right Kick Panel)

Door Lock Control

: Connector Joining Wire Harness and Wire Harness

Code	See Page	Joining Wire Harness and Wire Harness (Connector Location)
AA2	62 (H/B) 63 (S/D)	Engine Room Main Wire and Engine Room Main Wire (Instrument Panel Left)
FD1	62 (H/B) 63 (S/D)	Front Door RH Wire and Instrument Panel Wire (Right Kick Panel)
GD1	62 (H/B) 63 (S/D)	Front Door LH Wire and Instrument Panel Wire (Left Kick Panel)
HJ1	64 (5–Door) 66 (4–Door)	Rear Door No.1 Wire and Floor Wire (Right Center Pillar)
IJ1	64 (5–Door) 66 (4–Door)	Rear Door No.2 Wire and Floor Wire (Left Center Pillar)
JD1 JD2	63 (S/D)	Floor Wire and Instrument Panel Wire (Instrument Panel Left)
MJ1	64 (5–Door) 65 (3–Door)	Back Door No.1 Wire and Floor Wire (Left Rear Quarter Panel)
MN1	64 (5–Door) 65 (3–Door)	Back Door No.1 Wire and Back Door No.2 Wire (Back Door Panel Center)

: Ground Points

Code	See Page	Ground Points Location
D1	62 (H/B) 63 (S/D)	Left Kick Panel
D2	62 (H/B) 63 (S/D)	Right Kick Panel

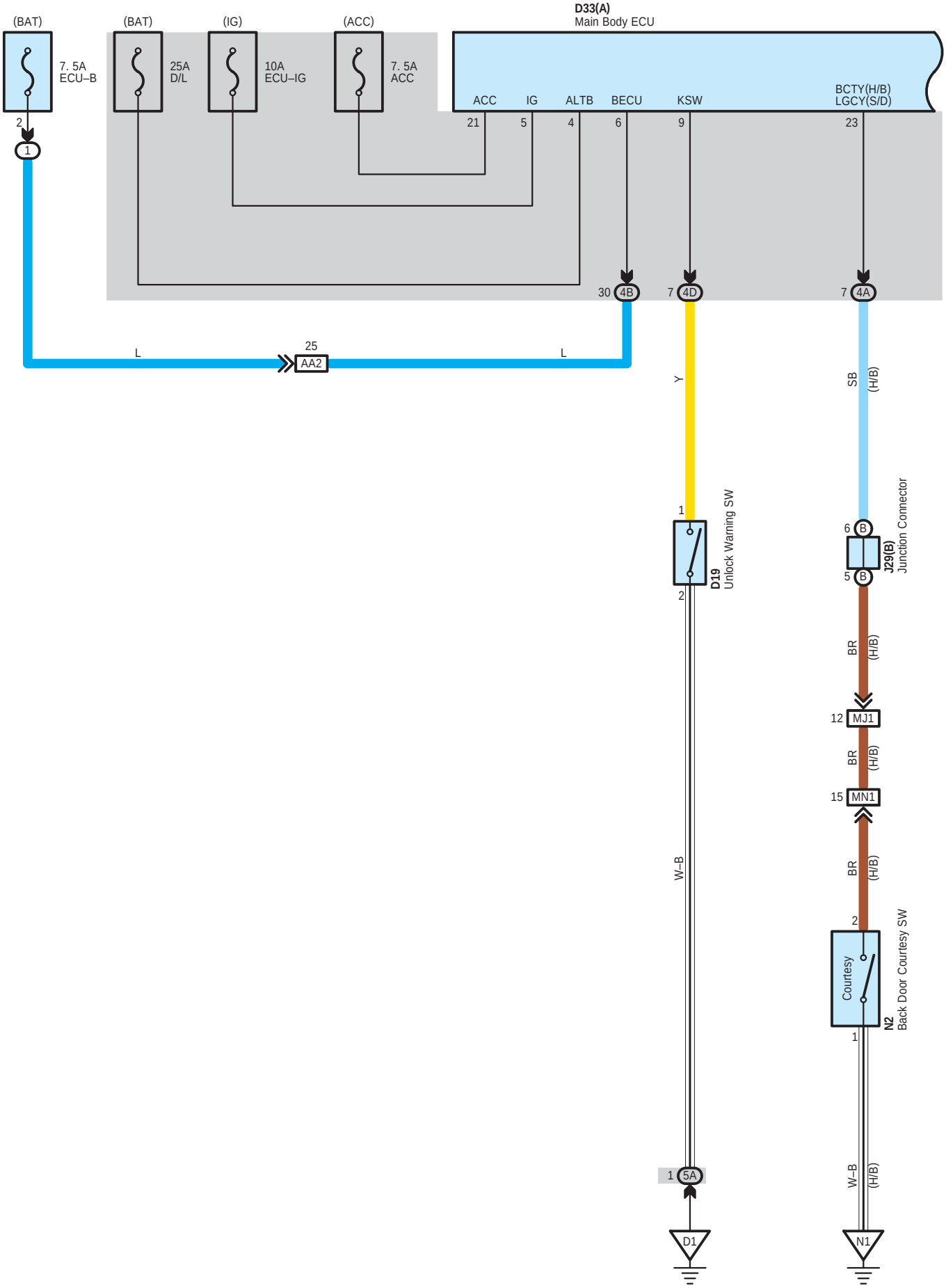
(BAT)
7. 5A
ECU–B
2
1
(BAT)
25A
D/L
(IG)
10A
ECU–IG
(ACC)
7. 5A
ACC
D33(A)
Main Body ECU
ACC
IG
ALTB
BECU
KSW
BCTY(H/B)
LGCY(S/D)
21
5
4
6
9
23
30
4B
7
4D
7
4A
L
25
AA2
L
Y
SB
(H/B)
1
D19
Unlock Warning SW
2
6
B
5
B
J29(B)
Junction Connector
BR
(H/B)
12
MJ1
BR
(H/B)
15
MN1
BR
(H/B)
2
Courtesy
N2
Back Door Courtesy SW
1
W–B
W–B
(H/B)
1
5A
D1
N1

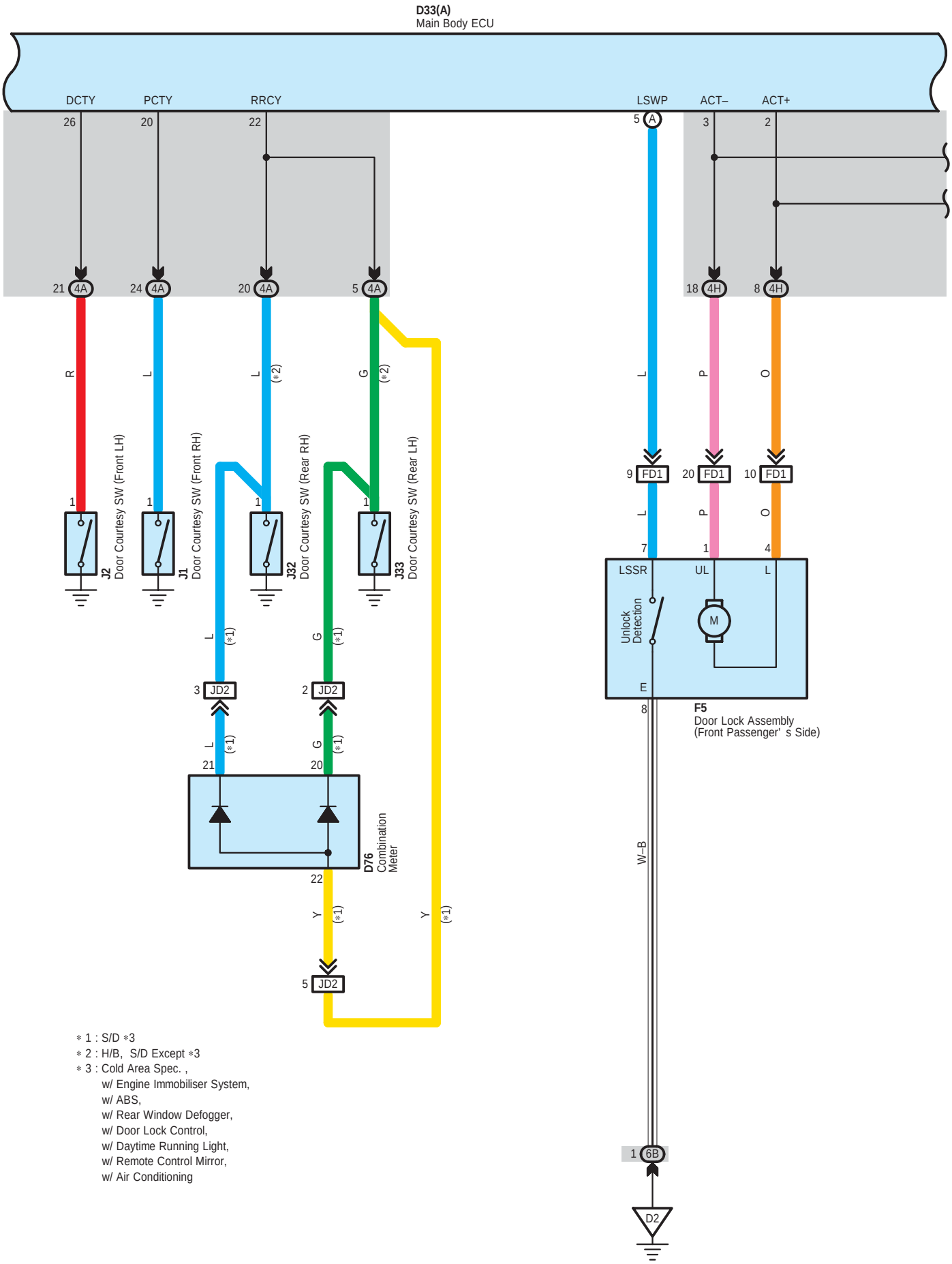
D33(A)
Main Body ECU
DCTY
PCTY
RRCY
LSWP
ACT–
ACT+
26
20
22
5 A
3
2
21 4A
24 4A
20 4A
5 4A
18 4H
8 4H
R
L
L (*2)
G (*2)
L
P
O
1
J2
Door Courtesy SW (Front LH)
J1
Door Courtesy SW (Front RH)
J32
Door Courtesy SW (Rear RH)
J33
Door Courtesy SW (Rear LH)
9 FD1
20 FD1
10 FD1
7
1
4
LSSR
UL
L
Unlock Detection
M
E
8
F5
Door Lock Assembly
(Front Passenger' s Side)
L (*1)
G (*1)
3 JD2
2 JD2
21
20
D76
Combination Meter
22
Y (*1)
Y (*1)
5 JD2
W–B
1 6B
D2
* 1 : S/D *3
* 2 : H/B, S/D Except *3
* 3 : Cold Area Spec. ,
w/ Engine Immobiliser System,
w/ ABS,
w/ Rear Window Defogger,
w/ Door Lock Control,
w/ Daytime Running Light,
w/ Remote Control Mirror,
w/ Air Conditioning

Wireless Door Lock Control

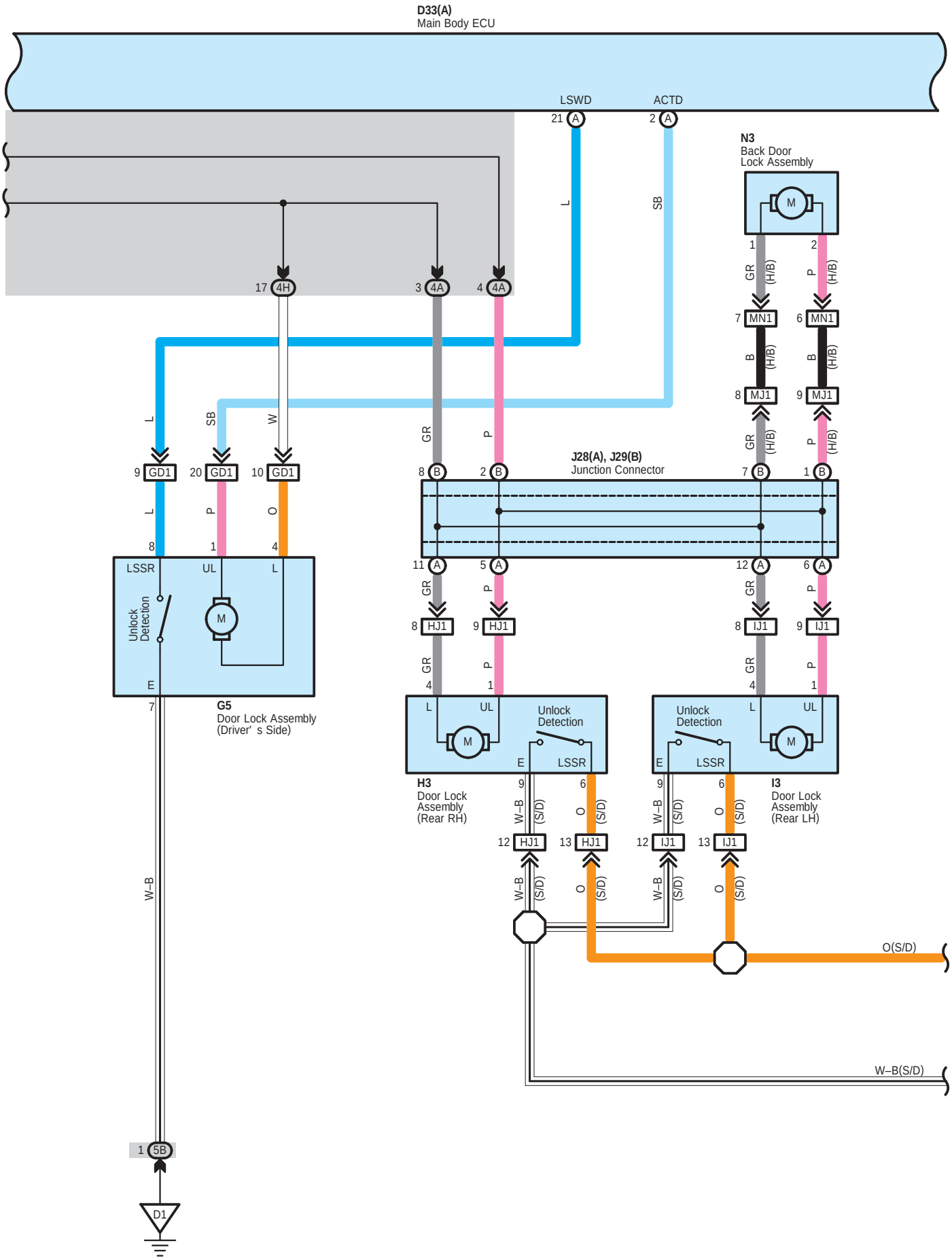

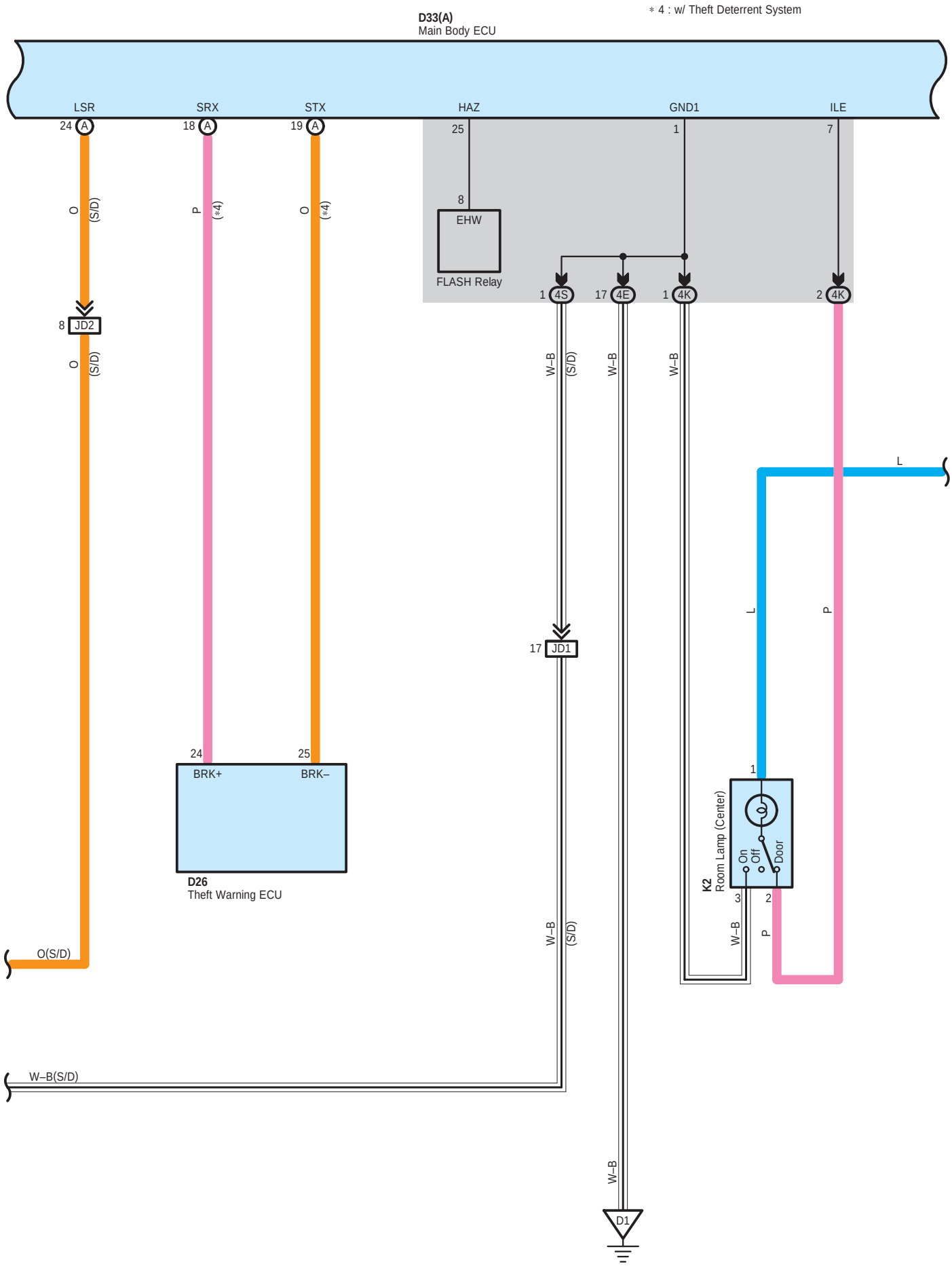
∗ 4 : w/ Theft Deterrent System
D33(A)
Main Body ECU
LSR
SRX
STX
HAZ
GND1
ILE
24 A
18 A
19 A
25
1
7
8
EHW
FLASH Relay
1 4S
17 4E
1 4K
2 4K
O (S/D)
P (∗4)
O (∗4)
8 JD2
O (S/D)
W–B (S/D)
W–B
W–B
L
17 JD1
L
P
24
25
BRK+
BRK–
D26
Theft Warning ECU
1
K2
Room Lamp (Center)
On
Off
Door
3
2
W–B
P
O(S/D)
W–B (S/D)
W–B
D1
W–B(S/D)

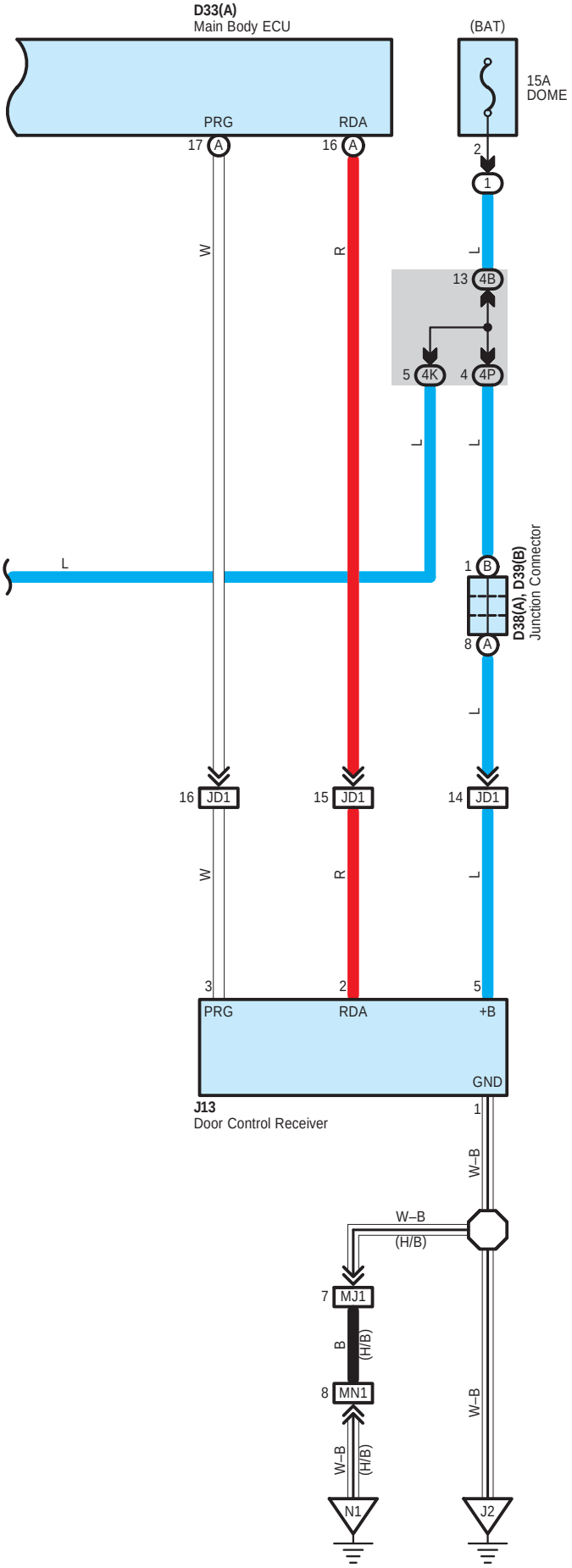
D33(A)
Main Body ECU
PRG
RDA
17 A
16 A
(BAT)
15A
DOME
2
1
W
R
L
13 4B
5 4K
4 4P
L
L
L
1 B
D38(A), D39(B)
Junction Connector
8 A
L
16 JD1
15 JD1
14 JD1
W
R
L
3
2
5
PRG
RDA
+B
GND
J13
Door Control Receiver
1
W–B
W–B
(H/B)
7 MJ1
B
(H/B)
8 MN1
W–B
W–B
(H/B)
N1
J2

System Outline

1. Wireless Lock & Unlock Function

Pushing the lock button locks all the doors and pushing the unlock button unlocks the all the doors.

2. 30–Second Auto Lock Function

If none of the door are opened within 30 seconds after they are unlocked with the unlock button, all the doors are locked automatically again to prevent the doors from being left open.

3. Operation Prohibition Function with the Door Open

When one of the doors is ajar or open, the door lock operation through the wireless remote control is prohibited.

4. Repeat Function

If a door lock operation has not been confirmed for some reason after the system conducts the lock operation, the system repeats the lock operation after approximately one second.

5. Answer Back Function (Hazard Light Flashing)

The hazard light flashes once when locking, and flashes twice when unlocking if the doors are locked/unlocked through the wireless remote control.

6. Key Reminder Function

When the key is inserted in the key cylinder, all the operations of the wireless remote control system are prohibited.

7. Illuminating Function

When the doors are unlocked with the wireless remote control, the interior lights are lit for approximately 15 seconds if the interior light switch is at 'door' position.

8. Wireless Security Function

The security function is adopted under which the door unlock and the like are controlled only when the wireless receiver checks the encrypted code sent from the transmitter key and identifies it as its own vehicle's code.

○ : Parts Location

Code	See Page	Code	See Page	Code	See Page
D19	51 (H/B)	G5	56 (3–Door)	J28 A	57 (3–Door)
	53 (S/D)		58 (4–Door)		59 (4–Door)
D26	51 (H/B)	H3	54 (5–Door)	J29 B	55 (5–Door)
	53 (S/D)		58 (4–Door)		57 (3–Door)
D33 A	51 (H/B)	I3	54 (5–Door)		59 (4–Door)
	53 (S/D)		58 (4–Door)	J32	55 (5–Door)
D38 A	51 (H/B)	J1	55 (5–Door)		59 (4–Door)
	53 (S/D)		57 (3–Door)	J33	55 (5–Door)
D39 B	51 (H/B)		59 (4–Door)		59 (4–Door)
	53 (S/D)	J2	55 (5–Door)	K2	54 (5–Door)
D76	53 (S/D)		57 (3–Door)		56 (3–Door)
F5	54 (5–Door)		59 (4–Door)		58 (4–Door)
	56 (3–Door)	J13	55 (5–Door)	N2	54 (5–Door)
	58 (4–Door)		57 (3–Door)		56 (3–Door)
G1 A	54 (5–Door)		59 (4–Door)	N3	54 (5–Door)
G5	54 (5–Door)	J28 A	55 (5–Door)		56 (3–Door)

⬭ : Relay Blocks

Code	See Page	Relay Blocks (Relay Block Location)
1	24	Engine Room R/B (Engine Compartment Left)

Wireless Door Lock Control

: Junction Block and Wire Harness Connector

Code	See Page	Junction Block and Wire Harness (Connector Location)
4A	30	Floor Wire and Instrument Panel J/B (Lower Finish Panel)
4B	30	Engine Room Main Wire and Instrument Panel J/B (Lower Finish Panel)
4D	30	Instrument Panel Wire and Instrument Panel J/B (Lower Finish Panel)
4E		
4H		
4K	30	Roof Wire and Instrument Panel J/B (Lower Finish Panel)
4P	31	Instrument Panel Wire and Instrument Panel J/B (Lower Finish Panel)
4S		
5A	38	Instrument Panel Wire and J/B No.5 (Left Kick Panel)
5B	38	Front Door LH Wire and J/B No.5 (Left Kick Panel)
6B	40	Front Door RH Wire and J/B No.6 (Right Kick Panel)

: Connector Joining Wire Harness and Wire Harness

Code	See Page	Joining Wire Harness and Wire Harness (Connector Location)
AA2	62 (H/B)	Engine Room Main Wire and Engine Room Main Wire (Instrument Panel Left)
	63 (S/D)	
FD1	62 (H/B)	Front Door RH Wire and Instrument Panel Wire (Right Kick Panel)
	63 (S/D)	
GD1	62 (H/B)	Front Door LH Wire and Instrument Panel Wire (Left Kick Panel)
	63 (S/D)	
HJ1	64 (5–Door)	Rear Door No.1 Wire and Floor Wire (Right Center Pillar)
	66 (4–Door)	
IJ1	64 (5–Door)	Rear Door No.2 Wire and Floor Wire (Left Center Pillar)
	66 (4–Door)	
JD1	62 (H/B)	Floor Wire and Instrument Panel Wire (Instrument Panel Left)
	63 (S/D)	
JD2	63 (S/D)	
MJ1	64 (5–Door)	Back Door No.1 Wire and Floor Wire (Left Rear Quarter Panel)
	65 (3–Door)	
MN1	64 (5–Door)	Back Door No.1 Wire and Back Door No.2 Wire (Back Door Panel Center)
	65 (3–Door)	

: Ground Points

Code	See Page	Ground Points Location
D1	62 (H/B)	Left Kick Panel
	63 (S/D)	
D2	62 (H/B)	Right Kick Panel
	63 (S/D)	
J2	64 (5–Door)	Left Rear Quarter Panel
	65 (3–Door)	
	66 (4–Door)	Lower Back Panel Left
N1	64 (5–Door)	Back Door Panel Center
	65 (3–Door)	

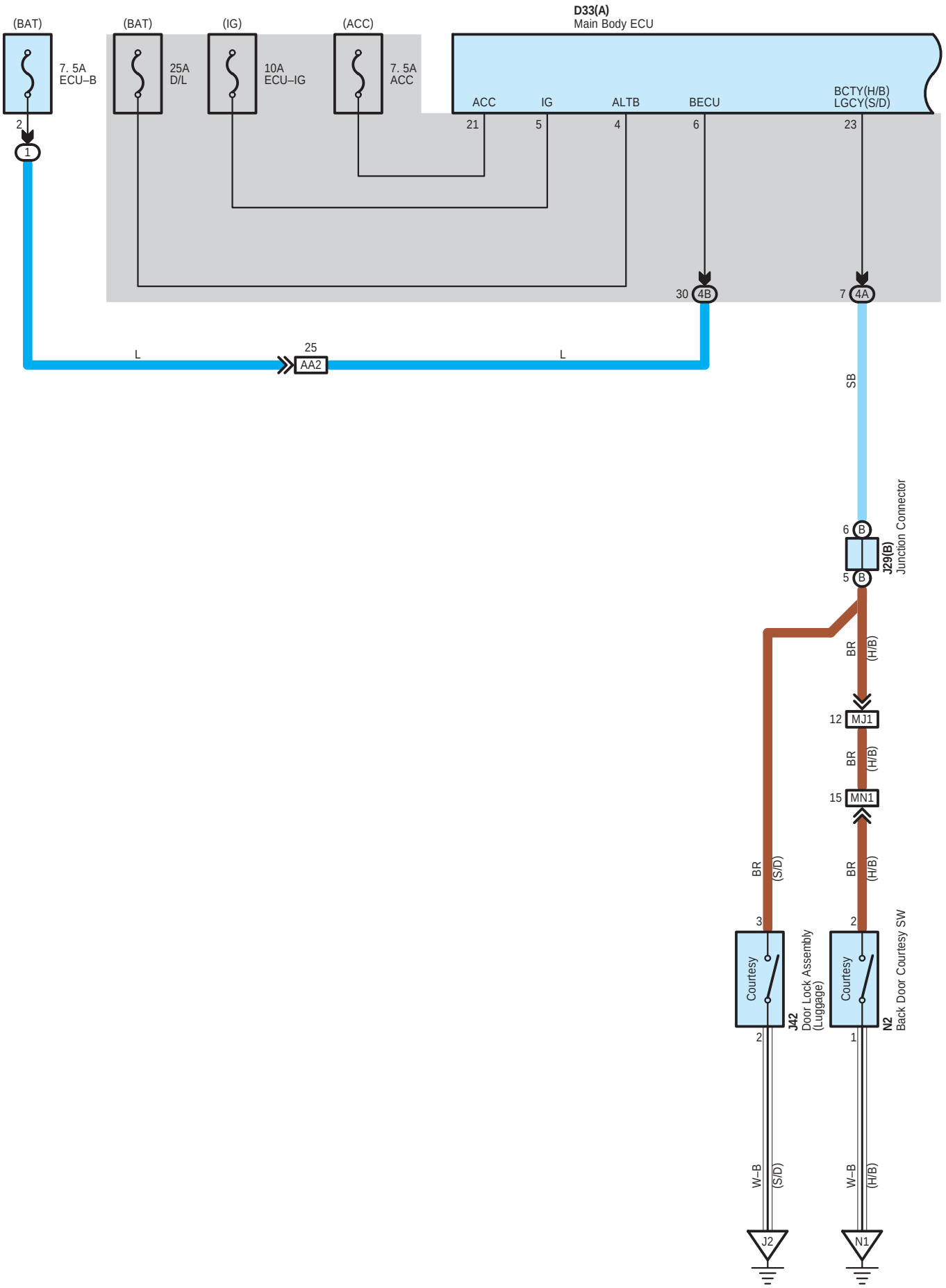
(BAT)
7. 5A
ECU–B
2
1
(BAT)
25A
D/L
(IG)
10A
ECU–IG
(ACC)
7. 5A
ACC
D33(A)
Main Body ECU
ACC
IG
ALTB
BECU
BCTY(H/B)
LGCY(S/D)
21
5
4
6
23
30
4B
7
4A
L
25
AA2
L
SB
6
B
5
B
J29(B)
Junction Connector
BR
(H/B)
12
MJ1
BR
(H/B)
15
MN1
BR
(S/D)
BR
(H/B)
3
2
Courtesy
Courtesy
J42
Door Lock Assembly
(Luggage)
N2
Back Door Courtesy SW
2
1
W–B
(S/D)
W–B
(H/B)
J2
N1

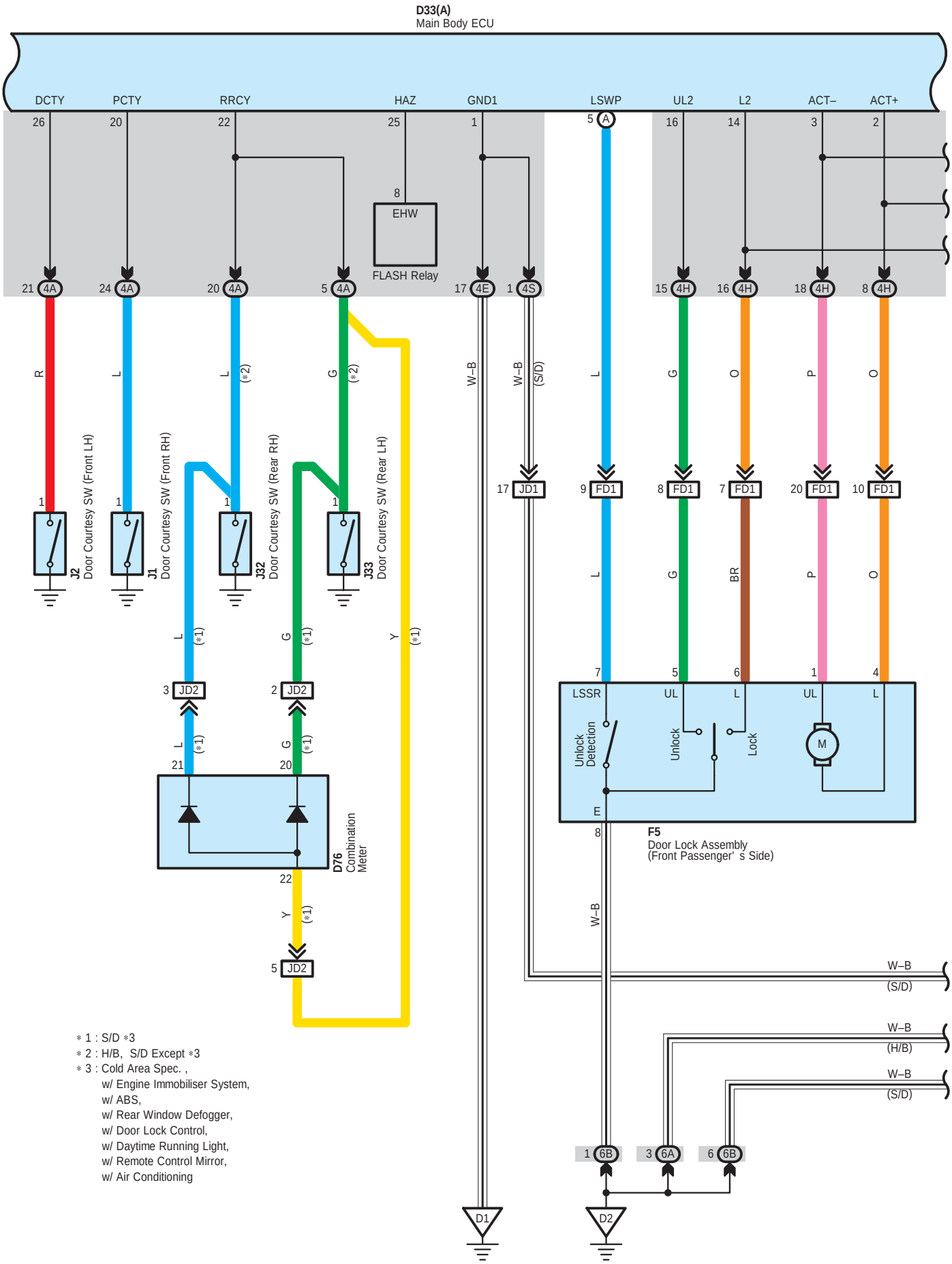

∗ 1 : S/D ∗3
∗ 2 : H/B, S/D Except ∗3
∗ 3 : Cold Area Spec. ,
w/ Engine Immobiliser System,
w/ ABS,
w/ Rear Window Defogger,
w/ Door Lock Control,
w/ Daytime Running Light,
w/ Remote Control Mirror,
w/ Air Conditioning

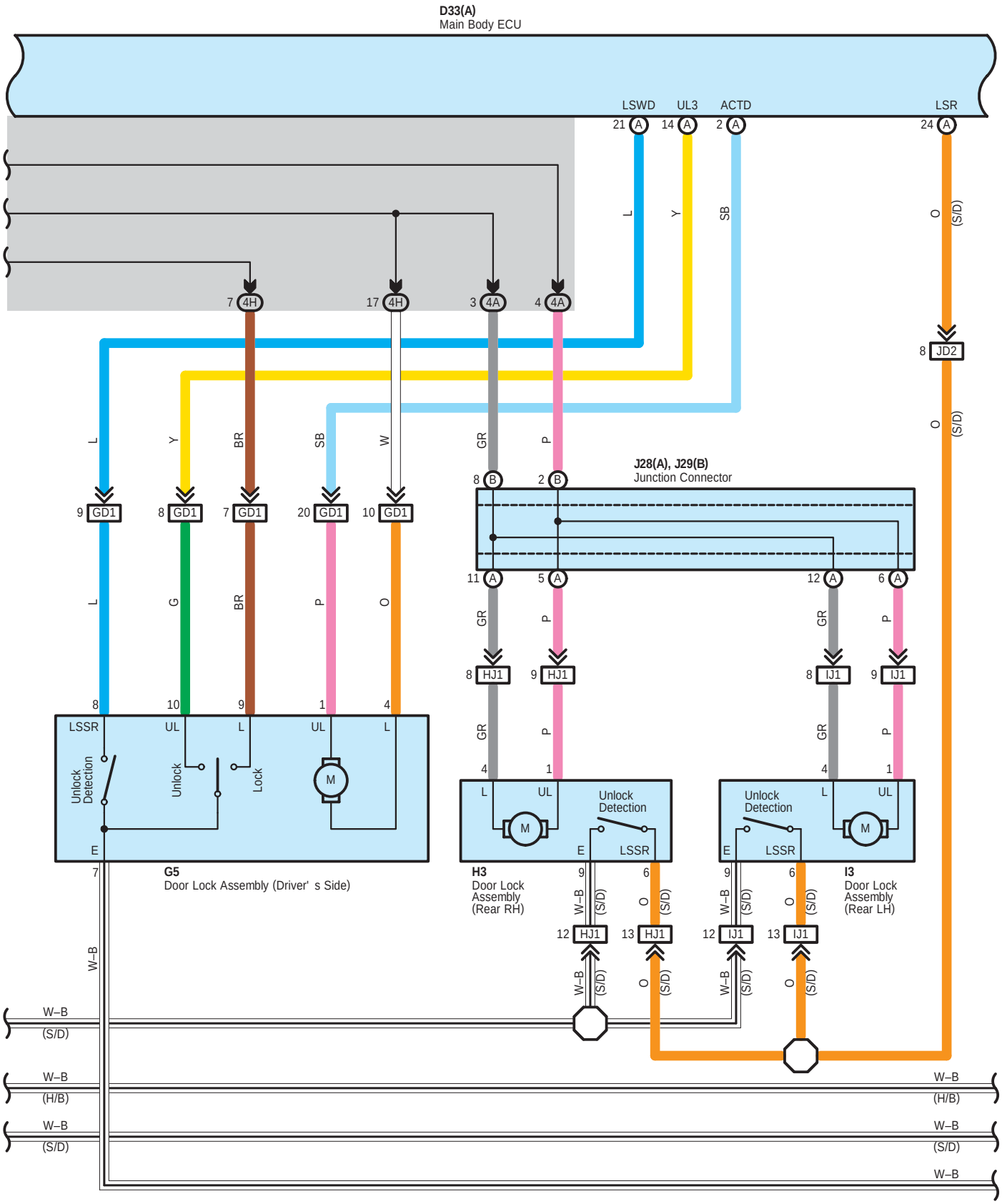
D33(A)
Main Body ECU
LSWD
UL3
ACTD
LSR
21 A
14 A
2 A
24 A
L
Y
SB
O
(S/D)
7 4H
17 4H
3 4A
4 4A
8 JD2
J28(A), J29(B)
Junction Connector
9 GD1
8 GD1
7 GD1
20 GD1
10 GD1
8 B
2 B
11 A
5 A
12 A
6 A
8 HJ1
9 HJ1
8 IJ1
9 IJ1
LSSR
UL
Unlock Detection
Unlock
Lock
M
E
G5
Door Lock Assembly (Driver' s Side)
H3
Door Lock Assembly (Rear RH)
I3
Door Lock Assembly (Rear LH)
12 HJ1
13 HJ1
12 IJ1
13 IJ1
W–B
(H/B)
(S/D)

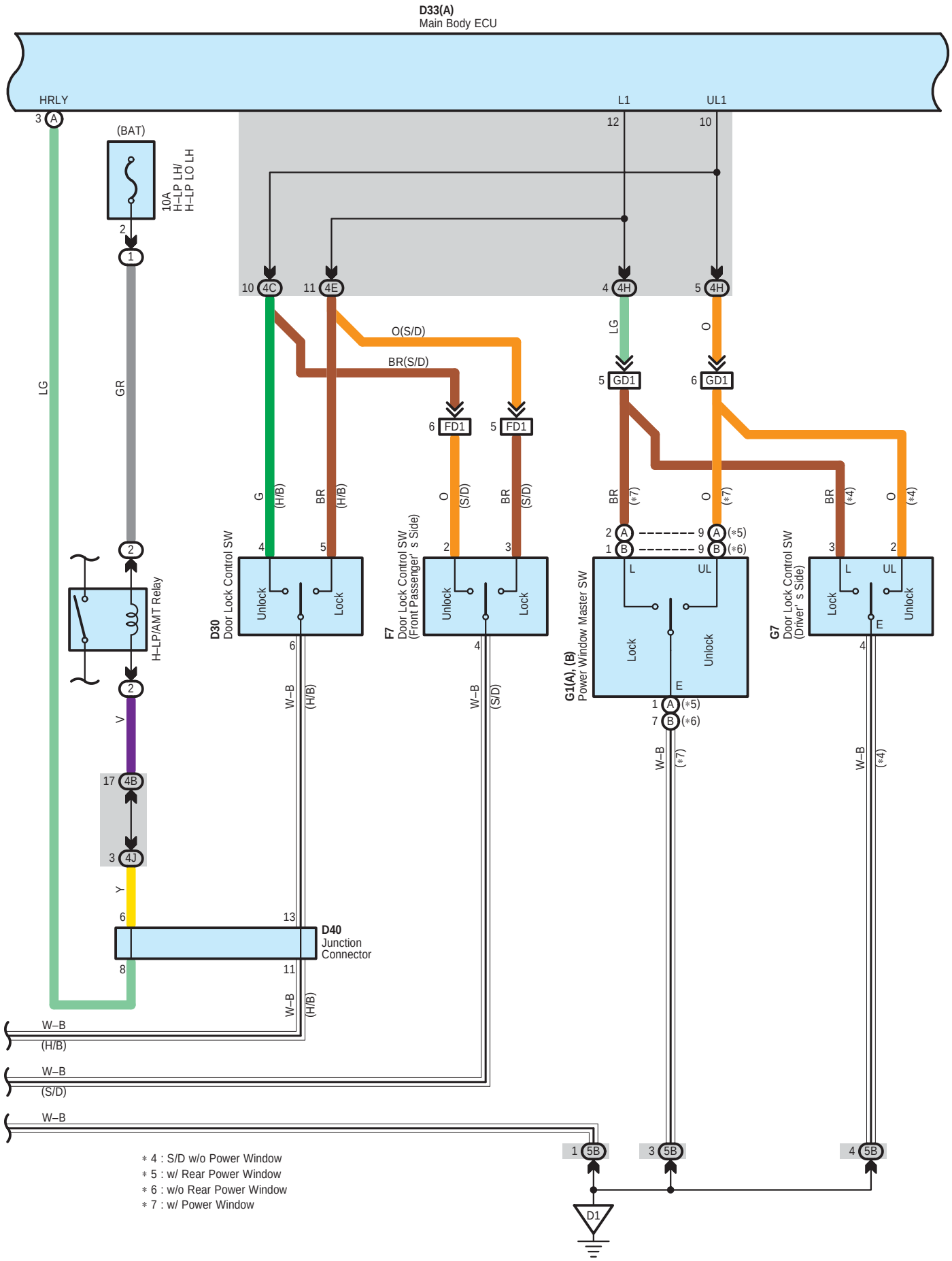
D33(A)
Main Body ECU
HRLY
L1
UL1
(BAT)
10A
H–LP LH/
H–LP LO LH
LG
GR
O(S/D)
BR(S/D)
G (H/B)
BR (H/B)
O (S/D)
BR (S/D)
BR (*7)
O (*7)
BR (*4)
O (*4)
H–LP/AMT Relay
D30
Door Lock Control SW
F7
Door Lock Control SW
(Front Passenger' s Side)
G1(A), (B)
Power Window Master SW
G7
Door Lock Control SW
(Driver' s Side)
Unlock
Lock
L
UL
E
V
Y
W–B (H/B)
W–B (S/D)
W–B (*7)
W–B (*4)
D40
Junction
Connector
D1
* 4 : S/D w/o Power Window
* 5 : w/ Rear Power Window
* 6 : w/o Rear Power Window
* 7 : w/ Power Window

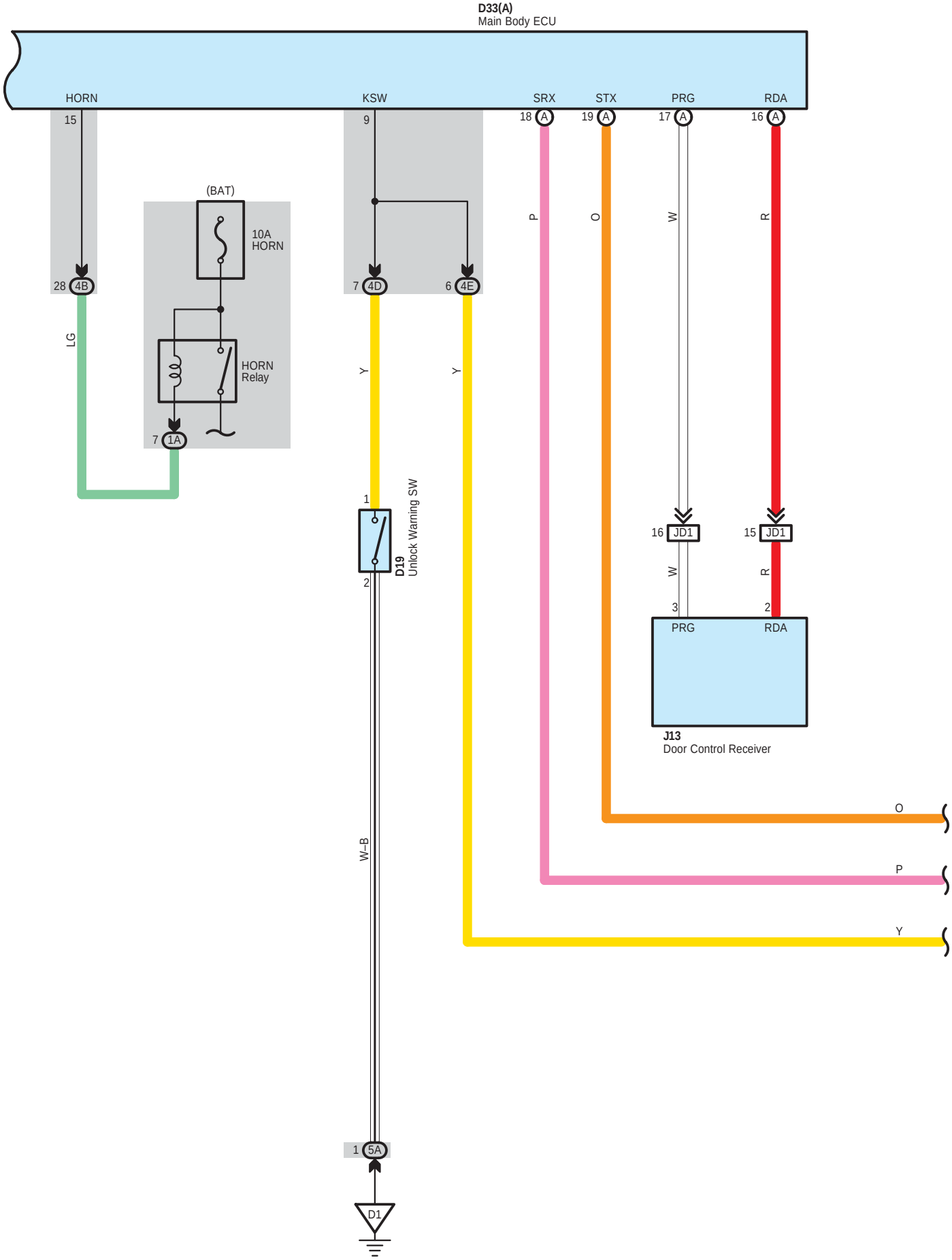
D33(A)
Main Body ECU
HORN
KSW
SRX
STX
PRG
RDA
15
9
18 A
19 A
17 A
16 A
(BAT)
10A
HORN
HORN
Relay
28 4B
7 4D
6 4E
7 1A
LG
Y
Y
P
O
W
R
1
2
D19
Unlock Warning SW
16 JD1
15 JD1
W
R
3
2
PRG
RDA
J13
Door Control Receiver
O
P
Y
W–B
1 5A
D1

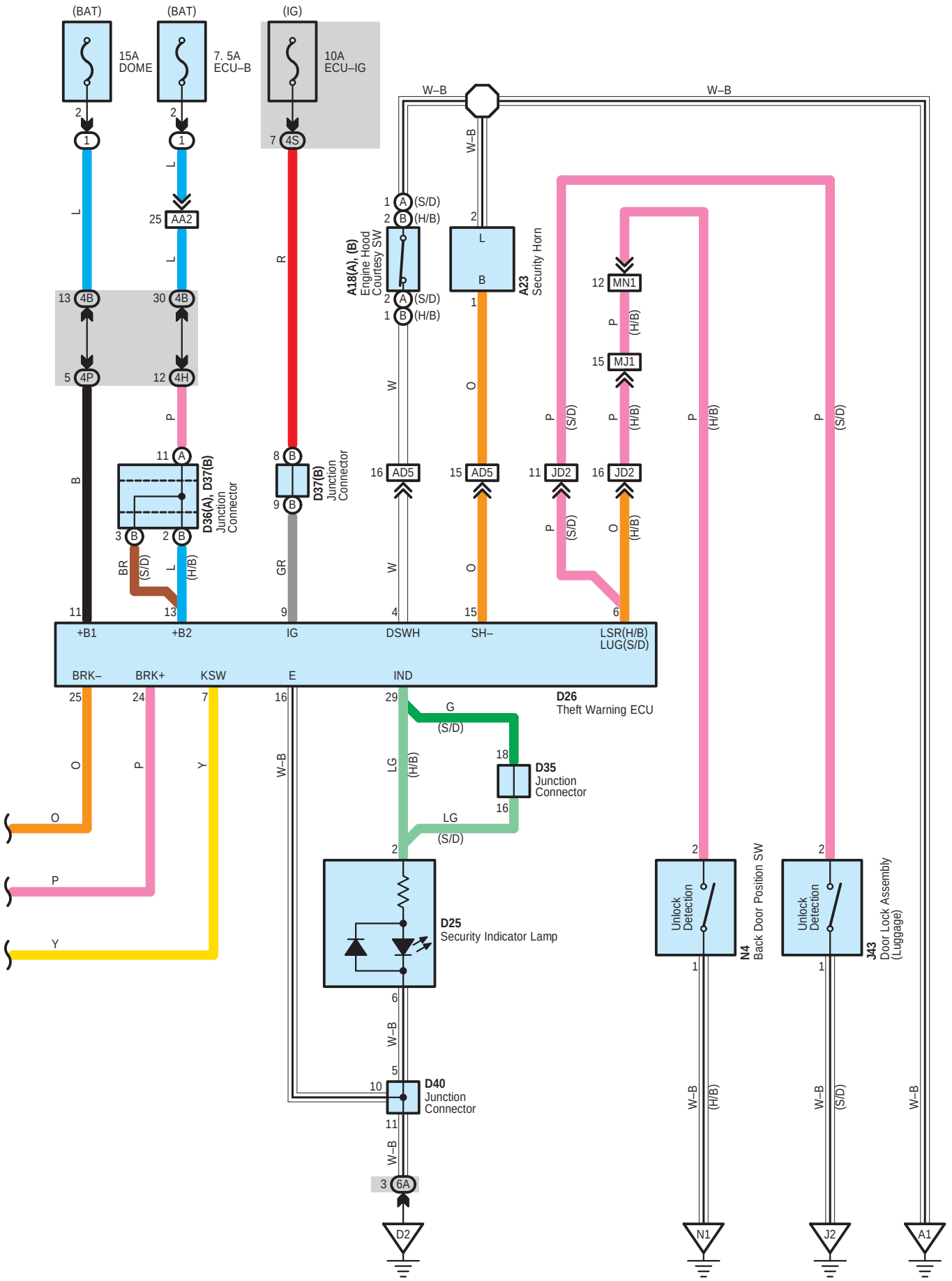
(BAT)
(BAT)
(IG)
15A
DOME
7. 5A
ECU–B
10A
ECU–IG
W–B
W–B
A18(A), (B)
Engine Hood
Courtesy SW
A23
Security Horn
D36(A), D37(B)
Junction
Connector
D37(B)
Junction
Connector
+B1
+B2
IG
DSWH
SH–
LSR(H/B)
LUG(S/D)
BRK–
BRK+
KSW
E
IND
D26
Theft Warning ECU
D35
Junction
Connector
D25
Security Indicator Lamp
D40
Junction
Connector
Unlock
Detection
N4
Back Door Position SW
Unlock
Detection
J43
Door Lock Assembly
(Luggage)
D2
N1
J2
A1

: Parts Location

Code		See Page	Code		See Page	Code		See Page
A18	A	48 (S/D)	F5		54 (5–Door)	J13		55 (5–Door)
	B	46 (H/B)			56 (3–Door)			57 (3–Door)
A23		46 (H/B)			58 (4–Door)			59 (4–Door)
		48 (S/D)	F7		58 (4–Door)	J28	A	55 (5–Door)
D19		51 (H/B)	G1	A	54 (5–Door)			57 (3–Door)
		53 (S/D)			58 (4–Door)			59 (4–Door)
D25		51 (H/B)		B	56 (3–Door)	J29	B	55 (5–Door)
		53 (S/D)	G5		54 (5–Door)			57 (3–Door)
D26		51 (H/B)			56 (3–Door)			59 (4–Door)
		53 (S/D)			58 (4–Door)	J32		55 (5–Door)
D30		51 (H/B)	G7		58 (4–Door)			59 (4–Door)
D33	A	51 (H/B)	H3		54 (5–Door)	J33		55 (5–Door)
		53 (S/D)			58 (4–Door)			59 (4–Door)
D35		53 (S/D)	I3		54 (5–Door)	J42		59 (4–Door)
D36	A	51 (H/B)			58 (4–Door)	J43		59 (4–Door)
		53 (S/D)	J1		55 (5–Door)	N2		54 (5–Door)
D37	B	51 (H/B)			57 (3–Door)			56 (3–Door)
		53 (S/D)			59 (4–Door)	N4		54 (5–Door)
D40		51 (H/B)	J2		55 (5–Door)			56 (3–Door)
		53 (S/D)			57 (3–Door)			
D76		53 (S/D)			59 (4–Door)			

: Relay Blocks

Code	See Page	Relay Blocks (Relay Block Location)
1	24	Engine Room R/B (Engine Compartment Left)
2	28	Engine Room R/B No.2 (Engine Compartment Right)

: Junction Block and Wire Harness Connector

Code	See Page	Junction Block and Wire Harness (Connector Location)
1A	25	Engine Room Main Wire and Engine Room J/B (Engine Compartment Left)
4A	30	Floor Wire and Instrument Panel J/B (Lower Finish Panel)
4B	30	Engine Room Main Wire and Instrument Panel J/B (Lower Finish Panel)
4C	30	Instrument Panel Wire and Instrument Panel J/B (Lower Finish Panel)
4D		
4E		
4H		
4J		
4P	31	
4S		
5A	38	Instrument Panel Wire and J/B No.5 (Left Kick Panel)
5B	38	Front Door LH Wire and J/B No.5 (Left Kick Panel)
6A	40	Instrument Panel Wire and J/B No.6 (Right Kick Panel)
6B	40	Front Door RH Wire and J/B No.6 (Right Kick Panel)

: Connector Joining Wire Harness and Wire Harness

Code	See Page	Joining Wire Harness and Wire Harness (Connector Location)
AA2	62 (H/B) 63 (S/D)	Engine Room Main Wire and Engine Room Main Wire (Instrument Panel Left)
AD5	62 (H/B) 63 (S/D)	Engine Room Main Wire and Instrument Panel Wire (Instrument Panel Left)
FD1	62 (H/B) 63 (S/D)	Front Door RH Wire and Instrument Panel Wire (Right Kick Panel)
GD1	62 (H/B) 63 (S/D)	Front Door LH Wire and Instrument Panel Wire (Left Kick Panel)
HJ1	64 (5–Door) 66 (4–Door)	Rear Door No.1 Wire and Floor Wire (Right Center Pillar)
IJ1	64 (5–Door) 66 (4–Door)	Rear Door No.2 Wire and Floor Wire (Left Center Pillar)
JD1	62 (H/B) 63 (S/D)	Floor Wire and Instrument Panel Wire (Instrument Panel Left)
JD2	62 (H/B) 63 (S/D)	
MJ1	64 (5–Door) 65 (3–Door)	Back Door No.1 Wire and Floor Wire (Left Rear Quarter Panel)
MN1	64 (5–Door) 65 (3–Door)	Back Door No.1 Wire and Back Door No.2 Wire (Back Door Panel Center)

: Ground Points

Code	See Page	Ground Points Location
A1	60 (H/B) 61 (S/D)	Left Suspension Tower
D1	62 (H/B) 63 (S/D)	Left Kick Panel
D2	62 (H/B) 63 (S/D)	Right Kick Panel
J2	66 (4–Door)	Lower Back Panel Left
N1	64 (5–Door) 65 (3–Door)	Back Door Panel Center

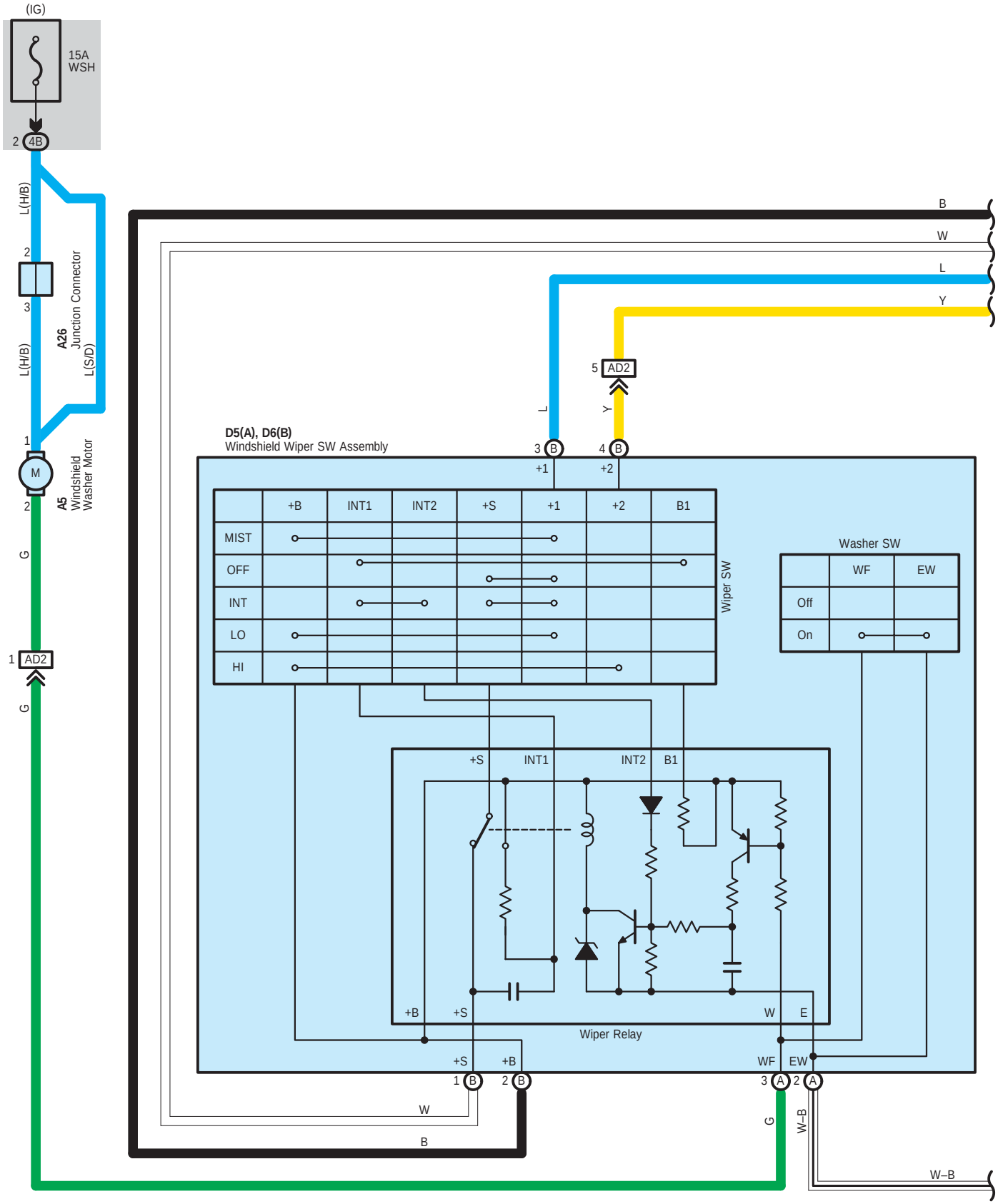
(IG)
15A
WSH
2 4B
L(H/B)
2
3
A26
Junction Connector
L(S/D)
L(H/B)
1
M
2
A5
Windshield
Washer Motor
G
1 AD2
G
B
W
L
Y
5 AD2
L
Y
D5(A), D6(B)
Windshield Wiper SW Assembly
3 B
4 B
+1
+2
+B
INT1
INT2
+S
+1
+2
B1
MIST
OFF
INT
LO
HI
Wiper SW
Washer SW
WF
EW
Off
On
+S
INT1
INT2
B1
+B
+S
W
E
Wiper Relay
+S
+B
1 B
2 B
WF
EW
3 A
2 A
W
B
G
W–B
W–B

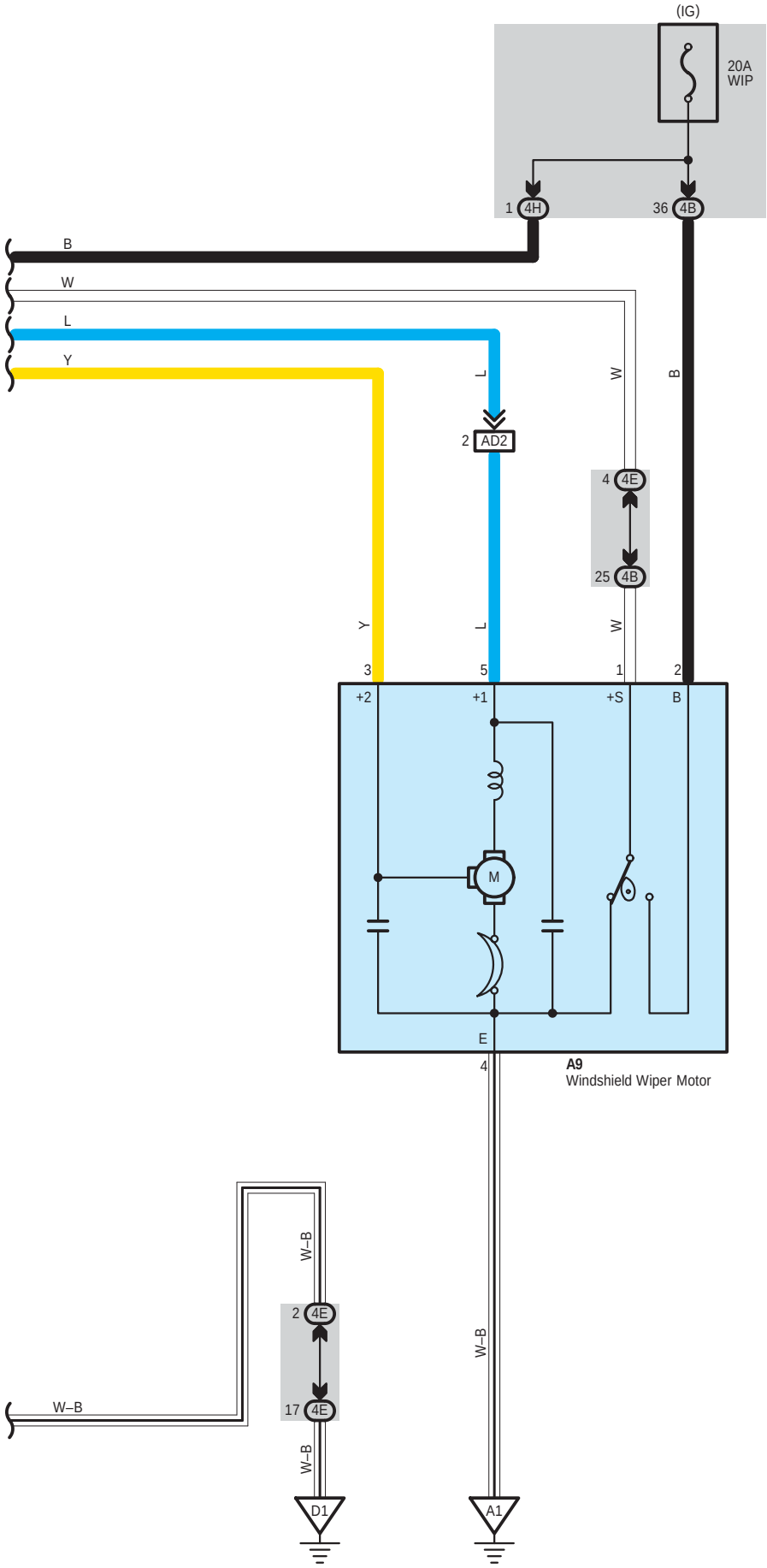
(IG)
20A
WIP
1 4H
36 4B
B
W
L
Y
L
W
B
2 AD2
4 4E
25 4B
Y
L
W
3
5
1
2
+2
+1
+S
B
M
E
4
A9
Windshield Wiper Motor
W–B
2 4E
17 4E
W–B
W–B
D1
A1

Front Wiper and Washer

System Outline

1. Intermittent Function

When the wiper control switch is turned to INT position, the wiper makes intermittent operation with an interval time of approximately 3.3 seconds.

2. Washer–Linked Function

When the washer switch is turned ON for approximately 0.3 seconds or more, the wiper starts a LO operation at the same time as the washer fluid is ejected. When the switch is turned ON for approximately 1.5 seconds or more, the wiper keeps a LO operation for approximately 2.2 seconds after the washer switch is turned OFF, and then stops its operation.

○ : Parts Location

Code	See Page	Code	See Page	Code	See Page
A5	46 (H/B)	A9	48 (S/D)	D5 A	53 (S/D)
	48 (S/D)	A26	50 (H/B)	D6 B	51 (H/B)
A9	46 (H/B)	D5 A	51 (H/B)		53 (S/D)

: Junction Block and Wire Harness Connector

Code	See Page	Junction Block and Wire Harness (Connector Location)
4B	30	Engine Room Main Wire and Instrument Panel J/B (Lower Finish Panel)
4E	30	Instrument Panel Wire and Instrument Panel J/B (Lower Finish Panel)
4H		

: Connector Joining Wire Harness and Wire Harness

Code	See Page	Joining Wire Harness and Wire Harness (Connector Location)
AD2	62 (H/B)	Engine Room Main Wire and Instrument Panel Wire (Instrument Panel Left)
	63 (S/D)	

▽ : Ground Points

Code	See Page	Ground Points Location
A1	60 (H/B)	Left Suspension Tower
	61 (S/D)	
D1	62 (H/B)	Left Kick Panel
	63 (S/D)	

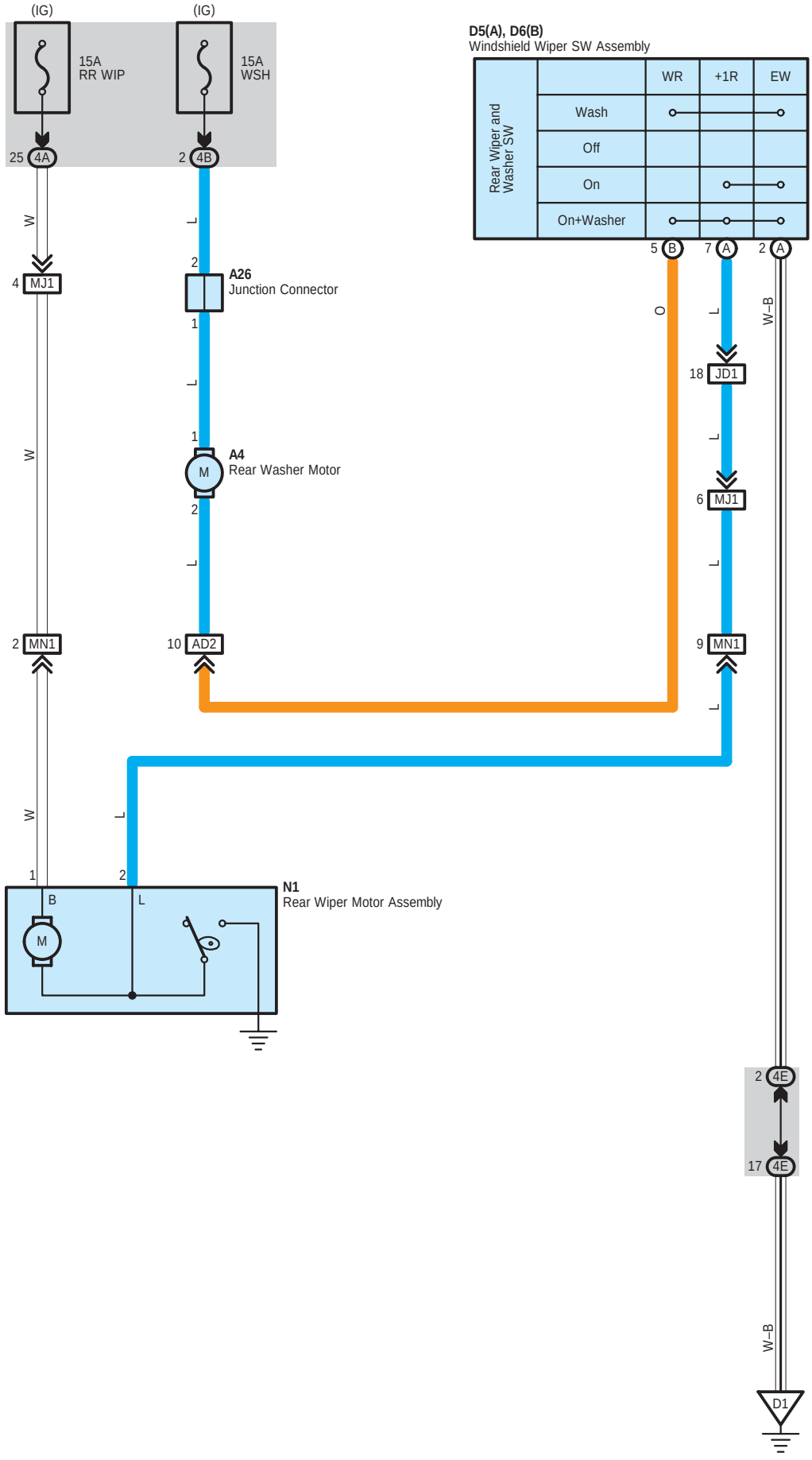
(IG)
(IG)
15A
RR WIP
15A
WSH
25 4A
2 4B
D5(A), D6(B)
Windshield Wiper SW Assembly
Rear Wiper and Washer SW
WR
+1R
EW
Wash
Off
On
On+Washer
5 B
7 A
2 A
W
L
O
W–B
4 MJ1
18 JD1
2
A26
Junction Connector
1
1
A4
Rear Washer Motor
2
6 MJ1
2 MN1
10 AD2
9 MN1
1
2
N1
Rear Wiper Motor Assembly
B
L
M
2 4E
17 4E
D1

: Parts Location

Code	See Page	Code		See Page	Code	See Page
A4	46 (H/B)	D5	A	51 (H/B)	N1	54 (5–Door)
A26	50 (H/B)	D6	B	51 (H/B)		56 (3–Door)

: Junction Block and Wire Harness Connector

Code	See Page	Junction Block and Wire Harness (Connector Location)
4A	30	Floor Wire and Instrument Panel J/B (Lower Finish Panel)
4B	30	Engine Room Main Wire and Instrument Panel J/B (Lower Finish Panel)
4E	30	Instrument Panel Wire and Instrument Panel J/B (Lower Finish Panel)

: Connector Joining Wire Harness and Wire Harness

Code	See Page	Joining Wire Harness and Wire Harness (Connector Location)
AD2	62 (H/B)	Engine Room Main Wire and Instrument Panel Wire (Instrument Panel Left)
JD1	62 (H/B)	Floor Wire and Instrument Panel Wire (Instrument Panel Left)
MJ1	64 (5–Door)	Back Door No.1 Wire and Floor Wire (Left Rear Quarter Panel)
	65 (3–Door)	
MN1	64 (5–Door)	Back Door No.1 Wire and Back Door No.2 Wire (Back Door Panel Center)
	65 (3–Door)	

: Ground Points

Code	See Page	Ground Points Location
D1	62 (H/B)	Left Kick Panel

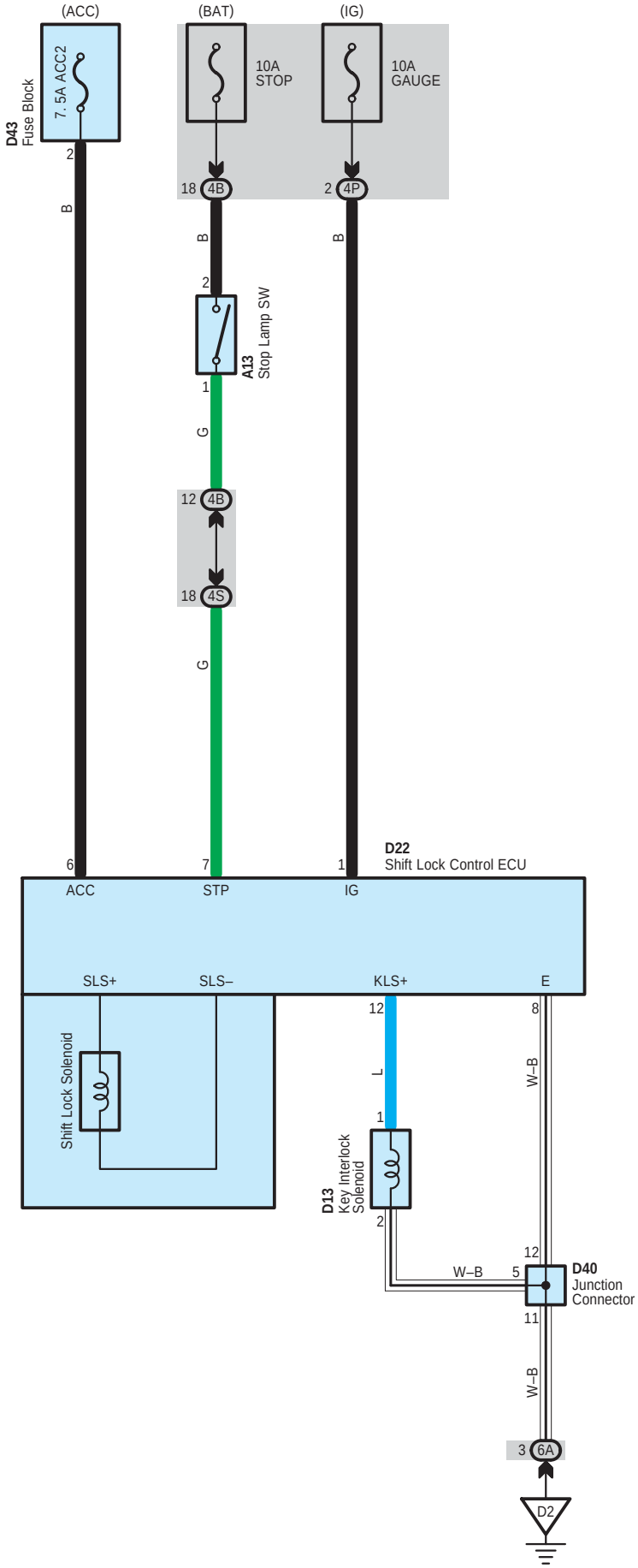
(ACC)
(BAT)
(IG)
D43
Fuse Block
7. 5A ACC2
10A
STOP
10A
GAUGE
2
18 4B
2 4P
B
B
B
2
A13
Stop Lamp SW
1
G
12 4B
18 4S
G
6
7
1
D22
Shift Lock Control ECU
ACC
STP
IG
SLS+
SLS–
KLS+
E
12
8
L
W–B
1
Shift Lock Solenoid
D13
Key Interlock
Solenoid
2
12
W–B
5
D40
Junction
Connector
11
W–B
3 6A
D2

System Outline

The shift lever can be shifted from P range only when the brake pedal is depressed with the ignition key at ON position.

○ : Parts Location

Code	See Page	Code	See Page	Code	See Page
A13	50 (H/B)	D22	51 (H/B)	D43	45, 51 (H/B)
	52 (S/D)		53 (S/D)		45, 53 (S/D)
D13	51 (H/B)	D40	51 (H/B)		
	53 (S/D)		53 (S/D)		

: Junction Block and Wire Harness Connector

Code	See Page	Junction Block and Wire Harness (Connector Location)
4B	30	Engine Room Main Wire and Instrument Panel J/B (Lower Finish Panel)
4P	31	Instrument Panel Wire and Instrument Panel J/B (Lower Finish Panel)
4S		
6A	40	Instrument Panel Wire and J/B No.6 (Right Kick Panel)

▽ : Ground Points

Code	See Page	Ground Points Location
D2	62 (H/B)	Right Kick Panel
	63 (S/D)	

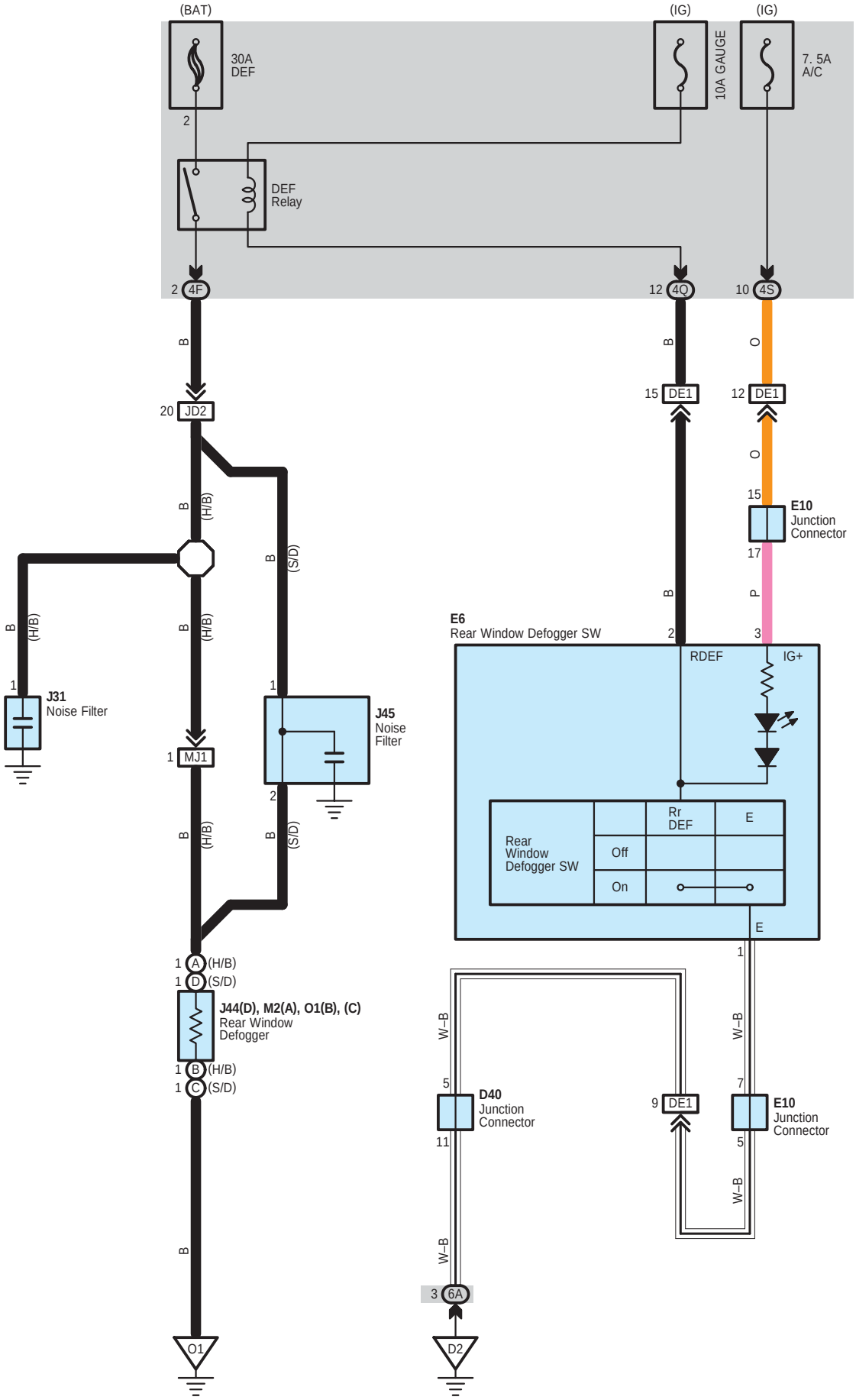
(BAT)
(IG)
(IG)
30A
DEF
10A GAUGE
7. 5A
A/C
DEF
Relay
2 4F
12 4Q
10 4S
B
O
20 JD2
15 DE1
12 DE1
15
E10
Junction
Connector
17
P
E6
Rear Window Defogger SW
2
3
RDEF
IG+
Rear
Window
Defogger SW
Rr
DEF
E
Off
On
J31
Noise Filter
J45
Noise
Filter
1 MJ1
(H/B)
(S/D)
1 A (H/B)
1 D (S/D)
J44(D), M2(A), O1(B), (C)
Rear Window
Defogger
1 B (H/B)
1 C (S/D)
W–B
5
D40
Junction
Connector
11
9 DE1
7
E10
Junction
Connector
5
3 6A
O1
D2

: Parts Location

Code	See Page	Code	See Page	Code		See Page
D40	51 (H/B)	E10	52 (S/D)	M2	A	54 (5–Door)
	53 (S/D)	J31	55 (5–Door)			56 (3–Door)
E6	50 (H/B)		57 (3–Door)	O1	B	54 (5–Door)
	52 (S/D)	J44 D	59 (4–Door)			56 (3–Door)
E10	50 (H/B)	J45	59 (4–Door)		C	58 (4–Door)

: Junction Block and Wire Harness Connector

Code	See Page	Junction Block and Wire Harness (Connector Location)
4F	30	Instrument Panel Wire and Instrument Panel J/B (Lower Finish Panel)
4Q	31	
4S		
6A	40	Instrument Panel Wire and J/B No.6 (Right Kick Panel)

: Connector Joining Wire Harness and Wire Harness

Code	See Page	Joining Wire Harness and Wire Harness (Connector Location)
DE1	62 (H/B)	Instrument Panel Wire and Instrument Panel No.2 Wire (Instrument Panel Center)
	63 (S/D)	
JD2	62 (H/B)	Floor Wire and Instrument Panel Wire (Instrument Panel Left)
	63 (S/D)	
MJ1	64 (5–Door)	Back Door No.1 Wire and Floor Wire (Left Rear Quarter Panel)
	65 (3–Door)	

: Ground Points

Code	See Page	Ground Points Location
D2	62 (H/B)	Right Kick Panel
	63 (S/D)	
O1	64 (5–Door)	Back Door Panel Left
	65 (3–Door)	
	66 (4–Door)	Right Rear Quarter Panel

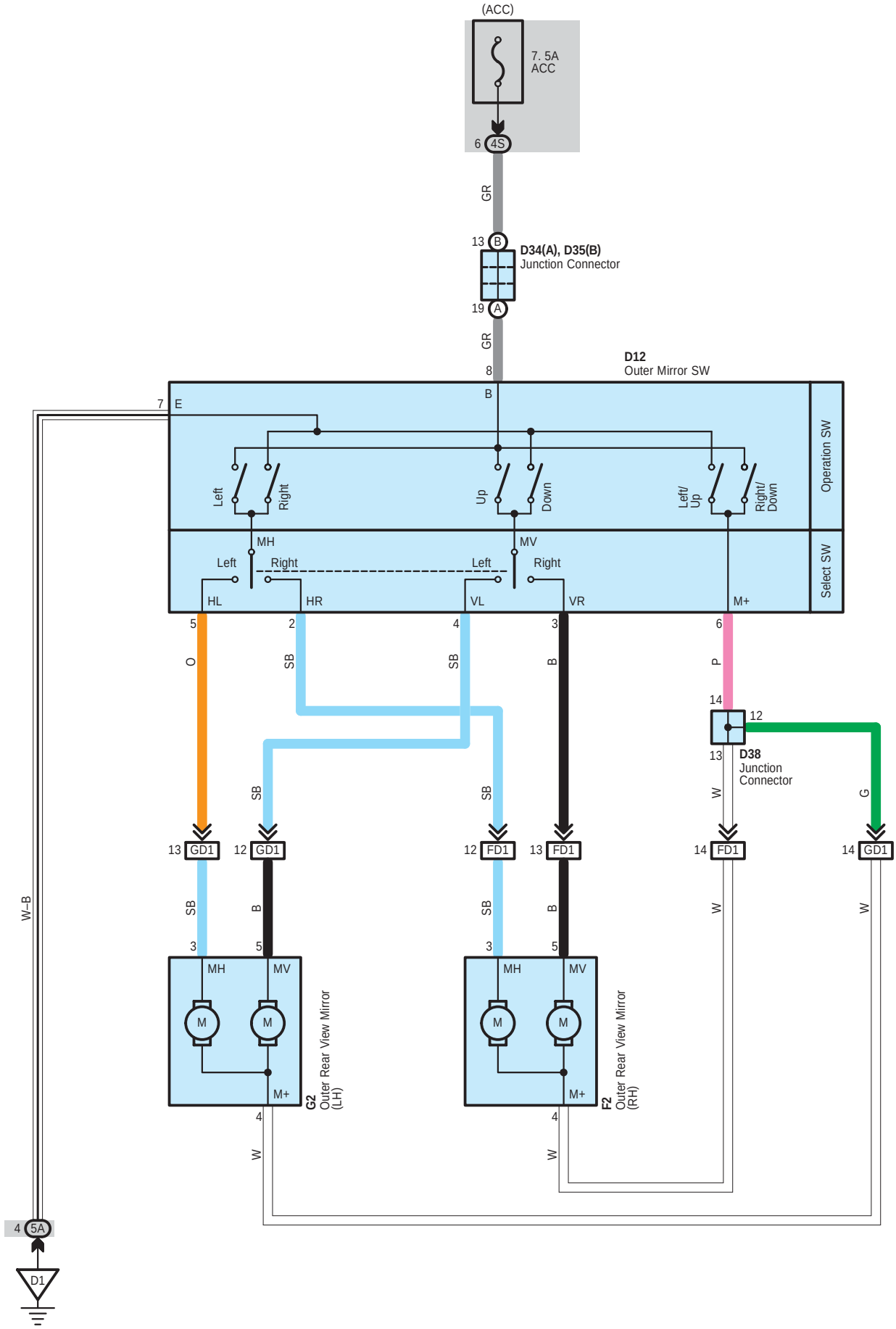
(ACC)
7. 5A
ACC
6 4S
GR
13 B
D34(A), D35(B)
Junction Connector
19 A
GR
8
D12
Outer Mirror SW
B
7 E
Left
Right
Up
Down
Left/
Up
Right/
Down
Operation SW
MH
MV
Left
Right
Left
Right
Select SW
HL
HR
VL
VR
M+
5
2
4
3
6
O
SB
SB
B
P
14
12
13
D38
Junction
Connector
W
G
SB
SB
13 GD1
12 GD1
12 FD1
13 FD1
14 FD1
14 GD1
SB
B
SB
B
W
W
3
5
3
5
MH
MV
MH
MV
M
M
M
M
M+
M+
G2
Outer Rear View Mirror
(LH)
F2
Outer Rear View Mirror
(RH)
4
4
W
W
W–B
4 5A
D1

: Parts Location

Code		See Page	Code		See Page	Code	See Page
D12		51 (H/B)	D35	B	53 (S/D)	F2	58 (4–Door)
		53 (S/D)	D38		51 (H/B)	G2	54 (5–Door)
D34	A	51 (H/B)			53 (S/D)		56 (3–Door)
		53 (S/D)	F2		54 (5–Door)		58 (4–Door)
D35	B	51 (H/B)			56 (3–Door)		

: Junction Block and Wire Harness Connector

Code	See Page	Junction Block and Wire Harness (Connector Location)
4S	31	Instrument Panel Wire and Instrument Panel J/B (Lower Finish Panel)
5A	38	Instrument Panel Wire and J/B No.5 (Left Kick Panel)

: Connector Joining Wire Harness and Wire Harness

Code	See Page	Joining Wire Harness and Wire Harness (Connector Location)
FD1	62 (H/B)	Front Door RH Wire and Instrument Panel Wire (Right Kick Panel)
	63 (S/D)	
GD1	62 (H/B)	Front Door LH Wire and Instrument Panel Wire (Left Kick Panel)
	63 (S/D)	

: Ground Points

Code	See Page	Ground Points Location
D1	62 (H/B)	Left Kick Panel
	63 (S/D)	

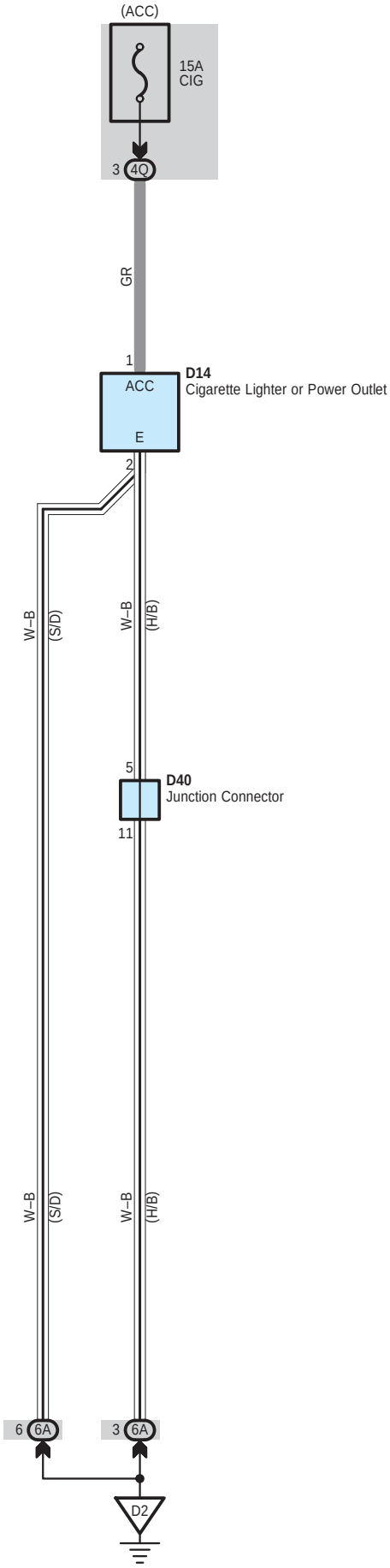
(ACC)
15A
CIG
3
4Q
GR
1
ACC
D14
Cigarette Lighter or Power Outlet
E
2
W–B
(S/D)
W–B
(H/B)
5
D40
Junction Connector
11
W–B
(S/D)
W–B
(H/B)
6
6A
3
6A
D2

○ : Parts Location

Code	See Page	Code	See Page	Code	See Page
D14	51 (H/B)	D14	53 (S/D)	D40	51 (H/B)

: Junction Block and Wire Harness Connector

Code	See Page	Junction Block and Wire Harness (Connector Location)
4Q	31	Instrument Panel Wire and Instrument Panel J/B (Lower Finish Panel)
6A	40	Instrument Panel Wire and J/B No.6 (Right Kick Panel)

▽ : Ground Points

Code	See Page	Ground Points Location
D2	62 (H/B) 63 (S/D)	Right Kick Panel

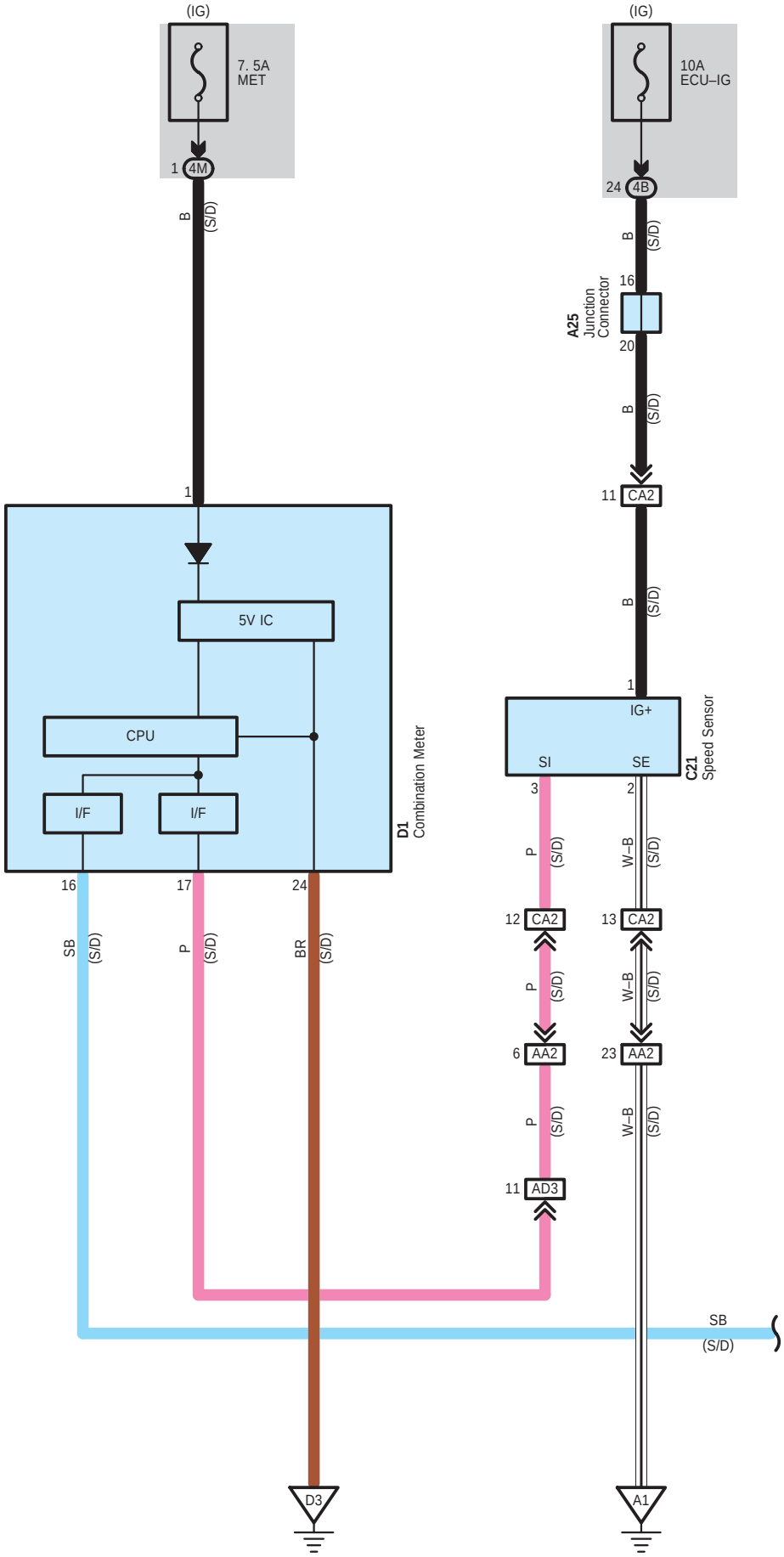
(IG)
7. 5A
MET
1
4M
B
(S/D)
1
5V IC
CPU
I/F
I/F
D1
Combination Meter
16
17
24
SB
(S/D)
P
(S/D)
BR
(S/D)
D3
(IG)
10A
ECU–IG
24
4B
B
(S/D)
16
A25
Junction
Connector
20
B
(S/D)
11
CA2
B
(S/D)
1
IG+
SI
SE
C21
Speed Sensor
3
2
P
(S/D)
W–B
(S/D)
12
CA2
13
CA2
P
(S/D)
W–B
(S/D)
6
AA2
23
AA2
P
(S/D)
W–B
(S/D)
11
AD3
SB
(S/D)
A1

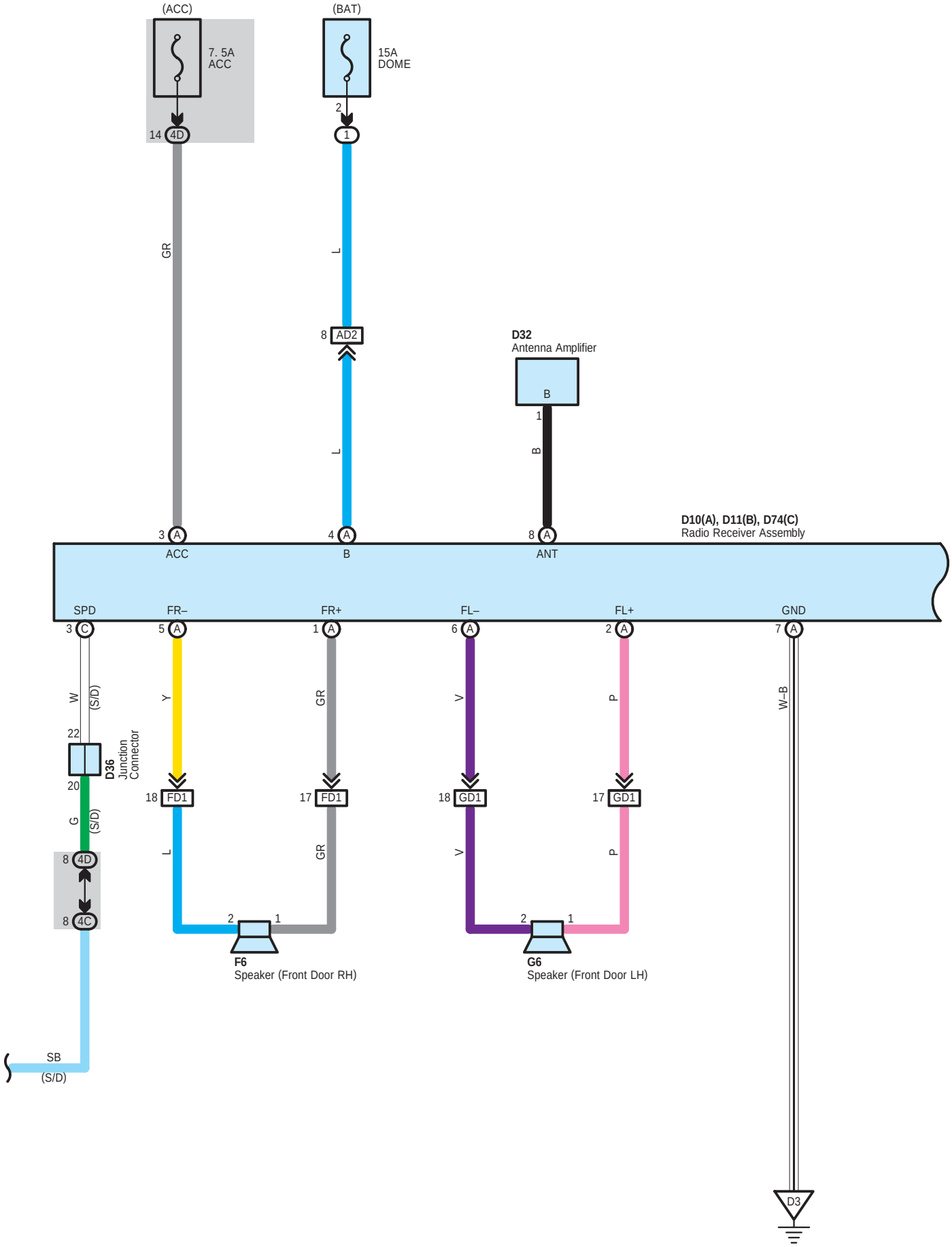
(ACC)
7. 5A
ACC
14 4D
(BAT)
15A
DOME
2
1
GR
L
8 AD2
L
D32
Antenna Amplifier
B
1
B
D10(A), D11(B), D74(C)
Radio Receiver Assembly
3 A
ACC
4 A
B
8 A
ANT
SPD
FR–
FR+
FL–
FL+
GND
3 C
5 A
1 A
6 A
2 A
7 A
W
(S/D)
22
D36
Junction
Connector
20
G
(S/D)
8 4D
8 4C
Y
GR
V
P
W–B
18 FD1
17 FD1
18 GD1
17 GD1
L
GR
V
P
2
1
F6
Speaker (Front Door RH)
G6
Speaker (Front Door LH)
SB
(S/D)
D3

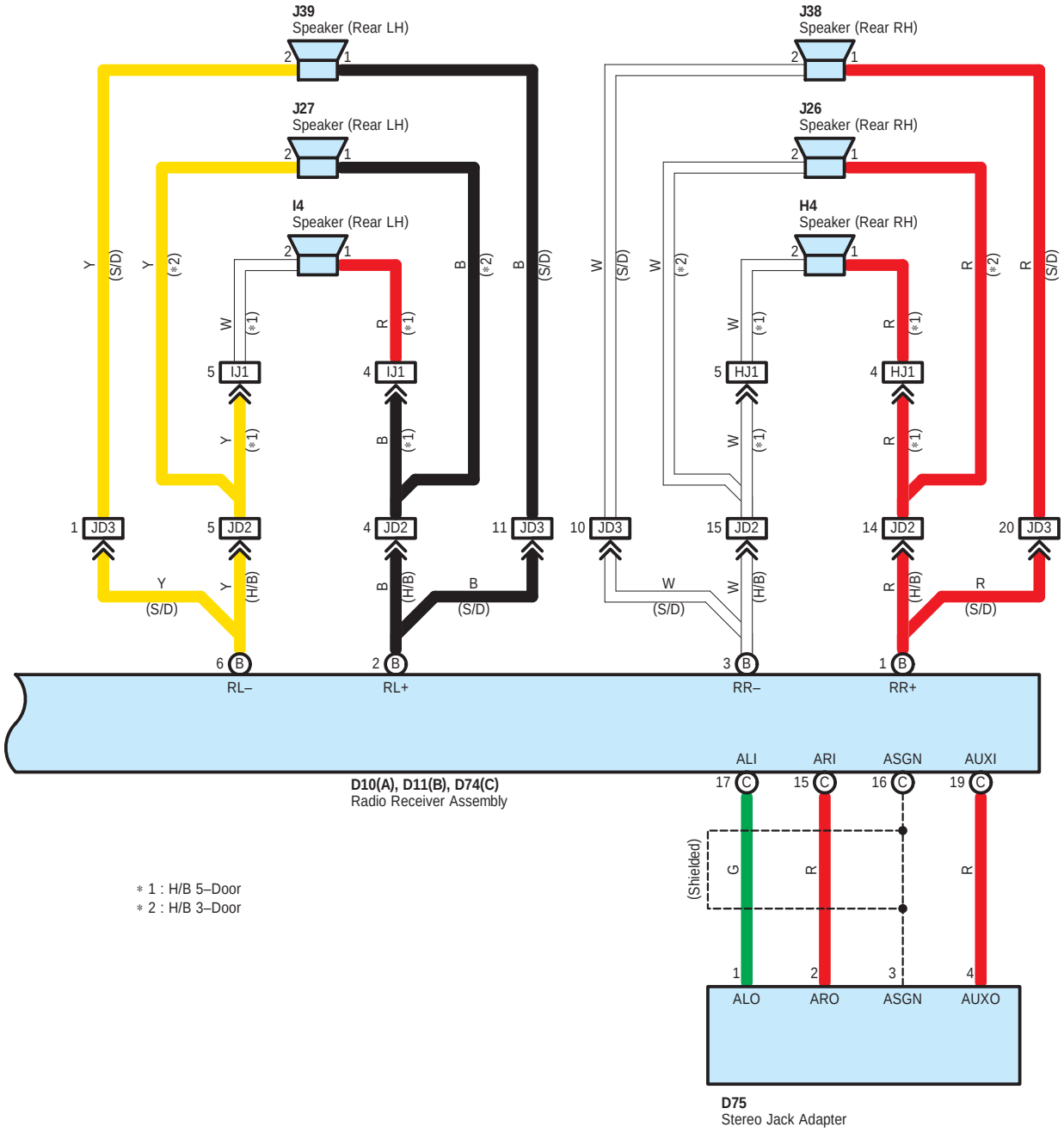

* 1 : H/B 5–Door
* 2 : H/B 3–Door

: Parts Location

Code		See Page	Code		See Page	Code	See Page
A25		48 (S/D)	D36		53 (S/D)	G6	56 (3–Door)
C21		49 (S/D)	D74	C	51 (H/B)		58 (4–Door)
D1		53 (S/D)			53 (S/D)	H4	54 (5–Door)
D10	A	51 (H/B)	D75		51 (H/B)	I4	54 (5–Door)
		53 (S/D)			53 (S/D)	J26	57 (3–Door)
D11	B	51 (H/B)	F6		54 (5–Door)	J27	57 (3–Door)
		53 (S/D)			56 (3–Door)	J38	59 (4–Door)
D32		51 (H/B)			58 (4–Door)	J39	59 (4–Door)
		53 (S/D)	G6		54 (5–Door)		

: Relay Blocks

Code	See Page	Relay Blocks (Relay Block Location)
1	24	Engine Room R/B (Engine Compartment Left)

: Junction Block and Wire Harness Connector

Code	See Page	Junction Block and Wire Harness (Connector Location)
4B	30	Engine Room Main Wire and Instrument Panel J/B (Lower Finish Panel)
4C	30	Instrument Panel Wire and Instrument Panel J/B (Lower Finish Panel)
4D		
4M	31	

: Connector Joining Wire Harness and Wire Harness

Code	See Page	Joining Wire Harness and Wire Harness (Connector Location)
AA2	63 (S/D)	Engine Room Main Wire and Engine Room Main Wire (Instrument Panel Left)
AD2	62 (H/B)	Engine Room Main Wire and Instrument Panel Wire (Instrument Panel Left)
	63 (S/D)	
AD3	63 (S/D)	
CA2	61 (S/D)	Engine Wire and Engine Room Main Wire (Engine Compartment Left)
FD1	62 (H/B)	Front Door RH Wire and Instrument Panel Wire (Right Kick Panel)
	63 (S/D)	
GD1	62 (H/B)	Front Door LH Wire and Instrument Panel Wire (Left Kick Panel)
	63 (S/D)	
HJ1	64 (5–Door)	Rear Door No.1 Wire and Floor Wire (Right Center Pillar)
IJ1	64 (5–Door)	Rear Door No.2 Wire and Floor Wire (Left Center Pillar)
JD2	62 (H/B)	Floor Wire and Instrument Panel Wire (Instrument Panel Left)
JD3	63 (S/D)	

: Ground Points

Code	See Page	Ground Points Location
A1	61 (S/D)	Left Suspension Tower
D3	62 (H/B)	Instrument Panel Reinforcement Left
	63 (S/D)	

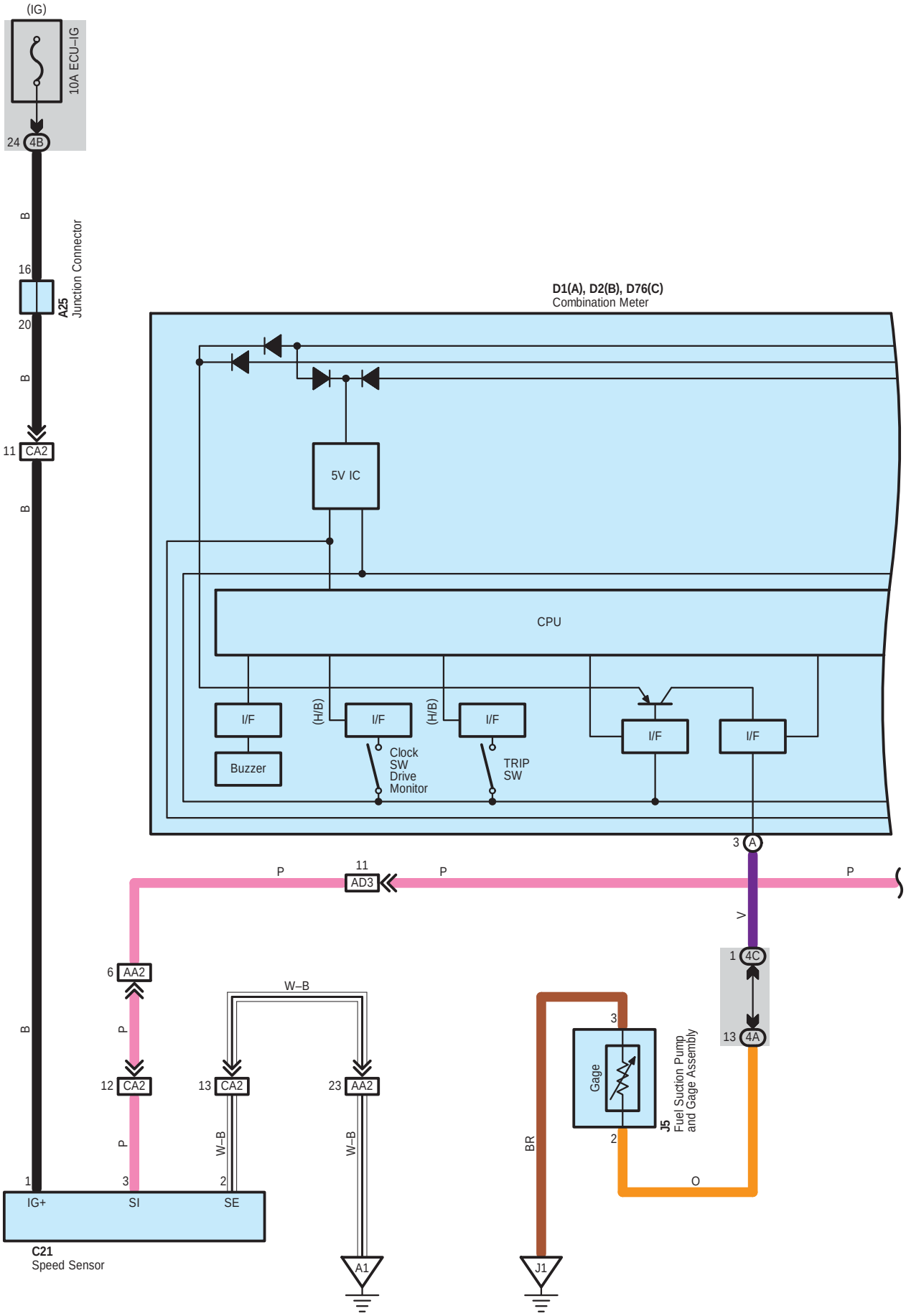
(IG)
10A ECU–IG
24 4B
B
16
A25
Junction Connector
20
B
11 CA2
B
D1(A), D2(B), D76(C)
Combination Meter
5V IC
CPU
I/F
Buzzer
(H/B)
I/F
Clock
SW
Drive
Monitor
(H/B)
I/F
TRIP
SW
I/F
I/F
3 A
P
11
AD3
P
P
V
1 4C
13 4A
6 AA2
P
12 CA2
P
W–B
13 CA2
W–B
23 AA2
W–B
3
Gage
2
J5
Fuel Suction Pump
and Gage Assembly
BR
O
B
1
IG+
3
SI
2
SE
C21
Speed Sensor
A1
J1

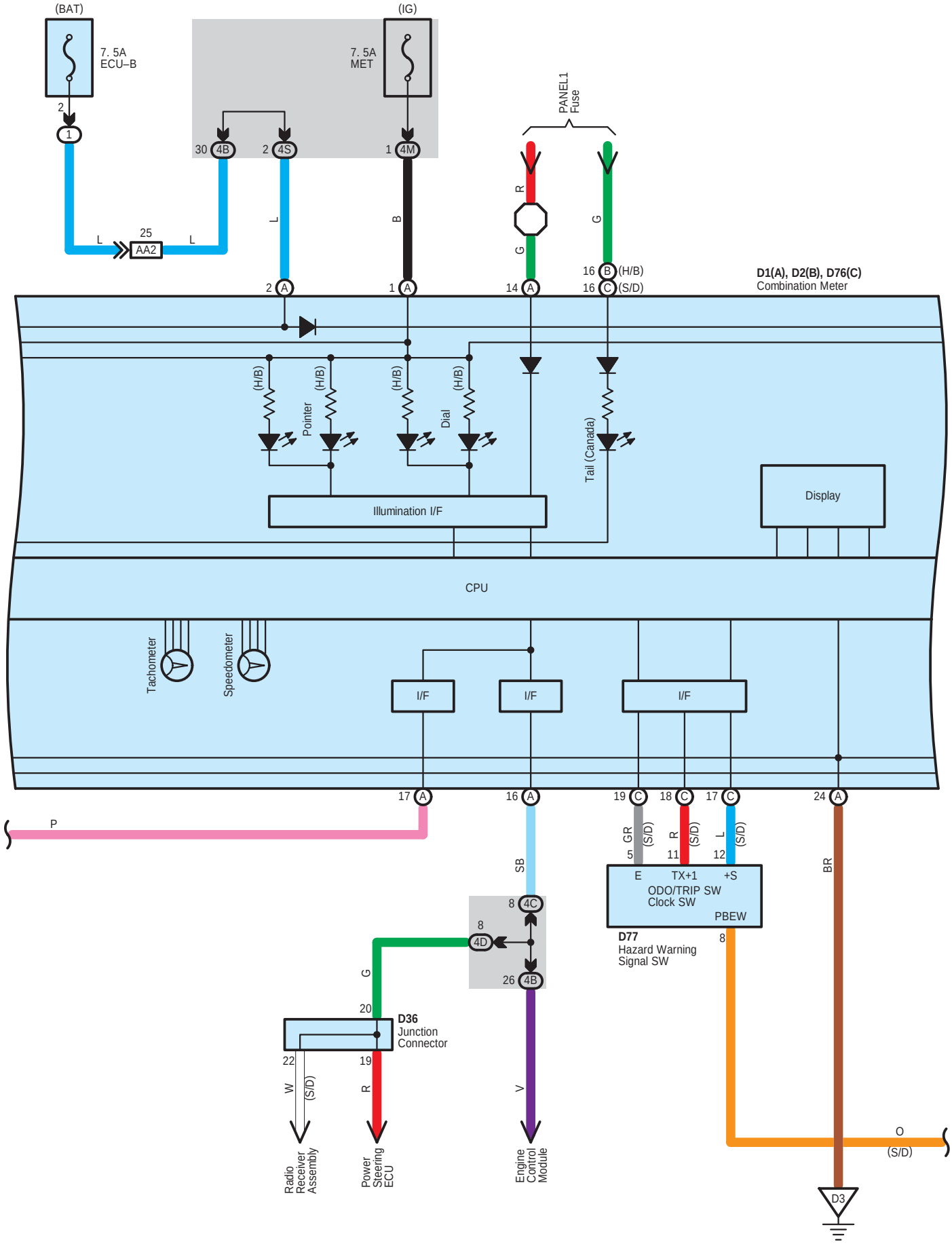
(BAT)
7. 5A
ECU–B
2
1
(IG)
7. 5A
MET
30 4B
2 4S
1 4M
PANEL1
Fuse
L
25
AA2
L
L
B
R
G
G
16 B (H/B)
16 C (S/D)
2 A
1 A
14 A
D1(A), D2(B), D76(C)
Combination Meter
(H/B)
Pointer
(H/B)
(H/B)
Dial
(H/B)
Tail (Canada)
Illumination I/F
Display
CPU
Tachometer
Speedometer
I/F
I/F
I/F
17 A
16 A
19 C
18 C
17 C
24 A
P
SB
GR
(S/D)
5
R
(S/D)
11
L
(S/D)
12
BR
E
TX+1
+S
ODO/TRIP SW
Clock SW
PBEW
8
D77
Hazard Warning
Signal SW
8 4C
8
4D
26 4B
G
20
D36
Junction
Connector
22
W
(S/D)
19
R
V
O
(S/D)
Radio
Receiver
Assembly
Power
Steering
ECU
Engine
Control
Module
D3

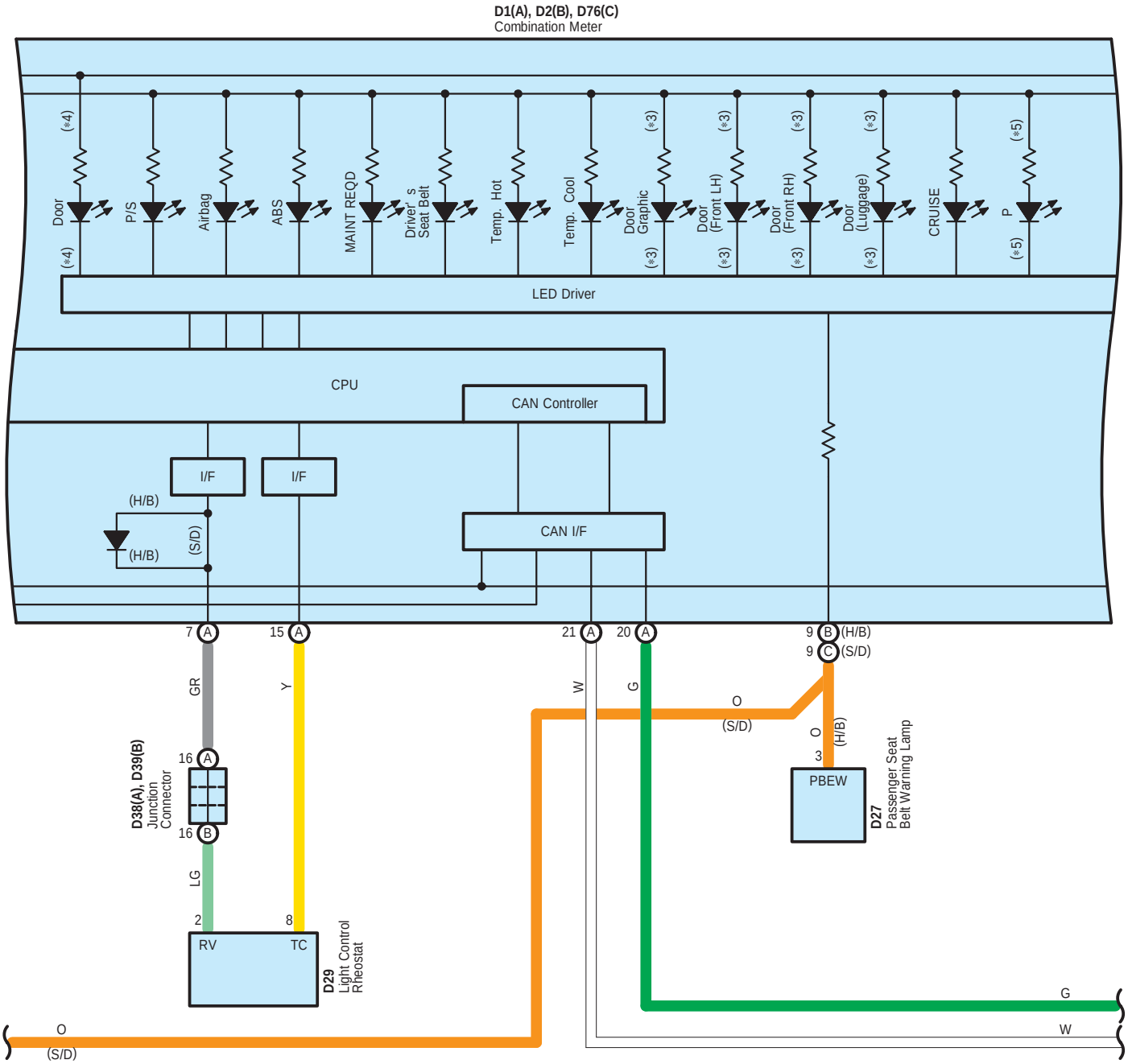
D1(A), D2(B), D76(C)
Combination Meter
Door
(*4)
P/S
Airbag
ABS
MAINT REQD
Driver's Seat Belt
Temp. Hot
Temp. Cool
Door Graphic
(*3)
Door (Front LH)
Door (Front RH)
Door (Luggage)
CRUISE
P
(*5)
LED Driver
CPU
CAN Controller
I/F
I/F
(H/B)
(S/D)
CAN I/F
7 A
15 A
21 A
20 A
9 B (H/B)
9 C (S/D)
GR
Y
W
G
O
(S/D)
O
(H/B)
3
PBEW
D27
Passenger Seat Belt Warning Lamp
16 A
16 B
D38(A), D39(B)
Junction Connector
LG
2
8
RV
TC
D29
Light Control Rheostat
G
W
O
(S/D)

* 1 : w/ Daytime Running Light
* 2 : w/o Daytime Running Light
* 3 : S/D w/ Tachometer
* 4 : S/D w/o Tachometer, H/B
* 5 : S/D A/T

D1(A), D2(B), D76(C)
Combination Meter

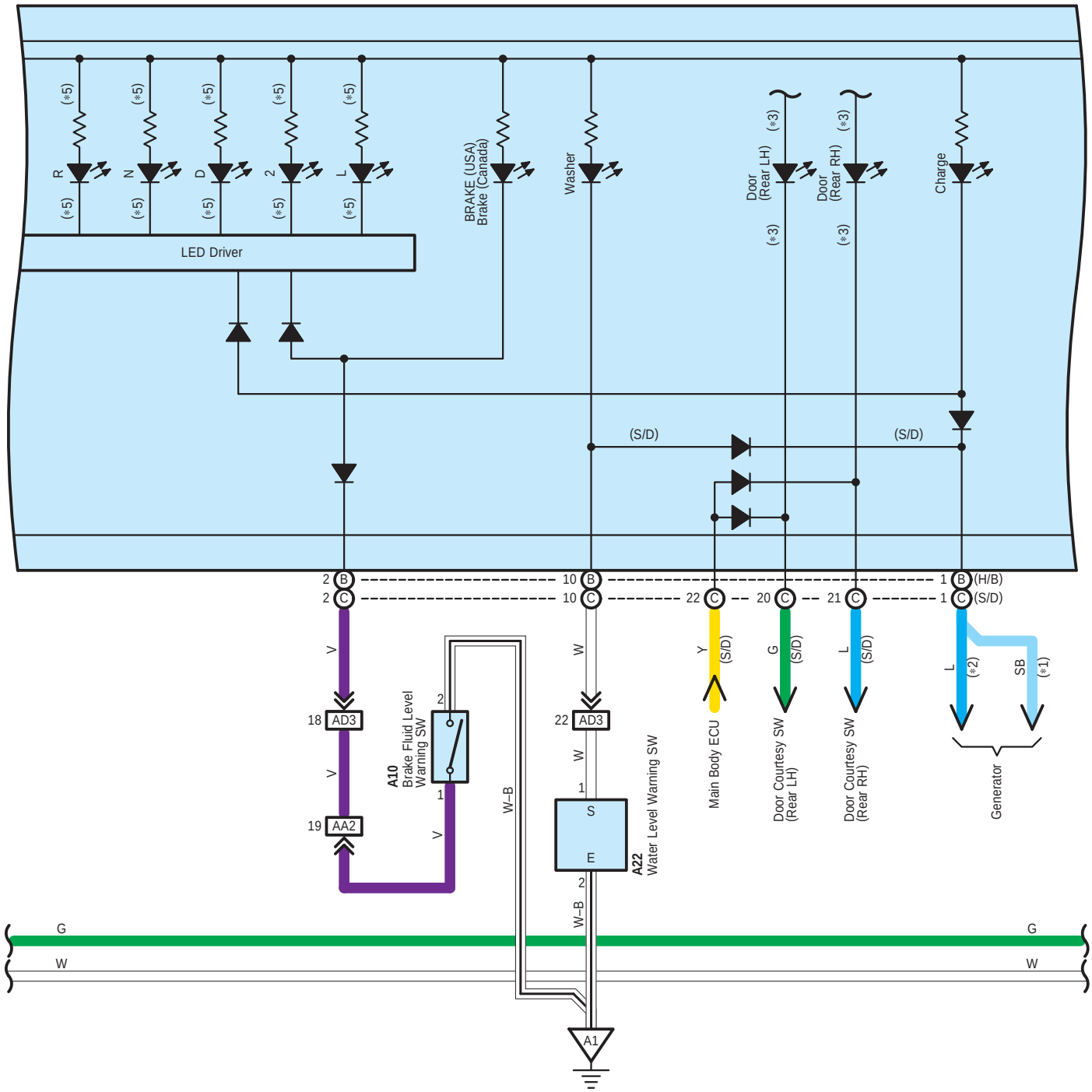

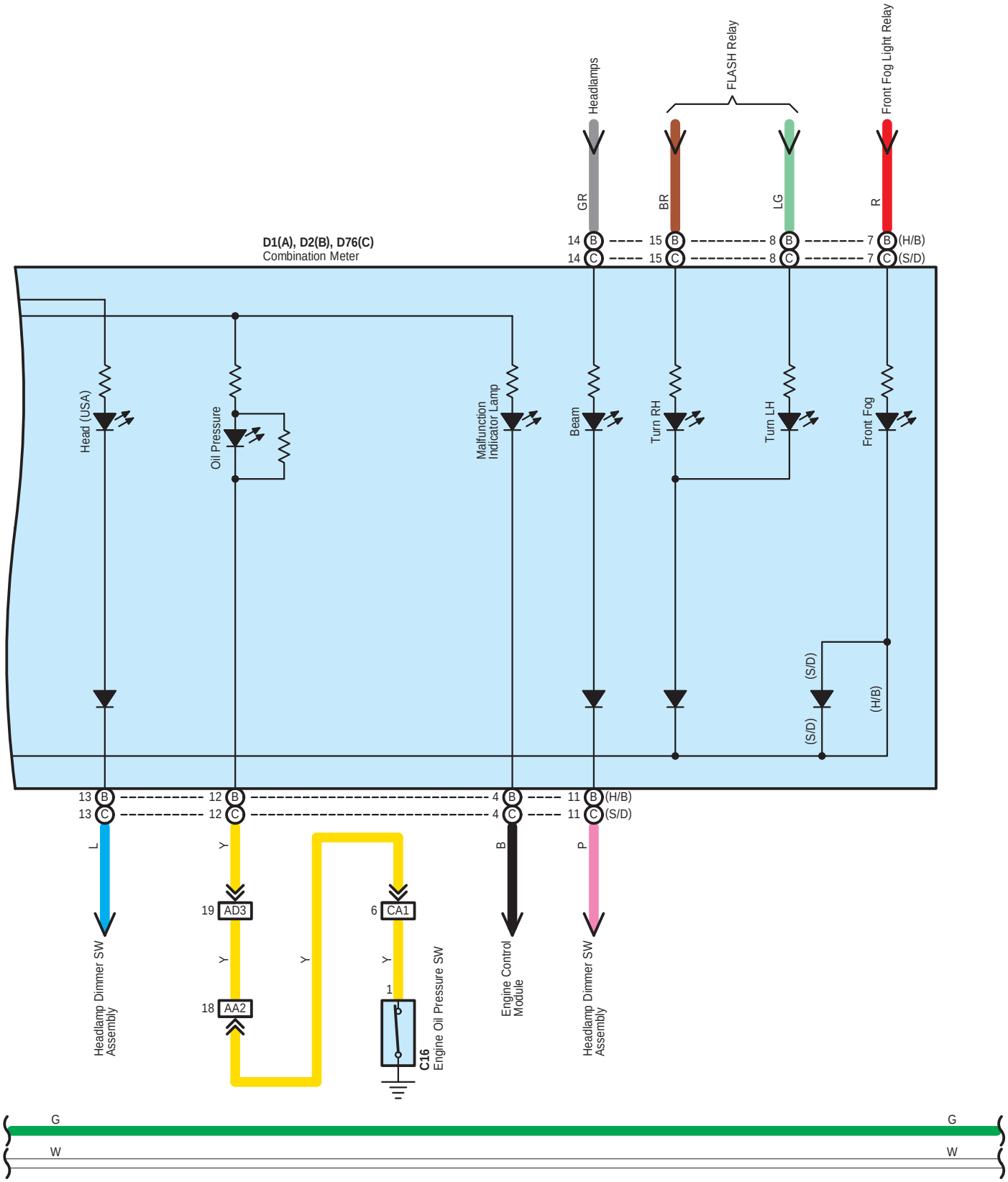
Headlamps
FLASH Relay
Front Fog Light Relay
GR
BR
LG
R
D1(A), D2(B), D76(C)
Combination Meter
14 B
14 C
15 B
15 C
8 B
8 C
7 B (H/B)
7 C (S/D)
Head (USA)
Oil Pressure
Malfunction Indicator Lamp
Beam
Turn RH
Turn LH
Front Fog
(S/D)
(H/B)
(S/D)
13 B
13 C
12 B
12 C
4 B
4 C
11 B (H/B)
11 C (S/D)
L
Y
B
P
19 AD3
18 AA2
6 CA1
1
C16
Engine Oil Pressure SW
Headlamp Dimmer SW Assembly
Engine Control Module
Headlamp Dimmer SW Assembly
G
W
G
W

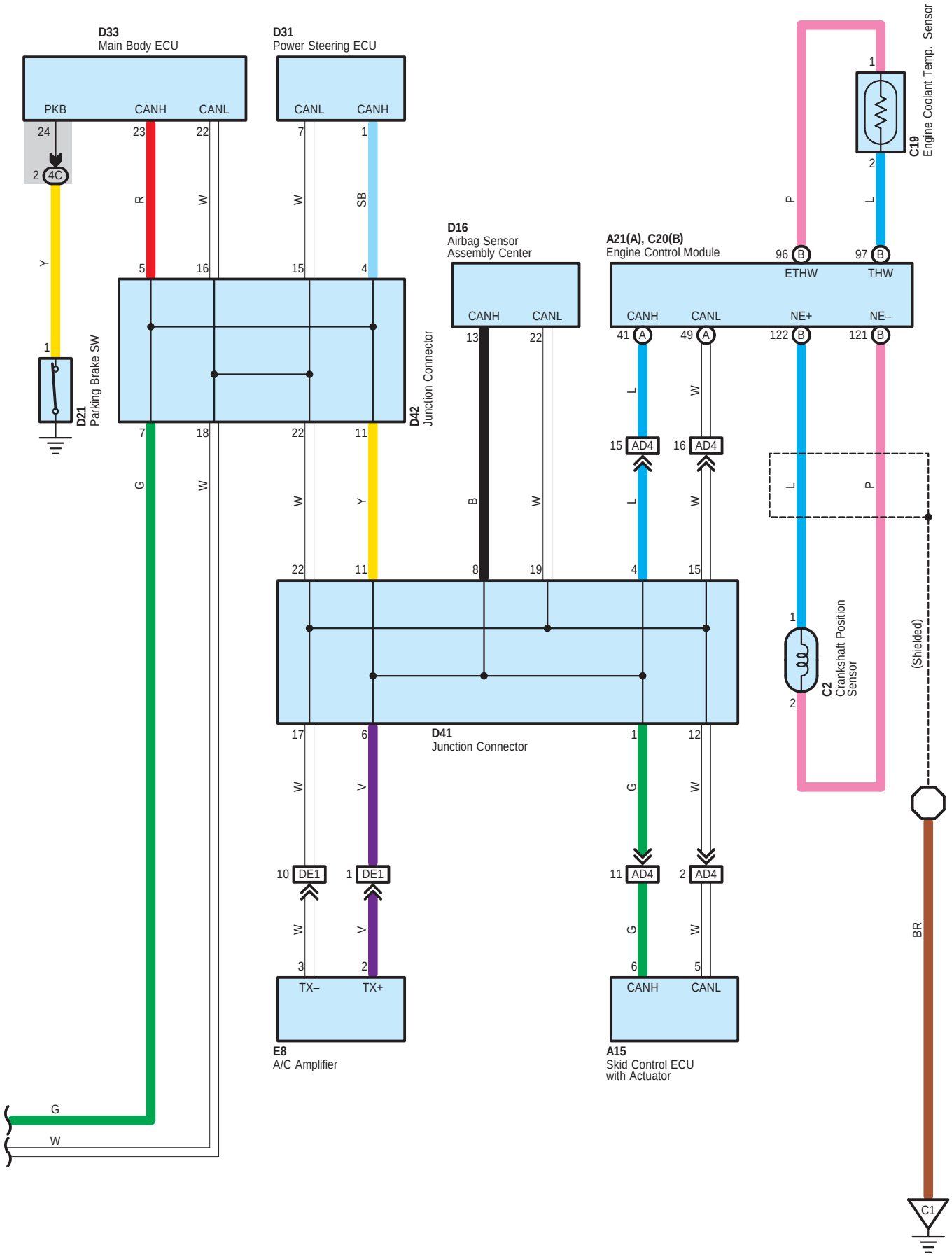
D33
Main Body ECU
PKB
CANH
CANL
24
23
22
2
4C
R
W
Y
5
16
1
D21
Parking Brake SW
7
18
G
W
D31
Power Steering ECU
CANL
CANH
7
1
W
SB
15
4
D42
Junction Connector
22
11
W
Y
22
11
D16
Airbag Sensor
Assembly Center
CANH
CANL
13
22
B
W
8
19
D41
Junction Connector
17
6
W
V
10
DE1
1
DE1
W
V
3
2
TX–
TX+
E8
A/C Amplifier
A21(A), C20(B)
Engine Control Module
CANH
CANL
NE+
NE–
41
A
49
A
122
B
121
B
L
W
15
AD4
16
AD4
L
W
4
15
1
12
G
W
11
AD4
2
AD4
G
W
6
5
CANH
CANL
A15
Skid Control ECU
with Actuator
96
B
97
B
ETHW
THW
P
L
1
2
C19
Engine Coolant Temp. Sensor
L
P
1
2
C2
Crankshaft Position
Sensor
(Shielded)
BR
C1
G
W

Combination Meter

: Parts Location

Code	See Page	Code	See Page	Code	See Page
A10	46 (H/B)	C20	49 (S/D)	D36	51 (H/B)
	48 (S/D)	C21	47 (H/B)		53 (S/D)
A15	46 (H/B)		49 (S/D)	D38 A	51 (H/B)
	48 (S/D)	D1 A	51 (H/B)		53 (S/D)
A21	46 (H/B)		53 (S/D)	D39 B	51 (H/B)
	48 (S/D)	D2 B	51 (H/B)		53 (S/D)
A22	46 (H/B)	D16	51 (H/B)	D41	51 (H/B)
	48 (S/D)		53 (S/D)		53 (S/D)
A25	46 (H/B)	D21	51 (H/B)	D42	51 (H/B)
	48 (S/D)		53 (S/D)		53 (S/D)
C2	47 (H/B)	D27	51 (H/B)	D76 C	53 (S/D)
	49 (S/D)	D29	51 (H/B)	D77	53 (S/D)
C16	47 (H/B)		53 (S/D)	E8	50 (H/B)
	49 (S/D)	D31	51 (H/B)		52 (S/D)
C19	47 (H/B)		53 (S/D)	J5	55 (5–Door)
	49 (S/D)	D33	51 (H/B)		57 (3–Door)
C20	47 (H/B)		53 (S/D)		59 (4–Door)

: Relay Blocks

Code	See Page	Relay Blocks (Relay Block Location)
1	24	Engine Room R/B (Engine Compartment Left)

: Junction Block and Wire Harness Connector

Code	See Page	Junction Block and Wire Harness (Connector Location)
4A	30	Floor Wire and Instrument Panel J/B (Lower Finish Panel)
4B	30	Engine Room Main Wire and Instrument Panel J/B (Lower Finish Panel)
4C	30	Instrument Panel Wire and Instrument Panel J/B (Lower Finish Panel)
4D		
4M	31	
4S		

: Connector Joining Wire Harness and Wire Harness

Code	See Page	Joining Wire Harness and Wire Harness (Connector Location)
AA2	62 (H/B)	Engine Room Main Wire and Engine Room Main Wire (Instrument Panel Left)
	63 (S/D)	
AD3	62 (H/B)	Engine Room Main Wire and Instrument Panel Wire (Instrument Panel Left)
	63 (S/D)	
AD4	62 (H/B)	
	63 (S/D)	
CA1	60 (H/B)	Engine Wire and Engine Room Main Wire (Engine Compartment Left)
	61 (S/D)	
CA2	60 (H/B)	
	61 (S/D)	
DE1	62 (H/B)	Instrument Panel Wire and Instrument Panel No.2 Wire (Instrument Panel Center)
	63 (S/D)	

▽ : **Ground Points**

Code	See Page	Ground Points Location
A1	60 (H/B)	Left Suspension Tower
	61 (S/D)	
C1	60 (H/B)	Engine Block Left
	61 (S/D)	
D3	62 (H/B)	Instrument Panel Reinforcement Left
	63 (S/D)	
J1	64 (5–Door)	Right Rear Quarter Panel
	65 (3–Door)	
	66 (4–Door)	Lower Back Panel Right

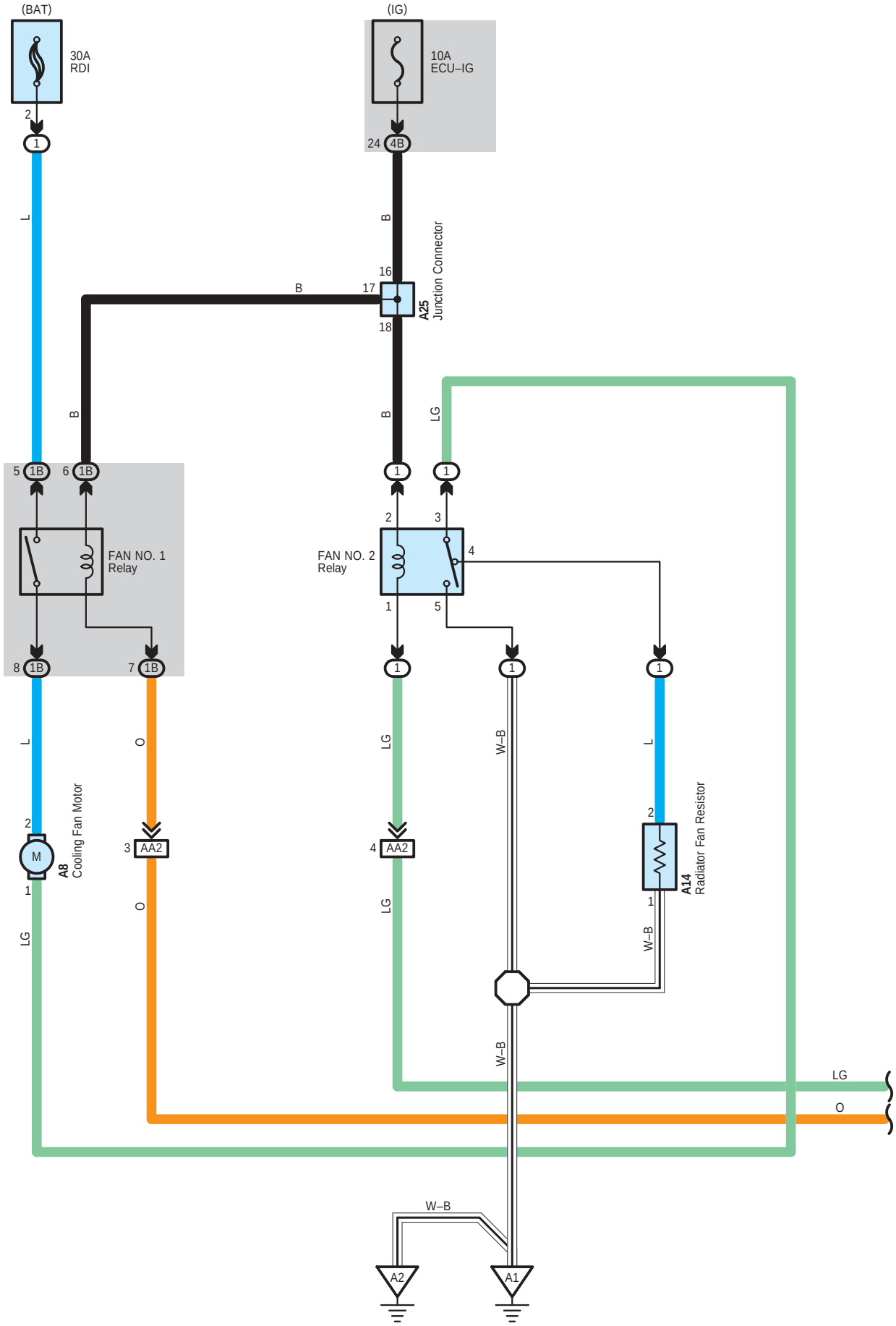
(BAT)
30A
RDI
2
1
L
(IG)
10A
ECU–IG
24 4B
B
16
17
18
A25
Junction Connector
B
B
LG
5 1B
6 1B
1
1
2
3
FAN NO. 1
Relay
FAN NO. 2
Relay
4
1
5
8 1B
7 1B
1
1
1
L
O
LG
W–B
L
2
M
A8
Cooling Fan Motor
3 AA2
4 AA2
2
A14
Radiator Fan Resistor
1
O
LG
1
W–B
W–B
LG
O
W–B
A2
A1

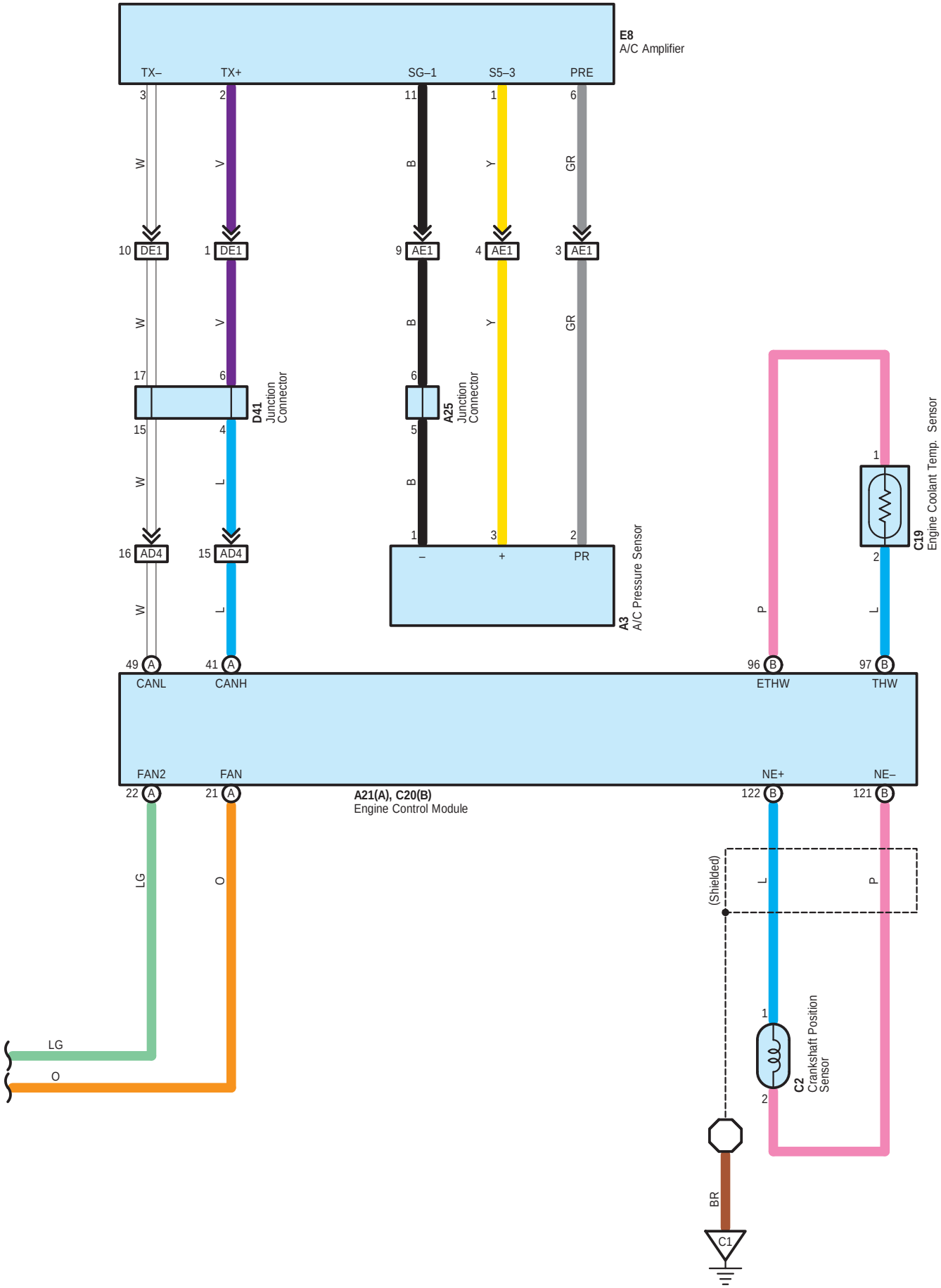
E8
A/C Amplifier
TX–
TX+
SG–1
S5–3
PRE
3
2
11
1
6
W
V
B
Y
GR
10 DE1
1 DE1
9 AE1
4 AE1
3 AE1
17
6
15
4
D41
Junction
Connector
6
5
A25
Junction
Connector
1
3
2
–
+
PR
A3
A/C Pressure Sensor
16 AD4
15 AD4
L
49 A
41 A
CANL
CANH
1
C19
Engine Coolant Temp. Sensor
2
P
96 B
97 B
ETHW
THW
FAN2
FAN
NE+
NE–
22 A
21 A
A21(A), C20(B)
Engine Control Module
122 B
121 B
LG
O
(Shielded)
1
C2
Crankshaft Position
Sensor
2
BR
C1

Cooling Fan

: Parts Location

Code	See Page	Code	See Page	Code	See Page
A3	46 (H/B)	A21 A	48 (S/D)	C20 B	47 (H/B)
	48 (S/D)	A25	46 (H/B)		49 (S/D)
A8	46 (H/B)		48 (S/D)	D41	51 (H/B)
	48 (S/D)	C2	47 (H/B)		53 (S/D)
A14	46 (H/B)		49 (S/D)	E8	50 (H/B)
	48 (S/D)	C19	47 (H/B)		52 (S/D)
A21 A	46 (H/B)		49 (S/D)		

: Relay Blocks

Code	See Page	Relay Blocks (Relay Block Location)
1	24	Engine Room R/B (Engine Compartment Left)

: Junction Block and Wire Harness Connector

Code	See Page	Junction Block and Wire Harness (Connector Location)
1B	25	Engine Room Main Wire and Engine Room J/B (Engine Compartment Left)
4B	30	Engine Room Main Wire and Instrument Panel J/B (Lower Finish Panel)

: Connector Joining Wire Harness and Wire Harness

Code	See Page	Joining Wire Harness and Wire Harness (Connector Location)
AA2	62 (H/B)	Engine Room Main Wire and Engine Room Main Wire (Instrument Panel Left)
	63 (S/D)	
AD4	62 (H/B)	Engine Room Main Wire and Instrument Panel Wire (Instrument Panel Left)
	63 (S/D)	
AE1	62 (H/B)	Engine Room Main Wire and Instrument Panel No.2 Wire (Instrument Panel Left)
	63 (S/D)	
DE1	62 (H/B)	Instrument Panel Wire and Instrument Panel No.2 Wire (Instrument Panel Center)
	63 (S/D)	

: Ground Points

Code	See Page	Ground Points Location
A1	60 (H/B)	Left Suspension Tower
	61 (S/D)	
A2	60 (H/B)	
	61 (S/D)	
C1	60 (H/B)	Engine Block Left
	61 (S/D)	

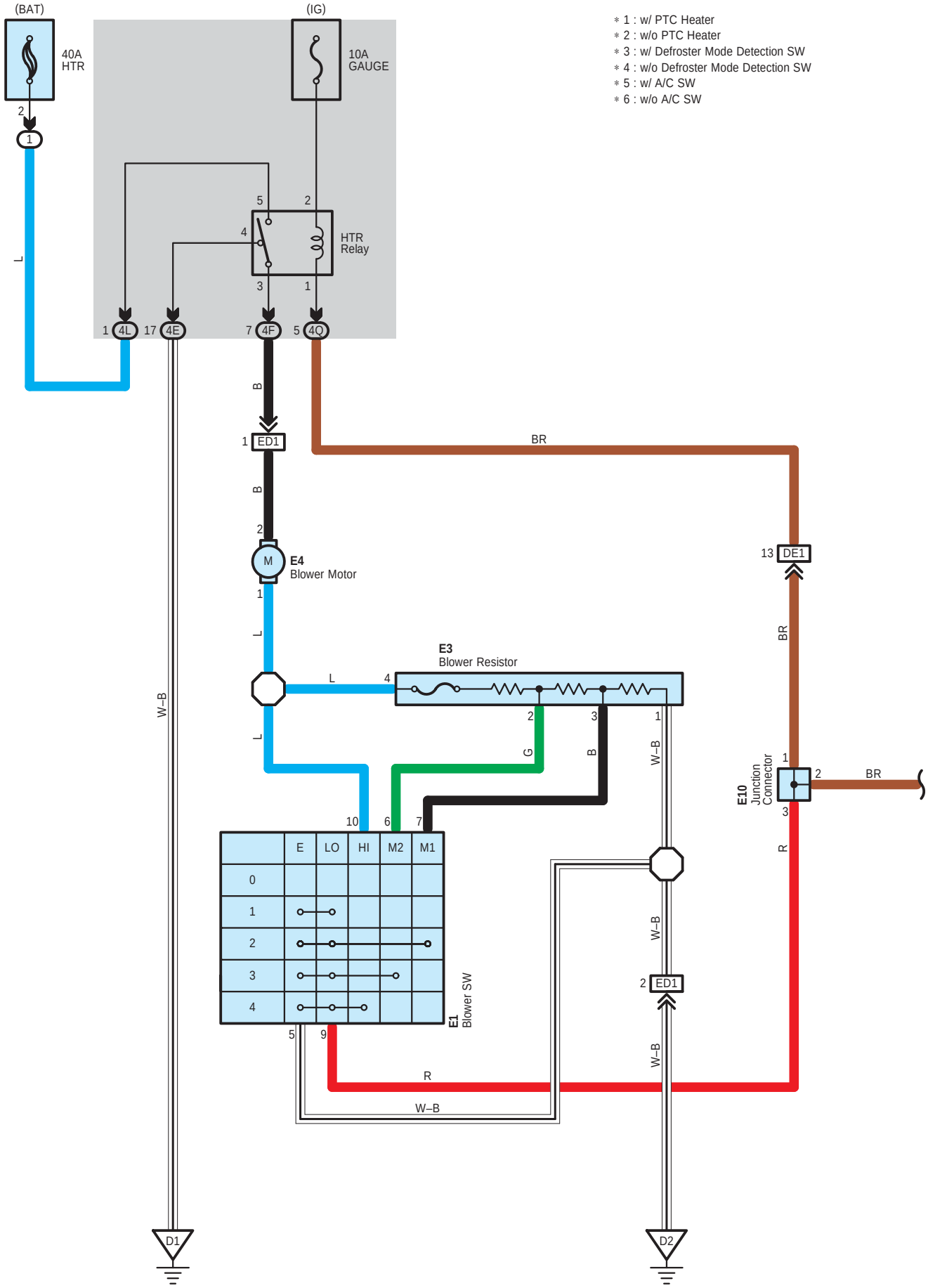
(BAT)
(IG)
40A
HTR
10A
GAUGE
HTR
Relay
* 1 : w/ PTC Heater
* 2 : w/o PTC Heater
* 3 : w/ Defroster Mode Detection SW
* 4 : w/o Defroster Mode Detection SW
* 5 : w/ A/C SW
* 6 : w/o A/C SW
E4
Blower Motor
E3
Blower Resistor
E1
Blower SW
E10
Junction
Connector
ED1
DE1
4L
4E
4F
4Q
D1
D2
W–B
BR
L
B
G
R

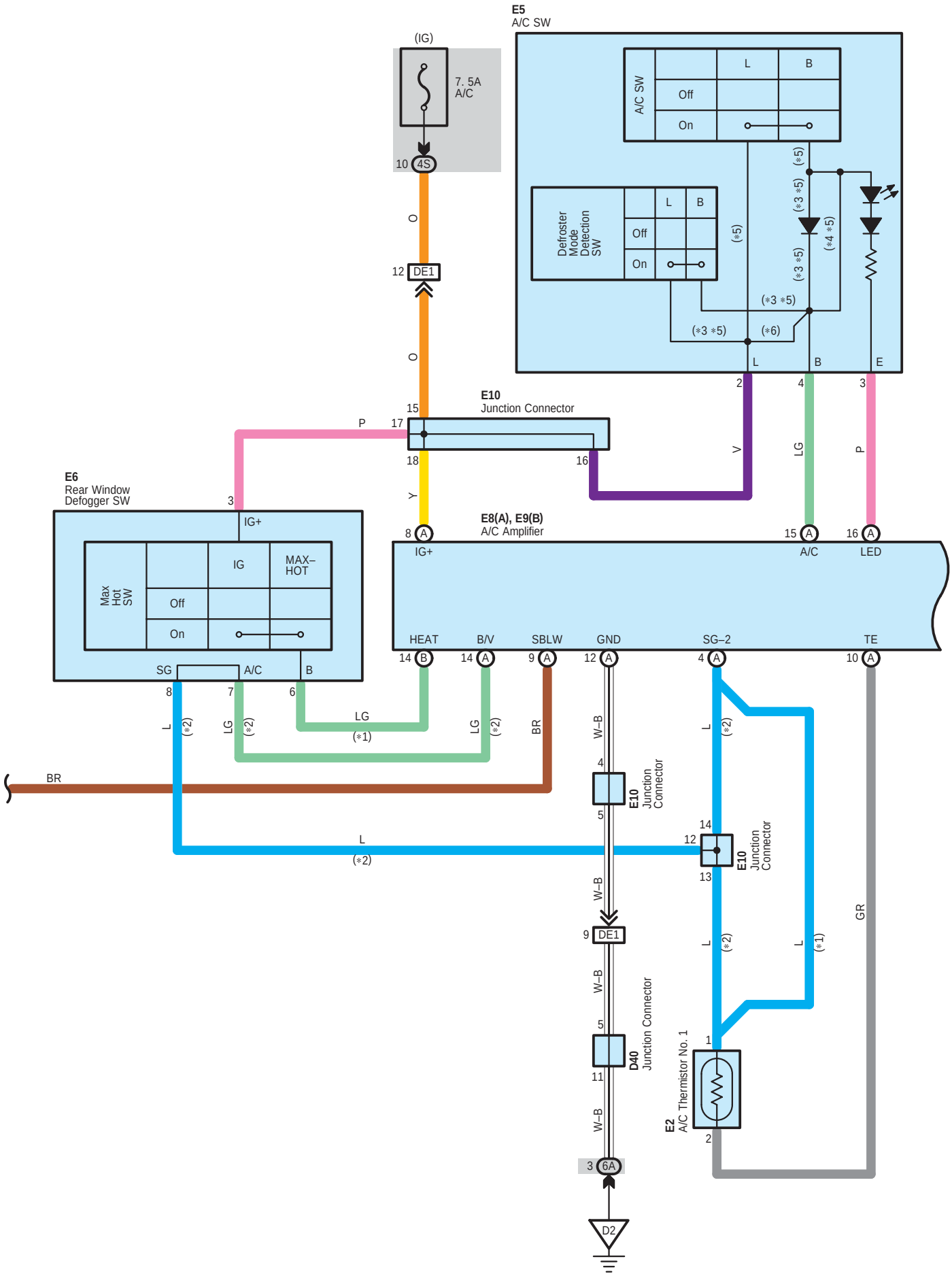
E5
A/C SW
(IG)
7. 5A
A/C
10 4S
O
12 DE1
O
A/C SW
L
B
Off
On
Defroster
Mode
Detection
SW
(*5)
(*3 *5)
(*4 *5)
(*6)
L
B
E
2
4
3
E10
Junction Connector
15
P
17
18
16
V
LG
P
E6
Rear Window
Defogger SW
3
IG+
Max
Hot
SW
IG
MAX–
HOT
Off
On
SG
A/C
B
8
7
6
Y
E8(A), E9(B)
A/C Amplifier
8 A
IG+
15 A
A/C
16 A
LED
HEAT
B/V
SBLW
GND
SG–2
TE
14 B
14 A
9 A
12 A
4 A
10 A
L
(*2)
LG
(*2)
LG
(*1)
LG
(*2)
BR
W–B
L
(*2)
BR
4
E10
Junction
Connector
5
L
(*2)
14
12
E10
Junction
Connector
13
W–B
9 DE1
L
(*2)
L
(*1)
GR
W–B
5
D40
Junction Connector
11
1
E2
A/C Thermistor No. 1
2
W–B
3 6A
D2

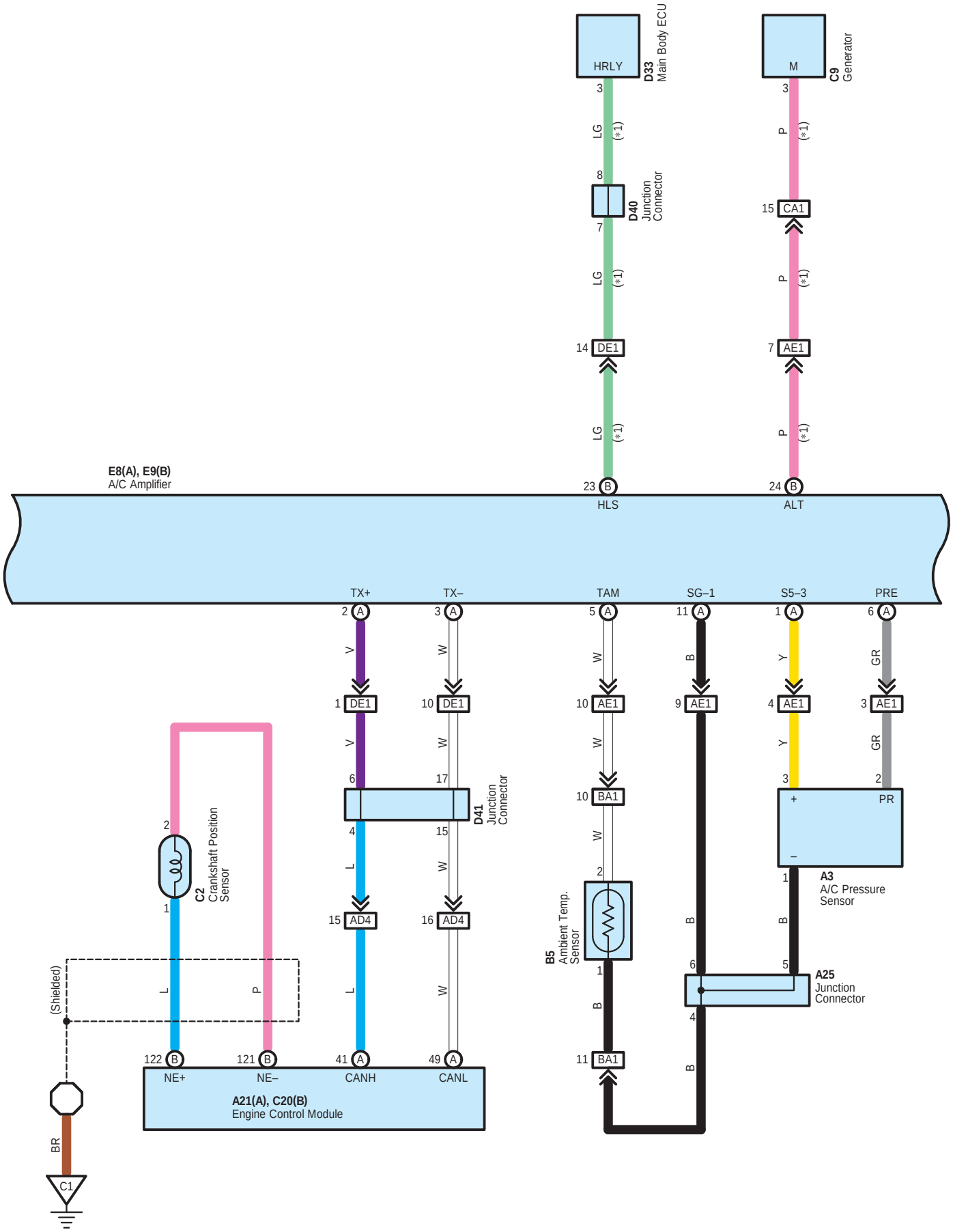
HRLY
D33
Main Body ECU
M
C9
Generator
3
LG
(*1)
8
D40
Junction Connector
7
15 CA1
P
14 DE1
7 AE1
E8(A), E9(B)
A/C Amplifier
23 B
HLS
24 B
ALT
TX+
TX–
TAM
SG–1
S5–3
PRE
2 A
3 A
5 A
11 A
1 A
6 A
V
W
B
Y
GR
1 DE1
10 DE1
10 AE1
9 AE1
4 AE1
3 AE1
6
17
D41
Junction Connector
4
15
L
10 BA1
2
B5
Ambient Temp. Sensor
1
11 BA1
+
PR
–
A3
A/C Pressure Sensor
5
A25
Junction Connector
15 AD4
16 AD4
C2
Crankshaft Position Sensor
(Shielded)
122 B
121 B
41 A
49 A
NE+
NE–
CANH
CANL
A21(A), C20(B)
Engine Control Module
BR
C1

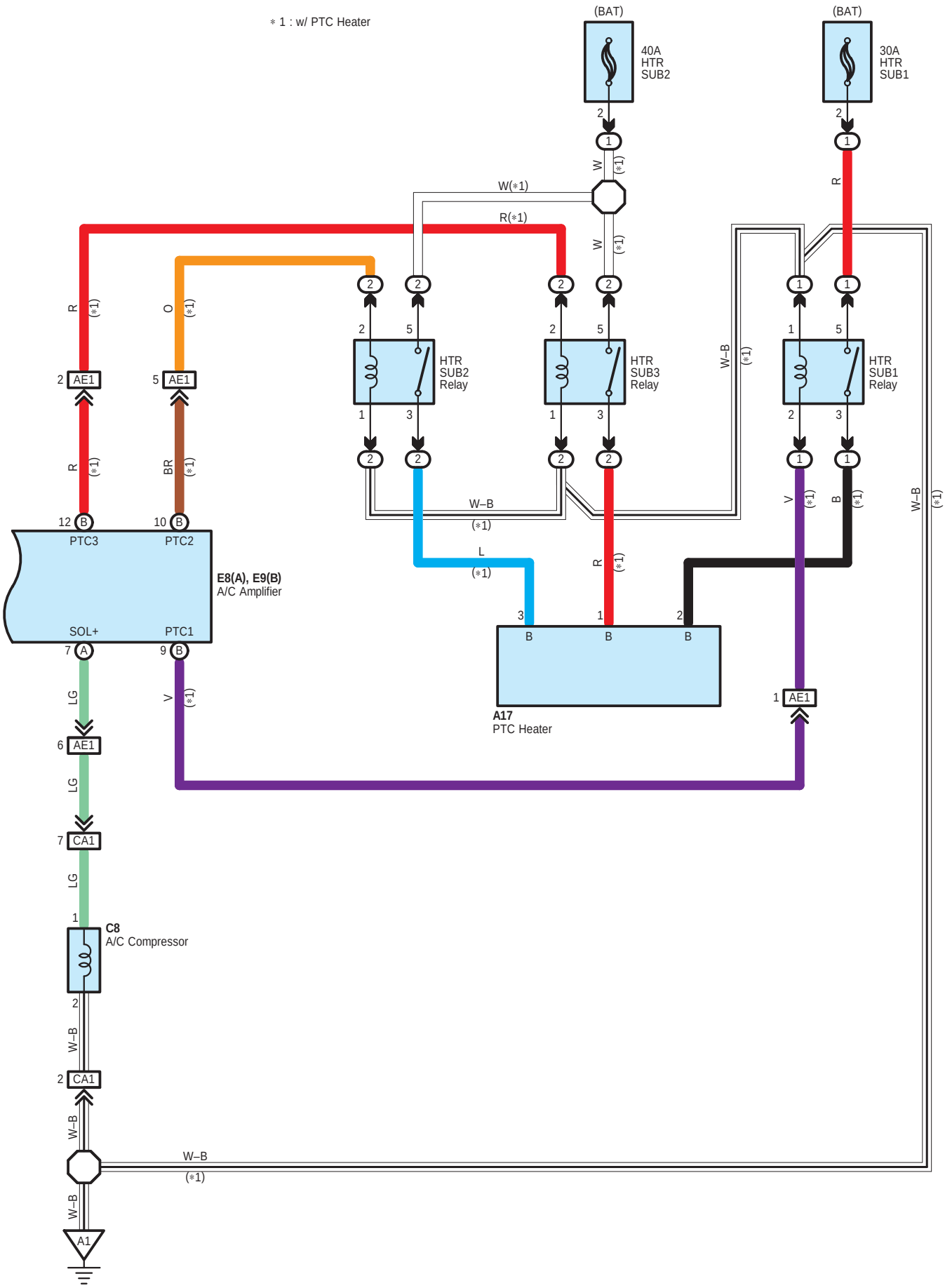
∗1 : w/ PTC Heater
(BAT)
40A
HTR
SUB2
(BAT)
30A
HTR
SUB1
W(∗1)
R(∗1)
HTR
SUB2
Relay
HTR
SUB3
Relay
HTR
SUB1
Relay
W–B
(∗1)
E8(A), E9(B)
A/C Amplifier
PTC3
PTC2
SOL+
PTC1
A17
PTC Heater
C8
A/C Compressor
AE1
CA1
A1

○ : Parts Location

Code	See Page	Code	See Page	Code	See Page
A3	46 (H/B)	C9	47 (H/B)	E3	50 (H/B)
	48 (S/D)		49 (S/D)		52 (S/D)
A17	50 (H/B)	C20 B	47 (H/B)	E4	50 (H/B)
	52 (S/D)		49 (S/D)		52 (S/D)
A21 A	46 (H/B)	D33	51 (H/B)	E5	50 (H/B)
	48 (S/D)		53 (S/D)		52 (S/D)
A25	46 (H/B)	D40	51 (H/B)	E6	50 (H/B)
	48 (S/D)		53 (S/D)		52 (S/D)
B5	46 (H/B)	D41	51 (H/B)	E8 A	50 (H/B)
	48 (S/D)		53 (S/D)		52 (S/D)
C2	47 (H/B)	E1	50 (H/B)	E9 B	50 (H/B)
	49 (S/D)		52 (S/D)		52 (S/D)
C8	47 (H/B)	E2	50 (H/B)	E10	50 (H/B)
	49 (S/D)		52 (S/D)		52 (S/D)

▭ : Relay Blocks

Code	See Page	Relay Blocks (Relay Block Location)
1	24	Engine Room R/B (Engine Compartment Left)
2	28	Engine Room R/B No.2 (Engine Compartment Right)

▭ : Junction Block and Wire Harness Connector

Code	See Page	Junction Block and Wire Harness (Connector Location)
4E	30	Instrument Panel Wire and Instrument Panel J/B (Lower Finish Panel)
4F		
4L	30	Engine Room Main Wire and Instrument Panel J/B (Lower Finish Panel)
4Q	31	Instrument Panel Wire and Instrument Panel J/B (Lower Finish Panel)
4S		
6A	40	Instrument Panel Wire and J/B No.6 (Right Kick Panel)

▭ : Connector Joining Wire Harness and Wire Harness

Code	See Page	Joining Wire Harness and Wire Harness (Connector Location)
AD4	62 (H/B)	Engine Room Main Wire and Instrument Panel Wire (Instrument Panel Left)
	63 (S/D)	
AE1	62 (H/B)	Engine Room Main Wire and Instrument Panel No.2 Wire (Instrument Panel Left)
	63 (S/D)	
BA1	60 (H/B)	Engine Room No.2 Wire and Engine Room Main Wire (Engine Compartment Left)
	61 (S/D)	
CA1	60 (H/B)	Engine Wire and Engine Room Main Wire (Engine Compartment Left)
	61 (S/D)	
DE1	62 (H/B)	Instrument Panel Wire and Instrument Panel No.2 Wire (Instrument Panel Center)
	63 (S/D)	
ED1	62 (H/B)	Instrument Panel No.2 Wire and Instrument Panel Wire (Instrument Panel Left)
	63 (S/D)	

▽ : **Ground Points**

Code	See Page	Ground Points Location
A1	60 (H/B)	Left Suspension Tower
	61 (S/D)	
C1	60 (H/B)	Engine Block Left
	61 (S/D)	
D1	62 (H/B)	Left Kick Panel
	63 (S/D)	
D2	62 (H/B)	Right Kick Panel
	63 (S/D)	

I GROUND POINT

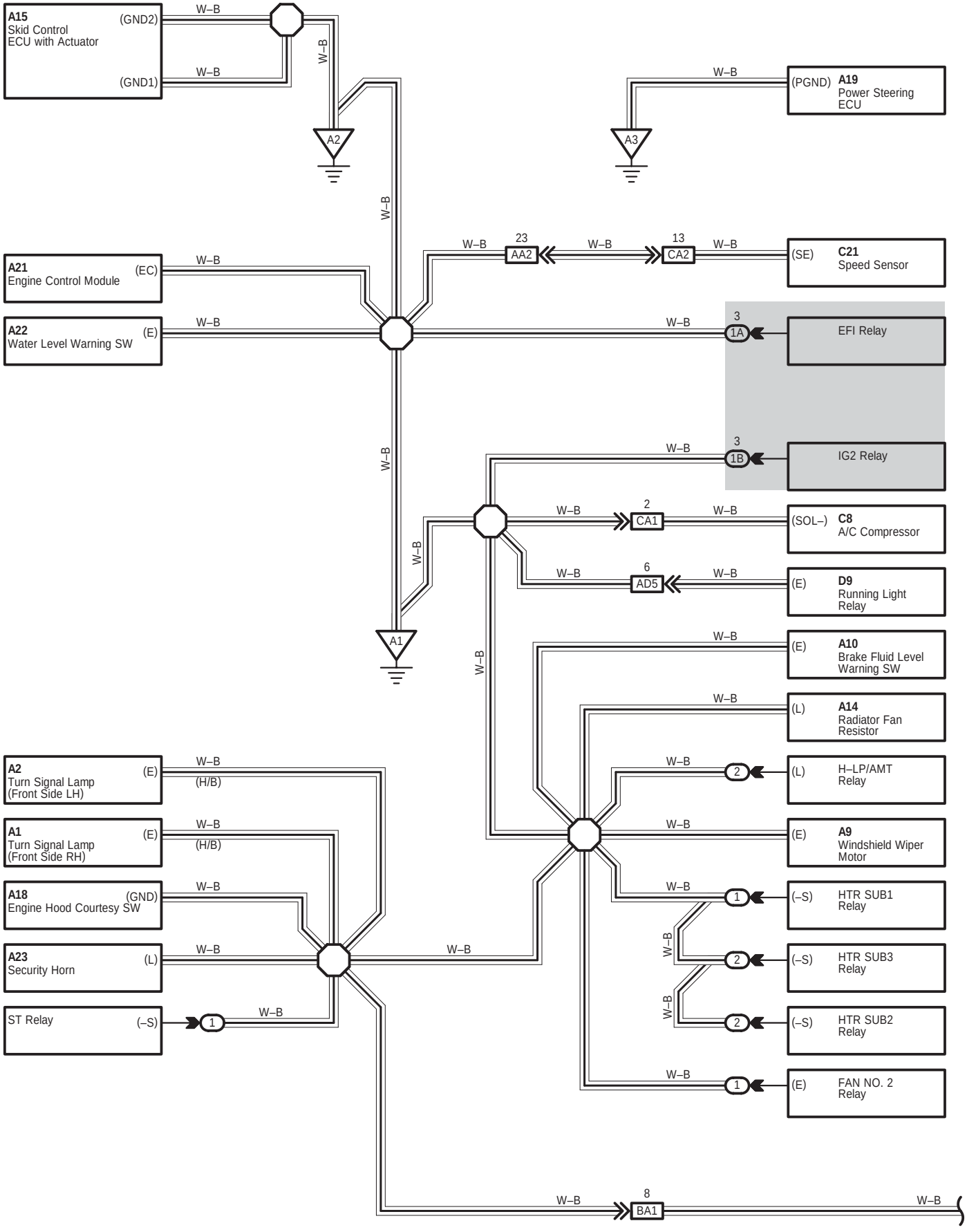

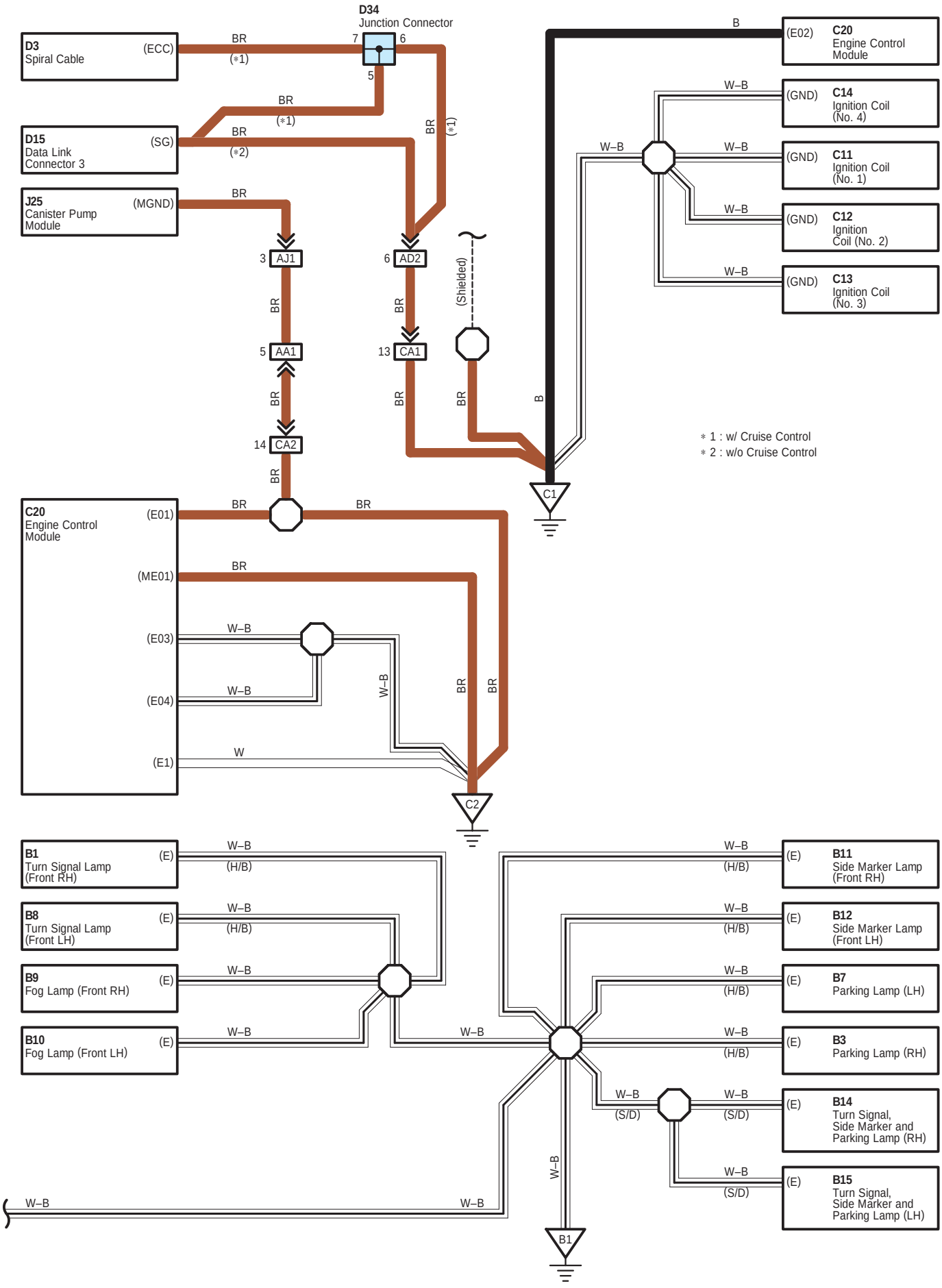
D34
Junction Connector
D3
Spiral Cable
(ECC)
D15
Data Link
Connector 3
(SG)
J25
Canister Pump
Module
(MGND)
BR
(*1)
(*2)
7
6
5
3 AJ1
6 AD2
5 AA1
13 CA1
14 CA2
(Shielded)
B
(E02)
C20
Engine Control
Module
W–B
(GND)
C14
Ignition Coil
(No. 4)
C11
Ignition Coil
(No. 1)
C12
Ignition
Coil (No. 2)
C13
Ignition Coil
(No. 3)
C1
* 1 : w/ Cruise Control
* 2 : w/o Cruise Control
C20
Engine Control
Module
(E01)
(ME01)
(E03)
(E04)
(E1)
W
C2
B1
Turn Signal Lamp
(Front RH)
B8
Turn Signal Lamp
(Front LH)
B9
Fog Lamp (Front RH)
B10
Fog Lamp (Front LH)
(E)
(H/B)
(S/D)
B11
Side Marker Lamp
(Front RH)
B12
Side Marker Lamp
(Front LH)
B7
Parking Lamp (LH)
B3
Parking Lamp (RH)
B14
Turn Signal,
Side Marker and
Parking Lamp (RH)
B15
Turn Signal,
Side Marker and
Parking Lamp (LH)
B1

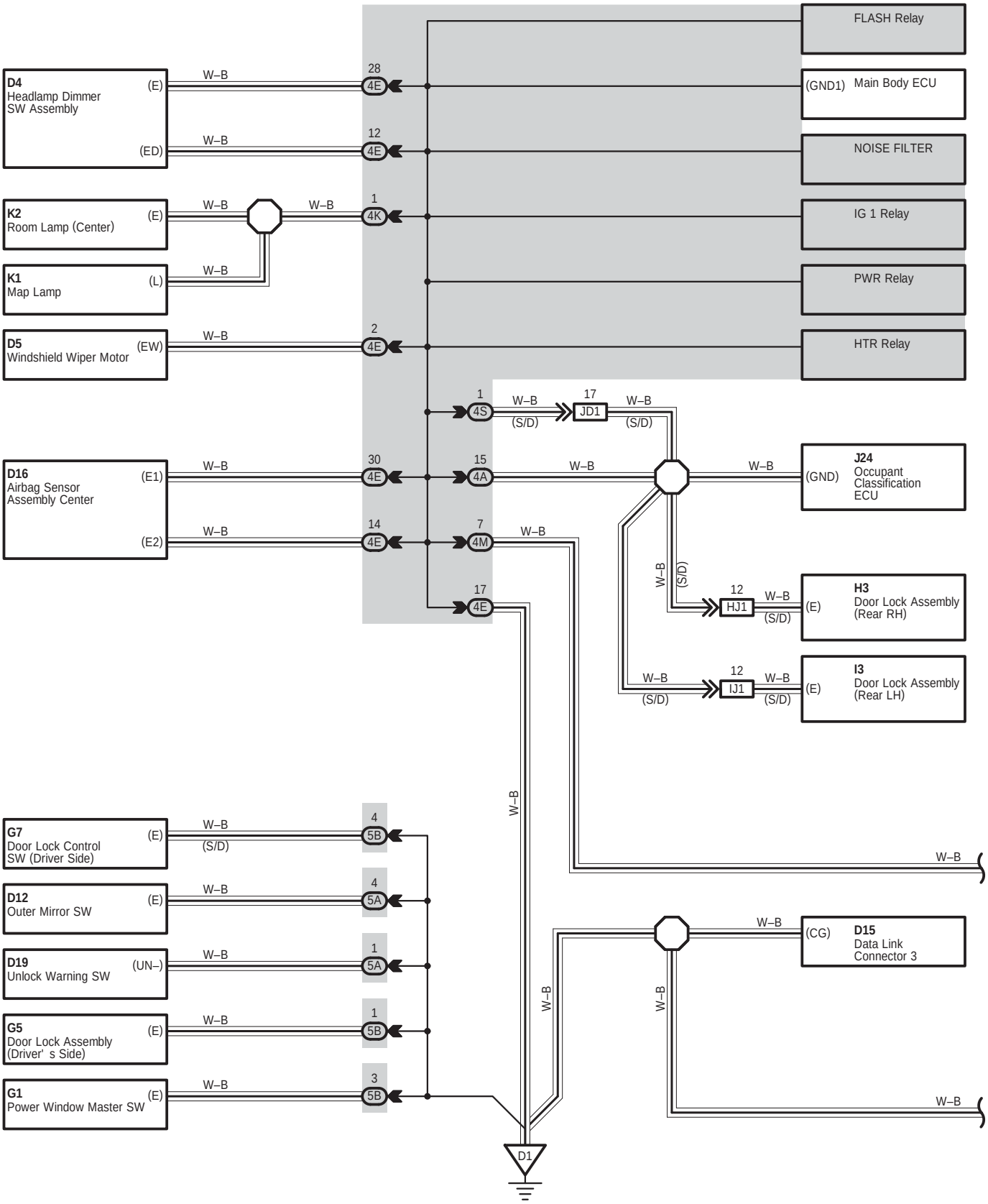
FLASH Relay
D4
Headlamp Dimmer SW Assembly
(E)
(ED)
W–B
28
12
4E
(GND1)
Main Body ECU
NOISE FILTER
K2
Room Lamp (Center)
K1
Map Lamp
(L)
1
4K
IG 1 Relay
PWR Relay
D5
Windshield Wiper Motor
(EW)
2
HTR Relay
1
4S
17
JD1
(S/D)
D16
Airbag Sensor Assembly Center
(E1)
(E2)
30
14
15
4A
7
4M
17
(GND)
J24
Occupant Classification ECU
12
HJ1
H3
Door Lock Assembly (Rear RH)
IJ1
I3
Door Lock Assembly (Rear LH)
G7
Door Lock Control SW (Driver Side)
D12
Outer Mirror SW
D19
Unlock Warning SW
(UN–)
G5
Door Lock Assembly (Driver' s Side)
G1
Power Window Master SW
4
5B
5A
1
3
(CG)
D15
Data Link Connector 3
D1

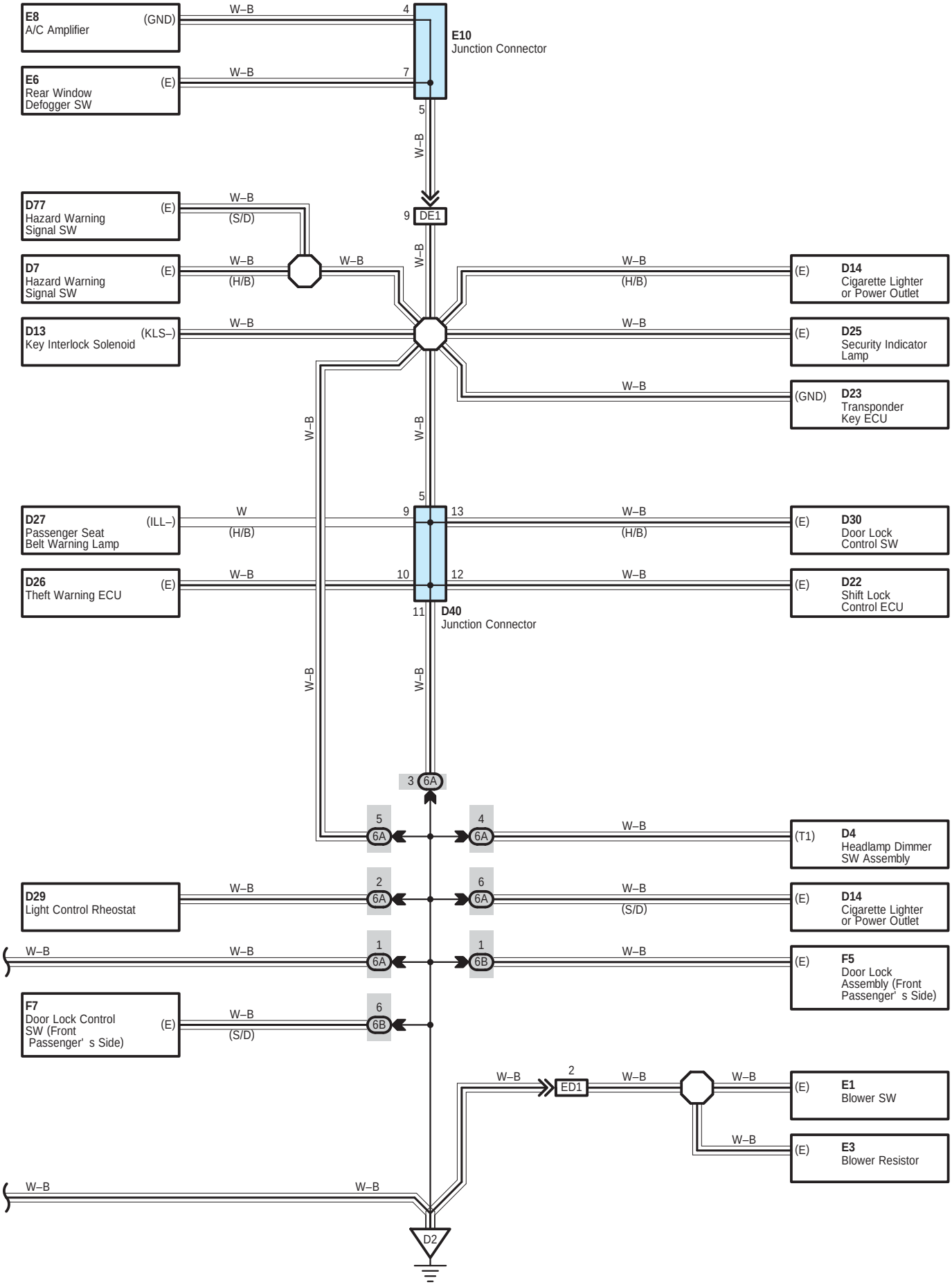
E8
A/C Amplifier
(GND)
W–B
4
E10
Junction Connector
E6
Rear Window
Defogger SW
(E)
W–B
7
5
W–B
D77
Hazard Warning
Signal SW
(E)
W–B
(S/D)
9
DE1
D7
Hazard Warning
Signal SW
(E)
W–B
(H/B)
W–B
W–B
W–B
(H/B)
(E)
D14
Cigarette Lighter
or Power Outlet
D13
Key Interlock Solenoid
(KLS–)
W–B
W–B
(E)
D25
Security Indicator
Lamp
W–B
(GND)
D23
Transponder
Key ECU
W–B
W–B
5
D27
Passenger Seat
Belt Warning Lamp
(ILL–)
W
(H/B)
9
13
W–B
(H/B)
(E)
D30
Door Lock
Control SW
D26
Theft Warning ECU
(E)
W–B
10
12
W–B
(E)
D22
Shift Lock
Control ECU
11
D40
Junction Connector
W–B
W–B
3
6A
5
6A
4
6A
W–B
(T1)
D4
Headlamp Dimmer
SW Assembly
D29
Light Control Rheostat
W–B
2
6A
6
6A
W–B
(S/D)
(E)
D14
Cigarette Lighter
or Power Outlet
W–B
W–B
1
6A
1
6B
W–B
(E)
F5
Door Lock
Assembly (Front
Passenger' s Side)
F7
Door Lock Control
SW (Front
Passenger' s Side)
(E)
W–B
(S/D)
6
6B
W–B
2
ED1
W–B
W–B
(E)
E1
Blower SW
W–B
(E)
E3
Blower Resistor
W–B
W–B
D2

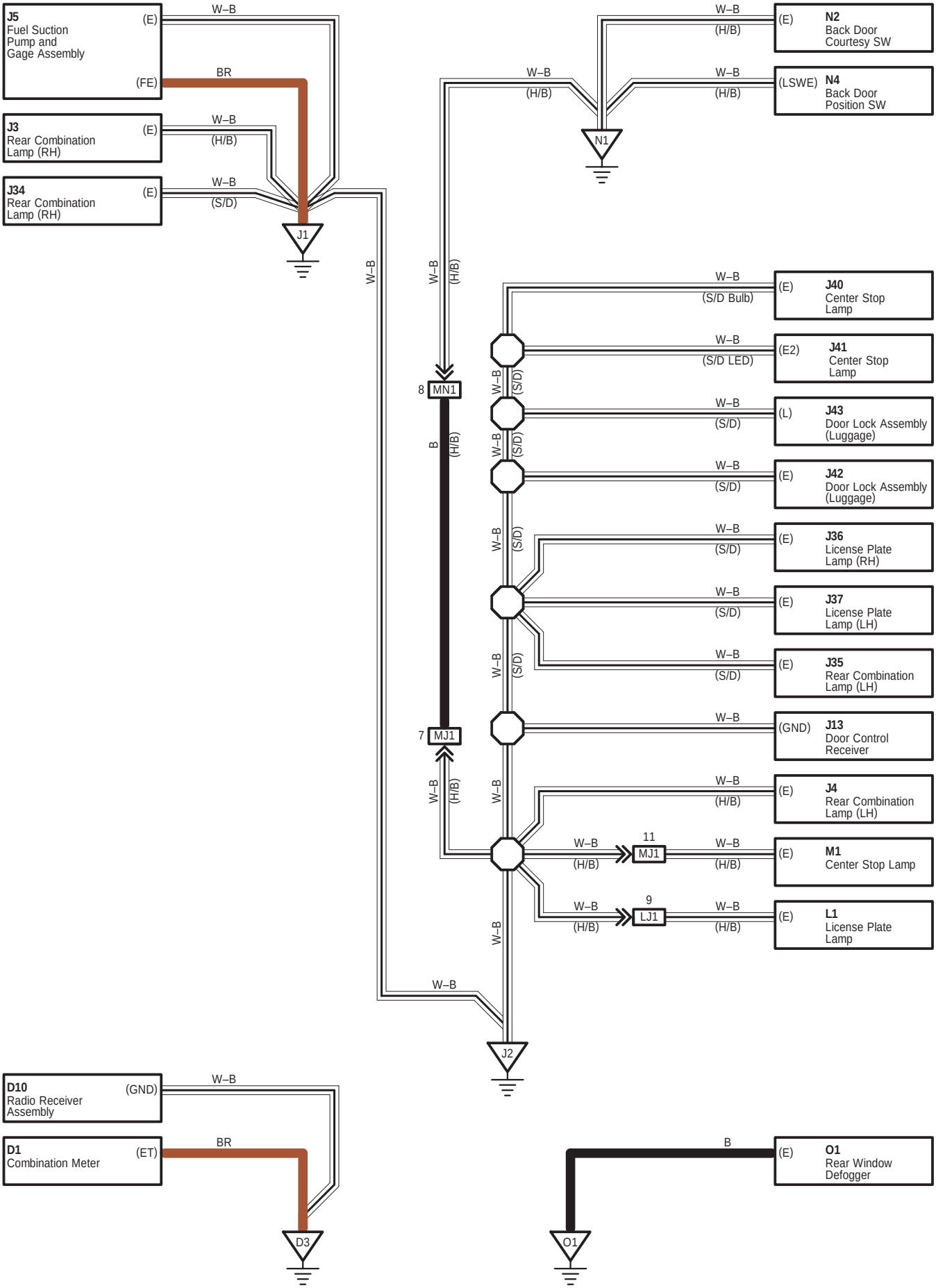
J5
Fuel Suction Pump and Gage Assembly
(E)
(FE)
J3
Rear Combination Lamp (RH)
(E)
J34
Rear Combination Lamp (RH)
(E)
W–B
BR
W–B (H/B)
W–B (S/D)
J1
W–B
W–B (H/B)
N1
W–B (H/B)
W–B (H/B)
(E) N2 Back Door Courtesy SW
(LSWE) N4 Back Door Position SW
8 MN1
B (H/B)
7 MJ1
W–B (H/B)
W–B (S/D Bulb)
(E) J40 Center Stop Lamp
W–B (S/D LED)
(E2) J41 Center Stop Lamp
W–B (S/D)
(L) J43 Door Lock Assembly (Luggage)
(E) J42 Door Lock Assembly (Luggage)
(E) J36 License Plate Lamp (RH)
(E) J37 License Plate Lamp (LH)
(E) J35 Rear Combination Lamp (LH)
(GND) J13 Door Control Receiver
(E) J4 Rear Combination Lamp (H/B)
11 MJ1
(E) M1 Center Stop Lamp
9 LJ1
(E) L1 License Plate Lamp
W–B
J2
D10
Radio Receiver Assembly
(GND)
D1
Combination Meter
(ET)
BR
D3
B
(E) O1 Rear Window Defogger
O1

: Parts Location

Code	See Page	Code	See Page	Code	See Page
D34	53 (S/D)	D40	53 (S/D)	E10	52 (S/D)
D40	51 (H/B)	E10	50 (H/B)		

: Relay Blocks

Code	See Page	Relay Blocks (Relay Block Location)
1	24	Engine Room R/B (Engine Compartment Left)
2	28	Engine Room R/B No.2 (Engine Compartment Right)

: Junction Block and Wire Harness Connector

Code	See Page	Junction Block and Wire Harness (Connector Location)
1A	25	Engine Room Main Wire and Engine Room J/B (Engine Compartment Left)
1B		
4A	30	Floor Wire and Instrument Panel J/B (Lower Finish Panel)
4E	30	Instrument Panel Wire and Instrument Panel J/B (Lower Finish Panel)
4K	30	Roof Wire and Instrument Panel J/B (Lower Finish Panel)
4M	31	Instrument Panel Wire and Instrument Panel J/B (Lower Finish Panel)
4S		
5A	38	Instrument Panel Wire and J/B No.5 (Left Kick Panel)
5B	38	Front Door LH Wire and J/B No.5 (Left Kick Panel)
6A	40	Instrument Panel Wire and J/B No.6 (Right Kick Panel)
6B	40	Front Door RH Wire and J/B No.6 (Right Kick Panel)

I GROUND POINT

: **Connector Joining Wire Harness and Wire Harness**

Code	See Page	Joining Wire Harness and Wire Harness (Connector Location)
AA1	62 (H/B)	Engine Room Main Wire and Engine Room Main Wire (Instrument Panel Left)
	63 (S/D)	
AA2	62 (H/B)	
	63 (S/D)	
AD2	62 (H/B)	Engine Room Main Wire and Instrument Panel Wire (Instrument Panel Left)
	63 (S/D)	
AD5	62 (H/B)	
	63 (S/D)	
AJ1	62 (H/B)	Engine Room Main Wire and Floor Wire (Instrument Panel Left)
	63 (S/D)	
BA1	60 (H/B)	Engine Room No.2 Wire and Engine Room Main Wire (Engine Compartment Left)
	61 (S/D)	
CA1	60 (H/B)	Engine Wire and Engine Room Main Wire (Engine Compartment Left)
	61 (S/D)	
CA2	60 (H/B)	
	61 (S/D)	
DE1	62 (H/B)	Instrument Panel Wire and Instrument Panel No.2 Wire (Instrument Panel Center)
	63 (S/D)	
ED1	62 (H/B)	Instrument Panel No.2 Wire and Instrument Panel Wire (Instrument Panel Left)
	63 (S/D)	
HJ1	66 (4–Door)	Rear Door No.1 Wire and Floor Wire (Right Center Pillar)
IJ1	66 (4–Door)	Rear Door No.2 Wire and Floor Wire (Left Center Pillar)
JD1	63 (S/D)	Floor Wire and Instrument Panel Wire (Instrument Panel Left)
LJ1	64 (5–Door)	Luggage Room No.2 Wire and Floor Wire (Luggage Room Left)
	65 (3–Door)	
MJ1	64 (5–Door)	Back Door No.1 Wire and Floor Wire (Left Rear Quarter Panel)
	65 (3–Door)	
MN1	64 (5–Door)	Back Door No.1 Wire and Back Door No.2 Wire (Back Door Panel Center)
	65 (3–Door)	

▽ : **Ground Points**

Code	See Page	Ground Points Location
A1	60 (H/B)	Left Suspension Tower
	61 (S/D)	
A2	60 (H/B)	
	61 (S/D)	
A3	62 (H/B)	Left Cowl Top Side Panel
	63 (S/D)	
B1	60 (H/B)	Radiator Support Left
	61 (S/D)	
C1	60 (H/B)	Engine Block Left
	61 (S/D)	
C2	60 (H/B)	
	61 (S/D)	
D1	62 (H/B)	Left Kick Panel
	63 (S/D)	
D2	62 (H/B)	Right Kick Panel
	63 (S/D)	
D3	62 (H/B)	Instrument Panel Reinforcement Left
	63 (S/D)	
J1	64 (5–Door)	Right Rear Quarter Panel
	65 (3–Door)	
	66 (4–Door)	Lower Back Panel Right
J2	64 (5–Door)	Left Rear Quarter Panel
	65 (3–Door)	
	66 (4–Door)	Lower Back Panel Left
N1	64 (5–Door)	Back Door Panel Center
	65 (3–Door)	
O1	64 (5–Door)	Back Door Panel Left
	65 (3–Door)	
	66 (4–Door)	Right Rear Quarter Panel

J POWER SOURCE (Current Flow Chart)

The chart below shows the route by which current flows from the battery to each electrical source (Fusible Link, Circuit Breaker, Fuse, etc.) and other Parts.

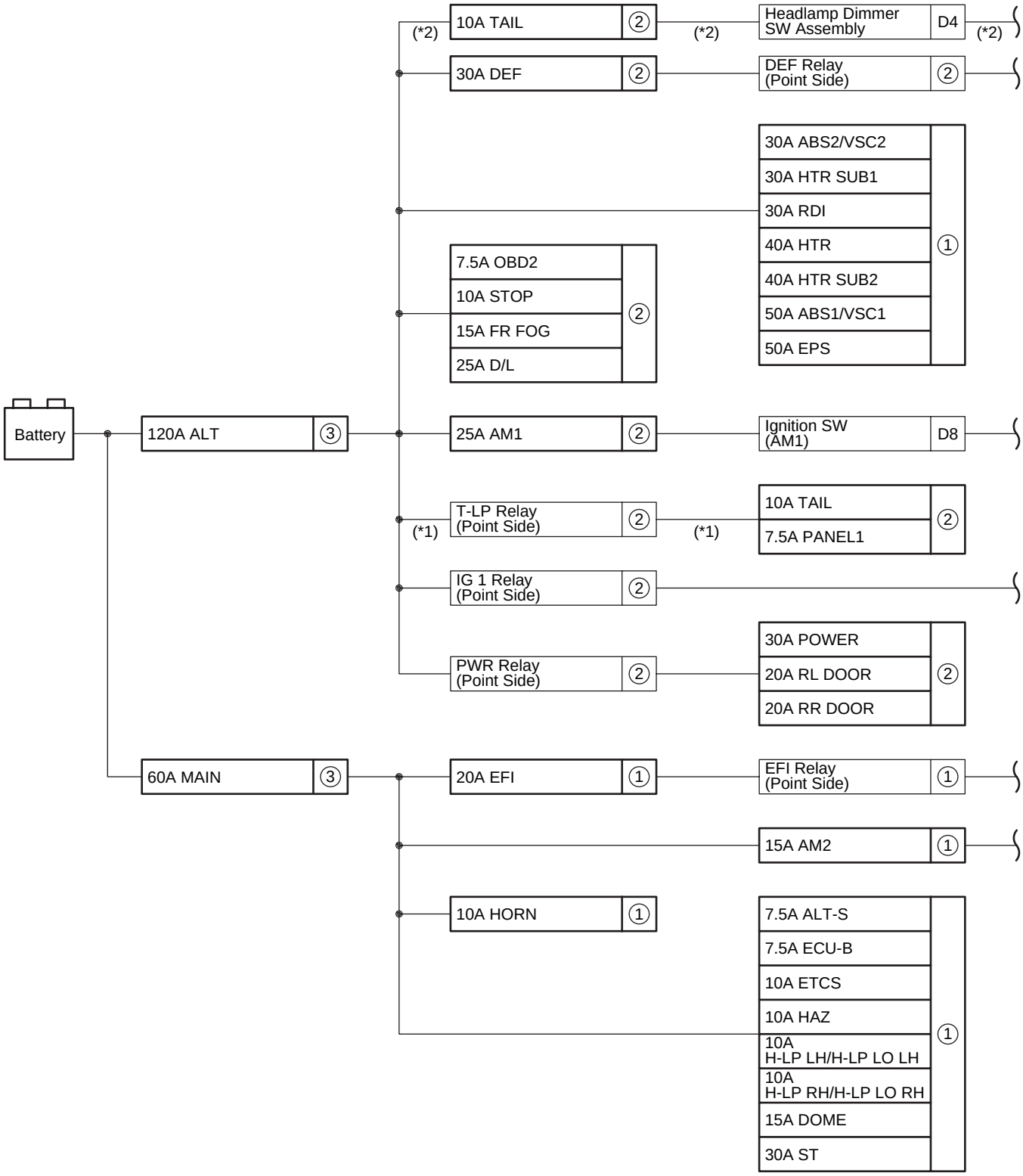

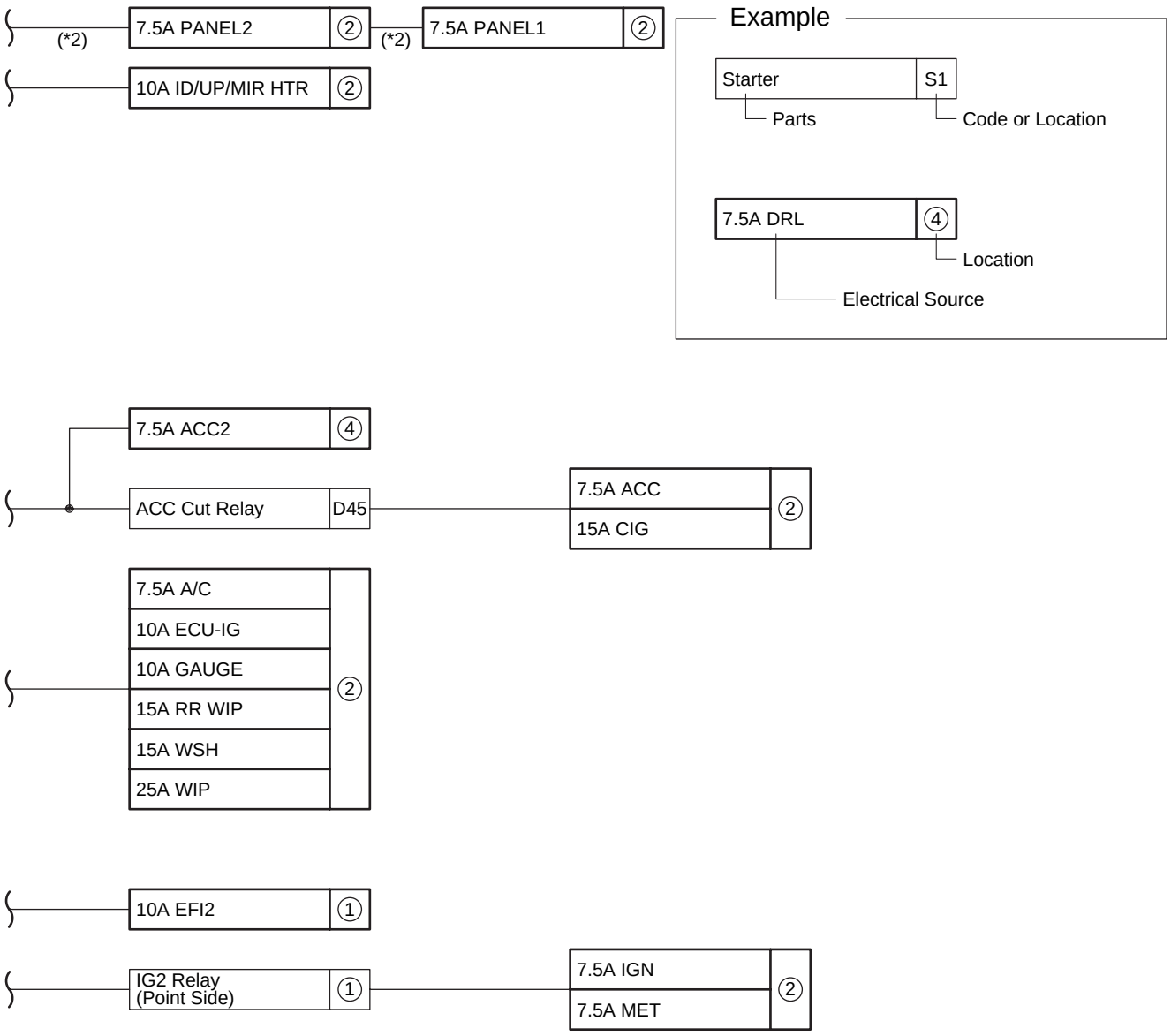

* 1:H/B, S/D *3
* 2:Except *1
* 3:Cold Area Spec ., w/ Engine Immobiliser System, w/ ABS, w/ Rear Window Defogger, w/ Door Lock Control, w/ Daytime Running Light, w/ Remote Control Mirror, w/ Air Conditioning

[LOCATION]

① : Engine Room R/B and Engine Room J/B (See Page 24)

② : Instrument Panel J/B (See Page 30)

③ : Fusible Link Block (See Page 42)

④ : Fuse Block (See Page 45)

Engine Room R/B and Engine Room J/B (See Page 24)

Fuse		System	Page
7.5A	ALT–S	Charging	78
7.5A	ECU–B	Combination Meter	226
		Cruise Control	102
		Door Lock Control	184
		Electronically Controlled Transmission and A/T Indicator	96
		Engine Control	84
		Engine Immobiliser System	110
		Headlight	120
		Interior Light	128
		Key Reminder and Light Reminder	150
		Power Window	178
		Seat Belt Warning	168
		SRS	159
		Theft Deterrent	200
		Wireless Door Lock Control	192
10A	EFI2	Engine Control	84
10A	ETCS	Engine Control	84
10A	HAZ	Turn Signal and Hazard Warning Light	124
10A	H–LP LH/H–LP LO LH	Headlight	120
		Theft Deterrent	200
10A	H–LP RH/H–LP LO RH	Headlight	120
10A	HORN	Horn	144
		Theft Deterrent	200
15A	AM2	Engine Control	84
		Ignition	80
		Starting	74
15A	DOME	Audio System	222
		Engine Control	84
		Interior Light	128
		Theft Deterrent	200
		Wireless Door Lock Control	192
20A	EFI	Cruise Control	102
		Electronically Controlled Transmission and A/T Indicator	96
		Engine Control	84
30A	ABS2/VSC2	ABS	154
30A	HTR SUB1	Air Conditioning	238
30A	RDI	Cooling Fan	234
30A	ST	Starting	74
40A	HTR	Air Conditioning	238
40A	HTR SUB2	Air Conditioning	238
50A	ABS1/VSC1	ABS	154

* These are the page numbers of the first page on which the related system is shown.

Fuse		System	Page
50A	EPS	EPS	174

Instrument Panel J/B (See Page 30)

Fuse		System	Page
7.5A	A/C	Air Conditioning	238
		Rear Window Defogger	216
7.5A	ACC	Audio System	222
		Door Lock Control	184
		Interior Light	128
		Remote Control Mirror	218
		Theft Deterrent	200
		Wireless Door Lock Control	192
7.5A	IGN	Cruise Control	102
		Electronically Controlled Transmission and A/T Indicator	96
		Engine Control	84
		Engine Immobiliser System	110
		Seat Belt Warning	168
		SRS	159
7.5A	MET	ABS	154
		Audio System	222
		Charging	78
		Combination Meter	226
		Cruise Control	102
		Electronically Controlled Transmission and A/T Indicator	96
		Engine Control	84
		EPS	174
		Interior Light	128
		Key Reminder and Light Reminder	150
		Seat Belt Warning	168
		SRS	159
		Taillight and Illumination	134
7.5A	OBD2	Data Link Connector 3	112
7.5A	PANEL1	Key Reminder and Light Reminder	150
		Taillight and Illumination	134
7.5A	PANEL2	Key Reminder and Light Reminder	150
		Taillight and Illumination	134
10A	ECU–IG	ABS	154
		Audio System	222
		Combination Meter	226
		Cooling Fan	234
		Cruise Control	102
		Door Lock Control	184
		Electronically Controlled Transmission and A/T Indicator	96
		Engine Control	84

* These are the page numbers of the first page on which the related system is shown.

J POWER SOURCE (Current Flow Chart)

Fuse		System	Page
10A	ECU–IG	EPS	174
		Headlight	120
		Power Window	178
		Theft Deterrent	200
		Wireless Door Lock Control	192
10A	GAUGE	Air Conditioning	238
		Back–Up Light	140
		Charging	78
		Cruise Control	102
		Electronically Controlled Transmission and A/T Indicator	96
		Rear Window Defogger	216
		Seat Belt Warning	168
		Shift Lock	214
		SRS	159
		Taillight and Illumination	134
		Turn Signal and Hazard Warning Light	124
10A	ID/UP/MIR HTR	Engine Control	84
10A	STOP	ABS	154
		Cruise Control	102
		Electronically Controlled Transmission and A/T Indicator	96
		Engine Control	84
		Shift Lock	214
		Stop Light	142
10A	TAIL	Engine Control	84
		Key Reminder and Light Reminder	150
		Taillight and Illumination	134
15A	CIG	Cigarette Lighter/Power Outlet	220
15A	FR FOG	Front Fog Light	146
		Headlight	120
15A	RR WIP	Rear Wiper and Washer	212
15A	WSH	Front Wiper and Washer	208
		Rear Wiper and Washer	212
20A	RL DOOR	Power Window	178
20A	RR DOOR	Power Window	178
20A	WIP	Front Wiper and Washer	208
25A	D/L	Door Lock Control	184
		Interior Light	128
		Theft Deterrent	200
		Wireless Door Lock Control	192
30A	DEF	Engine Control	84
		Rear Window Defogger	216
30A	POWER	Power Window	178

* These are the page numbers of the first page on which the related system is shown.

Fusible Link Block (See Page 42)

Fuse		System	Page
120A	ALT	Charging	78
		Engine Control	84
		Key Reminder and Light Reminder	150
		Power Window	178
		Taillight and Illumination	134

Fuse Block (See Page 45)

Fuse		System	Page
7.5A	ACC2	Shift Lock	214

* These are the page numbers of the first page on which the related system is shown.

K CONNECTOR LIST

A1
Gray



A2
Gray



A3
Black



A4
Gray

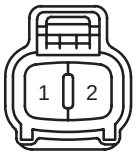

A5
Black

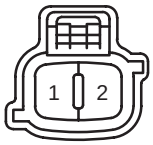

A6
Yellow



A7



A8
Gray

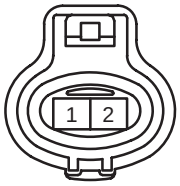

A9



A10
Gray



A11



A12
Yellow



A13

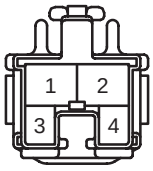

A14
Black



A15
Black

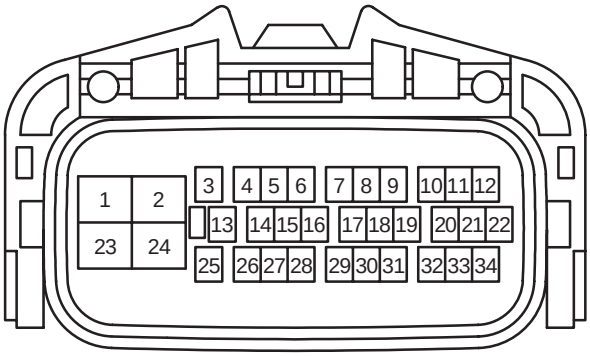

A16
Black

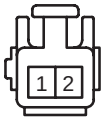

A17

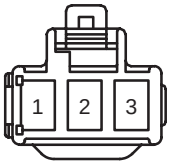

A18
Black



A19
Gray

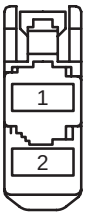

A20
Black

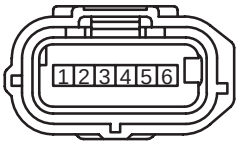

A21
Black

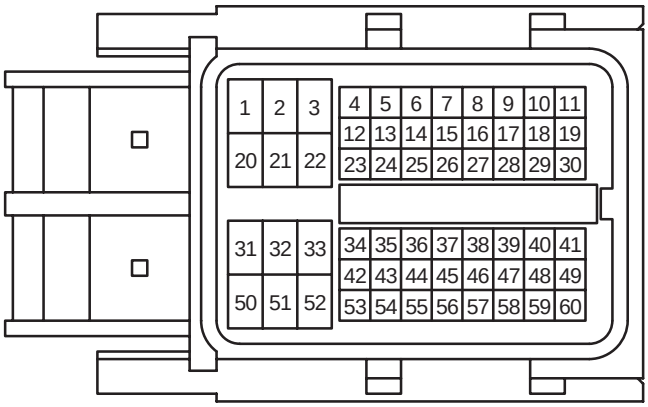

A22
Black

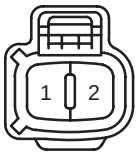

A23
Black



A24

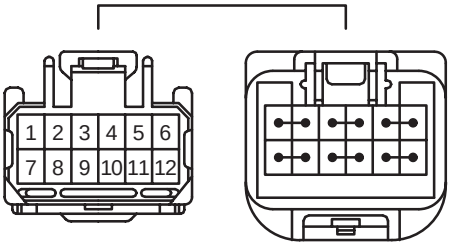

A25

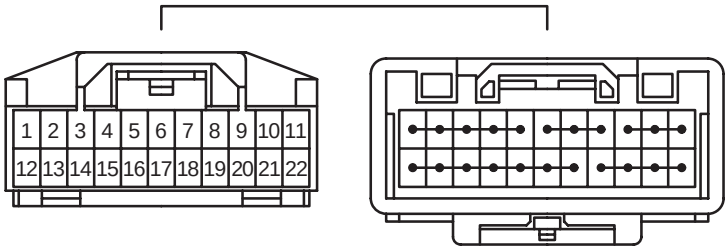

A26
Black

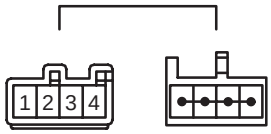

A27
Black

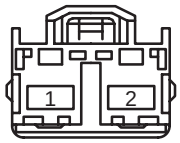

A28

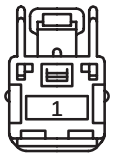

A29



B1
Gray

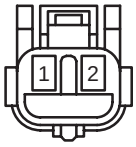

B2
Black



B3
Brown



B4

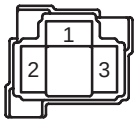

B5
Black



B6

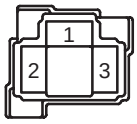

B7
Brown



B8
Gray

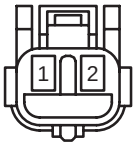

B9
Black

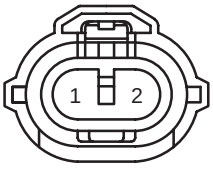

B10
Black

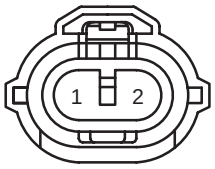

B11
Gray

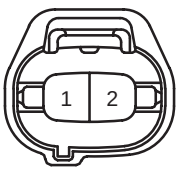

B12
Gray

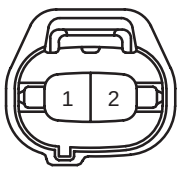

B13

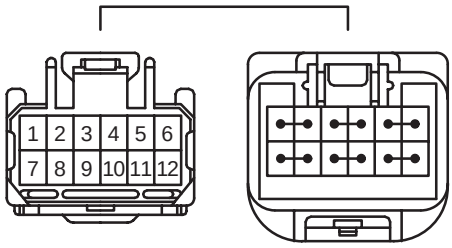

B14
Gray



B15
Gray



C1

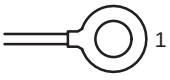

C2
Black

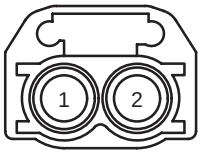

C3
Blue



K CONNECTOR LIST

C4
Black

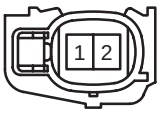

C5
Gray

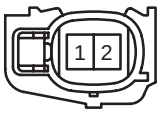

C6
Black

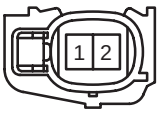

C7
Gray

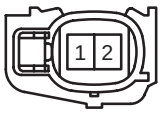

C8
Gray

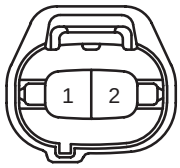

C9
Black



C10

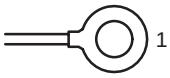

C11
Black

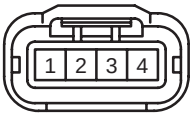

C12
Gray

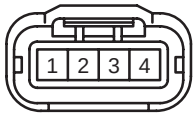

C13
Black

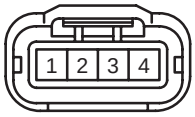

C14
Gray

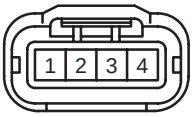

C15
Black



C16
Gray



C17
Black

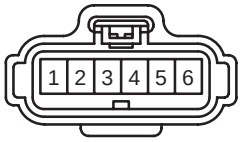

C18
Black



C19
Black



C20
Black

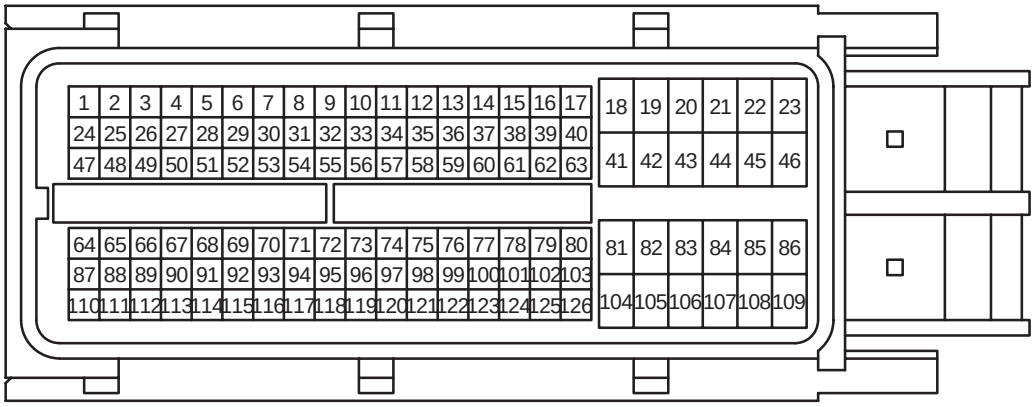

C21
Black



C22
Gray

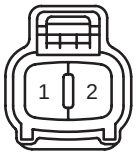

C23
Dark Gray



C24
Black



C25
Gray



C26
Black

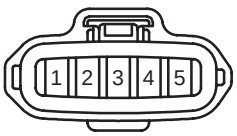

C27
Gray

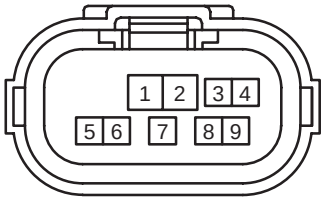

C28
Gray

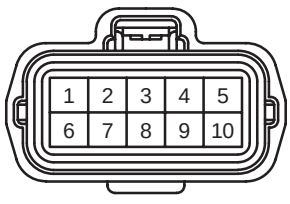

C29
Black

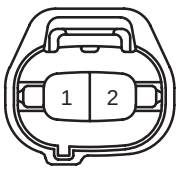

C30

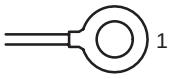

D1

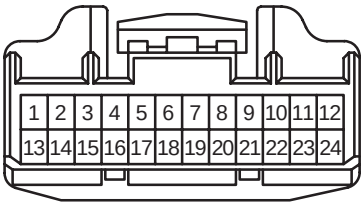

D2

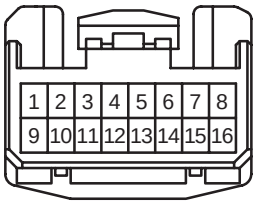

D3

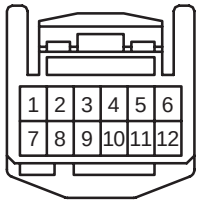

D4

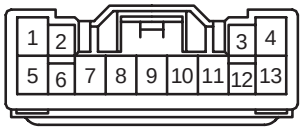

D5

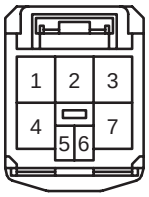

D6



D7
Gray

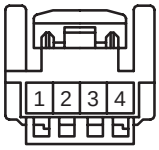

D8

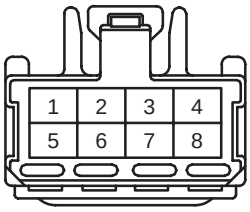

D9

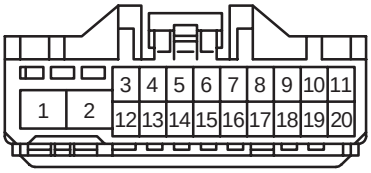

D10
Blue

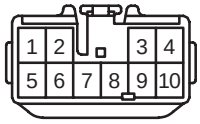

D11



D12

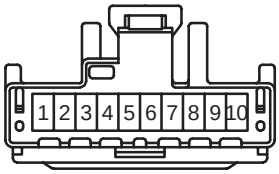

D13
Black



D14

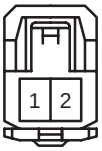

D15

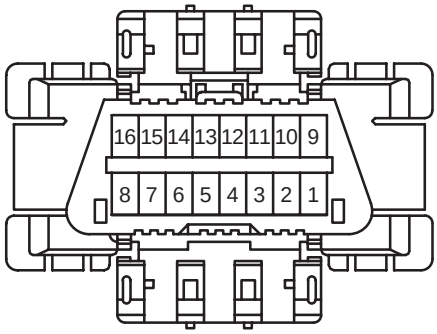

D16
Yellow

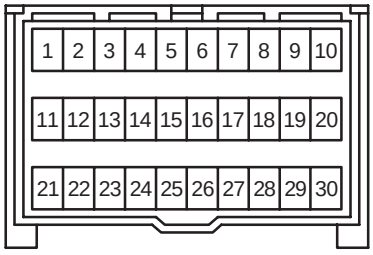

D18
Yellow

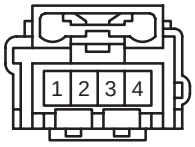

D19



D20



D21



K CONNECTOR LIST

D22



D23

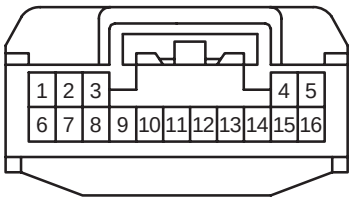

D24
Black

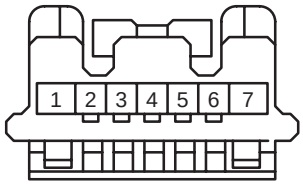

D25
Black

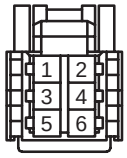

D26

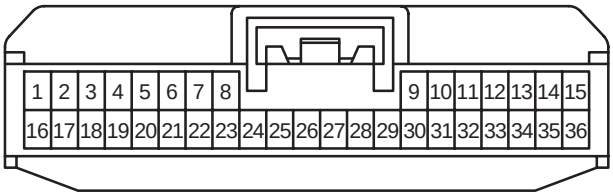

D27

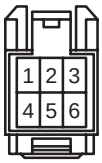

D28
Dark Gray



D29

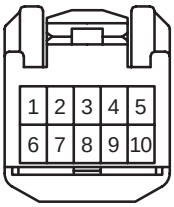

D30

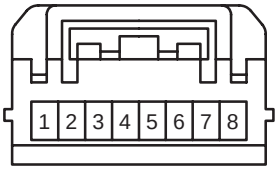

D31

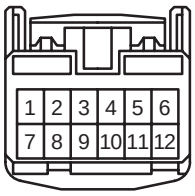

D32



D33

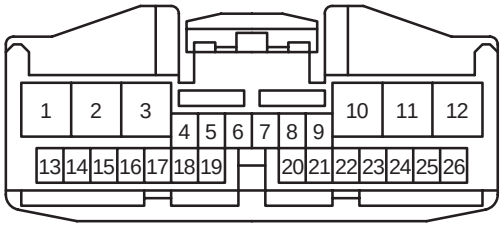

D34

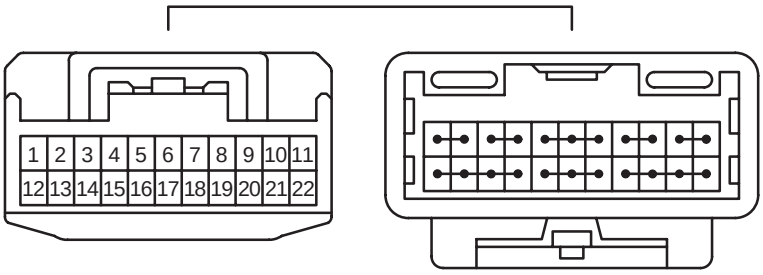

D35

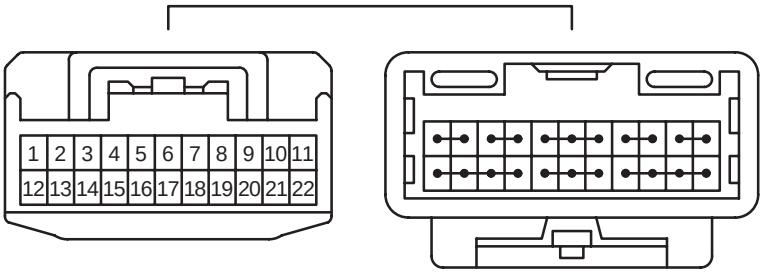

D36

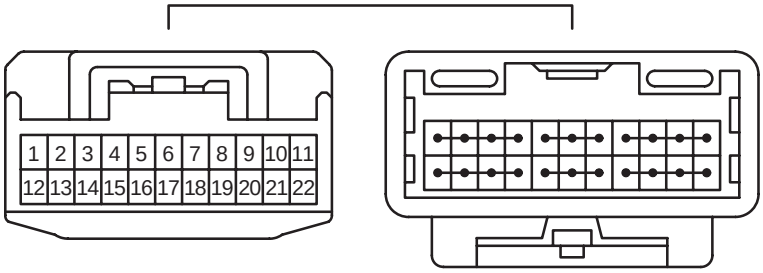

D37

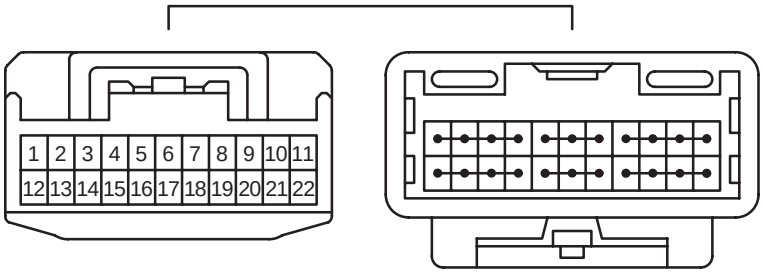

D38

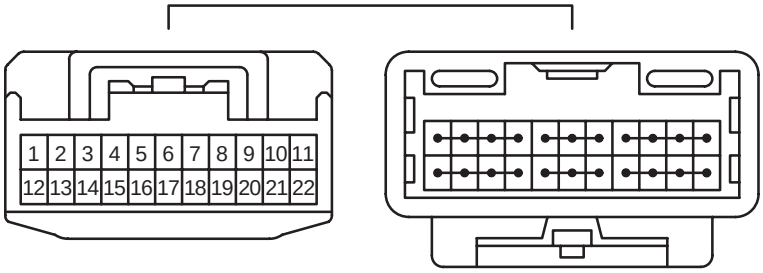

D39

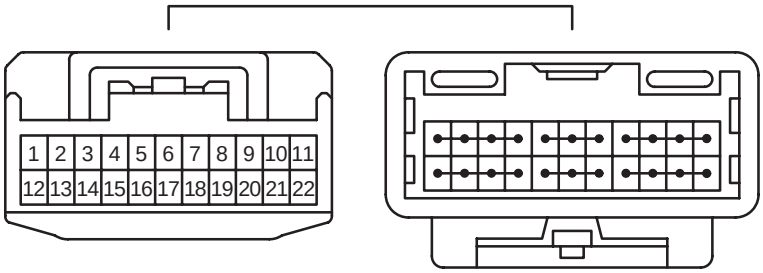

D40

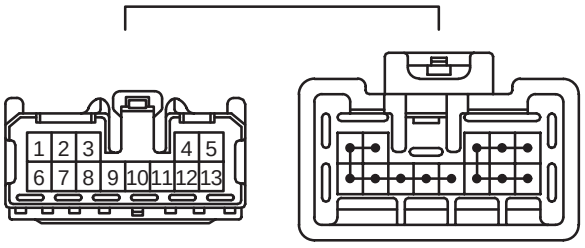

K CONNECTOR LIST

D41

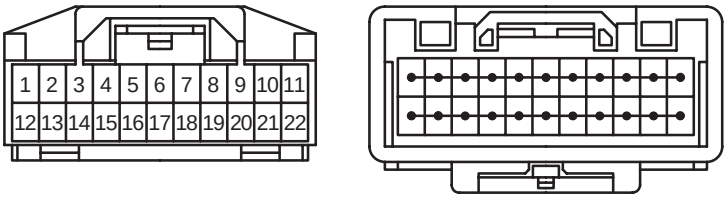

D42

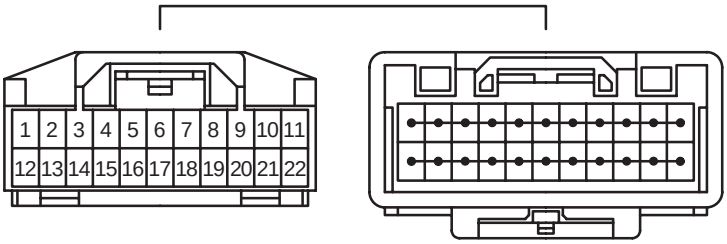

D43

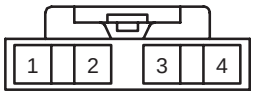

D44
Black



D45
Gray

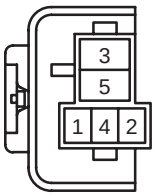

D46

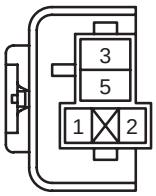

D74

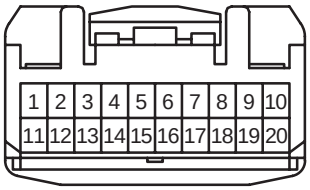

D75
Gray

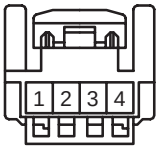

D76

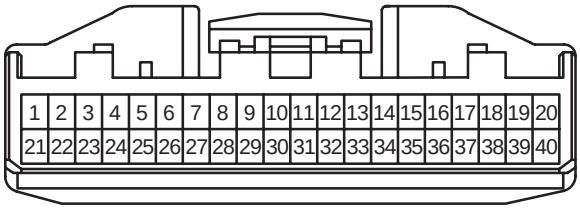

D77

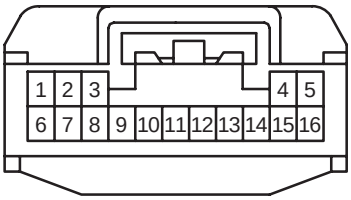

E1

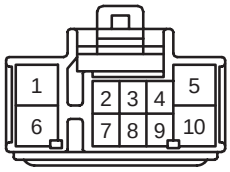

E2



E3
Black

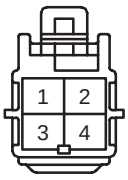

E4
Black



E5

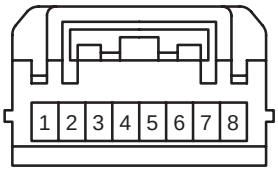

E6

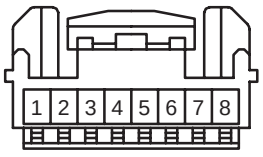

E8

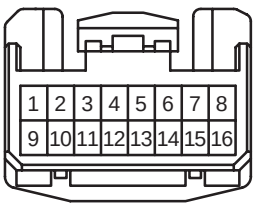

E9

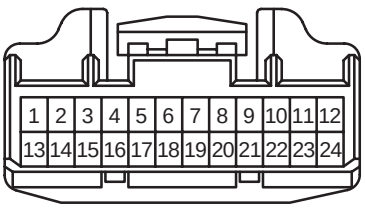

E10

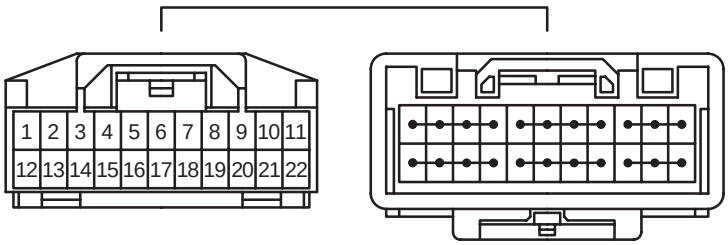

F1

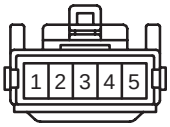

F2

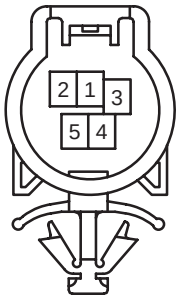

F4



F5

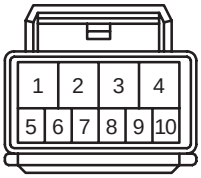

F6



F7

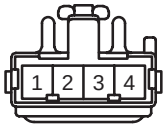

G1

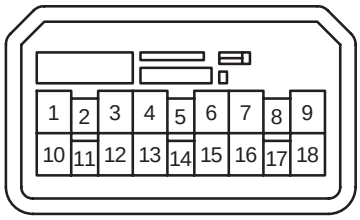

G2

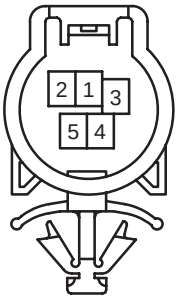

G4



G5

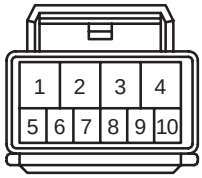

G6



G7

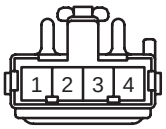

H1



H2



H3

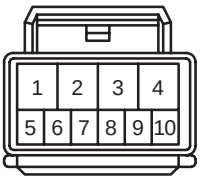

H4



I1



I2



I3

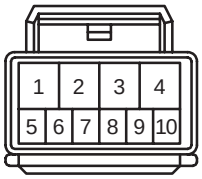

I4



J1



J2



K CONNECTOR LIST

J3

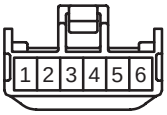

J4

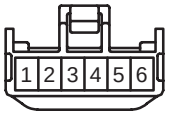

J5



J8
Yellow

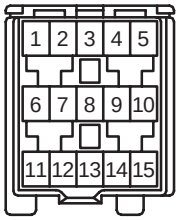

J9
Yellow

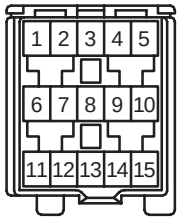

J10



J11



J12



J13

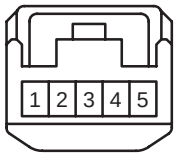

J14
Yellow

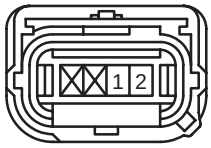

J15
Yellow

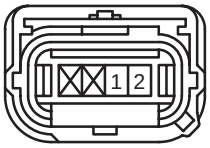

J16
Yellow



J17
Yellow

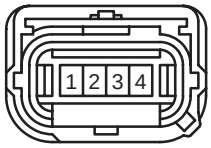

J20
Yellow

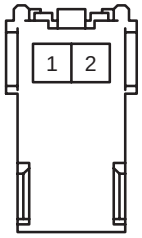

J21
Yellow

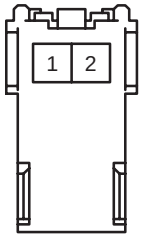

J22
Black

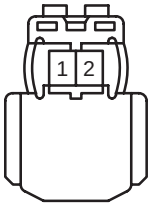

J23
Black

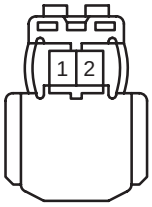

J24
Black



J25
Black



J26



J27



J28

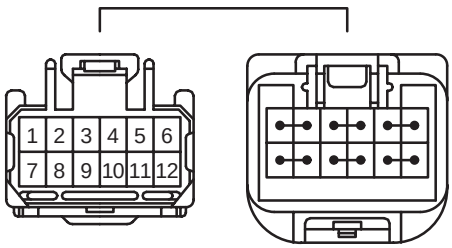

J29

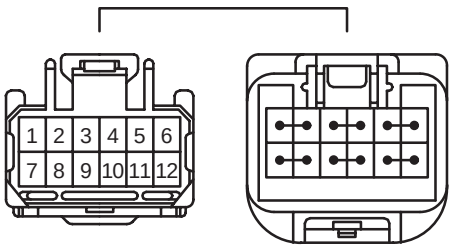

J30
Black



J31

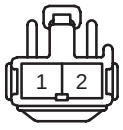

J32



J33



J34



J35



J36
Gray



J37
Gray



J38



J39



J40
Gray



J41

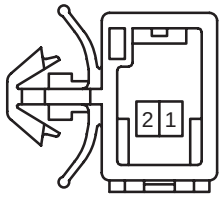

J42
Black



J43



J44
Black



J45

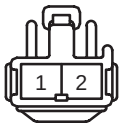

K1



K2
Gray

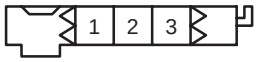

L1
Gray



M1

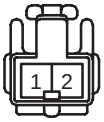

M2
Black

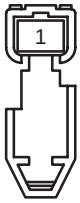

N1



N2

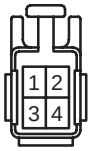

N3



N4



O1
(H/B) Black

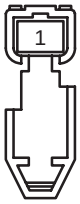

O1
(S/D) Black



P1
Black

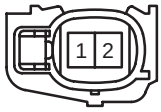

Q1
Orange

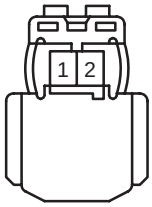

Q2
Black

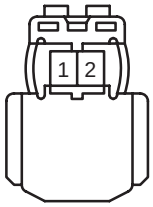

U1
Gray



U2
Black



U3
Black



U4
Black



U5
Black



K CONNECTOR LIST

V1
(H/B)

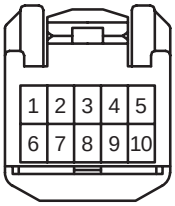

V1
(S/D)

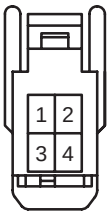

W1
Orange

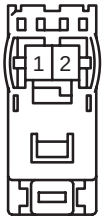

W2
Black

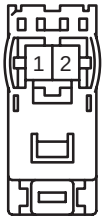

X1

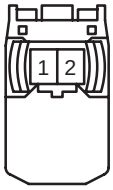

Y1

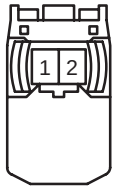

Z1
Black



a1
Black



b1

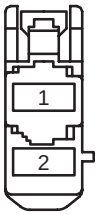

c1

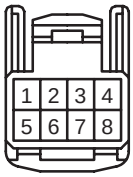

AA1

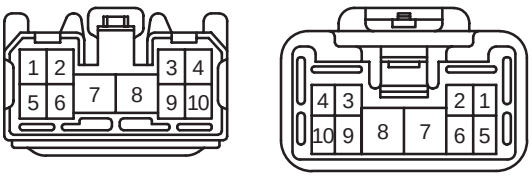

AA2

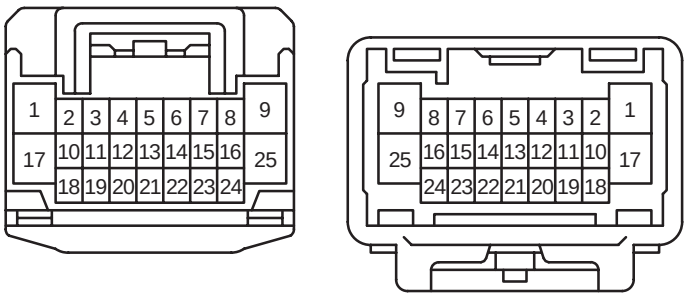

AD1 Yellow

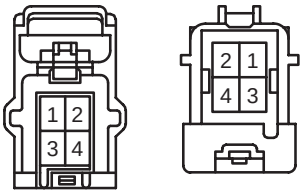

AD2

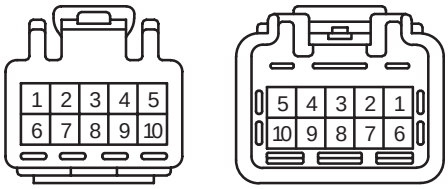

AD3 Black

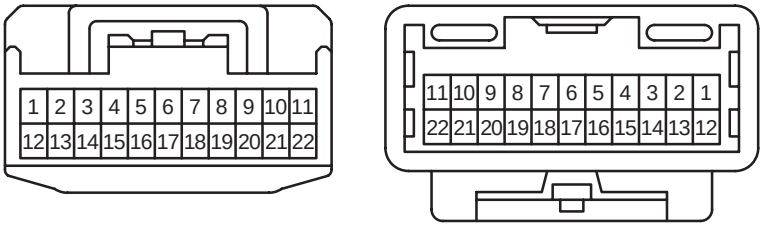

AD4 Gray

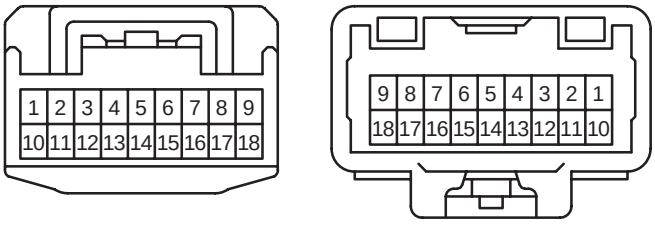

AD5 Blue

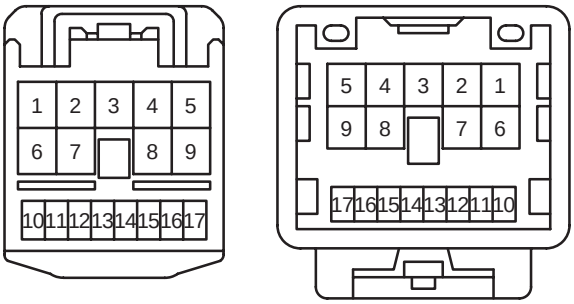

AE1

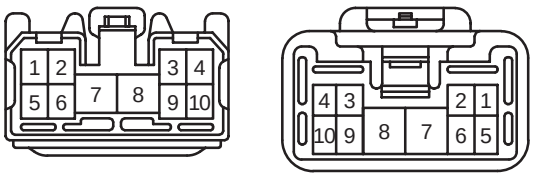

AJ1

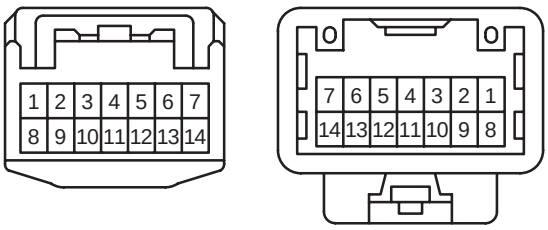

BA1

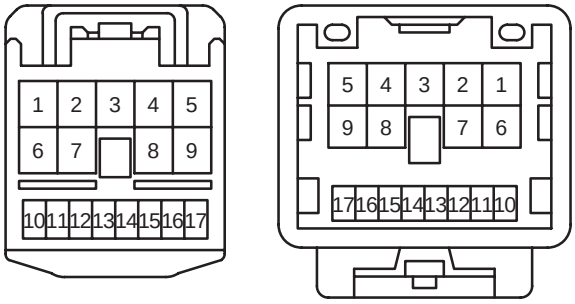

CA1

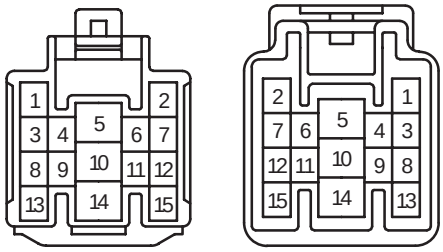

CA2

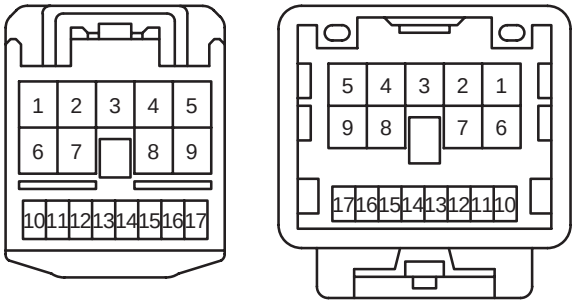

CP1 Gray

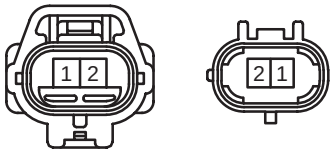

DE1

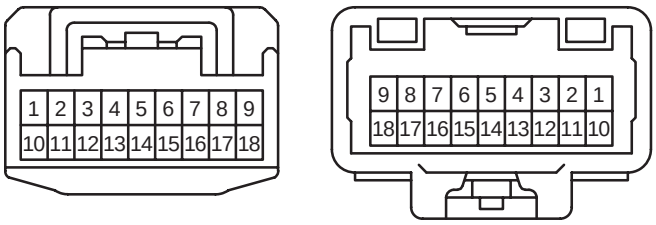

DQ1 Yellow

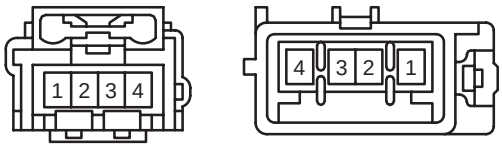

ED1

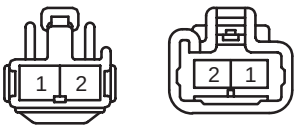

FD1

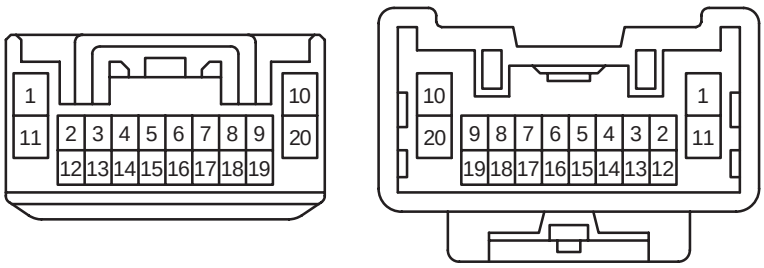

FD2

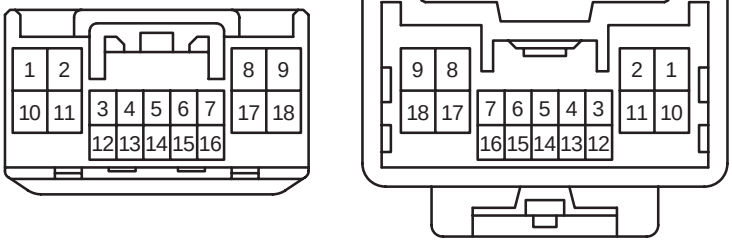

GD1

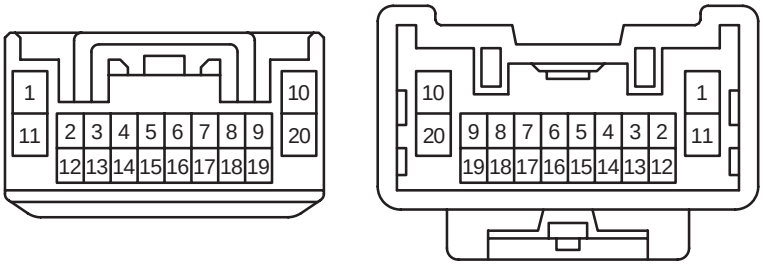

GD2

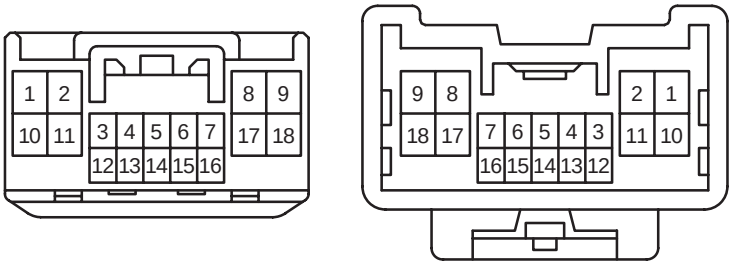

HJ1

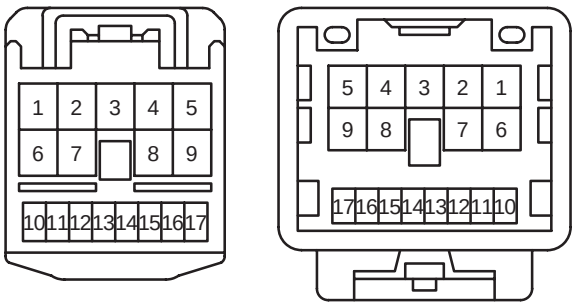

IJ1

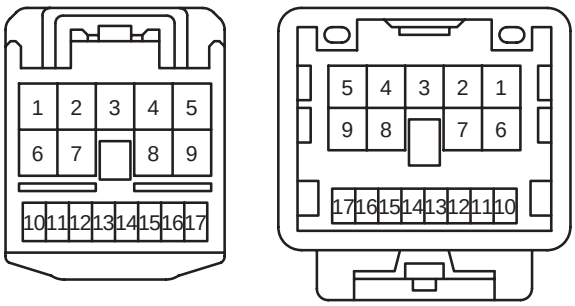

JD1

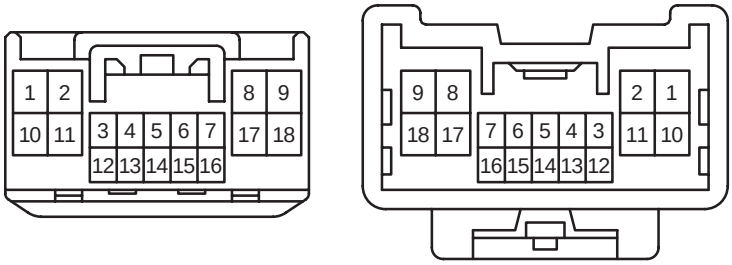

JD2

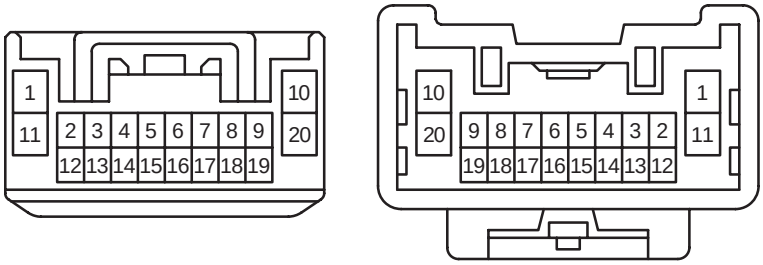

JD3

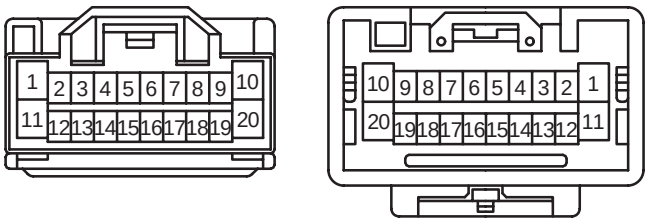

JX1

Yellow

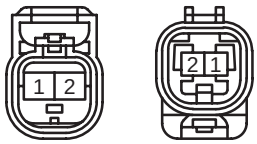

JY1

Yellow

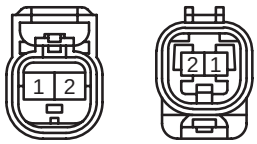

K CONNECTOR LIST

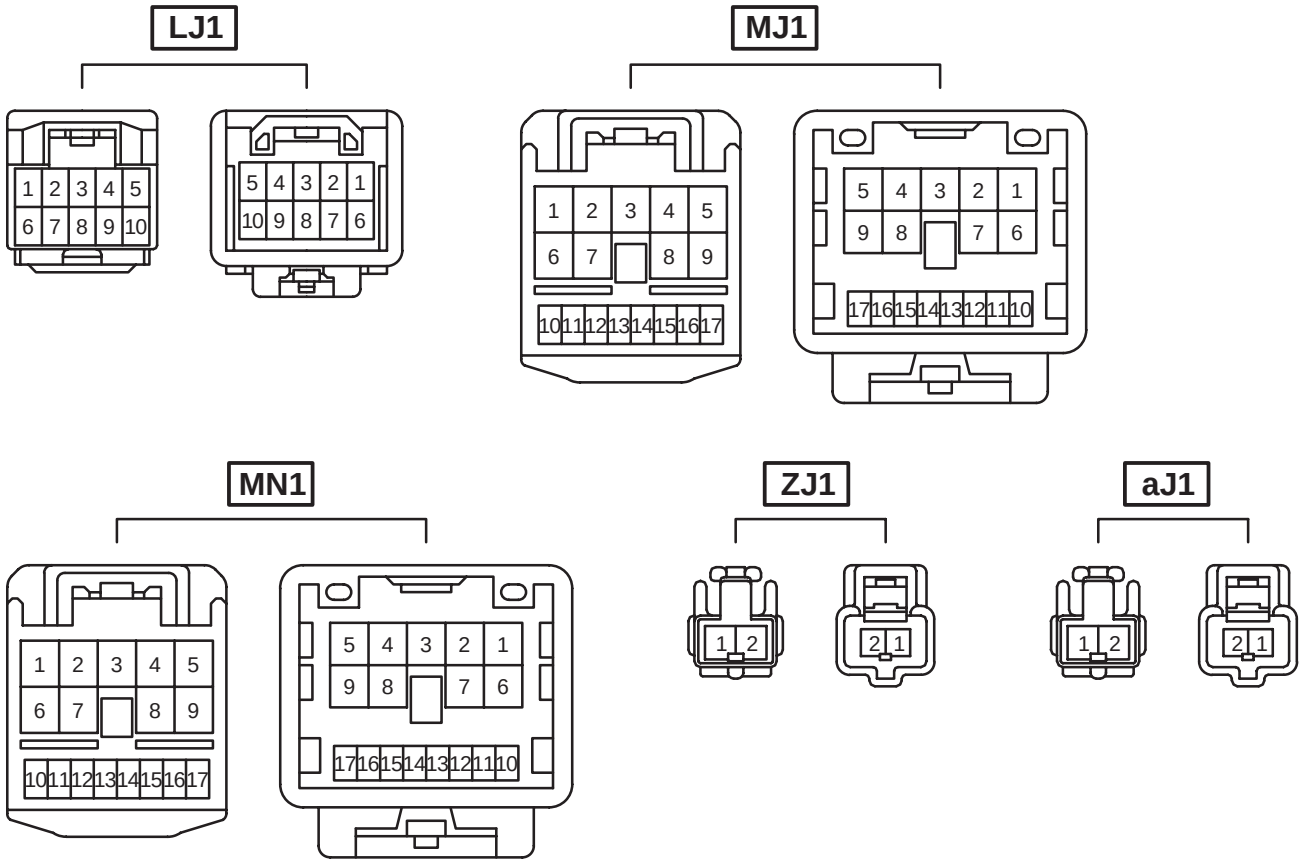

L PART NUMBER OF CONNECTORS

Code	Part Name	Part Number
A1	Turn Signal Lamp (Front Side RH)	90980–11162
A2	Turn Signal Lamp (Front Side LH)	
A3	A/C Pressure Sensor	90980–10845
A4	Rear Washer Motor	90980–11051
A5	Windshield Washer Motor	90980–11019
A6	Airbag Sensor (Front RH)	90980–12490
A7	Speed Sensor (Front RH)	90980–11003
A8	Cooling Fan Motor	90980–10928
A9	Windshield Wiper Motor	90980–11599
A10	Brake Fluid Level Warning SW	90980–11207
A11	Speed Sensor (Front LH)	90980–11003
A12	Airbag Sensor (Front LH)	90980–12490
A13	Stop Lamp SW	90980–11118
A14	Radiator Fan Resistor	90980–10928
A15	Skid Control ECU with Actuator	90980–12020
A16	Clutch Start SW	90980–10825
A17	PTC Heater	90980–10956
A18	Engine Hood Courtesy SW	90980–11003
A19	Power Steering ECU	90980–12300
A20	Accelerator Position Sensor	90980–12303
A21	Engine Control Module	90980–12462
A22	Water Level Warning SW	90980–11068
A23	Security Horn	90980–11235
A24	Junction Connector	90980–11661
A25	Junction Connector	90980–11915
A26	Junction Connector	90980–11398
A27	Fusible Link Block	90980–11996
A28	Fusible Link Block	90980–11775
A29	Cruise Control Clutch SW	90980–10906
B1	Turn Signal Lamp (Front RH)	82824–52130
B2	Horn	90980–10619
B3	Parking Lamp (RH)	90080–98298
B4	Headlamp (RH)	90980–11314
B5	Ambient Temp. Sensor	90980–11070
B6	Headlamp (LH)	90980–11314
B7	Parking Lamp (LH)	90080–98298
B8	Turn Signal Lamp (Front LH)	82824–52130
B9	Fog Lamp (Front RH)	82824–60460
B10	Fog Lamp (Front LH)	
B11	Side Marker Lamp (Front RH)	90980–11156
B12	Side Marker Lamp (Front LH)	
B13	Junction Connector	90980–11661
B14	Turn Signal, Side Marker and Parking Lamp (RH)	90980–10942
B15	Turn Signal, Side Marker and Parking Lamp (LH)	
C1	Starter	90980–09640

Code	Part Name	Part Number
C2	Crankshaft Position Sensor	90980–12028
C3	VSV (Purge)	90980–11156
C4	Fuel Injector (No.1)	90980–11875
C5	Fuel Injector (No.2)	
C6	Fuel Injector (No.3)	
C7	Fuel Injector (No.4)	
C8	A/C Compressor	90980–11156
C9	Generator	90980–11964
C10	Generator	90980–09373
C11	Ignition Coil (No.1)	90980–11885
C12	Ignition Coil (No.2)	
C13	Ignition Coil (No.3)	
C14	Ignition Coil (No.4)	
C15	Starter	90980–11400
C16	Engine Oil Pressure SW	90980–11363
C17	Throttle Body Assembly	90980–11858
C18	Camshaft Position Sensor	90980–10947
C19	Engine Coolant Temp. Sensor	90980–10735
C20	Engine Control Module	90980–12399
C21	Speed Sensor	90980–11143
C22	Back–Up Lamp SW	90980–11051
C23	Air Fuel Ratio Sensor (Bank 1 Sensor 1)	90980–10869
C24	Camshaft Timing Oil Control Valve	90980–11162
C25	Noise Filter	90980–10843
C26	Mass Air Flow Meter	90980–11317
C27	Park/Neutral Position SW	90980–12362
C28	Electronically Controlled Transmission Solenoid	90980–11658
C29	Speed Sensor (Turbine)	90980–11156
C30	Fusible Link Block	90980–09223
D1	Combination Meter	90980–12200
D2	Combination Meter	90980–12155
D3	Spiral Cable	90980–12183
D4	Headlamp Dimmer SW Assembly	90980–12007
D5	Windshield Wiper SW Assembly	90980–12358
D6	Windshield Wiper SW Assembly	90980–12359
D7	Hazard Warning Signal SW	82824–21030
D8	Ignition SW	90980–11615
D9	Running Light Relay	90980–12034
D10	Radio Receiver Assembly	90980–10997
D11	Radio Receiver Assembly	90980–10996
D12	Outer Mirror SW	90980–11657
D13	Key Interlock Solenoid	90980–12063
D14	Cigarette Lighter or Power Outlet	90980–12498
D15	Data Link Connector 3	90980–11978
D16	Airbag Sensor Assembly Center	90980–12391

Note: Not all of the above part numbers of the connector are established for the supply.

Code	Part Name	Part Number
D18	Spiral Cable	90980–12160
D19	Unlock Warning SW	90980–12063
D20	A/T Shift Lever Illumination	
D21	Parking Brake SW	90980–10871
D22	Shift Lock Control ECU	90980–12183
D23	Transponder Key ECU	90980–12423
D24	Transponder Key Amplifier	90980–12092
D25	Security Indicator Lamp	90980–12056
D26	Theft Warning ECU	90980–12564
D27	Passenger Seat Belt Warning Lamp	90980–12012
D28	Oxygen Sensor (Bank 1 Sensor 2)	90980–11028
D29	Light Control Rheostat	90980–12361
D30	Door Lock Control SW	90980–12550
D31	Power Steering ECU	90980–12290
D32	Antenna Amplifier	90980–10871
D33	Main Body ECU	90980–12203
D34	Junction Connector	90980–12372
D35	Junction Connector	
D36	Junction Connector	
D37	Junction Connector	
D38	Junction Connector	
D39	Junction Connector	
D40	Junction Connector	90980–11542
D41	Junction Connector	90980–11915
D42	Junction Connector	
D43	Fuse Block	82610–52010
D44	Diode (Starter)	90980–10962
D45	ACC Cut Relay	82660–52040
D46	Front Fog Light Relay	82660–52030
D74	Radio Receiver Assembly	90980–12259
D75	Stereo Jack Adapter	82824–21030
D76	Combination Meter	90980–12557
D77	Hazard Warning Signal SW	90980–12423
E1	Blower SW	90980–10993
E2	A/C Thermistor No.1	90980–11918
E3	Blower Resistor	90980–11136
E4	Blower Motor	90980–10916
E5	A/C SW	90980–12550
E6	Rear Window Defogger SW	90980–12217
E8	A/C Amplifier	90980–12155
E9	A/C Amplifier	90980–12200
E10	Junction Connector	90980–11915
F1	Power Window SW (Front RH)	90980–10789
F2	Outer Rear View Mirror (RH)	90980–12189
F4	Power Window Regulator Motor (Front RH)	90980–10797
F5	Door Lock Assembly (Front Passenger's Side)	90980–12226

Code	Part Name	Part Number
F6	Speaker (Front Door RH)	90980–10935
F7	Door Lock Control SW (Front Passenger's Side)	90980–11013
G1	Power Window Master SW	90980–12122
G2	Outer Rear View Mirror (LH)	90980–12189
G4	Power Window Regulator Motor (Front LH)	90980–10797
G5	Door Lock Assembly (Driver's Side)	90980–12226
G6	Speaker (Front Door LH)	90980–10935
G7	Door Lock Control SW (Driver's Side)	90980–11013
H1	Power Window SW (Rear RH)	90980–10631
H2	Power Window Regulator Motor (Rear RH)	90980–10797
H3	Door Lock Assembly (Rear RH)	90980–12226
H4	Speaker (Rear RH)	90980–10935
I1	Power Window SW (Rear LH)	90980–10631
I2	Power Window Regulator Motor (Rear LH)	90980–10797
I3	Door Lock Assembly (Rear LH)	90980–12226
I4	Speaker (Rear LH)	90980–10935
J1	Door Courtesy SW (Front RH)	82824–52010
J2	Door Courtesy SW (Front LH)	
J3	Rear Combination Lamp (RH)	90980–10957
J4	Rear Combination Lamp (LH)	
J5	Fuel Suction Pump and Gage Assembly	90980–11077
J8	Airbag Sensor Assembly Center	90980–12449
J9	Airbag Sensor Assembly Center	90980–12450
J10	Front Seat Inner Belt (Driver's Side)	90980–10942
J11	Front Seat Inner Belt Assembly (Front RH)	
J12	Room Lamp (Luggage)	90980–11148
J13	Door Control Receiver	90980–12366
J14	Airbag Sensor (Rear RH)	90980–12352
J15	Airbag Sensor (Rear LH)	
J16	Side Airbag Sensor (RH)	90980–12225
J17	Side Airbag Sensor (LH)	
J20	Pretensioner (RH)	90980–12253
J21	Pretensioner (LH)	
J22	Curtain Shield Airbag Squib (RH)	90980–12575
J23	Curtain Shield Airbag Squib (LH)	
J24	Occupant Classification ECU	90980–12356
J25	Canister Pump Module	90980–12380
J26	Speaker (Rear RH)	90980–10935
J27	Speaker (Rear LH)	
J28	Junction Connector	90980–11661
J29	Junction Connector	
J30	Diode (Room Lamp)	90980–10962
J31	Noise Filter	90980–10916
J32	Door Courtesy SW (Rear RH)	82824–52010
J33	Door Courtesy SW (Rear LH)	

L PART NUMBER OF CONNECTORS

Code	Part Name	Part Number
J34	Rear Combination Lamp (RH)	82824–52050
J35	Rear Combination Lamp (LH)	
J36	License Plate Lamp (RH)	90980–11148
J37	License Plate Lamp (LH)	
J38	Speaker (Rear RH)	90980–11299
J39	Speaker (Rear LH)	
J40	High Mounted Stop Light	90980–11148
J41	High Mounted Stop Light	90980–11967
J42	Door Lock Assembly (Luggage)	90980–10908
J43	Door Lock Assembly (Luggage)	90980–11212
J44	Rear Window Defogger	90980–10913
J45	Noise Filter	90980–10916
K1	Map Lamp	90980–11212
K2	Room Lamp (Center)	–
L1	License Plate Lamp	90980–11162
M1	Center Stop Lamp	90980–10860
M2	Rear Window Defogger	90980–11853
N1	Rear Wiper Motor Assembly	90980–10860
N2	Back Door Courtesy SW	90980–10795
N3	Back Door Lock Assembly	90980–10825
N4	Back Door Position SW	90980–11150
O1	Rear Window Defogger (H/B)	90980–11853
	Rear Window Defogger (S/D)	90980–10914
P1	Knock Control Sensor (Bank 1)	90980–11875
Q1	Airbag Squib (Front Passenger's Airbag Assembly)	90980–12576
Q2	Airbag Squib (Front Passenger's Airbag Assembly)	90980–12575
U1	Occupant Classification ECU	90980–12357
U2	Occupant Classification Sensor (Front LH)	90980–12353
U3	Occupant Classification Sensor (Rear LH)	
U4	Occupant Classification Sensor (Front RH)	
U5	Occupant Classification Sensor (Rear RH)	
V1	Cruise Control SW (S/D)	90980–12360
	Spiral Cable (H/B)	90980–12361
	Spiral Cable (S/D)	90980–12360
	Steering Pad SW (H/B)	90980–12361
	Steering Pad SW (S/D)	90980–12360
W1	Airbag Squib (Steering Wheel Pad)	90980–12224
	Spiral Cable	
W2	Airbag Squib (Steering Wheel Pad)	90980–12219
	Spiral Cable	
X1	Side Airbag Squib (RH)	90980–12452
Y1	Side Airbag Squib (LH)	
Z1	Speed Sensor (Rear RH)	90980–12416
a1	Speed Sensor (Rear LH)	
b1	Power Steering ECU	90980–12299
	Power Steering Motor	
c1	Power Steering ECU	90980–12221
	Power Steering Torque Sensor	

Note: Not all of the above part numbers of the connector are established for the supply.

HOW TO READ THIS SECTION

* The system shown here is an EXAMPLE ONLY. It is different to the actual circuit shown in the wiring diagram section.

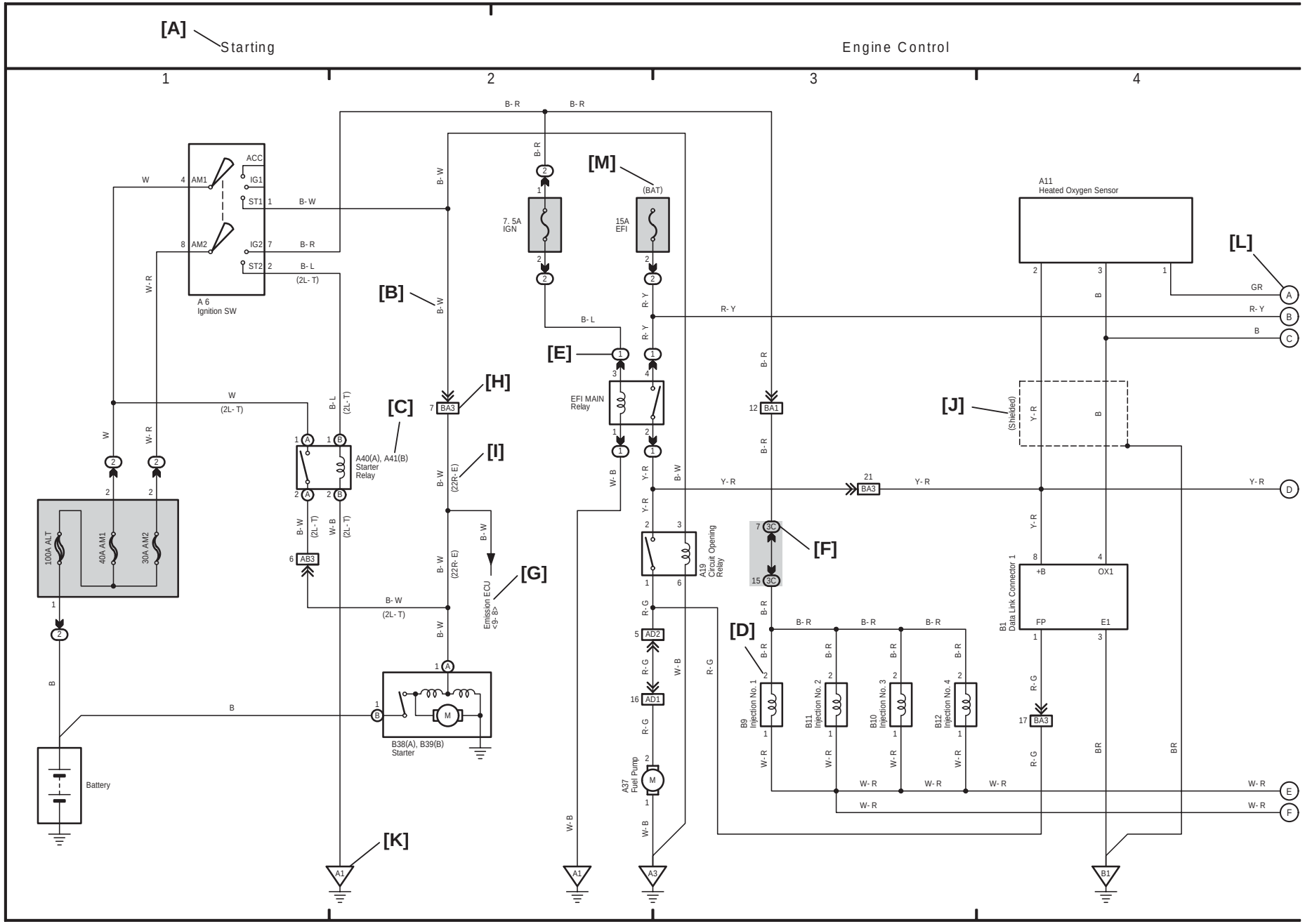

[A] : System Title

[B] : Indicates the wiring color.

Wire colors are indicated by an alphabetical code.

B	= Black	W	= White	BR	= Brown
L	= Blue	V	= Violet	SB	= Sky Blue
R	= Red	G	= Green	LG	= Light Green
P	= Pink	Y	= Yellow	GR	= Gray
O	= Orange				

The first letter indicates the basic wire color and the second letter indicates the color of the stripe.

Example: L – Y

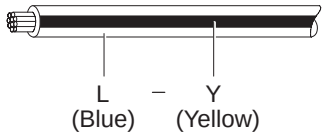

[C] : The position of the parts is the same as shown in the wiring diagram and wire routing.

[D] : Indicates the pin number of the connector. The numbering system is different for female and male connectors.

Example: Numbered in other from upper left to lower right / Numbered in other from upper right to lower left

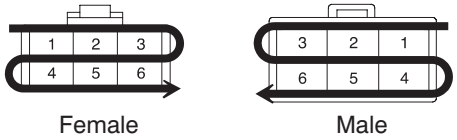

The numbering system for the overall wiring diagram is the same as above

[E] : Indicates a Relay Block. No shading is used and only the Relay Block No. is shown to distinguish it from the J/B.

Example: (1) Indicates Relay Block No.1

[F] : Junction Block (The number in the circle is the J/B No. and the connector code is shown beside it). Junction Blocks are shaded to clearly separate them from other parts.

Example:

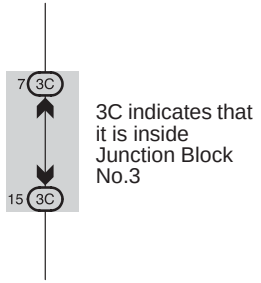

[G] : Indicates related system.

[H] : Indicates the wiring harness and wiring harness connector. The wiring harness with male terminal is shown with arrows (»). Outside numerals are pin numbers.

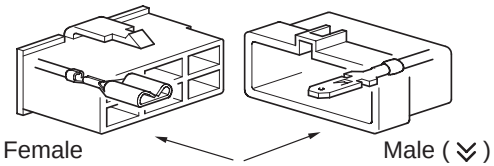

[I] : ( ) is used to indicate different wiring and connector, etc. when the vehicle model, engine type, or specification is different.

[J] : Indicates a shielded cable.



[K] : Indicates a ground point.

[L] : The same code occurring on the next page indicates that the wire harness is continuous.

[M] : Indicates the ignition key position(s) when the power is supplied to the fuse(s).

SYSTEM INDEX

SYSTEMS	LOCATION
ABS	17–1
Air Conditioning	29–1
Audio System	26–1
Back–Up Light	13–1
Charging	3–1
Cigarette Lighter	24–3
Combination Meter	27–1
Cooling Fan	28–1
Cruise Control	5–16
Data Link Connector 3	7–1
Door Lock Control	21–1
Electronically Controlled Transmission and A/T Indicator	5–17
Engine Control	5–1
Engine Immobiliser System	6–1
EPS	19–1
Front Fog Light	15–1
Front Wiper and Washer	22–1
Headlight	9–1
Horn	25–3
Ignition	4–1
Illumination	12–1
Interior Light	11–1
Key Reminder	16–1
Light Reminder	16–1
Multiplex Communication System (CAN)	8–1
Power Outlet	24–3
Power Source	1–1
Power Window	20–1
Rear Window Defogger	25–1
Rear Wiper and Washer	23–1
Remote Control Mirror	24–1
Seat Belt Warning	18–7
Shift Lock	23–3
SRS	18–1
Starting	2–1
Stop Light	14–1
Taillight	12–1
Theft Deterrent	21–10
Turn Signal and Hazard Warning Light	10–1
Wireless Door Lock Control	21–9

(Cont. next page)

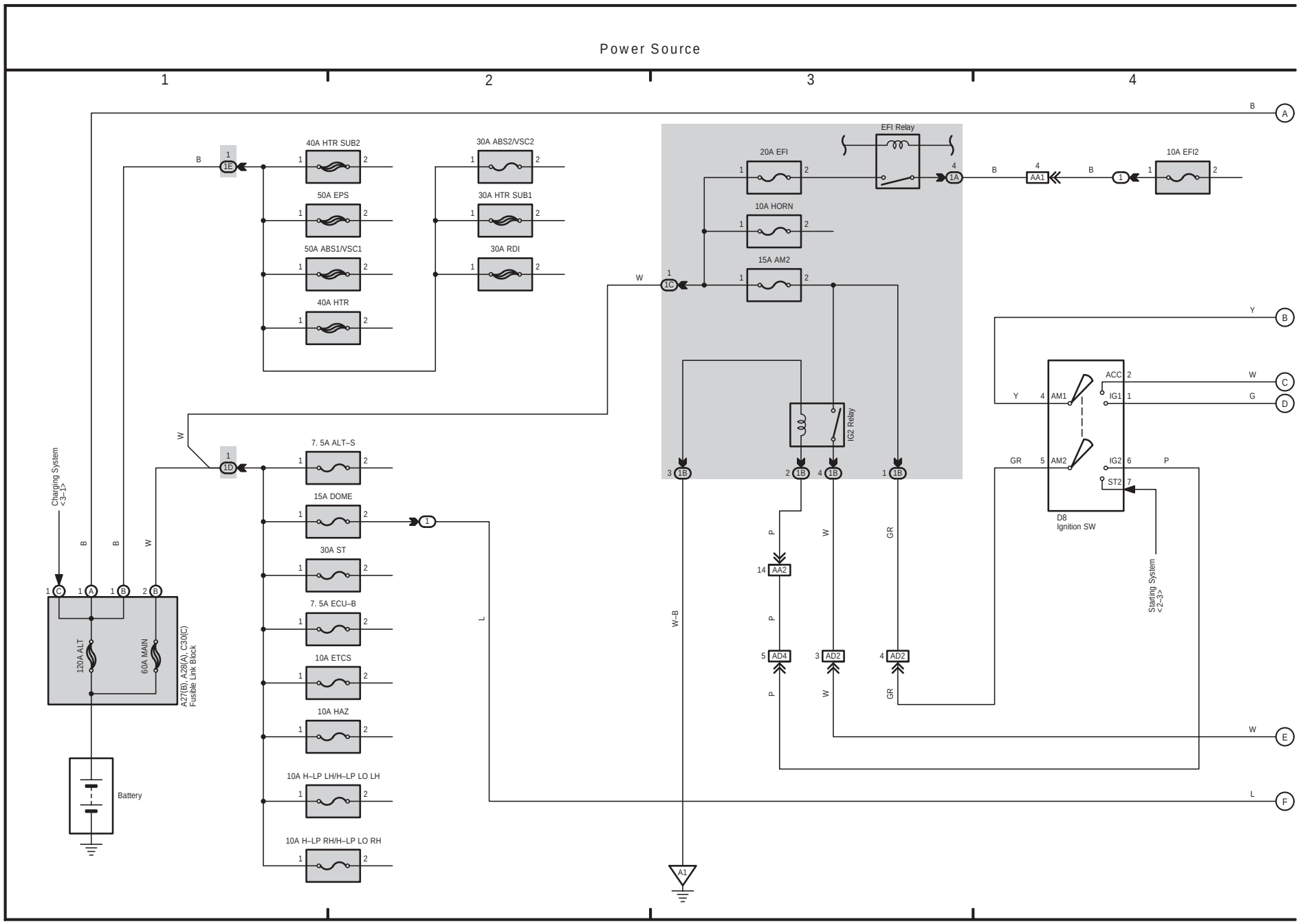

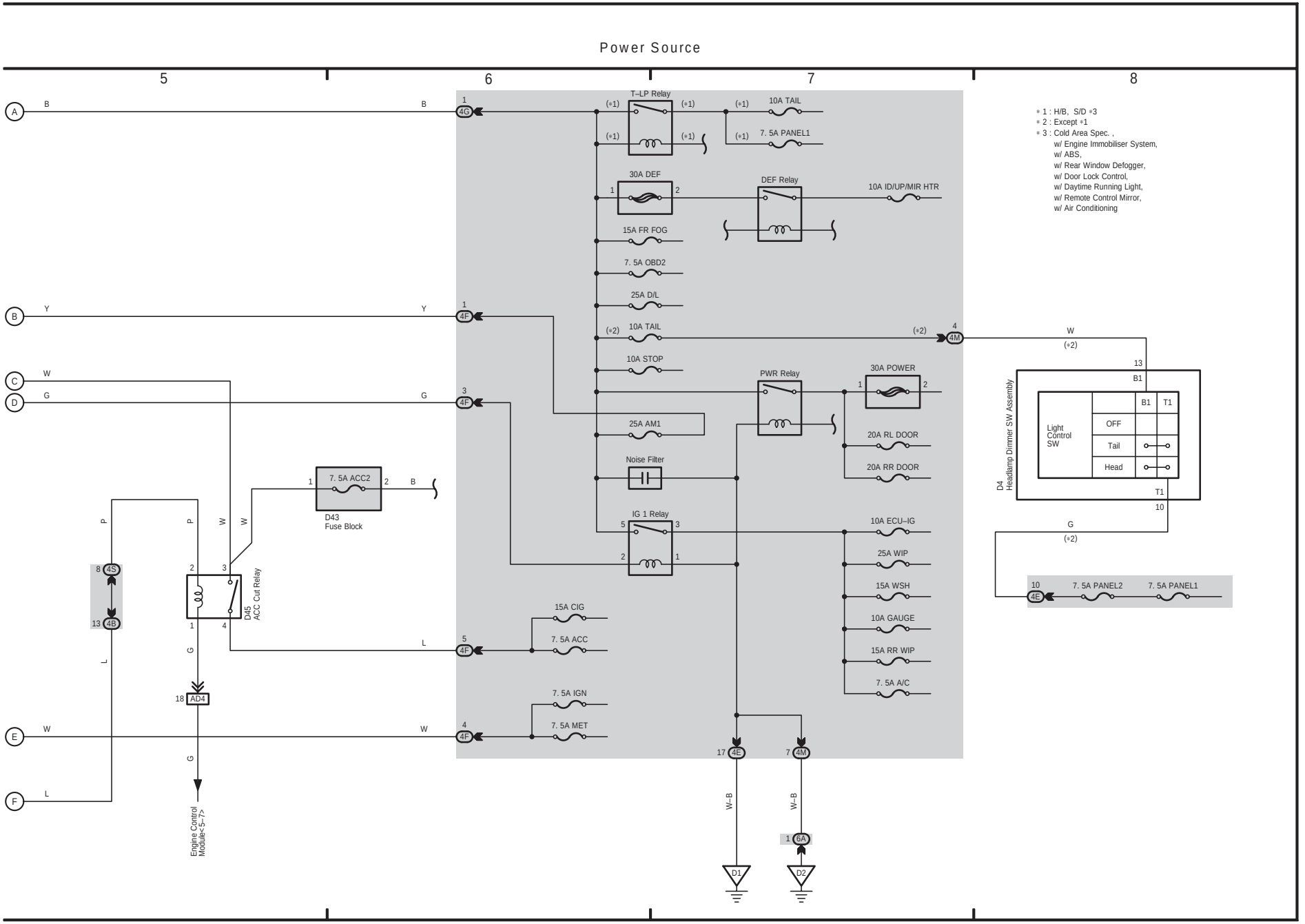
Power Source
5
6
7
8
T–LP Relay
10A TAIL
7. 5A PANEL1
30A DEF
DEF Relay
10A ID/UP/MIR HTR
15A FR FOG
7. 5A OBD2
25A D/L
10A TAIL
10A STOP
PWR Relay
30A POWER
25A AM1
20A RL DOOR
20A RR DOOR
Noise Filter
7. 5A ACC2
D43
Fuse Block
IG 1 Relay
10A ECU–IG
25A WIP
15A WSH
10A GAUGE
15A RR WIP
7. 5A A/C
15A CIG
7. 5A ACC
7. 5A IGN
7. 5A MET
D45
ACC Cut Relay
Engine Control Module<5–7>
W–B
D1
D2
D4
Headlamp Dimmer SW Assembly
Light Control SW
OFF
Tail
Head
B1
T1
7. 5A PANEL2
7. 5A PANEL1
∗1 : H/B, S/D ∗3
∗2 : Except ∗1
∗3 : Cold Area Spec. ,
w/ Engine Immobiliser System,
w/ ABS,
w/ Rear Window Defogger,
w/ Door Lock Control,
w/ Daytime Running Light,
w/ Remote Control Mirror,
w/ Air Conditioning

2 YARIS

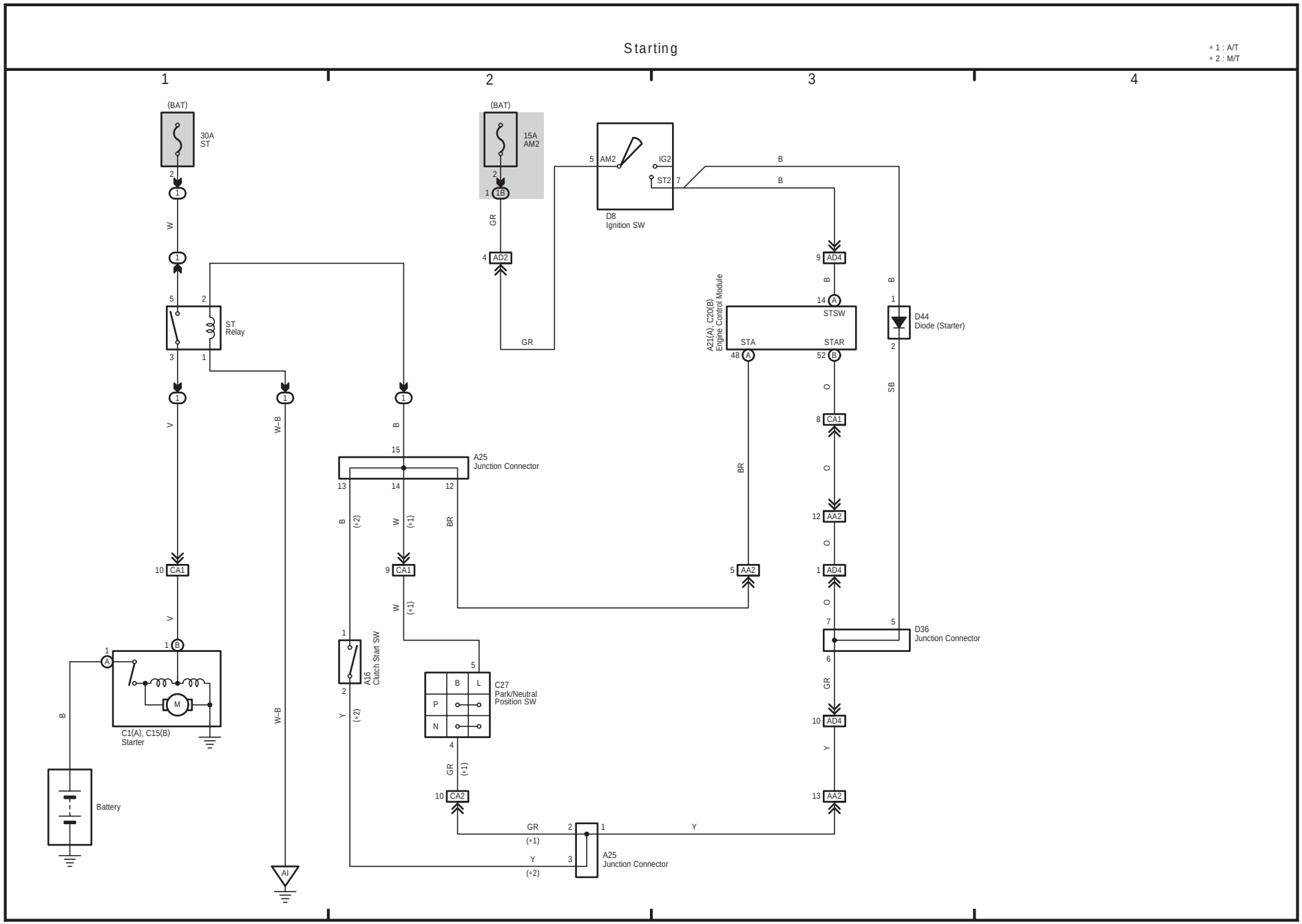
Starting
* 1 : A/T
* 2 : M/T
1
2
3
4
(BAT)
30A
ST
15A
AM2
D8
Ignition SW
ST
Relay
A25
Junction Connector
A21(A), C20(B)
Engine Control Module
STSW
STA
STAR
D44
Diode (Starter)
D36
Junction Connector
A16
Clutch Start SW
C27
Park/Neutral
Position SW
C1(A), C15(B)
Starter
Battery
AI

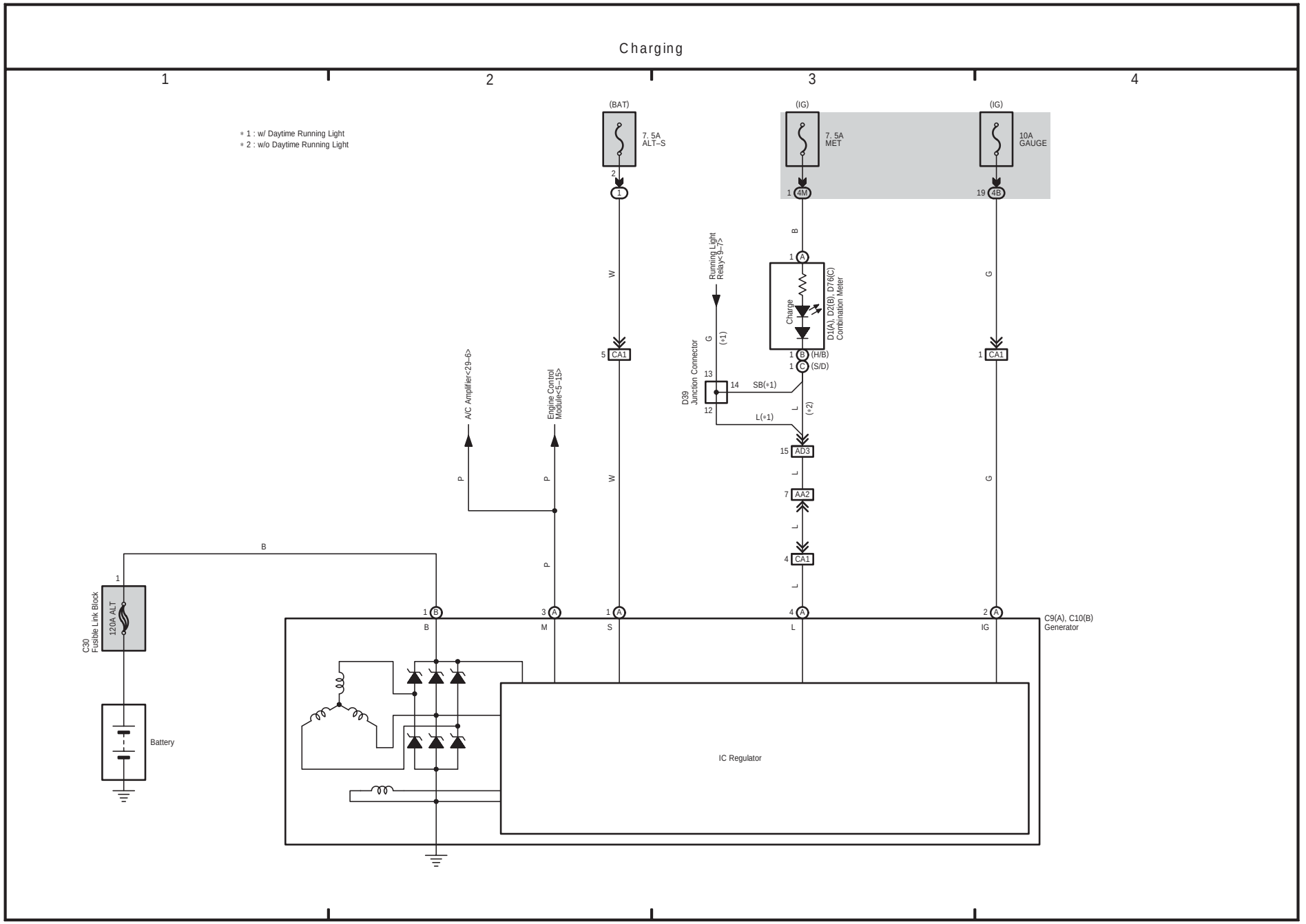
Charging
1
2
3
4
* 1 : w/ Daytime Running Light
* 2 : w/o Daytime Running Light
(BAT)
7. 5A
ALT–S
(IG)
7. 5A
MET
(IG)
10A
GAUGE
Running Light
Relay<3–7>
Charge
D1(A), D2(B), D76(C)
Combination Meter
(H/B)
(S/D)
D39
Junction Connector
SB(*1)
L(*1)
(*1)
(*2)
A/C Amplifier<29–6>
Engine Control
Module<5–15>
C30
Fusible Link Block
120A ALT
Battery
IC Regulator
C9(A), C10(B)
Generator
B
M
S
L
IG

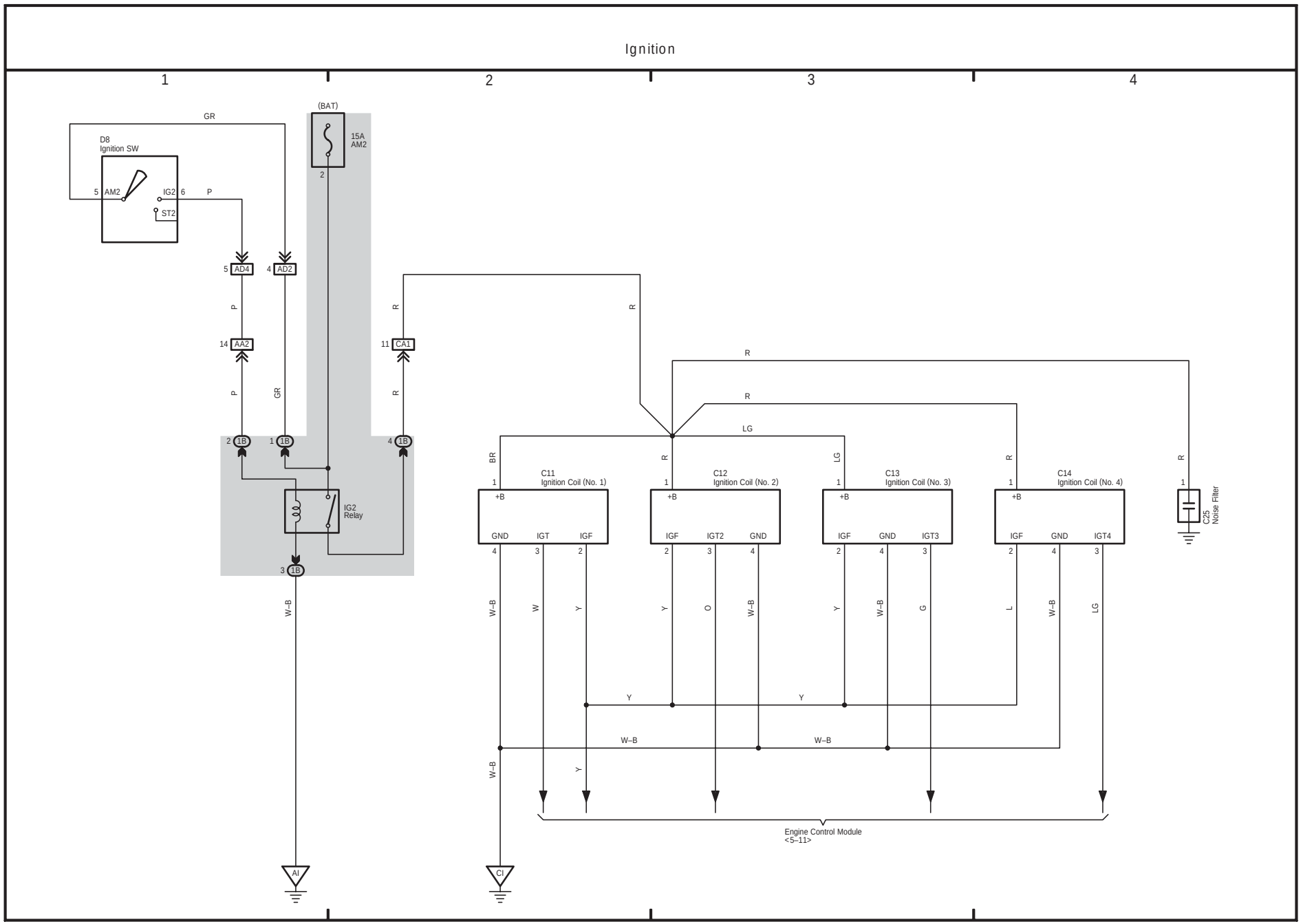
Ignition
1
2
3
4
(BAT)
15A
AM2
D8
Ignition SW
5 AM2
IG2 6
P
ST2
GR
5 AD4
4 AD2
P
14 AA2
P
GR
11 CA1
R
R
2 1B
1 1B
4 1B
IG2
Relay
3 1B
W–B
AI
R
R
LG
BR
R
LG
R
R
C11
Ignition Coil (No. 1)
C12
Ignition Coil (No. 2)
C13
Ignition Coil (No. 3)
C14
Ignition Coil (No. 4)
+B
GND IGT IGF
IGF IGT2 GND
IGF GND IGT3
IGF GND IGT4
C25
Noise Filter
W–B
W
Y
Y
O
W–B
Y
W–B
G
L
W–B
LG
Y
Y
W–B
W–B
W–B
Y
CI
Engine Control Module
<5–11>

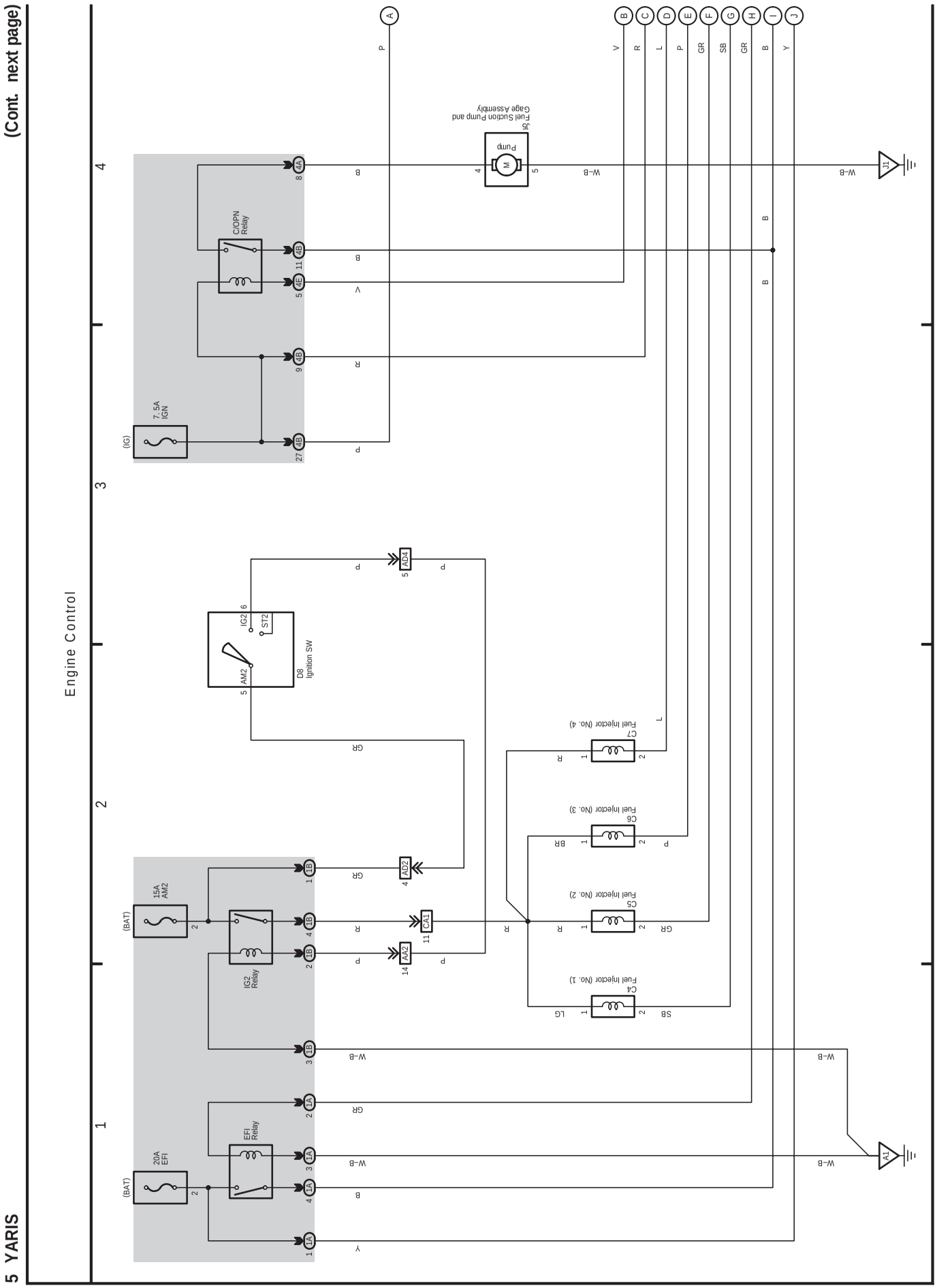
(Cont. next page)
5 YARIS
Engine Control
1
2
3
4
A
B
C
D
E
F
G
H
I
J
P
V
R
L
P
GR
SB
GR
B
Y
J5
Fuel Suction Pump and Gage Assembly
Pump
M
4
5
W-B
J1
W-B
C/OPN Relay
7.5A IGN
(IG)
8 4A
11 4E
5 4E
9 4B
27 4B
4B
AD4
5
IG2 6
ST2
AM2 5
D8 Ignition SW
GR
AD2
4
15A AM2
(BAT)
2
IG2 Relay
1B
4
2
11
CA1
14
AA2
3
W-B
20A EFI
(BAT)
2
EFI Relay
1A
2
3
4
1
W-B
GR
B
Y
C7 Fuel Injector (No. 4)
C6 Fuel Injector (No. 3)
C5 Fuel Injector (No. 2)
C4 Fuel Injector (No. 1)
LG
SB
BR
GR
L
P
R
1
2
A1
W-B

(Cont. next page)

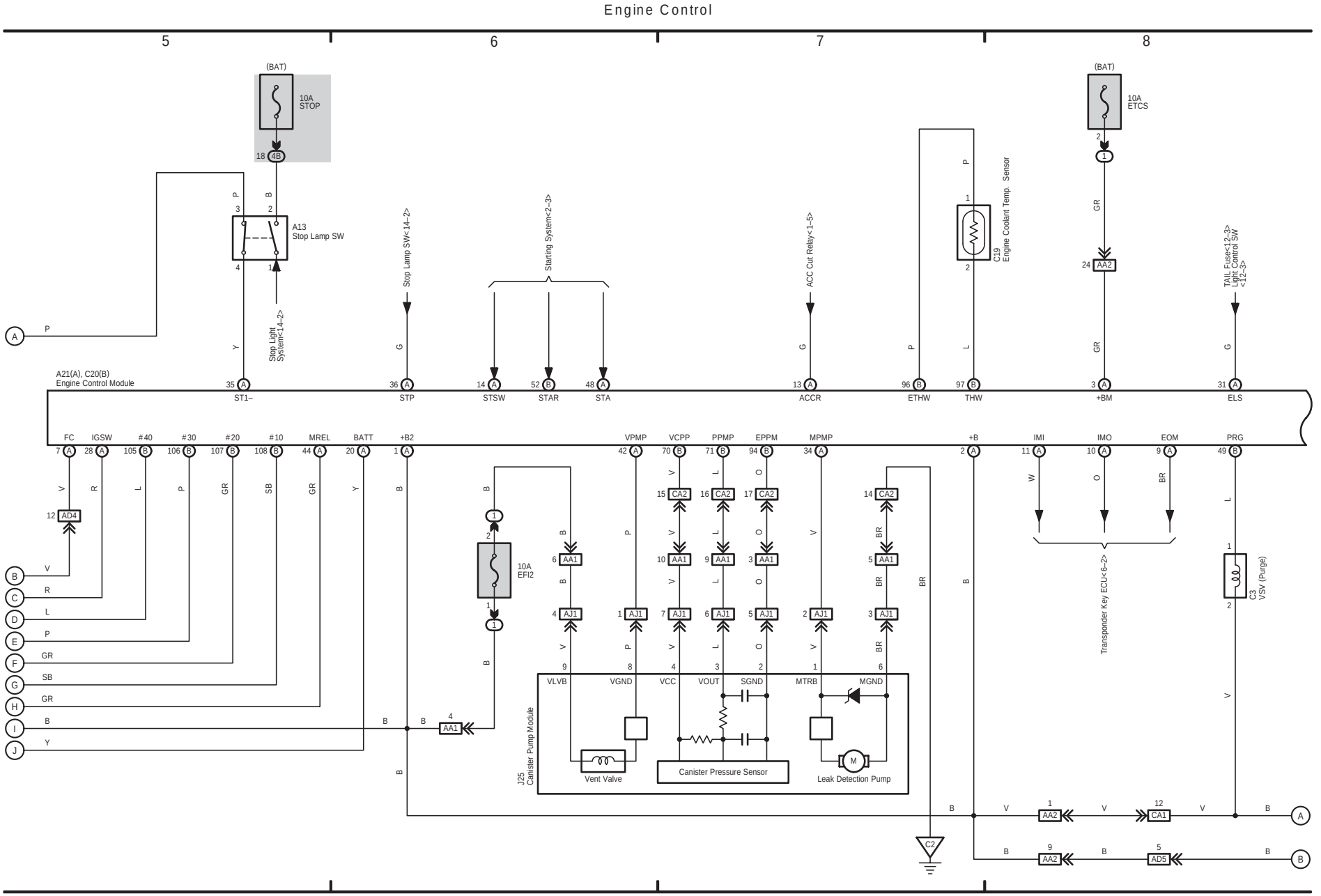

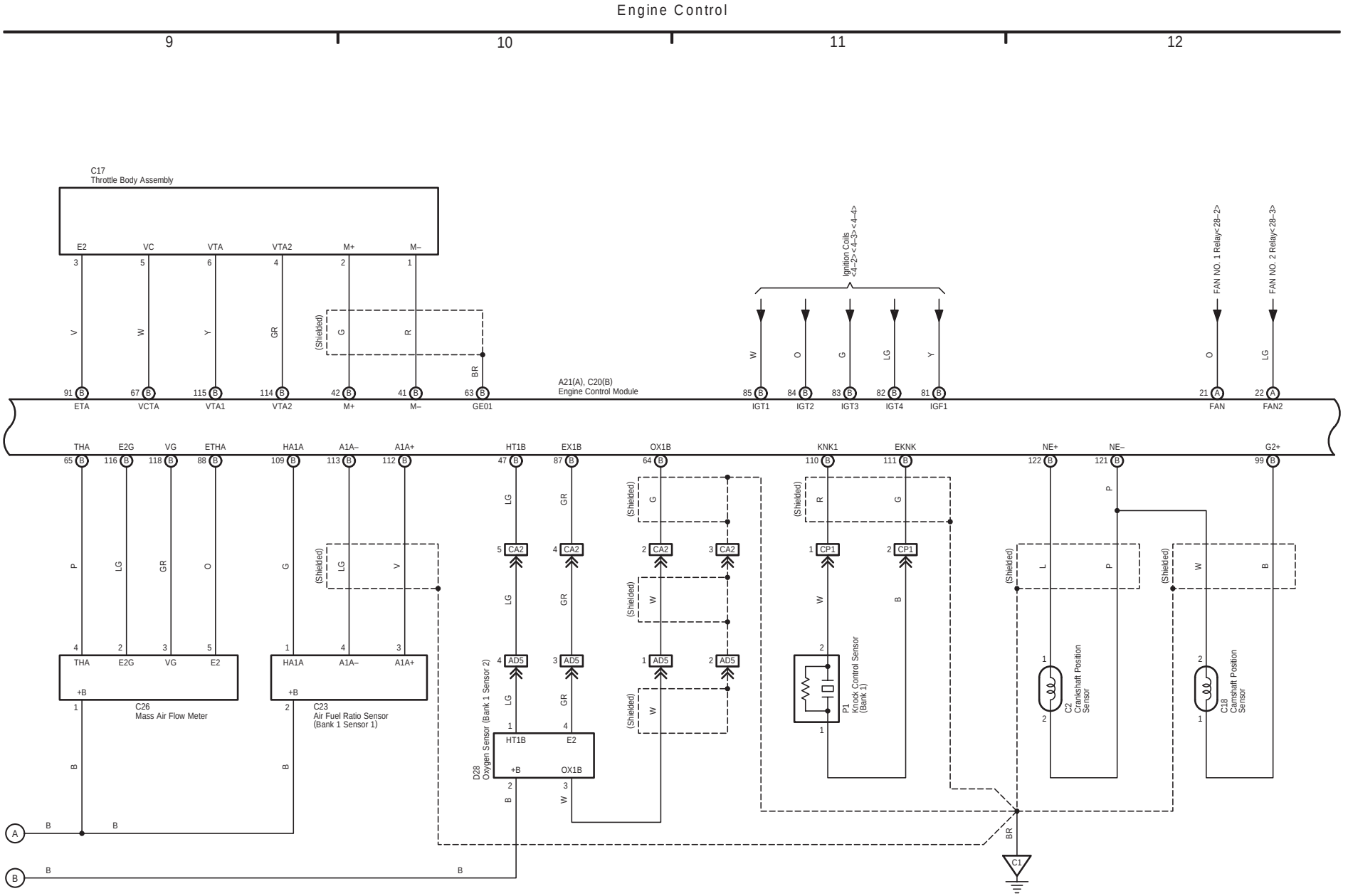
Engine Control
9
10
11
12
C17
Throttle Body Assembly
E2
VC
VTA
VTA2
M+
M–
(Shielded)
Ignition Coils
<4–2><4–3><4–4>
FAN NO. 1 Relay<28–2>
FAN NO. 2 Relay<28–3>
A21(A), C20(B)
Engine Control Module
ETA
VCTA
VTA1
VTA2
M+
M–
GE01
IGT1
IGT2
IGT3
IGT4
IGF1
FAN
FAN2
THA
E2G
VG
ETHA
HA1A
A1A–
A1A+
HT1B
EX1B
OX1B
KNK1
EKNK
NE+
NE–
G2+
C26
Mass Air Flow Meter
C23
Air Fuel Ratio Sensor
(Bank 1 Sensor 1)
D28
Oxygen Sensor (Bank 1 Sensor 2)
P1
Knock Control Sensor
(Bank 1)
C2
Crankshaft Position
Sensor
C18
Camshaft Position
Sensor
C1

(Cont. next page)

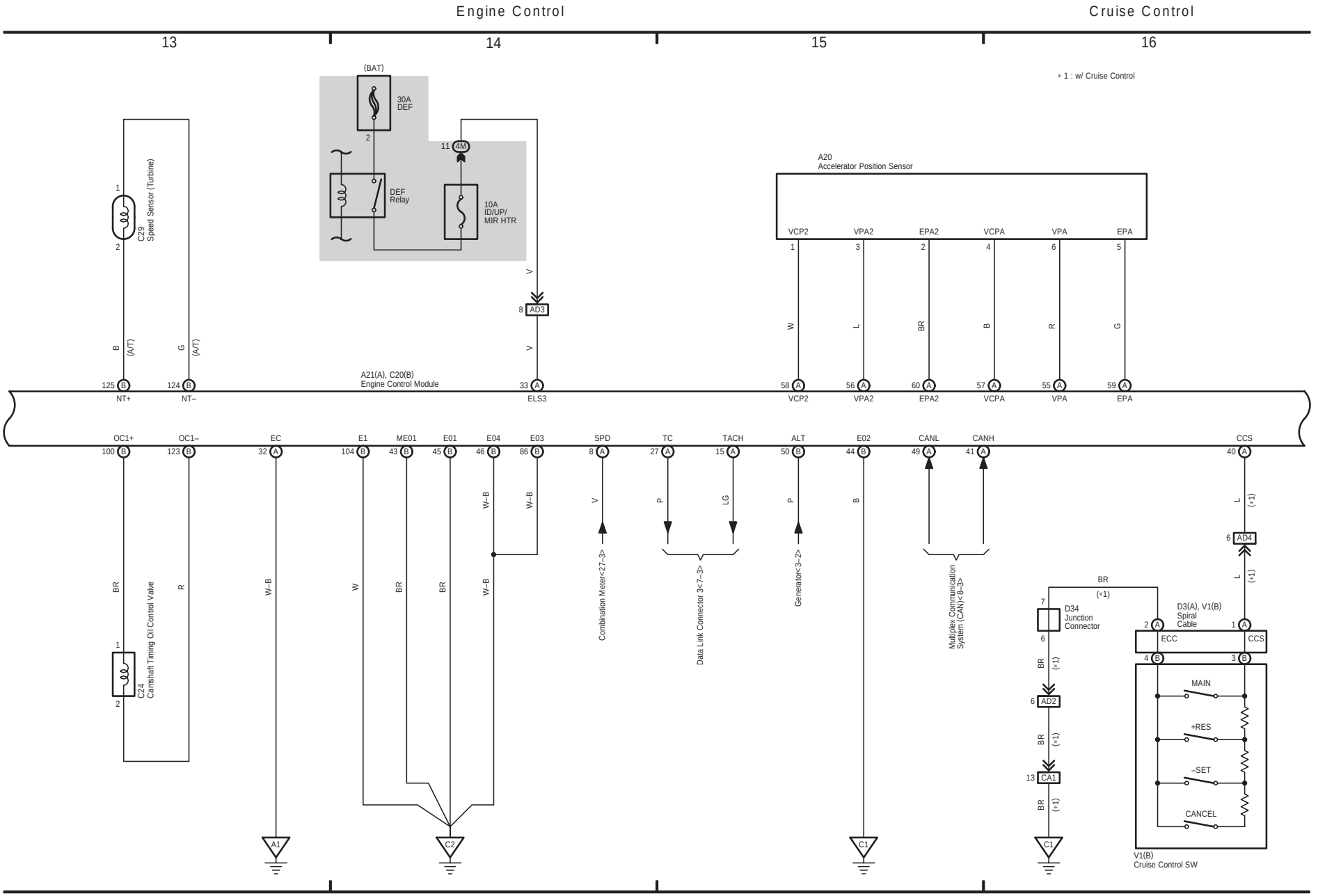

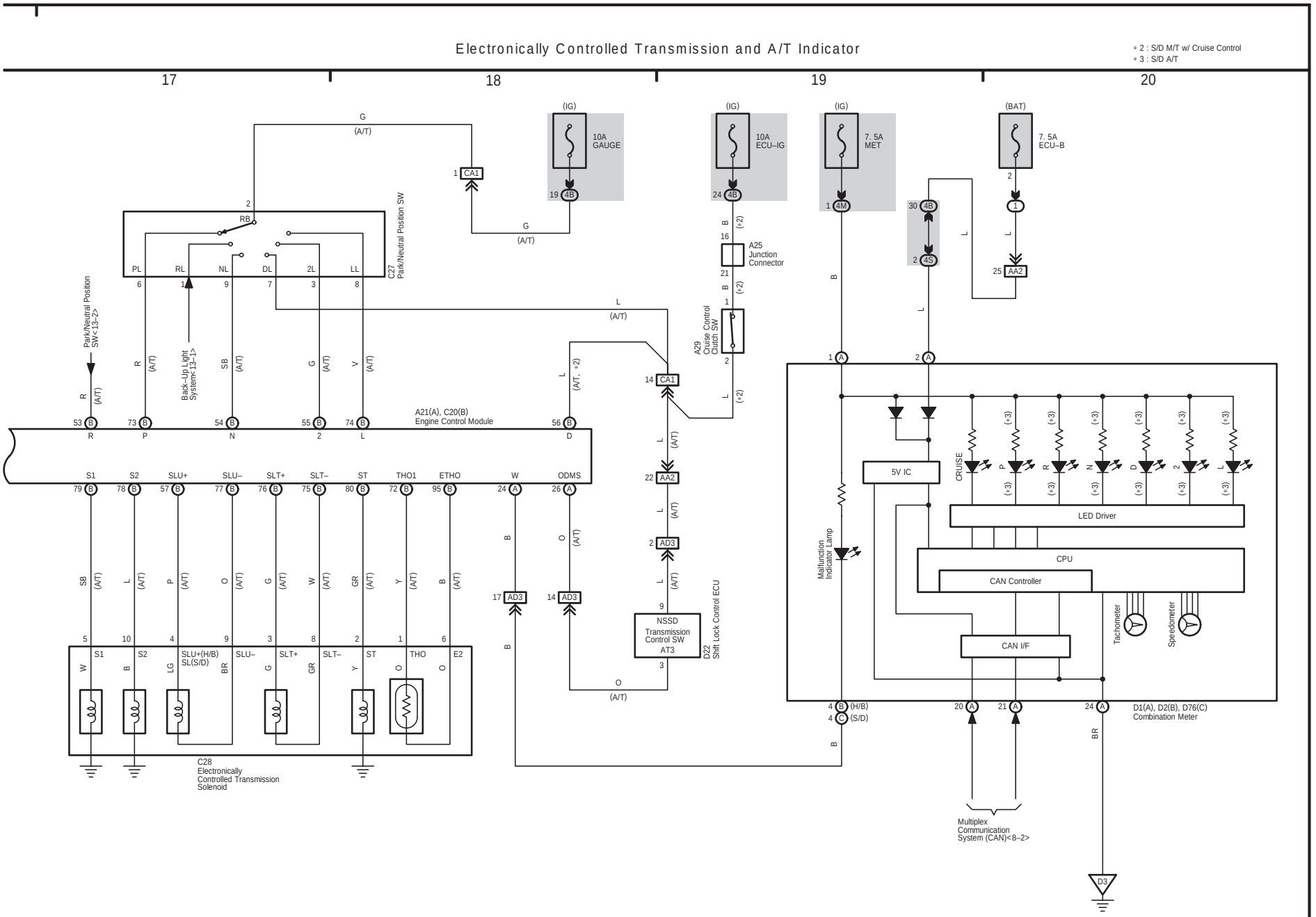
Electronically Controlled Transmission and A/T Indicator
* 2 : S/D M/T w/ Cruise Control
* 3 : S/D A/T
17
18
19
20
(IG)
10A GAUGE
(IG)
10A ECU–IG
(IG)
7. 5A MET
(BAT)
7. 5A ECU–B
G (A/T)
1 CA1
19 4B
24 4B
1 4M
30 4B
2 4S
2 1
25 AA2
2 RB
PL RL NL DL 2L LL
C27 Park/Neutral Position SW
Park/Neutral Position SW<13–2>
Back–Up Light System<13–1>
A25 Junction Connector
A29 Cruise Control Clutch SW
A21(A), C20(B) Engine Control Module
S1 S2 SLU+ SLU– SLT+ SLT– ST THO1 ETHO W ODMS
5V IC
CRUISE
LED Driver
CPU
CAN Controller
CAN I/F
Malfunction Indicator Lamp
Tachometer
Speedometer
NSSD Transmission Control SW AT3
D22 Shift Lock Control ECU
C28 Electronically Controlled Transmission Solenoid
SLU+(H/B) SL(S/D)
THO
E2
4 B (H/B)
4 C (S/D)
D1(A), D2(B), D76(C) Combination Meter
Multiplex Communication System (CAN)<8–2>
D3

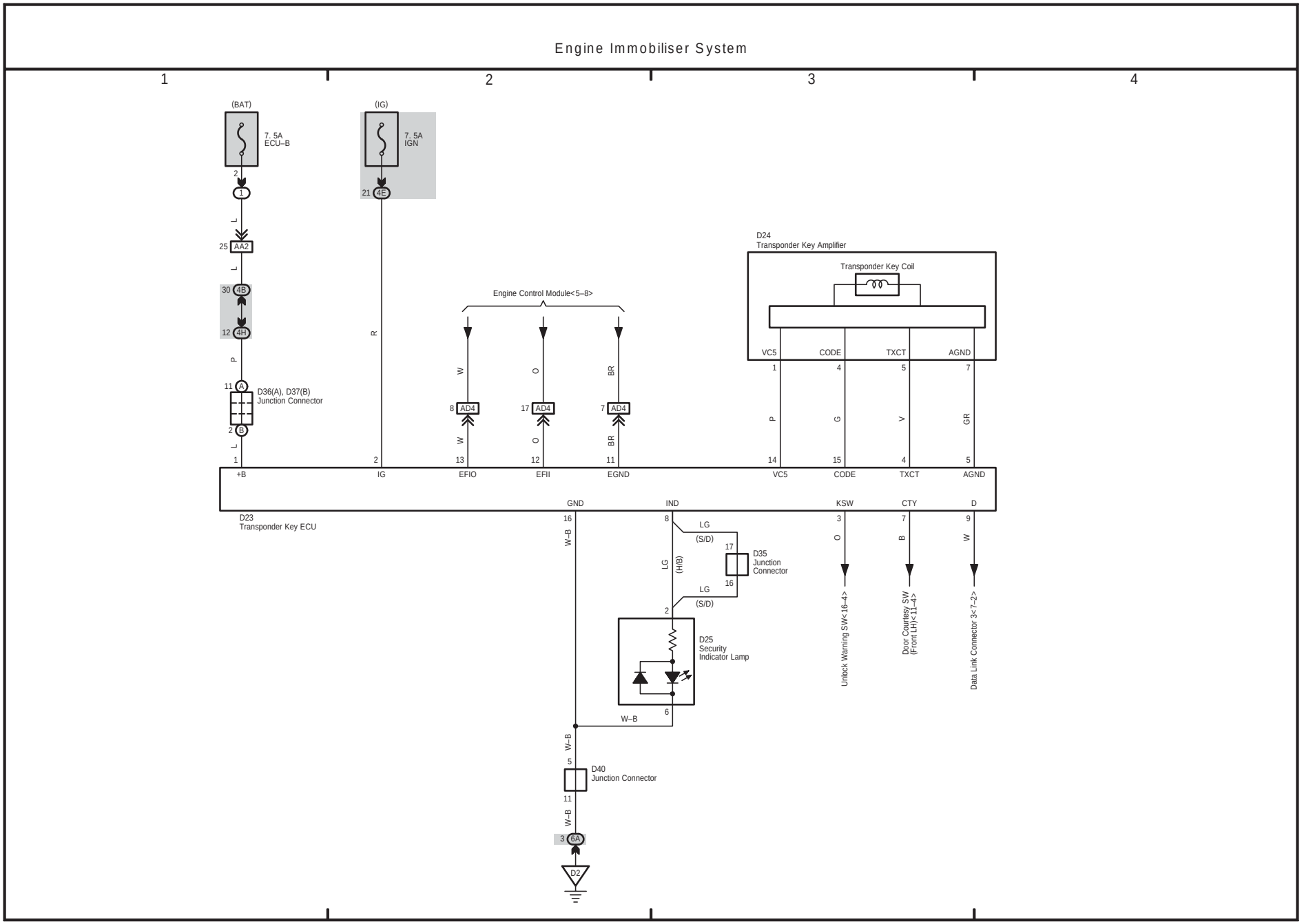
Engine Immobiliser System
1
2
3
4
(BAT)
7. 5A
ECU–B
(IG)
7. 5A
IGN
Engine Control Module<5–8>
D24
Transponder Key Amplifier
Transponder Key Coil
VC5
CODE
TXCT
AGND
D36(A), D37(B)
Junction Connector
+B
IG
EFIO
EFII
EGND
D23
Transponder Key ECU
GND
IND
KSW
CTY
D
D35
Junction
Connector
D25
Security
Indicator Lamp
D40
Junction Connector
D2
Unlock Warning SW<16–4>
Door Courtesy SW
(Front LH)<11–4>
Data Link Connector 3<7–2>
(S/D)
(H/B)

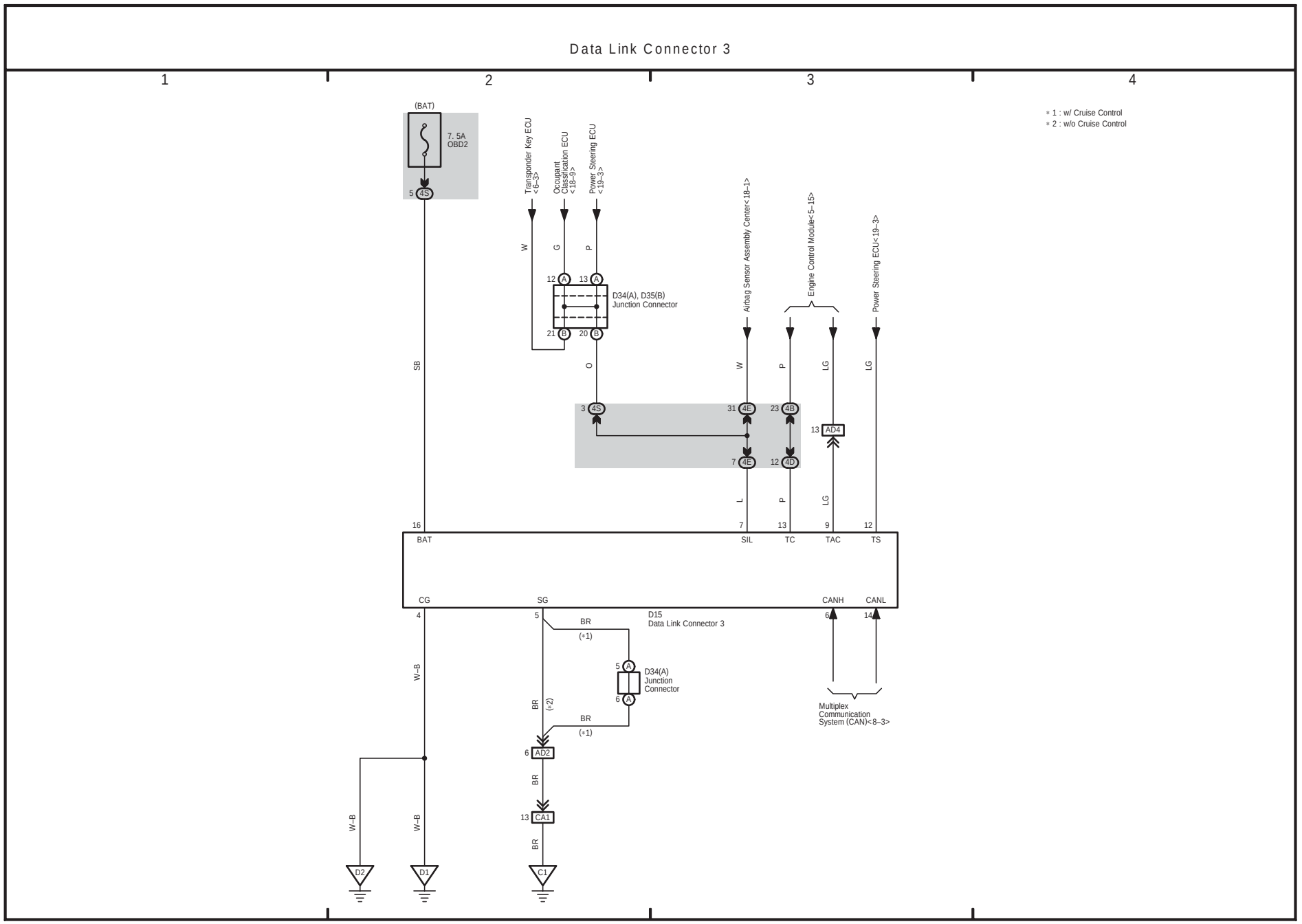
Data Link Connector 3
1
2
3
4
(BAT)
7. 5A
OBD2
5 4S
Transponder Key ECU <6–3>
Occupant Classification ECU <18–9>
Power Steering ECU <19–3>
W
G
P
12 A
13 A
D34(A), D35(B) Junction Connector
21 B
20 B
O
SB
3 4S
Airbag Sensor Assembly Center<18–1>
Engine Control Module<5–15>
Power Steering ECU<19–3>
W
P
LG
LG
31 4E
23 4B
13 AD4
7 4E
12 4D
L
P
LG
16
BAT
7
SIL
13
TC
9
TAC
12
TS
CG
SG
CANH
CANL
4
5
6
14
D15
Data Link Connector 3
BR
(+1)
5 A
D34(A)
Junction
Connector
6 A
W–B
BR
(+2)
BR
(+1)
Multiplex
Communication
System (CAN)<8–3>
6 AD2
BR
13 CA1
BR
W–B
W–B
D2
D1
C1
∗ 1 : w/ Cruise Control
∗ 2 : w/o Cruise Control

Multiplex Communication System (CAN)

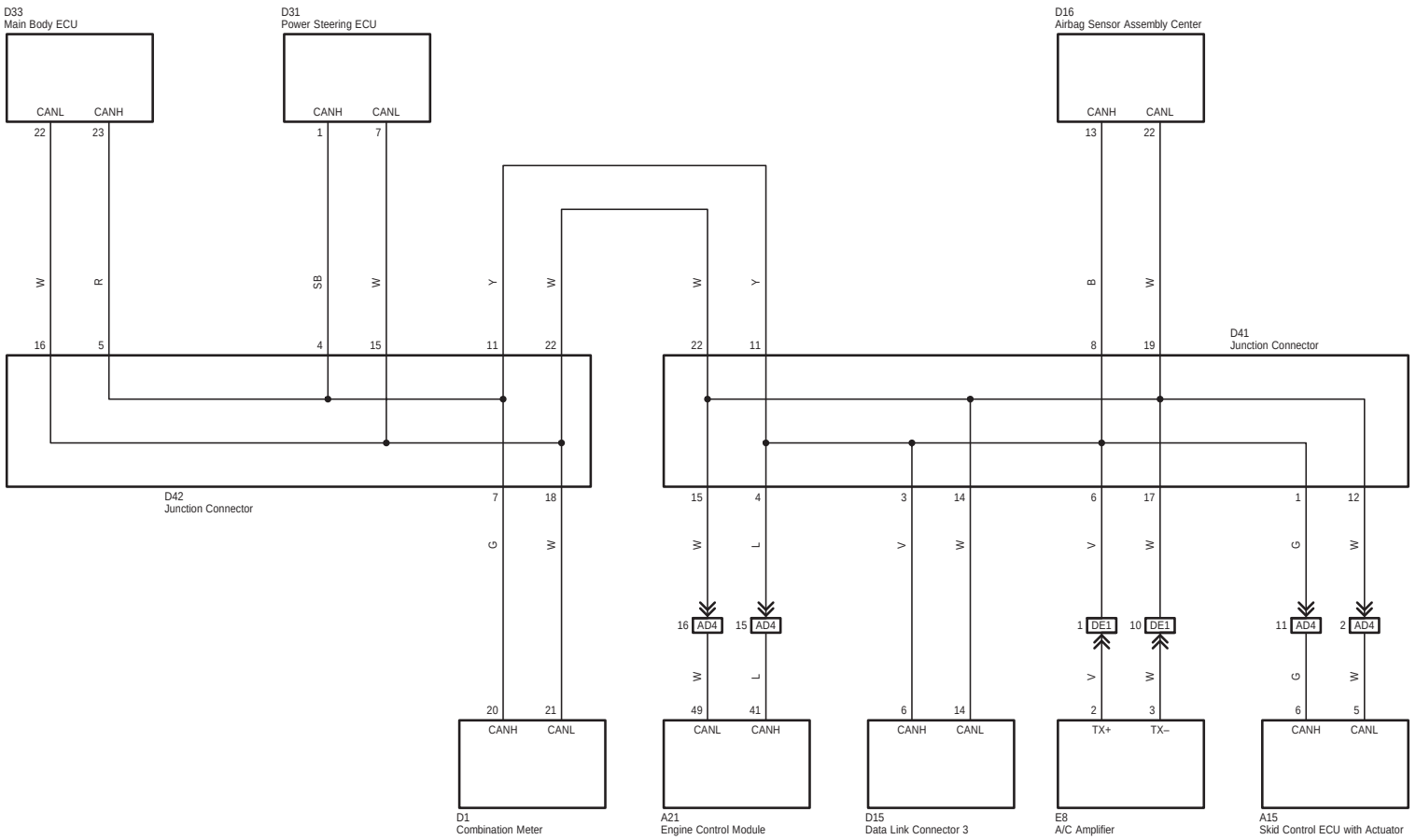

(Cont. next page)

Headlight

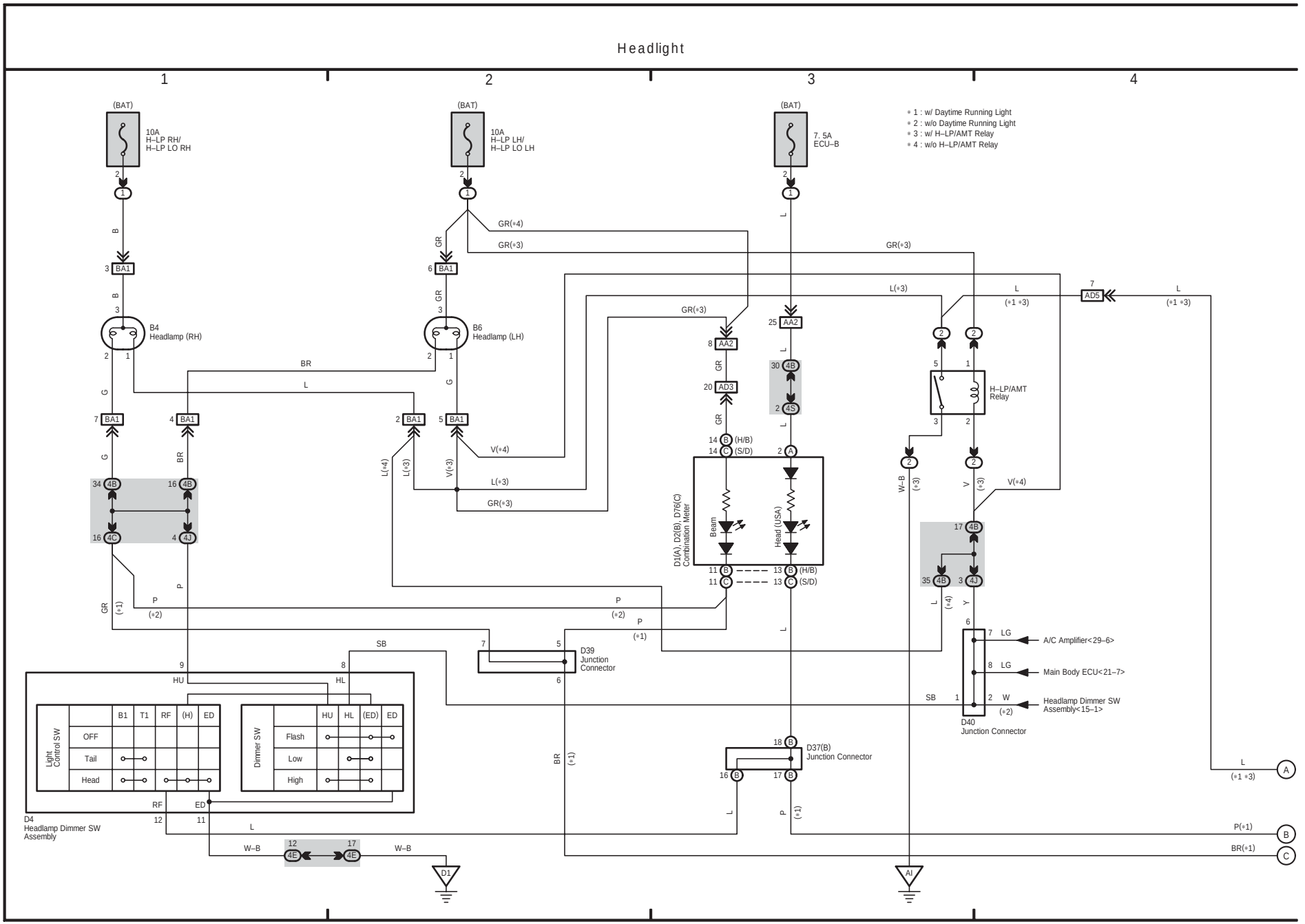

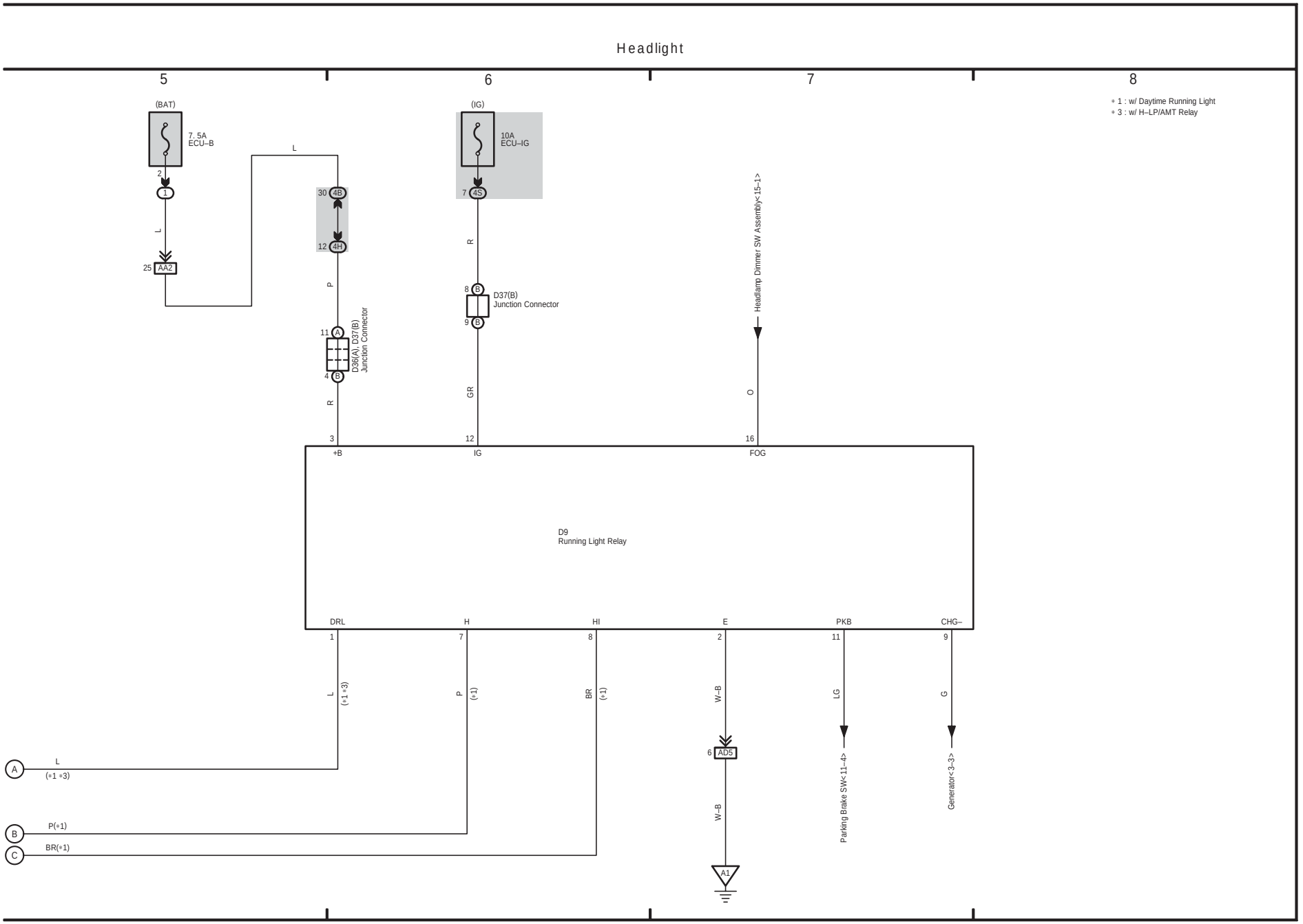
Headlight
5
6
7
8
* 1 : w/ Daytime Running Light
* 3 : w/ H–LP/AMT Relay
(BAT)
7. 5A
ECU–B
2
1
L
25 AA2
L
30 4B
12 4H
P
11 A
4 B
D36(A), D37(B)
Junction Connector
R
3
+B
(IG)
10A
ECU–IG
7 4S
R
8 B
D37(B)
Junction Connector
9 B
GR
12
IG
Headlamp Dimmer SW Assembly<15–1>
O
16
FOG
D9
Running Light Relay
DRL
H
HI
E
PKB
CHG–
1
7
8
2
11
9
L
(*1 *3)
P
(*1)
BR
(*1)
W–B
LG
G
6 AD5
W–B
A1
Parking Brake SW<11–4>
Generator<3–3>
A
L
(*1 *3)
B
P(*1)
C
BR(*1)

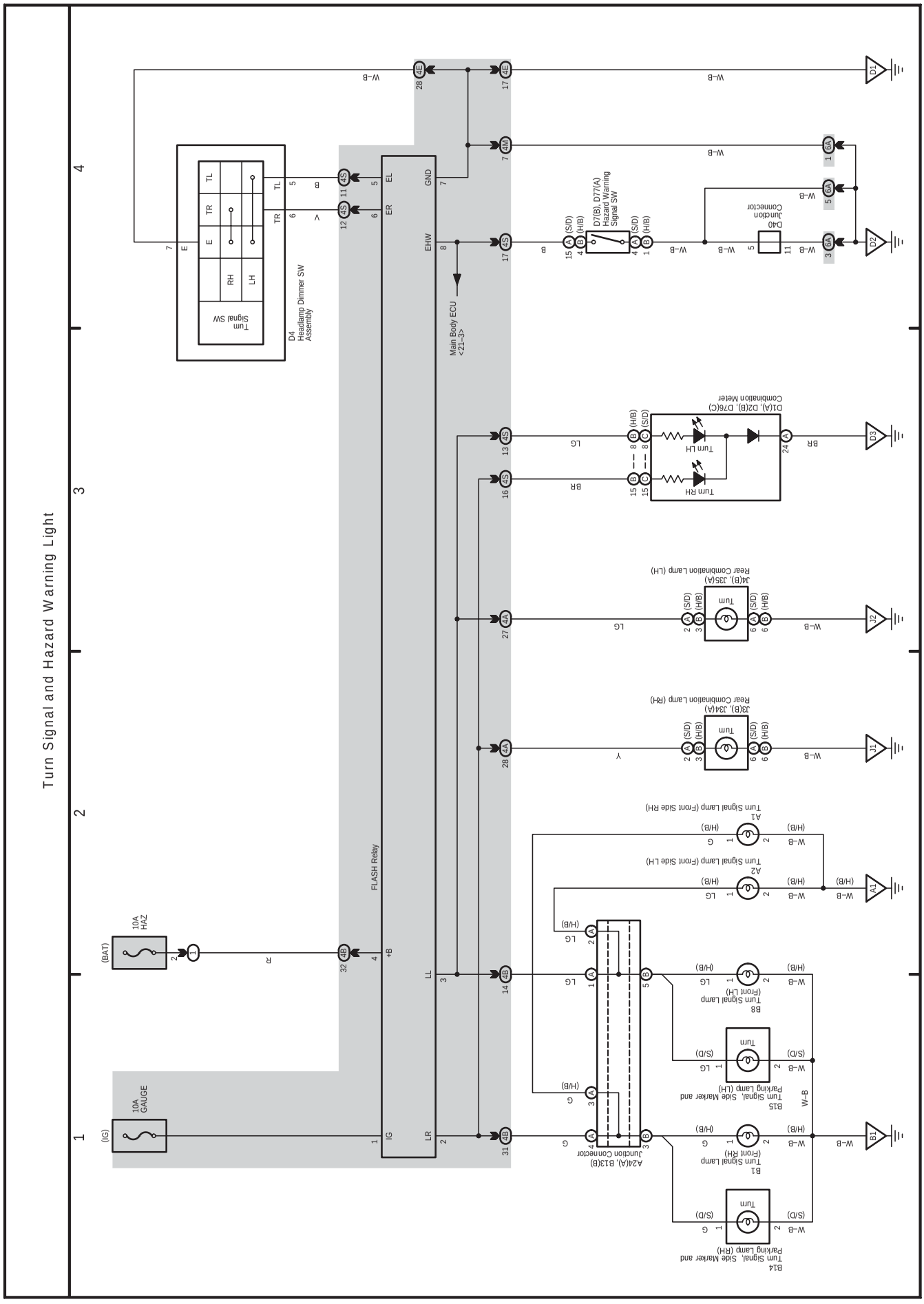
Turn Signal and Hazard Warning Light
10 YARIS
D4 Headlamp Dimmer SW Assembly
Turn Signal SW
Main Body ECU <21-3>
FLASH Relay
10A GAUGE
10A HAZ
D7(B), D77(A) Hazard Warning Signal SW
D40 Junction Connector
D1(A), D2(B), D76(C) Combination Meter
Turn LH
Turn RH
J4(B), J35(A) Rear Combination Lamp (LH)
J3(B), J34(A) Rear Combination Lamp (RH)
Turn Signal Lamp (Front Side RH)
Turn Signal Lamp (Front Side LH)
A24(A), B13(B) Junction Connector
B1 Turn Signal Lamp (Front RH)
B8 Turn Signal Lamp (Front LH)
B14 Turn Signal, Side Marker and Parking Lamp (RH)
B15 Turn Signal, Side Marker and Parking Lamp (LH)

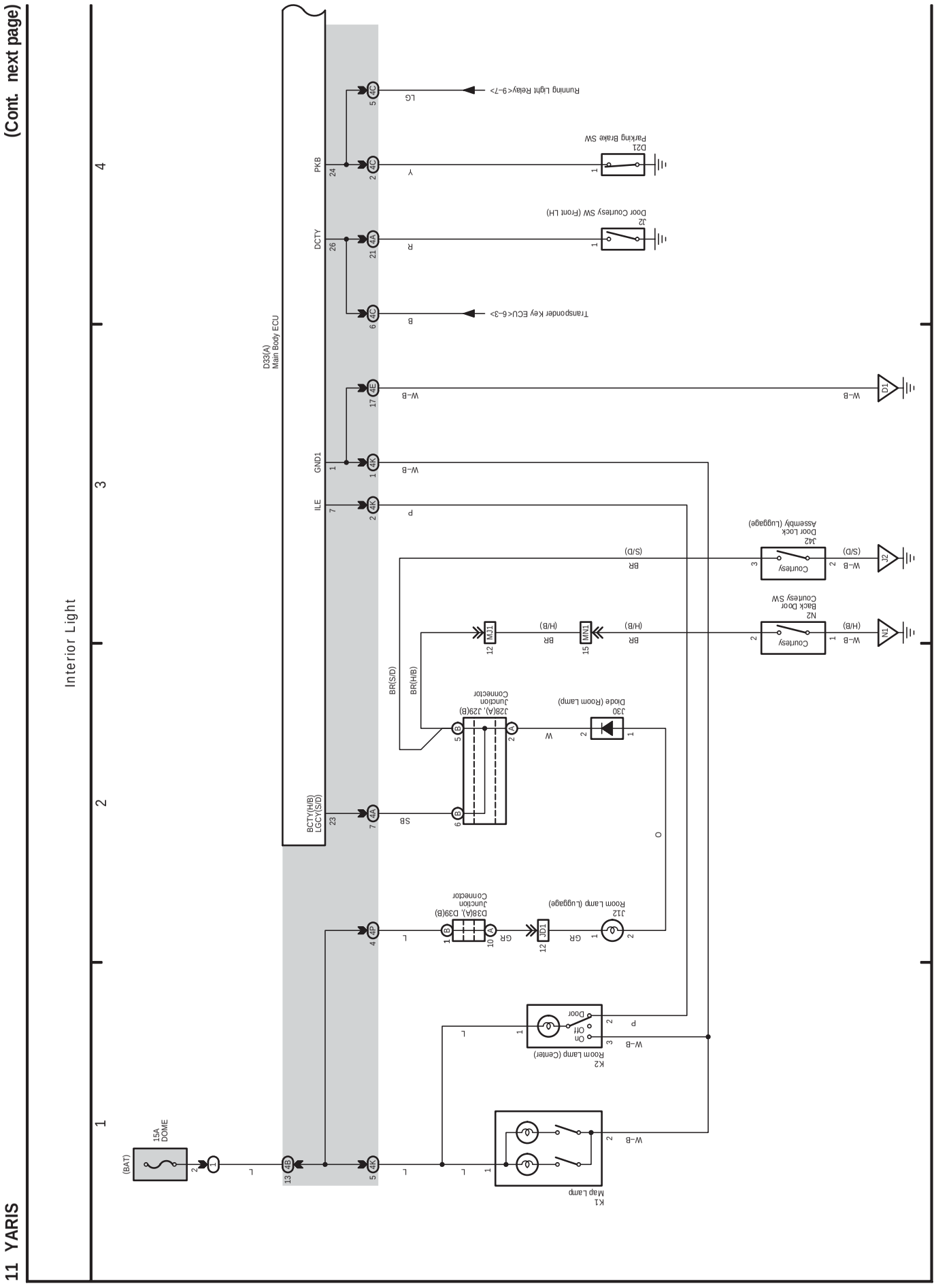
(Cont. next page)
Interior Light
1
2
3
4
11 YARIS
(BAT)
15A DOME
Map Lamp
K1
Room Lamp (Center)
K2
Door
Off
On
Room Lamp (Luggage)
J12
Diode (Room Lamp)
J30
Junction Connector
J28(A), J29(B)
Junction Connector
D38(A), D39(B)
BCTY(H/B) LGCY(S/D)
BR(H/B)
BR(S/D)
Back Door Courtesy SW
N2
Door Lock Assembly (Luggage)
J42
Courtesy
Door Courtesy SW (Front LH)
J2
Parking Brake SW
D21
Running Light Relay<9-7>
Transponder Key ECU<6-3>
D33(A) Main Body ECU
GND1
ILE
PKB
DCTY
W-B
L
SB
GR
BR
P
Y
R
B
LG
O
W

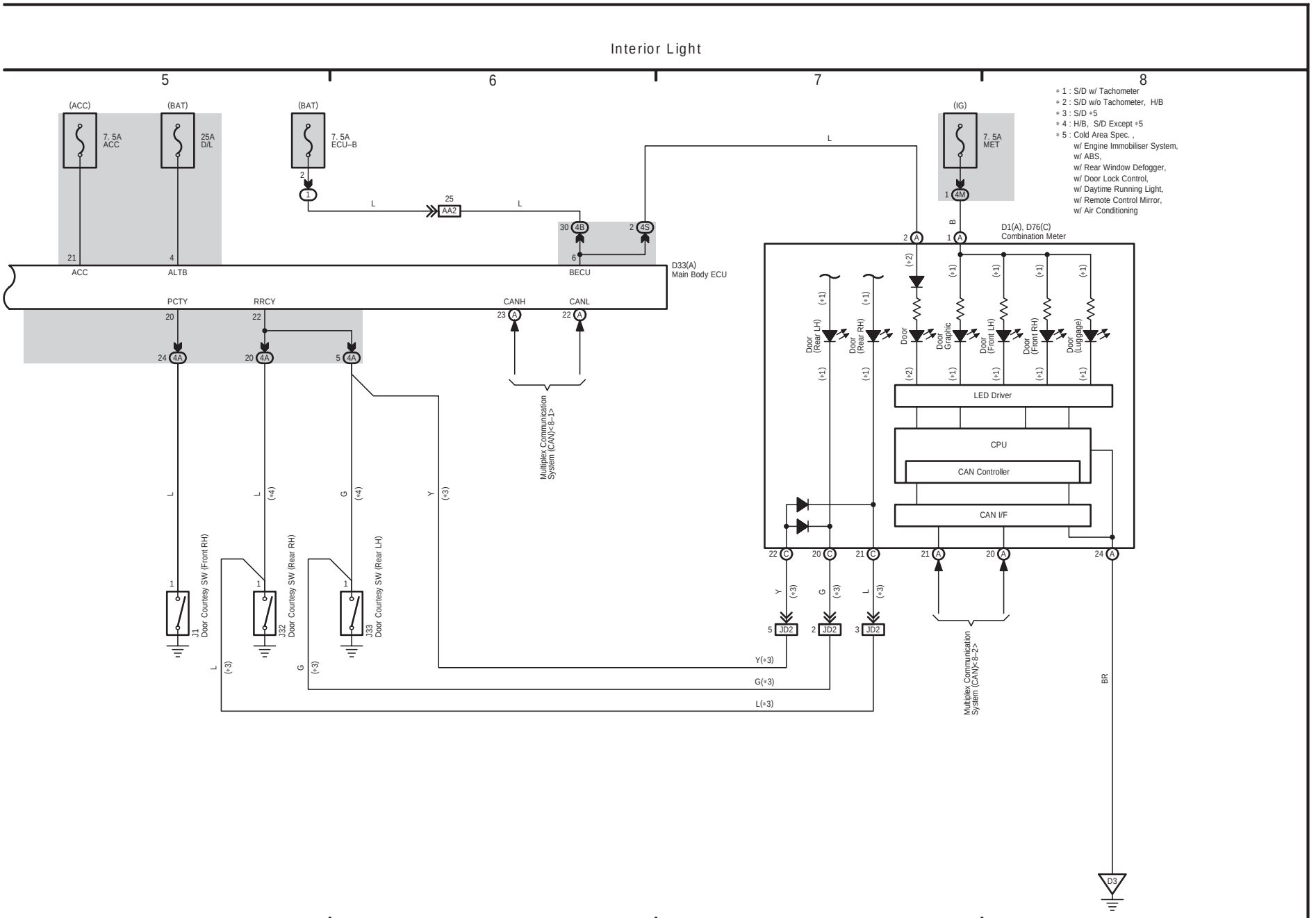
Interior Light
5
6
7
8
(ACC)
(BAT)
(BAT)
(IG)
7. 5A ACC
25A D/L
7. 5A ECU–B
7. 5A MET
21
4
2
1
25
AA2
30 4B
2 4S
6
1 4M
ACC
ALTB
BECU
D33(A) Main Body ECU
D1(A), D76(C) Combination Meter
PCTY
RRCY
CANH
CANL
20
22
23 A
22 A
24 4A
20 4A
5 4A
Multiplex Communication System (CAN)<8–1>
Door (Rear LH)
Door (Rear RH)
Door
Door Graphic
Door (Front LH)
Door (Front RH)
Door (Luggage)
LED Driver
CPU
CAN Controller
CAN I/F
J1 Door Courtesy SW (Front RH)
J32 Door Courtesy SW (Rear RH)
J33 Door Courtesy SW (Rear LH)
22 C
20 C
21 C
21 A
20 A
24 A
5 JD2
2 JD2
3 JD2
Y(*3)
G(*3)
L(*3)
Multiplex Communication System (CAN)<8–2>
BR
D3
* 1 : S/D w/ Tachometer
* 2 : S/D w/o Tachometer, H/B
* 3 : S/D *5
* 4 : H/B, S/D Except *5
* 5 : Cold Area Spec. ,
w/ Engine Immobiliser System,
w/ ABS,
w/ Rear Window Defogger,
w/ Door Lock Control,
w/ Daytime Running Light,
w/ Remote Control Mirror,
w/ Air Conditioning

(Cont. next page)

Taillight and Illumination

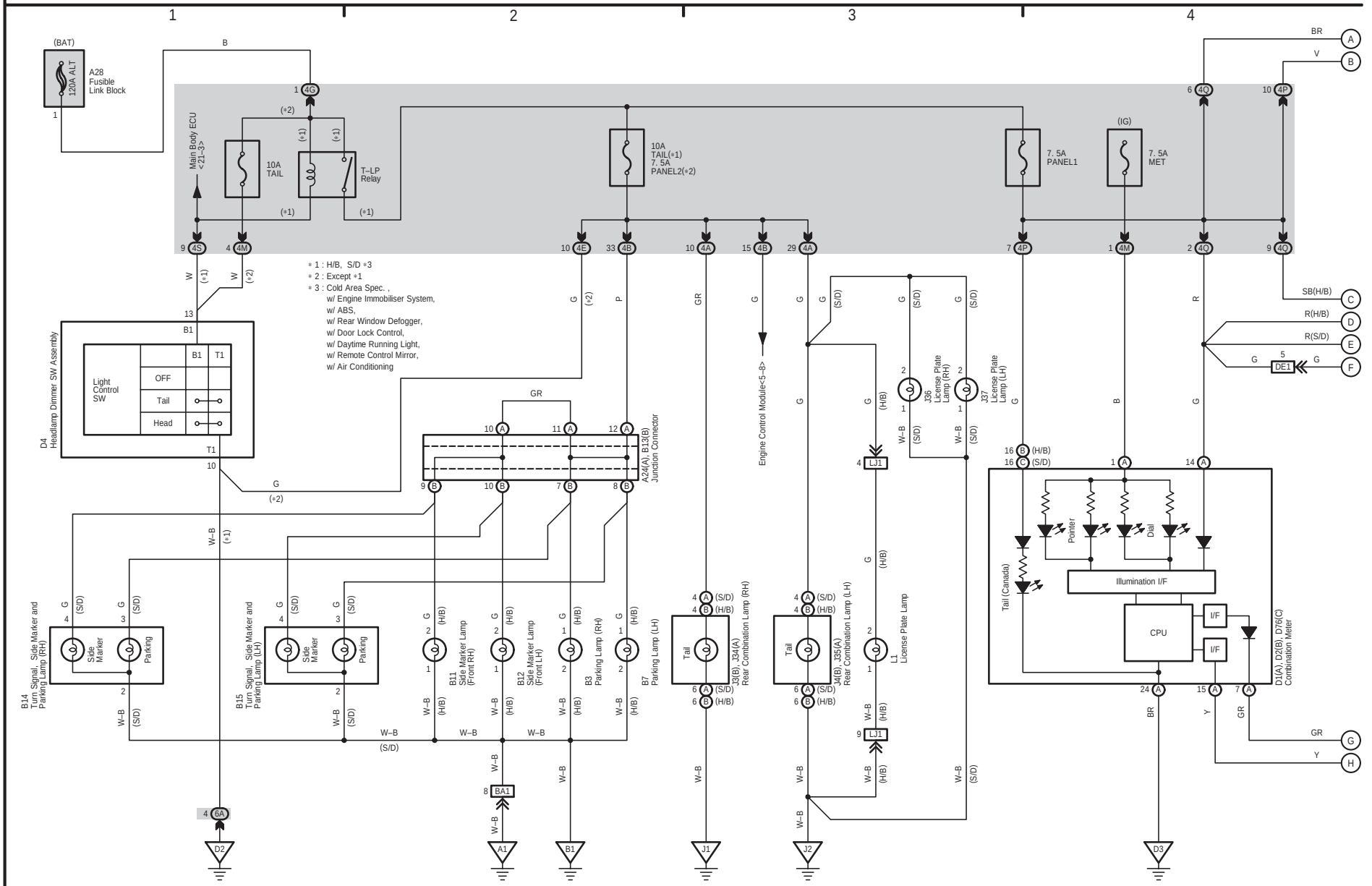

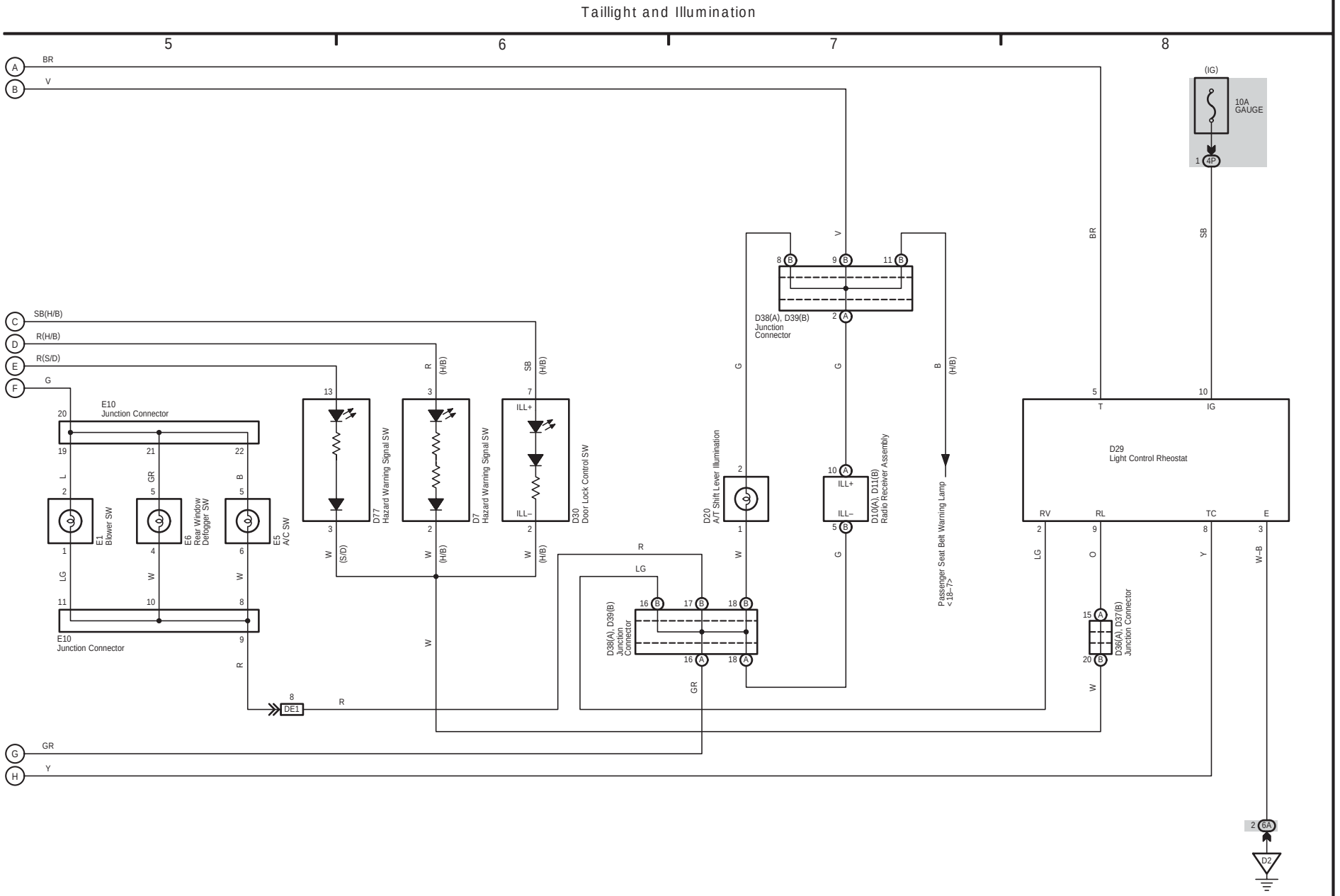
Taillight and Illumination
5
6
7
8
BR
V
(IG)
10A
GAUGE
4P
SB
SB(H/B)
R(H/B)
R(S/D)
G
E10
Junction Connector
E1
Blower SW
E6
Rear Window
Defogger SW
E5
A/C SW
D77
Hazard Warning Signal SW
D7
Hazard Warning Signal SW
D30
Door Lock Control SW
D38(A), D39(B)
Junction
Connector
D20
A/T Shift Lever Illumination
D10(A), D11(B)
Radio Receiver Assembly
Passenger Seat Belt Warning Lamp
<18–7>
D29
Light Control Rheostat
T
IG
RV
RL
TC
E
D36(A), D37(B)
Junction Connector
DE1
6A
D2
GR
Y

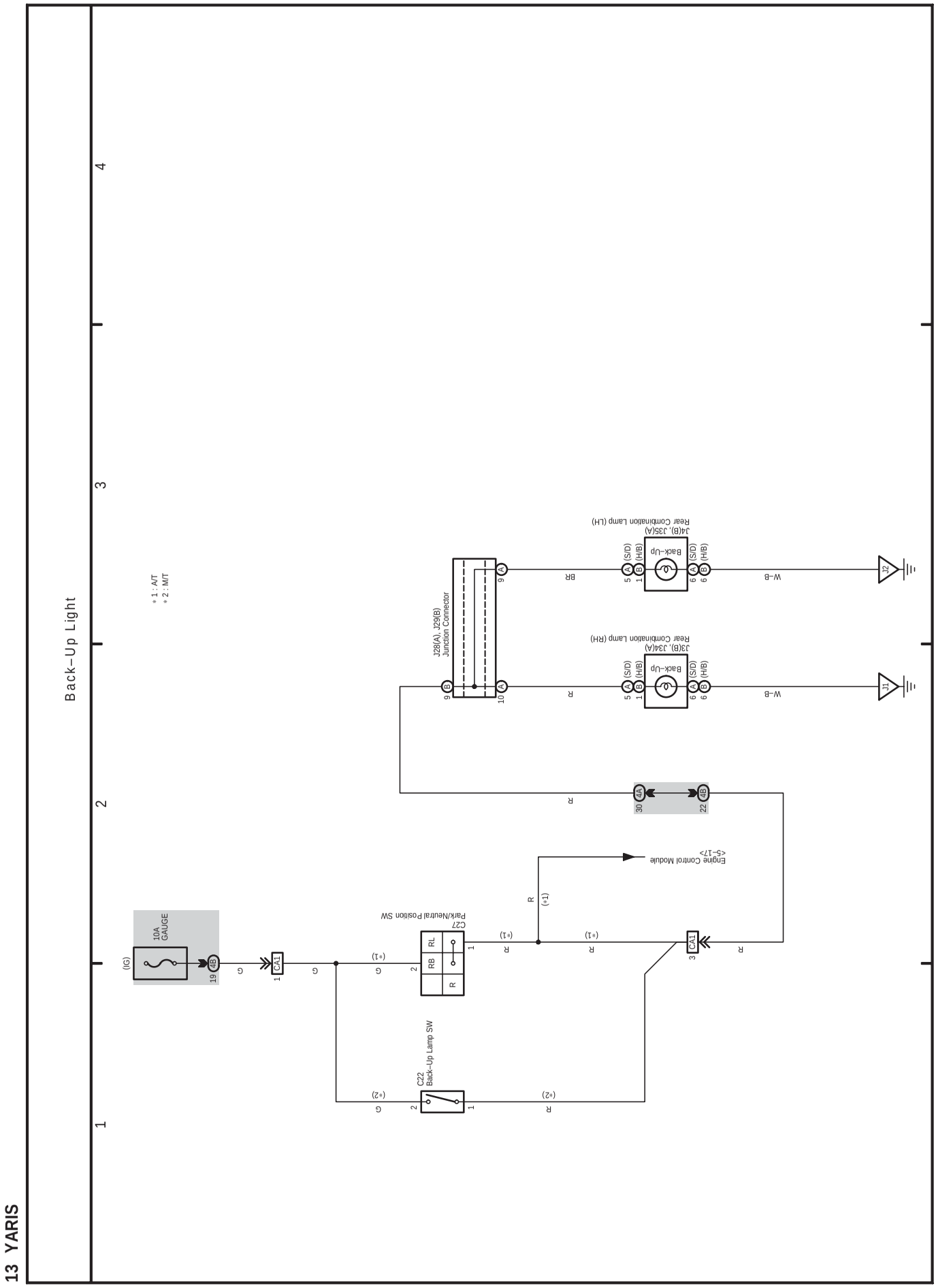
13 YARIS
Back–Up Light
1
2
3
4
* 1 : A/T
* 2 : M/T
(IG)
10A
GAUGE
19 4B
G
1 CA1
G
G (*1)
2
C27
Park/Neutral Position SW
RL
RB
R
1
R (*1)
R (+1)
R (*1)
3 CA1
R
Engine Control Module
<5–17>
30 4A
22 4B
R
J28(A), J29(B)
Junction Connector
9 B
10 A
R
9 A
BR
Rear Combination Lamp (LH)
J4(B), J35(A)
Back–Up
5 A (S/D)
1 B (H/B)
6 A (S/D)
6 B (H/B)
W–B
J2
Rear Combination Lamp (RH)
J3(B), J34(A)
Back–Up
5 A (S/D)
1 B (H/B)
6 A (S/D)
6 B (H/B)
W–B
J1
G (*2)
2
C22
Back–Up Lamp SW
1
R (*2)

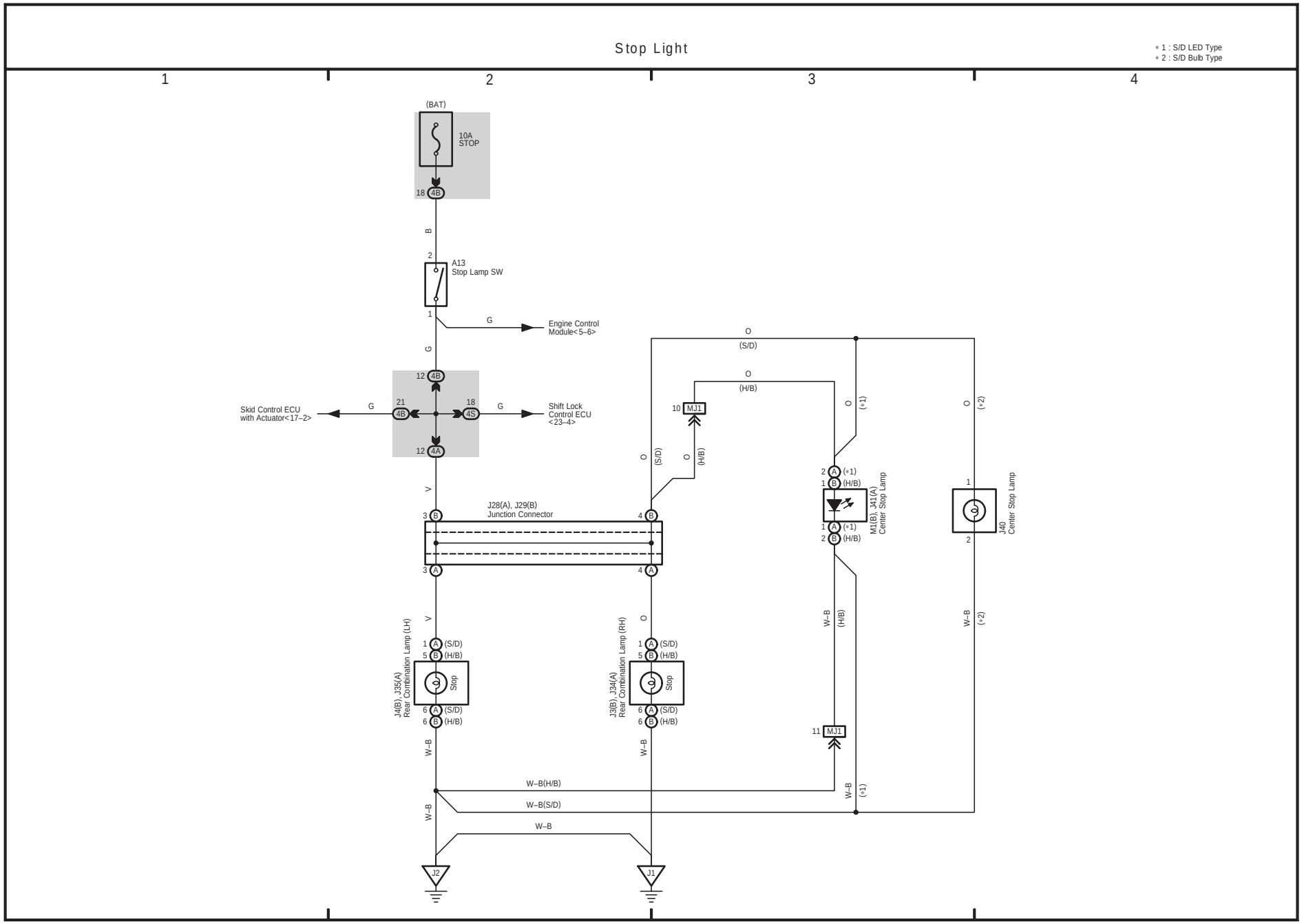
Stop Light
* 1 : S/D LED Type
* 2 : S/D Bulb Type
1
2
3
4
(BAT)
10A
STOP
18 4B
B
2
A13
Stop Lamp SW
1
G
Engine Control
Module<5–6>
G
12 4B
Skid Control ECU
with Actuator<17–2>
G
21
4B
18
4S
G
Shift Lock
Control ECU
<23–4>
12 4A
V
3 B
J28(A), J29(B)
Junction Connector
4 B
3 A
4 A
O
(S/D)
O
(H/B)
10 MJ1
O
(*1)
O
(*2)
2 A (*1)
1 B (H/B)
M41(B), J41(A)
Center Stop Lamp
1 A (*1)
2 B (H/B)
1
J40
Center Stop Lamp
2
V
O
1 A (S/D)
5 B (H/B)
J4(B), J35(A)
Rear Combination Lamp (LH)
Stop
6 A (S/D)
6 B (H/B)
1 A (S/D)
5 B (H/B)
J3(B), J34(A)
Rear Combination Lamp (RH)
Stop
6 A (S/D)
6 B (H/B)
W–B
(H/B)
W–B
(*2)
11 MJ1
W–B
W–B
W–B(H/B)
W–B
(*1)
W–B(S/D)
W–B
J2
J1

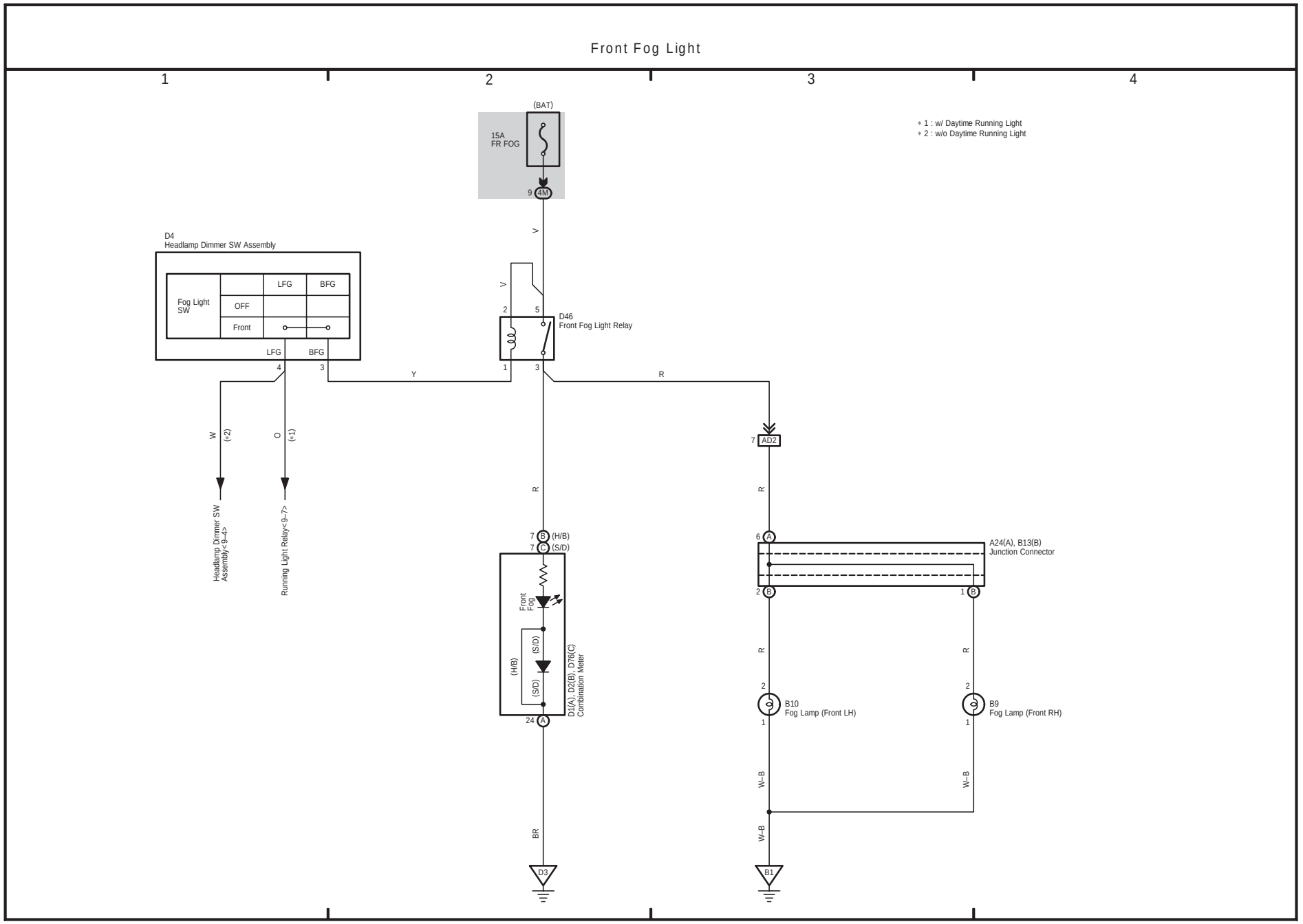
Front Fog Light
1
2
3
4
(BAT)
15A
FR FOG
9 4M
* 1 : w/ Daytime Running Light
* 2 : w/o Daytime Running Light
D4
Headlamp Dimmer SW Assembly
Fog Light SW
OFF
Front
LFG
BFG
V
2 5
D46
Front Fog Light Relay
1 3
Y
R
W (*2)
O (*1)
Headlamp Dimmer SW Assembly<9-4>
Running Light Relay<9-7>
7 AD2
7 B (H/B)
7 C (S/D)
Front Fog
(H/B)
(S/D)
(S/D)
D1(A), D2(B), D76(C)
Combination Meter
24 A
6 A
2 B
1 B
A24(A), B13(B)
Junction Connector
2
1
B10
Fog Lamp (Front LH)
B9
Fog Lamp (Front RH)
W-B
BR
D3
B1

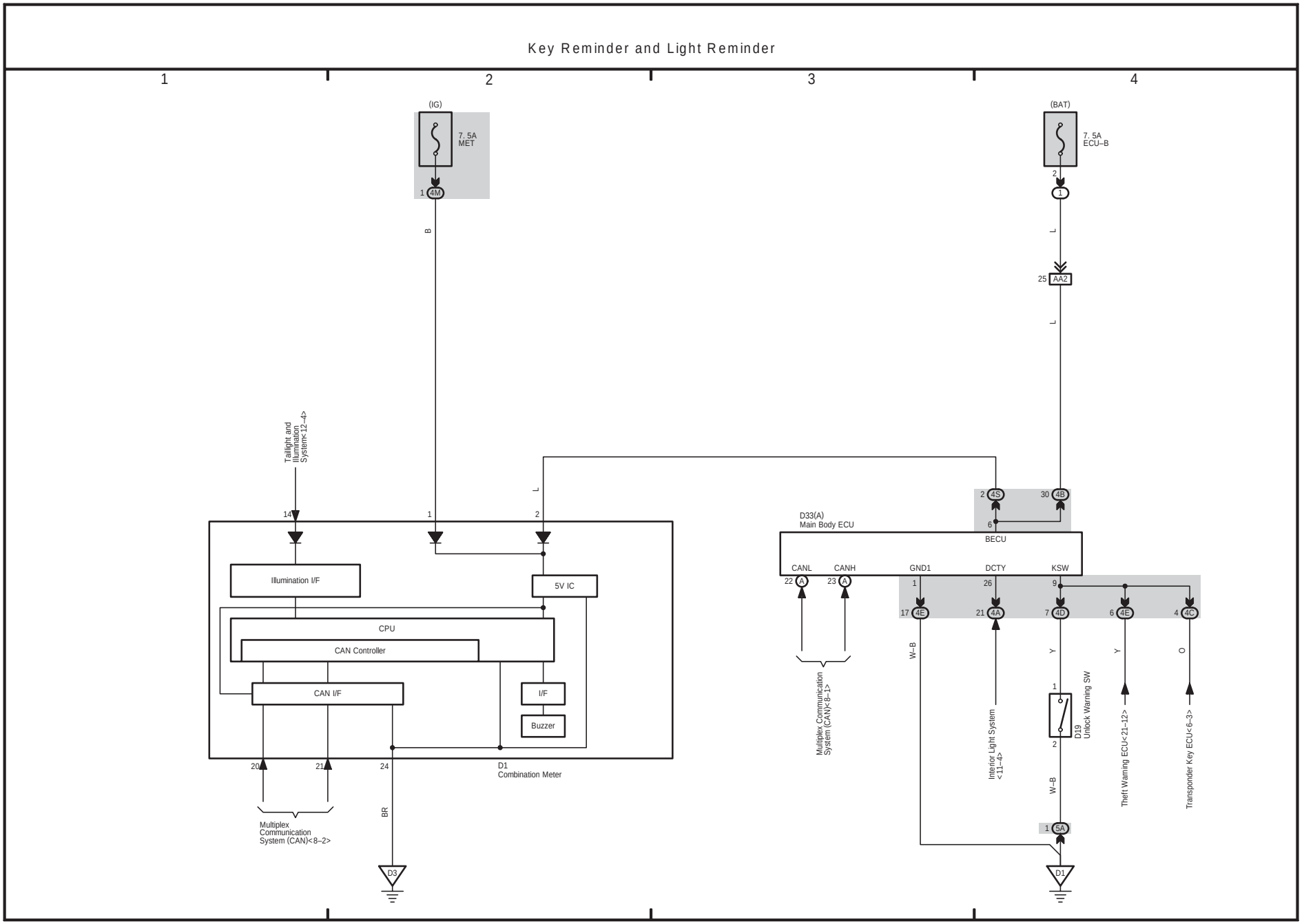
Key Reminder and Light Reminder
1
2
3
4
(IG)
7. 5A
MET
1 4M
B
(BAT)
7. 5A
ECU–B
2
1
L
25 AA2
L
Taillight and
Illumination
System<12–4>
14
1
2
L
Illumination I/F
5V IC
CPU
CAN Controller
CAN I/F
I/F
Buzzer
20
21
24
D1
Combination Meter
Multiplex
Communication
System (CAN)<8–2>
BR
D3
2 4S
30 4B
6
D33(A)
Main Body ECU
BECU
CANL
CANH
GND1
DCTY
KSW
22 A
23 A
1
26
9
17 4E
21 4A
7 4D
6 4E
4 4C
W–B
Y
Y
O
Multiplex Communication
System (CAN)<8–1>
Interior Light System
<11–4>
1
D19
Unlock Warning SW
2
Theft Warning ECU<21–12>
Transponder Key ECU<6–3>
W–B
1 5A
D1

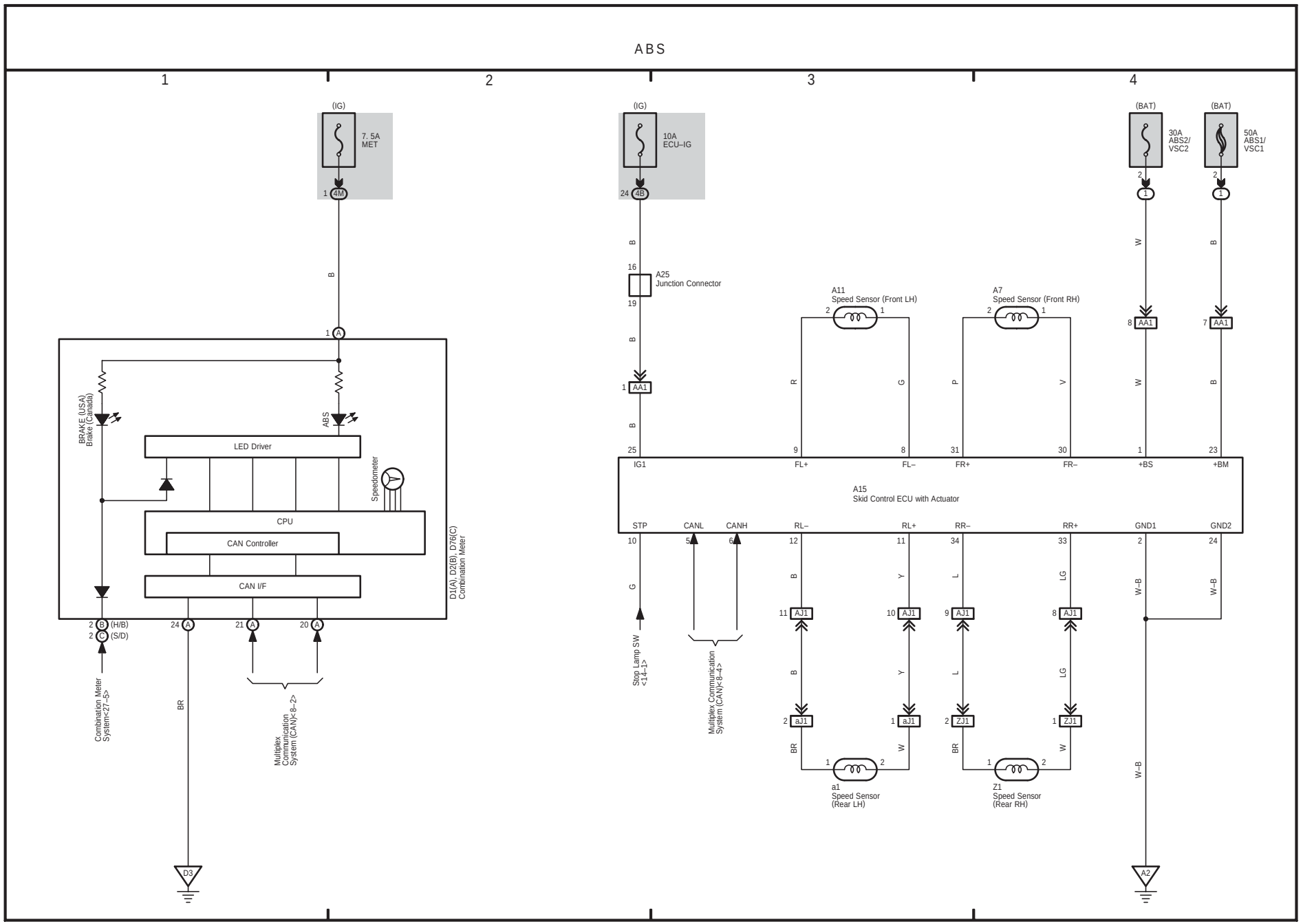
ABS
1
2
3
4
(IG)
7. 5A
MET
1 4M
B
1 A
BRAKE (USA)
Brake (Canada)
ABS
LED Driver
Speedometer
CPU
CAN Controller
CAN I/F
D1(A), D2(B), D76(C)
Combination Meter
2 B (H/B)
2 C (S/D)
24 A
21 A
20 A
Combination Meter System<27–5>
BR
Multiplex Communication System (CAN)<8–2>
D3
(IG)
10A
ECU–IG
24 4B
B
16
A25
Junction Connector
19
B
1 AA1
B
25
IG1
A11
Speed Sensor (Front LH)
2
1
R
G
9
8
FL+
FL–
A7
Speed Sensor (Front RH)
2
1
P
V
31
30
FR+
FR–
(BAT)
30A
ABS2/
VSC2
2
1
W
8 AA1
W
1
+BS
(BAT)
50A
ABS1/
VSC1
2
1
B
7 AA1
B
23
+BM
A15
Skid Control ECU with Actuator
STP
CANL
CANH
RL–
RL+
RR–
RR+
GND1
GND2
10
5
6
12
11
34
33
2
24
G
B
Y
L
LG
W–B
W–B
11 AJ1
10 AJ1
9 AJ1
8 AJ1
B
Y
L
LG
2 aJ1
1 aJ1
2 ZJ1
1 ZJ1
BR
W
BR
W
1
2
a1
Speed Sensor
(Rear LH)
1
2
Z1
Speed Sensor
(Rear RH)
W–B
A2
Stop Lamp SW
<14–1>
Multiplex Communication System (CAN)<8–4>

(Cont. next page)

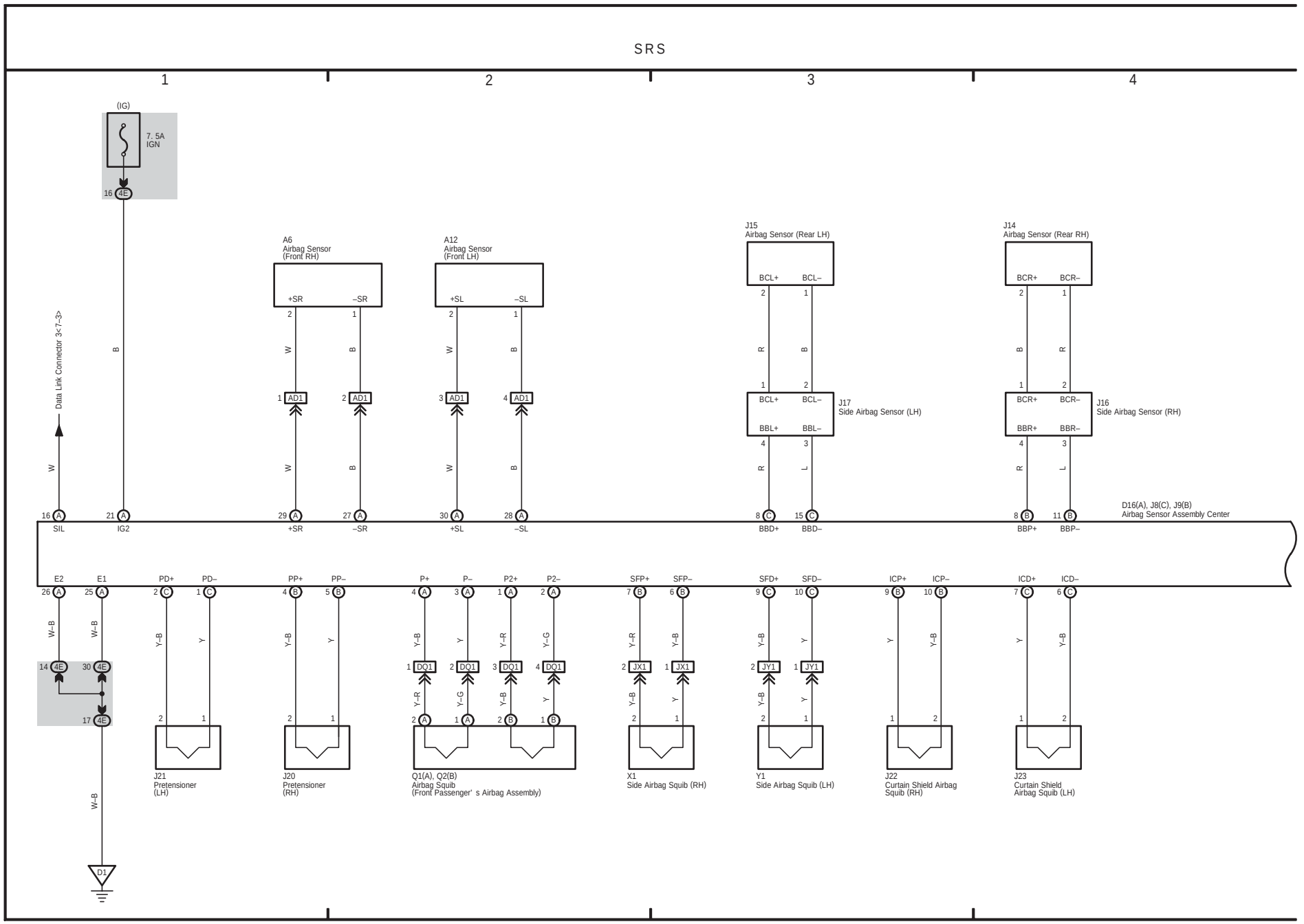

(Cont. next page)

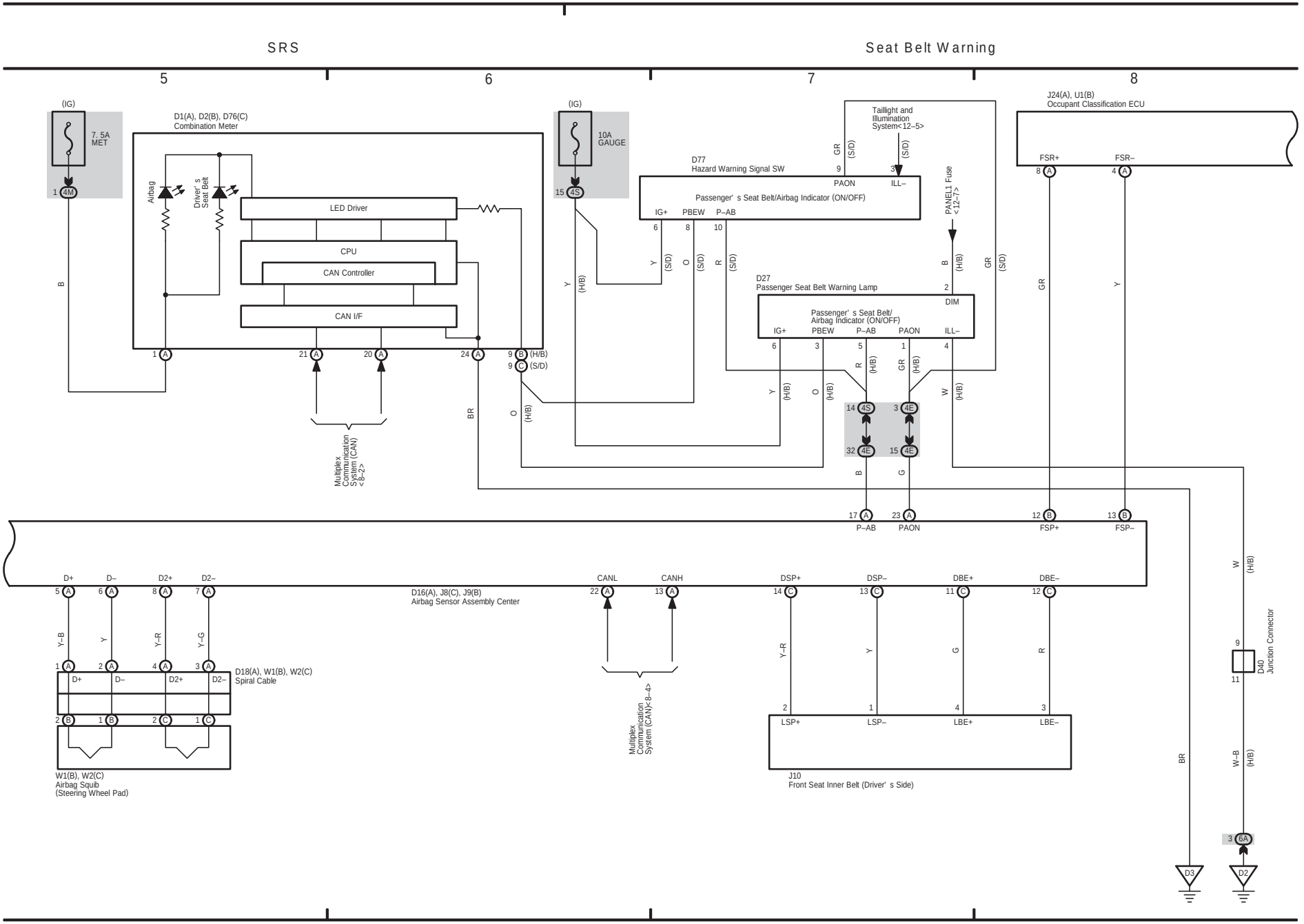

18 YARIS (Cont' d)

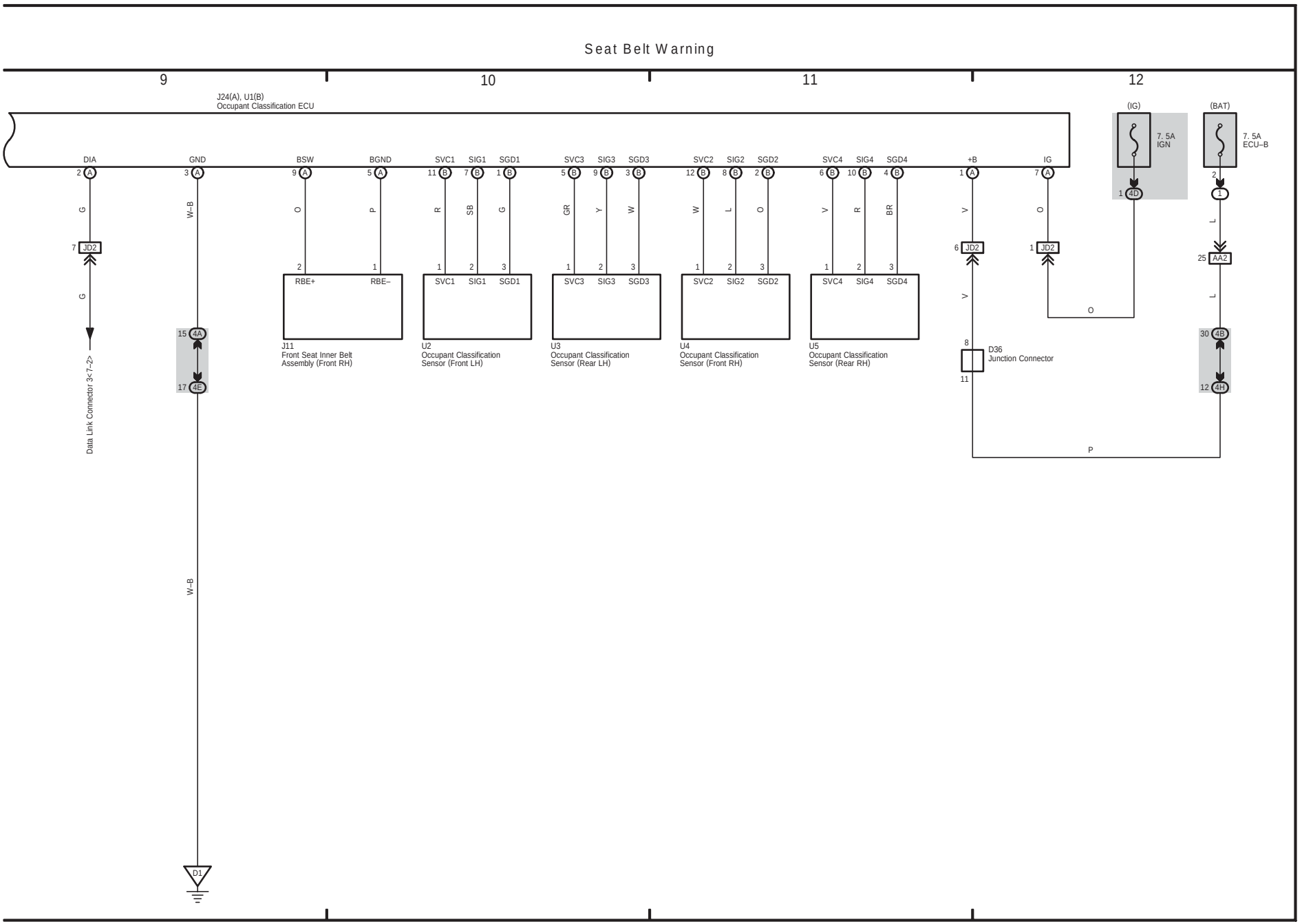

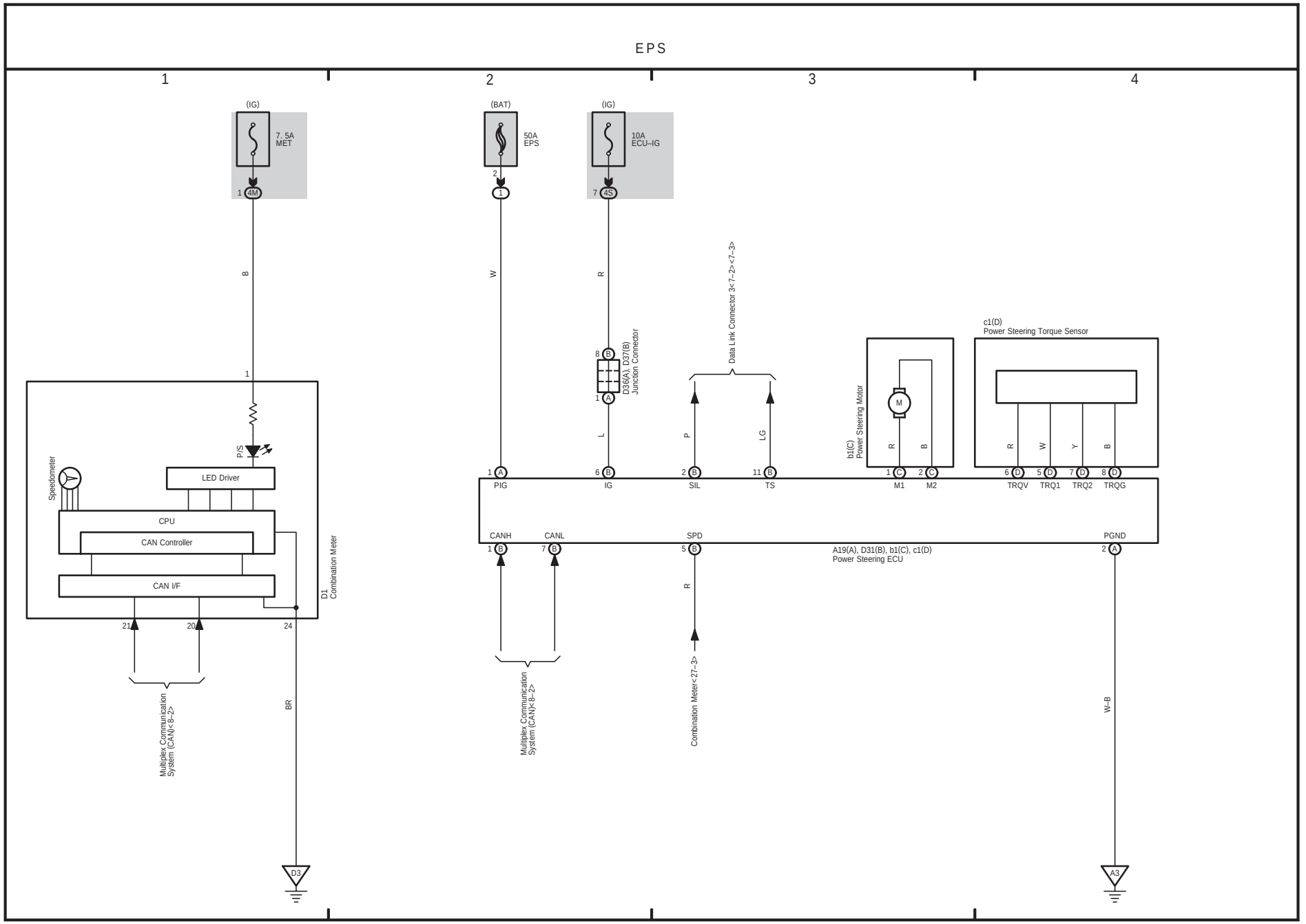
EPS
1
2
3
4
(IG)
7. 5A
MET
1 4M
B
1
P/S
Speedometer
LED Driver
CPU
CAN Controller
CAN I/F
D1
Combination Meter
21
20
24
Multiplex Communication System (CAN)<8–2>
BR
D3
(BAT)
50A
EPS
2
1
W
(IG)
10A
ECU–IG
7 4S
R
8 B
1 A
D36(A), D37(B)
Junction Connector
L
Data Link Connector 3<7–2><7–3>
P
LG
b1(C)
Power Steering Motor
M
R
B
c1(D)
Power Steering Torque Sensor
R
W
Y
B
1 A
PIG
6 B
IG
2 B
SIL
11 B
TS
1 C
M1
2 C
M2
6 D
TRQV
5 D
TRQ1
7 D
TRQ2
8 D
TRQG
CANH
CANL
SPD
PGND
1 B
7 B
5 B
2 A
A19(A), D31(B), b1(C), c1(D)
Power Steering ECU
Multiplex Communication System (CAN)<8–2>
R
Combination Meter<27–3>
W–B
A3

(Cont. next page)

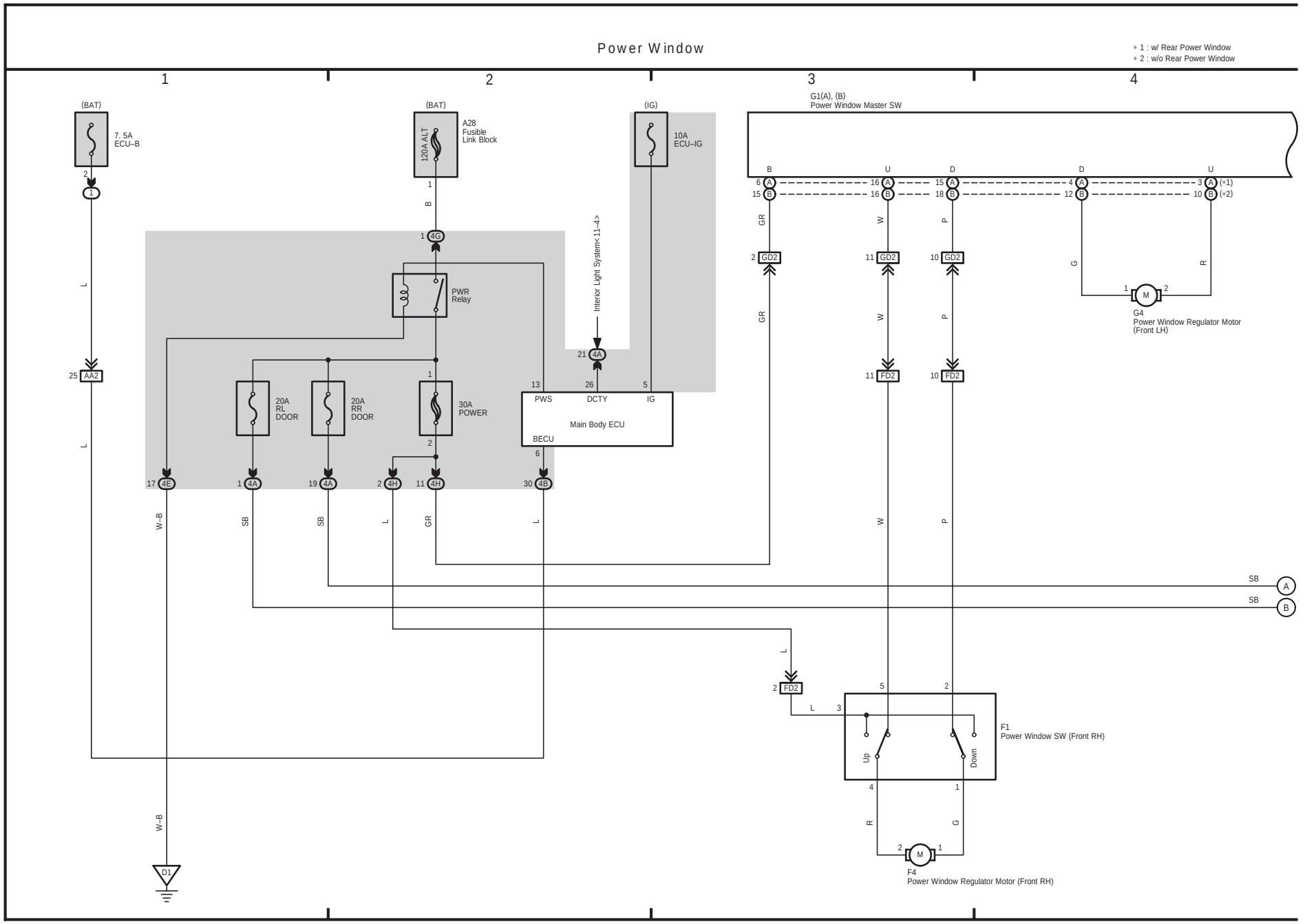

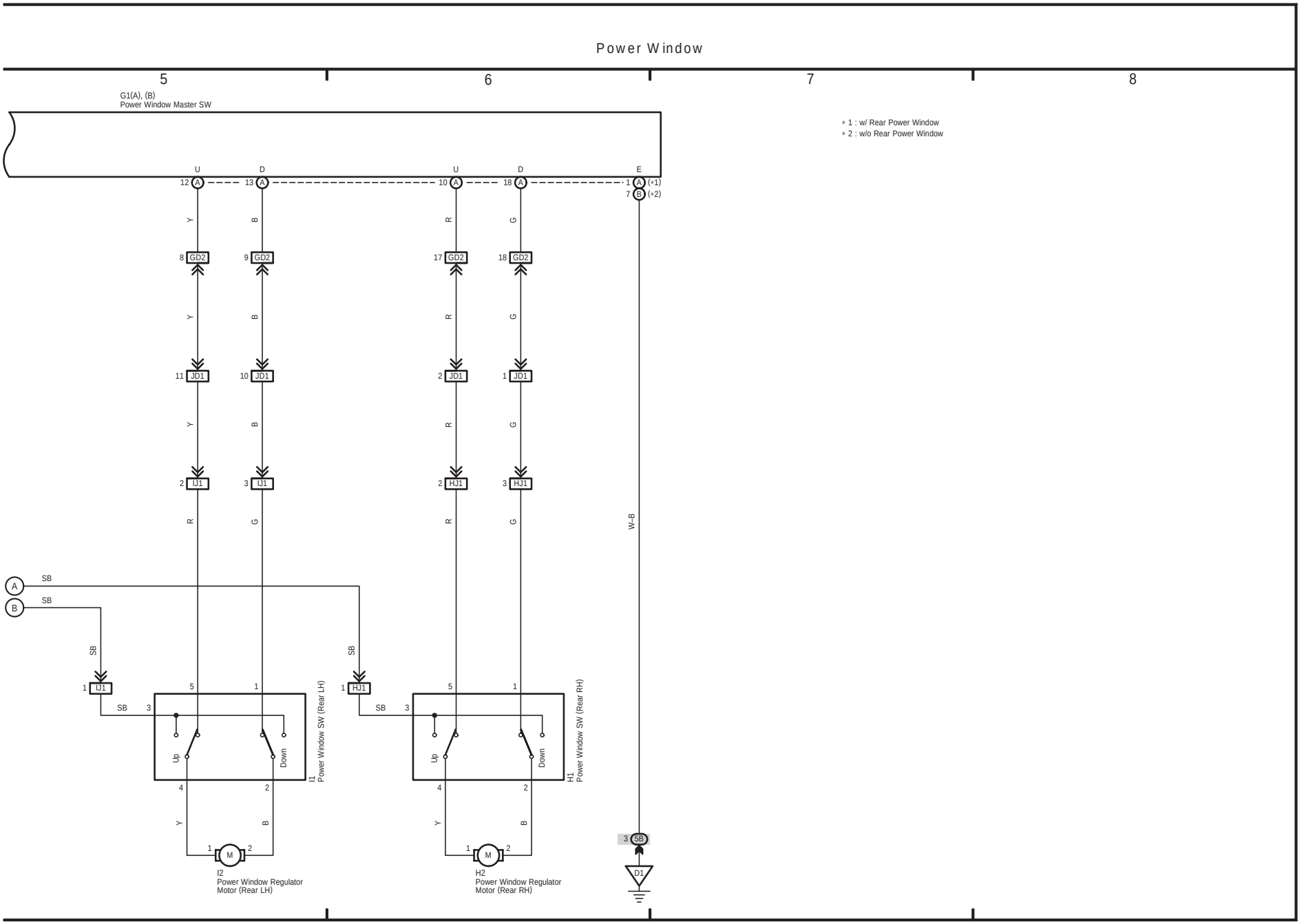
Power Window
5
6
7
8
G1(A), (B)
Power Window Master SW
* 1 : w/ Rear Power Window
* 2 : w/o Rear Power Window
U
D
U
D
E
12 A
13 A
10 A
18 A
1 A (*1)
7 B (*2)
Y
B
R
G
8 GD2
9 GD2
17 GD2
18 GD2
11 JD1
10 JD1
2 JD1
1 JD1
2 IJ1
3 IJ1
2 HJ1
3 HJ1
W-B
A
B
SB
SB
SB
SB
1 IJ1
1 HJ1
5
1
3
4
2
Up
Down
I1
Power Window SW (Rear LH)
H1
Power Window SW (Rear RH)
M
I2
Power Window Regulator
Motor (Rear LH)
H2
Power Window Regulator
Motor (Rear RH)
3 5B
D1

(Cont. next page)

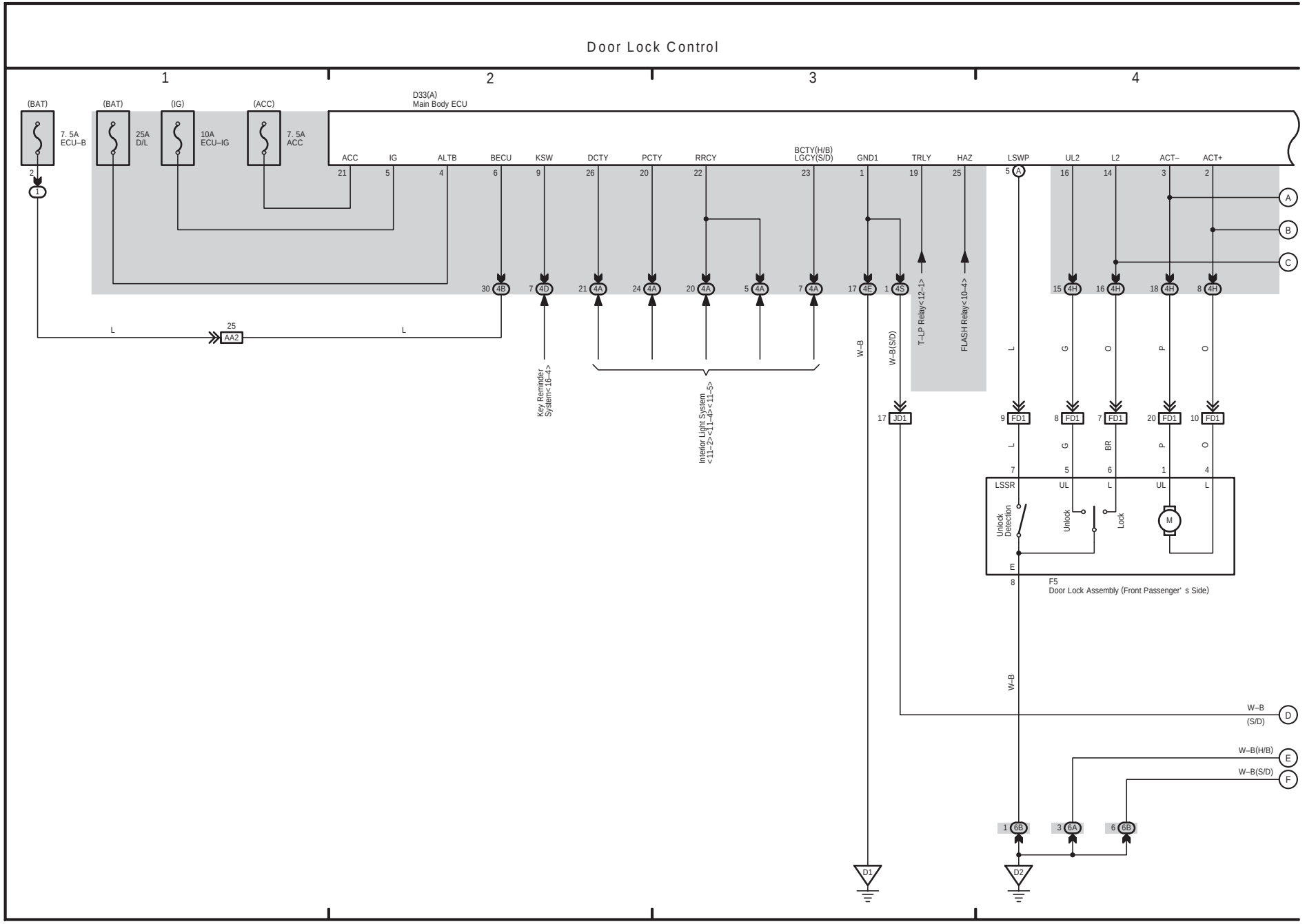

(Cont. next page)

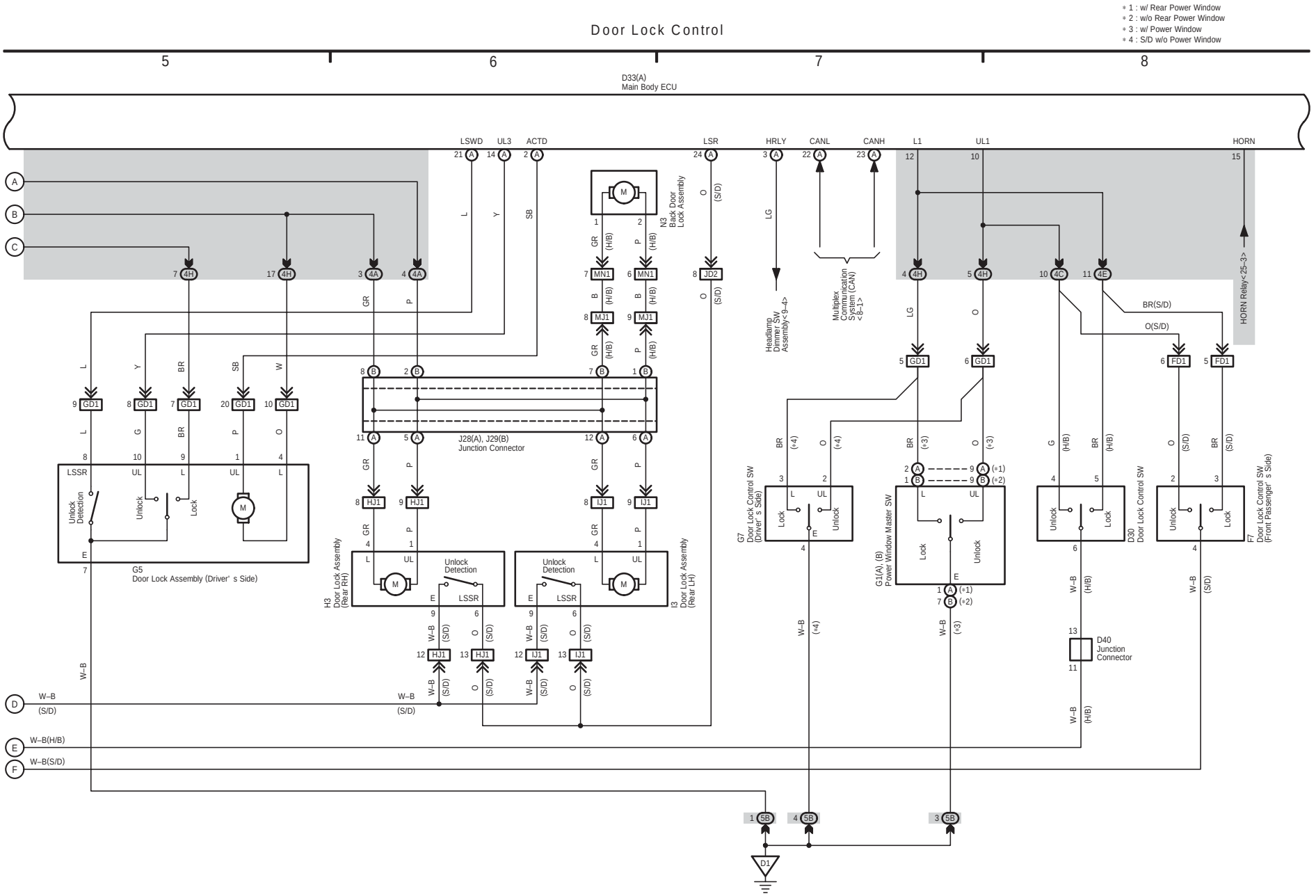

21 YARIS (Cont' d)

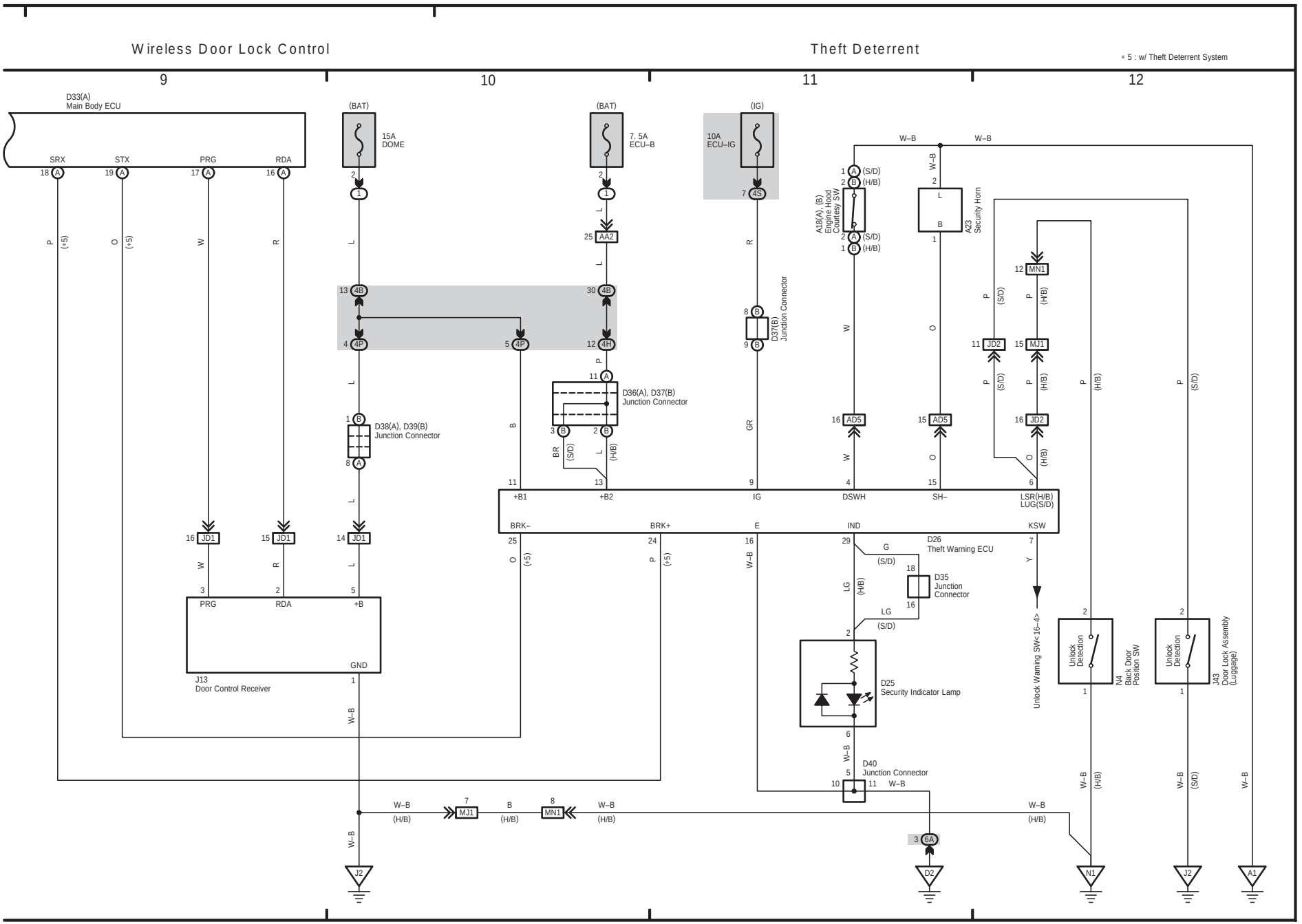

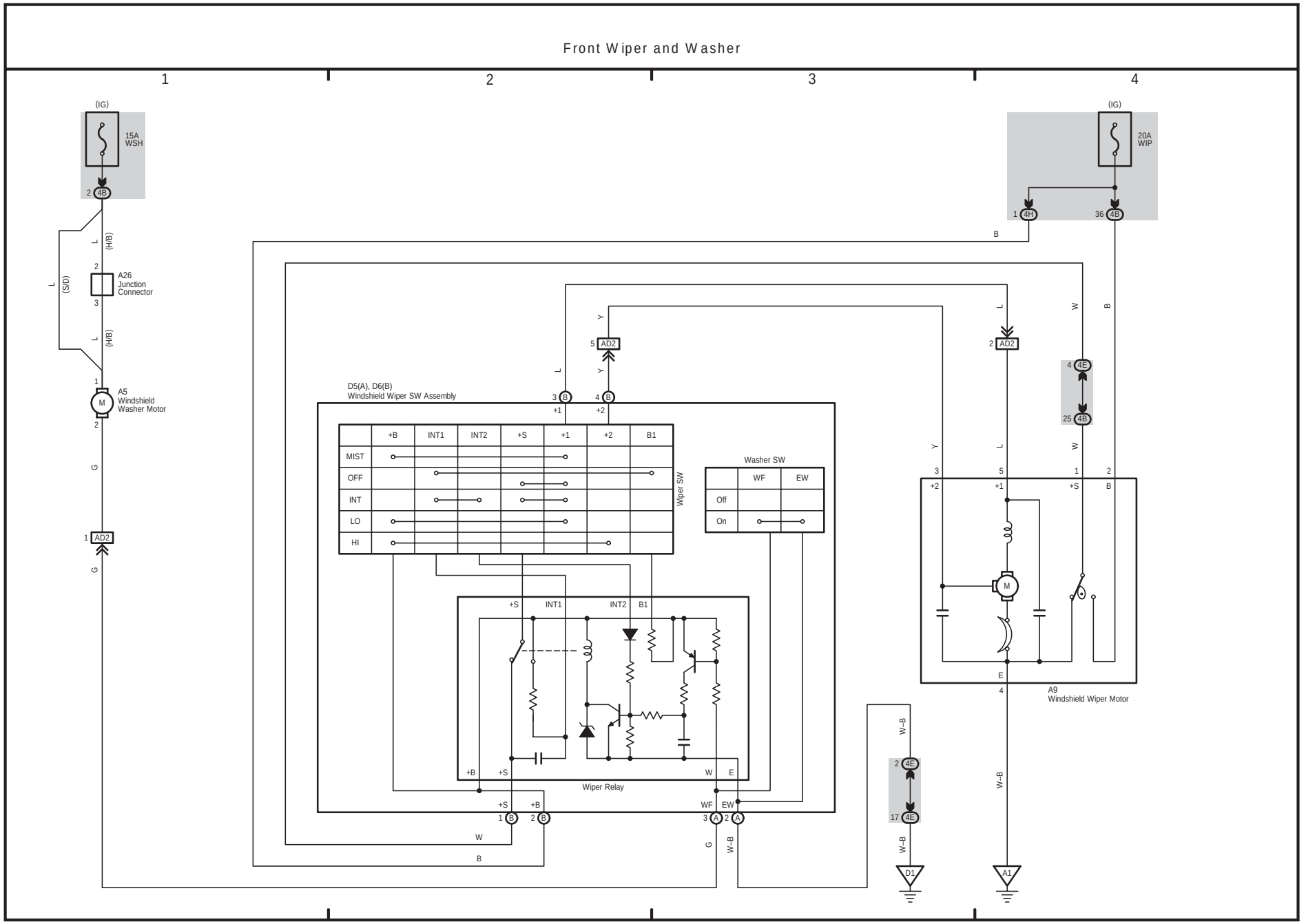
Front Wiper and Washer
1
2
3
4
(IG)
15A
WSH
2 4B
L
(H/B)
2
A26
Junction
Connector
3
L
(S/D)
L
(H/B)
1
A5
Windshield
Washer Motor
2
G
1 AD2
G
(IG)
20A
WIP
1 4H
36 4B
B
5 AD2
Y
L
2 AD2
L
W
B
4 4E
25 4B
D5(A), D6(B)
Windshield Wiper SW Assembly
3 B
+1
4 B
+2
+B
INT1
INT2
+S
+1
+2
B1
MIST
OFF
INT
LO
HI
Wiper SW
Washer SW
WF
EW
Off
On
+S
INT1
INT2
B1
+B
+S
W
E
Wiper Relay
+S
+B
1 B
2 B
WF
EW
3 A
2 A
W
B
G
W-B
Y
L
W
B
3
5
1
2
+2
+1
+S
B
M
E
4
A9
Windshield Wiper Motor
W-B
2 4E
17 4E
W-B
W-B
D1
A1

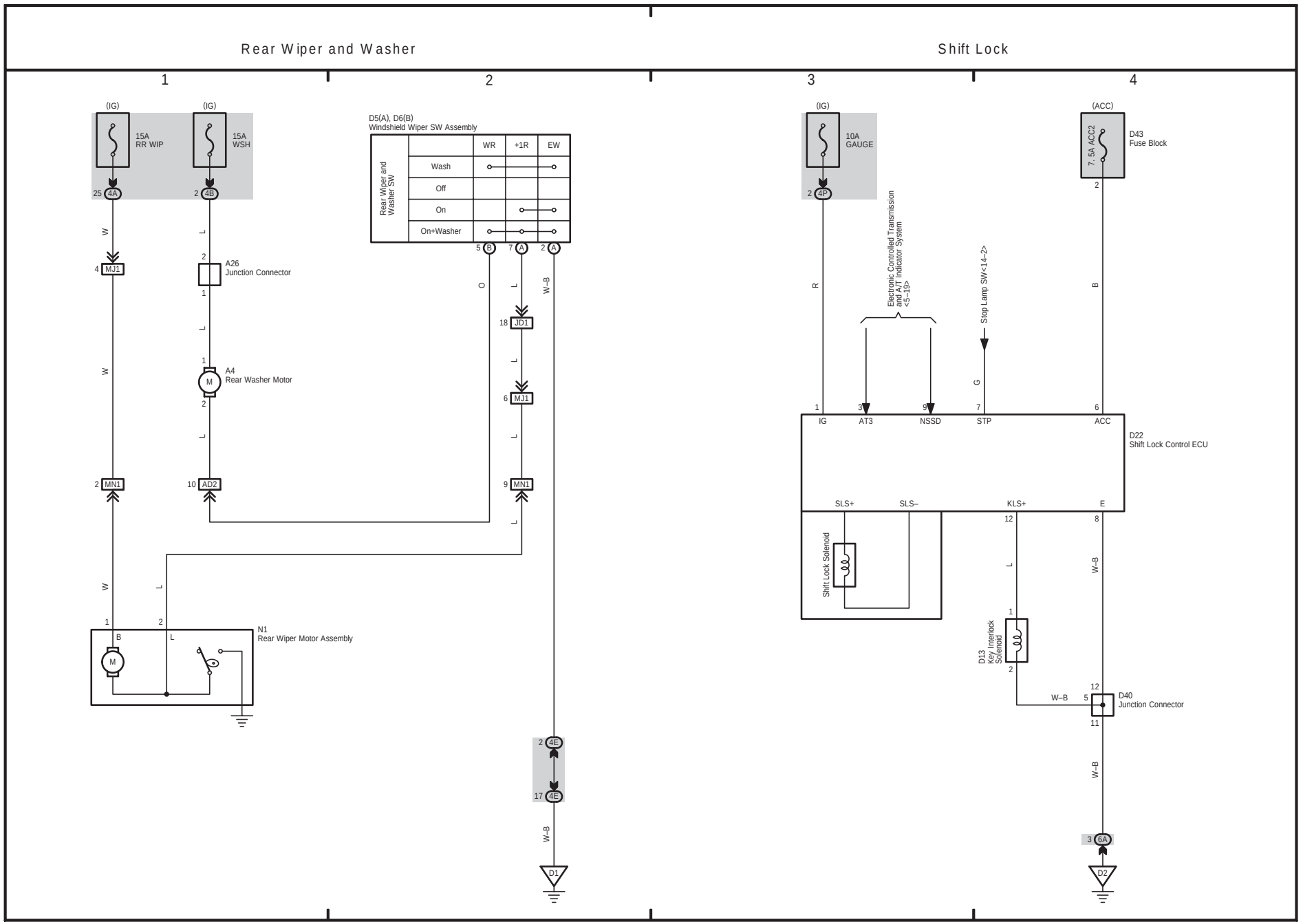
Rear Wiper and Washer
Shift Lock
1
2
3
4
(IG)
15A
RR WIP
(IG)
15A
WSH
25 4A
2 4B
W
L
4 MJ1
2
A26
Junction Connector
1
L
1
A4
Rear Washer Motor
M
2
L
W
2 MN1
10 AD2
L
W
L
1
2
B
L
M
N1
Rear Wiper Motor Assembly
D5(A), D6(B)
Windshield Wiper SW Assembly
Rear Wiper and Washer SW
WR
+1R
EW
Wash
Off
On
On+Washer
5 B
7 A
2 A
O
L
W–B
18 JD1
L
6 MJ1
L
L
9 MN1
L
2 4E
17 4E
W–B
D1
(IG)
10A
GAUGE
2 4P
R
(ACC)
7. 5A ACC2
D43
Fuse Block
2
B
Electronic Controlled Transmission and A/T Indicator System <5–19>
Stop Lamp SW<14–2>
G
1
IG
3
AT3
9
NSSD
7
STP
6
ACC
D22
Shift Lock Control ECU
SLS+
SLS–
KLS+
E
12
8
Shift Lock Solenoid
L
W–B
1
D13
Key Interlock Solenoid
2
12
W–B
5
D40
Junction Connector
11
W–B
3 6A
D2

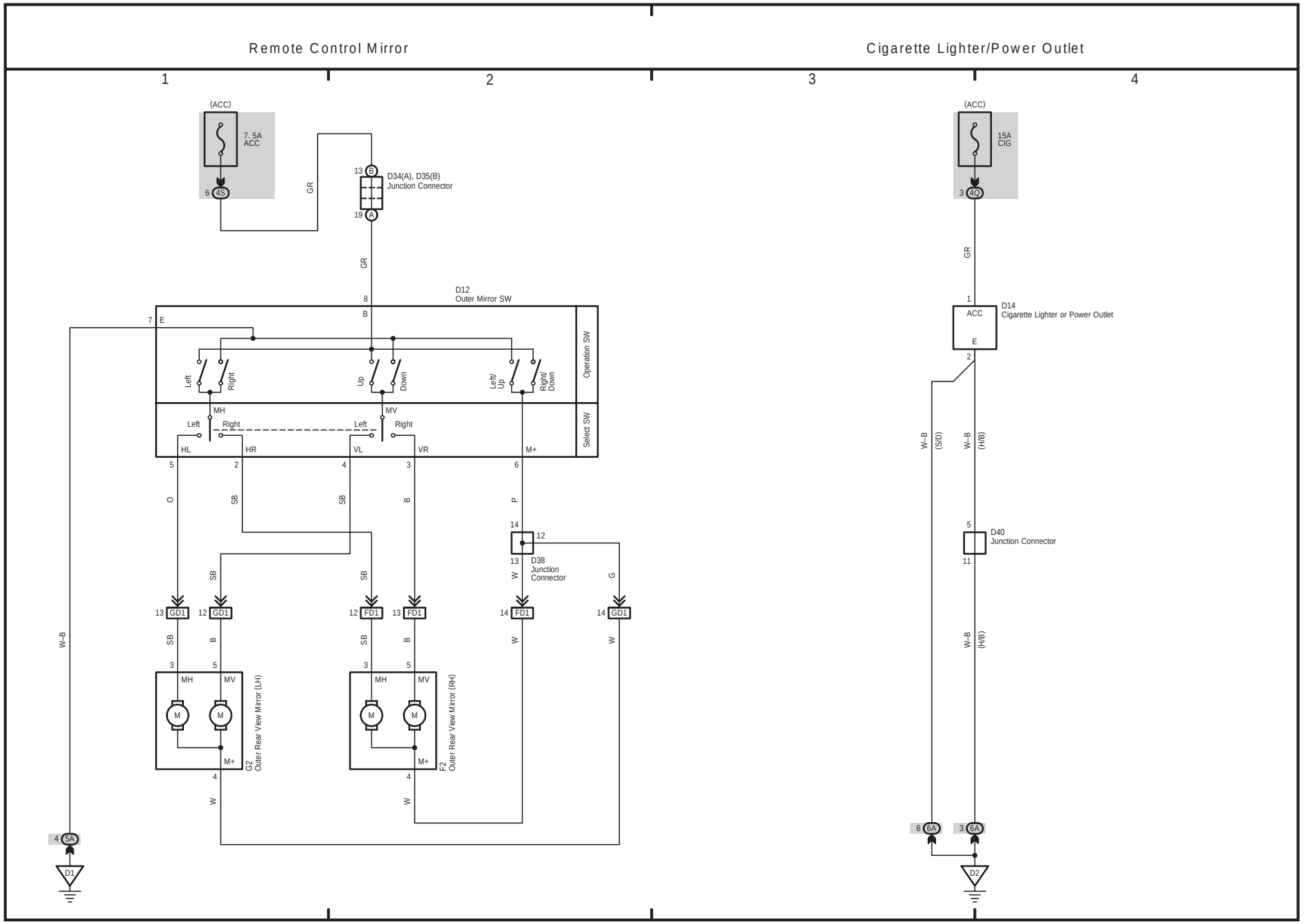
Remote Control Mirror
Cigarette Lighter/Power Outlet
1
2
3
4
(ACC)
7.5A
ACC
4S
GR
13 B
19 A
D34(A), D35(B)
Junction Connector
D12
Outer Mirror SW
8
B
7 E
Left
Right
Up
Down
Left/
Up
Right/
Down
Operation SW
Select SW
MH
MV
Left
Right
HL
HR
VL
VR
M+
5
2
4
3
6
O
SB
B
P
14
12
13
D38
Junction
Connector
W
G
GD1
FD1
W–B
MH
MV
M
G2
Outer Rear View Mirror (LH)
F2
Outer Rear View Mirror (RH)
4 5A
D1
(ACC)
15A
CIG
3 4Q
1
ACC
E
D14
Cigarette Lighter or Power Outlet
2
W–B
(S/D)
W–B
(H/B)
5
D40
Junction Connector
11
6 6A
3 6A
D2

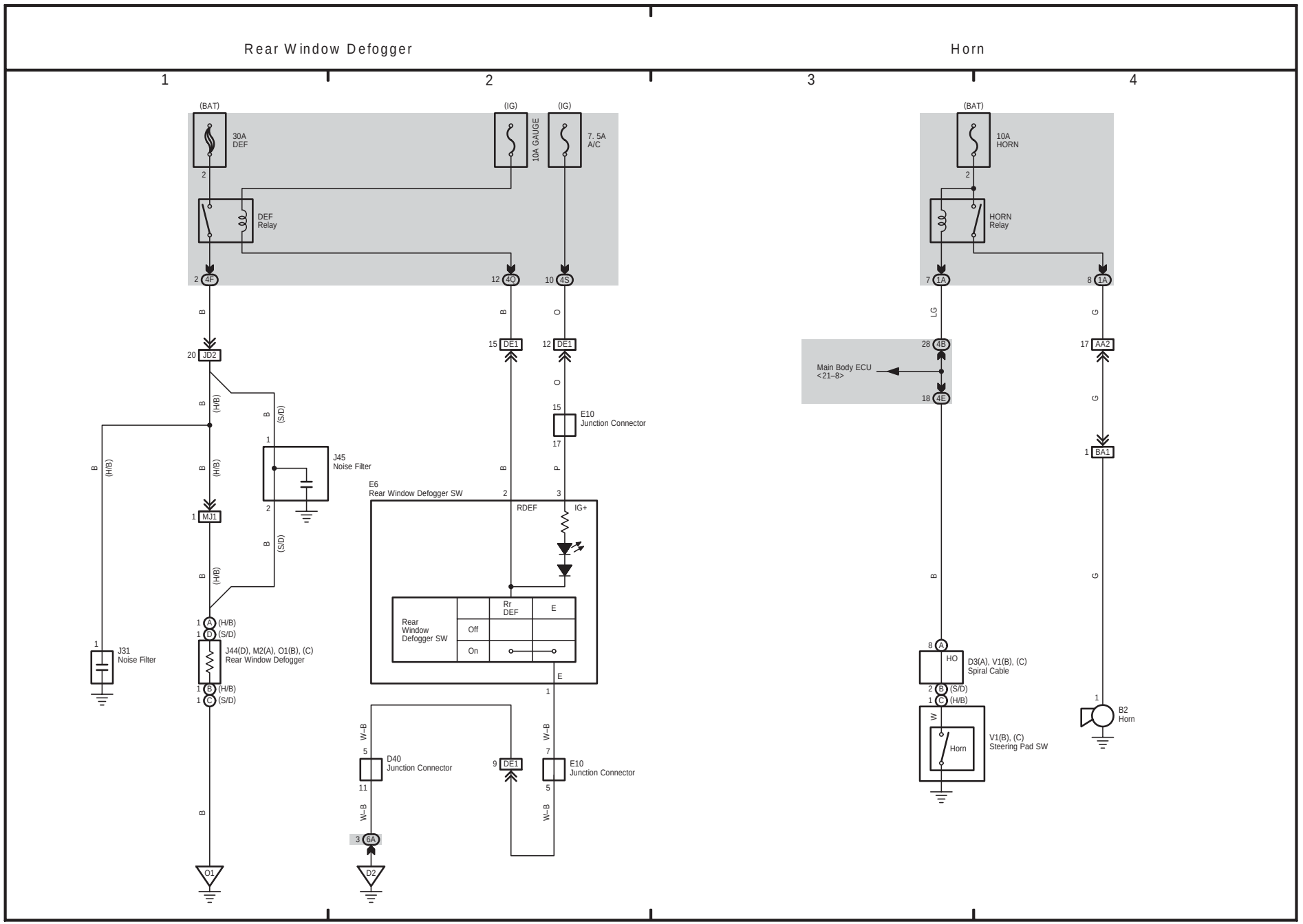
Rear Window Defogger
Horn
1
2
3
4
(BAT)
30A
DEF
(IG)
10A GAUGE
(IG)
7.5A
A/C
DEF
Relay
2 4F
12 4Q
10 4S
B
O
20 JD2
15 DE1
12 DE1
(H/B)
(S/D)
E10
Junction Connector
17
J45
Noise Filter
E6
Rear Window Defogger SW
RDEF
IG+
1 MJ1
P
Rr
DEF
E
Rear
Window
Defogger SW
Off
On
1 A (H/B)
1 D (S/D)
J31
Noise Filter
J44(D), M2(A), O1(B), (C)
Rear Window Defogger
1 B (H/B)
1 C (S/D)
W–B
5
D40
Junction Connector
11
9 DE1
7
E10
Junction Connector
5
3 6A
O1
D2
(BAT)
10A
HORN
HORN
Relay
7 1A
8 1A
LG
G
28 4B
17 AA2
Main Body ECU
<21–8>
18 4E
1 BA1
8 A
HO
D3(A), V1(B), (C)
Spiral Cable
2 B (S/D)
1 C (H/B)
W
Horn
V1(B), (C)
Steering Pad SW
1
B2
Horn

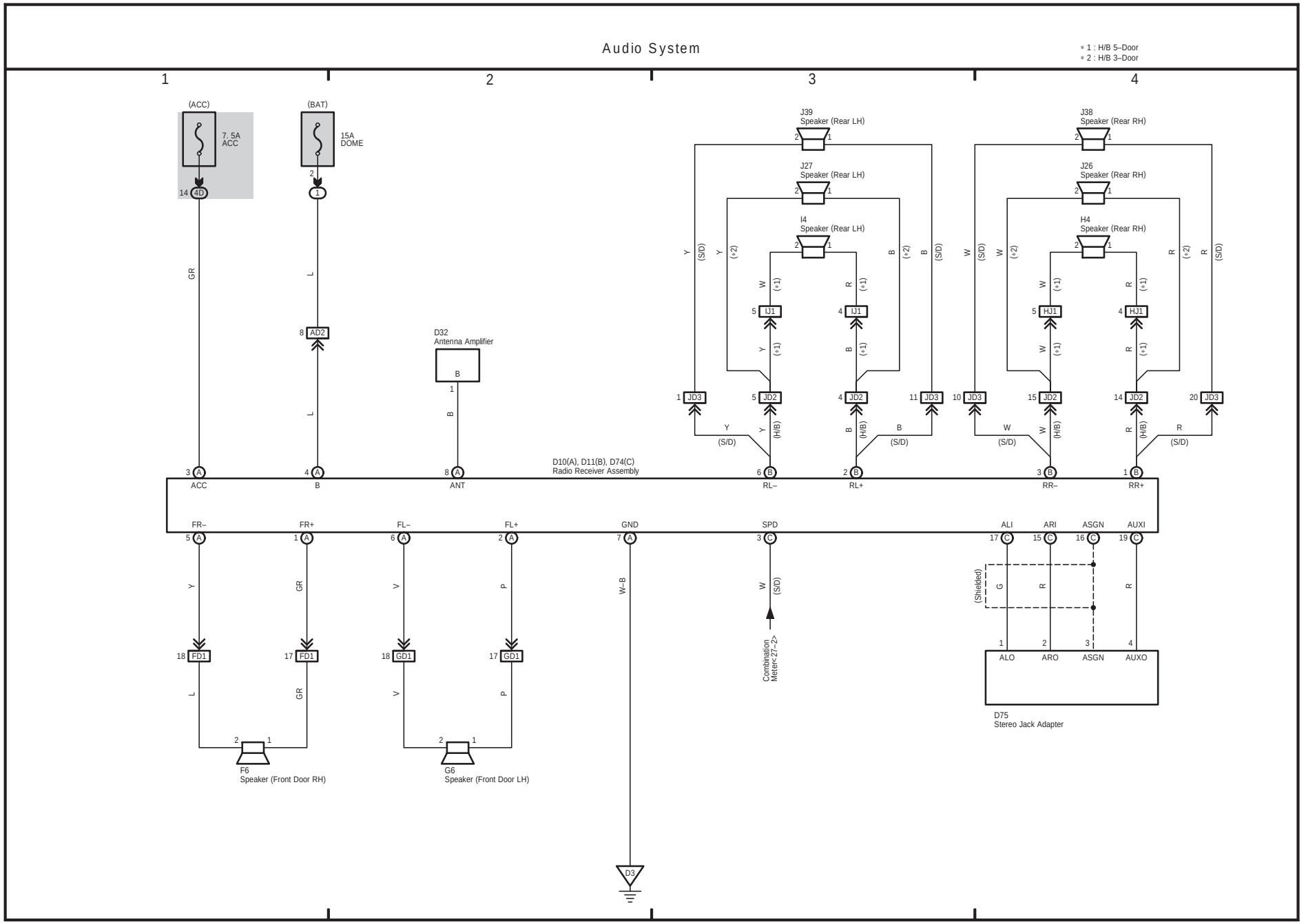
Audio System
* 1 : H/B 5–Door
* 2 : H/B 3–Door
1
2
3
4
(ACC)
(BAT)
7. 5A
ACC
15A
DOME
14 4D
2
1
GR
L
8 AD2
L
D32
Antenna Amplifier
B
1
B
J39
Speaker (Rear LH)
J27
Speaker (Rear LH)
I4
Speaker (Rear LH)
J38
Speaker (Rear RH)
J26
Speaker (Rear RH)
H4
Speaker (Rear RH)
Y (S/D)
Y (+2)
W (+1)
Y (+1)
B (+2)
B (S/D)
R (+1)
B (+1)
W (S/D)
W (+2)
R (+2)
R (S/D)
1 JD3
5 JD2
5 IJ1
4 IJ1
4 JD2
11 JD3
10 JD3
15 JD2
5 HJ1
4 HJ1
14 JD2
20 JD3
Y (S/D)
Y (H/B)
B (H/B)
B (S/D)
W (S/D)
W (H/B)
R (H/B)
R (S/D)
3 A ACC
4 A B
8 A ANT
D10(A), D11(B), D74(C)
Radio Receiver Assembly
6 B RL–
2 B RL+
3 B RR–
1 B RR+
FR–
FR+
FL–
FL+
GND
SPD
ALI
ARI
ASGN
AUXI
5 A
1 A
6 A
2 A
7 A
3 C
17 C
15 C
16 C
19 C
Y
GR
V
P
W–B
W (S/D)
(Shielded)
G
R
R
18 FD1
17 FD1
18 GD1
17 GD1
L
GR
V
P
Combination
Meter<27–2>
1 ALO
2 ARO
3 ASGN
4 AUXO
D75
Stereo Jack Adapter
2 1
F6
Speaker (Front Door RH)
2 1
G6
Speaker (Front Door LH)
D3

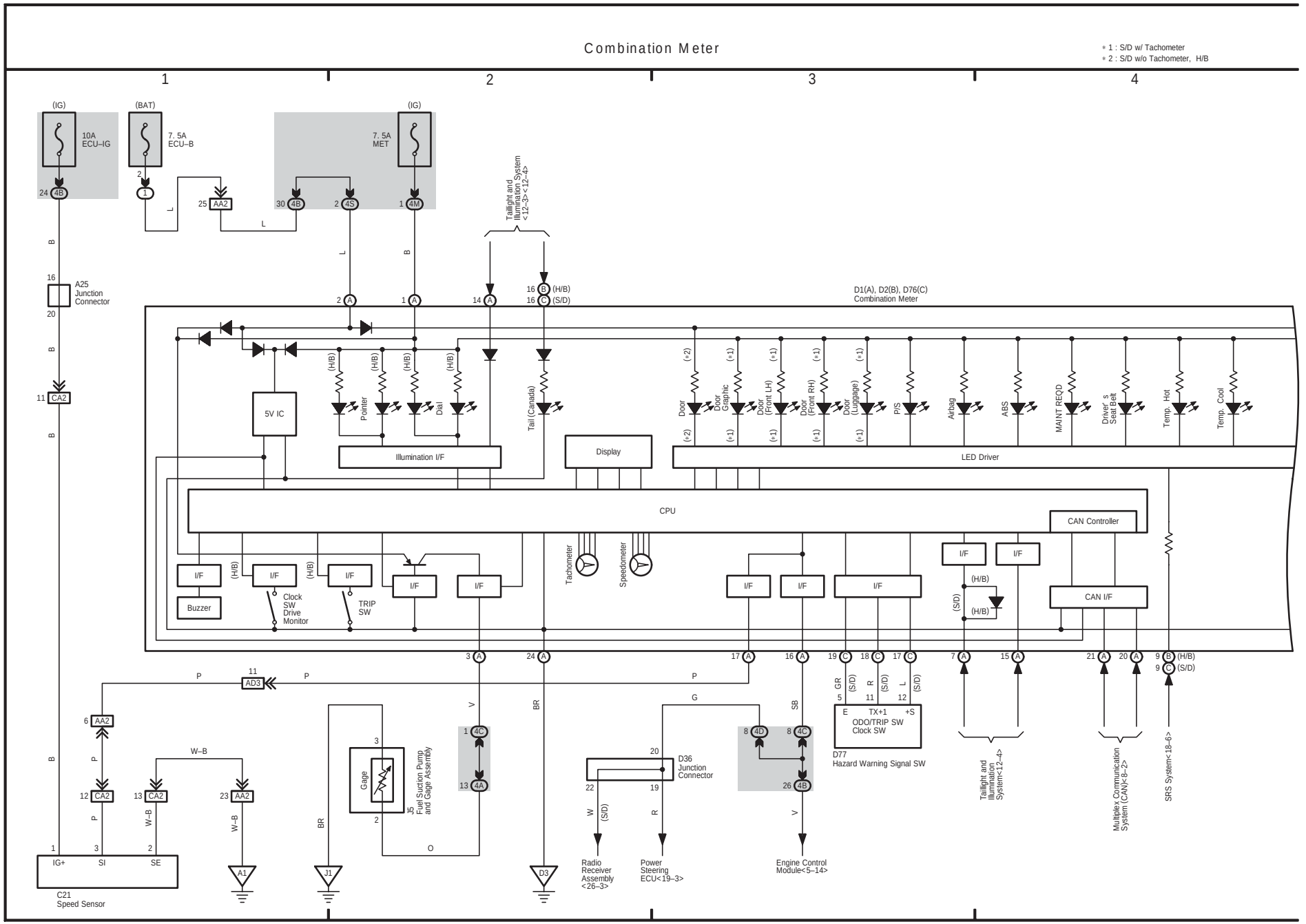
Combination Meter
* 1 : S/D w/ Tachometer
* 2 : S/D w/o Tachometer, H/B
1
2
3
4
(IG)
(BAT)
(IG)
10A ECU–IG
7. 5A ECU–B
7. 5A MET
Taillight and Illumination System <12–3>
A25 Junction Connector
D1(A), D2(B), D76(C) Combination Meter
5V IC
Pointer
Dial
Tail (Canada)
Illumination I/F
Display
LED Driver
Door
Door Graphic
Door (Front LH)
Door (Front RH)
Door (Luggage)
P/S
Airbag
ABS
MAINT REQD
Driver's Seat Belt
Temp. Hot
Temp. Cool
CPU
CAN Controller
CAN I/F
Buzzer
Clock SW Drive Monitor
TRIP SW
Tachometer
Speedometer
ODO/TRIP SW Clock SW
D77 Hazard Warning Signal SW
D36 Junction Connector
J5 Fuel Suction Pump and Gage Assembly
Gage
C21 Speed Sensor
IG+
SI
SE
Radio Receiver Assembly <26–3>
Power Steering ECU<19–3>
Engine Control Module<5–14>
Taillight and Illumination System<12–4>
Multiplex Communication System (CAN)<8–2>
SRS System<18–6>

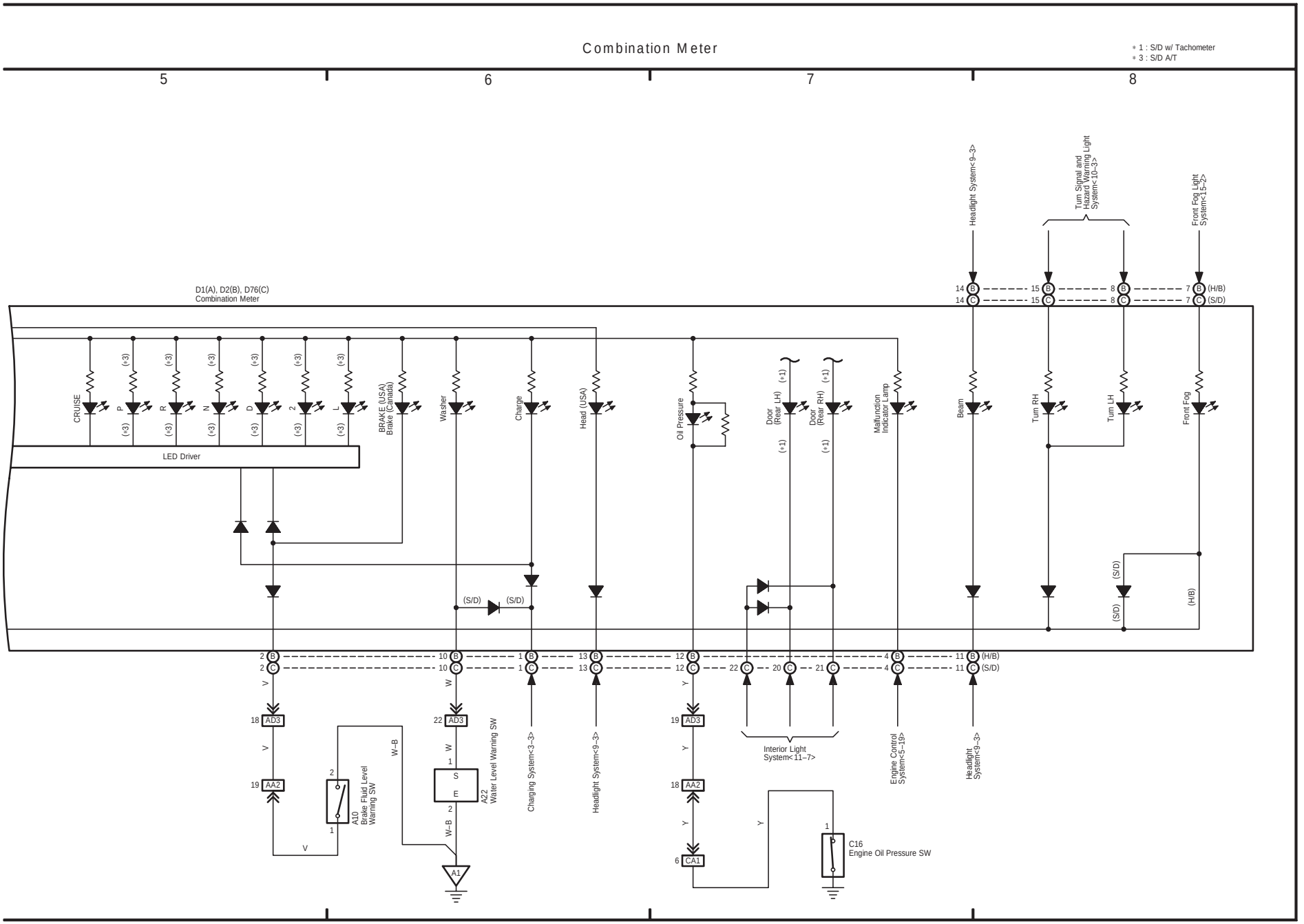
Combination Meter
* 1 : S/D w/ Tachometer
* 3 : S/D A/T
5
6
7
8
D1(A), D2(B), D76(C)
Combination Meter
CRUISE
P
R
N
D
2
L
BRAKE (USA)
Brake (Canada)
Washer
Charge
Head (USA)
Oil Pressure
Door (Rear LH)
Door (Rear RH)
Malfunction Indicator Lamp
Beam
Turn RH
Turn LH
Front Fog
LED Driver
Headlight System<9-3>
Turn Signal and Hazard Warning Light System<10-3>
Front Fog Light System<15-2>
(H/B)
(S/D)
AD3
AA2
CA1
A10
Brake Fluid Level Warning SW
A22
Water Level Warning SW
C16
Engine Oil Pressure SW
Charging System<3-3>
Headlight System<9-3>
Interior Light System<11-7>
Engine Control System<5-19>
Headlight System<9-3>
W-B
A1

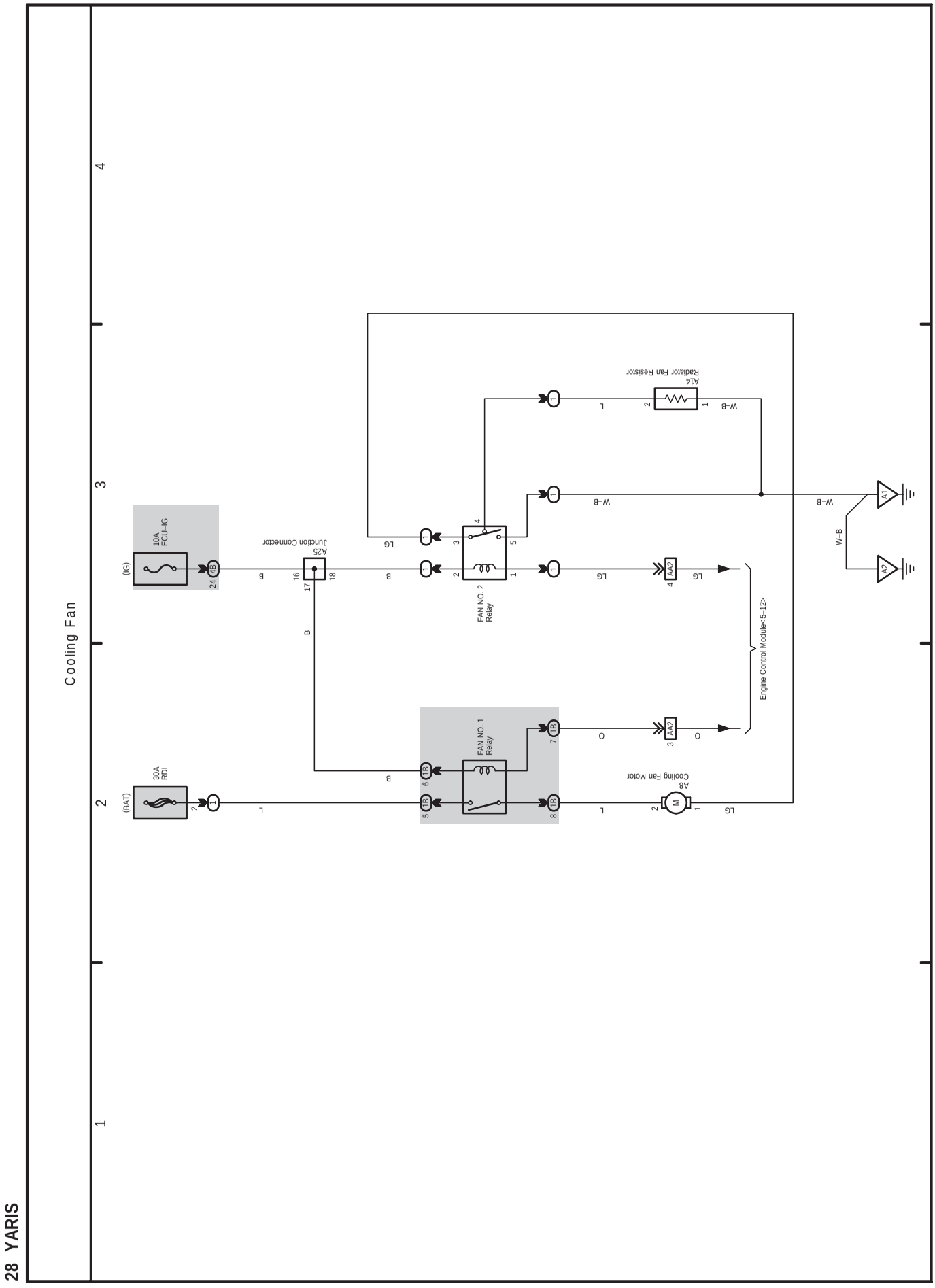
Cooling Fan
1
2
3
4
10A
ECU-IG
(IG)
24
4B
Junction Connector
A25
16
17
18
B
W-B
L
LG
O
FAN NO. 2
Relay
FAN NO. 1
Relay
30A
RDI
(BAT)
2
1B
5
6
7
8
AA2
3
4
Engine Control Module<5-12>
Radiator Fan Resistor
A14
Cooling Fan Motor
A8
M
A1
A2

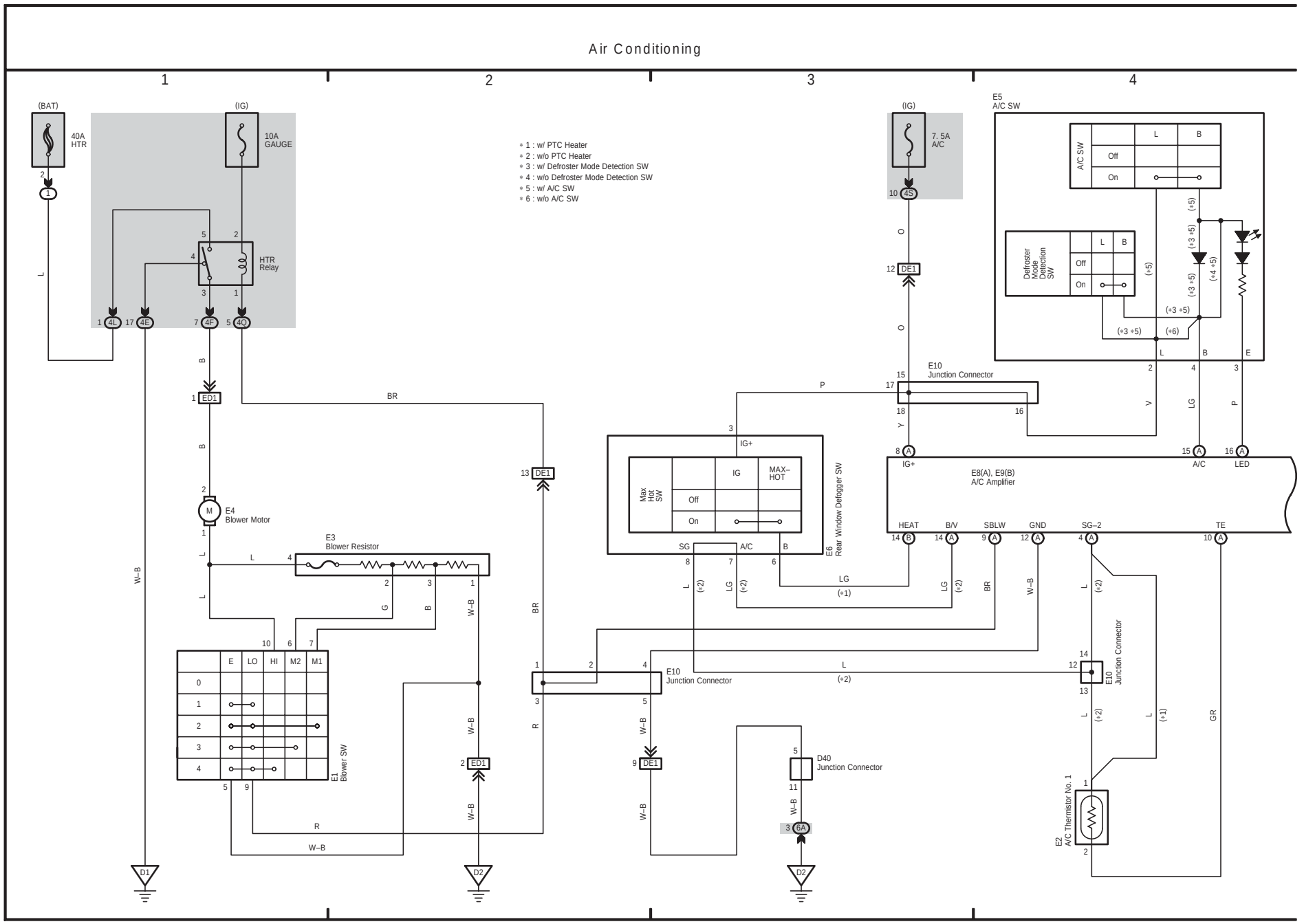
Air Conditioning
1
2
3
4
(BAT)
(IG)
40A HTR
10A GAUGE
HTR Relay
4L
4E
4F
4Q
ED1
DE1
E4 Blower Motor
E3 Blower Resistor
E1 Blower SW
E E
LO LO
HI HI
M2 M2
M1 M1
D1
D2
W–B
BR
L
B
G
R
∗1 : w/ PTC Heater
∗2 : w/o PTC Heater
∗3 : w/ Defroster Mode Detection SW
∗4 : w/o Defroster Mode Detection SW
∗5 : w/ A/C SW
∗6 : w/o A/C SW
(IG)
7. 5A A/C
4S
O
E5 A/C SW
A/C SW
Off
On
L
B
Defroster Mode Detection SW
(∗5)
(∗3 ∗5)
(∗4 ∗5)
(∗6)
E10 Junction Connector
P
V
Y
LG
E6 Rear Window Defogger SW
IG+
IG
MAX–HOT
Max Hot SW
SG
A/C
E8(A), E9(B) A/C Amplifier
HEAT
B/V
SBLW
GND
SG–2
TE
LED
(∗1)
(∗2)
D40 Junction Connector
E2 A/C Thermistor No. 1
GR

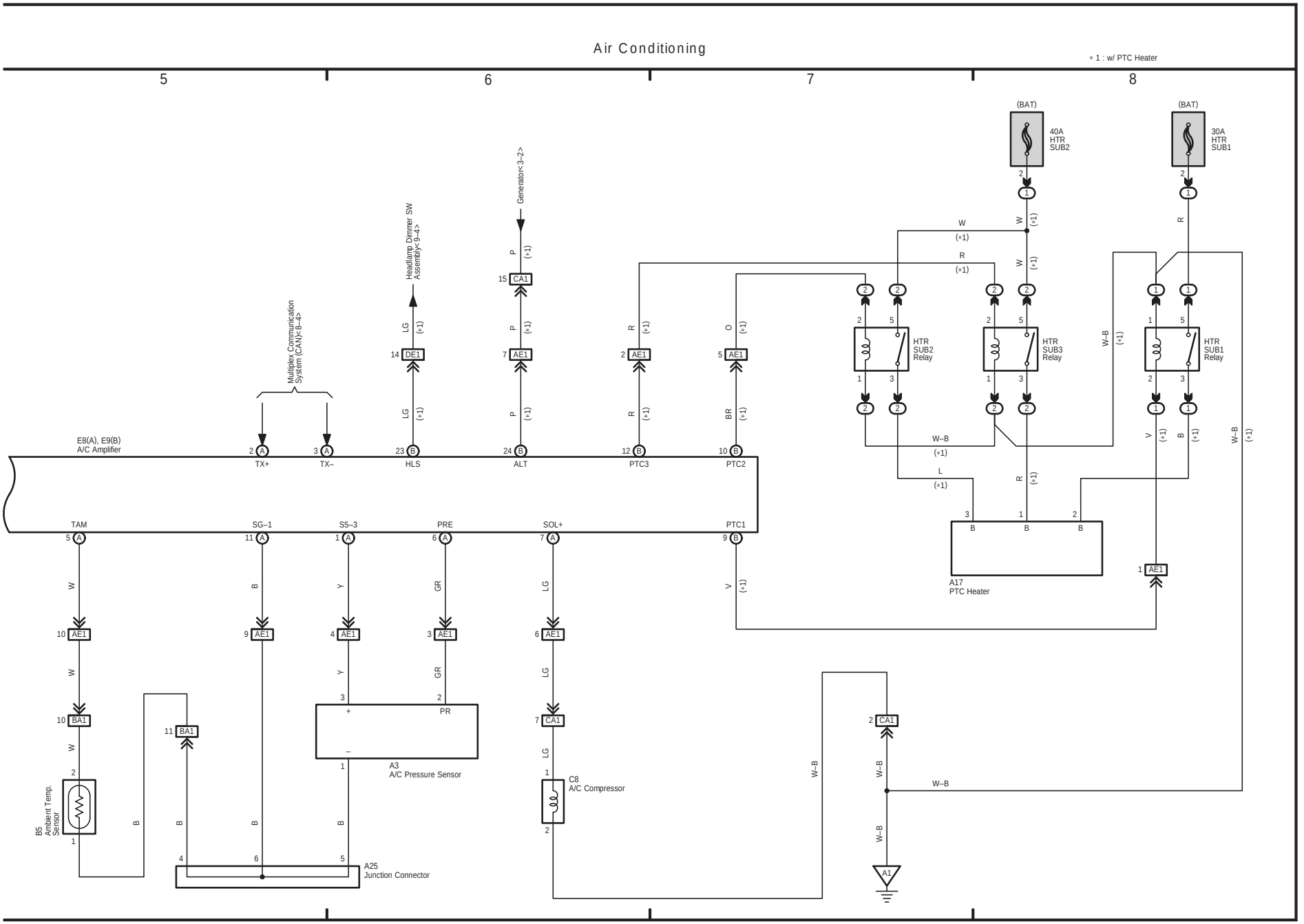
Air Conditioning
* 1 : w/ PTC Heater
5
6
7
8
(BAT)
40A HTR SUB2
30A HTR SUB1
HTR SUB2 Relay
HTR SUB3 Relay
HTR SUB1 Relay
Headlamp Dimmer SW Assembly<9–4>
Generator<3–2>
Multiplex Communication System (CAN)<8–4>
E8(A), E9(B) A/C Amplifier
TX+
TX–
HLS
ALT
PTC3
PTC2
TAM
SG–1
S5–3
PRE
SOL+
PTC1
A17 PTC Heater
B5 Ambient Temp. Sensor
A3 A/C Pressure Sensor
PR
C8 A/C Compressor
A25 Junction Connector
A1
W–B

FOREWORD

This repair manual has been prepared to provide essential information on body panel repair methods (including cutting and welding operations, but excluding painting) for the TOYOTA YARIS.

Applicable models: KSP90 series
NCP90, 91 series

This manual consists of body repair methods, exploded diagrams and illustrations of the body components and other information relating to body panel replacement such as handling precautions, etc. However, it should be noted that the front fenders of, this TOYOTA model are bolted on and require no welding.

When repairing, don't cut and join areas that are not shown in this manual. Only work on the specified contents to maintain body strength.

Body construction will sometimes differ depending on specifications and country of destination. Therefore, please keep in mind that the information contained herein is based on vehicles for general destinations.

For the repair procedures and specifications other than collision-damaged body components of the TOYOTA YARIS refer to the repair manuals.

If you require the above manuals, please contact your TOYOTA dealer.

All information contained in this manual is the most up-to-date at the time of publication. However, specifications and procedures are subject to change without prior notice.

TOYOTA MOTOR CORPORATION

VIEWS OF THIS TEXT

Scope of the repair work explanation

⁎ This text explains the welding panel replacement instructions from the vehicle's white body condition. We have abbreviated the explanations of the removal and reinstallation of the equipment parts up to the white body condition and of the installation, inspection, adjustment and final inspection of equipment parts after replacing the weld panel.

Section categories

⁎ This manual has been divided as shown below.

Section Title	Contents	Examples
INTRODUCTION	Explanation of general body repair. Views of weld panel replacement instructions.	Cautionary items. Views of weld panel replacement instructions.
BODY PANEL REPLACEMENT	Instructions for replacing the weld panels from the white body condition, from which bolted parts have been removed, with individual supply parts.	Front side member replacement. Quarter panel replacement.
BODY DIMENSIONS	Body aligning measurements.	Dimension diagrams.
PAINT ⁎COATING	Scope and type of anti-rust treatment, etc. together with weld panel replacement.	Under coating. Body sealer.

Contents omitted in this manual.

⁎ Make sure to perform the following essential procedures, although they are omitted in this manual.

(1) Jack and lift operations.

(2) Clean and wash removed parts, if necessary.

(3) Visual inspection.

GENERAL REPAIR INSTRUCTIONS

1. WORK PRECAUTIONS

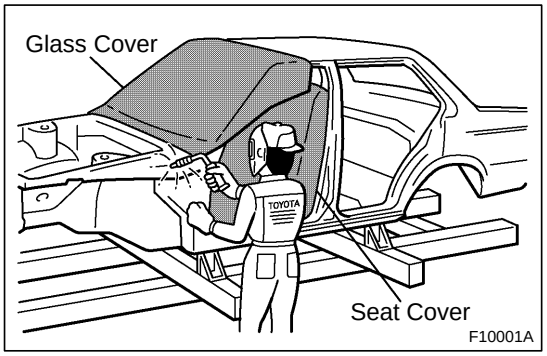

(a) VEHICLE PROTECTION

(1) When welding, protect the painted surfaces, windows, seats and carpet with heat resistant, fireproof covers.

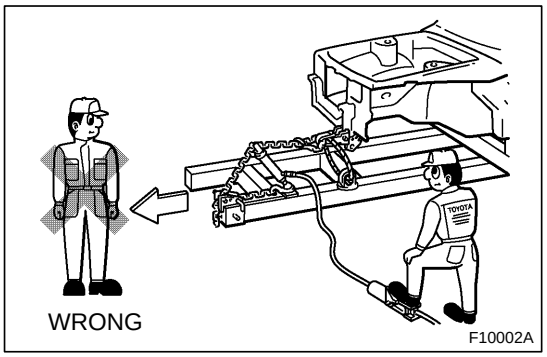

(b) SAFETY

(1) Never stand in a direct line with the chain when using a puller on the body or frame, and be sure to attach a safety cable.

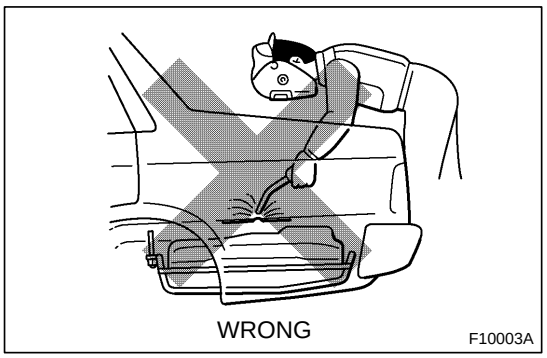

(2) Before performing repair work, check for fuel leaks. If a leak is found, be sure to close the opening completely.

(3) If it is necessary to use a flame in the area of the fuel tank, first remove the tank and plug the fuel line.

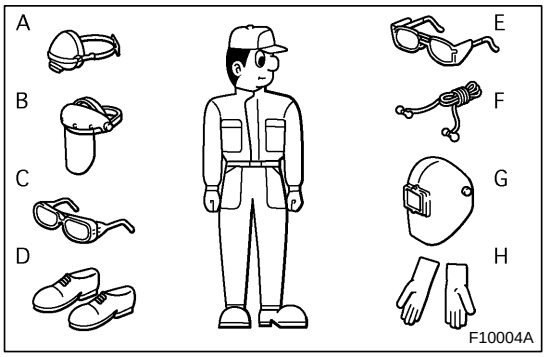

(c) SAFETY WORK CLOTHES

(1) In addition to the usual mechanic's wear, cap and safety shoes, the appropriate gloves, head protector, glasses, ear plugs, face protector, dust-prevention mask, etc. should be worn as the situation demands.

Code	Name
A	Dust-Prevention Mask
B	Face Protector
C	Eye Protector
D	Safety Shoes
E	Welder's Glasses
F	Ear Plugs
G	Head Protector
H	Welder's Gloves

2. HANDLING PRECAUTIONS OF PLASTIC BODY PARTS

(1) The repair procedure for plastic body parts must conform with the type of plastic material.

(2) Plastic body parts are identified by the codes in the following table.

(3) When repairing metal body parts adjoining plastic body parts (by brazing, frame cutting, welding, painting etc.), consideration must be given to the properties of the plastic.

Code	Material name	Heat* resistant temperature limit °C (°F)	Resistance to alcohol or gasoline	Notes
AAS	Acrylonitrile Acrylic Styrene	80 (176)	Alcohol is harmless if applied only for short time in small amounts (e.g., quick wiping to remove grease).	Avoid gasoline and organic or aromatic solvents.
ABS	Acrylonitrile Butadiene Styrene	80 (176)	Alcohol is harmless if applied only for short time in small amounts (e.g., quick wiping to remove grease).	Avoid gasoline and organic or aromatic solvents.
AES	Acrylonitrile Ethylene Styrene	80 (176)	Alcohol is harmless if applied only for short time in small amounts (e.g., quick wiping to remove grease).	Avoid gasoline and organic or aromatic solvents.
ASA	Acrylonitrile Styrene Acrylate	80 (176)	Alcohol is harmless if applied only for short time in small amounts (e.g., quick wiping to remove grease).	Avoid gasoline and organic or aromatic solvents.
CAB	Cellulose Acetate	80 (176)	Alcohol is harmless if applied only for short time in small amounts (e.g., quick wiping to remove grease).	Avoid gasoline and organic or aromatic solvents.
EPDM	Ethylene Propylene	100 (212)	Alcohol is harmless. Gasoline is harmless if applied only for short time in small amounts.	Most solvents are harmless but avoid dipping in gasoline, solvents, etc.
FRP	Fiber Reinforced Plastics	180 (356)	Alcohol and gasoline are harmless.	Avoid alkali.
EVA	Ethylene Acetate	70 (158)	Alcohol is harmless if applied only for short time in small amounts (e.g., quick wiping to remove grease).	Avoid gasoline and organic or aromatic solvents.
E/VAC	Ethylene/ Vinyl Acetate Copolymer Resin	70 (158)	Alcohol is harmless if applied only for short time in small amounts (e.g., quick wiping to remove grease).	Avoid gasoline and organic or aromatic solvents.
PA	Polyamide (Nylon)	80 (176)	Alcohol and gasoline are harmless.	Avoid battery acid.
PBT	Polybutylene Terephthalate	160 (320)	Alcohol and gasoline are harmless.	Most solvents are harmless.
PC	Polycarbonate	120 (248)	Alcohol is harmless.	Avoid gasoline, brake fluid, wax, wax removers and organic solvents. Avoid alkali.

*Temperatures higher than those listed here may result in material deformation during repair.

Code	Material name	Heat* resistant temperature limit °C (°F)	Resistance to alcohol or gasoline	Notes
PE	Polyethylene	80 (176)	Alcohol and gasoline are harmless.	Most solvents are harmless.
PET	Polyethylene Terephthalate	75 (167)	Alcohol and gasoline are harmless.	Avoid dipping in water.
PMMA	Polymethyl Methacrylate	80 (176)	Alcohol is harmless if applied only for short time in small amounts.	Avoid dipping or immersing in alcohol, gasoline, solvents, etc.
POM	Polyoxymethylene (Polyacetal)	100 (212)	Alcohol and gasoline are harmless.	Most solvents are harmless.
PP	Polypropylene	80 (176)	Alcohol and gasoline are harmless.	Most solvents are harmless.
PPF	Composite Reinforced Polypropylene	80 (176)	Alcohol and gasoline are harmless.	Most solvents are harmless.
PPO	Modified Polyphenylene Oxide	100 (212)	Alcohol is harmless.	Gasoline is harmless if applied only for quick wiping to remove grease.
PS	Polystyrene	60 (140)	Alcohol and gasoline are harmless if applied only for short time in small amounts.	Avoid dipping or immersing in alcohol, gasoline, solvents, etc.
PUR	Polyurethane	80 (176)	Alcohol is harmless if applied only for very short time in small amounts (e.g., quick wiping to remove grease).	Avoid dipping or immersing in alcohol, gasoline, solvents, etc.
PVC	Polyvinylchloride (Vinyl)	80 (176)	Alcohol and gasoline are harmless if applied only for short time in small amounts (e.g., quick wiping to remove grease).	Avoid dipping or immersing in alcohol, gasoline, solvents, etc.
SAN	Styrene Acrylonitrile	80 (176)	Alcohol is harmless if applied only for short time in small amounts (e.g., quick wiping to remove grease).	Avoid dipping or immersing in alcohol, gasoline, solvents, etc.
TPO	Thermoplastic Olefine	80 (176)	Alcohol is harmless. Gasoline is harmless if applied only for short time in small amounts.	Most solvents are harmless but avoid dipping in gasoline, solvents, etc.
TPU	Thermoplastic Polyurethane	80 (176)	Alcohol is harmless if applied only for short time in small amounts (e.g., quick wiping to remove grease).	Avoid dipping or immersing in alcohol, gasoline, solvents, etc.
TSOP	TOYOTA Super Olefine Polymer	80 (176)	Alcohol and gasoline are harmless.	Most solvents are harmless.
UP	Unsaturated Polyester	110 (233)	Alcohol and gasoline are harmless.	Avoid alkali.

*Temperatures higher than those listed here may result in material deformation during repair.

3. LOCATION OF PLASTIC BODY PARTS

Parts Name	Code
Front Bumper Cover	TSOP
Radiator Grille	TSOP
Headlight	PC/PP
Fog Light	TSOP
Front Pillar Upper Cover	AES
Side Turn Signal Light	PMMA/PC/ABS
Cowl Top Ventilator Louver	TSOP/PP/PE
Rear Body Mudguard	PP
Door Outside Handle	PA/PC/PBT
Outer Rear View Mirror	PP/PA/ABS ⁎ASA
Front Door Window Frame Front Moulding	ASA
Front Spoiler Cover	TSOP
Front Fender Mudguard	PP
Back Door Outside Handle	PA
License Plate Light	PC
Rear Combination Light	PMMA/ASA
Rear Bumper Cover	TSOP

HINT:
⁎ Resin material differs depending on model.
/ Made up of 2 or more kinds of materials.

HOW TO USE THIS MANUAL

1. BODY PANEL REPLACEMENT IN THIS MANUAL

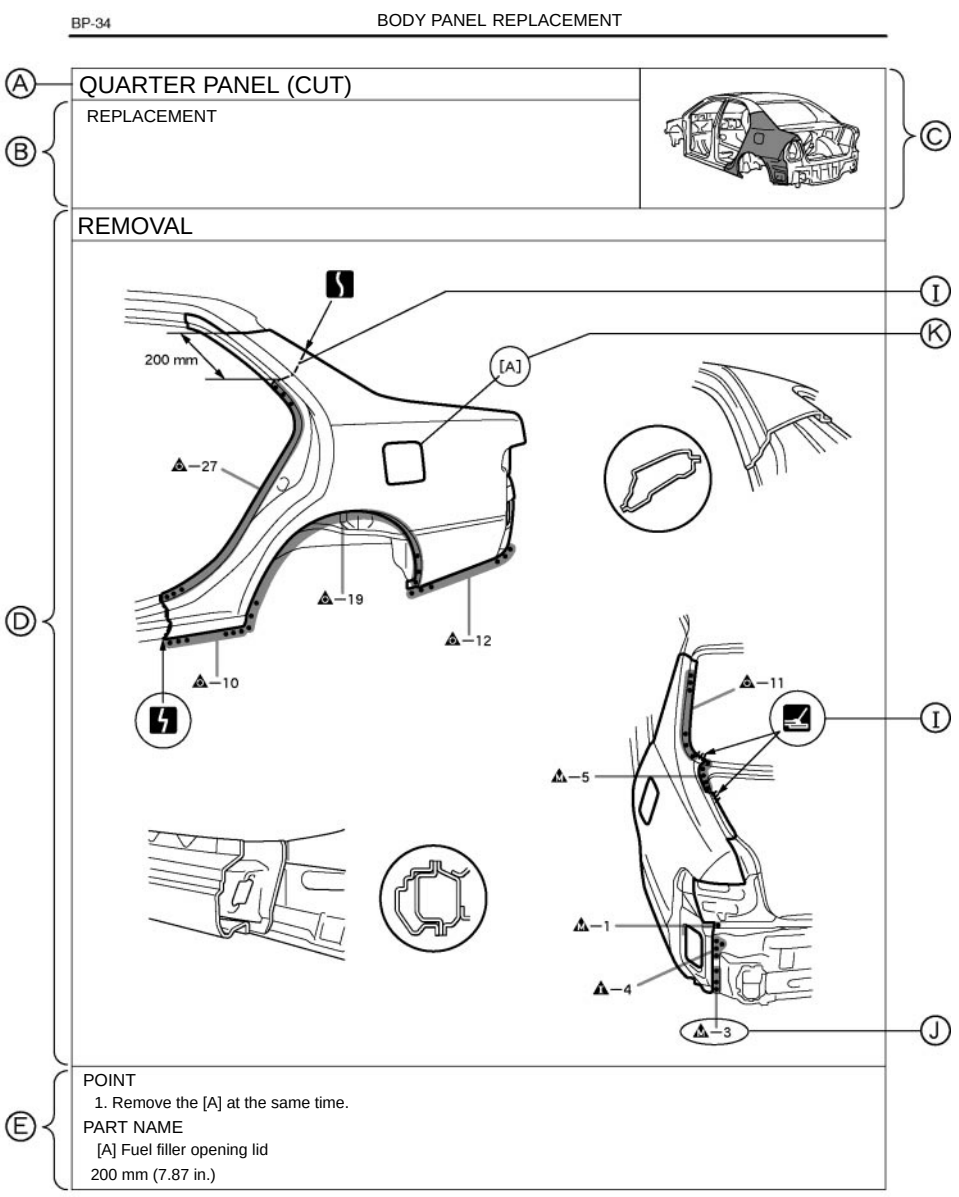

Ⓐ : REPLACEMENT PART AND METHOD

QUARTER PANEL (CUT)

- Replacement part
- Replacement method
  - (ASSY)...Assembly replacement
  - (CUT)...Major cutting (less than 1/2 of part used)
  - (CUT-H)...Half cutting (about 1/2 of part used)
  - (CUT-P)...Partial cutting (most of part used)

Ⓑ : REMOVAL CONDITIONS

Ⓒ : PART LOCATION

Ⓓ : REMOVAL DIAGRAM
Describes in detail the removal of the damaged part involving repair by cutting.

Ⓔ : REMOVAL GUIDE
Provides additional information to more efficiently help you perform the removal.

F13890A

INSTALLATION
- Temporarily install the new parts and measure each part of the new parts in accordance with the body dimension diagram. (See the body dimension diagram)
- Inspect the fitting of the related parts around the new parts before welding. This affects the appearance of the finish.
- After welding, apply the polyurethane foam to the corresponding parts.
- After welding, apply body sealer and under-coating to the corresponding parts.
- After applying the top coat layer, apply anti-rust agent to the inside of the necked section structural weld spots.

Ⓕ

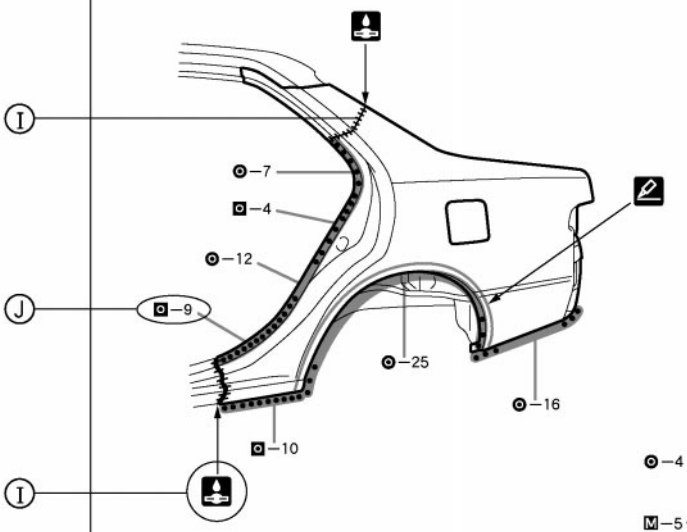

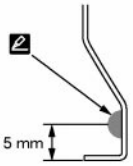

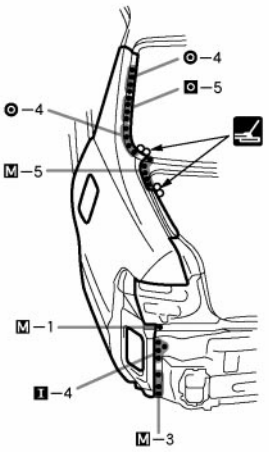

Ⓖ

POINT
1. Before temporarily installing the new parts, apply sealer to the wheel arch.

HINT
1) Apply body sealer about 5 mm (0.20 in.) front the flange, avoiding any oozing.
2) Apply sealer evenly, about 3−4 mm (0.12−0.16 in.) in diameter
3) For other sealing points, refer to section PC.

Ⓗ

Ⓕ : INSTALLATION CONDITIONS

Ⓖ : INSTALLATION DIAGRAM
Describes in detail the installation of the new parts involving repair by welding and/or cutting, but excluding painting.

Ⓗ : INSTALLATION GUIDE
Provides additional information to more efficiently help you perform the installation.

Ⓘ : SYMBOLS
(See page IN-7)

Ⓙ : INSTALLATION OF WELD POINTS
Weld method and panel position symbols (See page IN-9)

Ⓚ : PART NAME

F13891A

2. SYMBOLS

The following symbols are used in the welding diagrams in section BP of this manual to indicate cutting areas and the types of weld required.

SYMBOLS		MEANING	ILLUSTRATION
		CUT AND JOIN LOCATION (Saw Cut)	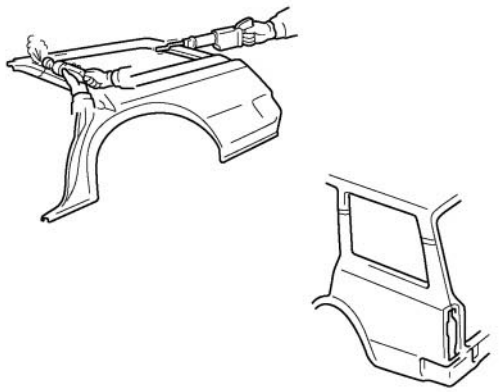
		CUT AND JOIN LOCATION (Cut Location for Supply Parts)	
		CUT LOCATION	
		CUT WITH DISC SANDER, ETC.	
		BRAZE (Removal)	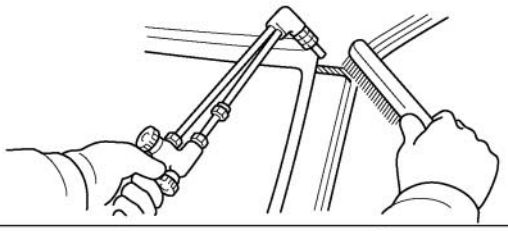
		BRAZE (Installation)	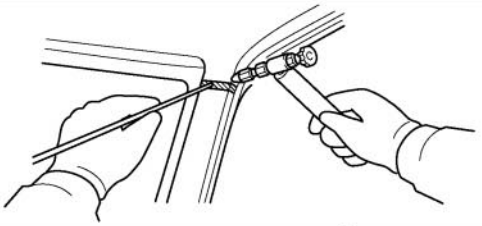
	–	WELD POINTS	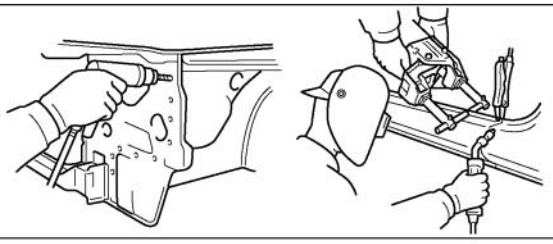
	–	SPOT WELD OR MIG PLUG WELD (See page IN-9)	
		CONTINUOUS MIG WELD (BUTT WELD)	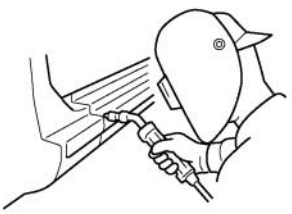
		CONTINUOUS MIG WELD (TACK WELD)	
		BODY SEALER	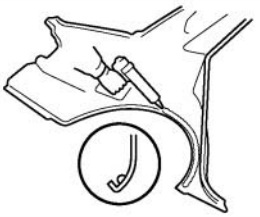 F13893A

SYMBOLS		MEANING	ILLUSTRATION
—		Assembly Mark	—
	—	BODY SEALER (Flat Finishing)	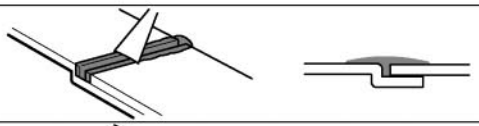
	—	BODY SEALER (No Flat Finishing)	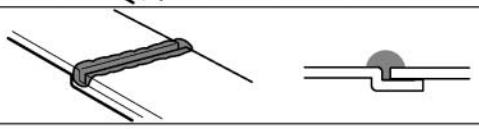

F13894A

3. ILLUSTRATION OF WELD POINT SYMBOLS

EXAMPLE:

REMOVAL

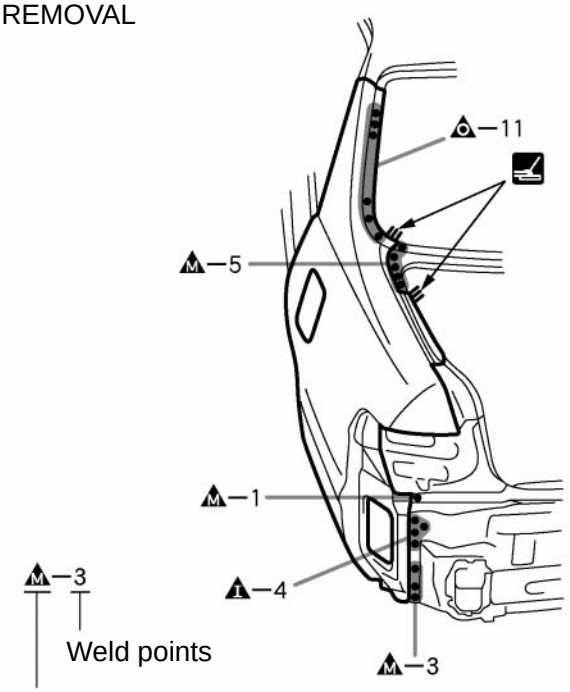

INSTALLATION

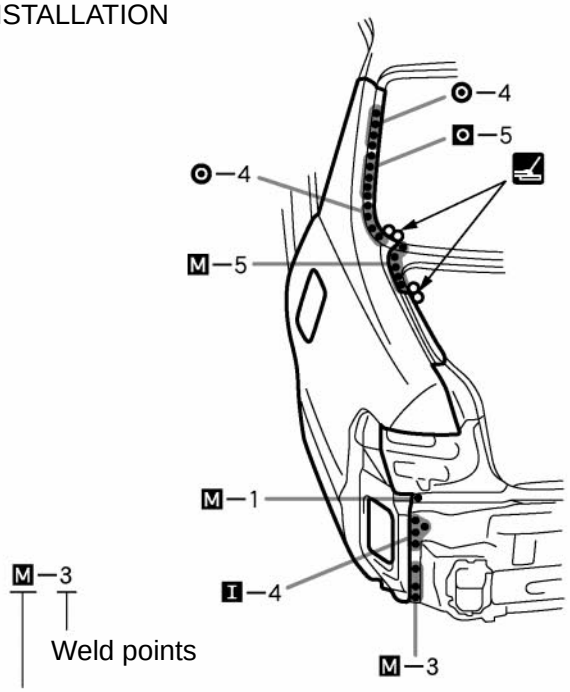

SYMBOLS	MEANING	ILLUSTRATION
O M I	Remove Weld Points	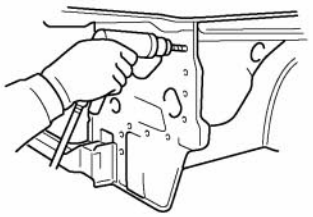
O	(Outside)	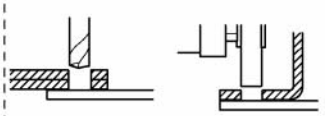
M	(Middle)	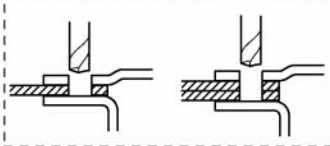
I	(Inside)	

HINT: Panel position symbols are as seen from the working posture.

SYMBOLS	MEANING	ILLUSTRATION
O M I	Spot Weld	
O M I	MIG Plug Weld	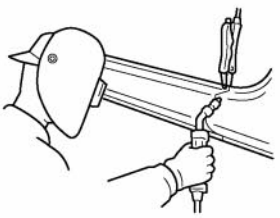
+	Spot MIG Weld	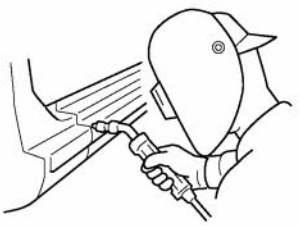

F13892A

PROPER AND EFFICIENT WORK PROCEDURES

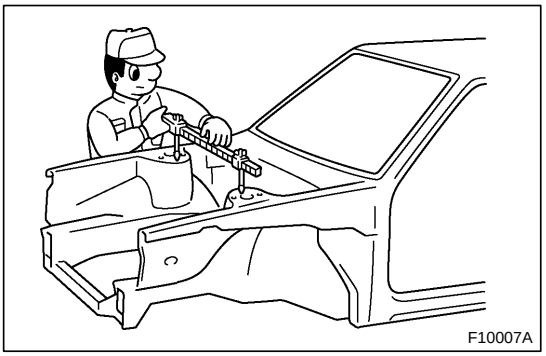
F10007A

1. REMOVAL

(a) PRE-REMOVAL MEASURING

(1) Before removal or cutting operations, take measurements in accordance with the dimensions diagram. Always use a puller to straighten a damaged body or frame.

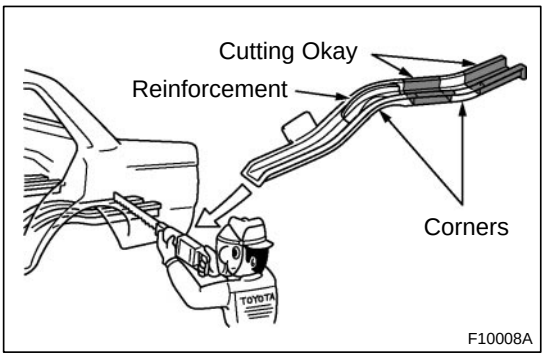

F10008A

(b) CUTTING AREA

(1) Always cut in a straight line and avoid reinforced areas.

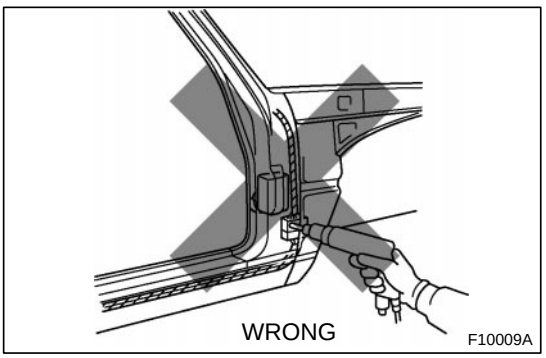

F10009A

(c) PRECAUTIONS FOR DRILLING OR CUTTING

(1) Check behind any area to be drilled or cut to ensure that there are no hoses, wires, etc., that may be damaged.

HINT: See “Handling Precautions on Related Components” on page IN-15.

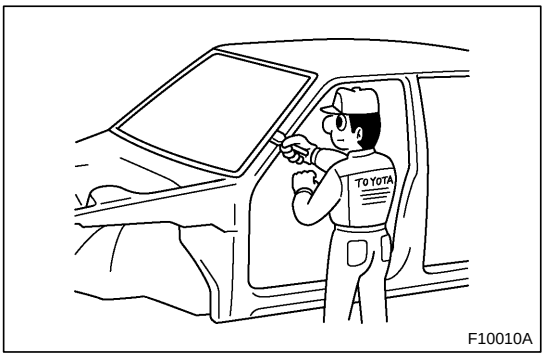

F10010A

(d) REMOVAL OF ADJACENT COMPONENTS

(1) When removing adjacent components, apply protective tape to the surrounding body and your tools to prevent damage.

HINT: See “Handling Precautions on Related Components” on page IN-15.

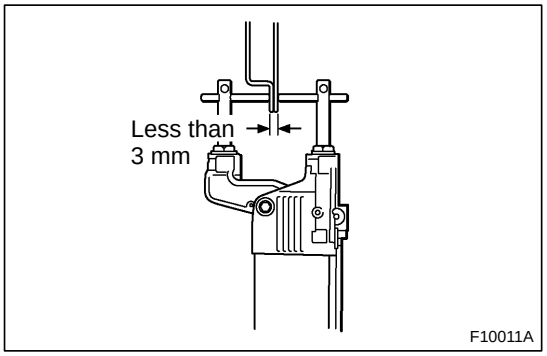

2. PREPARATION FOR INSTALLATION

(a) SPOT WELD POINTS

(1) When welding panels with a combined thickness of over 3 mm (0.12 in.), use a MIG (Metal Inert Gas) welder for plug welding.

HINT: Spot welding does not provide sufficient durability for panels with a combined thickness of over 3 mm (0.12 in.).

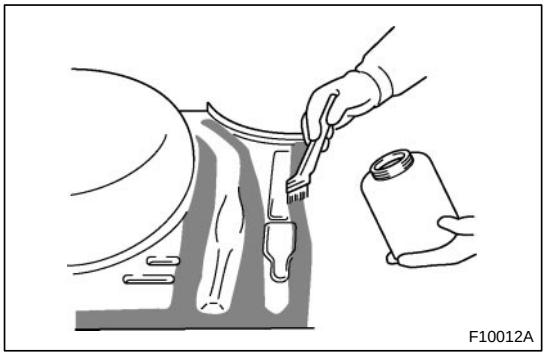

(b) APPLICATION OF WELD-THROUGH PRIMER (SPOT SEALER)

(1) Remove the paint from the portion of the new parts and body to be welded, and apply weld-through primer.

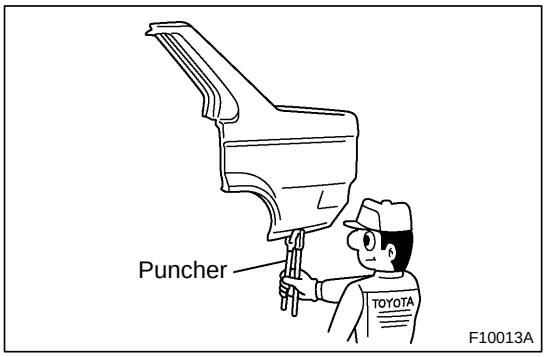

(c) MAKING HOLES FOR PLUG WELDING

(1) For areas where a spot welder cannot be used, use a puncher or drill to make holes for plug welding.

REFERENCE: mm (in.)

Thickness of welded portion	Size of plug hole
1.0 (0.04) under	5 (0.20) ø over
1.0 (0.04) − 1.6 (0.06)	6.5 (0.26) ø over
1.7 (0.07) − 2.3 (0.09)	8 (0.31) ø over
2.4 (0.09) over	10 (0.39) ø over

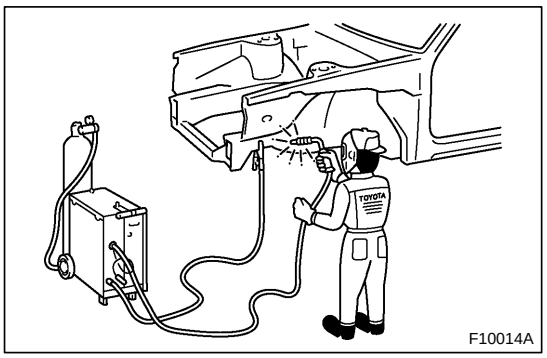

(d) SAFETY PRECAUTIONS FOR ELECTRICAL COMPONENTS

(1) When welding, there is a danger that electrical components will be damaged by the electrical current flowing through the body.

(2) Before starting work, disconnect the negative terminal of the battery and ground the welder near the welding location of the body.

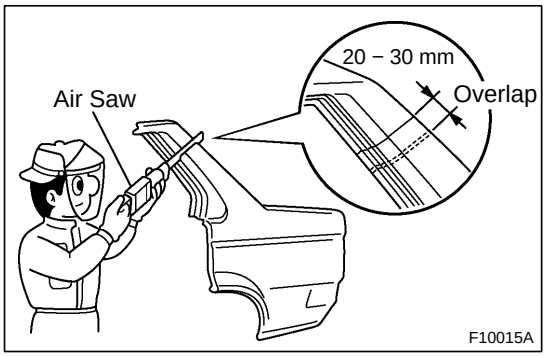

(e) ROUGH CUTTING OF JOINTS

(1) For joint areas, rough cut the new parts, leaving 20 − 30 mm (0.79 − 1.18 in.) of overlap.

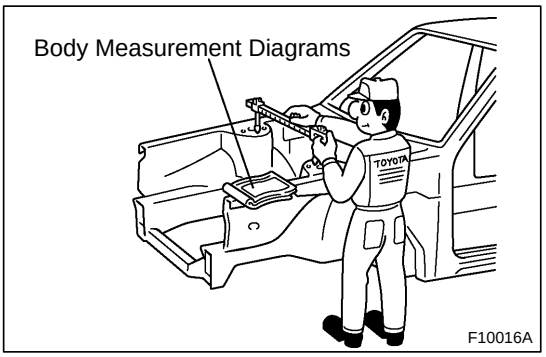

3. INSTALLATION

(a) PRE-WELDING MEASUREMENTS

(1) Always take measurements before installing underbody or engine components to ensure correct assembly. After installation, confirm proper fit.

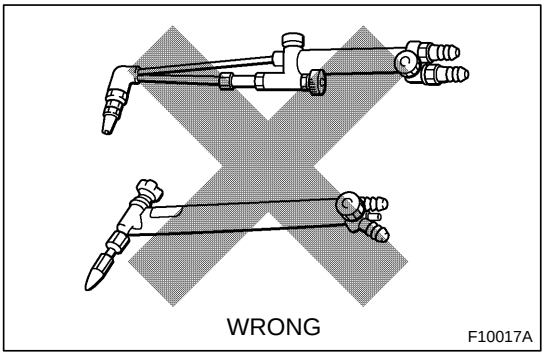

(b) WELDING PRECAUTIONS

(1) The number of welding spots should be as follows.

Spot weld: 1.3 X No. of manufacturer's spots.
Plug weld: More than No. of manufacturer's plugs.

(2) Plug welding should be done with a MIG (Metal Inert Gas) welder. Do not gas weld or braze panels at areas other than specified.

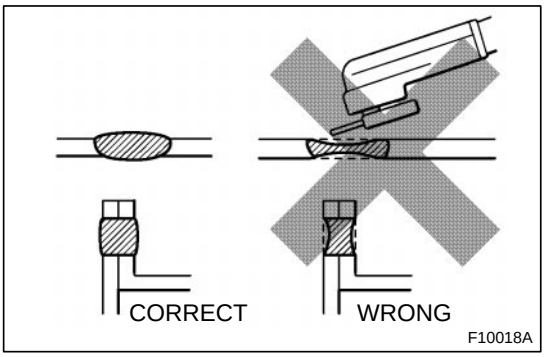

(c) POST-WELDING REFINISHING

(1) Always check the welded spots to ensure they are secure.

(2) When smoothing out the weld spots with a disc grinder, be careful not to grind off too much as this will weaken the weld.

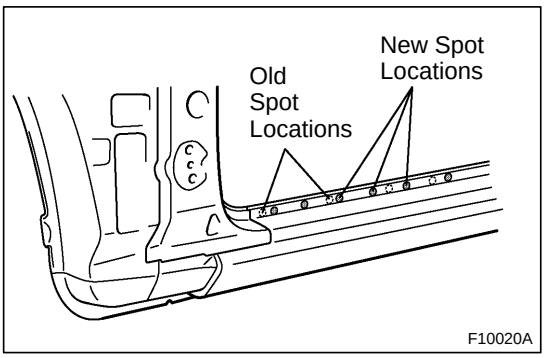

(d) SPOT WELD LOCATIONS

(1) Avoid welding over previously welded areas.

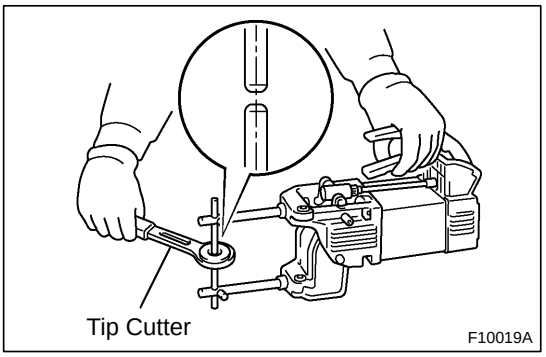

(e) SPOT WELDING PRECAUTIONS

(1) The shape of the tip point of the spot welder significantly affects the strength of the weld. Therefore, maintain the tip point in the proper shape, and allow it to cool after every five or six spots.

(2) Completely remove the paint from the areas to be spot welded, including the seams and the surfaces that come in contact with the welding tip.

(3) Use a sander to remove any burrs that are created during spot welding.

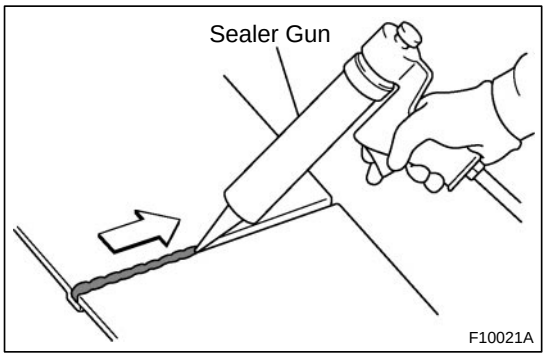

4. ANTI-RUST TREATMENT AFTER INSTALLATION (BEFORE PAINTING PROCESS)

(a) BODY SEALER APPLICATION

(1) For water-proofing and anti-corrosion measures, always apply the body sealer to the body panel seams and hems of the doors, hood, etc.

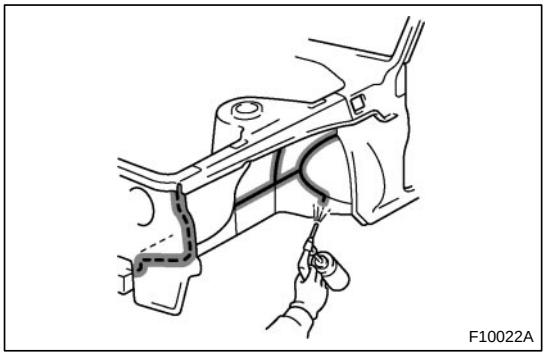

(b) UNDERCOAT APPLICATION

(1) To prevent corrosion and protect the body from damage by flying stones, always apply sufficient undercoating to the bottom surface of the under body and inside of the wheel housings.

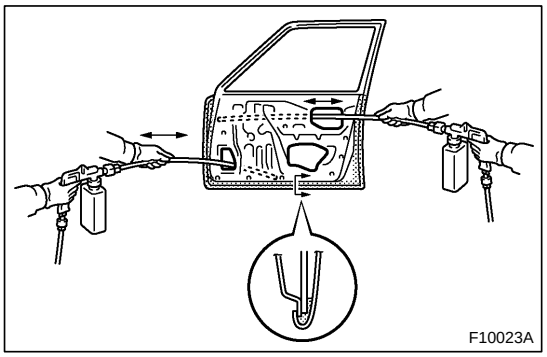

5. ANTI-RUST TREATMENT AFTER INSTALLATION (AFTER PAINTING PROCESS)

(a) ANTI-RUST AGENT (WAX) APPLICATION

(1) To preserve impossible to paint areas from corrosion, always apply sufficient anti-rust agent (wax) to the inside of the hemming areas of the doors and hood, and around the hinges, or the welded surfaces inside the box-shaped cross sections of the side members, body pillar, etc.

6. ANTI-RUST TREATMENT BY PAINTING

REFERENCE:

Painting prevents corrosion and protects the sheet metal from damage. In this section, anti-chipping paint only for anti-corrosion purpose is described.

(a) ANTI-CHIPPING PAINT

(1) To prevent corrosion and protect the body from damage by flying stones, etc., apply anti-chipping paint to the rocker panel, wheel arch areas, balance panel, etc.

HINT:
Depending on the model or the application area, there are cases where the application of anti-chipping paint is necessary before the second coat or after the top coat.

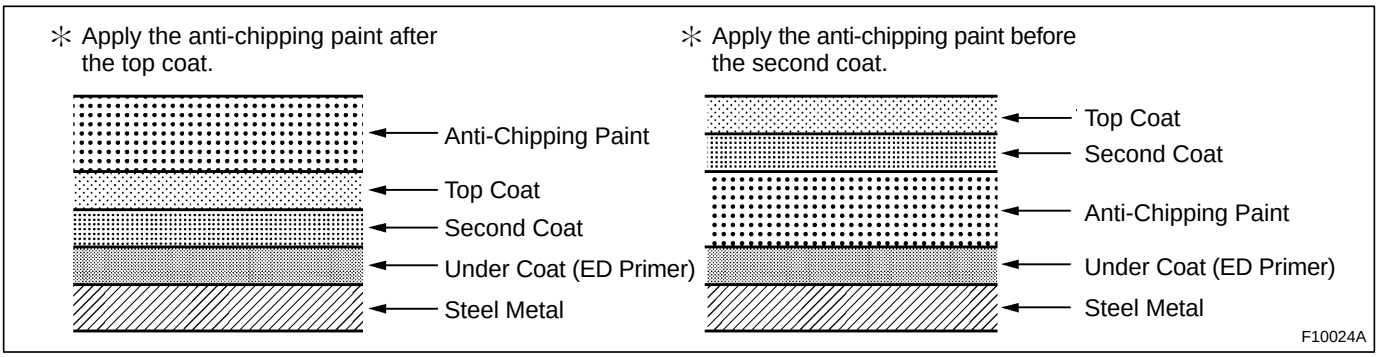

HANDLING PRECAUTIONS ON RELATED COMPONENTS

1. BRAKE SYSTEM

The brake system is one of the most important safety components. Always follow the directions and notes given in the brake (32) section of the repair manual for the relevant model when handling brake system parts.

NOTICE: When repairing the brake master cylinder or TRAC system, bleed the air out of the TRAC system.

2. DRIVE TRAIN AND CHASSIS

The drive train and chassis are components that can have great effects on the running performance and vibration resistance of the vehicle. After installing components in the sections listed in the table below, perform alignments to ensure correct mounting angles and dimensions. Body repair must be particularly accurate to ensure correct alignment.

HINT: Correct procedures and special tools are required for alignment. Always follow the directions given in the repair manual for the relevant model during alignment and section DI of this section.

Component to be aligned	Section of repair manual for relevant model
Front Wheels	Front Suspension (26) section
Rear Wheels	Rear Suspension (27) section

3. COMPONENTS ADJACENT TO THE BODY PANELS

Various types of component parts are mounted directly on or adjacently to the body panels. Strictly observe the following precautions to prevent damaging these components and the body panels during handling.

- Before repairing the body panels, remove their components or apply protective covers over the components.
- Before prying components off using a screwdriver or a scraper, etc., attach protective tape to the tool tip or blade to prevent damaging the components and the body paint.
- Before removing components from the outer surface of the body, attach protective tape to the body to ensure no damage to painted areas.

  HINT: Apply touch-up paint to any damaged paint surfaces.
- Before drilling or cutting sections, make sure that there are no wires, etc. on the reverse side.

4. ECU (ELECTRONIC CONTROL UNIT)

Many ECUs are mounted in this vehicle.
Take the following precautions during body repair to prevent damage to the ECUs.

- Before starting electric welding operations, disconnect the negative (−) terminal cable from the battery.
  When the negative (−) terminal cable is disconnected from the battery, memory of the clock and audio systems will be canceled. So before starting work, make a record of the contents memorized by each memory system. Then when work is finished, reset the clock and audio systems as before.
  When the vehicle has tilt and telescopic steering, power seats and outside rear view mirrors, which are all equipped with a memory function, it is not possible to make a record of the memory contents. So when the operation is finished, it will be necessary to explain this fact to the customer, and request the customer to adjust the features and reset the memory.
- Do not expose the ECUs to ambient temperatures above 80°C (176°F).

  NOTICE: If it is possible the ambient temperature may reach 80° C (176° F) or more, remove the ECUs from the vehicle before starting work.
- Be careful not to drop the ECUs and not to apply physical shocks to them.

PRECAUTIONS FOR REPAIRING BODY STRUCTURE PANELS

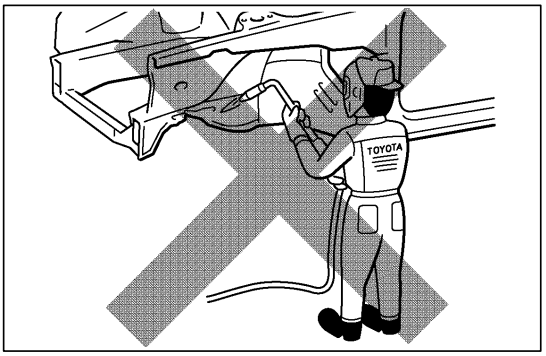

1. HEAT REPAIR FOR BODY STRUCTURE PANELS

Toyota prohibits the use of the heat repair method on body structure panels when repairing a vehicle damaged in a collision.

Panels that have high strength and rigidity, as well as a long life span for the automobile body are in high demand.

At Toyota, in order to fulfill these requirement, we use high tensile strength steel sheets and rust preventive steel sheets on the body. High tensile steel sheets are made with alloy additives and a special heat treatment in order to improve the strength.

To prevent the occurrence of rust for a long period of time, the surface of the steel is coated with a zinc alloy.

If body structure parts are heat repaired with an acetylene torch or other heating source, the crystalline organization of the steel sheet will change and the strength of the steel sheet will be reduced. The ability of the body to resist rust is significantly lowered as well since the rust resistant zinc coating is destroyed by heat and the steel sheet surface is oxidized.

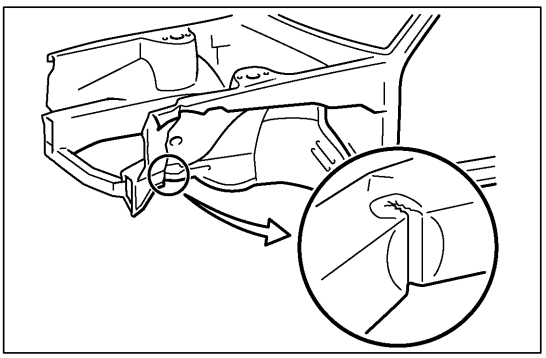

2. STRUCTURE PANEL KINKS

A sharp deformation angle on a panel that cannot be returned to its original shape by pulling or hammering is called a kink.

Structural parts are designed to perform in their original shape. If parts are deformed in an accident, or if the deformed parts are repaired and reused, the parts may be unable to perform as intended.

It is necessary to replace the part where the kink has occurred.

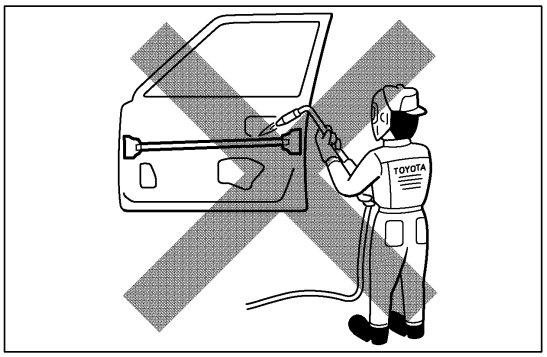

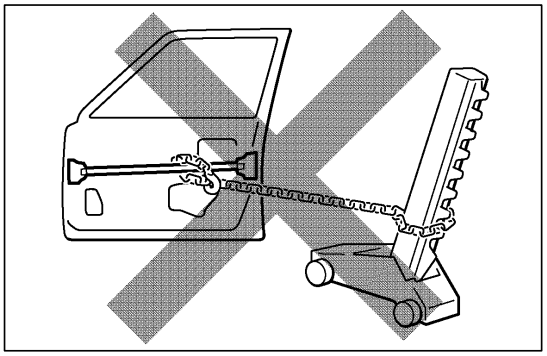

3. IMPACT BEAM REPAIR

The impact beam and bracket are necessary and important parts that help reduce the probability of injury to passengers in side collisions.

For impact beams, we use special high tensile strength steel.

The high tensile strength steel maintains its special crystalline organization by heat treatment or alloy additives.

Structural parts are designed to perform in their original shape. If parts are deformed in an accident, or if the deformed parts are repaired and reused, the parts may be unable to perform as intended.

If the impact beam or bracket is damaged, replace the door assembly with the damaged beam.

Also, the bumper reinforcement is a necessary and important part that helps reduce the probability of injury to passengers in front collisions, and for the same reasons explained above, should be replaced if damaged.

ABBREVIATIONS USED IN THIS MANUAL

For convenience, the following abbreviations are used in this manual.

ABS	Antilock Brake System
A/C	Air Conditioner
assy	assembly
ECT	Electronic Controlled Transmission
ECU	Electronic Control Unit
e.g.	Exempli Gratia (for Example)
Ex.	Except
FWD	Front Wheel Drive Vehicles
2WD	Two Wheel Drive Vehicles
4WD	Four Wheel Drive Vehicles
in.	inch
LH	Left-hand
LHD	Left-hand Drive
MIG	Metal Inert Gas
M/Y	Model Year
PPS	Progressive Power Steering
RH	Right-hand
RHD	Right-hand Drive
SRS	Supplemental Restraint System
SSM	Special Service Materials
w/	with
w/o	without

RADIATOR SUPPORT (ASSY)

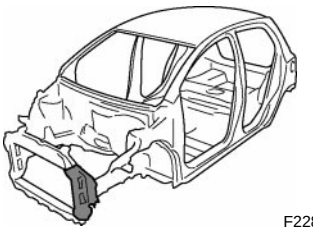
F22816A

REPLACEMENT

REMOVAL

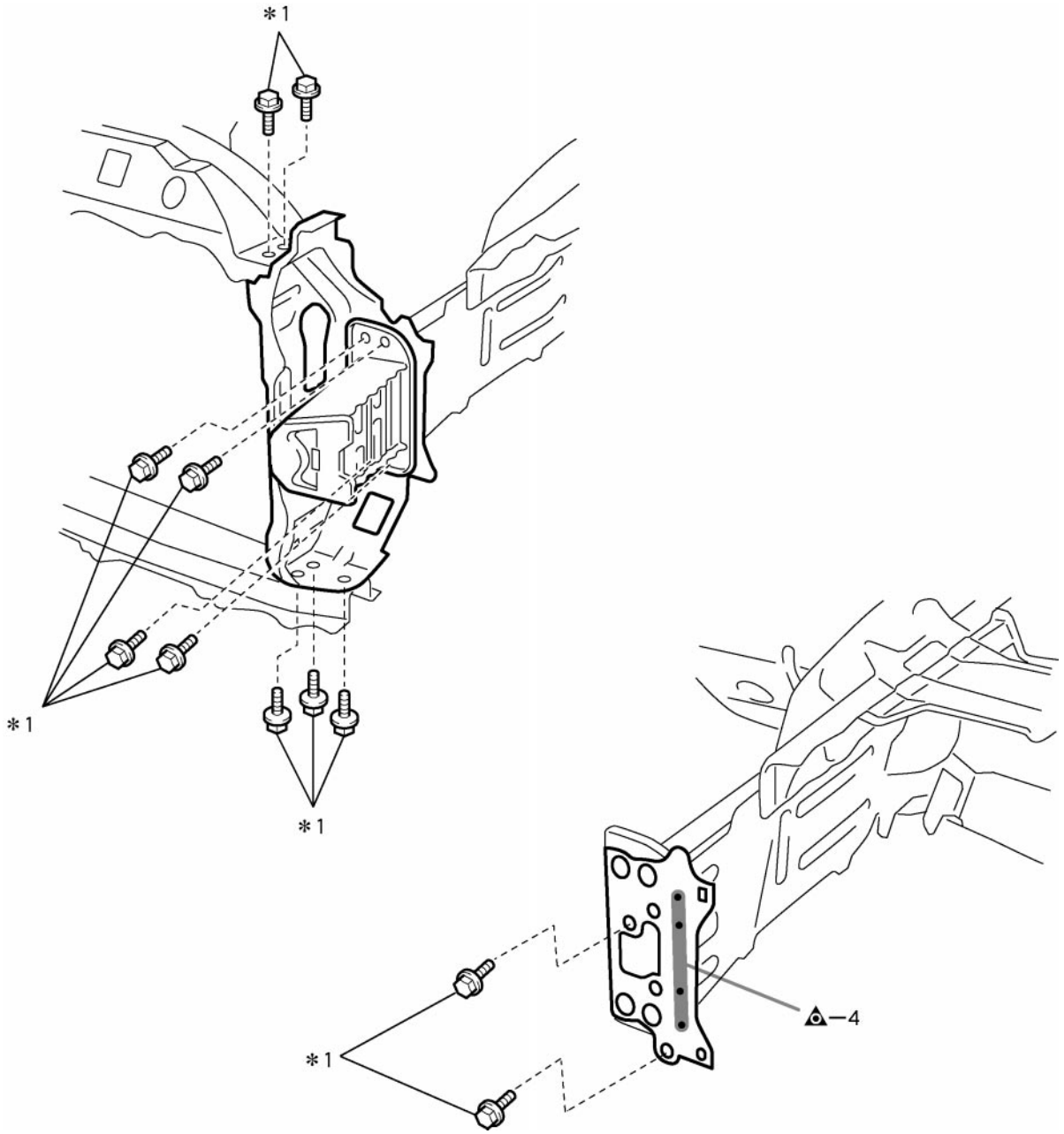

F22816

POINT

1 *1: Bolt

INSTALLATION

* Temporarily install the new parts and measure each part of the new parts in accordance with the body dimension diagram. (See the body dimension diagram)
* Inspect the fitting of the related parts around the new parts before welding. This affects the appearance of the finish.
* After welding, apply polyurethane foam to the corresponding parts.
* After welding, apply body sealer and undercoating to the corresponding parts.
* After applying the top coat, apply anti-rust agent to the internal panel portion of the closed section structural weld points.

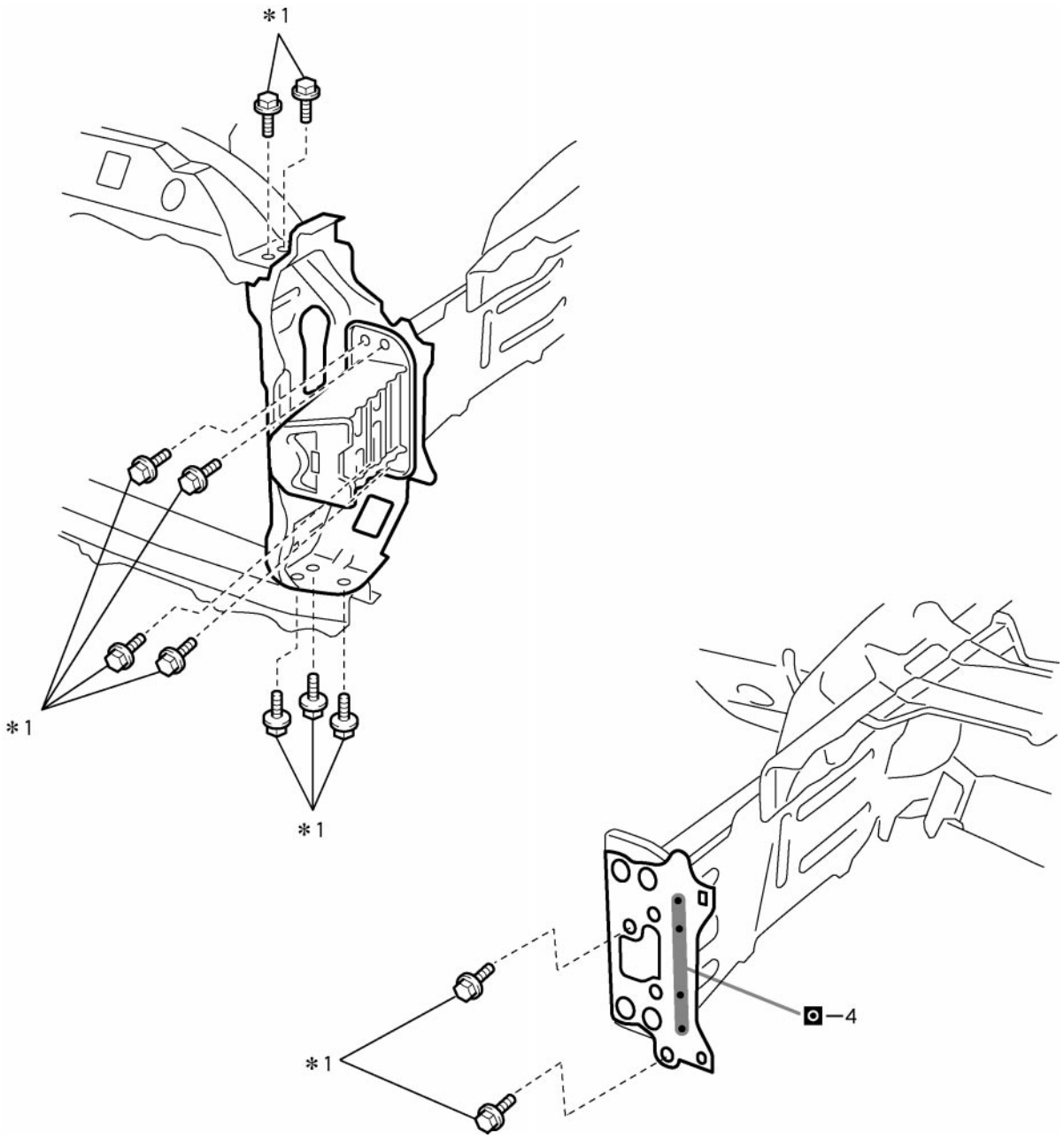

F22817

POINT

1 Inspect the fitting of the headlight, front fender, hood and other related parts, before welding as this affects the appearance of the finish.

2 *1: Bolt

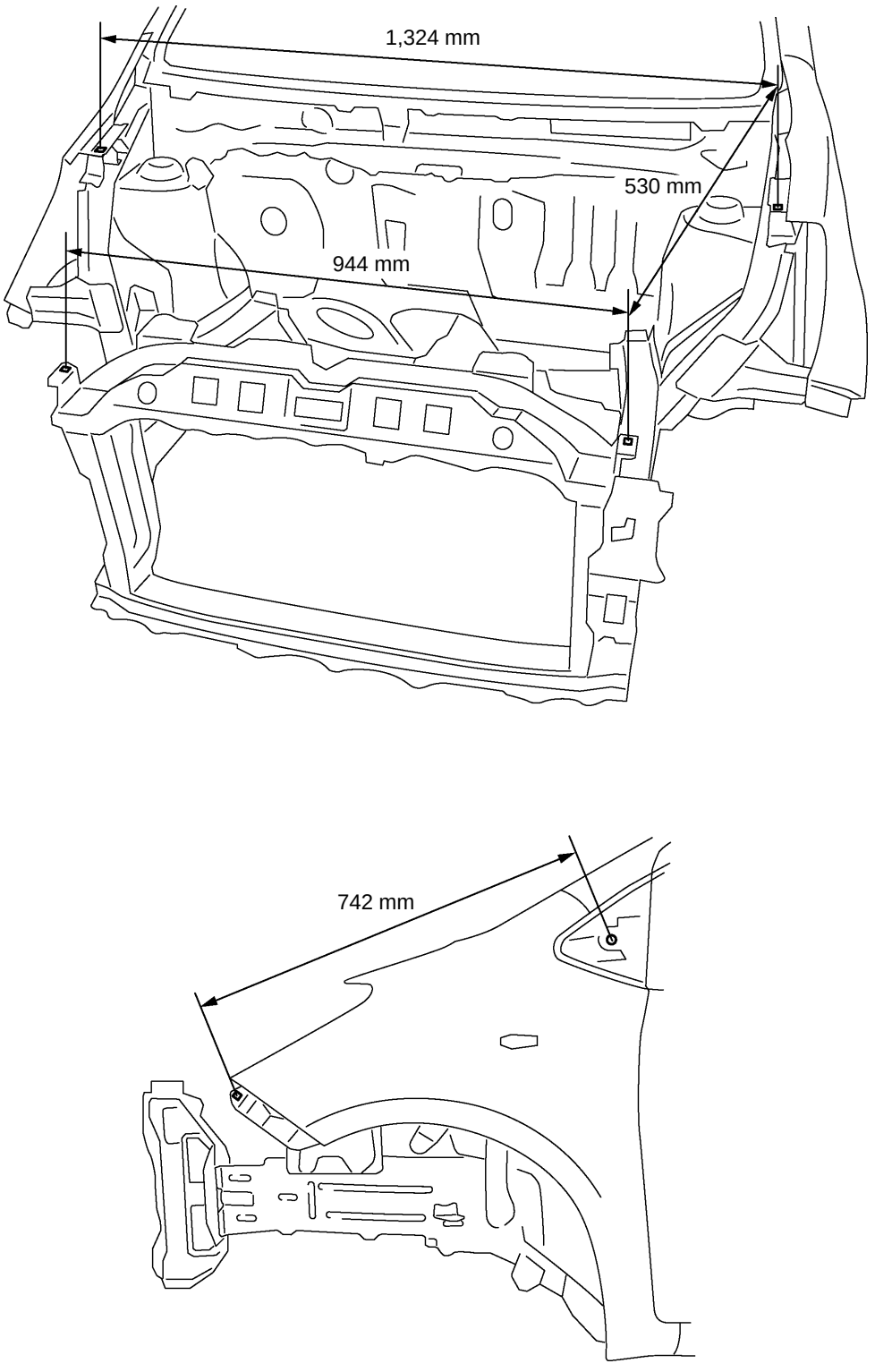

POINT

1 Measure the dimensions before installing the headlight.
2 These values are reference values.

530 mm (20.87 in.) 742 mm (29.21 in.) 944 mm (37.17 in.) 1,324 mm (52.13 in.)

FRONT FENDER MOUNTING BRACKET (ASSY)

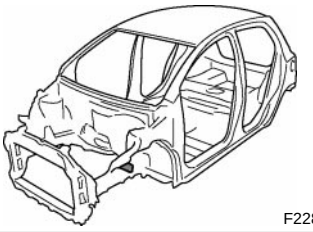
F22819A

REPLACEMENT

REMOVAL

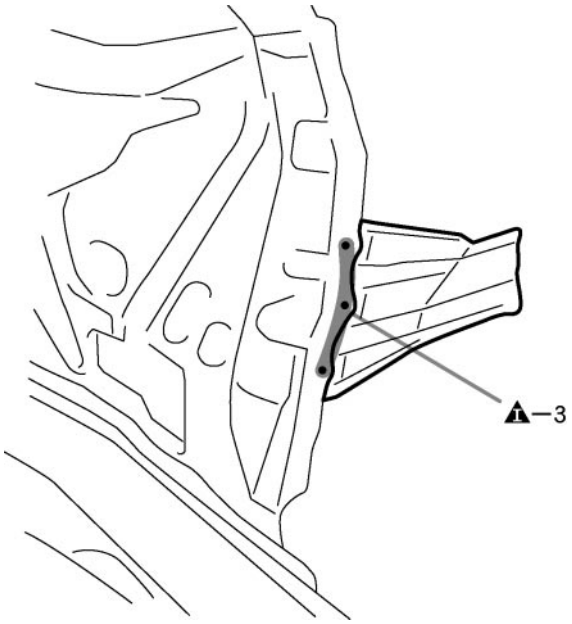

F22819

INSTALLATION

⁎ Temporarily install the new parts and measure each part of the new parts in accordance with the body dimension diagram. (See the body dimension diagram)
⁎ Inspect the fitting of the related parts around the new parts before welding. This affects the appearance of the finish.
⁎ After welding, apply polyurethane foam to the corresponding parts.
⁎ After welding, apply body sealer and undercoating to the corresponding parts.
⁎ After applying the top coat, apply anti-rust agent to the internal panel portion of the closed section structural weld points.

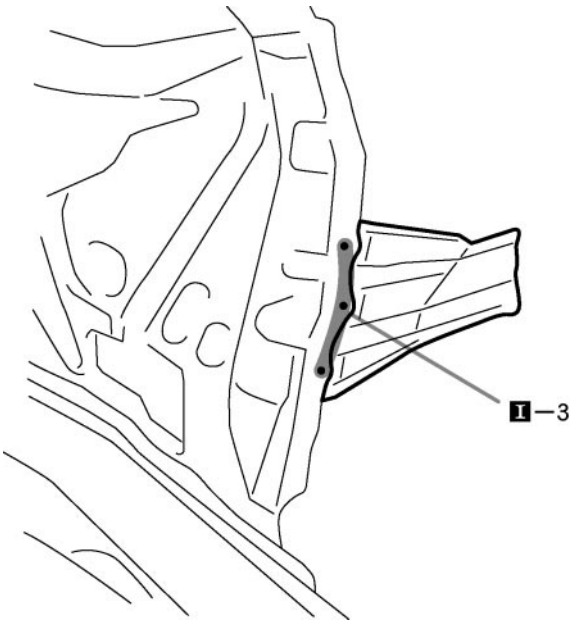

F22820

POINT

1 Inspect the fitting of the front fender and other related parts before welding as this affects the appearance of the finish.

QUARTER PANEL UPPER EXTENSION (CUT): Hatchback

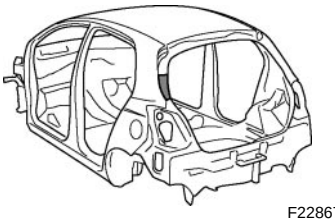
F22867A

REPLACEMENT
With the back door opening trough removed.

REMOVAL

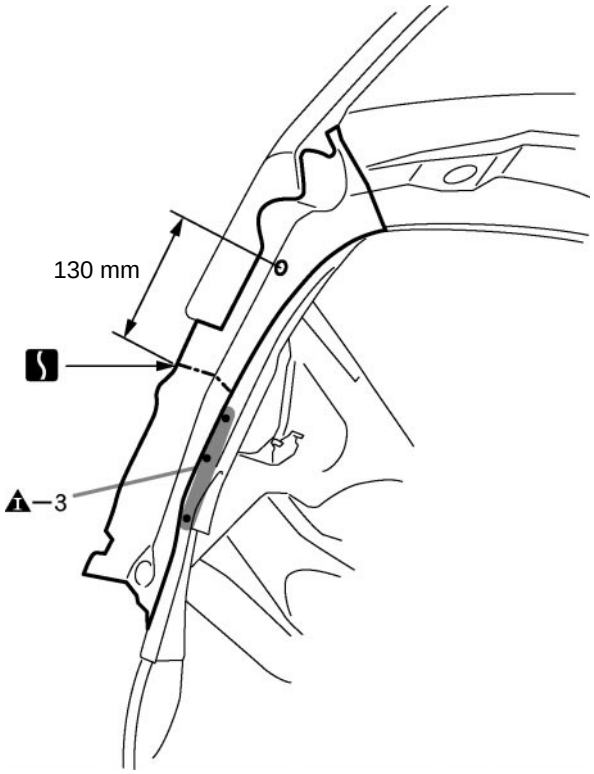

F22867

130 mm (5.12 in.)

INSTALLATION

⁎ Temporarily install the new parts and measure each part of the new parts in accordance with the body dimension diagram. (See the body dimension diagram)
⁎ Inspect the fitting of the related parts around the new parts before welding. This affects the appearance of the finish.
⁎ After welding, apply the polyurethane foam to the corresponding parts.
⁎ After welding, apply body sealer and under-coating to the corresponding parts.
⁎ After applying the top coat layer, apply anti-rust agent to the inside of the necked section structural weld spots.

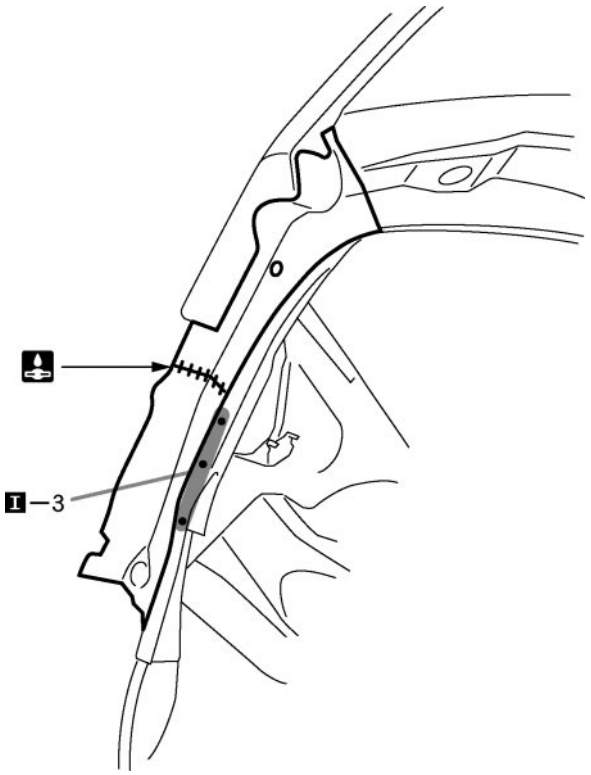

F22868

FLOOR SIDE RAIL FRONT PANEL (ASSY): Hatchback

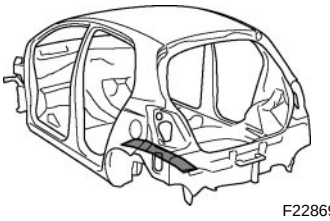
F22869A

REPLACEMENT
With the body lower back panel removed.

REMOVAL

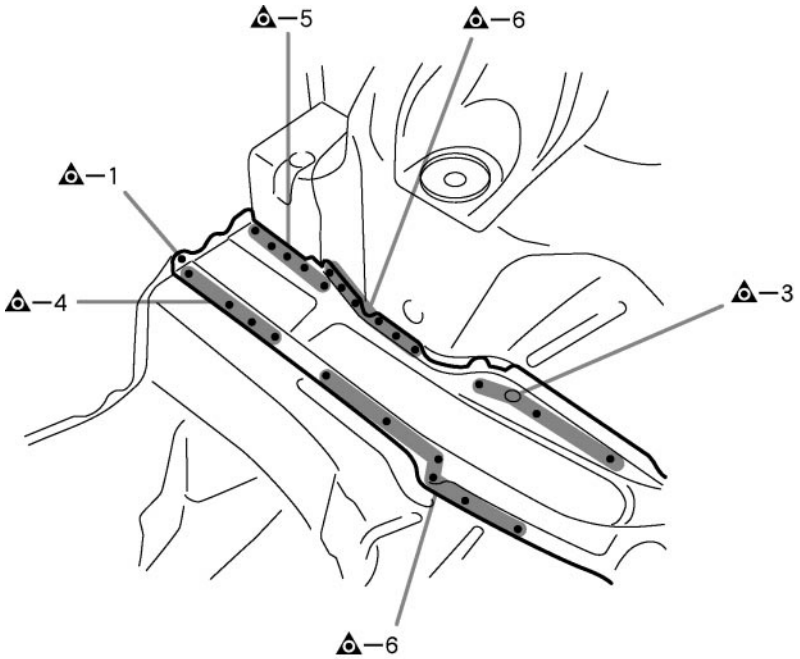

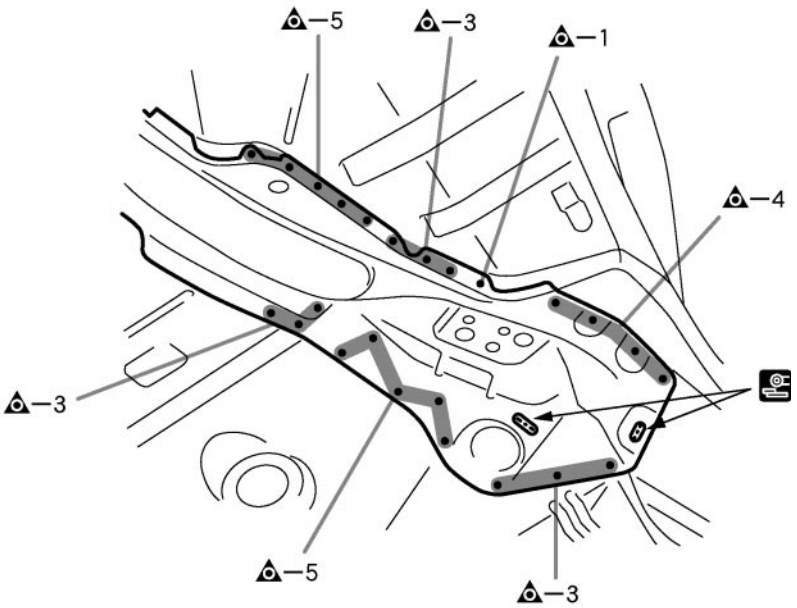

F23327

INSTALLATION

⁎ Temporarily install the new parts and measure each part of the new parts in accordance with the body dimension diagram. (See the body dimension diagram)
⁎ Inspect the fitting of the related parts around the new parts before welding. This affects the appearance of the finish.
⁎ After welding, apply the polyurethane foam to the corresponding parts.
⁎ After welding, apply body sealer and under-coating to the corresponding parts.
⁎ After applying the top coat layer, apply anti-rust agent to the inside of the necked section structural weld spots.

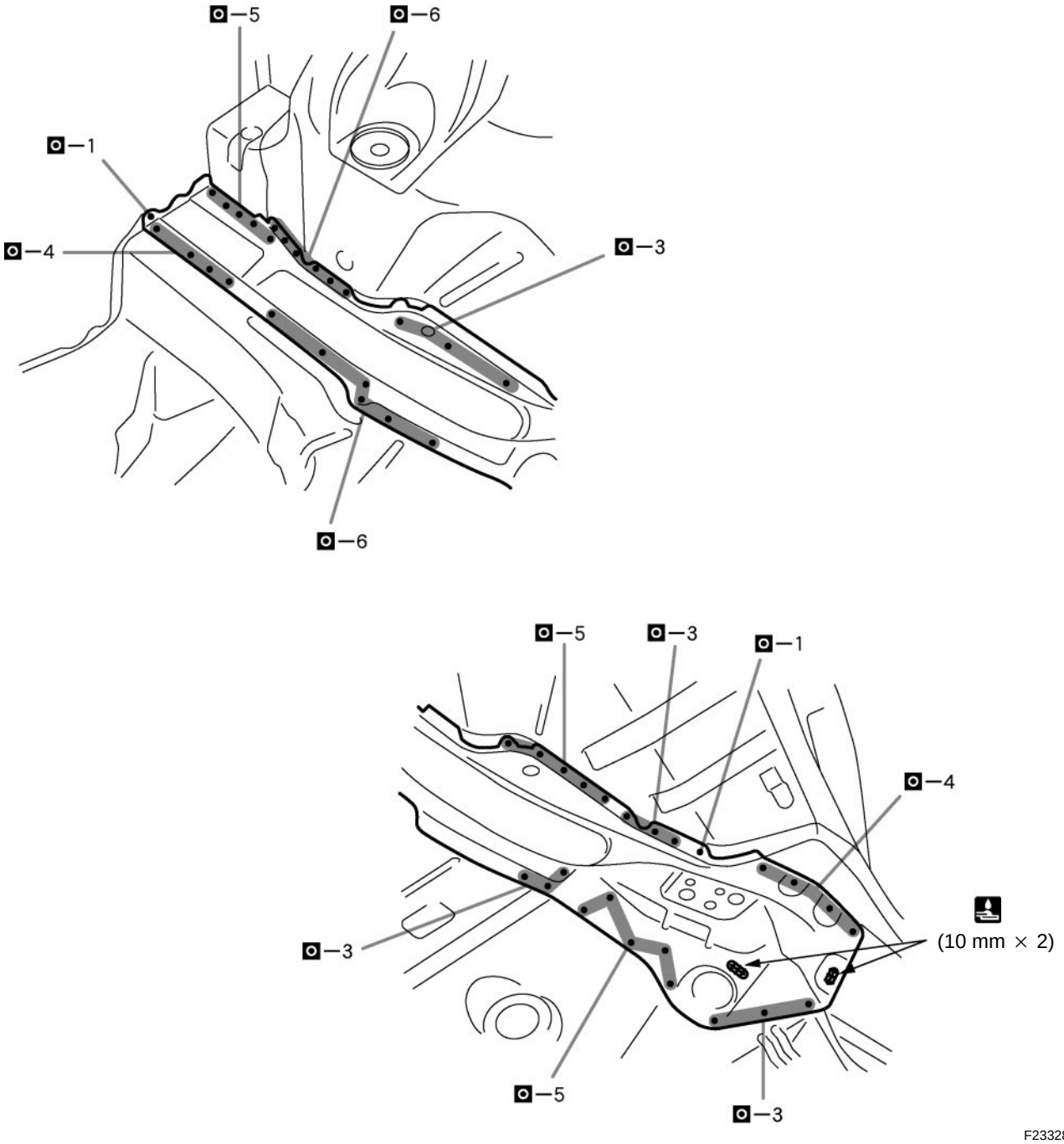

10 mm (0.39 in.)

FLOOR SIDE RAIL FRONT PANEL (ASSY): Sedan

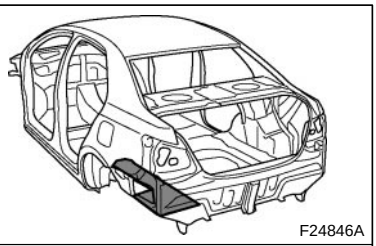
F24846A

REPLACEMENT
With the body lower back panel removed.

REMOVAL

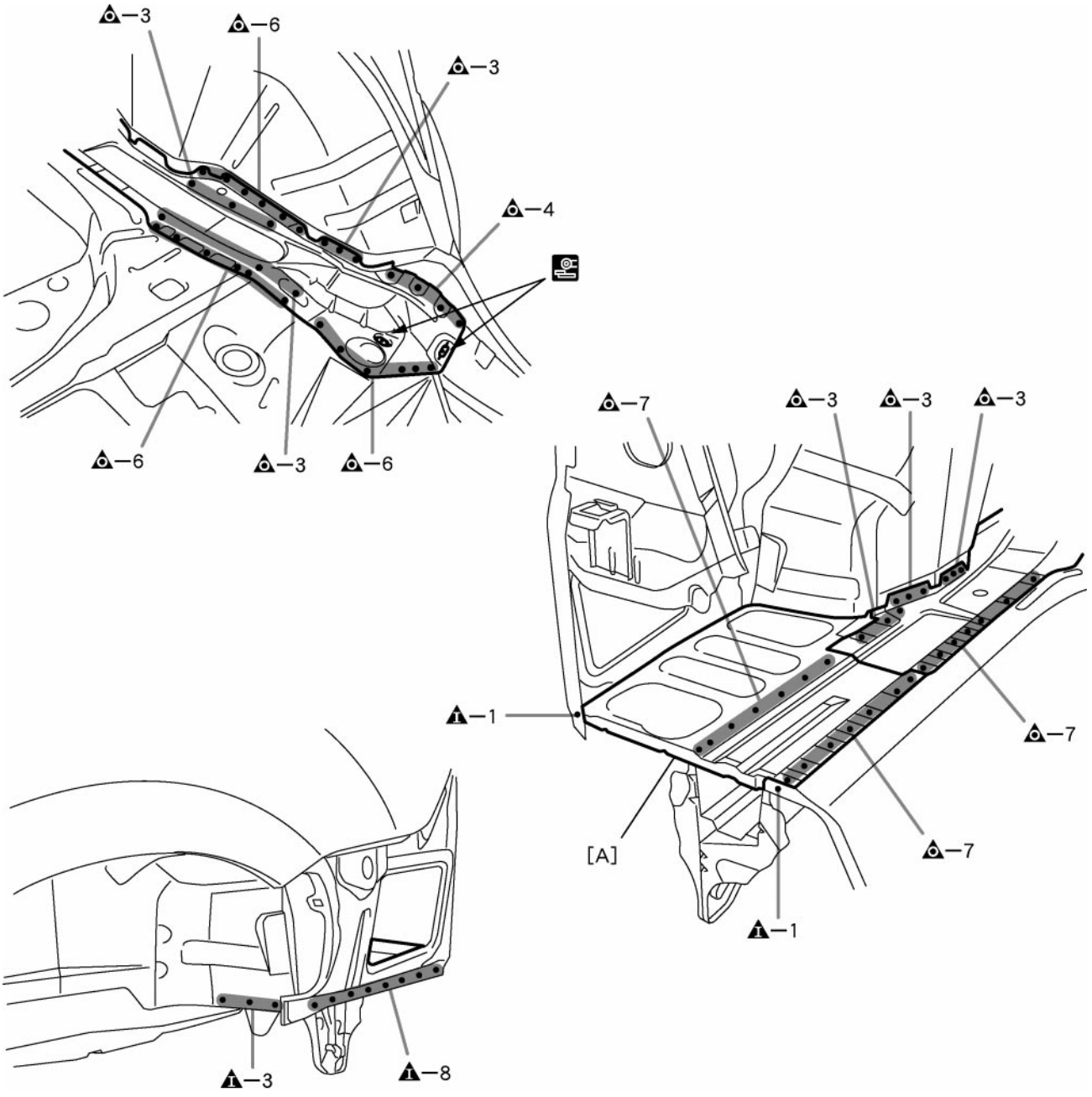

F24846-1

POINT
1 Remove [A] at the same time.

PART NAME
[A] Rear Floor Pan Extension

INSTALLATION

⁎ Temporarily install the new parts and measure each part of the new parts in accordance with the body dimension diagram. (See the body dimension diagram)
⁎ Inspect the fitting of the related parts around the new parts before welding. This affects the appearance of the finish.
⁎ After welding, apply polyurethane foam to the corresponding parts.
⁎ After welding, apply body sealer and undercoating to the corresponding parts.
⁎ After applying the top coat, apply anti-rust agent to the internal panel portion of the closed section structural weld points.

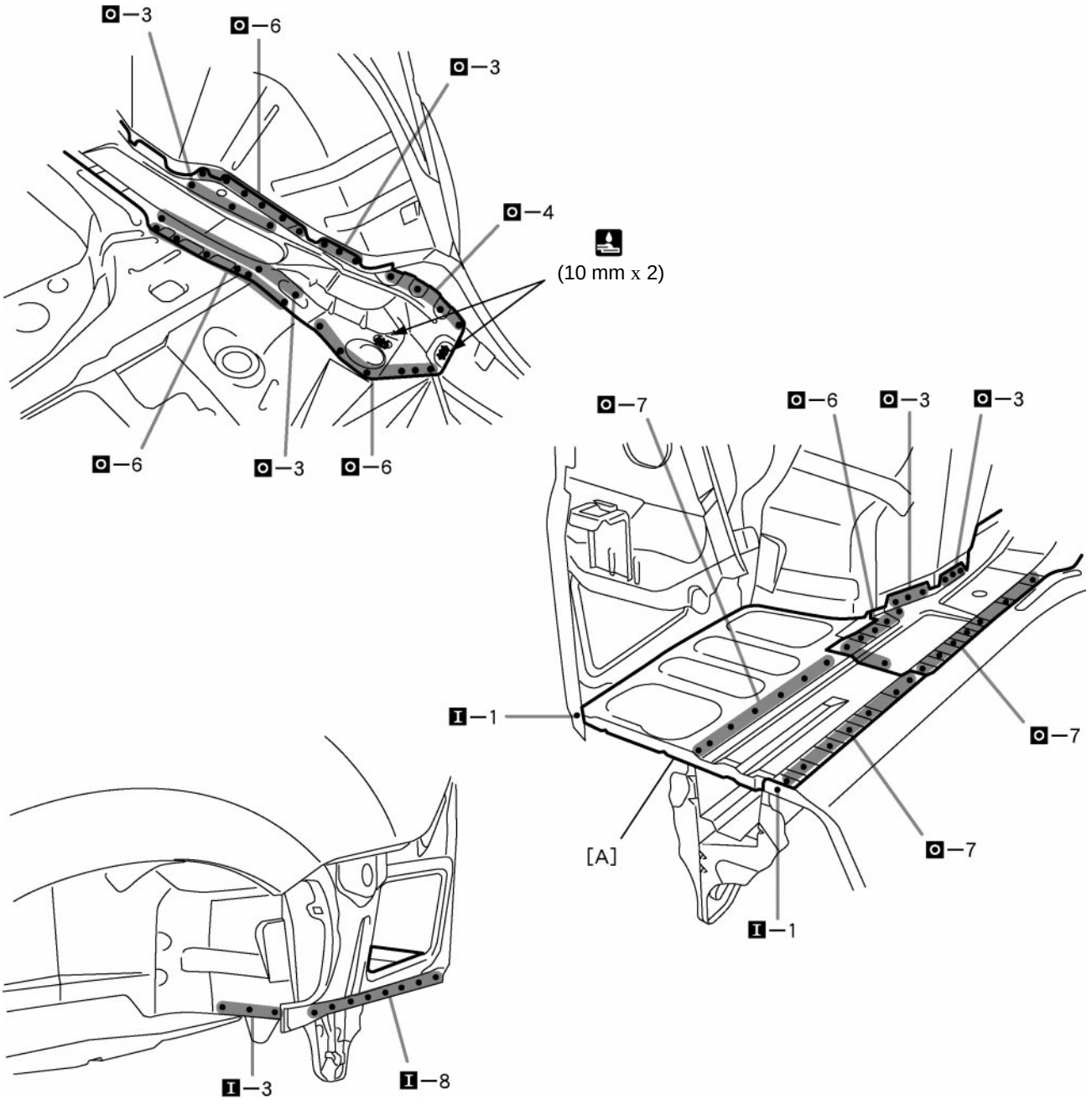

F24846-2

10 mm (0.39 in.)

REAR FLOOR SIDE PANEL EXTENSION (ASSY): Hatchback

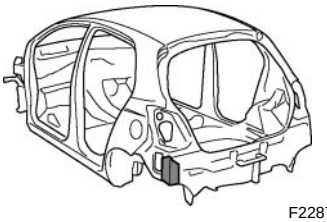
F22875A

REPLACEMENT
With the quarter panel and body lower back panel removed.

REMOVAL

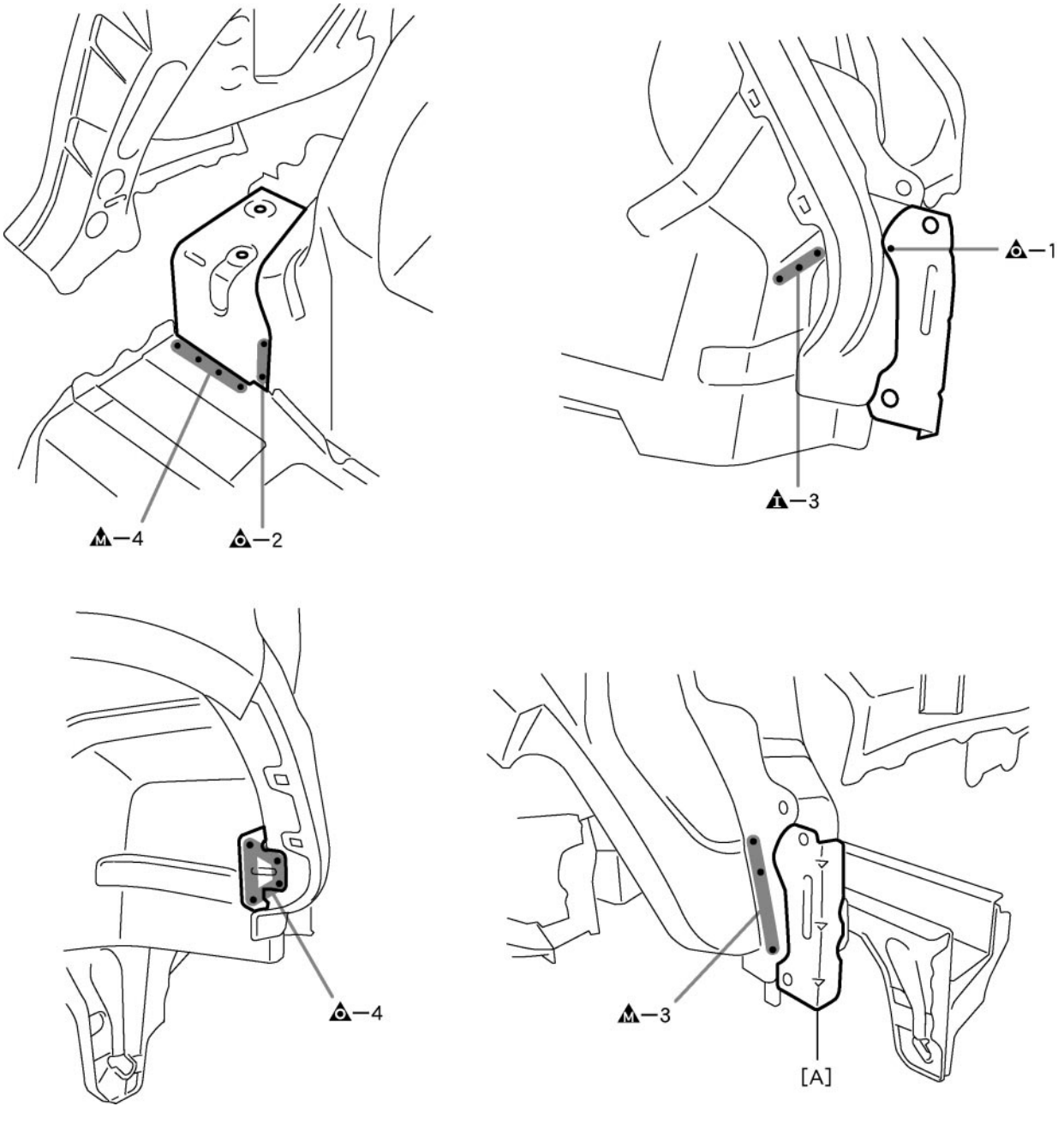

F22875

POINT
1 After removing the rear floor side panel extension, remove [A].

PART NAME
[A] Quarter Wheel Housing Extension

INSTALLATION

⁎ Temporarily install the new parts and measure each part of the new parts in accordance with the body dimension diagram. (See the body dimension diagram)
⁎ Inspect the fitting of the related parts around the new parts before welding. This affects the appearance of the finish.
⁎ After welding, apply the polyurethane foam to the corresponding parts.
⁎ After welding, apply body sealer and under-coating to the corresponding parts.
⁎ After applying the top coat layer, apply anti-rust agent to the inside of the necked section structural weld spots.

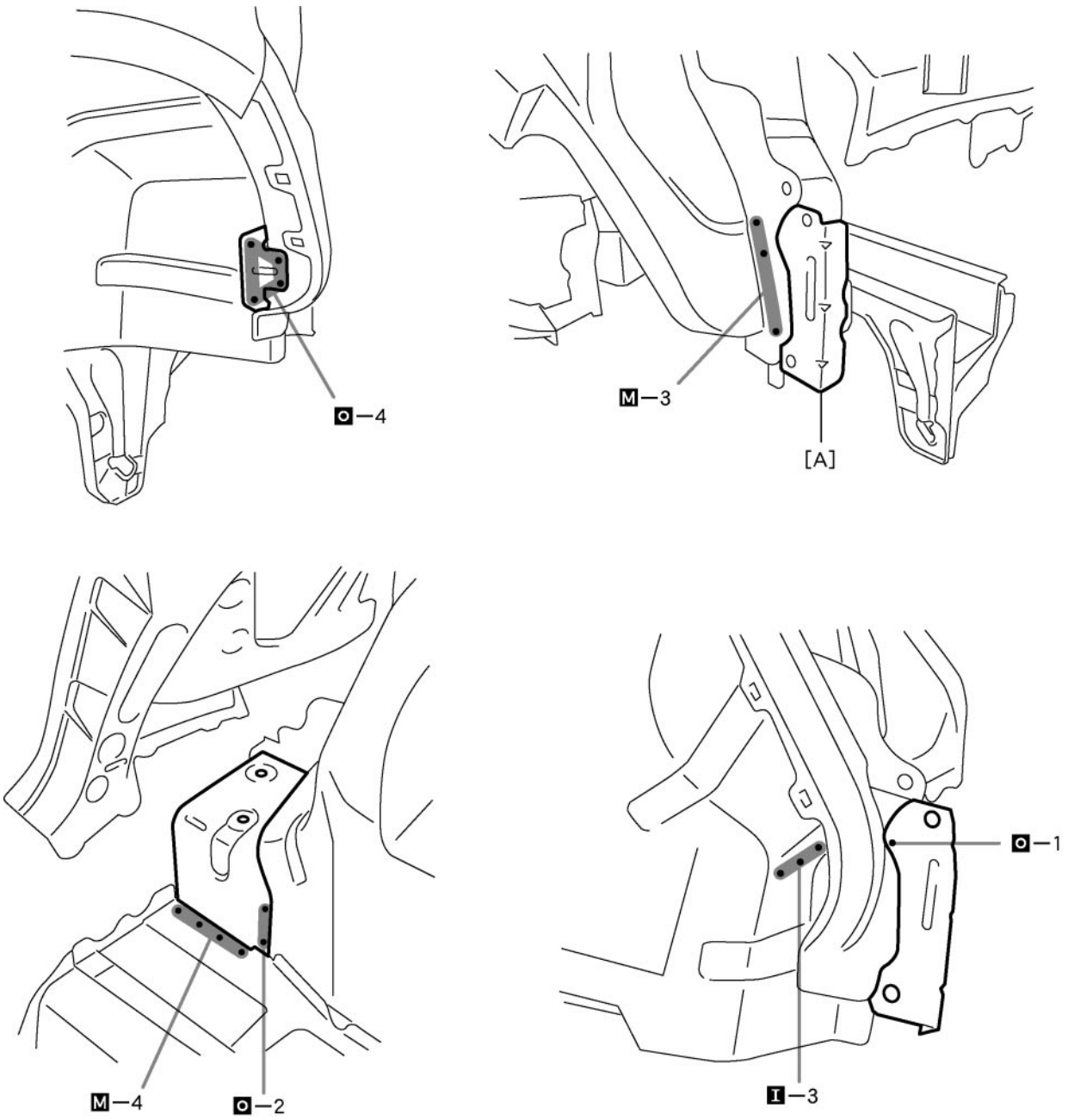

F22876

POINT

1 After installing [A], install the new parts.

PART NAME

[A] Quarter Wheel Housing Extension

REAR FLOOR PAN (ASSY): Hatchback

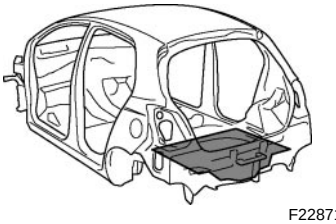
F22871A

REPLACEMENT

With the body lower back panel and floor side rail front panel removed.

REMOVAL

[EX. U.S.A., CANADA]

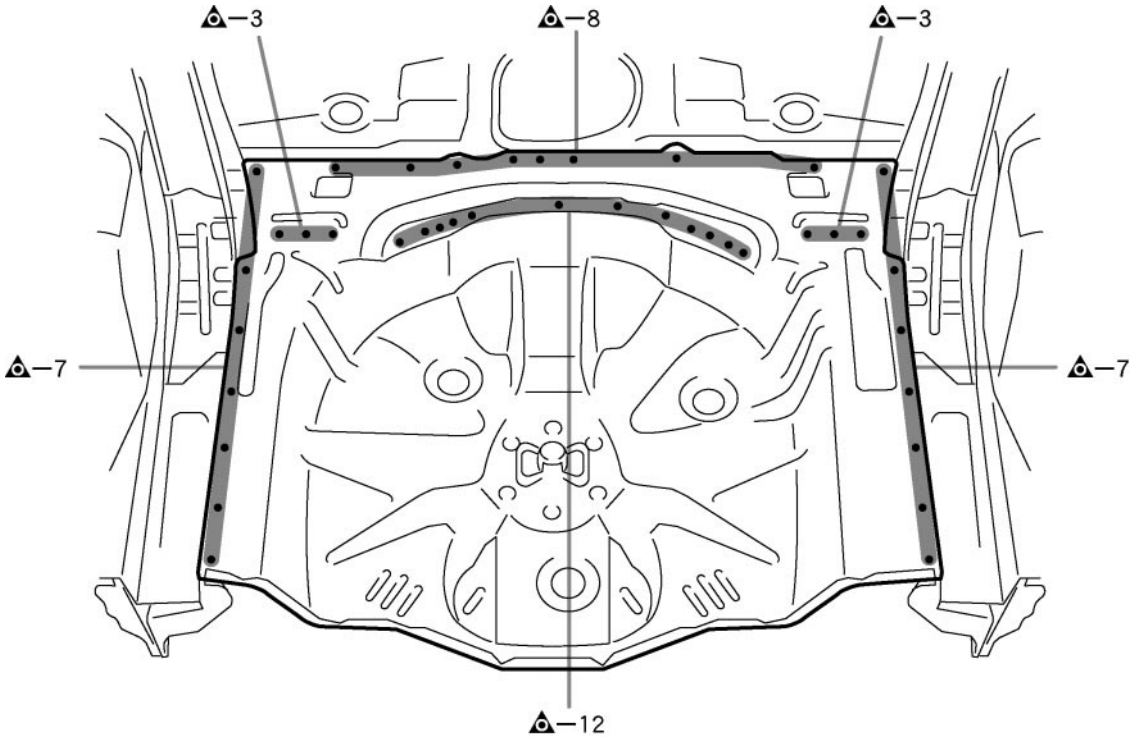

F23347

[U.S.A., CANADA]

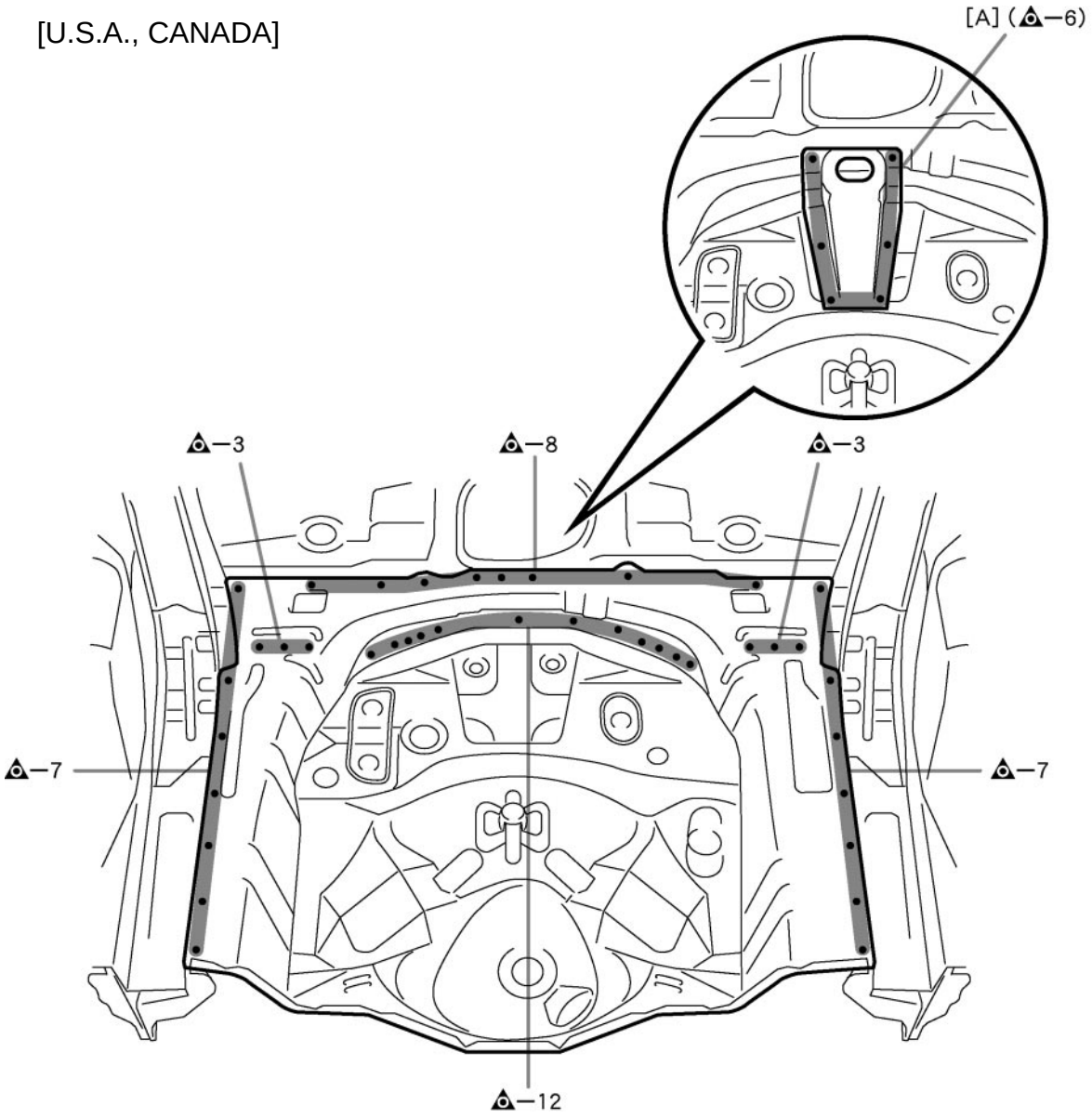

F23345

POINT

1 After removing [A], remove the rear floor pan.

PART NAME

[A] Rear Floor Brace Braket

INSTALLATION

⁎ Temporarily install the new parts and measure each part of the new parts in accordance with the body dimension diagram. (See the body dimension diagram)
⁎ Inspect the fitting of the related parts around the new parts before welding. This affects the appearance of the finish.
⁎ After welding, apply polyurethane foam to the corresponding parts.
⁎ After welding, apply body sealer and undercoating to the corresponding parts.
⁎ After applying the top coat, apply anti-rust agent to the internal panel portion of the closed section structural weld points.

[EX. U.S.A., CANADA]

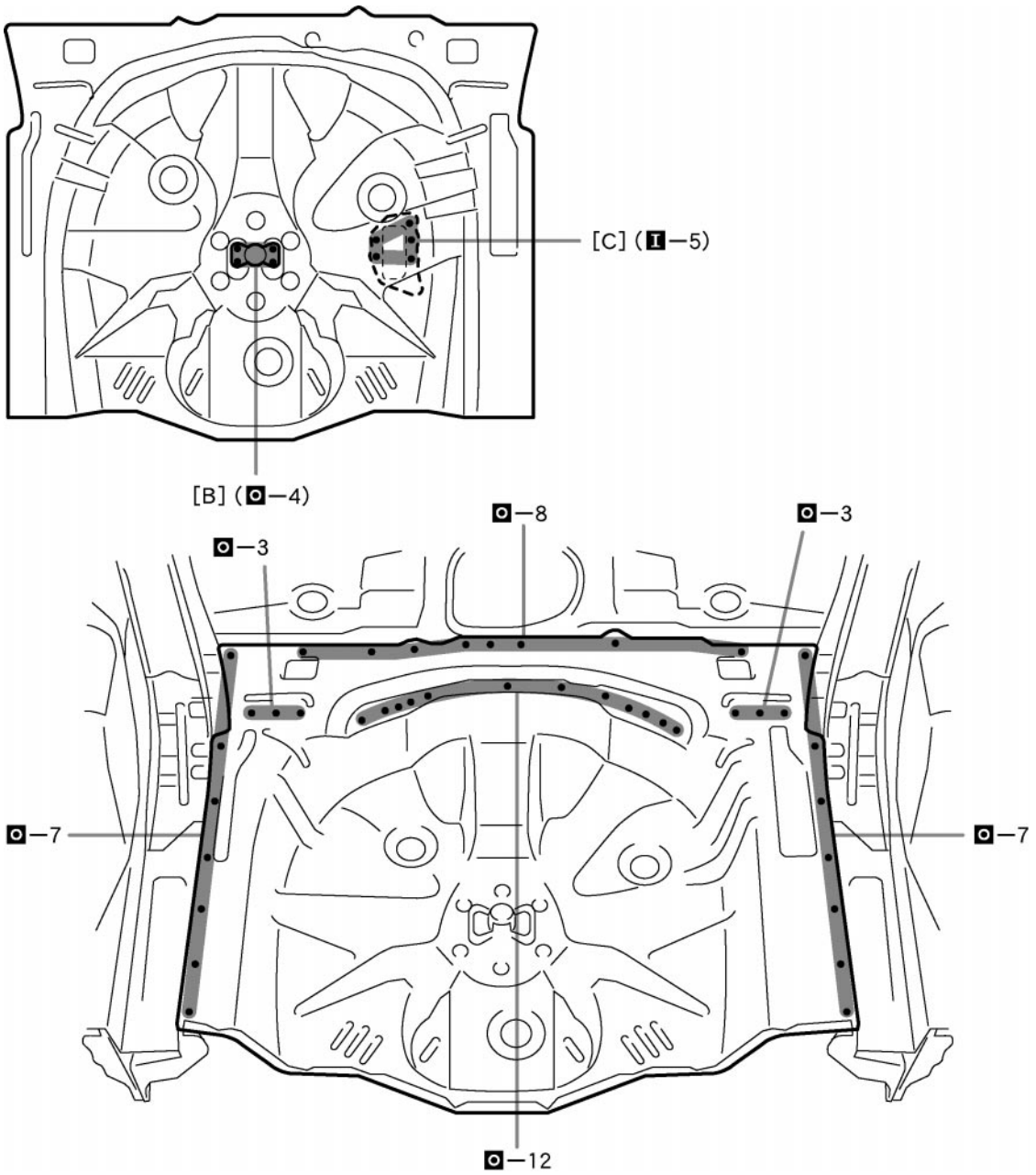

F23348

PART NAME

[B] Spare Wheel Clamp Bracket [C] Actuator Cover No.3 Bracket

[U.S.A., CANADA]

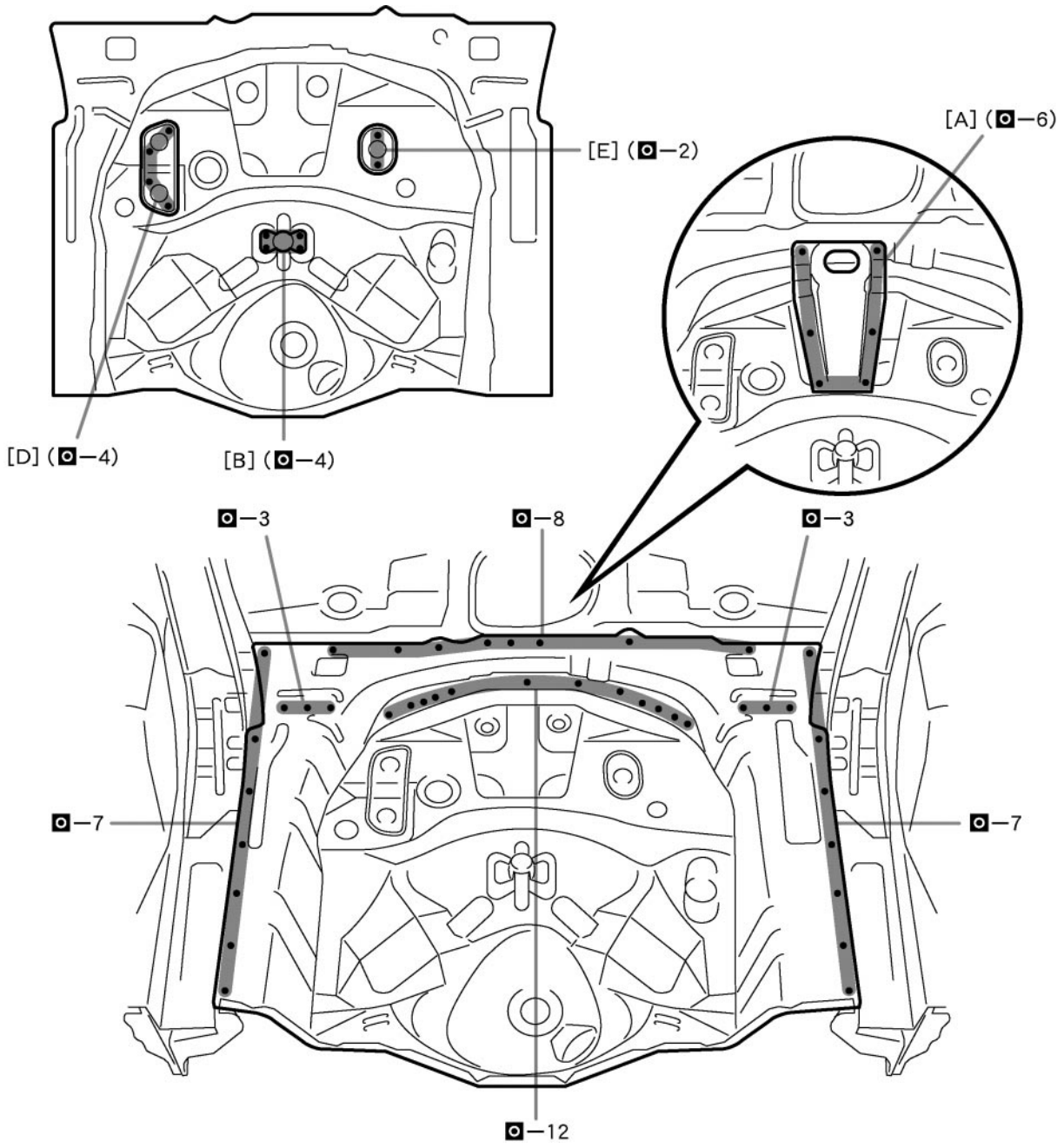

F23346

POINT

1 After installing the new parts, install [A].

PART NAME

[A] Rear Floor Brace Bracket [B] Spare Wheel Clamp Bracket
[D] Fuel Tube No.2 Bracket [E] Fuel Tube Bracket

REAR FLOOR PAN EXTENSION (ASSY): Sedan

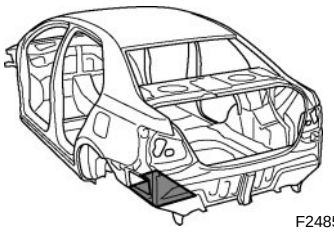
F24852A

REPLACEMENT
With the body lower back panel removed.

REMOVAL

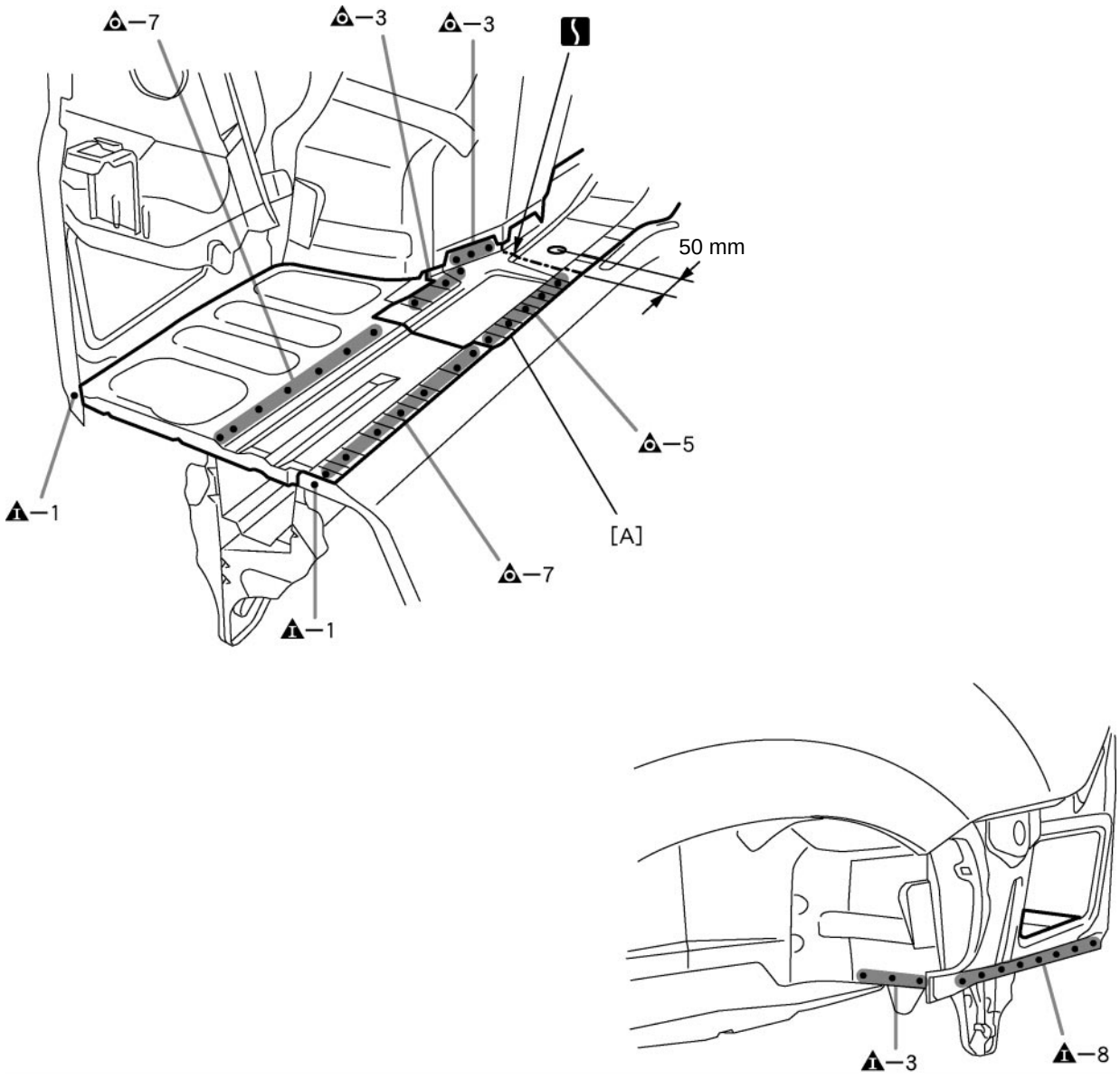

F24852-1

POINT
1 Remove [A] at the same time.

PART NAME
[A] Floor Side Rail Front Panel
50 mm (1.97 in.)

INSTALLATION

* Temporarily install the new parts and measure each part of the new parts in accordance with the body dimension diagram. (See the body dimension diagram)
* Inspect the fitting of the related parts around the new parts before welding. This affects the appearance of the finish.
* After welding, apply polyurethane foam to the corresponding parts.
* After welding, apply body sealer and undercoating to the corresponding parts.
* After applying the top coat, apply anti-rust agent to the internal panel portion of the closed section structural weld points.

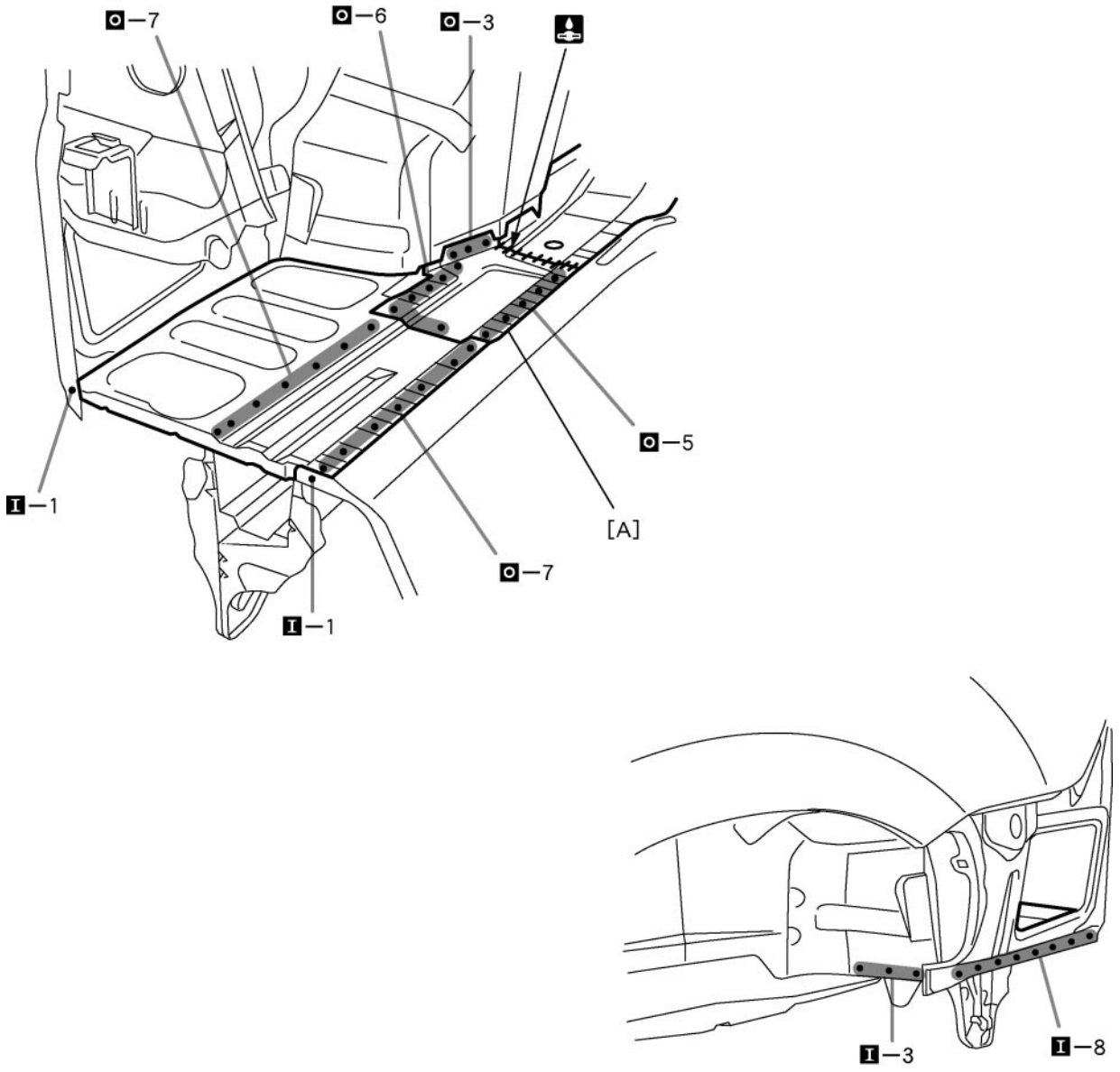

F24852-2

PART NAME

[A] Floor Side Rail Front Panel

REAR FLOOR PAN (ASSY): Sedan

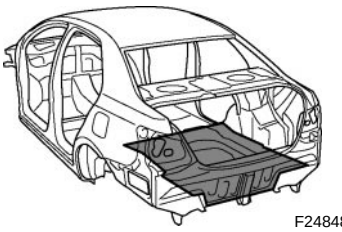
F24848A

REPLACEMENT

With the floor side rail front panel removed.

REMOVAL

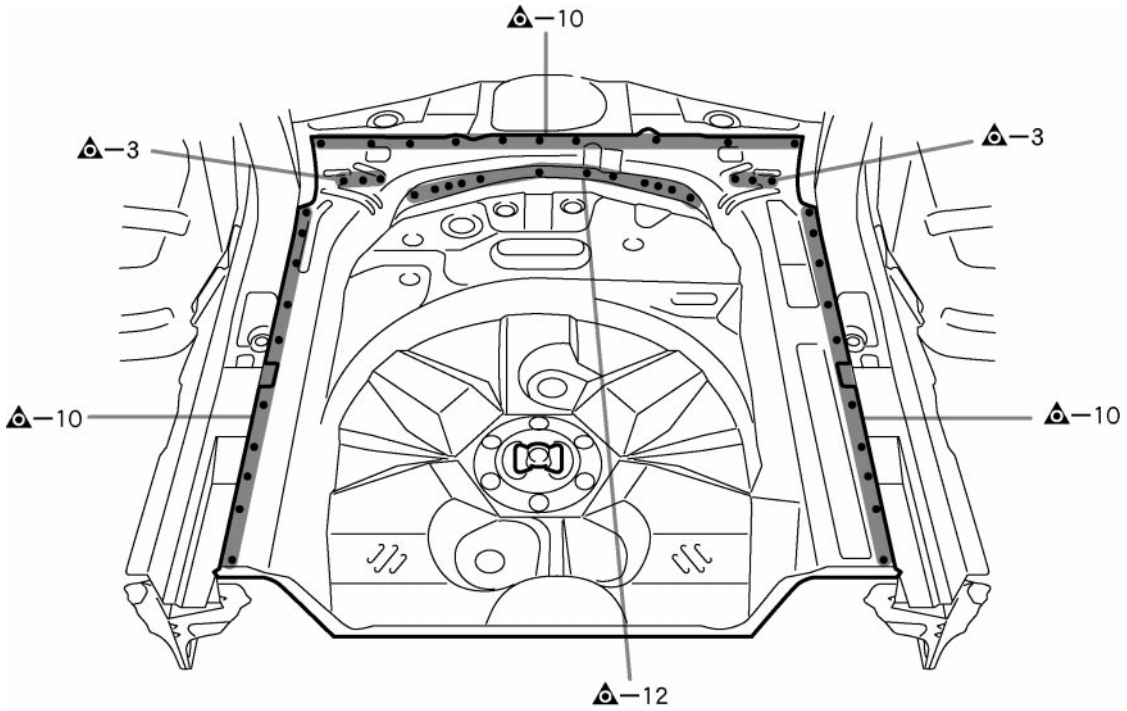

F24848

INSTALLATION

⁎ Temporarily install the new parts and measure each part of the new parts in accordance with the body dimension diagram. (See the body dimension diagram)
⁎ Inspect the fitting of the related parts around the new parts before welding. This affects the appearance of the finish.
⁎ After welding, apply polyurethane foam to the corresponding parts.
⁎ After welding, apply body sealer and undercoating to the corresponding parts.
⁎ After applying the top coat, apply anti-rust agent to the internal panel portion of the closed section structural weld points.

[EX. U.S.A., CANADA]

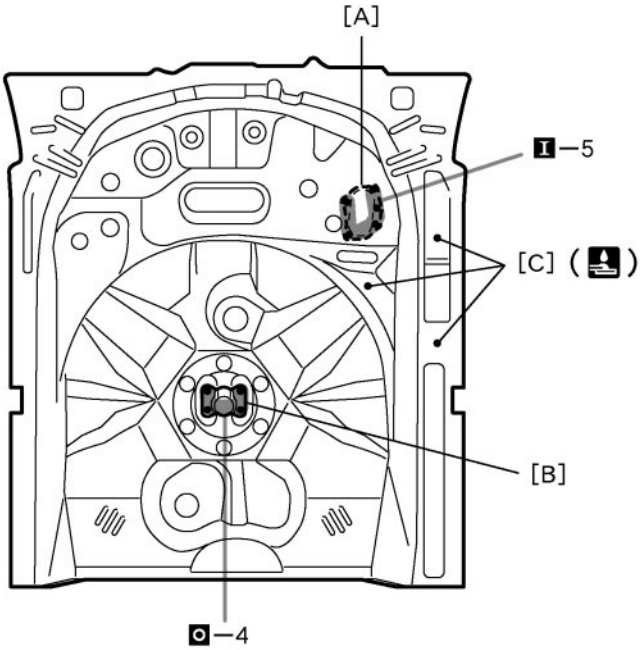

[U.S.A., CANADA]

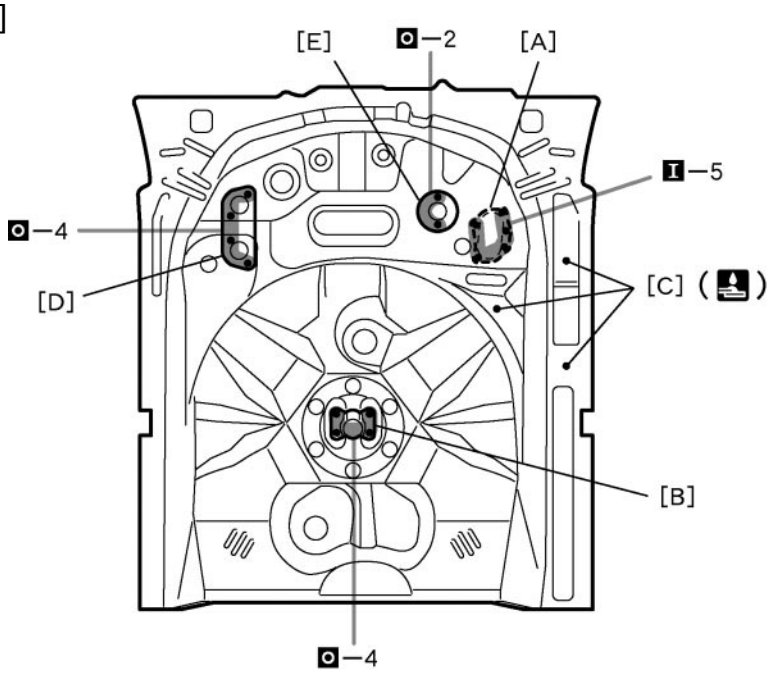

F24849-1

PART NAME

[A] Actuator Cover No.3 Bracket
[B] Spare Wheel Clamp Bracket
[C] Weld Bolt
[D] Fuel Tube Bracket
[E] Fuel Tube No.2 Bracket

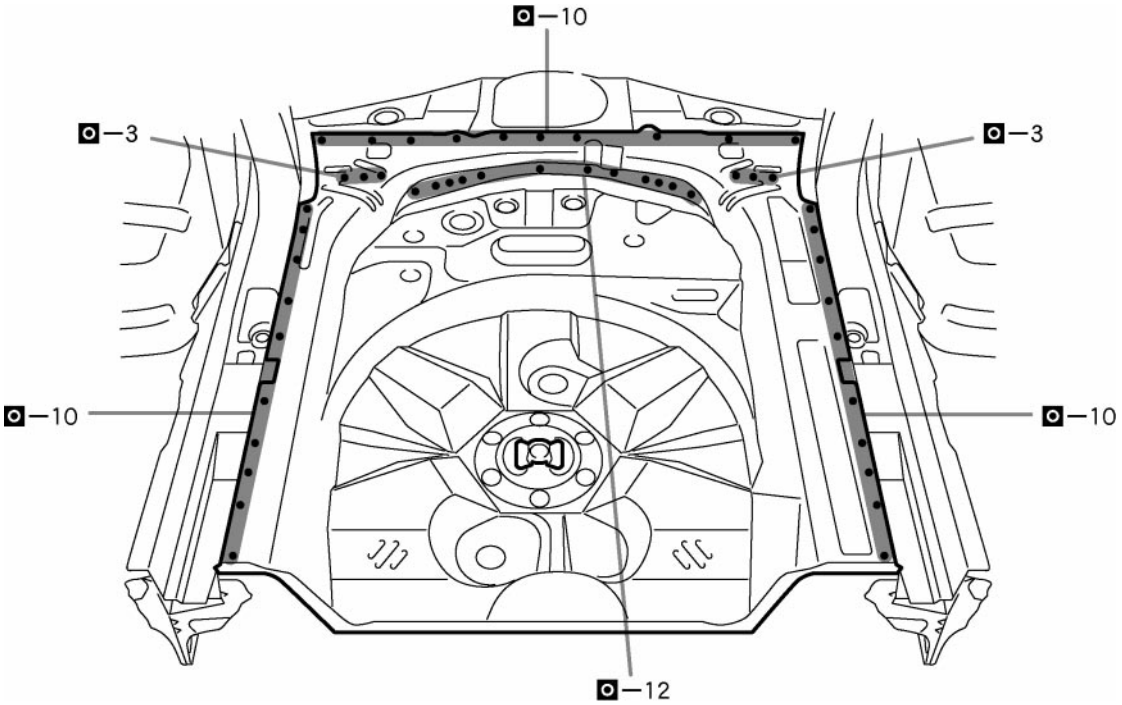

F24849-2

REAR FLOOR CROSSMEMBER NO.2 (ASSY): Hatchback

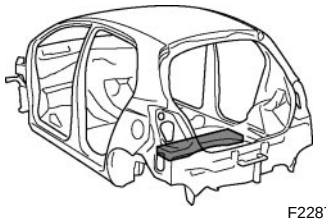
F22877A

REPLACEMENT

REMOVAL

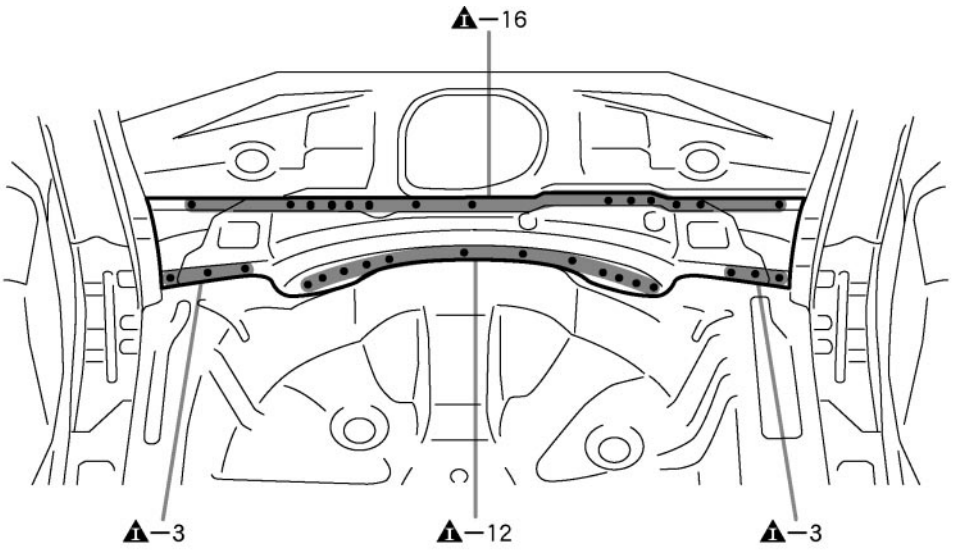

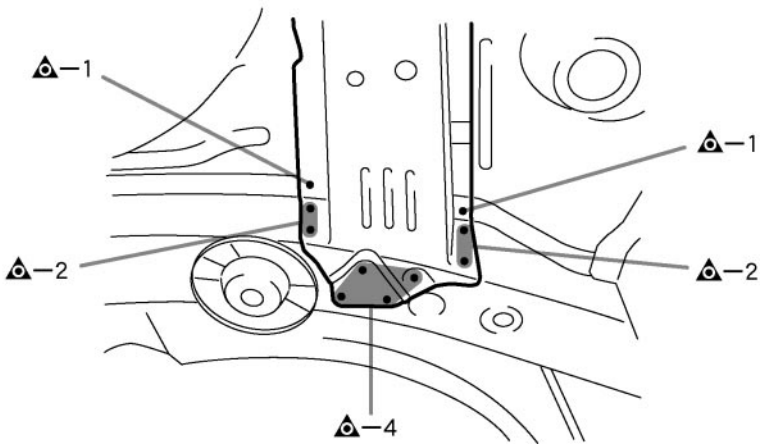

F22877

INSTALLATION

⁎ Temporarily install the new parts and measure each part of the new parts in accordance with the body dimension diagram. (See the body dimension diagram)
⁎ Inspect the fitting of the related parts around the new parts before welding. This affects the appearance of the finish.
⁎ After welding, apply the polyurethane foam to the corresponding parts.
⁎ After welding, apply body sealer and under-coating to the corresponding parts.
⁎ After applying the top coat layer, apply anti-rust agent to the inside of the necked section structural weld spots.

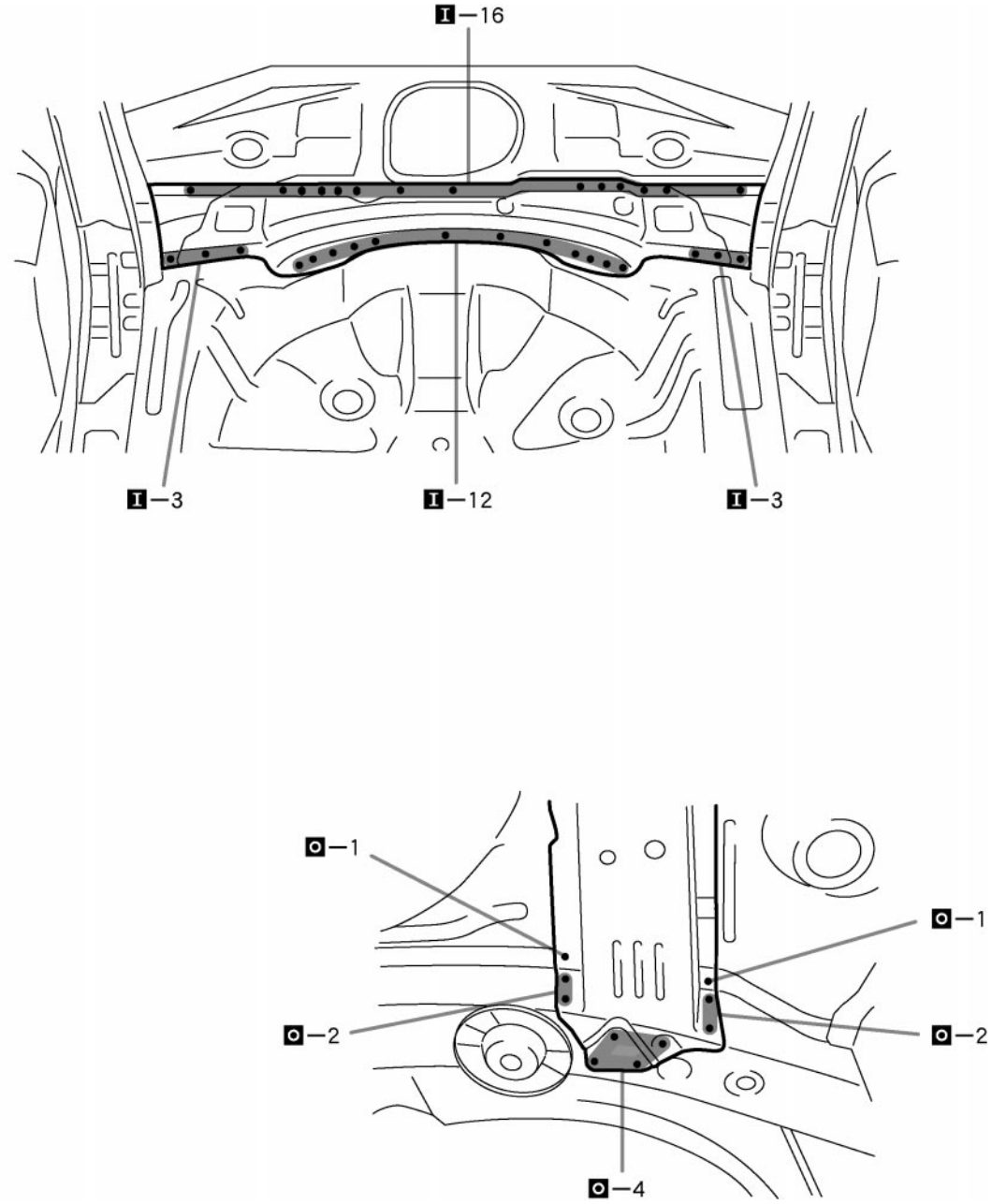

F22878

REAR FLOOR CROSSMEMBER NO.2 (ASSY): Sedan

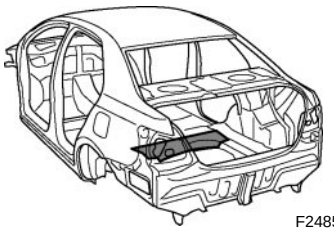
F24853A

REPLACEMENT

REMOVAL

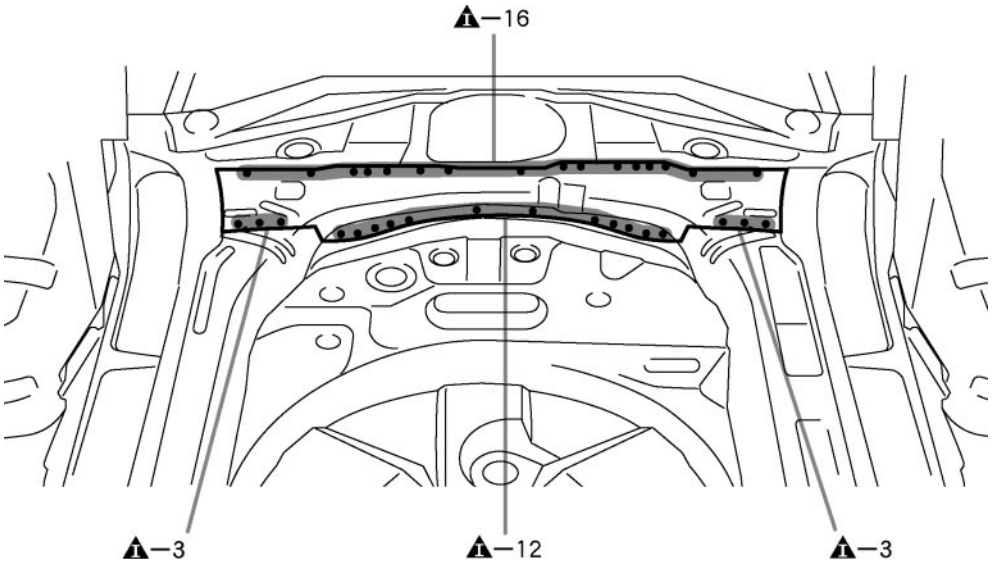

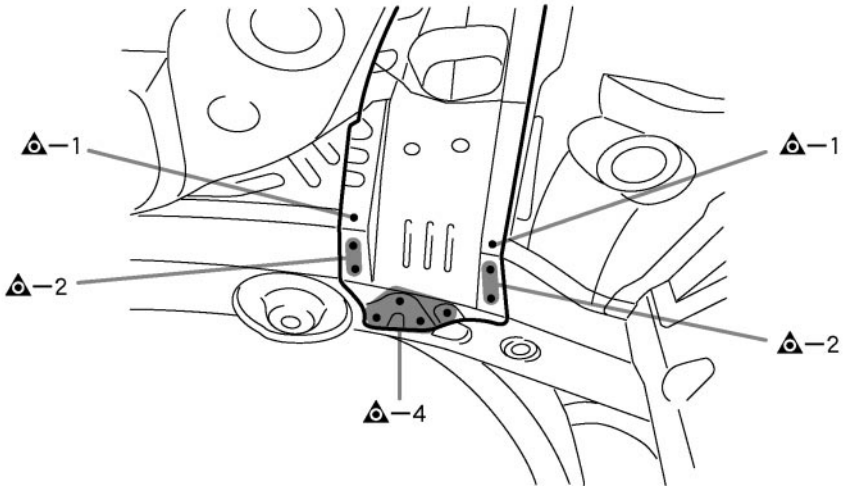

F24853-1

INSTALLATION

⁎ Temporarily install the new parts and measure each part of the new parts in accordance with the body dimension diagram. (See the body dimension diagram)
⁎ Inspect the fitting of the related parts around the new parts before welding. This affects the appearance of the finish.
⁎ After welding, apply polyurethane foam to the corresponding parts.
⁎ After welding, apply body sealer and undercoating to the corresponding parts.
⁎ After applying the top coat, apply anti-rust agent to the internal panel portion of the closed section structural weld points.

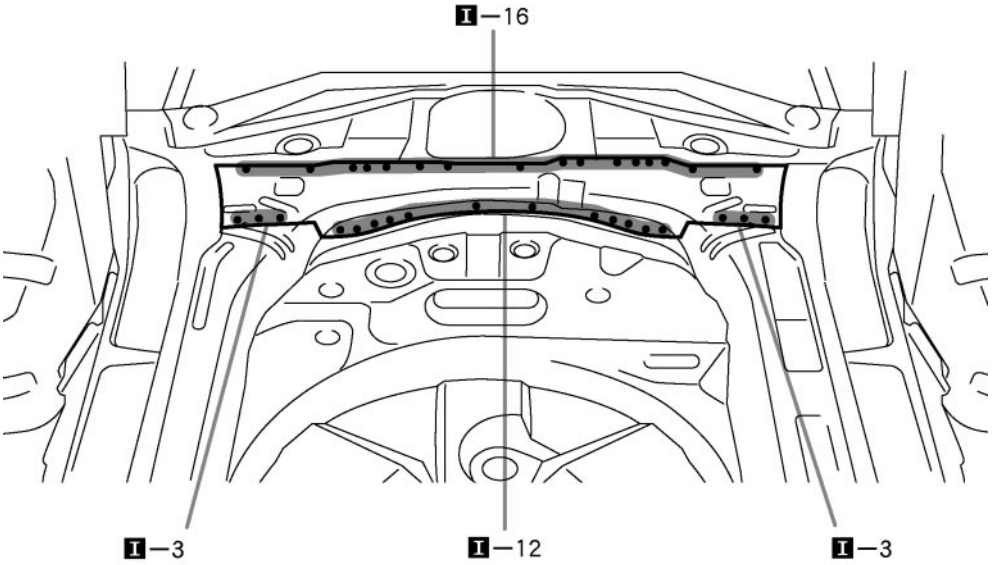

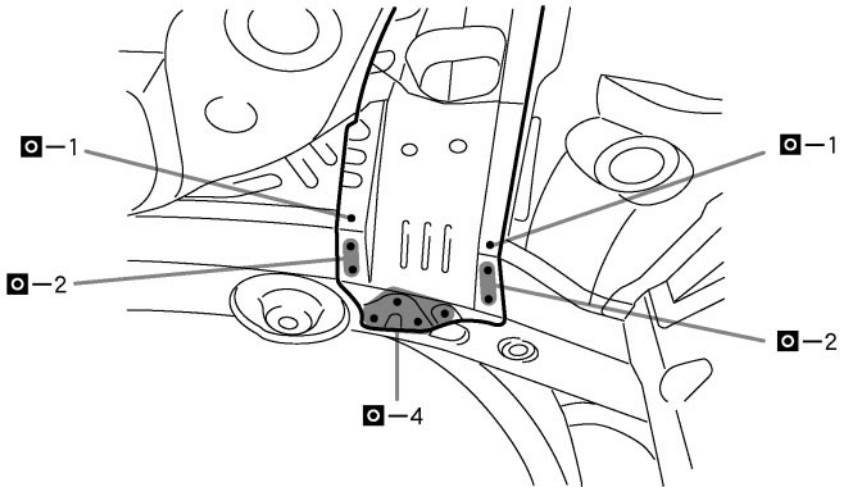

F24853-2

ROOF PANEL (ASSY): Hatchback

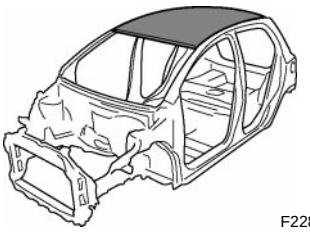
F22885A

REPLACEMENT

REMOVAL

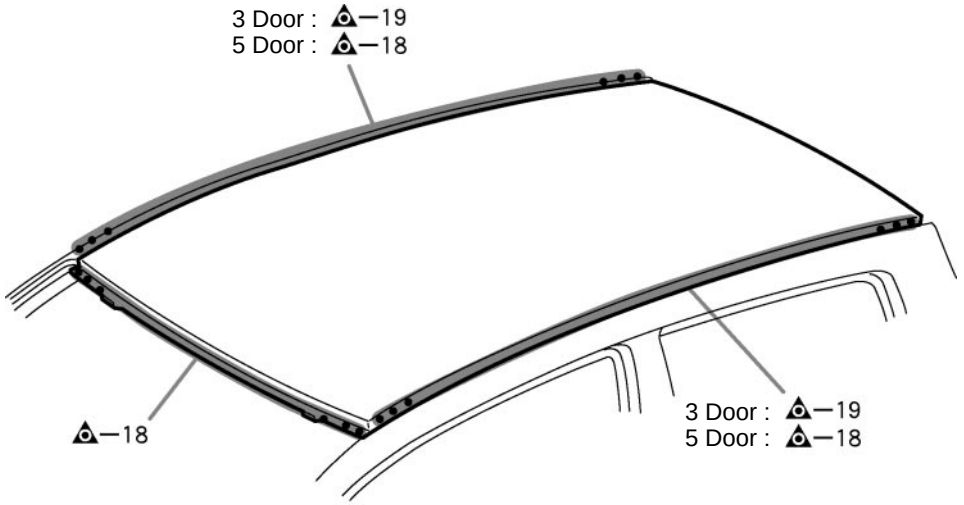

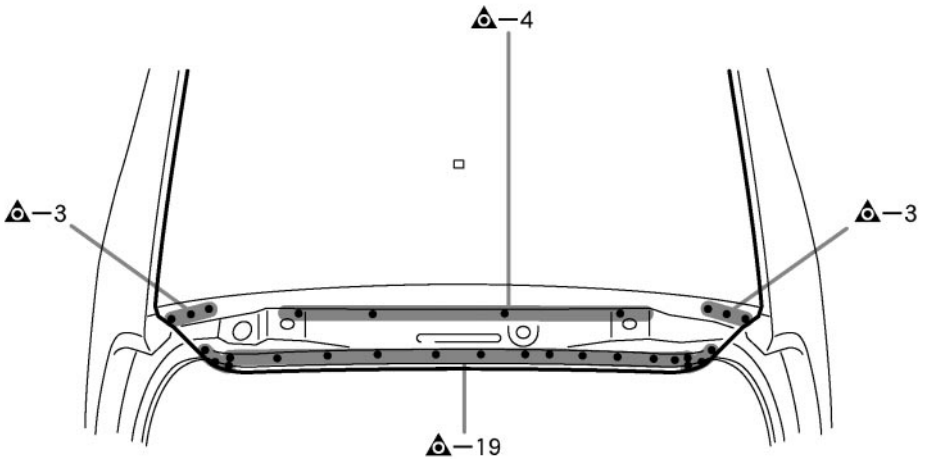

F23331

INSTALLATION

* Temporarily install the new parts and measure each part of the new parts in accordance with the body dimension diagram. (See the body dimension diagram)
* Inspect the fitting of the related parts around the new parts before welding. This affects the appearance of the finish.
* After welding, apply polyurethane foam to the corresponding parts.
* After welding, apply body sealer and undercoating to the corresponding parts.
* After applying the top coat, apply anti-rust agent to the internal panel portion of the closed section structural weld points.

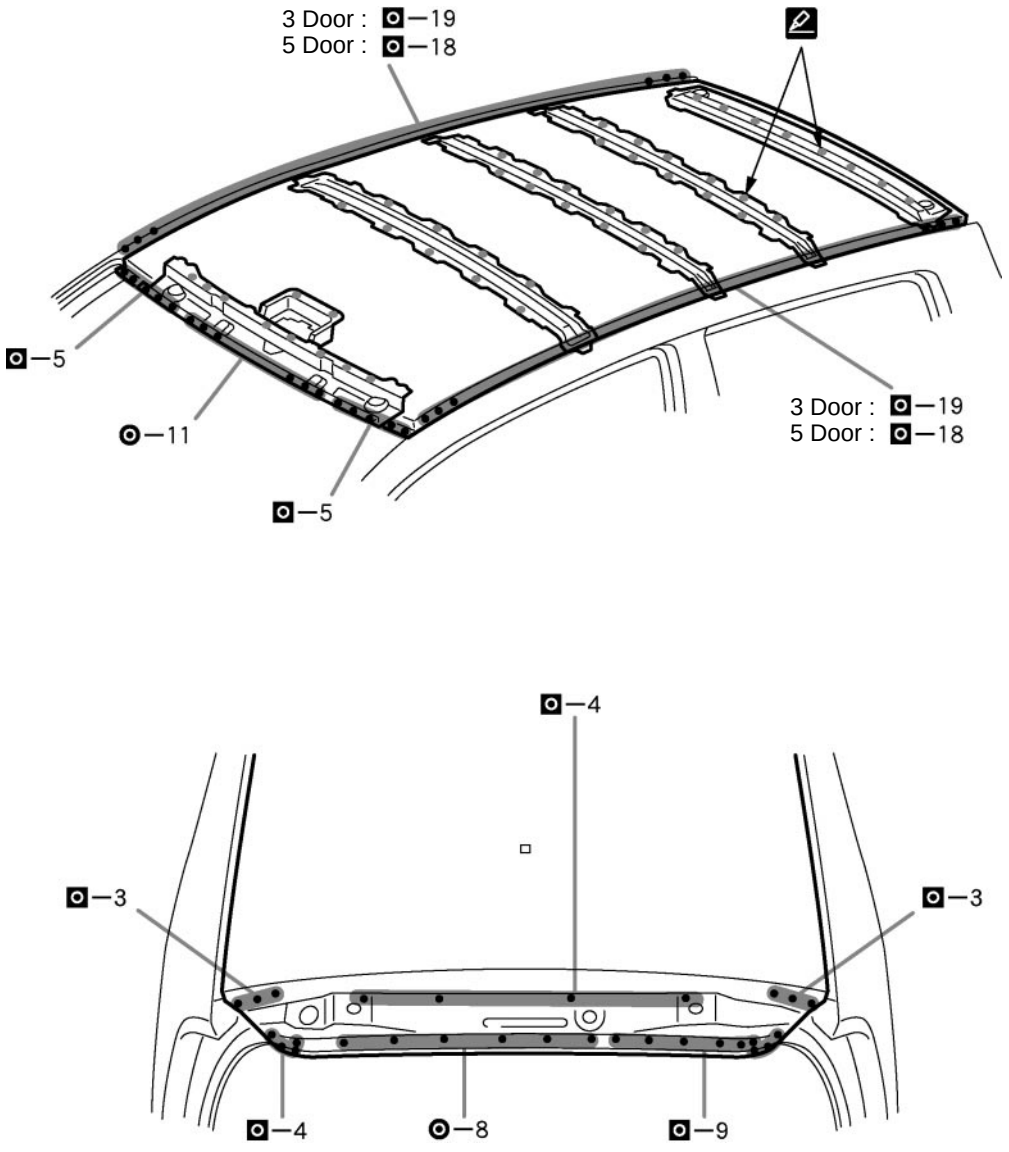

F23332

POINT

1 Before temporarily installing the new parts, apply body sealer to the window shield header panel, roof panel reinforcement and back window upper frame.
HINT:
1) Apply just enough sealer for the new parts to make contact.

FRONT FENDER APRON (ASSY)

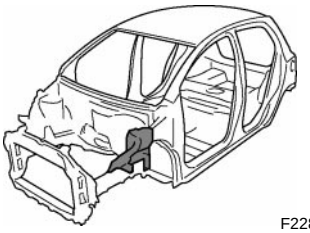
F22821A

REPLACEMENT

With the cowl top side panel removed.

REMOVAL

[RH]

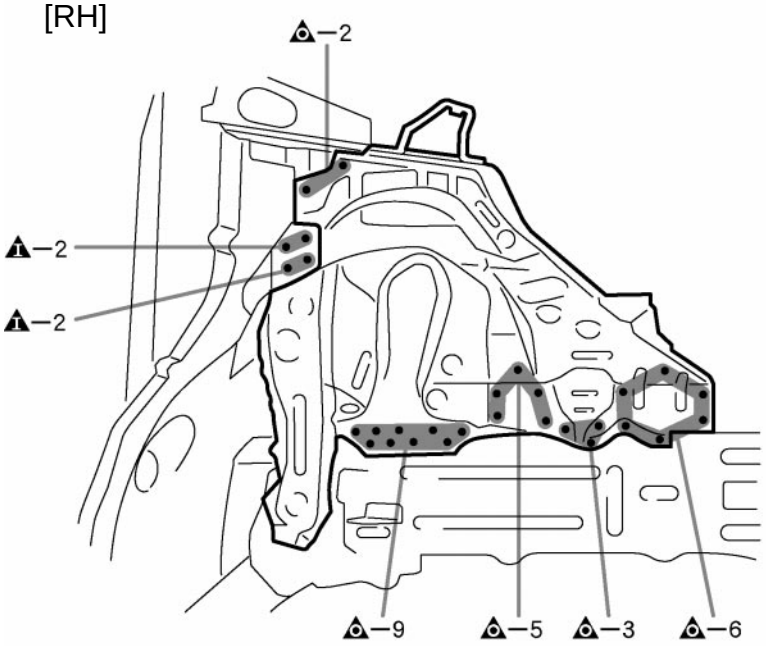

[LH]

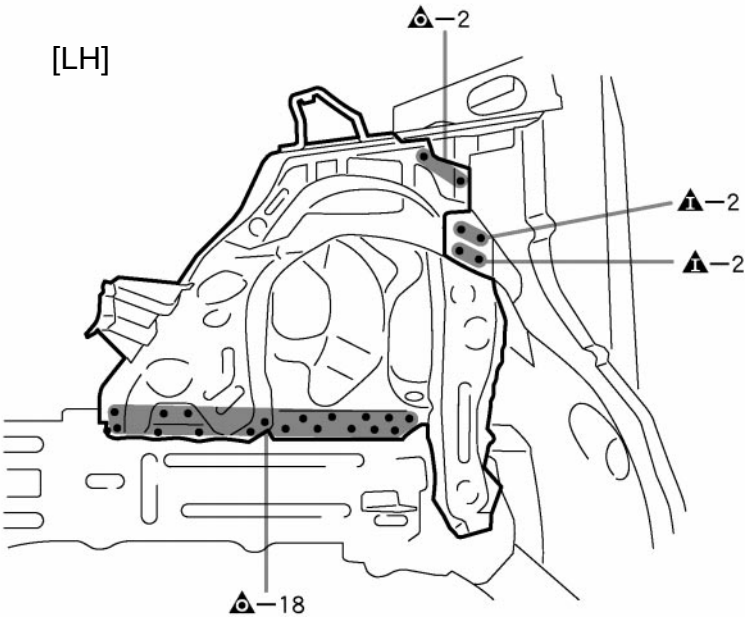

F22821

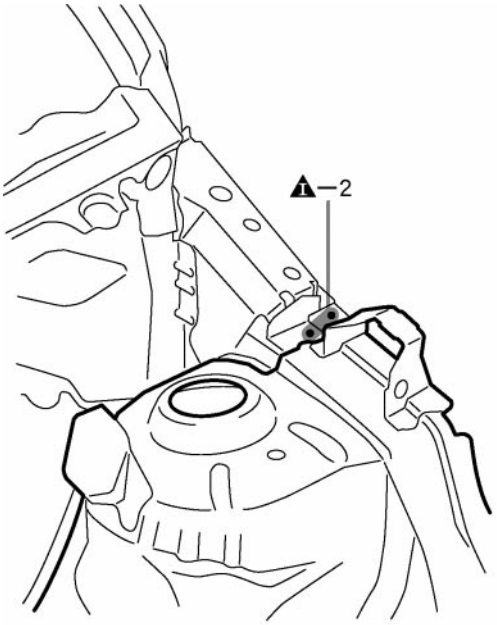

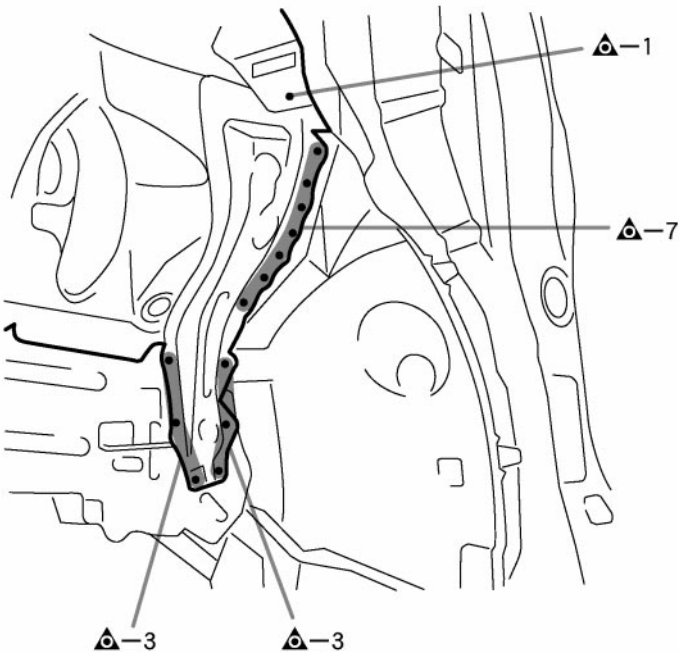

F22822

INSTALLATION

⁎ Temporarily install the new parts and measure each part of the new parts in accordance with the body dimension diagram. (See the body dimension diagram)
⁎ Inspect the fitting of the related parts around the new parts before welding. This affects the appearance of the finish.
⁎ After welding, apply the polyurethane foam to the corresponding parts.
⁎ After welding, apply body sealer and under-coating to the corresponding parts.
⁎ After applying the top coat layer, apply anti-rust agent to the inside of the necked section structural weld spots.

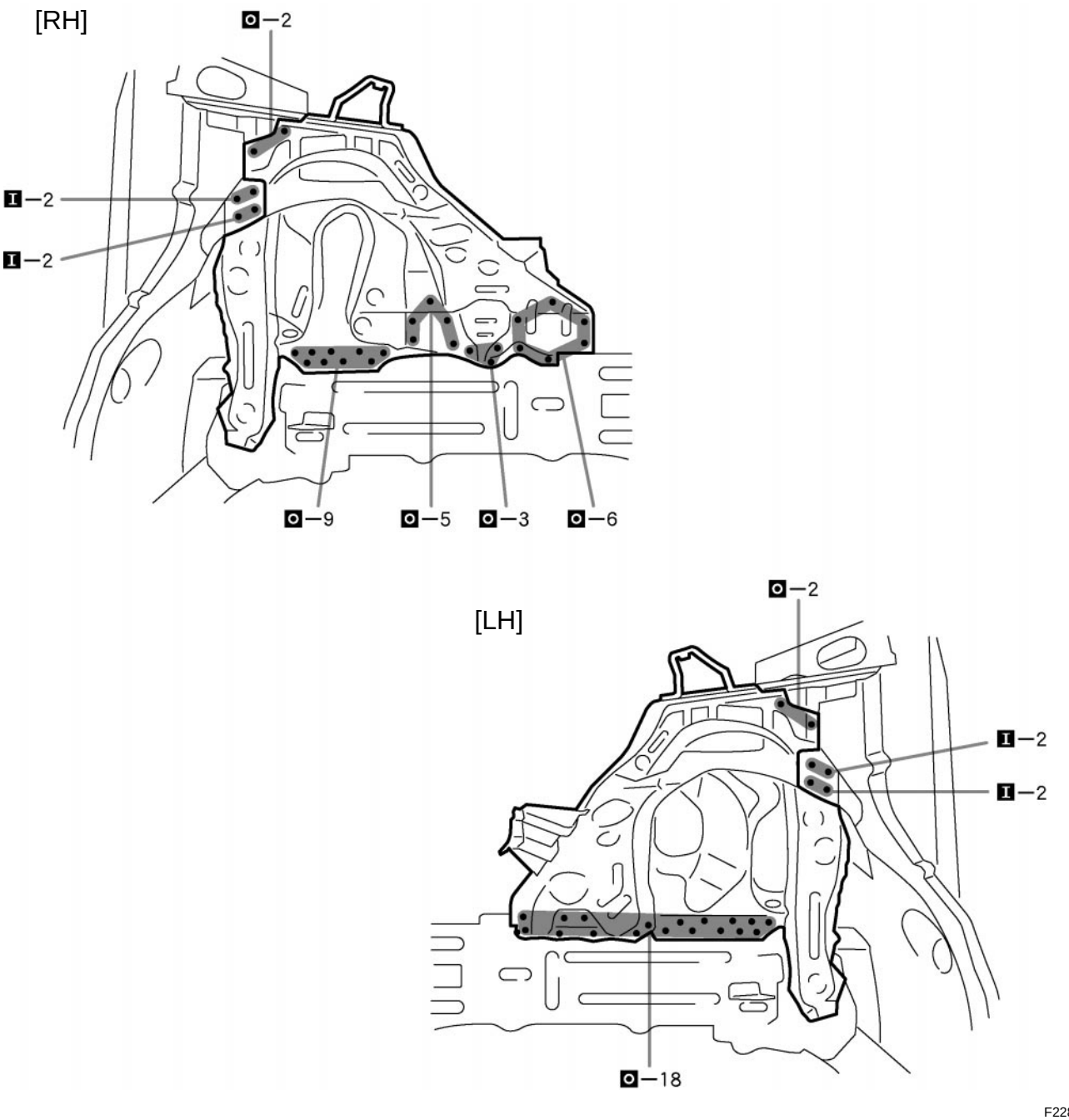

POINT

1 Make sure to attach correctly in accordance with the body dimension diagram as this part affects the front wheel alignment.
2 Inspect the fitting of the front fender, hood and other related parts before welding as this affects the appearance of the finish.

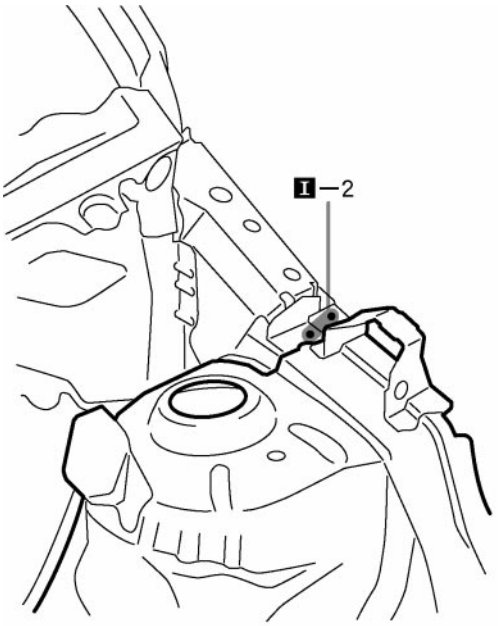

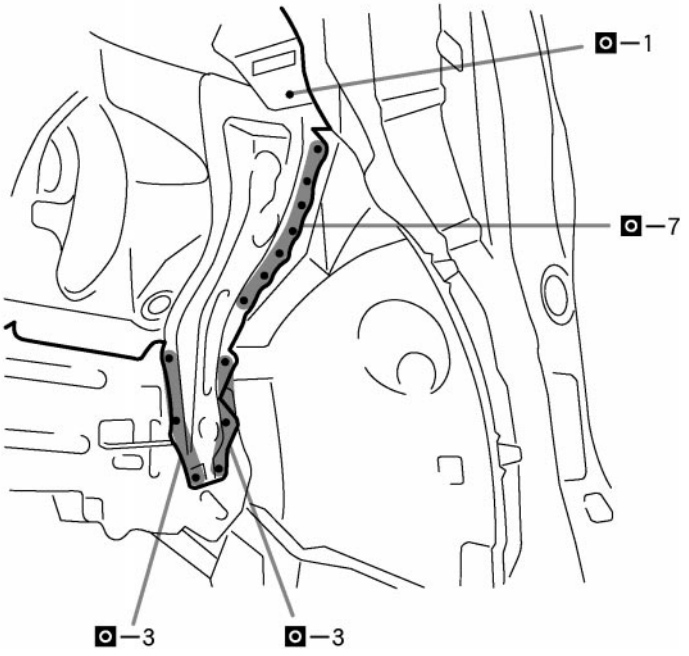

F22824

ROOF PANEL (ASSY): Sedan

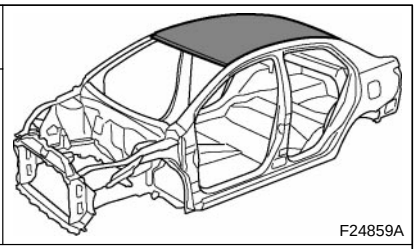
F24859A

REPLACEMENT

REMOVAL

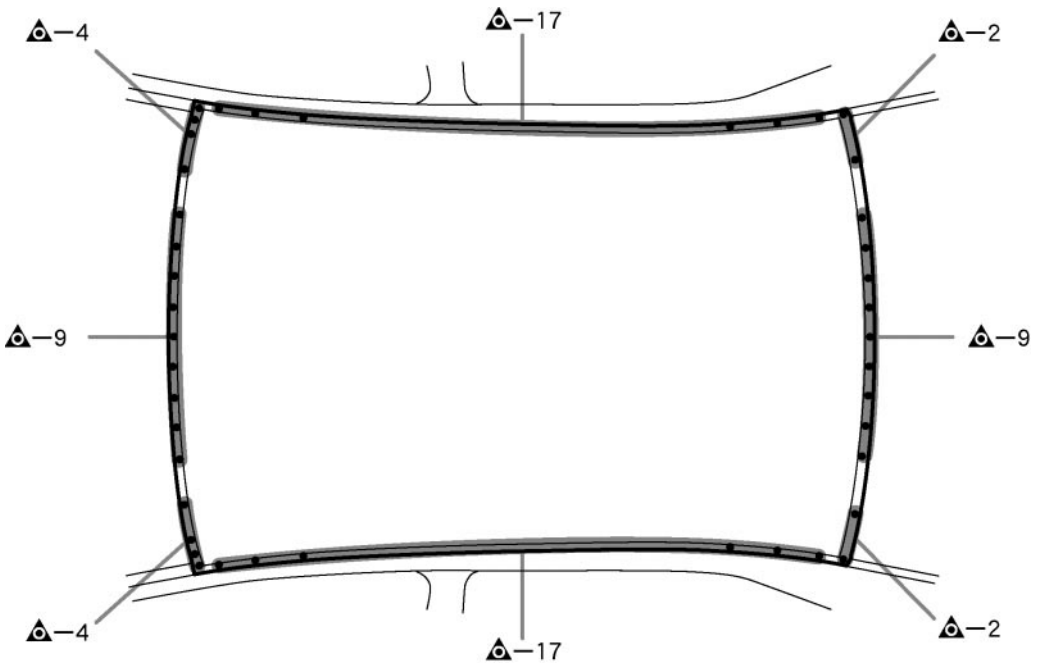

F24859-1

INSTALLATION

⁎ Temporarily install the new parts and measure each part of the new parts in accordance with the body dimension diagram. (See the body dimension diagram)
⁎ Inspect the fitting of the related parts around the new parts before welding. This affects the appearance of the finish.
⁎ After welding, apply polyurethane foam to the corresponding parts.
⁎ After welding, apply body sealer and undercoating to the corresponding parts.
⁎ After applying the top coat, apply anti-rust agent to the internal panel portion of the closed section structural weld points.

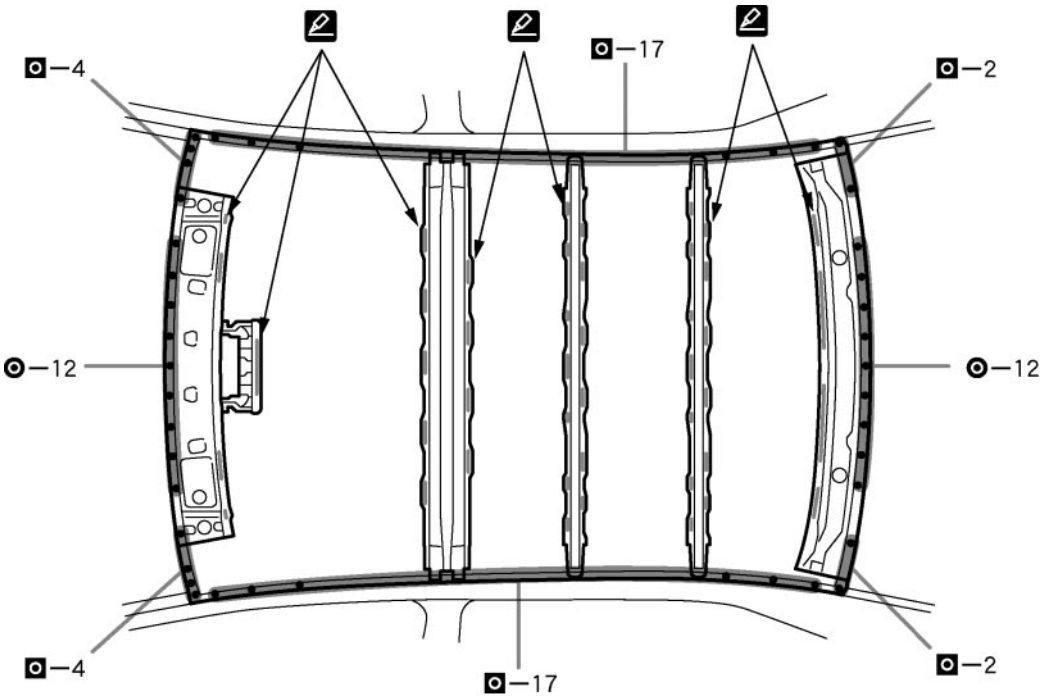

F248860-1

POINT

1 Before temporarily installing the new parts, apply body sealer to the window shield header panel, roof panel reinforcement and back window upper frame.
HINT:
1) Apply just enough sealer for the new parts to make contact.

REAR FLOOR SIDEMEMBER (CUT): Hatchback

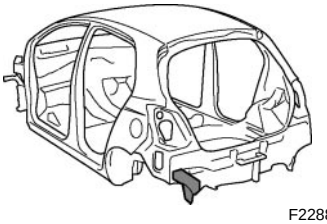
F22881A

REPLACEMENT
With the body lower back panel removed.

REMOVAL

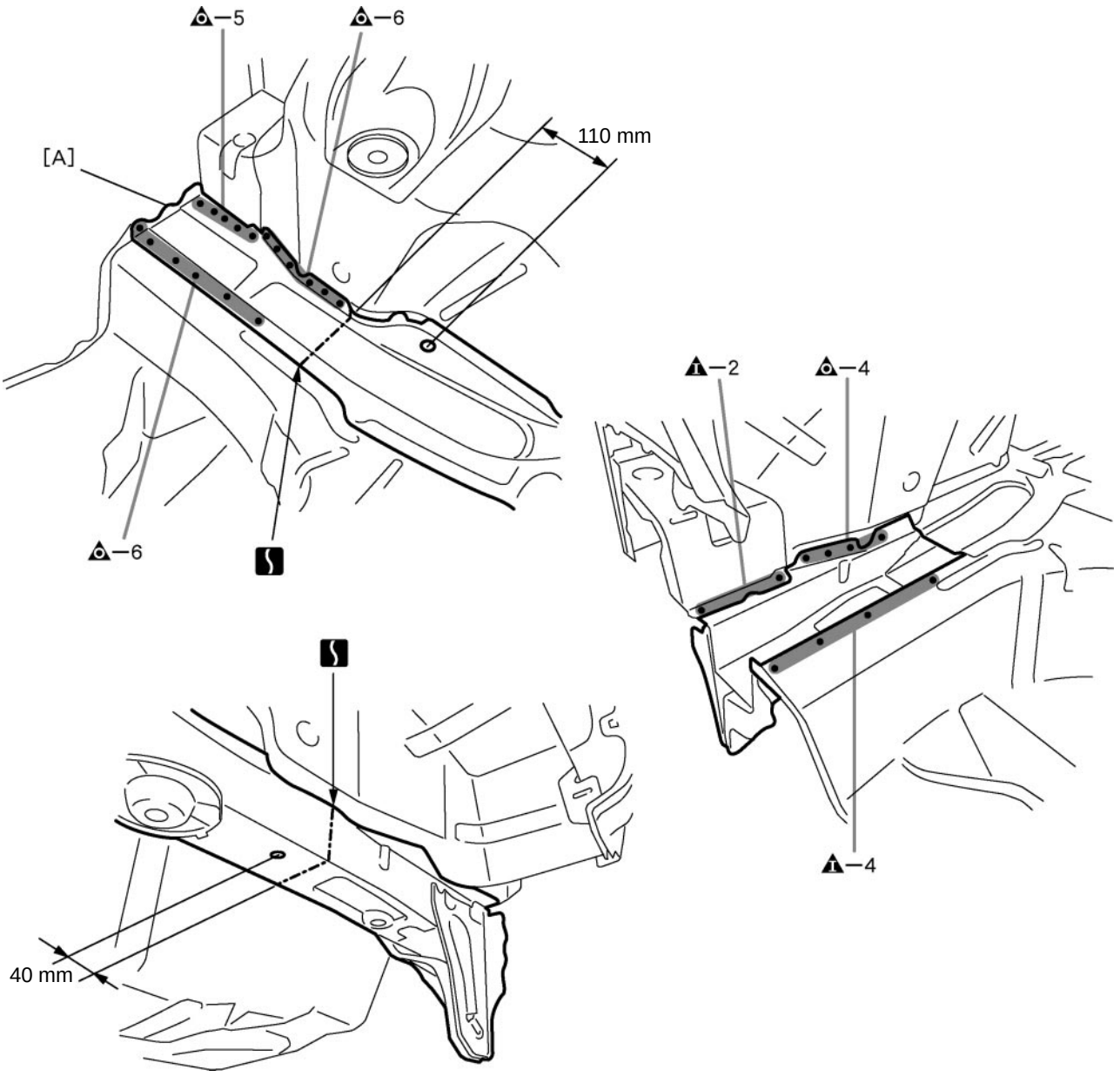

F23329

POINT
1 After removing [A], remove the rear floor sidemember.

PART NAME
[A] Floor Side Rail Front Panel
40 mm (1.57 in.) 110 mm (4.33 in.)

INSTALLATION

⁎ Temporarily install the new parts and measure each part of the new parts in accordance with the body dimension diagram. (See the body dimension diagram)
⁎ Inspect the fitting of the related parts around the new parts before welding. This affects the appearance of the finish.
⁎ After welding, apply the polyurethane foam to the corresponding parts.
⁎ After welding, apply body sealer and under-coating to the corresponding parts.
⁎ After applying the top coat layer, apply anti-rust agent to the inside of the necked section structural weld spots.

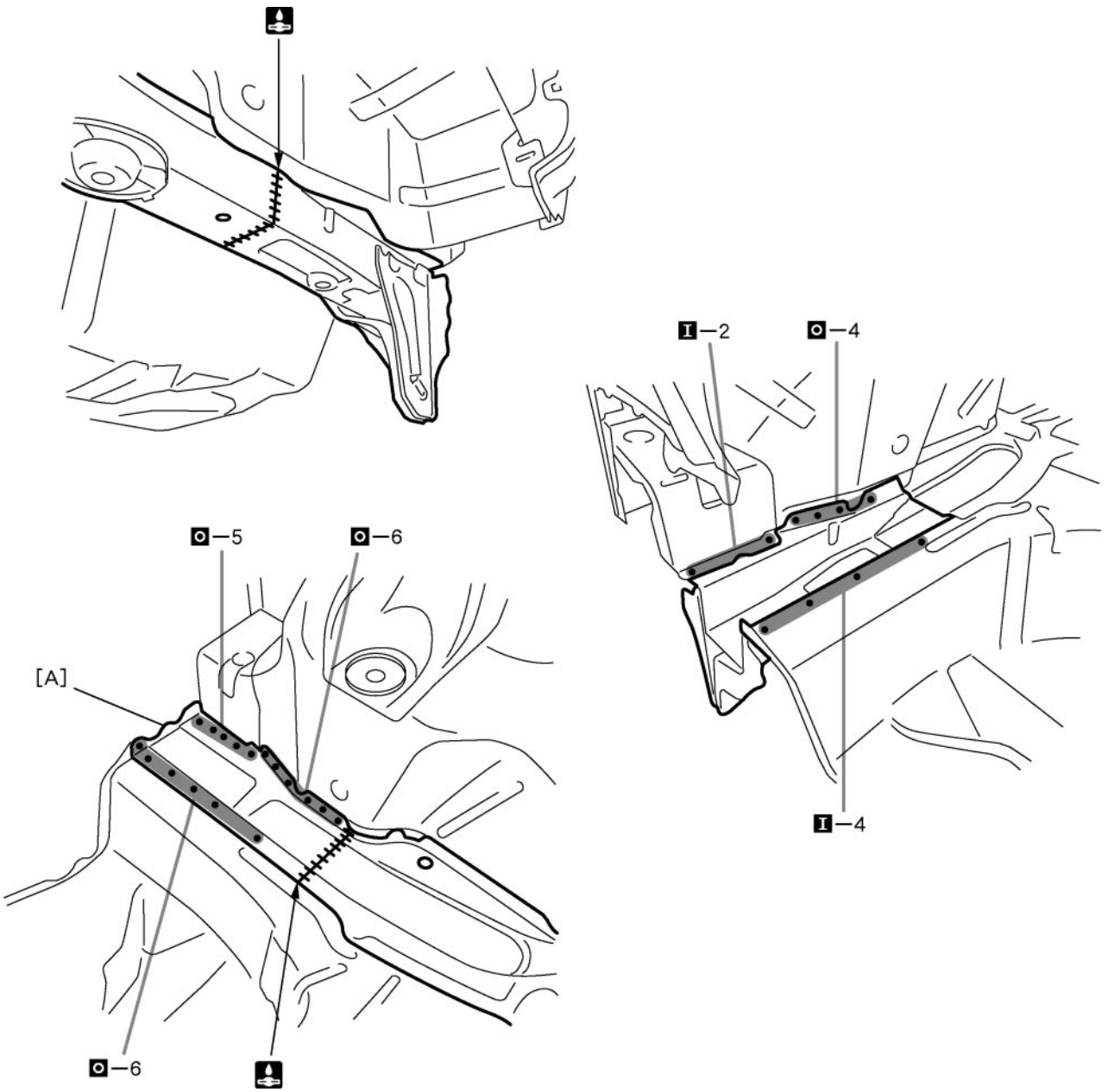

F23330

PART NAME

[A] Floor Side Rail Front Panel

OUTER PANEL INSTALLATION TORQUE

[Hatchback]

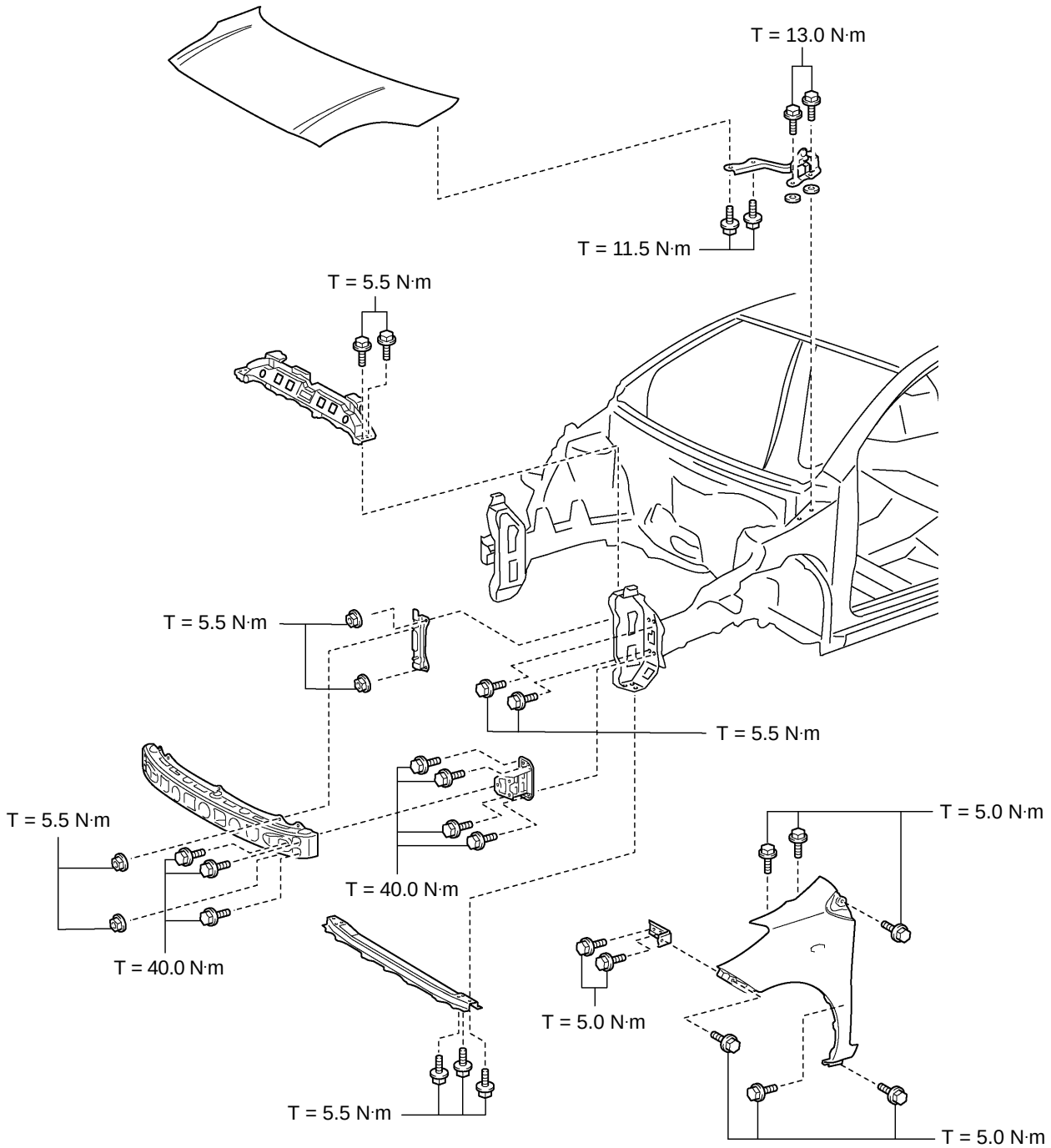

5.0 N·m (51 kgf·cm, 44 in.·lbf)	5.5 N·m (56 kgf·cm, 49 in.·lbf)	11.5 N·m (117 kgf·cm, 8 ft.·lbf)
13.0 N·m (133 kgf·cm, 10 ft.·lbf)	40.0 N·m (408 kgf·cm, 30 ft.·lbf)	—

[Sedan]

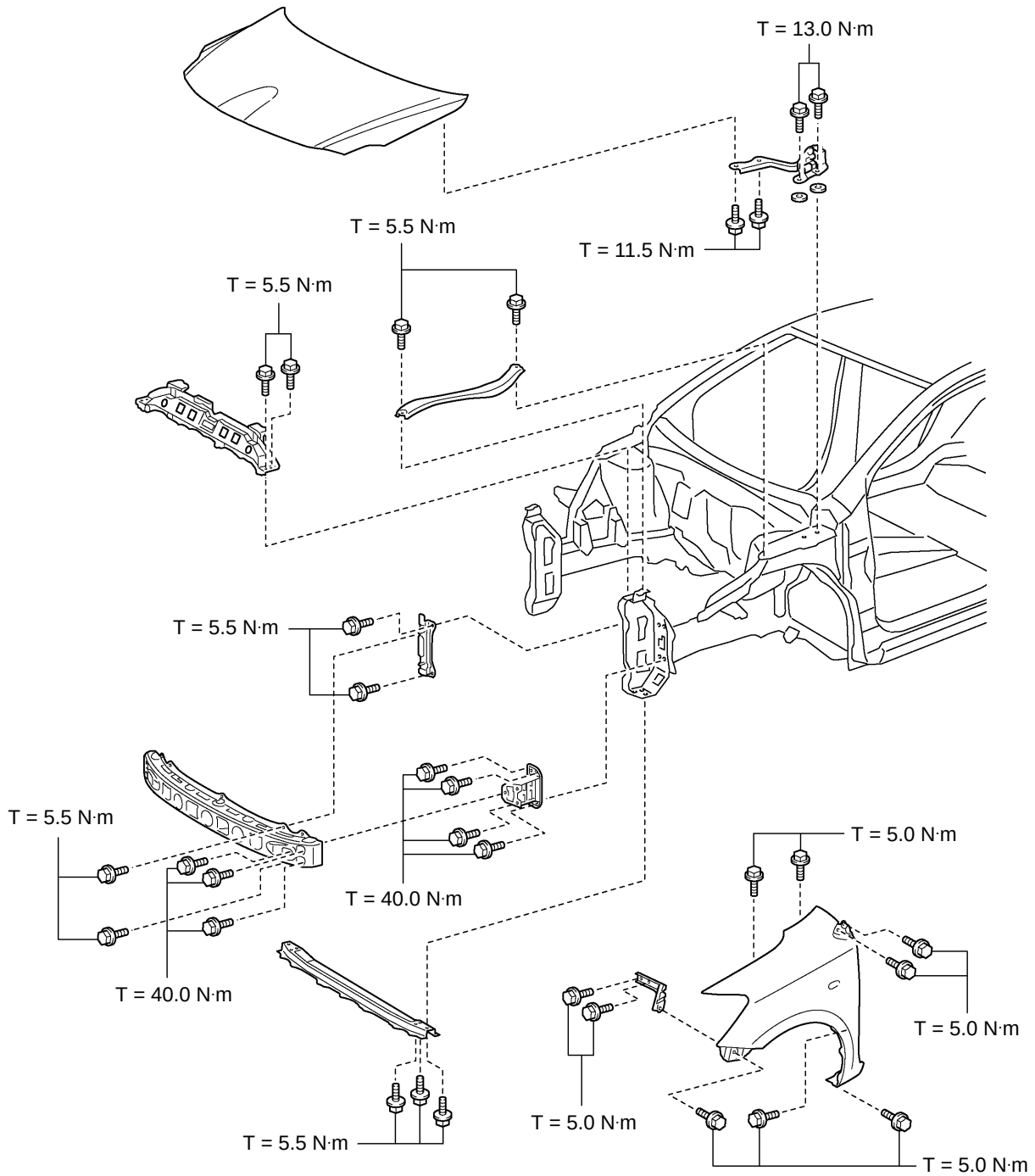

F24861-1

5.0 N·m (51 kgf·cm, 44 in.·lbf)	5.5 N·m (56 kgf·cm, 49 in.·lbf)	11.5 N·m (117 kgf·cm, 8 ft.·lbf)
13.0 N·m (133 kgf·cm, 10 ft.·lbf)	40.0 N·m (408 kgf·cm, 30 ft.·lbf)	—

[Hatchback 3 Door]

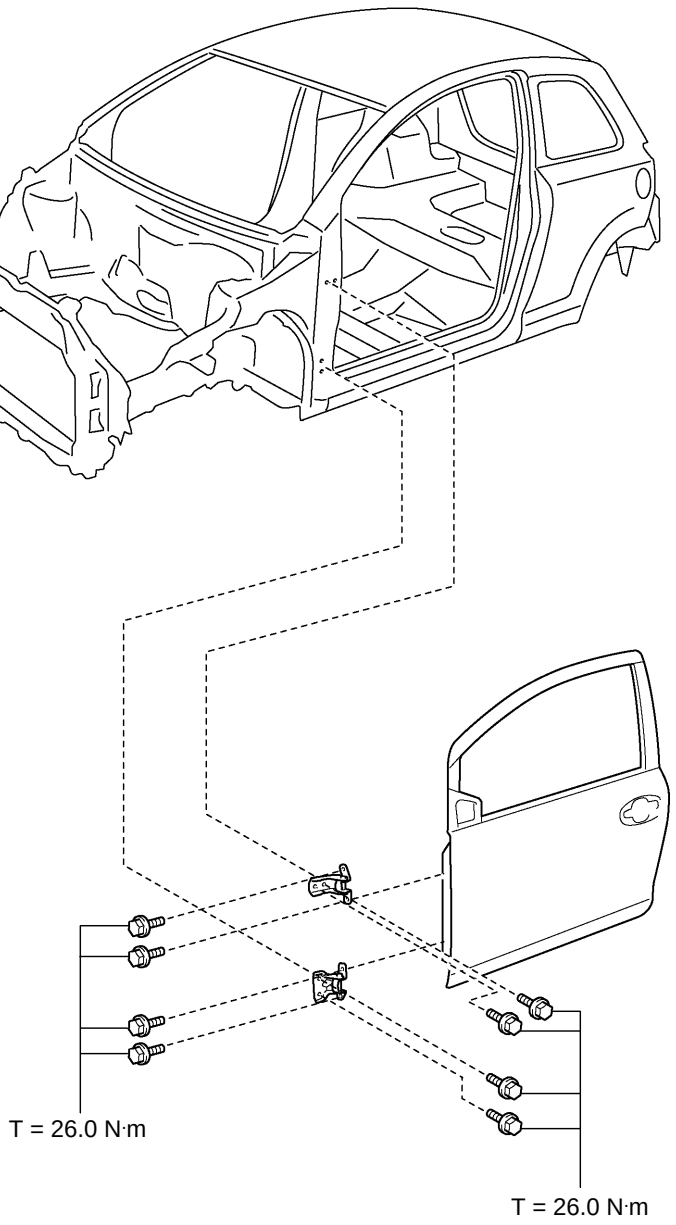

F23333

26.0 N·m (265 kgf·cm, 19 ft.·lbf)	—	—

[Hatchback 5 Door]

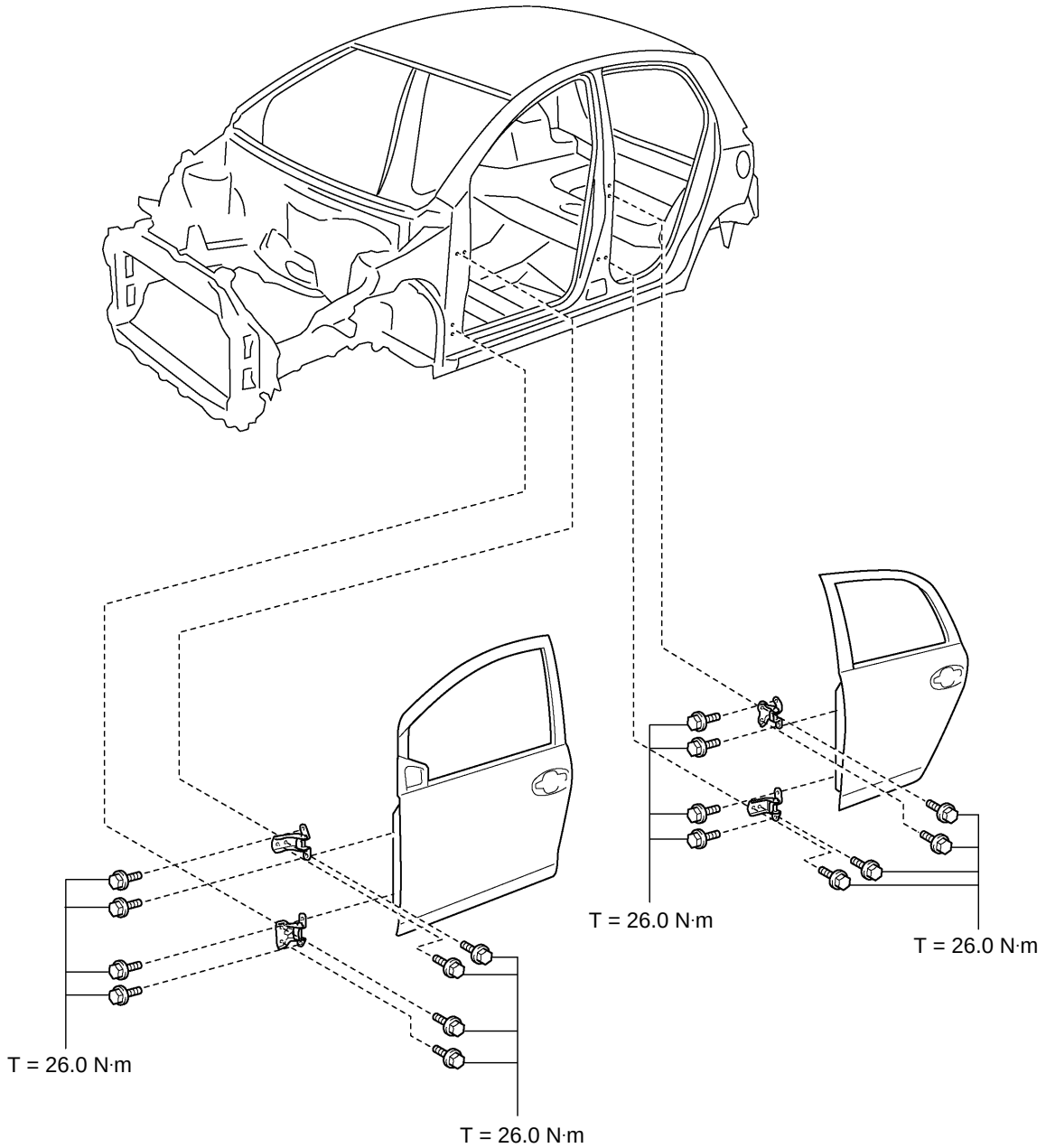

F23334

26.0 N·m (265 kgf·cm, 19 ft.·lbf)	—	—

[Sedan]

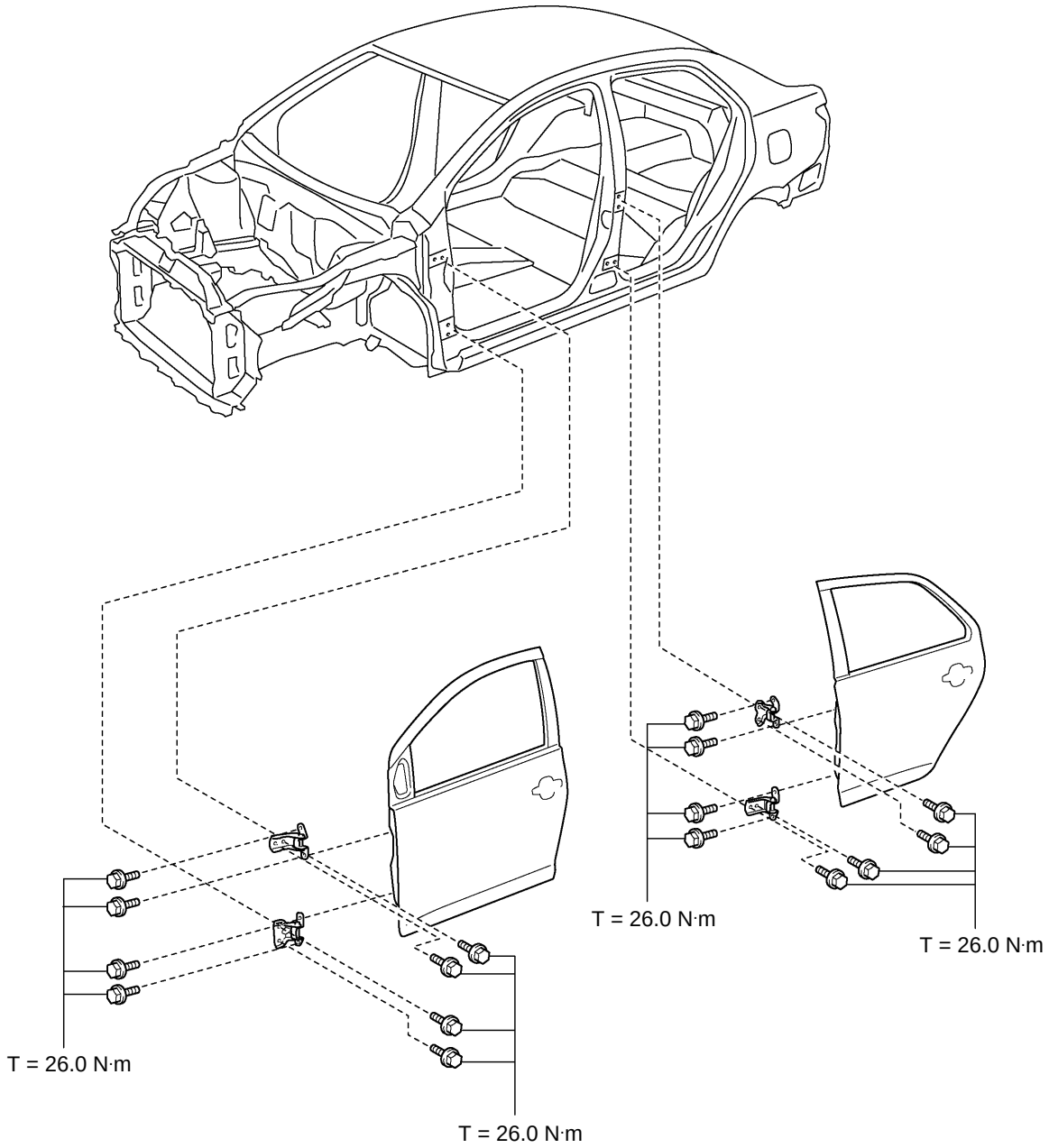

F24862-1

26.0 N·m (265 kgf·cm, 19 ft.·lbf)	—	—

[Hatchback]

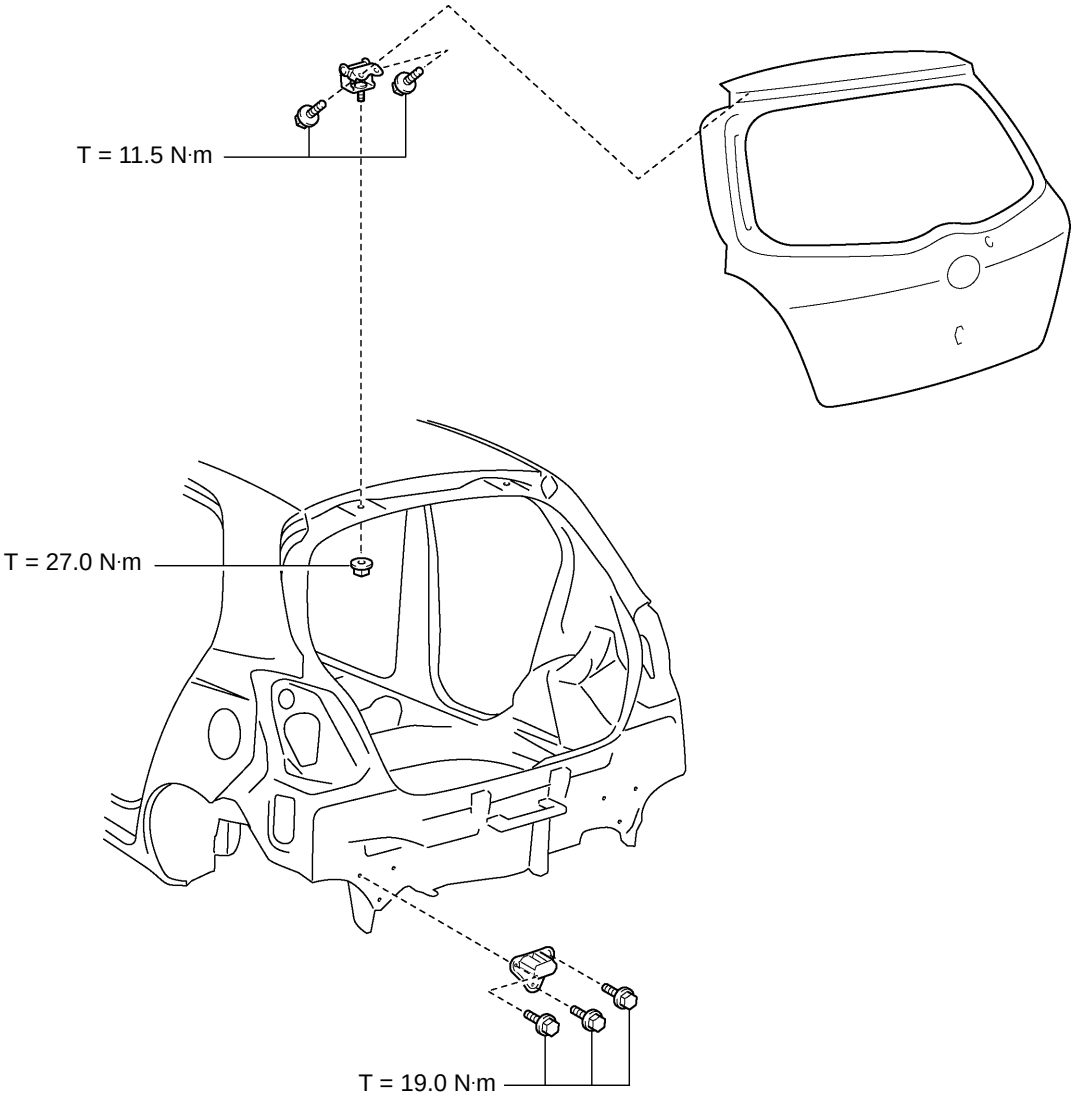

F22803

11.5 N·m (117 kgf·cm, 8 ft.·lbf)	19.0 N·m (194 kgf·cm, 14 ft.·lbf)	27.0 N·m (275 kgf·cm, 20 ft.·lbf)

[Sedan]

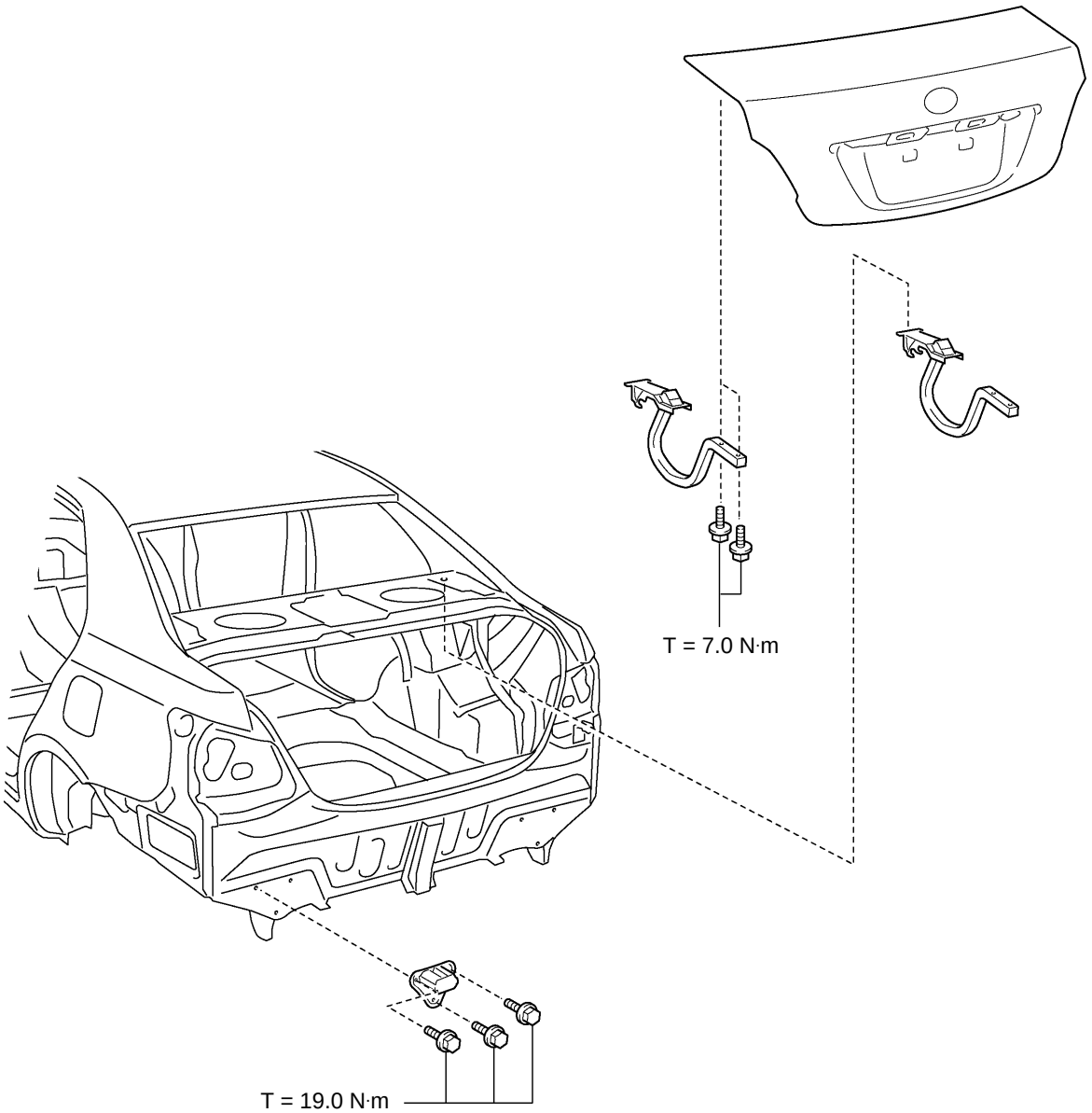

F24863-1

7.0 N·m (71 kgf·cm, 62 in.·lbf)	19.0 N·m (194 kgf·cm, 14 ft.·lbf)	—

REAR FLOOR SIDEMEMBER (ASSY): Sedan

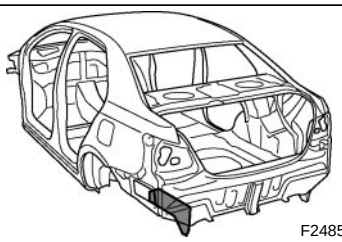
F24855A

REPLACEMENT
With the rear floor pan removed.

REMOVAL

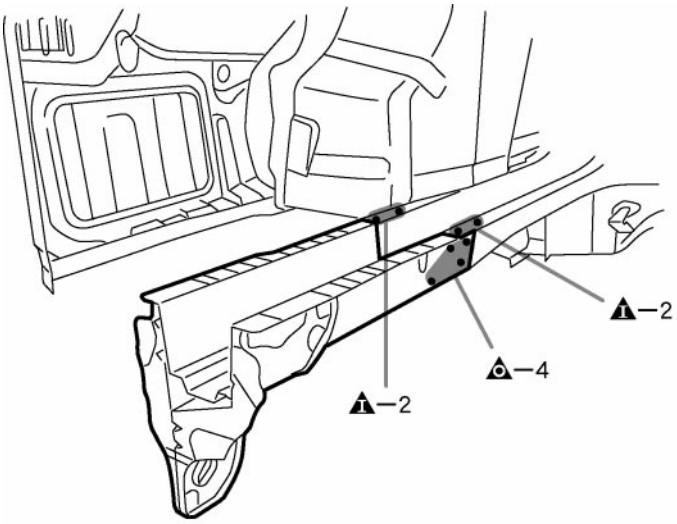

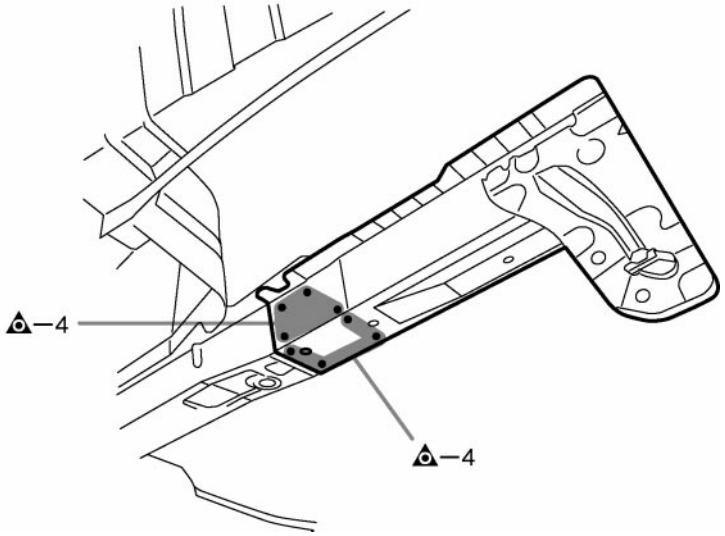

F24855-1

INSTALLATION

* Temporarily install the new parts and measure each part of the new parts in accordance with the body dimension diagram. (See the body dimension diagram)
* Inspect the fitting of the related parts around the new parts before welding. This affects the appearance of the finish.
* After welding, apply polyurethane foam to the corresponding parts.
* After welding, apply body sealer and undercoating to the corresponding parts.
* After applying the top coat, apply anti-rust agent to the internal panel portion of the closed section structural weld points.

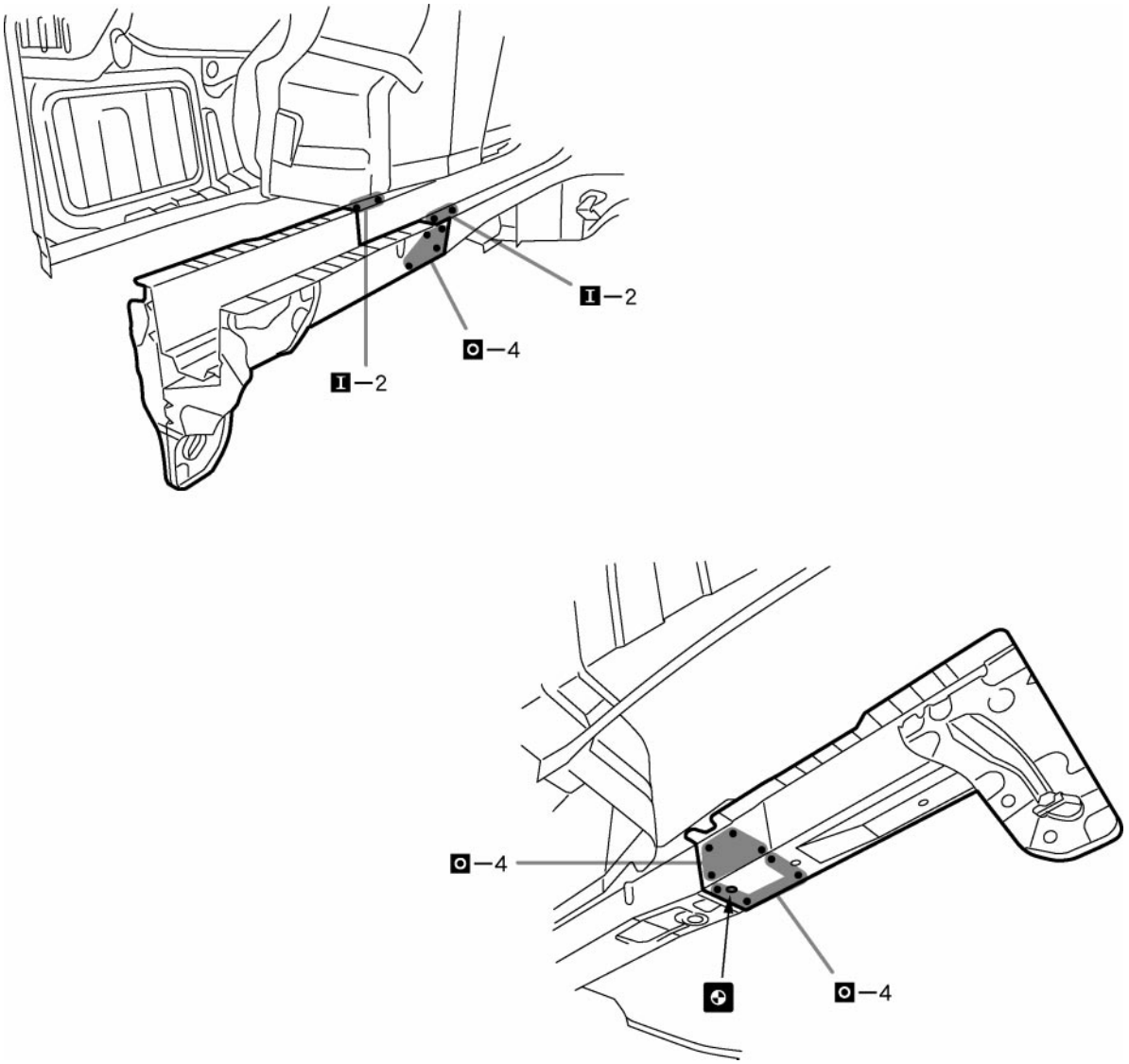

F24855-2

FIT STANDARDS

[Hatchback]

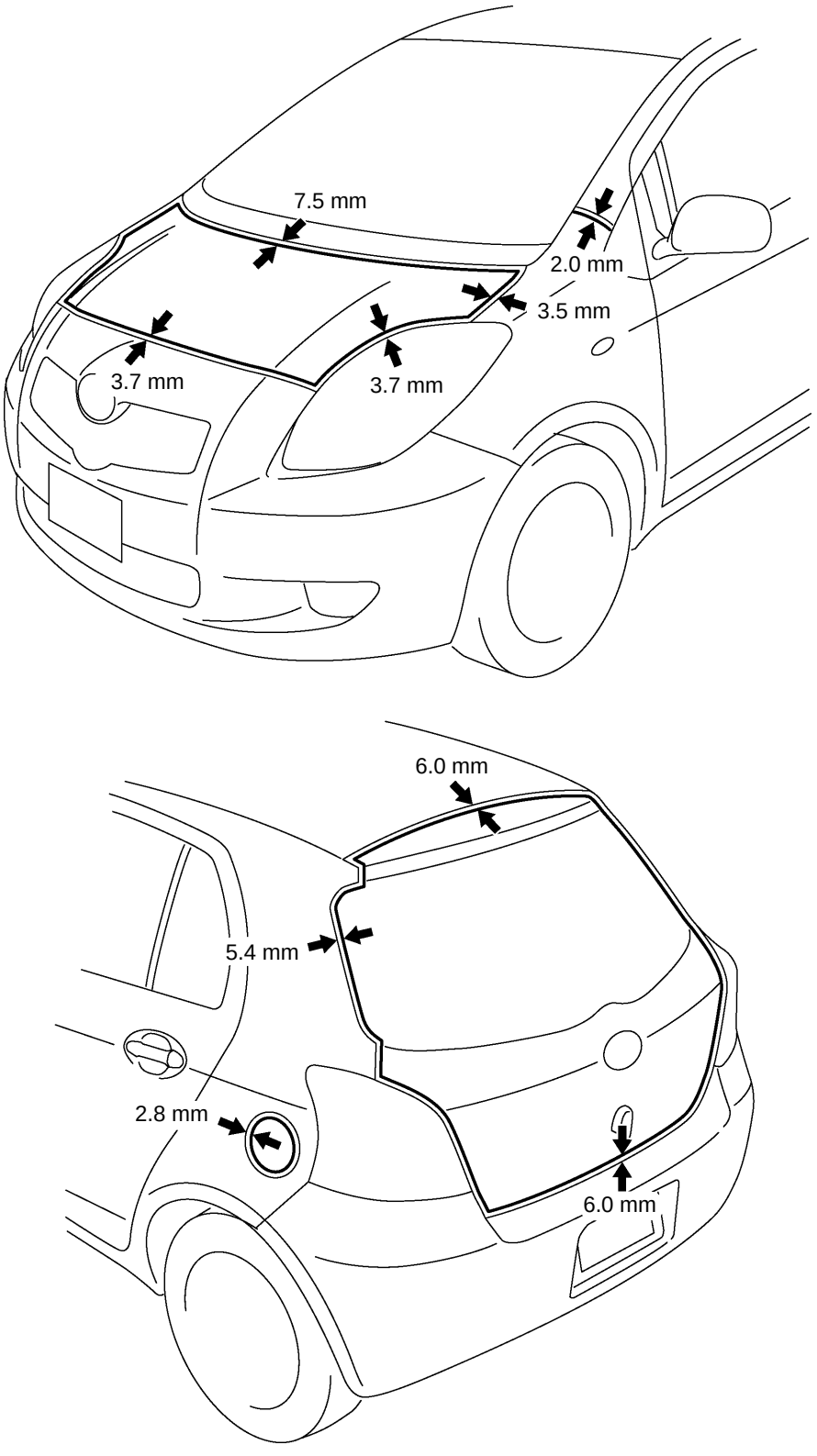

2.0 mm (0.079 in.)	2.8 mm (0.110 in.)	3.5 mm (0.138 in.)
3.7 mm (0.146 in.)	5.4 mm (0.213 in.)	6.0 mm (0.236 in.)
7.5 mm (0.295 in.)	—	—

[Sedan]

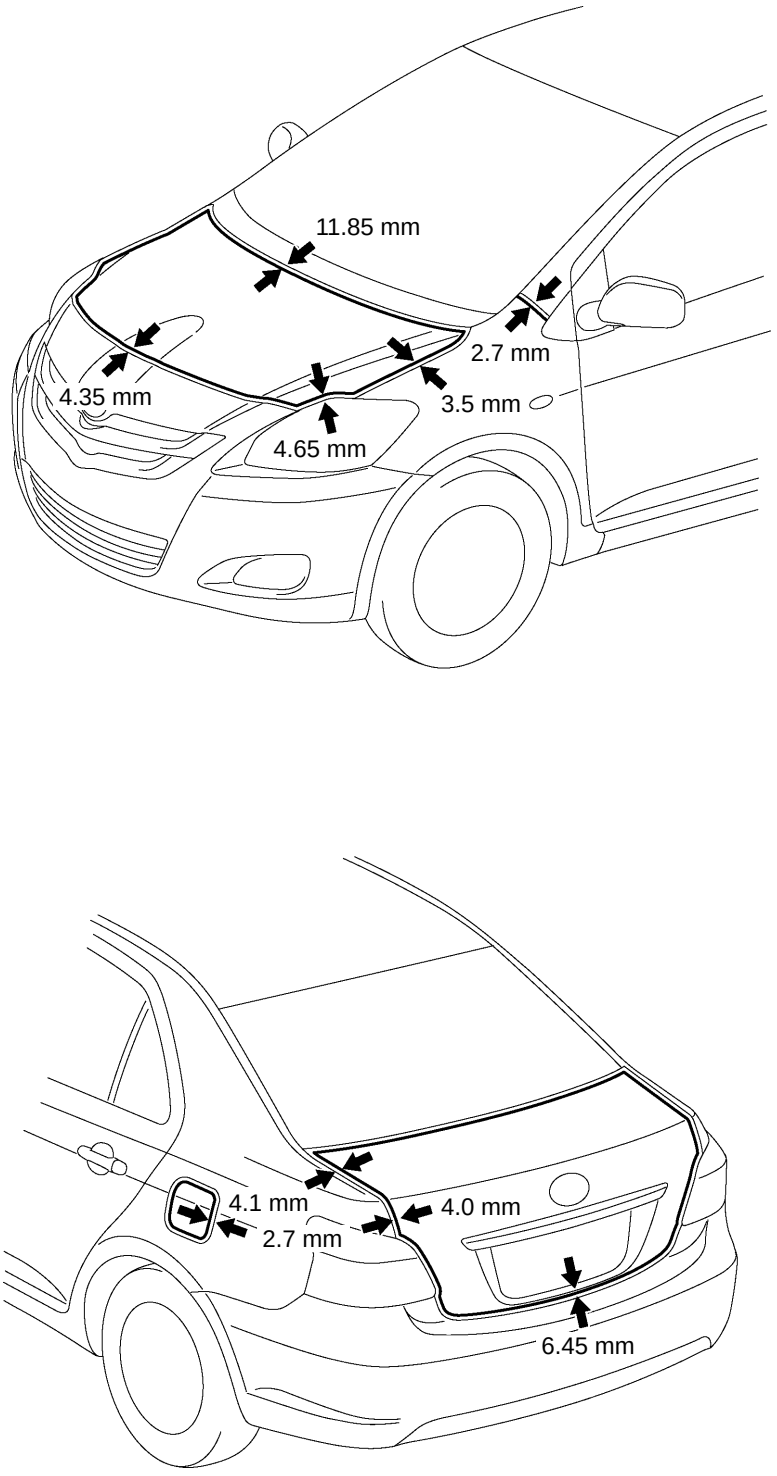

F24864-1

2.7 mm (0.106 in.)	3.5 mm (0.138 in.)	4.0 mm (0.157 in.)
4.1 mm (0.161 in.)	4.35 mm (0.171 in.)	4.65 mm (0.183 in.)
6.45 mm (0.254 in.)	11.85 mm (0.467 in.)	—

[Hatchback 3 Door]

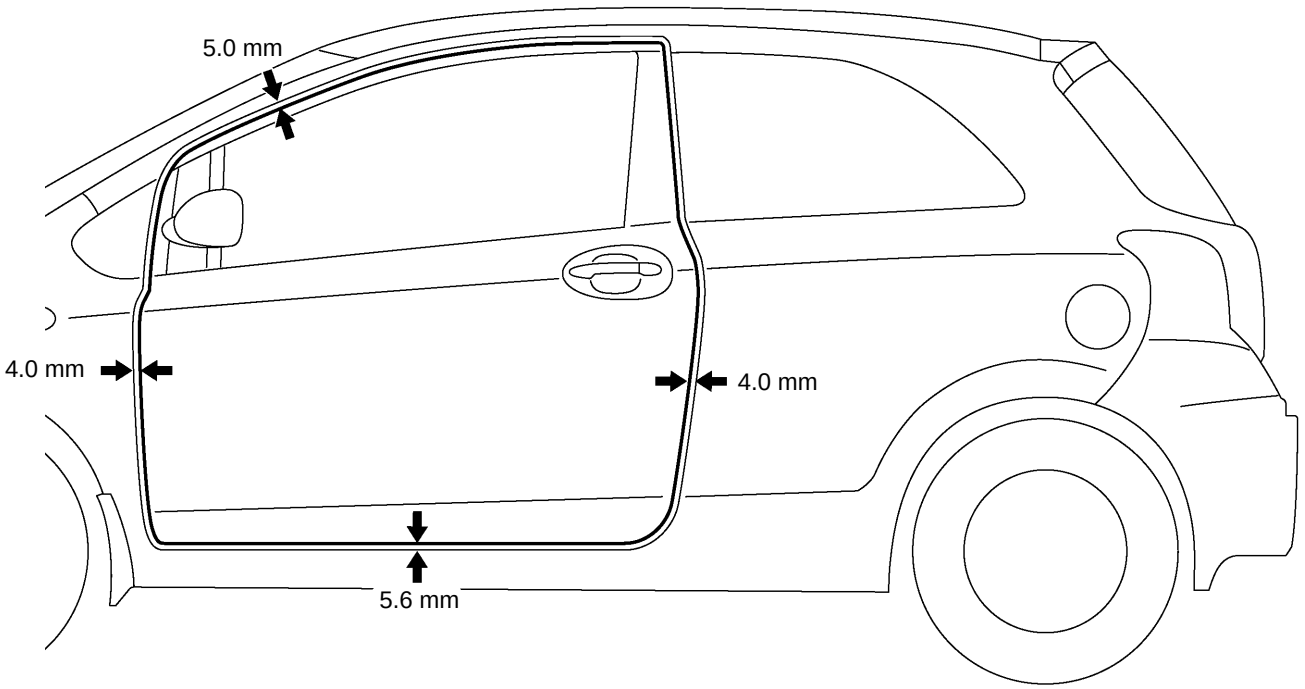

[Hatchback 5 Door]

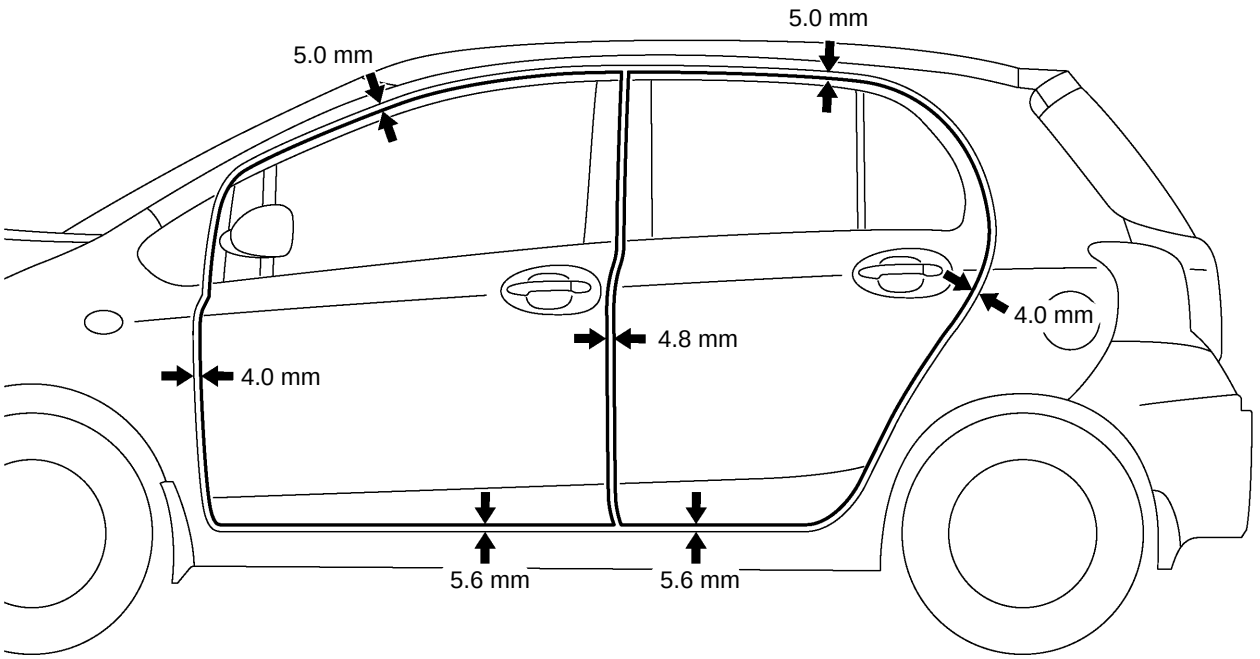

F23335

4.0 mm (0.157 in.)	4.8 mm (0.189 in.)	5.0 mm (0.197 in.)
5.6 mm (0.220 in.)	—	—

[Sedan]

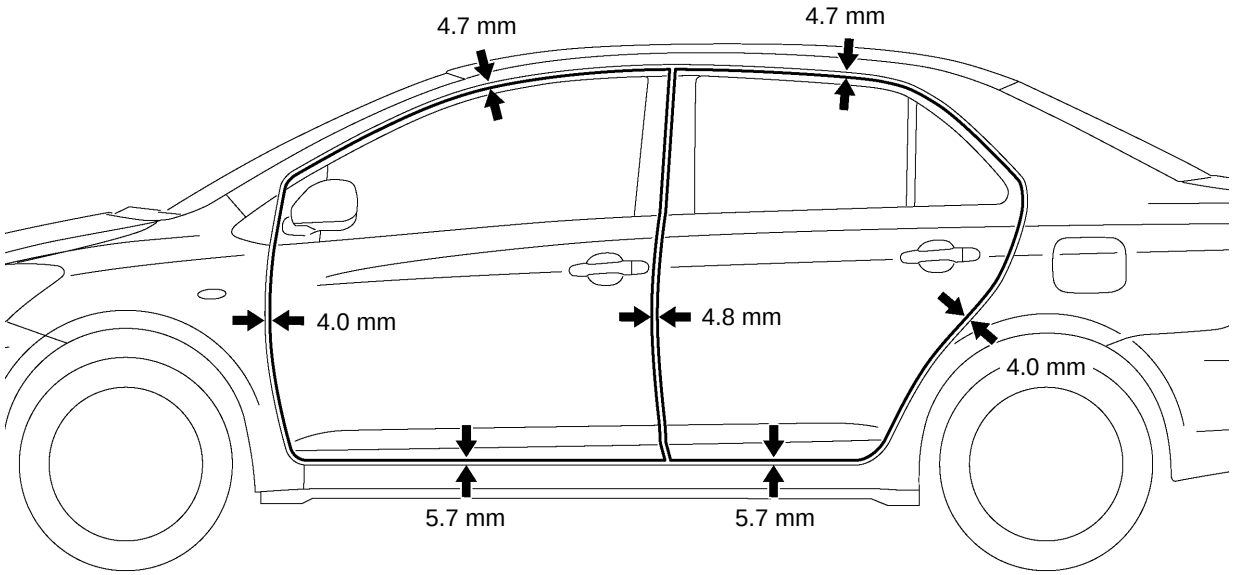

F24865-1

4.0 mm (0.157 in.)	4.7 mm (0.185 in.)	4.8 mm (0.189 in.)
5.7 mm (0.224 in.)	—	—

BODY PANEL SEALING AREAS

HINT:
1) Prior to applying body sealer, clean the area with a rag soaked in silicone remover.
2) If weld-through primer was used, first wipe off any excess and than coat with anti-corrosion primer before applying body sealer.
3) Wipe off excess body sealer with a rag soaked in silicone remover.
4) Besure to repair as necessary if the body sealer shows signs of damage such as peeling or cracking.

++++++++++	Flat Finishing	————	No Flat Finishing

1. ENGINE COMPARTMENT

[Hatchback]

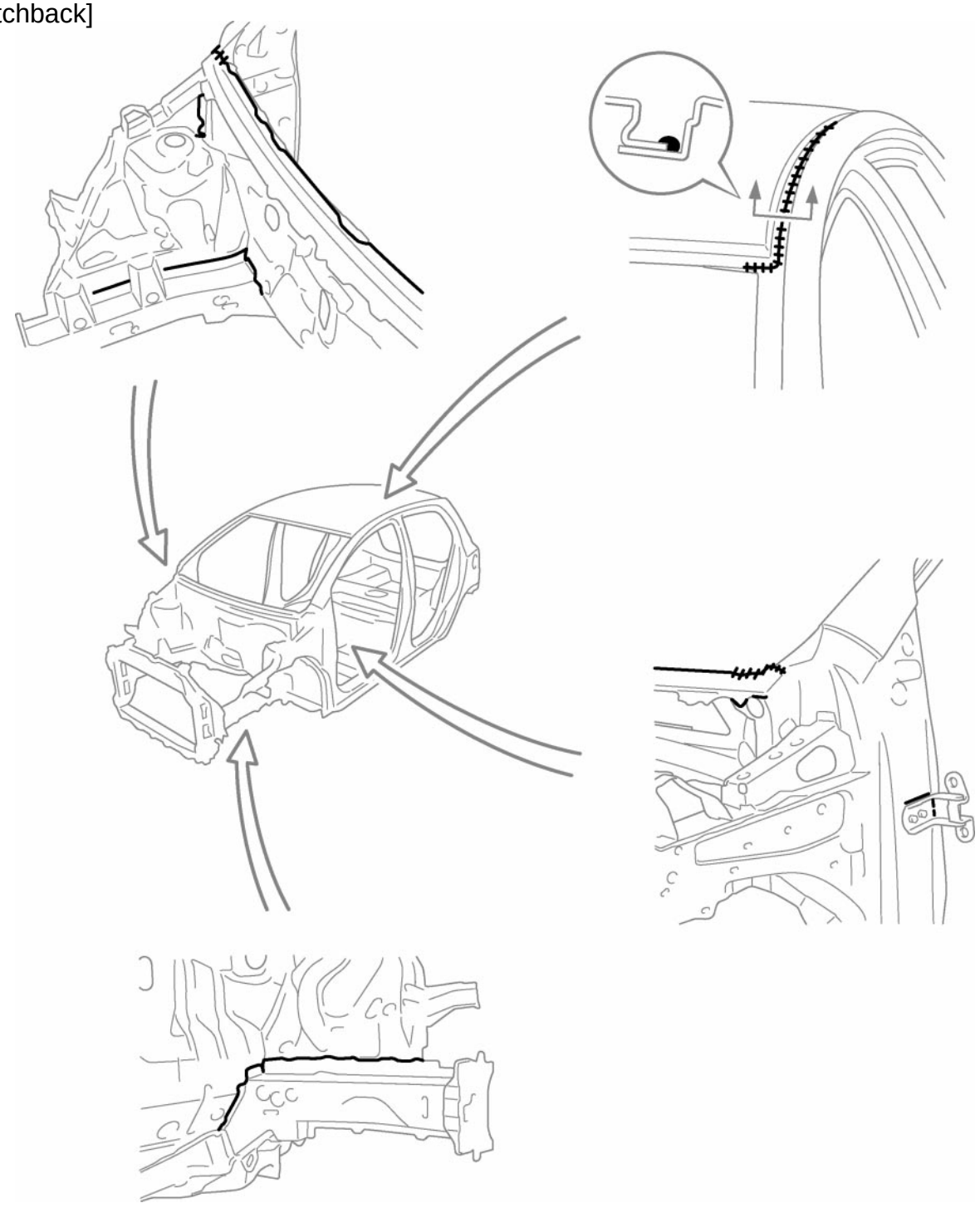

F22806

[Sedan]

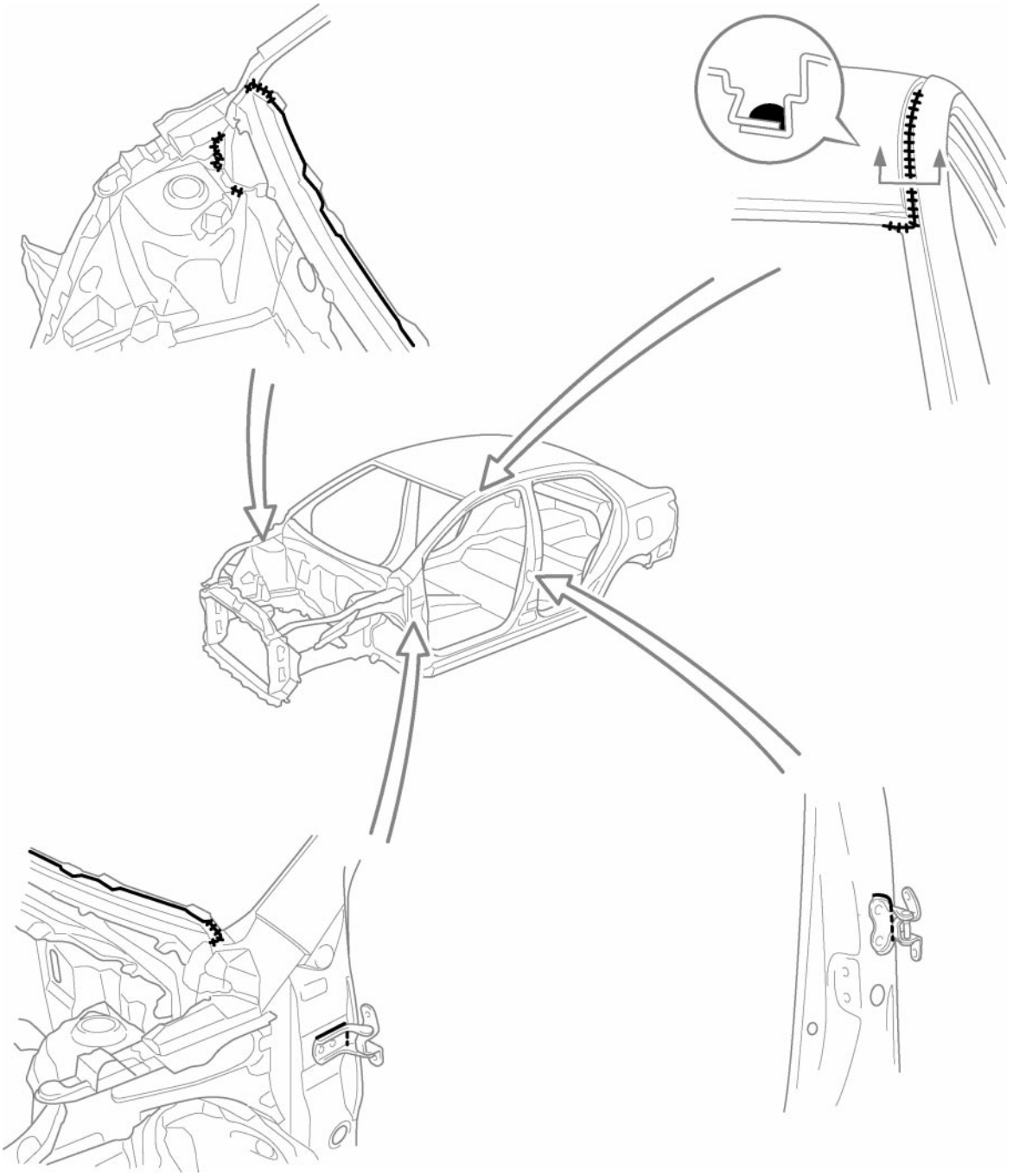

F24801-1

2. INSIDE

[Hatchback]

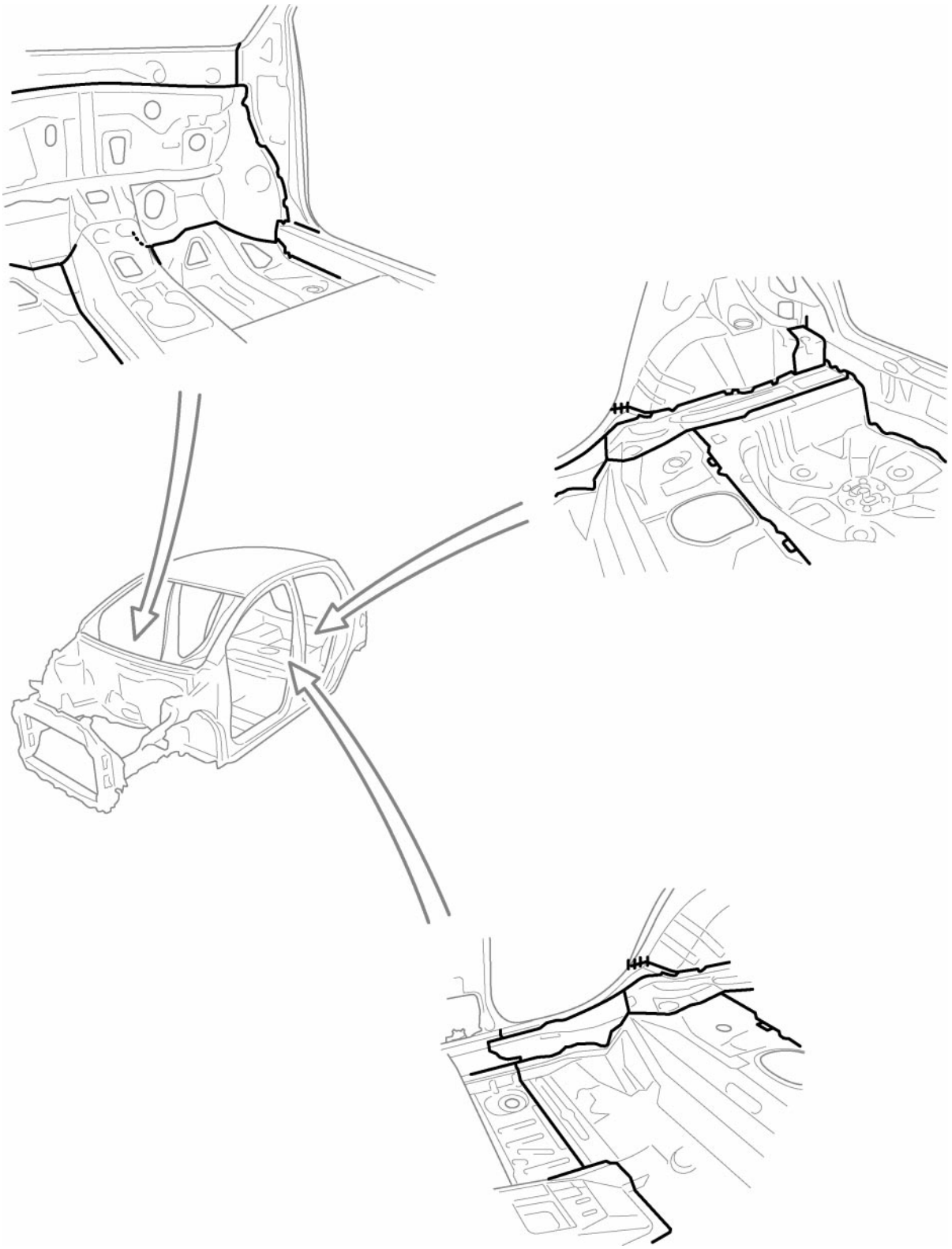

F22336

[Sedan]

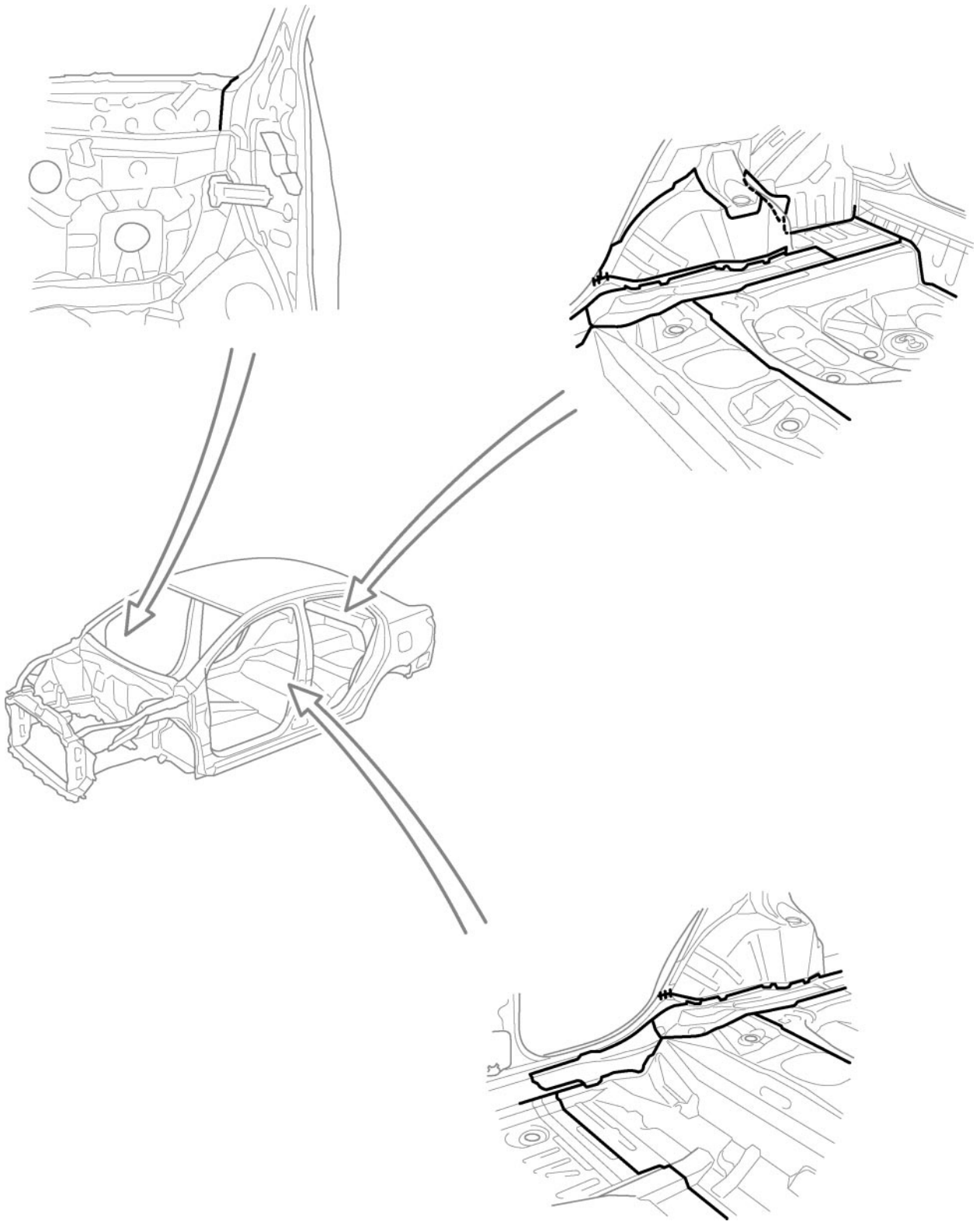

F24802-1

3. OUTSIDE

[Hatchback]

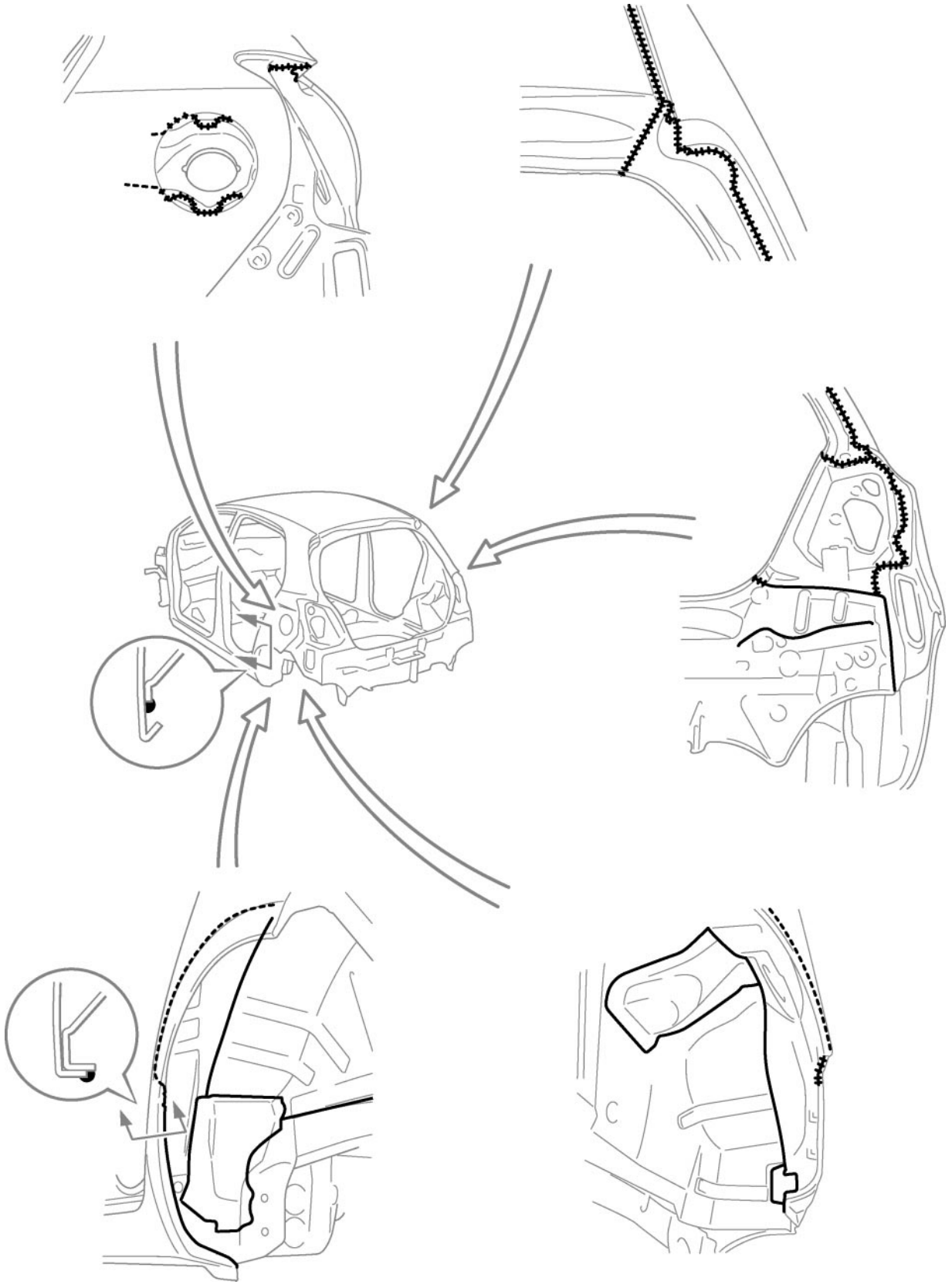

F22337

[Sedan]

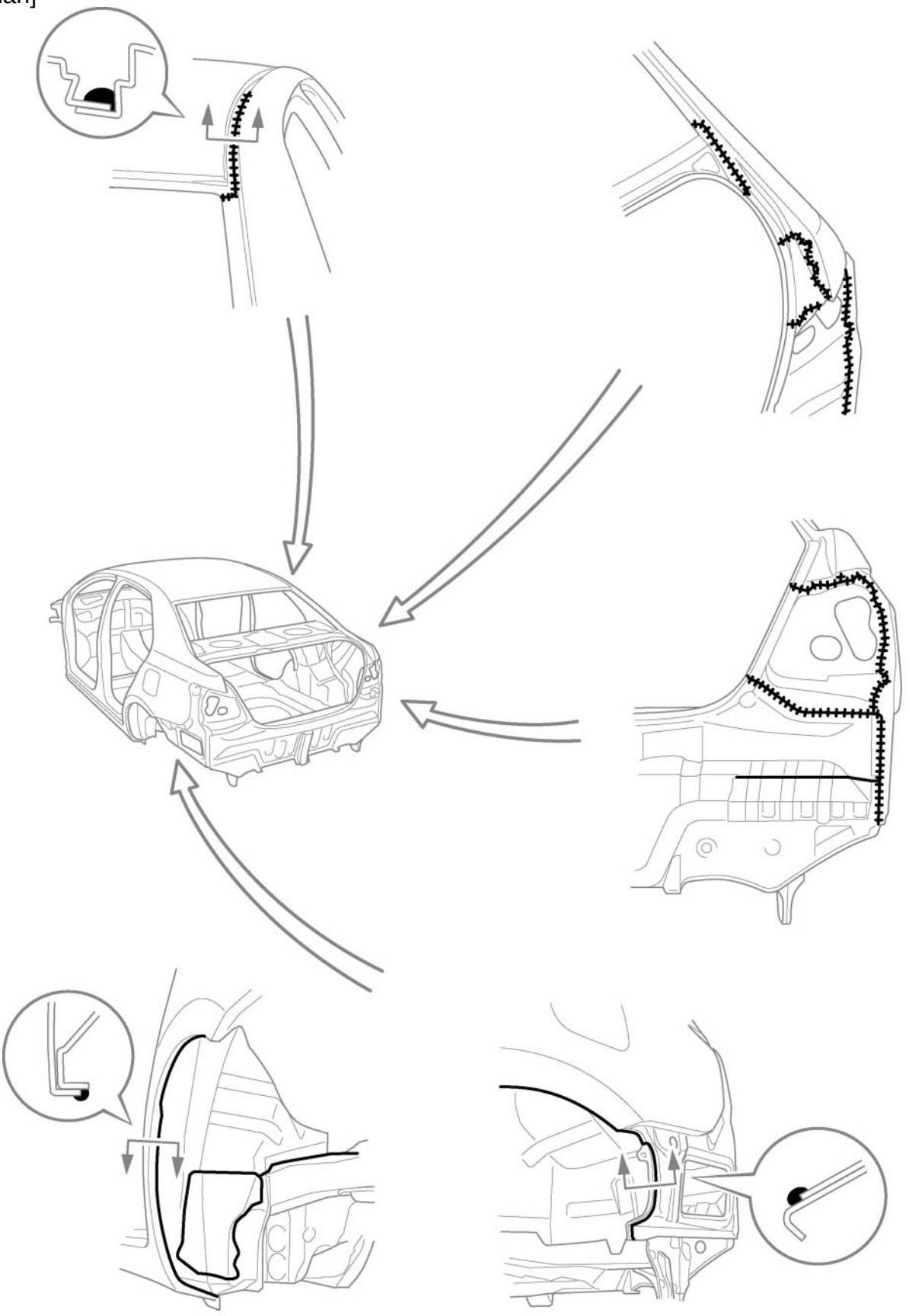

F24803-1

4. DOOR PARTS

[Hatchback 3 Door]

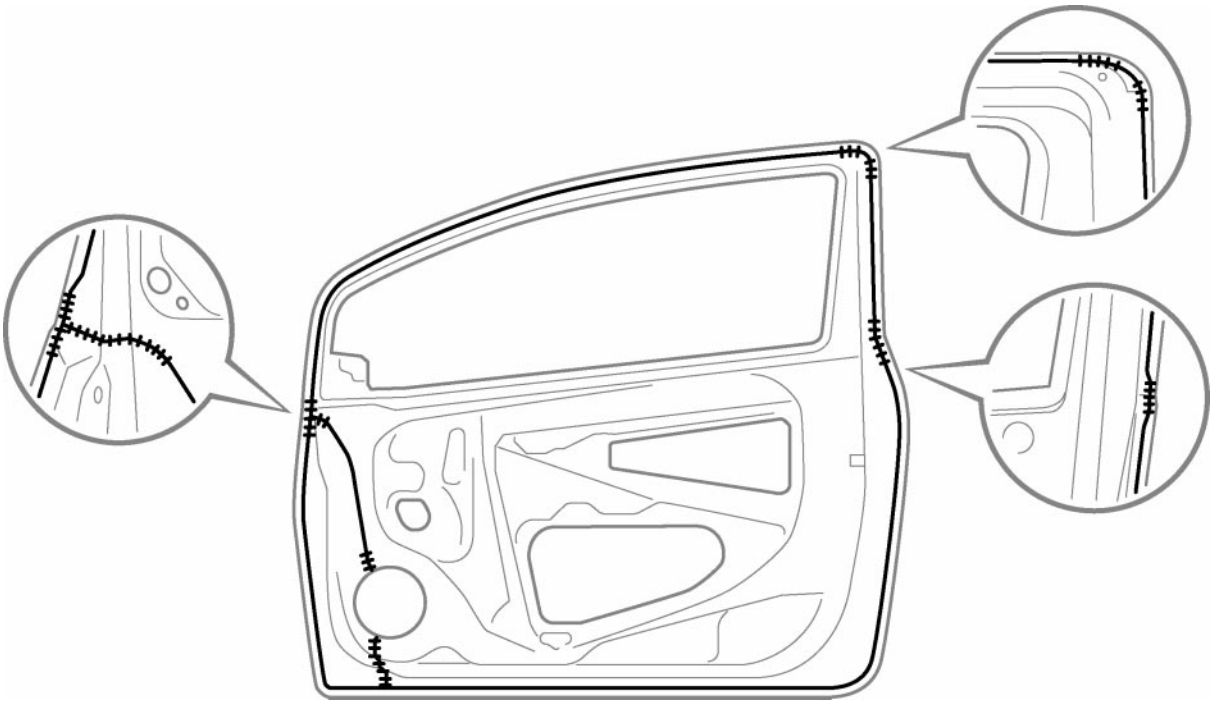

F22338

[Hatchback 5 Door]

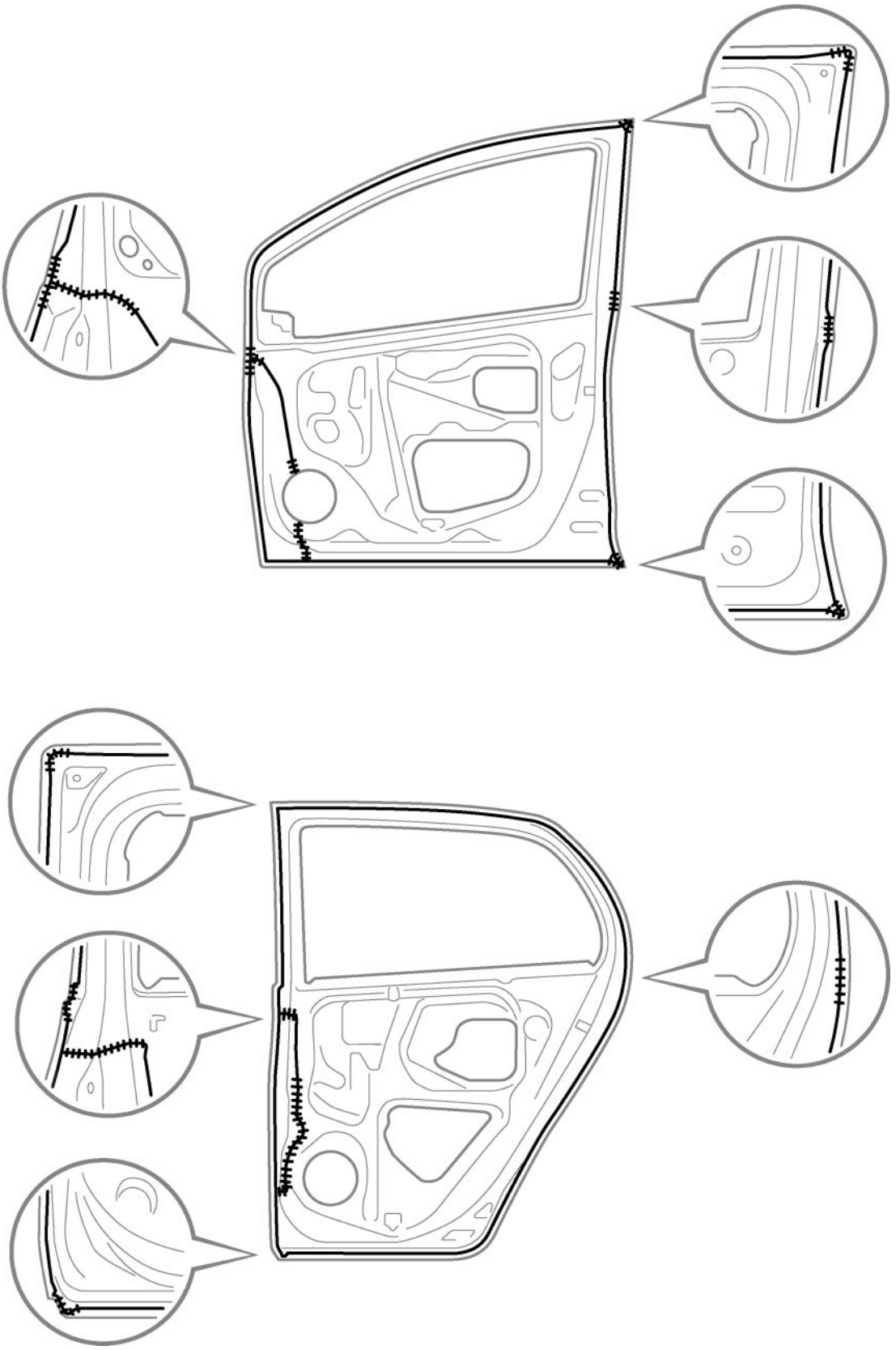

F23339

[Sedan]

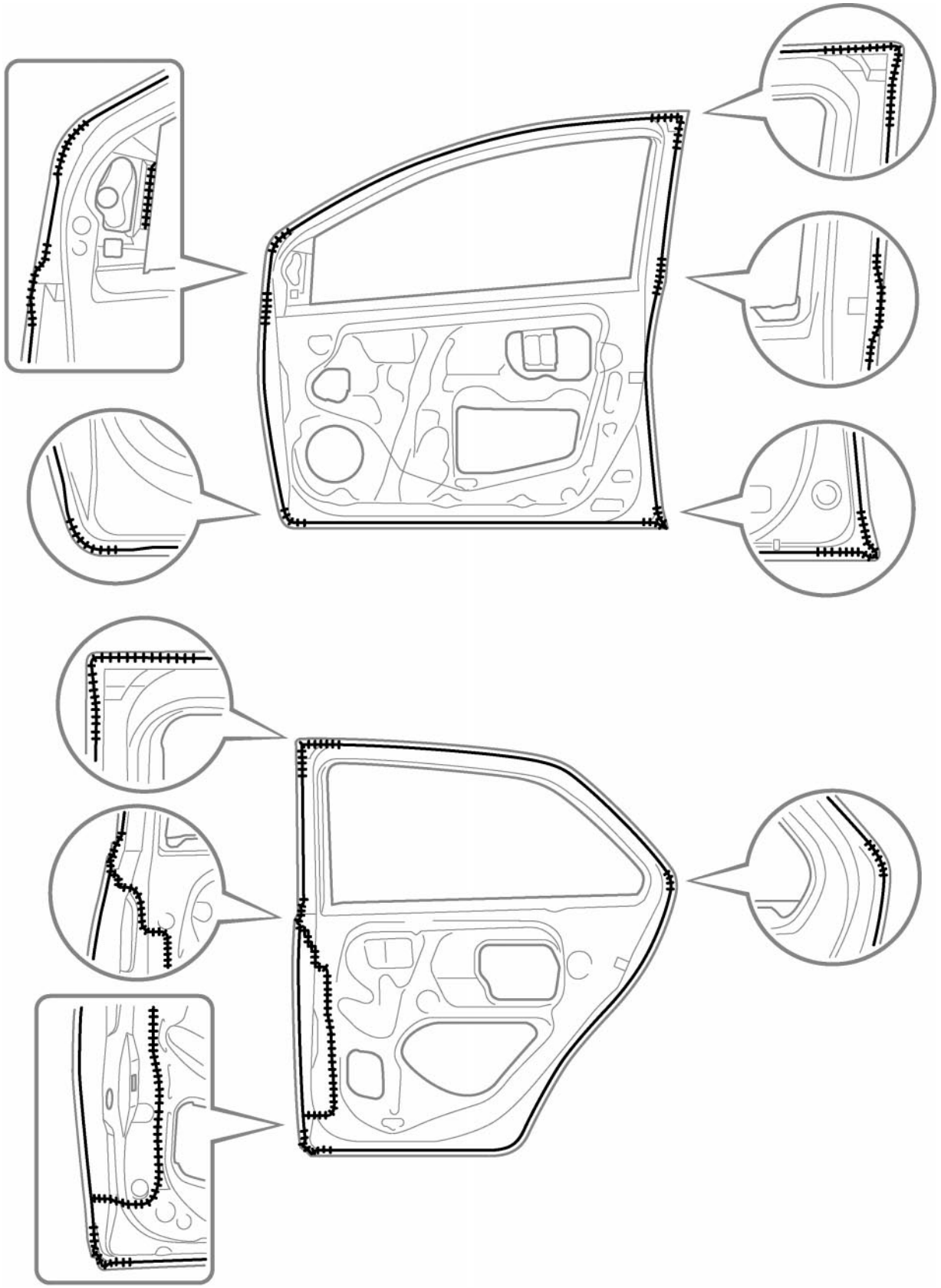

F24804-1

[Hatchback]

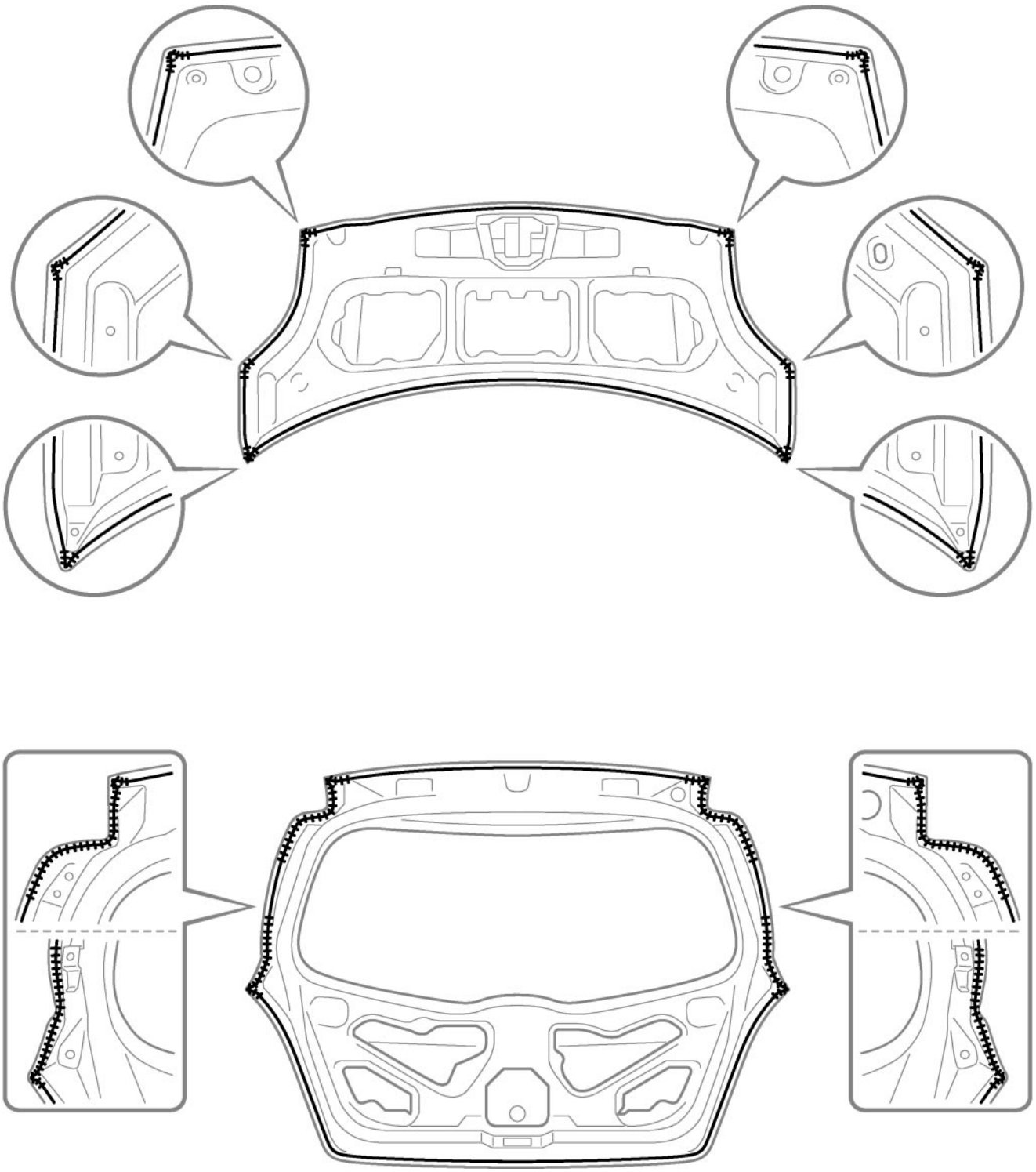

F22810

[Sedan]

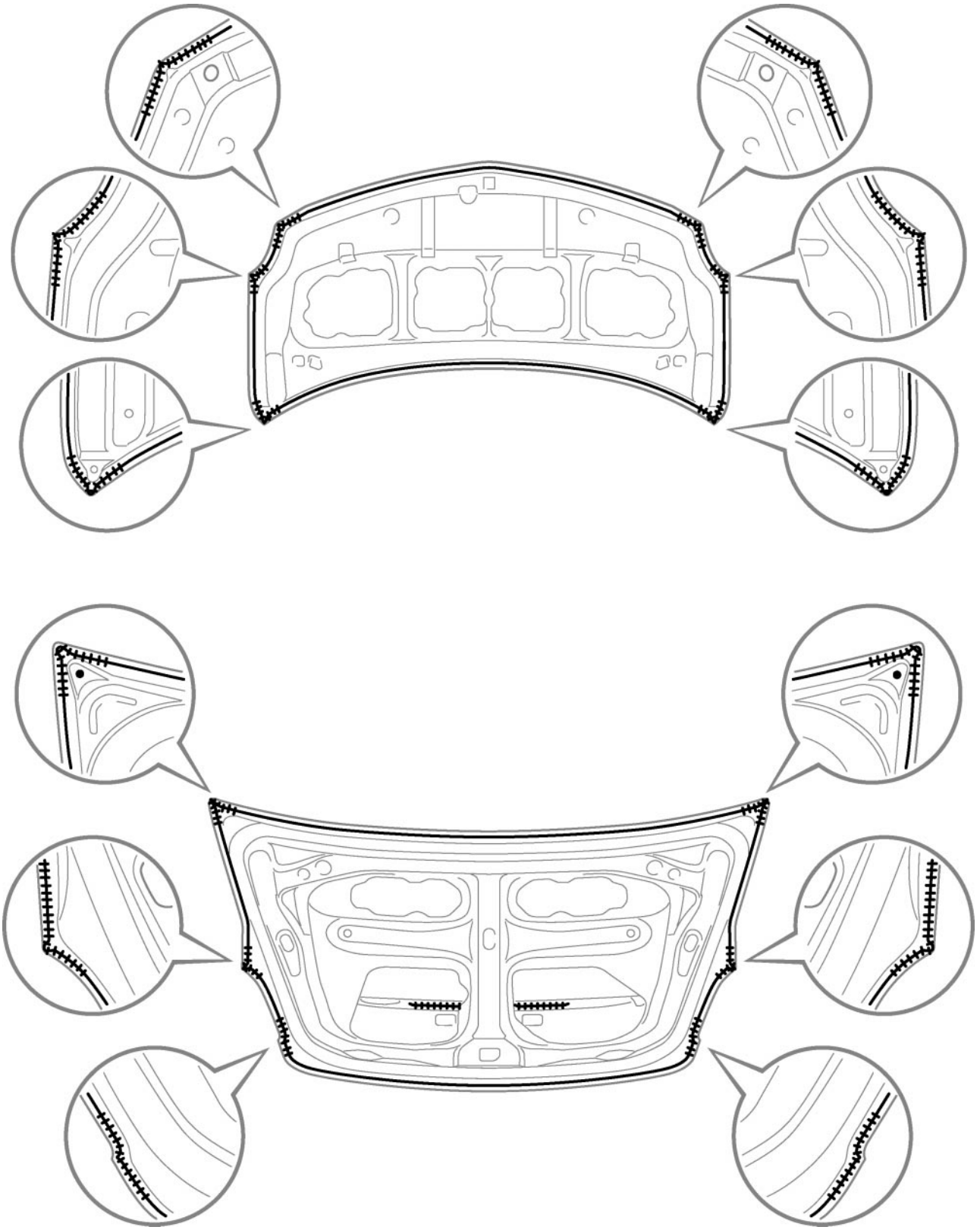

F24805-1

BODY PANEL UNDER COATING AREAS

HINT:
1) First wipe off any dirt, grease or oil with a rag soaked in silicone remover.
2) Cover the surrounding areas with masking paper to avoid coating unnecessary areas. If other areas are accidently coated, wipe off the coating immediately.
3) Apply the first coating of undercoat to all welded areas and panel joints, then apply a second coat over the entire area.
4) Do not coat parts which become hot such as the tailpipe, and moving parts such as the propeller shaft.
5) Apply under coating to all weld points under the body to ensure corrosion prevention at every location except the areas below.
6) Be sure to seal the edge of the flange of the member and bracket with undercoating.
7) Be sure to repair the under coating as necessary if there are signs of damage such as cracking or peeling.
8) Apply sealer before applying the under coat for rust prevention.

[Hatchback]

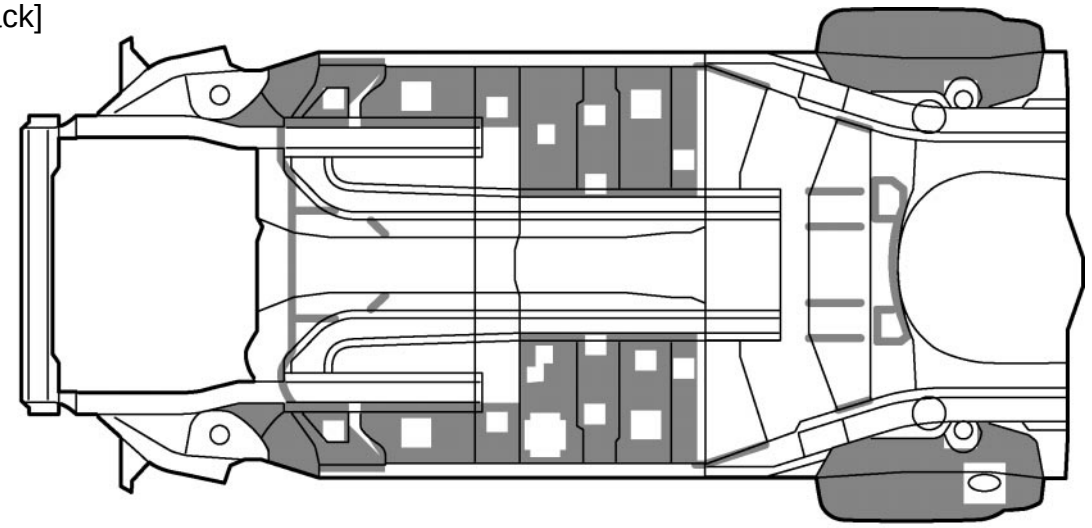

[LH]

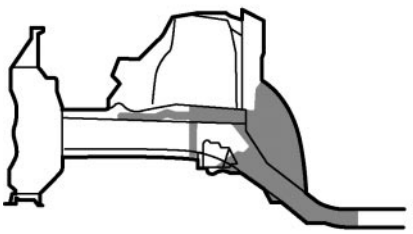

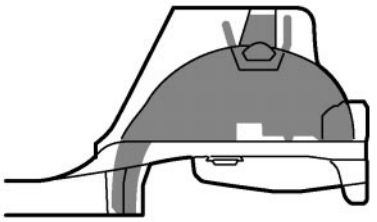

[RH]

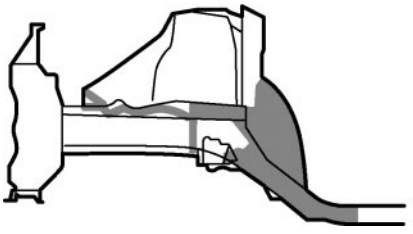

F23340

POINT

1 The film thickness of the interior portion of the rear wheel housing should be 1.0 mm (0.04 in.) or more for the front half and 2.0 mm (0.08 in.) of more for the rear half.

REFERENCE

The under coating should be applied according to the specifications for your country while referring to the notes above.

[Sedan]

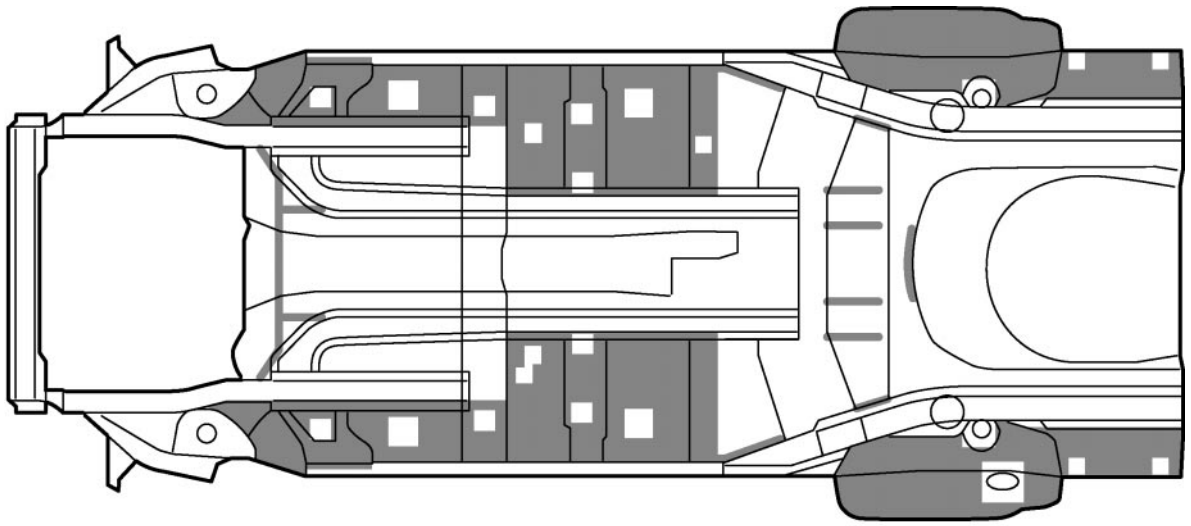

[LH]

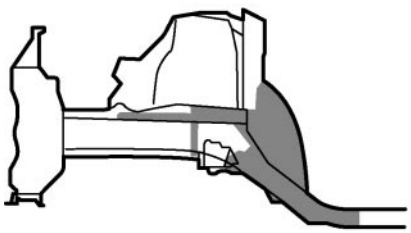

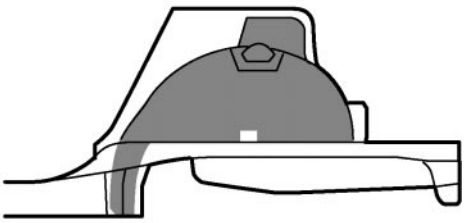

[RH]

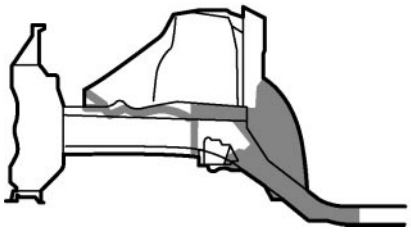

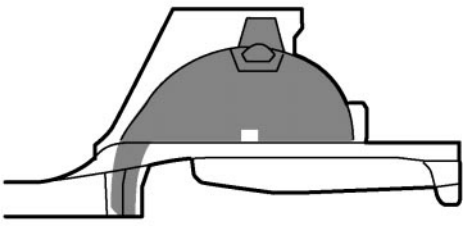

F24806-1

POINT

1 The film thickness of the interior portion of the rear wheel housing should be 1.0 mm (0.04 in.) or more for the front half and 1.3 mm (0.05 in.) of more for the rear half.

REFERENCE

The under coating should be applied according to the specifications for your country while referring to the notes above.

FOAMED MATERIAL APPLICATION AREAS

The sections shown in the figure below are filled with foamed material to provide noise insulation.
Refill with foamed materials after repairing these sections and their surrounding sections.
HINT:
1) Use the service holes located on the reverse side of the body panel to refill foamed materials.
2) Follow manufacturer directions when handling the foamed material.

[Hatchback]

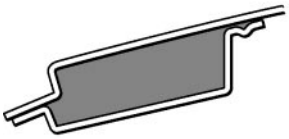



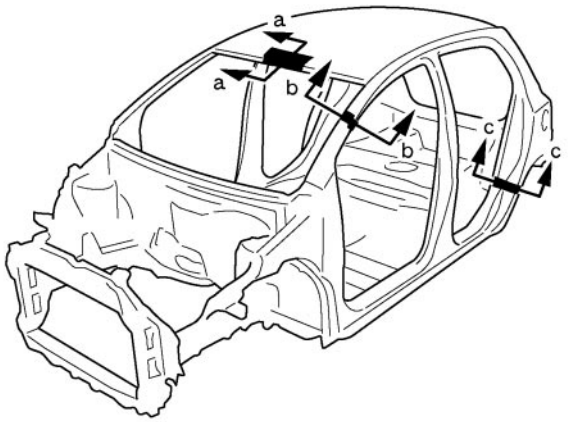

[5 Door Only]

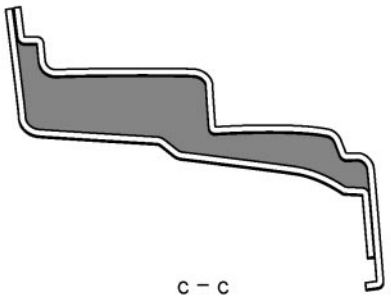

F23341

[Sedan]

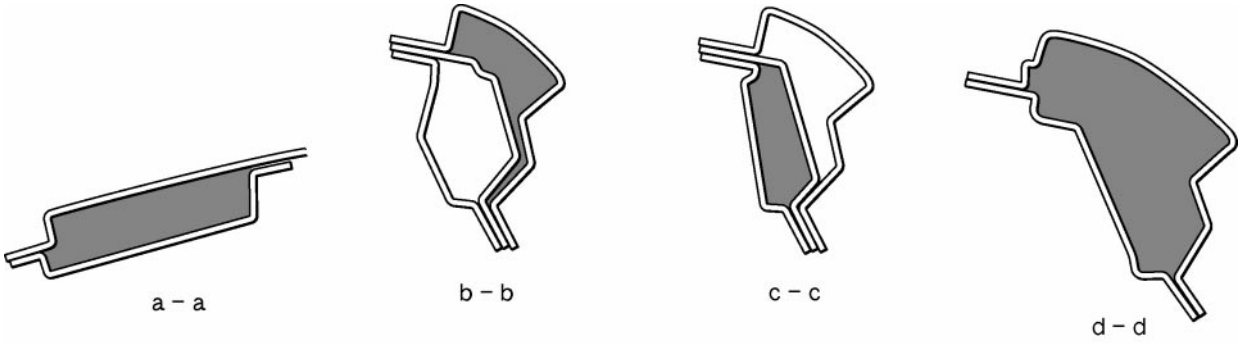

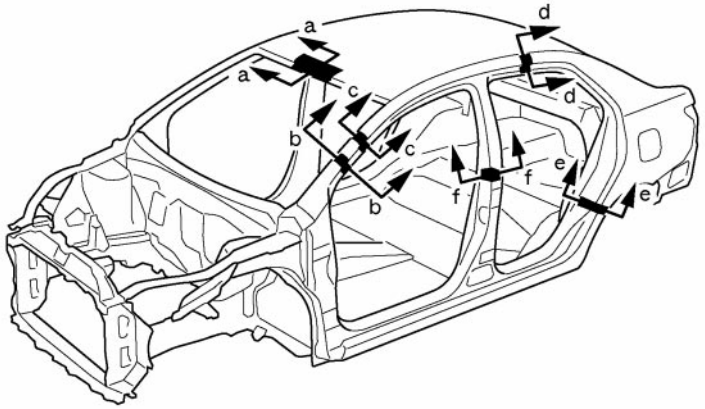

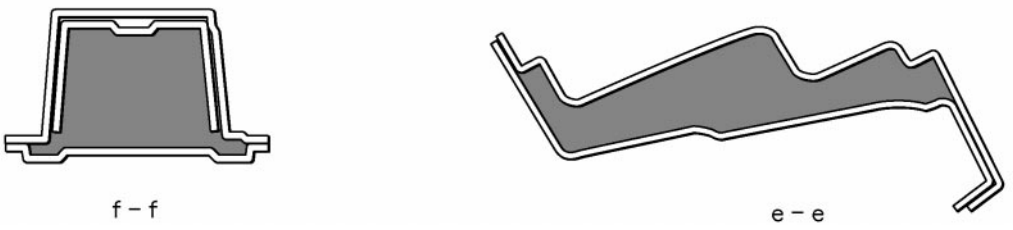

F24808-1

BODY PANEL ANTI-RUST AGENT (WAX) APPLICATION AREAS

HINT:
1) Apply anti-rust agent (wax) around the hinges whenever adjusting the doors and hoods.
2) Even if partially repairing a part, apply anti-rust agent (wax) over the entire application area of the part.
3) Wipe off the anti-rust agent immediately with a rag soaked in silicone remover if it is accidentally applied to other areas.

[Hatchback]

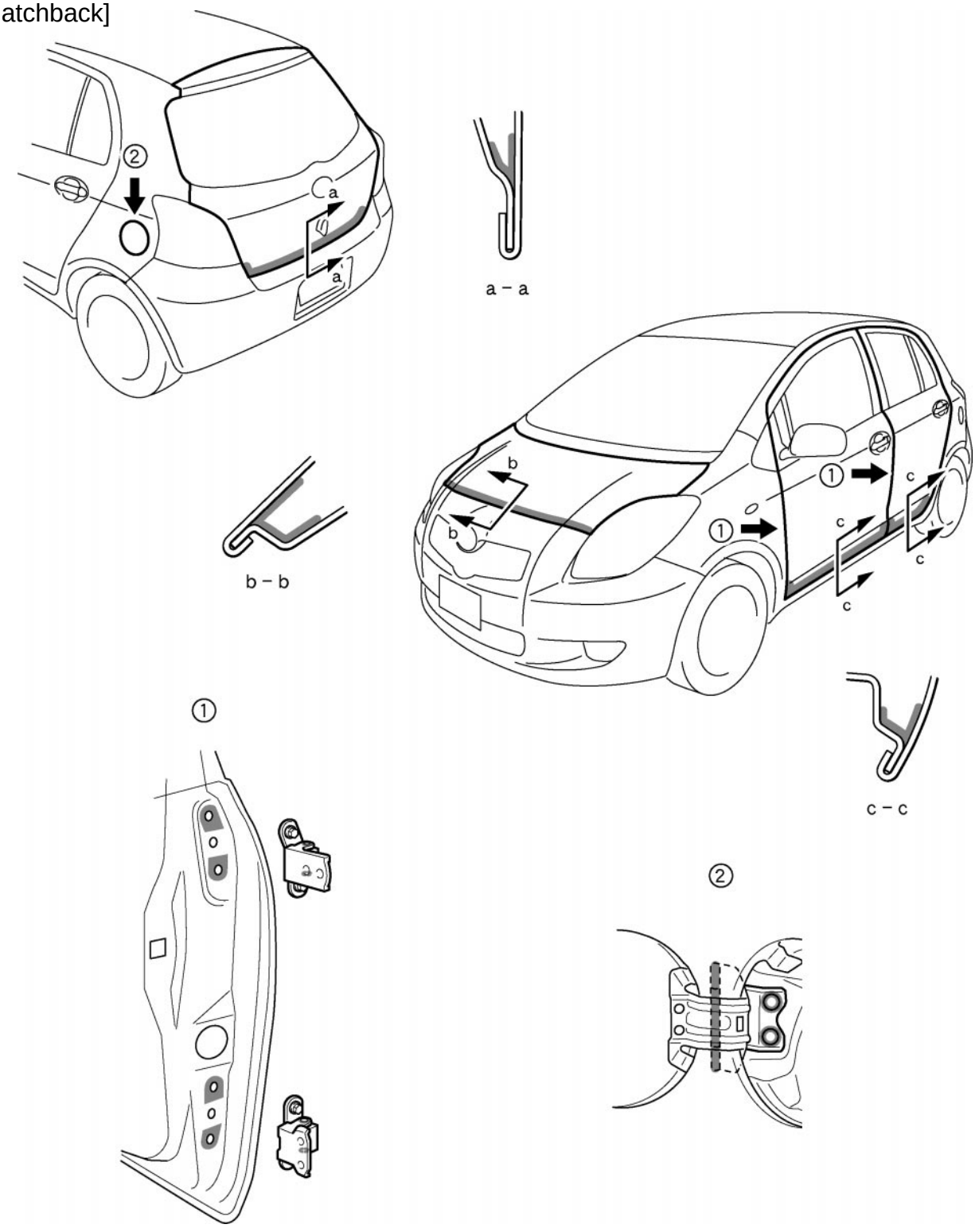

[Sedan]

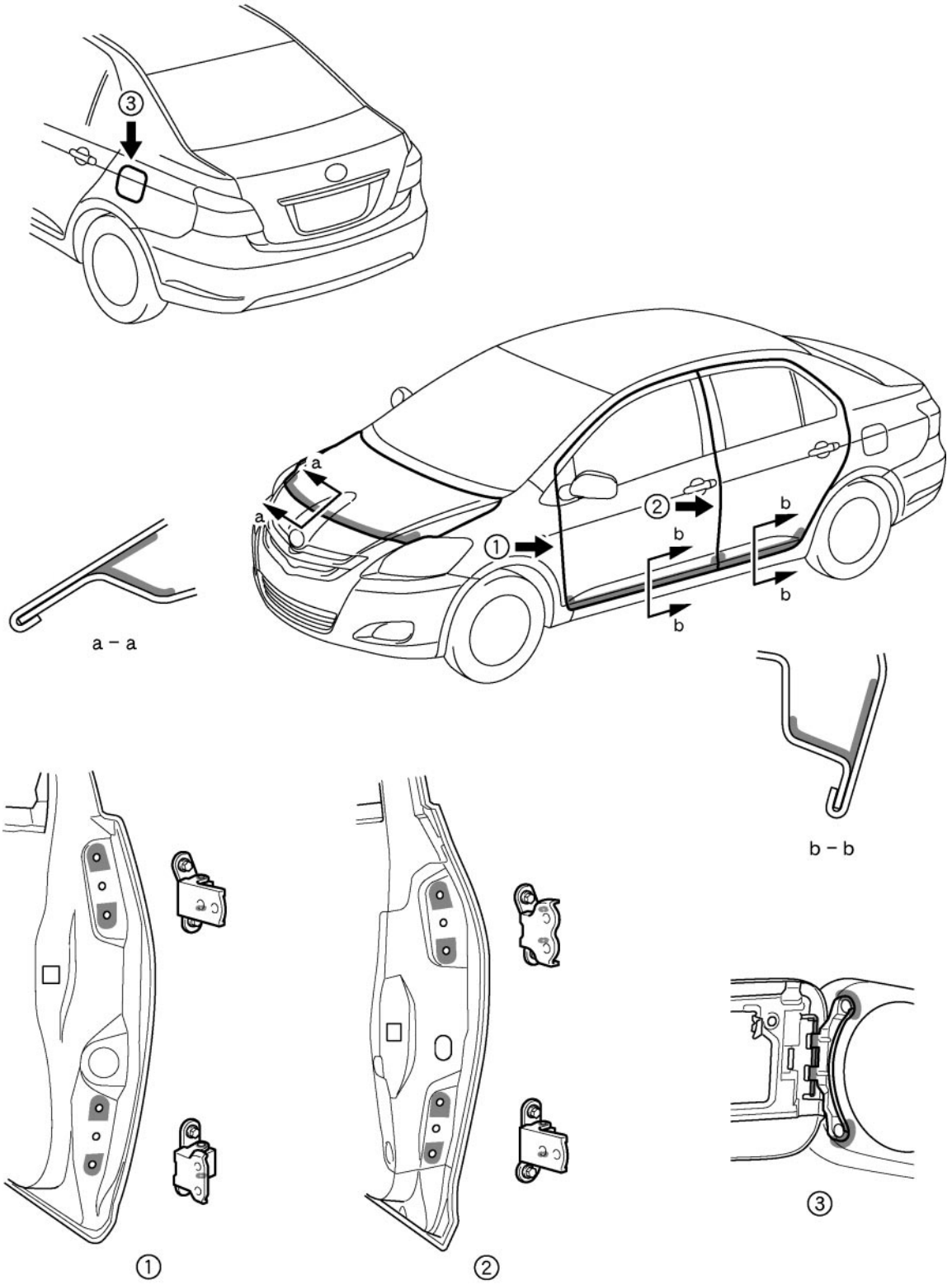

F24809-1

SILENCER SHEET INSTALLATION AREAS

[Sedan]

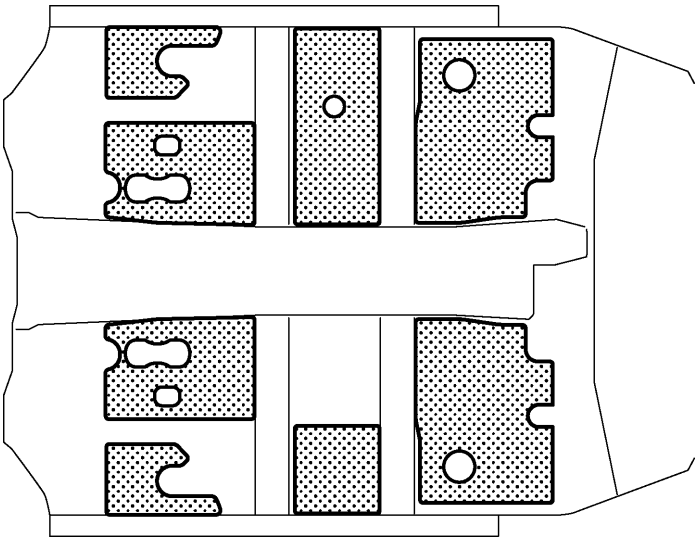

F24810-1

	0.8 mm (0.031 in.)				

FRONT SIDEMEMBER REINFORCEMENT (CUT-P)

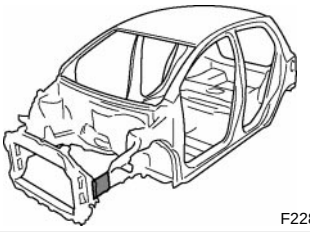
F22825A

REPLACEMENT
With the radiator support removed.

REMOVAL

[LH]

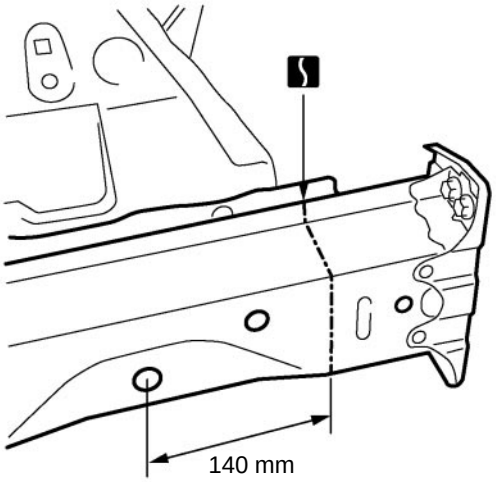

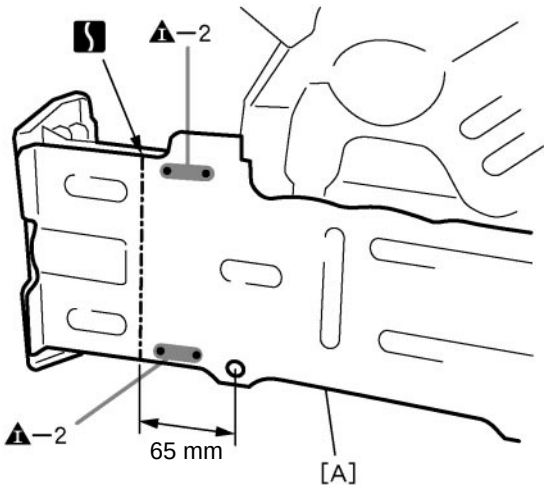

F23301

POINT
1 Remove [A] at the same time.

PART NAME
[A] Front Sidemember Outer Plate
65 mm (2.56 in.) 140 mm (5.51 in.)

[RH]

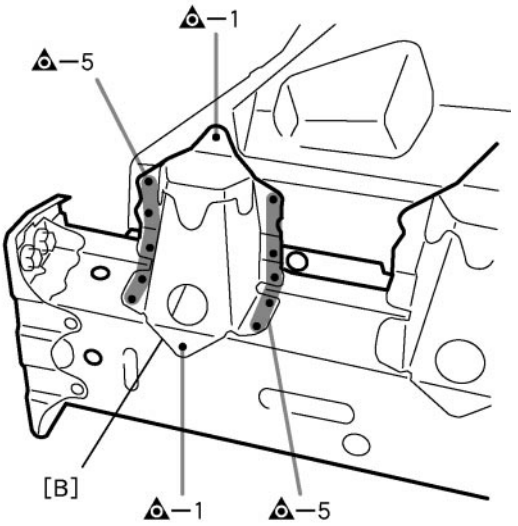

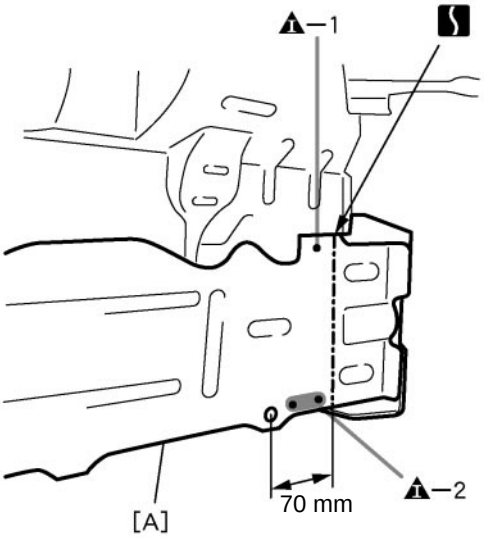

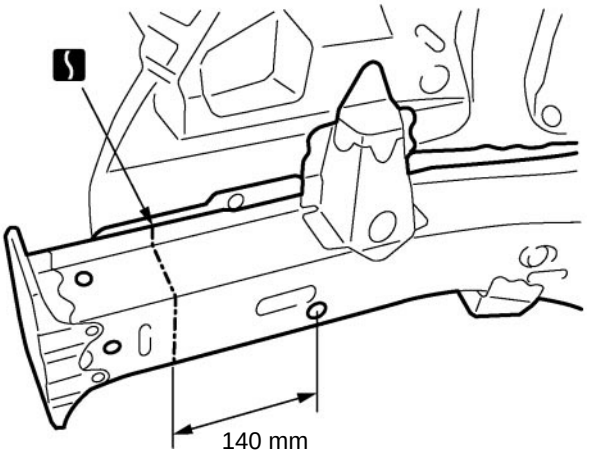

F23302

POINT

1 Remove [B] before conducting this work.
2 Remove [A] at the same time.

PART NAME

[A] Front Sidemember Outer Plate [B] Engine Front Mounting Bracket
70 mm (2.76 in.) 140 mm (5.51 in.)

INSTALLATION

⁎ Temporarily install the new parts and measure each part of the new parts in accordance with the body dimension diagram. (See the body dimension diagram)
⁎ Inspect the fitting of the related parts around the new parts before welding. This affects the appearance of the finish.
⁎ After welding, apply the polyurethane foam to the corresponding parts.
⁎ After welding, apply body sealer and under-coating to the corresponding parts.
⁎ After applying the top coat layer, apply anti-rust agent to the inside of the necked section structural weld spots.

[LH]

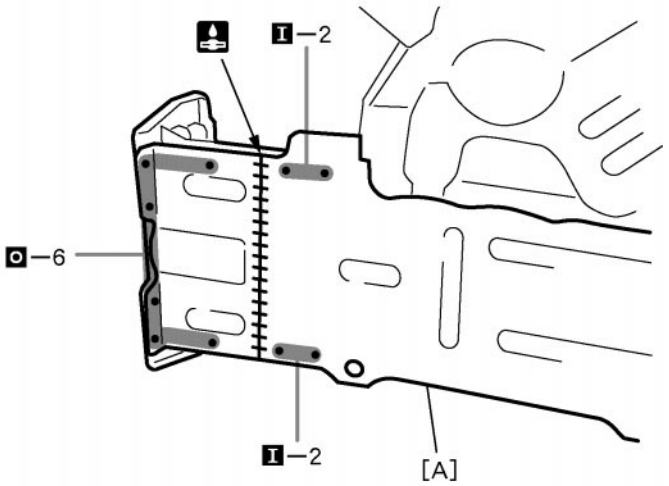

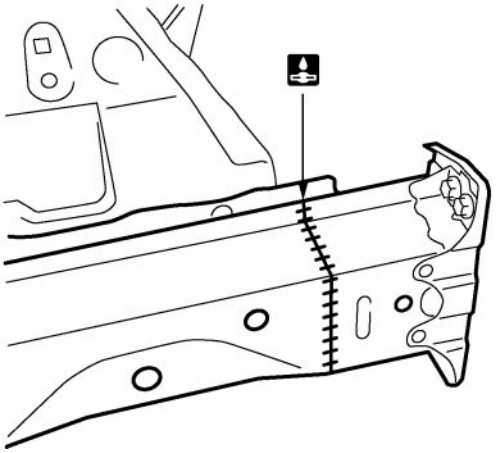

F23303

PART NAME

[A] Front Sidemember Outer Plate

[RH]

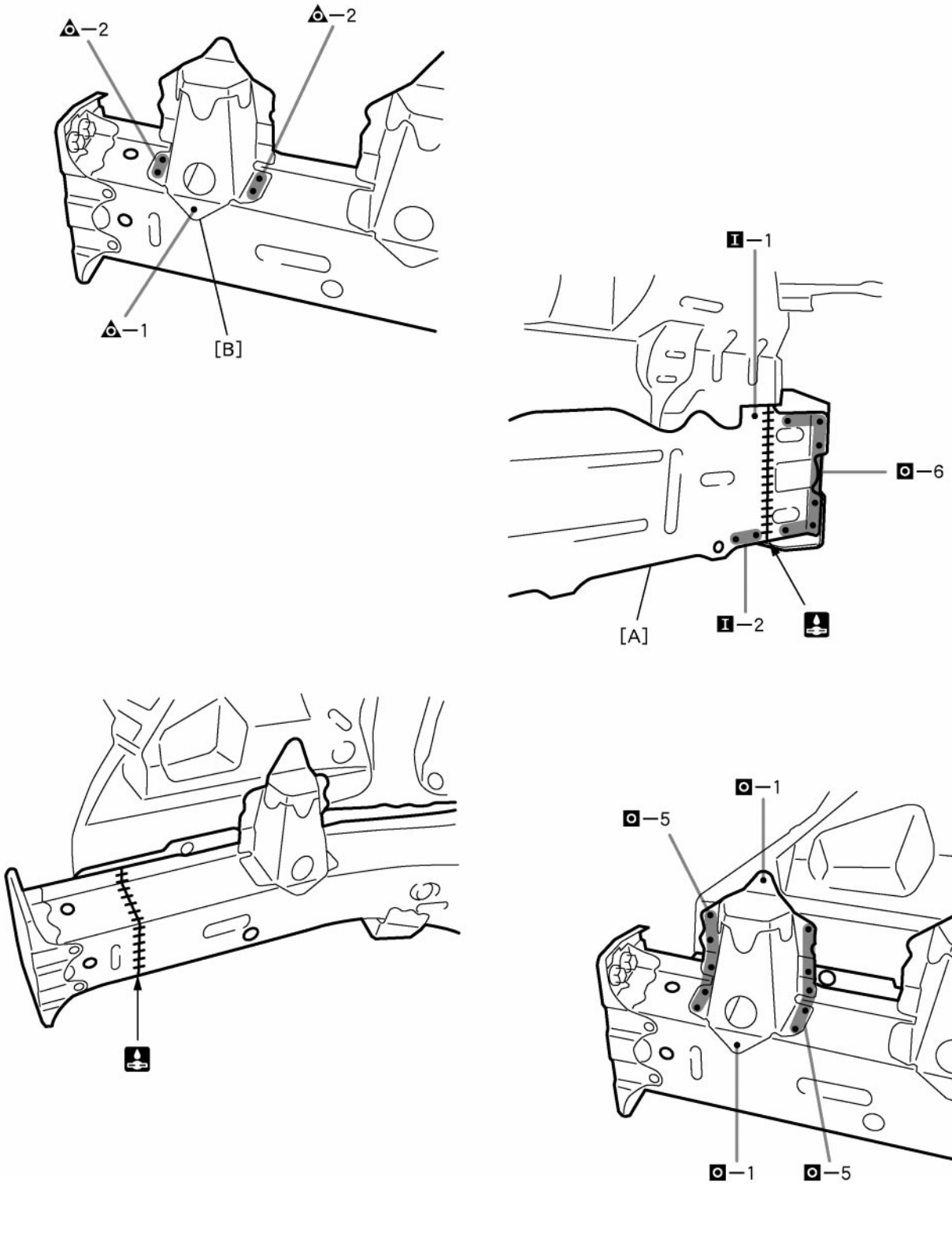

F23304

POINT

1 Remove the [B] from the new parts of the front sidemember reinforcement.
2 After installing the new parts, install [B].

PART NAME

[A] Front Sidemember Outer Plate [B] Engine Front Mounting Bracket

BODY PANEL ANTI-CHIPPING PAINT APPLICATION AREAS

HINT:

[Sedan]

1) Anti-chipping paint should be applied to some areas before the second coat and to other areas after the top coat.

2) Wipe off the paint immediately with a rag soaked in silicone remover if unrelated areas are accidentally coated.

[Hatchback]

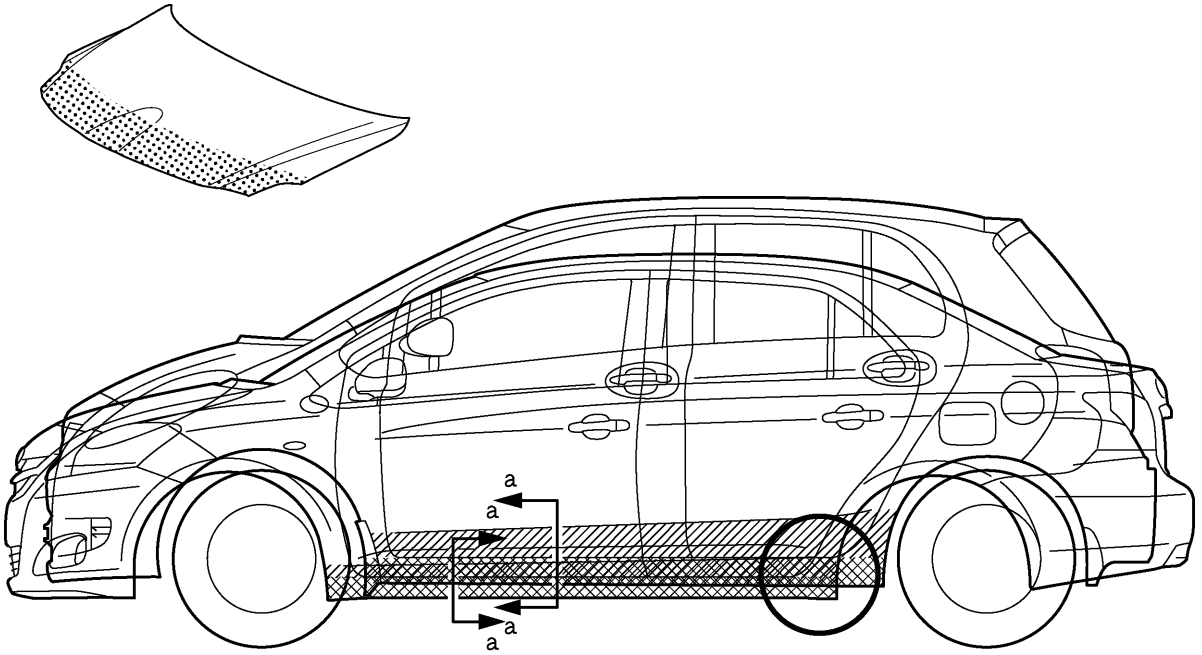

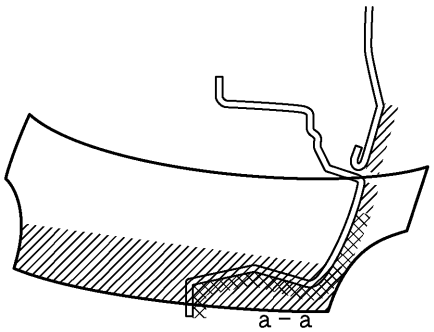

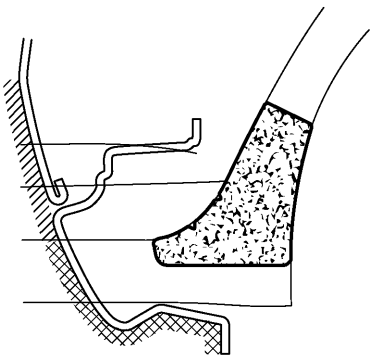

F24811-1

	PVC		Urethane		Adheshion Primer
	Protection Tape		Soft−Chip (Poly Olefine)	—	—

F23342

MEMO

MEMO

BODY DIMENSION DRAWINGS

ENGINE COMPARTMENT

Hatchback

(Three-Dimensional Distance)

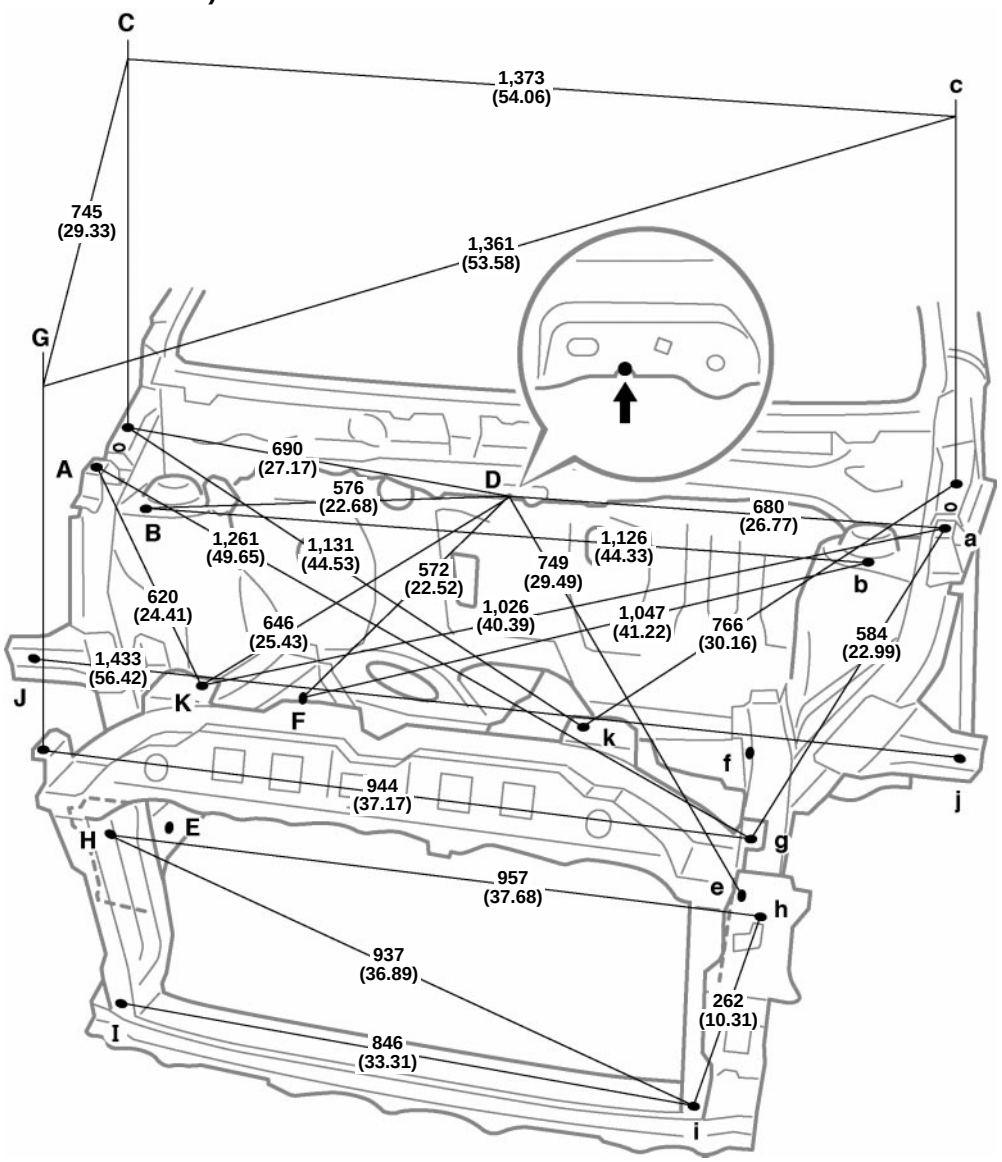

Vehicle Dimensions

A-a	A-C or a-c	B-C or b-c	B-c or b-C	B-K or b-k	B-k or b-K	K-k
1,324 (52.13)	170 (6.69)	209 (8.23)	1,261 (49.65)	564 (22.20)	942 (37.09)	505 (19.88)

Height from Imaginary Standard Line

A, a	C, c	G, g
810 (31.89)	815 (32.09)	614 (24.17)

HINT: For symbols, capital letters indicate right side of vehicle, small letters indicate left side of vehicle (seen from rear).

mm (in.)

Symbol	Name	Hole dia.	Symbol	Name	Hole dia.
A, a	Front fender installation nut	M6 (0.24)	G, g	Headlight bracket standard hole	ø 10 (0.39)
B, b	Front spring support hole−inner	ø 11 (0.43)	H, h	Radiator side support installation hole	ø 6.3 (0.248)
C, c	Hood hinge installation nut-rear	M8 (0.31)	I, i	Radiator seal installation hole	ø 9 (0.35)
D	Cowl panel center mark	—	J, j	Front fender mounting bracket standard hole	ø 10 (0.39)
E, e	Front side member standard hole	ø 15 (0.59)	K, k	Front bumper installation hole	ø 7 (0.28)
F, f	Front side member standard hole	ø 10 (0.39)	—	—	—

BODY DIMENSION DRAWINGS

ENGINE COMPARTMENT

Sedan

(Three-Dimensional Distance)

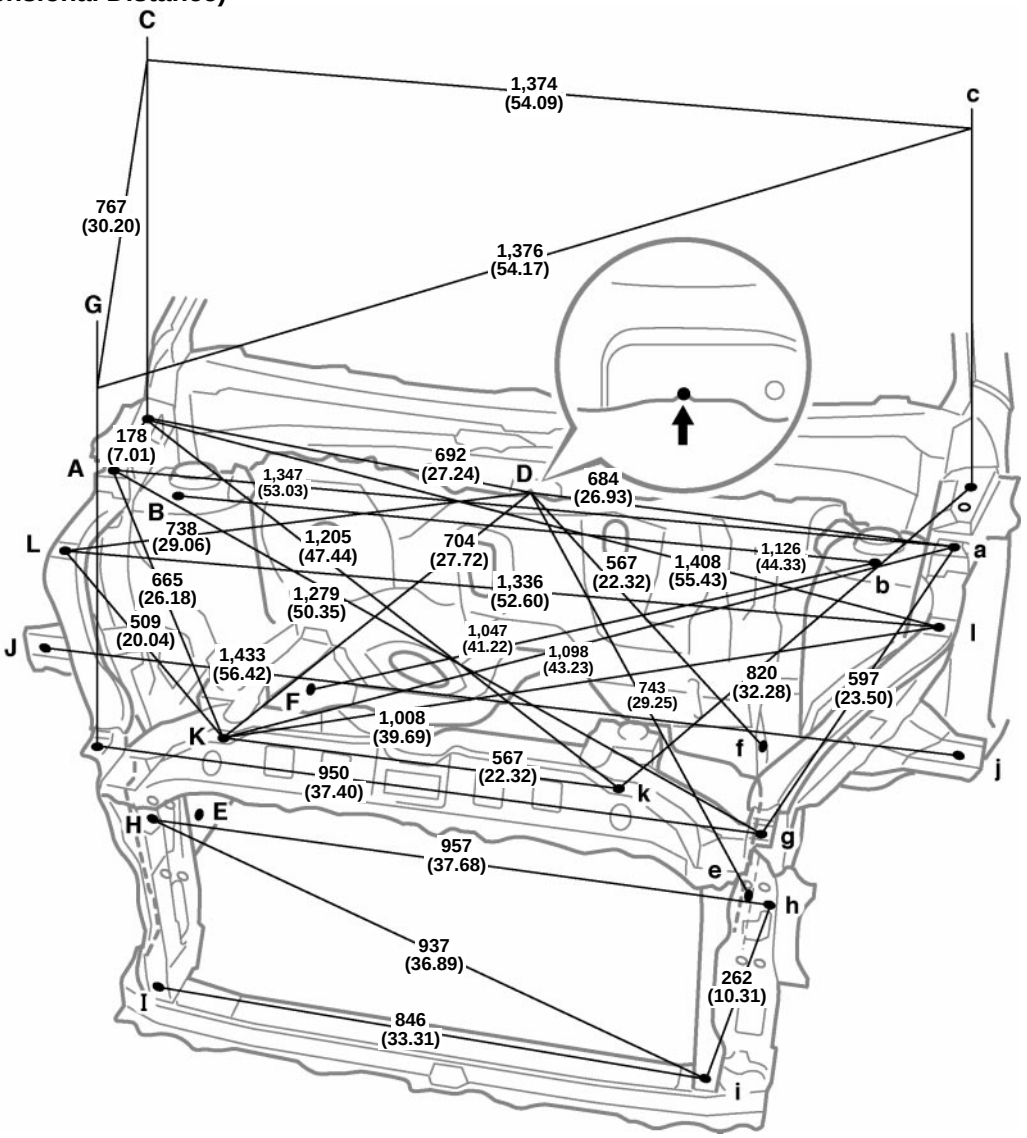

Vehicle Dimensions

B-C or b-c	B-c or b-C	B-D or b-D	B-K or b-k	B-k or b-K	C-L or c-l
223 (8.78)	1,264 (49.76)	575 (22.64)	998 (39.29)	597 (23.50)	381 (15.00)

Height from imaginary standard line

A, a	C, c	G, g
778 (30.63)	792 (31.18)	615 (24.21)

HINT: For symbols, capital letters indicate right side of vehicle, small letters indicate left side of vehicle (seen from rear).

mm (in.)

Symbol	Name	Hole dia.	Symbol	Name	Hole dia.
A, a	Front fender installation nut	M6 (0.24)	G, g	Headlight bracket installation hole	⁜9 (0.35)
B, b	Front spring support hole-inner	ø11 (0.43)	H, h	Radiator side support inatallation hole	ø6.3 (0.248)
C, c	Hood hinge installation nut-rear	M8 (0.31)	I, i	Radiator seal installation hole	ø9 (0.35)
D	Cowl panel center mark	—	J, j	Front fender mounting bracket standard hole	ø10 (0.39)
E, e	Front side member standard hole	ø15 (0.59)	K, k	Radiator upper support standard hole	ø13 (0.51)
F, f	Front side member standard hole	ø10 (0.39)	L, l	Front fender installation nut	M6 (0.24)

BODY OPENING AREAS (Side View)
Hatchback 3 Door

(Three-Dimensional Distance)

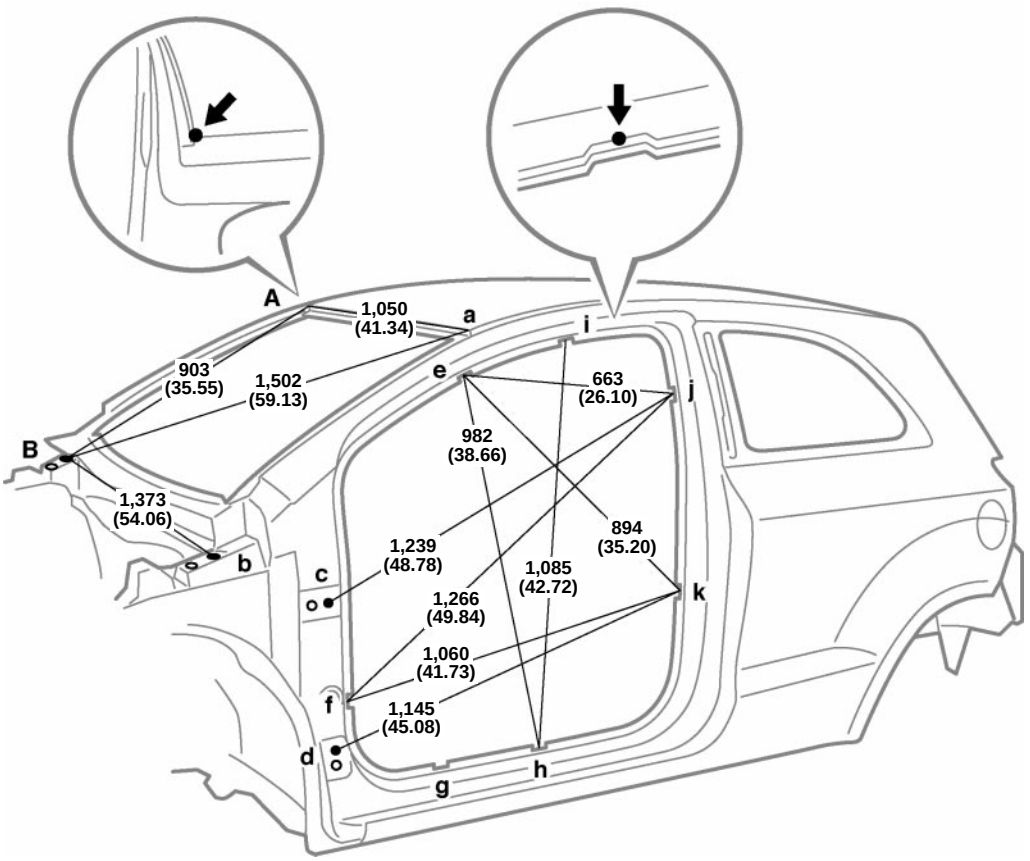

Vehicle Dimensions

E-e	F-f	G-g	H-h	I-i	J-j	K-k
1,147 (45.16)	1,379 (54.29)	1,417 (55.79)	1,417 (55.79)	1,090 (42.91)	1,258 (49.53)	1,395 (54.92)

E-f or e-F	E-h or e-H	E-j or e-J	E-k or e-K	F-j or f-J	F-k or f-K	G-h or g-H	H-i or h-I	J-k or j-K
1,532 (60.31)	1,609 (63.35)	1,372 (54.02)	1,549 (60.98)	1,826 (71.89)	1,745 (68.70)	1,440 (56.69)	1,650 (64.96)	1,429 (56.26)

HINT: For symbols, capital letters indicate right side of vehicle, small letters indicate left side of vehicle (seen from rear).

mm (in.)

Symbol	Name	Hole dia.	Symbol	Name	Hole dia.
A, a	Roof panel corner	—	G, g	Rocker panel assembly mark	—
B, b	Hood hinge installation nut	M8 (0.31)	H, h	Rocker panel assembly mark	—
C, c	Front door hinge installation nut	M8 (0.31)	I, i	Roof side rail assembly mark	—
D, d	Front door hinge installation nut	M8 (0.31)	J, j	Quarter panel assembly mark	—
E, e	Front body pillar assembly mark	—	K, k	Quarter panel assembly mark	—
F, f	Front body pillar assembly mark	—	—	—	—

BODY OPENING AREAS (Side View: Front)
Hatchback 5 Door

(Three-Dimensional Distance)

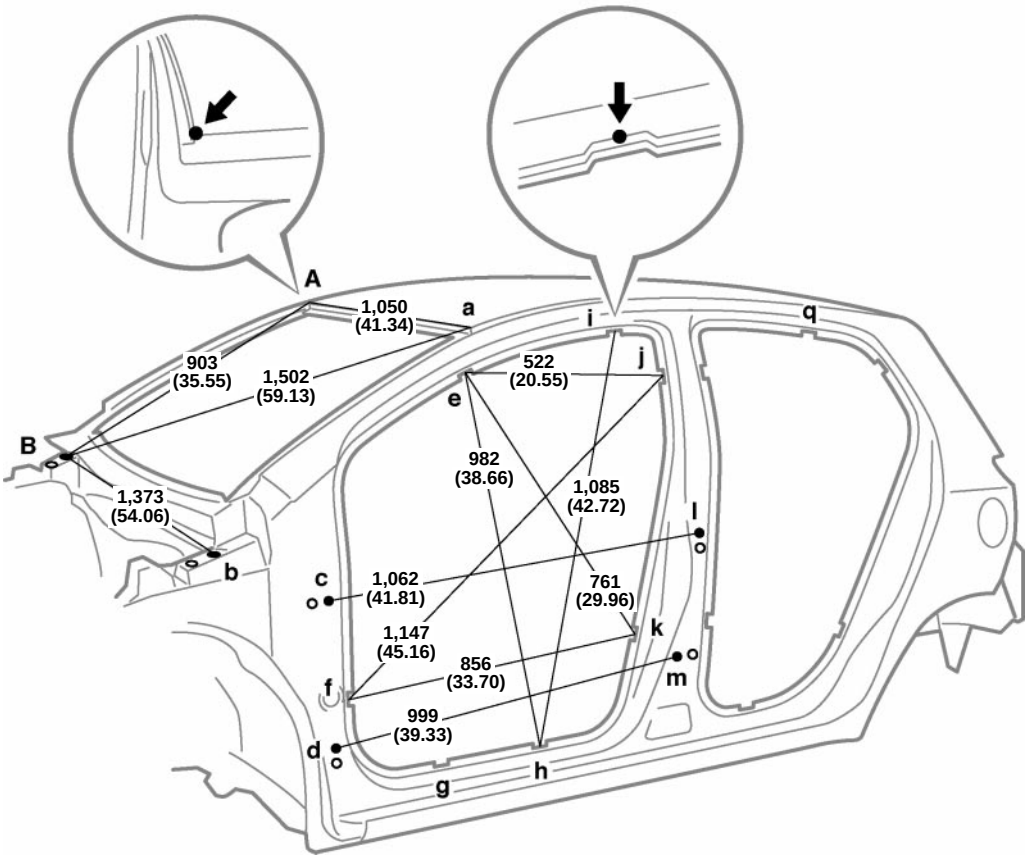

Vehicle Dimensions

E-e	F-f	G-g	H-h	I-i	J-j	K-k
1,147 (45.16)	1,379 (54.29)	1,417 (55.79)	1,417 (55.79)	1,090 (42.91)	1,263 (49.72)	1,391 (54.76)

E-f or e-F	E-h or e-H	E-j or e-J	F-j or f-J	F-k or f-K	H-i or h-I	I-q or i-Q	J-k or j-K
1,532 (60.31)	1,609 (63.35)	1,312 (51.65)	1,748 (68.82)	1,628 (64.09)	1,650 (64.96)	1,260 (49.61)	1,431 (56.34)

HINT: For symbols, capital letters indicate right side of vehicle, small letters indicate left side of vehicle (seen from rear).

mm (in.)

Symbol	Name	Hole dia.	Symbol	Name	Hole dia.
A, a	Roof panel corner	—	H, h	Rocker panel assembly mark	—
B, b	Hood hinge installation nut	M8 (0.31)	I, i	Roof side rail assembly mark	—
C, c	Front door hinge installation nut	M8 (0.31)	J, j	Center body pillar assembly mark	—
D, d	Front door hinge installation nut	M8 (0.31)	K, k	Center body pillar assembly mark	—
E, e	Front body pillar assembly mark	—	L, l	Rear door hinge installation nut	M8 (0.31)
F, f	Front body pillar assembly mark	—	M, m	Rear door hinge installation nut	M8 (0.31)
G, g	Rocker panel assembly mark	—	Q, q	Roof side rail assembly mark	—

BODY OPENING AREAS (Side View: Rear)
Hatchback 5 Door

(Three-Dimensional Distance)

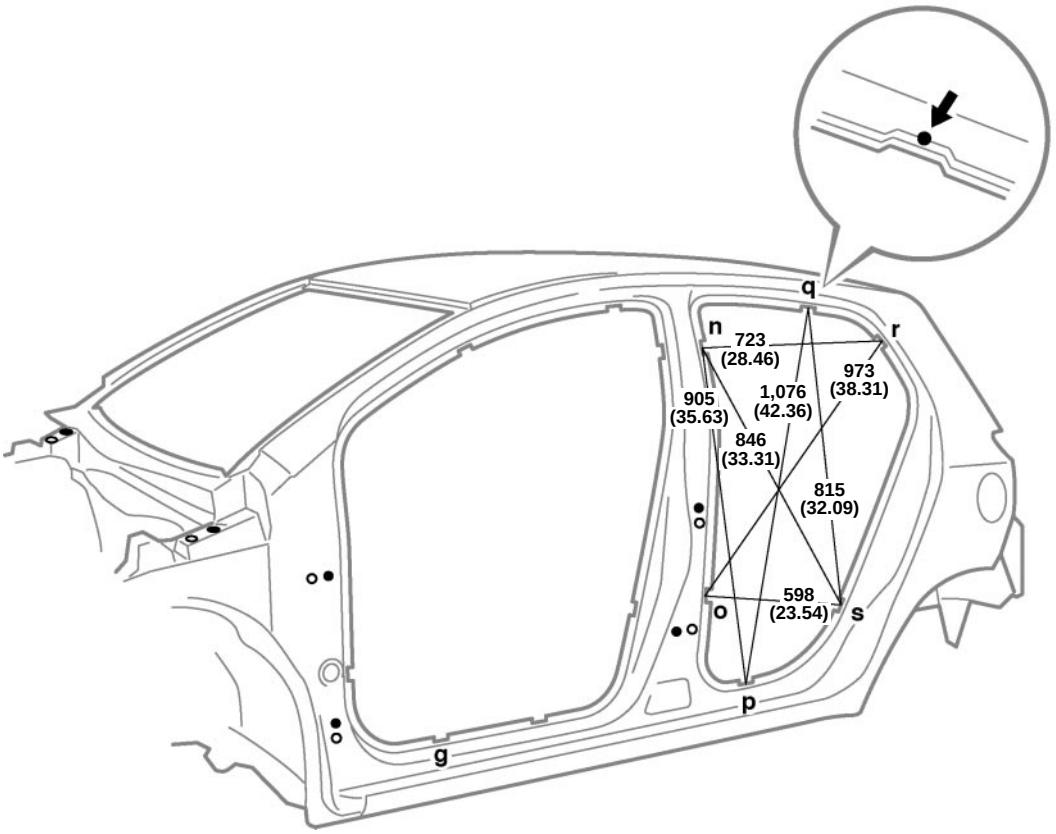

Vehicle Dimensions

N-n	O-o	P-p	Q-q	R-r	S-s
1,263 (49.72)	1,381 (54.37)	1,417 (55.79)	1,068 (42.05)	1,130 (44.49)	1,405 (55.31)

G-p or g-P	N-r or n-R	N-s or n-S	O-r or o-R	O-s or o-S	P-q or p-Q	R-s or r-S
1,717 (67.60)	1,397 (55.00)	1,578 (62.13)	1,584 (62.36)	1,516 (59.69)	1,634 (64.33)	1,451 (57.13)

HINT: For symbols, capital letters indicate right side of vehicle, small letters indicate left side of vehicle (seen from rear).

mm (in.)

Symbol	Name	Hole dia.	Symbol	Name	Hole dia.
G, g	Rocker panel assembly mark	—	Q, q	Roof side rail assembly mark	—
N, n	Center body pillar assembly mark	—	R, r	Quarter panel assembly mark	—
O, o	Center body pillar assembly mark	—	S, s	Quarter panel assembly mark	—
P, p	Quarter panel assembly mark	—	—	—	—

BODY OPENING AREAS (Side View: Front)
Sedan

(Three-Dimensional Distance)

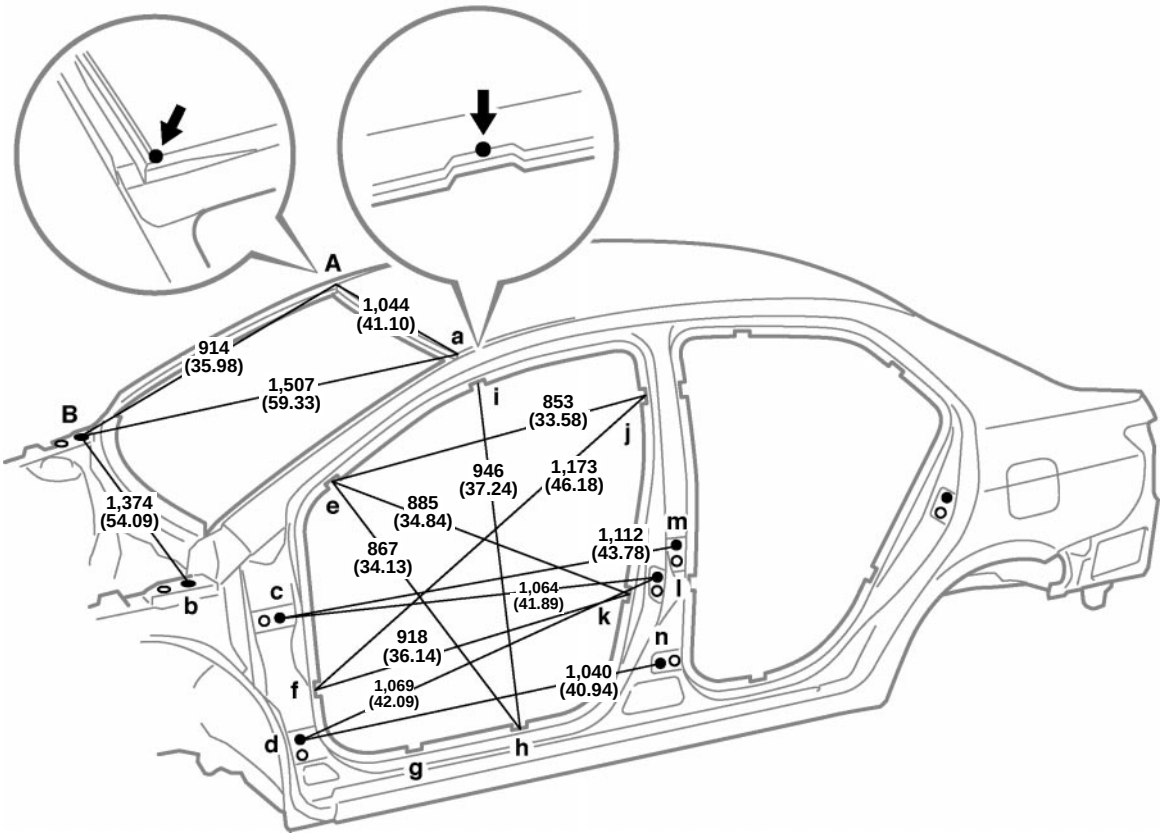

Vehicle Dimensions

E-e	F-f	G-g	H-h	I-i	J-j	K-k	L-l
1,266 (49.84)	1,378 (54.25)	1,418 (55.83)	1,418 (55.83)	1,128 (44.41)	1,240 (48.82)	1,378 (54.25)	1,480 (58.27)

E-f or e-F	E-h or e-H	E-j or e-J	F-j or f-J	F-k or f-K	H-i or h-I	J-k or j-K
1,443 (56.81)	1,596 (62.83)	1,515 (59.65)	1,756 (69.13)	1,656 (65.20)	1,579 (62.17)	1,403 (55.24)

HINT: For symbols, capital letters indicate right side of vehicle, small letters indicate left side of vehicle (seen from rear).

mm (in.)

Symbol	Name	Hole dia.	Symbol	Name	Hole dia.
A, a	Roof panel corner	—	H, h	Rocker panel assembly mark	—
B, b	Hood hinge installation nut	M8 (0.31)	I, i	Roof side rail assembly mark	—
C, c	Front door hinge installation nut	M8 (0.31)	J, j	Center body pillar assembly mark	—
D, d	Front door hinge installation nut	M8 (0.31)	K, k	Center body pillar assembly mark	—
E, e	Front body pillar assembly mark	—	L, l	Front door lock striker installation nut	M8 (0.31)
F, f	Front body pillar assembly mark	—	M, m	Rear door hinge installation nut	M8 (0.31)
G, g	Rocker panel assembly mark	—	N, n	Rear door hinge installation nut	M8 (0.31)

BODY OPENING AREAS (Side View: Rear)
Sedan

(Three-Dimensional Distance)

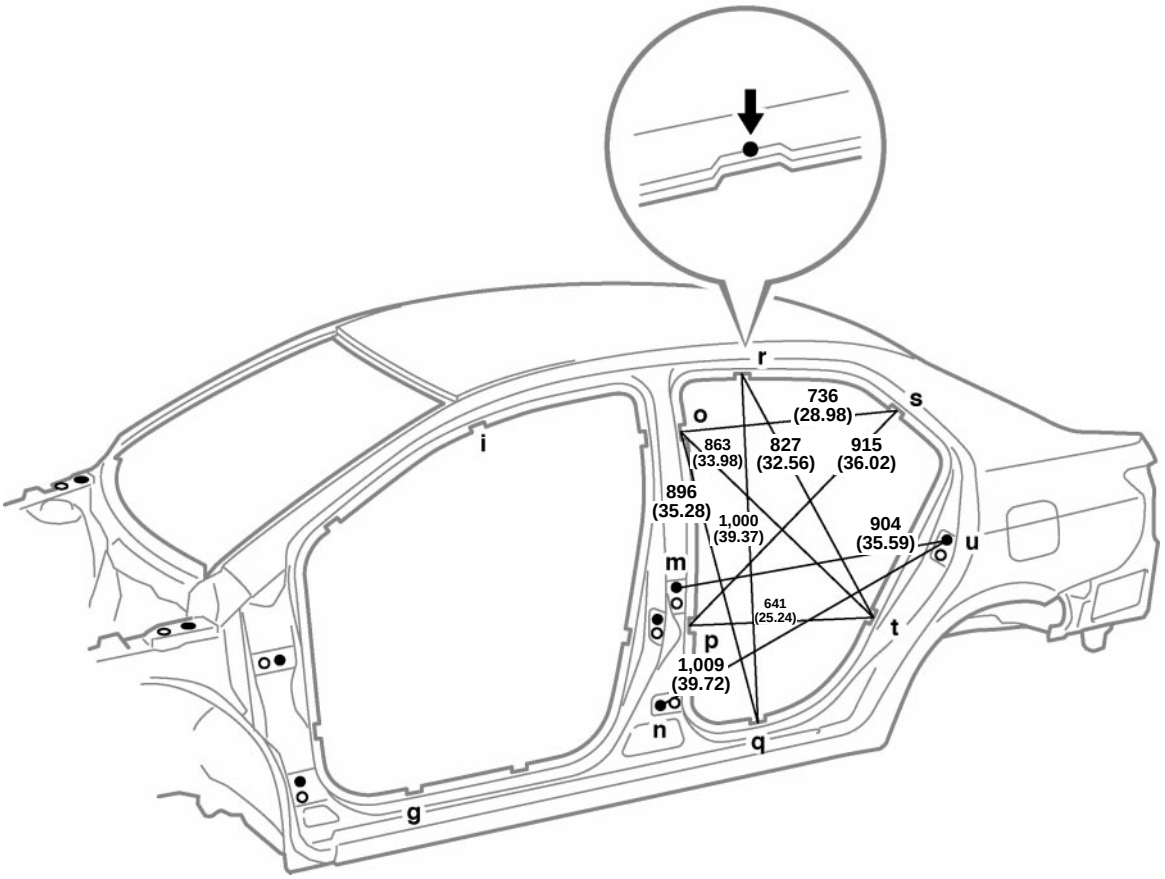

Vehicle Dimensions

O-o	P-p	Q-q	R-r	S-s	T-t	U-u
1,240 (48.82)	1,373 (54.06)	1,418 (55.83)	1,084 (42.68)	1,197 (47.13)	1,405 (55.31)	1,489 (58.62)

G-q or g-Q	I-r or i-R	O-s or o-S	O-t or o-T	P-t or p-T	Q-r or q-R	S-t or s-T
1,770 (69.69)	1,375 (54.13)	1,424 (56.06)	1,577 (62.09)	1,529 (60.20)	1,593 (62.72)	1,430 (56.30)

HINT: For symbols, capital letters indicate right side of vehicle, small letters indicate left side of vehicle (seen from rear).

mm (in.)

Symbol	Name	Hole dia.	Symbol	Name	Hole dia.
G, g	Rocker panel assembly mark	—	Q, q	Rocker panel assembly mark	—
I, i	Roof side rail assembly mark	—	R, r	Roof side rail assembly mark	—
M, m	Rear door hinge installation nut	M8 (0.31)	S, s	Quarter panel assembly mrak	—
N, n	Rear door hinge installation nut	M8 (0.31)	T, t	Quarter panel assembly mark	—
O, o	Center body pillar assembly mark	—	U, u	Rear door lock striker installation nut	M8 (0.31)
P, p	Center body pillar assembly mark	—	—	—	—

BODY OPENING AREAS (Rear View)
Hatchback 5 Door

(Three-Dimensional Distance)

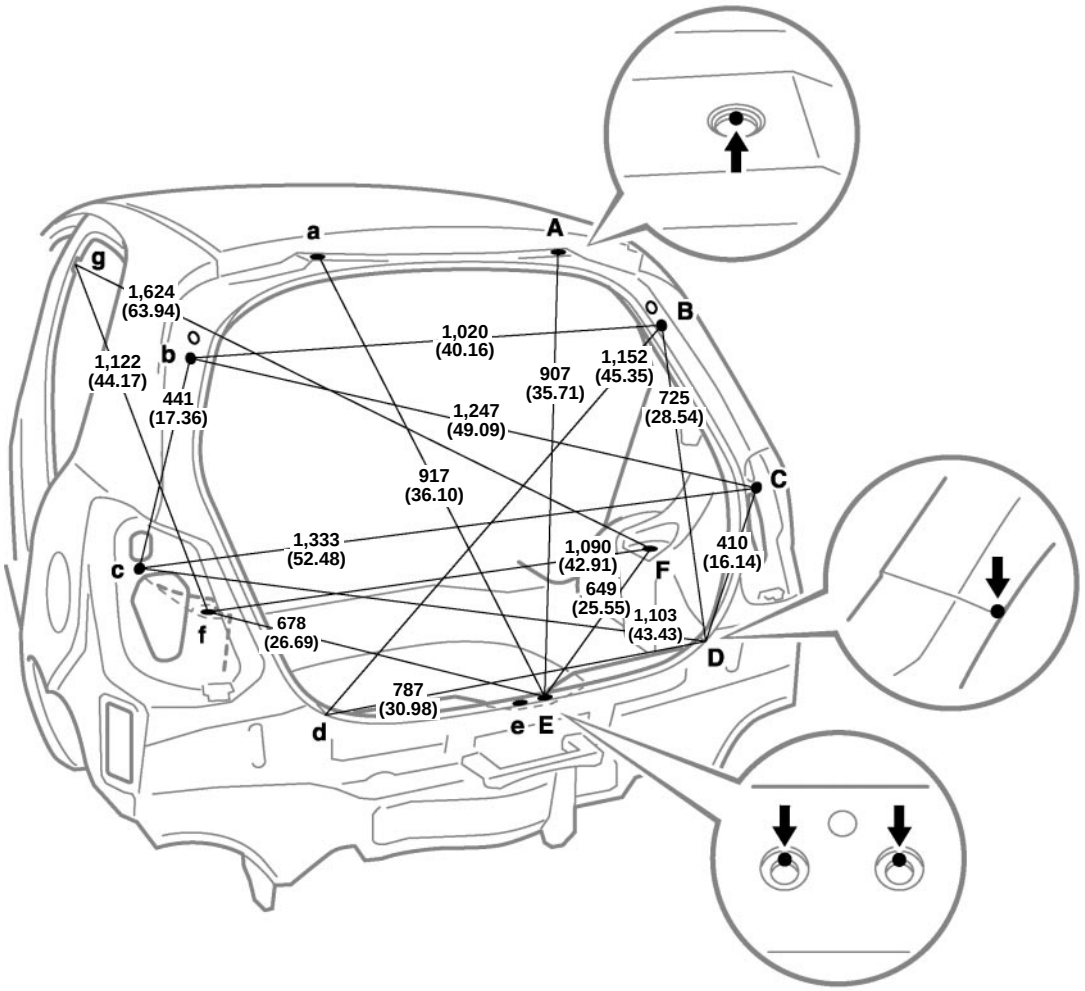

HINT: For symbols, capital letters indicate right side of vehicle, small letters indicate left side of vehicle (seen from rear).

mm (in.)

Symbol	Name	Hole dia.	Symbol	Name	Hole dia.
A, a	Back door hinge installation hole	ø 10.2 (0.402): RH ø 10.2 (0.402) × 12 (0.47): LH	E, e	Back door lock striker installation nut	—
B, b	Back door stay installation nut	M6 (0.24)	F, f	Rear shock absorber installation hole−inner	M8 (0.31)
C, c	Back door opening trough standard hole	ø 10 (0.39)	G, g	Center body pillar assembly mark	ø 18 (0.71)
D, d	Back door opening trough/Body lower back panel adjoining point	—	—	—	—

BODY OPENING AREAS (Rear View)
Hatchback 3 Door

(Three-Dimensional Distance)

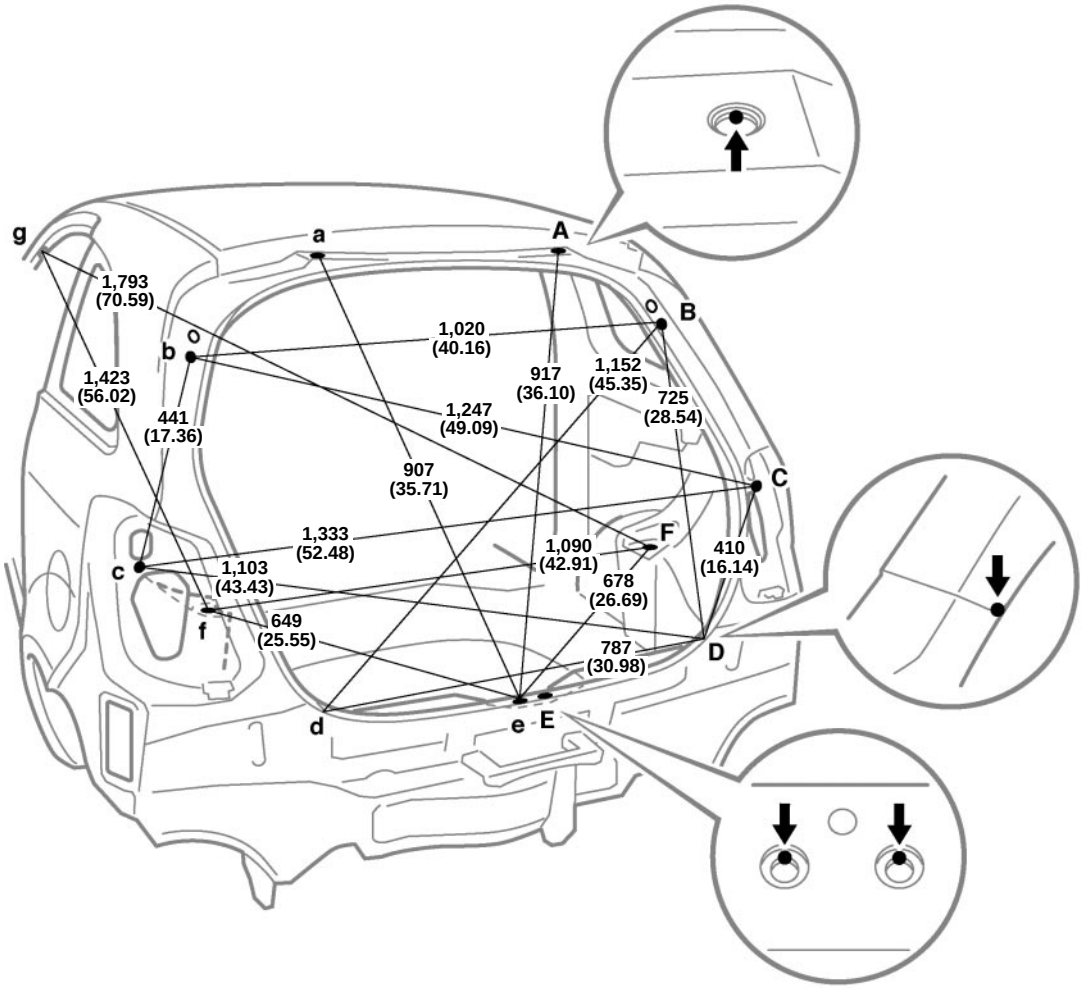

HINT: For symbols, capital letters indicate right side of vehicle, small letters indicate left side of vehicle (seen from rear).

mm (in.)

Symbol	Name	Hole dia.	Symbol	Name	Hole dia.
A, a	Back door hinge installation hole	ø 10.2 (0.402): RH ø 10.2 (0.402) × 12 (0.47): LH	E, e	Back door lock striker installation nut	M8 (0.31)
B, b	Back door stay installation nut	M6 (0.24)	F, f	Rear shock absorber installation hole−inner	ø 18 (0.71)
C, c	Back door opening trough standard hole	ø 10 (0.39)	G, g	Roof side rail assembly mark	—
D, d	Back door opening trough/Body lower back panel adjoining point	—	—	—	—

FRONT SIDEMEMBER REINFORCEMENT (ASSY)

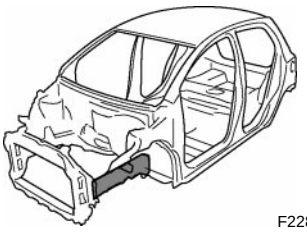
F22829A

REPLACEMENT
With the radiator support and front fender apron removed.

REMOVAL

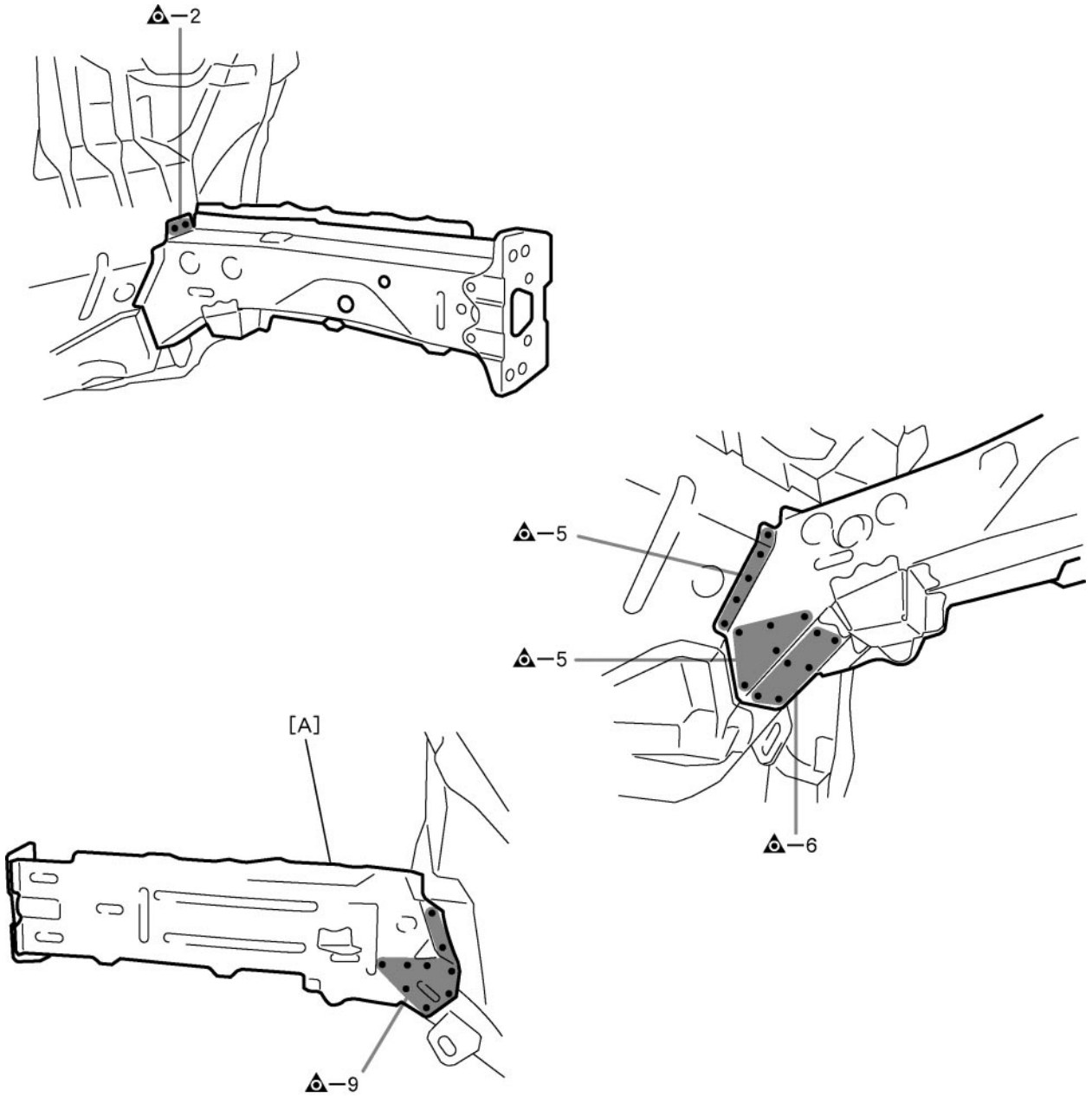

F22829

POINT
1 Remove [A] at the same time.

PART NAME
[A] Front Sidemember Outer Plate

INSTALLATION

⁎ Temporarily install the new parts and measure each part of the new parts in accordance with the body dimension diagram. (See the body dimension diagram)
⁎ Inspect the fitting of the related parts around the new parts before welding. This affects the appearance of the finish.
⁎ After welding, apply the polyurethane foam to the corresponding parts.
⁎ After welding, apply body sealer and under-coating to the corresponding parts.
⁎ After applying the top coat layer, apply anti-rust agent to the inside of the necked section structural weld spots.

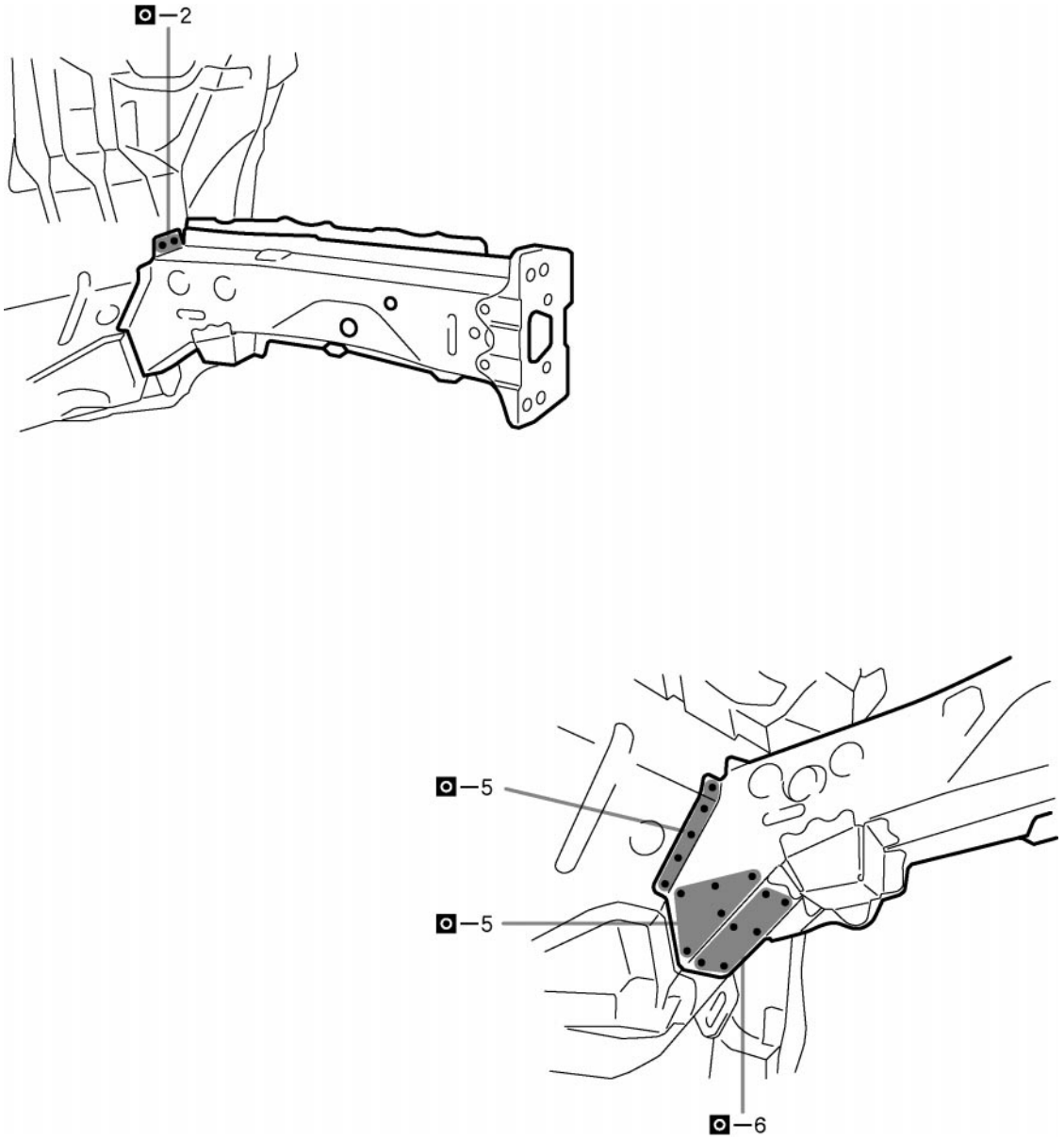

F22830

POINT

1 Make sure to attach correctly in accordance with the body dimension diagram as this part affects the front wheel alignment.

[LH]

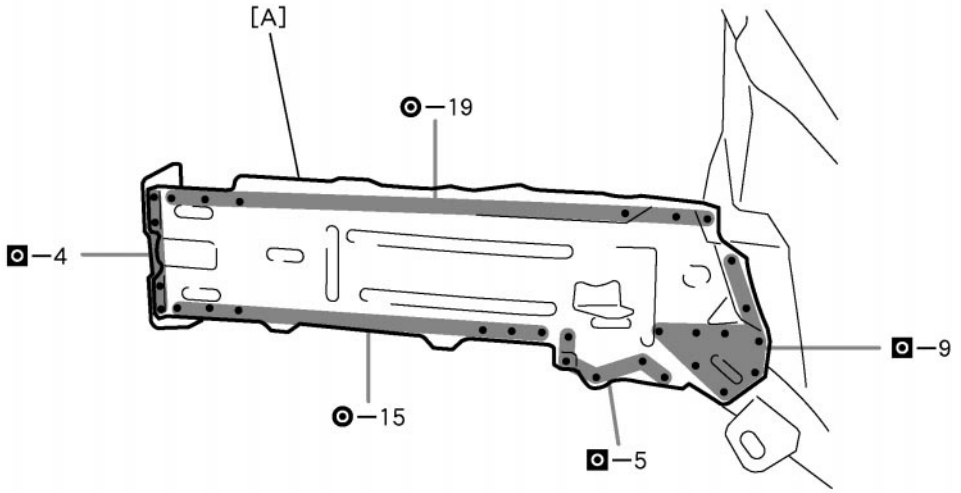

[RH]

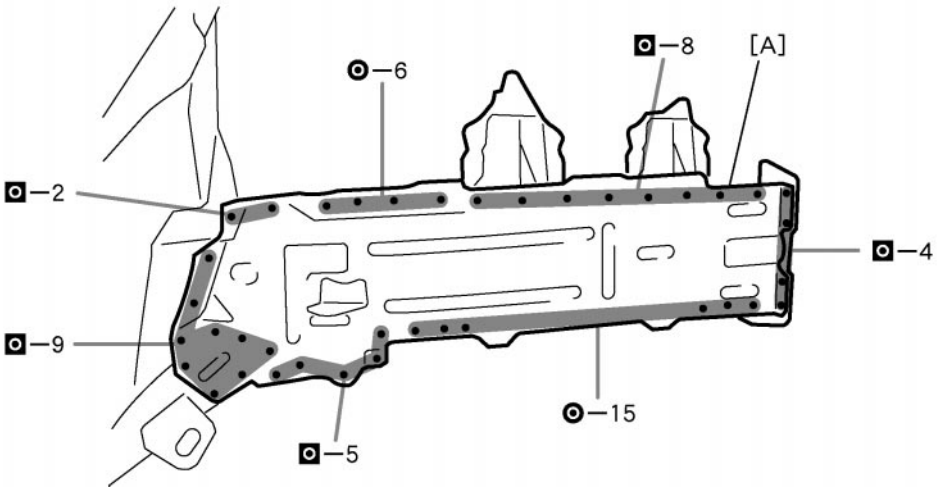

F22831

PART NAME

[A] Front Sidemember Outer Plate

BODY OPENING AREAS (Rear View)
Sedan

(Three-Dimensional Distance)

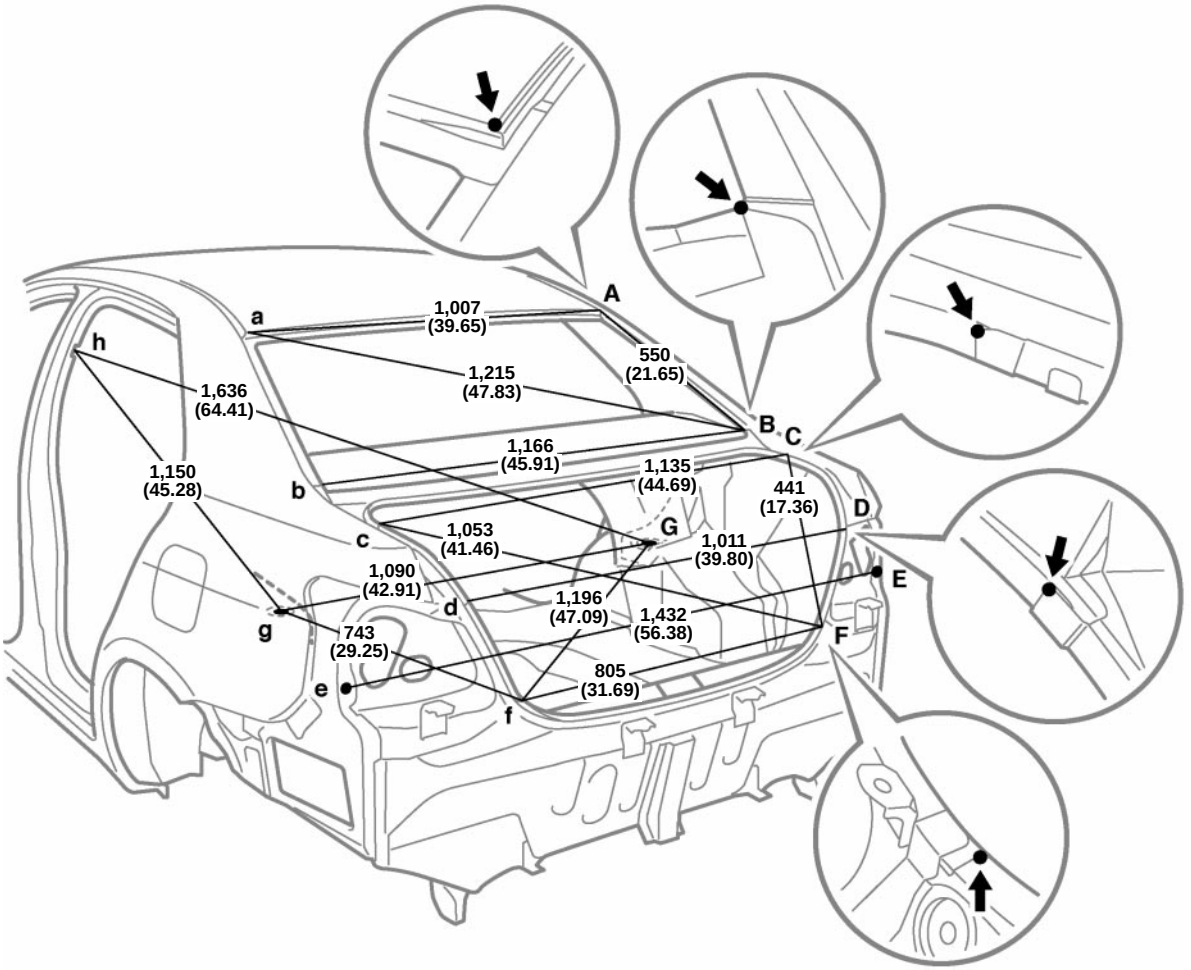

HINT: For symbols, capital letters indicate right side of vehicle, small letters indicate left side of vehicle (seen from rear).

mm (in.)

Symbol	Name	Hole dia.	Symbol	Name	Hole dia.
A, a	Roof panel corner	—	E, e	Quarter panel standard hole	ø13 (0.51)
B, b	Upper back panel corner	—	F, f	Body lower back reinforcement corner	—
C, c	Back door opening trough corner	—	G, g	Rear shock absorber installation hole	ø18 (0.71)
D, d	Luggage door opening front trough corner	—	H, h	Center body pillar assembly mark	—

UNDER BODY
Hatchback

(Three-Dimensional Distance)

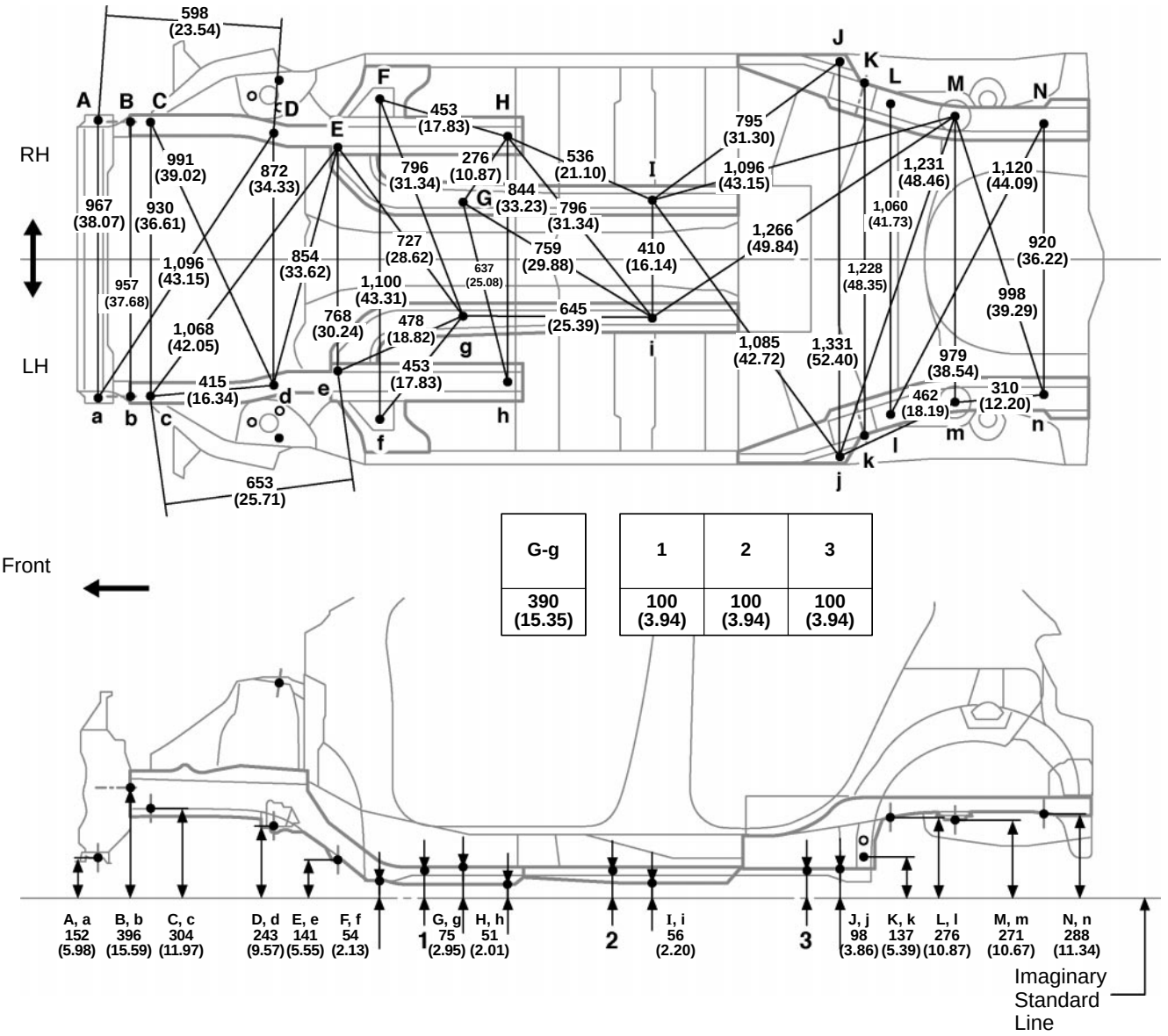

G-g
390 (15.35)

1	2	3
100 (3.94)	100 (3.94)	100 (3.94)

HINT: For symbols, capital letters indicate right side of vehicle, small letters indicate left side of vehicle (seen from rear).

mm (in.)

Symbol	Name	Hole dia.	Symbol	Name	Hole dia.
A, a	Radiator side support installation nut	M6 (0.24)	H, h	Front side member standard hole	ø 18 (0.71)
B, b	Radiator side support installation hole	ø 6.3 (0.248)	I, i	Front floor pan standard hole	ø 18 (0.71)
C, c	Front side member standard hole	ø 18 (0.71)	J, j	Floor side inner rear member standard hole	ø 18 (0.71)
D, d	Front suspension installation nut	M12 (0.47)	K, k	Rear axle beam installation outer hole-inner	ø 15 (0.59)
E, e	Front suspension installation nut	M14 (0.55)	L, l	Rear floor side member standard hole	ø 18 (0.71)
F, f	Torque box front standard hole	ø 25 (0.98)	M, m	Rear spring plate standard hole	ø 18 (0.71)
G, g	Front floor pan standard hole	ø 18 (0.71)	N, n	Rear floor side member standard hole	ø 18 (0.71)

UNDER BODY
Sedan

(Three-Dimensional Distance)

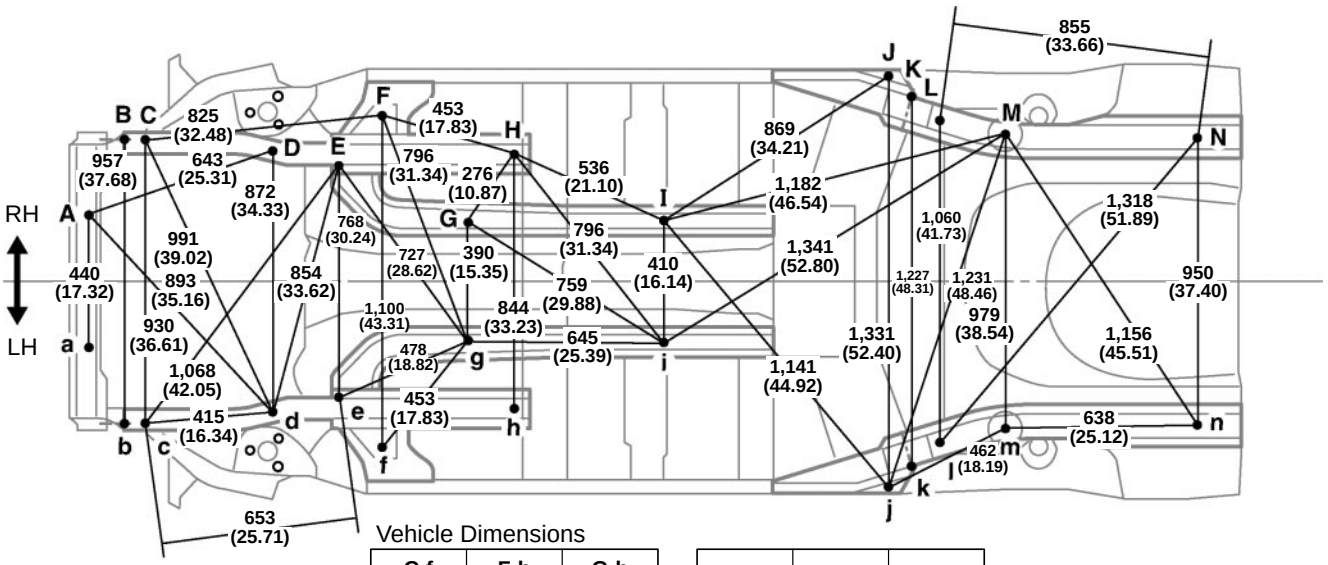

Vehicle Dimensions

C-f or c-F	F-h or f-H	G-h or g-H
1,305 (51.38)	1,065 (41.93)	637 (25.08)

1	2	3
100 (3.94)	100 (3.94)	100 (3.94)

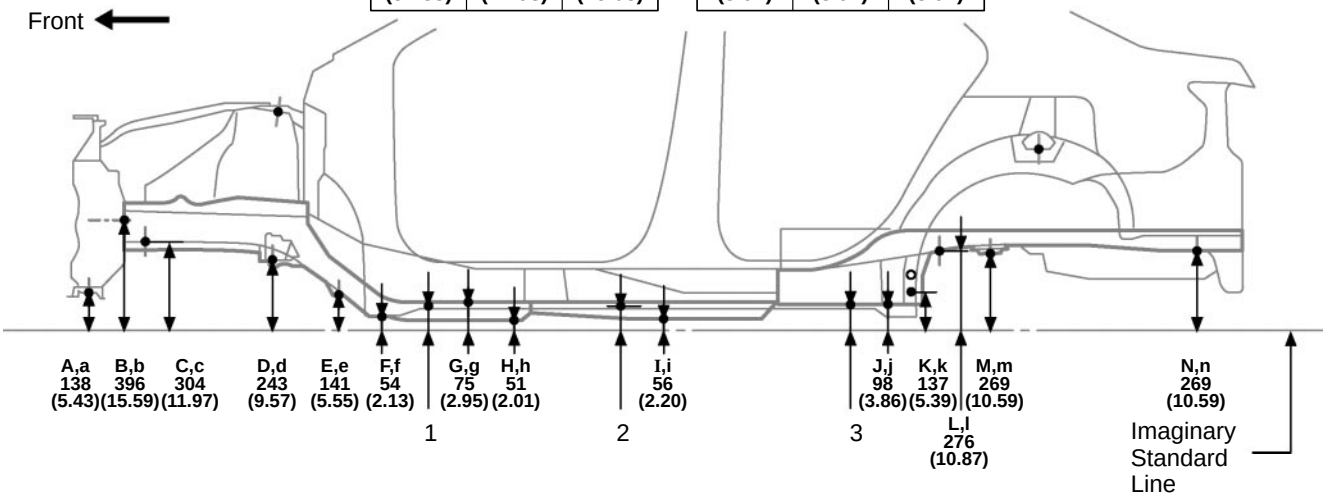

HINT: For symbols, capital letters indicate right side of vehicle, small letters indicate left side of vehicle (seen from rear).

mm (in.)

Symbol	Name	Hole dia.	Symbol	Name	Hole dia.
A, a	Radiator lower support standard hole	ø18 (0.71)	H, h	Front side member standard hole	ø18 (0.71)
B, b	Radiator side support inatallation hole	ø6.3 (0.248)	I, i	Front floor pan standard hole	ø18 (0.71)
C, c	Front side member standard hole	ø18 (0.71)	J, j	Floor side inner rear member standard hole	ø18 (0.71)
D, d	Front suspension member installation nut	M12 (0.47)	K, k	Rear axle beam installation outer hole-inner	ø15 (0.59)
E, e	Front suspension member installation nut	M14 (0.55)	L, l	Rear floor side member standard hole	ø18 (0.71)
F, f	Torque box front standard hole	ø25 (0.98)	M, m	Rear spring plate standard hole	ø18 (0.71)
G, g	Front floor pan standard hole	ø18 (0.71)	N, n	Rear floor side member standard hole	ø18 (0.71)

UNDER BODY
Hatchback

(Two-Dimensional Distance)

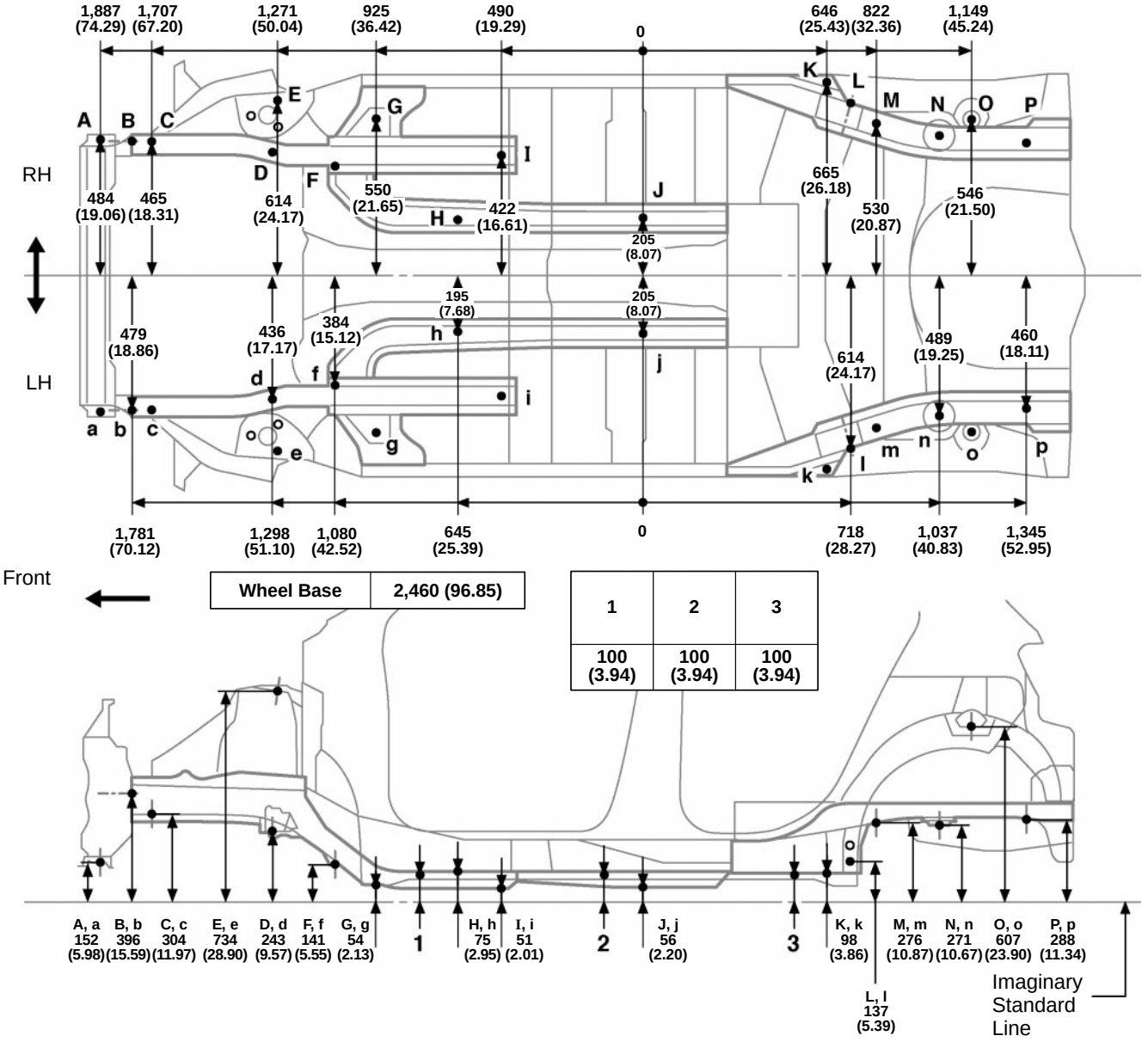

HINT: For symbols, capital letters indicate right side of vehicle, small letters indicate left side of vehicle (seen from rear).

mm (in.)

Symbol	Name	Hole dia.	Symbol	Name	Hole dia.
A, a	Radiator side support installation nut	M6 (0.24)	I, i	Front side member standard hole	ø 18 (0.71)
B, b	Radiator side support installation hole	ø 6.3 (0.248)	J, j	Front floor pan standard hole	ø 18 (0.71)
C, c	Front side member standard hole	ø 18 (0.71)	K, k	Floor side inner rear member standard hole	ø 18 (0.71)
D, d	Front suspension member installation nut	M12 (0.47)	L, l	Rear axle beam installation outer hole-inner	ø 15 (0.59)
E, e	Front spring support plate standard hole−outer	ø 11 (0.43)	M, m	Rear floor side member standard hole	ø 18 (0.71)
F, f	Front suspension member installation nut	M14 (0.55)	N, n	Rear spring plate standard hole	ø 18 (0.71)
G, g	Torque box front standard hole	ø 25 (0.98)	O, o	Rear shock absorber installation hole	ø 18 (0.71)
H, h	Front floor pan standard hole	ø 18 (0.71)	P, p	Rear floor side member standard hole	ø 18 (0.71)

UNDER BODY
Sedan

(Two-Dimensional Distance)

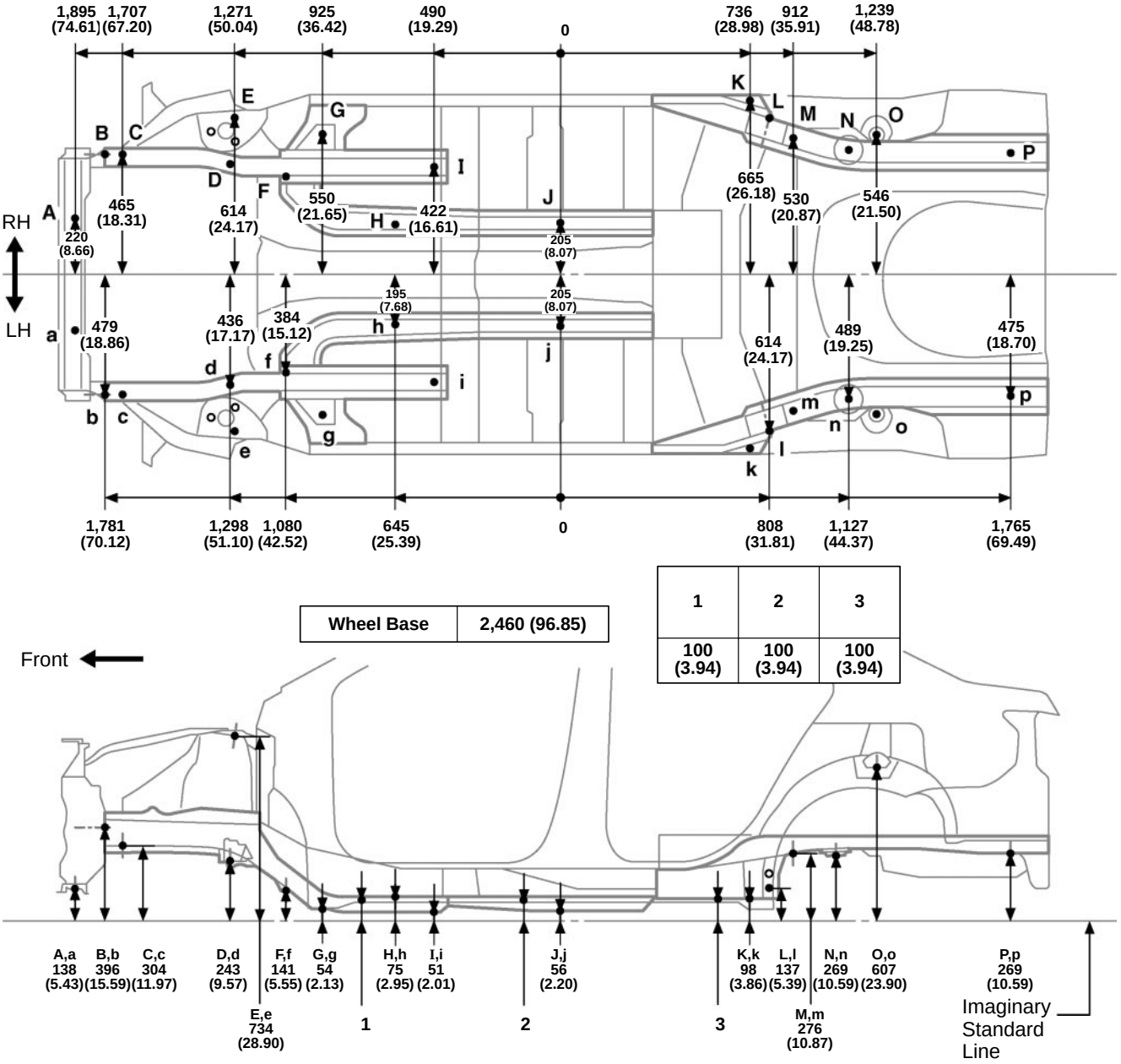

HINT: For symbols, capital letters indicate right side of vehicle, small letters indicate left side of vehicle (seen from rear).

mm (in.)

Symbol	Name	Hole dia.	Symbol	Name	Hole dia.
A, a	Radiator lower support standard hole	ø18 (0.71)	I, i	Front side member standard hole	ø18 (0.71)
B, b	Radiator side support inatallation hole	ø6.3 (0.248)	J, j	Front floor pan standard hole	ø18 (0.71)
C, c	Front side member standard hole	ø18 (0.71)	K, k	Floor side inner rear member standard hole	ø18 (0.71)
D, d	Front suspension member installation nut	M12 (0.47)	L, l	Rear axle beam installation outer hole-inner	ø15 (0.59)
E, e	Front spring support plate standard hole	ø11 (0.43)	M, m	Rear floor side member standard hole	ø18 (0.71)
F, f	Front suspension member installation nut	M14 (0.55)	N, n	Rear spring plate standard hole	ø18 (0.71)
G, g	Torque box front standard hole	ø25 (0.98)	O, o	Rear shock absorber installation hole	ø18 (0.71)
H, h	Front floor pan standard hole	ø18 (0.71)	P, p	Rear floor side member standard hole	ø18 (0.71)

REFERENCE VALUE
ENGINE COMPARTMENT
Hatchboack

(Three-Dimensional Distance)

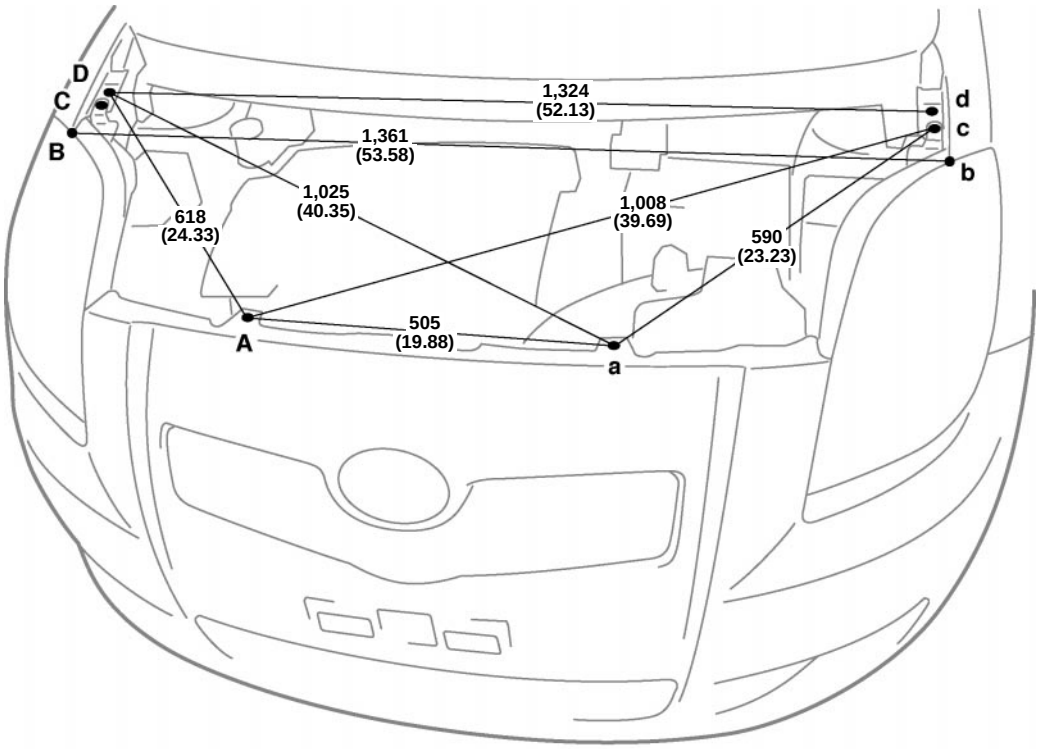

C-c	C-D or c-d
1,324 (52.13)	38 (1.50)

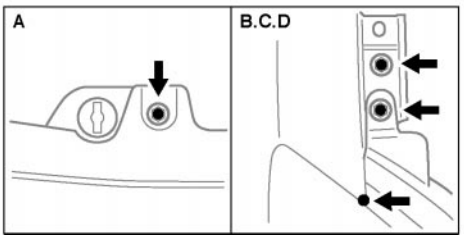

HINT: These values are actual measurements made on a vehicle.
Use these reference values.

mm (in.)

Symbol	Name	Hole dia.	Symbol	Name	Hole dia.
A, a	Front bumper cover installation bolt	—	C, c	Headlight installation bolt	—
B, b	Front end of fender	—	D, d	Front fender installation bolt	—

REFERENCE VALUE
ENGINE COMPARTMENT
Sedan

(Three-Dimensional Distance)

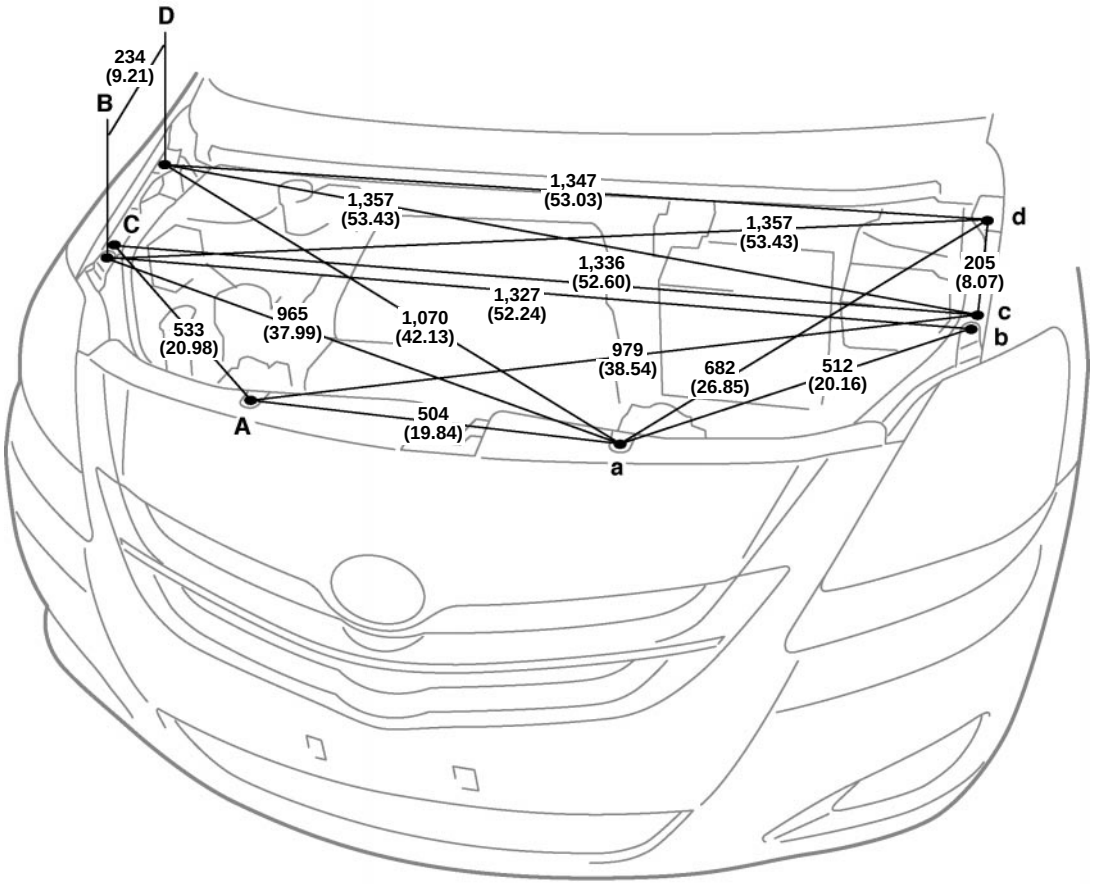

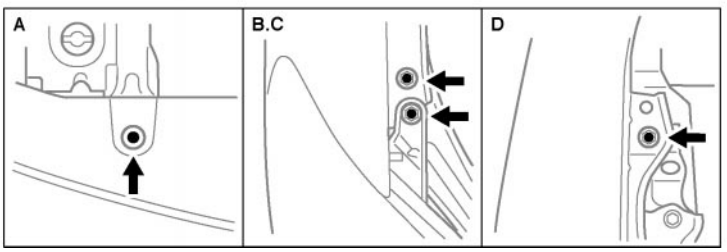

HINT: These values are actual measurements made on a vehicle.
Use these reference values.

mm (in.)

Symbol	Name	Hole dia.	Symbol	Name	Hole dia.
A, a	Front bumper cover installation clip	—	C, c	Front fender installation bolt	—
B, b	Headlight installation bolt	—	D, d	Front fender installation bolt	—

UNDER BODY

(Two-Dimensional Distance)

Radiator support installation

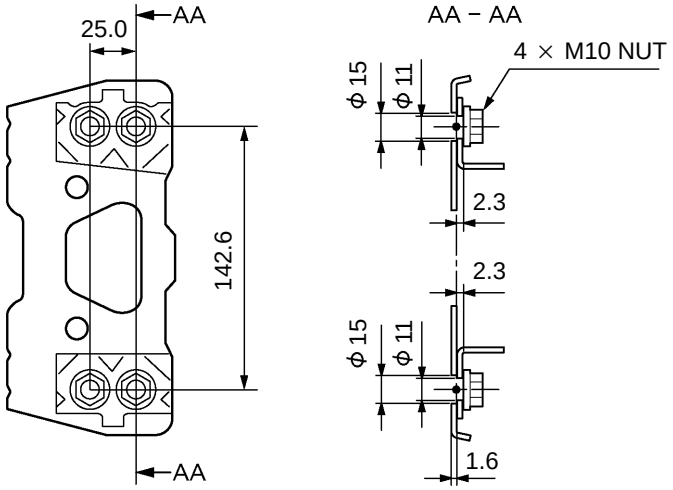

Front spring support

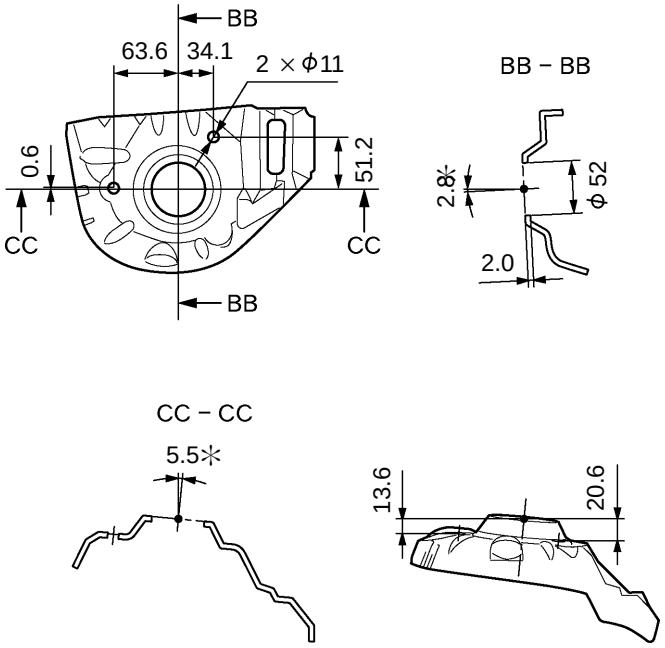

Rear shock absorber installation

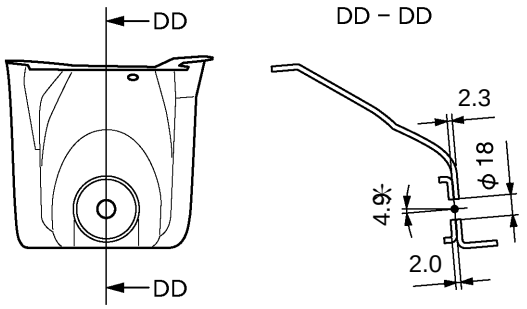

mm

COWL TOP SIDE PANEL (ASSY)

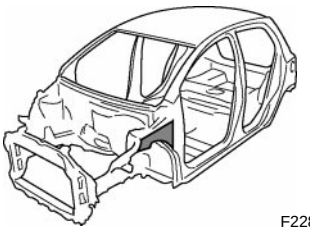
F22832A

REPLACEMENT

REMOVAL

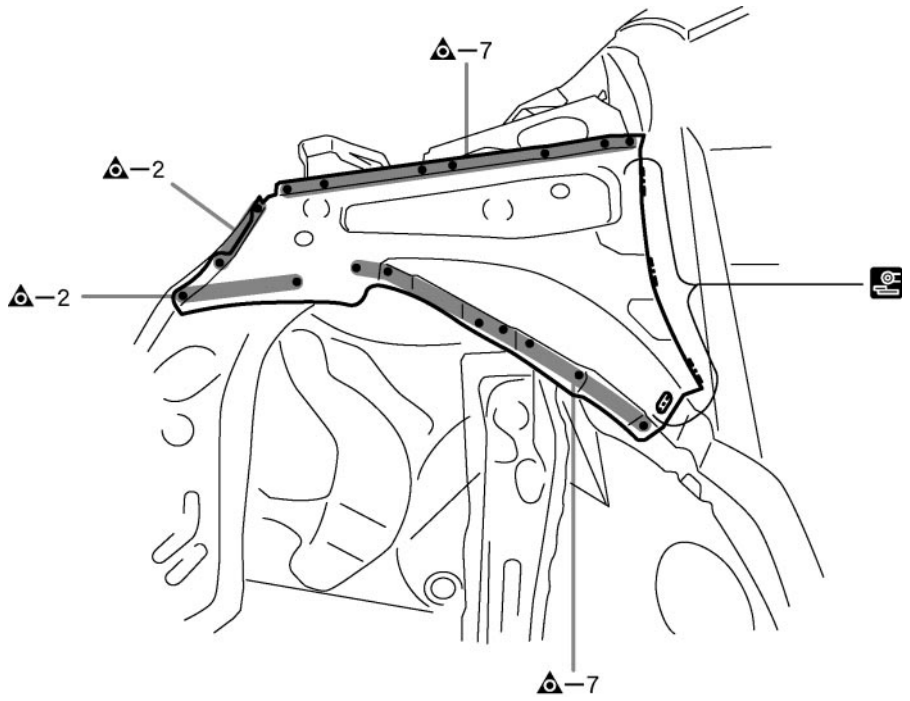

F22832

INSTALLATION

⁎ Temporarily install the new parts and measure each part of the new parts in accordance with the body dimension diagram. (See the body dimension diagram)
⁎ Inspect the fitting of the related parts around the new parts before welding. This affects the appearance of the finish.
⁎ After welding, apply the polyurethane foam to the corresponding parts.
⁎ After welding, apply body sealer and under-coating to the corresponding parts.
⁎ After applying the top coat layer, apply anti-rust agent to the inside of the necked section structural weld spots.

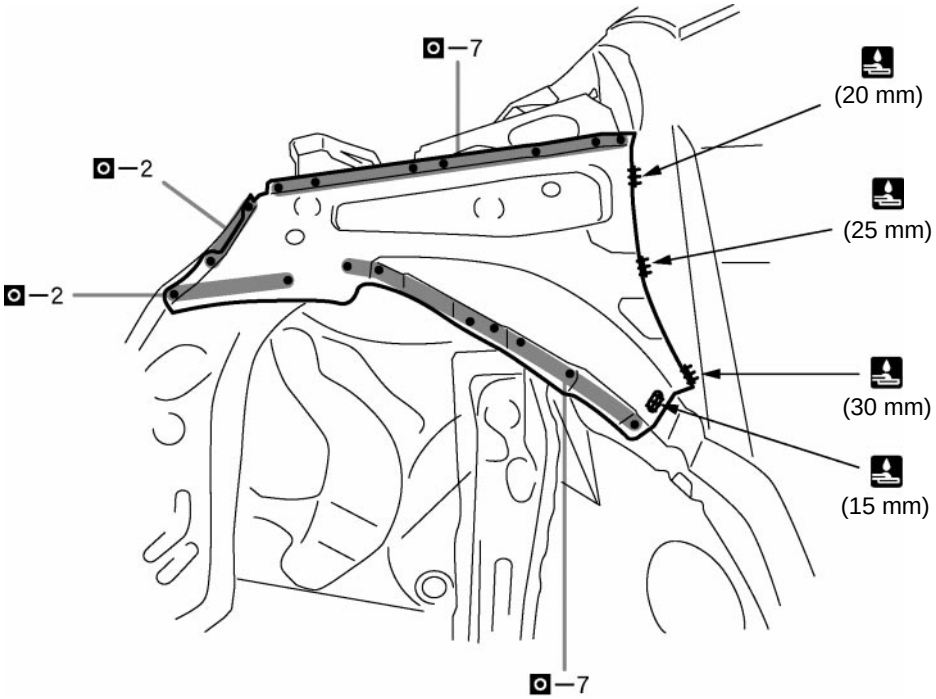

F22833

15 mm (0.59 in.) 20 mm (0.79 in.) 25 mm (0.98 in.) 30 mm (1.18 in.)

COWL TOP SIDE UPPER PANEL (ASSY)

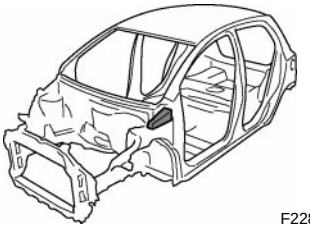
F22834A

REPLACEMENT
With the cowl top side panel removed.

REMOVAL

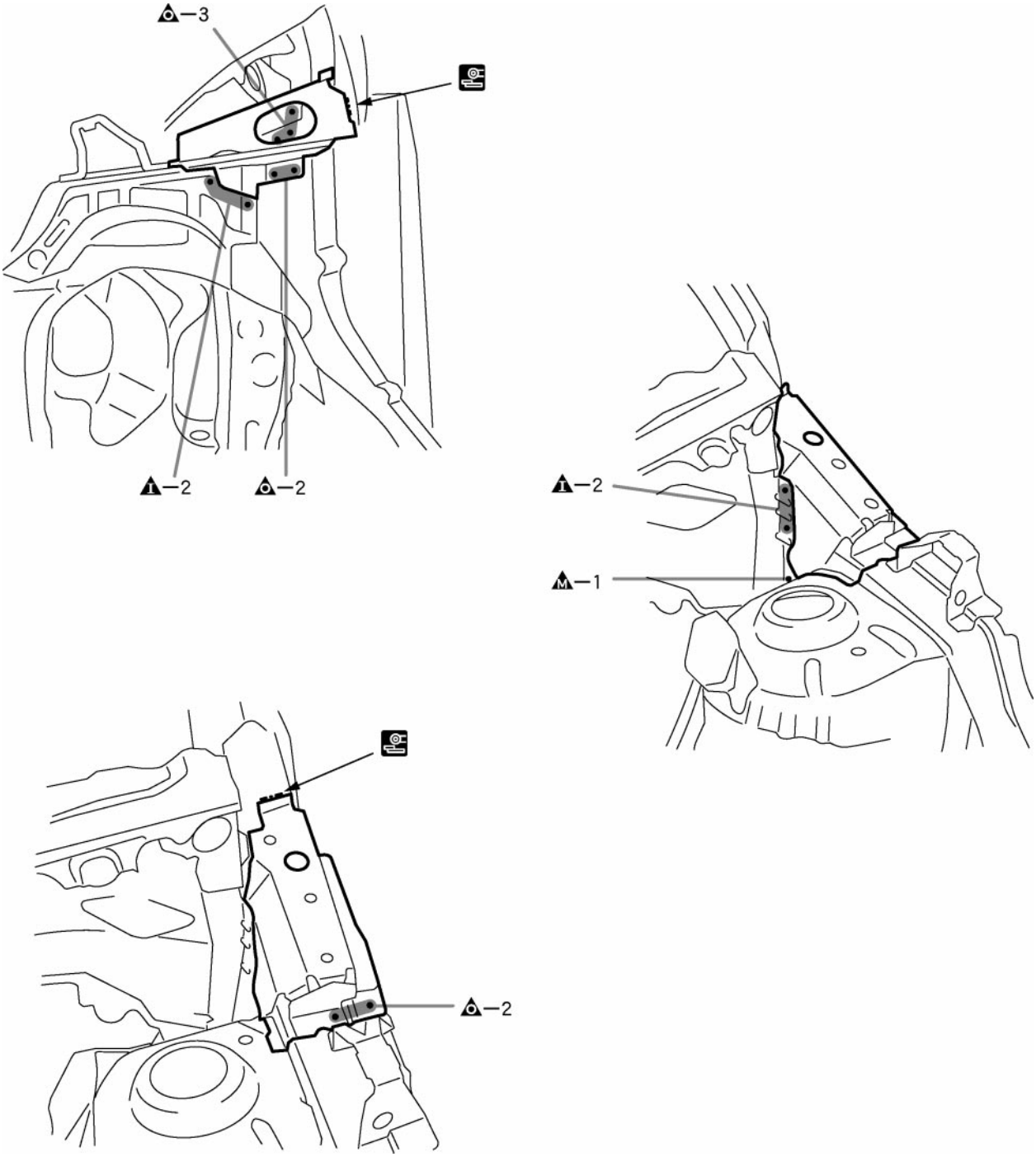

F22834

INSTALLATION

* Temporarily install the new parts and measure each part of the new parts in accordance with the body dimension diagram. (See the body dimension diagram)
* Inspect the fitting of the related parts around the new parts before welding. This affects the appearance of the finish.
* After welding, apply the polyurethane foam to the corresponding parts.
* After welding, apply body sealer and under-coating to the corresponding parts.
* After applying the top coat layer, apply anti-rust agent to the inside of the necked section structural weld spots.

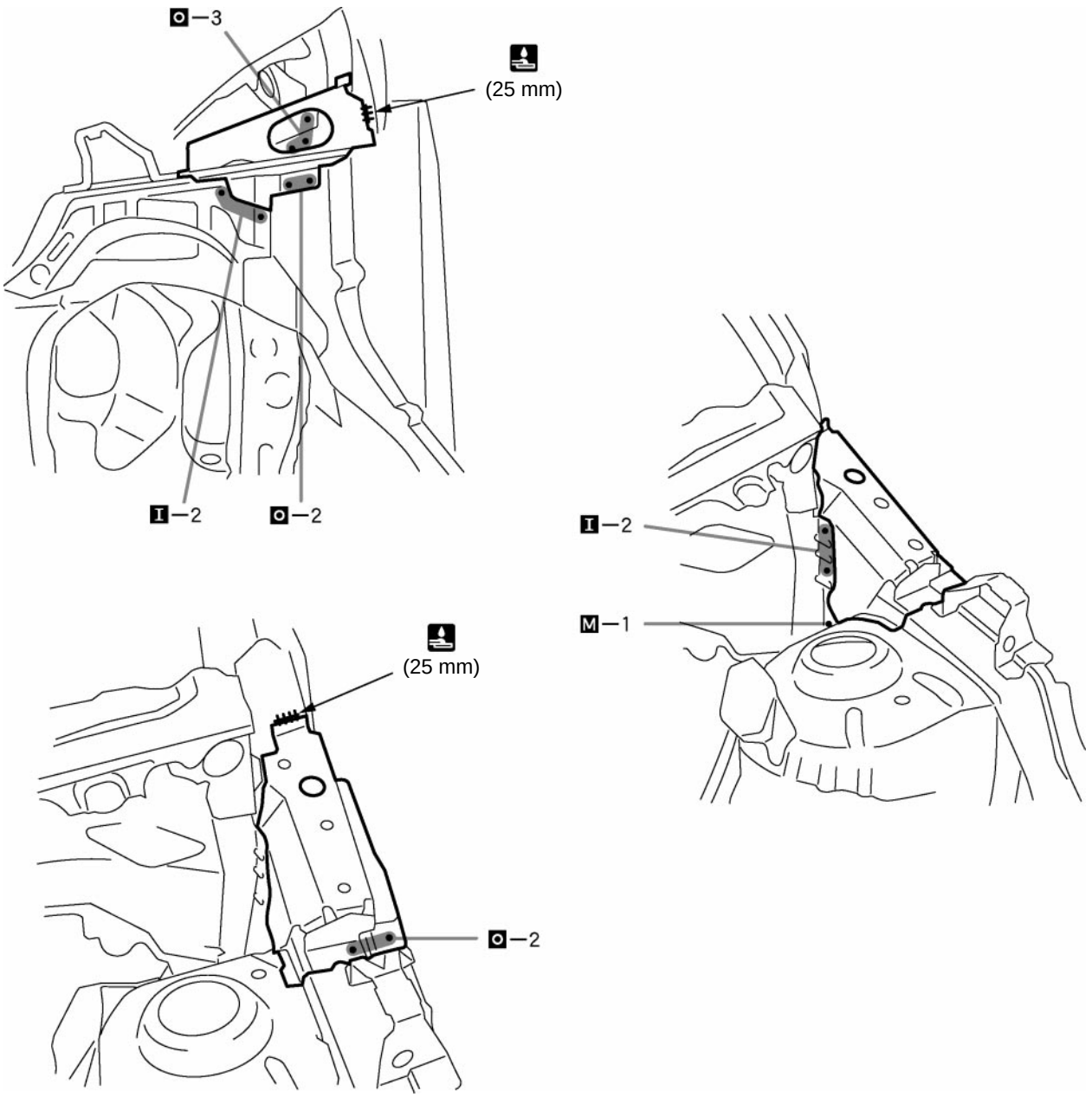

F22835

POINT

1 Inspect the fitting of the hood and related parts before welding as this affects the appearance of the finish.

25 mm (0.98 in.)

FRONT BODY PILLAR (CUT)

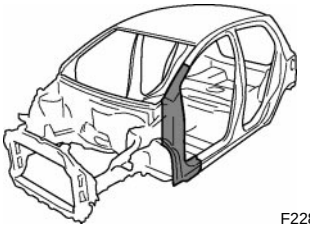
F22836A

REPLACEMENT
With the cowl top side upper panel removed.

REMOVAL

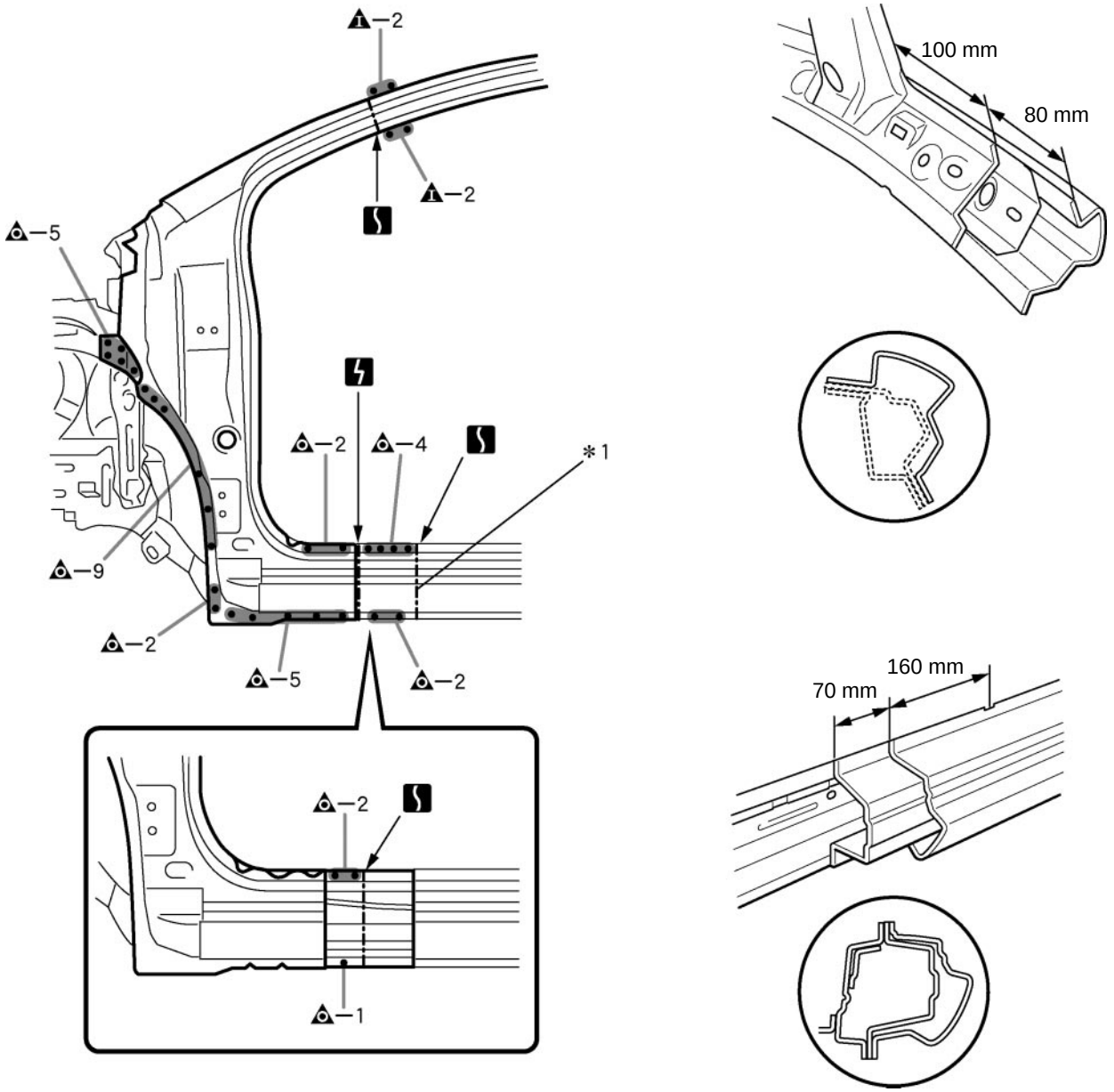

F22836

POINT
1 *1: This part of the outer panel is reused because the rocker panel section is cut off at a position behind the service part cut position of the outer panel.

70 mm (2.76 in.) 80 mm (3.15 in.) 100 mm (3.94 in.) 160 mm (6.30 in.)

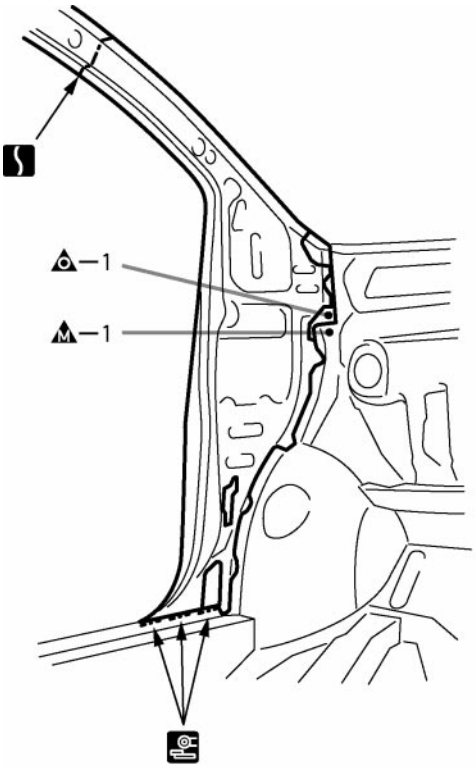

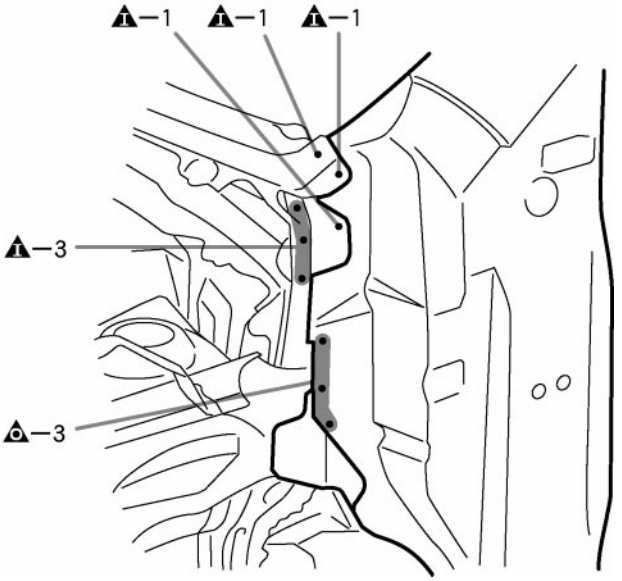

F22837

INSTALLATION

⁎ Temporarily install the new parts and measure each part of the new parts in accordance with the body dimension diagram. (See the body dimension diagram)
⁎ Inspect the fitting of the related parts around the new parts before welding. This affects the appearance of the finish.
⁎ After welding, apply the polyurethane foam to the corresponding parts.
⁎ After welding, apply body sealer and undercoating to the corresponding parts.
⁎ After applying the top coat, apply anti-rust agent to the internal panel portion of the closed section structural weld spots.

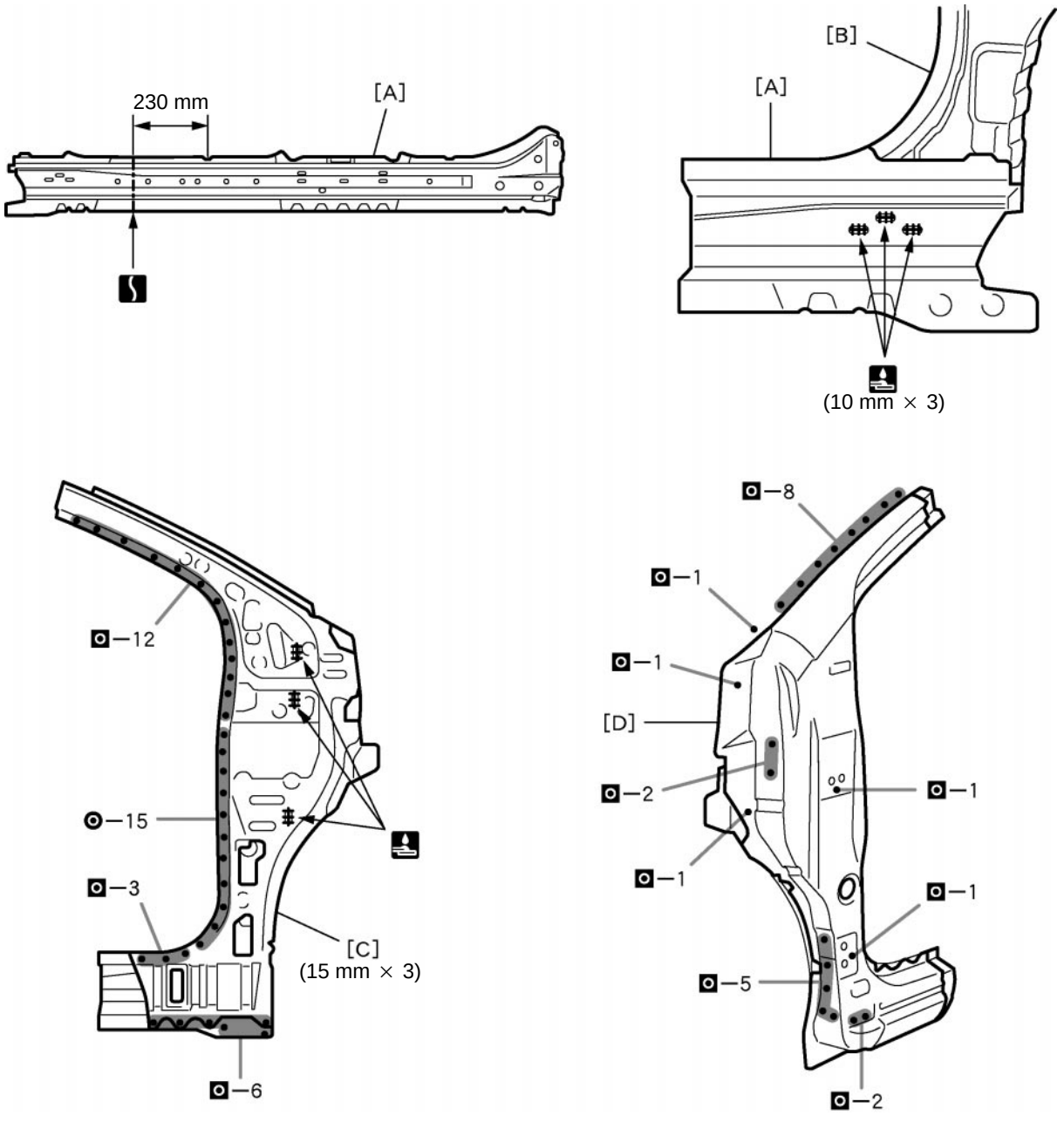

F22838

POINT

1 Before temporarily installing the new parts, weld [A], [B], [C] and [D] with standard welding number.

PART NAME

[A] Rocker Outer Reinforce [B] Front Body Pillar Lower Reinforce
[C] Front Body Inner Pillar [D] Front Body Outer Pillar
10 mm (0.39 in.) 15 mm (0.59 in.) 230 mm (9.06 in.)

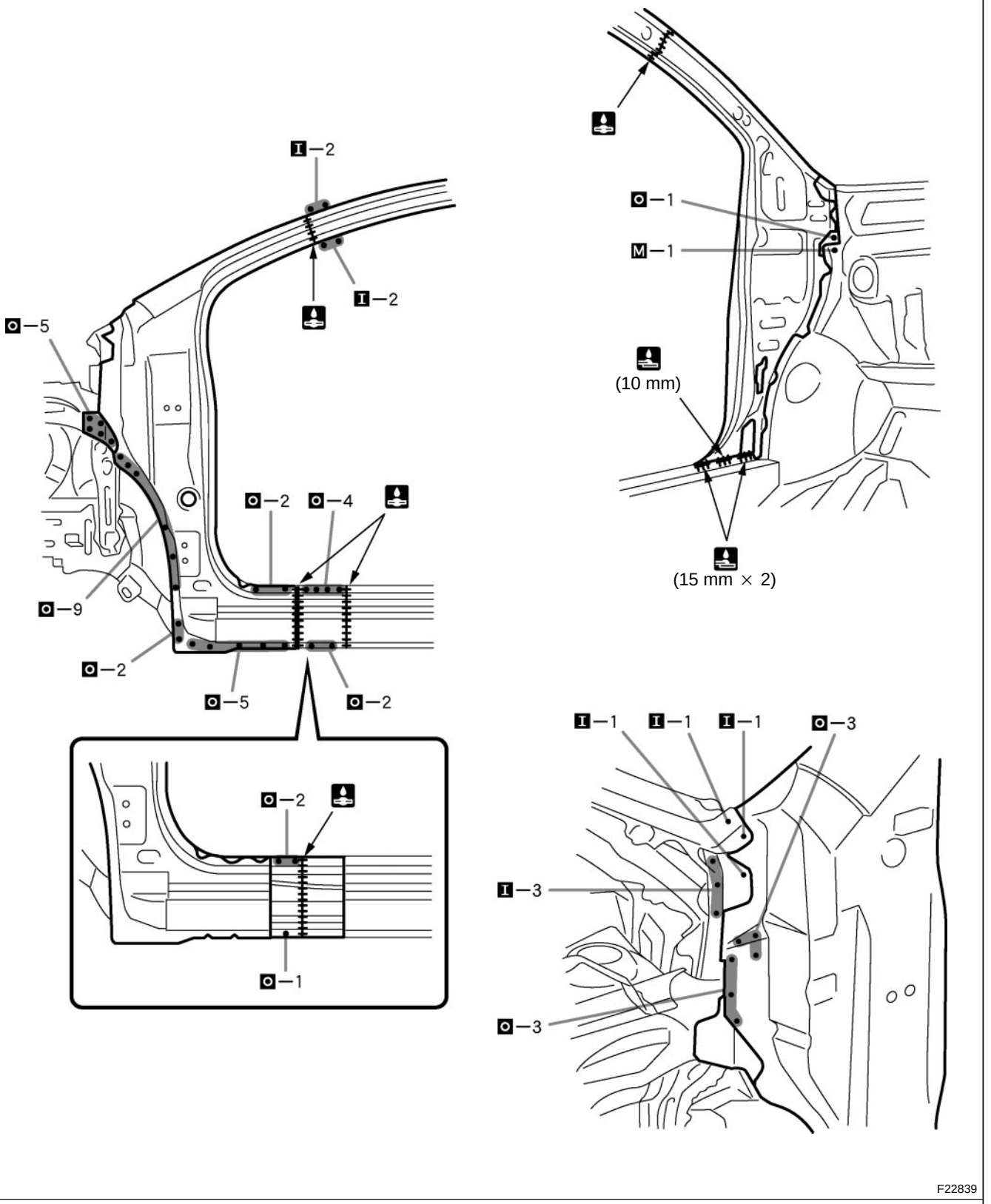

POINT

1 Inspect the fitting of the front fender, front door, windshield glass and other related parts before welding as this affects the appearance of the finish.

10 mm (0.39 in.) 15 mm (0.59 in.)

CENTER BODY PILLAR (CUT): 5-Door

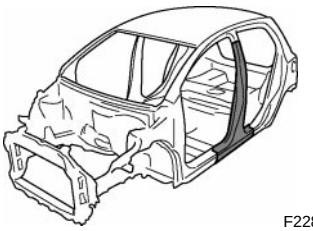
F22840A

REPLACEMENT

REMOVAL

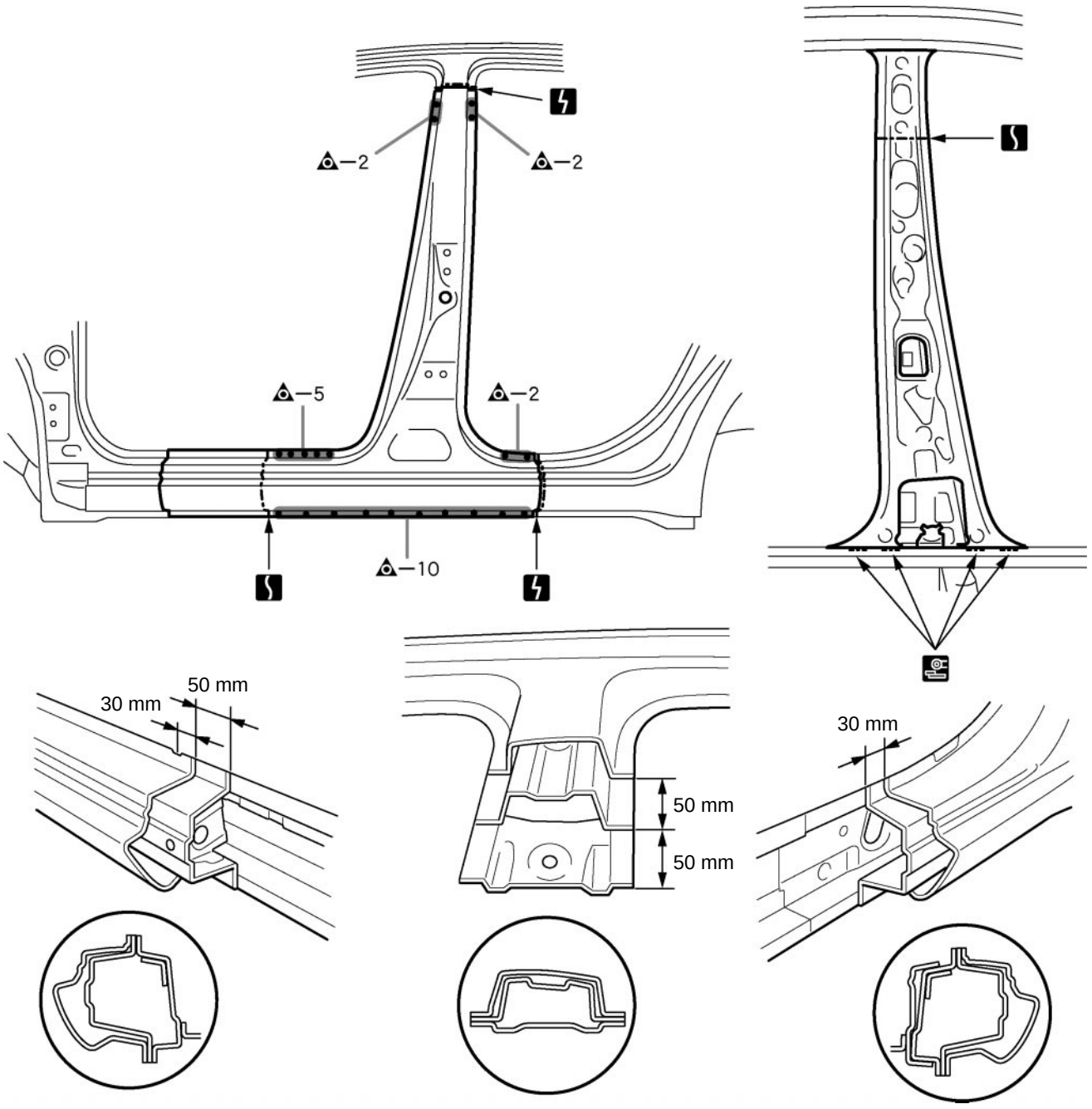

F22840

30 mm (1.18 in.) 50 mm (1.97 in.)

INSTALLATION

* Temporarily install the new parts and measure each part of the new parts in accordance with the body dimension diagram. (See the body dimension diagram)
* Inspect the fitting of the related parts around the new parts before welding. This affects the appearance of the finish.
* After welding, apply the polyurethane foam to the corresponding parts.
* After welding, apply body sealer and under-coating to the corresponding parts.
* After applying the top coat layer, apply anti-rust agent to the inside of the necked section structural weld spots.

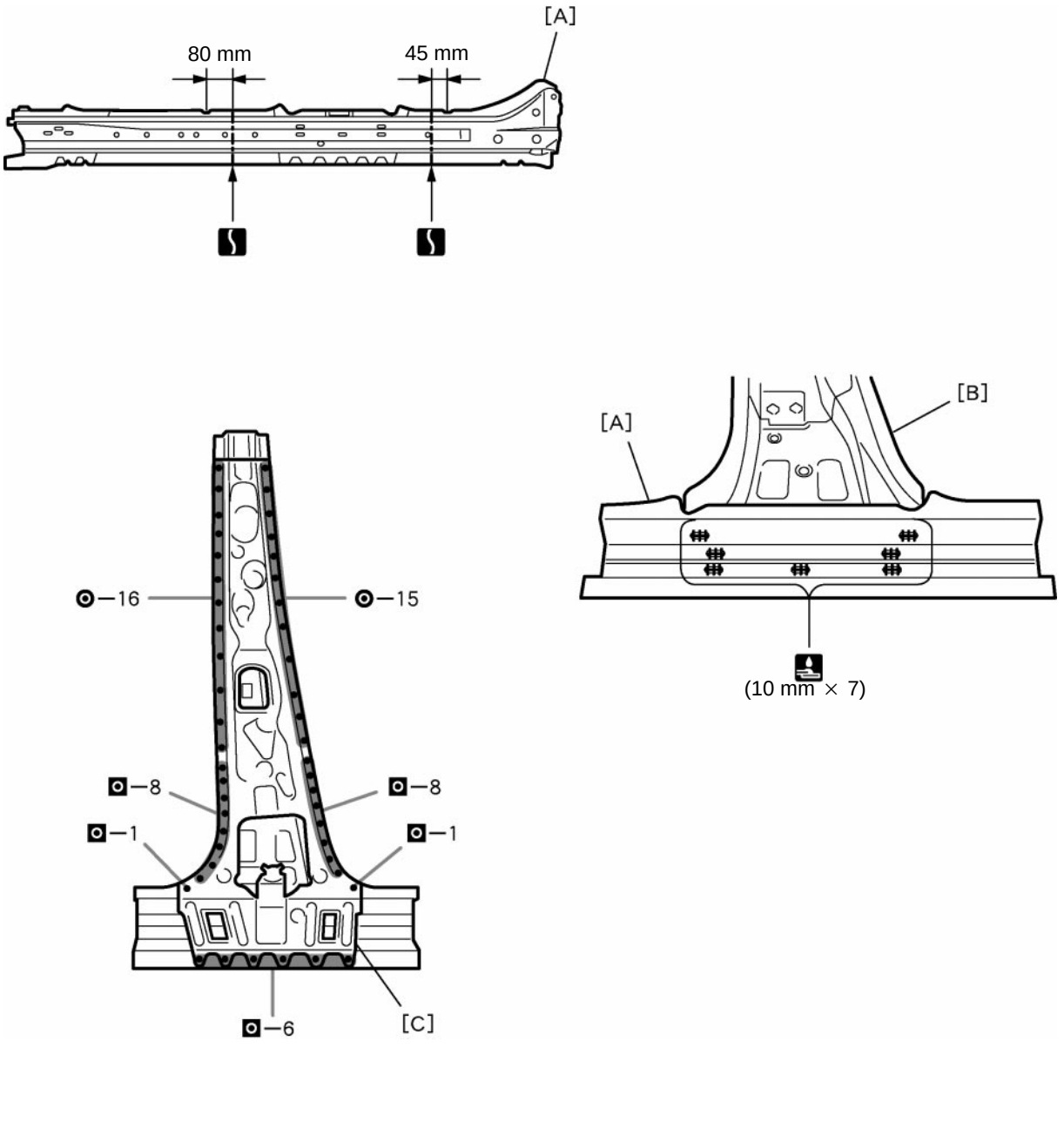

F22841

POINT

1 Before temporarily installing the new parts, weld [A], [B] and [C] with standard welding number.

PART NAME

[A] Rocker Outer Reinforce [B] Center Body Pillar Reinforcement [C] Center Body Inner Pillar

10 mm (0.39 in.) 45 mm (1.77 in.) 80 mm (3.15 in.)

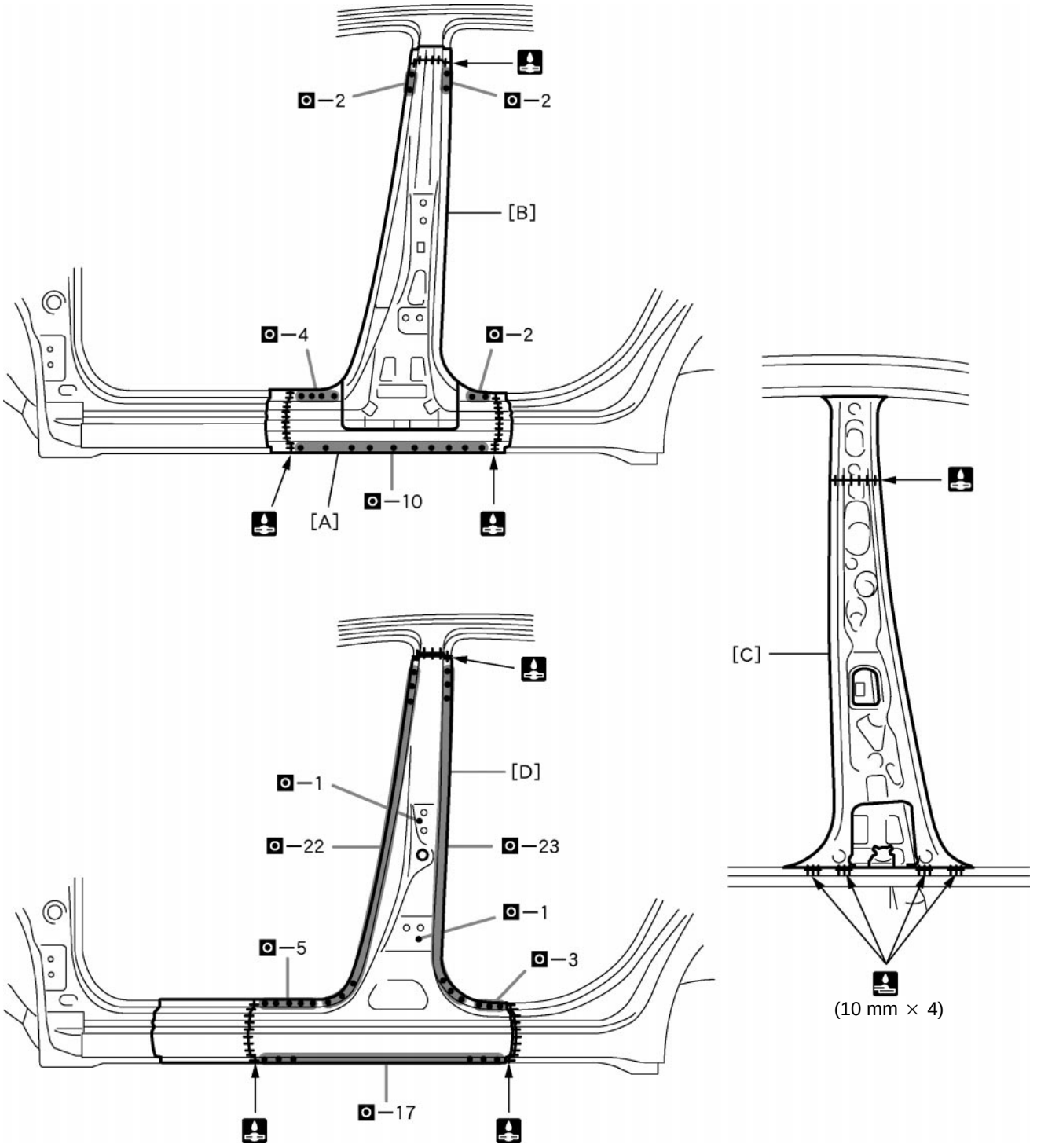

F22842

POINT

1 Inspect the fitting of the front door, rear door and other related parts before welding as this affects the appearance of the finish.
2 After welding [A], [B] and [C] to the vehicle, install [D].

PART NAME

[A] Rocker Outer Reinforce
[B] Center Body Pillar Reinforcement
[C] Center Body Inner Pillar
[D] Center Body Outer Pillar

10 mm (0.39 in.)

FRONT DOOR OUTER PANEL (CUT): 3-Door

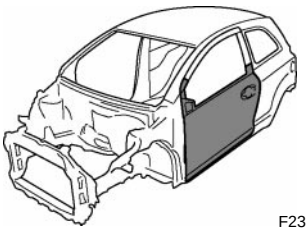
F23305A

REPLACEMENT

REMOVAL

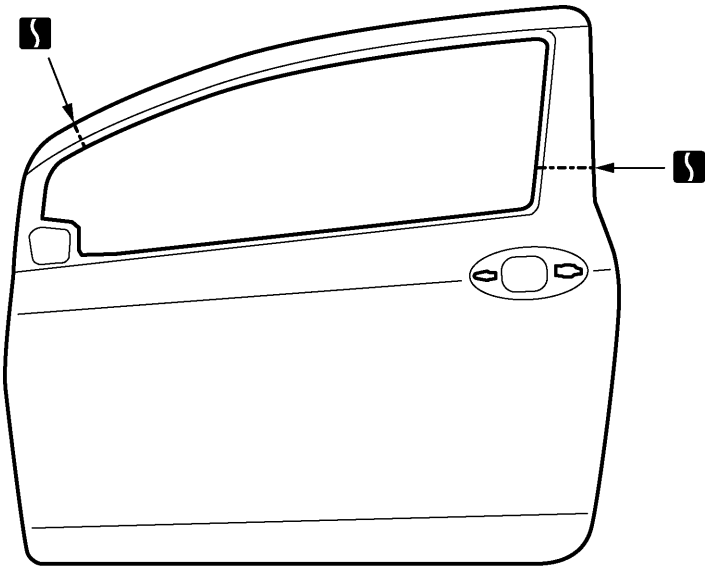

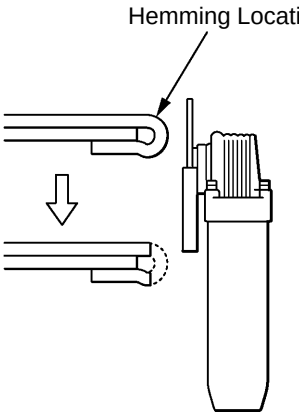

F23305

POINT

1 After grinding off the hemming location, remove the outer panel.

INSTALLATION

⁎ Temporarily install the new parts and measure each part of the new parts in accordance with the body dimension diagram. (See the body dimension diagram)
⁎ Inspect the fitting of the related parts around the new parts before welding. This affects the appearance of the finish.
⁎ After welding, apply the polyurethane foam to the corresponding parts.
⁎ After welding, apply body sealer and under-coating to the corresponding parts.
⁎ After applying the top coat layer, apply anti-rust agent to the inside of the necked section structural weld spots.

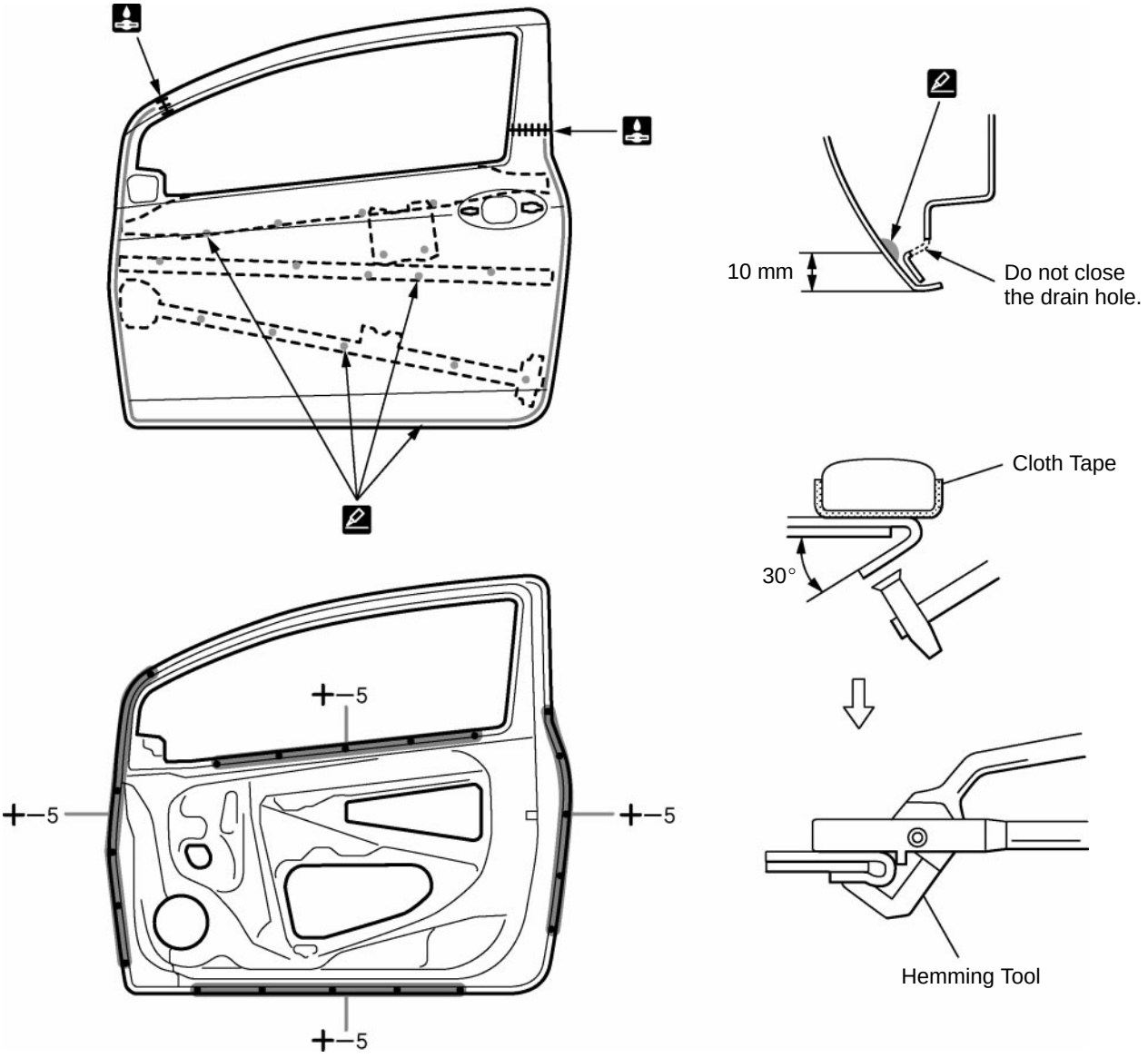

F23306

POINT

1 Before temporarily installing the new parts, apply body sealer to the reinforcement, side impact protection beam and backside of the new parts.
HINT:
1) Apply sealer evenly of about 10 mm (0.39 in.) from the flange and 3 mm (0.12 in.) in diameter on the outer panel and apply just enough sealer for the reinforcement and side impact protection beam to make contact.

2 Bend the flange hem about 30° with a hammer and dolly. Then, fasten tightly with a hemming tool.
HINT:
1) Perform hemming in three steps, being careful not to warp the panel.
2) If a hemming tool cannot be used, hem with a hammer and dolly.

FRONT DOOR OUTER PANEL (CUT): 5-Door

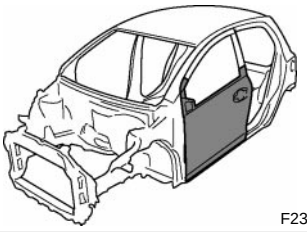
F23307A

REPLACEMENT

REMOVAL

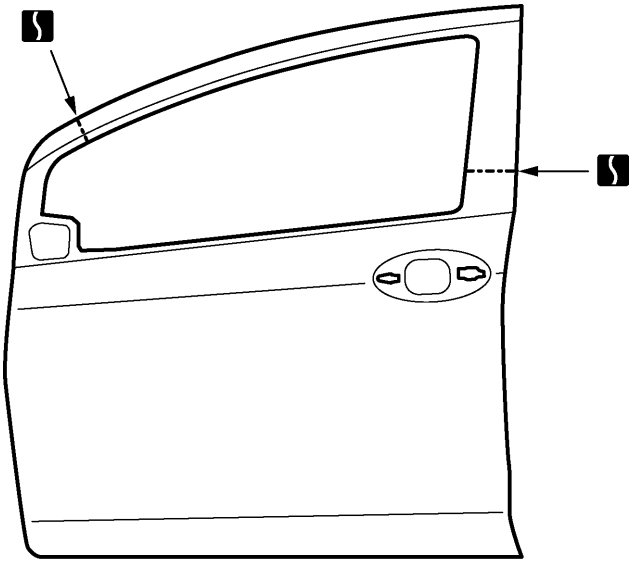

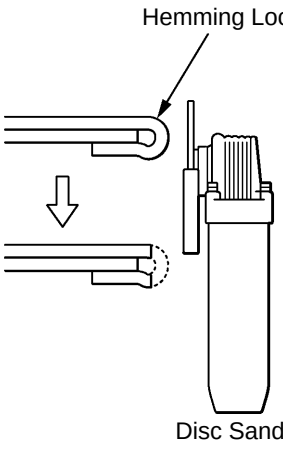

F23307

POINT

1 After grinding off the hemming location, remove the outer panel.

INSTALLATION

⁎ Temporarily install the new parts and measure each part of the new parts in accordance with the body dimension diagram. (See the body dimension diagram)
⁎ Inspect the fitting of the related parts around the new parts before welding. This affects the appearance of the finish.
⁎ After welding, apply the polyurethane foam to the corresponding parts.
⁎ After welding, apply body sealer and under-coating to the corresponding parts.
⁎ After applying the top coat layer, apply anti-rust agent to the inside of the necked section structural weld spots.

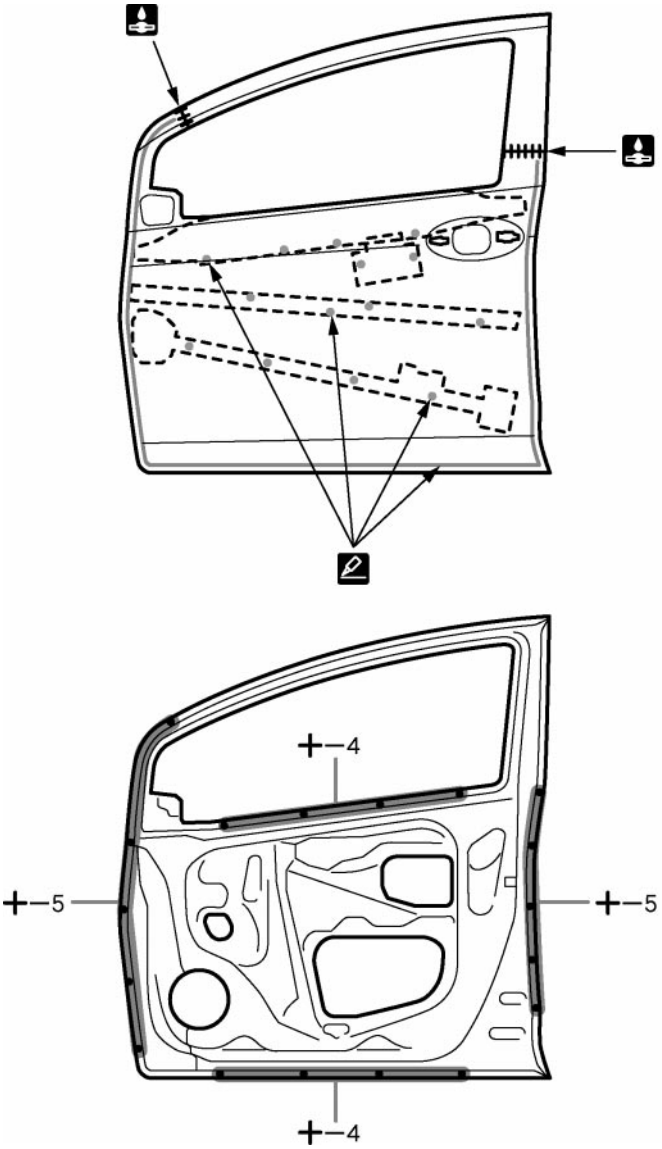

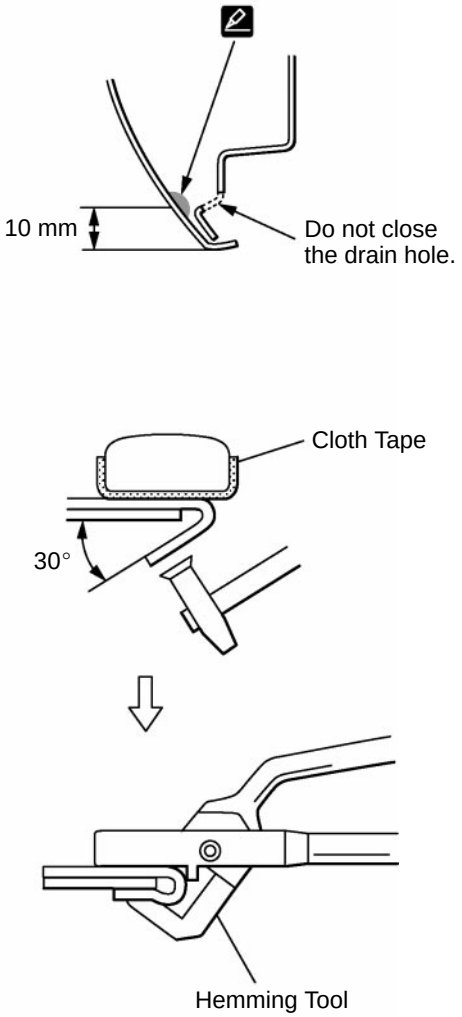

F23308

POINT

1 Before temporarily installing the new parts, apply body sealer to the reinforcement, side impact protection beam and backside of the new parts.
HINT:
1) Apply sealer evenly of about 10 mm (0.39 in.) from the flange and 3 mm (0.12 in.) in diameter on the outer panel and apply just enough sealer for the reinforcement and side impact protection beam to make contact.

2 Bend the flange hem about 30° with a hammer and dolly. Then, fasten tightly with a hemming tool.
HINT:
1) Perform hemming in three steps, being careful not to warp the panel.
2) If a hemming tool cannot be used, hem with a hammer and dolly.

REAR DOOR OUTER PANEL (CUT): 5-Door

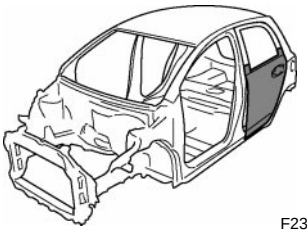
F23309A

REPLACEMENT

REMOVAL

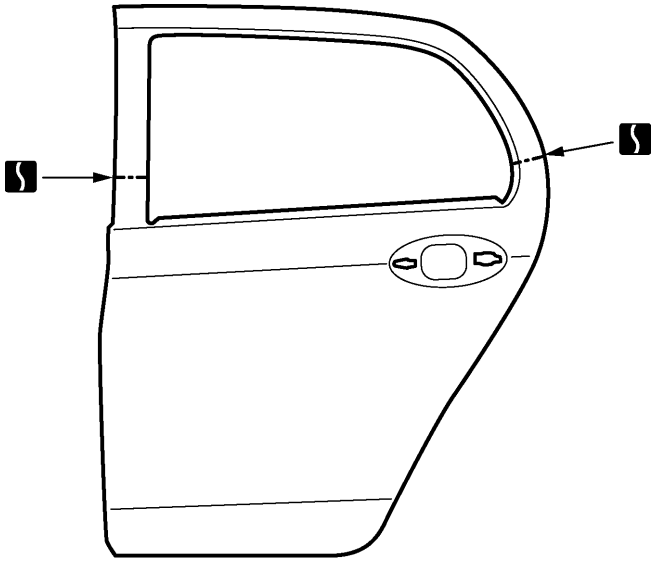

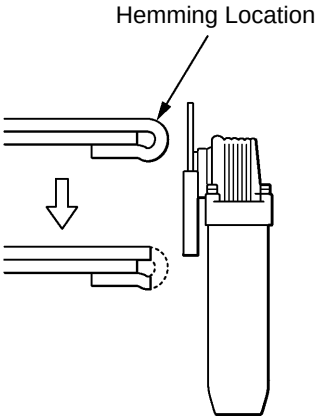

F23309

POINT

1 After grinding off the hemming location, remove the outer panel.

INSTALLATION

⁎ Temporarily install the new parts and measure each part of the new parts in accordance with the body dimension diagram. (See the body dimension diagram)
⁎ Inspect the fitting of the related parts around the new parts before welding. This affects the appearance of the finish.
⁎ After welding, apply the polyurethane foam to the corresponding parts.
⁎ After welding, apply body sealer and under-coating to the corresponding parts.
⁎ After applying the top coat layer, apply anti-rust agent to the inside of the necked section structural weld spots.

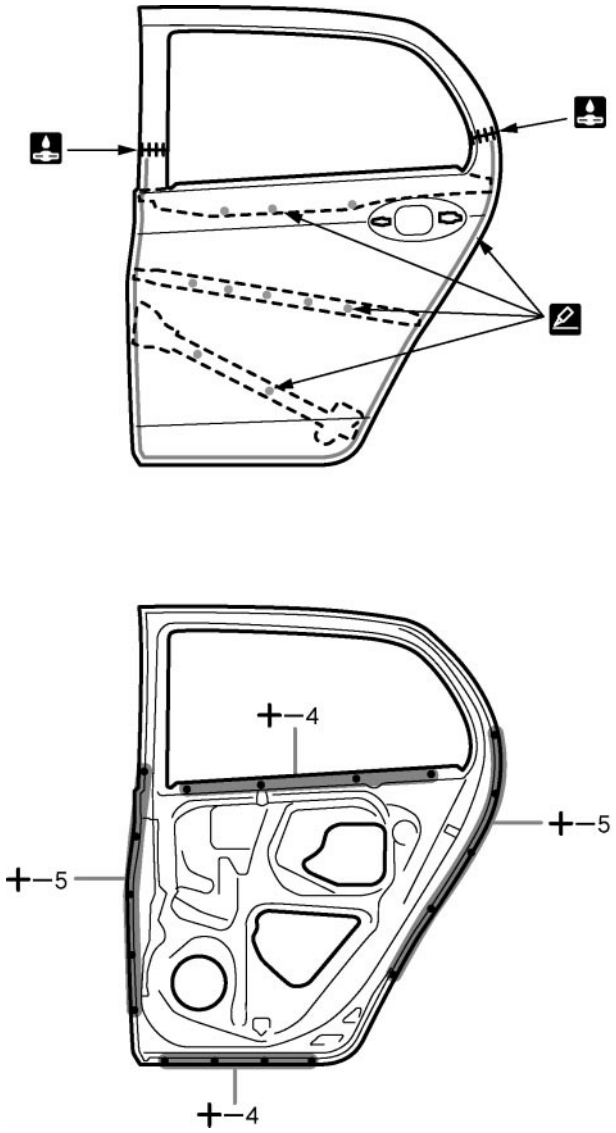

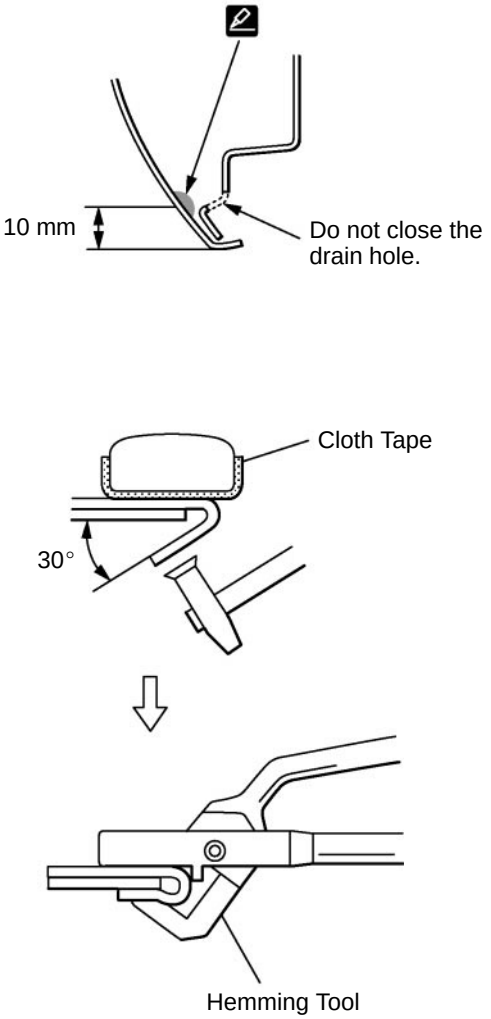

F23310

POINT

1 Before temporarily installing the new parts, apply body sealer to the reinforcement, side impact protection beam and backside of the new parts.
HINT:
1) Apply sealer evenly of about 10 mm (0.39 in.) from the flange and 3 mm (0.12 in.) in diameter on the outer panel and apply just enough sealer for the reinforcement and side impact protection beam to make contact.

2 Bend the flange hem about 30° with a hammer and dolly. Then, fasten tightly with a hemming tool.
HINT:
1) Perform hemming in three steps, being careful not to warp the panel.
2) If a hemming tool cannot be used, hem with a hammer and dolly.

ROCKER OUTER PANEL (CUT-H): 5-Door

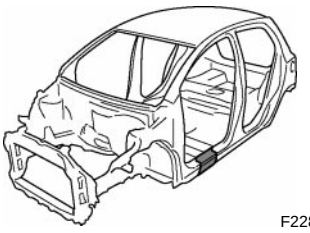
F22843A

REPLACEMENT

REMOVAL

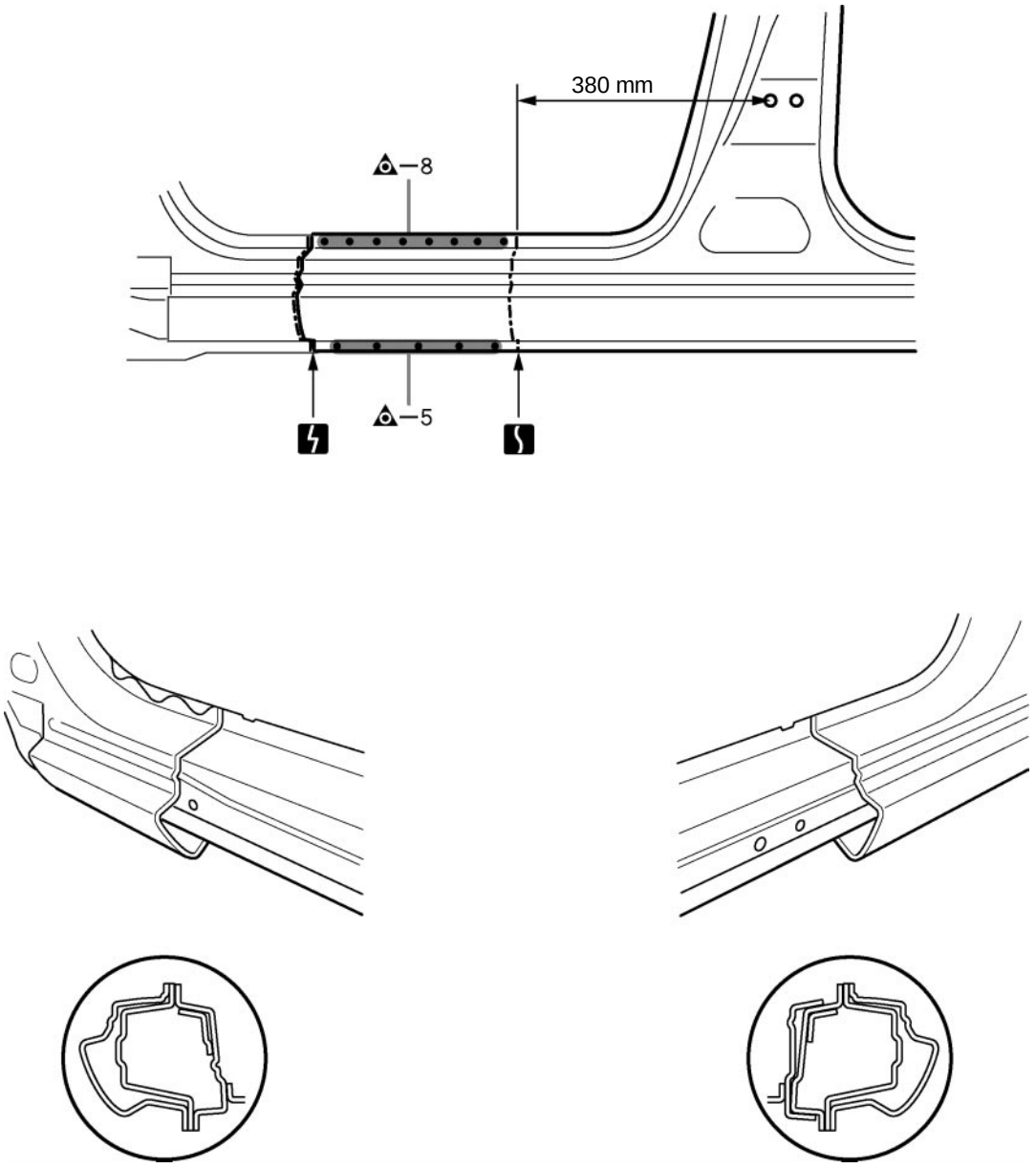

F22843

380 mm (14.96 in.)

INSTALLATION

⁎ Temporarily install the new parts and measure each part of the new parts in accordance with the body dimension diagram. (See the body dimension diagram)
⁎ Inspect the fitting of the related parts around the new parts before welding. This affects the appearance of the finish.
⁎ After welding, apply the polyurethane foam to the corresponding parts.
⁎ After welding, apply body sealer and under-coating to the corresponding parts.
⁎ After applying the top coat layer, apply anti-rust agent to the inside of the necked section structural weld spots.

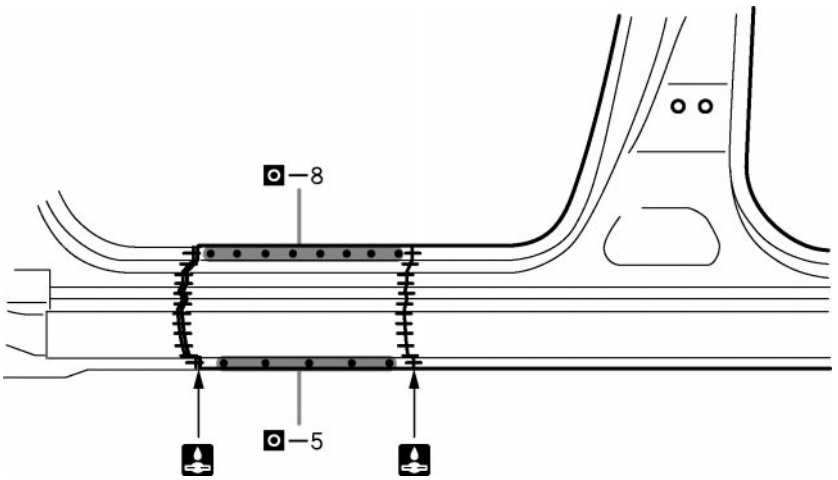

F22844

POINT

1 Inspect the fitting of the front door and other related parts before welding as this affects the appearance of the finish.

ROCKER OUTER PANEL (CUT): 3-Door

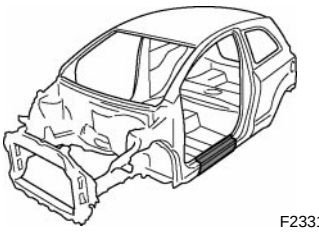
F23311A

REPLACEMENT

REMOVAL

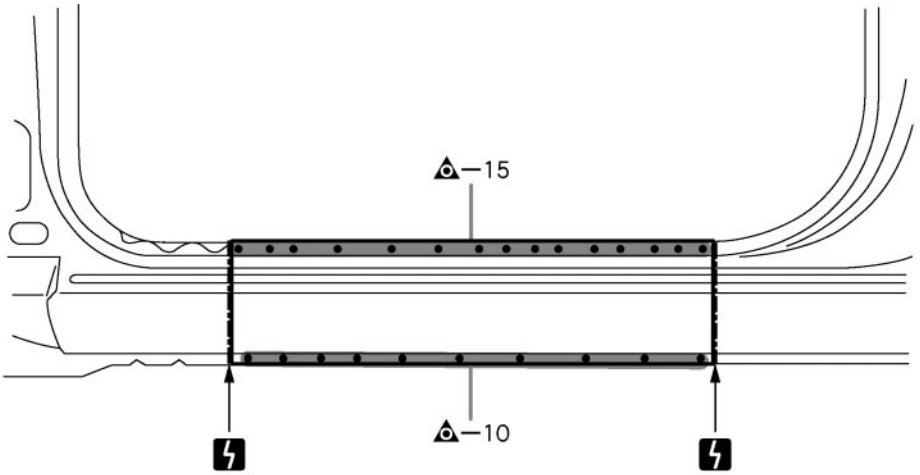

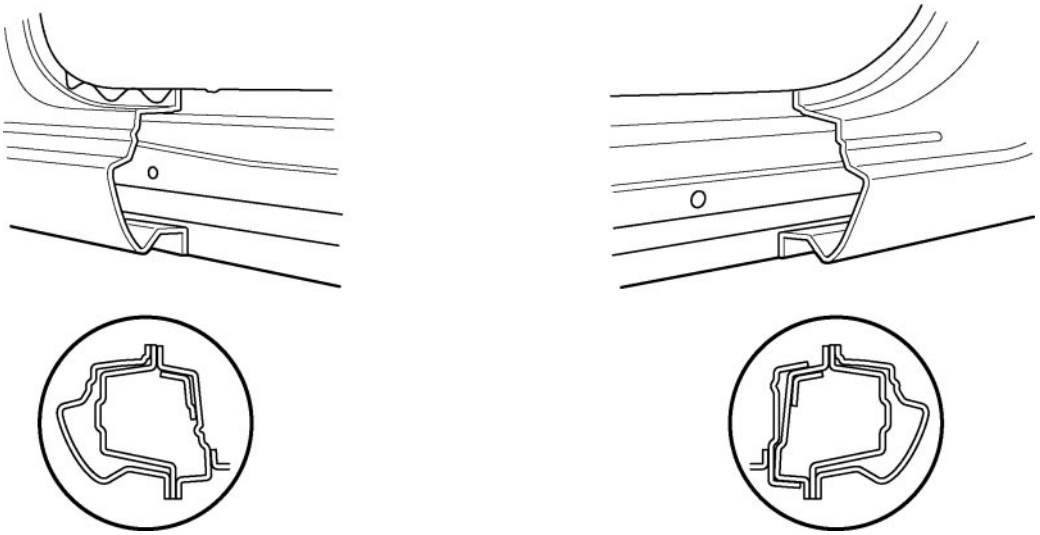

F23311

INSTALLATION

⁎ Temporarily install the new parts and measure each part of the new parts in accordance with the body dimension diagram. (See the body dimension diagram)
⁎ Inspect the fitting of the related parts around the new parts before welding. This affects the appearance of the finish.
⁎ After welding, apply polyurethane foam to the corresponding parts.
⁎ After welding, apply body sealer and undercoating to the corresponding parts.
⁎ After applying the top coat, apply anti-rust agent to the internal panel portion of the closed section structural weld points.

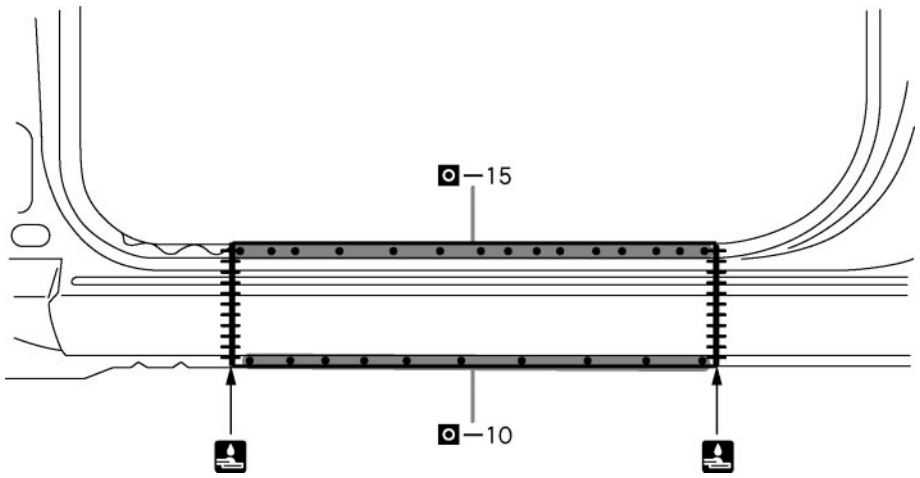

F23312

POINT

1 Inspect the fitting of the front door and other related parts before welding as this affects the appearance of the finish.

ROCKER OUTER PANEL (CUT): 5-Door

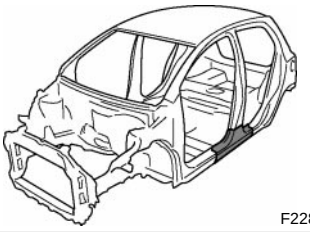
F22845A

REPLACEMENT

REMOVAL

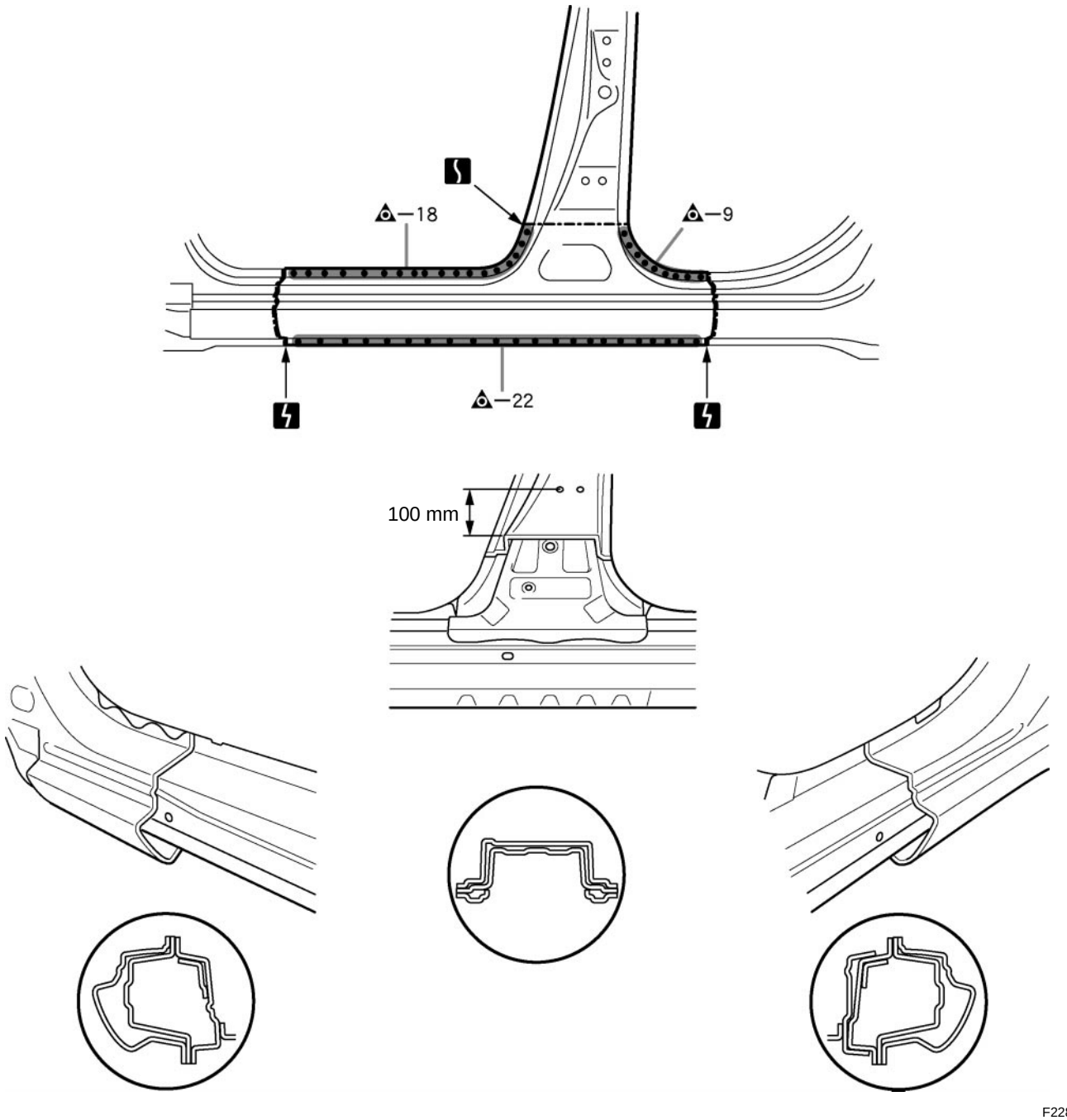

F22845

100 mm (3.94 in.)

INSTALLATION

⁎ Temporarily install the new parts and measure each part of the new parts in accordance with the body dimension diagram. (See the body dimension diagram)
⁎ Inspect the fitting of the related parts around the new parts before welding. This affects the appearance of the finish.
⁎ After welding, apply polyurethane foam to the corresponding parts.
⁎ After welding, apply body sealer and undercoating to the corresponding parts.
⁎ After applying the top coat, apply anti-rust agent to the internal panel portion of the closed section structural weld points.

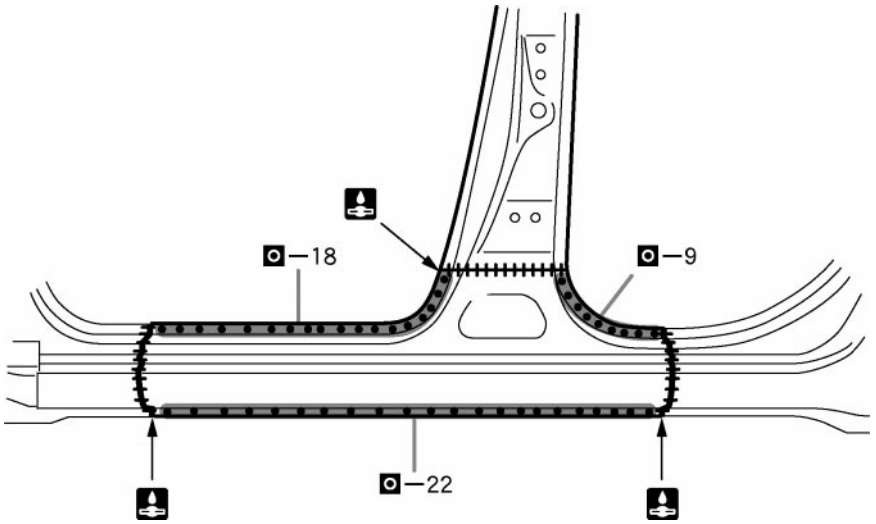

F22846

POINT

1 Inspect the fitting of the front door, rear door and other related parts before welding as this affects the appearance of the finish.

Adhesive Application Area Work Procedure

※NOTE※

This vehicle has areas on the Quarter Panel and Quarter Wheel Housing Outer Panel that are joined together only with adhesive. It is necessary to conduct the correct repair procedures for high durability so make sure to follow the instructions below for the adhesive application areas.
Type of adhesive used: 3M8115 Auto Mix Panel Bond

1. Removal of the Quarter Panel

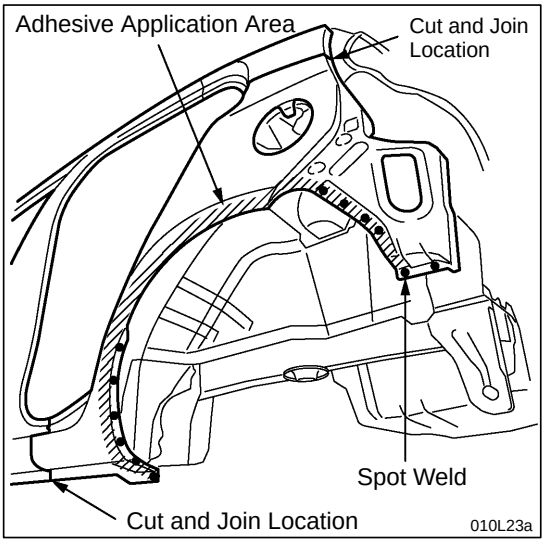

(A) Remove the body sealer from the Quarter Panel and cut at the cut and join location. Remove the spot welded portions.

(B) After rough cutting the Wheel Arch portion, heat the adhesive applied area and remove the panel. {Heat the Wheel Arch portion of the Quarter Panel at 110 to 140 C (230 to 284 F) with a dryer or gas burner and remove the Quarter Panel.}

2. Removal of the previous adhesive coating

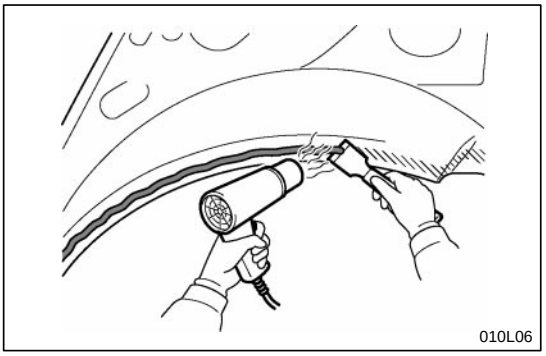

(A) Heat at 110 to 140 C (230 to 284 F) with a dryer or gas burner.

(B) Scrape away the adhesive with a scraper, and scuff while sanding with a disc grinder or a belt sander.

※NOTE※

- Make sure to use either a disc grinder or belt sander to sand coarsely and deeply to improve adhesiveness.
- Scuff at a width of approximately 10 mm (0.39 in.) over the previous adhesive coating.

3. Treatment of the spot welded portions on the body

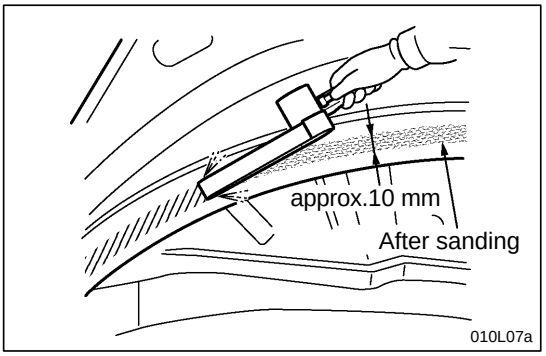

(A) After the adhesive has been removed from the body, remove the paint from the underside of the spot welded points blow air and degrease.

(B) Apply spot sealer at the joined portion between panels.

4. Attachment of the New Quarter Panel

(A) Temporarily attach the new panel and check the fitting condition, the cut and join locations, the welded areas, and the adhesive applied area.

※NOTE※

- Check the adhesive applied condition to ensure adhesive strength.
- Conduct hammering to fix the non-adhered portions.

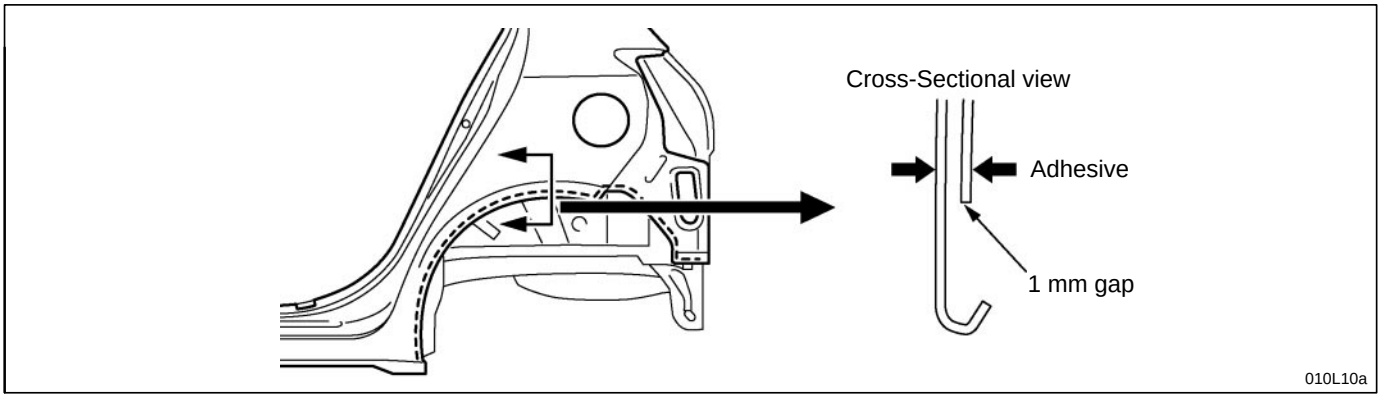

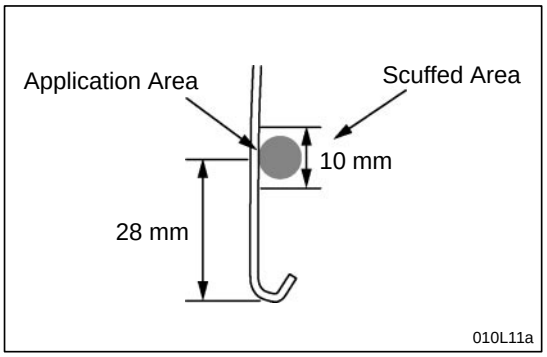

5. Adhesive Application to New Quarter Panel

(A) Scuff with #60-120 grit sandpaper at the adhesive application area.

※POINT※

Sand deeply into the ED coat.

(B) Blow air around the scuffed portion and then degrease.

(C) Apply adhesive.

※POINT※

Apply adhesive at a width of approximately 10 mm (0.39 in.) at a location 28 mm (1.10 in.) from the panel flange edge. Spread the adhesive flatly within the scuffed area {approximately 10 mm (0.39 in.) in width} to remove trapped air.

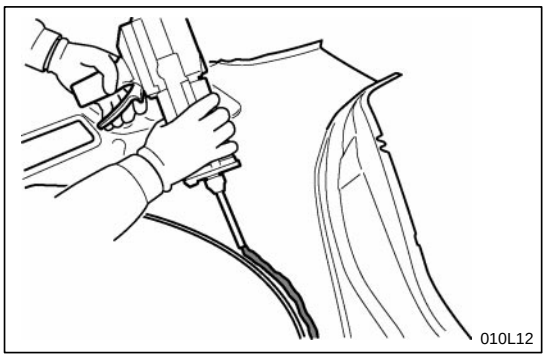

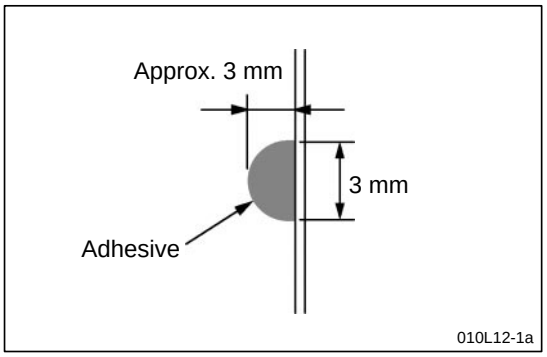

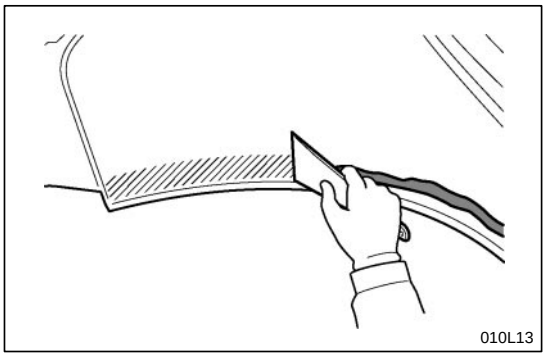

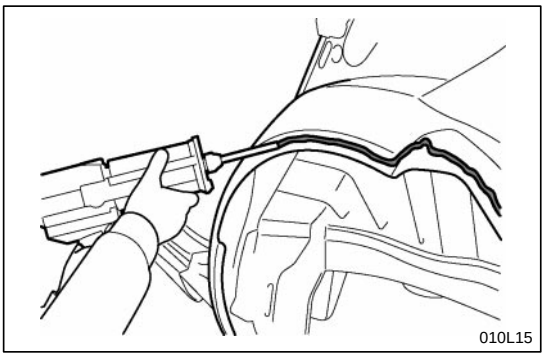

6. Application of Adhesive to the Body

(A) Degrease the adhesive aplication area.

(B) Apply adhesive.

- Refer to the diagram of step 5 for the application amount.
- The application location is 7.5 mm (0.295 in.) from the flange edge.

(C) Flatten out the applied adhesive with a spatula until it is at an even level.

- Apply adhesive at exposed metal plate portions to prevent corrosion.
- It is not necessary to flatten out adhesive after it has been reapplied.

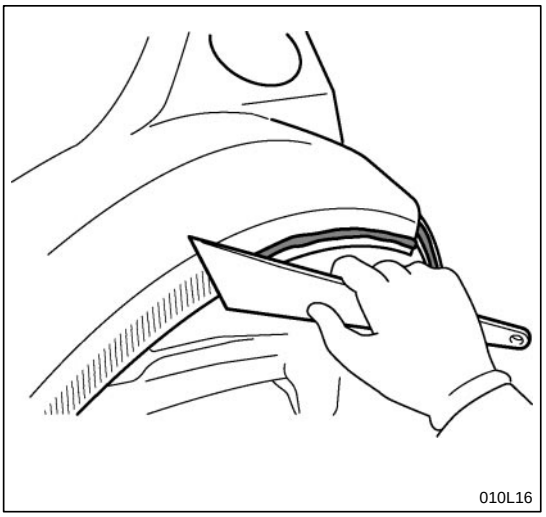

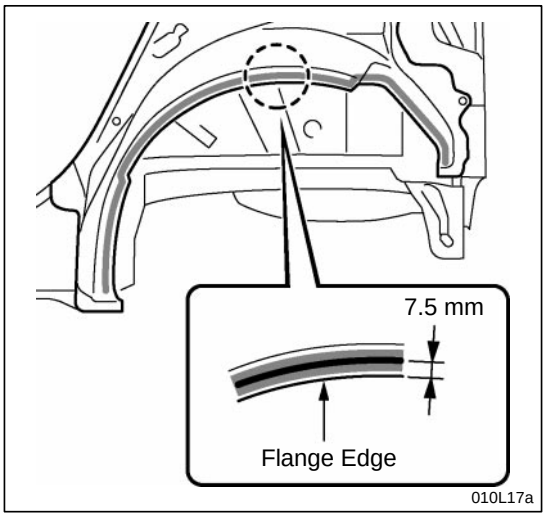

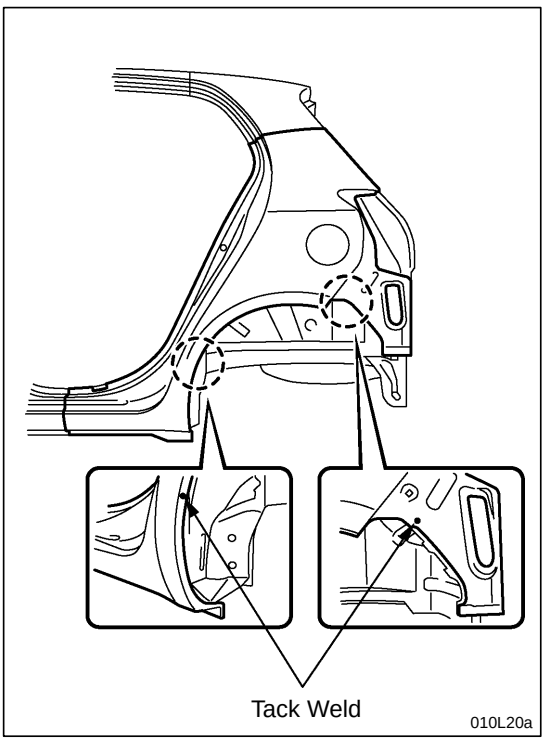

7. Attachment of the new Quarter Panel

(A) Set the new panel in the position for temporary attachment. (Be careful of where you hold the panel so as not to touch the adhesive applied surfaces.)

(B) Secure in a vice grip or equivalent and check the fitting condition.

(C) Press on the entire surface so that the adhesive between the Quarter Panel and Quarter Wheel Housing Outer panel becomes an even thickness.

※ NOTE ※

Be careful that adhesive that spills over does not contact the Brake Drum.

(D) Tack weld at the cut and join welded portion.

(E) Tack weld by spot welding at one point on both ends of the adhesive applied portions.

(F) Conduct actual welding using procedures in the BP section of this manual.

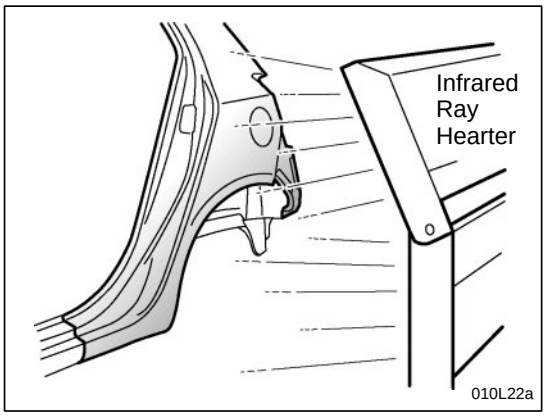

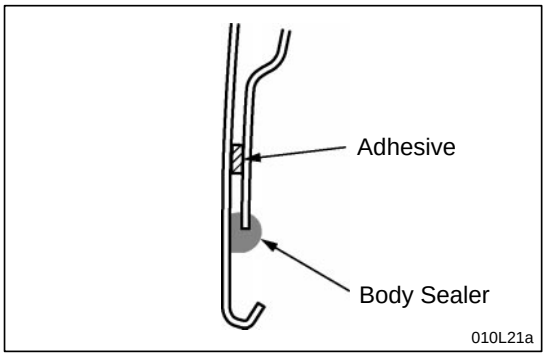

8. Drying

(A) Clean away adhesive that has spilled over with a degreaser or equivalent.

(B) After all welding works have been completed, dry the adhesive with a heater.

- Hardening Time
  - Forced drying
    60 C (140 F) at 90 minutes.
  - Natural drying
    24 C (75 F) (room temperature) for 24 hours.

9. Other work

(A) After applying Primer Surfacer to the underside of the Wheel Arch of the Quarter Panel, apply body sealer to the locations indicated in the body repair manual.

QUARTER PANEL (CUT): 3-Door

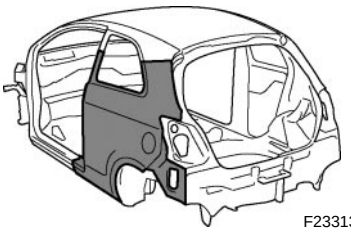
F23313A

REPLACEMENT

REMOVAL

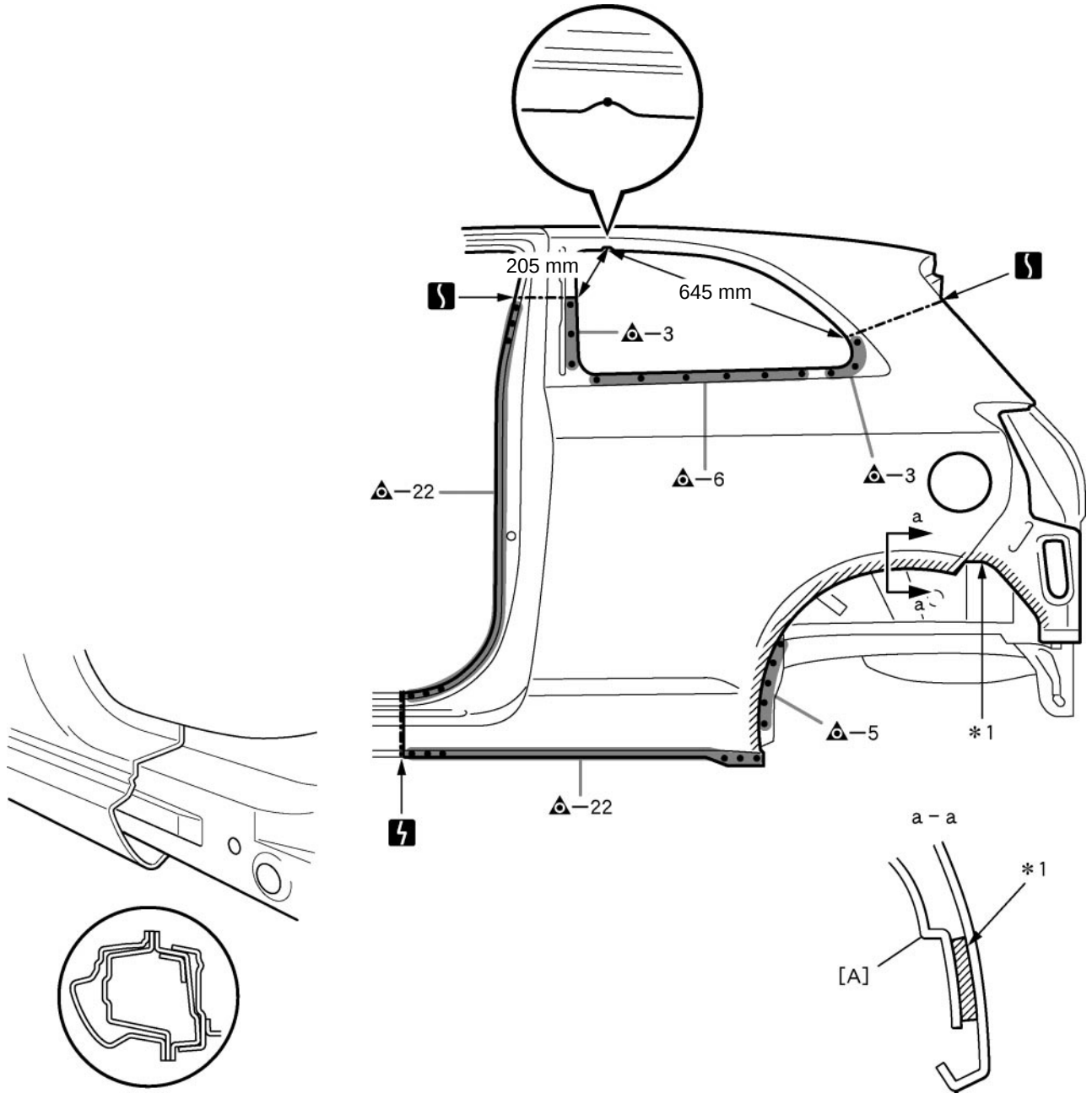

F23313

POINT

1 *1: The hatched area indicates the adhesive application area.

PART NAME

[A] Quarter Wheel Housing Outer Panel

205 mm (8.07 in.) 645 mm (25.39 in.)

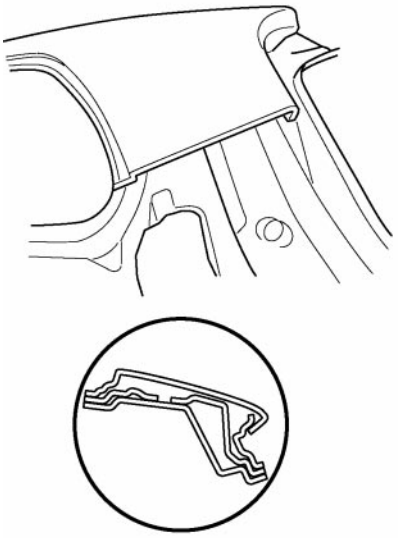

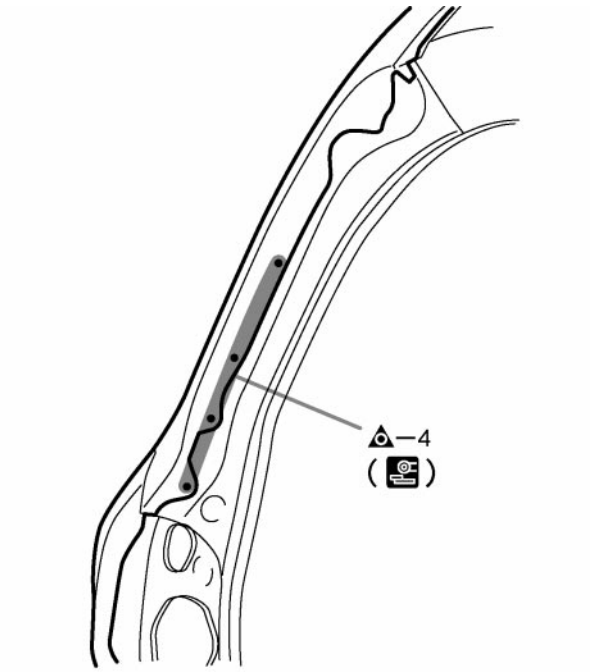

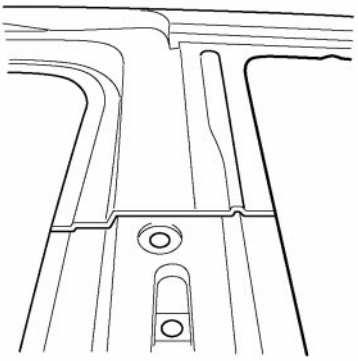

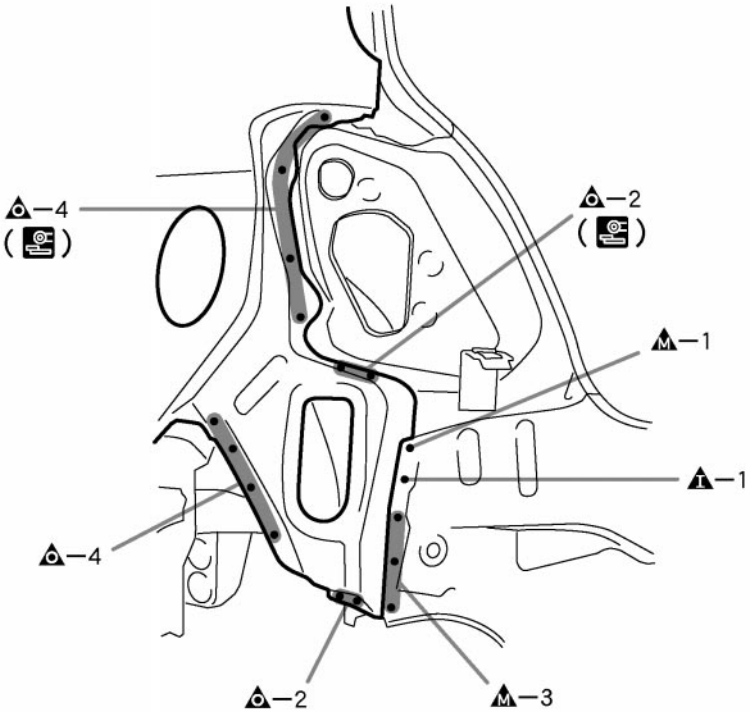

F23314

INSTALLATION

* Temporarily install the new parts and measure each part of the new parts in accordance with the body dimension diagram. (See the body dimension diagram)
* Inspect the fitting of the related parts around the new parts before welding. This affects the appearance of the finish.
* After welding, apply polyurethane foam to the corresponding parts.
* After welding, apply body sealer and undercoating to the corresponding parts.
* After applying the top coat, apply anti-rust agent to the internal panel portion of the closed section structural weld points.

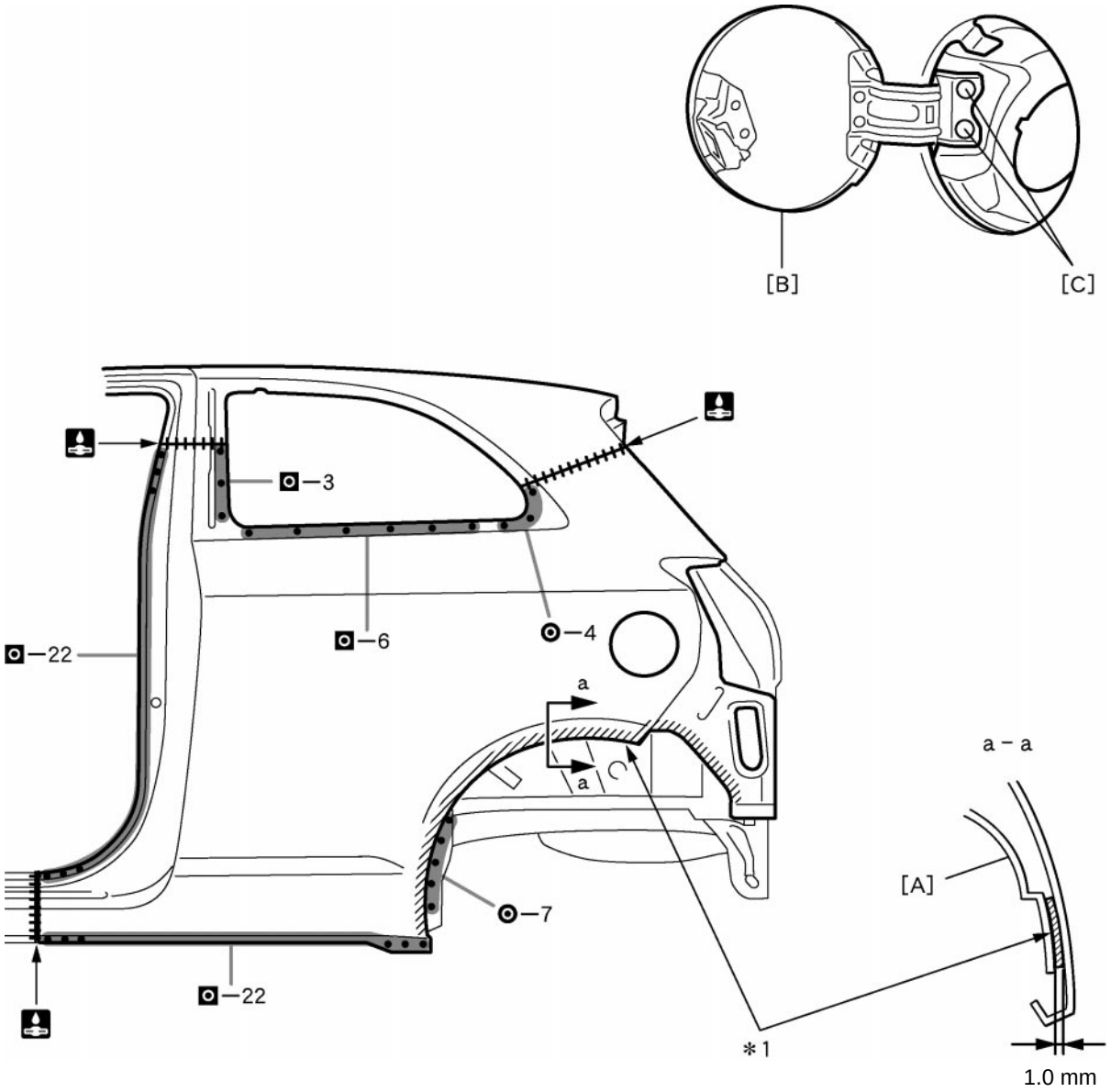

F23315

POINT

1 *1: The hatched area indicates the adhesive application area.

PART NAME

[A] Quarter Wheel Housing Outer Panel [B] Fuel Filler Opening Lid [C] Rivet

1.0 mm (0.04 in.)

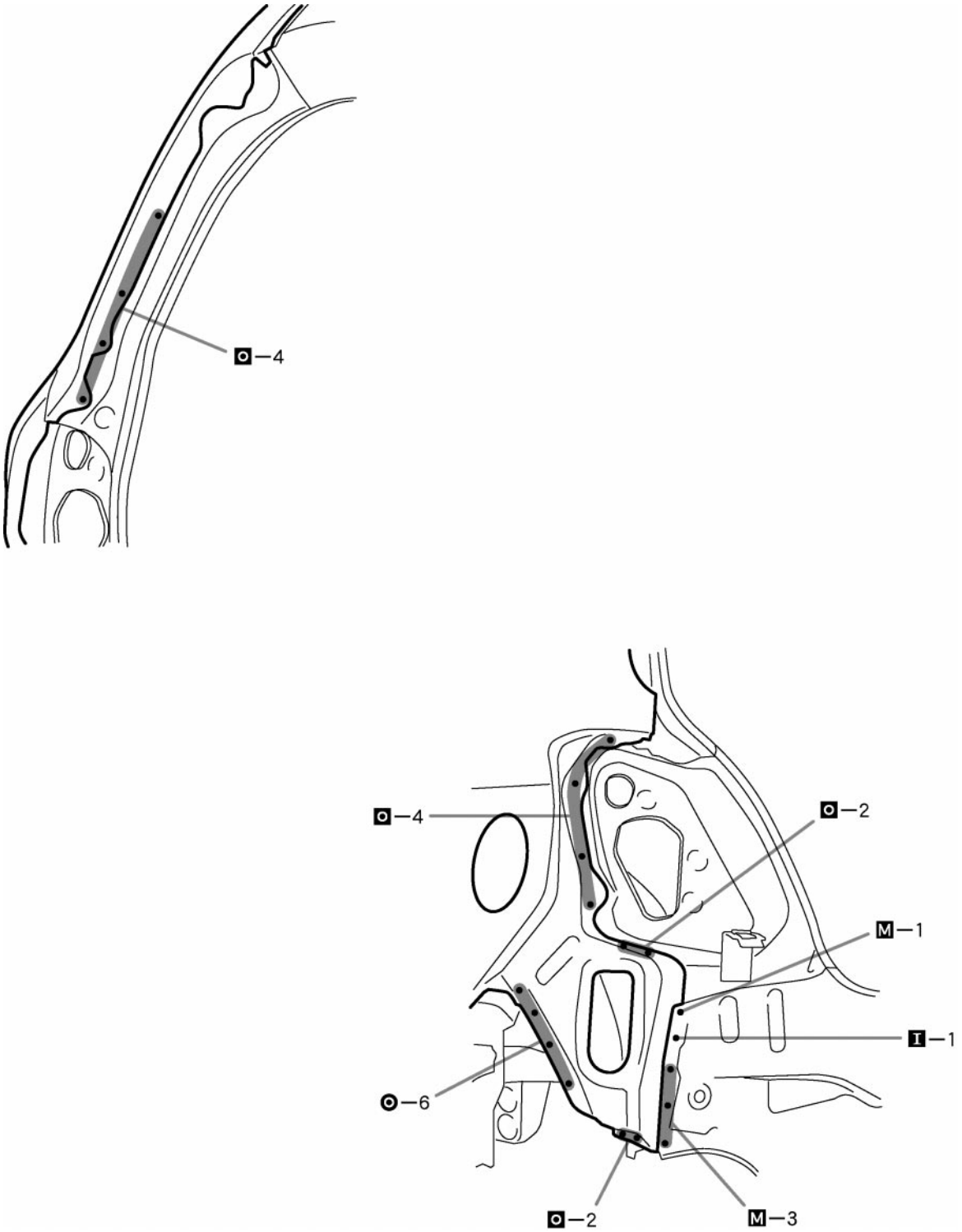

POINT

1 Inspect the front door, back door, rear combination light and other related parts before welding as this affects the appearance of the finish.

QUARTER PANEL (CUT): 5-Door

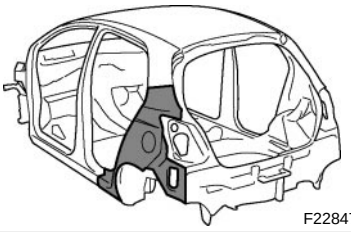
F22847A

REPLACEMENT

REMOVAL

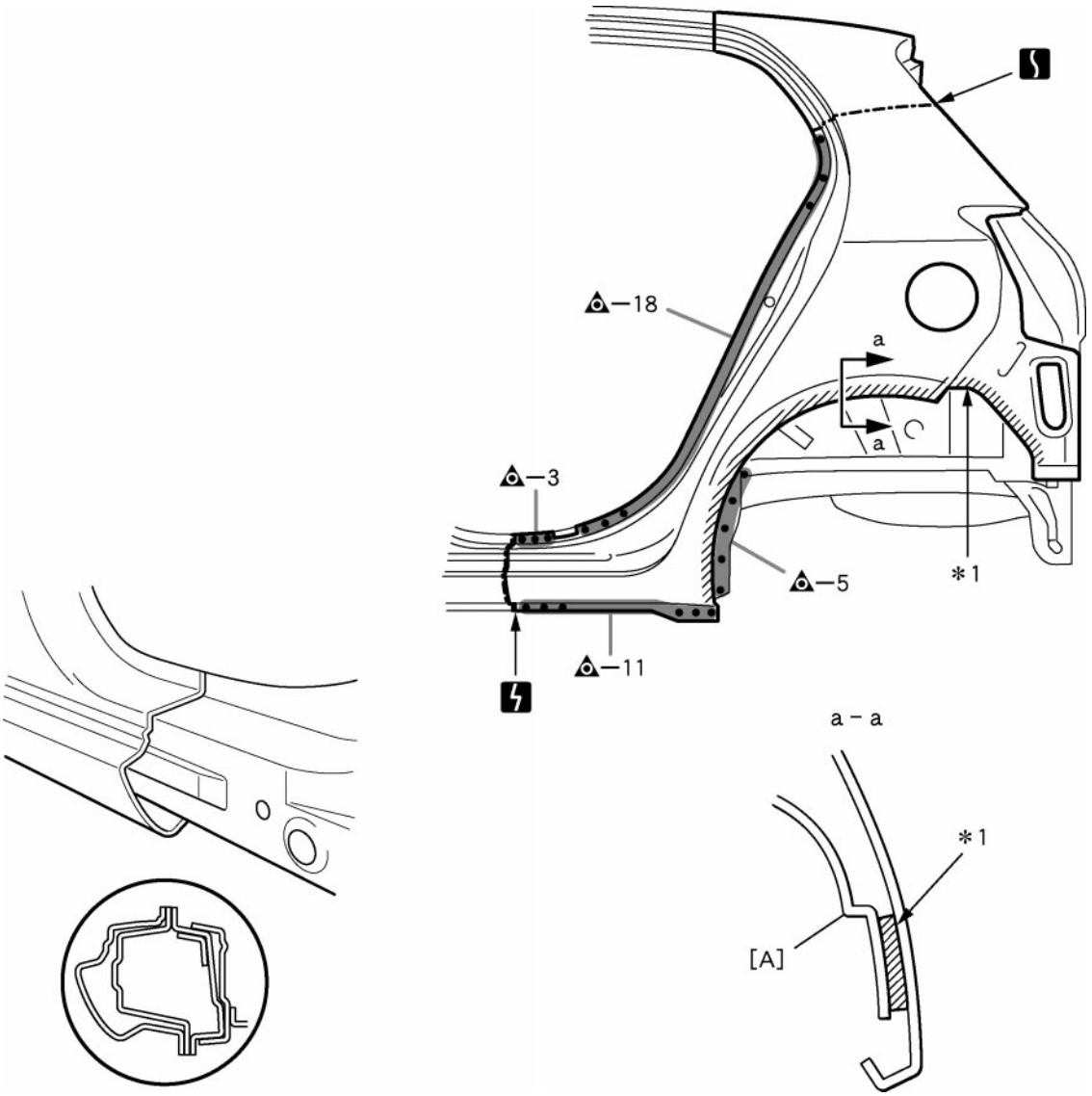

F23317

POINT

1 *1: The hatched area indicates the adhesive application area.

PART NAME

[A] Quarter Wheel Housing Outer Panel

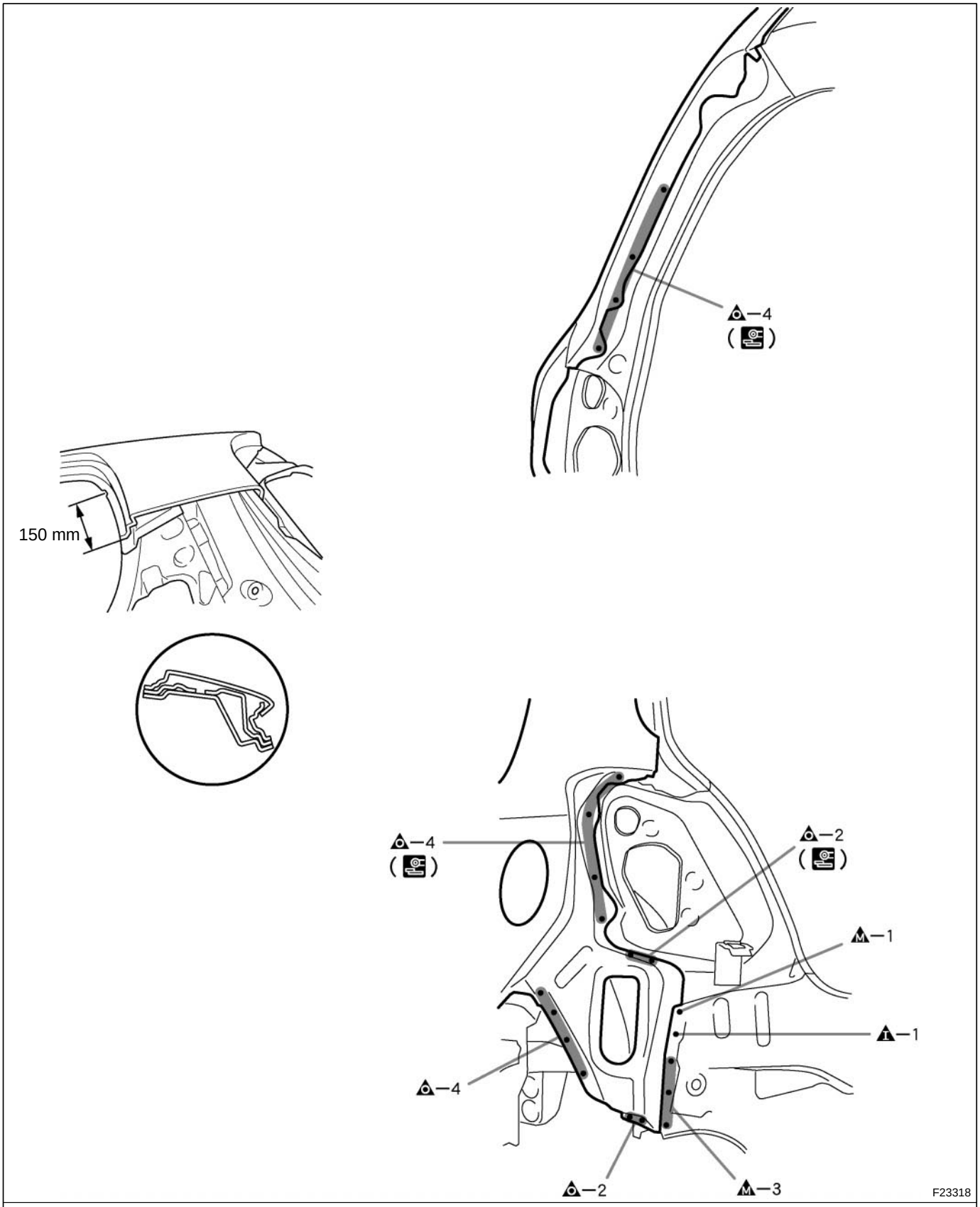

150 mm (5.91in.)

INSTALLATION

* Temporarily install the new parts and measure each part of the new parts in accordance with the body dimension diagram. (See the body dimension diagram)
* Inspect the fitting of the related parts around the new parts before welding. This affects the appearance of the finish.
* After welding, apply polyurethane foam to the corresponding parts.
* After welding, apply body sealer and undercoating to the corresponding parts.
* After applying the top coat, apply anti-rust agent to the internal panel portion of the closed section structural weld points.

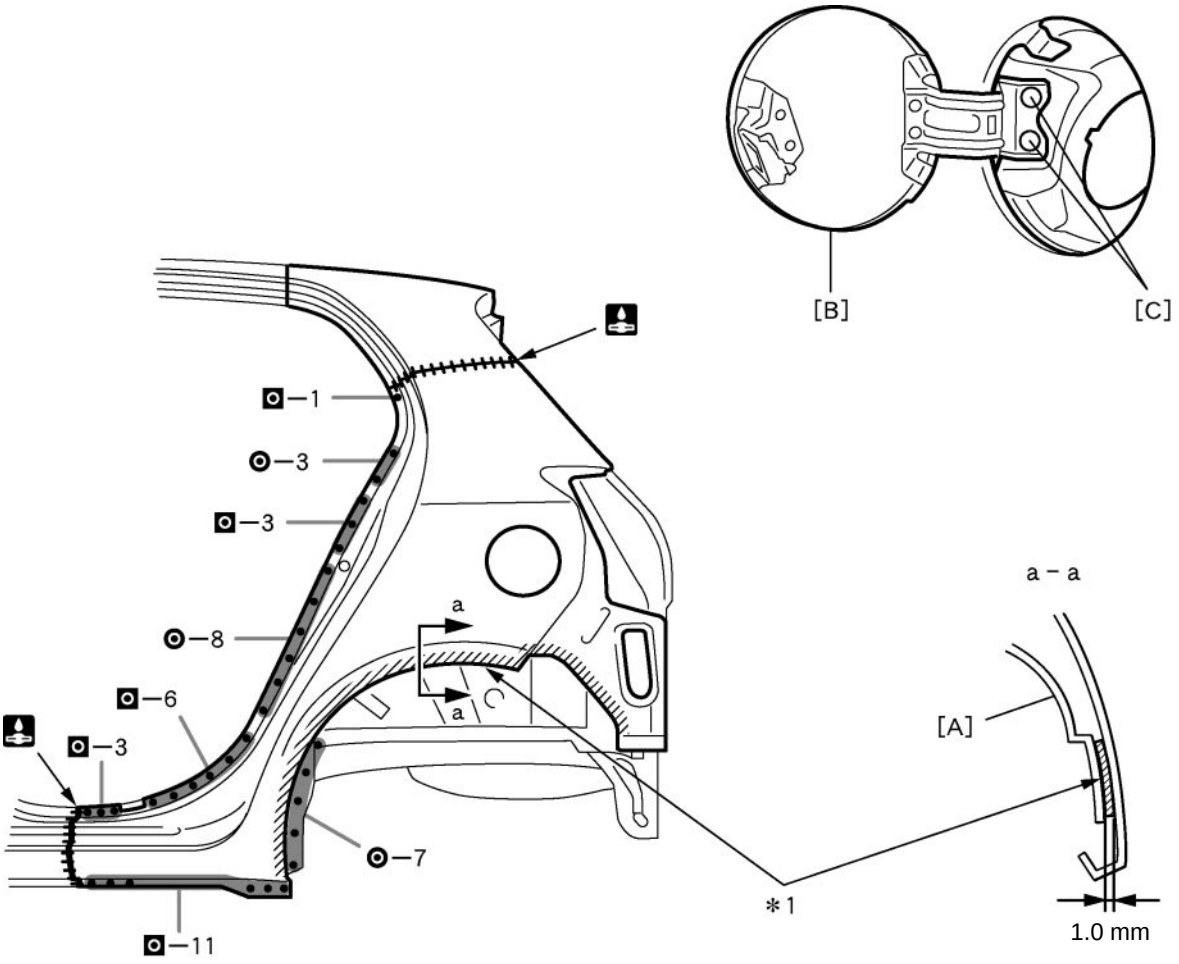

F23319

POINT

1 *1: The hatched area indicates the adhesive application area.

PART NAME

[A] Quarter Wheel Housing Outer Panel [B] Fuel Filler Opening Lid [C] Rivet

1.0 mm (0.04 in.)

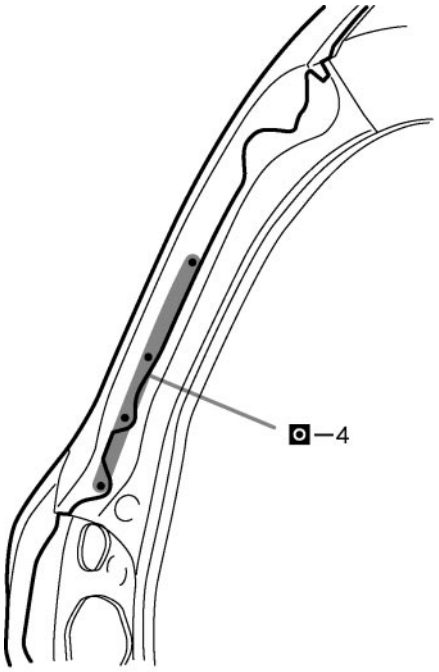

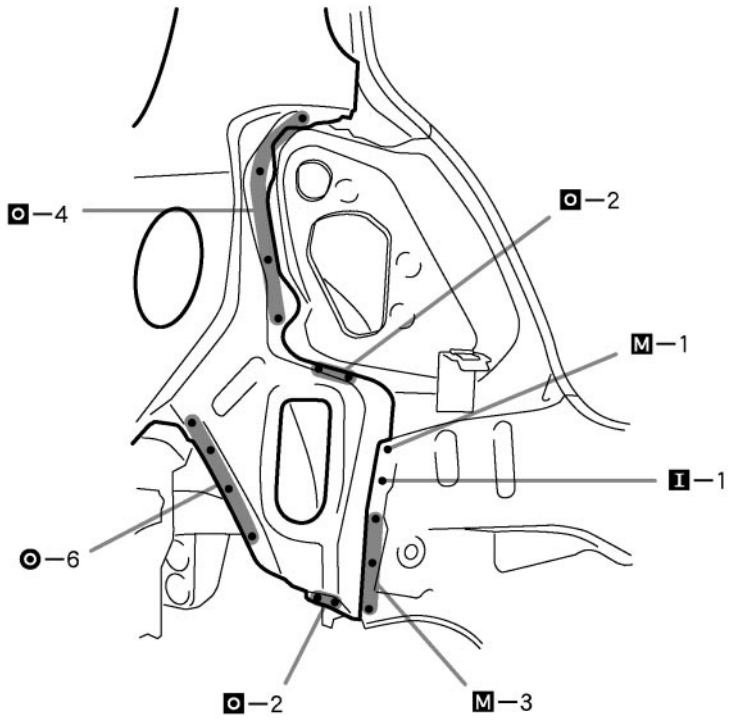

F23320

POINT

1 Inspect the front door, back door, rear combination light and other related parts before welding as this affects the appearance of the finish.

QUARTER WHEEL HOUSING OUTER PANEL (ASSY)

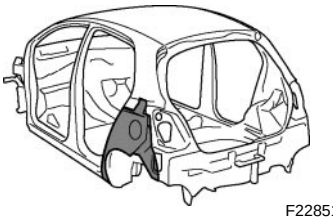
F22851A

REPLACEMENT
With the quarter panel removed.

REMOVAL

[LH]

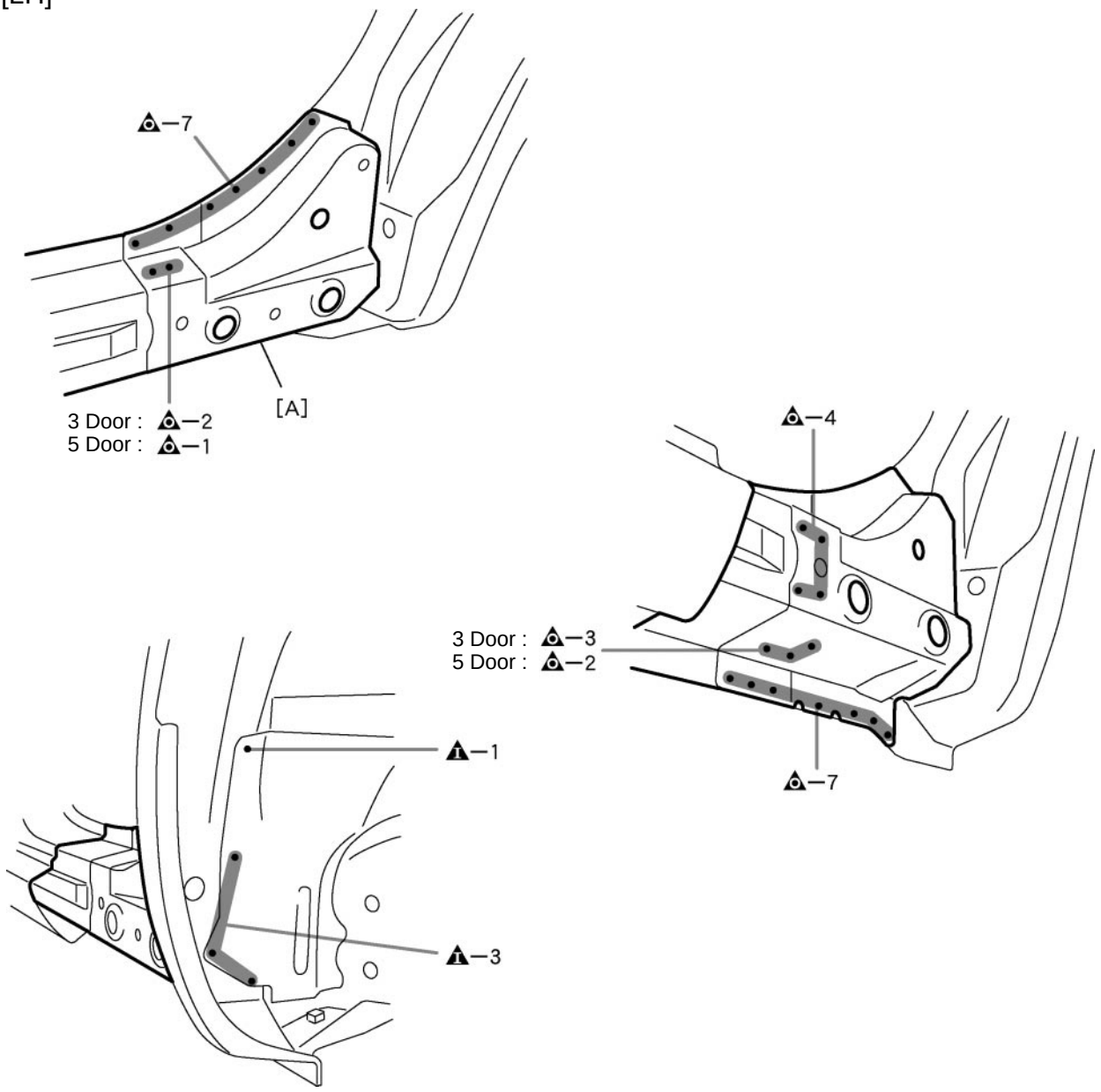

F23321

POINT
1 After removing [A], remove the quarter wheel housing outer panel.

PART NAME
[A] Rocker Outer Extension

[LH]

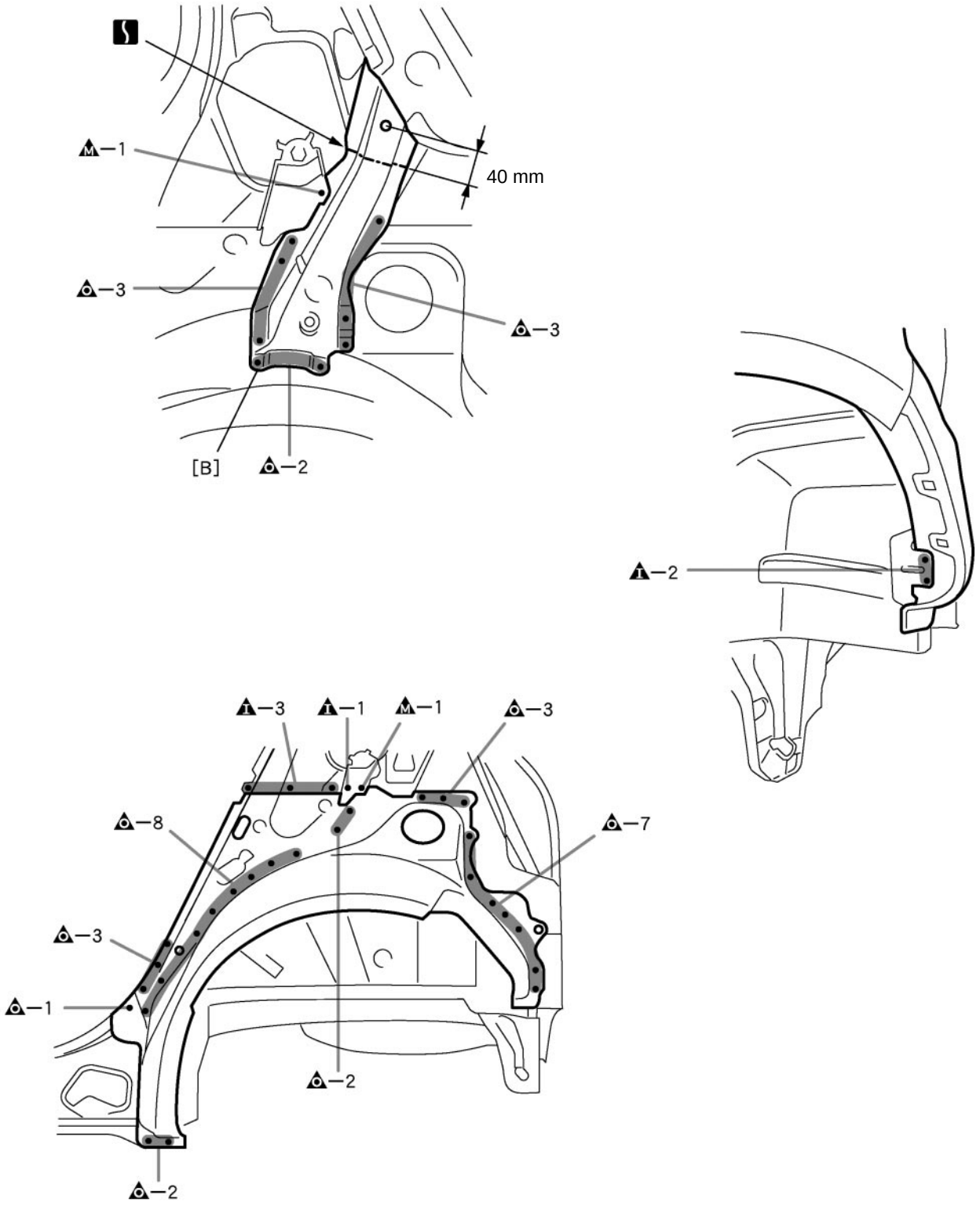

POINT

1 After removing [B], remove the quarter wheel housing outer panel.

PART NAME

[B] Roof Side Outer Panel

40 mm (1.57 in.)

[RH]

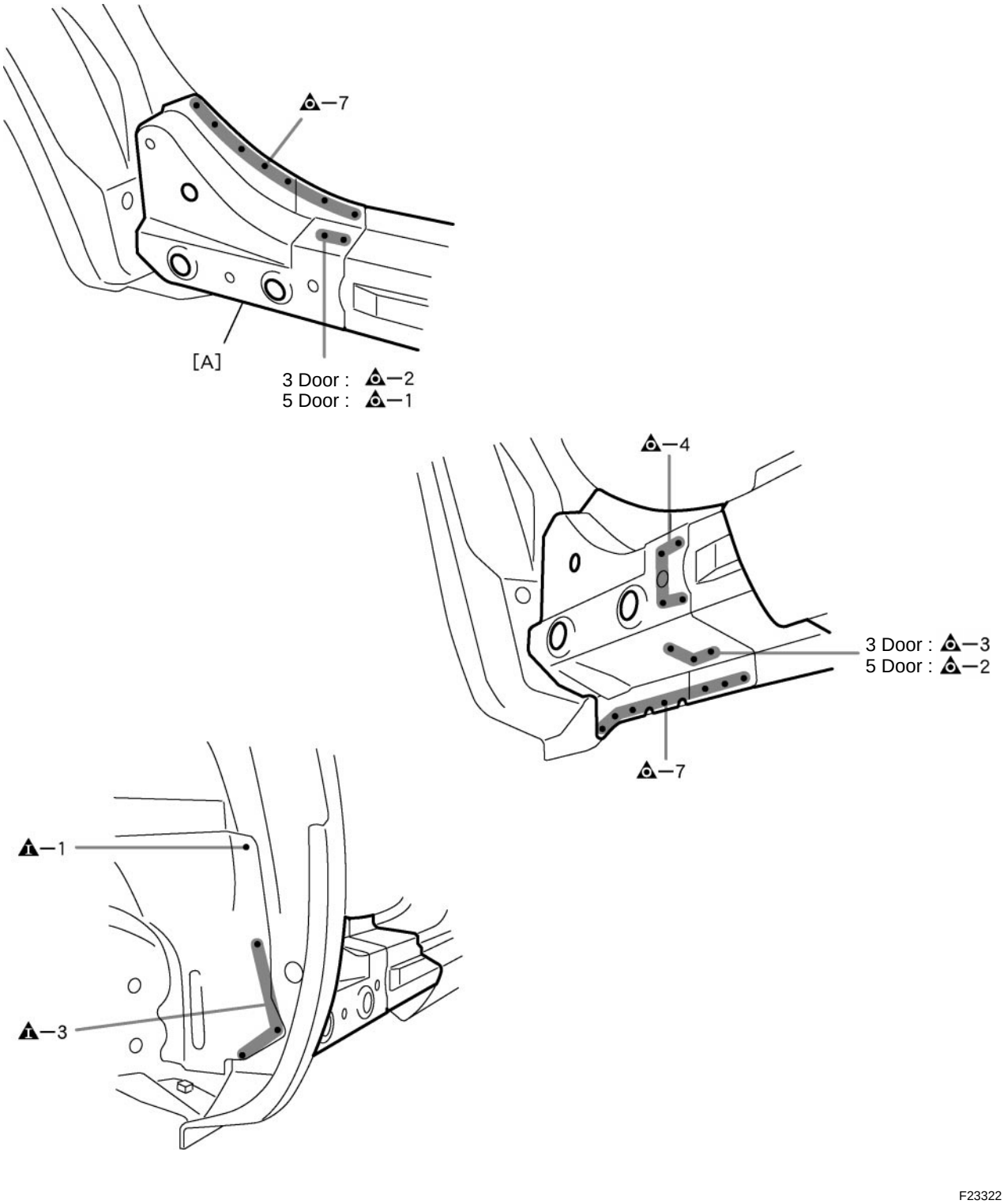

POINT

1 After removing [A], remove the quarter wheel housing outer panel.

PART NAME

[A] Rocker Outer Extension

[RH]

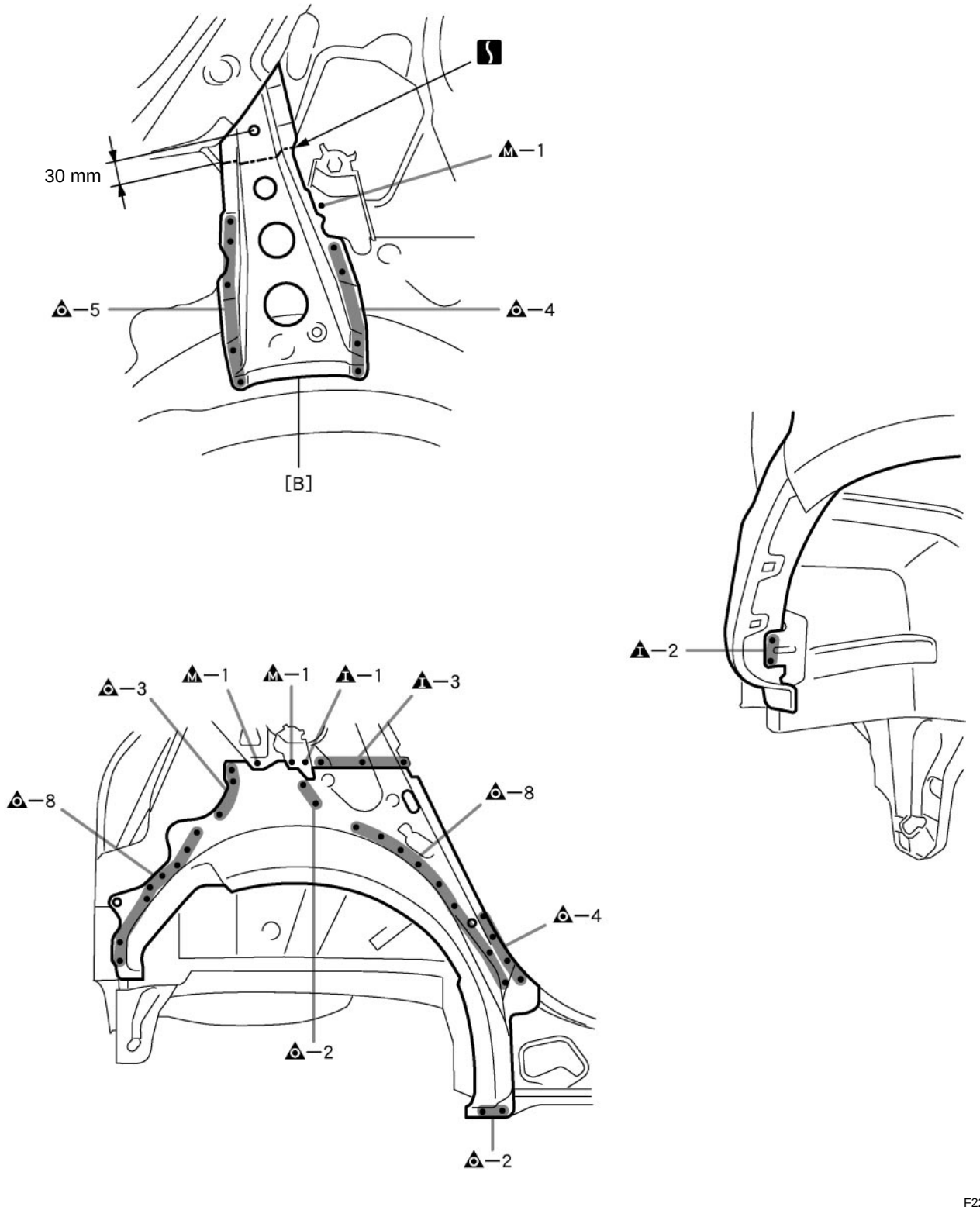

POINT

1 After removing [B], remove the quarter wheel housing outer panel.

PART NAME

[B] Roof Side Outer Panel

30 mm (1.18 in.)

INSTALLATION

⁎ Temporarily install the new parts and measure each part of the new parts in accordance with the body dimension diagram. (See the body dimension diagram)
⁎ Inspect the fitting of the related parts around the new parts before welding. This affects the appearance of the finish.
⁎ After welding, apply the polyurethane foam to the corresponding parts.
⁎ After welding, apply body sealer and under-coating to the corresponding parts.
⁎ After applying the top coat layer, apply anti-rust agent to the inside of the necked section structural weld spots.

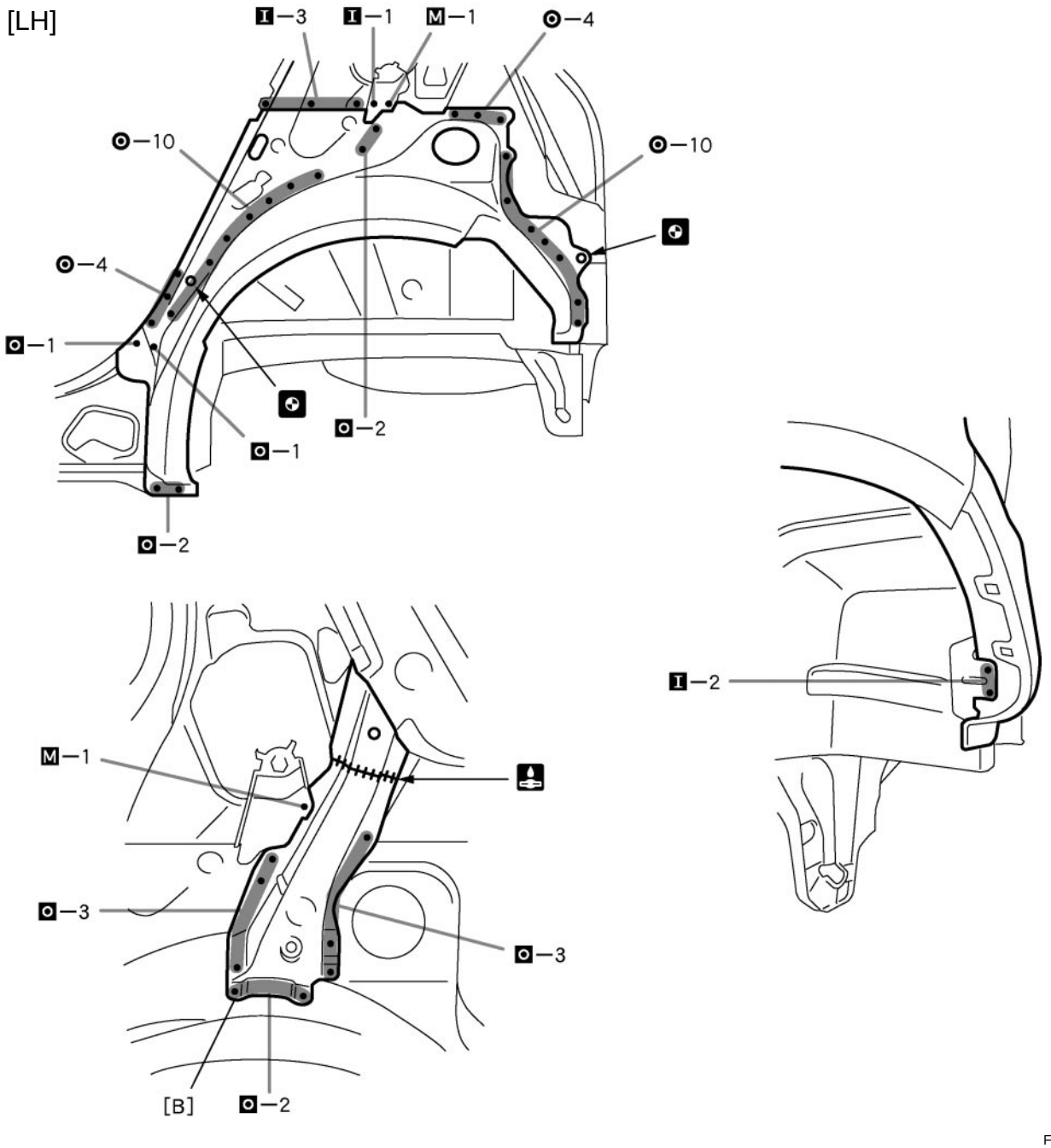

POINT

1 After installing the new parts, install [B].

PART NAME

[B] Roof Side Outer Panel

[LH]

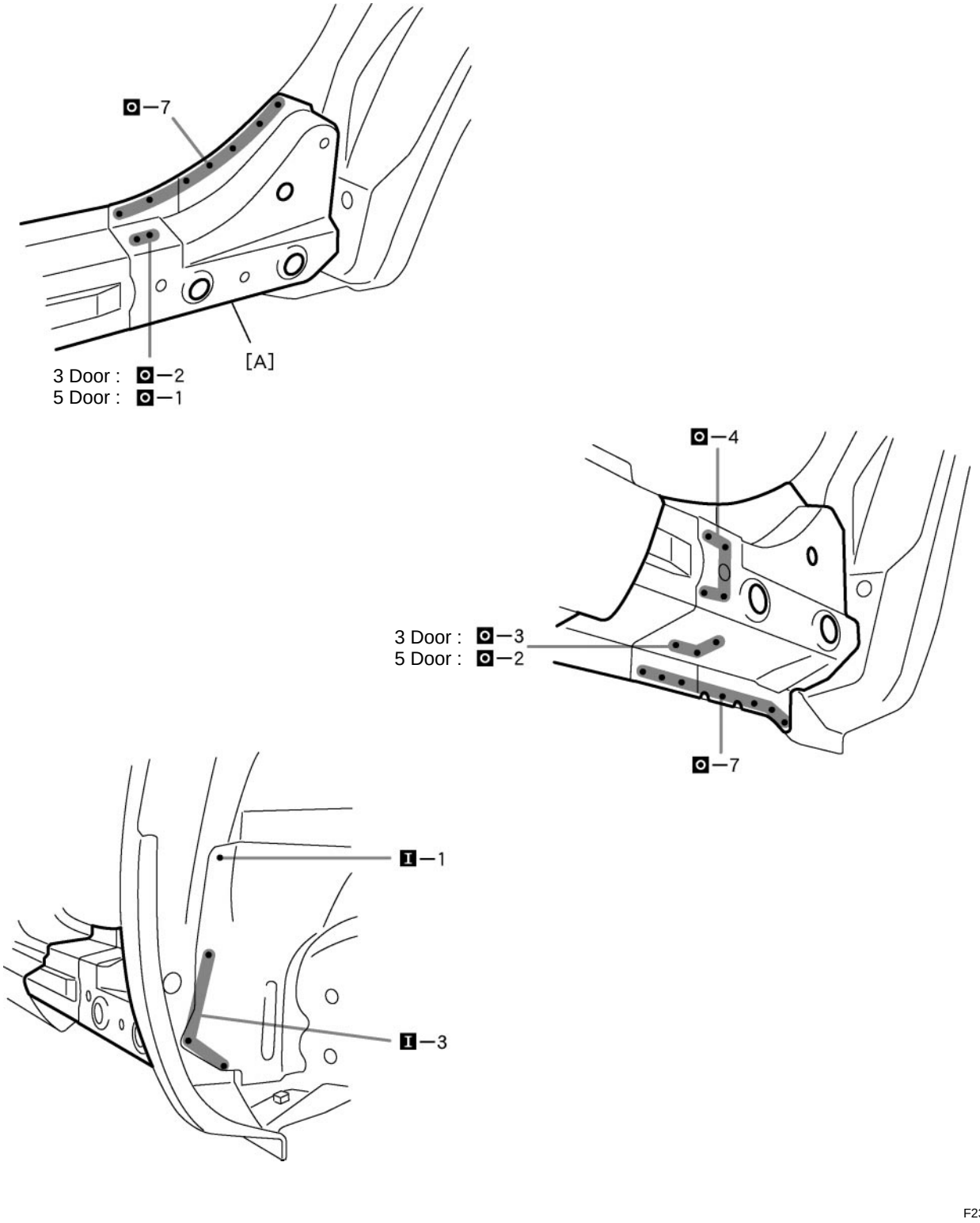

POINT

1 After installing the new parts, install [A].

PART NAME

[A] Rocker Outer Extension

[RH]

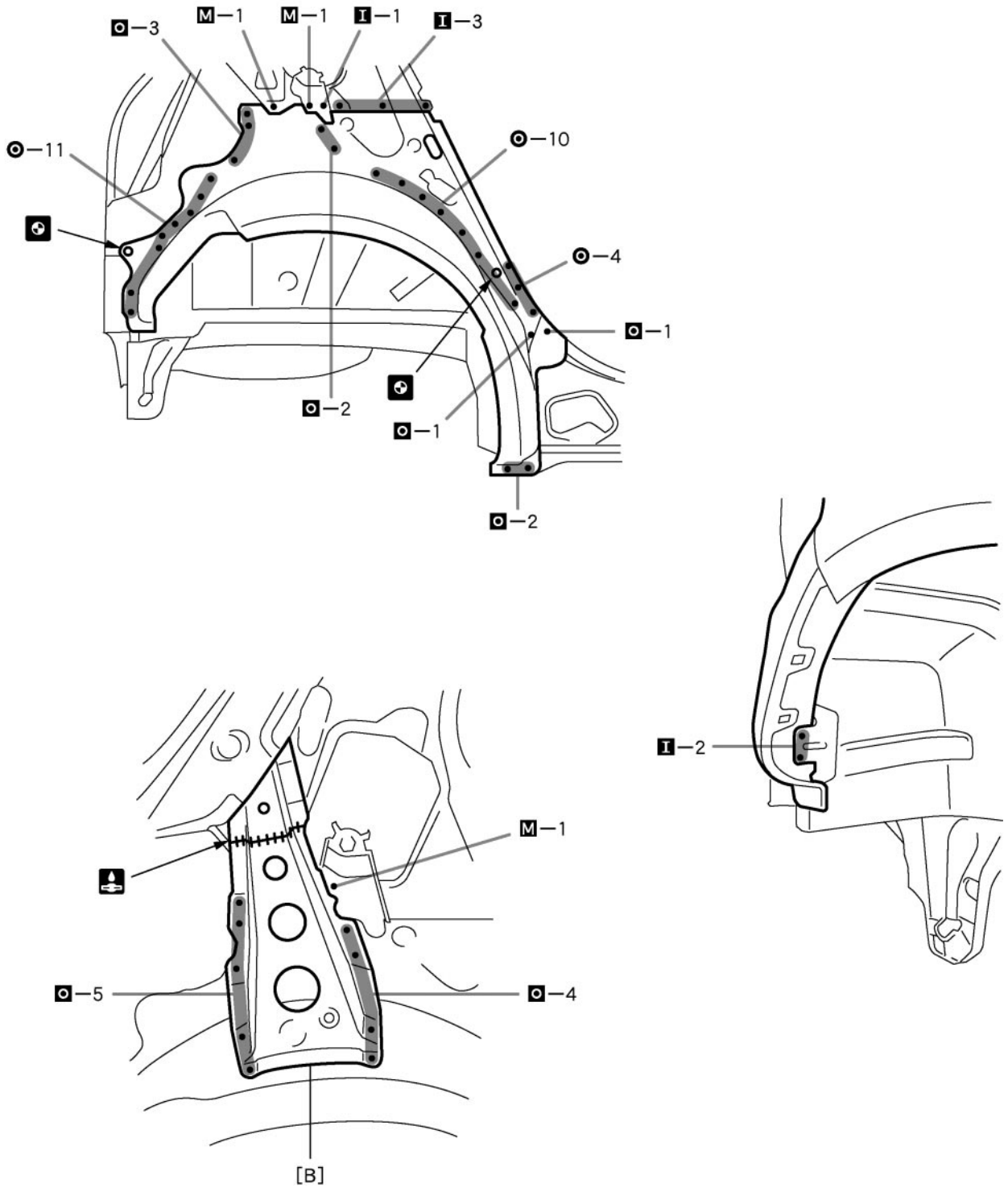

F22858

POINT

1 After installing the new parts, install [B].

PART NAME

[B] Roof Side Outer Panel

[RH]

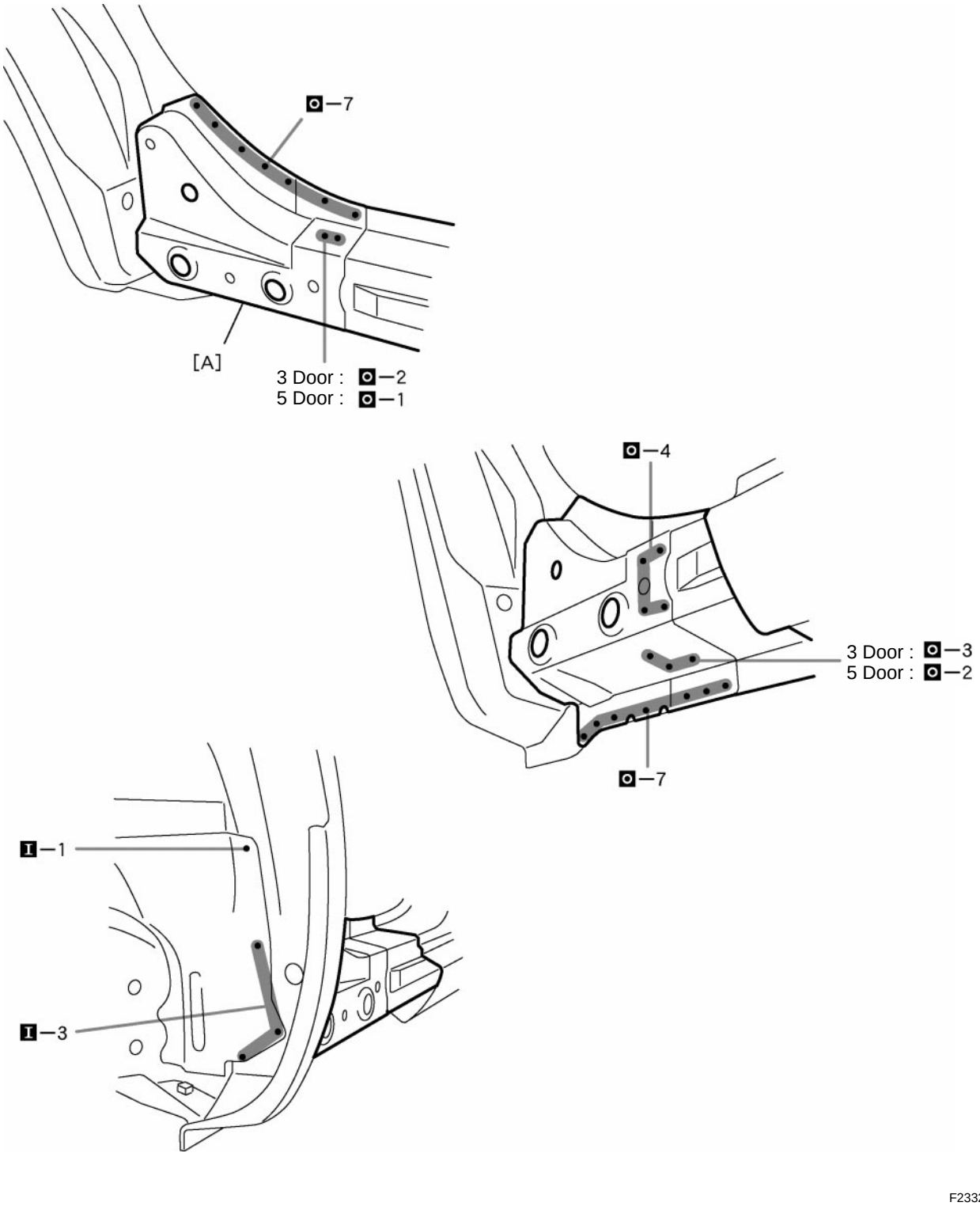

F23324

POINT

1 After installing the new parts, install [A].

PART NAME

[A] Rocker Outer Extension

LOWER BACK UPPER GUSSET (ASSY)

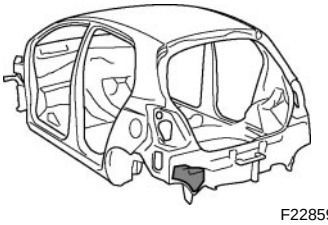

F22859A

REPLACEMENT

REMOVAL

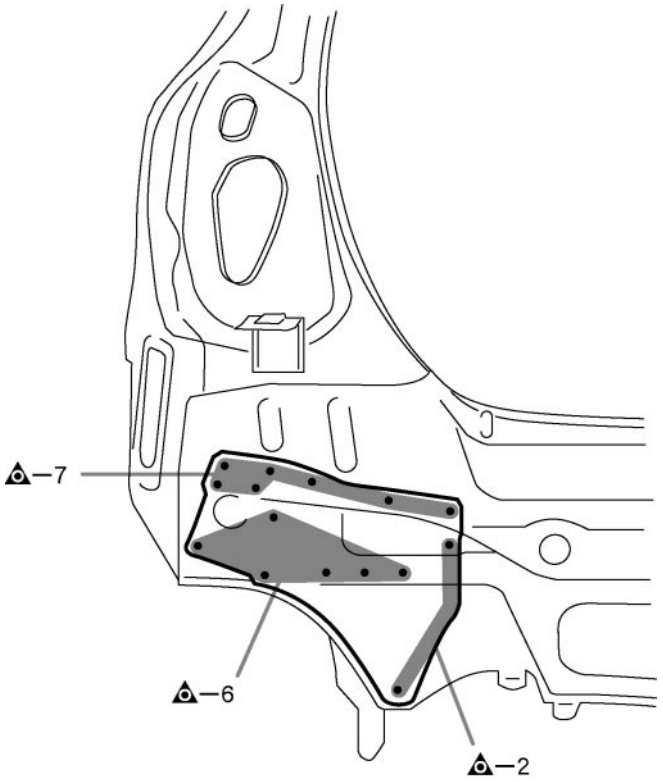

F22859

INSTALLATION

⁎ Temporarily install the new parts and measure each part of the new parts in accordance with the body dimension diagram. (See the body dimension diagram)
⁎ Inspect the fitting of the related parts around the new parts before welding. This affects the appearance of the finish.
⁎ After welding, apply the polyurethane foam to the corresponding parts.
⁎ After welding, apply body sealer and under-coating to the corresponding parts.
⁎ After applying the top coat layer, apply anti-rust agent to the inside of the necked section structural weld spots.

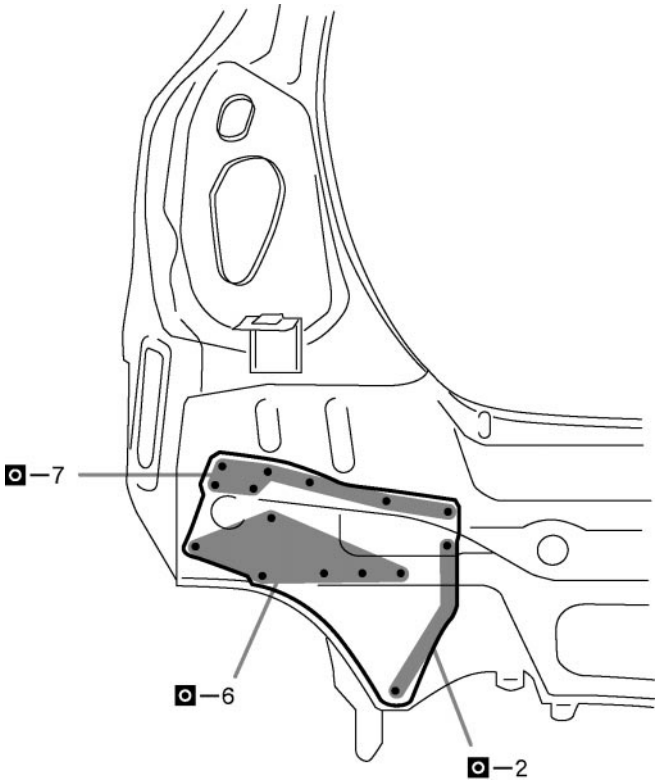

F22860

BODY LOWER BACK PANEL (ASSY)

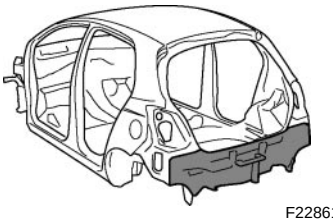
F22861A

REPLACEMENT

REMOVAL

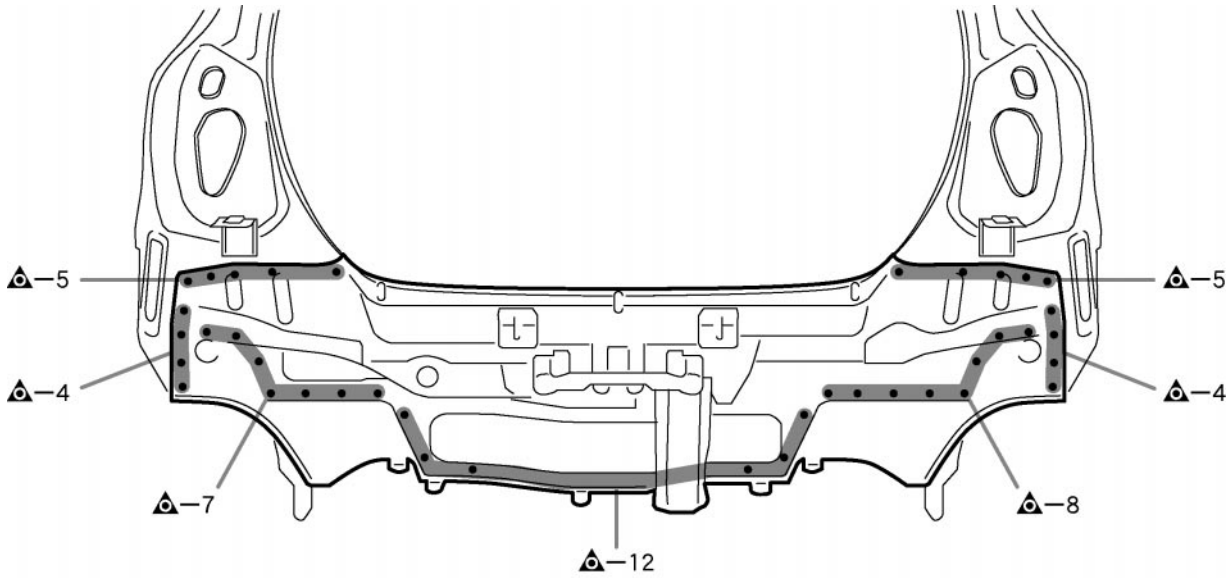

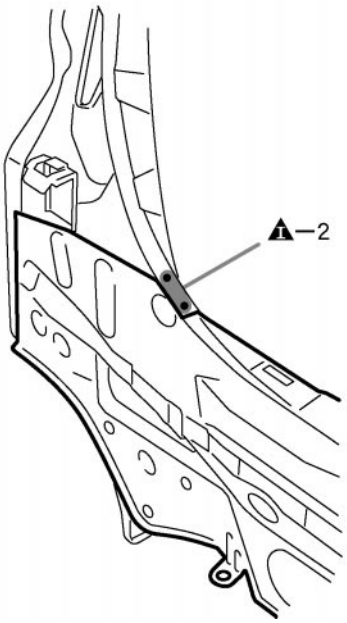

F23325

INSTALLATION

* Temporarily install the new parts and measure each part of the new parts in accordance with the body dimension diagram. (See the body dimension diagram)
* Inspect the fitting of the related parts around the new parts before welding. This affects the appearance of the finish.
* After welding, apply polyurethane foam to the corresponding parts.
* After welding, apply body sealer and undercoating to the corresponding parts.
* After applying the top coat, apply anti-rust agent to the internal panel portion of the closed section structural weld points.

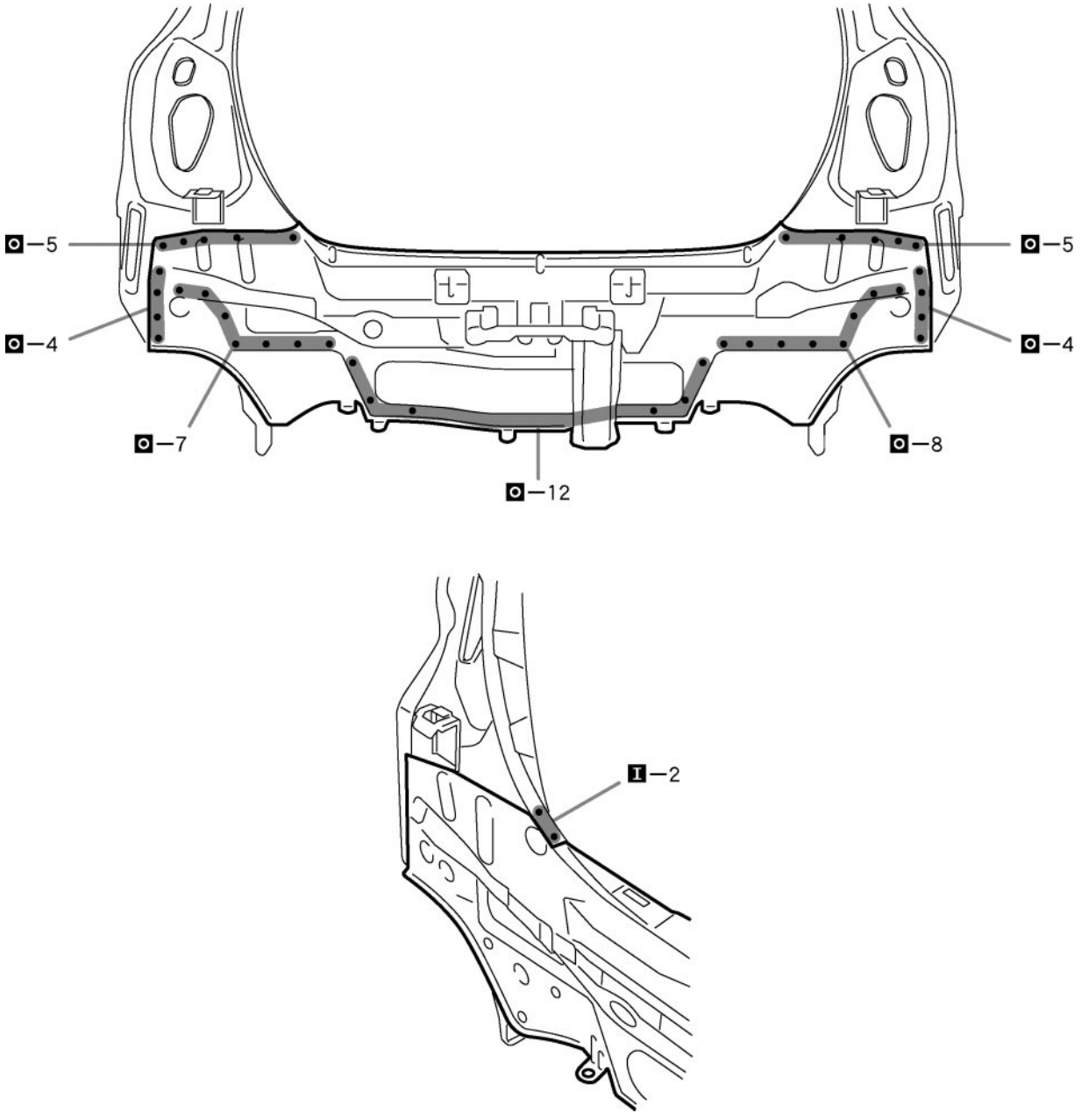

F23326

POINT

1 Inspect the fitting of the back door, rear combination light and other related parts before welding as this affects the appearance of the finish.

BACK DOOR OPENING TROUGH (ASSY)

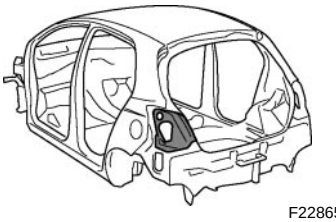
F22865A

REPLACEMENT
With the quarter panel and body lower back panel removed.

REMOVAL

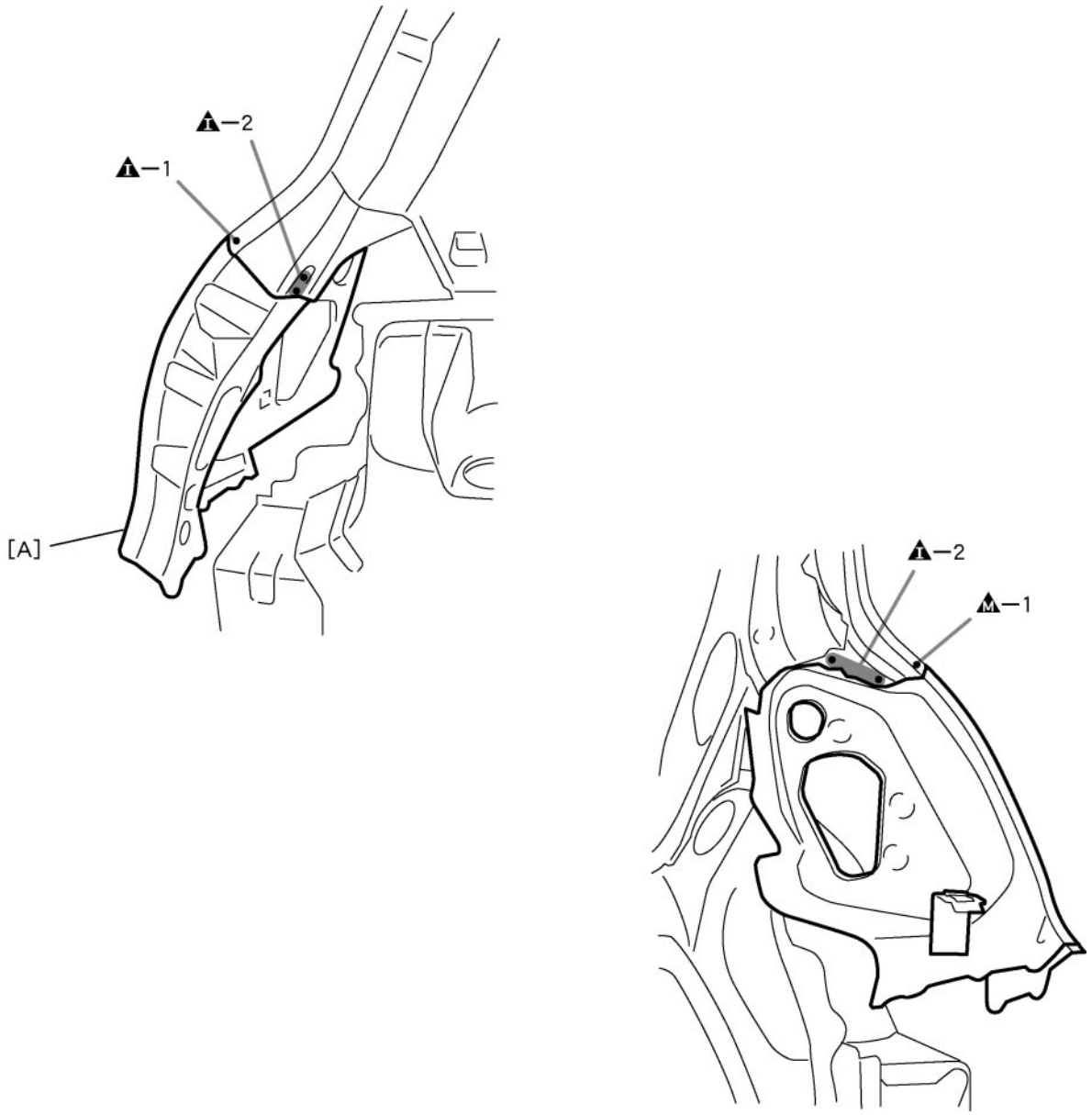

F22865

POINT
1 Remove [A] at the same time.

PART NAME
[A] Back Door Opening Lower Reinforcement

INSTALLATION

* Temporarily install the new parts and measure each part of the new parts in accordance with the body dimension diagram. (See the body dimension diagram)
* Inspect the fitting of the related parts around the new parts before welding. This affects the appearance of the finish.
* After welding, apply polyurethane foam to the corresponding parts.
* After welding, apply body sealer and undercoating to the corresponding parts.
* After applying the top coat, apply anti-rust agent to the internal panel portion of the closed section structural weld points.

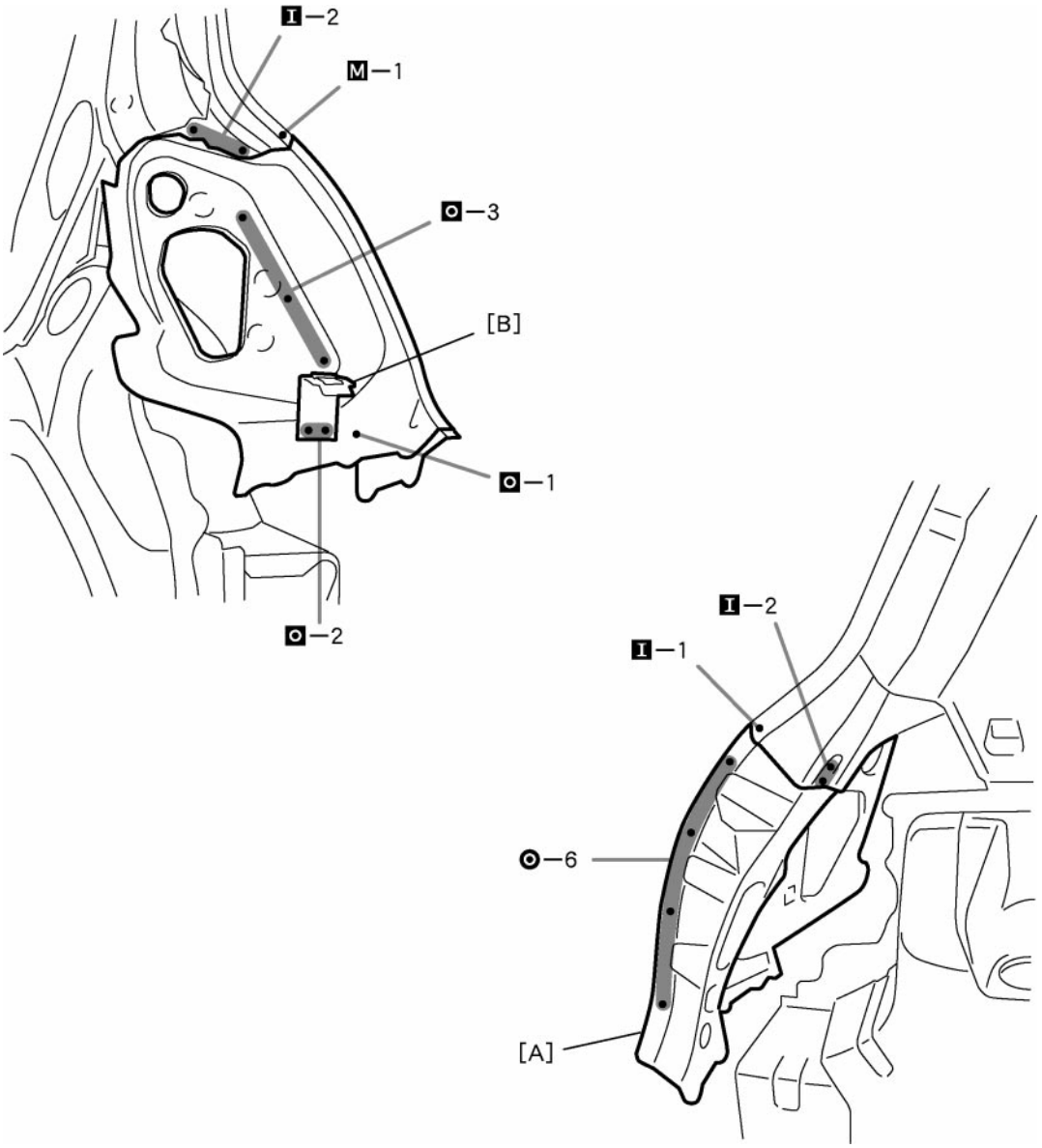

F22866

POINT

1 Inspect the fitting of the back door, rear combination light and other related parts before welding as this affects the appearance of the finish.

PART NAME

[A] Back Door Opening Lower Reinforcement [B] Rear Bumper Side Retainer

QUARTER PANEL UPPER EXTENSION (CUT)

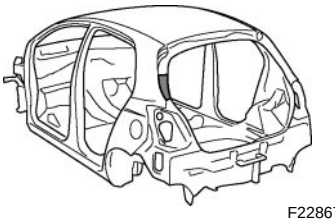
F22867A

REPLACEMENT
With the back door opening trough removed.

REMOVAL

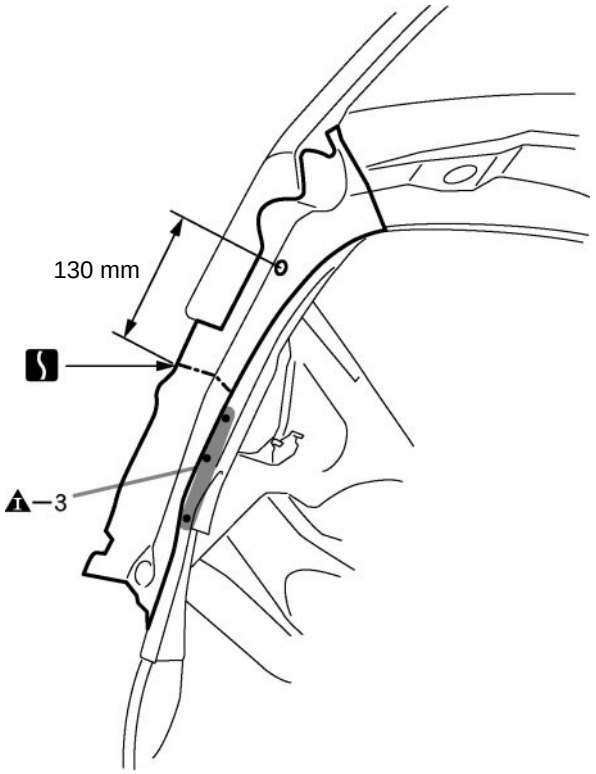

F22867

130 mm (5.12 in.)

INSTALLATION

⁎ Temporarily install the new parts and measure each part of the new parts in accordance with the body dimension diagram. (See the body dimension diagram)
⁎ Inspect the fitting of the related parts around the new parts before welding. This affects the appearance of the finish.
⁎ After welding, apply the polyurethane foam to the corresponding parts.
⁎ After welding, apply body sealer and under-coating to the corresponding parts.
⁎ After applying the top coat layer, apply anti-rust agent to the inside of the necked section structural weld spots.

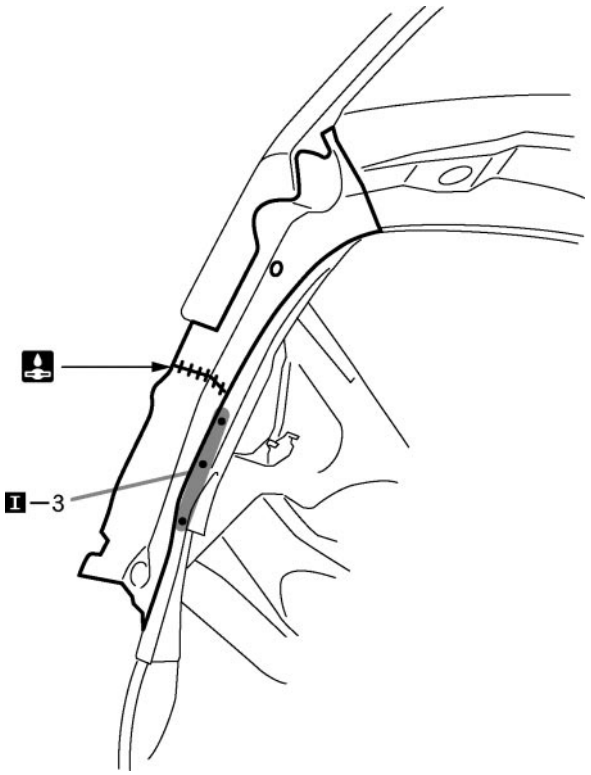

F22868

FLOOR SIDE RAIL FRONT PANEL (ASSY)

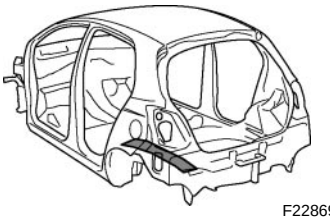
F22869A

REPLACEMENT

With the body lower back panel removed.

REMOVAL

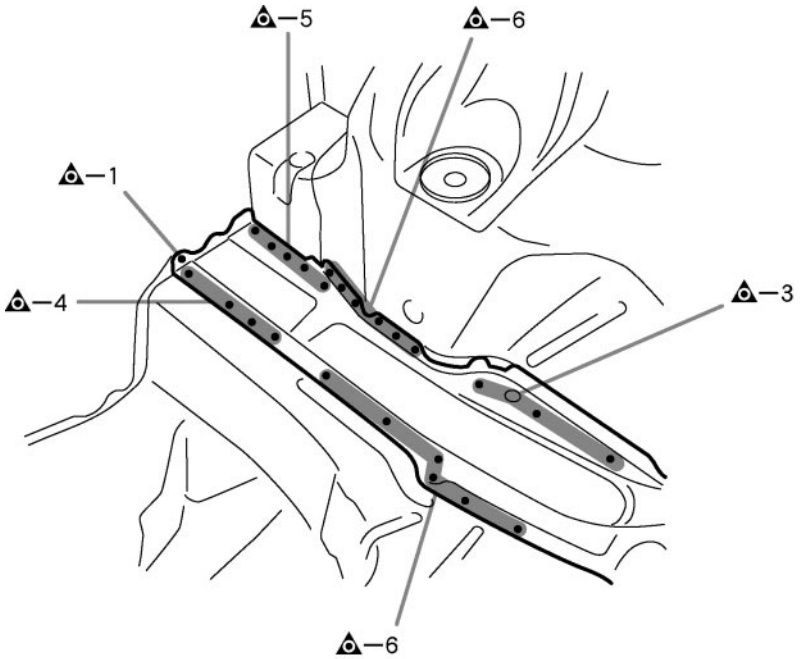

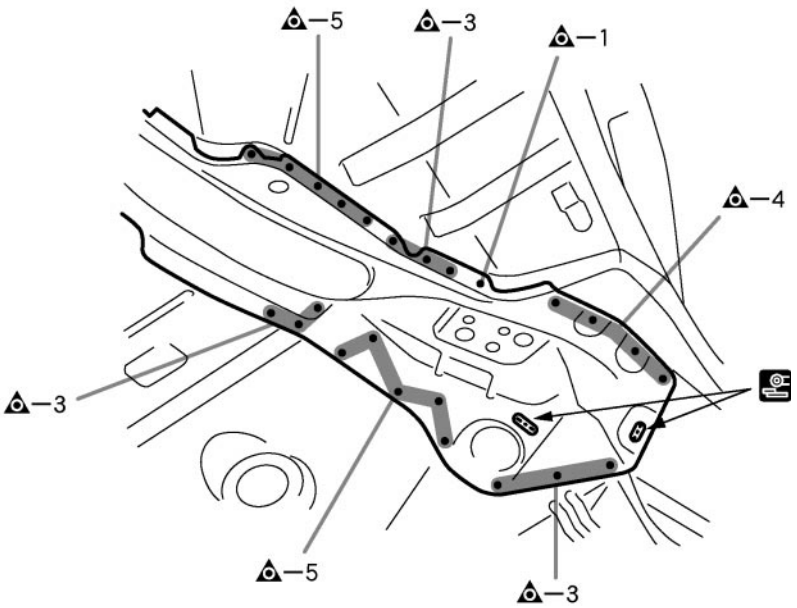

F23327

INSTALLATION

⁎ Temporarily install the new parts and measure each part of the new parts in accordance with the body dimension diagram. (See the body dimension diagram)
⁎ Inspect the fitting of the related parts around the new parts before welding. This affects the appearance of the finish.
⁎ After welding, apply the polyurethane foam to the corresponding parts.
⁎ After welding, apply body sealer and under-coating to the corresponding parts.
⁎ After applying the top coat layer, apply anti-rust agent to the inside of the necked section structural weld spots.

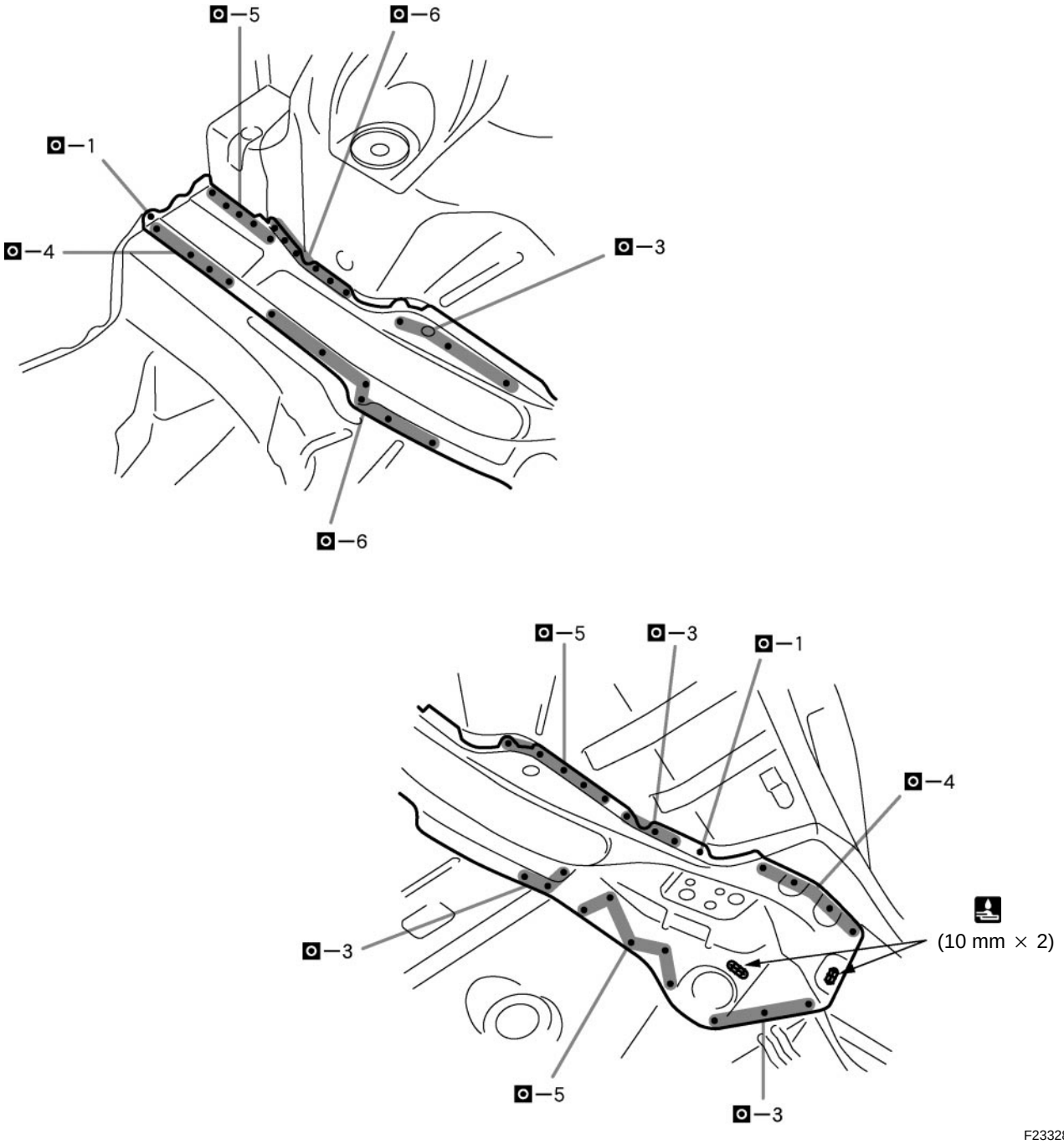

10 mm (0.39 in.)

REAR FLOOR PAN (ASSY)

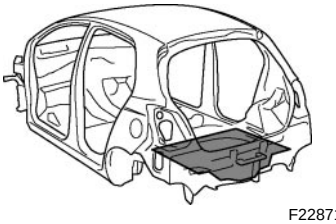

F22871A

REPLACEMENT

With the body lower back panel and floor side rail front panel removed.

REMOVAL

[EX. U.S.A., CANADA]

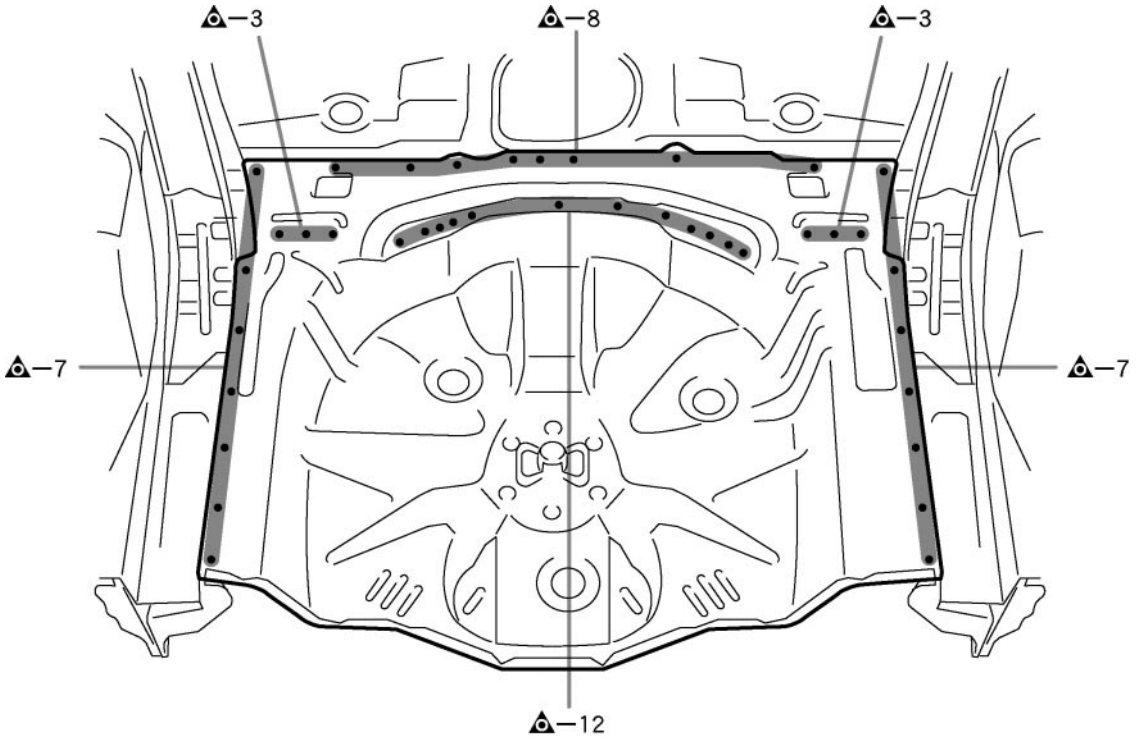

F23347

[U.S.A., CANADA]

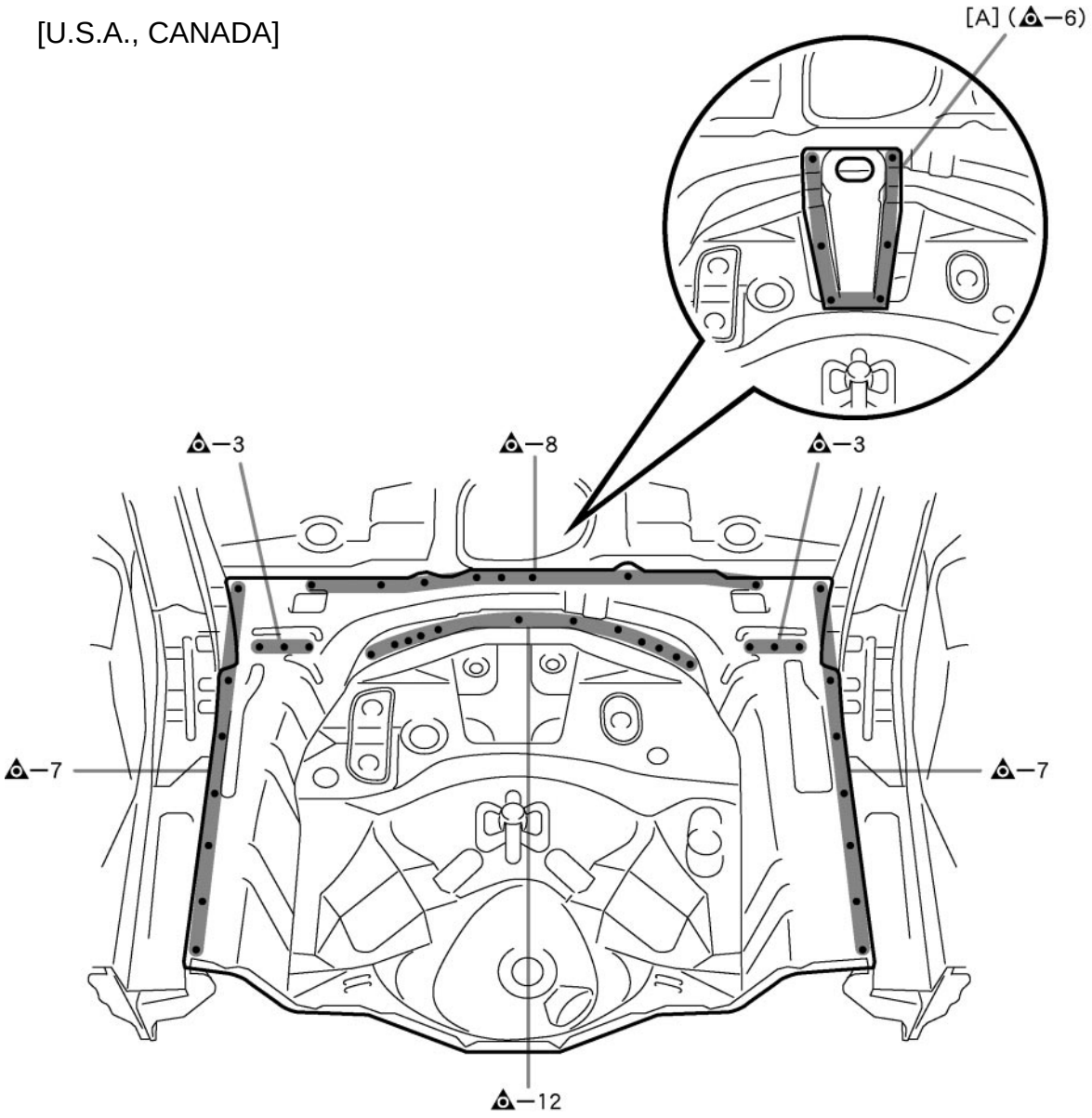

F23345

POINT

1 After removing [A], remove the rear floor pan.

PART NAME

[A] Rear Floor Brace Braket

INSTALLATION

* Temporarily install the new parts and measure each part of the new parts in accordance with the body dimension diagram. (See the body dimension diagram)
* Inspect the fitting of the related parts around the new parts before welding. This affects the appearance of the finish.
* After welding, apply polyurethane foam to the corresponding parts.
* After welding, apply body sealer and undercoating to the corresponding parts.
* After applying the top coat, apply anti-rust agent to the internal panel portion of the closed section structural weld points.

[EX. U.S.A., CANADA]

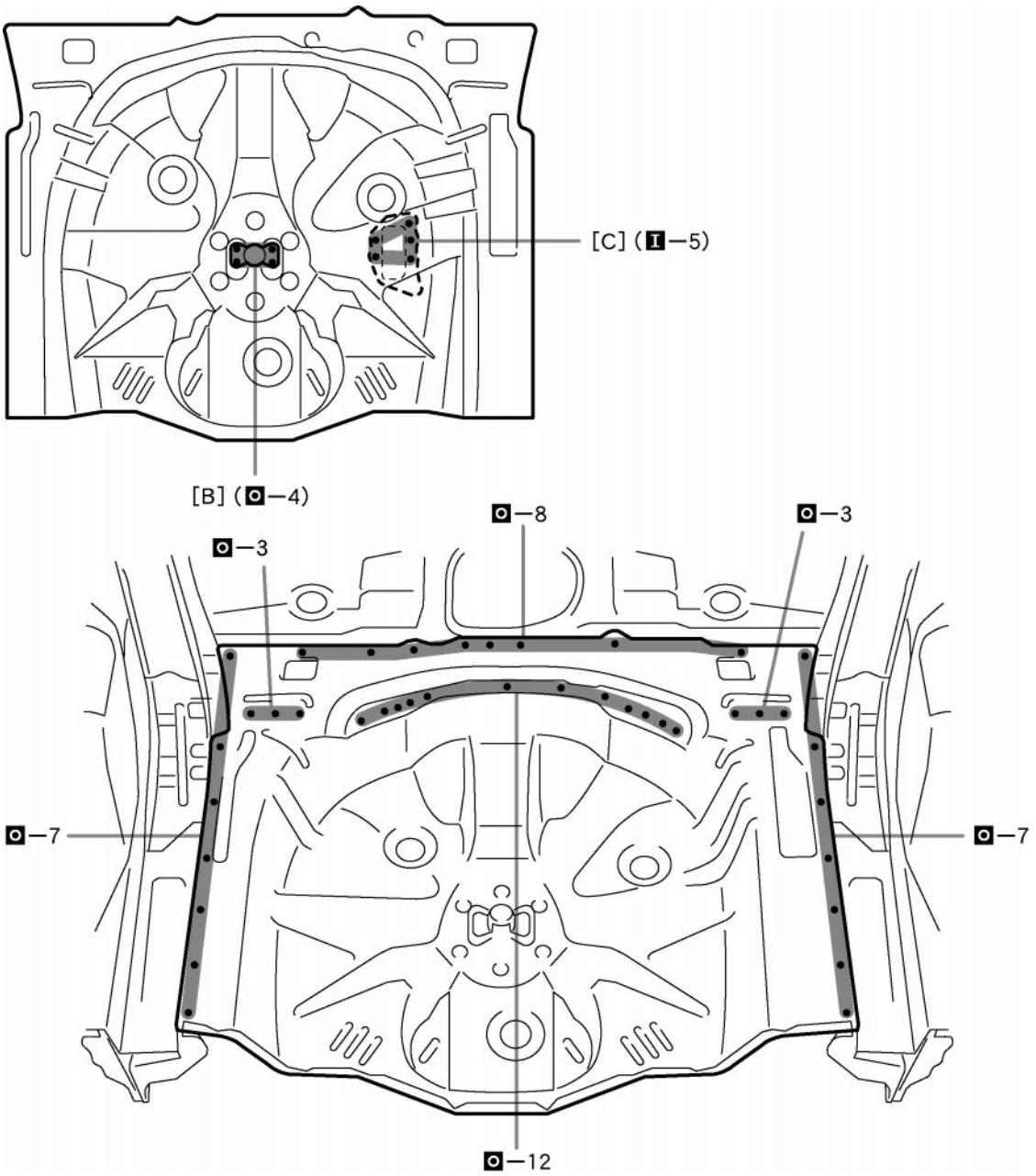

F23348

PART NAME

[B] Spare Wheel Clamp Bracket [C] Actuator Cover No.3 Bracket

[U.S.A., CANADA]

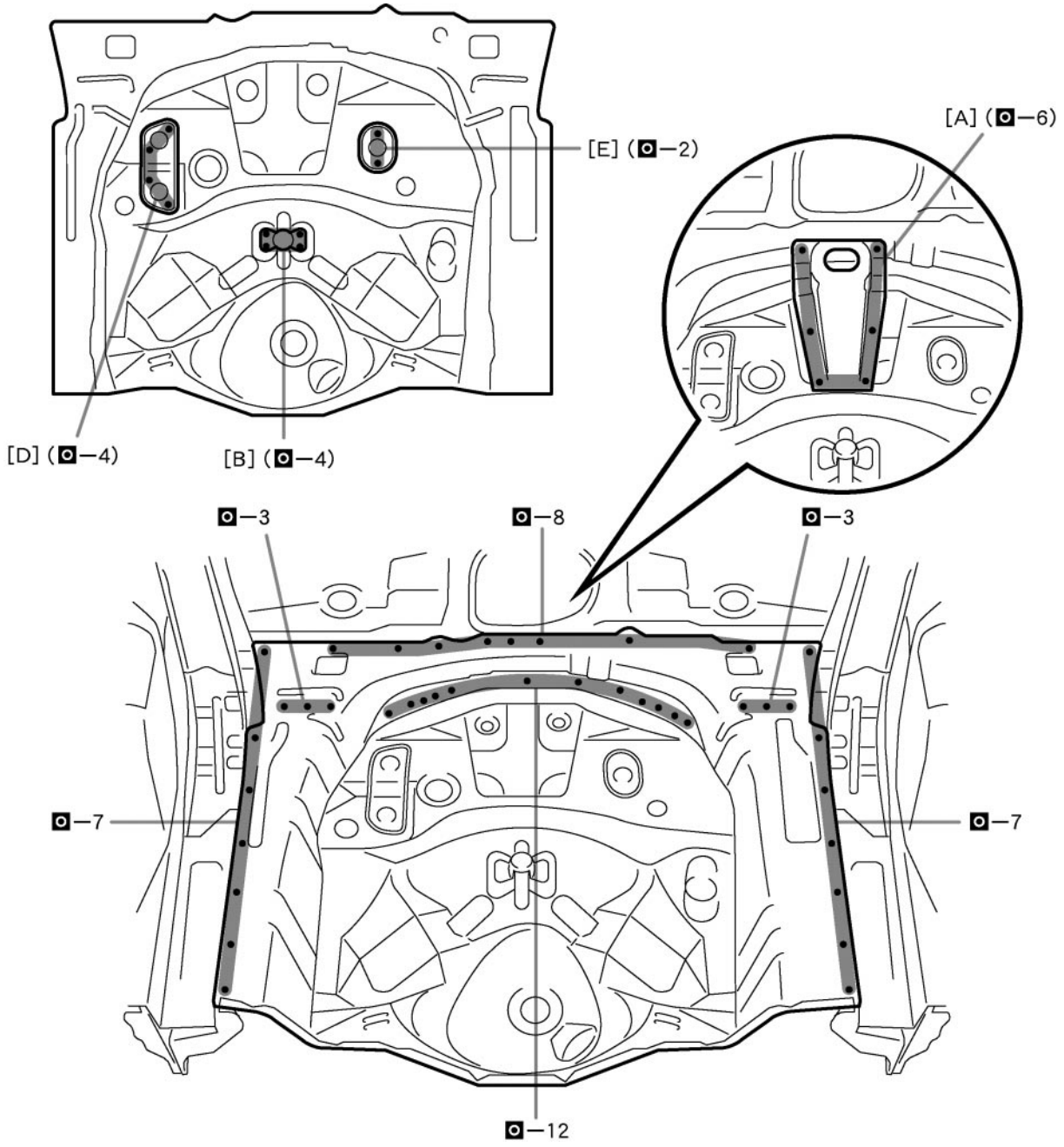

POINT

1 After installing the new parts, install [A].

PART NAME

[A] Rear Floor Brace Bracket [B] Spare Wheel Clamp Bracket
[D] Fuel Tube No.2 Bracket [E] Fuel Tube Bracket

REAR FLOOR SIDE PANEL EXTENSION (ASSY)

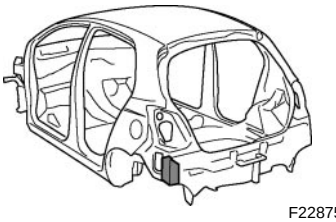
F22875A

REPLACEMENT
With the quarter panel and body lower back panel removed.

REMOVAL

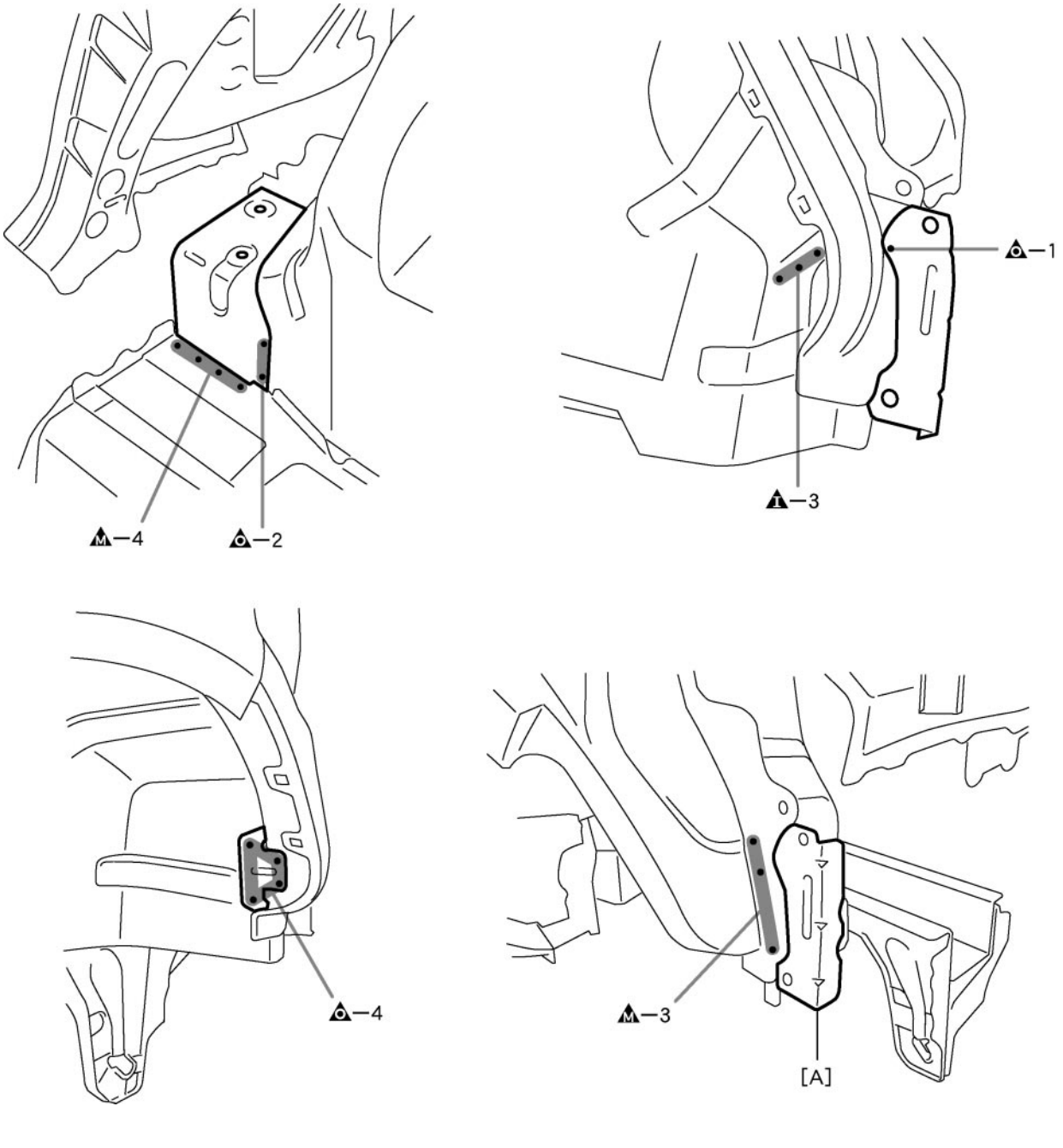

F22875

POINT
1 After removing the rear floor side panel extension, remove [A].

PART NAME
[A] Quarter Wheel Housing Extension

INSTALLATION

* Temporarily install the new parts and measure each part of the new parts in accordance with the body dimension diagram. (See the body dimension diagram)
* Inspect the fitting of the related parts around the new parts before welding. This affects the appearance of the finish.
* After welding, apply the polyurethane foam to the corresponding parts.
* After welding, apply body sealer and under-coating to the corresponding parts.
* After applying the top coat layer, apply anti-rust agent to the inside of the necked section structural weld spots.

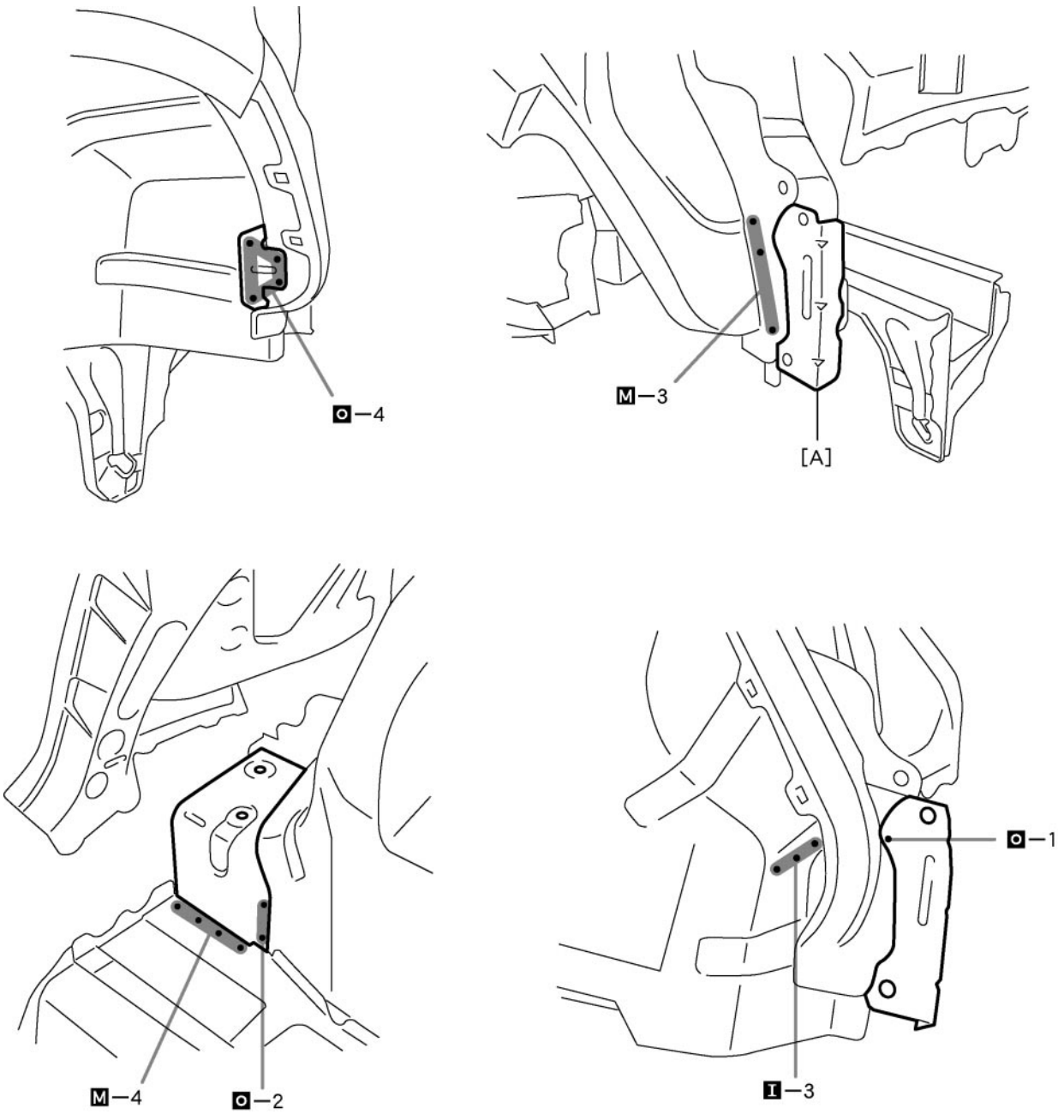

POINT

1 After installing [A], install the new parts.

PART NAME

[A] Quarter Wheel Housing Extension

REAR FLOOR CROSSMEMBER NO.2 (ASSY)

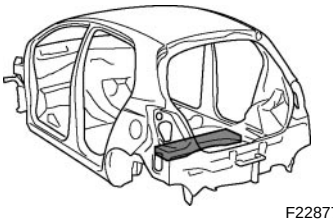

F22877A

REPLACEMENT

REMOVAL

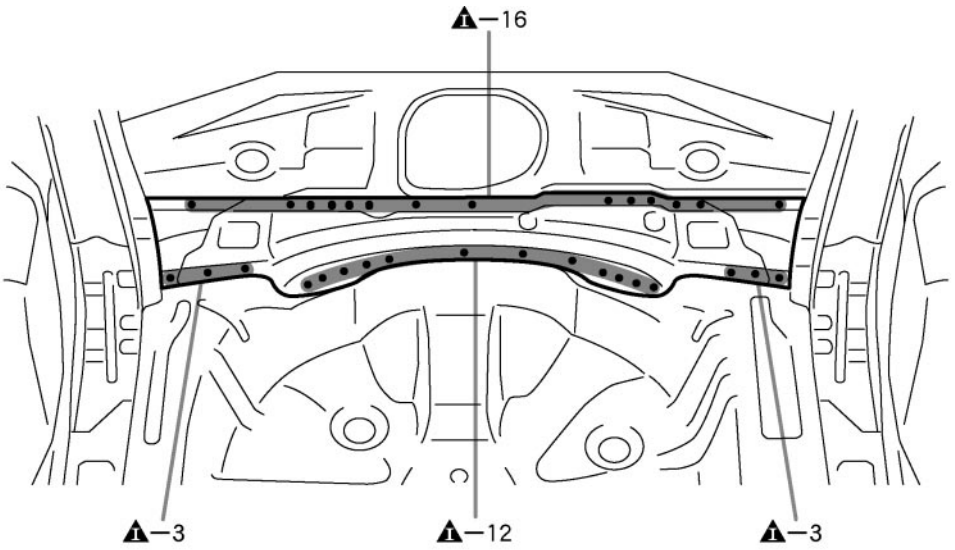

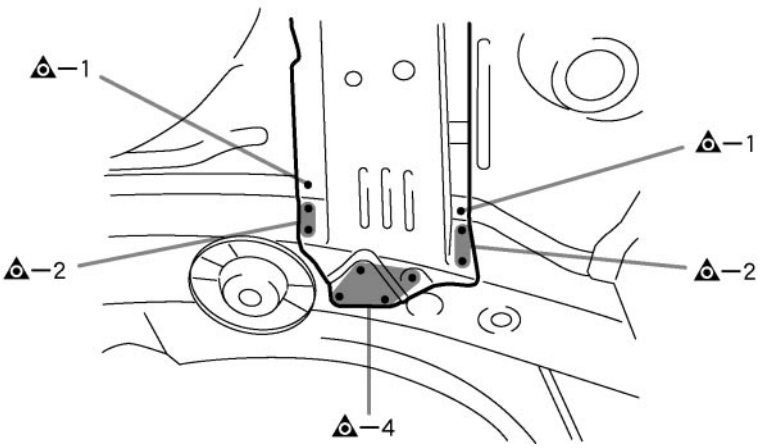

F22877

INSTALLATION

⁎ Temporarily install the new parts and measure each part of the new parts in accordance with the body dimension diagram. (See the body dimension diagram)
⁎ Inspect the fitting of the related parts around the new parts before welding. This affects the appearance of the finish.
⁎ After welding, apply the polyurethane foam to the corresponding parts.
⁎ After welding, apply body sealer and under-coating to the corresponding parts.
⁎ After applying the top coat layer, apply anti-rust agent to the inside of the necked section structural weld spots.

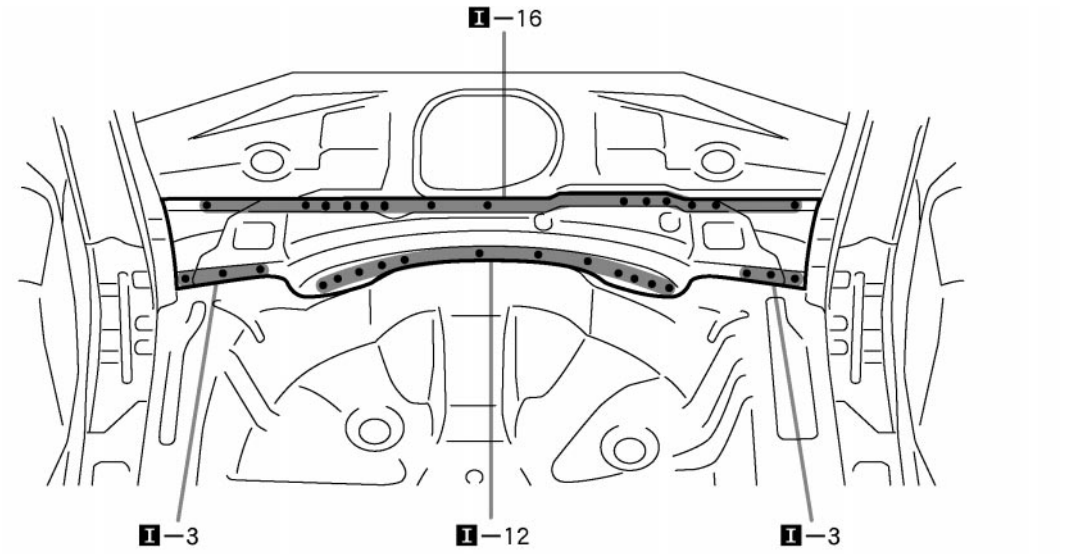

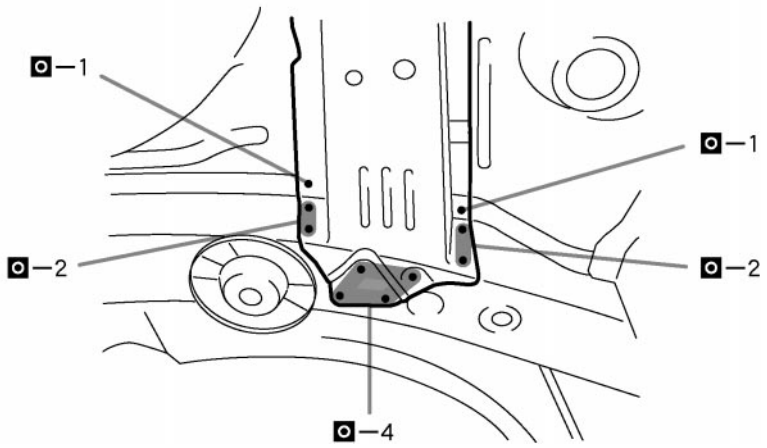

F22878

REAR FLOOR SIDEMEMBER (CUT)

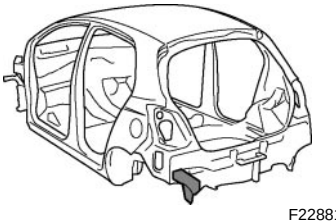
F22881A

REPLACEMENT
With the body lower back panel removed.

REMOVAL

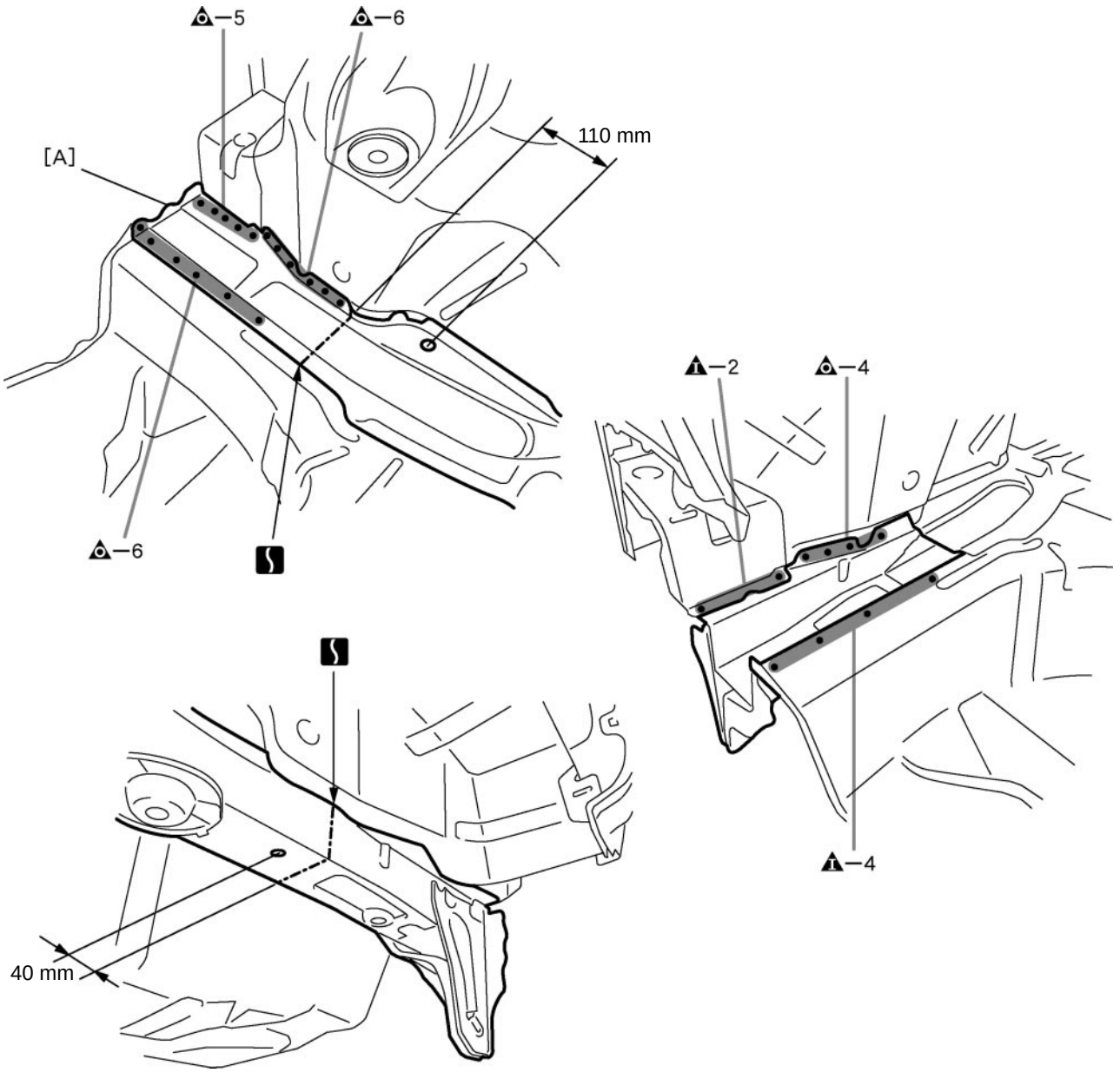

F23329

POINT
1 After removing [A], remove the rear floor sidemember.

PART NAME
[A] Floor Side Rail Front Panel
40 mm (1.57 in.) 110 mm (4.33 in.)

INSTALLATION

⁎ Temporarily install the new parts and measure each part of the new parts in accordance with the body dimension diagram. (See the body dimension diagram)
⁎ Inspect the fitting of the related parts around the new parts before welding. This affects the appearance of the finish.
⁎ After welding, apply the polyurethane foam to the corresponding parts.
⁎ After welding, apply body sealer and under-coating to the corresponding parts.
⁎ After applying the top coat layer, apply anti-rust agent to the inside of the necked section structural weld spots.

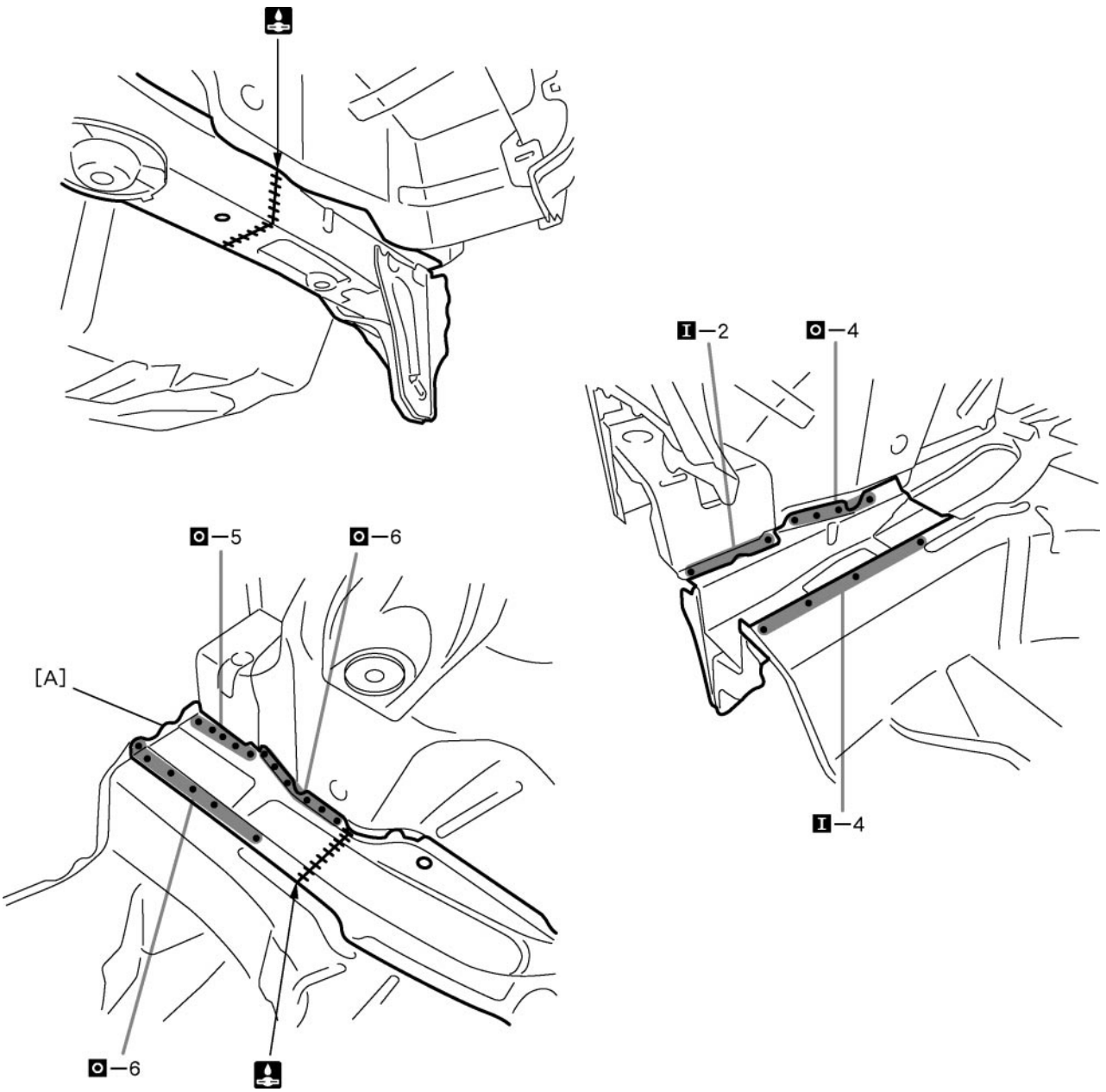

F23330

PART NAME

[A] Floor Side Rail Front Panel

ROOF PANEL (ASSY)

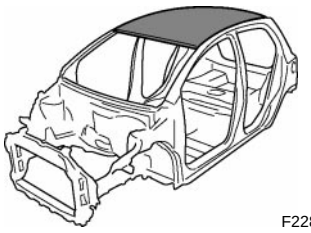
F22885A

REPLACEMENT

REMOVAL

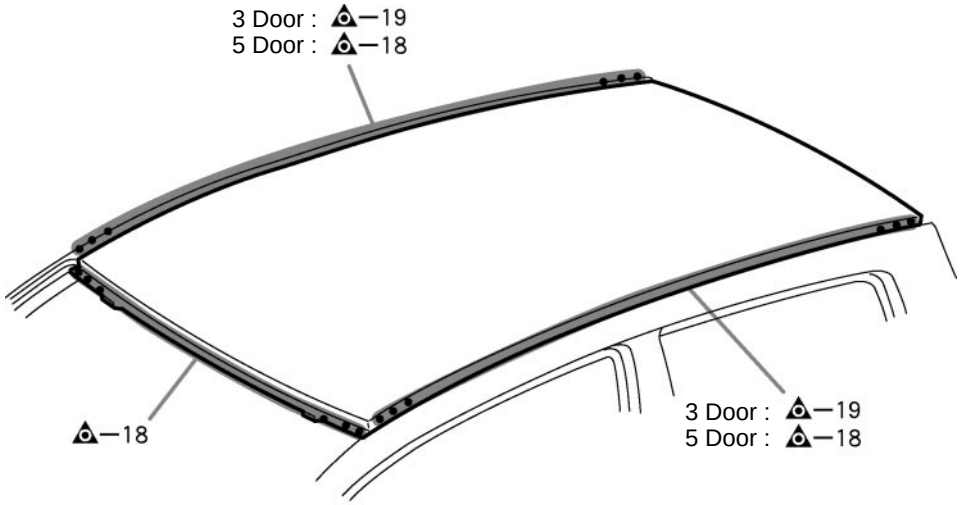

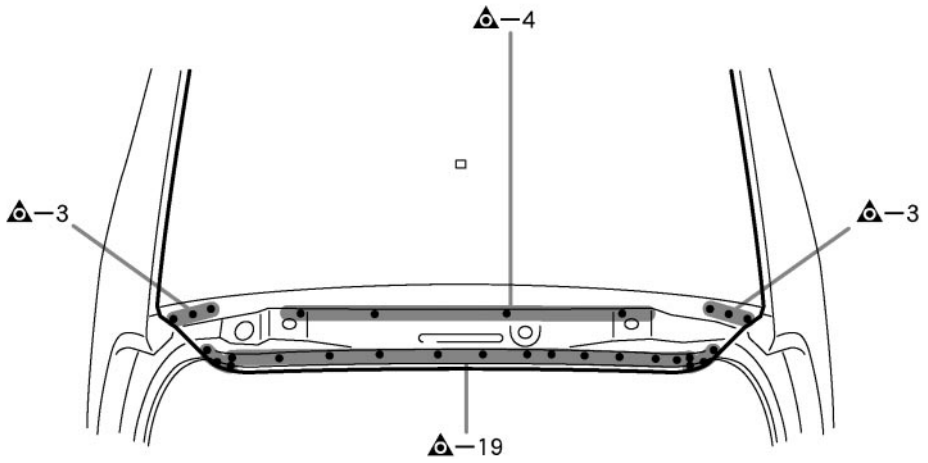

F23331

INSTALLATION

⁎ Temporarily install the new parts and measure each part of the new parts in accordance with the body dimension diagram. (See the body dimension diagram)
⁎ Inspect the fitting of the related parts around the new parts before welding. This affects the appearance of the finish.
⁎ After welding, apply polyurethane foam to the corresponding parts.
⁎ After welding, apply body sealer and undercoating to the corresponding parts.
⁎ After applying the top coat, apply anti-rust agent to the internal panel portion of the closed section structural weld points.

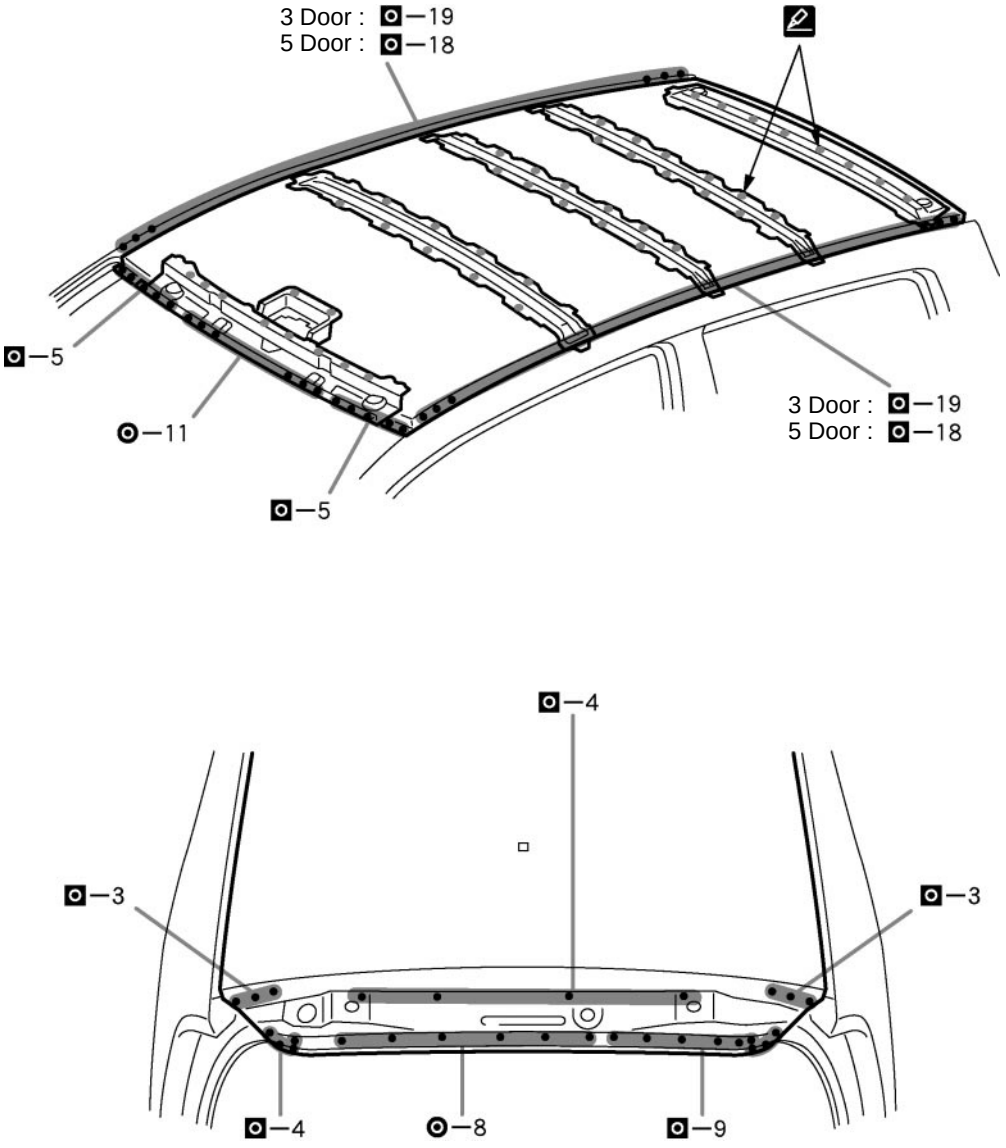

POINT

1 Before temporarily installing the new parts, apply body sealer to the window shield header panel, roof panel reinforcement and back window upper frame.
HINT:
1) Apply just enough sealer for the new parts to make contact.

OUTER PANEL INSTALLATION TORQUE

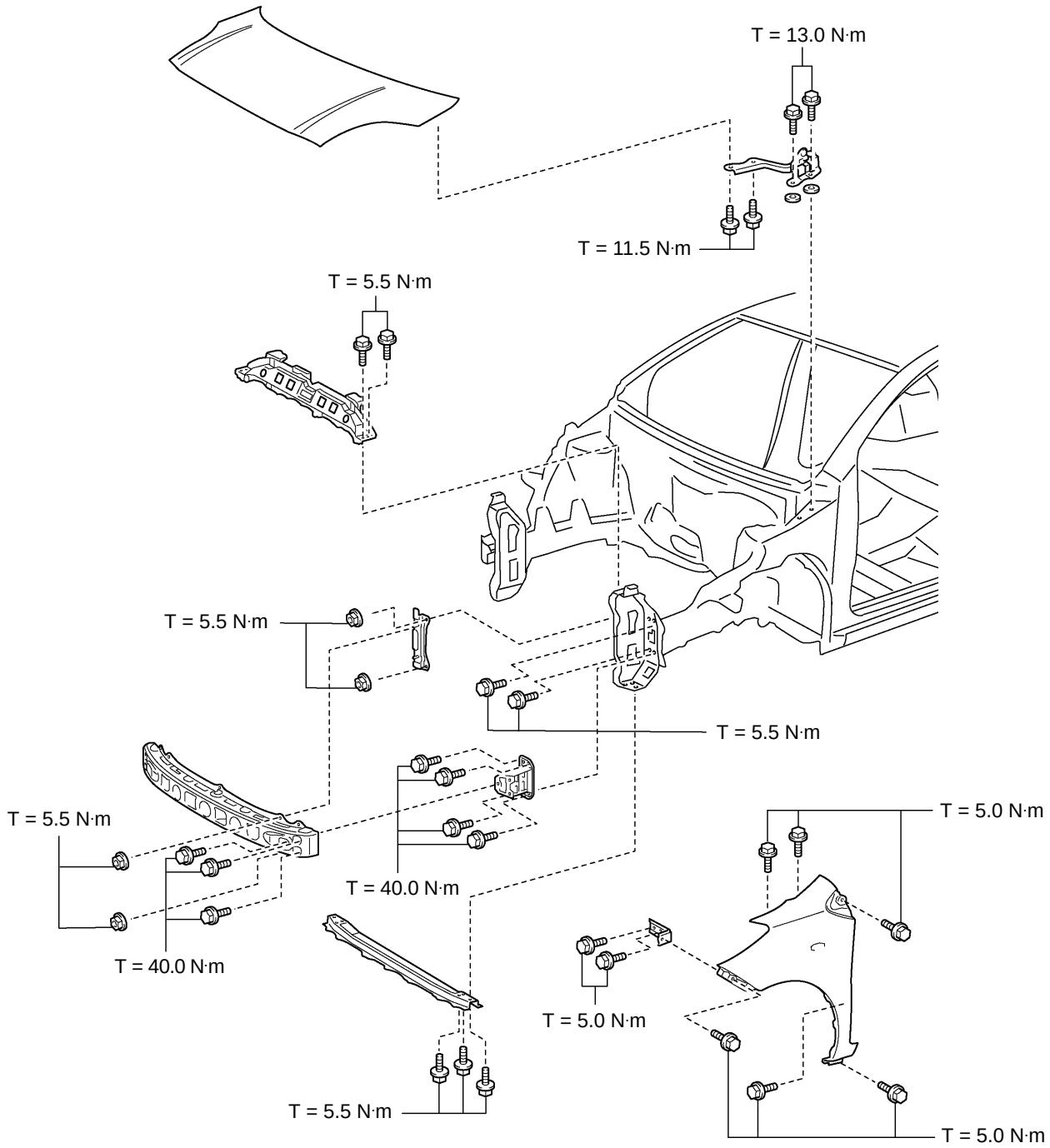

5.0 N·m (51 kgf·cm, 44 in.·lbf)	5.5 N·m (56 kgf·cm, 49 in.·lbf)	11.5 N·m (117 kgf·cm, 8 ft.·lbf)
13.0 N·m (133 kgf·cm, 10 ft.·lbf)	40.0 N·m (408 kgf·cm, 30 ft.·lbf)	—

[3 Door]

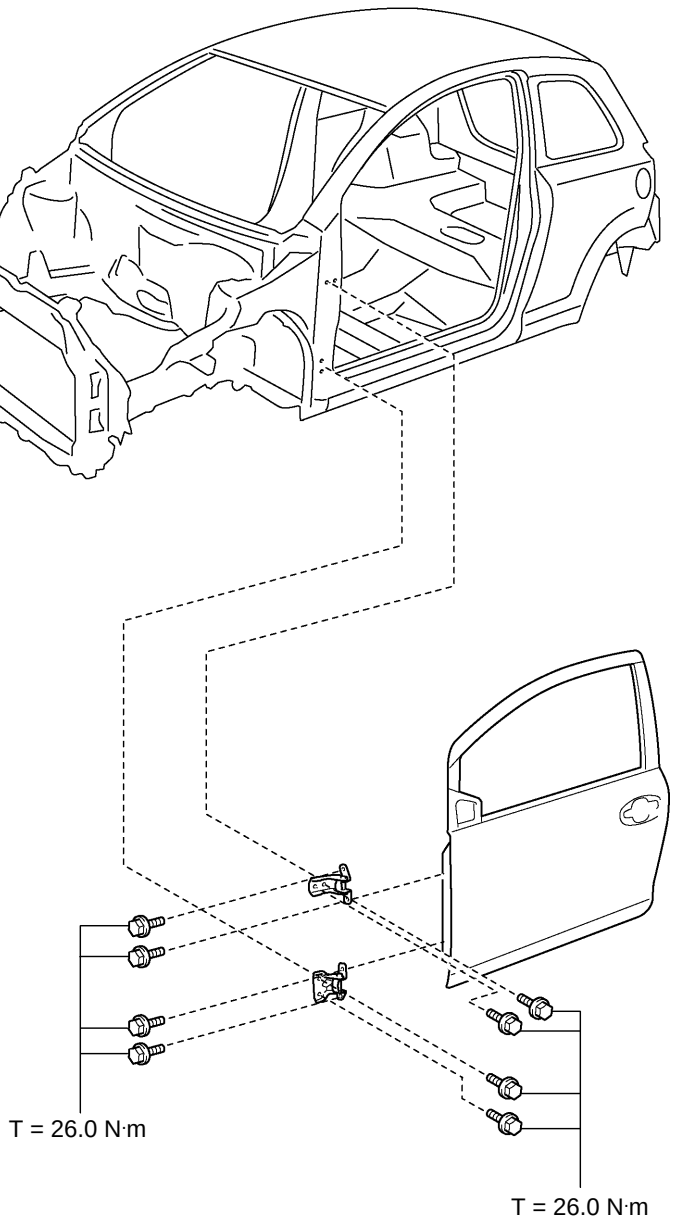

F23333

26.0 N·m (265 kgf·cm, 19 ft.·lbf)	—	—

[5 Door]

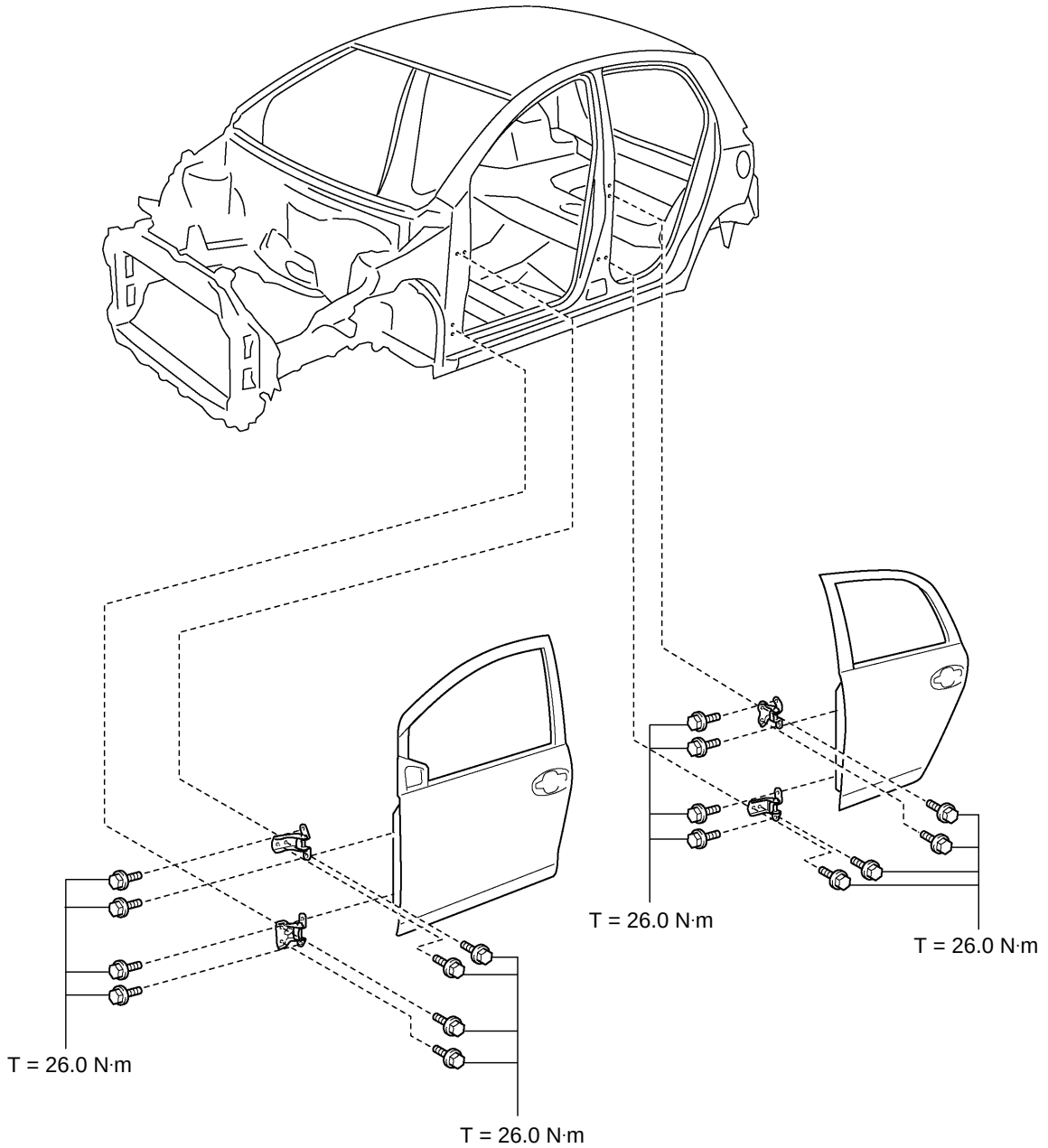

F23334

26.0 N·m (265 kgf·cm, 19 ft.·lbf)	—	—

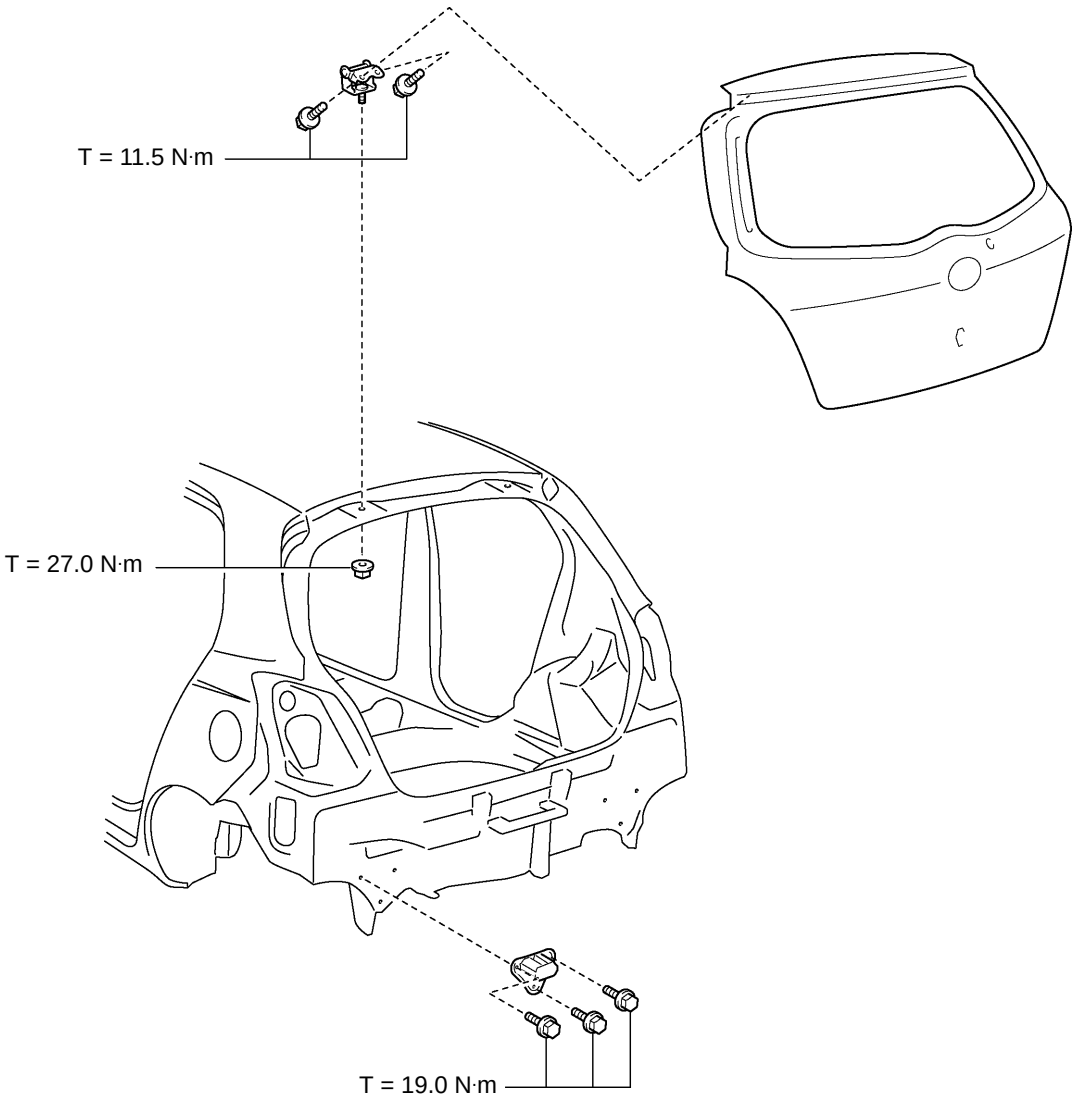

F22803

11.5 N·m (117 kgf·cm, 8 ft.·lbf)	19.0 N·m (194 kgf·cm, 14 ft.·lbf)	27.0 N·m (275 kgf·cm, 20 ft.·lbf)

FIT STANDARDS

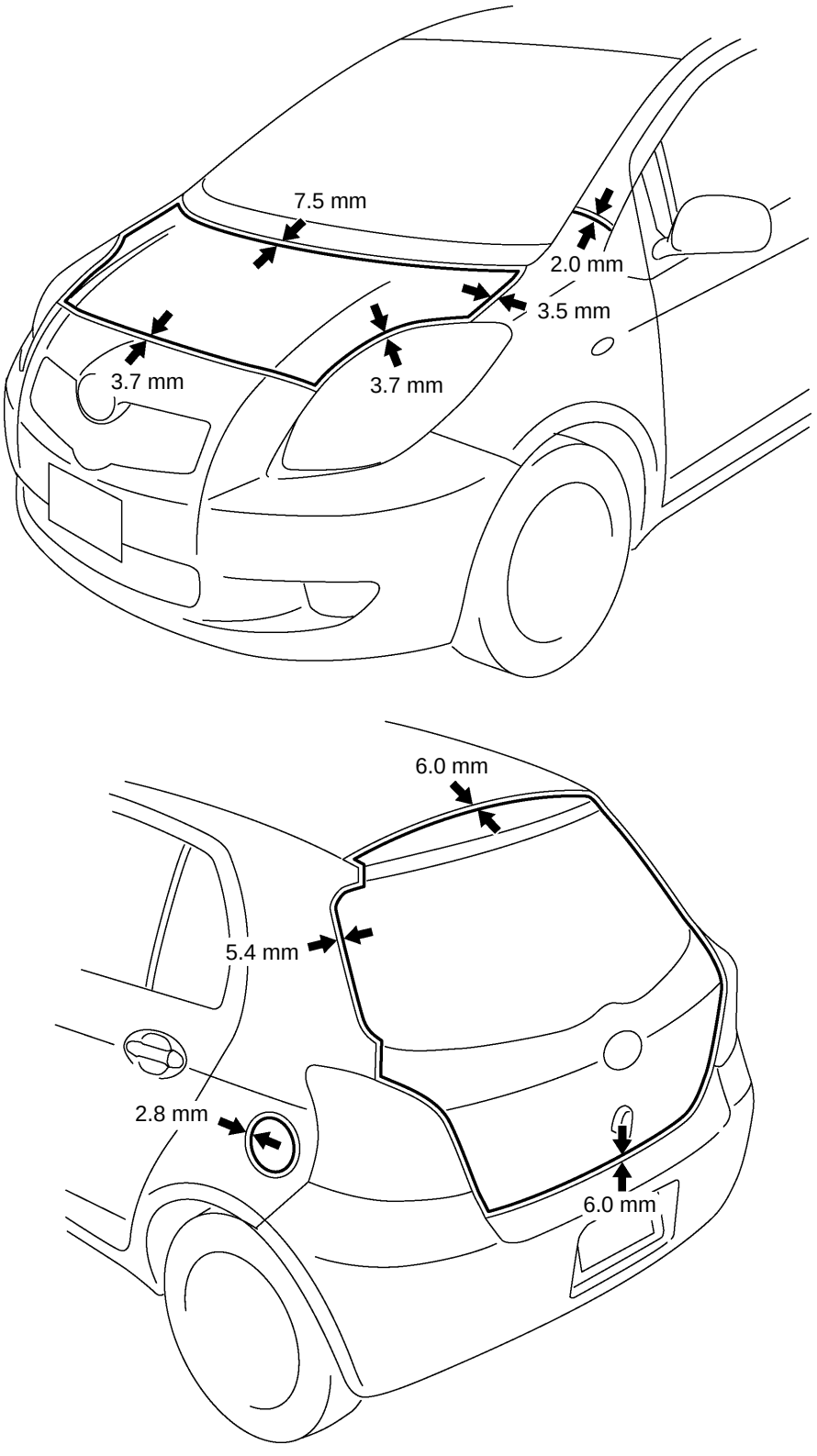

2.0 mm (0.079 in.)	2.8 mm (0.110 in.)	3.5 mm (0.138 in.)
3.7 mm (0.146 in.)	5.4 mm (0.213 in.)	6.0 mm (0.236 in.)
7.5 mm (0.295 in.)	—	—

[3 Door]

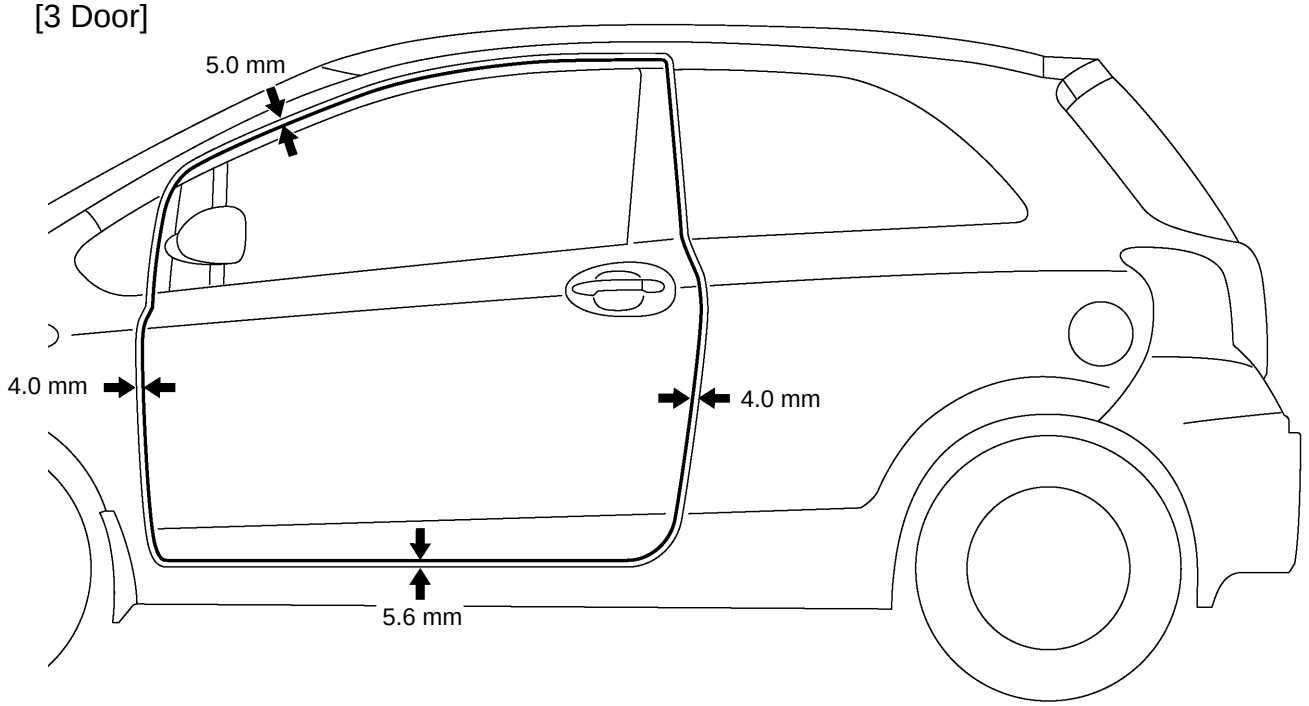

[5 Door]

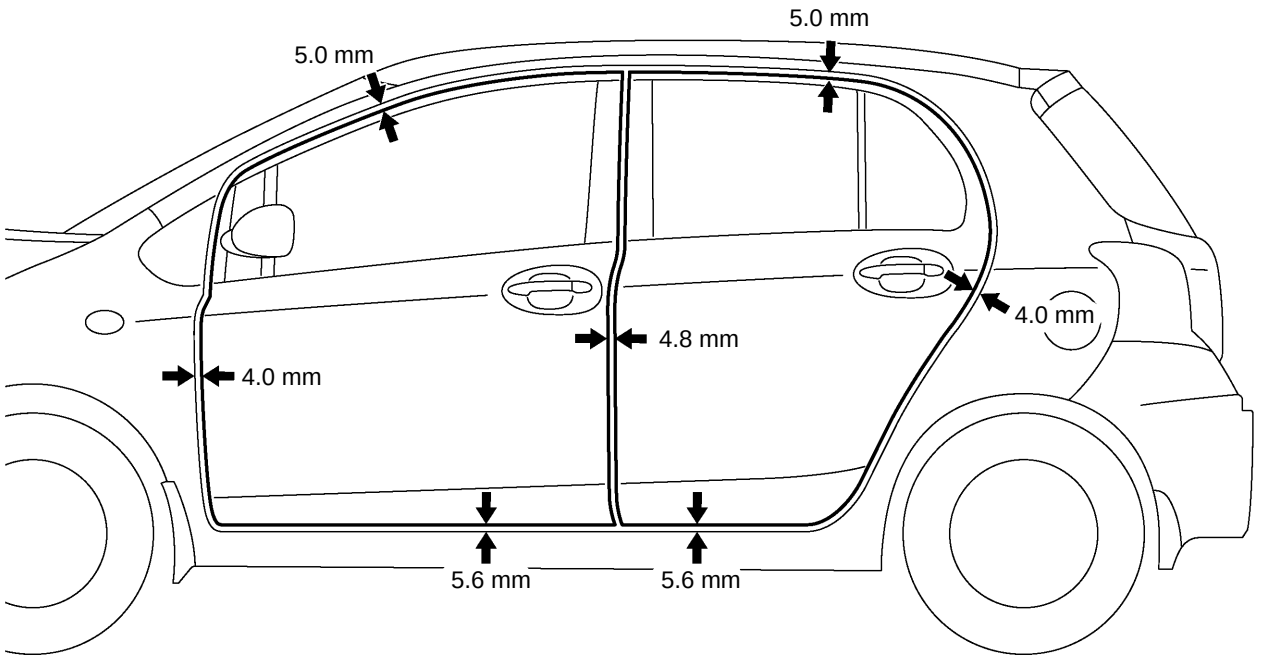

F23335

4.0 mm (0.157 in.)	4.8 mm (0.189 in.)	5.0 mm (0.197 in.)
5.6 mm (0.220 in.)	—	—

BODY PANEL SEALING AREAS

HINT:
1) Prior to applying body sealer, clean the area with a rag soaked in silicone remover.
2) If weld-through primer was used, first wipe off any excess and than coat with anti-corrosion primer before applying body sealer.
3) Wipe off excess body sealer with a rag soaked in silicone remover.
4) Besure to repair as necessary if the body sealer shows signs of damage such as peeling or cracking.

++++++++++	Flat Finishing	————	No Flat Finishing

1. ENGINE COMPARTMENT

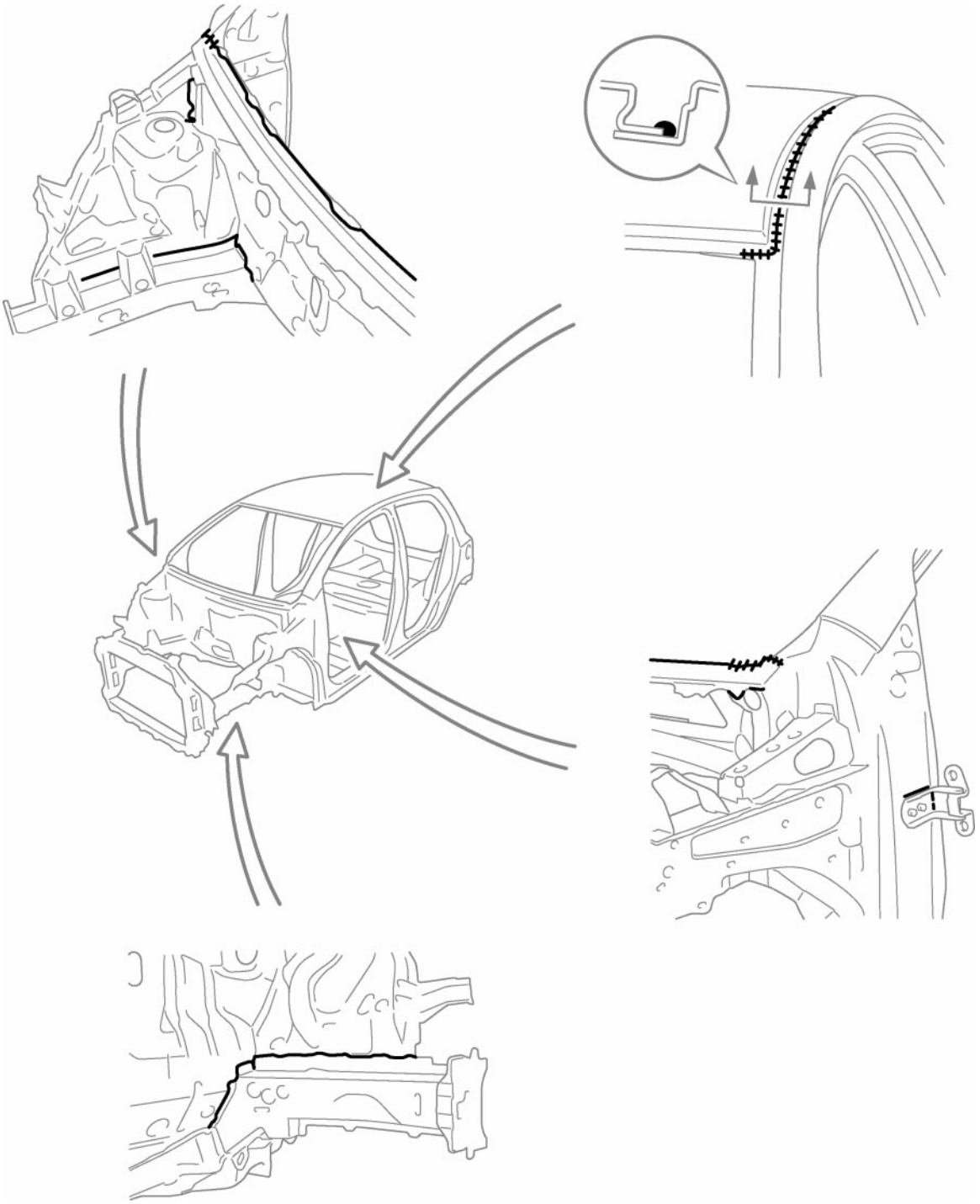

F22806

2. INSIDE

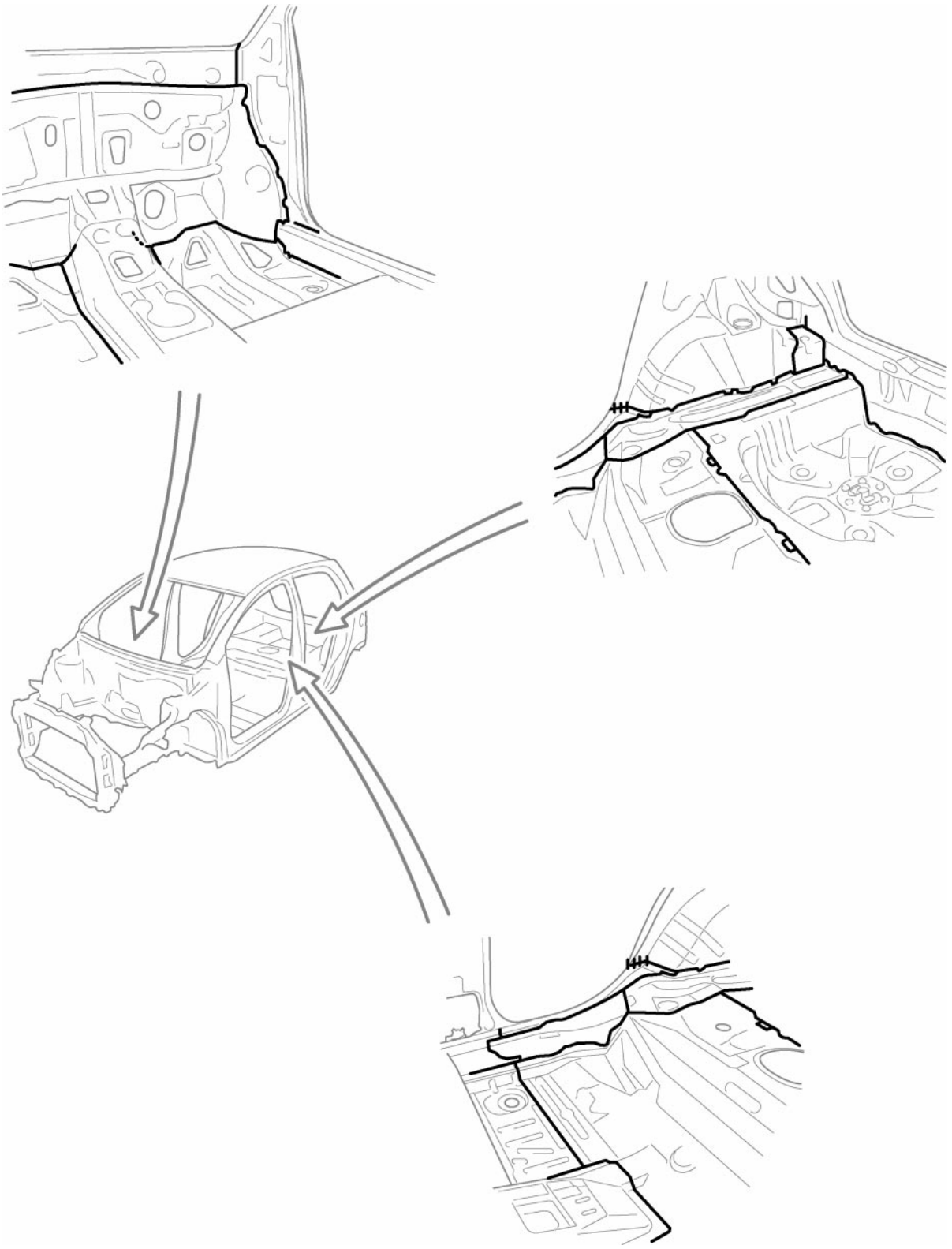

F22336

3. OUTSIDE

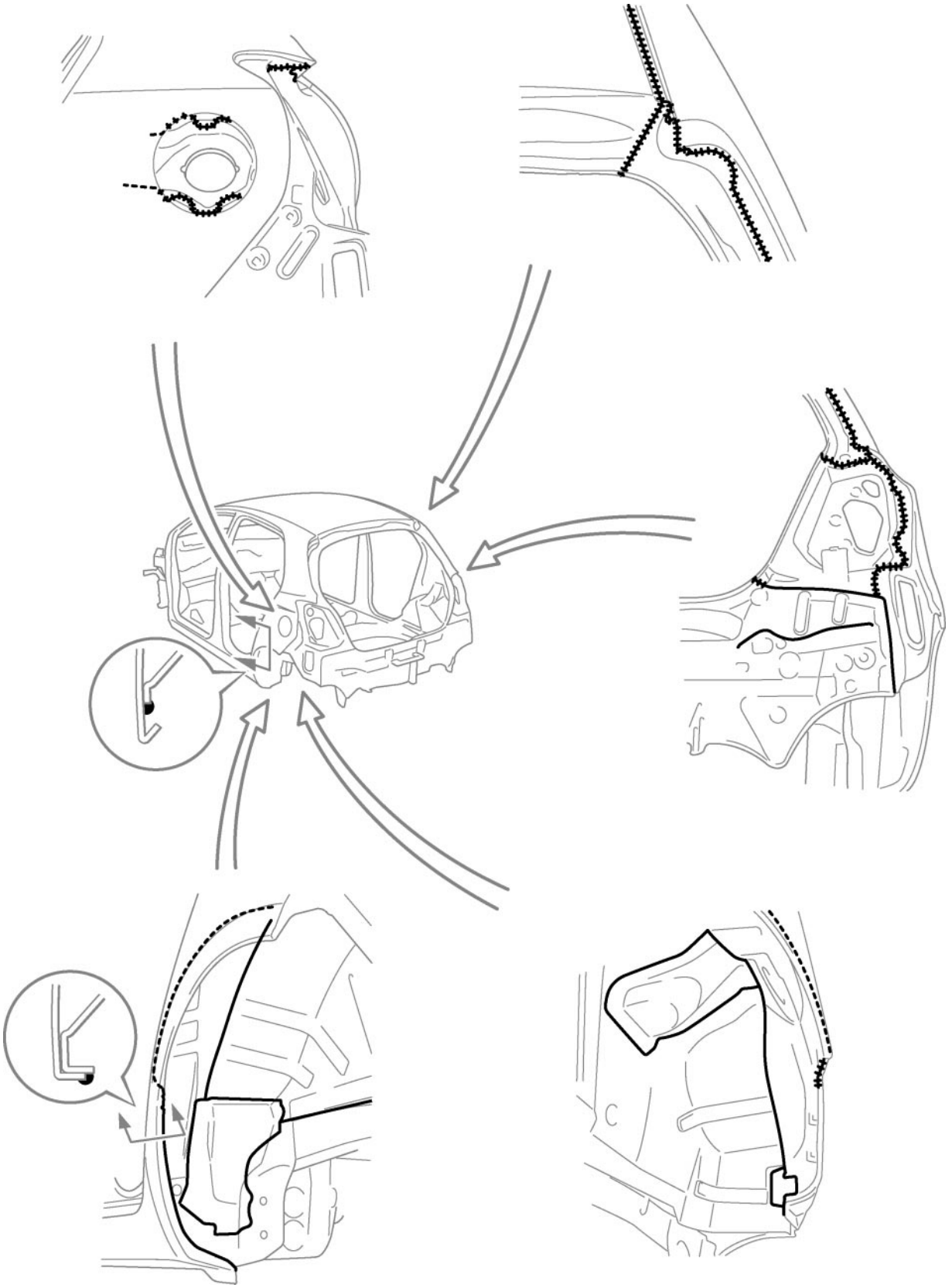

F22337

4. DOOR PARTS

[3 Door]

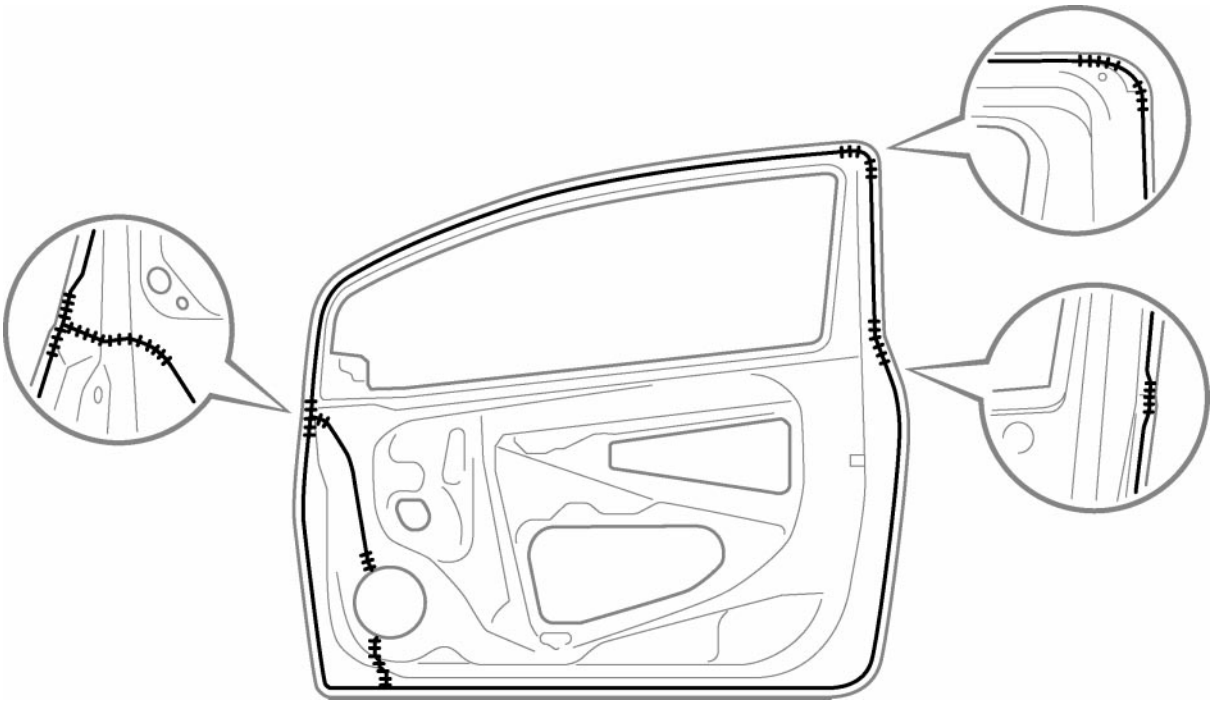

F22338

[5 Door]

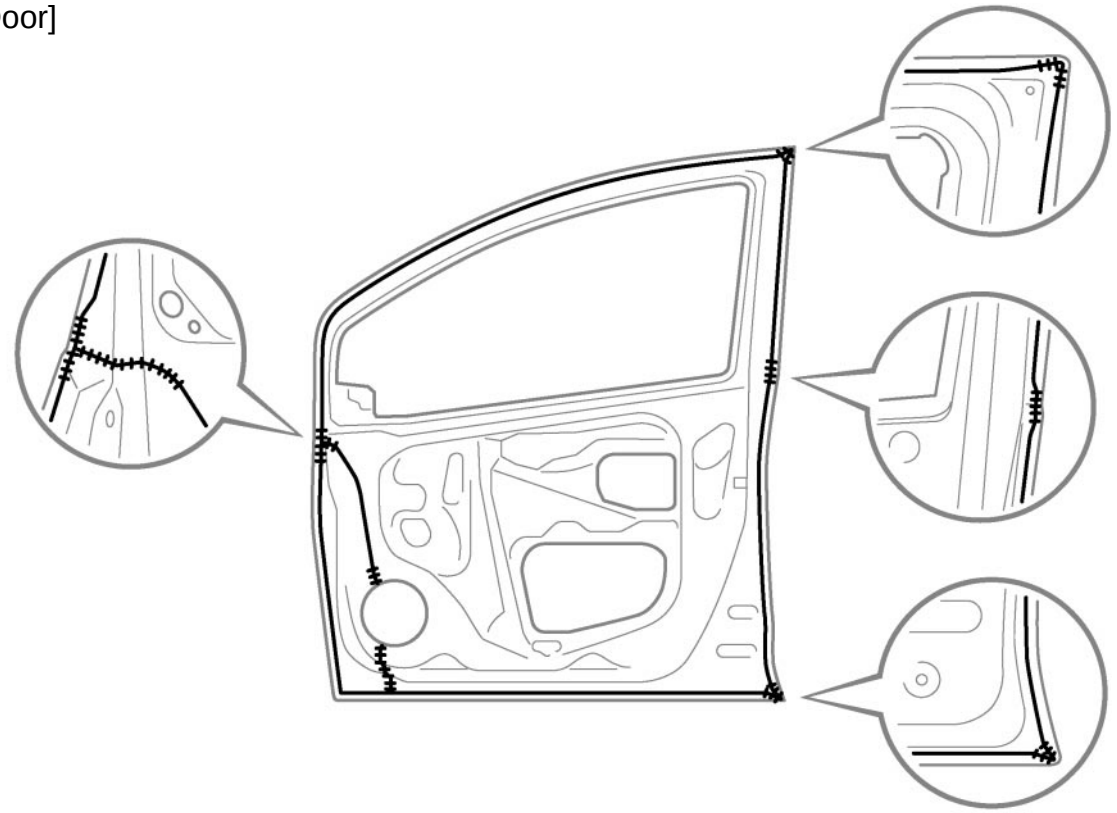

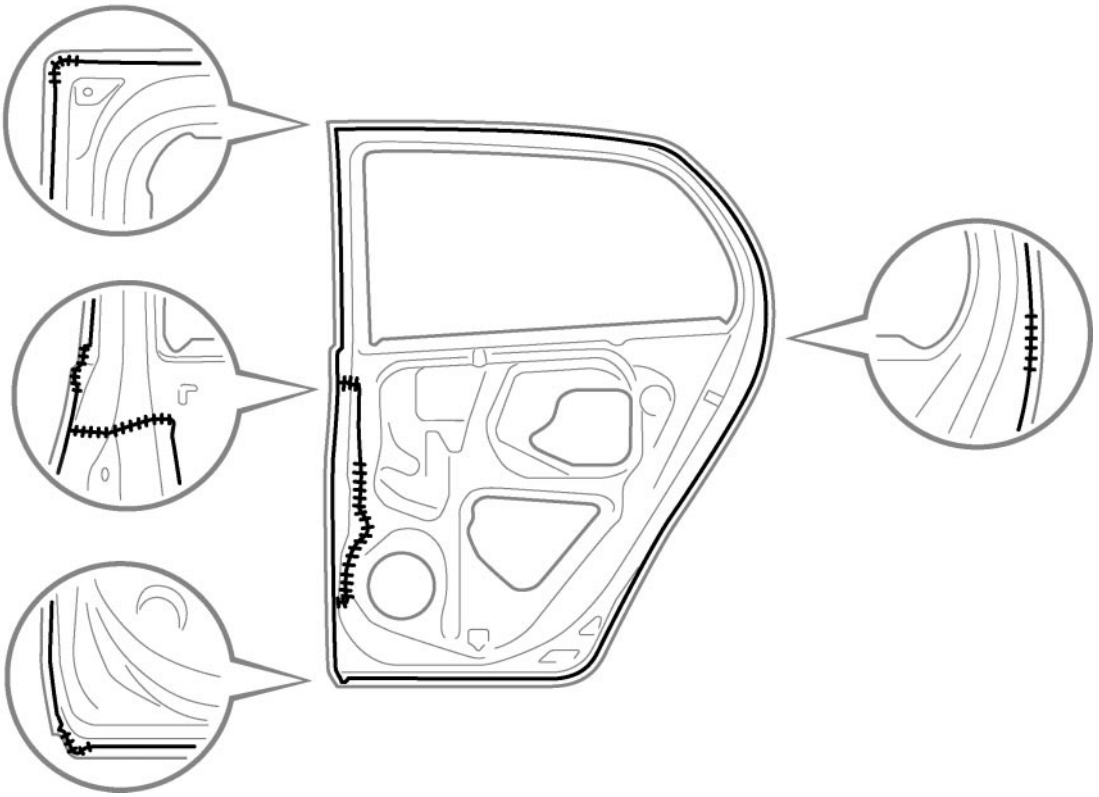

F23339

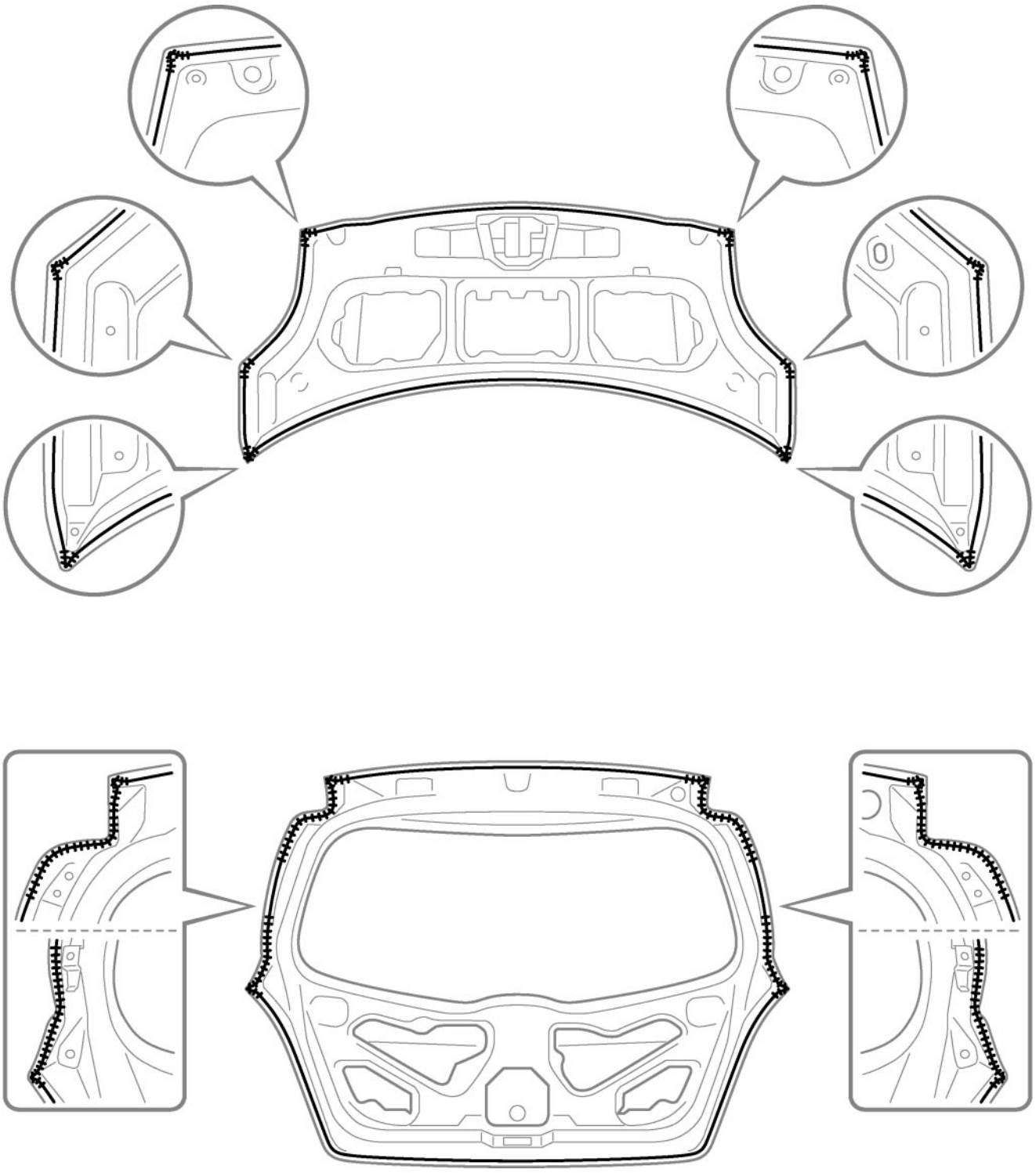

F22810

BODY PANEL UNDER COATING AREAS

HINT:
1) First wipe off any dirt, grease or oil with a rag soaked in silicone remover.
2) Cover the surrounding areas with masking paper to avoid coating unnecessary areas. If other areas are accidently coated, wipe off the coating immediately.
3) Apply the first coating of undercoat to all welded areas and panel joints, then apply a second coat over the entire area.
4) Do not coat parts which become hot such as the tailpipe, and moving parts such as the propeller shaft.
5) Apply under coating to all weld points under the body to ensure corrosion prevention at every location except the areas below.
6) Be sure to seal the edge of the flange of the member and bracket with undercoating.
7) Be sure to repair the under coating as necessary if there are signs of damage such as cracking or peeling.
8) Apply sealer before applying the under coat for rust prevention.

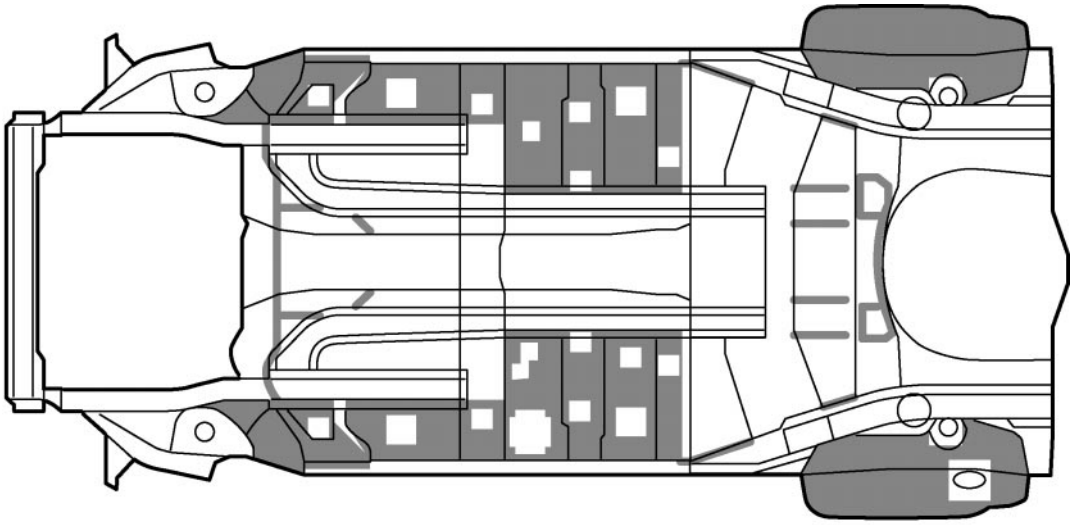

[LH]

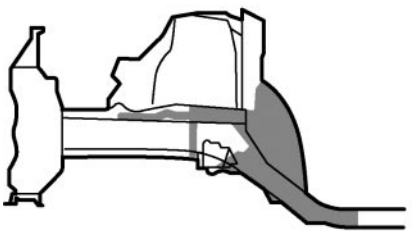

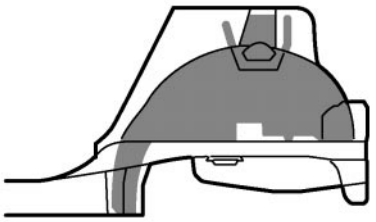

[RH]

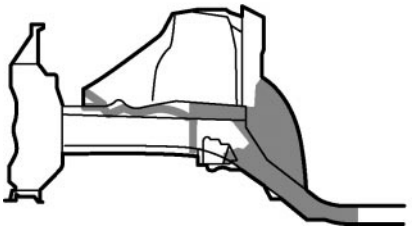

F23340

POINT
1 The film thickness of the interior portion of the rear wheel housing should be 1.0 mm (0.04 in.) or more for the front half and 2.0 mm (0.08 in.) of more for the rear half.

REFERENCE
The under coating should be applied according to the specifications for your country while referring to the notes above.

FOAMED MATERIAL APPLICATION AREAS

The sections shown in the figure below are filled with foamed material to provide noise insulation.
Refill with foamed materials after repairing these sections and their surrounding sections.
HINT:
1) Use the service holes located on the reverse side of the body panel to refill foamed materials.
2) Follow manufacturer directions when handling the foamed material.

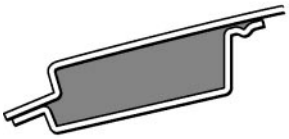

a – a



b – b

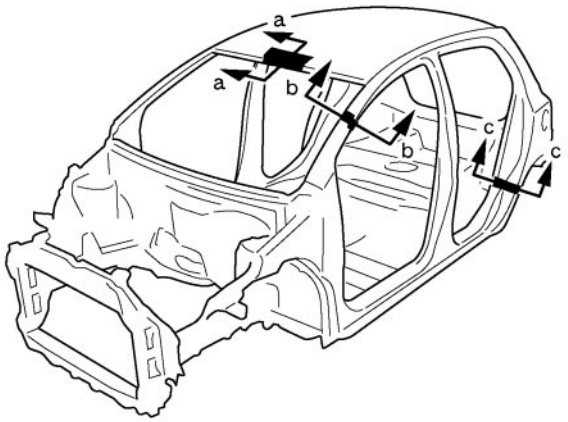

[5 Door Only]

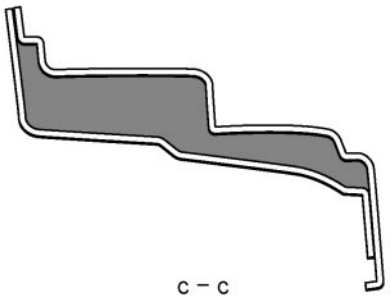

c – c

F23341

BODY PANEL ANTI-RUST AGENT (WAX) APPLICATION AREAS

HINT:
1) Apply anti-rust agent (wax) around the hinges whenever adjusting the doors and hoods.
2) Even if partially repairing a part, apply anti-rust agent (wax) over the entire application area of the part.
3) Wipe off the anti-rust agent immediately with a rag soaked in silicone remover if it is accidentally applied to other areas.

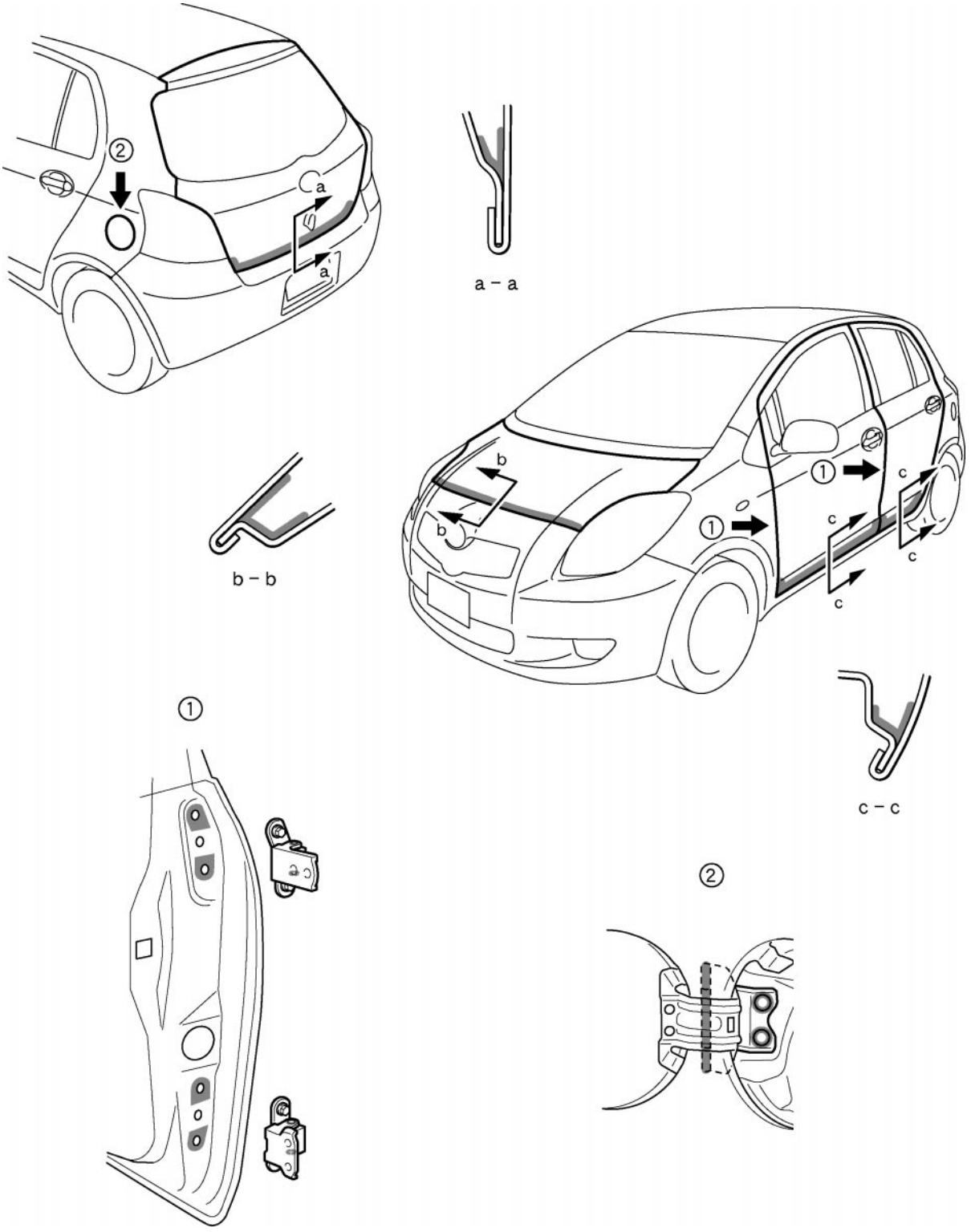

F23344

BODY PANEL ANTI-CHIPPING PAINT APPLICATION AREAS

HINT:
1) Anti-chipping paint should be applied to some areas before the second coat and to other areas after the top coat.
2) Wipe off the paint immediately with a rag soaked in silicone remover if unrelated areas are accidentally coated.

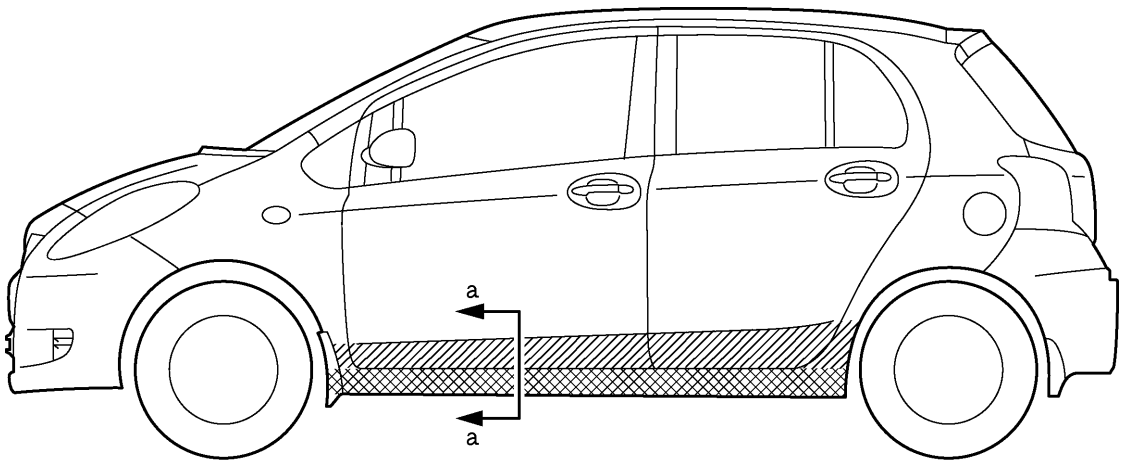

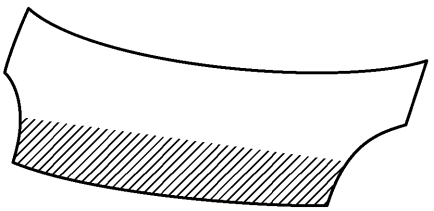

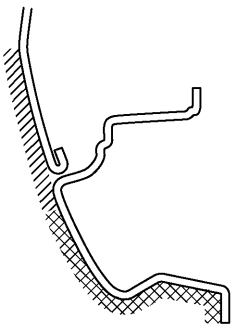

a – a

F23342

	PVC		Soft−Chip (Poly Olefine)	—	—

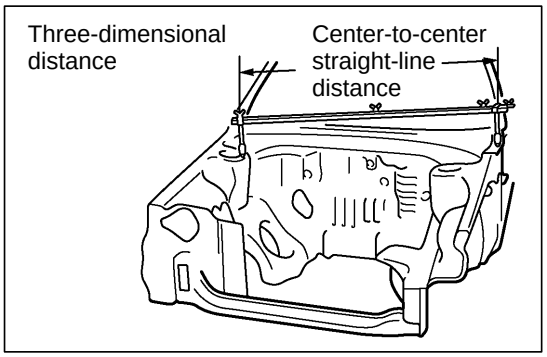

GENERAL INFORMATION

1. BASIC DIMENSIONS

(a) There are two types of dimensions in the diagram.

(1) (Three-dimensional distance)

* Straight-line distance between the centers of two measuring points.

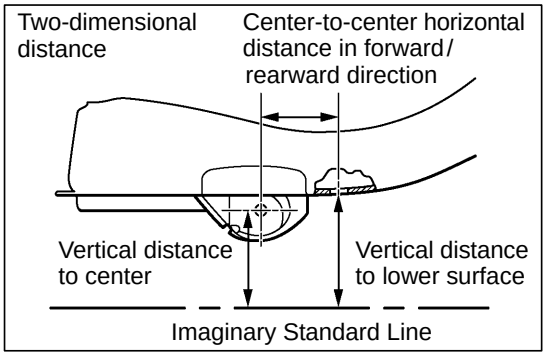

(2) (Two-dimensional distance)

* Horizontal distance in forward/rearward direction between the centers of two measuring points.
* The height from an imaginary standard line.

(b) In cases in which only one dimension is given, left and right are symmetrical.

(c) The dimensions in the following drawing indicate actual distance. Therefore, please use the dimensions as a reference.

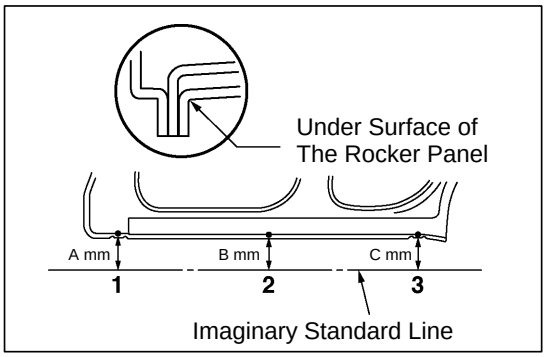

(d) The line that connects the places listed below is the imaginary standard line when measuring the height. (The dimensions are printed in the text.)

SYMBOL	Name
1	The place that was lowered A mm from the under surface of the rocker panel centered on the front jack up point.
2	The place that was lowered B mm from the under surface of the rocker panel centered between 1 and 3.
3	The place that was lowered C mm from the under surface of the rocker panel centered on the rear jack up point.

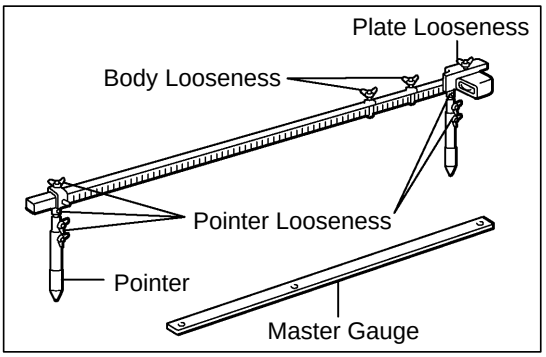

2. MEASURING

(a) Basically, all measurements are to be done with a tracking gauge. For portions where it is not possible to use a tracking gauge, a tape measure should be used.

(b) Use only a tracking gauge that has no looseness in the body, measuring plate, or pointers.

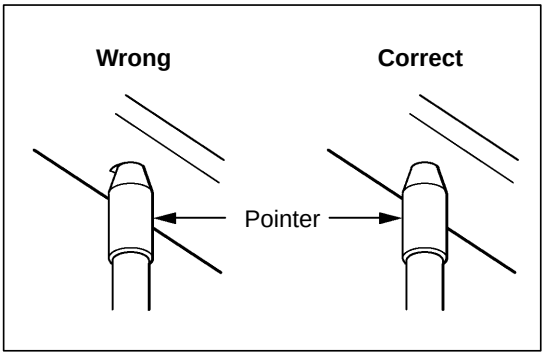

HINT:

1) The height of the left and right pointers must be equal.

2) Always calibrate the tracking gauge before measuring or after adjusting the pointer height.

3) Take care not to drop the tracking gauge or otherwise shock it.

4) Confirm that the pointers are securely in the holes.

(c) When using a tape measure, avoid twists and bends in the tape.

BODY DIMENSION DRAWINGS

ENGINE COMPARTMENT

(Three-Dimensional Distance)

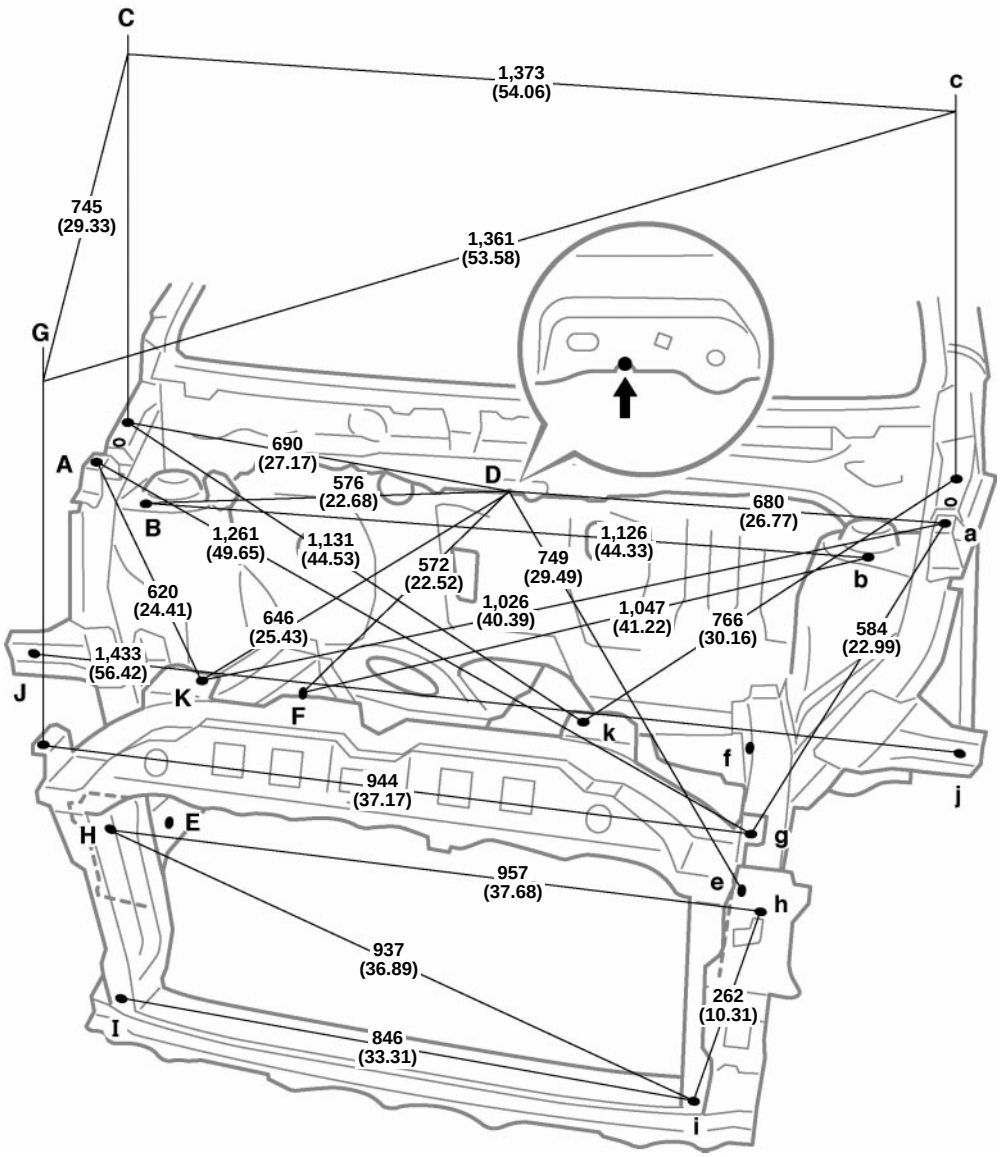

Vehicle Dimensions

A-a	A-C or a-c	B-C or b-c	B-c or b-C	B-K or b-k	B-k or b-K	K-k
1,324 (52.13)	170 (6.69)	209 (8.23)	1,261 (49.65)	564 (22.20)	942 (37.09)	505 (19.88)

Height from Imaginary Standard Line

A, a	C, c	G, g
810 (31.89)	815 (32.09)	614 (24.17)

HINT: For symbols, capital letters indicate right side of vehicle, small letters indicate left side of vehicle (seen from rear).

mm (in.)

Symbol	Name	Hole dia.	Symbol	Name	Hole dia.
A, a	Front fender installation nut	M6 (0.24)	G, g	Headlight bracket standard hole	ø 10 (0.39)
B, b	Front spring support hole−inner	ø 11 (0.43)	H, h	Crush box installation hole	ø 6.3 (0.248)
C, c	Hood hinge installation nut-rear	M8 (0.31)	I, i	Radiator seal installation hole	ø 9 (0.35)
D	Cowl panel center mark	—	J, j	Front fender mounting bracket standard hole	ø 10 (0.39)
E, e	Front side member standard hole	ø 15 (0.59)	K, k	Front bumper installation hole	ø 7 (0.28)
F, f	Front side member standard hole	ø 10 (0.39)	—	—	—

BODY OPENING AREAS (Side View)
3-Door

(Three-Dimensional Distance)

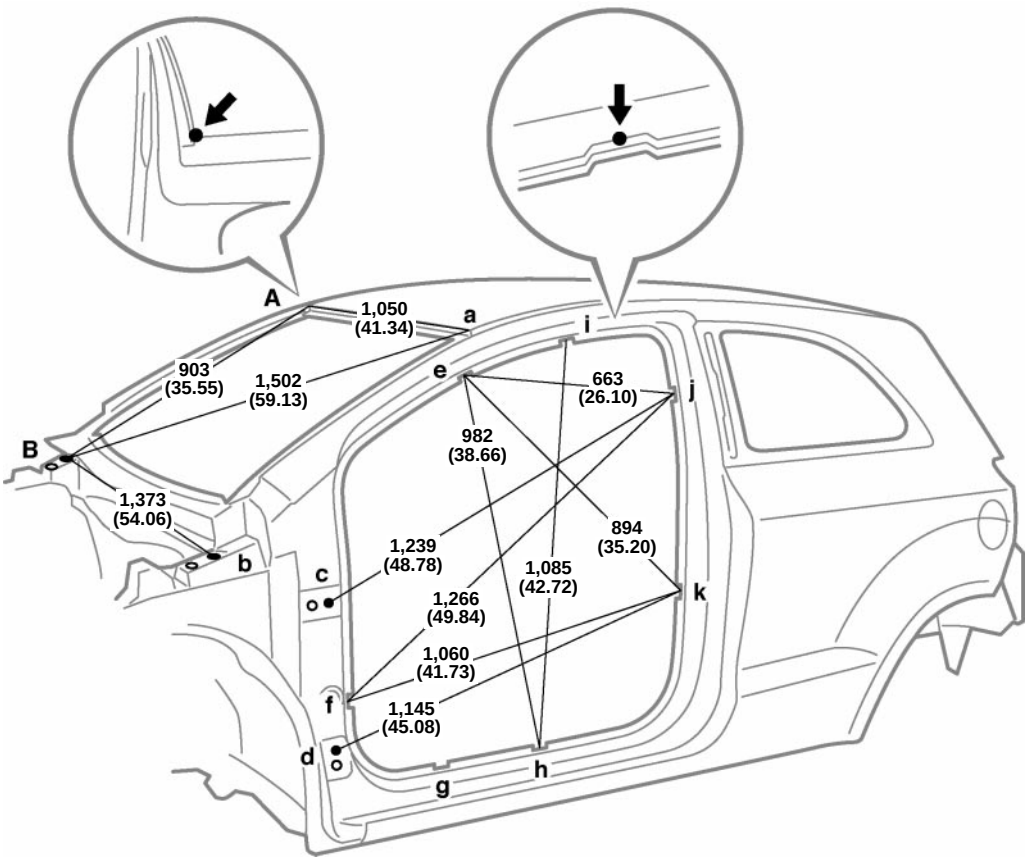

Vehicle Dimensions

E-e	F-f	G-g	H-h	I-i	J-j	K-k
1,147 (45.16)	1,379 (54.29)	1,417 (55.79)	1,417 (55.79)	1,090 (42.91)	1,258 (49.53)	1,395 (54.92)

E-f or e-F	E-h or e-H	E-j or e-J	E-k or e-K	F-j or f-J	F-k or f-K	G-h or g-H	H-i or h-I	J-k or j-K
1,532 (60.31)	1,609 (63.35)	1,372 (54.02)	1,549 (60.98)	1,826 (71.89)	1,745 (68.70)	1,440 (56.69)	1,650 (64.96)	1,429 (56.26)

HINT: For symbols, capital letters indicate right side of vehicle, small letters indicate left side of vehicle (seen from rear).

mm (in.)

Symbol	Name	Hole dia.	Symbol	Name	Hole dia.
A, a	Roof panel corner	—	G, g	Rocker panel assembly mark	—
B, b	Hood hinge installation nut	M8 (0.31)	H, h	Rocker panel assembly mark	—
C, c	Front door hinge installation nut	M8 (0.31)	I, i	Roof side rail assembly mark	—
D, d	Front door hinge installation nut	M8 (0.31)	J, j	Quarter panel assembly mark	—
E, e	Front body pillar assembly mark	—	K, k	Quarter panel assembly mark	—
F, f	Front body pillar assembly mark	—	—	—	—

BODY OPENING AREAS (Side View: Front)
5-Door

(Three-Dimensional Distance)

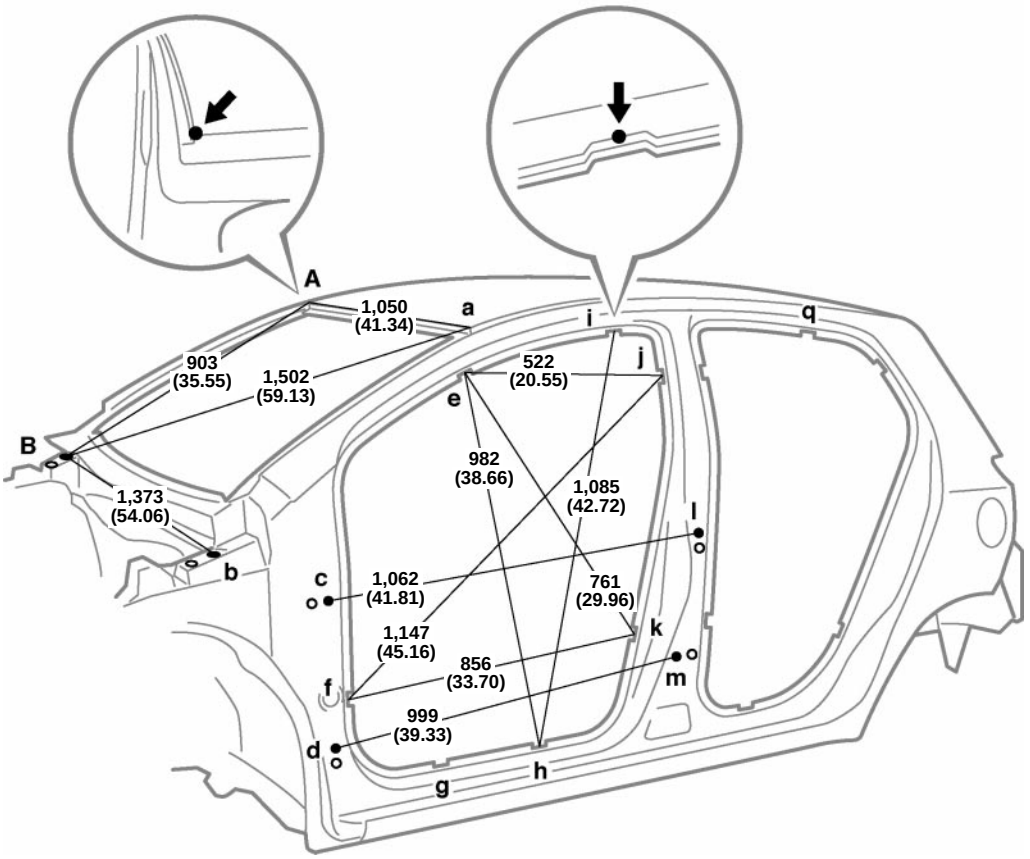

Vehicle Dimensions Left ↔ Right

E-e	F-f	G-g	H-h	I-i	J-j	K-k
1,147 (45.16)	1,379 (54.29)	1,417 (55.79)	1,417 (55.79)	1,090 (42.91)	1,263 (49.72)	1,391 (54.76)

E-f or e-F	E-h or e-H	E-j or e-J	F-j or f-J	F-k or f-K	H-i or h-I	I-q or I-Q	J-k or j-K
1,532 (60.31)	1,609 (63.35)	1,312 (51.65)	1,748 (68.82)	1,628 (64.09)	1,650 (64.96)	1,260 (49.61)	1,431 (56.34)

HINT: For symbols, capital letters indicate right side of vehicle, small letters indicate left side of vehicle (seen from rear).

mm (in.)

Symbol	Name	Hole dia.	Symbol	Name	Hole dia.
A, a	Roof panel corner	—	H, h	Rocker panel assembly mark	—
B, b	Hood hinge installation nut	M8 (0.31)	I, i	Roof side rail assembly mark	—
C, c	Front door hinge installation nut	M8 (0.31)	J, j	Center body pillar assembly mark	—
D, d	Front door hinge installation nut	M8 (0.31)	K, k	Center body pillar assembly mark	—
E, e	Front body pillar assembly mark	—	L, l	Rear door hinge installation nut	M8 (0.31)
F, f	Front body pillar assembly mark	—	M, m	Rear door hinge installation nut	M8 (0.31)
G, g	Rocker panel assembly mark	—	Q, q	Roof side rail assembly mark	—

BODY OPENING AREAS (Side View: Rear)
5-Door

(Three-Dimensional Distance)

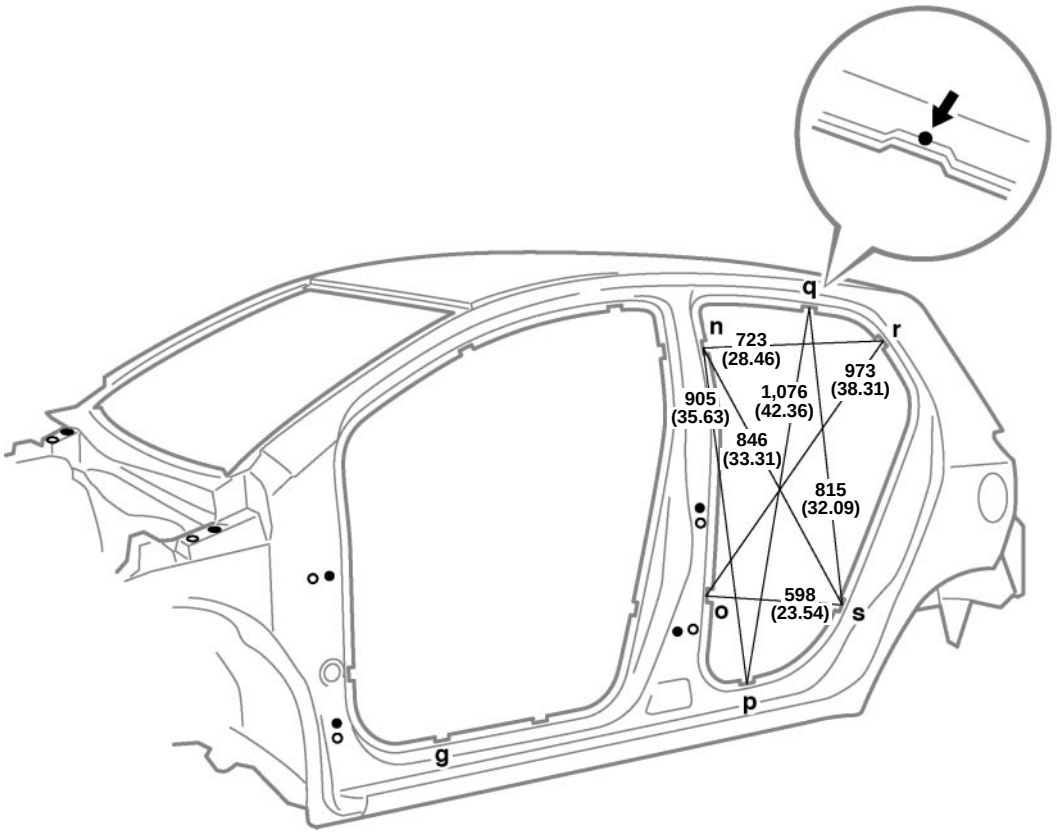

Vehicle Dimensions Left ↔ Right

N-n	O-o	P-p	Q-q	R-r	S-s
1,263 (49.72)	1,381 (54.37)	1,417 (55.79)	1,068 (42.05)	1,130 (44.49)	1,405 (55.31)

G-p or g-P	N-r or n-R	N-s or n-S	O-r or o-R	O-s or o-S	P-q or p-Q	R-s or r-S
1,717 (67.60)	1,397 (55.00)	1,578 (62.13)	1,584 (62.36)	1,516 (59.69)	1,634 (64.33)	1,451 (57.13)

HINT: For symbols, capital letters indicate right side of vehicle, small letters indicate left side of vehicle (seen from rear).

mm (in.)

Symbol	Name	Hole dia.	Symbol	Name	Hole dia.
G, g	Rocker panel assembly mark	—	Q, q	Roof side rail assembly mark	—
N, n	Center body pillar assembly mark	—	R, r	Quarter panel assembly mark	—
O, o	Center body pillar assembly mark	—	S, s	Quarter panel assembly mark	—
P, p	Quarter panel assembly mark	—	—	—	—

BODY OPENING AREAS (Rear View)
3-Door

(Three-Dimensional Distance)

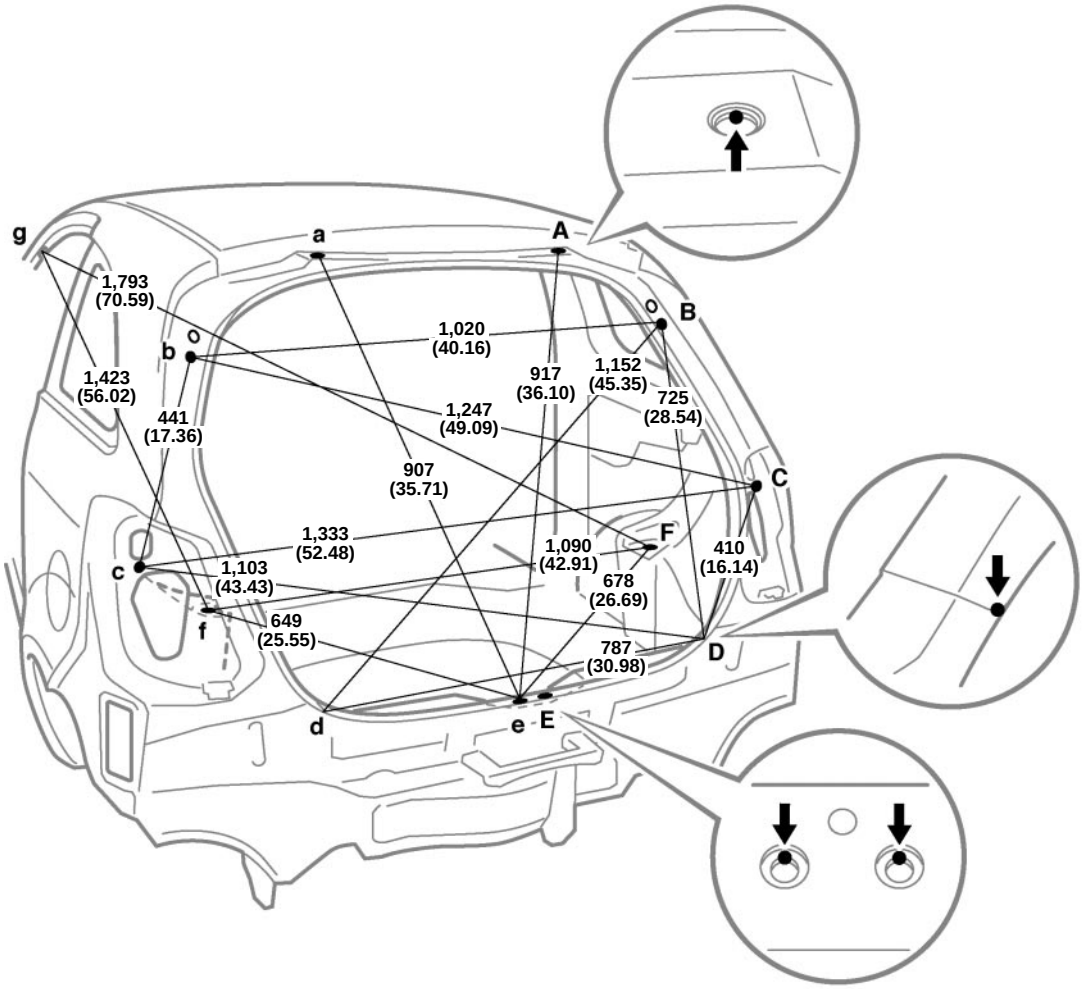

HINT: For symbols, capital letters indicate right side of vehicle, small letters indicate left side of vehicle (seen from rear).

mm (in.)

Symbol	Name	Hole dia.	Symbol	Name	Hole dia.
A, a	Back door hinge installation hole	ø 10.2 (0.402): RH ø 10.2 (0.402) × 12 (0.47): LH	E, e	Back door lock striker installation nut	M8 (0.31)
B, b	Back door stay installation nut	M6 (0.24)	F, f	Rear shock absorber installation hole−inner	ø 18 (0.71)
C, c	Back door opening trough standard hole	ø 10 (0.39)	G, g	Roof side rail assembly mark	—
D, d	Back door opening trough/Body lower back panel adjoining point	—	—	—	—

BODY OPENING AREAS (Rear View)
5-Door

(Three-Dimensional Distance)

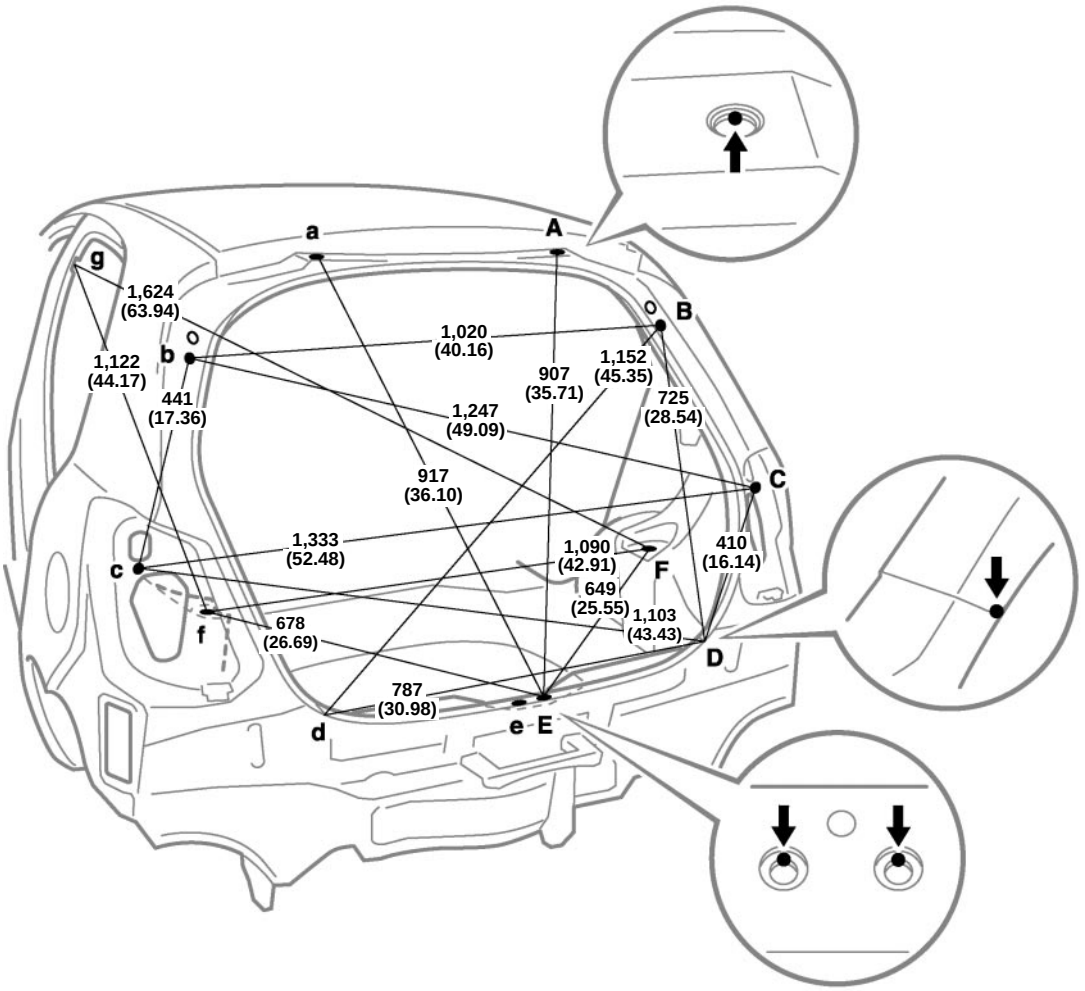

HINT: For symbols, capital letters indicate right side of vehicle, small letters indicate left side of vehicle (seen from rear).

mm (in.)

Symbol	Name	Hole dia.	Symbol	Name	Hole dia.
A, a	Back door hinge installation hole	ø 10.2 (0.402): RH ø 10.2 (0.402) × 12 (0.47): LH	E, e	Back door lock striker installation nut	—
B, b	Back door stay installation nut	M6 (0.24)	F, f	Rear shock absorber installation hole−inner	M8 (0.31)
C, c	Back door opening trough standard hole	ø 10 (0.39)	G, g	Center body pillar assembly mark	ø 18 (0.71)
D, d	Back door opening trough/Body lower back panel adjoining point	—	—	—	—

UNDER BODY

(Three-Dimensional Distance)

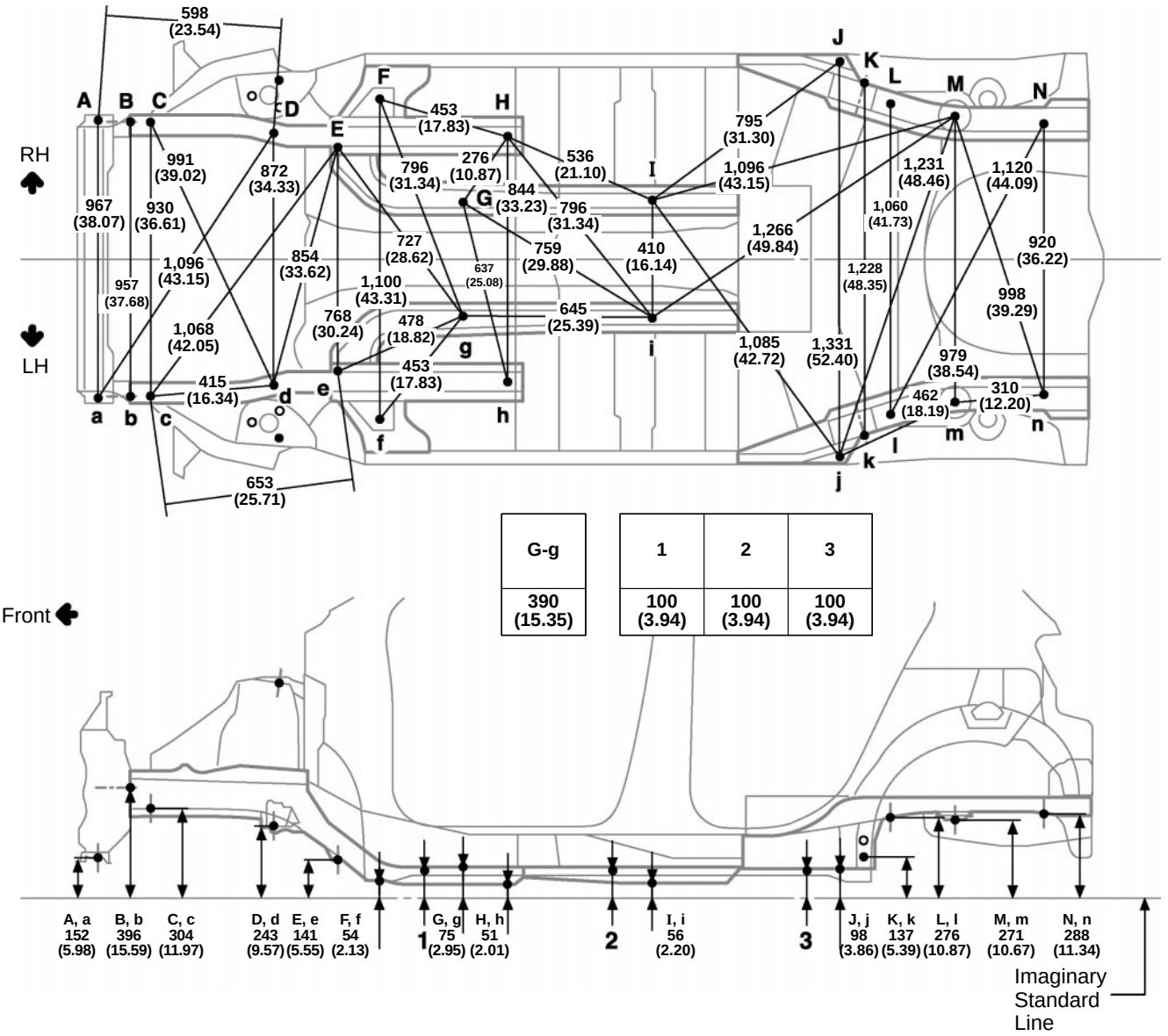

G-g
390 (15.35)

1	2	3
100 (3.94)	100 (3.94)	100 (3.94)

HINT: For symbols, capital letters indicate right side of vehicle, small letters indicate left side of vehicle (seen from rear).

mm (in.)

Symbol	Name	Hole dia.	Symbol	Name	Hole dia.
A, a	Radiator side support installation nut	M6 (0.24)	H, h	Front side member standard hole	ø 18 (0.71)
B, b	Crush box installation hole	ø 6.3 (0.248)	I, i	Front floor pan standard hole	ø 18 (0.71)
C, c	Front side member standard hole	ø 18 (0.71)	J, j	Floor side inner rear member standard hole	ø 18 (0.71)
D, d	Front suspension installation nut	M12 (0.47)	K, k	Trading arm installation outer hole−inner	ø 15 (0.59)
E, e	Front suspension installation nut	M14 (0.55)	L, l	Rear floor sidemember standard hole	ø 18 (0.71)
F, f	Torque box front standard hole	ø 25 (0.98)	M, m	Rear spring plate standard hole	ø 18 (0.71)
G, g	Front floor pan standard hole	ø 18 (0.71)	N, n	Rear floor sidemember standard hole	ø 18 (0.71)

UNDER BODY

(Two-Dimensional Distance)

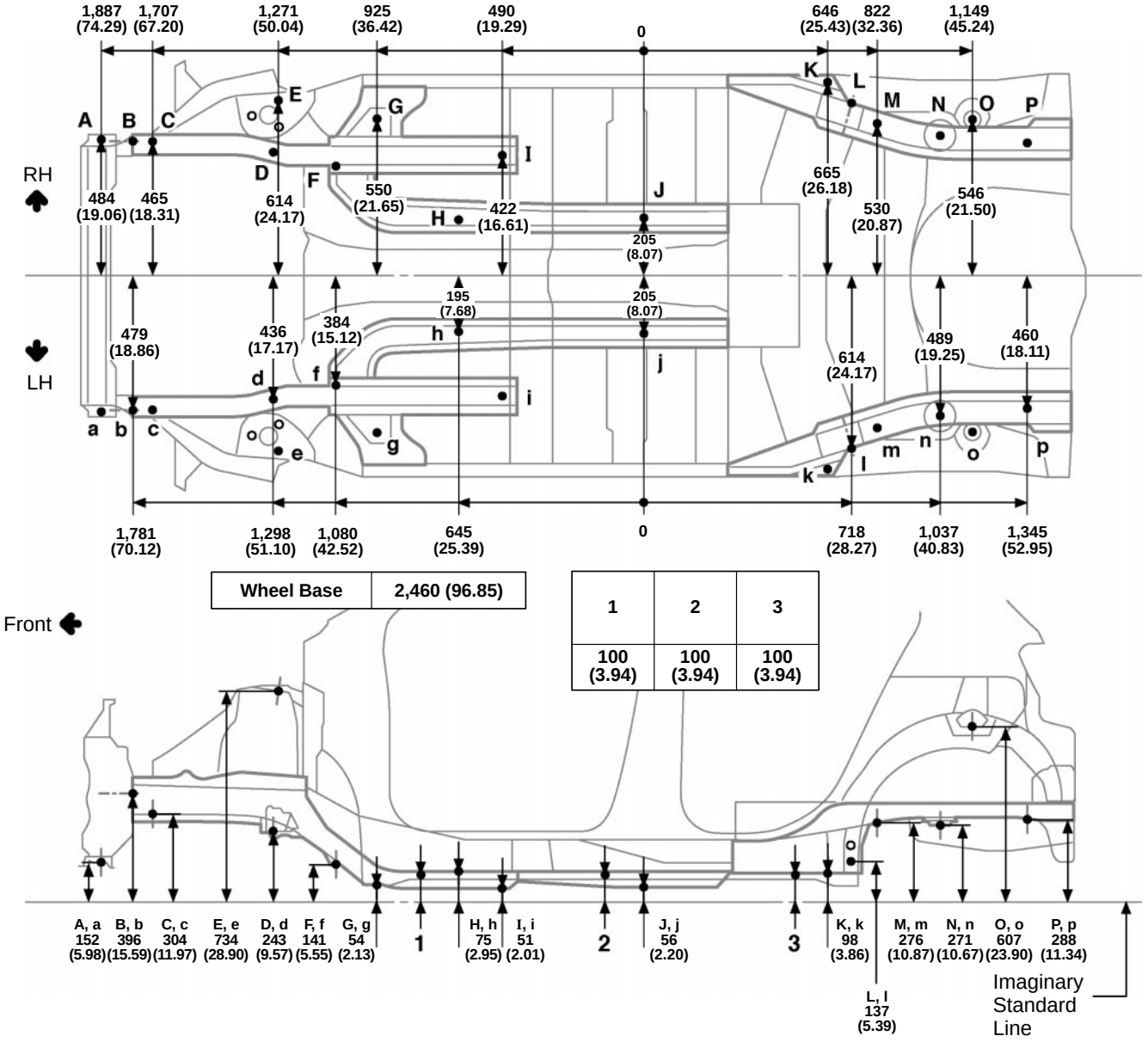

Wheel Base	2,460 (96.85)

1	2	3
100 (3.94)	100 (3.94)	100 (3.94)

HINT: For symbols, capital letters indicate right side of vehicle, small letters indicate left side of vehicle (seen from rear).

mm (in.)

Symbol	Name	Hole dia.	Symbol	Name	Hole dia.
A, a	Radiator side support installation nut	M6 (0.24)	I, i	Front side member standard hole	ø 18 (0.71)
B, b	Crush box installation hole	ø 6.3 (0.248)	J, j	Front floor pan standard hole	ø 18 (0.71)
C, c	Front side member standard hole	ø 18 (0.71)	K, k	Floor side inner rear member standard hole	ø 18 (0.71)
D, d	Front suspension member installation nut	M12 (0.47)	L, l	Trading arm installation outer hole−inner	ø 15 (0.59)
E, e	Front spring support plate standard hole−outer	ø 11 (0.43)	M, m	Rear floor sidemember standard hole	ø 18 (0.71)
F, f	Front suspension member installation nut	M14 (0.55)	N, n	Rear spring plate standard hole	ø 18 (0.71)
G, g	Torque box front standard hole	ø 25 (0.98)	O, o	Rear shock absorber installation hole	ø 18 (0.71)
H, h	Front floor pan standard hole	ø 18 (0.71)	P, p	Rear floor sidemember standard hole	ø 18 (0.71)

REFERENCE VALUE
ENGINE COMPARTMENT

(Three-Dimensional Distance)

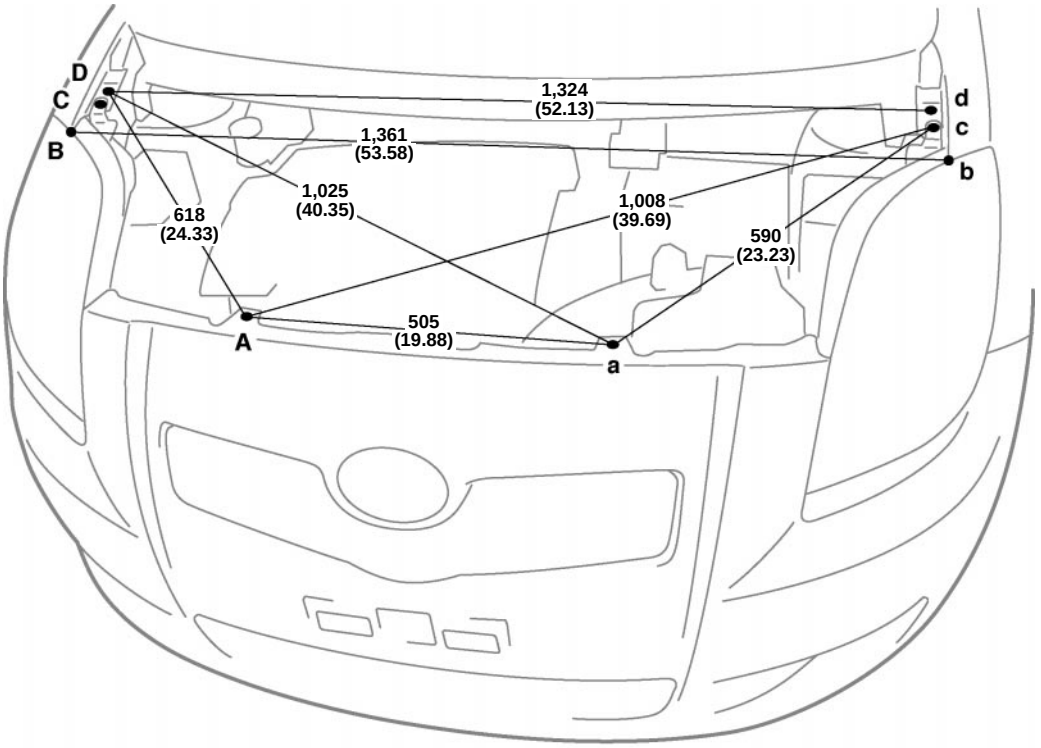

C-c	C-D or c-d
1,324 (52.13)	38 (1.50)

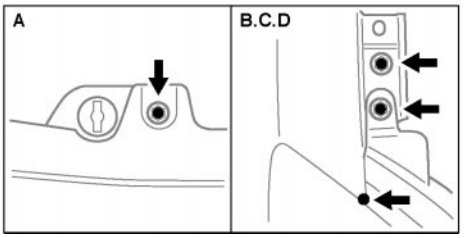

HINT: These values are actual measurements made on a vehicle.
Use these reference values.

mm (in.)

Symbol	Name	Hole dia.	Symbol	Name	Hole dia.
A, a	Front bumper cover installation bolt	—	C, c	Headlight installation bolt	—
B, b	Front end of fender	—	D, d	Front fender installation bolt	—

UNDER BODY

(Two-Dimensional Distance)

Radiator support installation

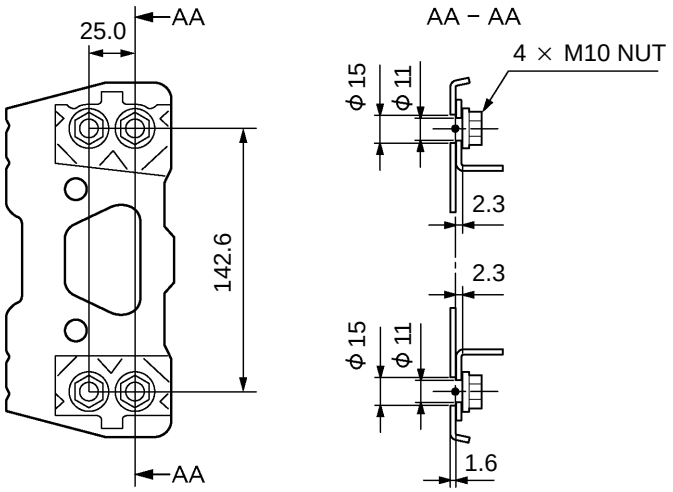

Front spring support

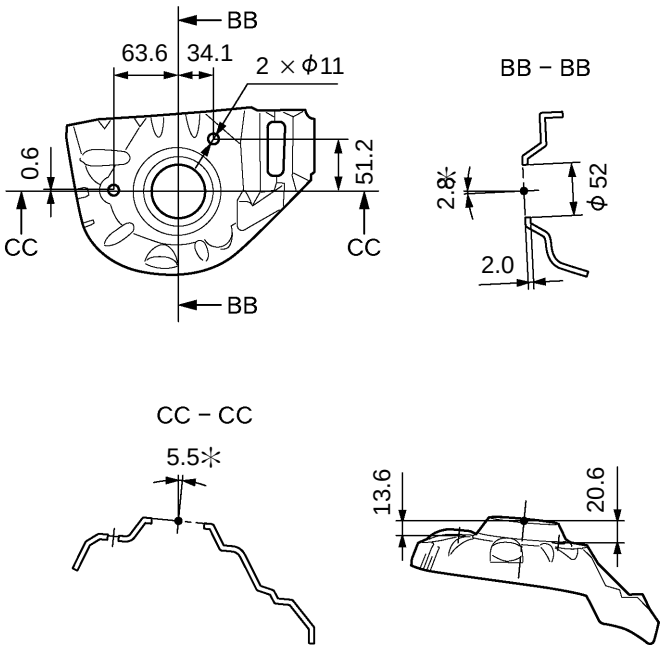

Rear shock absorber installation

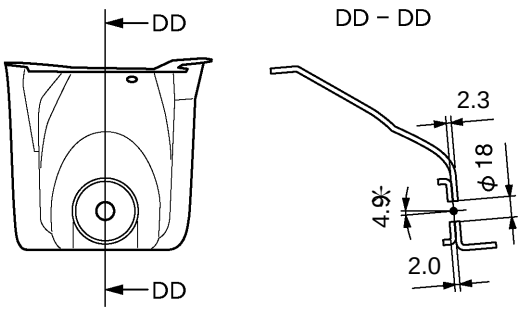

mm

FOREWORD

This repair manual has been prepared to provide essential information on body panel repair methods (including cutting and welding operations, but excluding painting) for the TOYOTA YARIS.

Applicable models: KSP90 series
NCP90, 91, 92, 93 series
SCP90 series
NLP90 series

This manual consists of body repair methods, exploded diagrams and illustrations of the body components and other information relating to body panel replacement such as handling precautions, etc. However, it should be noted that the front fenders of, this TOYOTA model are bolted on and require no welding.

When repairing, don't cut and join areas that are not shown in this manual. Only work on the specified contents to maintain body strength.

Body construction will sometimes differ depending on specifications and country of destination. Therefore, please keep in mind that the information contained herein is based on vehicles for general destinations.

For the repair procedures and specifications other than collision-damaged body components of the TOYOTA YARIS refer to the repair manuals.

If you require the above manuals, please contact your TOYOTA dealer.

All information contained in this manual is the most up-to-date at the time of publication. However, specifications and procedures are subject to change without prior notice.

TOYOTA MOTOR CORPORATION

HOW TO USE THIS MANUAL

Scope of the repair work explanation

⁎ This text explains the welding panel replacement instructions from the vehicle's white body condition. We have abbreviated the explanations of the removal and reinstallation of the equipment parts up to the white body condition and of the installation, inspection, adjustment and final inspection of equipment parts after replacing the weld panel.

Section categories

⁎ This manual has been divided as shown below.

Section Title	Contents	Examples
INTRODUCTION	Explanation of general body repair. Views of weld panel replacement instructions.	Cautionary items. Views of weld panel replacement instructions.
BODY PANEL REPLACEMENT	Instructions for replacing the weld panels from the white body condition, from which bolted parts have been removed, with individual supply parts.	Front side member replacement. Quarter panel replacement.
BODY DIMENSIONS	Body aligning measurements.	Dimension diagrams.
PAINT ⁎COATING	Scope and type of anti-rust treatment, etc. together with weld panel replacement.	Under coating. Body sealer.

Contents omitted in this manual.

⁎ Make sure to perform the following essential procedures, although they are omitted in this manual.

(1) Jack and lift operations.

(2) Clean and wash removed parts, if necessary.

(3) Visual inspection.

GENERAL REPAIR INSTRUCTIONS

1. WORK PRECAUTIONS

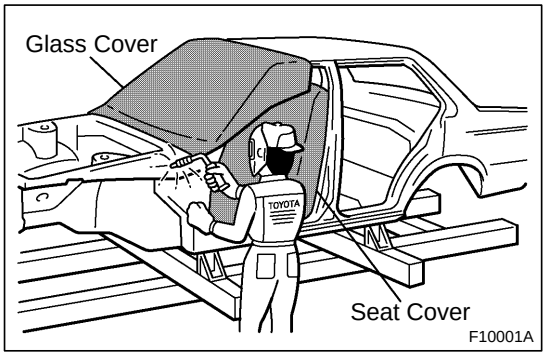

(a) VEHICLE PROTECTION

(1) When welding, protect the painted surfaces, windows, seats and carpet with heat resistant, fireproof covers.

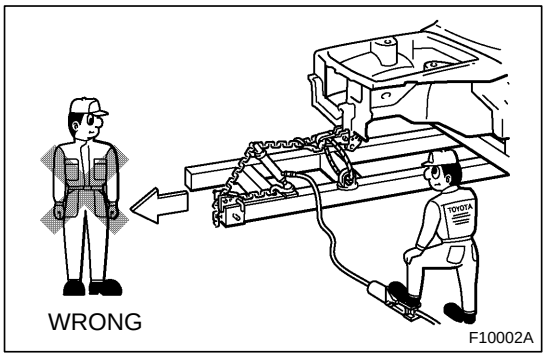

(b) SAFETY

(1) Never stand in a direct line with the chain when using a puller on the body or frame, and be sure to attach a safety cable.

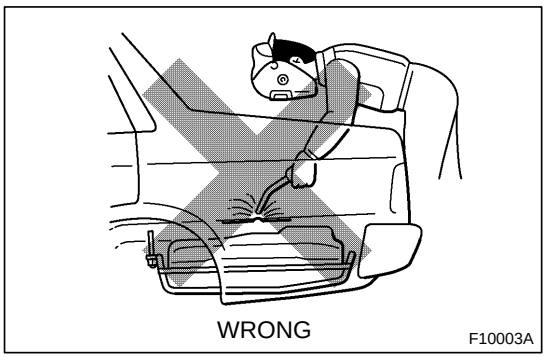

(2) Before performing repair work, check for fuel leaks. If a leak is found, be sure to close the opening completely.

(3) If it is necessary to use a flame in the area of the fuel tank, first remove the tank and plug the fuel line.

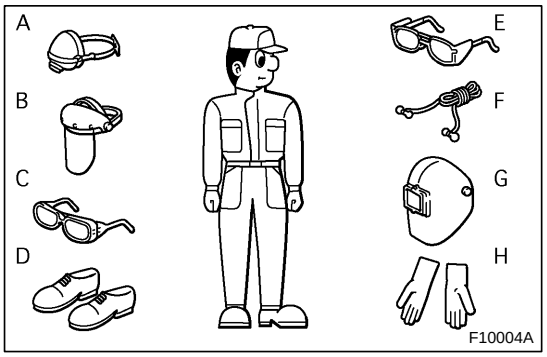

(c) SAFETY WORK CLOTHES

(1) In addition to the usual mechanic's wear, cap and safety shoes, the appropriate gloves, head protector, glasses, ear plugs, face protector, dust-prevention mask, etc. should be worn as the situation demands.

Code	Name
A	Dust-Prevention Mask
B	Face Protector
C	Eye Protector
D	Safety Shoes
E	Welder's Glasses
F	Ear Plugs
G	Head Protector
H	Welder's Gloves

2. HANDLING PRECAUTIONS OF PLASTIC BODY PARTS

(1) The repair procedure for plastic body parts must conform with the type of plastic material.

(2) Plastic body parts are identified by the codes in the following table.

(3) When repairing metal body parts adjoining plastic body parts (by brazing, frame cutting, welding, painting etc.), consideration must be given to the properties of the plastic.

Code	Material name	Heat* resistant temperature limit °C (°F)	Resistance to alcohol or gasoline	Notes
AAS	Acrylonitrile Acrylic Styrene	80 (176)	Alcohol is harmless if applied only for short time in small amounts (e.g., quick wiping to remove grease).	Avoid gasoline and organic or aromatic solvents.
ABS	Acrylonitrile Butadiene Styrene	80 (176)	Alcohol is harmless if applied only for short time in small amounts (e.g., quick wiping to remove grease).	Avoid gasoline and organic or aromatic solvents.
AES	Acrylonitrile Ethylene Styrene	80 (176)	Alcohol is harmless if applied only for short time in small amounts (e.g., quick wiping to remove grease).	Avoid gasoline and organic or aromatic solvents.
ASA	Acrylonitrile Styrene Acrylate	80 (176)	Alcohol is harmless if applied only for short time in small amounts (e.g., quick wiping to remove grease).	Avoid gasoline and organic or aromatic solvents.
CAB	Cellulose Acetate	80 (176)	Alcohol is harmless if applied only for short time in small amounts (e.g., quick wiping to remove grease).	Avoid gasoline and organic or aromatic solvents.
EPDM	Ethylene Propylene	100 (212)	Alcohol is harmless. Gasoline is harmless if applied only for short time in small amounts.	Most solvents are harmless but avoid dipping in gasoline, solvents, etc.
FRP	Fiber Reinforced Plastics	180 (356)	Alcohol and gasoline are harmless.	Avoid alkali.
EVA	Ethylene Acetate	70 (158)	Alcohol is harmless if applied only for short time in small amounts (e.g., quick wiping to remove grease).	Avoid gasoline and organic or aromatic solvents.
E/VAC	Ethylene/ Vinyl Acetate Copolymer Resin	70 (158)	Alcohol is harmless if applied only for short time in small amounts (e.g., quick wiping to remove grease).	Avoid gasoline and organic or aromatic solvents.
PA	Polyamide (Nylon)	80 (176)	Alcohol and gasoline are harmless.	Avoid battery acid.
PBT	Polybutylene Terephthalate	160 (320)	Alcohol and gasoline are harmless.	Most solvents are harmless.
PC	Polycarbonate	120 (248)	Alcohol is harmless.	Avoid gasoline, brake fluid, wax, wax removers and organic solvents. Avoid alkali.

*Temperatures higher than those listed here may result in material deformation during repair.

Code	Material name	Heat* resistant temperature limit °C (°F)	Resistance to alcohol or gasoline	Notes
PE	Polyethylene	80 (176)	Alcohol and gasoline are harmless.	Most solvents are harmless.
PET	Polyethylene Terephthalate	75 (167)	Alcohol and gasoline are harmless.	Avoid dipping in water.
PMMA	Polymethyl Methacrylate	80 (176)	Alcohol is harmless if applied only for short time in small amounts.	Avoid dipping or immersing in alcohol, gasoline, solvents, etc.
POM	Polyoxymethylene (Polyacetal)	100 (212)	Alcohol and gasoline are harmless.	Most solvents are harmless.
PP	Polypropylene	80 (176)	Alcohol and gasoline are harmless.	Most solvents are harmless.
PPF	Composite Reinforced Polypropylene	80 (176)	Alcohol and gasoline are harmless.	Most solvents are harmless.
PPO	Modified Polyphenylene Oxide	100 (212)	Alcohol is harmless.	Gasoline is harmless if applied only for quick wiping to remove grease.
PS	Polystyrene	60 (140)	Alcohol and gasoline are harmless if applied only for short time in small amounts.	Avoid dipping or immersing in alcohol, gasoline, solvents, etc.
PUR	Polyurethane	80 (176)	Alcohol is harmless if applied only for very short time in small amounts (e.g., quick wiping to remove grease).	Avoid dipping or immersing in alcohol, gasoline, solvents, etc.
PVC	Polyvinylchloride (Vinyl)	80 (176)	Alcohol and gasoline are harmless if applied only for short time in small amounts (e.g., quick wiping to remove grease).	Avoid dipping or immersing in alcohol, gasoline, solvents, etc.
SAN	Styrene Acrylonitrile	80 (176)	Alcohol is harmless if applied only for short time in small amounts (e.g., quick wiping to remove grease).	Avoid dipping or immersing in alcohol, gasoline, solvents, etc.
TPO	Thermoplastic Olefine	80 (176)	Alcohol is harmless. Gasoline is harmless if applied only for short time in small amounts.	Most solvents are harmless but avoid dipping in gasoline, solvents, etc.
TPU	Thermoplastic Polyurethane	80 (176)	Alcohol is harmless if applied only for short time in small amounts (e.g., quick wiping to remove grease).	Avoid dipping or immersing in alcohol, gasoline, solvents, etc.
TSOP	TOYOTA Super Olefine Polymer	80 (176)	Alcohol and gasoline are harmless.	Most solvents are harmless.
UP	Unsaturated Polyester	110 (233)	Alcohol and gasoline are harmless.	Avoid alkali.

*Temperatures higher than those listed here may result in material deformation during repair.

3. LOCATION OF PLASTIC BODY PARTS

Parts Name	Code
Front Bumper Cover	TSOP
Front Spoiler Cover	TSOP ⁎TPO
Radiator Grille	AES
Headlight	PC/PP
Foglight	PBT/ASA
Front Pillar Upper Cover (Hatchback)	AES
Front Pillar Cover (Sedan)	AES
Side Turn Signal Light	PMMA/PC/ABS
Cowl Top Ventilator Louver	TSOP
Outer Rear View Mirror	PA/ABS ⁎ASA ⁎PP
Door Outside Handle	PA/PC/PBT
Mudguard	PP
Back Door Outside Handle (Hatchback)	PA
Luggage Compartment Door Outside Garnish (Sedan)	ABS
Rear Spoiler (Sedan)	ABS
License Plate Light	PC
Rear Combination Light	PMMA/ABS
Rear Bumper Cover	TSOP

HINT:
⁎ Resin material differs depending on model.
/ Made up of 2 or more kinds of materials.

HOW TO USE THIS MANUAL

1. BODY PANEL REPLACEMENT IN THIS MANUAL

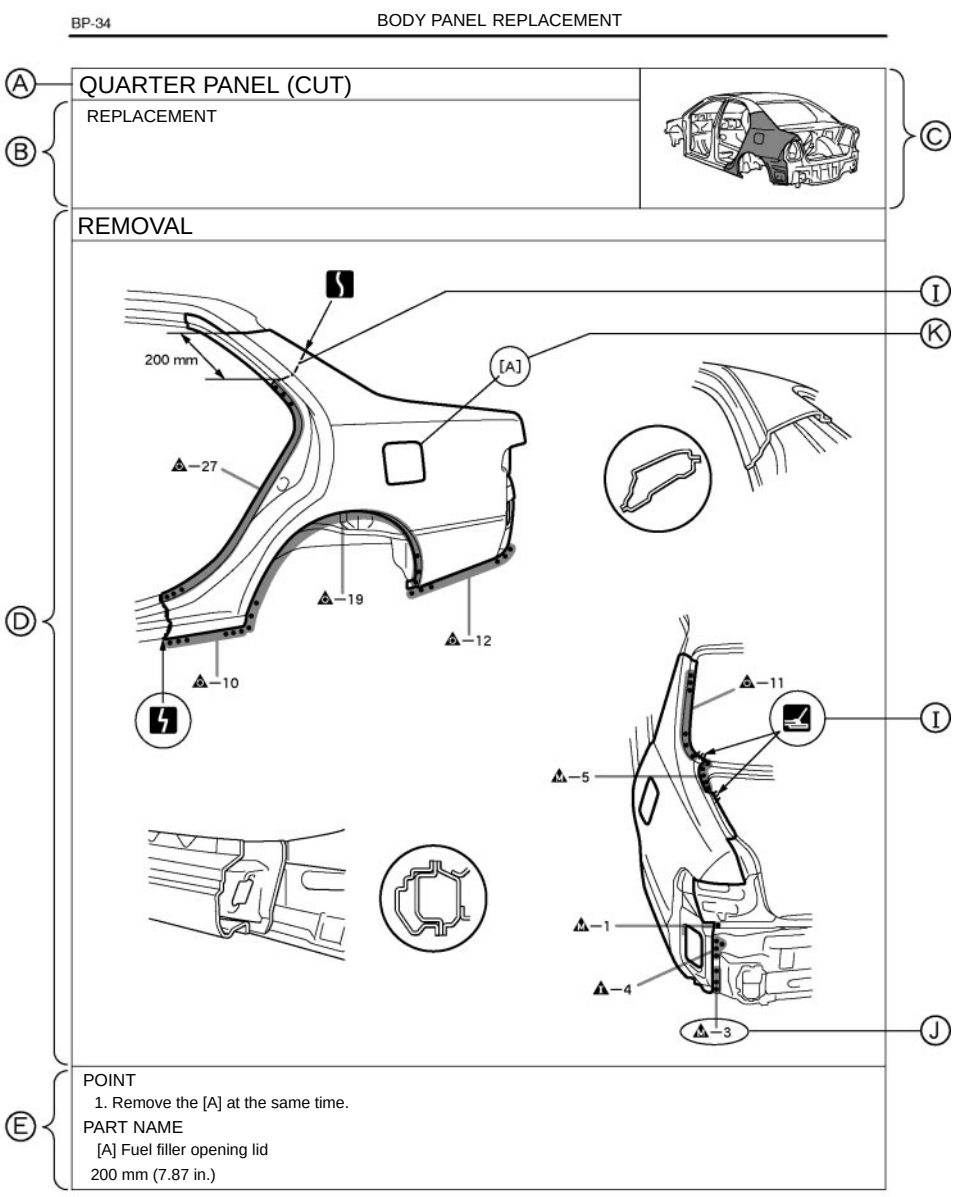

Ⓐ : REPLACEMENT PART AND METHOD

QUARTER PANEL (CUT)

- Replacement part
- Replacement method
  - (ASSY)...Assembly replacement
  - (CUT)...Major cutting (less than 1/2 of part used)
  - (CUT-H)...Half cutting (about 1/2 of part used)
  - (CUT-P)...Partial cutting (most of part used)

Ⓑ : REMOVAL CONDITIONS

Ⓒ : PART LOCATION

Ⓓ : REMOVAL DIAGRAM
Describes in detail the removal of the damaged part involving repair by cutting.

Ⓔ : REMOVAL GUIDE
Provides additional information to more efficiently help you perform the removal.

F13890A

INSTALLATION
- Temporarily install the new parts and measure each part of the new parts in accordance with the body dimension diagram. (See the body dimension diagram)
- Inspect the fitting of the related parts around the new parts before welding. This affects the appearance of the finish.
- After welding, apply the polyurethane foam to the corresponding parts.
- After welding, apply body sealer and under-coating to the corresponding parts.
- After applying the top coat layer, apply anti-rust agent to the inside of the necked section structural weld spots.

Ⓕ

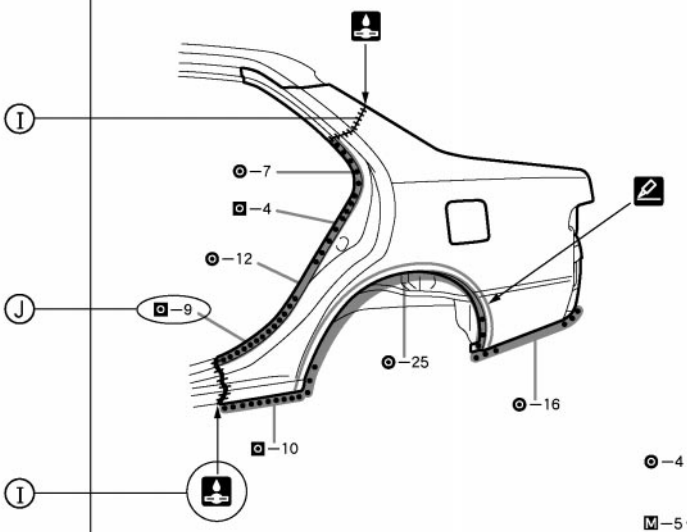

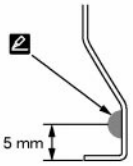

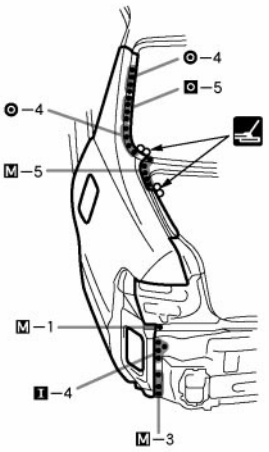

Ⓖ

POINT
1. Before temporarily installing the new parts, apply sealer to the wheel arch.

HINT
1) Apply body sealer about 5 mm (0.20 in.) front the flange, avoiding any oozing.
2) Apply sealer evenly, about 3−4 mm (0.12−0.16 in.) in diameter
3) For other sealing points, refer to section PC.

Ⓗ

Ⓕ : INSTALLATION CONDITIONS

Ⓖ : INSTALLATION DIAGRAM
Describes in detail the installation of the new parts involving repair by welding and/or cutting, but excluding painting.

Ⓗ : INSTALLATION GUIDE
Provides additional information to more efficiently help you perform the installation.

Ⓘ : SYMBOLS
(See page IN-7)

Ⓙ : INSTALLATION OF WELD POINTS
Weld method and panel position symbols (See page IN-9)

Ⓚ : PART NAME

F13891A

2. SYMBOLS

The following symbols are used in the welding diagrams in section BP of this manual to indicate cutting areas and the types of weld required.

SYMBOLS		MEANING	ILLUSTRATION
		CUT AND JOIN LOCATION (Saw Cut)	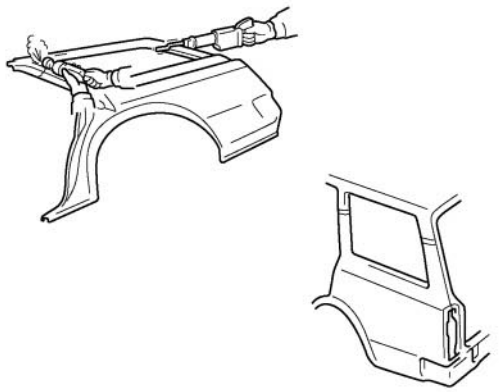
		CUT AND JOIN LOCATION (Cut Location for Supply Parts)	
		CUT LOCATION	
		CUT WITH DISC SANDER, ETC.	
		BRAZE (Removal)	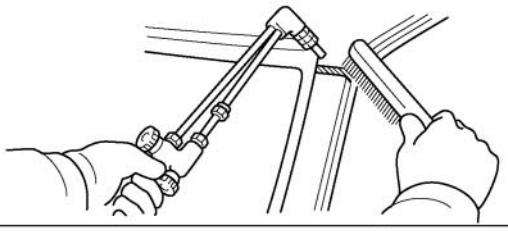
		BRAZE (Installation)	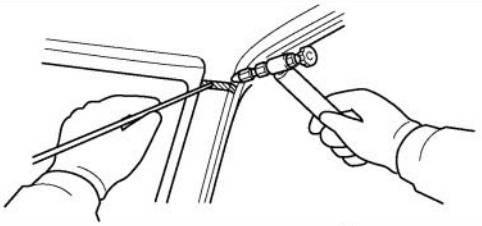
	–	WELD POINTS	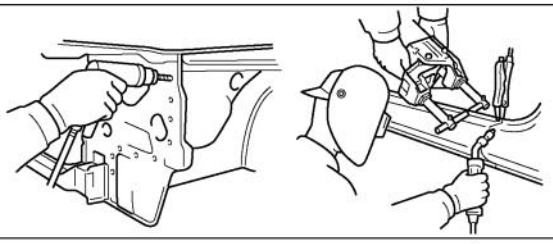
	–	SPOT WELD OR MIG PLUG WELD (See page IN-9)	
		CONTINUOUS MIG WELD (BUTT WELD)	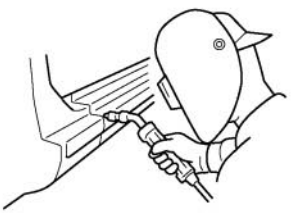
		CONTINUOUS MIG WELD (TACK WELD)	
		BODY SEALER	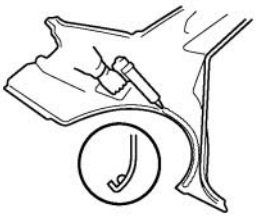 F13893A

SYMBOLS		MEANING	ILLUSTRATION
—		Assembly Mark	—
	—	BODY SEALER (Flat Finishing)	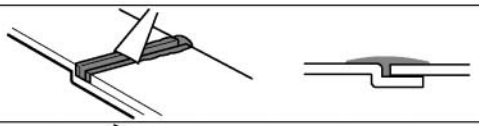
	—	BODY SEALER (No Flat Finishing)	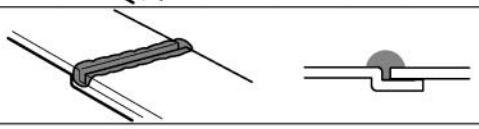

F13894A

3. ILLUSTRATION OF WELD POINT SYMBOLS

EXAMPLE:

REMOVAL

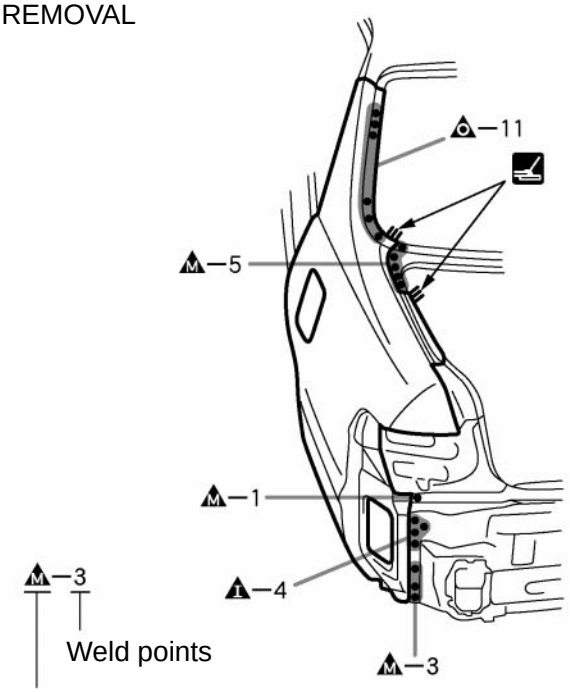

INSTALLATION

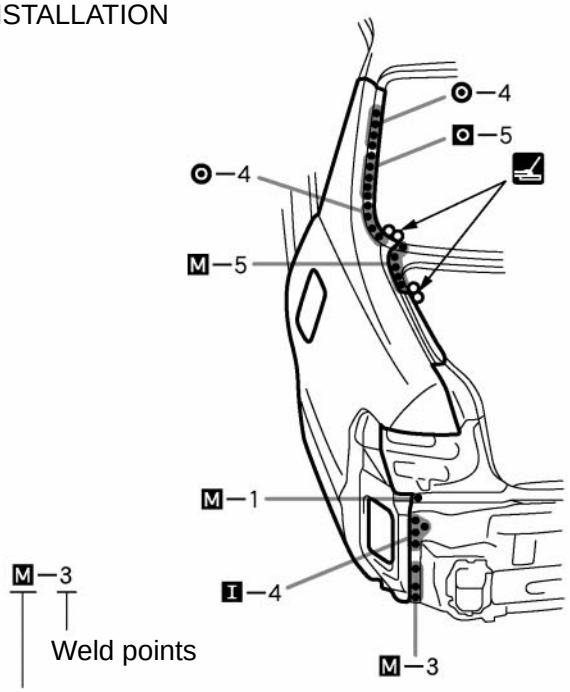

SYMBOLS	MEANING	ILLUSTRATION
O M I	Remove Weld Points	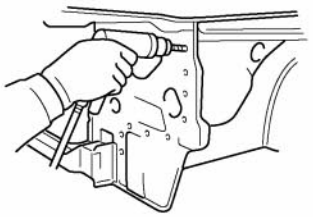
O	(Outside)	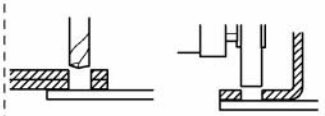
M	(Middle)	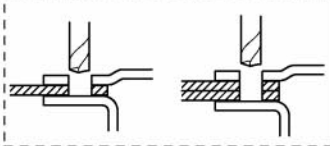
I	(Inside)	

HINT: Panel position symbols are as seen from the working posture.

SYMBOLS	MEANING	ILLUSTRATION
O M I	Spot Weld	
O M I	MIG Plug Weld	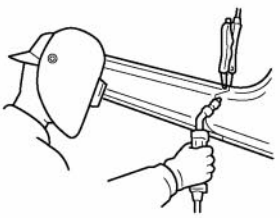
+	Spot MIG Weld	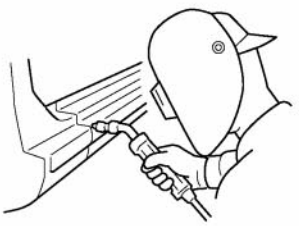

F13892A

PROPER AND EFFICIENT WORK PROCEDURES

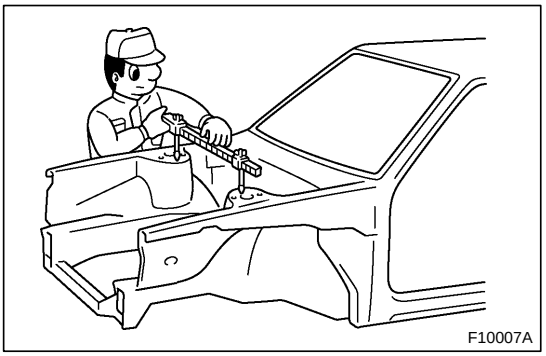
F10007A

1. REMOVAL

(a) PRE-REMOVAL MEASURING

(1) Before removal or cutting operations, take measurements in accordance with the dimensions diagram. Always use a puller to straighten a damaged body or frame.

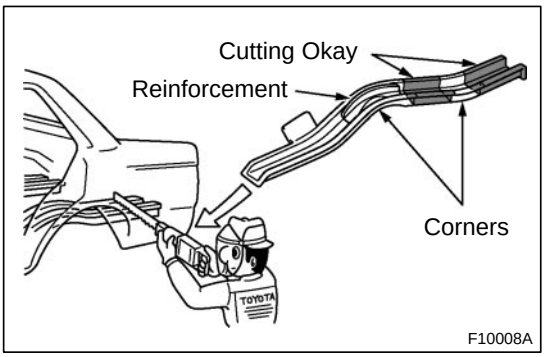

F10008A

(b) CUTTING AREA

(1) Always cut in a straight line and avoid reinforced areas.

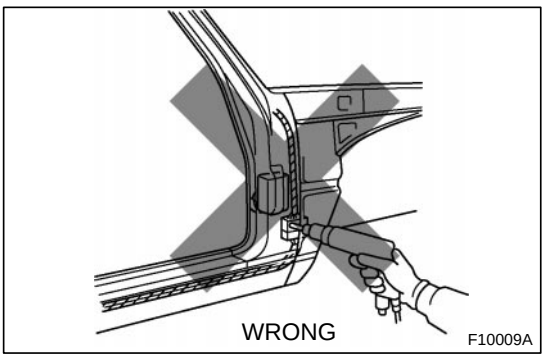

F10009A

(c) PRECAUTIONS FOR DRILLING OR CUTTING

(1) Check behind any area to be drilled or cut to ensure that there are no hoses, wires, etc., that may be damaged.

HINT: See “Handling Precautions on Related Components” on page IN-15.

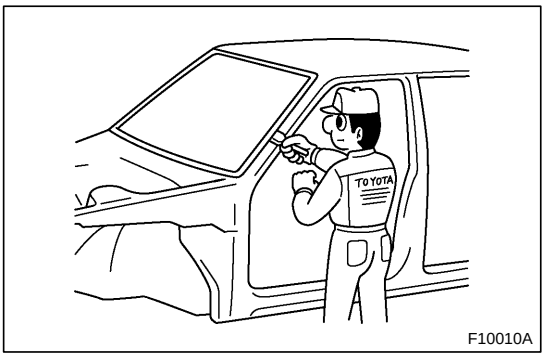

F10010A

(d) REMOVAL OF ADJACENT COMPONENTS

(1) When removing adjacent components, apply protective tape to the surrounding body and your tools to prevent damage.

HINT: See “Handling Precautions on Related Components” on page IN-15.

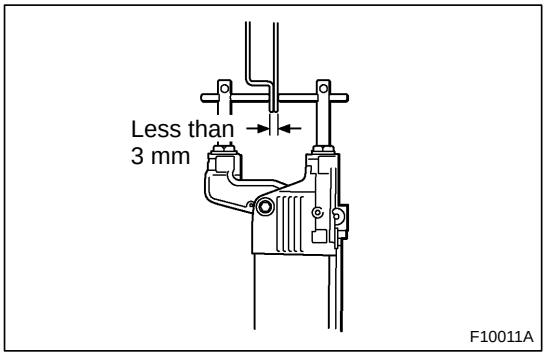

2. PREPARATION FOR INSTALLATION

(a) SPOT WELD POINTS

(1) When welding panels with a combined thickness of over 3 mm (0.12 in.), use a MIG (Metal Inert Gas) welder for plug welding.

HINT: Spot welding does not provide sufficient durability for panels with a combined thickness of over 3 mm (0.12 in.).

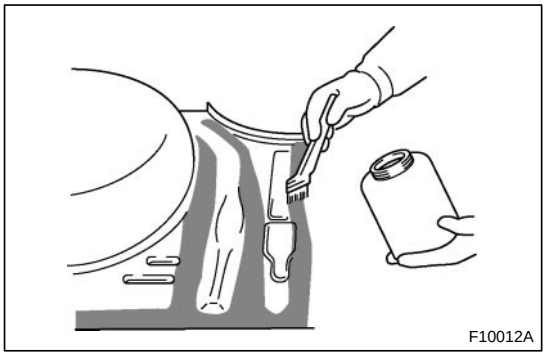

(b) APPLICATION OF WELD-THROUGH PRIMER (SPOT SEALER)

(1) Remove the paint from the portion of the new parts and body to be welded, and apply weld-through primer.

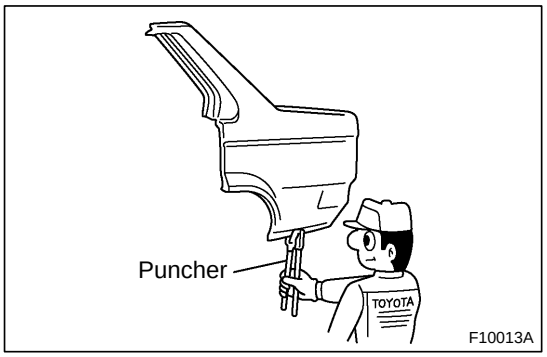

(c) MAKING HOLES FOR PLUG WELDING

(1) For areas where a spot welder cannot be used, use a puncher or drill to make holes for plug welding.

REFERENCE: mm (in.)

Thickness of welded portion	Size of plug hole
1.0 (0.04) under	5 (0.20) ø over
1.0 (0.04) − 1.6 (0.06)	6.5 (0.26) ø over
1.7 (0.07) − 2.3 (0.09)	8 (0.31) ø over
2.4 (0.09) over	10 (0.39) ø over

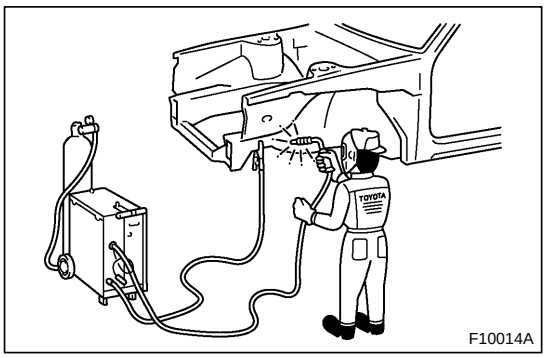

(d) SAFETY PRECAUTIONS FOR ELECTRICAL COMPONENTS

(1) When welding, there is a danger that electrical components will be damaged by the electrical current flowing through the body.

(2) Before starting work, disconnect the negative terminal of the battery and ground the welder near the welding location of the body.

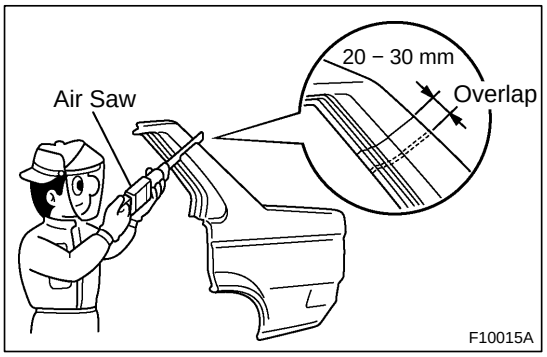

(e) ROUGH CUTTING OF JOINTS

(1) For joint areas, rough cut the new parts, leaving 20 − 30 mm (0.79 − 1.18 in.) of overlap.

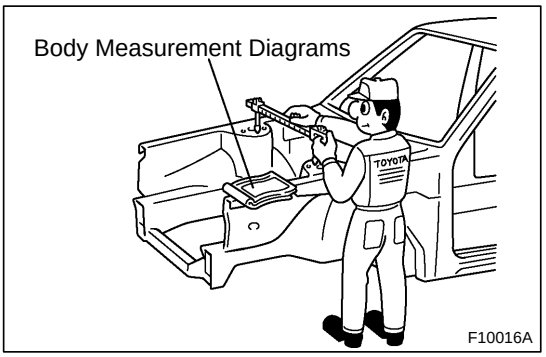

3. INSTALLATION

(a) PRE-WELDING MEASUREMENTS

(1) Always take measurements before installing underbody or engine components to ensure correct assembly. After installation, confirm proper fit.

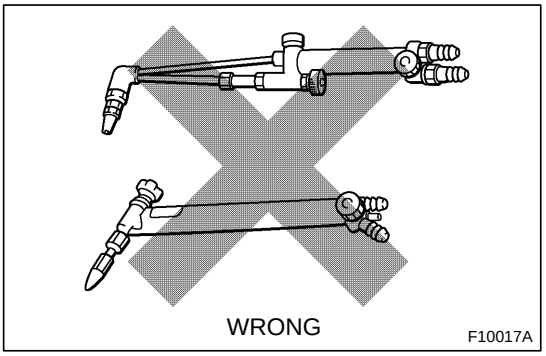

(b) WELDING PRECAUTIONS

(1) The number of welding spots should be as follows.

Spot weld: 1.3 X No. of manufacturer's spots.
Plug weld: More than No. of manufacturer's plugs.

(2) Plug welding should be done with a MIG (Metal Inert Gas) welder. Do not gas weld or braze panels at areas other than specified.

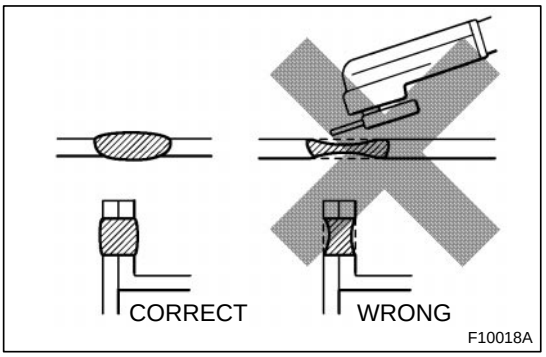

(c) POST-WELDING REFINISHING

(1) Always check the welded spots to ensure they are secure.

(2) When smoothing out the weld spots with a disc grinder, be careful not to grind off too much as this will weaken the weld.

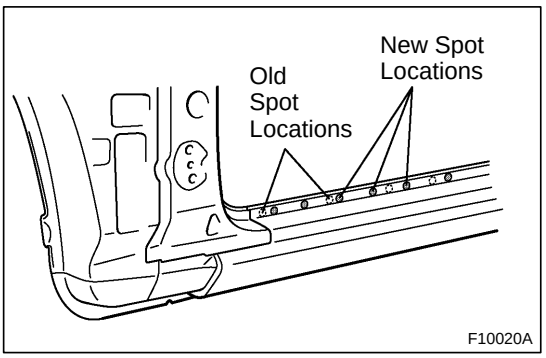

(d) SPOT WELD LOCATIONS

(1) Avoid welding over previously welded areas.

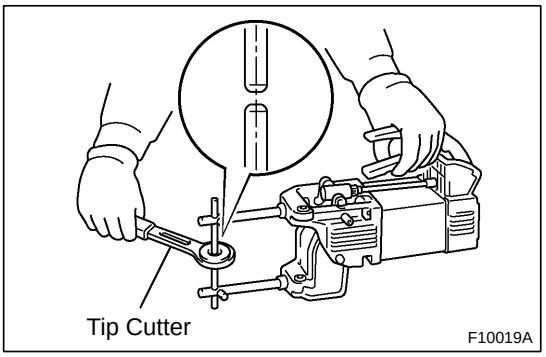

(e) SPOT WELDING PRECAUTIONS

(1) The shape of the tip point of the spot welder significantly affects the strength of the weld. Therefore, maintain the tip point in the proper shape, and allow it to cool after every five or six spots.

(2) Completely remove the paint from the areas to be spot welded, including the seams and the surfaces that come in contact with the welding tip.

(3) Use a sander to remove any burrs that are created during spot welding.

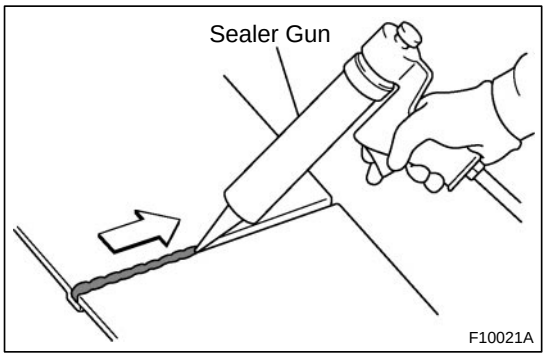

4. ANTI-RUST TREATMENT AFTER INSTALLATION (BEFORE PAINTING PROCESS)

(a) BODY SEALER APPLICATION

(1) For water-proofing and anti-corrosion measures, always apply the body sealer to the body panel seams and hems of the doors, hood, etc.

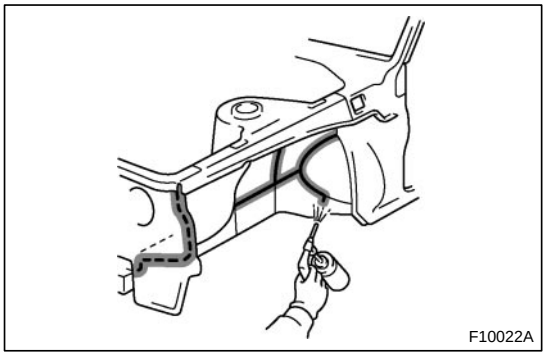

(b) UNDERCOAT APPLICATION

(1) To prevent corrosion and protect the body from damage by flying stones, always apply sufficient undercoating to the bottom surface of the under body and inside of the wheel housings.

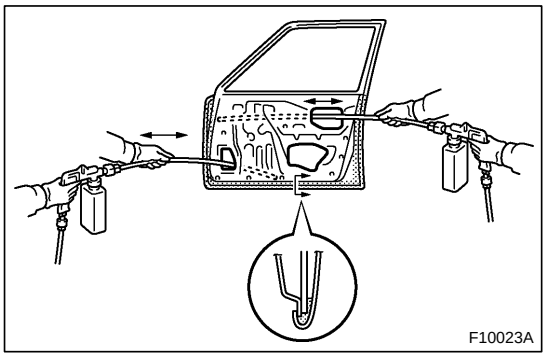

5. ANTI-RUST TREATMENT AFTER INSTALLATION (AFTER PAINTING PROCESS)

(a) ANTI-RUST AGENT (WAX) APPLICATION

(1) To preserve impossible to paint areas from corrosion, always apply sufficient anti-rust agent (wax) to the inside of the hemming areas of the doors and hood, and around the hinges, or the welded surfaces inside the box-shaped cross sections of the side members, body pillar, etc.

6. ANTI-RUST TREATMENT BY PAINTING

REFERENCE:

Painting prevents corrosion and protects the sheet metal from damage. In this section, anti-chipping paint only for anti-corrosion purpose is described.

(a) ANTI-CHIPPING PAINT

(1) To prevent corrosion and protect the body from damage by flying stones, etc., apply anti-chipping paint to the rocker panel, wheel arch areas, balance panel, etc.

HINT:
Depending on the model or the application area, there are cases where the application of anti-chipping paint is necessary before the second coat or after the top coat.

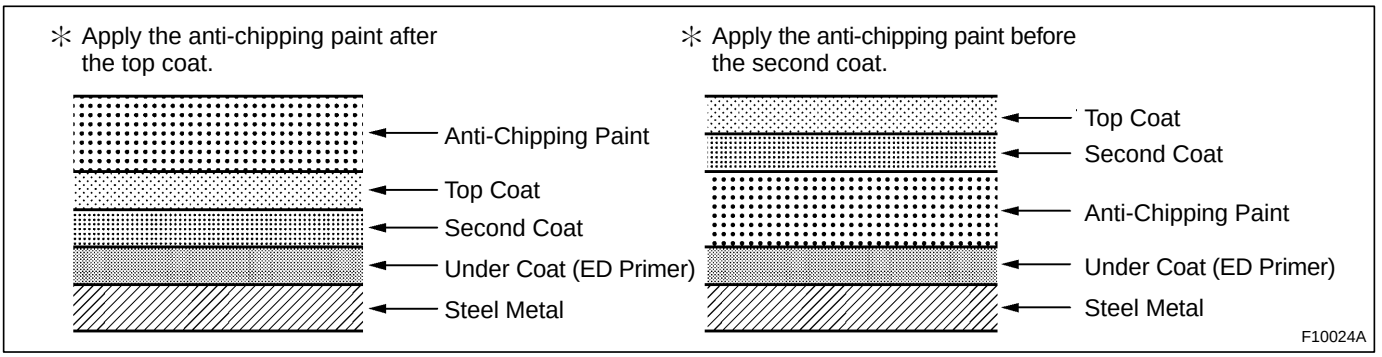

HANDLING PRECAUTIONS ON RELATED COMPONENTS

1. BRAKE SYSTEM

The brake system is one of the most important safety components. Always follow the directions and notes given in the brake (32) section of the repair manual for the relevant model when handling brake system parts.

NOTICE: When repairing the brake master cylinder or TRAC system, bleed the air out of the TRAC system.

2. DRIVE TRAIN AND CHASSIS

The drive train and chassis are components that can have great effects on the running performance and vibration resistance of the vehicle. After installing components in the sections listed in the table below, perform alignments to ensure correct mounting angles and dimensions. Body repair must be particularly accurate to ensure correct alignment.

HINT: Correct procedures and special tools are required for alignment. Always follow the directions given in the repair manual for the relevant model during alignment and section DI of this section.

Component to be aligned	Section of repair manual for relevant model
Front Wheels	Front Suspension (26) section
Rear Wheels	Rear Suspension (27) section

3. COMPONENTS ADJACENT TO THE BODY PANELS

Various types of component parts are mounted directly on or adjacently to the body panels. Strictly observe the following precautions to prevent damaging these components and the body panels during handling.

- Before repairing the body panels, remove their components or apply protective covers over the components.
- Before prying components off using a screwdriver or a scraper, etc., attach protective tape to the tool tip or blade to prevent damaging the components and the body paint.
- Before removing components from the outer surface of the body, attach protective tape to the body to ensure no damage to painted areas.

  HINT: Apply touch-up paint to any damaged paint surfaces.
- Before drilling or cutting sections, make sure that there are no wires, etc. on the reverse side.

4. ECU (ELECTRONIC CONTROL UNIT)

Many ECUs are mounted in this vehicle.
Take the following precautions during body repair to prevent damage to the ECUs.

- Before starting electric welding operations, disconnect the negative (−) terminal cable from the battery.
  When the negative (−) terminal cable is disconnected from the battery, memory of the clock and audio systems will be canceled. So before starting work, make a record of the contents memorized by each memory system. Then when work is finished, reset the clock and audio systems as before.
  When the vehicle has tilt and telescopic steering, power seats and outside rear view mirrors, which are all equipped with a memory function, it is not possible to make a record of the memory contents. So when the operation is finished, it will be necessary to explain this fact to the customer, and request the customer to adjust the features and reset the memory.
- Do not expose the ECUs to ambient temperatures above 80°C (176°F).

  NOTICE: If it is possible the ambient temperature may reach 80° C (176° F) or more, remove the ECUs from the vehicle before starting work.
- Be careful not to drop the ECUs and not to apply physical shocks to them.

PRECAUTIONS FOR REPAIRING BODY STRUCTURE PANELS

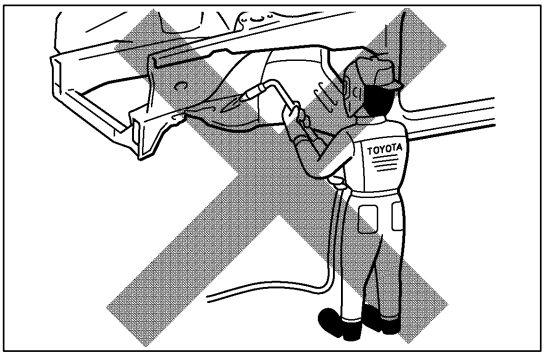

1. HEAT REPAIR FOR BODY STRUCTURE PANELS

Toyota prohibits the use of the heat repair method on body structure panels when repairing a vehicle damaged in a collision.

Panels that have high strength and rigidity, as well as a long life span for the automobile body are in high demand.

At Toyota, in order to fulfill these requirement, we use high tensile strength steel sheets and rust preventive steel sheets on the body. High tensile steel sheets are made with alloy additives and a special heat treatment in order to improve the strength.

To prevent the occurrence of rust for a long period of time, the surface of the steel is coated with a zinc alloy.

If body structure parts are heat repaired with an acetylene torch or other heating source, the crystalline organization of the steel sheet will change and the strength of the steel sheet will be reduced. The ability of the body to resist rust is significantly lowered as well since the rust resistant zinc coating is destroyed by heat and the steel sheet surface is oxidized.

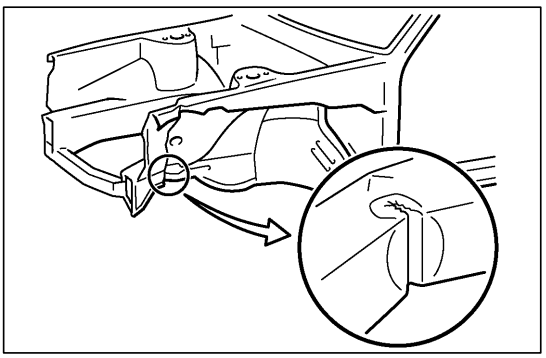

2. STRUCTURE PANEL KINKS

A sharp deformation angle on a panel that cannot be returned to its original shape by pulling or hammering is called a kink.

Structural parts are designed to perform in their original shape. If parts are deformed in an accident, or if the deformed parts are repaired and reused, the parts may be unable to perform as intended.

It is necessary to replace the part where the kink has occurred.

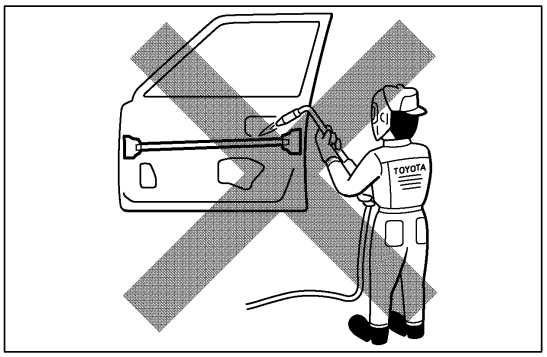

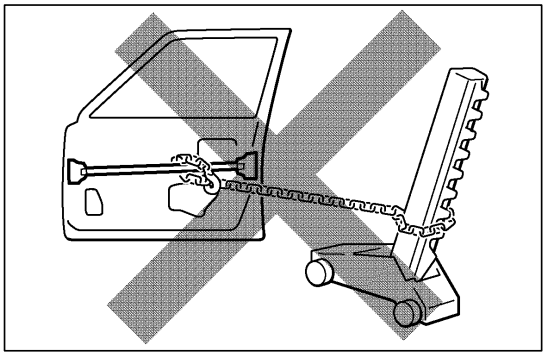

3. IMPACT BEAM REPAIR

The impact beam and bracket are necessary and important parts that help reduce the probability of injury to passengers in side collisions.

For impact beams, we use special high tensile strength steel.

The high tensile strength steel maintains its special crystalline organization by heat treatment or alloy additives.

Structural parts are designed to perform in their original shape. If parts are deformed in an accident, or if the deformed parts are repaired and reused, the parts may be unable to perform as intended.

If the impact beam or bracket is damaged, replace the door assembly with the damaged beam.

Also, the bumper reinforcement is a necessary and important part that helps reduce the probability of injury to passengers in front collisions, and for the same reasons explained above, should be replaced if damaged.

ABBREVIATIONS USED IN THIS MANUAL

For convenience, the following abbreviations are used in this manual.

ABS	Antilock Brake System
A/C	Air Conditioner
assy	assembly
ECT	Electronic Controlled Transmission
ECU	Electronic Control Unit
e.g.	Exempli Gratia (for Example)
Ex.	Except
FWD	Front Wheel Drive Vehicles
2WD	Two Wheel Drive Vehicles
4WD	Four Wheel Drive Vehicles
in.	inch
LH	Left-hand
LHD	Left-hand Drive
MIG	Metal Inert Gas
M/Y	Model Year
PPS	Progressive Power Steering
RH	Right-hand
RHD	Right-hand Drive
SRS	Supplemental Restraint System
SSM	Special Service Materials
w/	with
w/o	without

RADIATOR SUPPORT (ASSY)

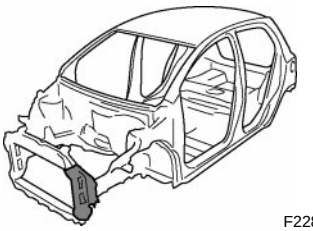
F22816A

REPLACEMENT

REMOVAL

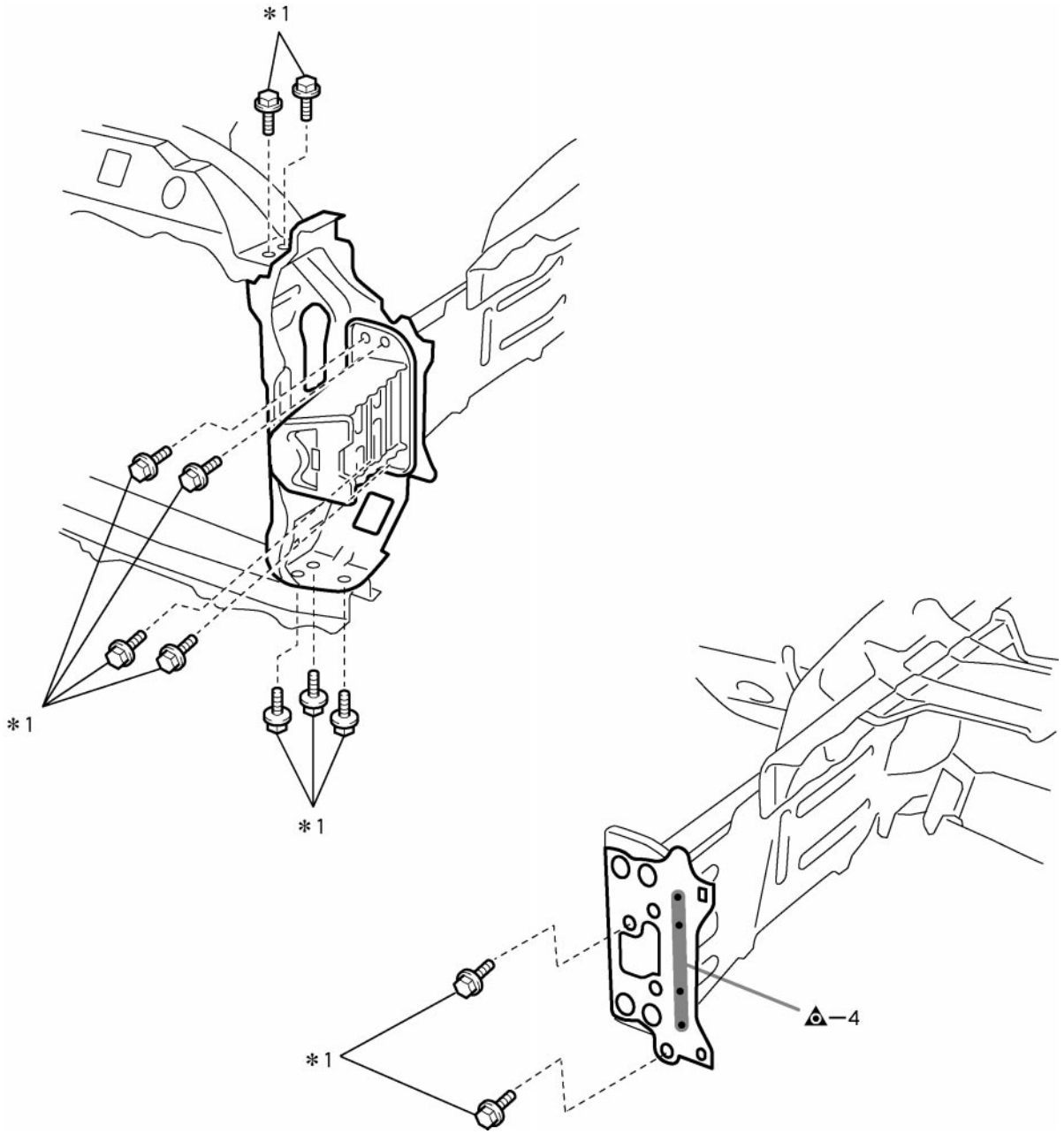

F22816

POINT

1 *1: Bolt

INSTALLATION

* Temporarily install the new parts and measure each part of the new parts in accordance with the body dimension diagram. (See the body dimension diagram)
* Inspect the fitting of the related parts around the new parts before welding. This affects the appearance of the finish.
* After welding, apply polyurethane foam to the corresponding parts.
* After welding, apply body sealer and undercoating to the corresponding parts.
* After applying the top coat, apply anti-rust agent to the internal panel portion of the closed section structural weld points.

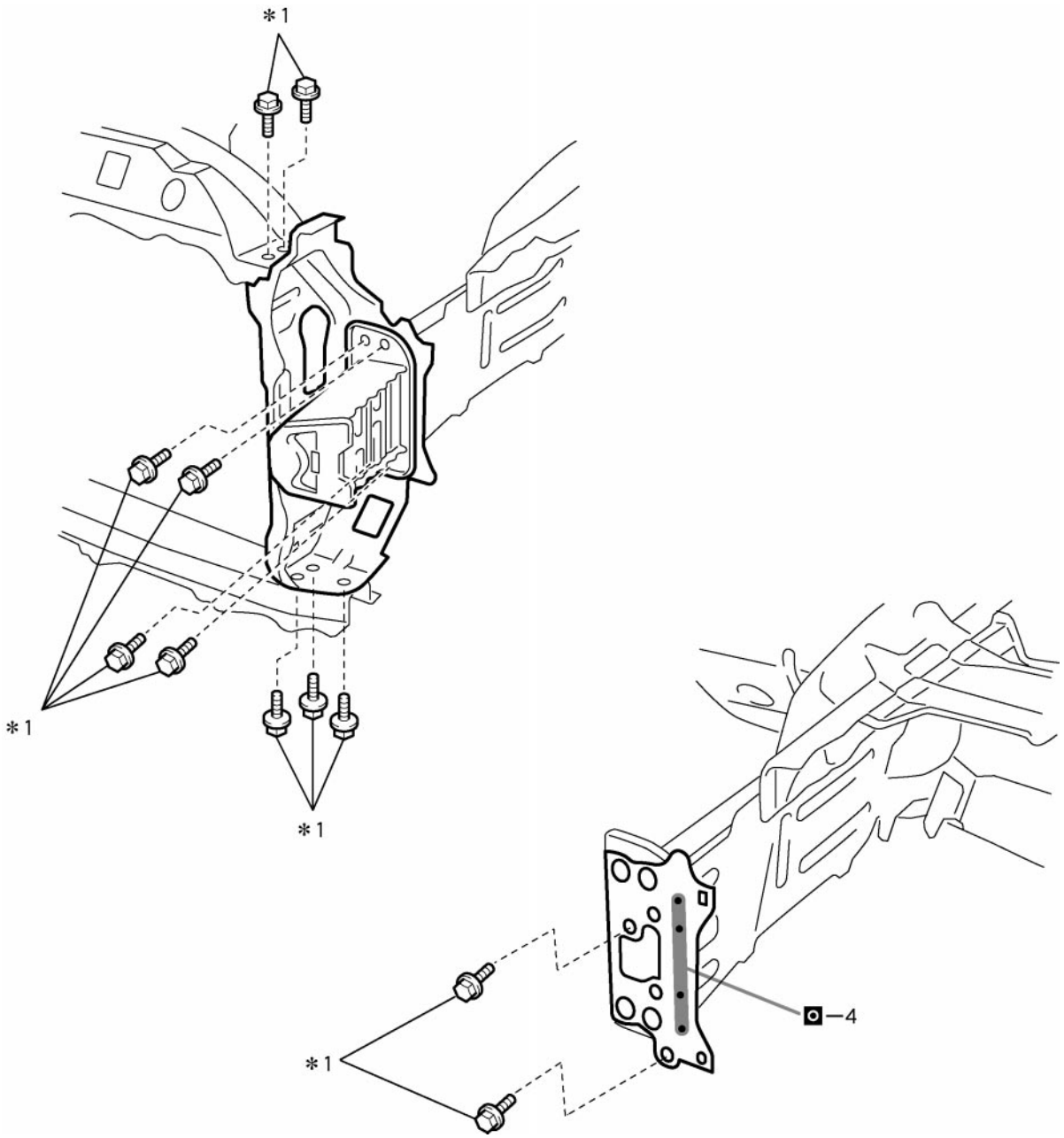

F22817

POINT

1 Inspect the fitting of the headlight, front fender, hood and other related parts, before welding as this affects the appearance of the finish.

2 *1: Bolt

[Hatchback]

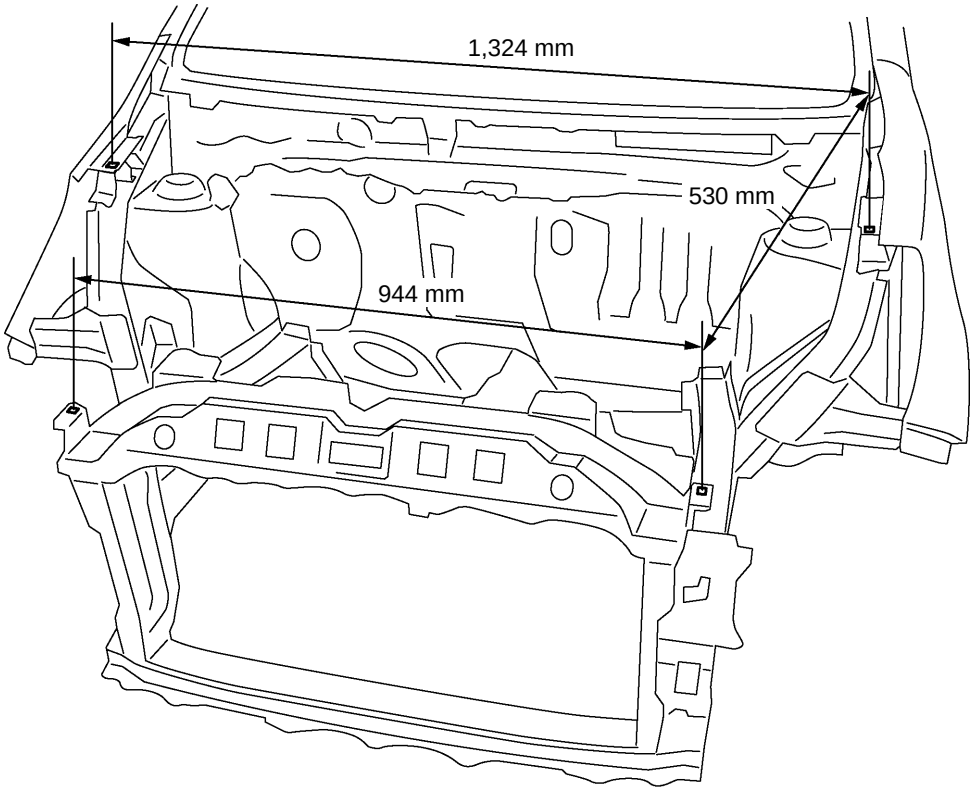

[Sedan]

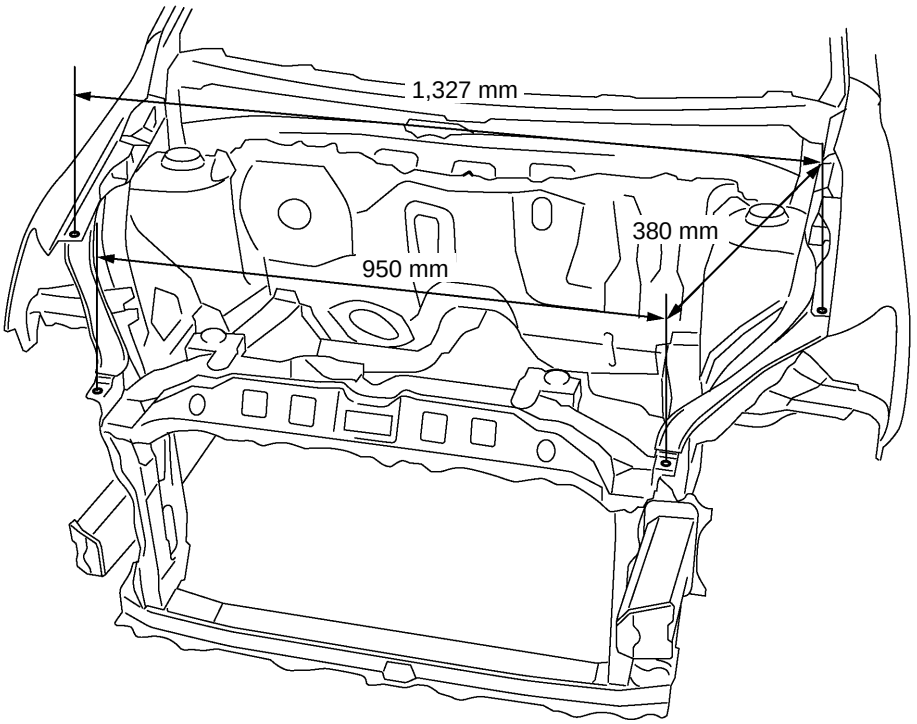

F22818-1

POINT

1 Measure the dimensions before installing the headlight.
2 These values are reference values.

380 mm (14.96 in.) 530 mm (20.87 in.) 944 mm (37.17 in.) 950 mm (37.40 in.)
1,324 mm (52.13 in.) 1,327 mm (52.24 in.)

FRONT SIDEMEMBER REINFORCEMENT (CUT-P)

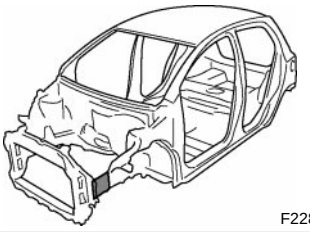
F22825A

REPLACEMENT
With the radiator support removed.

REMOVAL

[LH]

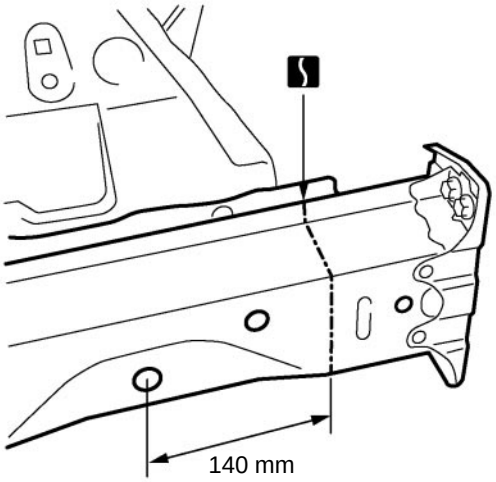

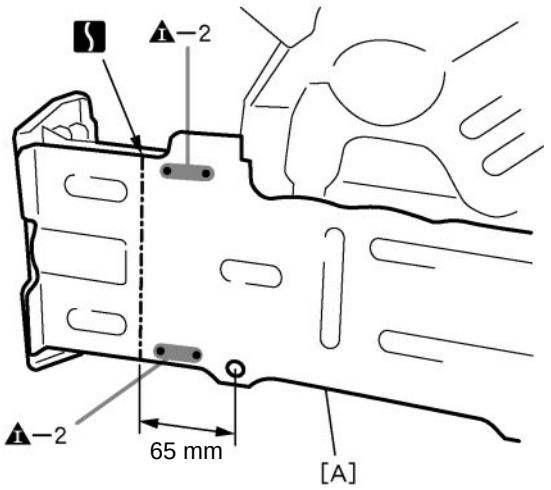

F23301

POINT
1 Remove [A] at the same time.

PART NAME
[A] Front Sidemember Outer Plate
65 mm (2.56 in.) 140 mm (5.51 in.)

[RH]

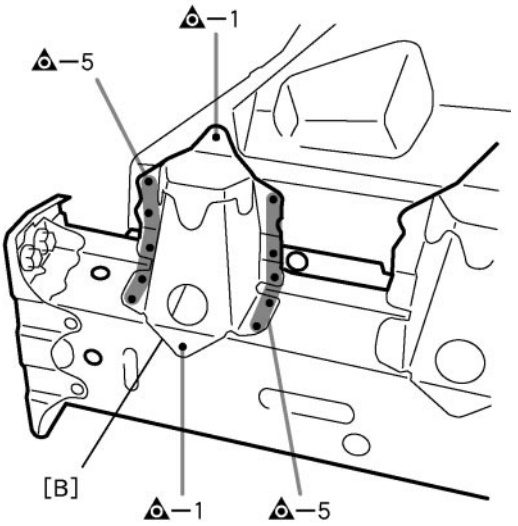

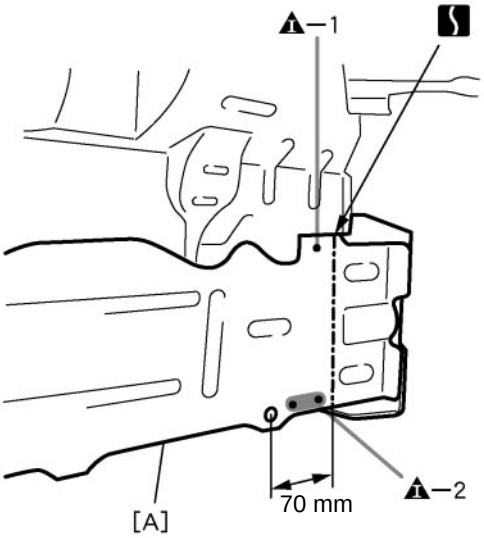

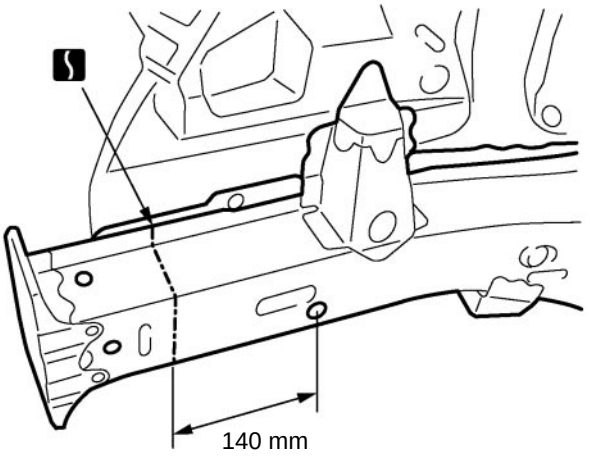

F23302

POINT

1 Remove [B] before conducting this work.
2 Remove [A] at the same time.

PART NAME

[A] Front Sidemember Outer Plate [B] Engine Front Mounting Bracket
70 mm (2.76 in.) 140 mm (5.51 in.)

INSTALLATION

⁎ Temporarily install the new parts and measure each part of the new parts in accordance with the body dimension diagram. (See the body dimension diagram)
⁎ Inspect the fitting of the related parts around the new parts before welding. This affects the appearance of the finish.
⁎ After welding, apply the polyurethane foam to the corresponding parts.
⁎ After welding, apply body sealer and under-coating to the corresponding parts.
⁎ After applying the top coat layer, apply anti-rust agent to the inside of the necked section structural weld spots.

[LH]

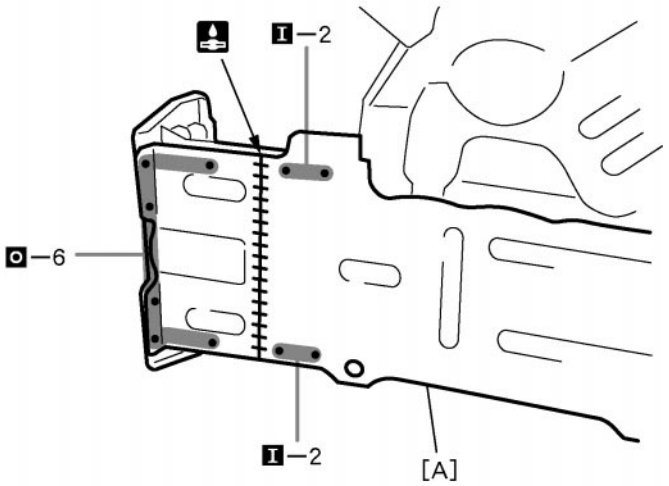

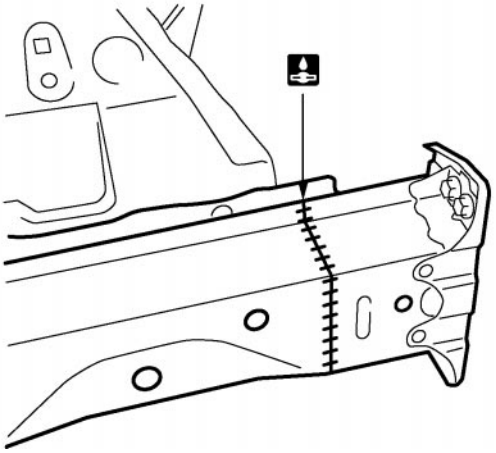

F23303

PART NAME

[A] Front Sidemember Outer Plate

[RH]

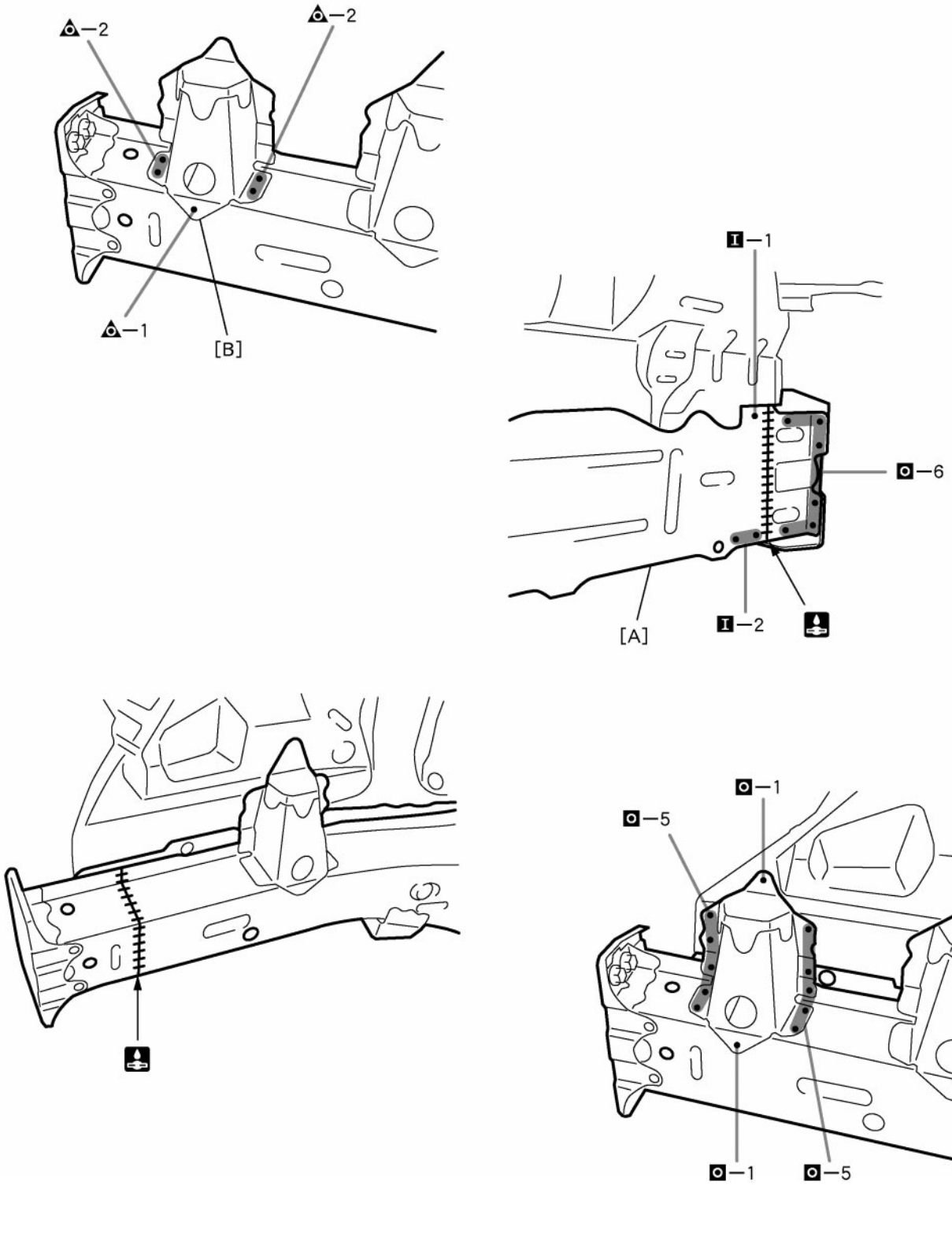

F23304

POINT

1 Remove the [B] from the new parts of the front sidemember reinforcement.
2 After installing the new parts, install [B].

PART NAME

[A] Front Sidemember Outer Plate [B] Engine Front Mounting Bracket

FRONT FENDER MOUNTING BRACKET (ASSY)

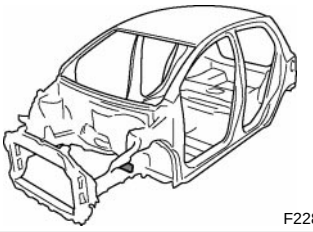
F22819A

REPLACEMENT

REMOVAL

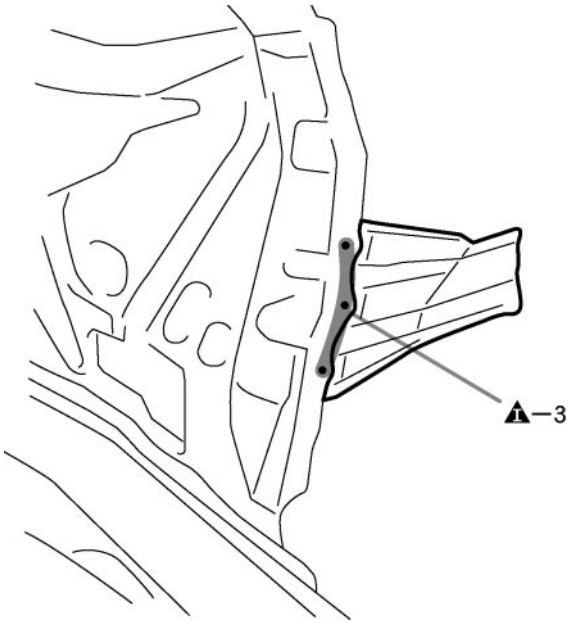

F22819

INSTALLATION

⁎ Temporarily install the new parts and measure each part of the new parts in accordance with the body dimension diagram. (See the body dimension diagram)
⁎ Inspect the fitting of the related parts around the new parts before welding. This affects the appearance of the finish.
⁎ After welding, apply polyurethane foam to the corresponding parts.
⁎ After welding, apply body sealer and undercoating to the corresponding parts.
⁎ After applying the top coat, apply anti-rust agent to the internal panel portion of the closed section structural weld points.

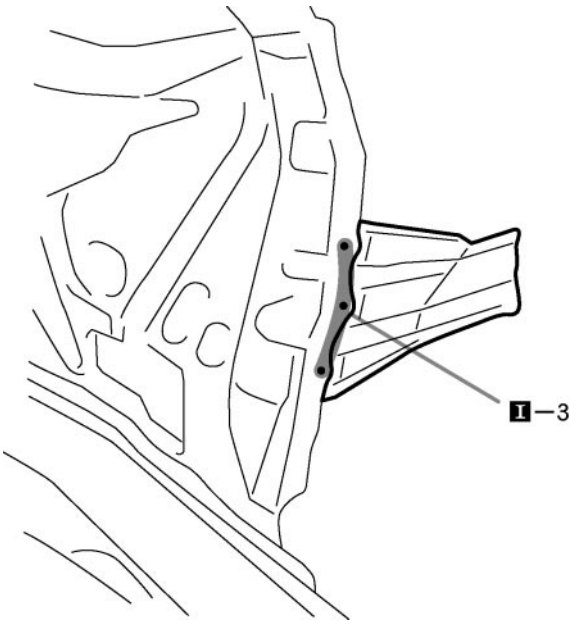

F22820

POINT

1 Inspect the fitting of the front fender and other related parts before welding as this affects the appearance of the finish.

FRONT FENDER APRON (ASSY)

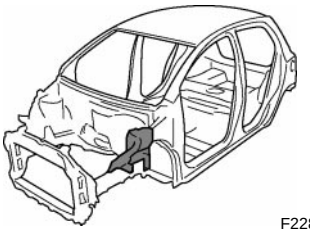
F22821A

REPLACEMENT

With the cowl top side panel removed.

REMOVAL

[RH]

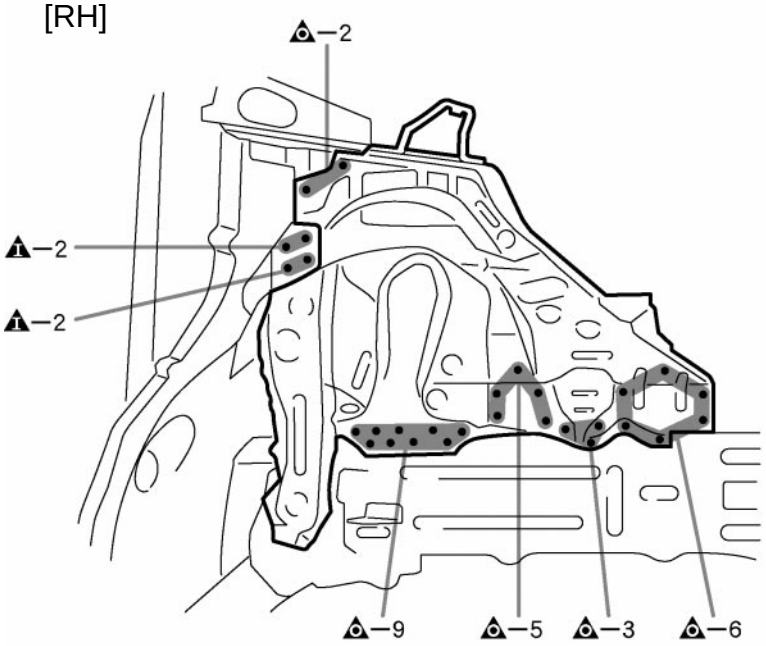

[LH]

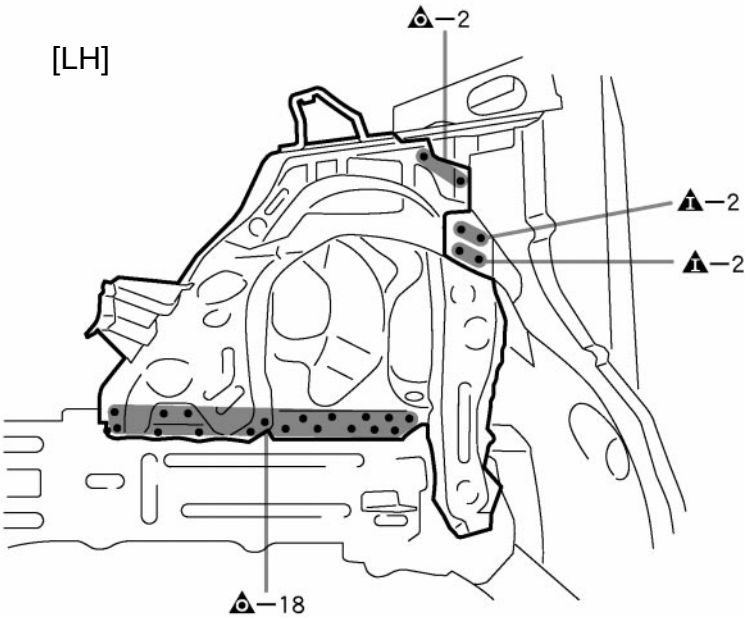

F22821

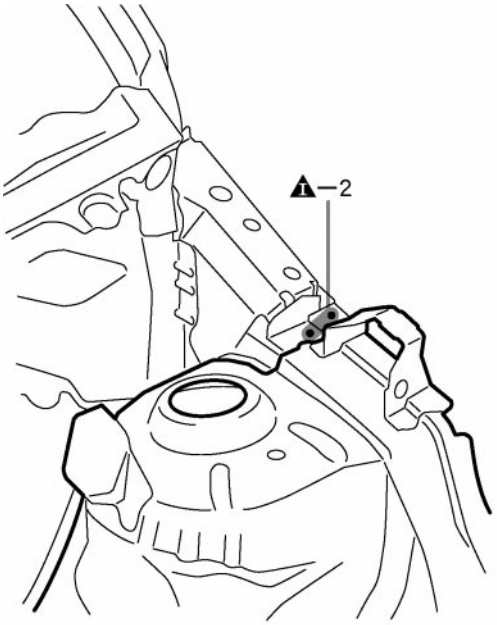

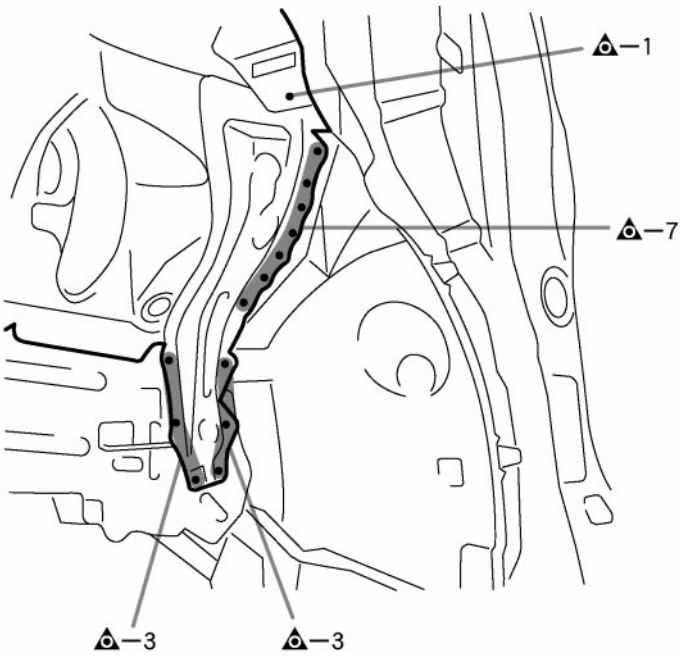

F22822

INSTALLATION

⁎ Temporarily install the new parts and measure each part of the new parts in accordance with the body dimension diagram. (See the body dimension diagram)
⁎ Inspect the fitting of the related parts around the new parts before welding. This affects the appearance of the finish.
⁎ After welding, apply the polyurethane foam to the corresponding parts.
⁎ After welding, apply body sealer and under-coating to the corresponding parts.
⁎ After applying the top coat layer, apply anti-rust agent to the inside of the necked section structural weld spots.

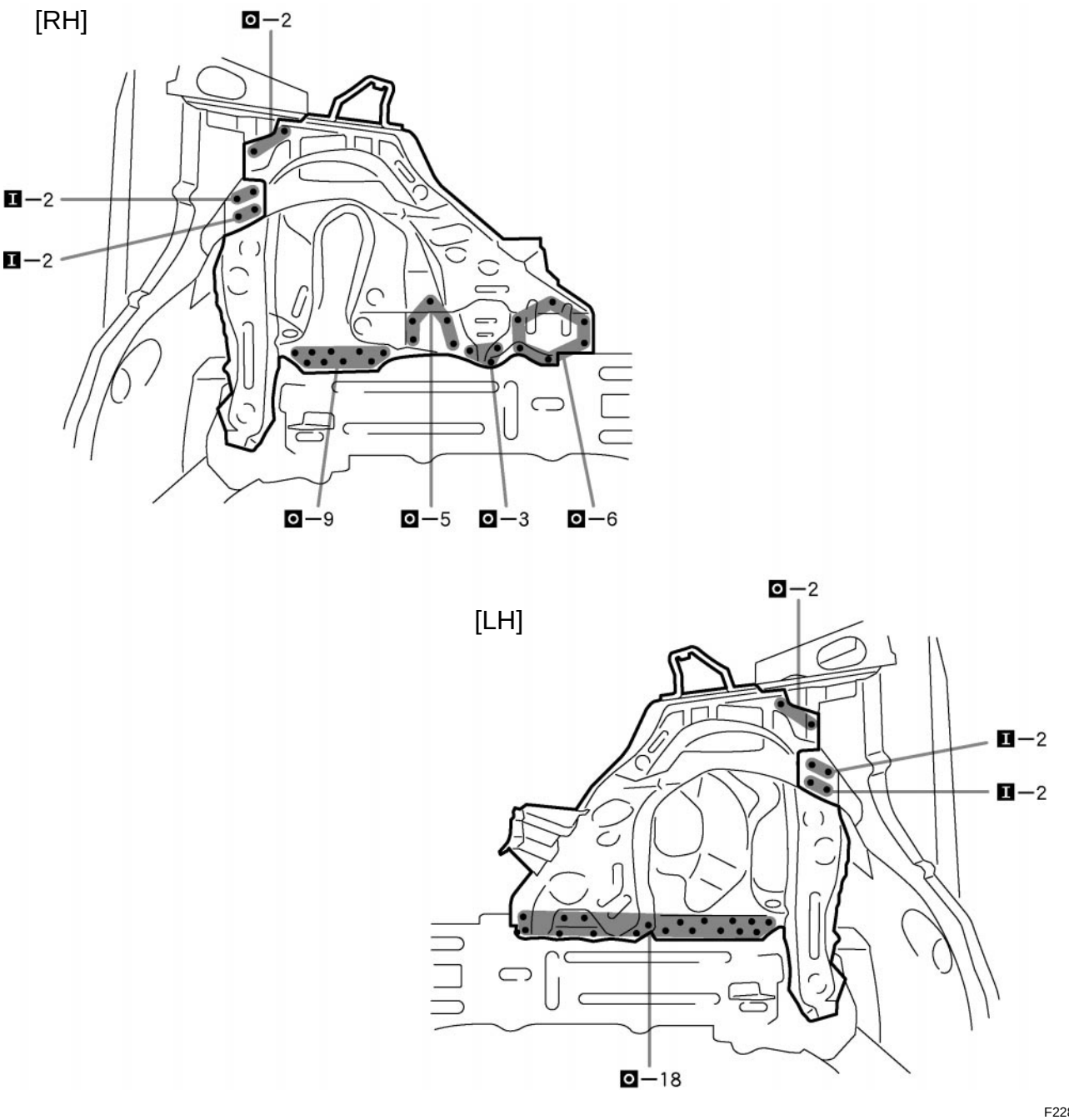

POINT

1 Make sure to attach correctly in accordance with the body dimension diagram as this part affects the front wheel alignment.
2 Inspect the fitting of the front fender, hood and other related parts before welding as this affects the appearance of the finish.

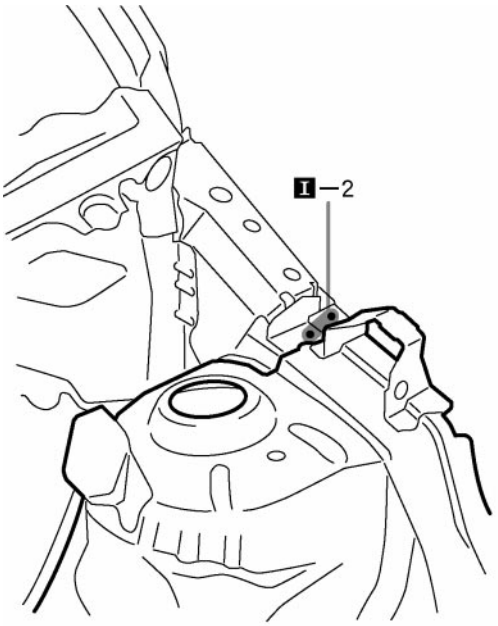

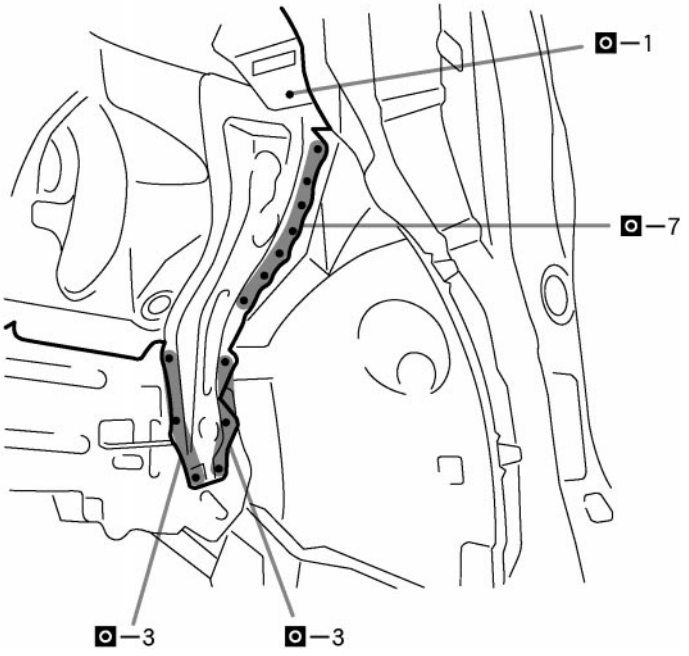

F22824

FRONT SIDEMEMBER REINFORCEMENT (ASSY)

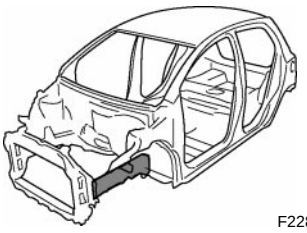
F22829A

REPLACEMENT
With the radiator support and front fender apron removed.

REMOVAL

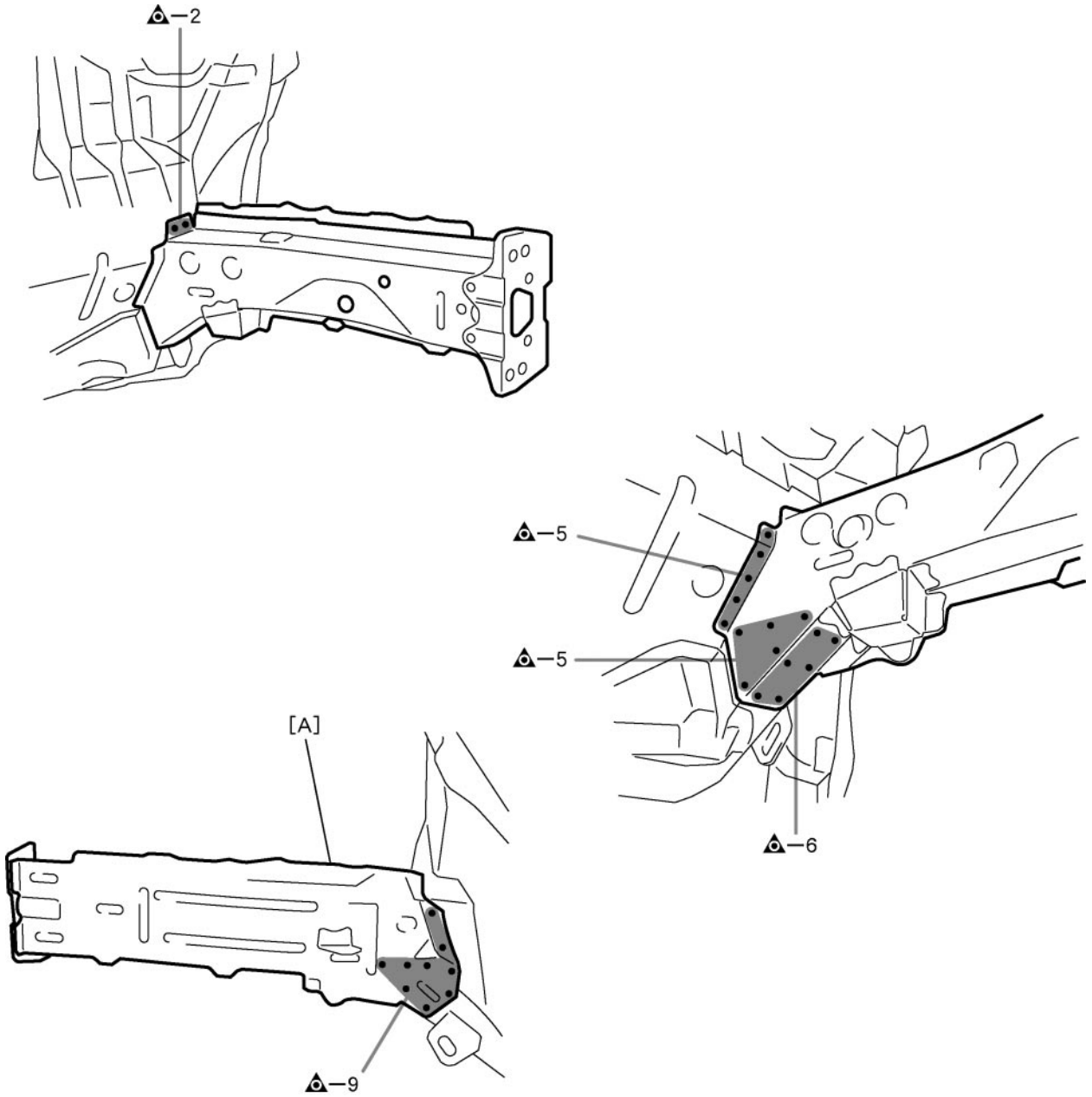

F22829

POINT
1 Remove [A] at the same time.

PART NAME
[A] Front Sidemember Outer Plate

INSTALLATION

⁎ Temporarily install the new parts and measure each part of the new parts in accordance with the body dimension diagram. (See the body dimension diagram)
⁎ Inspect the fitting of the related parts around the new parts before welding. This affects the appearance of the finish.
⁎ After welding, apply the polyurethane foam to the corresponding parts.
⁎ After welding, apply body sealer and under-coating to the corresponding parts.
⁎ After applying the top coat layer, apply anti-rust agent to the inside of the necked section structural weld spots.

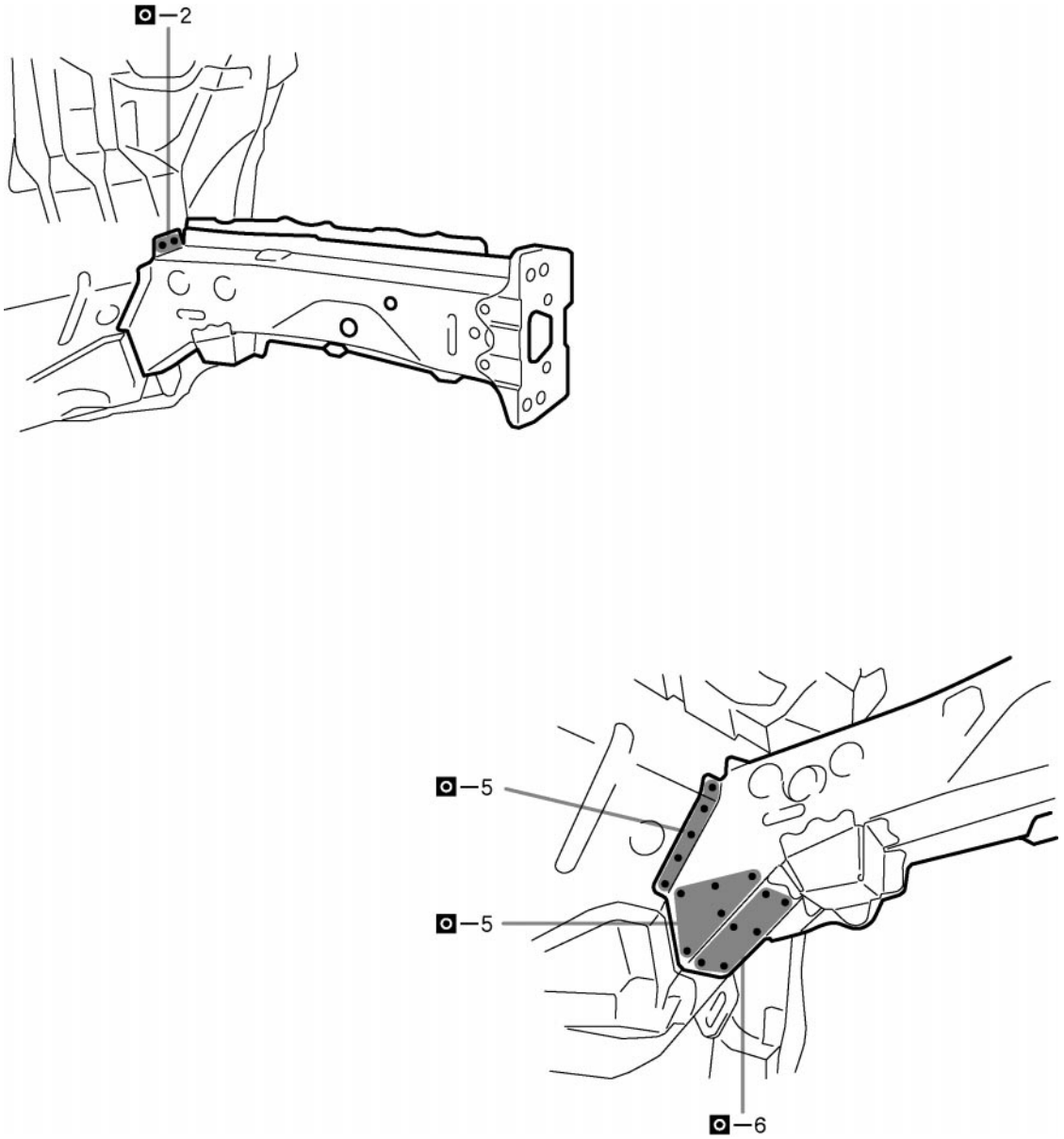

F22830

POINT

1 Make sure to attach correctly in accordance with the body dimension diagram as this part affects the front wheel alignment.

[LH]

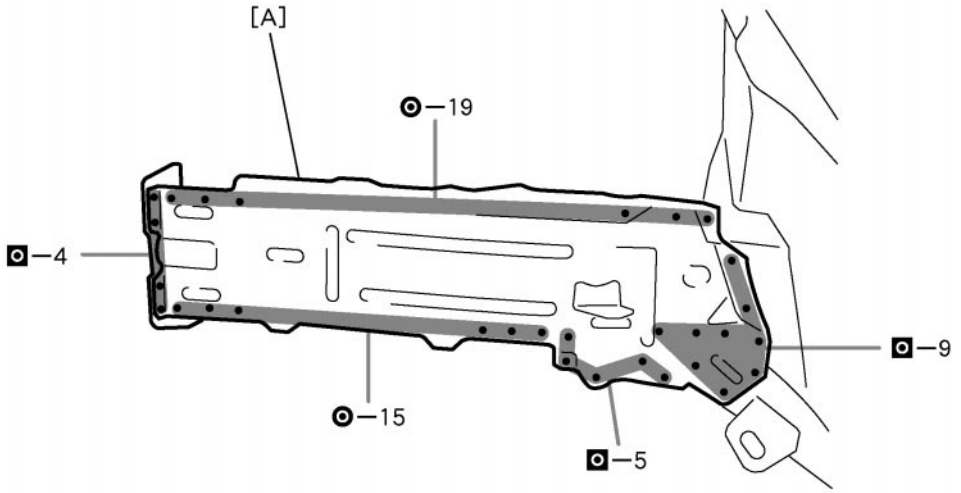

[RH]

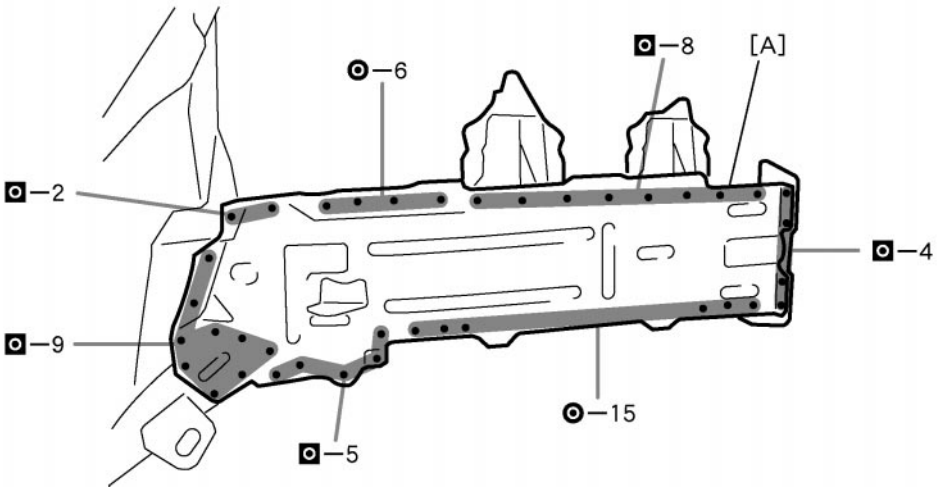

F22831

PART NAME

[A] Front Sidemember Outer Plate

COWL TOP SIDE PANEL (ASSY): Hatchback

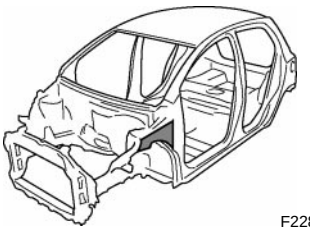
F22832A

REPLACEMENT

REMOVAL

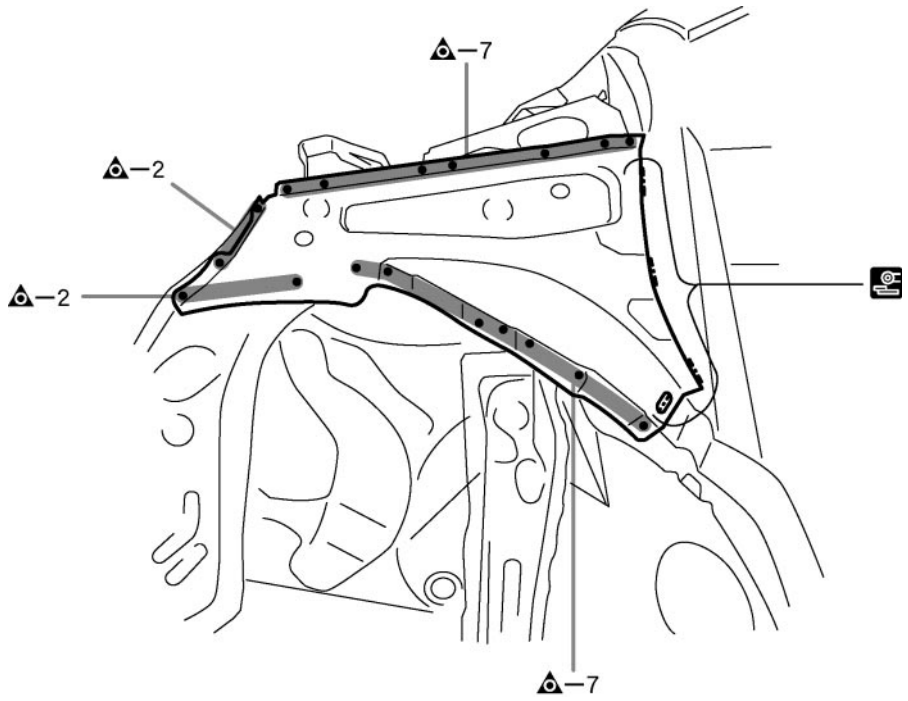

F22832

INSTALLATION

⁎ Temporarily install the new parts and measure each part of the new parts in accordance with the body dimension diagram. (See the body dimension diagram)
⁎ Inspect the fitting of the related parts around the new parts before welding. This affects the appearance of the finish.
⁎ After welding, apply the polyurethane foam to the corresponding parts.
⁎ After welding, apply body sealer and under-coating to the corresponding parts.
⁎ After applying the top coat layer, apply anti-rust agent to the inside of the necked section structural weld spots.

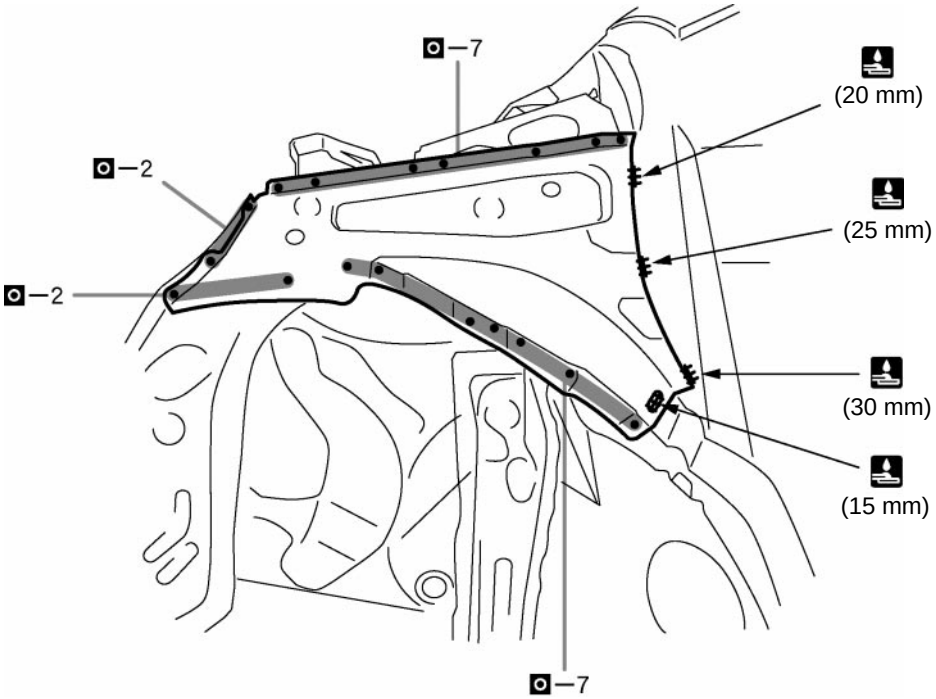

F22833

15 mm (0.59 in.) 20 mm (0.79 in.) 25 mm (0.98 in.) 30 mm (1.18 in.)

COWL TOP SIDE PANEL (ASSY): Sedan

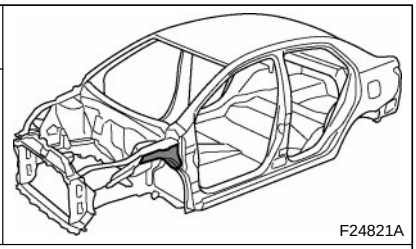
F24821A

REPLACEMENT

REMOVAL

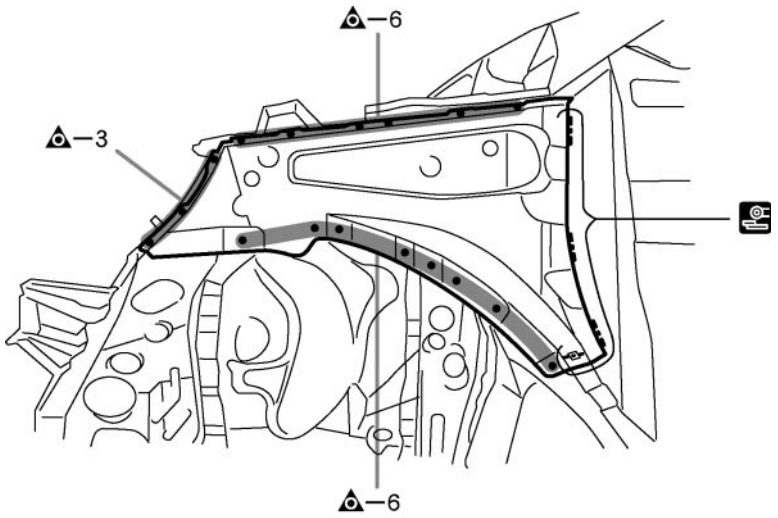

F24821-1

INSTALLATION

* Temporarily install the new parts and measure each part of the new parts in accordance with the body dimension diagram. (See the body dimension diagram)
* Inspect the fitting of the related parts around the new parts before welding. This affects the appearance of the finish.
* After welding, apply polyurethane foam to the corresponding parts.
* After welding, apply body sealer and undercoating to the corresponding parts.
* After applying the top coat, apply anti-rust agent to the internal panel portion of the closed section structural weld points.

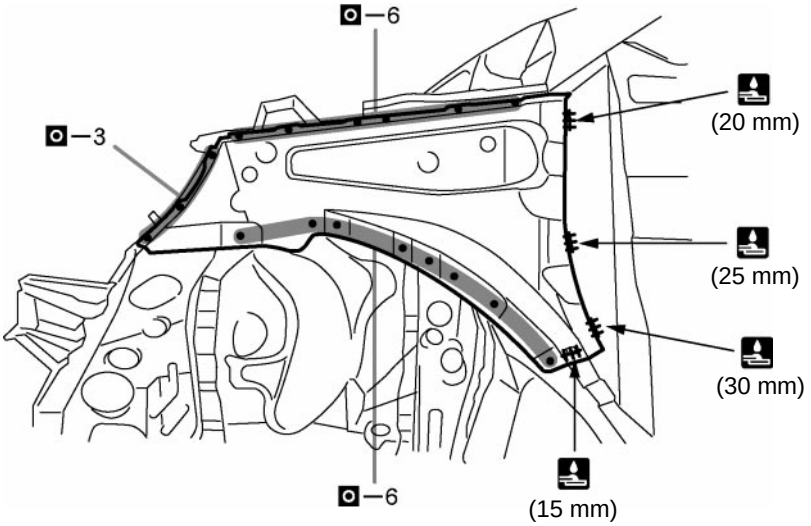

F24821-2

15 mm (0.59 in.) 20 mm (0.79 in.) 25 mm (0.98 in.) 30 mm (1.18 in.)

COWL TOP SIDE UPPER PANEL (ASSY): Hatchback

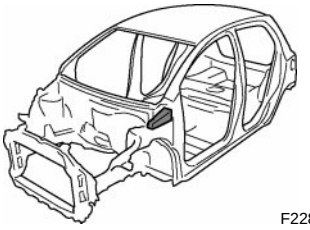
F22834A

REPLACEMENT
With the cowl top side panel removed.

REMOVAL

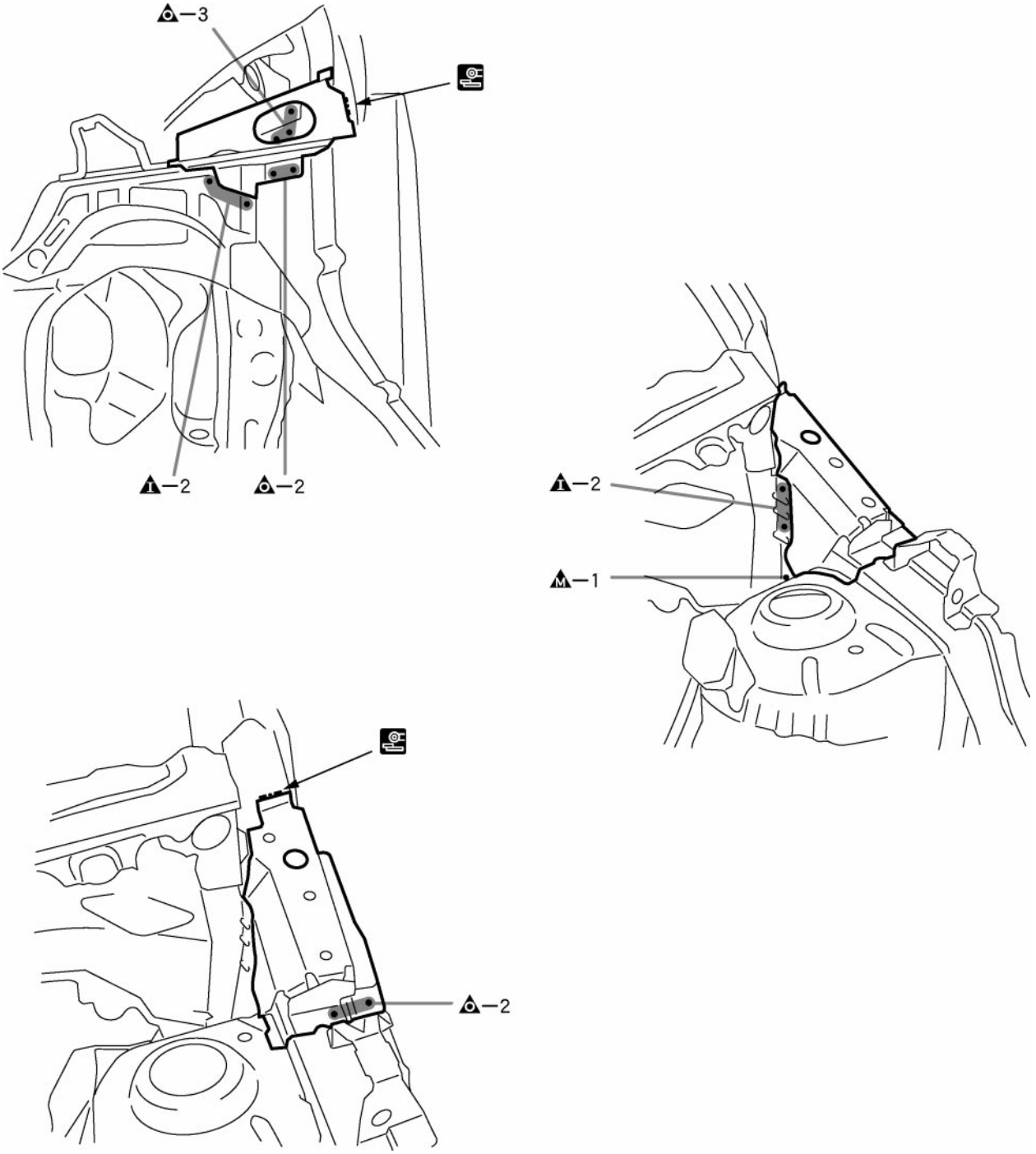

F22834

INSTALLATION

⁎ Temporarily install the new parts and measure each part of the new parts in accordance with the body dimension diagram. (See the body dimension diagram)
⁎ Inspect the fitting of the related parts around the new parts before welding. This affects the appearance of the finish.
⁎ After welding, apply the polyurethane foam to the corresponding parts.
⁎ After welding, apply body sealer and under-coating to the corresponding parts.
⁎ After applying the top coat layer, apply anti-rust agent to the inside of the necked section structural weld spots.

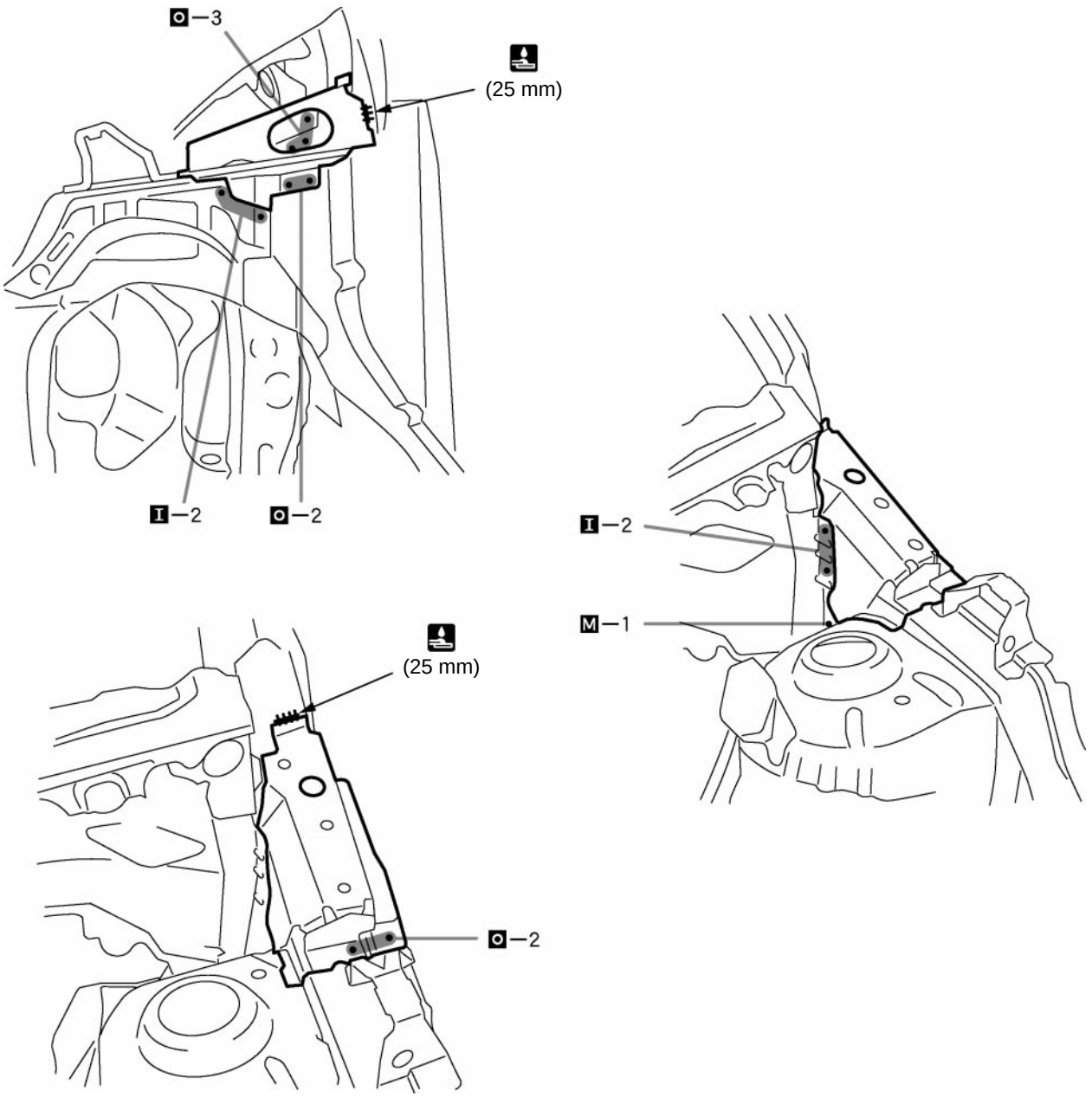

POINT

1 Inspect the fitting of the hood and related parts before welding as this affects the appearance of the finish.

25 mm (0.98 in.)

COWL TOP SIDE UPPER PANEL (ASSY): Sedan

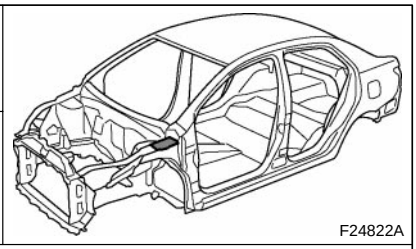
F24822A

REPLACEMENT
With the cowl top side panel removed.

REMOVAL

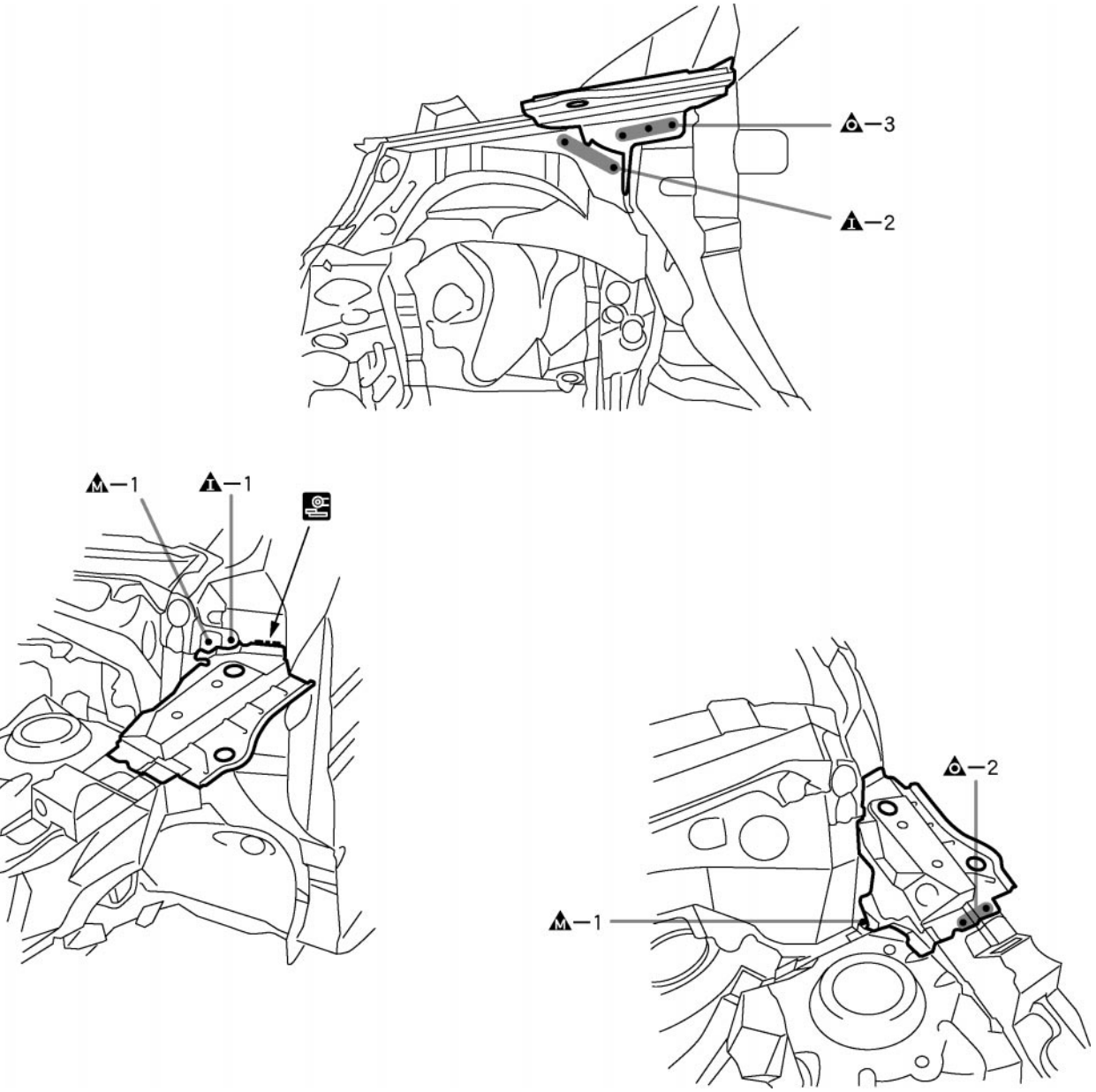

F24822-1

INSTALLATION

⁎ Temporarily install the new parts and measure each part of the new parts in accordance with the body dimension diagram. (See the body dimension diagram)
⁎ Inspect the fitting of the related parts around the new parts before welding. This affects the appearance of the finish.
⁎ After welding, apply polyurethane foam to the corresponding parts.
⁎ After welding, apply body sealer and undercoating to the corresponding parts.
⁎ After applying the top coat, apply anti-rust agent to the internal panel portion of the closed section structural weld points.

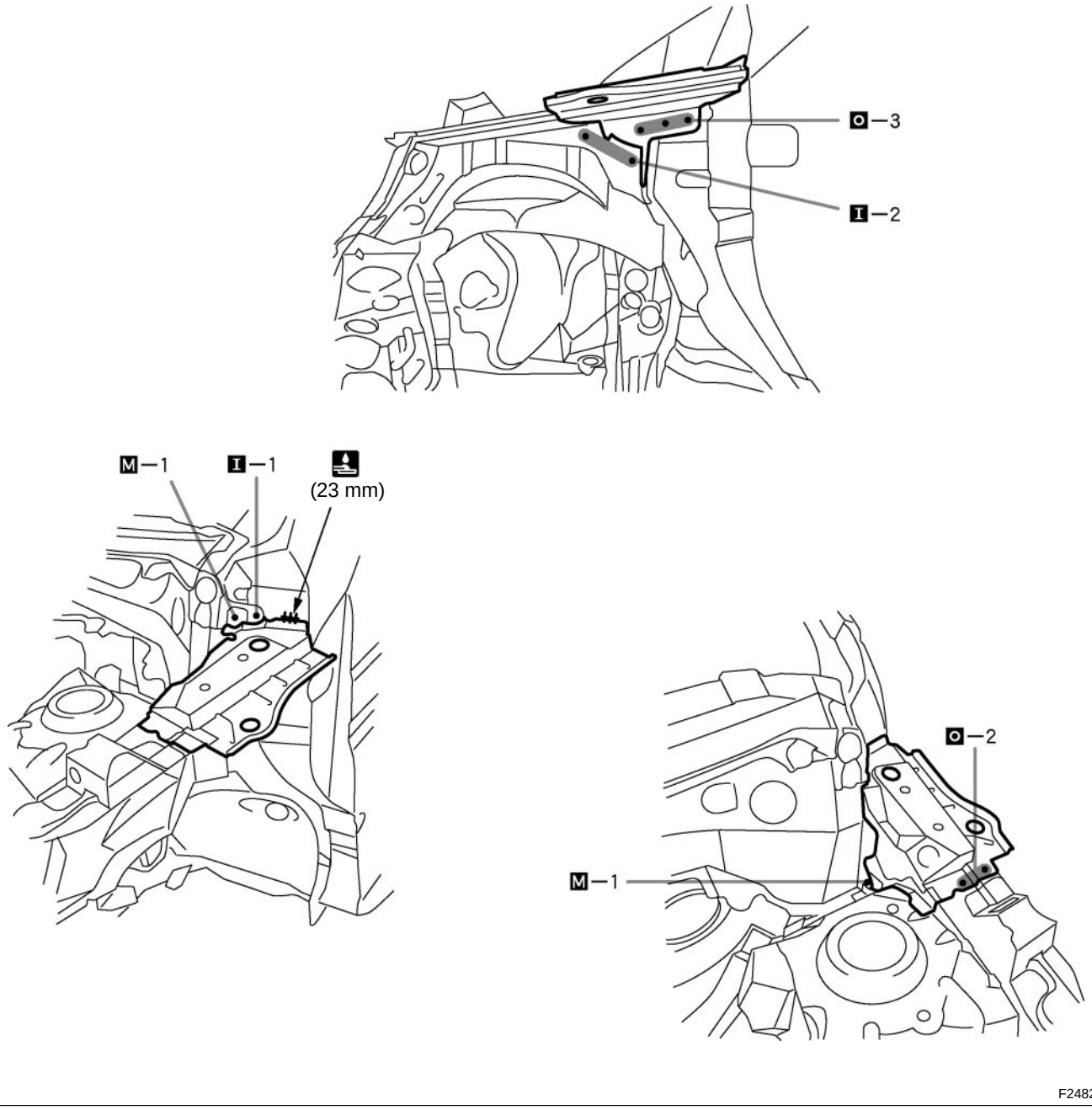

F24822-2

POINT

1 Inspect the fitting of the hood and related parts before welding as this affects the appearance of the finish.

23 mm (0.91 in.)

CENTER BODY PILLAR (CUT): Hatchback 5 Door

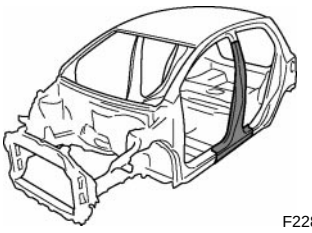
F22840A

REPLACEMENT

REMOVAL

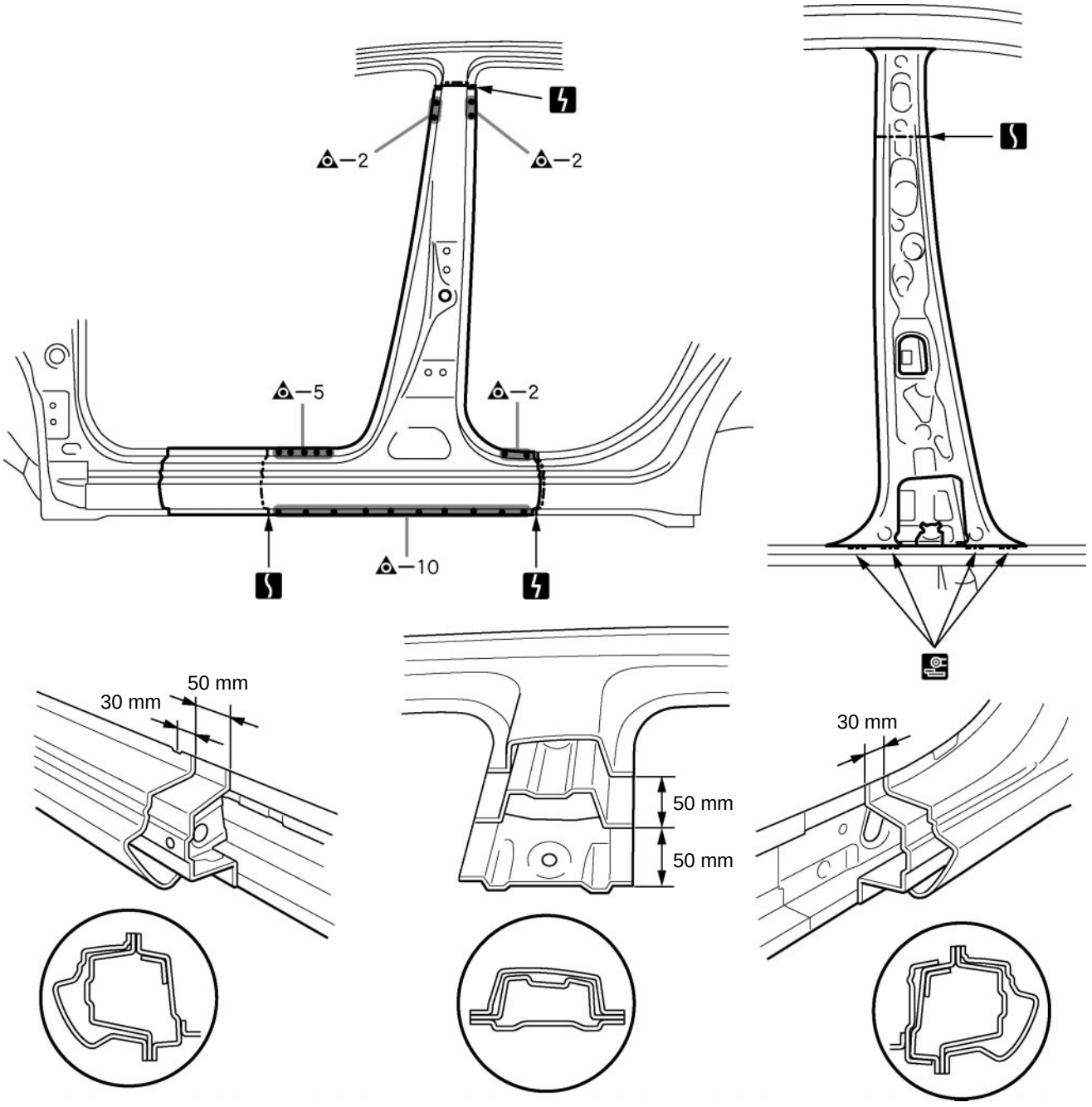

F22840

30 mm (1.18 in.) 50 mm (1.97 in.)

INSTALLATION

⁎ Temporarily install the new parts and measure each part of the new parts in accordance with the body dimension diagram. (See the body dimension diagram)
⁎ Inspect the fitting of the related parts around the new parts before welding. This affects the appearance of the finish.
⁎ After welding, apply the polyurethane foam to the corresponding parts.
⁎ After welding, apply body sealer and under-coating to the corresponding parts.
⁎ After applying the top coat layer, apply anti-rust agent to the inside of the necked section structural weld spots.

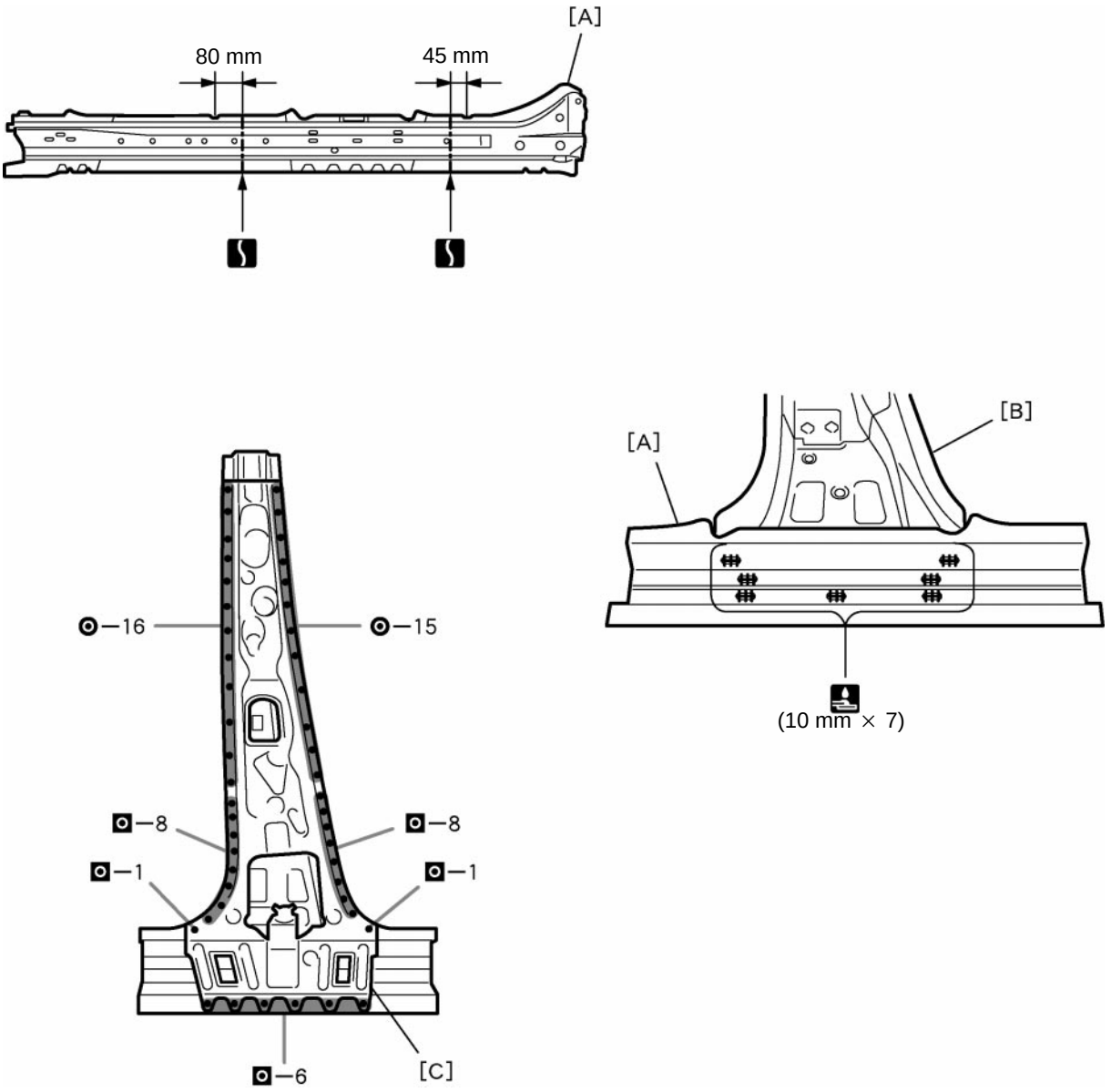

F22841

POINT

1 Before temporarily installing the new parts, weld [A], [B] and [C] with standard welding number.

PART NAME

[A] Rocker Outer Reinforce [B] Center Body Pillar Reinforcement [C] Center Body Inner Pillar

10 mm (0.39 in.) 45 mm (1.77 in.) 80 mm (3.15 in.)

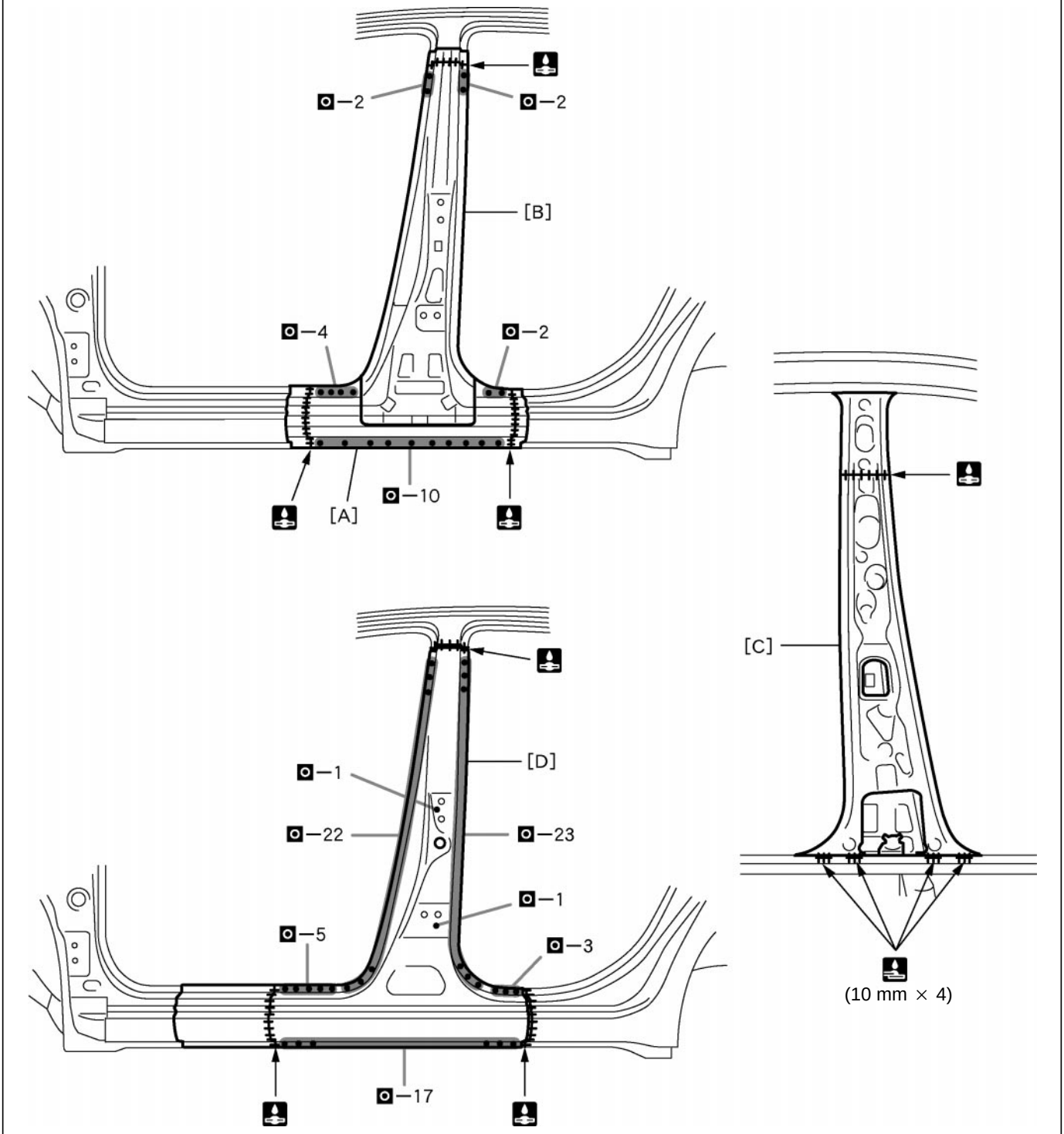

POINT

1 Inspect the fitting of the front door, rear door and other related parts before welding as this affects the appearance of the finish.

2 After welding [A], [B] and [C] to the vehicle, install [D].

PART NAME

[A] Rocker Outer Reinforce
[B] Center Body Pillar Reinforcement
[C] Center Body Inner Pillar
[D] Center Body Outer Pillar

10 mm (0.39 in.)

FRONT BODY PILLAR (CUT): Hatchback

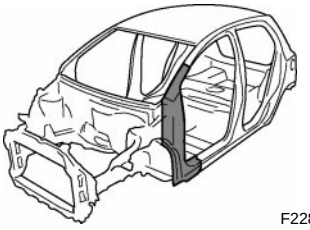
F22836A

REPLACEMENT
With the cowl top side upper panel removed.

REMOVAL

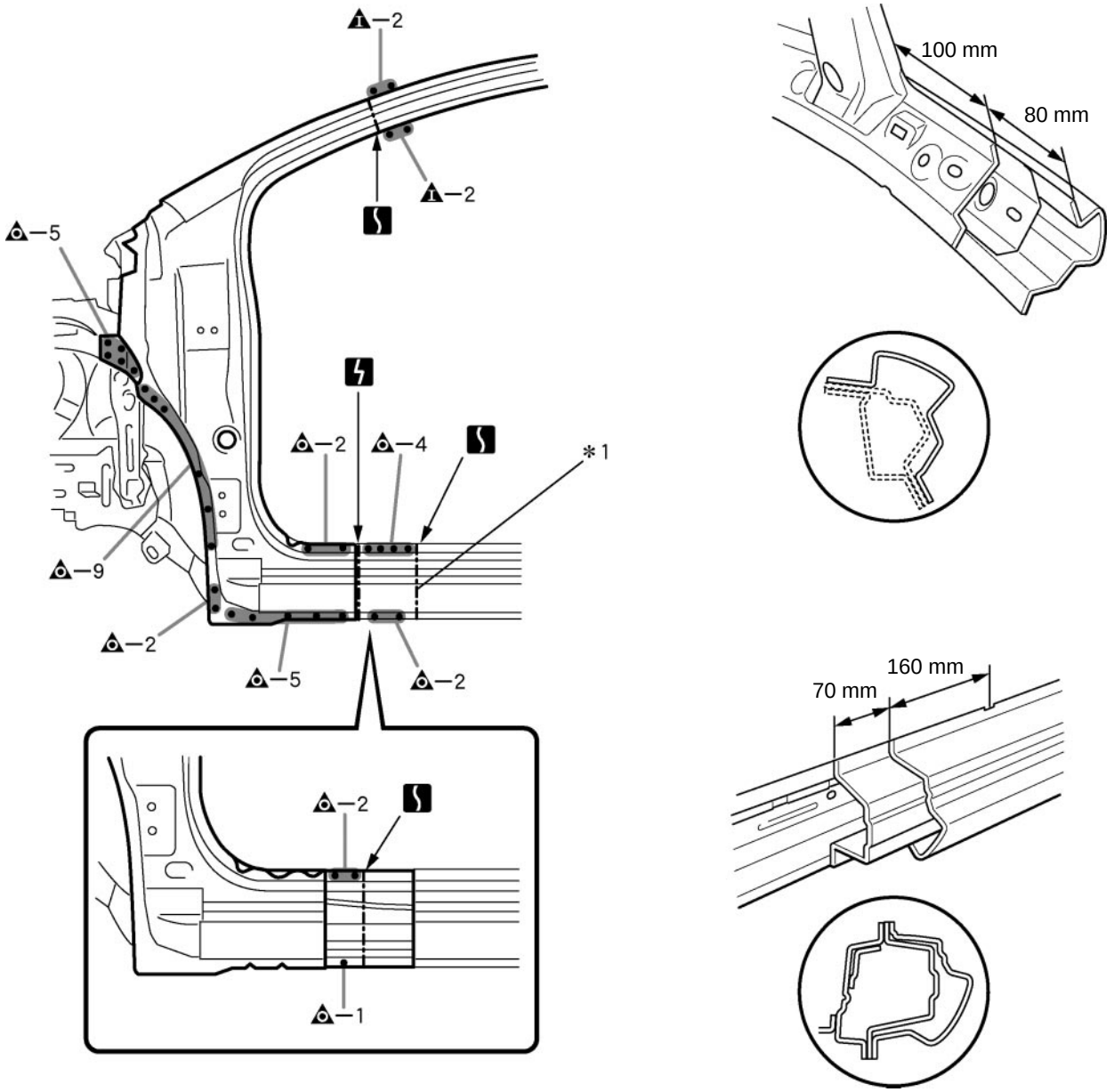

F22836

POINT
1 *1: This part of the outer panel is reused because the rocker panel section is cut off at a position behind the service part cut position of the outer panel.

70 mm (2.76 in.) 80 mm (3.15 in.) 100 mm (3.94 in.) 160 mm (6.30 in.)

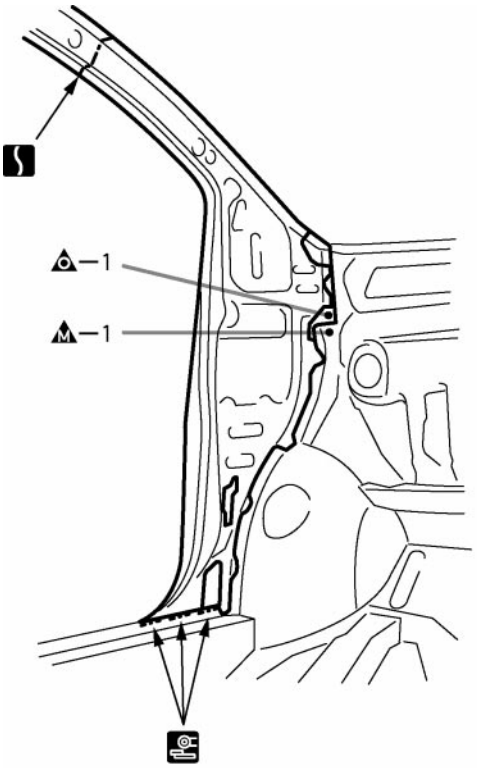

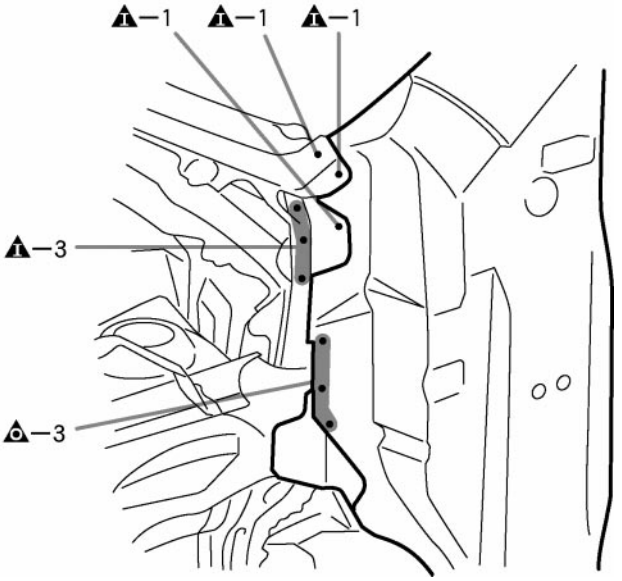

F22837

INSTALLATION

⁎ Temporarily install the new parts and measure each part of the new parts in accordance with the body dimension diagram. (See the body dimension diagram)
⁎ Inspect the fitting of the related parts around the new parts before welding. This affects the appearance of the finish.
⁎ After welding, apply polyurethane foam to the corresponding parts.
⁎ After welding, apply body sealer and undercoating to the corresponding parts.
⁎ After applying the top coat, apply anti-rust agent to the internal panel portion of the closed section structural weld points.

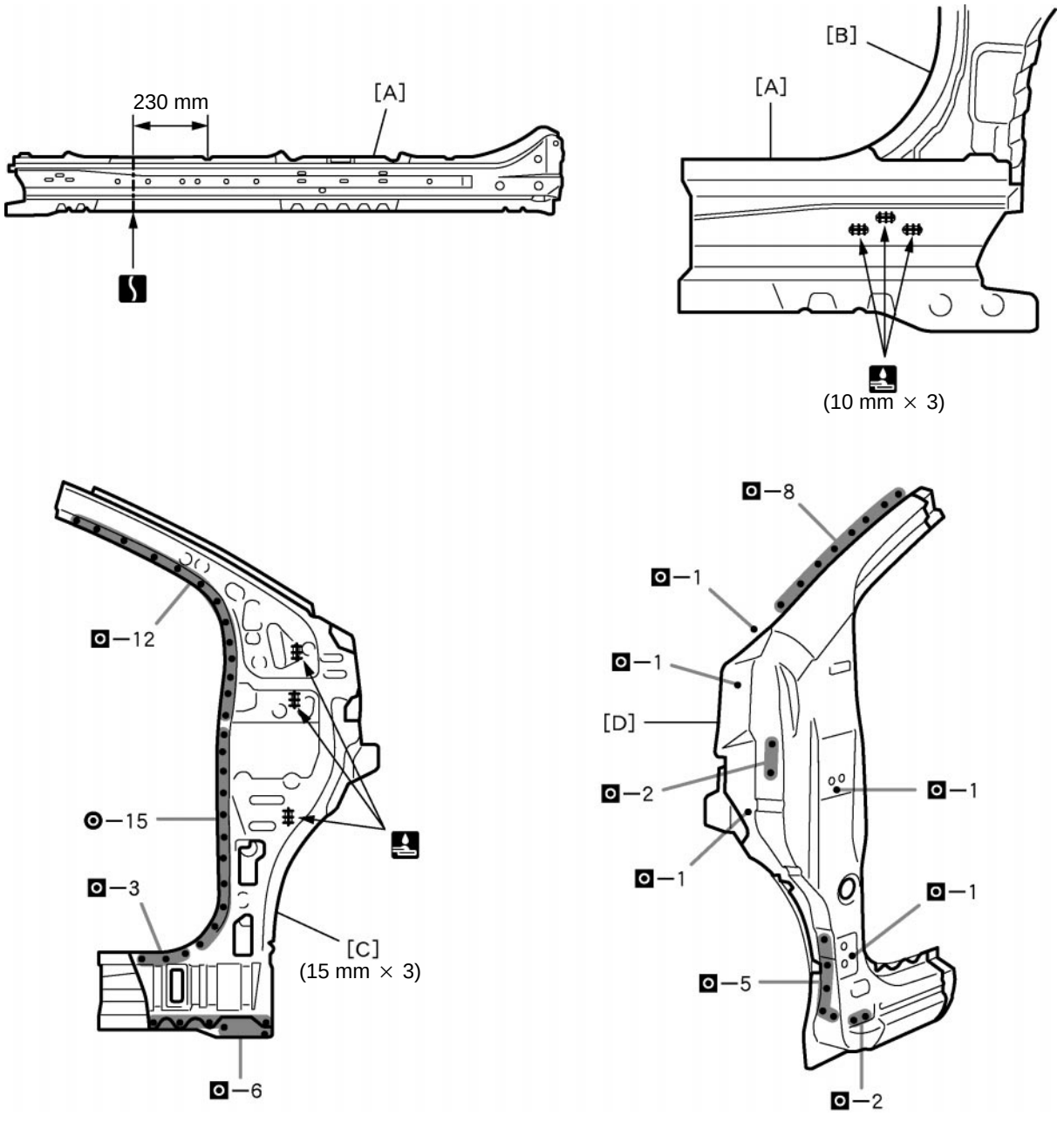

F22838

POINT

1 Before temporarily installing the new parts, weld [A], [B], [C] and [D] with standard welding number.

PART NAME

[A] Rocker Outer Reinforce [B] Front Body Pillar Lower Reinforce
[C] Front Body Inner Pillar [D] Front Body Outer Pillar
10 mm (0.39 in.) 15 mm (0.59 in.) 230 mm (9.06 in.)

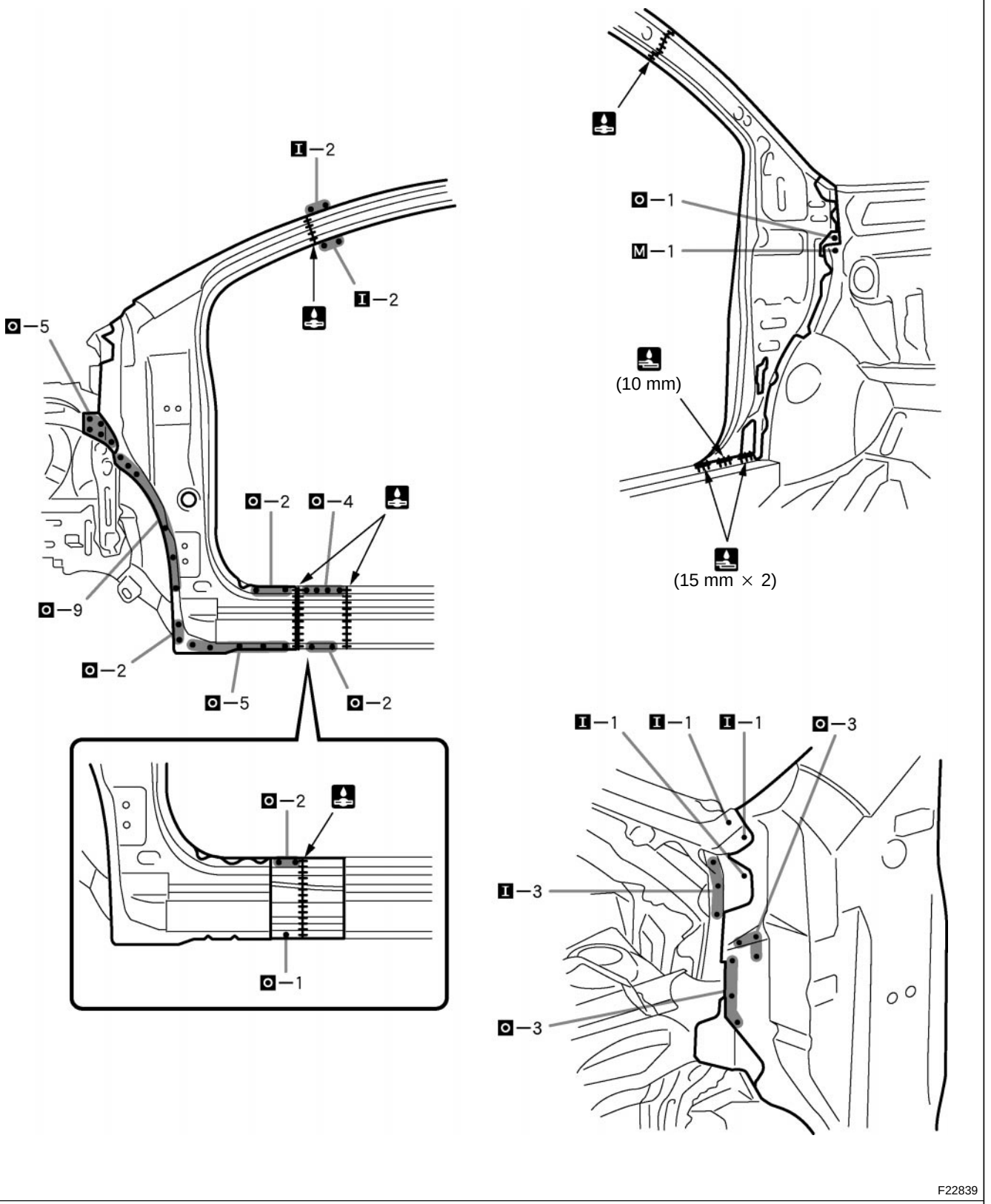

POINT

1 Inspect the fitting of the front fender, front door, windshield glass and other related parts before welding as this affects the appearance of the finish.

10 mm (0.39 in.) 15 mm (0.59 in.)

FRONT BODY PILLAR (CUT): Sedan

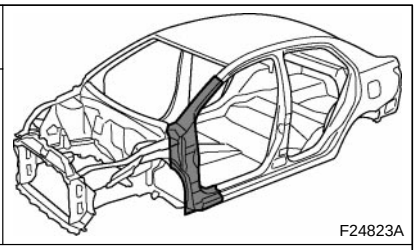
F24823A

REPLACEMENT
With the cowl top side upper panel removed.

REMOVAL

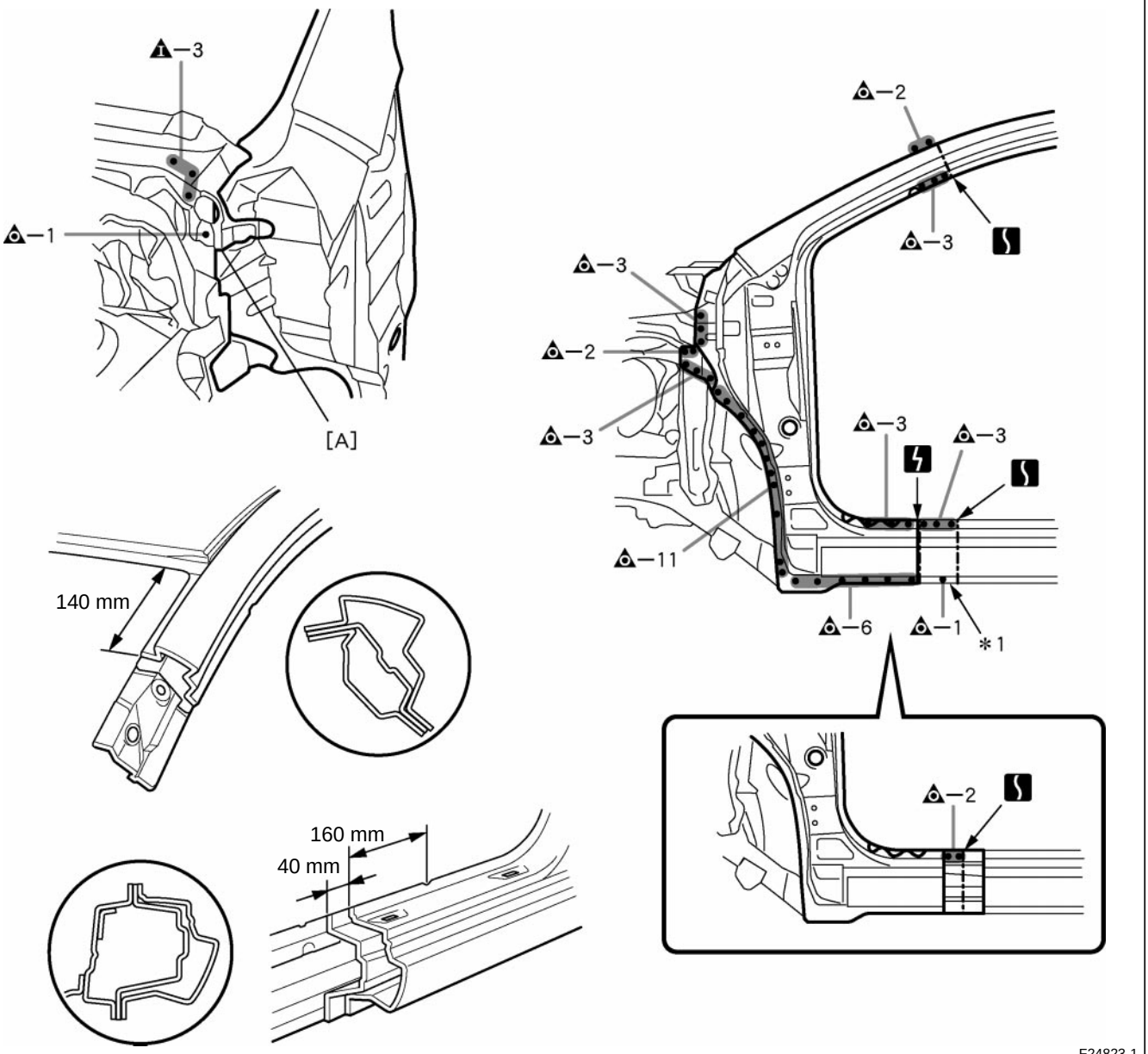

F24823-1

POINT
1 After removing [A], remove the front body pillar.
2 *1: This part of the outer panel is reused because the rocker panel section is cut off at a position behind the service part cut position of the outer panel.

PART NAME
[A] Front Panel No.1 Bracket

40 mm (1.57 in.) 140 mm (5.51 in.) 160 mm (6.30 in.)

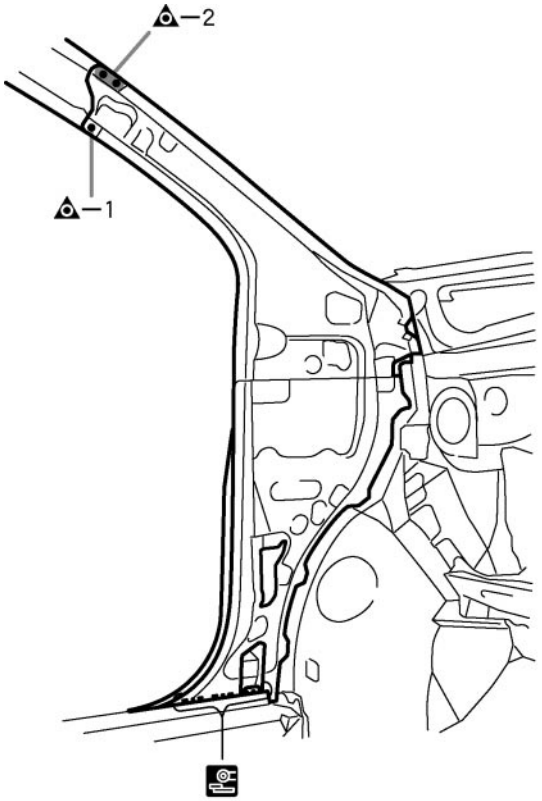

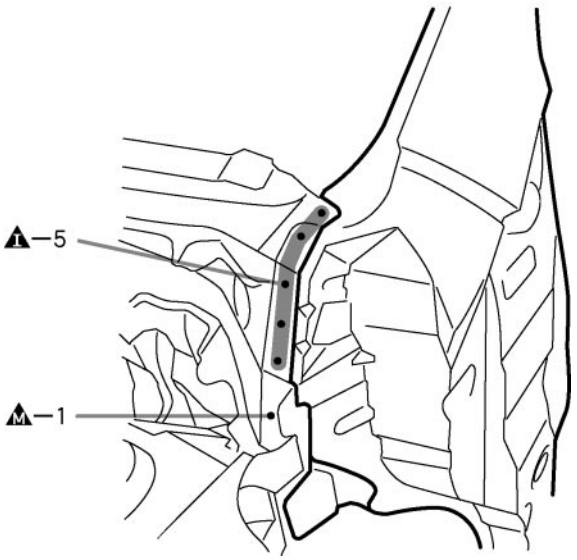

F24824

INSTALLATION

⁎ Temporarily install the new parts and measure each part of the new parts in accordance with the body dimension diagram. (See the body dimension diagram)
⁎ Inspect the fitting of the related parts around the new parts before welding. This affects the appearance of the finish.
⁎ After welding, apply polyurethane foam to the corresponding parts.
⁎ After welding, apply body sealer and undercoating to the corresponding parts.
⁎ After applying the top coat, apply anti-rust agent to the internal panel portion of the closed section structural weld points.

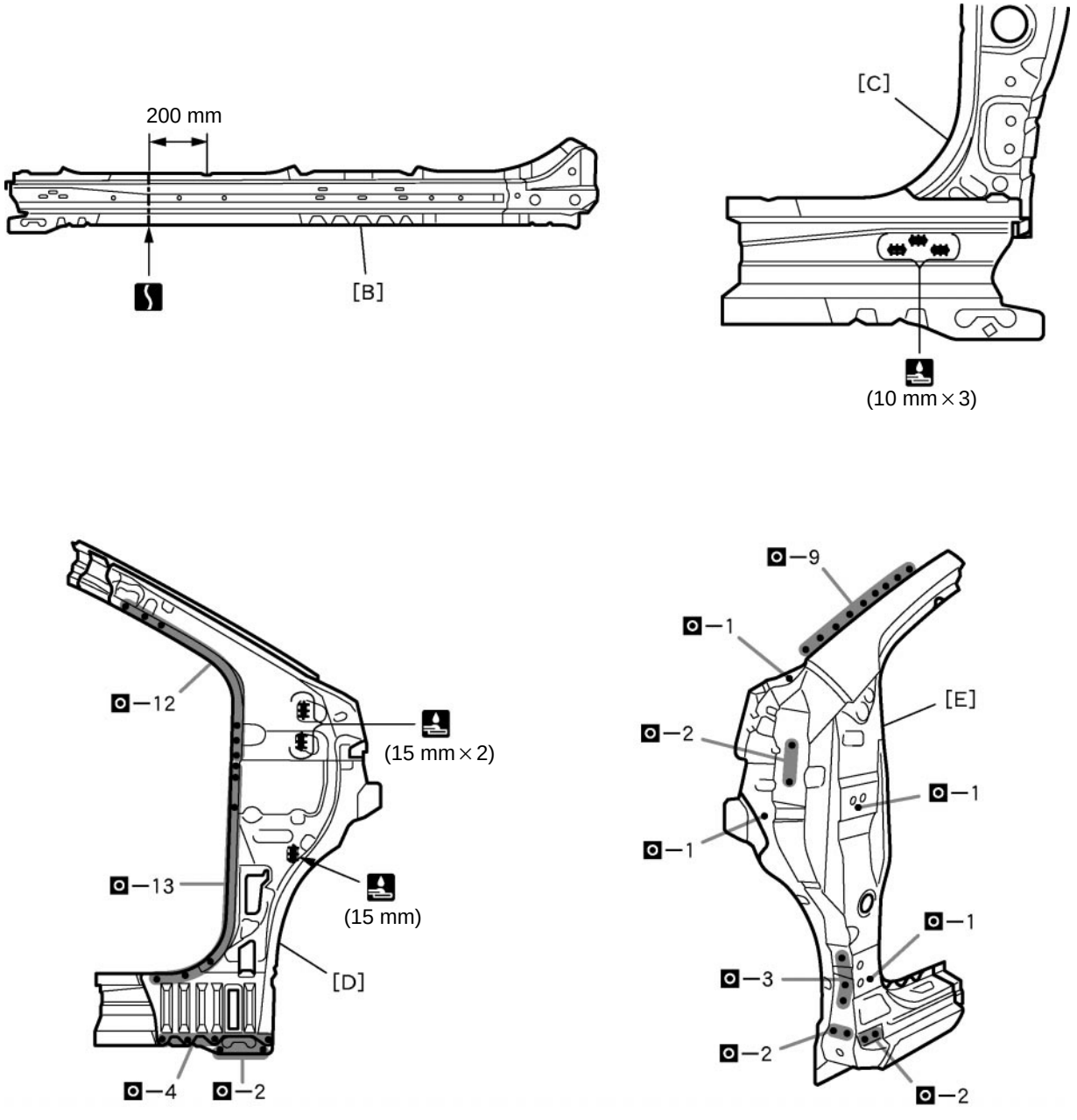

POINT

1 Before temporarily installing the new parts, weld [B], [C], [D] and [E] with standard welding number.

PART NAME

[B] Rocker Outer Reinforce
[C] Front Body Pillar Lower Reinforce
[D] Front Body Inner Pillar
[E] Front Body Upper Outer Pillar

10 mm (0.39 in.) 15 mm (0.59 in.) 200 mm (7.87 in.)

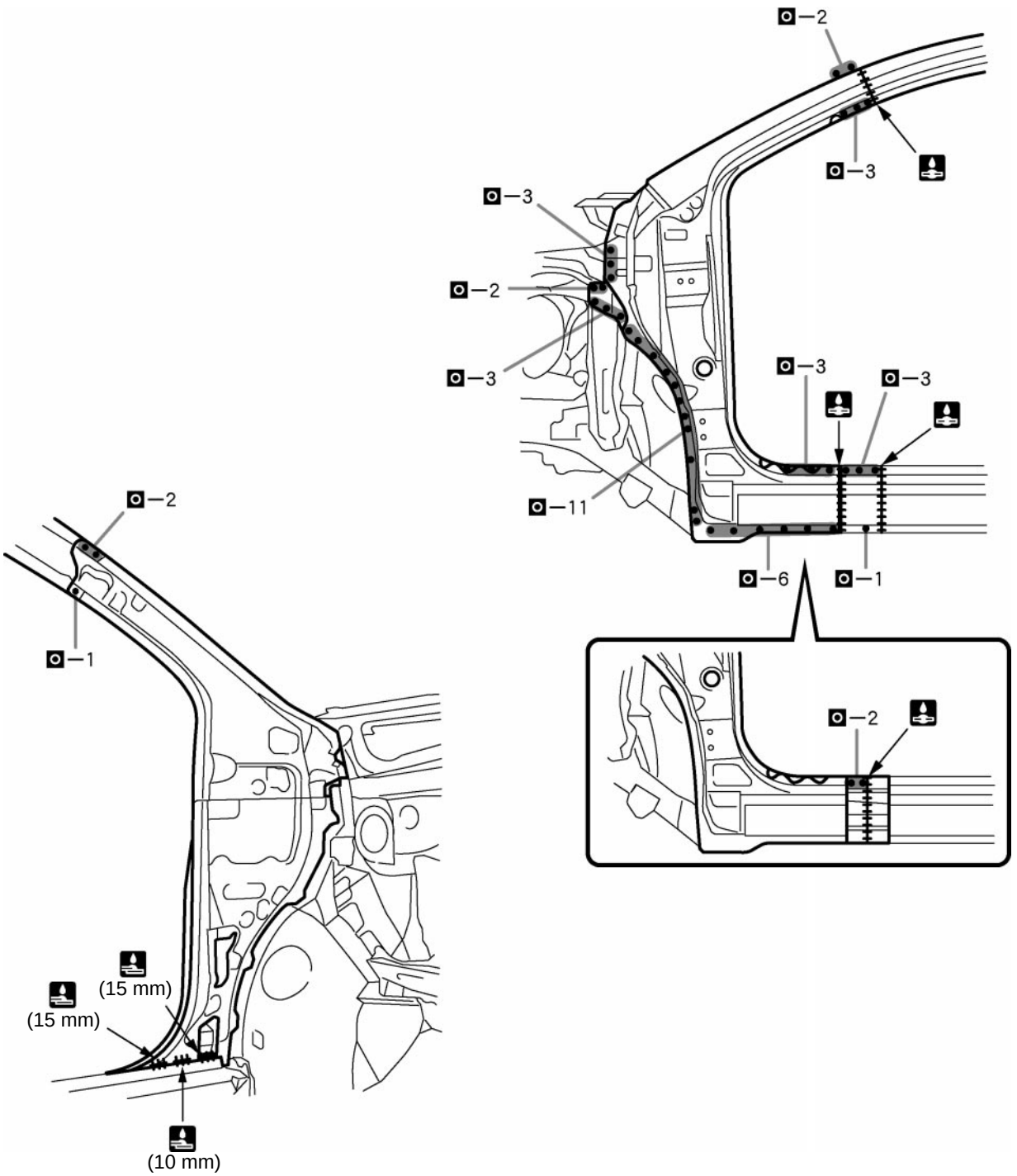

F24826

10 mm (0.39 in.) 15 mm (0.59 in.)

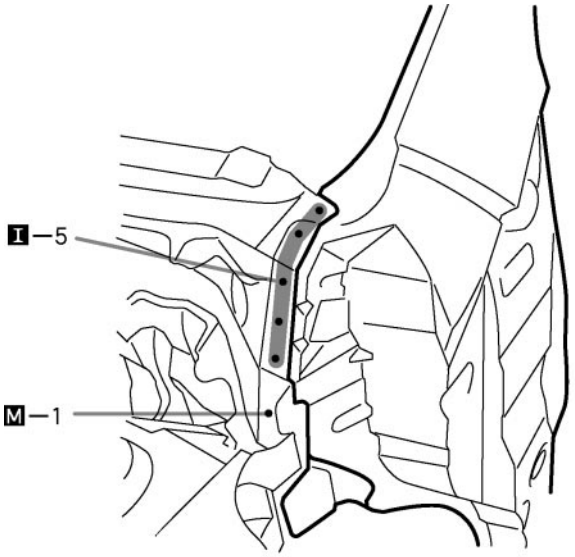

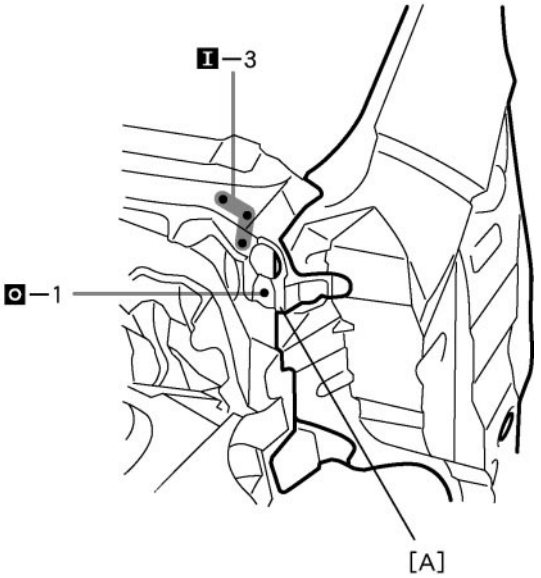

F24827-1

POINT

1 Inspect the fitting of the front fender, front door, window shield glass and other related parts before welding as this affects the appearance of the finish.
2 After installing the new parts, install [A]

PART NAME

[A] Front Panel No.1 Bracket

FRONT DOOR OUTER PANEL (CUT): Hatchback 5 Door

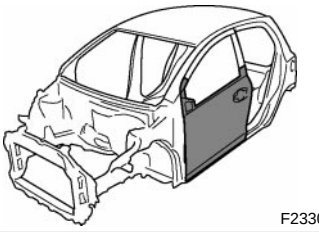
F23307A

REPLACEMENT

REMOVAL

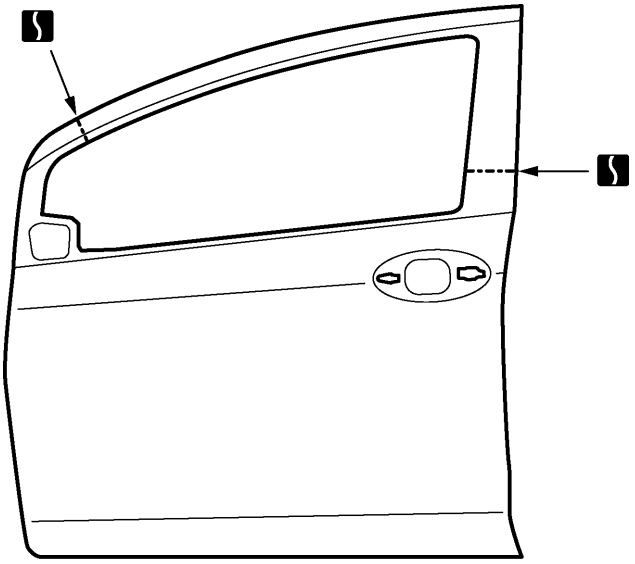

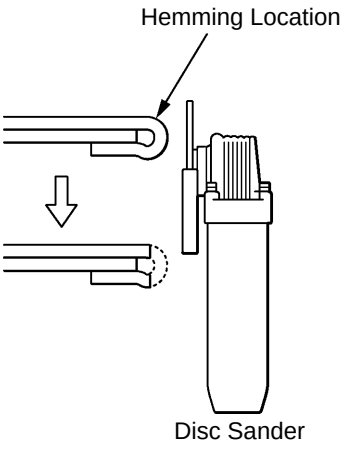

F23307

POINT

1 After grinding off the hemming location, remove the outer panel.

INSTALLATION

- ⁎ Temporarily install the new parts and measure each part of the new parts in accordance with the body dimension diagram. (See the body dimension diagram)
- ⁎ Inspect the fitting of the related parts around the new parts before welding. This affects the appearance of the finish.
- ⁎ After welding, apply the polyurethane foam to the corresponding parts.
- ⁎ After welding, apply body sealer and under-coating to the corresponding parts.
- ⁎ After applying the top coat layer, apply anti-rust agent to the inside of the necked section structural weld spots.

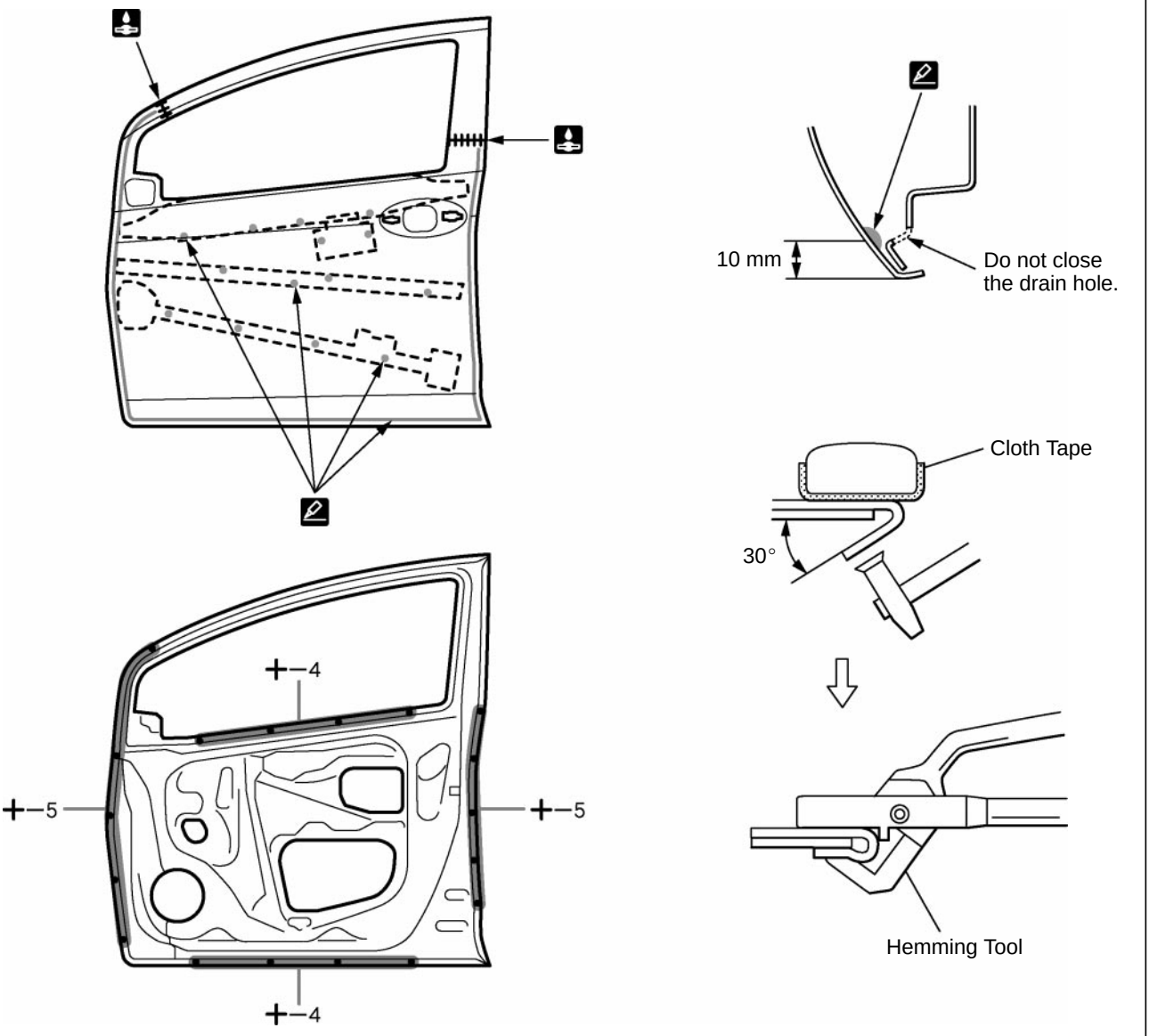

F23308

POINT

1 Before temporarily installing the new parts, apply body sealer to the reinforcement, side impact protection beam and backside of the new parts.
HINT:
1) Apply sealer evenly of about 10 mm (0.39 in.) from the flange and 3 mm (0.12 in.) in diameter on the outer panel and apply just enough sealer for the reinforcement and side impact protection beam to make contact.

2 Bend the flange hem about 30° with a hammer and dolly. Then, fasten tightly with a hemming tool.
HINT:
1) Perform hemming in three steps, being careful not to warp the panel.
2) If a hemming tool cannot be used, hem with a hammer and dolly.

CENTER BODY PILLAR (CUT): Sedan

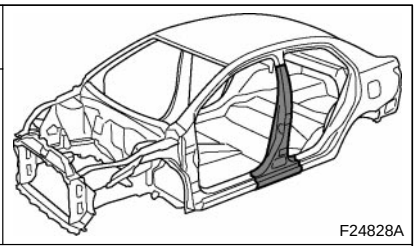
F24828A

REPLACEMENT

REMOVAL

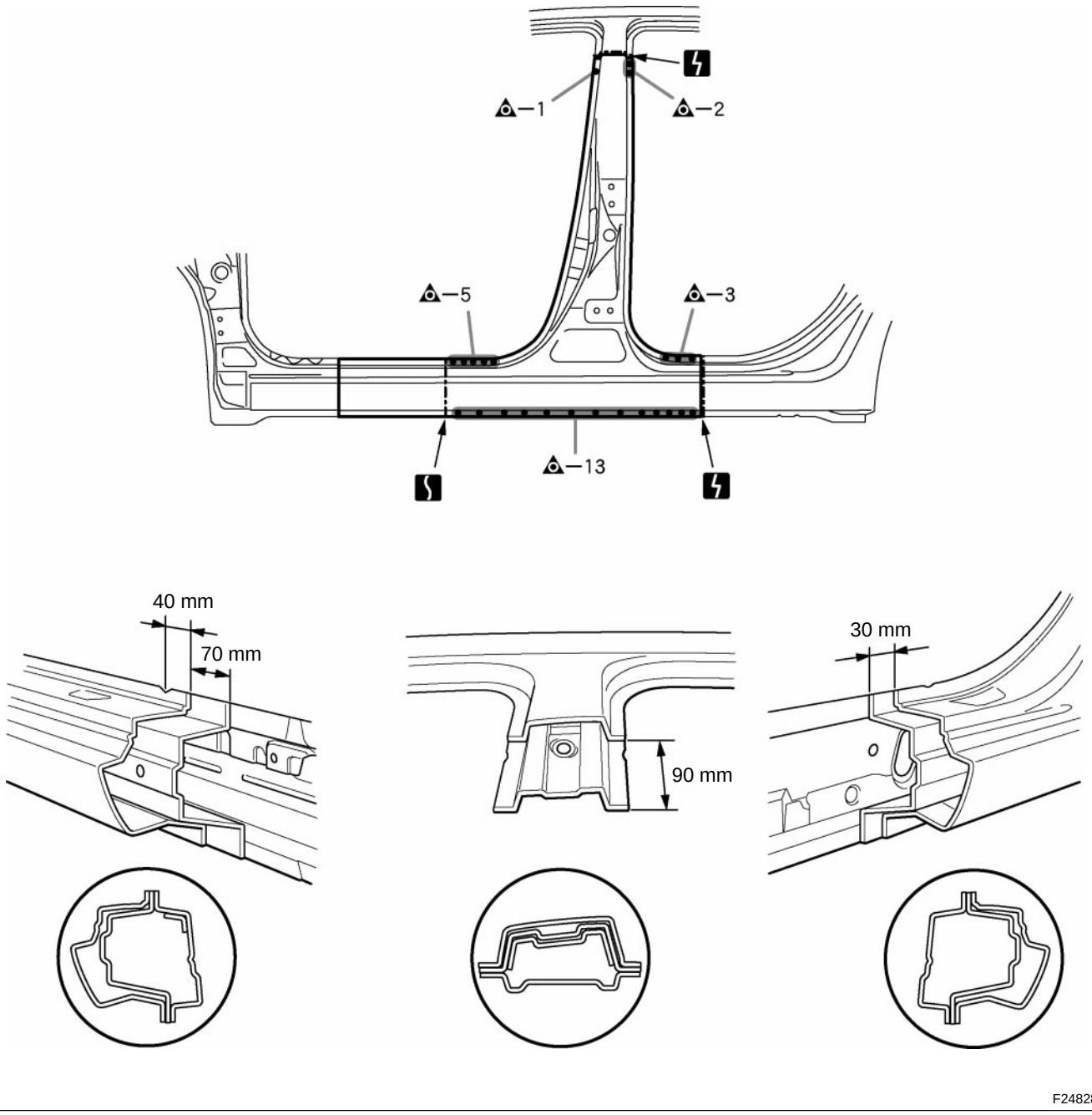

F24828-1

30 mm (1.18 in.) 40 mm (1.57 in.) 70 mm (2.76 in.) 90 mm (3.54 in.)

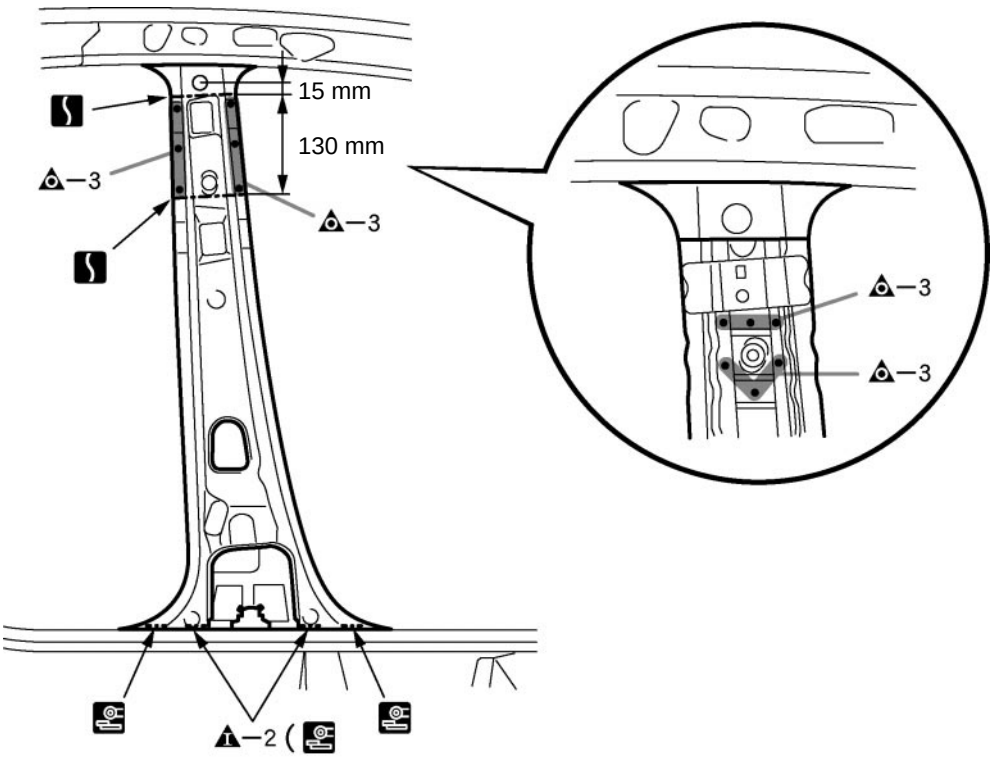

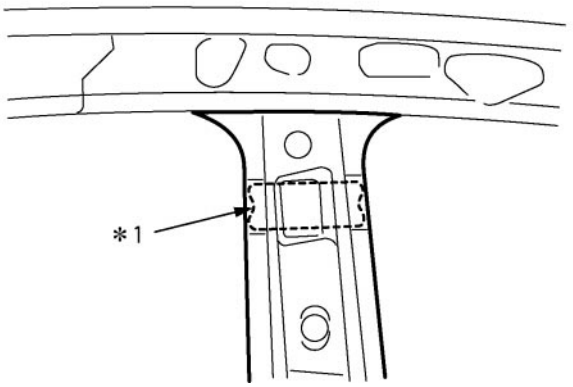

F24829

POINT

1 *1: Take care not to damage the internal reinforcement.

15 mm (0.59 in.) 130 mm (5.12 in.)

INSTALLATION

⁎ Temporarily install the new parts and measure each part of the new parts in accordance with the body dimension diagram. (See the body dimension diagram)
⁎ Inspect the fitting of the related parts around the new parts before welding. This affects the appearance of the finish.
⁎ After welding, apply polyurethane foam to the corresponding parts.
⁎ After welding, apply body sealer and undercoating to the corresponding parts.
⁎ After applying the top coat, apply anti-rust agent to the internal panel portion of the closed section structural weld points.

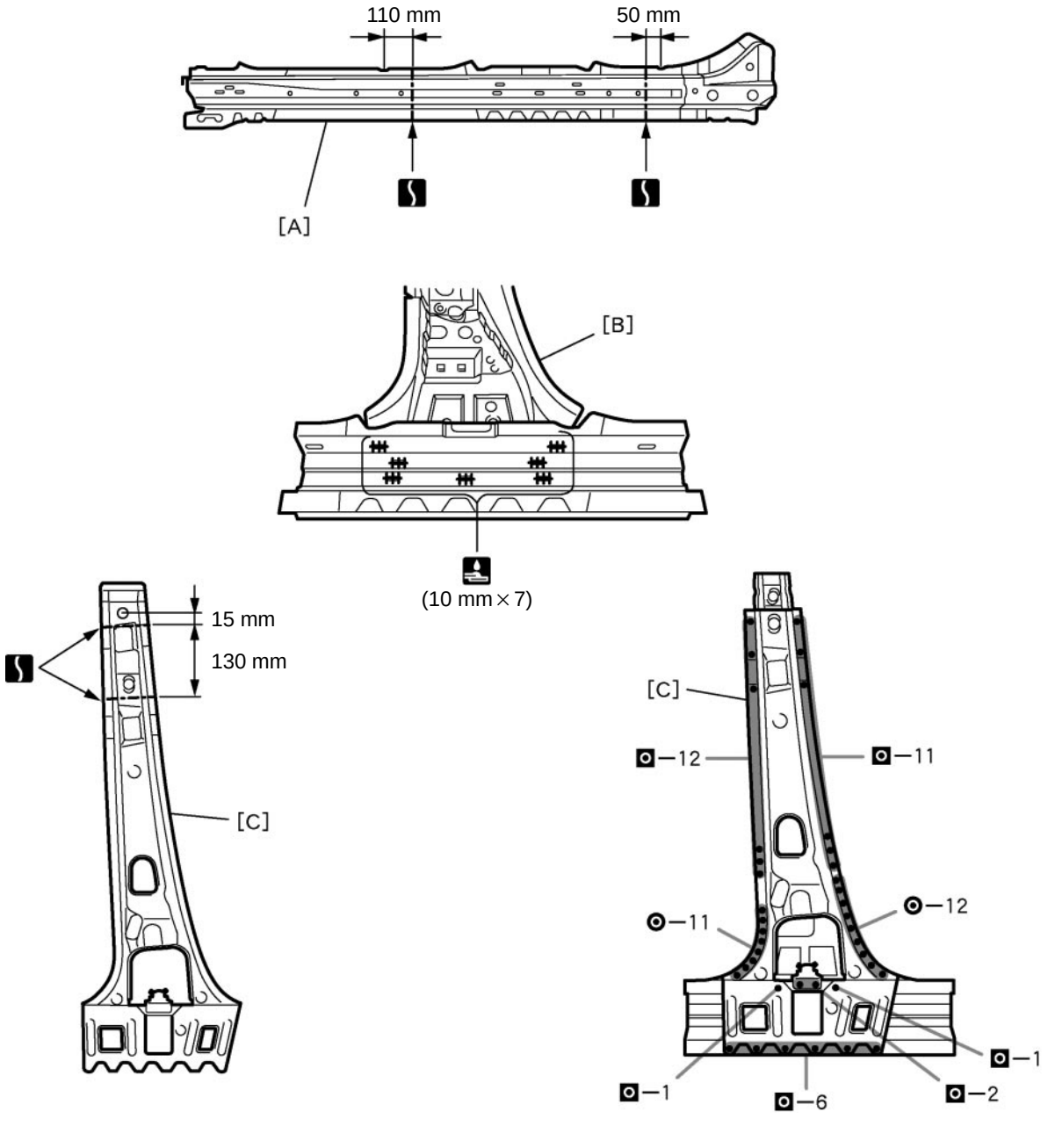

F24830-1

POINT

1 Before temporarily installing the new parts, weld [A], [B] and [C] with standard welding number.

PART NAME

[A] Rocker Outer Reinforce [B] Center Body Pillar Reinforcement
[C] Center Body Inner Pillar

10 mm (0.39 in.) 15 mm (0.59 in.) 50 mm (1.97 in.) 110 mm (4.33 in.) 130 mm (5.12 in.)

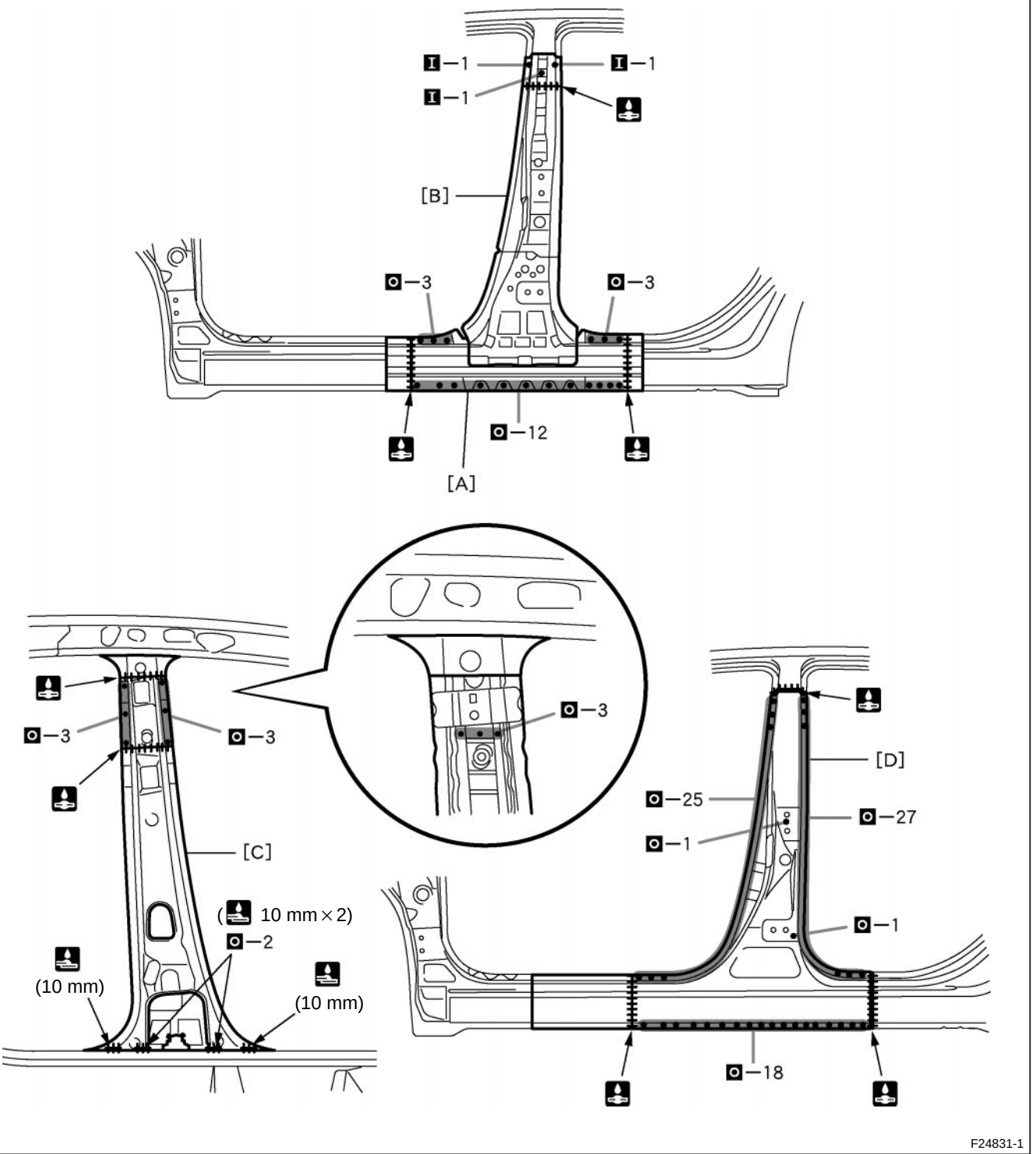

F24831-1

POINT

1 Inspect the fitting of the front door, rear door and other related parts before welding as this affects the appearance of the finish.

2 After welding [A], [B] and [C] to the vehicle, install [D].

PART NAME

[A] Rocker Outer Reinforce [B] Center Body Pillar Reinforcement
[C] Center Body Inner Pillar [D] Rocker Outer Panel

10 mm (0.39 in.)

FRONT DOOR OUTER PANEL (CUT): Sedan Ex. U.S.A., CANADA

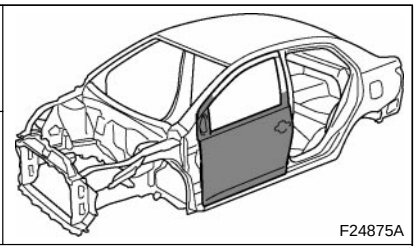
F24875A

REPLACEMENT

REMOVAL

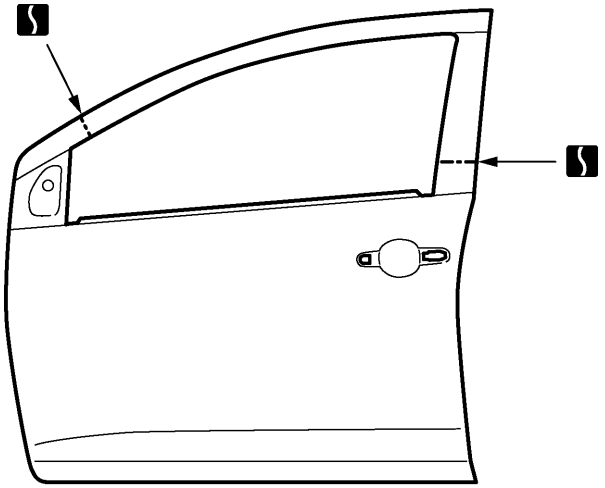

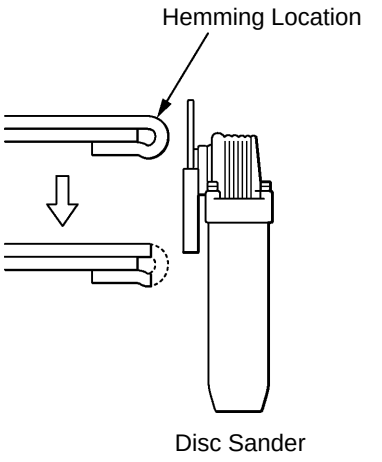

F24875

POINT

1 Afer grinding off the hemming location, remove the outer panel.

INSTALLATION

⁎ Temporarily install the new parts and measure each part of the new parts in accordance with the body dimension diagram. (See the body dimension diagram)
⁎ Inspect the fitting of the related parts around the new parts before welding. This affects the appearance of the finish.
⁎ After welding, apply polyurethane foam to the corresponding parts.
⁎ After welding, apply body sealer and undercoating to the corresponding parts.
⁎ After applying the top coat, apply anti-rust agent to the internal panel portion of the closed section structural weld points.

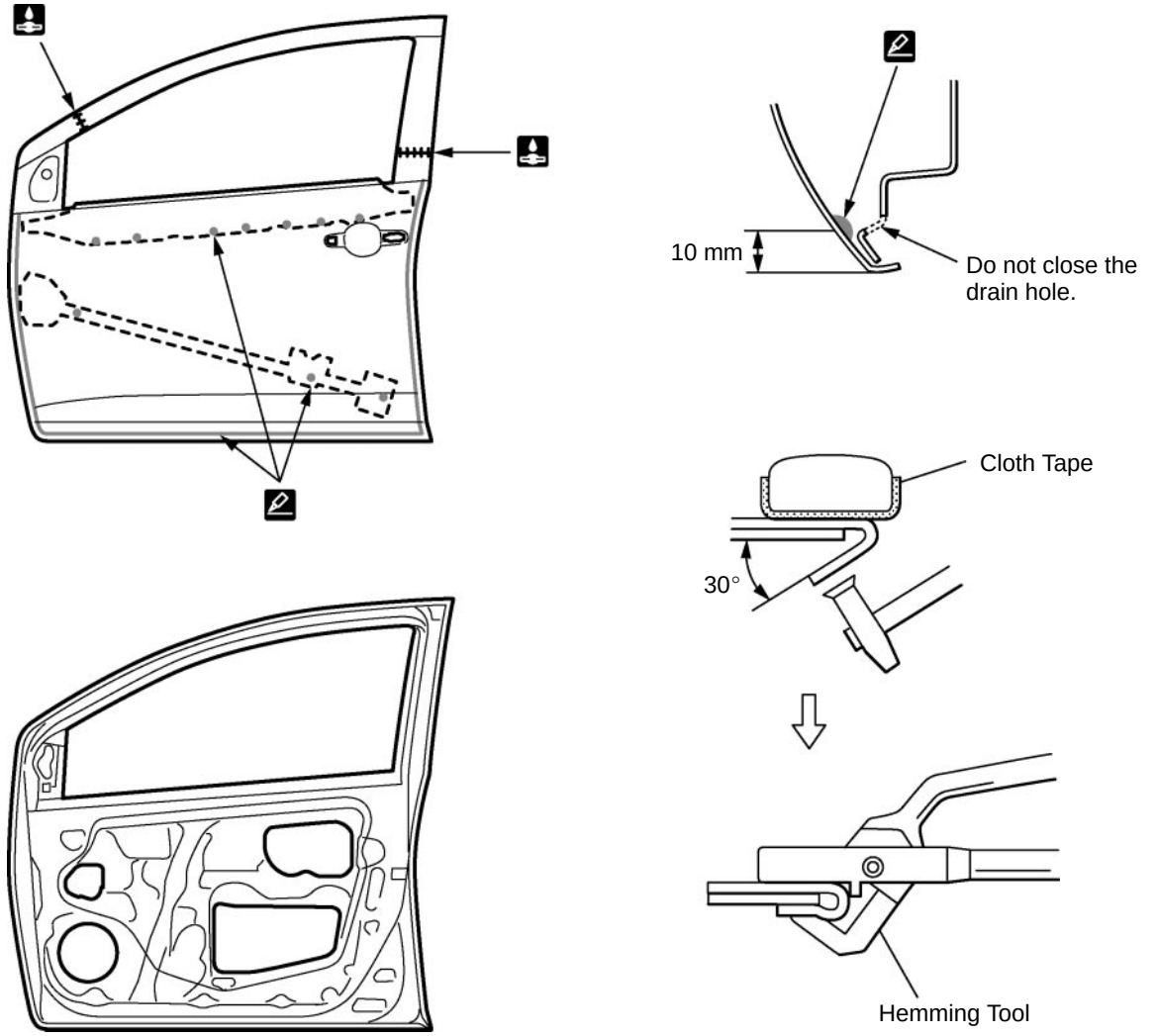

POINT

1 Before temporarily installing the new parts, apply body sealer to the reinforcement, side impact protection beam and backside of the new parts.
HINT:
1) Apply sealer evenly of about 10 mm (0.39 in.) from the flange and 3 mm (0.12 in.) in diameter on the outer panel and apply just enough sealer for the reinforcement and side impact protection beam to make contact.

2 Bend the flange hem about 30° with a hammer and dolly. Then, fasten tightly with a hemming tool.
HINT:
1) Perform hemming in three steps, being careful not to warp the panel.
2) If a hemming tool cannot be used, hem with a hammer and dolly.

FRONT DOOR OUTER PANEL (CUT): Hatchback 3 Door

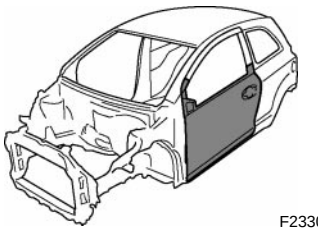
F23305A

REPLACEMENT

REMOVAL

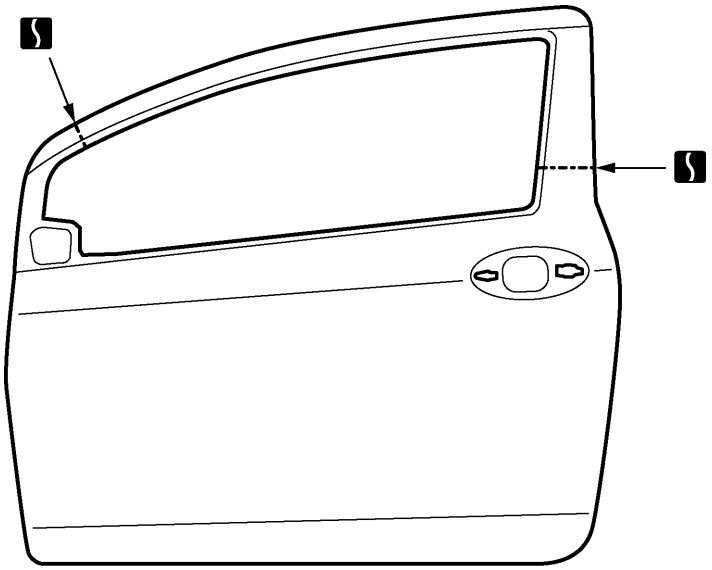

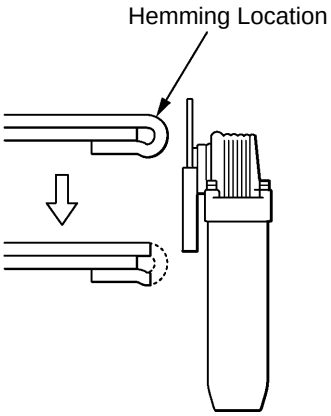

F23305

POINT

1 After grinding off the hemming location, remove the outer panel.

INSTALLATION

⁎ Temporarily install the new parts and measure each part of the new parts in accordance with the body dimension diagram. (See the body dimension diagram)
⁎ Inspect the fitting of the related parts around the new parts before welding. This affects the appearance of the finish.
⁎ After welding, apply the polyurethane foam to the corresponding parts.
⁎ After welding, apply body sealer and under-coating to the corresponding parts.
⁎ After applying the top coat layer, apply anti-rust agent to the inside of the necked section structural weld spots.

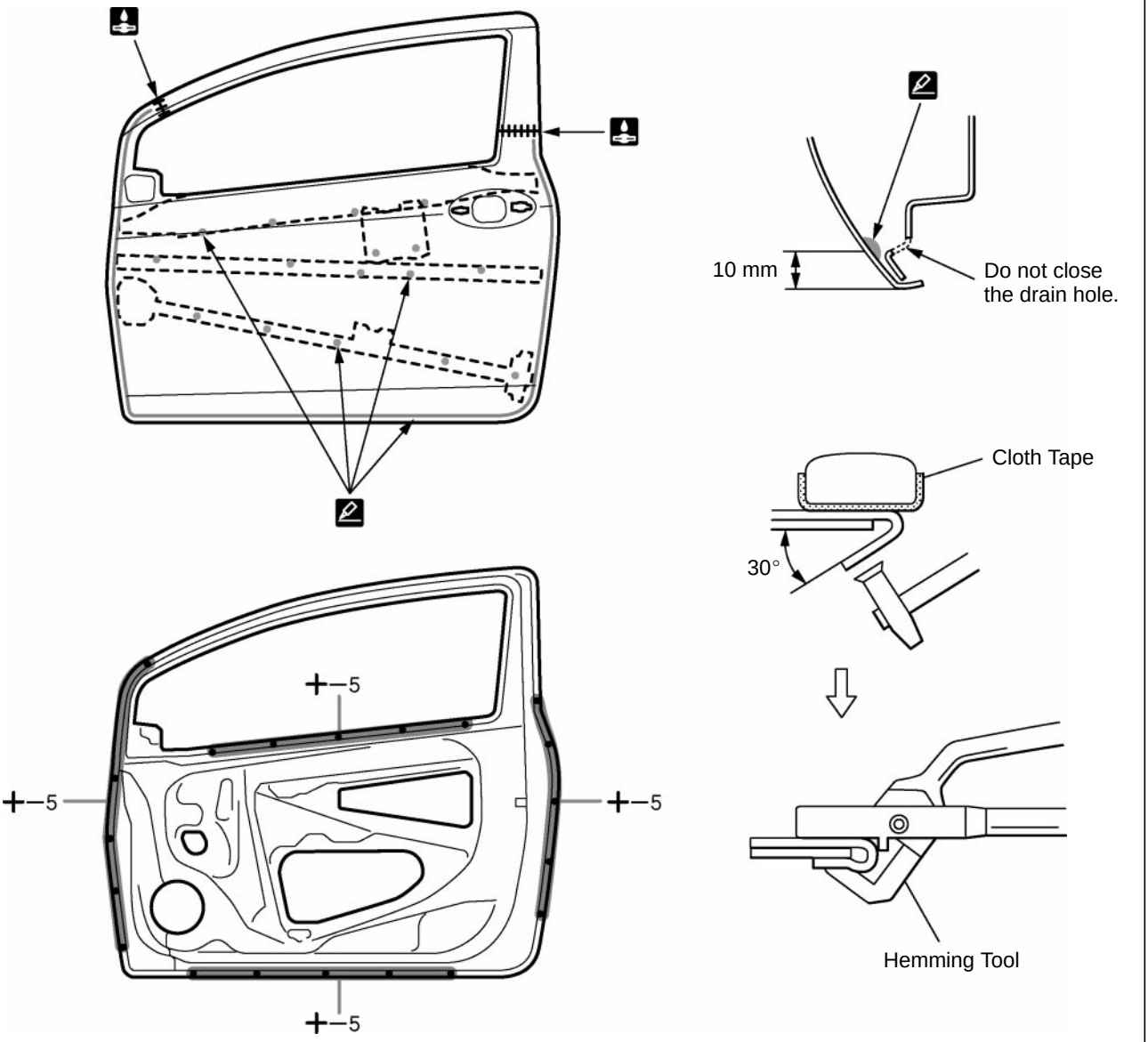

F23306

POINT

1 Before temporarily installing the new parts, apply body sealer to the reinforcement, side impact protection beam and backside of the new parts.
HINT:
1) Apply sealer evenly of about 10 mm (0.39 in.) from the flange and 3 mm (0.12 in.) in diameter on the outer panel and apply just enough sealer for the reinforcement and side impact protection beam to make contact.

2 Bend the flange hem about 30° with a hammer and dolly. Then, fasten tightly with a hemming tool.
HINT:
1) Perform hemming in three steps, being careful not to warp the panel.
2) If a hemming tool cannot be used, hem with a hammer and dolly.

FRONT DOOR OUTER PANEL (CUT): Sedan U.S.A., CANADA

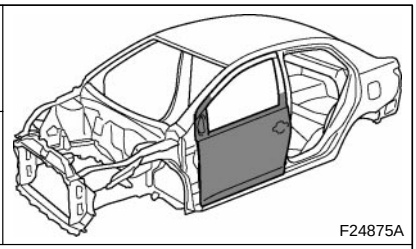
F24875A

REPLACEMENT

REMOVAL

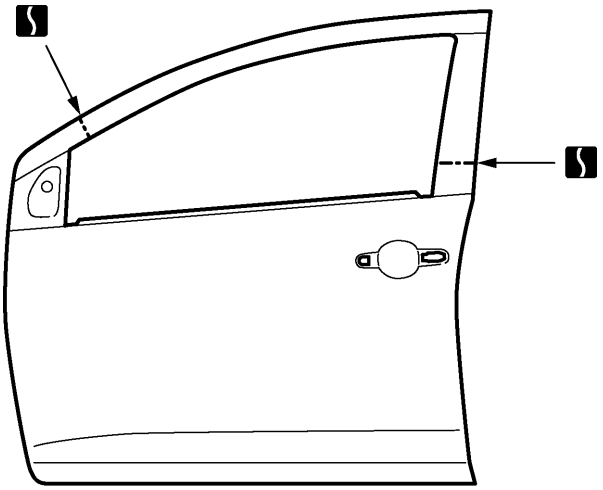

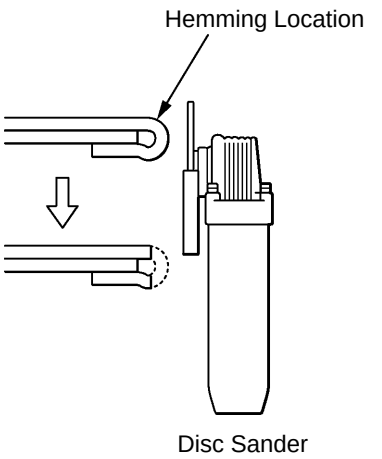

F24877

POINT

1 After grinding off the hemming location, remove the outer panel.

INSTALLATION

⁎ Temporarily install the new parts and measure each part of the new parts in accordance with the body dimension diagram. (See the body dimension diagram)
⁎ Inspect the fitting of the related parts around the new parts before welding. This affects the appearance of the finish.
⁎ After welding, apply polyurethane foam to the corresponding parts.
⁎ After welding, apply body sealer and undercoating to the corresponding parts.
⁎ After applying the top coat, apply anti-rust agent to the internal panel portion of the closed section structural weld points.

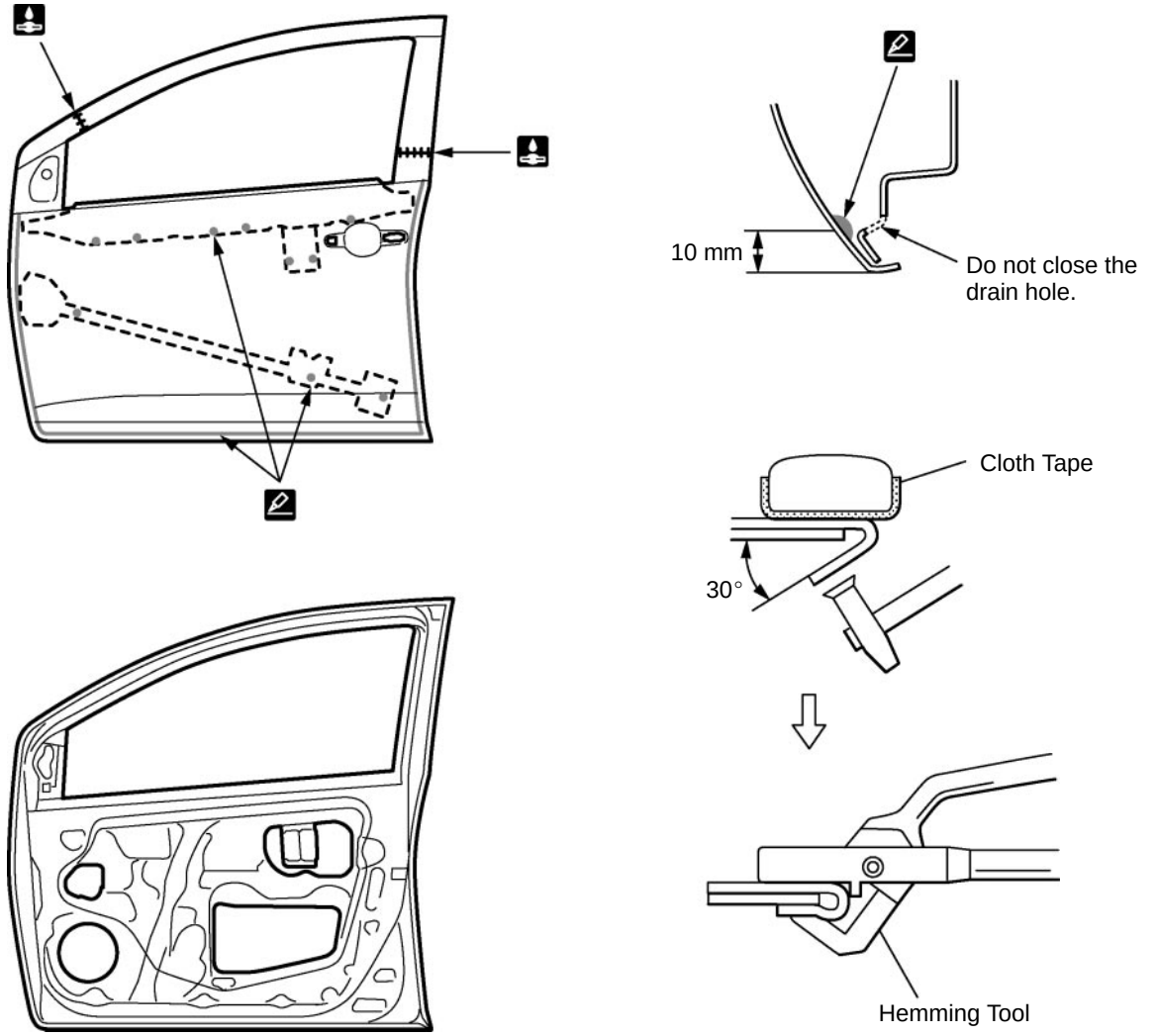

POINT

1 Before temporarily installing the new parts, apply body sealer to the reinforcement, side impact protection beam and backside of the new parts.
HINT:
1) Apply sealer evenly of about 10 mm (0.39 in.) from the flange and 3 mm (0.12 in.) in diameter on the outer panel and apply just enough sealer for the reinforcement and side impact protection beam to make contact.

2 Bend the flange hem about 30° with a hammer and dolly. Then, fasten tightly with a hemming tool.
HINT:
1) Perform hemming in three steps, being careful not to warp the panel.
2) If a hemming tool cannot be used, hem with a hammer and dolly.

REAR DOOR OUTER PANEL (CUT): Hatchback 5 Door

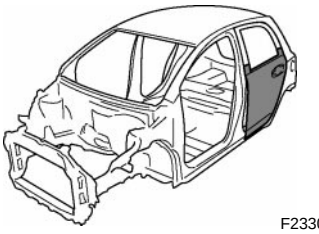
F23309A

REPLACEMENT

REMOVAL

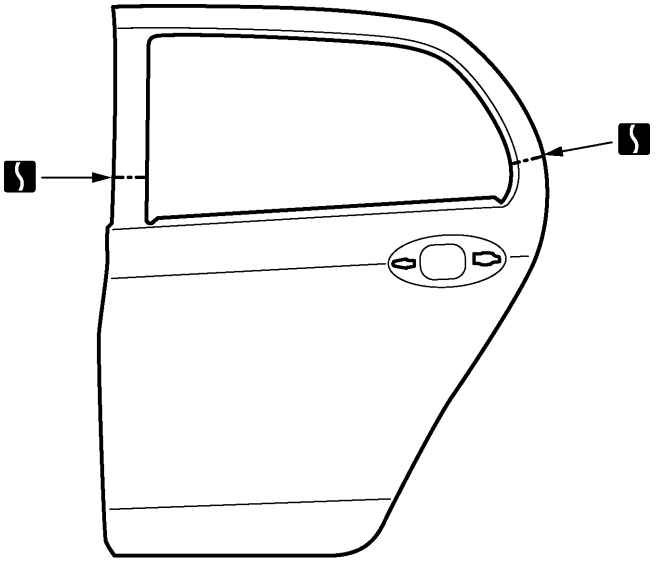

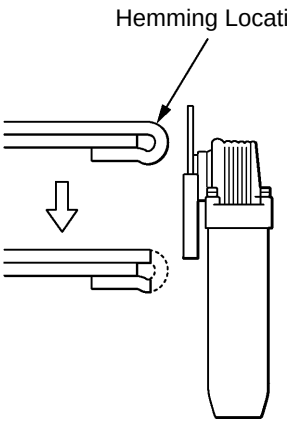

F23309

POINT

1 After grinding off the hemming location, remove the outer panel.

INSTALLATION

⁎ Temporarily install the new parts and measure each part of the new parts in accordance with the body dimension diagram. (See the body dimension diagram)
⁎ Inspect the fitting of the related parts around the new parts before welding. This affects the appearance of the finish.
⁎ After welding, apply the polyurethane foam to the corresponding parts.
⁎ After welding, apply body sealer and under-coating to the corresponding parts.
⁎ After applying the top coat layer, apply anti-rust agent to the inside of the necked section structural weld spots.

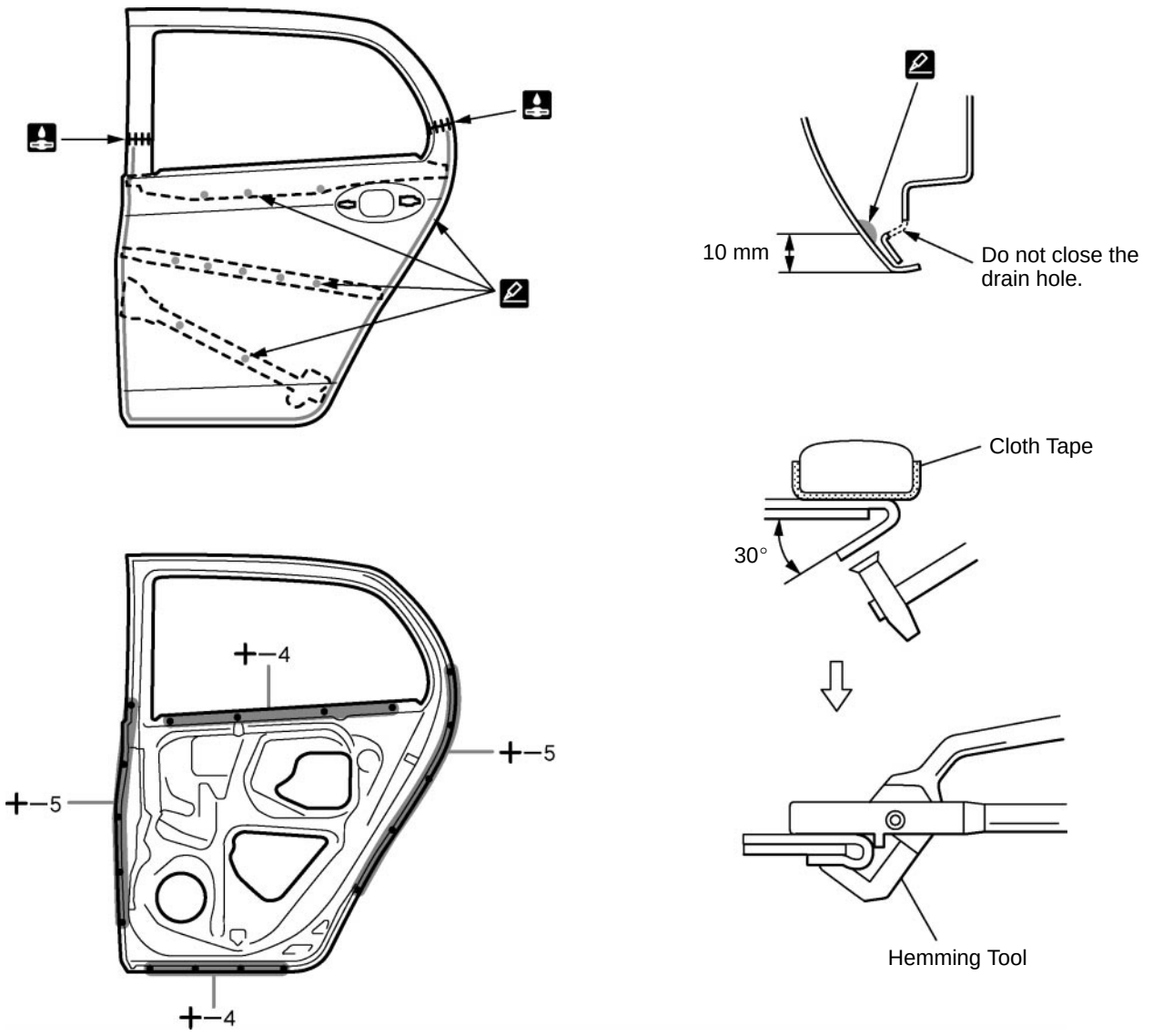

POINT

1 Before temporarily installing the new parts, apply body sealer to the reinforcement, side impact protection beam and backside of the new parts.
HINT:
1) Apply sealer evenly of about 10 mm (0.39 in.) from the flange and 3 mm (0.12 in.) in diameter on the outer panel and apply just enough sealer for the reinforcement and side impact protection beam to make contact.

2 Bend the flange hem about 30° with a hammer and dolly. Then, fasten tightly with a hemming tool.
HINT:
1) Perform hemming in three steps, being careful not to warp the panel.
2) If a hemming tool cannot be used, hem with a hammer and dolly.

REAR DOOR OUTER PANEL (CUT): Sedan Ex. U.S.A., CANADA

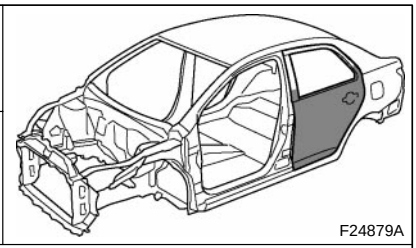
F24879A

REPLACEMENT

REMOVAL

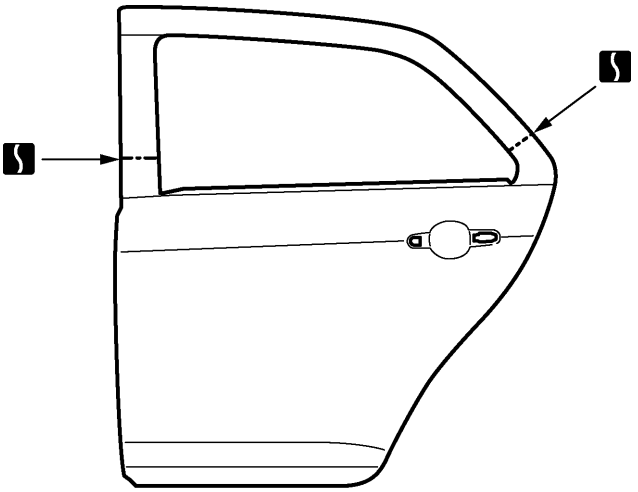

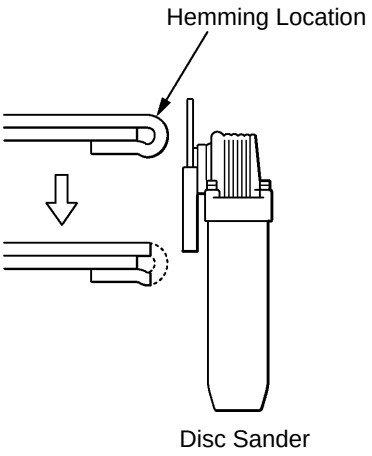

F24879

POINT

1 After grinding off the hemming location, remove the outer panel.

INSTALLATION

- ⁎ Temporarily install the new parts and measure each part of the new parts in accordance with the body dimension diagram. (See the body dimension diagram)
- ⁎ Inspect the fitting of the related parts around the new parts before welding. This affects the appearance of the finish.
- ⁎ After welding, apply polyurethane foam to the corresponding parts.
- ⁎ After welding, apply body sealer and undercoating to the corresponding parts.
- ⁎ After applying the top coat, apply anti-rust agent to the internal panel portion of the closed section structural weld points.

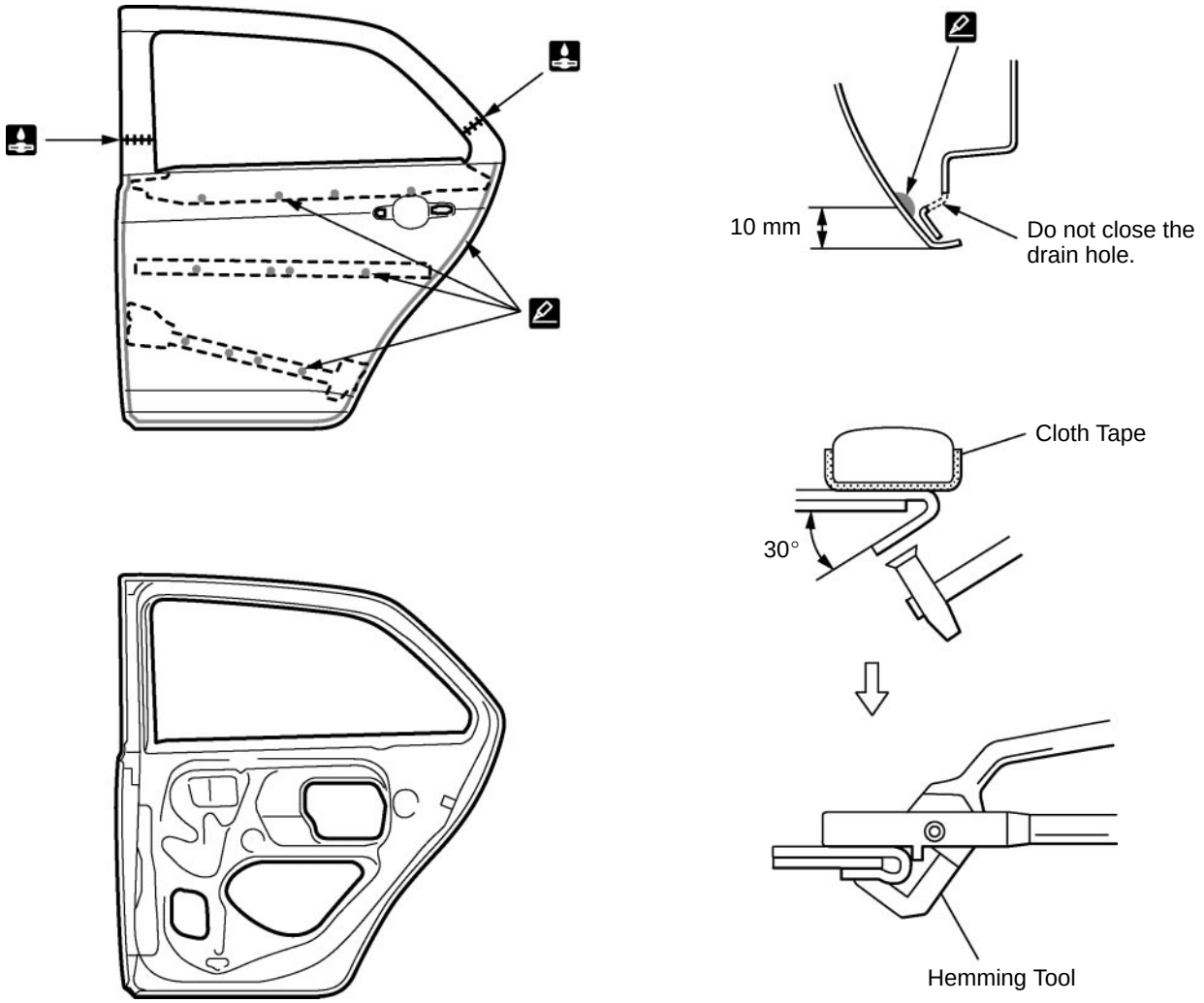

POINT

1 Before temporarily installing the new parts, apply body sealer to the reinforcement, side impact protection beam and backside of the new parts.
HINT:
1) Apply sealer evenly of about 10 mm (0.39 in.) from the flange and 3 mm (0.12 in.) in diameter on the outer panel and apply just enough sealer for the reinforcement and side impact protection beam to make contact.

2 Bend the flange hem about 30° with a hammer and dolly. Then, fasten tightly with a hemming tool.
HINT:
1) Perform hemming in three steps, being careful not to warp the panel.
2) If a hemming tool cannot be used, hem with a hammer and dolly.

REAR DOOR OUTER PANEL (CUT): Sedan U.S.A., CANADA

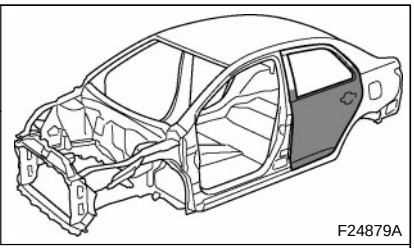
F24879A

REPLACEMENT

REMOVAL

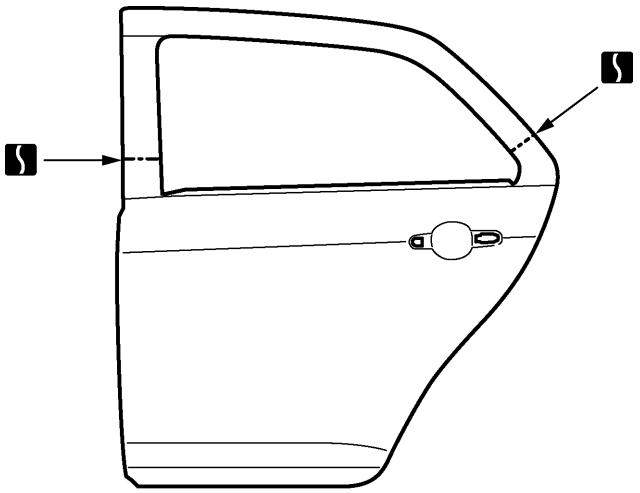

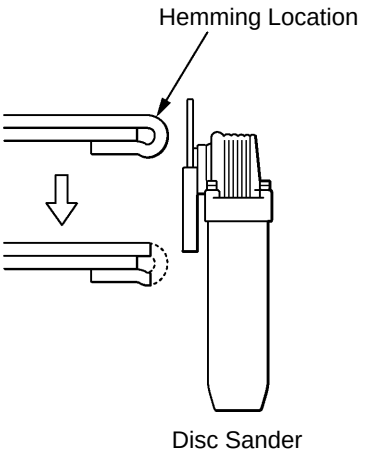

F24881

POINT

1 After grinding off the hemming location, remove the outer panel.

INSTALLATION

- ⁎ Temporarily install the new parts and measure each part of the new parts in accordance with the body dimension diagram. (See the body dimension diagram)
- ⁎ Inspect the fitting of the related parts around the new parts before welding. This affects the appearance of the finish.
- ⁎ After welding, apply polyurethane foam to the corresponding parts.
- ⁎ After welding, apply body sealer and undercoating to the corresponding parts.
- ⁎ After applying the top coat, apply anti-rust agent to the internal panel portion of the closed section structural weld points.

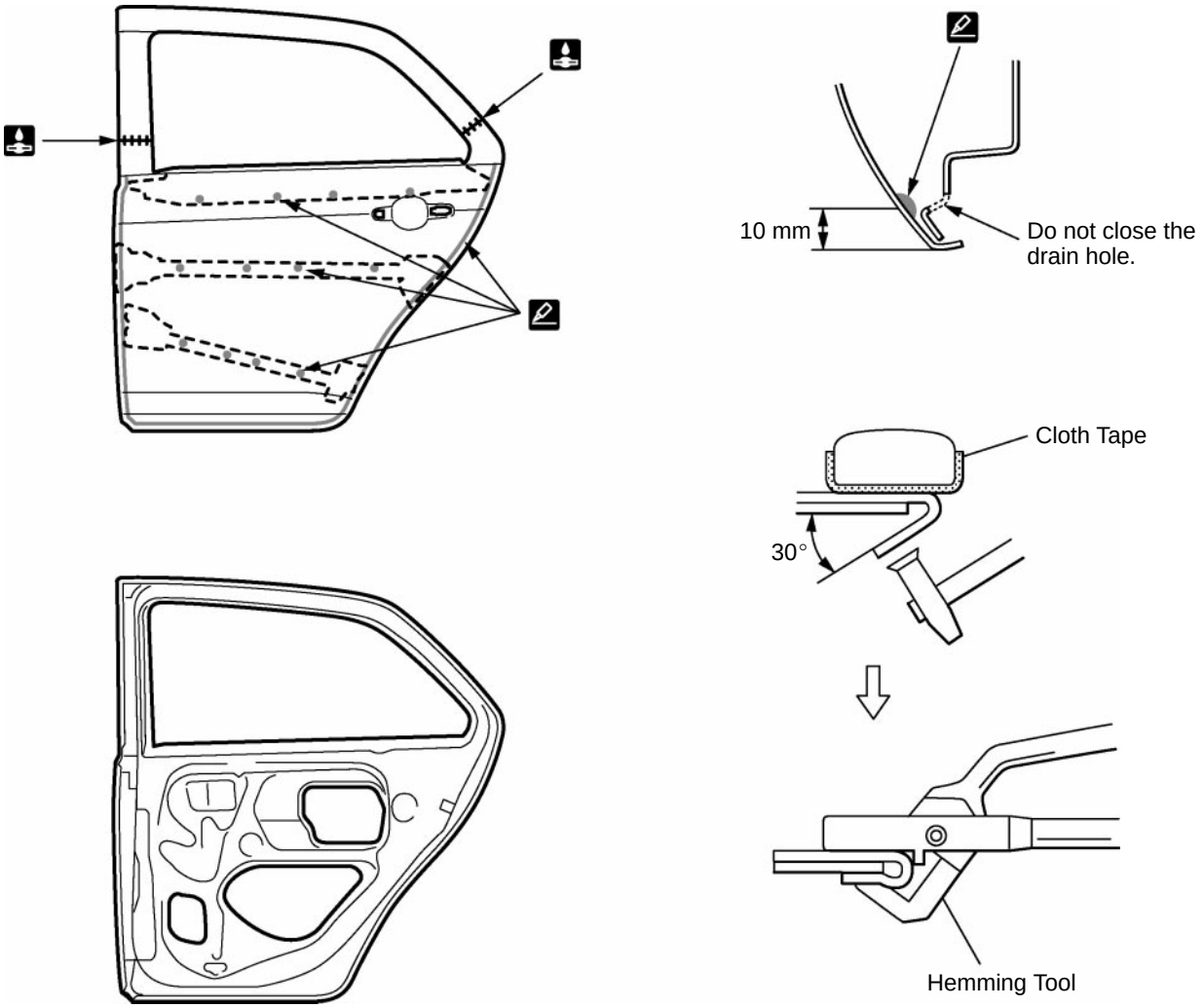

F24882

POINT

1 Before temporarily installing the new parts, apply body sealer to the reinforcement, side impact protection beam and backside of the new parts.
HINT:
1) Apply sealer evenly of about 10 mm (0.39 in.) from the flange and 3 mm (0.12 in.) in diameter on the outer panel and apply just enough sealer for the reinforcement and side impact protection beam to make contact.

2 Bend the flange hem about 30° with a hammer and dolly. Then, fasten tightly with a hemming tool.
HINT:
1) Perform hemming in three steps, being careful not to warp the panel.
2) If a hemming tool cannot be used, hem with a hammer and dolly.

ROCKER OUTER PANEL (CUT-H): Hatchback 5 Door

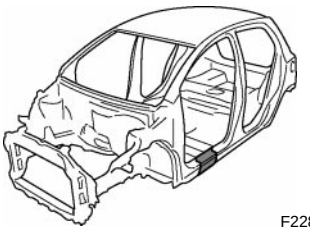
F22843A

REPLACEMENT

REMOVAL

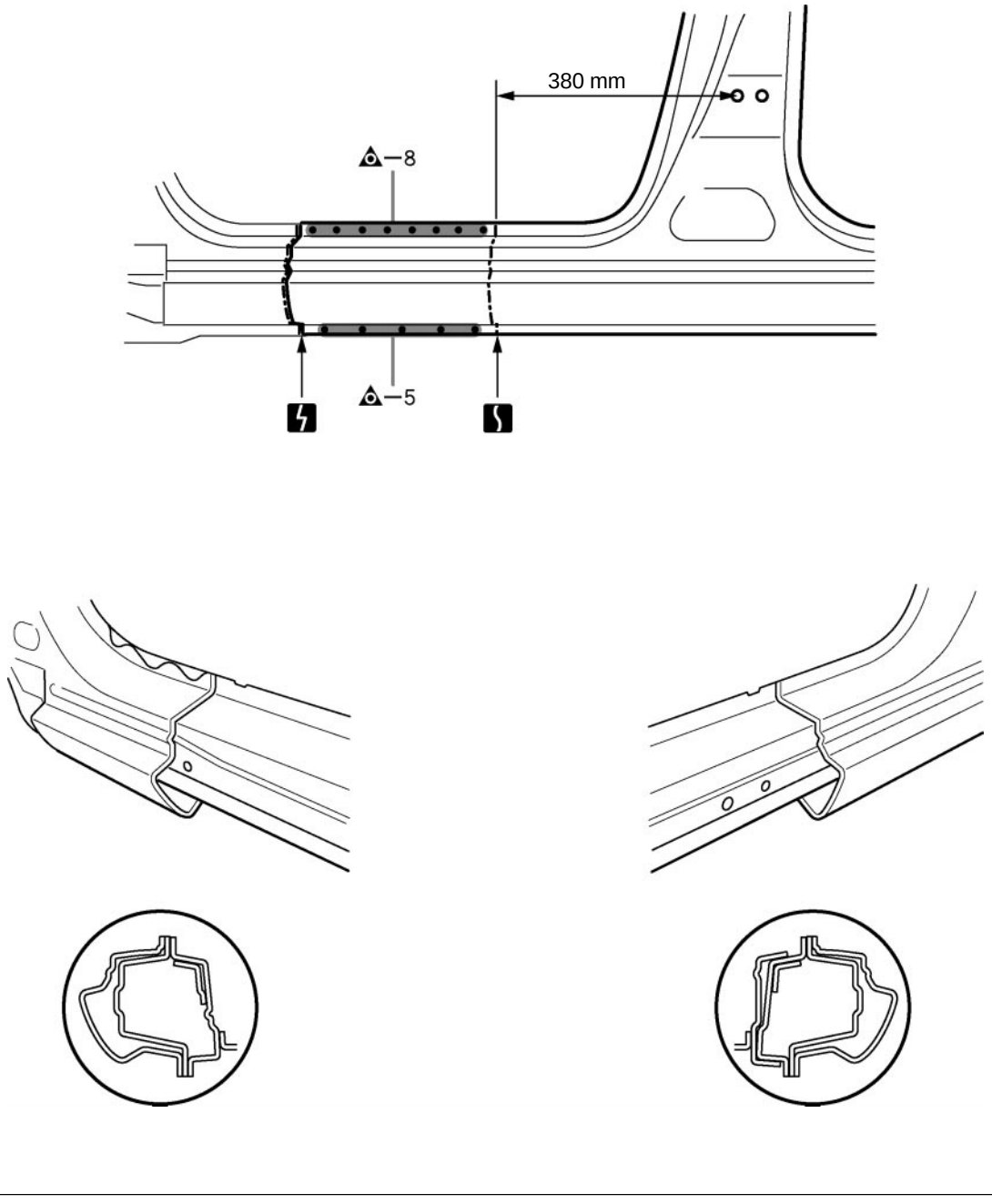

F22843

380 mm (14.96 in.)

INSTALLATION

* Temporarily install the new parts and measure each part of the new parts in accordance with the body dimension diagram. (See the body dimension diagram)
* Inspect the fitting of the related parts around the new parts before welding. This affects the appearance of the finish.
* After welding, apply the polyurethane foam to the corresponding parts.
* After welding, apply body sealer and under-coating to the corresponding parts.
* After applying the top coat layer, apply anti-rust agent to the inside of the necked section structural weld spots.

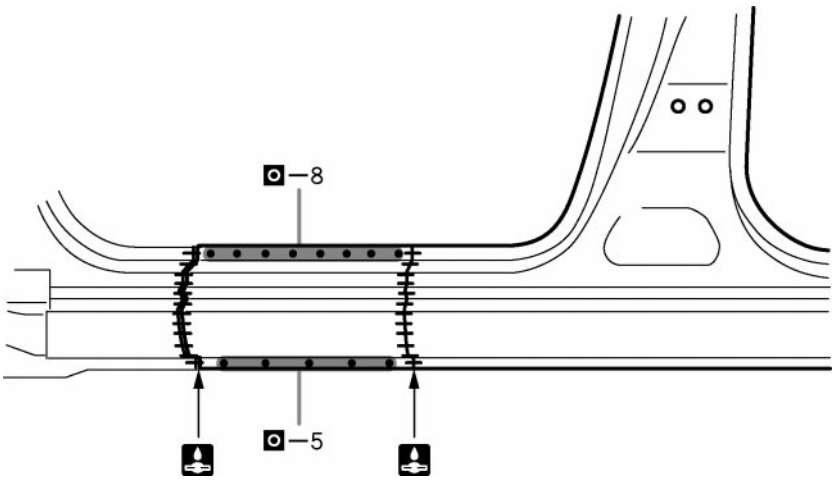

F22844

POINT

1 Inspect the fitting of the front door and other related parts before welding as this affects the appearance of the finish.

ROCKER OUTER PANEL (CUT): Hatchback 5 Door

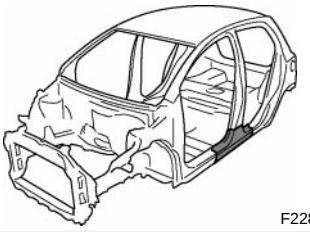
F22845A

REPLACEMENT

REMOVAL

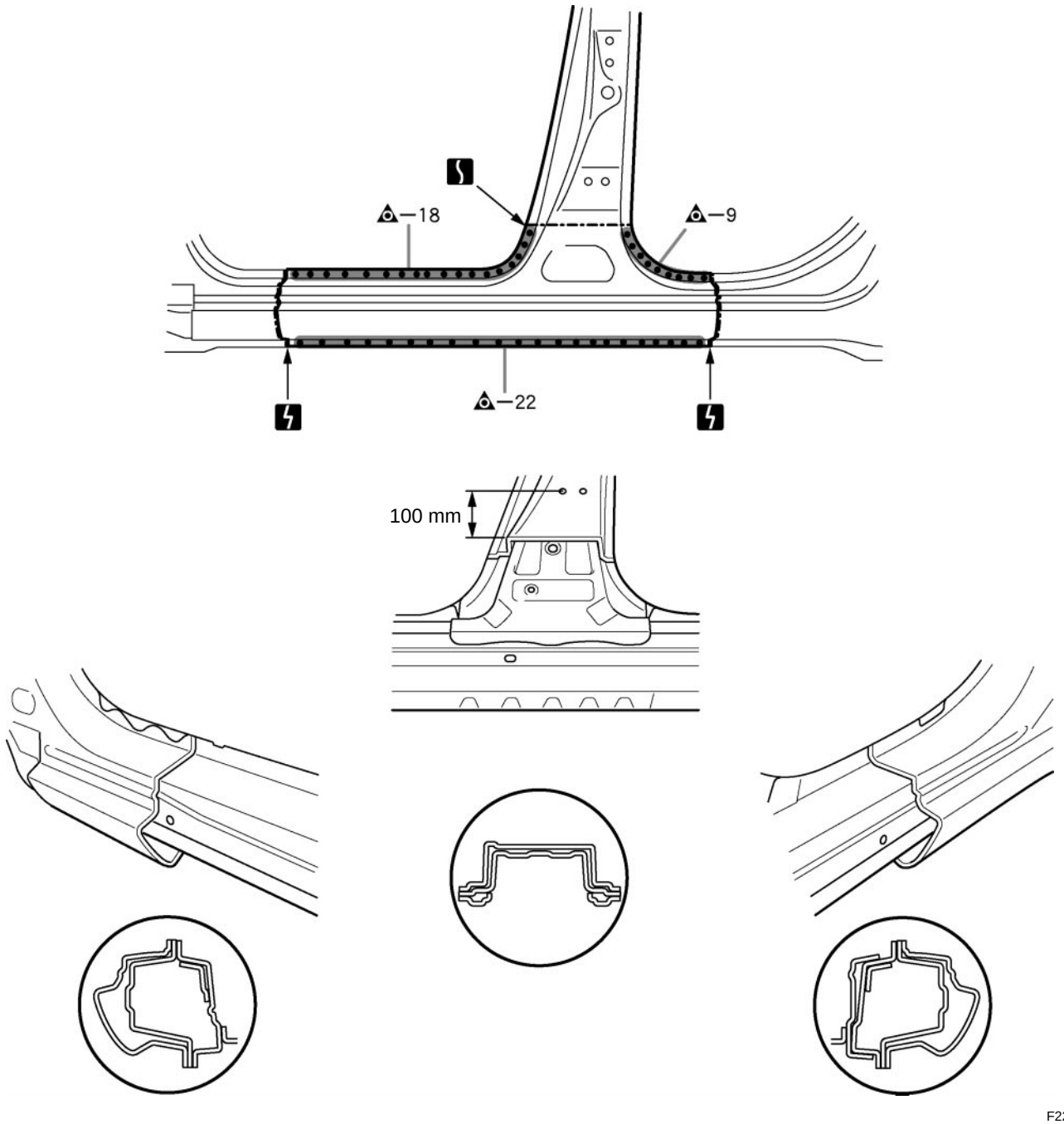

F22845

100 mm (3.94 in.)

INSTALLATION

⁎ Temporarily install the new parts and measure each part of the new parts in accordance with the body dimension diagram. (See the body dimension diagram)
⁎ Inspect the fitting of the related parts around the new parts before welding. This affects the appearance of the finish.
⁎ After welding, apply polyurethane foam to the corresponding parts.
⁎ After welding, apply body sealer and undercoating to the corresponding parts.
⁎ After applying the top coat, apply anti-rust agent to the internal panel portion of the closed section structural weld points.

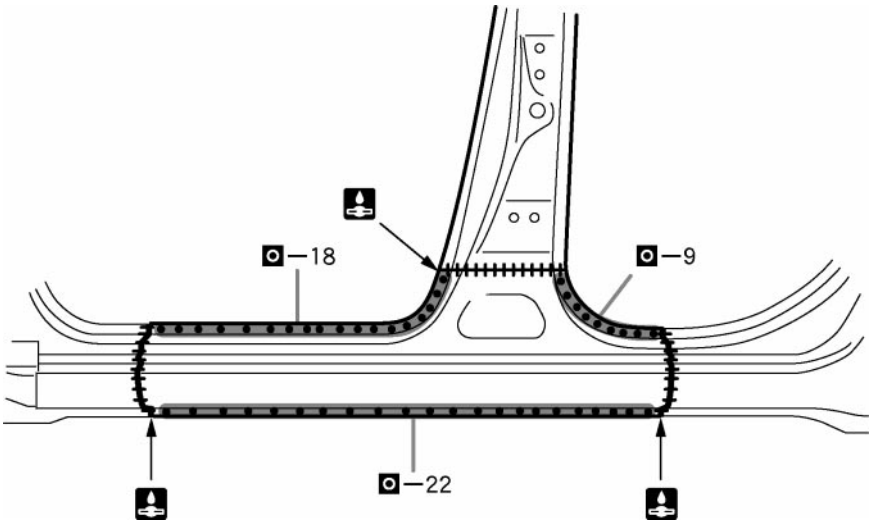

F22846

POINT

1 Inspect the fitting of the front door, rear door and other related parts before welding as this affects the appearance of the finish.

ROCKER OUTER PANEL (CUT-H): Sedan

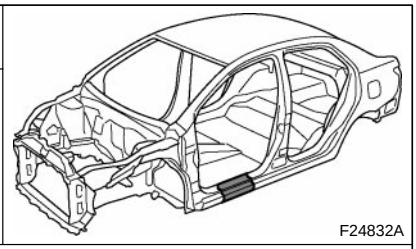
F24832A

REPLACEMENT

REMOVAL

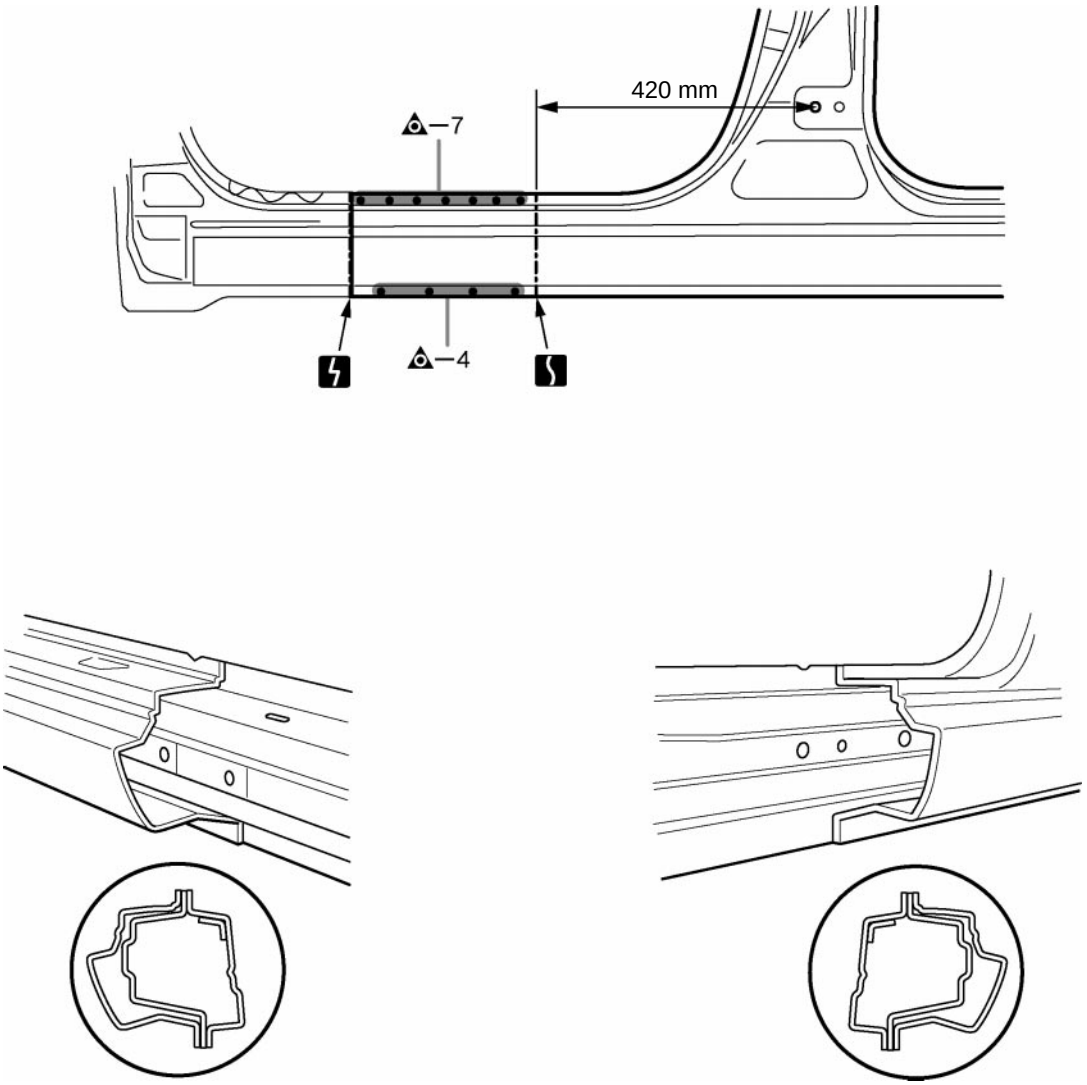

F24832-1

420 mm (16.54 in.)

INSTALLATION

* Temporarily install the new parts and measure each part of the new parts in accordance with the body dimension diagram. (See the body dimension diagram)
* Inspect the fitting of the related parts around the new parts before welding. This affects the appearance of the finish.
* After welding, apply polyurethane foam to the corresponding parts.
* After welding, apply body sealer and undercoating to the corresponding parts.
* After applying the top coat, apply anti-rust agent to the internal panel portion of the closed section structural weld points.

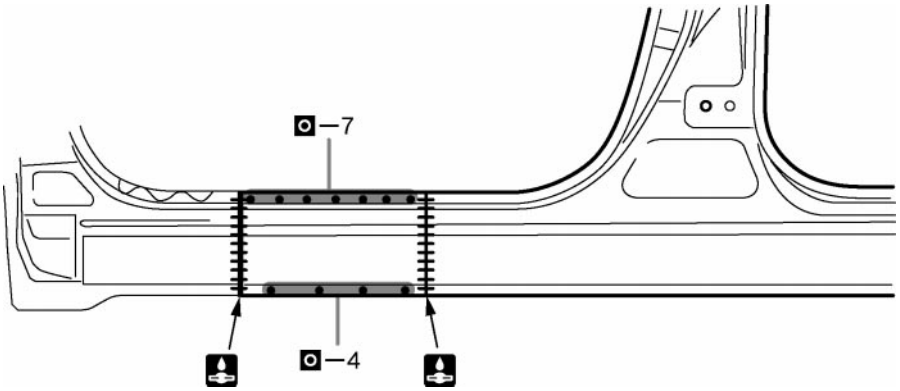

F24832-2

POINT

1 Inspect the fitting of the front door and other related parts before welding as this affects the appearance of the finish.

ROCKER OUTER PANEL (CUT): Hatchback 3 Door

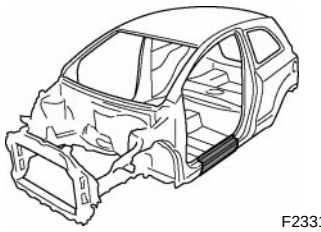
F23311A

REPLACEMENT

REMOVAL

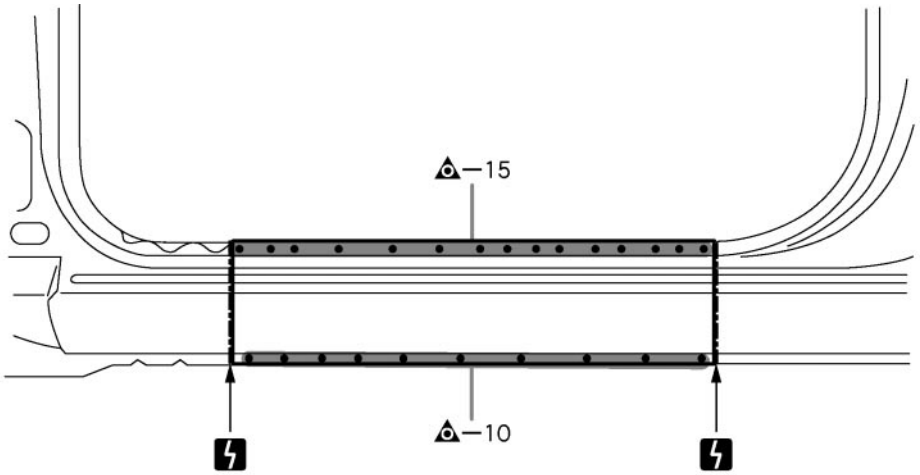

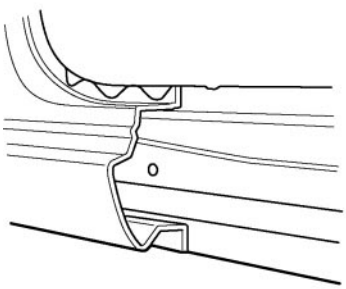

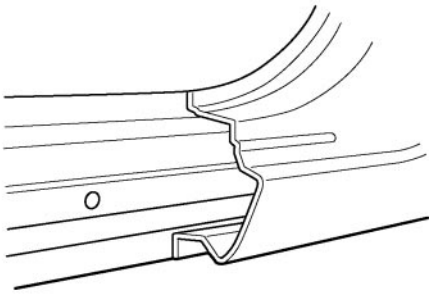

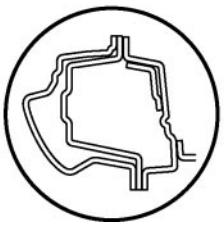

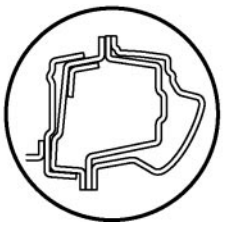

F23311

INSTALLATION

* Temporarily install the new parts and measure each part of the new parts in accordance with the body dimension diagram. (See the body dimension diagram)
* Inspect the fitting of the related parts around the new parts before welding. This affects the appearance of the finish.
* After welding, apply polyurethane foam to the corresponding parts.
* After welding, apply body sealer and undercoating to the corresponding parts.
* After applying the top coat, apply anti-rust agent to the internal panel portion of the closed section structural weld points.

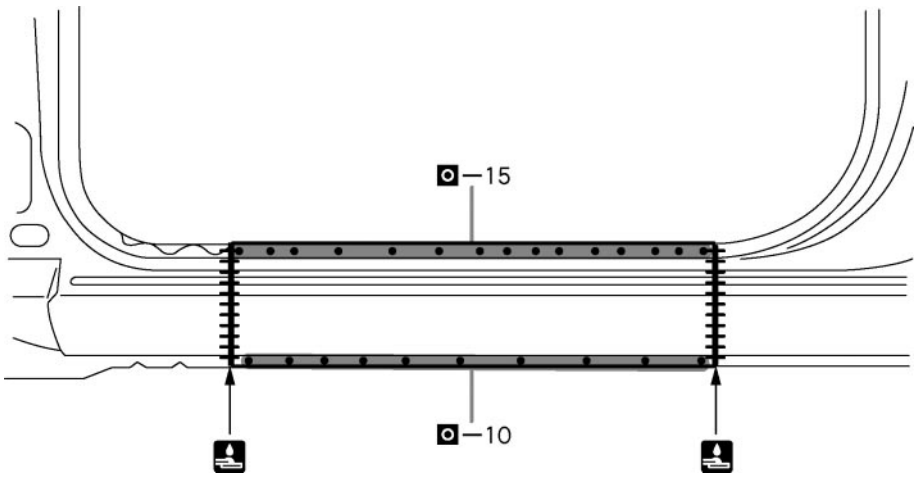

F23312

POINT

1 Inspect the fitting of the front door and other related parts before welding as this affects the appearance of the finish.

QUARTER PANEL (CUT): Hatchback 3 Door

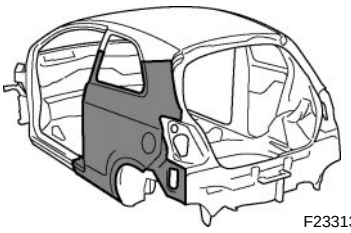
F23313A

REPLACEMENT

REMOVAL

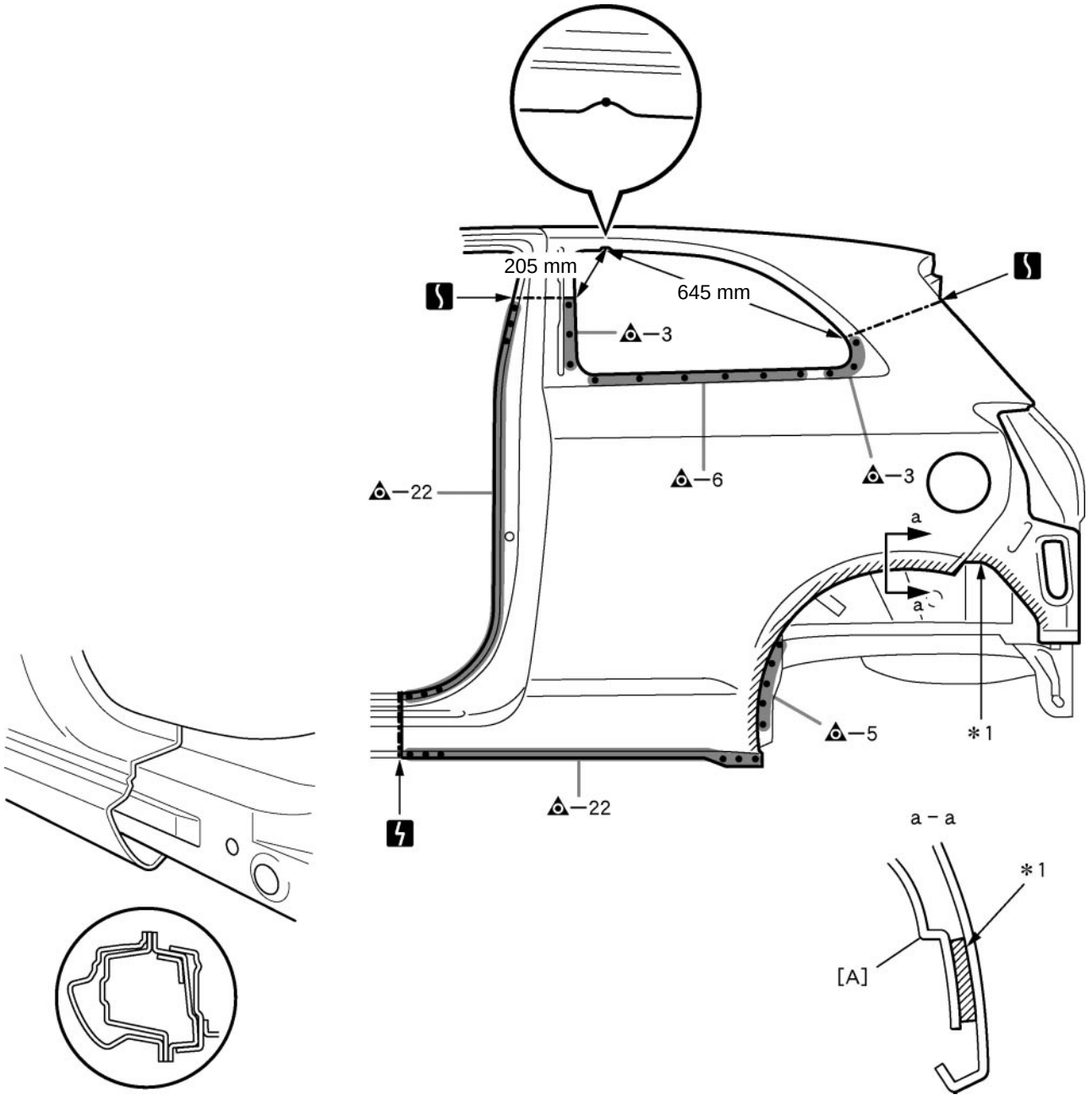

F23313

POINT

1 *1: The hatched area indicates the adhesive application area.

PART NAME

[A] Quarter Wheel Housing Outer Panel

205 mm (8.07 in.) 645 mm (25.39 in.)

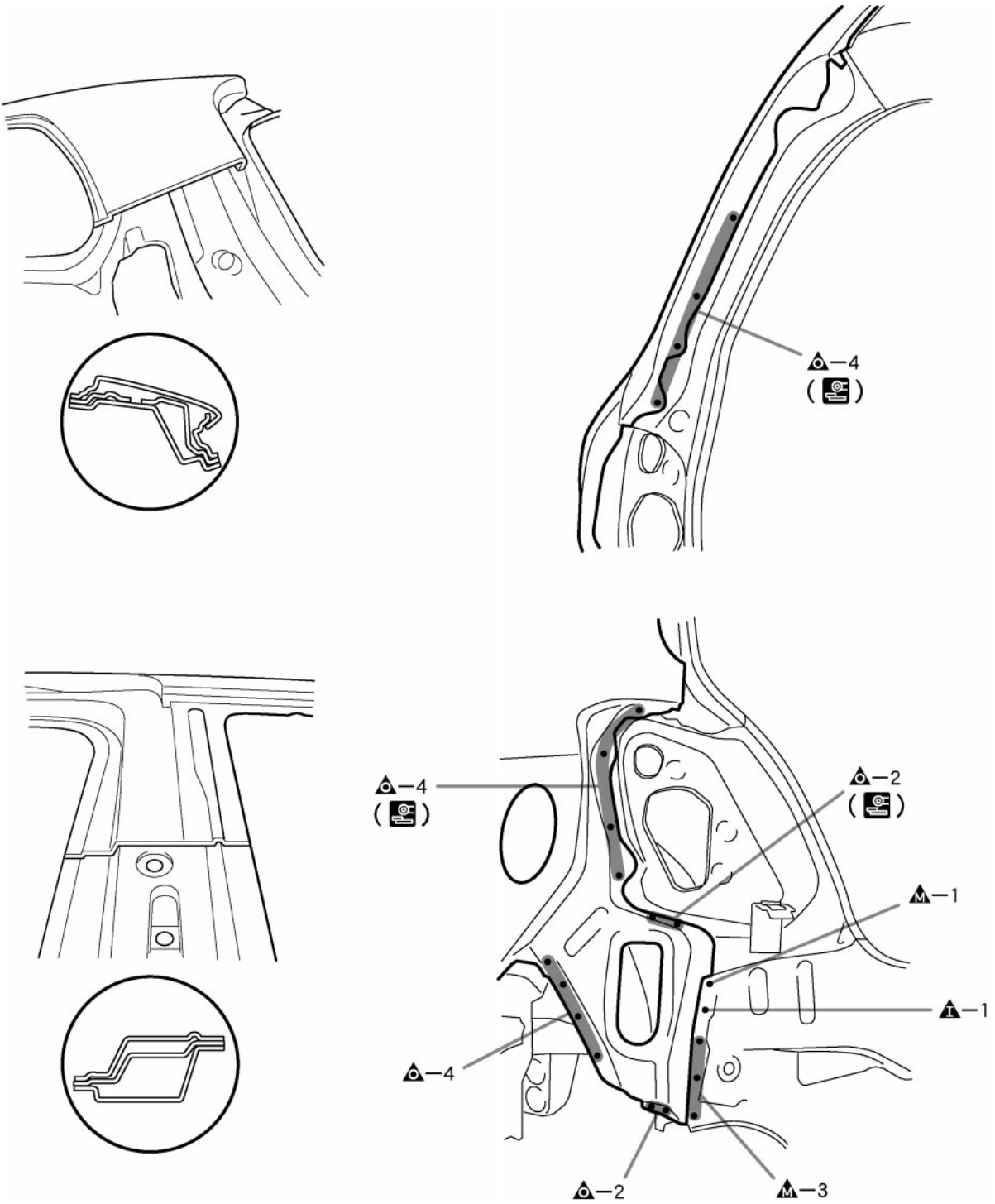
◭—4
(SEALER)
◭—4
(SEALER)
◭—2
(SEALER)
Ⓜ—1
Ⓘ—1
◭—4
◭—2
Ⓜ—3
F23314

INSTALLATION

⁎ Temporarily install the new parts and measure each part of the new parts in accordance with the body dimension diagram. (See the body dimension diagram)
⁎ Inspect the fitting of the related parts around the new parts before welding. This affects the appearance of the finish.
⁎ After welding, apply polyurethane foam to the corresponding parts.
⁎ After welding, apply body sealer and undercoating to the corresponding parts.
⁎ After applying the top coat, apply anti-rust agent to the internal panel portion of the closed section structural weld points.

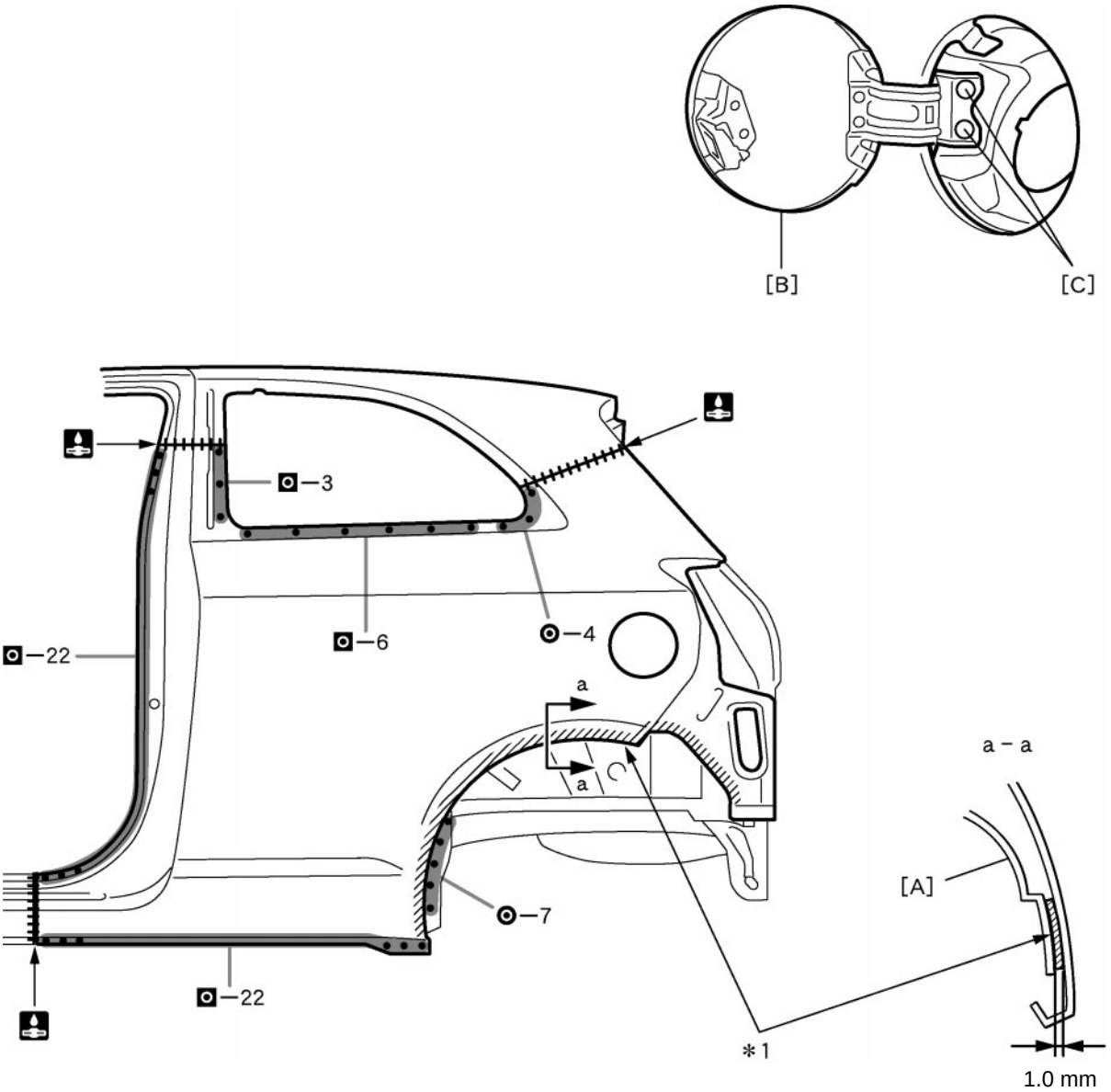

F23315

POINT

1 *1: The hatched area indicates the adhesive application area.

PART NAME

[A] Quarter Wheel Housing Outer Panel [B] Fuel Filler Opening Lid [C] Rivet
1.0 mm (0.04 in.)

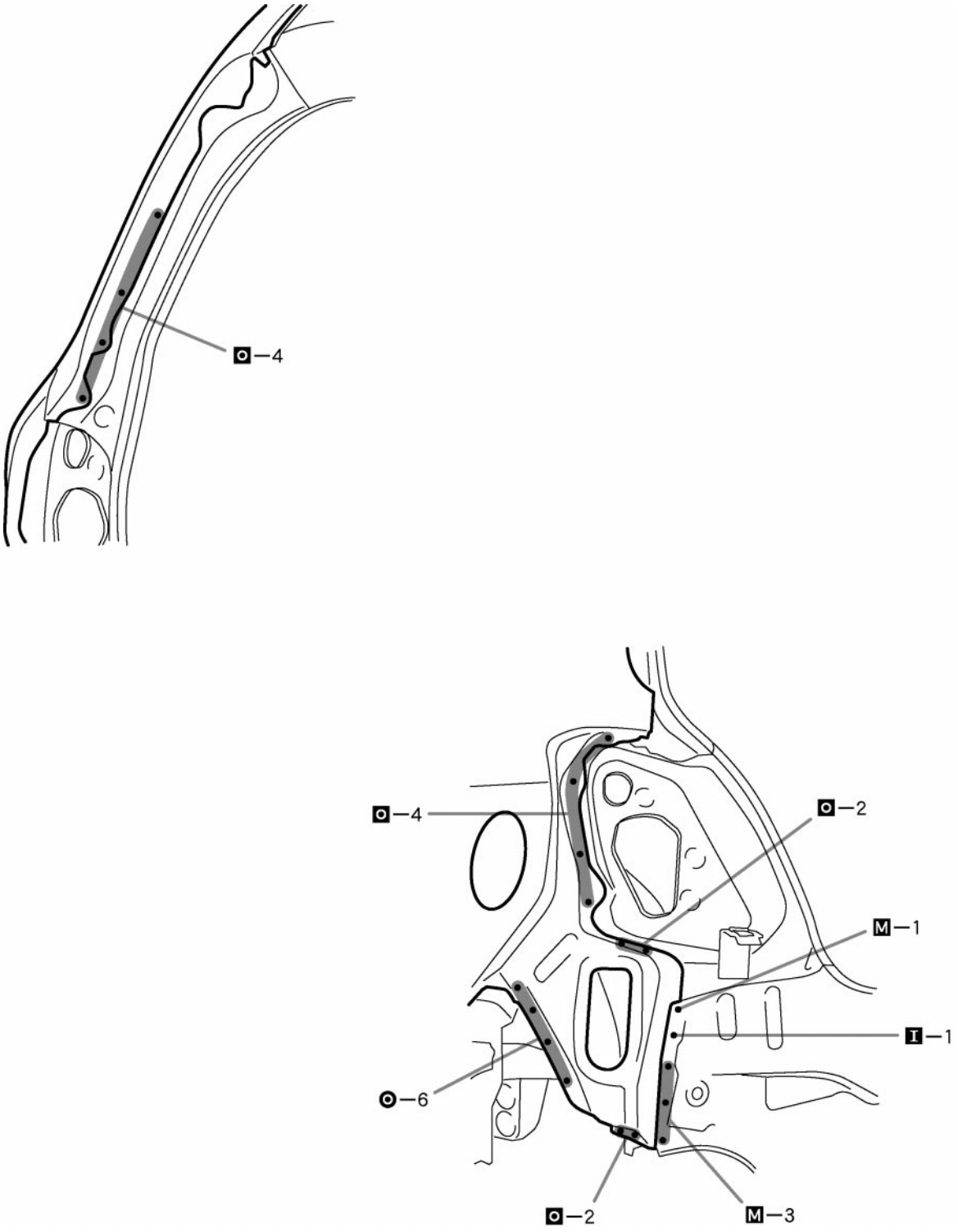

F23316

POINT

1 Inspect the front door, back door, rear combination light and other related parts before welding as this affects the appearance of the finish.

ROCKER OUTER PANEL (CUT): Sedan

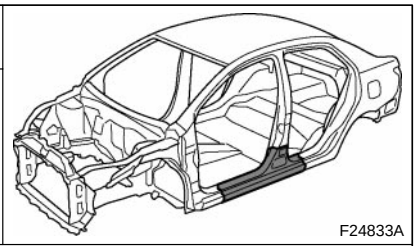
F24833A

REPLACEMENT

REMOVAL

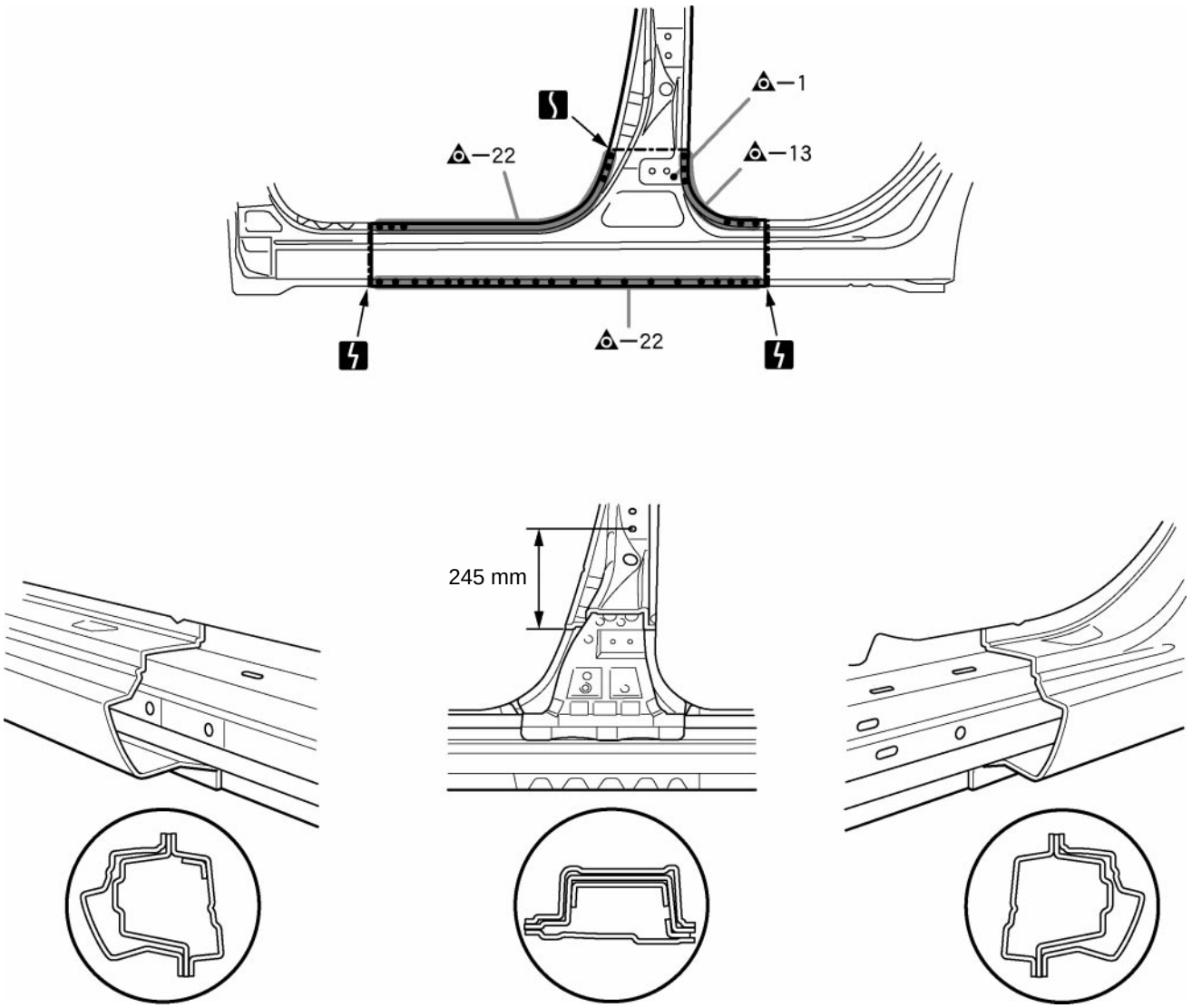

F24833-1

245 mm (9.65 in.)

INSTALLATION

* Temporarily install the new parts and measure each part of the new parts in accordance with the body dimension diagram. (See the body dimension diagram)
* Inspect the fitting of the related parts around the new parts before welding. This affects the appearance of the finish.
* After welding, apply polyurethane foam to the corresponding parts.
* After welding, apply body sealer and undercoating to the corresponding parts.
* After applying the top coat, apply anti-rust agent to the internal panel portion of the closed section structural weld points.

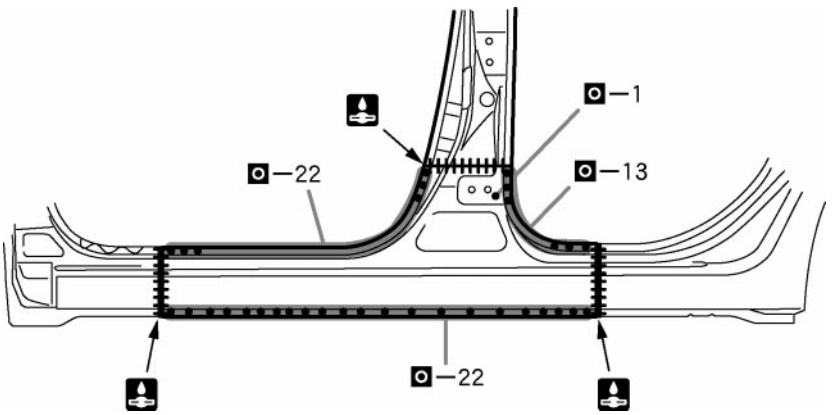

F24833-2

POINT

1 Inspect the fitting of the front door, rear door and other related parts before welding as this affects the appearance of the finish.

QUARTER WHEEL HOUSING OUTER PANEL (ASSY): Hatchback

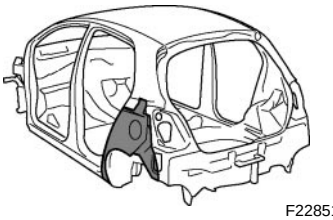
F22851A

REPLACEMENT
With the quarter panel removed.

REMOVAL

[LH]

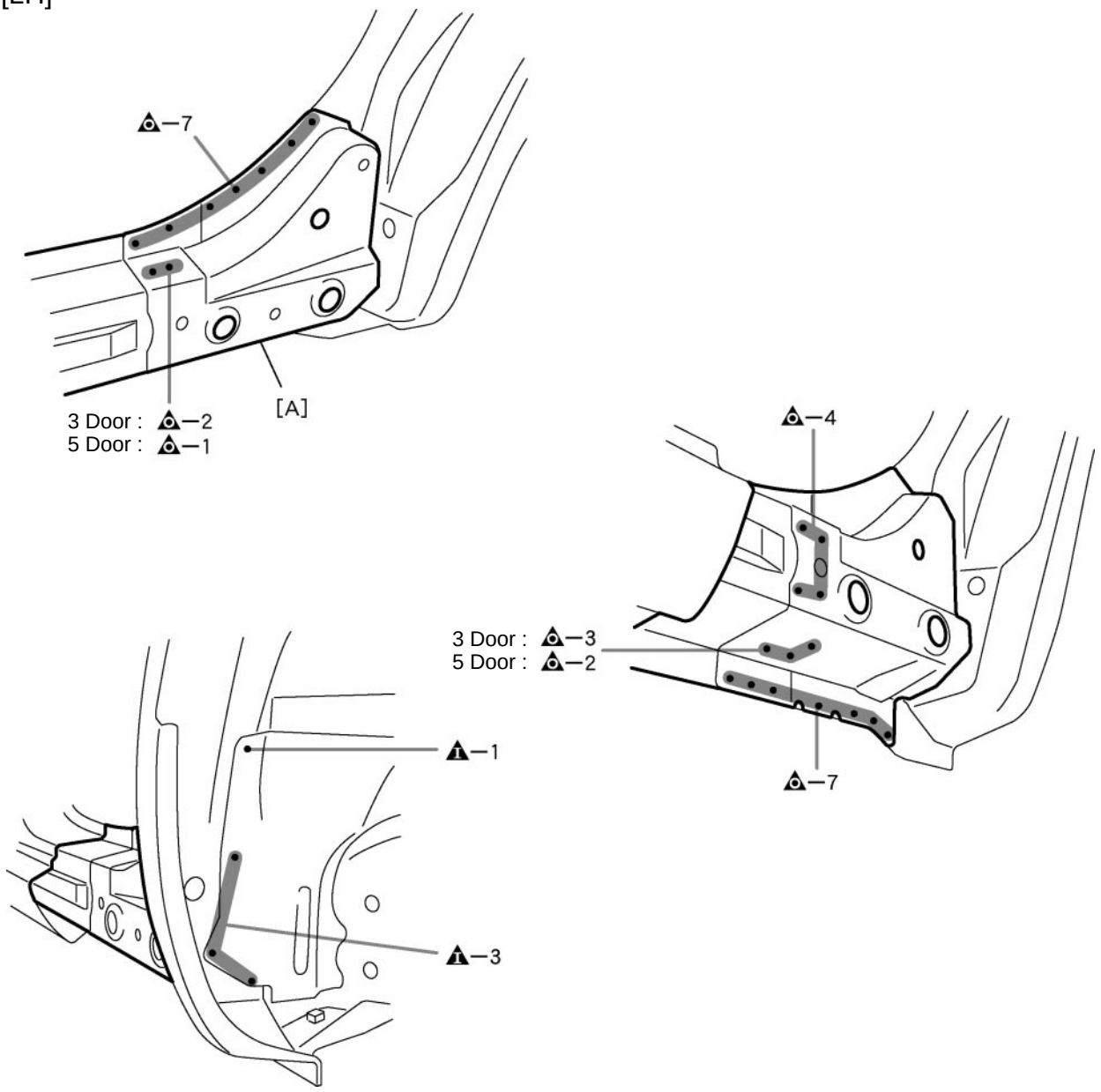

F23321

POINT
1 After removing [A], remove the quarter wheel housing outer panel.

PART NAME
[A] Rocker Outer Reinforce

[LH]

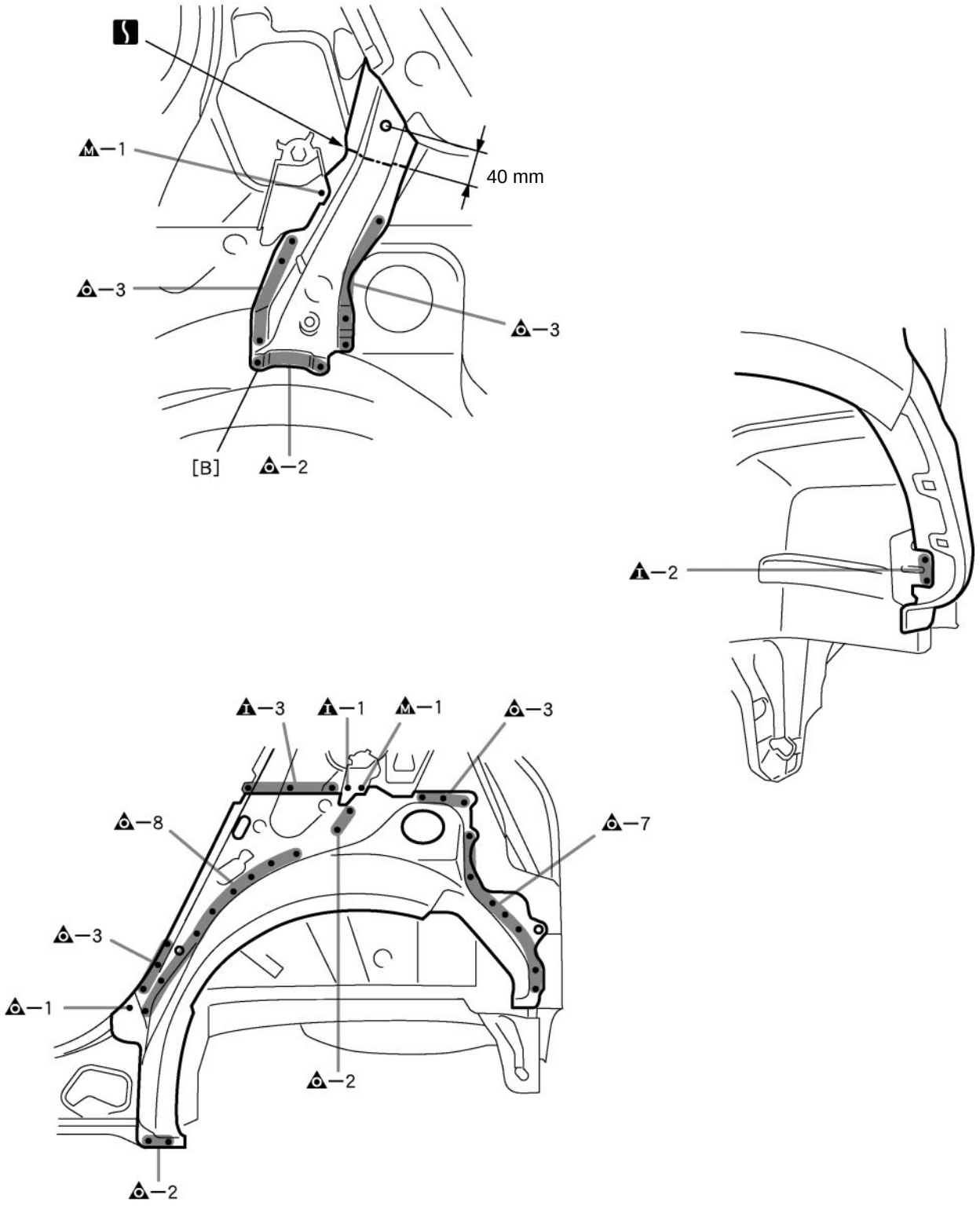

POINT

1 After removing [B], remove the quarter wheel housing outer panel.

PART NAME

[B] Roof Side Outer Panel

40 mm (1.57 in.)

[RH]

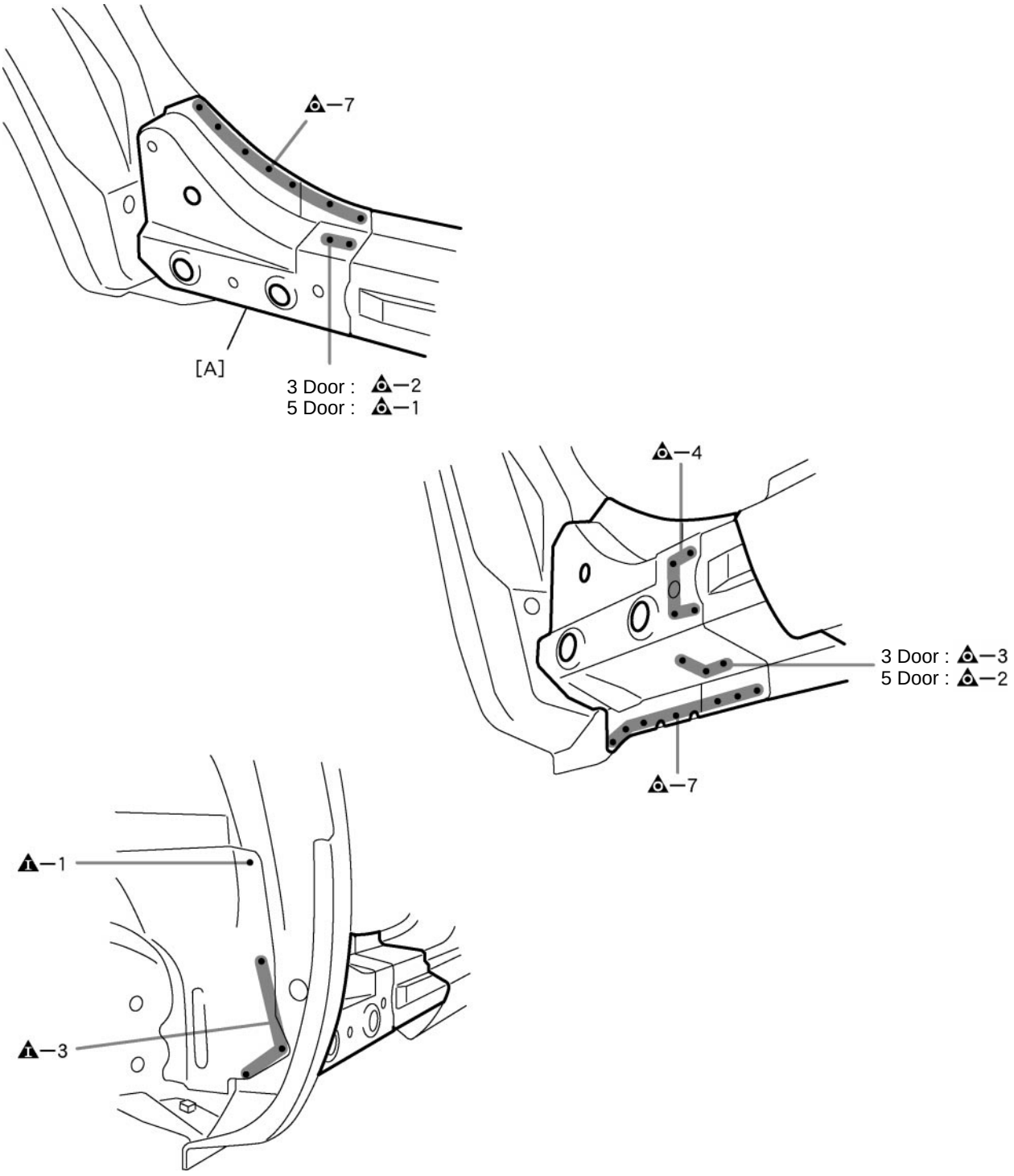

POINT

1 After removing [A], remove the quarter wheel housing outer panel.

PART NAME

[A] Rocker Outer Reinforce

[RH]

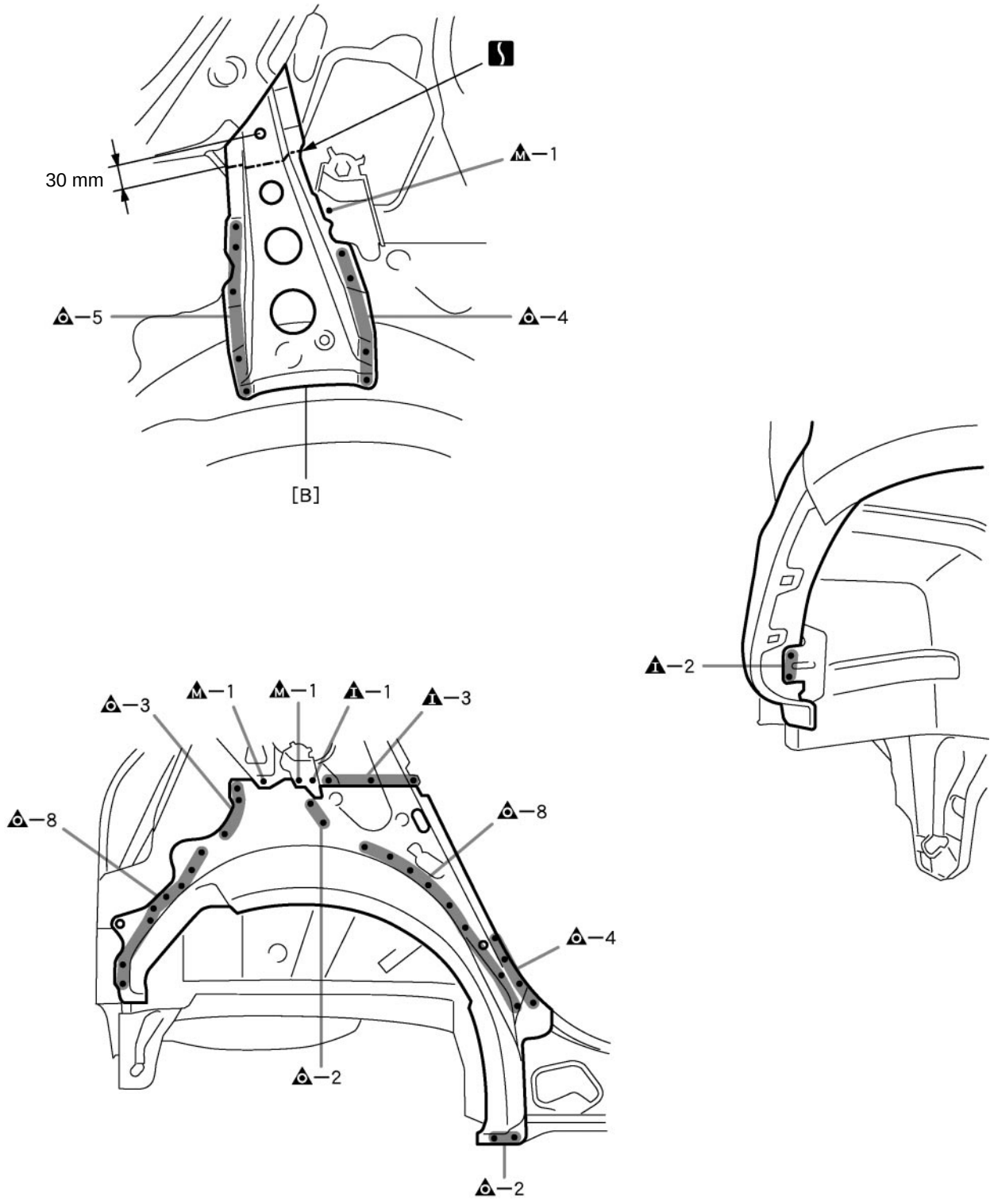

F22854

POINT

1 After removing [B], remove the quarter wheel housing outer panel.

PART NAME

[B] Roof Side Outer Panel

30 mm (1.18 in.)

INSTALLATION

⁎ Temporarily install the new parts and measure each part of the new parts in accordance with the body dimension diagram. (See the body dimension diagram)
⁎ Inspect the fitting of the related parts around the new parts before welding. This affects the appearance of the finish.
⁎ After welding, apply the polyurethane foam to the corresponding parts.
⁎ After welding, apply body sealer and under-coating to the corresponding parts.
⁎ After applying the top coat layer, apply anti-rust agent to the inside of the necked section structural weld spots.

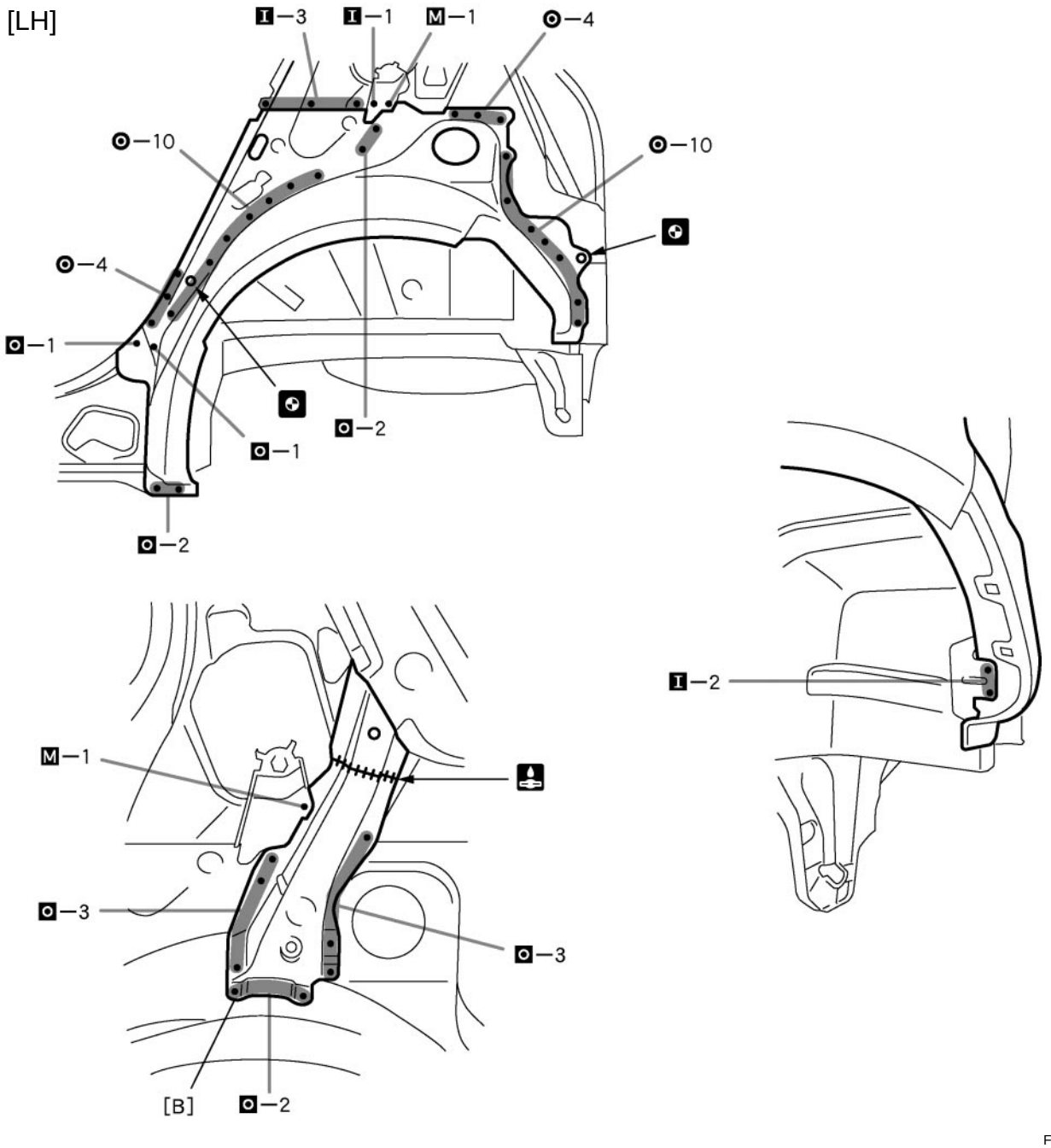

POINT

1 After installing the new parts, install [B].

PART NAME

[B] Roof Side Outer Panel

[LH]

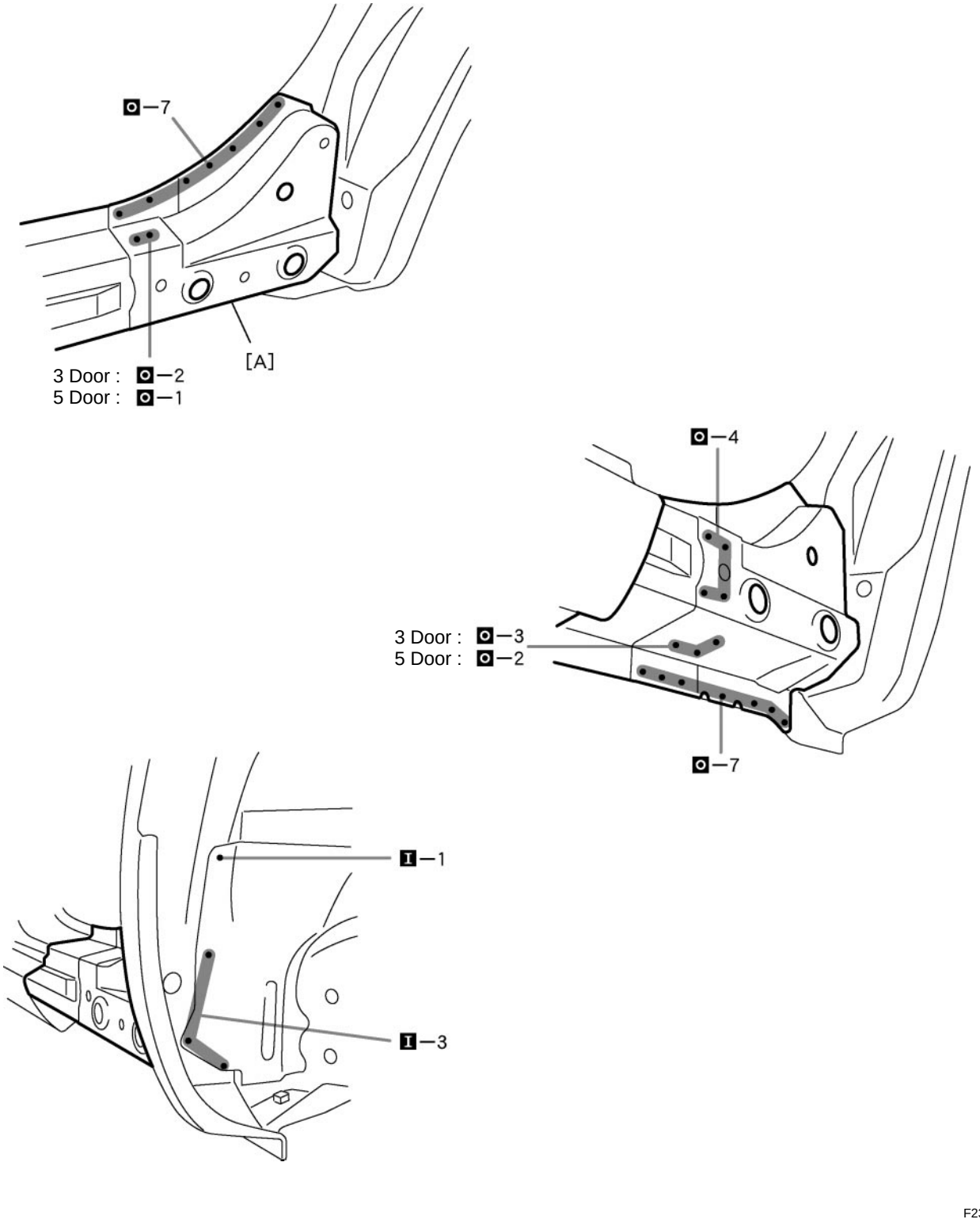

POINT

1 After installing the new parts, install [A].

PART NAME

[A] Rocker Outer Reinforce

[RH]

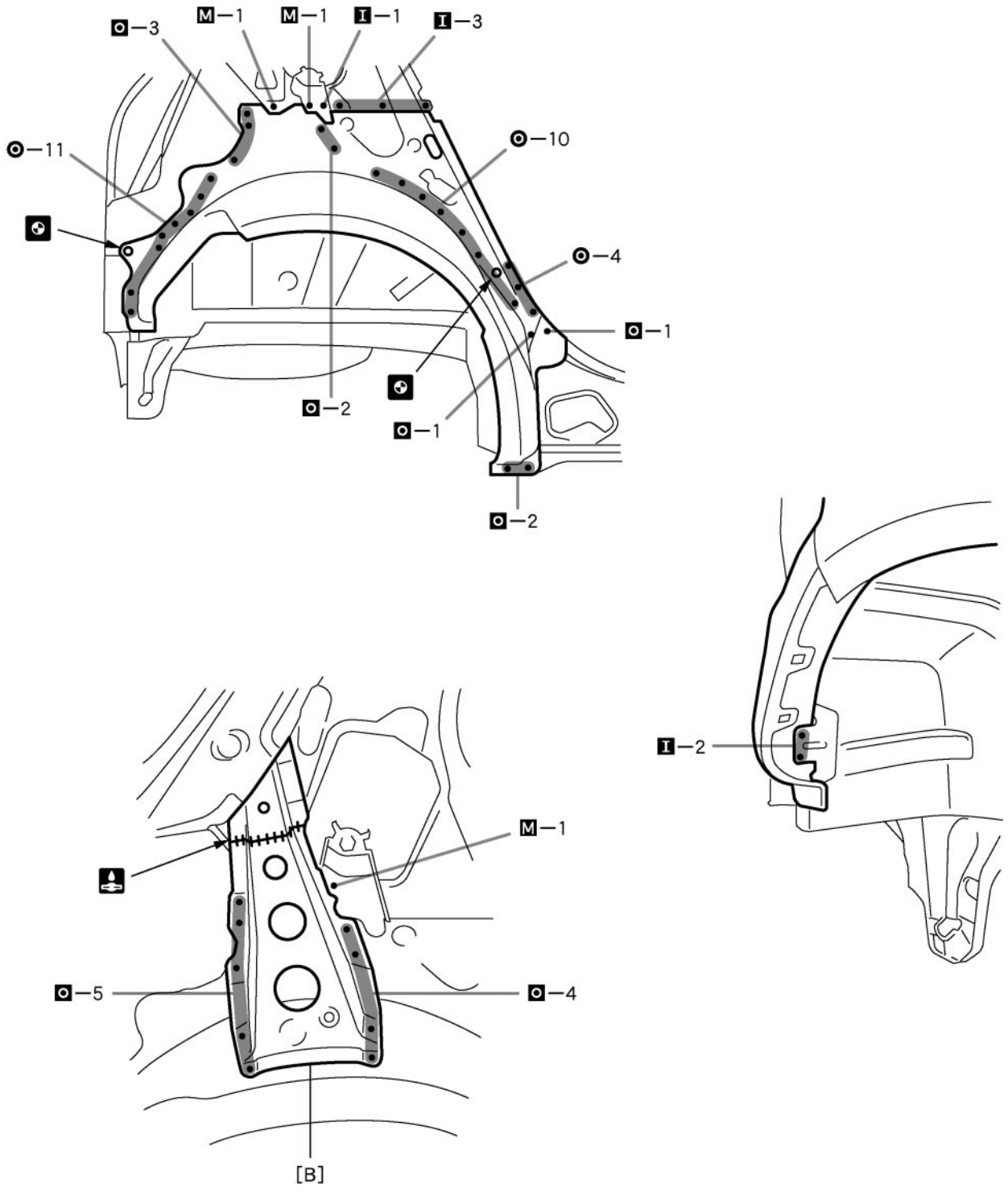

F22858

POINT

1 After installing the new parts, install [B].

PART NAME

[B] Roof Side Outer Panel

[RH]

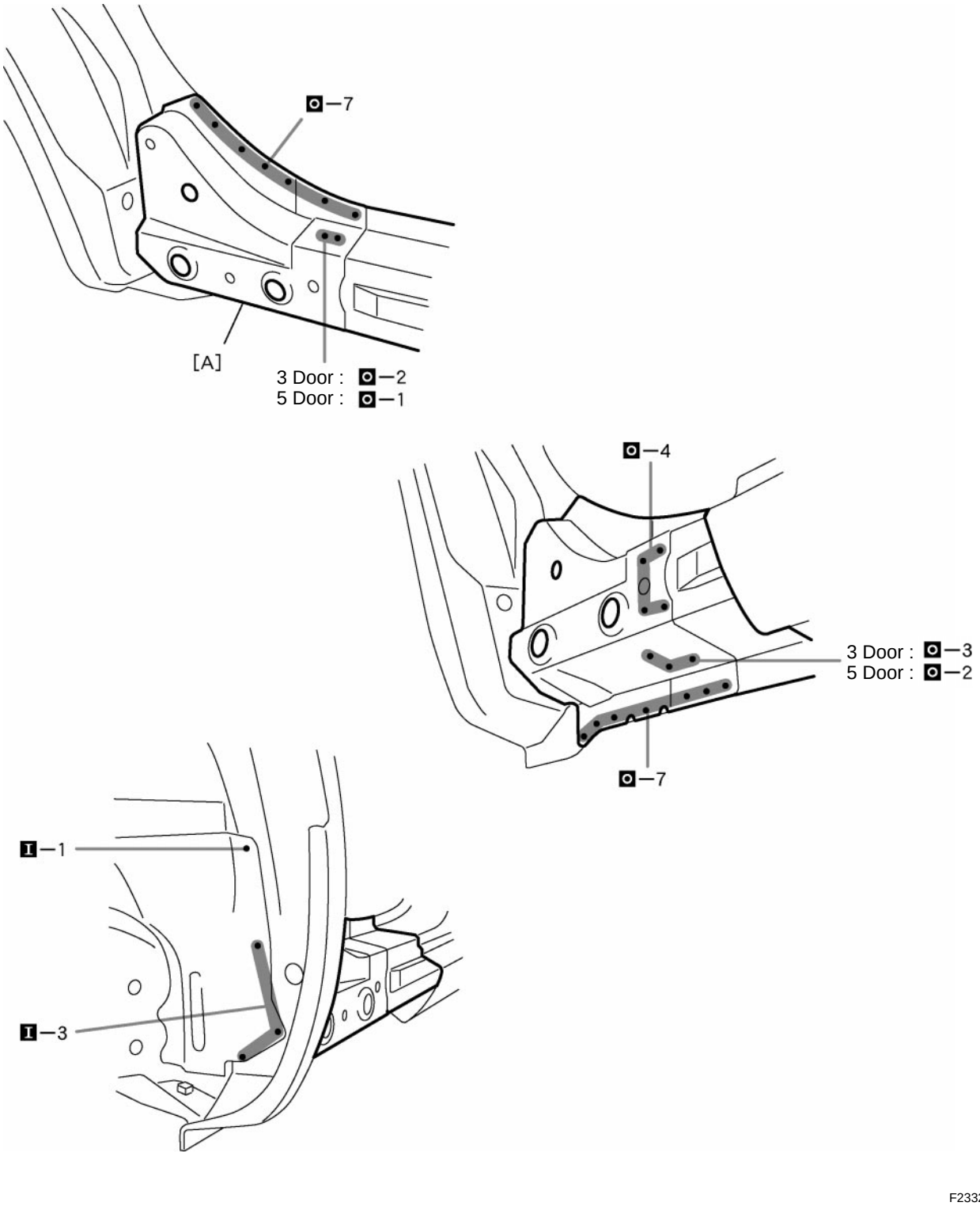

F23324

POINT

1 After installing the new parts, install [A].

PART NAME

[A] Rocker Outer Reinforce

QUARTER PANEL (CUT): Hatchback 5 Door

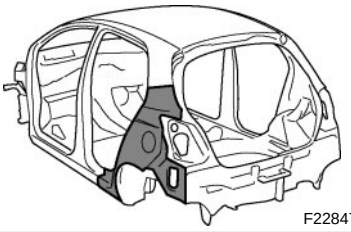
F22847A

REPLACEMENT

REMOVAL

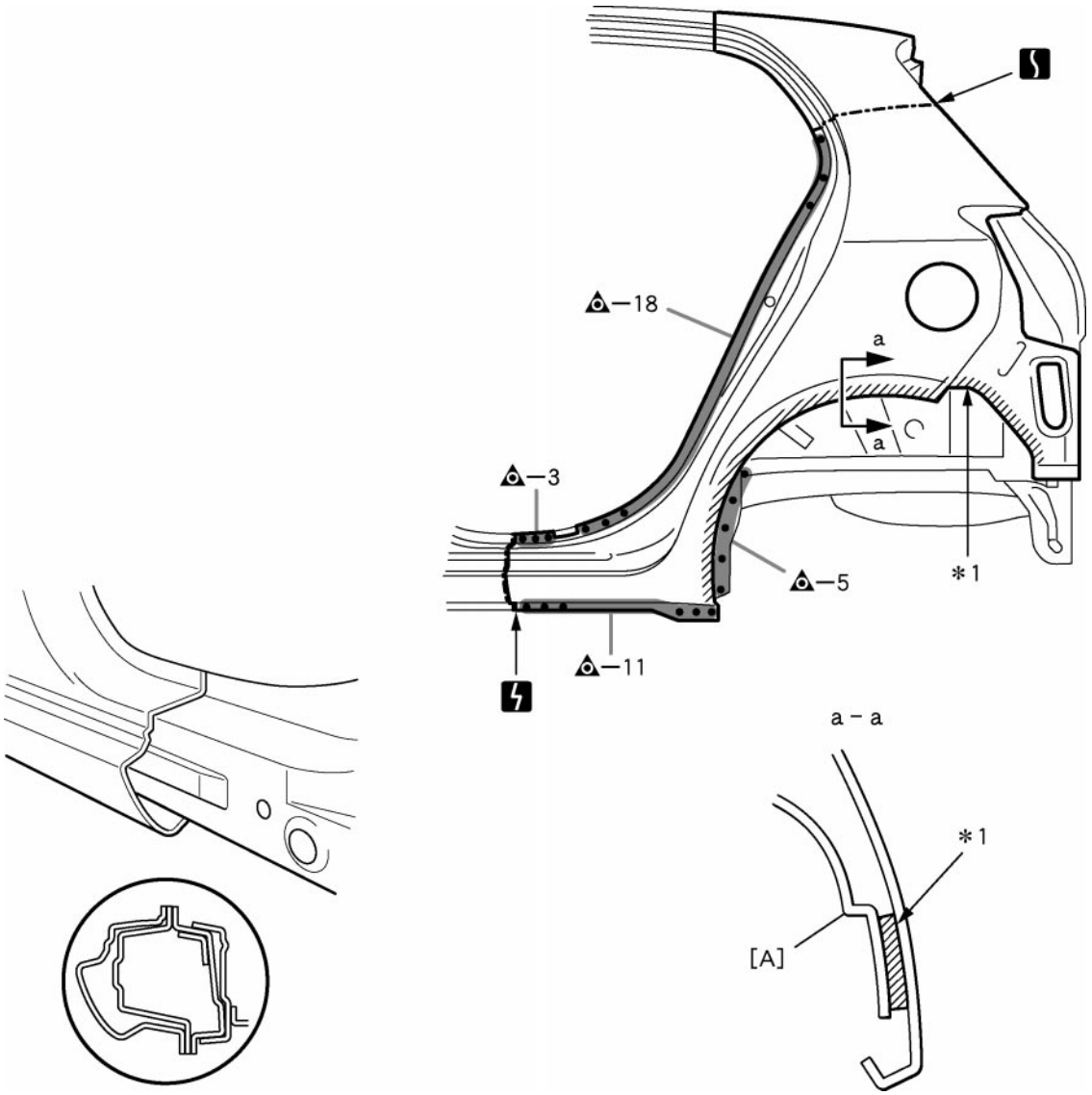

F23317

POINT

1 *1: The hatched area indicates the adhesive application area.

PART NAME

[A] Quarter Wheel Housing Outer Panel

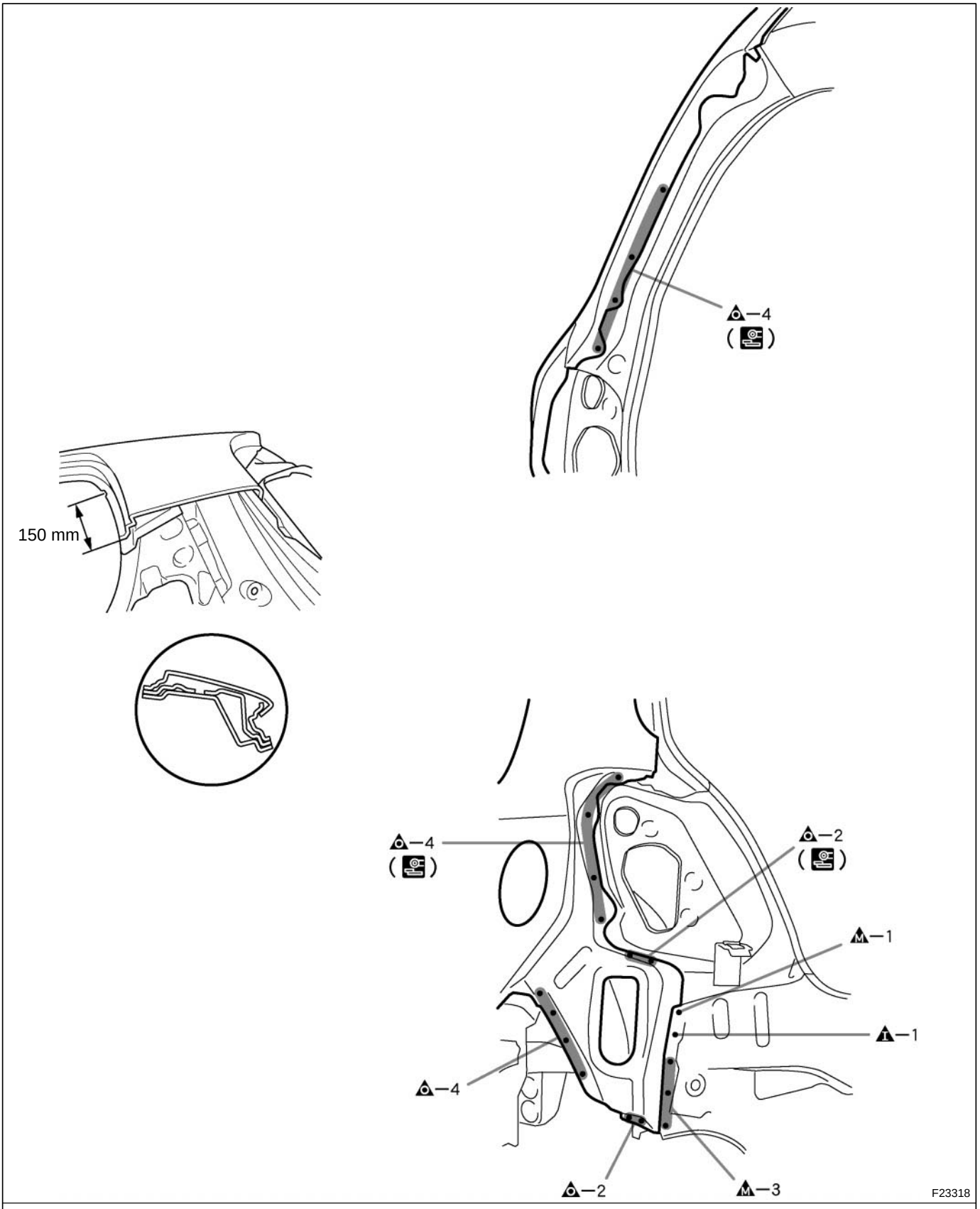

150 mm (5.91in.)

INSTALLATION

⁎ Temporarily install the new parts and measure each part of the new parts in accordance with the body dimension diagram. (See the body dimension diagram)
⁎ Inspect the fitting of the related parts around the new parts before welding. This affects the appearance of the finish.
⁎ After welding, apply polyurethane foam to the corresponding parts.
⁎ After welding, apply body sealer and undercoating to the corresponding parts.
⁎ After applying the top coat, apply anti-rust agent to the internal panel portion of the closed section structural weld points.

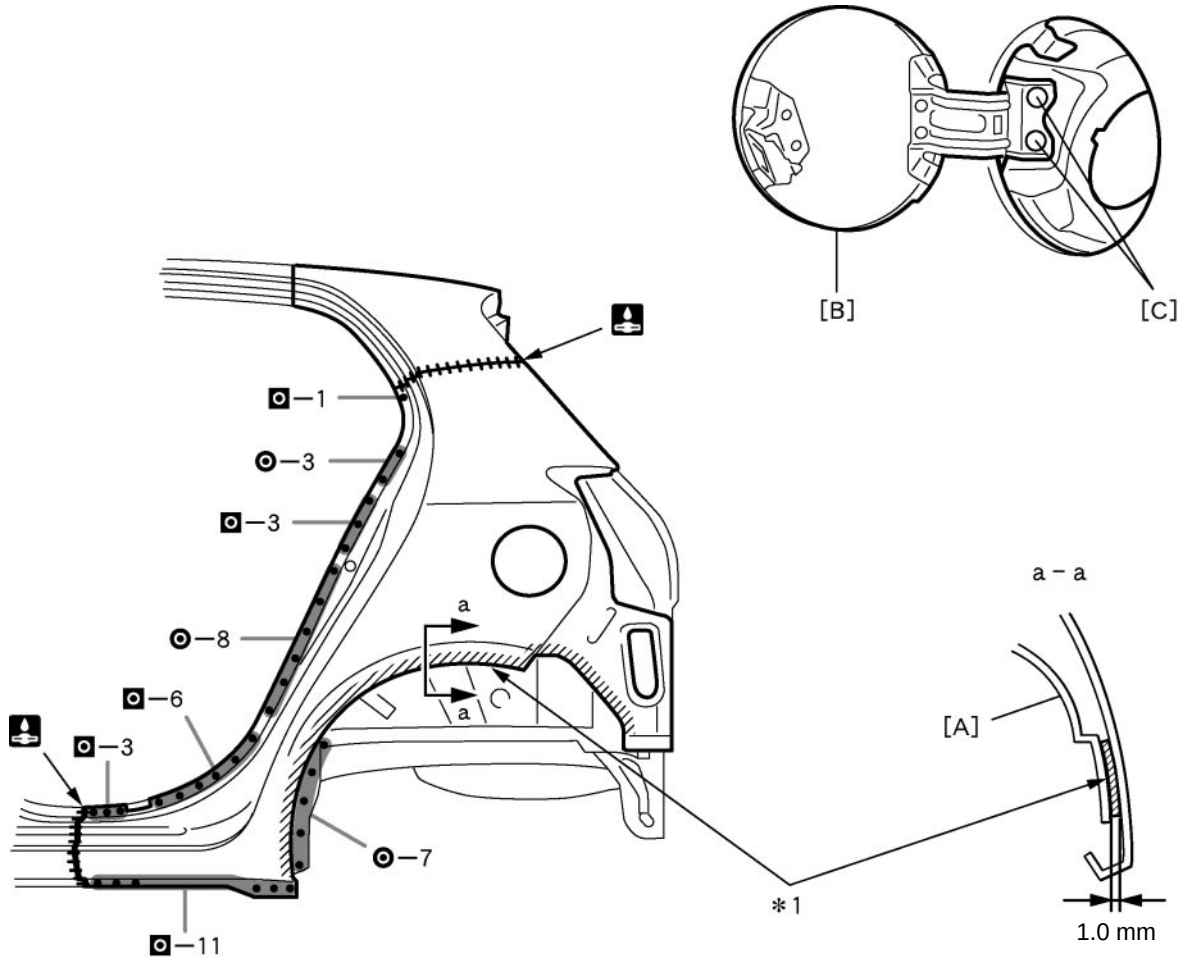

F23319

POINT

1 *1: The hatched area indicates the adhesive application area.

PART NAME

[A] Quarter Wheel Housing Outer Panel [B] Fuel Filler Opening Lid [C] Rivet
1.0 mm (0.04 in.)

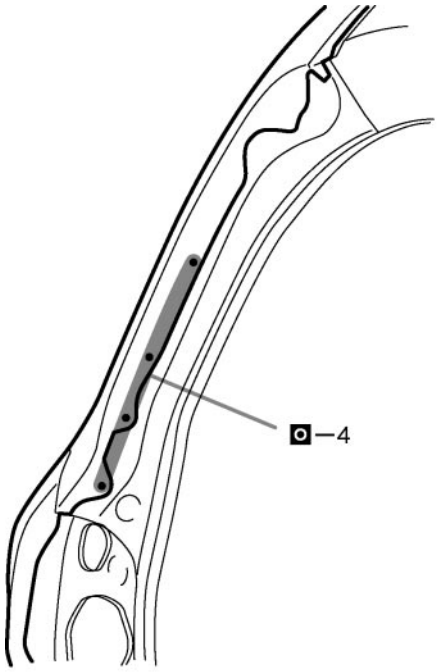

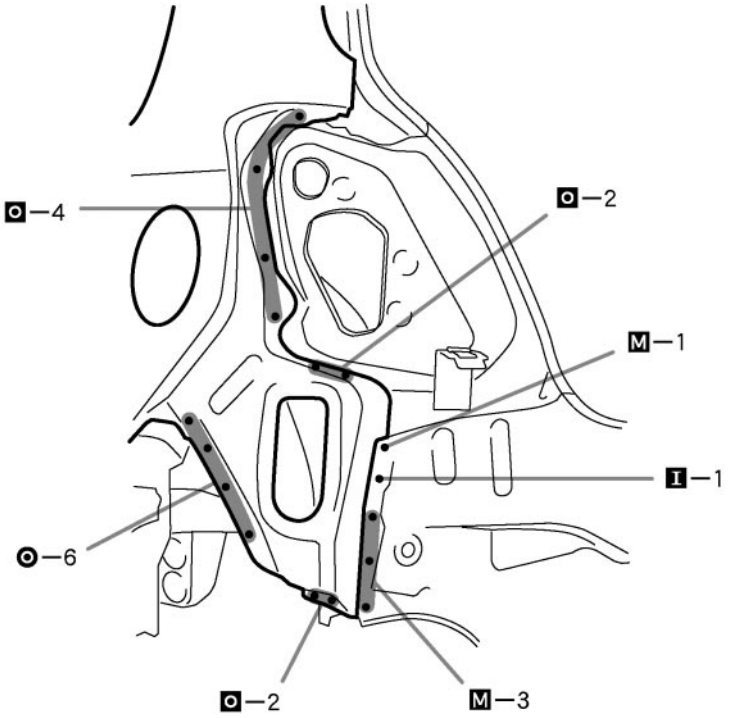

F23320

POINT

1 Inspect the front door, back door, rear combination light and other related parts before welding as this affects the appearance of the finish.

Adhesive Application Area Work Procedure

※NOTE※

This vehicle has areas on the Quarter Panel and Quarter Wheel Housing Outer Panel that are joined together only with adhesive. It is necessary to conduct the correct repair procedures for high durability so make sure to follow the instructions below for the adhesive application areas.
Type of adhesive used: 3M8115 Auto Mix Panel Bond

1. Removal of the Quarter Panel

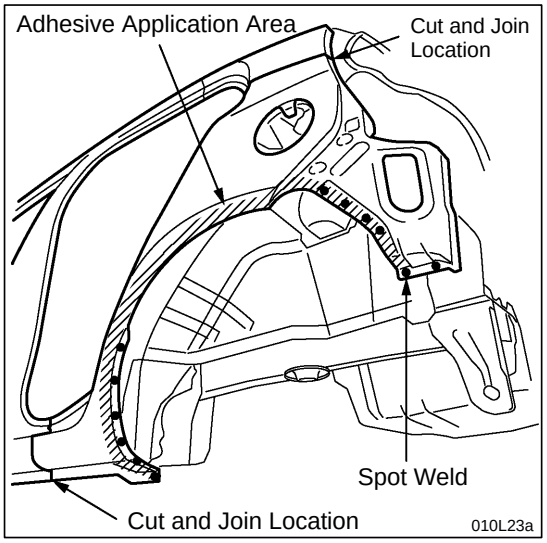

(A) Remove the body sealer from the Quarter Panel and cut at the cut and join location. Remove the spot welded portions.

(B) After rough cutting the Wheel Arch portion, heat the adhesive applied area and remove the panel. {Heat the Wheel Arch portion of the Quarter Panel at 110 to 140 C (230 to 284 F) with a dryer or gas burner and remove the Quarter Panel.}

2. Removal of the previous adhesive coating

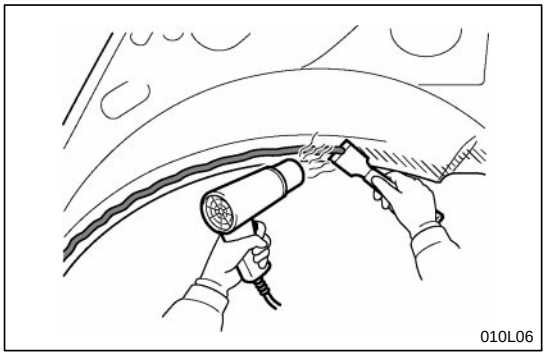

(A) Heat at 110 to 140 C (230 to 284 F) with a dryer or gas burner.

(B) Scrape away the adhesive with a scraper, and scuff while sanding with a disc grinder or a belt sander.

※NOTE※

- Make sure to use either a disc grinder or belt sander to sand coarsely and deeply to improve adhesiveness.
- Scuff at a width of approximately 10 mm (0.39 in.) over the previous adhesive coating.

3. Treatment of the spot welded portions on the body

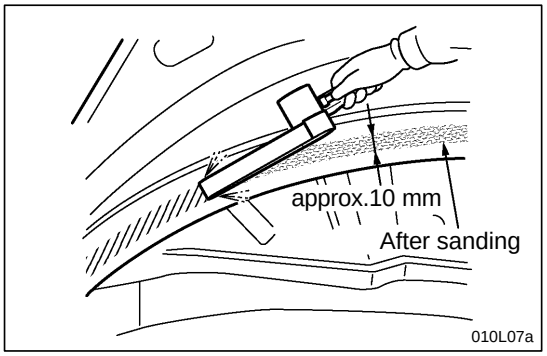

(A) After the adhesive has been removed from the body, remove the paint from the underside of the spot welded points blow air and degrease.

(B) Apply spot sealer at the joined portion between panels.

4. Attachment of the New Quarter Panel

(A) Temporarily attach the new panel and check the fitting condition, the cut and join locations, the welded areas, and the adhesive applied area.

※ NOTE ※

- Check the adhesive applied condition to ensure adhesive strength.
- Conduct hammering to fix the non-adhered portions.

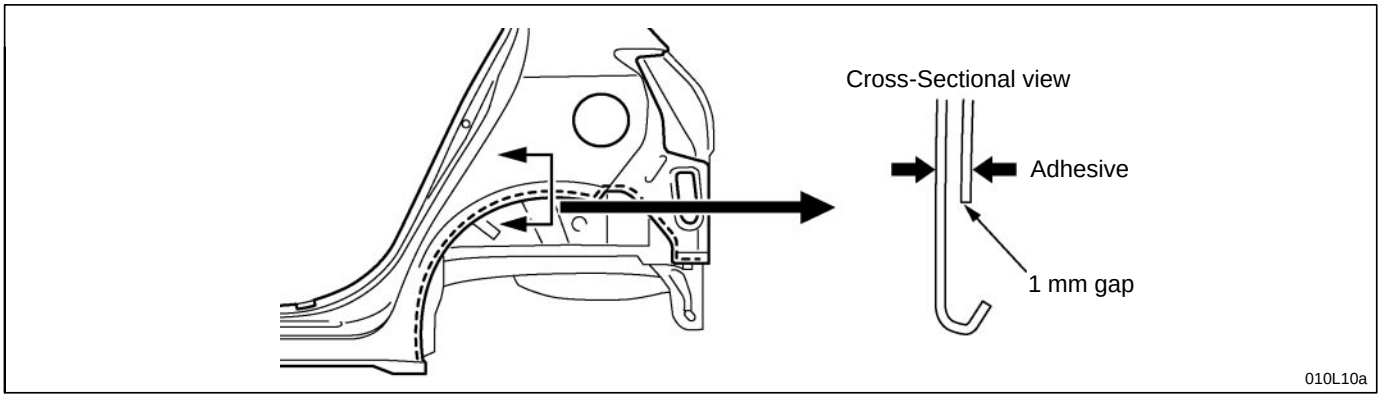

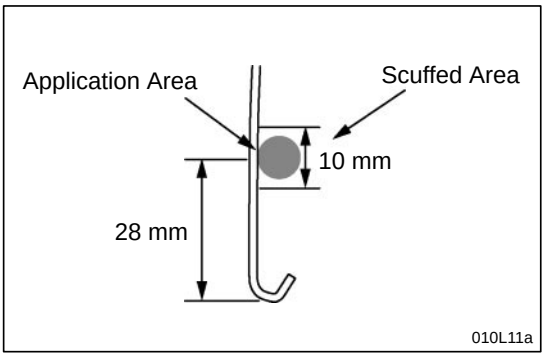

5. Adhesive Application to New Quarter Panel

(A) Scuff with #60-120 grit sandpaper at the adhesive application area.

※ POINT ※

Sand deeply into the ED coat.

(B) Blow air around the scuffed portion and then degrease.

(C) Apply adhesive.

※ POINT ※

Apply adhesive at a width of approximately 10 mm (0.39 in.) at a location 28 mm (1.10 in.) from the panel flange edge. Spread the adhesive flatly within the scuffed area {approximately 10 mm (0.39 in.) in width} to remove trapped air.

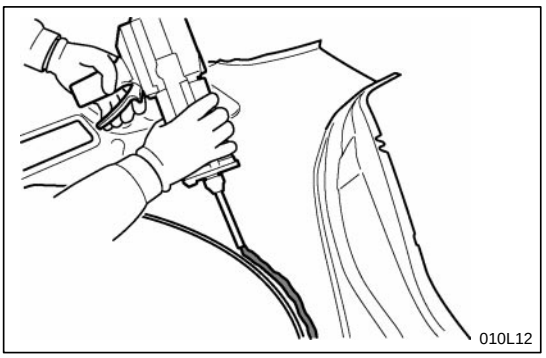

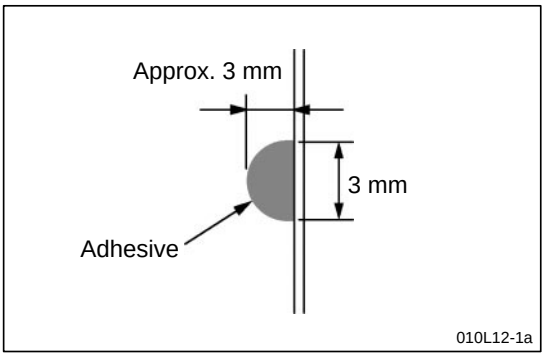

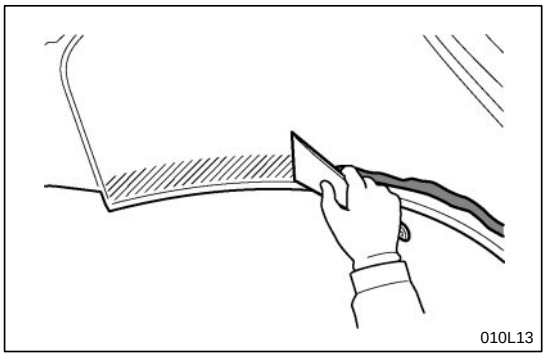

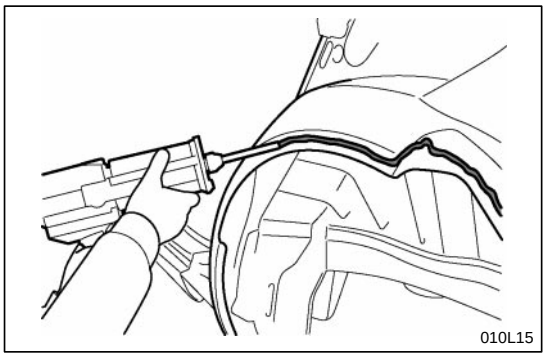

6. Application of Adhesive to the Body

(A) Degrease the adhesive aplication area.

(B) Apply adhesive.

- Refer to the diagram of step 5 for the application amount.
- The application location is 7.5 mm (0.295 in.) from the flange edge.

(C) Flatten out the applied adhesive with a spatula until it is at an even level.

- Apply adhesive at exposed metal plate portions to prevent corrosion.
- It is not necessary to flatten out adhesive after it has been reapplied.

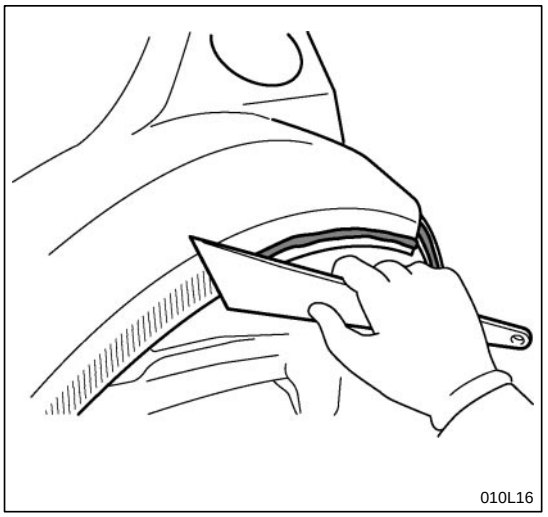

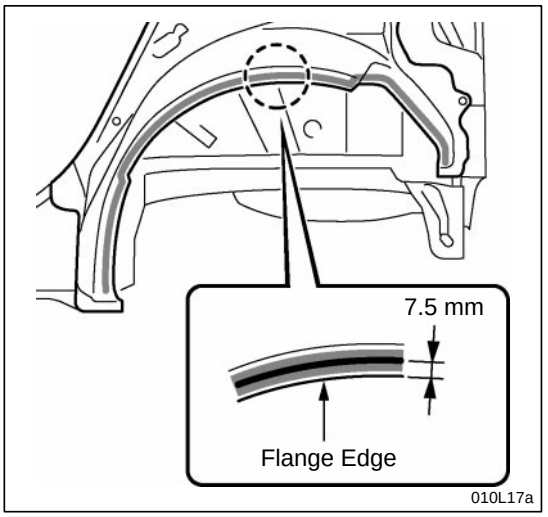

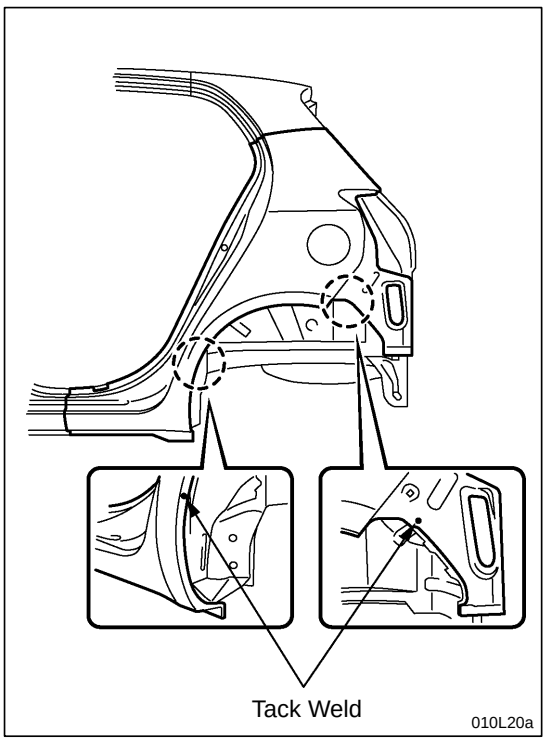

7. Attachment of the new Quarter Panel

(A) Set the new panel in the position for temporary attachment. (Be careful of where you hold the panel so as not to touch the adhesive applied surfaces.)

(B) Secure in a vice grip or equivalent and check the fitting condition.

(C) Press on the entire surface so that the adhesive between the Quarter Panel and Quarter Wheel Housing Outer panel becomes an even thickness.

※ NOTE ※

Be careful that adhesive that spills over does not contact the Brake Drum.

(D) Tack weld at the cut and join welded portion.

(E) Tack weld by spot welding at one point on both ends of the adhesive applied portions.

(F) Conduct actual welding using procedures in the BP section of this manual.

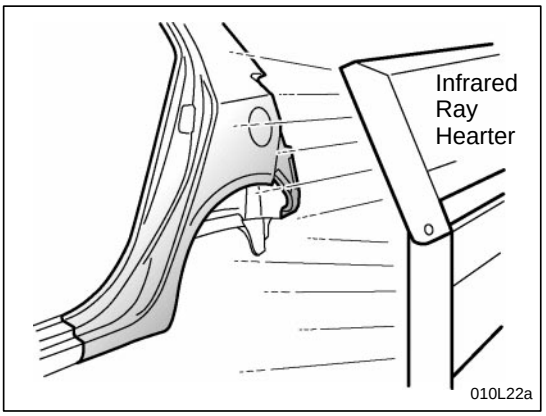

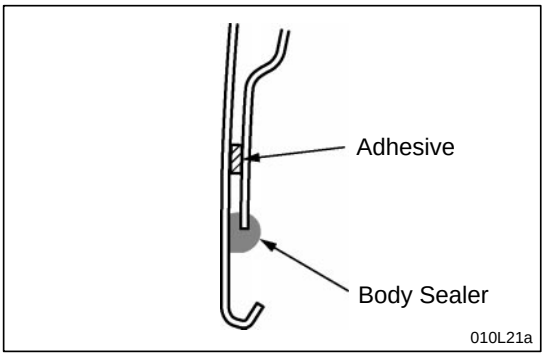

8. Drying

(A) Clean away adhesive that has spilled over with a degreaser or equivalent.

(B) After all welding works have been completed, dry the adhesive with a heater.

- Hardening Time
  - Forced drying
    60 C (140 F) at 90 minutes.
  - Natural drying
    24 C (75 F) (room temperature) for 24 hours.

9. Other work

(A) After applying Primer Surfacer to the underside of the Wheel Arch of the Quarter Panel, apply body sealer to the locations indicated in the body repair manual.

QUARTER WHEEL HOUSING OUTER PANEL (ASSY): Sedan

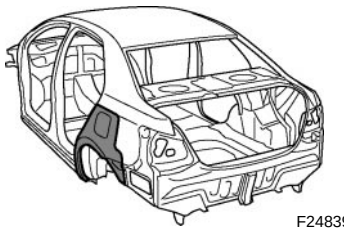
F24839A

REPLACEMENT
With the quarter panel removed.

REMOVAL

[LH]

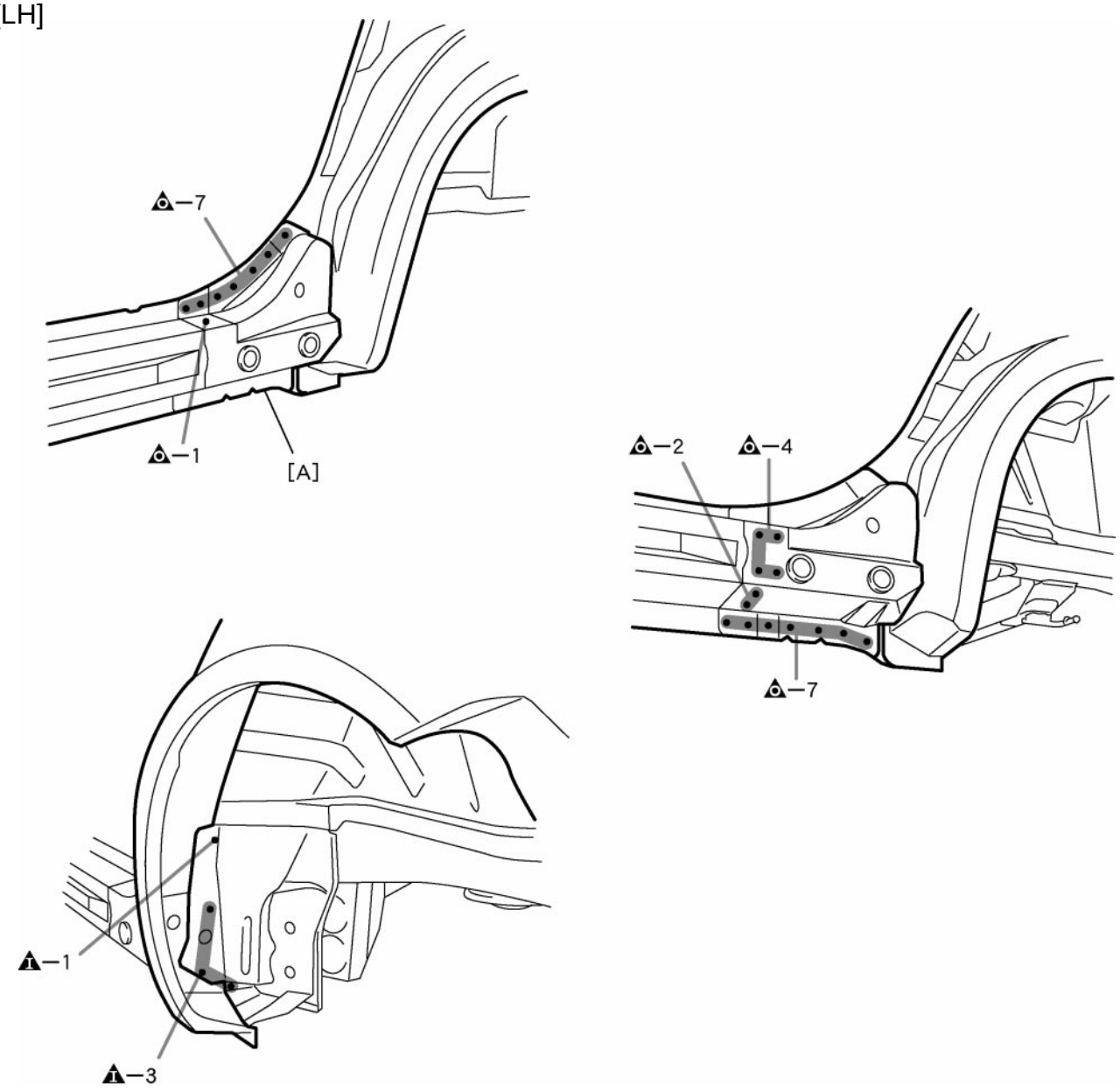

F24839-1

POINT
1 After removing [A], remove the quarter wheel housing outer panel.

PART NAME
[A] Rocker Outer Reinforce

[LH]

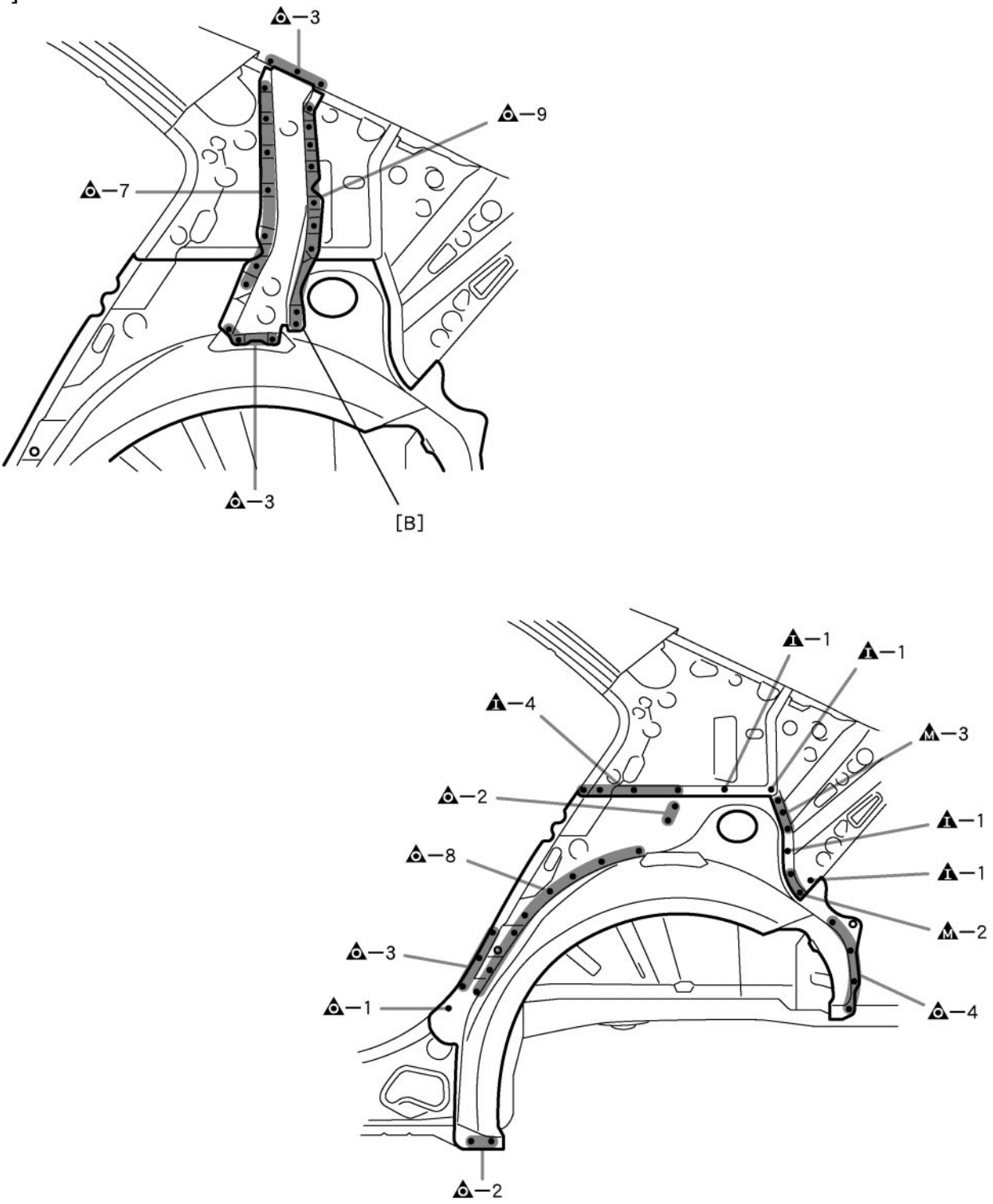

F24840-1

POINT

1 After removing [B], remove the quarter wheel housing outer panel.

PART NAME

[B] Roof Side Outer Panel

[RH]

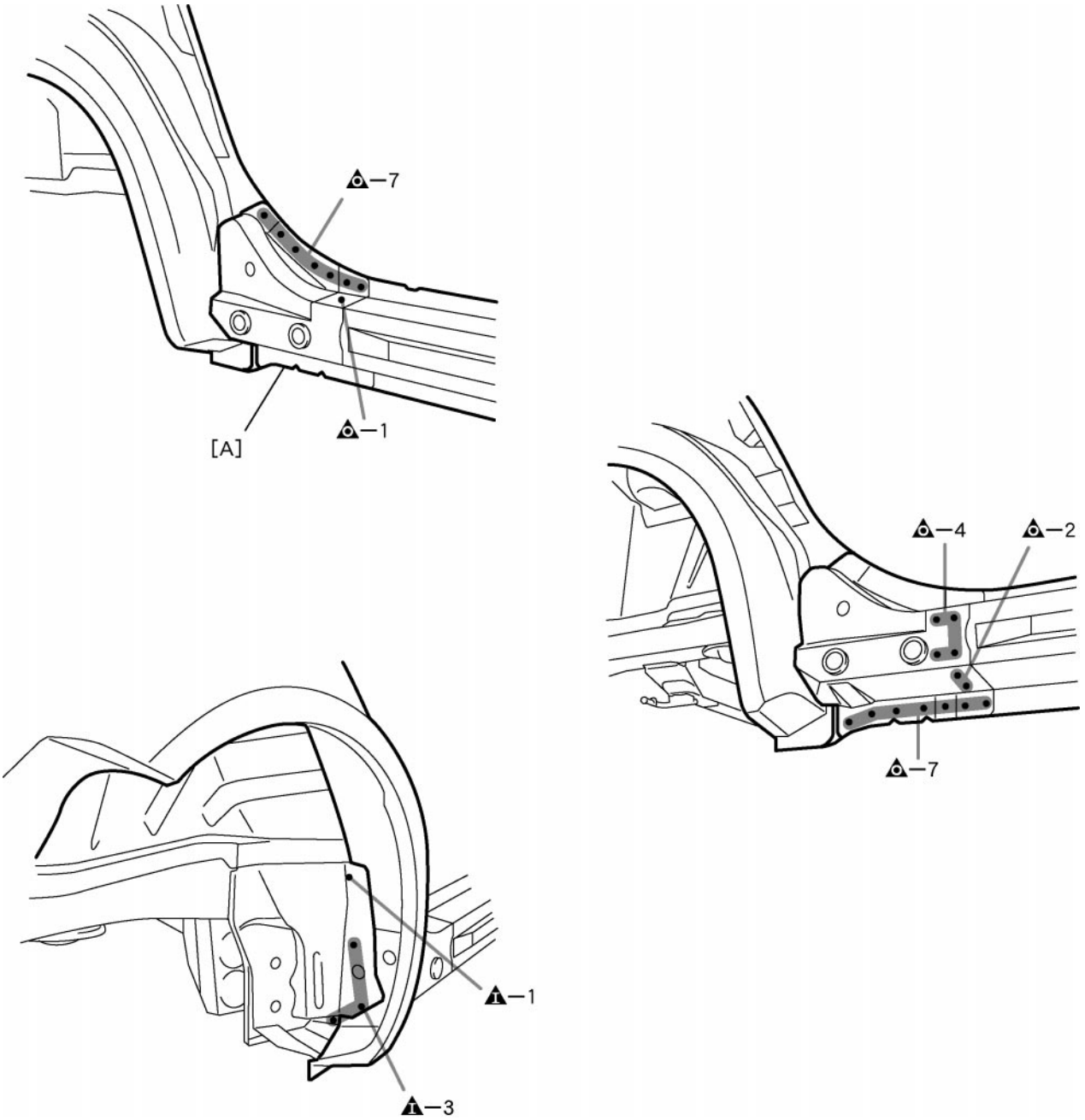

F24841-1

POINT

1 After removing [A], remove the quarter wheel housing outer panel.

PART NAME

[A] Rocker Outer Reinforce

[RH]

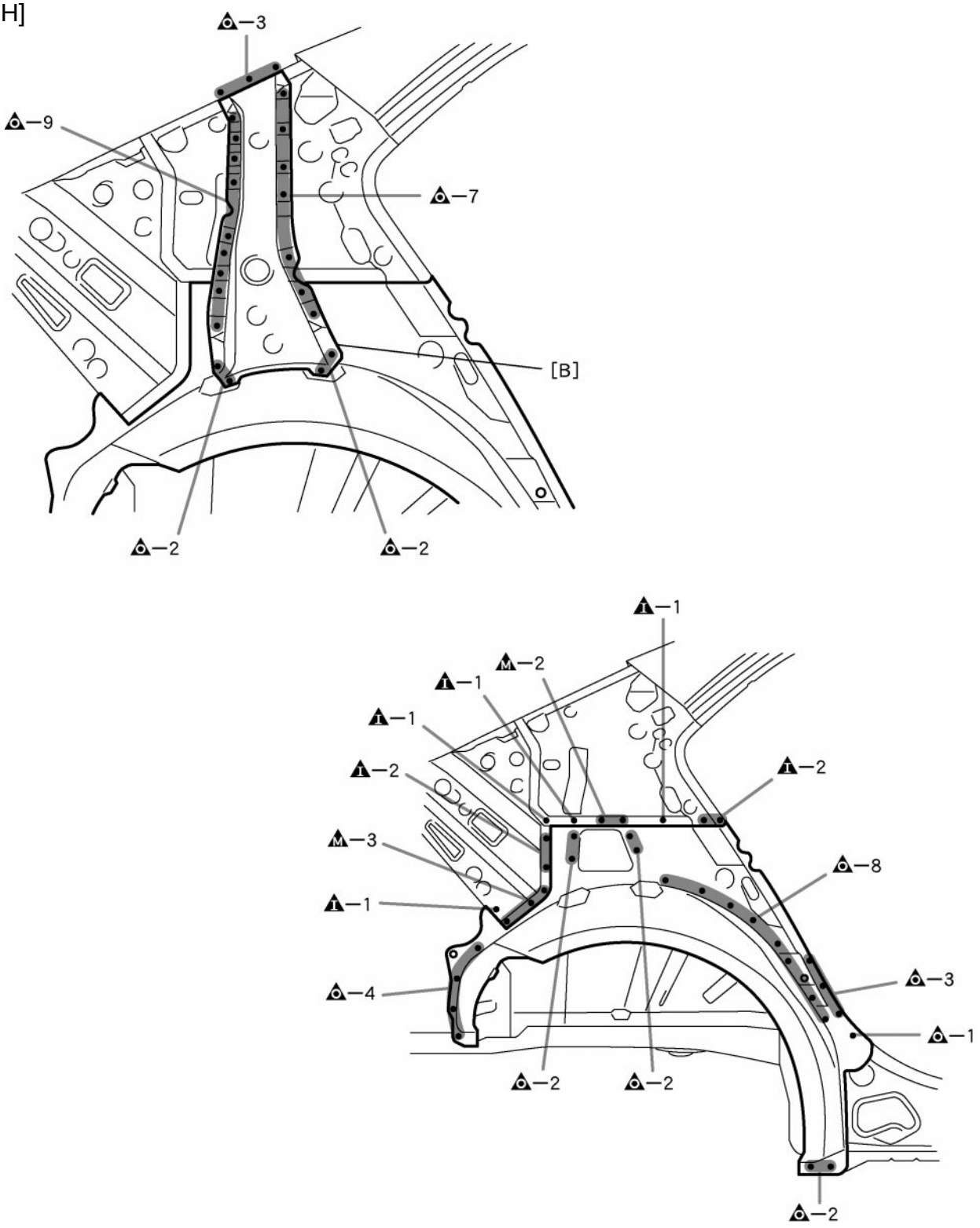

F24842-1

POINT

1 After removing [B], remove the quarter wheel housing outer panel.

PART NAME

[B] Roof Side Outer Panel

INSTALLATION

* Temporarily install the new parts and measure each part of the new parts in accordance with the body dimension diagram. (See the body dimension diagram)
* Inspect the fitting of the related parts around the new parts before welding. This affects the appearance of the finish.
* After welding, apply polyurethane foam to the corresponding parts.
* After welding, apply body sealer and undercoating to the corresponding parts.
* After applying the top coat, apply anti-rust agent to the internal panel portion of the closed section structural weld points.

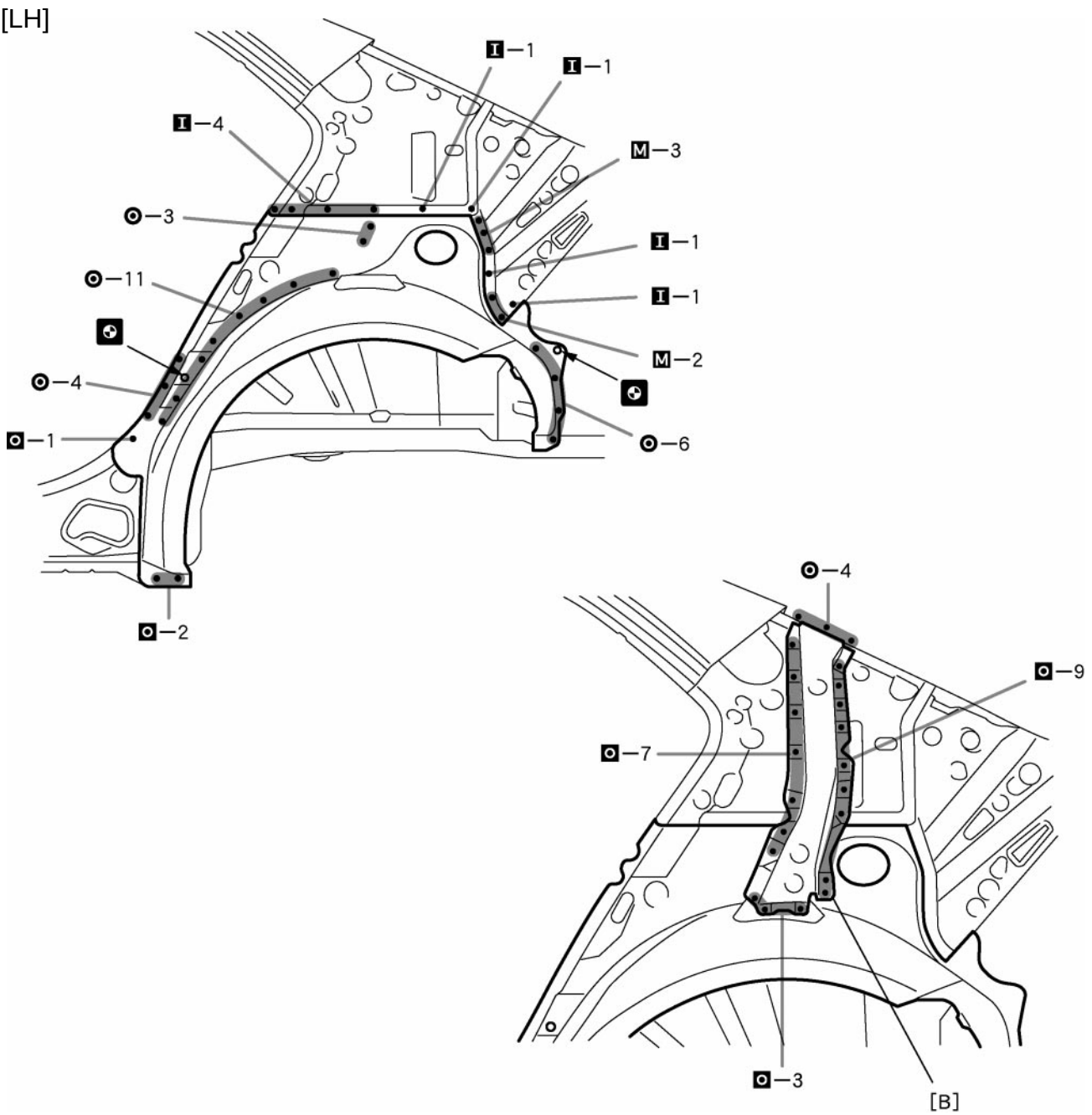

F24840-2

POINT

1 After installing the new parts, install [B].

PART NAME

[B] Roof Side Outer Panel

[LH]

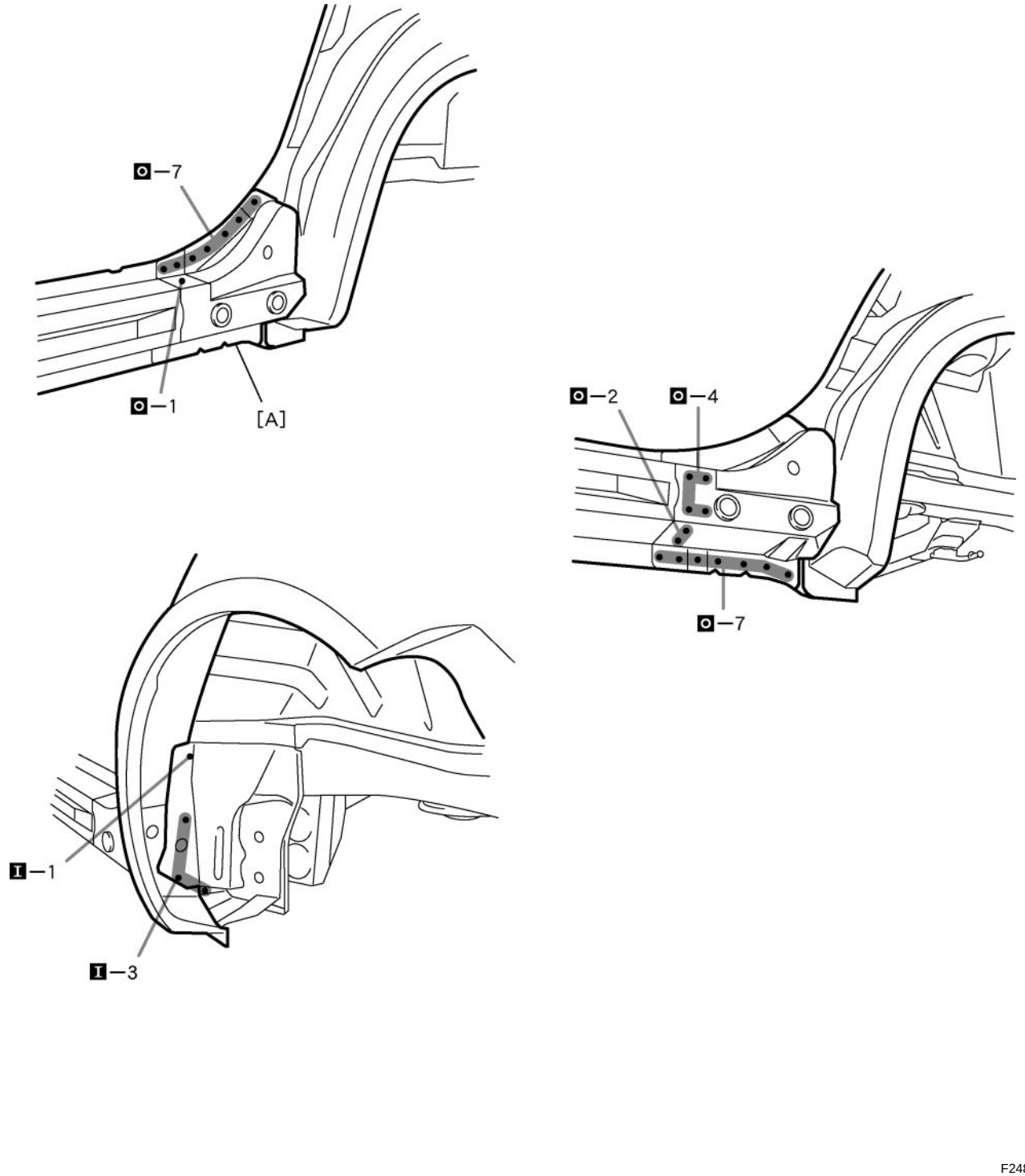

POINT

1 After installing the new parts,install [A].

PART NAME

[A] Rocker Outer Reinforce

[RH]

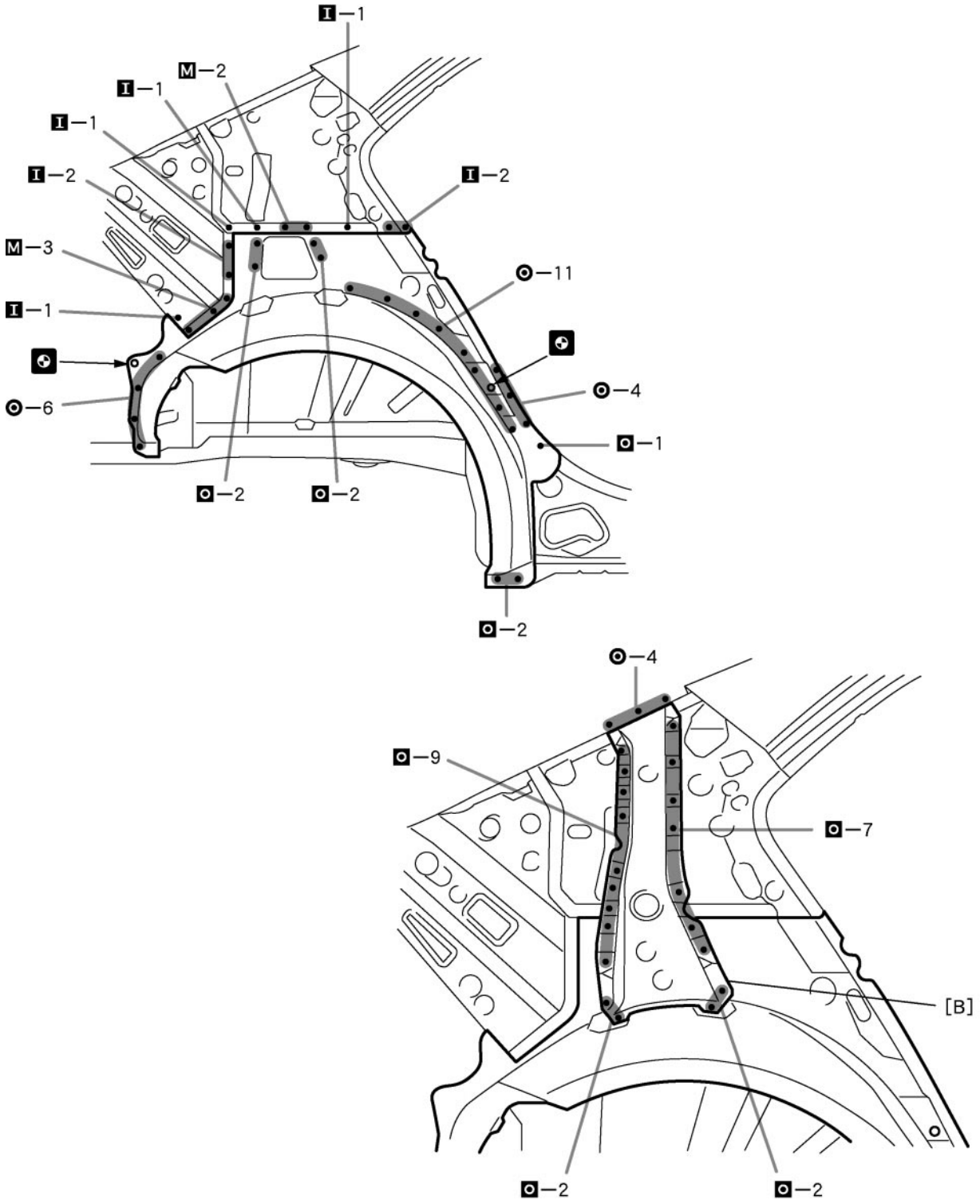

F24842-2

POINT

1 After installing the new parts, install [B].

PART NAME

[B] Roof Side Outer Panel

[RH]

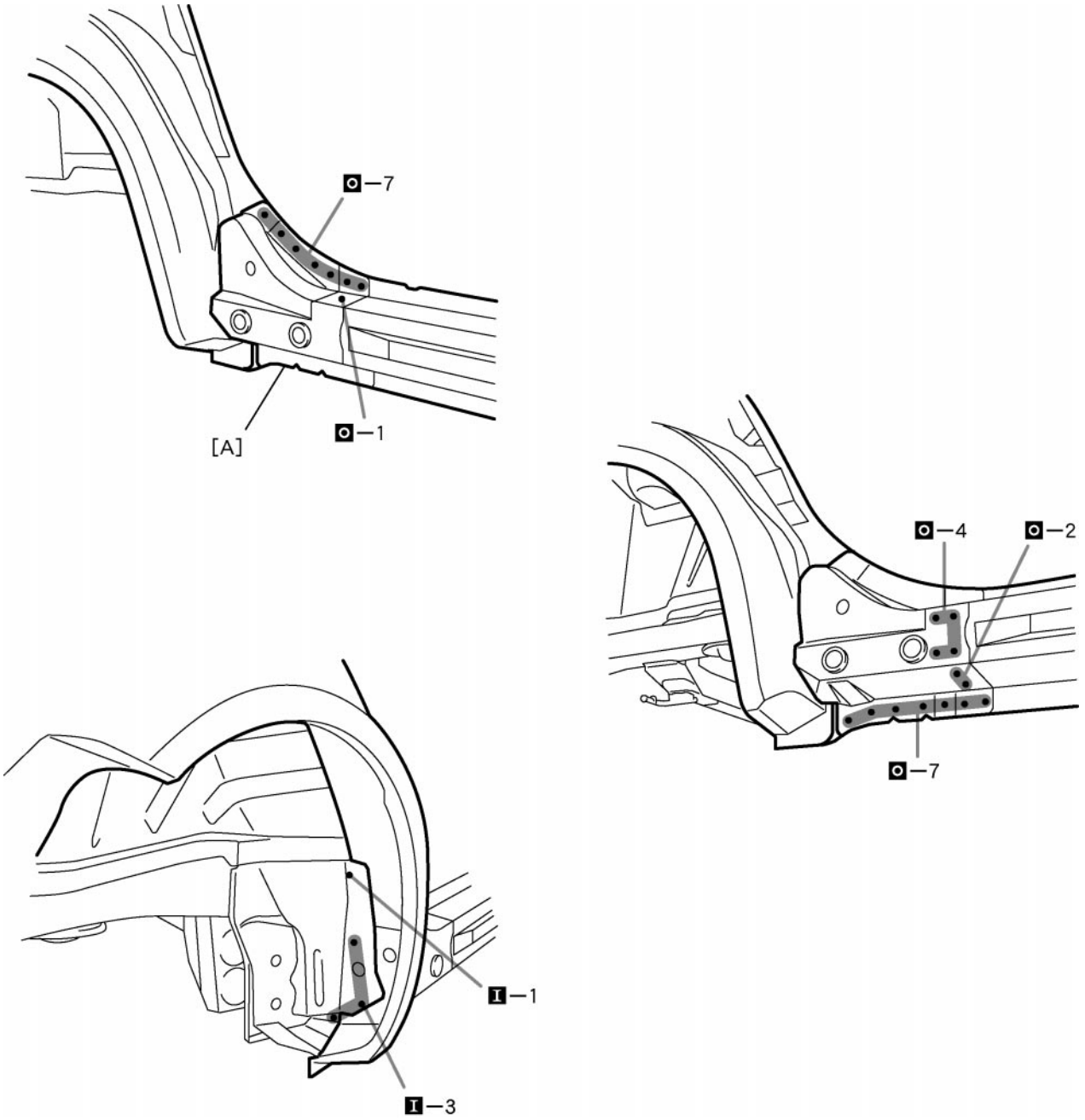

F24841-2

POINT

1 After installing the new parts, install [A].

PART NAME

[A] Rocker Outer Reinforce

QUARTER PANEL (CUT): Sedan

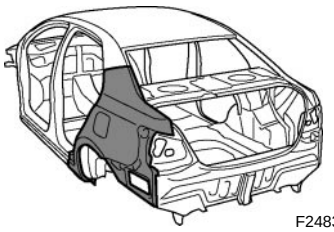
F24834A

REPLACEMENT

REMOVAL

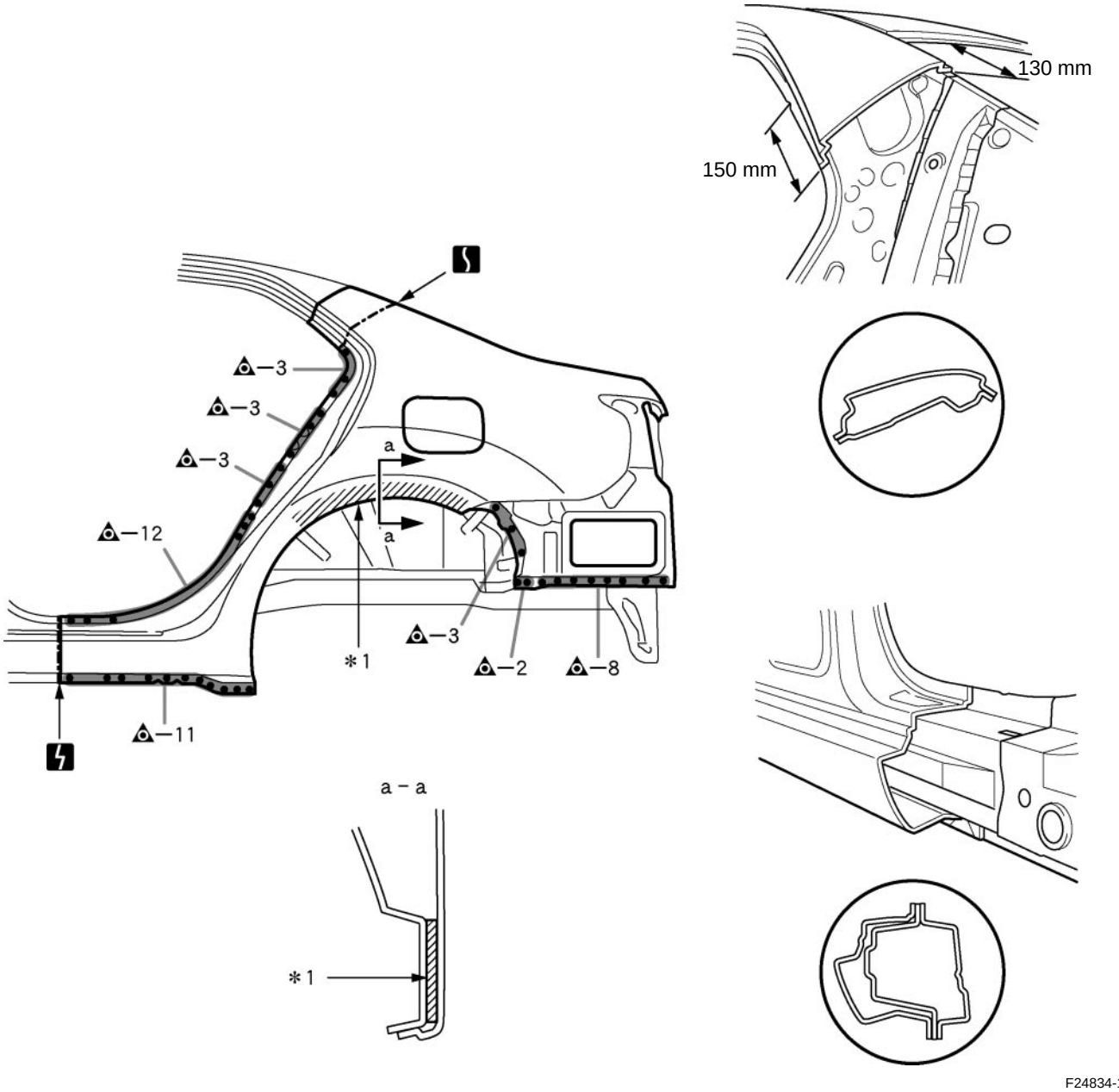

F24834-1

POINT

1 *1: in illustration above indicates where the adhesive is.

2 Roughly cut open the wheel arch of the panel so that the adhesive can be reached. Cut through the adhesive with a cut chisel to remove the panel.
HINT:
1) If the cut chisel cannot reach the adhesive, heat the adhesive with a heat gun, oxygen-acetylene burner. When heating, do not deform the quarter housing outer panel.

130 mm (5.12 in.) 150 mm (5.91 in.)

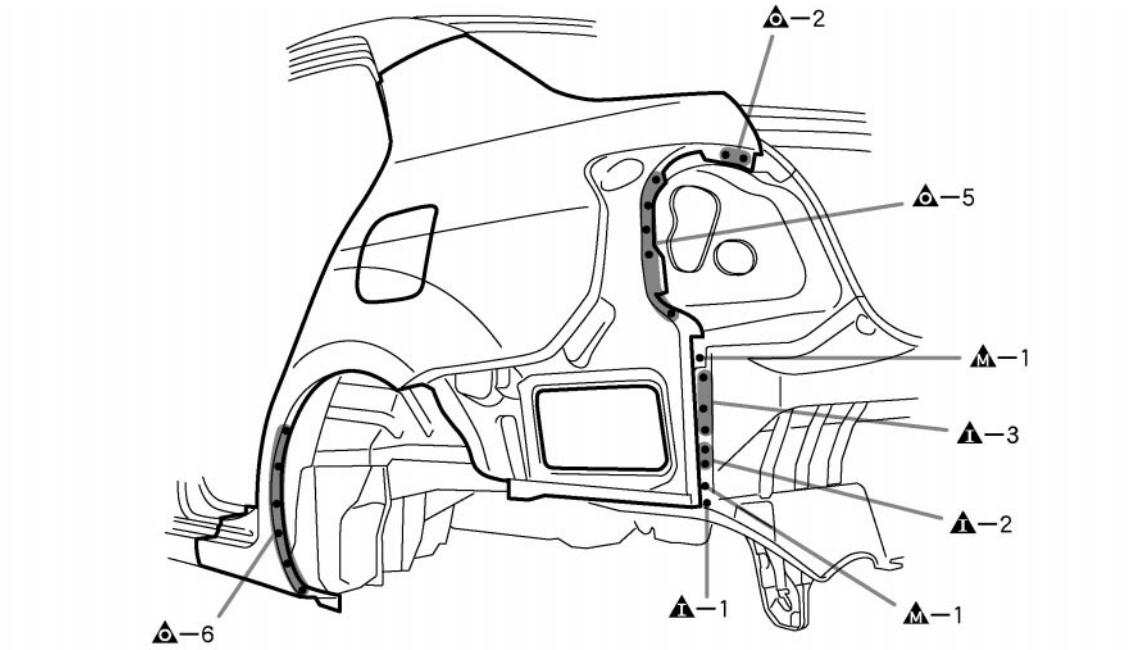

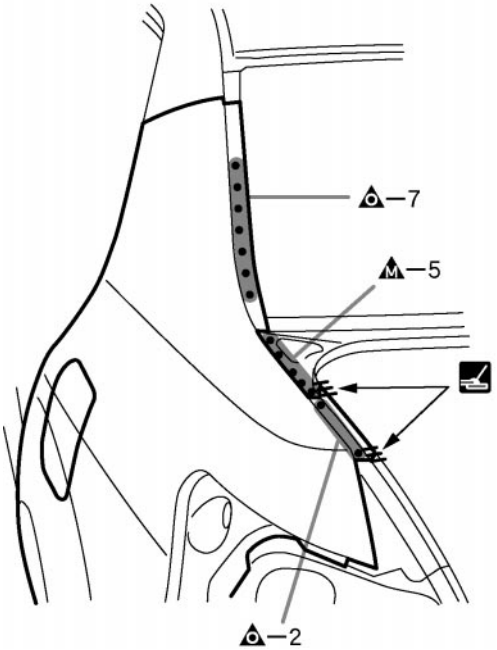

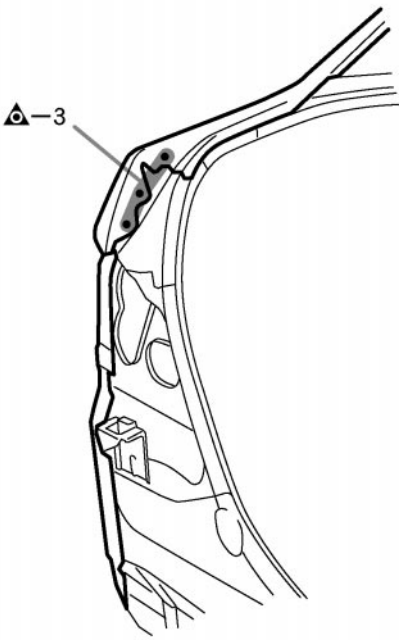

F24835

INSTALLATION

⁎ Temporarily install the new parts and measure each part of the new parts in accordance with the body dimension diagram. (See the body dimension diagram)
⁎ Inspect the fitting of the related parts around the new parts before welding. This affects the appearance of the finish.
⁎ After welding, apply polyurethane foam to the corresponding parts.
⁎ After welding, apply body sealer and undercoating to the corresponding parts.
⁎ After applying the top coat, apply anti-rust agent to the internal panel portion of the closed section structural weld points.

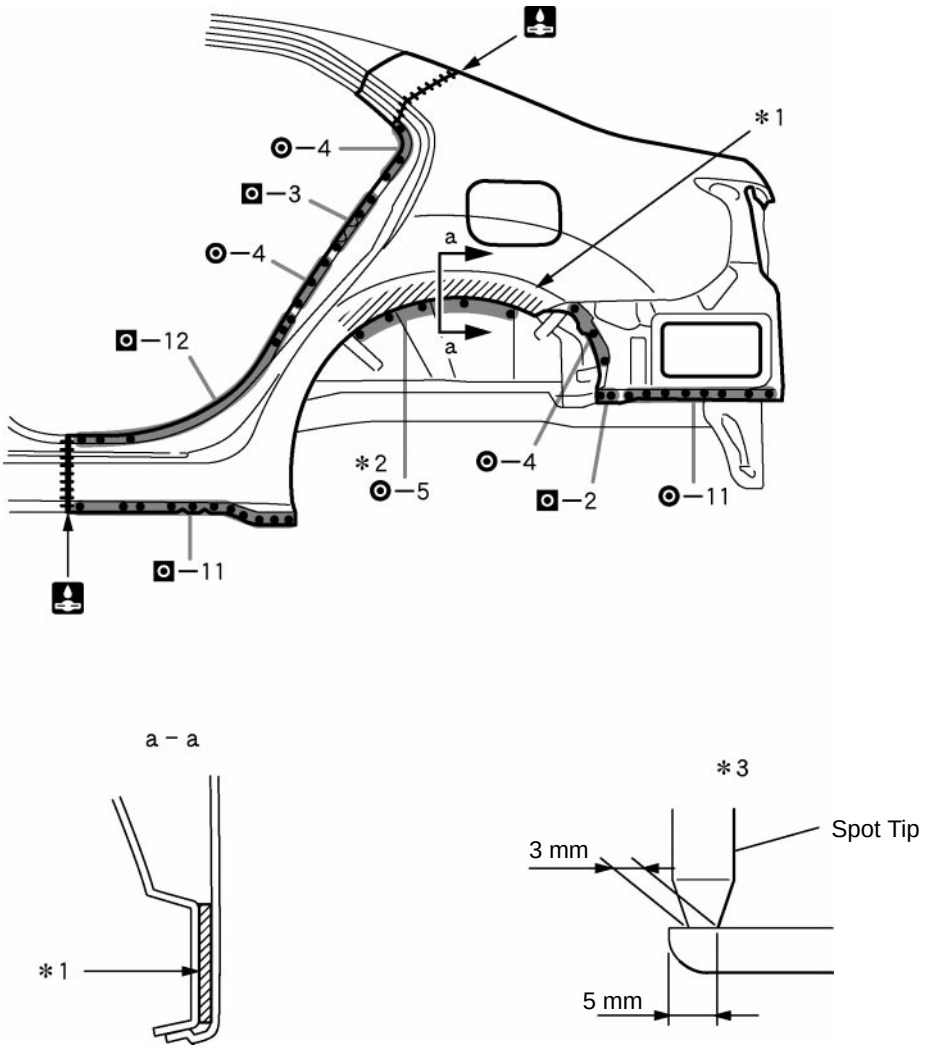

F24836-1

POINT

1 Inspect the fitting of the rear door, luggage compartment door, rear combination light and other related parts before welding as this affects the appearance of the finish.
2 Apply adhesive (3M™ Automix™ Panel Bonding Adhesive #8115) to the area indicated by ⁎1 in illustration.
HINT:
1) Apply enough adhesive for the panels to sick to each other.
3 Perform spot-welding on the flange indicated by ⁎2 in the illustration. Modify/cut the spot tip as shown in the illustration (⁎3) so that it can fit into the narrow flange.

3 mm (0.12 in.) 5 mm (0.20 in.)

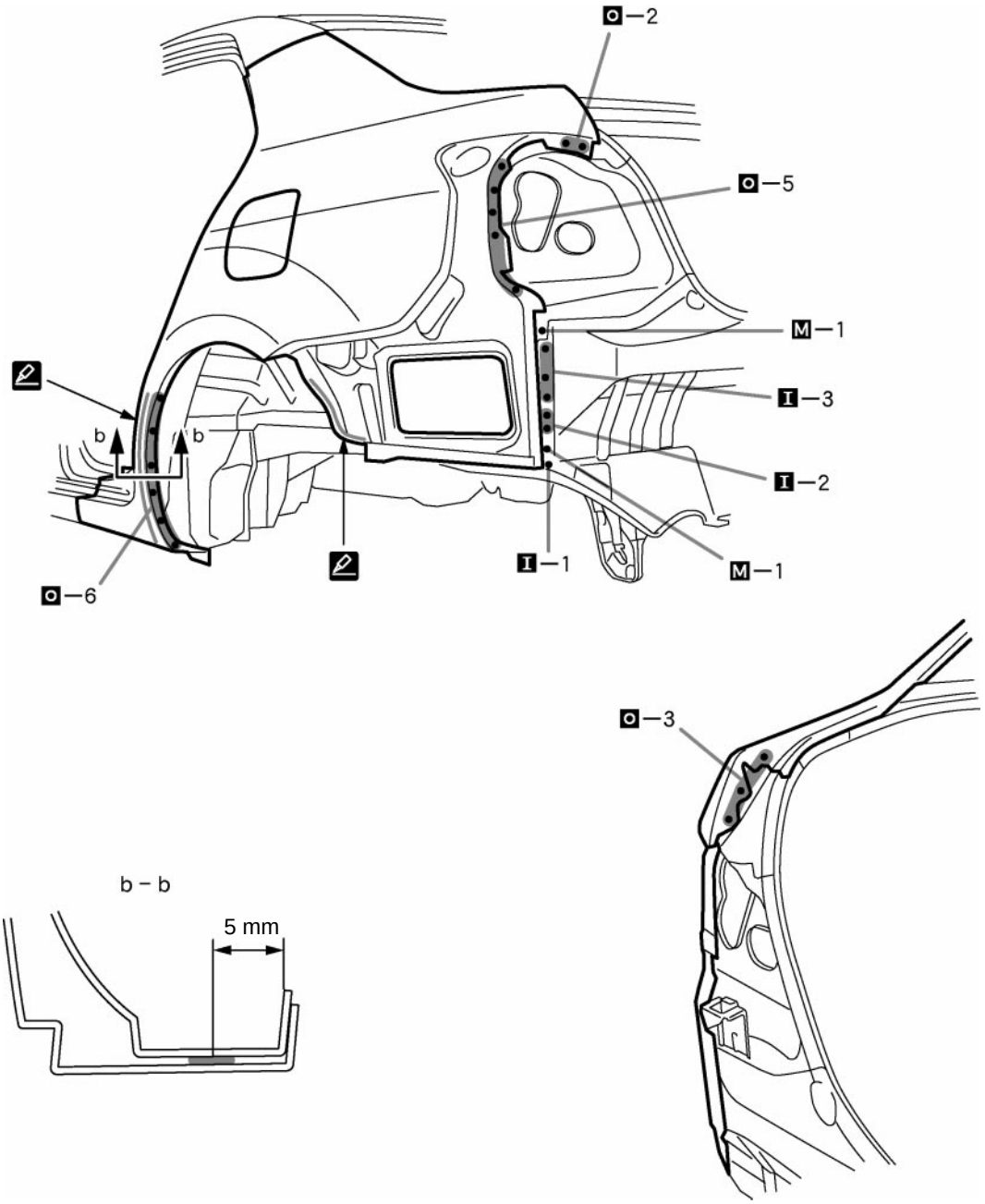

F24837-1

POINT

1 Before temporarily installing the new parts, apply body sealer to the wheel arch.
HINT:
1) Apply body sealer evenly about 5 mm (0.20 in.) form the flange, avoiding any oozing.
2) Apply sealer evenly, about 3 − 4 mm (0.12 − 0.16 in.) in diameter.

5 mm (0.20 in.)

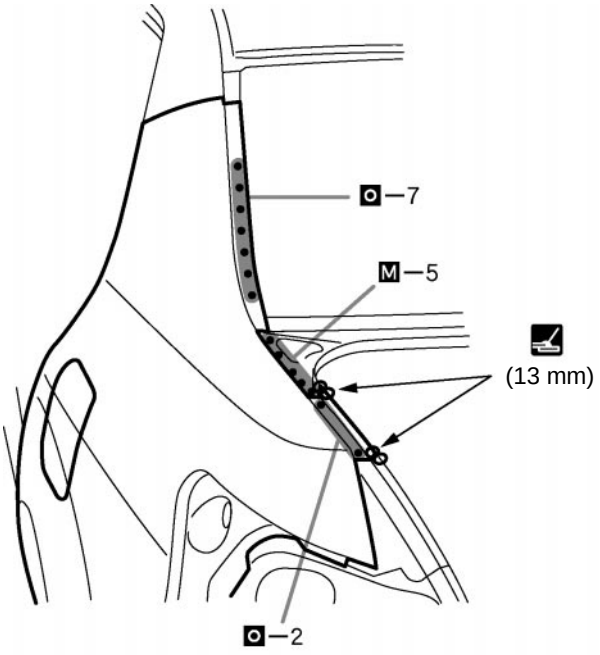

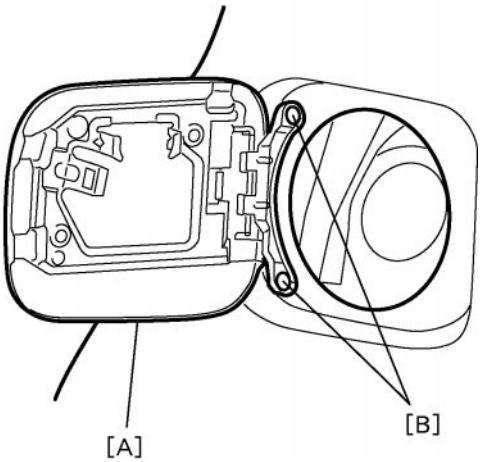

F24838-1

PART NAME
[A] Fuel Filler Opening Lid [B] Rivets

13 mm (0.51 in.)

LOWER BACK UPPER GUSSET (ASSY): Hatchback

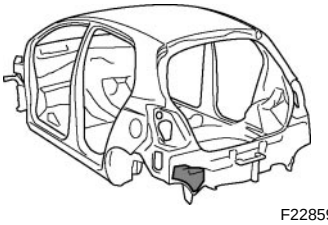

F22859A

REPLACEMENT

REMOVAL

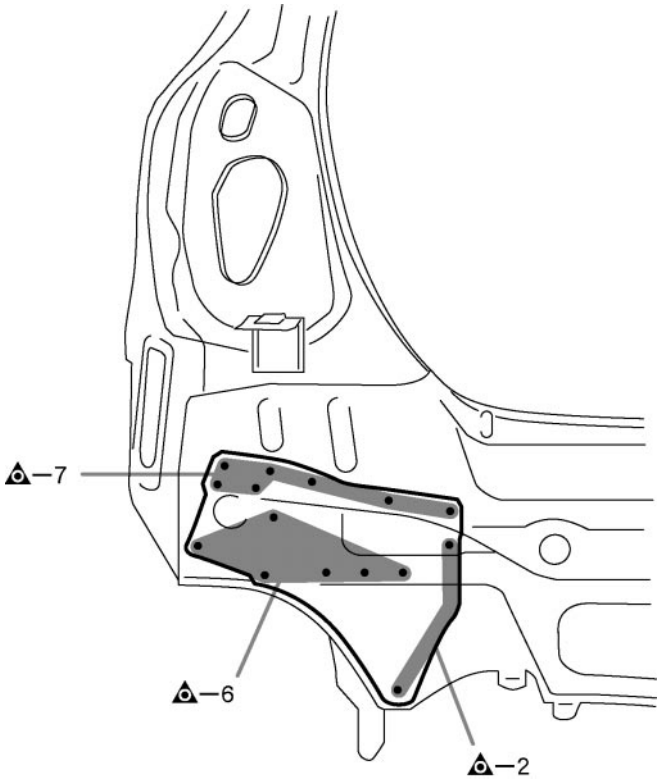

F22859

INSTALLATION

⁎ Temporarily install the new parts and measure each part of the new parts in accordance with the body dimension diagram. (See the body dimension diagram)
⁎ Inspect the fitting of the related parts around the new parts before welding. This affects the appearance of the finish.
⁎ After welding, apply the polyurethane foam to the corresponding parts.
⁎ After welding, apply body sealer and under-coating to the corresponding parts.
⁎ After applying the top coat layer, apply anti-rust agent to the inside of the necked section structural weld spots.

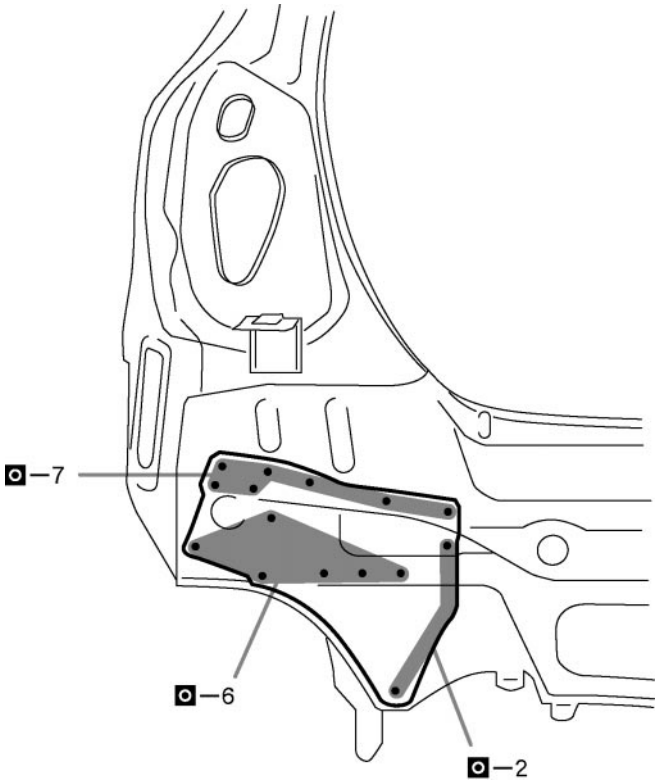

F22860

LOWER BACK UPPER QUSSET (ASSY): Sedan

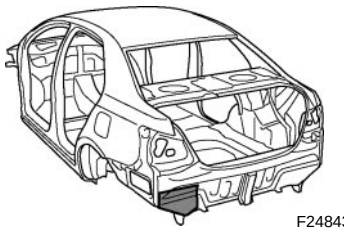
F24843A

REPLACEMENT

REMOVAL

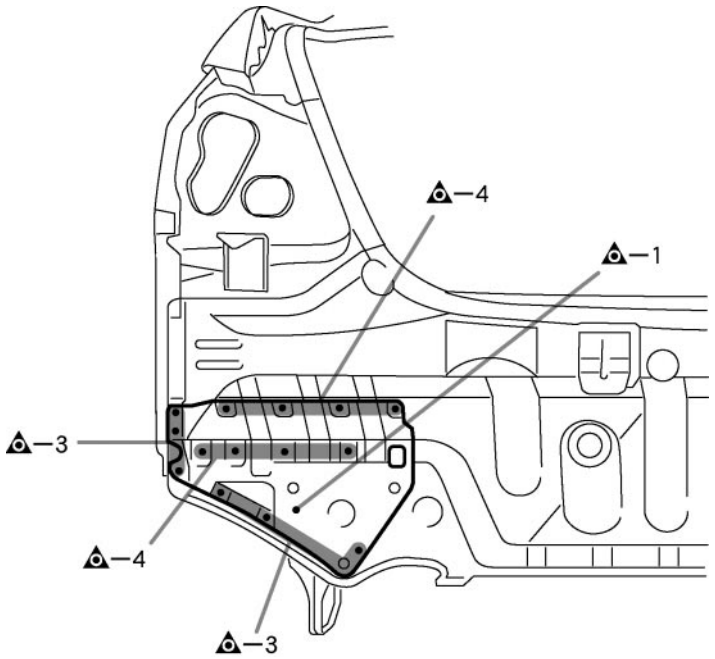

F24843-1

INSTALLATION

⁎ Temporarily install the new parts and measure each part of the new parts in accordance with the body dimension diagram. (See the body dimension diagram)
⁎ Inspect the fitting of the related parts around the new parts before welding. This affects the appearance of the finish.
⁎ After welding, apply polyurethane foam to the corresponding parts.
⁎ After welding, apply body sealer and undercoating to the corresponding parts.
⁎ After applying the top coat, apply anti-rust agent to the internal panel portion of the closed section structural weld points.

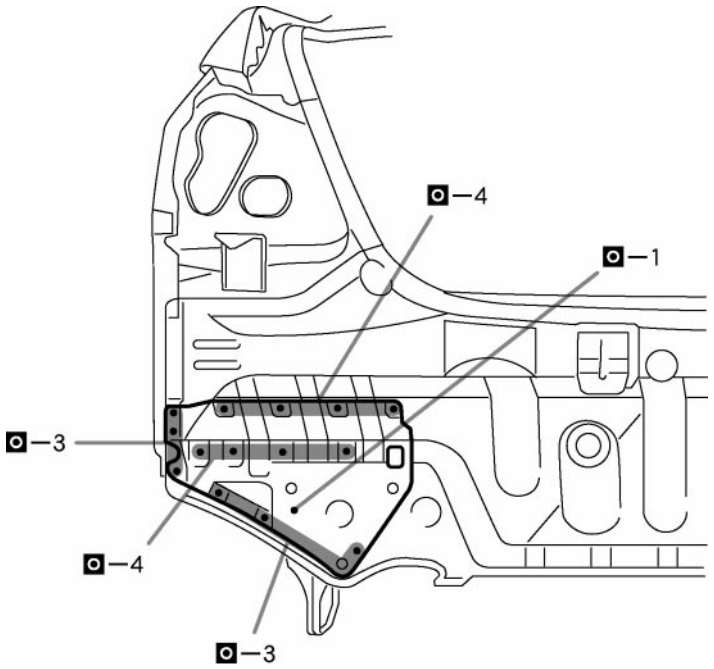

F24843-2

BODY LOWER BACK PANEL (ASSY): Hatchback

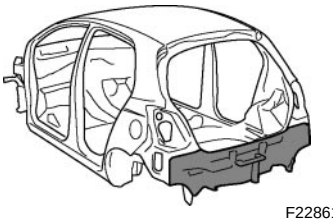
F22861A

REPLACEMENT

REMOVAL

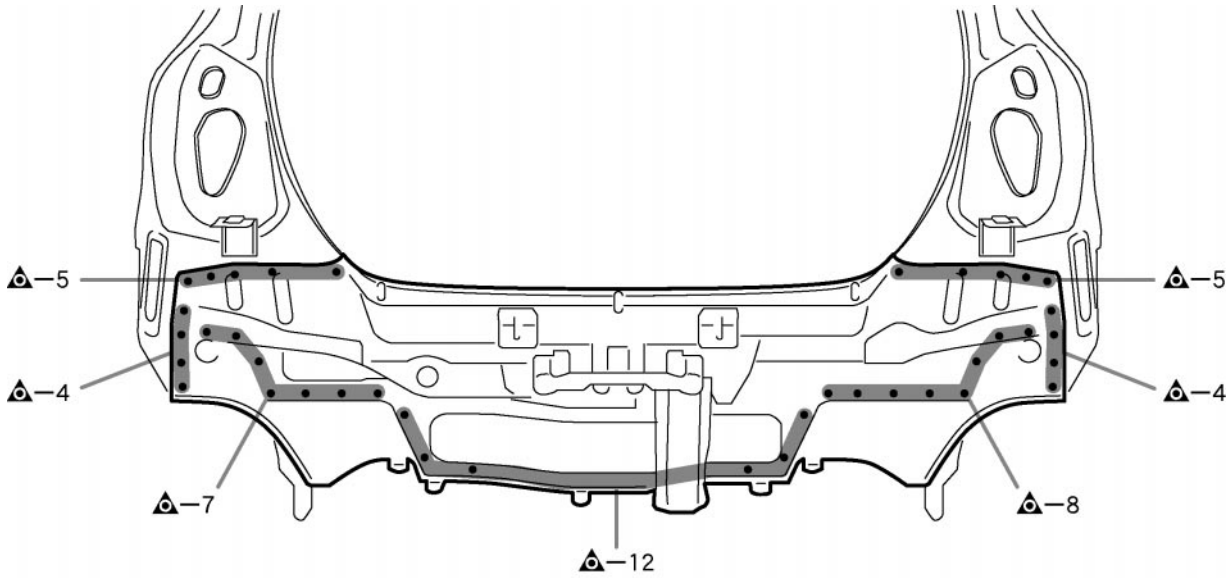

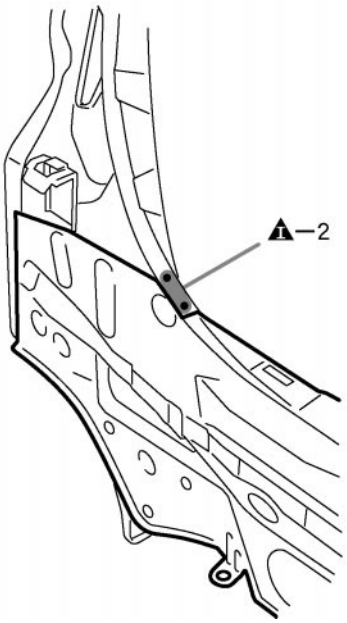

F23325

INSTALLATION

⁎ Temporarily install the new parts and measure each part of the new parts in accordance with the body dimension diagram. (See the body dimension diagram)
⁎ Inspect the fitting of the related parts around the new parts before welding. This affects the appearance of the finish.
⁎ After welding, apply polyurethane foam to the corresponding parts.
⁎ After welding, apply body sealer and undercoating to the corresponding parts.
⁎ After applying the top coat, apply anti-rust agent to the internal panel portion of the closed section structural weld points.

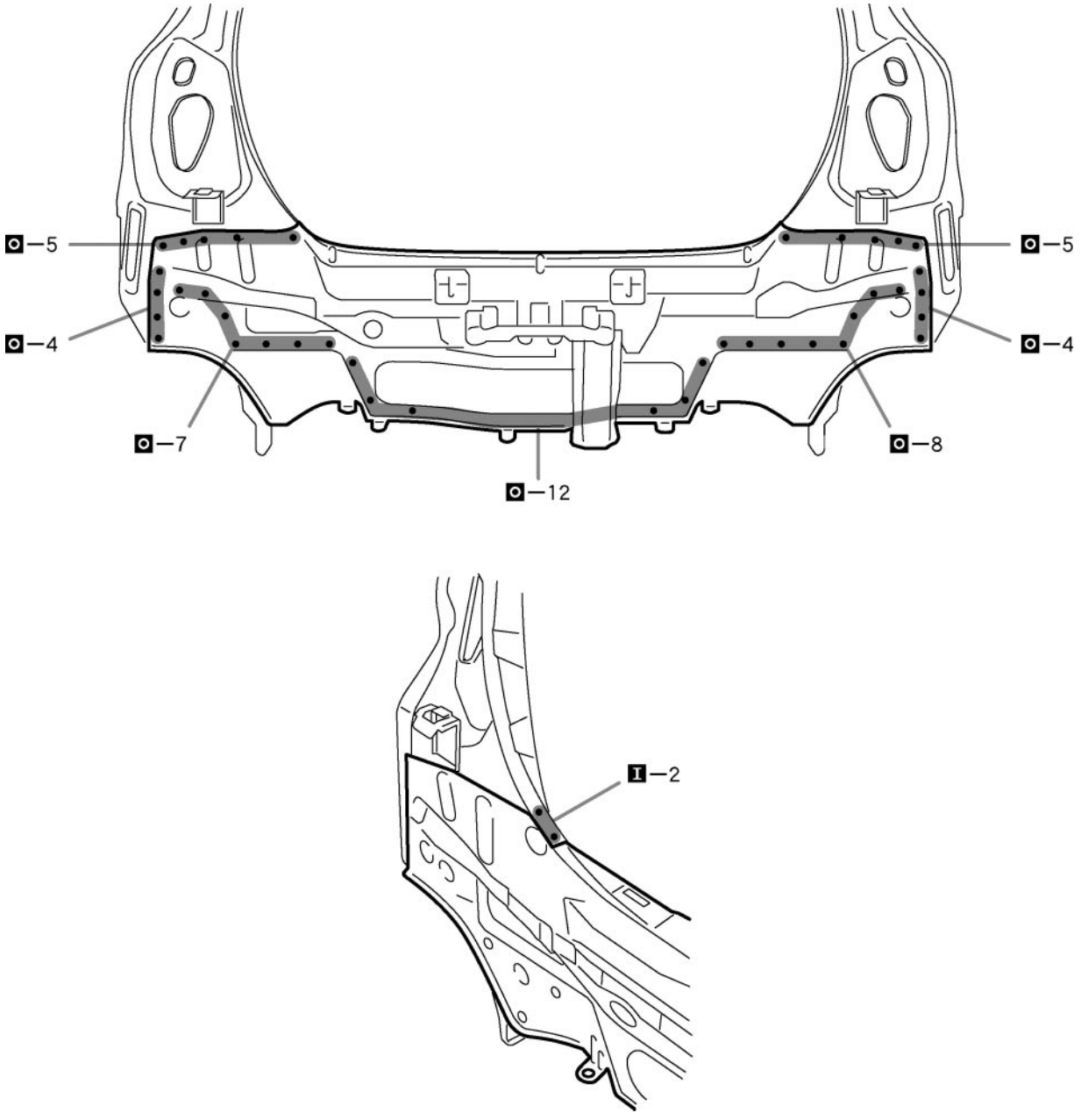

F23326

POINT

1 Inspect the fitting of the back door, rear combination light and other related parts before welding as this affects the appearance of the finish.

BODY LOWER BACK PANEL (ASSY): Sedan

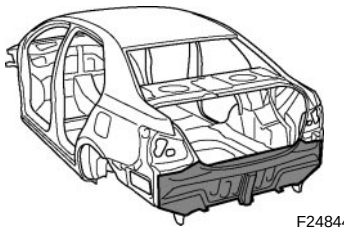
F24844A

REPLACEMENT

REMOVAL

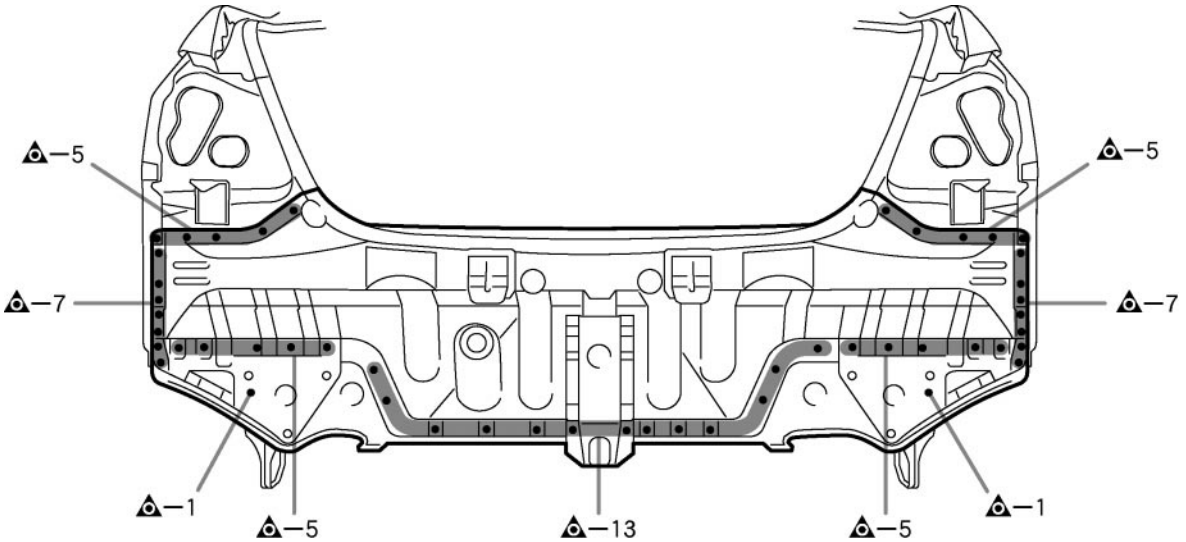

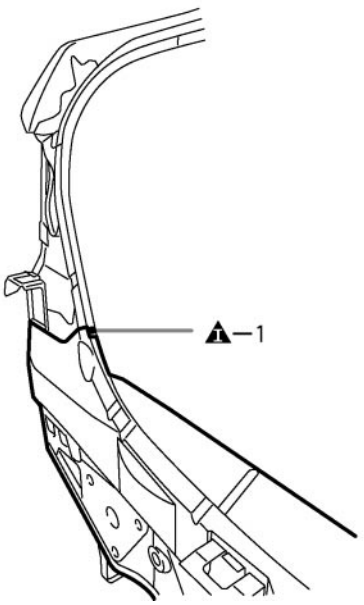

F24844-1

INSTALLATION

⁎ Temporarily install the new parts and measure each part of the new parts in accordance with the body dimension diagram. (See the body dimension diagram)
⁎ Inspect the fitting of the related parts around the new parts before welding. This affects the appearance of the finish.
⁎ After welding, apply polyurethane foam to the corresponding parts.
⁎ After welding, apply body sealer and undercoating to the corresponding parts.
⁎ After applying the top coat, apply anti-rust agent to the internal panel portion of the closed section structural weld points.

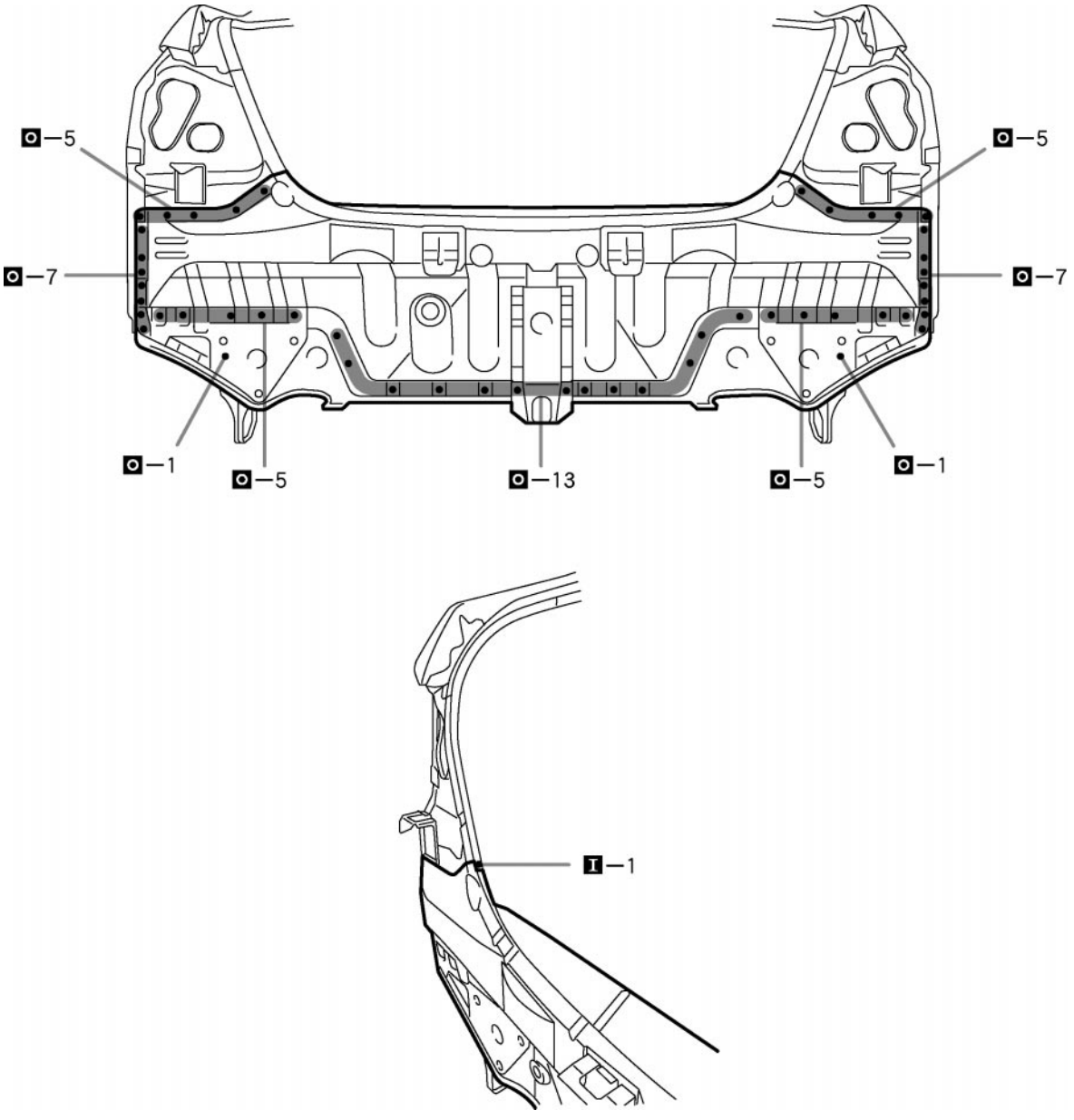

F24844-2

POINT

1 Inspect the fitting of the back door and rear combination light and other related parts before welding as this affects the appearance of the finish.

BACK DOOR OPENING TROUGH (ASSY): Hatchback

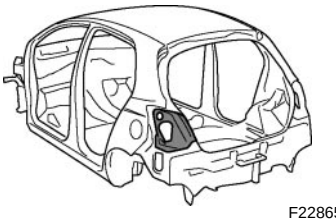
F22865A

REPLACEMENT
With the quarter panel and body lower back panel removed.

REMOVAL

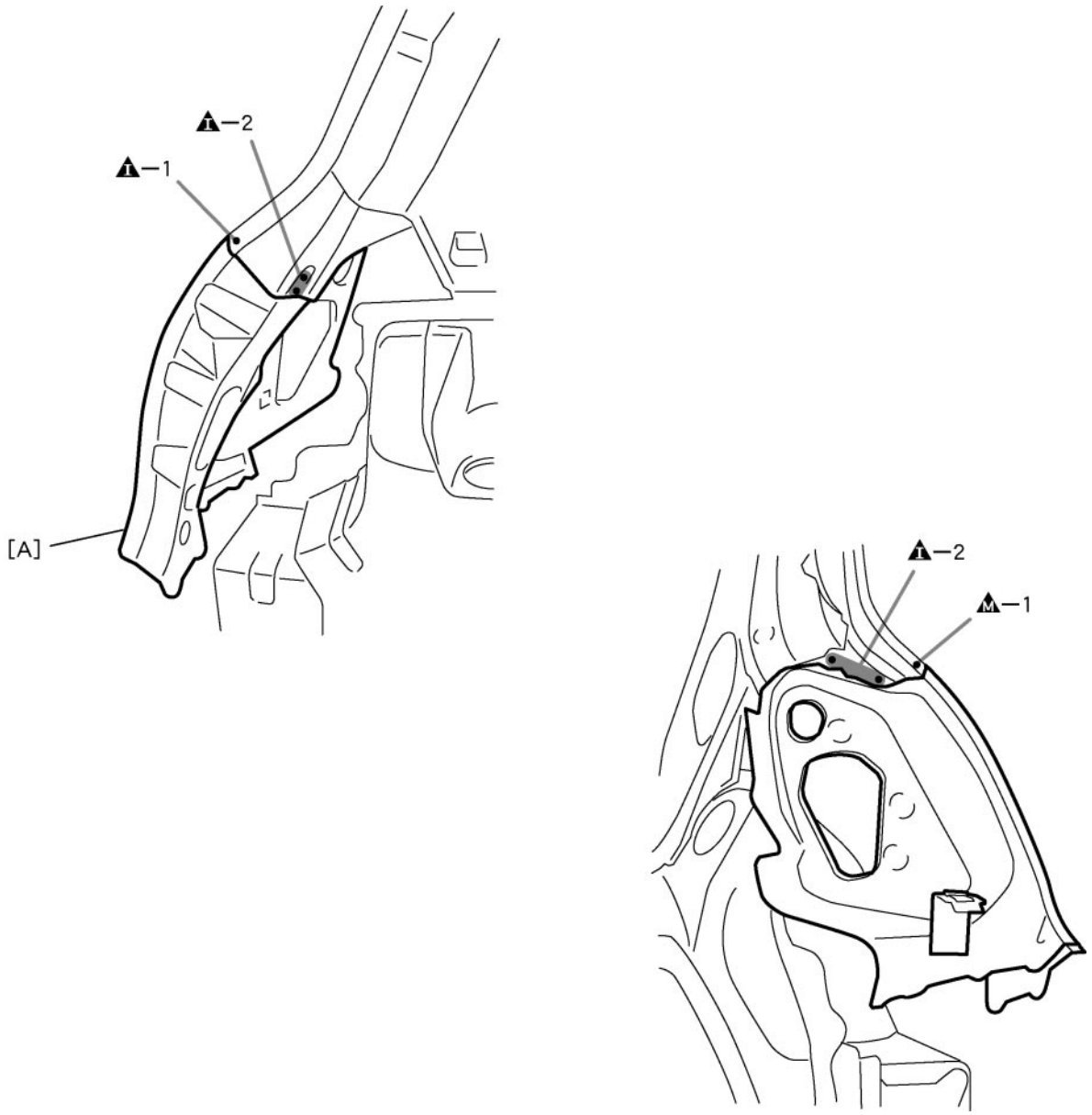

F22865

POINT
1 Remove [A] at the same time.

PART NAME
[A] Back Door Opening Lower Reinforcement

INSTALLATION

⁎ Temporarily install the new parts and measure each part of the new parts in accordance with the body dimension diagram. (See the body dimension diagram)
⁎ Inspect the fitting of the related parts around the new parts before welding. This affects the appearance of the finish.
⁎ After welding, apply polyurethane foam to the corresponding parts.
⁎ After welding, apply body sealer and undercoating to the corresponding parts.
⁎ After applying the top coat, apply anti-rust agent to the internal panel portion of the closed section structural weld points.

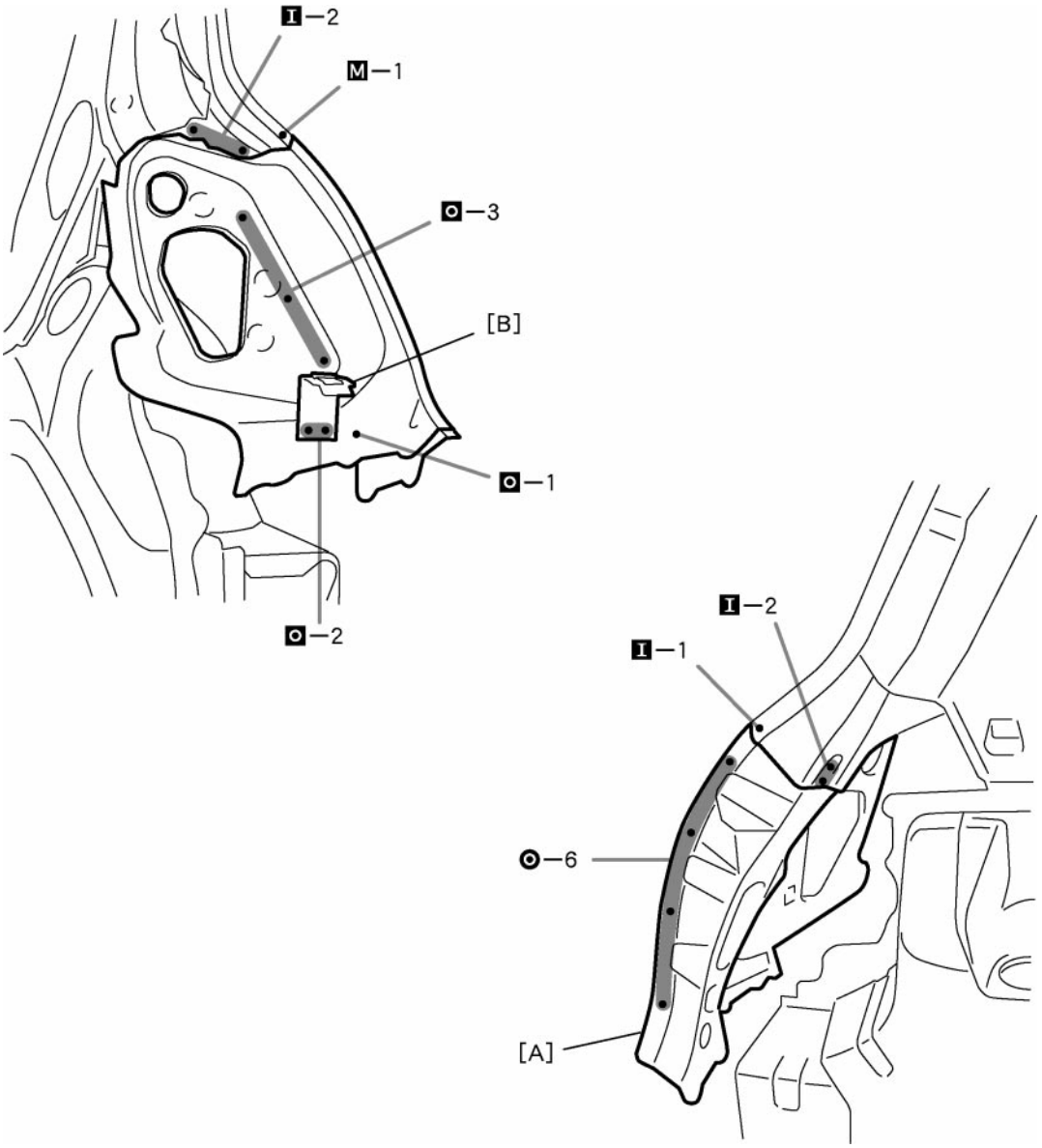

F22866

POINT

1 Inspect the fitting of the back door, rear combination light and other related parts before welding as this affects the appearance of the finish.

PART NAME

[A] Back Door Opening Lower Reinforcement [B] Rear Bumper Side Retainer

LUGGAGE DOOR OPENING FRONT TROUGH (ASSY): Sedan

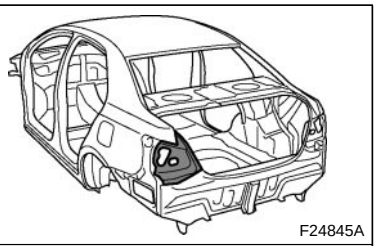
F24845A

REPLACEMENT

REMOVAL

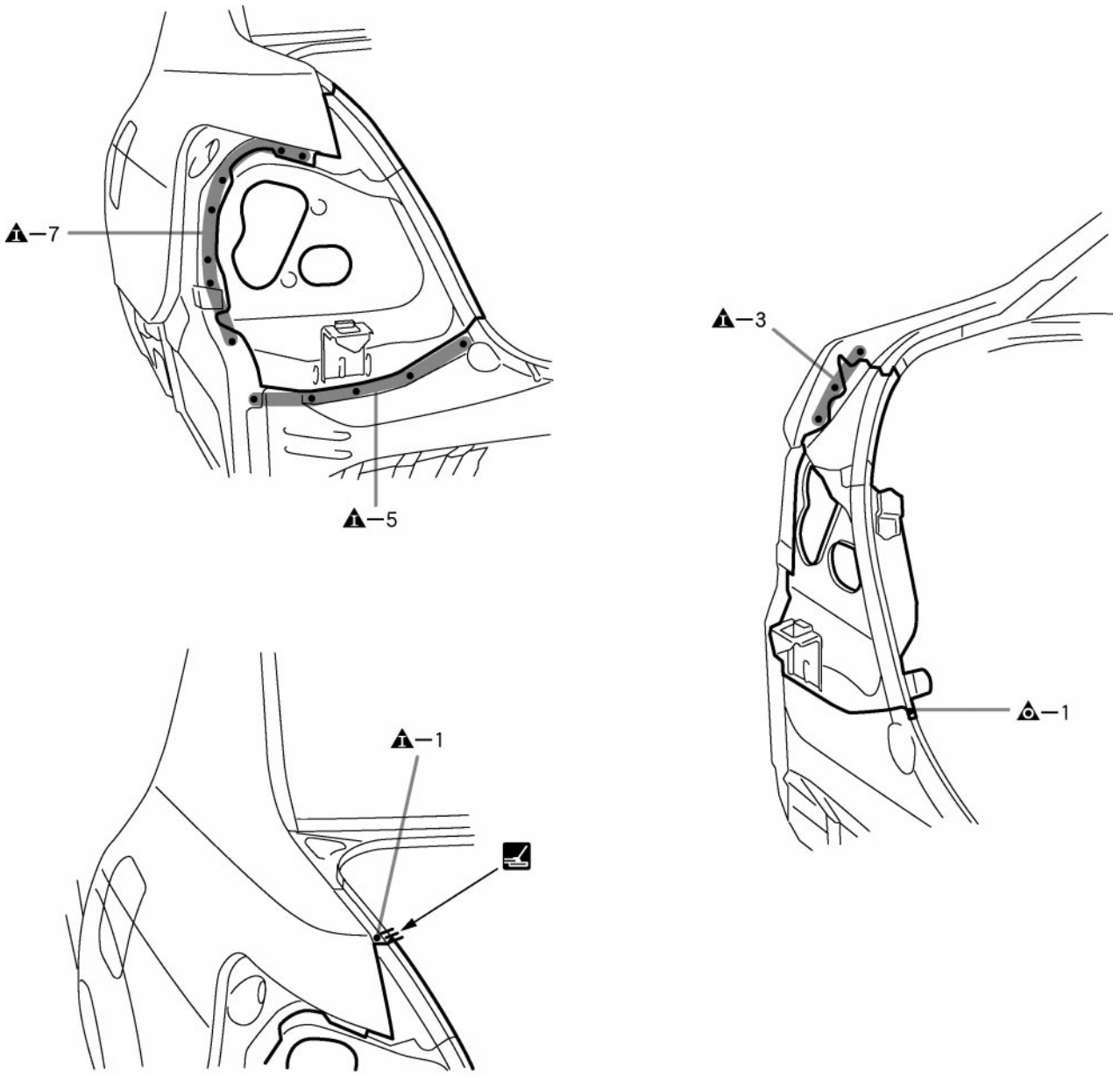

F24845-1

INSTALLATION

⁎ Temporarily install the new parts and measure each part of the new parts in accordance with the body dimension diagram. (See the body dimension diagram)
⁎ Inspect the fitting of the related parts around the new parts before welding. This affects the appearance of the finish.
⁎ After welding, apply polyurethane foam to the corresponding parts.
⁎ After welding, apply body sealer and undercoating to the corresponding parts.
⁎ After applying the top, apply anti-rust agent to the internal panel portion of the closed section structural weld points.

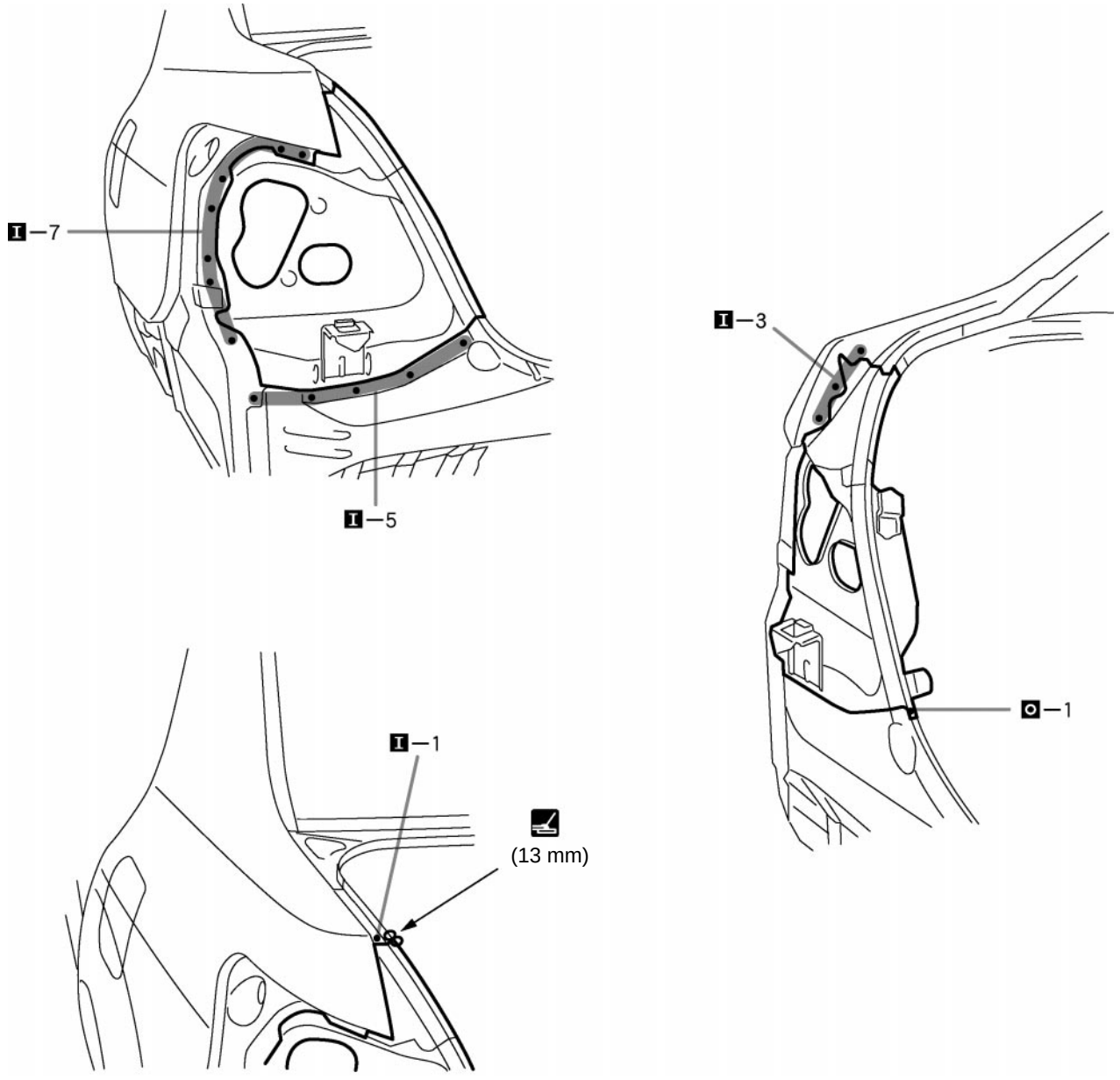

F24845-2

POINT

1 Inspect the fitting of the back door, rear combination light and other related parts before welding as this affects the appearance of the finish.

13 mm (0.51 in.)

SECTION 1–1

OPERATION OF INSTRUMENTS AND CONTROLS

Overview of instruments and controls

Instrument panel overview 2
Instrument cluster overview 4
Indicator symbols on the instrument panel 6

Instrument panel overview

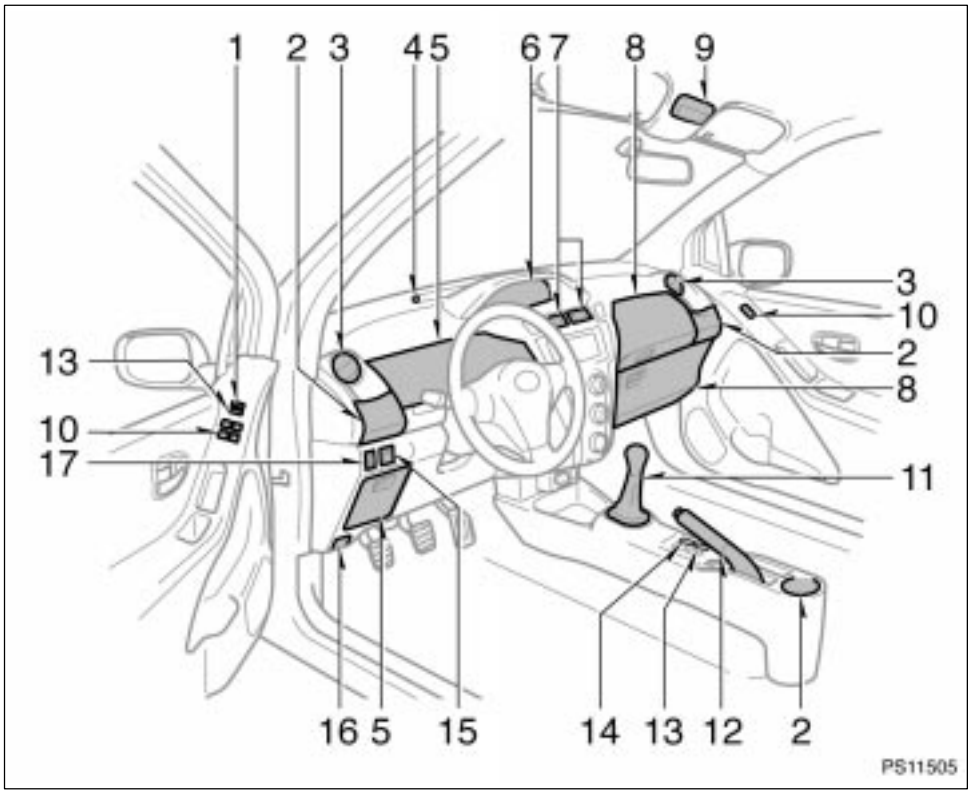

1. Window lock switch
2. Cup holders
3. Side vents
4. Engine immobilizer/theft deterrent system indicator light
5. Auxiliary boxes
6. Instrument cluster
7. Center vents
8. Glove boxes
9. Personal lights
10. Power window switches
11. Automatic transmission selector lever or manual transmission gear shift lever
12. Parking brake lever
13. Power door lock switches
14. AUX adapter
15. Power rear view mirror control switches
16. Hood lock release lever
17. Instrument panel light control knob

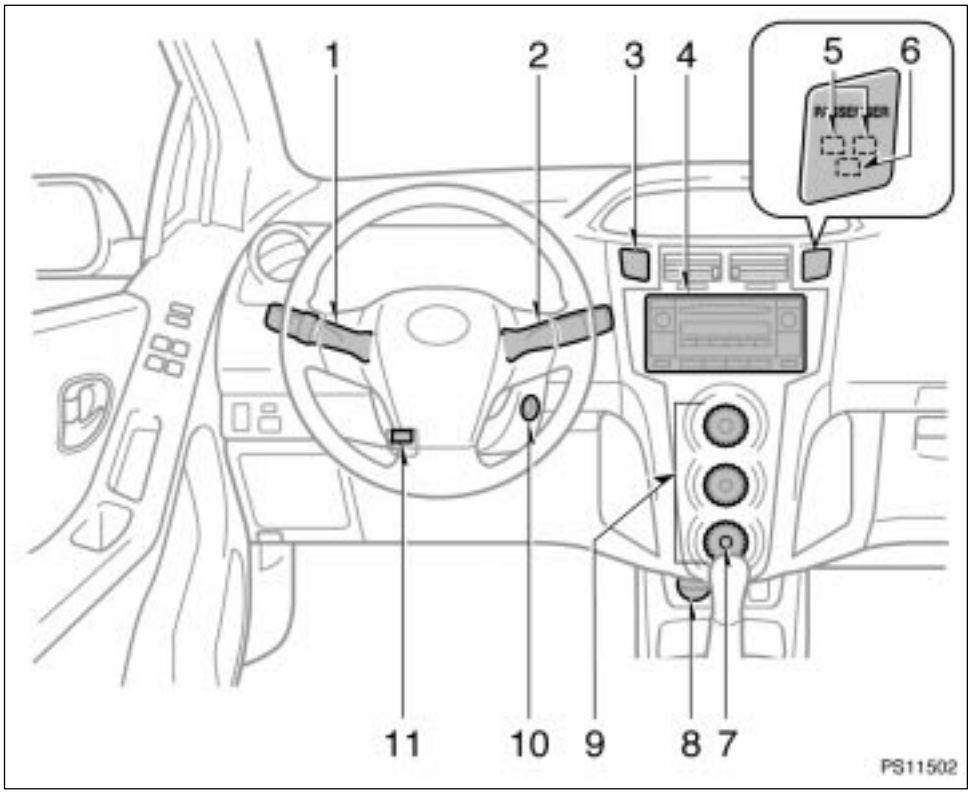

1. Headlight, turn signal and front fog light switches
2. Wiper and washer switches
3. Emergency flasher switch
4. Audio system
5. Front passenger airbag on−off indicator lights
6. Front passenger's seat belt reminder light
7. Rear window defogger switch
8. Power outlet
9. Air conditioning controls
10. Ignition switch
11. Tilt steering lock release lever

Instrument cluster overview

- **With tachometer**

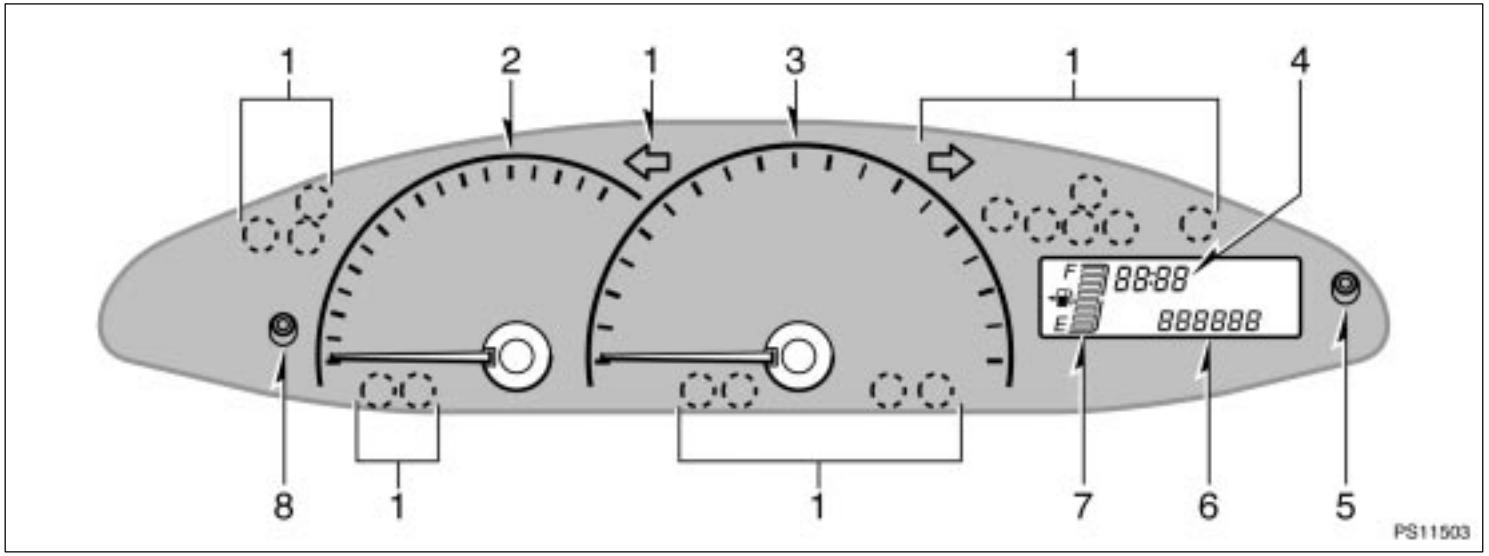

1. Service reminder indicators and indicator lights
2. Tachometer
3. Speedometer
4. Clock
5. Clock reset knob
6. Odometer and two trip meters
7. Fuel gauge
8. Trip meter reset knob

- **Without tachometer**

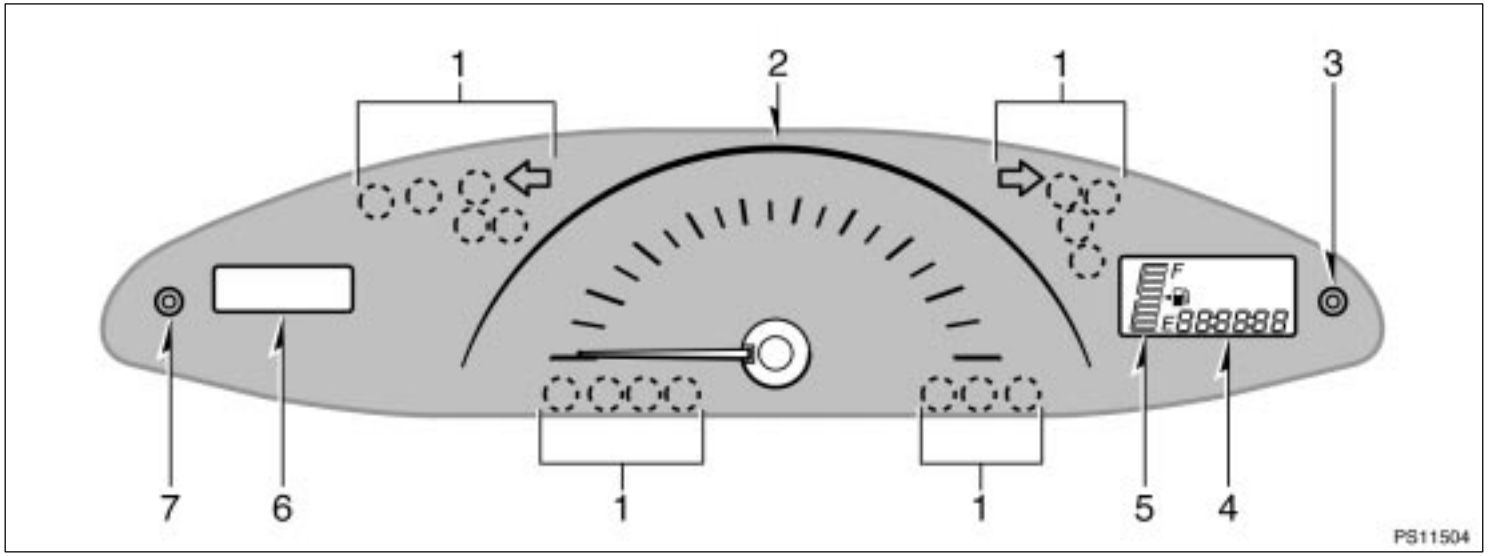

1. Service reminder indicators and indicator lights
2. Speedometer
3. Trip meter reset knob
4. Odometer and two trip meters
5. Fuel gauge
6. Clock
7. Clock reset knob

Indicator symbols on the instrument panel

BRAKE or 	Brake system warning light*1
	Driver's seat belt reminder light*1
PASSENGER 	Front passenger's seat belt reminder light*1
	Charging system warning light*1
 CHECK or 	Malfunction indicator lamp*1
	Low engine oil pressure warning light*1

ABS or 	Anti-lock brake system warning light*1
	Open door warning light*1
	SRS warning light*1
P/S	Electric power steering system warning light*1
 or 	Low fuel level indicator light*1
	Low windshield washer fluid level warning light*1

MAINT REQD	Engine oil replacement reminder light*1
AIRBAG ON	“AIRBAG ON” indicator light
AIRBAG OFF	“AIRBAG OFF” indicator light
	Headlight low beam indicator light
	Taillight indicator light
	Turn signal indicator lights
	Headlight high beam indicator light
	Front fog light indicator light

	High engine coolant temperature warning light*1
	Low engine coolant temperature indicator light*2

*1: For details, see “Service reminder indicators and warning buzzers” on page 114 in Section 1−6.

*2: For details, see “Engine coolant temperature indicator and warning light” on page 111 in Section 1−6.

SECTION 1–2

OPERATION OF INSTRUMENTS AND CONTROLS

Keys and Doors

Keys 10
Engine immobilizer system 13
Wireless remote control 14
Side doors 19
Power windows 22
Back door 24
Hood 25
Theft deterrent system 26
Fuel tank cap 28

Keys (without engine immobilizer system)



With wireless remote control



Without wireless remote control

These keys work in every lock.

Since the side doors and back door can be locked without a key, you should always carry a spare key in case you accidentally lock your keys inside the vehicle.



KEY NUMBER PLATE

Your key number is shown on the plate. Keep the plate in a safe place such as your wallet, not in the vehicle.

If you should lose your keys or if you need additional keys, duplicates can be made by a Toyota dealer using the key number.

We recommend writing down the key number and storing it in a safe place.

Keys (with engine immobilizer system)

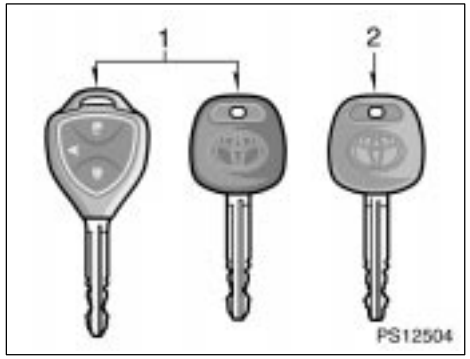

With wireless remote control

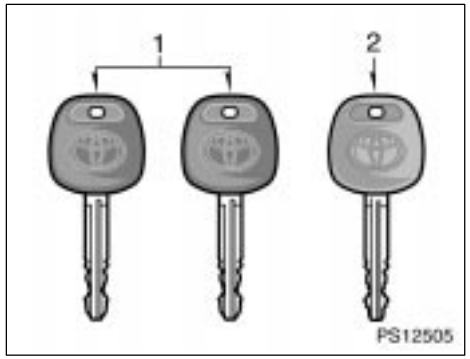

Without wireless remote control

Your vehicle is supplied with two kinds of keys.

1. Master keys (black)—These keys work in every lock. Your Toyota dealer will need one of them to make a new key with a built−in transponder chip.
2. Sub key (gray)—This key also works in every lock.

A transponder chip for engine immobilizer system has been placed in the head of the master and sub keys. These chips are needed to enable the system to function correctly, so be careful not to lose these keys. If you make your own duplicate key, you will not be able to cancel the system or start the engine.

Since the side doors and back door can be locked without a key, you should always carry a spare key in case you accidentally lock your keys inside the vehicle.



NOTICE

When using a key containing a transponder chip, observe the following precautions:

- ***When starting the engine, do not use the key with a key ring resting on the key grip and do not press the key ring against the key grip. Otherwise the engine may not start, or may stop soon after it starts.***



- ***When starting the engine, do not use the key with other transponder keys around (including keys of other vehicles) and do not press other key plates against the key grip. Otherwise the engine may not start, or may stop soon after it starts. If this happens, remove the key once and then insert it again after removing other transponder keys (including keys of other vehicles) from the ring or while gripping or covering them with your hand to start the engine.***



- ***Do not bend the key grip.***
- ***Do not cover the key grip with any material that cuts off electromagnetic waves.***
- ***Do not knock the key hard against other objects.***
- ***Do not leave the key exposed to high temperatures for a long period, such as on the dashboard and hood under direct sunlight.***
- ***Do not put the key in water or wash it in an ultrasonic washer.***
- ***Do not use the key with electromagnetic materials.***



KEY NUMBER PLATE

Your key number is shown on the plate. Keep the plate in a safe place such as your wallet, not in the vehicle.

If you should lose your keys or if you need additional keys, duplicates can be made by a Toyota dealer using the key number.

We recommend writing down the key number and storing it in a safe place.

Engine immobilizer system

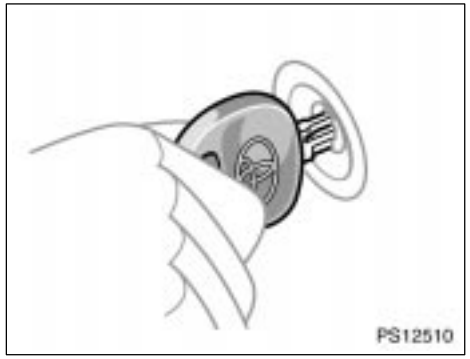

The engine immobilizer system is a theft prevention system. When you insert the key in the ignition switch, the transponder chip in the key's head transmits an electronic code to the vehicle. The engine will start only when the electronic code in the chip corresponds to the registered ID code for the vehicle.

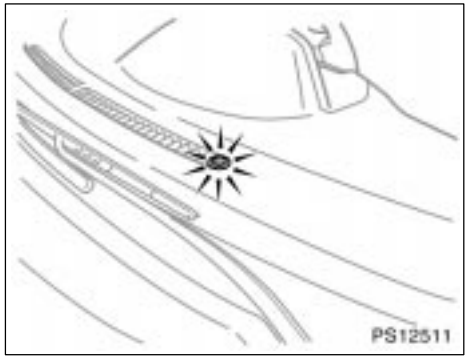

The system is automatically set when the key is removed from the ignition switch. The indicator light will start flashing to show the system is set.

If any of the following indicator conditions occurs, contact your Toyota dealer.

- The indicator light stays on.
- The indicator light does not start flashing when the key is removed from the ignition switch.
- The indicator light flashes inconsistently.

Inserting the registered key in the ignition switch automatically cancels the system, which enables the engine to start. The indicator light will go off.

For your Toyota dealer to make you a new key with a built−in transponder chip, your dealer will need your key number and master key. However, there is a limit to the number of additional keys your Toyota dealer can make for you.

If you make your own duplicate key, you will not be able to cancel the system or start the engine.

NOTICE

Do not modify, remove or disassemble the engine immobilizer system. If any unauthorized changes or modifications are made, proper operation of the system cannot be guaranteed.

For vehicles sold in U.S.A.

FCC ID: MOZRI−20BTY

This device complies with Part 15 of the FCC Rules. Operation is subject to the following two conditions:

(1) This device may not cause harmful interference, and (2) this device must accept any interference received, including interference that may cause undesired operation.

⚠ CAUTION

Changes or modifications not expressly approved by the party responsible for compliance could void the user's authority to operate the equipment.

For vehicles sold in Canada

This device complies with RSS−210 of Industry Canada. Operation is subject to the following two conditions:

(1) This device may not cause interference, and (2) this device must accept any interference, including interference that may cause undesired operation of the device.

Wireless remote control—

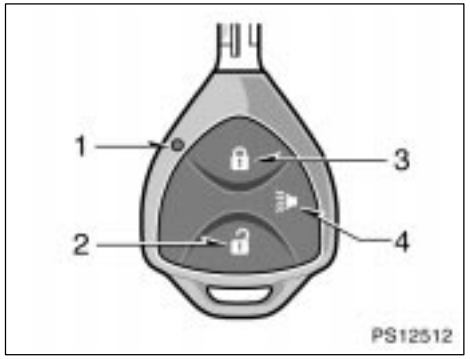

1. Indicator light
2. Unlock switch
3. Lock switch
4. Panic switch

The wireless remote control system is designed to lock or unlock the side doors and back door, from a distance within approximately 1 m (3 ft.) of the vehicle.

When you operate any switch, push it slowly and securely. At this time, the indicator light flashes once.

The wireless remote control key is an electronic component. Observe the following instructions in order not to cause damage to the key.

- Do not leave the key in places where the temperature becomes high such as on the dashboard.
- Do not disassemble it.
- Avoid knocking it hard against other objects or dropping it.
- Avoid putting it in water.

You can use up to 4 wireless remote control keys for the same vehicle. Contact your Toyota dealer for detailed information.

If the wireless remote control key does not actuate the doors or operate from a normal distance, or the indicator light on the key is dimmed or does not come on:

- Check for closeness to a radio transmitter such as a radio station or an airport which can interfere with normal operation of the key.
- The battery may have been consumed. Check the battery in the key. To replace the battery, see "—Replacing battery" on page 17.

If you lose your wireless remote control key, contact your Toyota dealer as soon as possible to avoid the possibility of theft, or an accident. (See "If you lose your keys" on page 245.)

For vehicles sold in U.S.A.

FCC ID: MOZB41TG

FCC ID: MOZB21RG

This device complies with Part 15 of the FCC Rules. Operation is subject to the following two conditions:

(1) This device may not cause harmful interference, and (2) this device must accept any interference received, including interference that may cause undesired operation.

⚠ CAUTION

Changes or modifications not expressly approved by the party responsible for compliance could void the user's authority to operate the equipment.

For vehicles sold in Canada

This device complies with RSS−210 of Industry Canada. Operation is subject to the following two conditions:

(1) This device may not cause interference, and (2) this device must accept any interference, including interference that may cause undesired operation of the device.

—Locking and unlocking the doors and back door

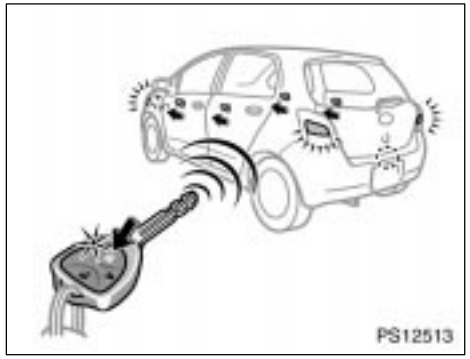

Locking operation

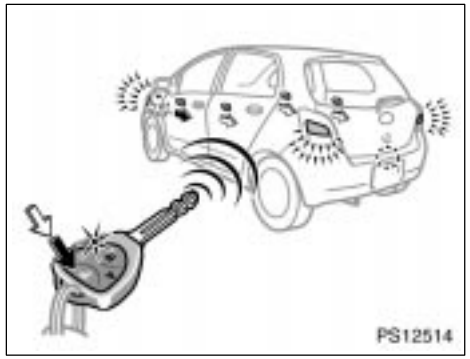

Unlocking operation

To lock and unlock all the doors, push the switches of the wireless remote control key slowly and securely.

To lock: Push the lock switch. All the side doors and back door are locked simultaneously. At this time, the turn signal lights will flash once.

Check to see that the doors are securely locked.

If any of the doors is not securely closed, or if the key is in the ignition switch, locking cannot be performed by the lock switch.

To unlock: Push the unlock switch once to unlock the driver's door alone. Pushing the switch twice within 3 seconds unlocks all the doors simultaneously. Each time the unlock switch is pushed, the turn signal lights will flash twice.

When the unlock switch is pressed, the interior light will come on and remain on for about 15 seconds before fading out. (For further information, see "Interior light" on page 105.)

You have 30 seconds to open a door after using the wireless remote unlock feature. If a door is not opened by then, all the side doors and back door will be automatically locked again.

If the lock or unlock switch is kept pressed in, the locking or unlocking operation is not repeated. Release the switch and then push it again.

—Activating panic mode



Pushing the panic switch for 1 second blows the horn intermittently and flashes the headlights, tail lights and emergency flashers and turns on the interior light.

The panic switch is used to deter vehicle theft when you witness anyone attempting to break into or damage your vehicle.

The panic mode will last for one minute. To stop the panic mode midway, do the following:

- Push any switch on the key.
- Turn the ignition key from the “LOCK” to “ON” position.

The panic mode does not work when the ignition key is in the “ON” position.

—Replacing battery

For replacement, use a CR2016 lithium battery or equivalent and a flathead screwdriver or equivalent.

⚠ CAUTION

Special care should be taken to prevent small children from swallowing the removed battery or components.

NOTICE

- ***When replacing the battery, be careful not to lose the components.***
- ***Replace only with the same or equivalent type recommended by a Toyota dealer.***
- ***Dispose of used batteries according to the local laws.***

Replace the battery by following these procedures:



1. Open the cover using a flathead screwdriver wrapped with plastic tape.

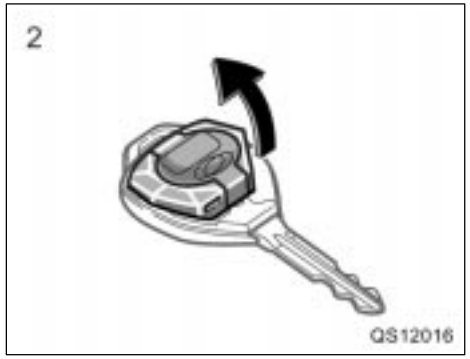

2. Remove the module from the key case.

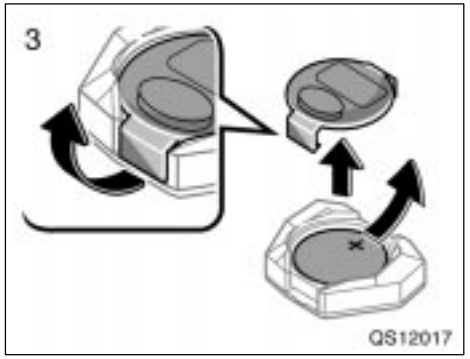

3. Remove the battery cover of the module.

NOTICE

Do not bend the terminals.

4. Remove the discharged battery and put in a new battery with positive (+) side up.

NOTICE

- ***Make sure the positive side and negative side of the battery are faced correctly.***
- ***Do not replace the battery with wet hands. Water may cause unexpected rust.***
- ***Do not touch or move any components inside the transmitter, or it may interfere with proper operation.***
- ***Be careful not to bend the electrode when inserting the battery and that dust or oils do not adhere to the case.***
- ***Close the cover securely.***

5. Install the battery cover of the module.
6. Install the module into the key case and secure the cover.

After replacing the battery, check that the key operates properly. If the key still does not operate properly, contact your Toyota dealer.

Side doors—

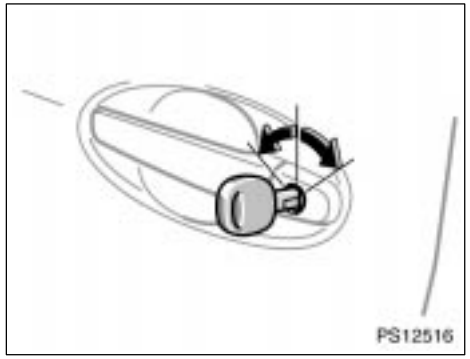

LOCKING AND UNLOCKING WITH KEY

Insert the key into the keyhole and turn it.

To lock: Turn the key forward.
To unlock: Turn the key backward.

Vehicles with the power door lock system—All the side doors and back door lock and unlock simultaneously with the driver's door. In the driver's door lock, turning the key once will unlock the driver's door and twice in succession will unlock all the side doors and back door simultaneously.

When the interior light switch is in the "DOOR" position and any of the side doors is opened, the light will come on. After all the side doors are closed, the light remains on for about 15 seconds before fading out. (For further information, see "Interior light" on page 105 in Section 1−5.)

Vehicles with the power door lock system—When the interior light switch is in the "DOOR" position, and the driver's door is unlocked using the key, the interior light will come on and remain on for about 15 seconds before fading out. (For further information, see "Interior light" on page 105 in Section 1−5.)

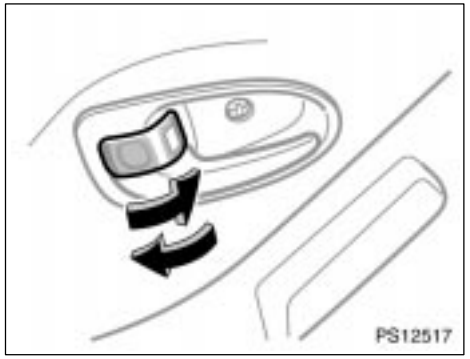

LOCKING AND UNLOCKING WITH INSIDE LOCK KNOB

Move the lock knob.

To lock: Push the knob forward.
To unlock: Pull the knob backward.

The front doors can be opened by pulling the inside handle even if the lock knobs are in the locked position.

⚠ CAUTION

Do not pull the inside handle of the front doors while driving. The doors will open and an accident may occur. Toyota strongly recommends that all children be placed in the rear seat of the vehicle.

Closing the door with the lock knob in the lock position will also lock the door. Be careful not to lock your keys in the vehicle.

Vehicles with the power door lock system—Doors cannot be locked when the driver's door is open and the key is in the ignition.

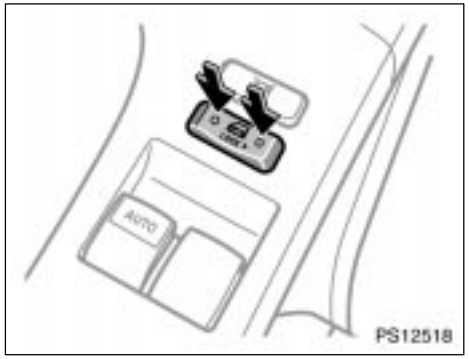

For driver's use

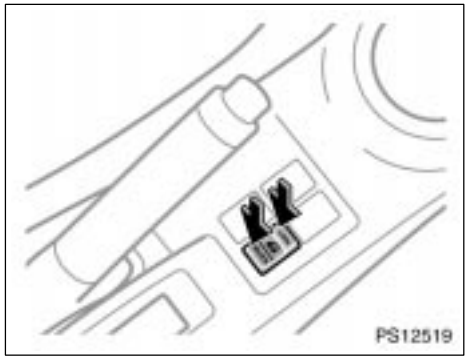

For front passenger's use

LOCKING AND UNLOCKING WITH POWER DOOR LOCK SWITCH

Push the switch.

For driver's use—

To lock: Push the switch down on the right side.
To unlock: Push the switch down on the left side.

For front passenger's use—

To lock: Push the switch down on the "LOCK" side.

To unlock: Push the switch down on the "UNLOCK" side.

Operating the switch simultaneously locks or unlocks all the side doors and back door.

If you do any of the following, no side door or back door can be unlocked with the power door lock switch.

- Lock all the side doors and back door with the wireless remote control key.
- Set the driver's door inside lock knob in the lock position, and close the driver's door while holding up the outside door handle.
- Lock all the side doors and back door simultaneously with driver's door.

The power door lock switch can be reset in the following ways.

- Turn the ignition key to “ON”.
- Unlock all the side doors and back door simultaneously with the driver’s door.
- Unlock all the side doors and back door with the wireless remote control key.
- Unlock the driver’s door with the inside lock knob, and then unlock all the side doors with the power door lock switch.

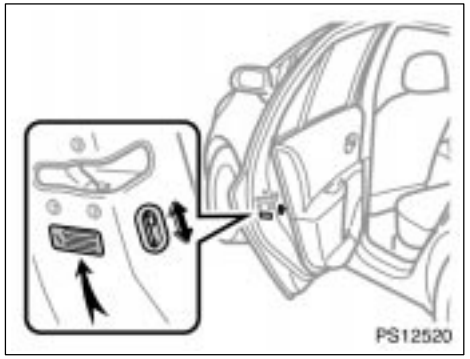

REAR DOOR CHILD−PROTECTORS (5−door models only)

Move the lock lever to the “LOCK” position as shown on the label.

When the child−protector is locked, you cannot open the rear door by the inside door handle. We recommend using this feature whenever small children are in the vehicle.

⚠ CAUTION

Before driving, be sure that the doors are closed and locked, especially when small children are in the vehicle. Along with the proper use of seat belts, locking the doors helps prevent the driver and passengers from being thrown out from the vehicle in an accident. It also helps prevent the doors from being opened unintentionally.

Power windows

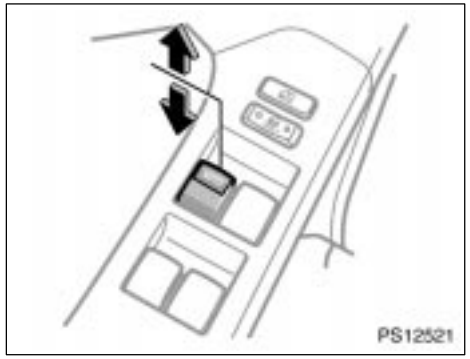

The windows can be operated with the switch on each side door.

The ignition key must be in the “ON” position.

Key off operation: The driver’s window works for about 45 seconds even after the ignition switch is turned off. They stop working when either of the front door is opened.

OPERATING THE DRIVER’S WINDOW

Use the switch on the driver’s door.

Normal operation: The window moves as long as you hold the switch.

To open: Lightly push down the switch.

To close: Pull up the switch.

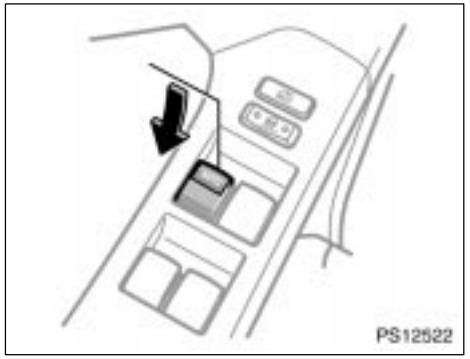

Automatic operation (to open only): Push the switch completely down and then release it. The window will fully open. To stop the window partway, lightly pull the switch up and then release it.

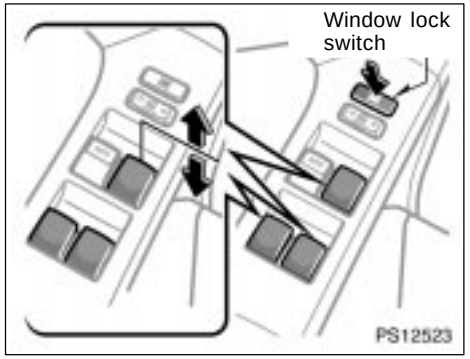

OPERATING THE PASSENGERS’ WINDOWS

Use the switches on the each passenger’s door or the switches on the driver’s door that control each passenger’s window.

The window moves as long as you hold the switch.

To open: Push down the switch.
To close: Pull up the switch.

If you push in the window lock switch on the driver’s door, the passenger’s windows cannot be operated.

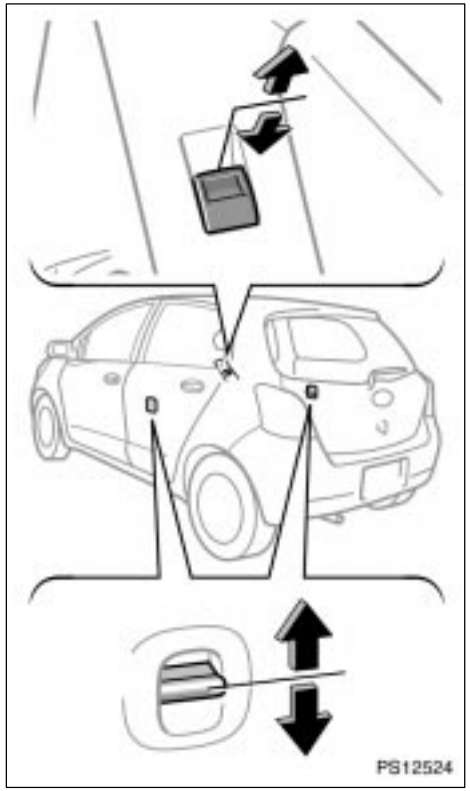

⚠ CAUTION

To avoid serious personal injury, you must do the following.

- **Before you close the power windows, always make sure there is nobody around the power windows. You must also make sure the heads, hands and other parts of the bodies of all occupants are kept completely inside the vehicle. If someone's neck, head or hands get caught in a closing window, it could result in death or serious injury. When anyone closes the power windows, make sure he or she operates the windows safely.**
- **When small children are in the vehicle, never let them use the power window switches without supervision. Use the window lock switch to prevent them from making unexpected use of the switches.**
- **Be sure to remove the ignition key or turn the ignition switch to the "LOCK" position when you leave your vehicle.**
- **Never leave anyone (particularly a small child) alone in your vehicle, especially with the ignition key still inserted. Otherwise, he/she could use the power window switches and get trapped in a window. Unattended person (particularly a small child) can be involved in a serious accident.**

Back door

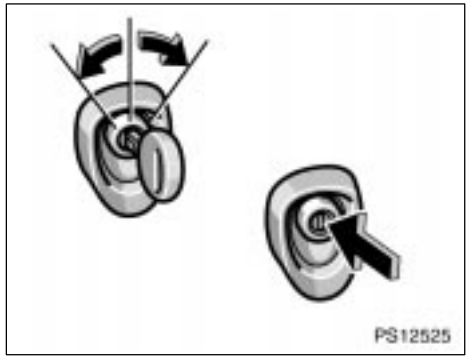

LOCKING AND UNLOCKING WITH KEY

Insert the key into the keyhole and turn it.

To lock: Turn the key clockwise.
To unlock: Turn the key counterclockwise.

To open the back door, push the button.

Vehicles with the power door lock system—Operating the power door lock switch or wireless remote control simultaneously locks or unlocks the back door (see “Side doors” on page 19).

When closing the back door, make sure it is securely closed.

See “—Stowage precautions” on page 202 in Section 2 for precautions when loading luggage.

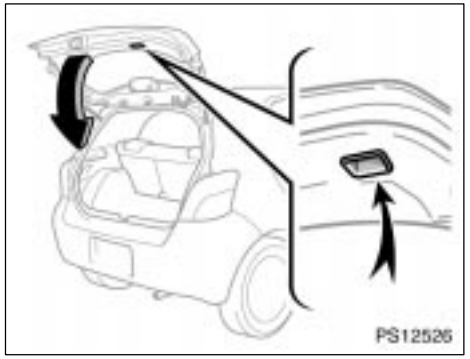

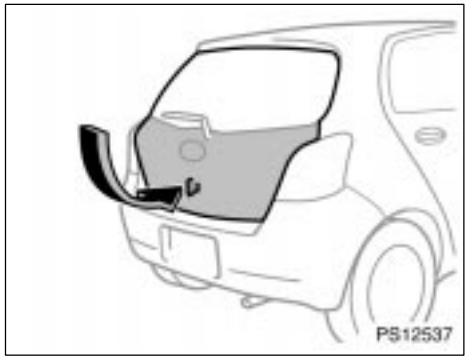

When closing the back door, the inside handle can be used to make the reach easier.

To close the back door, lower it and press down on it. After closing the back door, try pulling it up to make sure it is securely closed.

⚠ CAUTION

- **Keep the back door closed while driving. This not only keeps the luggage from being thrown out but also prevents exhaust gases from entering the vehicle.**
- **Push the back door shut from the outside. Using the inside handle to directly close the back door could cause hands, arms or head to be caught in the door, resulting in serious injuries.**

Hood

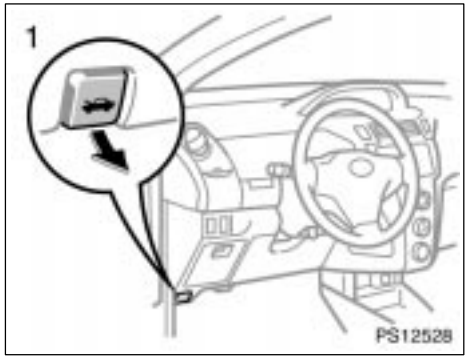

To open the hood:

1. Pull the hood lock release lever. The hood will spring up slightly.

⚠ CAUTION

Before driving, be sure that the hood is closed and securely locked. Otherwise, the hood may open unexpectedly while driving and an accident may occur.

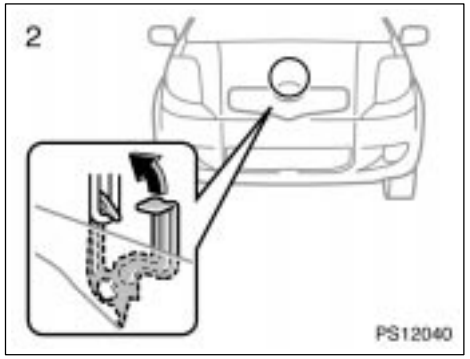

2. In front of the vehicle, pull up the auxiliary catch lever and lift the hood.

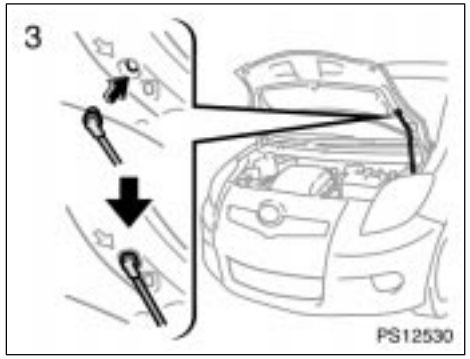

3. Hold the hood open by inserting the support rod into the slot.

To insert the support rod into the slot, move it straight up. If it is moved to the side or toward the inside of the vehicle, it may become detached.

Before closing the hood, check to see that you have not forgotten any tools, rags, etc. and return the support rod to its clip−this prevents rattles. Then lower the hood and make sure it locks into place. If necessary, press down gently on the front edge to lock it.

⚠ CAUTION

After inserting the support rod into the slot, make sure the rod supports the hood security from falling down on to your head or body.

NOTICE

Be sure to return the support rod to its clip before closing the hood. Closing the hood with the support rod up could cause the hood to bend.

Theft deterrent system (vehicles sold in Puerto Rico only)



To deter vehicle theft, the system is designed to sound an alarm if any of the side doors, back door or hood is forcibly unlocked and opened.

The alarm blows the horn intermittently and flashes the headlights, tail lights and turn signal lights, and turns on the interior light.

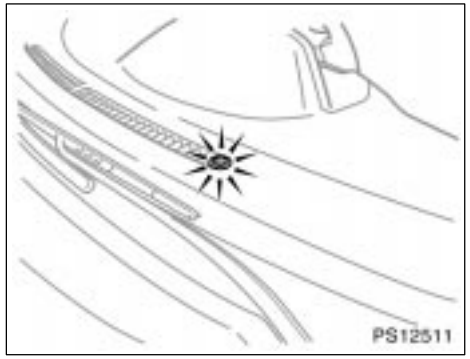

SETTING THE SYSTEM

1. Turn the ignition key to the “LOCK” position and remove it.
2. Have all passengers get out of the vehicle.
3. Close and lock all the side doors, back door and hood.

   Use the key to lock the last door. When the back door is the last, turn the key to the unlock position and then turn to the door lock position.

The indicator light will remain on when all the side doors, back door and hood are closed and locked.

The system will automatically be set after 30 seconds. When the system is set, the indicator light will start flashing.

4. After making sure the indicator light starts flashing, you may leave the vehicle.

Never leave anyone in the vehicle when you set the system, because unlocking from the inside will activate the system.

WHEN THE SYSTEM IS SET

Activating the system

The system will sound the alarm if any of the side doors is unlocked or if the back door or hood is forcibly opened without the key.

The indicator light will come on when the system is activated.

After one minute, the alarm will automatically stop and the indicator light will starts flashing again.

Reactivating the alarm

Once set, the system automatically resets the alarm after the alarm stops.

The alarm will activate again under the same circumstances described in “Activating the system”.

Stopping the alarm

The alarm will be stopped by the following two ways:

- Turn the ignition key from the “LOCK” to “ON” position.
- Unlock any of the doors with the key.

CANCELLING THE SYSTEM

The system will be cancelled by the above mentioned 2 ways.

If the tail lights come on for 2 seconds, the theft deterrent system has been alarmed. Check to see if there is any abnormality with your vehicle.

TESTING THE SYSTEM

1. Open all the windows.
2. Set the system as described above. The doors should be locked with the key. Be sure to wait until the indicator light goes off or starts flashing.
3. Unlock any side door from the inside. The system should activate the alarm.
4. Stop the alarm as described above.
5. Repeat this operation for the other doors, back door and hood.

If the system does not work properly, have it checked by your Toyota dealer.

Fuel tank cap

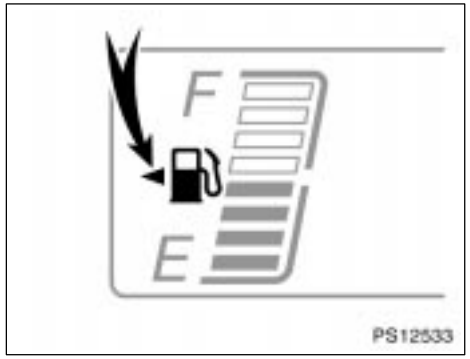

With tachometer

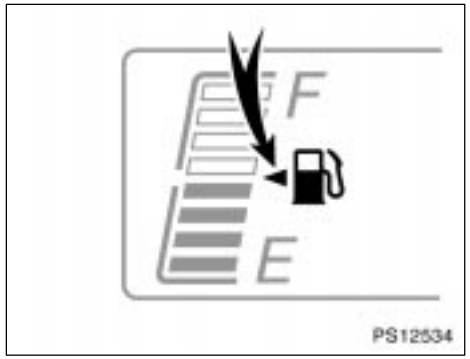

Without tachometer

This indicates that the fuel filler door is on the left side of your vehicle.



1. To open the fuel filler door, pull the lever up.

   When refueling, turn off the engine.

⚠ CAUTION

- Do not smoke, cause sparks or allow open flames when refueling. The fumes are flammable.
- When opening the cap, do not remove the cap quickly. In hot weather, fuel under pressure could cause injury by spraying out of the filler neck if the cap is suddenly removed.

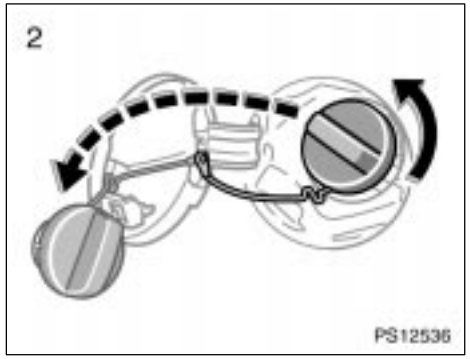

2. To remove the fuel tank cap, turn the cap slowly counterclockwise, then pause slightly before removing it. After removing the cap, hang the tether as shown in the illustration.

It is not unusual to hear a slight swoosh when the cap is opened.

When installing the cap, turn it clockwise until one click is heard, in order to fully close it. The cap returns slightly when your hand is released from the cap after closure, however this does not cause any problems.

If the cap is not tightened securely, the malfunction indicator lamp comes on. Make sure the cap is tightened securely. The indicator lamp goes off after driving several times. If the indicator lamp does not go off, contact your Toyota dealer as soon as possible.

⚠ CAUTION

- **Make sure the cap is installed securely to prevent fuel spillage in the event of an accident.**
- **Use only a genuine Toyota fuel tank cap for replacement. It is designed to regulate fuel tank pressure.**

SECTION 1–3

OPERATION OF INSTRUMENTS AND CONTROLS

Occupant restraint systems

Seats 32
Front seats 32
Rear seats 35
Fold−down rear seat 37
Head restraints 41
Seat belts 42
SRS driver and front passenger airbags 55
SRS side airbags and curtain shield airbags 62
Front passenger occupant classification system 69
Child restraint 74

Seats

While the vehicle is being driven, all vehicle occupants should have the seatback upright, sit well back in the seat and properly wear the seat belts provided.

CAUTION

- **Do not drive the vehicle unless the occupants are properly seated. Do not allow any passengers to sit on top of a folded−down seatback, or in the luggage compartment or cargo area. Persons not properly seated and/or not properly restrained by seat belts can be severely injured in the event of emergency braking or a collision.**
- **During driving, do not allow any passengers to stand up or move around between seats. Otherwise, severe injuries can occur in the event of emergency braking or a collision.**

Front seats—
—Front seat precautions

Driver seat

CAUTION

The SRS driver airbag deploys with considerable force, and can cause death or serious injury especially if the driver is very close to the airbag. The National Highway Traffic Safety Administration (“NHTSA”) advises:

Since the risk zone for driver airbag is the first 50—75 mm (2—3 in.) of inflation, placing yourself 250 mm (10 in.) from your driver airbag provides you with a clear margin of safety. This distance is measured from the center of the steering wheel to your breastbone. If you sit less than 250 mm (10 in.) away now, you can change your driving position in several ways:

- **Move your seat to the rear as far as you can while still reaching the pedals comfortably.**
- **Slightly recline the back of the seat. Although vehicle designs vary, many drivers can achieve the 250 mm (10 in.) distance, even with the driver seat all the way forward, simply by reclining the back of the seat somewhat. If reclining the back of your seat makes it hard to see the road, raise yourself by using a firm, non−slippery cushion, or raise the seat if your vehicle has that feature.**
- **If your steering wheel is adjustable, tilt it downward. This points the airbag toward your chest instead of your head and neck.**

The seat should be adjusted as recommended by NHTSA above, while still maintaining control of the foot pedals, steering wheel, and your view of the instrument panel controls.

Front passenger seat

CAUTION

The SRS front passenger airbag also deploys with considerable force, and can cause death or serious injury especially if the front passenger is very close to the airbag. The front passenger seat should be as far from the airbag as possible with the seatback adjusted, so the front passenger sits upright.

Front seats (with SRS side airbags)

CAUTION

The SRS side airbags are installed in the driver and front passenger seats. Observe the following precautions.

- Do not lean against the front door when the vehicle is in use, since the side airbag inflates with considerable speed and force. Otherwise, you may be killed or seriously injured.
- Do not use seat accessories which cover the area where the side airbags inflate. Such accessories may prevent the side airbags from activating correctly, causing death or serious injury.
- Do not modify or replace the seats or upholstery of the seats with side airbags. Such change may prevent the side airbag system from activating correctly, disable the system or cause the side airbag system to inflate accidentally, resulting in death or serious injury.

—Seat adjustment precautions

CAUTION

- Do not adjust the seat while the vehicle is moving as the seat may unexpectedly move and cause the driver to lose control of the vehicle.
- Be careful that the seat does not hit a passenger or luggage.
- After adjusting the seat position, release the lever and try sliding the seat forward and backward to make sure it is locked in position.
- After adjusting the seatback, push your body back against the seat to make sure the seat is locked in position.
- Do not put objects under the seats. Otherwise, the objects may interfere with the seat−lock mechanism or unexpectedly push up the seat position adjusting lever and the seat may suddenly move, causing the driver to lose control of the vehicle.

—Adjusting front seats

- **While adjusting the seat, do not put your hands under the seat or near the moving parts. Otherwise, your hands or fingers may be caught and injured.**

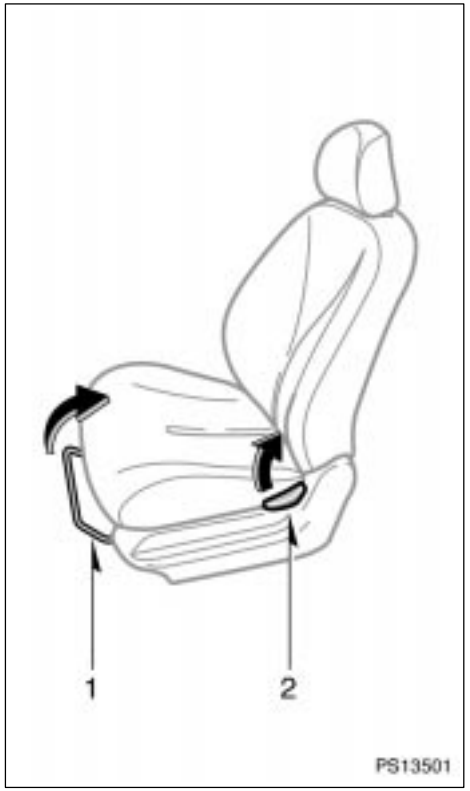

1. SEAT POSITION ADJUSTING LEVER

Hold the center of the lever and pull it up. Then slide the seat to the desired position with slight body pressure and release the lever.

2. SEATBACK ANGLE ADJUSTING LEVER

Lean forward and pull the lever up. Then lean back to the desired angle and release the lever.

⚠ CAUTION

Avoid reclining the seatback any more than needed. The seat belts provide maximum protection in a frontal or rear collision when the driver and the front passenger are sitting up straight and well back in the seats. If you are reclined, the lap belt may slide past your hips and apply restraint forces directly to the abdomen or your neck may contact the shoulder belt. In the event of a frontal collision, the more the seat is reclined, the greater the risk of death or personal injury.

—Moving passenger's seat for rear seat entry (3−door models only)

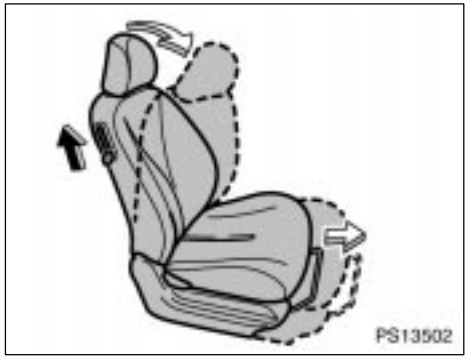

For easy access to the rear seat:

1. Lift up the seatback lock release lever. The seat will slide forward.
2. Move the seat to the front−most position.

After rear passengers are in, lift up the seatback and return the seat until it locks.

⚠ CAUTION

After putting back the seat, try pushing the seat forward and rearward to make sure it is secured in place.

Rear seats— —Rear seat precautions

⚠ CAUTION

- **Do not adjust the seat while the vehicle is moving.**
- **Be careful that the seat does not hit a passenger or luggage.**
- **Be careful not to get your hands or feet pinched in the seat.**
- **Split seat—After adjusting the seat position, release the lever and try sliding the seat forward and backward to make sure it is locked in position.**
- **After adjusting the seatback, push your body back against the seat to make sure the seat is locked in position.**
- **When returning the seatback to the upright position, observe the following precautions in order to prevent personal injury in a collision or sudden stop:**

  Make sure the seatback is securely locked by pushing forward and rearward on the top of the seatback. Failure to do so will prevent the seat belt from operating properly.

—Adjusting rear seats

Make sure the seat belts are not twisted or caught in the seatback and are arranged in their proper position and are ready to use.

Folding down the rear seatbacks will enlarge the luggage compartment. See "—Stowage precautions" on page 202 in Section 2 for precautions when loading luggage.

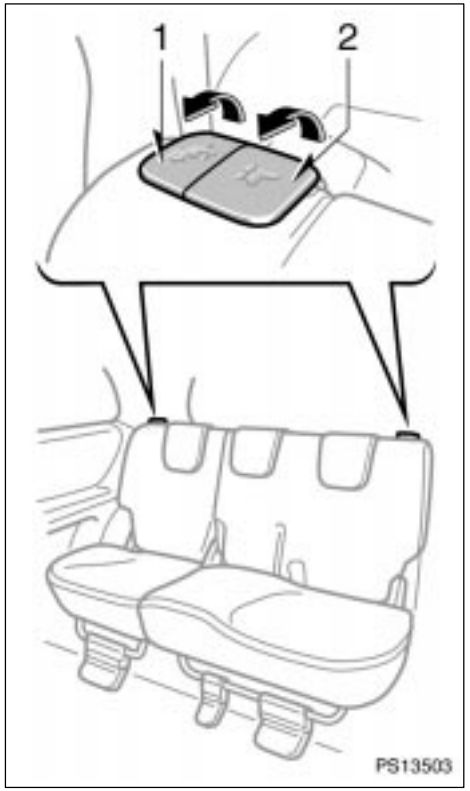

Split seat

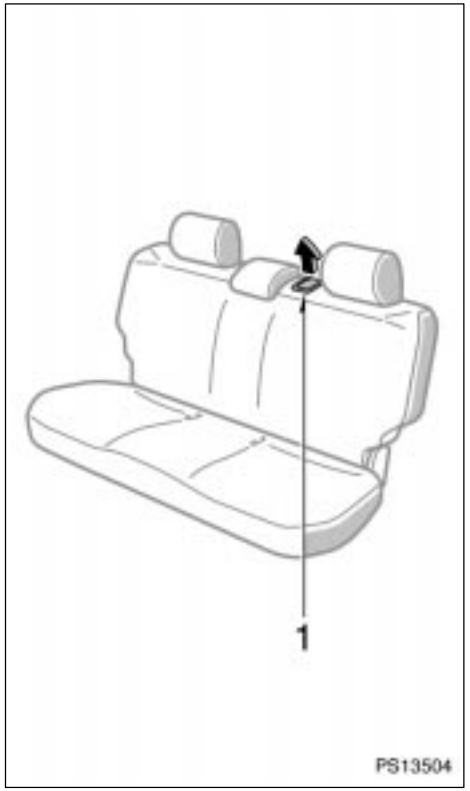

Non−split seat

1. SEATBACK ANGLE ADJUSTING LEVER

Pull the lever up. Then lean back to the desired angle and release the lever.

⚠ CAUTION

- Do not adjust the seat while the vehicle is moving.
- Avoid reclining the seatback any more than needed. The seat belts provide maximum protection in a frontal or rear collision when the passengers are sitting up straight and well back in the seats. If you are reclined, the lap belt may slide past your hips and apply restraint forces directly to the abdomen or your neck may contact the shoulder belt. In the event of a frontal collision, the more the seat is reclined, the greater the risk of death or personal injury.
- Split seat—After adjusting the seat position, release the lever and try sliding the seat forward and backward to make sure it is locked in position.

- After adjusting the seatback, push your body back against the seat to make sure the seat is locked in position.

2. SEAT POSITION ADJUSTING LEVER

Pull the lever up. Then slide the seat to the desired position with slight body pressure and release the lever.

Fold−down rear seat

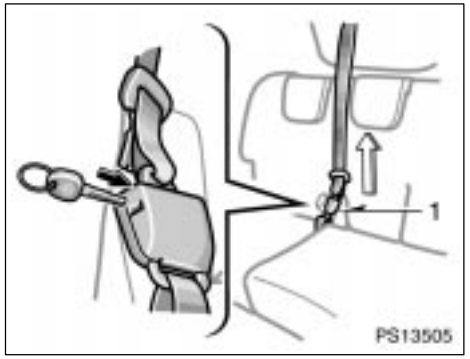

BEFORE FOLDING DOWN REAR SEATS

1. Before folding down the seatback, disconnect the center seat belt to prevent damage.

Insert the key into the hole on the buckle to release tab 1 (with hook end), and allow the belt to retract.

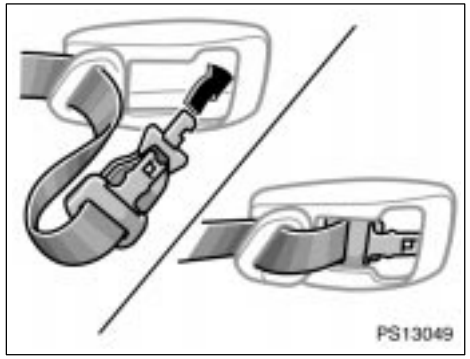

2. **Insert the tabs of the center seat belt into the cover. Make sure the tabs are securely locked in the cover.**

NOTICE
The seat belt tabs must be stowed before you fold the seatback.

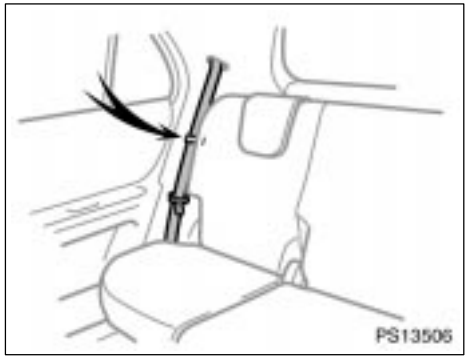

3. **Make sure the outer seat belt passes through the hanger when folding the seatback down.**

This prevents the shoulder belt from being damaged.

⚠ CAUTION
The seat belt must be removed from the hanger when the seat belt is in use.

NOTICE
The seat belt must be stowed before you fold the seatback.

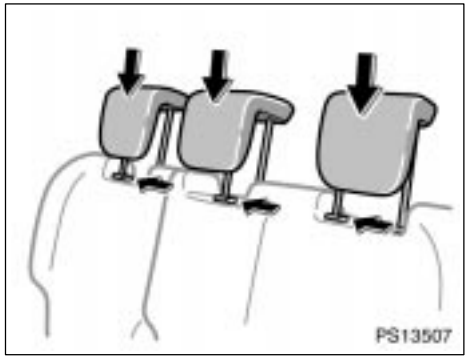

FOLDING REAR SEATS (split seat)

1. **Lower the head restraint to the lowest position.**

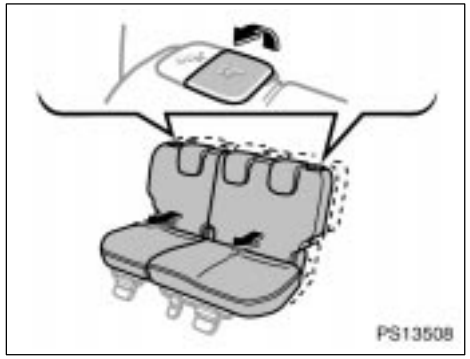

2. Pull the seat position adjusting liver up. Then slide the rear seat fully forward.

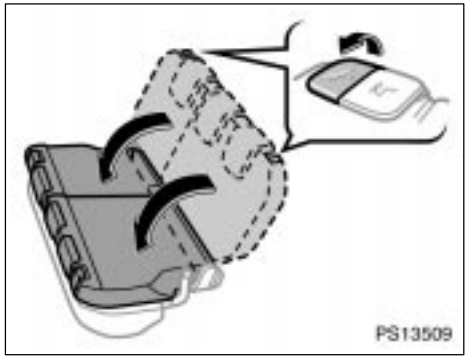

3. Pull the seatback angle adjusting lever up and fold the seatback down.

Each seatback may be folded separately.

⚠ CAUTION

When returning the seatback to the upright position, observe the following precautions in order to prevent personal injury in a collision or sudden stop:

- **Make sure the seatback is securely locked by pushing forward and rearward on the top of the seatback. Failure to do so will prevent the seat belt from operating properly.**
- **Make sure the seat belts are not twisted or caught in the seatback and are arranged in the proper position and are ready to use.**

NOTICE

Do not pull the pocket that stores the seat belt comfort guide when returning the seatback to the upright position.

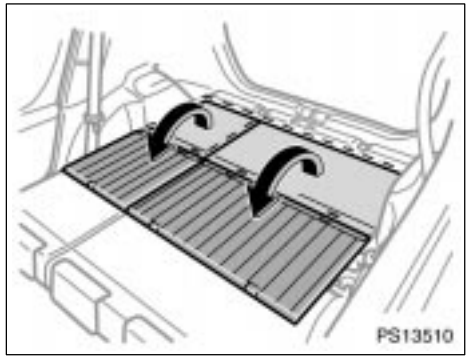

4. Flip over the deck board.

This will enlarge the luggage compartment as far as the seatbacks. See “Cargo and luggage” on page 202 for precautions to observe for loading luggage.

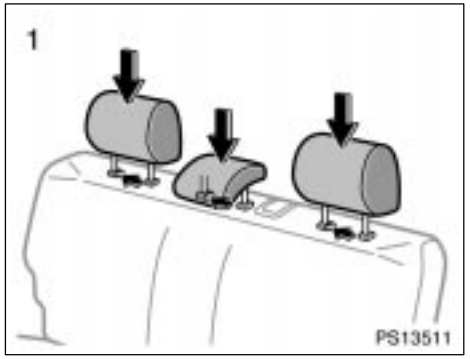

FOLDING REAR SEAT (non−split seat)

1. Lower the head restraint to the lowest position.

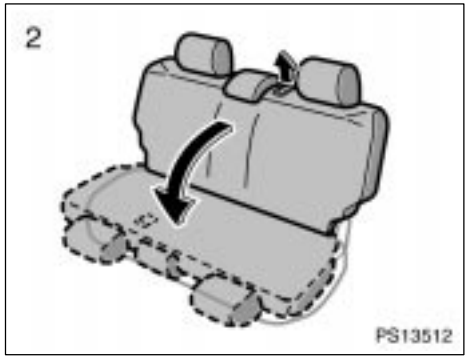

2. Pull the seatback angle adjusting lever up and fold the seatback down.

Each seatback may be folded separately.

Head restraints

⚠ CAUTION

When returning the seatback to the upright position, observe the following precautions in order to prevent personal injury in a collision or sudden stop:

- **Make sure the seatback is securely locked by pushing forward and rearward on the top of the seatback. Failure to do so will prevent the seat belt from operating properly.**
- **Make sure the seat belts are not twisted or caught in the seatback and are arranged in the proper position and are ready to use.**

NOTICE

Do not pull the pocket that stores the seat belt comfort guide when returning the seatback to the upright position.

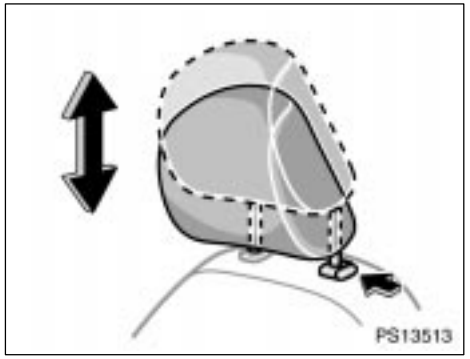

Front seat

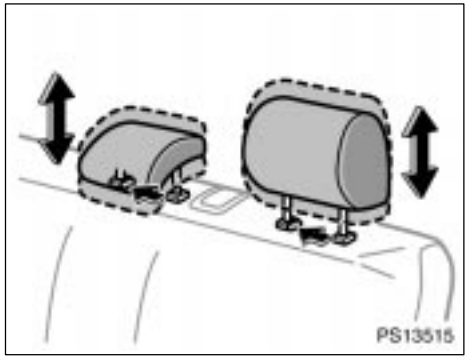

Rear seat (non−split seat)

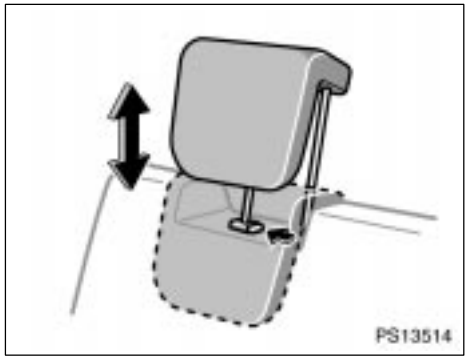

Rear seat (split seat)

For your safety and comfort, adjust the head restraint before driving.

To raise: Pull it up.
To lower: Push it down while pressing the lock release button.

Rear center head restraint—When an occupant sits on the rear center seat, always pull up the rear center head restraint to the lock position.

The head restraint is most effective when it is close to your head. Therefore, using a cushion on the seatback is not recommended.

⚠ CAUTION

- **Adjust the center of the head restraint so that it is closest to the top of your ears.**
- **After adjusting the head restraint, make sure it is locked in position.**
- **Do not drive with the head restraints removed.**

Seat belts—
—Seat belt precautions

Toyota strongly urges that the driver and passengers in the vehicle be properly restrained at all times with the seat belts provided. Failure to do so could increase the chance of injury and/or the severity of injury in accidents.

The seat belts provided for your vehicle are designed for people of adult size, large enough to properly wear them.

Child. Use a child restraint system appropriate for the child until the child becomes large enough to properly wear the vehicle's seat belts. See "Child restraint" on page 74 for details.

If a child is too large for a child restraint system, the child should sit in the rear seat and must be restrained using the vehicle's seat belt. According to accident statistics, the child is safer when properly restrained in the rear seat than in the front seat.

If a child must sit in the front seat, the seat belts should be worn properly. If an accident occurs and the seat belts are not worn properly, the force of the rapid inflation of the airbag may cause death or serious injury to the child.

Do not allow any children to stand up or kneel on either rear or front seats. An unrestrained child could suffer serious injury or death during emergency braking or a collision. Also, do not let the child sit on your lap. Holding a child in your arms does not provide sufficient restraint.

Pregnant woman. Toyota recommends the use of a seat belt. Ask your doctor for specific recommendations. The lap belt should be worn securely and as low as possible over the hips and not on the waist.

Injured person. Toyota recommends the use of a seat belt. Depending on the injury, first check with your doctor for specific recommendations.

⚠ CAUTION

Persons should ride in their seats properly wearing their seat belts whenever the vehicle is moving. Otherwise, they are much more likely to suffer serious bodily injury or death in the event of sudden braking or a collision.

When using the seat belts, observe the following:

- **Use the belt for only one person at a time. Do not use a single belt for two or more people—even children.**
- **Avoid reclining the seatback any more than needed. The seat belts provide maximum protection in a frontal or rear collision when the driver and the front passenger are sitting up straight and well back in the seats. If you are reclined, the lap belt may slide past your hips and apply restraint forces directly to the abdomen or your neck may contact the shoulder belt. In the event of a frontal collision, the more the seat is reclined, the greater the risk of death or personal injury.**
- **Be careful not to damage the belt webbing or hardware. Take care that they do not get caught or pinched in the seat or doors.**
- **Inspect the belt system periodically. Check for cuts, fraying, and loose parts. Damaged parts should be replaced. Do not disassemble or modify the system.**
- **Keep the belts clean and dry. If they need cleaning, use a mild soap solution or lukewarm water. Never use bleach, dye, or abrasive cleaners, or allow them to come into contact with the belts—they may severely weaken the belts. (See "Cleaning the interior" on page 251 in Section 5.)**
- **Replace the belt assembly (including bolts) if it has been used in a severe impact. The entire assembly should be replaced even if damage is not obvious.**

—Fastening front and rear seat belts

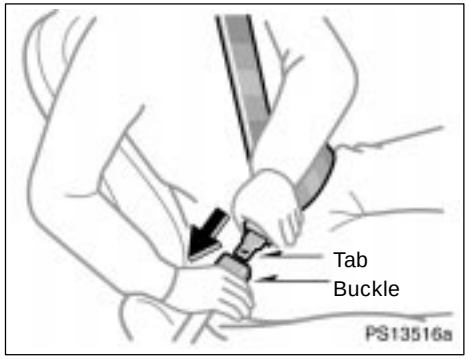

Adjust the seat as needed and sit up straight and well back in the seat. To fasten your belt, pull it out of the retractor and insert the tab into the buckle.

You will hear a click when the tab locks into the buckle.

The seat belt length automatically adjusts to your size and the seat position.

The retractor will lock the belt during a sudden stop or on impact. It also may lock if you lean forward too quickly. A slow, easy motion will allow the belt to extend, and you can move around freely.

When a passenger's shoulder belt is completely extended and is then retracted even slightly, the belt is locked in that position and cannot be extended. This feature is used to hold the child restraint system securely. (For details, see "Child restraint" on page 74 in this Section.) To free the belt again, fully retract the belt and then pull the belt out once more.

If the seat belt cannot be pulled out of the retractor, firmly pull the belt and release it. You will then be able to smoothly pull the belt out of the retractor.

⚠ CAUTION

- **After inserting the tab, make sure the tab and buckle are locked and that the belt is not twisted.**
- **Do not insert coins, clips, etc. in the buckle as this may prevent you from properly latching the tab and buckle.**
- **If the seat belt does not function normally, immediately contact your Toyota dealer. Do not use the seat until the seat belt is fixed, because it cannot protect an adult occupant or your child from death or serious injury.**

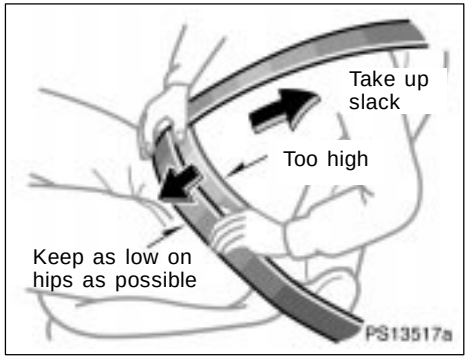

Adjust the position of the lap and shoulder belts.

Position the lap belt as low as possible on your hips—not on your waist, then adjust it to a snug fit by pulling the shoulder portion upward through the latch plate.

⚠ CAUTION

- **Both high−positioned lap belts and loose−fitting belts could cause serious injuries due to sliding under the lap belt during a collision or other unintended event. Keep the lap belt positioned as low on hips as possible.**
- **Do not place the shoulder belt under your arm.**

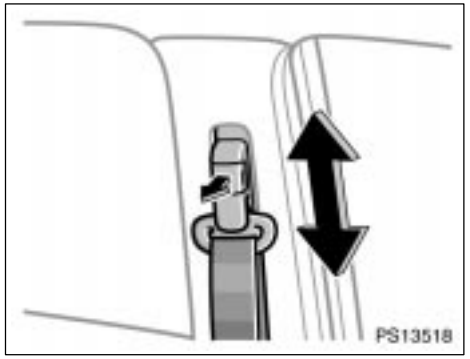

Seat belts with an adjustable shoulder anchor (5−door models)—

Adjust the shoulder anchor position to your size.

To raise: Slide the anchor up.
To lower: Pull the lock release knob and slide the anchor down.

After adjustment make sure the anchor is locked in position.

⚠ CAUTION

Always make sure the shoulder belt is positioned across the center of your shoulder. The belt should be kept away from your neck, but not falling off your shoulder. Failure to do so could reduce the amount of protection in an accident and cause serious injures in a collision.

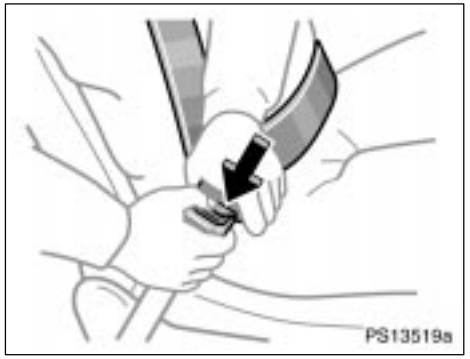

To release the belt, press the buckle release button and allow the belt to retract.

If the belt does not retract smoothly, pull it out and check for kinks or twists. Then make sure it remains untwisted as it retracts.

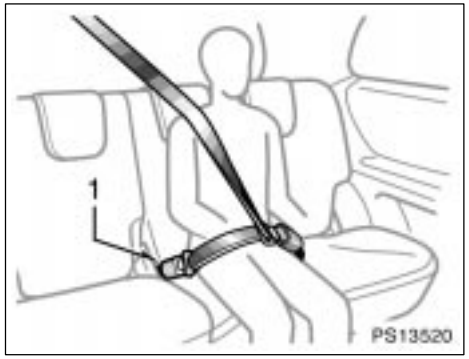

REAR CENTER SEAT BELT

The rear center seat belt is a 3−point type restraint with 2 buckles. Both seat belt buckles must be correctly located and securely latched for proper operation.

Make sure buckle 1 is securely latched for ready use of the center seat belt.

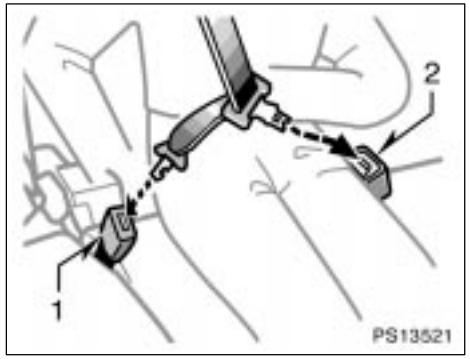

Two buckles and tabs for rear center seat belt

The two tabs have different shapes to prevent the belt from being buckled in the wrong place.

Buckle 1—Matches the tab with the hooked end

Buckle 2—Matches the tab with the concave end

⚠ CAUTION

Make sure the both buckles are correctly located and securely latched. Failure to properly match the buckle and tab may cause serious injury in case of an accident or a collision.

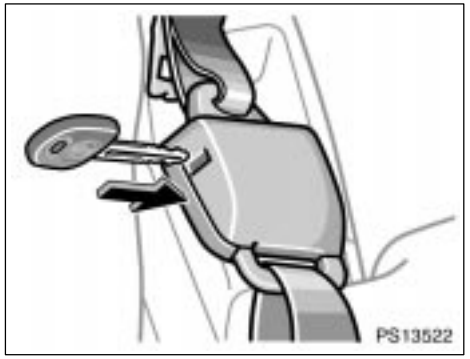

To release the hooked end tab, insert the key into the hole on buckle 1 and allow the belt to retract.



⚠ CAUTION

Do not use the rear center seat belt with either buckle released. Fastening only the shoulder belt or lap belt may cause serious personal injury in case of a sudden braking or a collision.

—Stowing the rear center seat belt

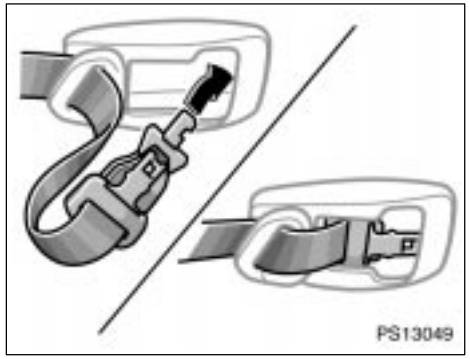

STOWING THE REAR CENTER SEAT BELT TABS

Insert the tabs of the center seat belt into the cover. Make sure the tabs are securely locked in the cover.

Seat belt must be stowed before you fold the seatback.

NOTICE
Stow the rear center seat belt tabs when not in use.

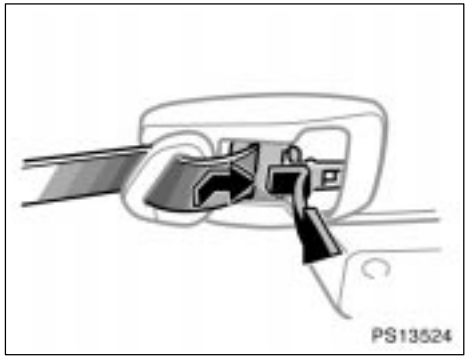

PULLING OUT THE REAR CENTER SEAT BELT TABS

Push the tab and then pull the tabs out from the cover.

—Seat belt comfort guide

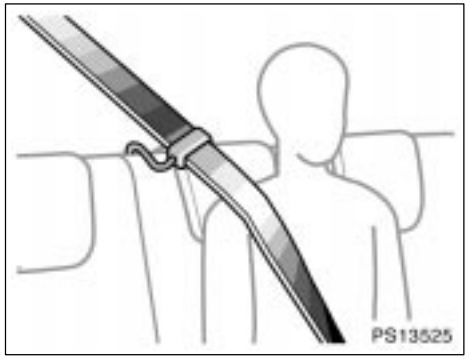

The center shoulder belt comfort guide for the rear seat center position will provide added seat belt comfort for children who have outgrown child restraints and for small adults. When the center shoulder belt is inserted through the guide, the comfort guide pulls the belt away from the neck and head of an occupant.

To use the comfort guide, do as follows.

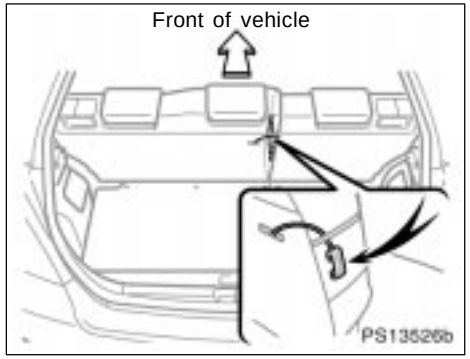

Split seat

Seat belt comfort guide is stored in the pocket on the right side of the left rear seatback.

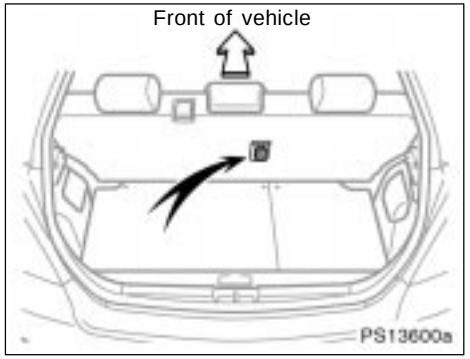

Non−split seat

Seat belt comfort guide is stored in the pocket behind the rear seatback.

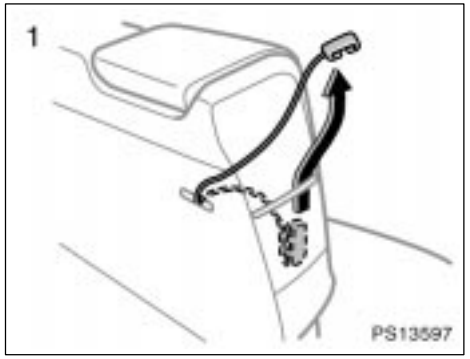

Split seat

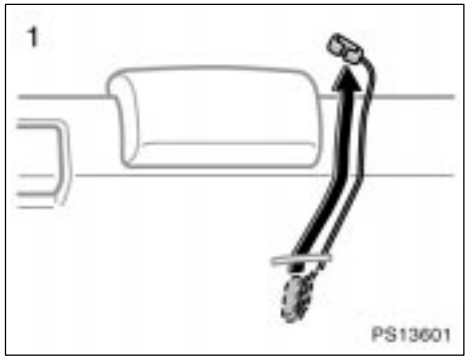

Non−split seat

INSTALLING THE COMFORT GUIDE

1. **Pull the comfort guide from the pocket.**

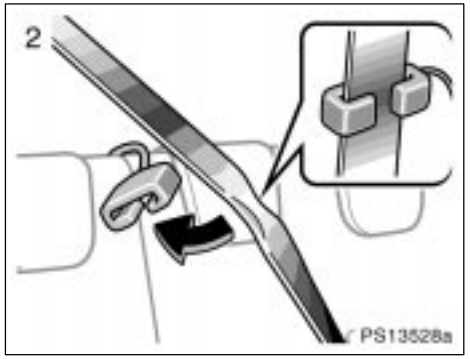

2. **Pinch the two edges of the shoulder belt for the rear seat center position with your fingers and slide the belt past the slot of the guide as shown above. At this time, the elastic cord must be behind the seat belt.**

⚠ CAUTION

Make sure the belt is not twisted and that it lies flat. The elastic cord must be behind the belt and the guide must be on the front.

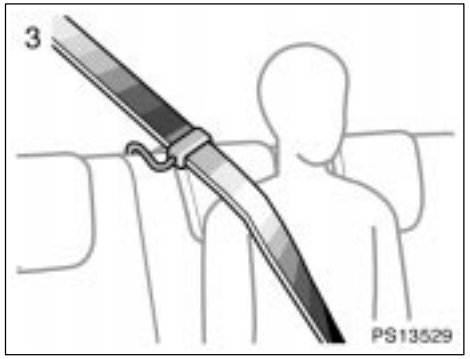

3. **Buckle, position and release the seat belt. (For wearing the seat belt, see "—Fastening front and rear seat belts" on page 43 in this Section.)**

⚠ CAUTION

Always make sure the shoulder belt is positioned across the center of the shoulder. The belt should be kept away from the neck, and should not fall off the shoulder. Failure to observe these precautions could reduce the effectiveness of the seat belt in an accident, causing death or serious injury.

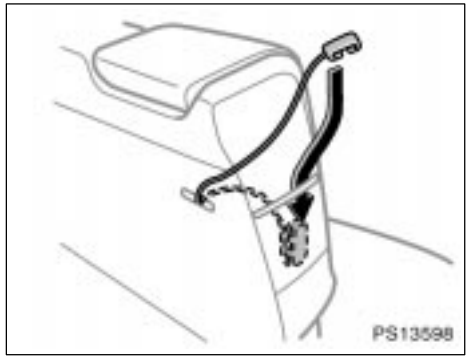

Split seat

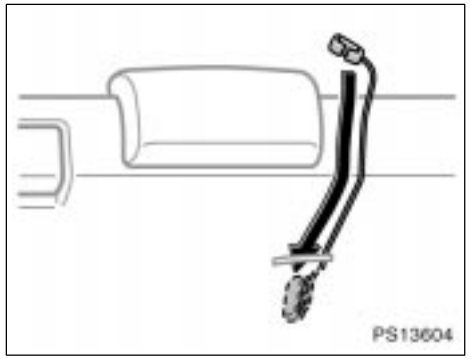

Non−split seat

REMOVING AND STORING THE COMFORT GUIDE

Pinch the two edges of the seat belt together so that you can slide them out of the guide. Store the guide with the elastic cord into the pocket.

⚠ CAUTION

To reduce the chance of injury in case of an accident or a sudden stop while driving, remove and store the comfort guide in its pocket when it is not in use.

—Seat belt extender

If your seat belts cannot be fastened securely because they are not long enough, a personalized seat belt extender is available from your Toyota dealer free of charge.

Please contact your local Toyota dealer so that the dealer can order the proper required length for the extender. Bring the heaviest coat you expect to wear for proper measurement and selection of length. Additional ordering information is available at your Toyota dealer.

⚠ CAUTION

When using the seat belt extender, observe the following precautions. Failure to follow these instructions could reduce the effectiveness of the seat belt restraint system in case of an accident, increasing the chance of personal injury.

- **Remember that the extender provided for you may not be safe when used on a different vehicle, for another person, or at a different seating position than the one originally intended.**



- If the seat belt extender has been connected to the driver's seat belt buckle without wearing the seat belt when using the extender in the driver's seat, the SRS driver's airbag system will judge that the driver wears the seat belt even if not wearing it. In this case, the driver's airbag may not activate correctly, causing death or serious injury in the event of collision. Be sure to wear the seat belt with the seat belt extender.

- Make sure the "AIRBAG ON" indicator light is illuminated when using the seat belt extender for the front passenger seat. If the "AIRBAG OFF" indicator light is illuminated, disconnect the extender tongue from the seat belt buckle, then reconnect the seat belt. Reconnect the seat belt extender after making sure the "AIRBAG ON" indicator light is illuminated. If you use the seat belt extender while the "AIRBAG OFF" indicator light is illuminated, the front passenger airbag and side airbag on the front passenger side may not activate correctly, causing death or serious injury in the event of collision.
- Be sure to wear the seat belt without the seat belt extender if you can fasten the seat belt without the extender.

- Do not use the seat belt extender when installing a child restraint system on the front or rear passenger seat. If installing a child restraint system with the seat belt extender connected to the seat belt, the seat belt will not securely hold the child restraint system, which could cause death or serious injury to the child or other passengers in the event of collision.

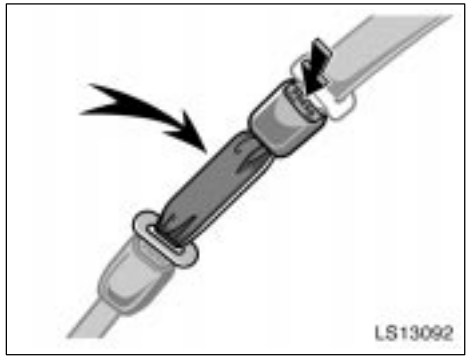

To connect the extender to the seat belt, insert the tab into the seat belt buckle so that the “PRESS” signs on the buckle release buttons of the extender and the seat belt are both facing outward as shown.

You will hear a click when the tab locks into the buckle.

When releasing the seat belt, press on the buckle release button on the extender, not on the seat belt. This helps prevent damage to the vehicle interior and extender itself.

As far as the seat belt extender on the front passenger side is concerned, do not fail to disconnect the extender from the seat belt after the above operation in order to activate the front passenger airbag correctly when getting into the vehicle next time.

When not in use, remove the extender and store in the vehicle for future use.

⚠ CAUTION

- **After inserting the tab, make sure the tab and buckle are locked and that the lap and shoulder portions of the belt and the seat belt extender are not twisted.**
- **Do not insert coins, clips, etc. in the buckle as this may prevent you from properly latching the tab and buckle.**
- **If the seat belt does not function normally, immediately contact your Toyota dealer. Do not use the seat until the seat belt is fixed, because it cannot protect an adult occupant or your child from death or serious injury.**

—Seat belt pretensioners

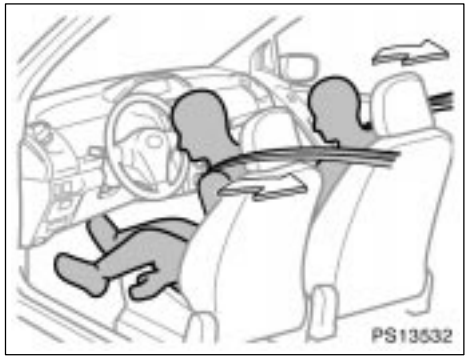

The driver and front passenger seat belt pretensioners are designed to be activated in response to a severe frontal impact.

When the sensor detects a severe frontal impact, the front seat belts are quickly drawn back by the retractors so that the belts snugly restrain the occupants.

The front passenger's seat belt pretensioner will not activate if no passenger is detected in the front passenger seat by the front passenger occupant classification system. However, the front passenger's seat belt pretensioner may activate if luggage is put on the seat, or the seat belt is buckled up regardless of the presence of an occupant in the seat. (As for the front passenger occupant classification system, see "Front passenger occupant classification system" on page 69 in this Section.)

The seat belt pretensioners and SRS airbags may not operate together in all collisions.

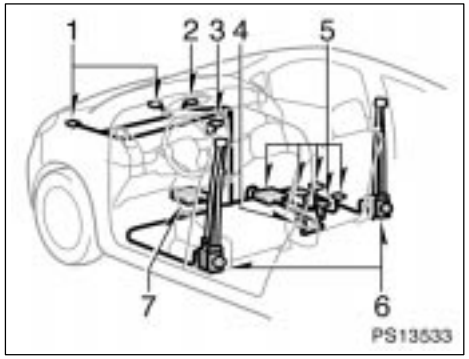

The seat belt pretensioner system consists mainly of the following components and their locations are shown in the illustration.

1. Front airbag sensors
2. SRS warning light
3. "AIRBAG ON" and "AIRBAG OFF" indicator lights
4. Front passenger's seat belt buckle switch
5. Front passenger occupant classification system (ECU and sensors)
6. Seat belt pretensioner assemblies
7. Airbag sensor assembly

The seat belt pretensioners are controlled by the airbag sensor assembly. The airbag sensor assembly consists of a safing sensor and airbag sensor.

When the seat belt pretensioners are activated, an operating noise may be heard and a small amount of non−toxic gas may be released. This does not indicate that a fire is occurring. This gas is normally harmless.

Once the seat belt pretensioners have been activated, the seat belt retractors remain locked.

⚠ CAUTION

Do not modify, remove, strike or open the seat belt pretensioner assemblies, airbag sensor or surrounding area or wiring. Failure to follow these instruction may prevent the seat belt pretensioners from activating correctly, cause sudden operation of the system or disable the system, which could result in death or serious injury. Consult your Toyota dealer about any repair and modification.

NOTICE

Do not perform any of the following changes without consulting your Toyota dealer. Such changes can interfere with proper operation of the seat belt pretensioners in some cases.

- ***Installation of electronic devices such as a mobile two−way radio, cassette tape player or compact disc player***
- ***Repairs on or near the front seat belt retractor assemblies***
- ***Modification of the suspension system***
- ***Modification of the front end structure***
- ***Attachment of a grille guard (bull bar, kangaroo bar, etc.), snowplow, winches or any other equipment to the front end***
- ***Repairs made on or near the front fenders, front end structure or console***



This indicator comes on when the ignition key is turned to the “ON” position. It goes off after about 6 seconds. This means the seat belt pretensioners are operating properly.

This warning light system monitors the airbag sensor assembly, front airbag sensors, side and curtain shield airbag sensors, curtain shield airbag sensors, driver’s seat position sensor, driver’s seat belt buckle switch, front passenger occupant classification system, “AIRBAG ON” indicator light, “AIRBAG OFF” indicator light, front passenger’s seat belt buckle switch, seat belt pretensioner assemblies, inflators, interconnecting wiring and power sources. (For details, see “Service reminder indicators and warning buzzers” on page 114 in Section 1−6.)

If any of the following conditions occurs, this indicates a malfunction of the airbags or seat belt pretensioners. Contact your Toyota dealer as soon as possible.

- The light does not come on when the ignition key is turned to the “ON” position or remains on for more than 6 seconds or flashes.
- The light comes on or starts flashing while driving.
- If any seat belt does not retract or can not be pulled out due to a malfunction or activation of the relevant seat belt pretensioner.

- The seat belt pretensioner assembly or surrounding area has been damaged.

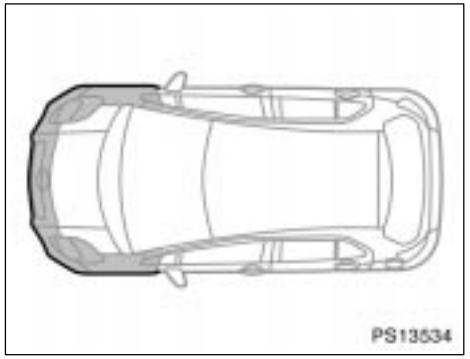

In the following cases, contact your Toyota dealer as soon as possible:

- The front part of the vehicle (shaded in the illustration) was involved in an accident that was not severe enough to cause the seat belt pretensioners to operate.
- Either seat belt pretensioner assembly or surrounding area is scratched, cracked, or otherwise damaged.

SRS driver and front passenger airbags

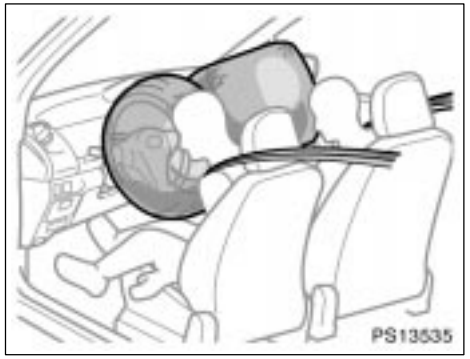

The SRS (Supplemental Restraint System) airbags are designed to provide further protection for the driver and front passenger in addition to the primary safety protection provided by the seat belts.

Your vehicle is equipped with “ADVANCED AIRBAGS” designed based on US motor vehicle safety standards (FMVSS208). The airbag system controls airbag deployment power for the driver and front passenger. The driver airbag system consists of the driver seat’s position sensor etc. The front passenger’s airbag system consists of the front passenger occupant classification sensor etc.

In response to a severe frontal impact, the SRS airbags work with the seat belts to help reduce injury by inflating. The SRS airbags help reduce injuries mainly to the driver's or front passenger's head or chest caused by hitting the vehicle interior.

The SRS front passenger airbag will not activate if there is no passenger sitting in the front passenger seat. However, the front passenger airbag may deploy if luggage is put in the seat, or the seat belt is buckled up, regardless of the presence of an occupant in the seat. (As for the front passenger occupant classification system, see "Front passenger occupant classification system" on page 69 in this Section.)

Always wear your seat belt properly.

⚠ CAUTION

- **The SRS front airbag system is designed only as a supplement to the primary protection of the driver and front passenger seat belt systems. The driver and front passenger can be killed or seriously injured by the inflating airbags if they do not wear the available seat belts properly. During sudden braking just before a collision, an unrestrained driver or front passenger can move forward into direct contact with or close proximity to the airbag which may then deploy during the collision. To ensure maximum protection in an accident, the driver and all passengers in the vehicle must wear their seat belts properly. Wearing a seat belt properly during an accident reduces the chances of death or serious injury or being thrown out of the vehicle. For instructions and precautions concerning the seat belt system, see "Seat belts" on page 42 in this Section.**

- **Improperly seated and/or restrained infants and children can be killed or seriously injured by the deploying airbags. An infant or child who is too small to use a seat belt should be properly secured using a child restraint system. Toyota strongly recommends that all infants and children be placed in the rear seat of the vehicle and properly restrained. The rear seat is the safest for infants and children. For instructions concerning the installation of a child restraint system, see "Child restraint" on page 74 in this Section.**

The SRS airbags are designed to deploy in severe (usually frontal) collisions where the magnitude and duration of the forward deceleration of the vehicle exceeds the designed threshold level.

The SRS airbags will deploy if the severity of the impact is above the designed threshold level, comparable to an approximate 25 km/h (15 mph) collision when the vehicle has the impact straight into a fixed barrier that does not move or deform.

However, this threshold velocity will be considerably higher if the vehicle strikes an object, such as a parked vehicle or sign pole, which can move or deform on impact, or if the vehicle is involved in an underride collision (e.g. a collision in which the front of the vehicle “underrides”, or goes under, the bed of a truck, etc.).

It is possible that in some collisions where the forward deceleration of the vehicle is very close to the designed threshold level, the SRS airbags and the seat belt pretensioners may not activate together.

Always wear your seat belts properly.

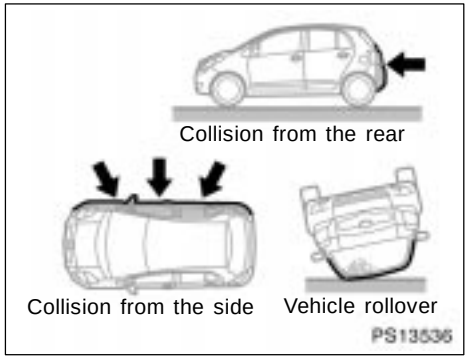

The SRS airbags are not generally designed to inflate if the vehicle is involved in a side or rear collision, if it rolls over, or if it is involved in a low–speed frontal collision. But, whenever a collision of any type causes sufficient forward deceleration of the vehicle, deployment of the SRS airbags may occur.

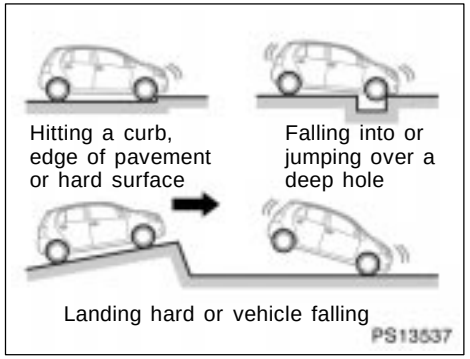

The SRS airbags may also deploy if a serious impact occurs to the underside of your vehicle. Some examples are shown in the illustration.

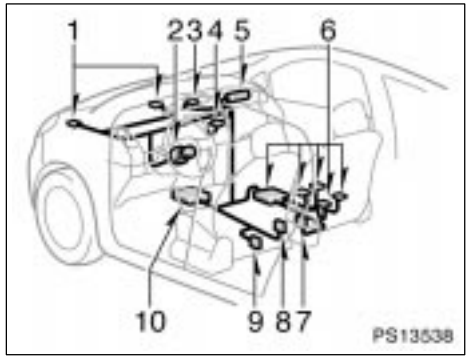

The SRS airbag system consists mainly of the following components, and their locations are shown in the illustration.

1. Front airbag sensors
2. Airbag module for driver (airbag and inflator)
3. SRS warning light
4. “AIRBAG ON” and “AIRBAG OFF” indicator lights
5. Airbag module for front passenger (airbag and inflator)
6. Front passenger occupant classification system (ECU and sensors)
7. Front passenger’s seat belt buckle switch
8. Driver’s seat belt buckle switch
9. Driver’s seat position sensor
10. Airbag sensor assembly

The airbag sensor assembly consists of a safing sensor and airbag sensor.

The front airbag sensors constantly monitor the forward deceleration of the vehicle. If an impact results in a forward deceleration beyond the designed threshold level, the system triggers the airbag inflators. At this time a chemical reaction in the inflators very quickly fills the airbags with non−toxic gas to help restrain the forward motion of the occupants. The airbags then quickly deflate, so that there is no obstruction of the driver’s vision should it be necessary to continue driving.

When the airbags inflate, they produce a loud noise and release some smoke and residue along with non−toxic gas. This does not indicate a fire. This smoke may remain inside the vehicle for some time, and may cause some minor irritation to the eyes, skin or breathing. Be sure to wash off any residue as soon as possible to prevent any potential skin irritation with soap and water. If you can safely exit from the vehicle, you should do so immediately.

Deployment of the airbags happens in a fraction of a second, so the airbags must inflate with considerable force. While the system is designed to reduce serious injuries, primarily to the head and chest, it may also cause other, less severe injuries to the face, chest, arms and hands. These are usually in the nature of minor burns or abrasions and swelling, but the force of a deploying airbag can cause more serious injuries, especially if an occupant’s hands, arms, chest or head is in close proximity to the airbag module at the time of deployment. This is why it is important for the occupant to: avoid placing any object or part of the body between the occupant and the airbag module; sit straight and well back into the seat; wear the available seat belt properly; and sit as far as possible from the airbag module, while still maintaining control of the vehicle.

Parts of the airbag module (steering wheel hub, airbag cover and inflator) may be hot for several minutes after deployment, so do not touch! The airbags inflate only once. The windshield may be damaged by absorbing some of the force of the inflating airbag.

⚠ CAUTION

The driver or front passenger who is too close to the steering wheel or dashboard during airbag deployment can be killed or seriously injured. Toyota strongly recommends that:

- **The driver sit as far back as possible from the steering wheel while still maintaining control of the vehicle.**
- **The front passenger sit as far back as possible from the dashboard.**
- **All vehicle occupants be properly restrained using the available seat belts.**

For instructions and precautions concerning the seating position, see "—Front seat precautions" on page 32 in this Section.



- **Do not sit on the edge of the seat or lean against the dashboard when the vehicle is in use, since the front passenger airbag could inflate with considerable speed and force. Anyone who is up against, or very close to, an airbag when it inflates, can be killed or seriously injured. Sit up straight and well back in the seat, and always use your seat belt properly.**



- **Toyota strongly recommends that all infants and children be placed in the rear seat of the vehicle and be properly restrained.**
- **Do not hold a child on your lap or in your arms. Use a child restraint system in the rear seat. For instructions concerning the installation of a child restraint system, see "Child restraint" on page 74 in this Section.**

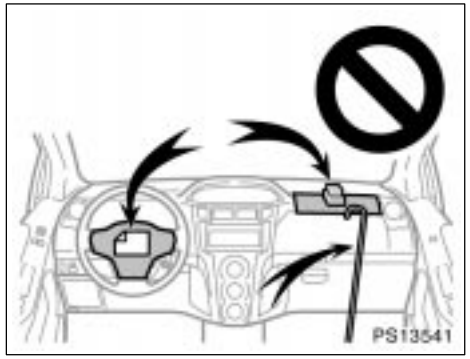

- **Do not put anything or any part of your body on or in front of the dashboard or steering wheel pad that houses the front airbag system. They might restrict inflation or cause death or serious injury as they are projected rearward by the force of deploying airbags. Likewise, the driver and front passenger should not hold objects in their arms or on their knees.**

- **Do not modify or remove any wiring. Do not modify, remove, strike or open any components such as the steering wheel pad, steering wheel, column cover, dashboard near the front passenger airbag, front passenger airbag cover, front passenger airbag or airbag sensor assembly. Doing so may prevent the front airbag system from activating correctly, cause sudden activation of the system or disable the system, which could result in death or serious injury.**

Failure to follow these instructions can result in death or serious injury. Consult your Toyota dealer about any repair and modification.

If you wish to modify your vehicle for a person with physical disability, consult your Toyota dealer. If may dangerously interfere with the SRS front airbags operation.

NOTICE

Do not perform any of the following changes without consulting your Toyota dealer. Such changes can interfere with proper operation of the SRS airbag system in some cases.

- ***Installation of electronic devices such as a mobile two−way radio, cassette tape player or compact disc player***
- ***Modification of the suspension system***
- ***Modification of the front end structure***
- ***Attachment of a grille guard (bull bar, kangaroo bar, etc.), snowplow, winches or any other equipment to the front end***
- ***Repairs made on or near the front fenders, front end structure, console, steering column, steering wheel or dashboard near the front passenger airbag***



This indicator comes on when the ignition key is turned to the “ON” position. It goes off after about 6 seconds. This means the SRS airbags are operating properly.

This warning light system monitors the airbag sensor assembly, front airbag sensors, side and curtain shield airbag sensors, curtain shield airbag sensors, driver’s seat position sensor, driver’s seat belt buckle switch, front passenger occupant classification system, “AIRBAG ON” indicator light, “AIRBAG OFF” indicator light, front passenger’s seat belt buckle switch, seat belt pretensioner assemblies, inflators, interconnecting wiring and power sources. (For details, see “Service reminder indicators and warning buzzers” on page 114 in Section 1−6.)

If any of the following conditions occurs, this indicates a malfunction of the airbags or seat belt pretensioners. Contact your Toyota dealer as soon as possible.

- The light does not come on when the ignition key is turned to the “ON” position or remains on for more than 6 seconds or flashes.
- The light comes on or starts flashing while driving.

The SRS warning light and “AIRBAG OFF” indicator light will come on if there is a malfunction in the front passenger occupant classification system.

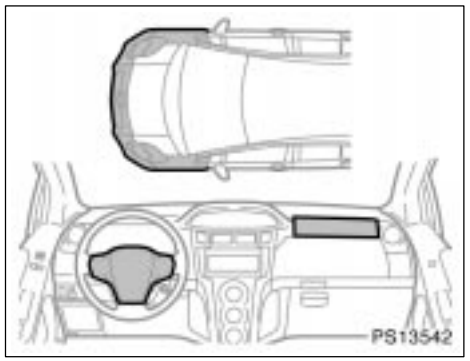

In the following cases, contact your Toyota dealer as soon as possible:

- The SRS airbags have been inflated.
- The front part of the vehicle (shaded in the illustration) was involved in an accident that was not severe enough to cause the SRS airbags to inflate.
- The pad part of the steering wheel or front passenger airbag cover (shaded in the illustration) is scratched, cracked, or otherwise damaged.

NOTICE

Do not disconnect the battery cables before contacting your Toyota dealer.

SRS side airbags and curtain shield airbags

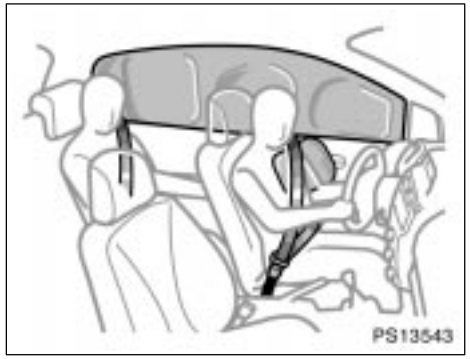

The SRS (Supplemental Restraint System) side airbags and curtain shield airbags are designed to provide further protection for the driver, front passenger and rear outside passengers in addition to the primary safety protection provided by the seat belts.

In response to a severe side impact, the SRS side airbags and curtain shield airbags work with the seat belts to help reduce injury by inflating. The SRS side airbags help reduce injuries mainly to the driver's or front passenger's chest and the SRS curtain shield airbags help reduce injuries mainly to the driver's front passenger's or rear outside passenger's head.

The SRS side airbag on the passenger seat will not activate if there is no passenger sitting in the front passenger seat. However, the side airbag on the passenger seat may deploy if luggage is put in the seat, or the seat belt is buckled up regardless of the presence of the occupant in the seat. (As for the front passenger occupant classification system, see "Front passenger occupant classification system" on page 69 in this Section.)

The SRS curtain shield airbag on the passenger side are activated even with no passenger in the front seat or rear outside seat.

The SRS curtain shield airbags may activate even when the side airbags are not activated.

Always wear your seat belt properly.

⚠ CAUTION

- **The SRS side airbag and curtain shield airbag system is designed only as a supplement to the primary protection of the driver, front passenger and rear outside passenger seat belt systems. To ensure maximum protection in an accident, the driver and all passengers in the vehicle must wear their seat belts properly. Wearing a seat belt properly during an accident reduces the chances of death or serious injury or being thrown out of the vehicle. For instructions and precautions concerning the seat belt system, see "Seat belts" on page 42 in this Section.**

- **Do not allow anyone to lean his/her head or any part of his/her body against the door or the area of the seat, front pillar, rear pillar or roof side rail from which the SRS side airbag and curtain shield airbag deploy even if he/she is a child seated in the child restraint system. It is dangerous if the SRS side airbag and curtain shield airbag inflate, and the impact of the deploying airbag could cause death or serious injury to the occupant.**
- **Improperly seated and/or restrained infants and children can be killed or seriously injured by the deploying airbags. An infant or child who is too small to use a seat belt should be properly secured using a child restraint system. Toyota strongly recommends that all infants and children be placed in the rear seats of the vehicle and properly restrained. The rear seats are the safest for infants and children. For instructions concerning the installation of a child restraint system, see “Child restraint” on page 74 in this Section.**

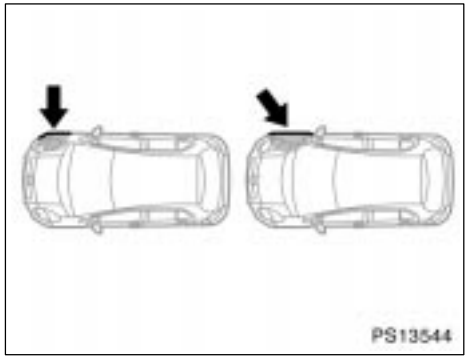

The SRS side airbag and curtain shield airbag system may not activate if the vehicle is subjected to a collision from the side at certain angles, or a collision to the side of the vehicle body other than the passenger compartment as shown in the illustration.

The SRS side airbags and curtain shield airbags are designed to inflate when the passenger compartment area suffers a severe impact from the side.

Always wear your seat belt properly.

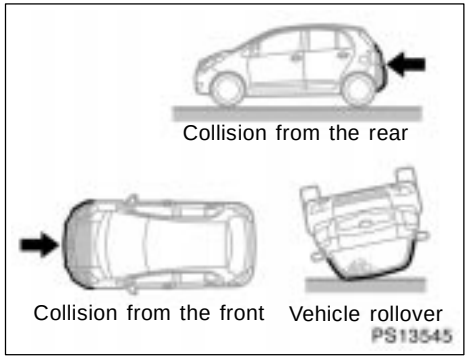

The SRS side airbags and curtain shield airbags are not generally designed to inflate if the vehicle is involved in a front or rear collision, if it rolls over, or if it is involved in a low−speed side collision.

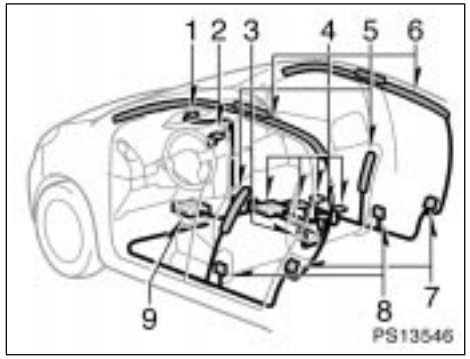

The SRS side airbag and curtain shield airbag system consists mainly of the following components, and their locations are shown in the illustration.

1. SRS warning light
2. “AIRBAG ON” and “AIRBAG OFF” indicator lights
3. Front passenger’s seat belt buckle switch
4. Front passenger occupant classification system (ECU and sensors)
5. Side airbag modules (airbag and inflator)
6. Curtain shield airbag modules (airbag and inflator)
7. Curtain shield airbag sensors
8. Side and curtain shield airbag sensors
9. Airbag sensor assembly

The SRS side airbag and curtain shield airbag system is controlled by the airbag sensor assembly. The airbag sensor assembly consists of a safing sensor and airbag sensor.

In a severe side impact, the side and curtain shield airbag sensor and/or the curtain shield airbag sensor trigger(s) the side airbag inflators and/or the curtain shield airbag inflators. At this time a chemical reaction in the inflators quickly fills the airbags with non−toxic gas to help restrain the lateral motion of the occupants.

When the airbags inflate, they produce a fairly loud noise and release some smoke and residue along with non−toxic gas. This does not indicate a fire. This smoke may remain inside the vehicle for some time, and may cause some minor irritation to the eyes, skin or breathing. Be sure to wash off any residue as soon as possible to prevent any potential skin irritation with soap and water. If you can safely exit from the vehicle, you should do so immediately.

Deployment of the airbags happen in a fraction of a second, so the airbags must inflate with considerable force. While the system is designed to reduce serious injuries, it may also cause minor burns or abrasions and swelling.

Front seats as well as parts of the front and rear pillars, and roof side rail may be hot for several minutes, but the airbags themselves will not be hot. The airbags are designed to inflate only once.

⚠ CAUTION

SRS side airbags and curtain shield airbags inflate with considerable force. To reduce the possibility of death or serious injury when they inflate, the driver, front passenger and rear outside passengers must:

- **Wear their seat belts properly.**
- **Remain properly seated with their backs upright and against the seats at all times.**



- Do not allow anyone to lean against the door when the vehicle is in use, since the side airbag and curtain shield airbag could inflate with considerable speed and force. Otherwise, he/she may be killed or seriously injured. Special care should be taken especially when you have a small child in the vehicle.
- Sit up straight and well back in the seat, distributing your weight evenly in the seat. Do not apply excessive weight to the outer side of the seats with a side airbag, and to the front pillar, rear pillar and roof side rail with a curtain shield airbag.



- Do not allow anyone to get his/her head closer to the area where the side airbag and curtain shield airbag inflate, since these airbags could inflate with considerable speed and force. Otherwise, he/she may be killed or seriously injured. Special care should be taken especially when you have a small child in the vehicle.



- Do not allow anyone to kneel on the passenger seat, facing the passenger's side door, since the side airbag and curtain shield airbag could inflate with considerable speed and force. Otherwise, he/she may be killed or seriously injured. Special care should be taken especially when you have a small child in the vehicle.

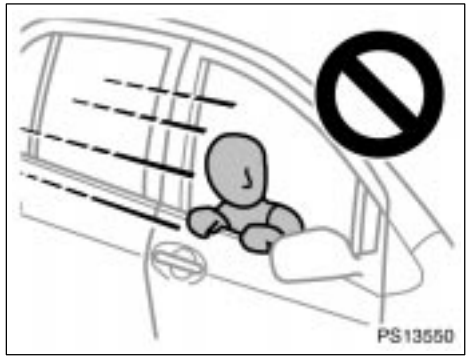

- Do not allow anyone to get his/her head or hands out of windows since the curtain shield airbags could inflate with considerable speed and force. Otherwise, he/she may be killed or seriously injured. Special care should be taken especially when you have a small child in the vehicle.

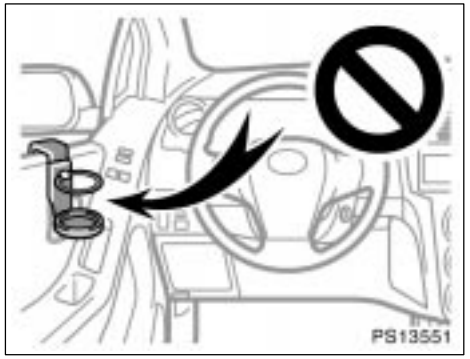

- Do not attach a cup holder or any other device or object on or around the door. When the side airbag inflates, the cup holder or any other device or object will be thrown with great force or the side airbag may not activate correctly, resulting in death or serious injury. Likewise, the driver and front passenger should not hold objects in their arms or on their knees.

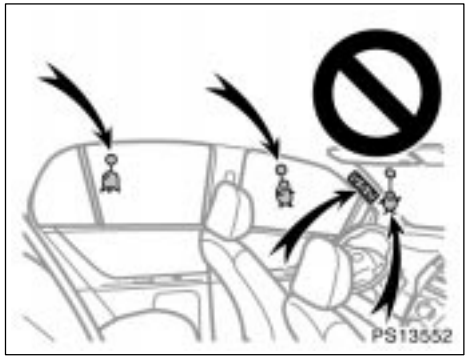

- Do not attach a microphone or any other device or object around the area where the curtain shield airbag activates such as on the windshield glass, side door glass, front and rear pillars, roof side rail and assist grips. When the curtain shield airbag inflates, the microphone or other device or object will be thrown away with great force or the curtain shield airbag may not activate correctly, resulting in death or serious injury.

- **Do not hook a hanger, heavy or sharp pointed objects on the coat hook. If the curtain shield airbag inflates, those items will be thrown away with great force or the curtain shield airbag may not activate correctly, resulting in death or serious injury. When you hang clothes, hang them on the coat hook directly.**
- **Do not use seat accessories which cover the parts where the side airbags inflate. Such accessories may prevent the side airbags from activating correctly, causing death or serious injury.**
- **Do not modify or replace the seats or upholstery or the seats with side airbags. Such changes may prevent the side airbag system from activating correctly, disable the system or cause the side airbags to inflate accidentally, resulting in death or serious injury.**

- **Do not disassemble or repair the front and rear pillars and roof side rail containing the curtain shield airbags. Such changes may disable the system or cause the curtain shield airbags to inflate accidentally, resulting in death or serious injury.**

Failure to follow these instructions can result in death or serious injury. Consult your Toyota dealer about any repair and modification.

If you wish to modify your vehicle for a person with physical disability, consult your Toyota dealer. It may dangerously interfere with the SRS front airbags operation.

NOTICE

Do not perform any of the following changes without consulting your Toyota dealer. Such changes can interfere with proper operation of the SRS side airbag and curtain shield airbag system in some cases.

- ***Installation of electronic devices such as a mobile two−way radio, cassette tape player or compact disc player***
- ***Modification of the suspension system***
- ***Modification of the side structure of the passenger compartment***
- ***Repairs made on or near the console or front seat***



This indicator comes on when the ignition key is turned to the “ON” position. It goes off after about 6 seconds. This means the SRS side airbags and curtain shield airbags are operating properly.

This warning light system monitors the airbag sensor assembly, front airbag sensors, side and curtain shield airbag sensors, curtain shield airbag sensors, driver’s seat position sensor, driver’s seat belt buckle switch, front passenger occupant classification system, “AIRBAG ON” indicator light, “AIRBAG OFF” indicator light, front passenger’s seat belt buckle switch, seat belt pretensioner assemblies, inflators, interconnecting wiring and power sources. (For details, see “Service reminder indicators and warning buzzers” on page 114 in Section 1−6.)

If either of the following conditions occurs, this indicates a malfunction of the airbags or seat belt pretensioners. Contact your Toyota dealer as soon as possible.

- The light does not come on when the ignition key is turned to the “ON” position or remains on for more than 6 seconds or flashes.
- The light comes on or starts flashing while driving.

The SRS warning light and “AIRBAG OFF” indicator light will come on if there is a malfunction in the front passenger occupant classification system.

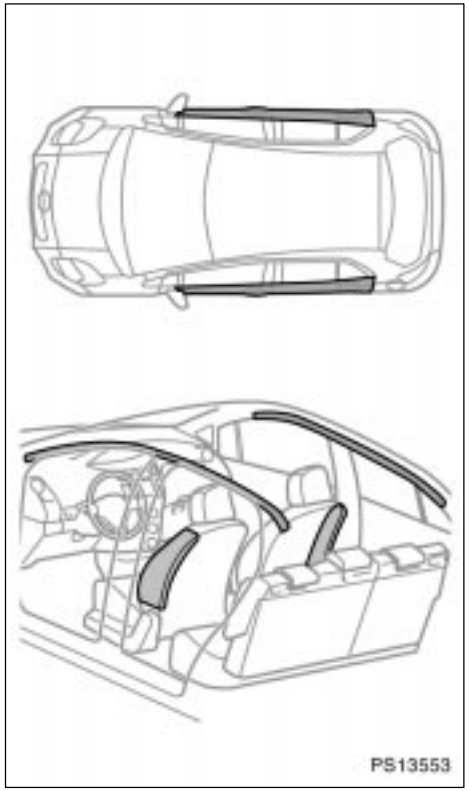

In the following cases, contact your Toyota dealer as soon as possible:

- Any of the SRS side airbags and curtain shield airbags have been inflated.
- The portion of the doors (shaded in the illustration) was involved in an accident that was not severe enough to cause the SRS side airbags and curtain shield airbags to inflate.
- The surface of the seats with the side airbag (shaded in the illustration) is scratched, cracked, or otherwise damaged.
- The portion of the front pillars, rear pillars or roof side rail garnishes (padding) containing the curtain shield airbags inside (shaded in the illustration) is scratched, cracked, or otherwise damaged.

NOTICE
Do not disconnect the battery cables before contacting your Toyota dealer.

Front passenger occupant classification system

Your vehicle is equipped with a front passenger occupant classification system. This system detects the conditions 1—4 (Shown in the table on page 72). Based on these conditions, the systems below are activated or deactivated:

- Front passenger airbag
- Side airbag on the front passenger seat
- Front passenger's seat belt pretensioner

The system monitors the weight and load on the front passenger seat, and the seat belt buckle switch to determine conditions 1—4.

In order to ensure the system detects the conditions correctly:

- Do not place a heavy load on the front passenger seat.
- Do not attach a commercial seatback table or other heavy item to the back of the front passenger seat.
- Do not apply pressure to the front passenger seat by resting hands or legs on the seatback.

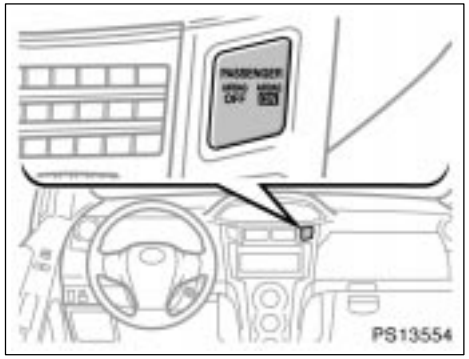

The "AIRBAG ON" and "AIRBAG OFF" indicator lights indicate the actuation of the front passenger airbag, side airbag on the front passenger seat and front passenger's seat belt pretensioner.

The "AIRBAG ON" and "AIRBAG OFF" indicator lights will be illuminated initially when the ignition key is turned to the "ON" position. After about 4 seconds, they will go off. After that, the front passenger occupant classification system operates and judges which indicator light be illuminated.

The “AIRBAG OFF” indicator light will be illuminated when the ignition switch is in the “ON” position with the condition 2 in the table shown below.

If the front passenger occupant classification system determines that person of adult size sits in the front passenger seat but the “AIRBAG OFF” indicator light is illuminated, one of the following is likely to have occurred:

- A rear passenger lifts the front passenger seat cushion with their legs.
- Objects are placed under the front passenger seat.
- The front passenger seatback is in contact with the rear seat.

To ensure the system correctly detects the presence or absence of a person of adult size sitting in the front passenger seat, make sure that none of the above occur.

Make sure that the “AIRBAG ON” indicator light is illuminated when a person of adult size is seated in the front passenger seat. If the “AIRBAG OFF” indicator light is illuminated, ask the passenger to sit up straight, well back in the seat, and with the seat belt worn correctly. If the “AIRBAG OFF” indicator light remains illuminated, either ask the passenger to move to the rear seat, or if that is not possible, move the front passenger seat fully rearward.

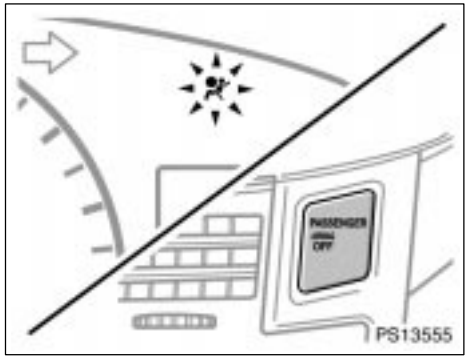

With tachometer

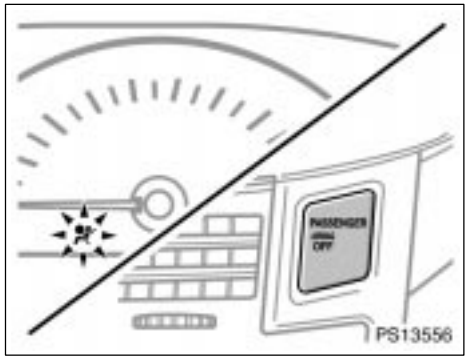

Without tachometer

The SRS warning light and “AIRBAG OFF” indicator light will come on if there is a malfunction in the front passenger occupant classification system. Contact your Toyota dealer as soon as possible.

Condition and operation in the front passenger classification system

<table>
<tr><td rowspan="2">Condition detected by the front passenger occupant classification system</td><td colspan="3">Indicator/warning light</td><td colspan="4">Devices</td></tr>
<tr><td>“AIRBAG ON” and “AIRBAG OFF” indicator lights</td><td>SRS warning light</td><td>Front passenger’s seat belt reminder light</td><td>Front passenger airbag</td><td>Side airbag on the front passenger seat</td><td>Curtain shield airbag in the front passenger side</td><td>Front passenger’s seat belt pretensioner</td></tr>
<tr><td>1. Adult*1</td><td>“AIRBAG ON”</td><td>Off</td><td>Flashing*4</td><td colspan="4">Activated</td></tr>
<tr><td>2. Child*2 or child restraint system*3</td><td>“AIRBAG OFF”</td><td>Off</td><td>Flashing*4</td><td colspan="2">Deactivated</td><td rowspan="3">Activated</td><td>Activated</td></tr>
<tr><td>3. Unoccupied</td><td>Not illuminated</td><td>Off</td><td>Off</td><td colspan="2">Deactivated</td><td>Deactivated</td></tr>
<tr><td>4. There is a malfunction in the system</td><td>“AIRBAG OFF”</td><td>On</td><td>Off</td><td colspan="2">Deactivated</td><td>Activated</td></tr>
</table>

*1: The system judges a person of adult size as an adult. When a smaller adult sits in the front passenger seat, the system may recognize him/her as a child depending on his/her physique and posture.

*2: When a larger child who has outgrown a child restraint system sits in the front passenger seat, the system may recognize him/her as an adult depending on his/her physique or posture.

*3: Never install a rear−facing child restraint system on the front passenger seat. A forward−facing child restraint system should only be installed on the front passenger seat when it is unavoidable. (See “Child restraint” on page 74 in this Section as for installing the child restraint system.)

*4: In the event that the front passenger does not wear a seat belt.

⚠ CAUTION

To avoid potential death or serious injury when the front passenger occupant classification system does not detect the conditions correctly, observe the following.

- **Do not recline the front passenger seat seatback so that it interferes with a rear seat as it may cause the "AIRBAG OFF" indicator light be illuminated. If the seatback interferes with the rear seat, return the seatback to a position where it does not interfere with the rear seat.**

  Keep the front passenger seatback as upright as possible when the vehicle is moving. Reclining the seatback excessively may lessen the effectiveness of the seat belt system.

- **Make sure the "AIRBAG ON" indicator light is illuminated when using the seat belt extender for the front passenger seat. If the "AIRBAG OFF" indicator light is illuminated, disconnect the extender tongue from the seat belt buckle, then reconnect the seat belt. Reconnect the seat belt extender after making sure the "AIRBAG ON" indicator light is illuminated. If you use the seat belt extender while the "AIRBAG OFF" indicator light is illuminated, the front passenger airbag and side airbag on the front passenger side may not activate correctly, which could cause death or serious injury in the event of collision.**

- **If an adult sits in the front passenger seat, the "AIRBAG ON" indicator light should be illuminated. If the "AIRBAG OFF" indicator light is illuminated, ask the passenger to sit up straight, well back in the seat, feet on the floor, and with the seat belt worn correctly. If the "AIRBAG OFF" indicator light still remains illuminated, either ask the passenger to move to the rear seat, or if that is not possible, move the front passenger seat fully rearward.**
- **Wear the seat belt properly.**
- **Make sure the front passenger's seat belt tab has not been left inserted into the buckle before someone sits in the front passenger seat.**
- **Do not place a heavy load on the front passenger seat.**
- **Do not apply pressure to the front passenger seat by resting hands or legs on the seatback.**

- **Do not let a rear passenger lift the front passenger seat with their feet or press on the seatback with their legs.**
- **Do not put objects under the front passenger seat.**
- **Do not attach a commercial seatback table or other heavy item to the back of the front passenger seat.**
- **Child restraint systems installed on the rear seat should not contact the front seatbacks.**
- **When it is unavoidable to install the forward−facing child restraint system on the front passenger seat, install the child restraint system on the front passenger seat in the proper order. (As for the installation order, see "—Installation with seat belt" on page 77 in this Section.)**
- **Do not modify or remove the front seats.**

- **Do not kick the front passenger seat or subject it to severe impact. Otherwise, the SRS warning light may come on to indicate a malfunction of the detection system. In this case, contact your Toyota dealer immediately.**

The "AIRBAG ON" indicator light may be illuminated (the front passenger airbag and side airbag on the front passenger seat may deploy) even if observing the above cautions, when a child sits in, or a forward−facing child restraint system is installed on the front passenger seat. Refer to all the cautions in this Section and "Child restraint" on page 74 in this Section.

Child restraint— —Child restraint precautions

Toyota strongly urges the use of appropriate child restraint systems for children.

The laws of all 50 states in the U.S.A. and Canada now require the use of a child restraint system.

Your vehicle conforms to SAE J1819.

If a child is too large for a child restraint system, the child should sit in the rear seat and must be restrained using the vehicle's seat belt. See "Seat belts" on page 42 in this Section for details.

⚠ CAUTION

- **For effective protection in automobile accidents and sudden stops, a child must be properly restrained, using a seat belt or child restraint system depending on the age and size of the child. Holding a child in your arms is not a substitute for a child restraint system. In an accident, the child can be crushed against the windshield, or between you and the vehicle's interior.**

- **Toyota strongly urges use of a proper child restraint system which conforms to the size of the child, installed on the rear seat. According to accident statistics, the child is safer when properly restrained in the rear seat than in the front seat.**
- **Never install a rear−facing child restraint system on the front passenger seat even if the “AIRBAG OFF” indicator light is illuminated. In the event of an accident, the force of the rapid inflation of the front passenger airbag can cause death or serious injury to the child if the rear−facing child restraint system is installed on the front passenger seat.**

- **A forward−facing child restraint system should be allowed to be installed on the front passenger seat only when it is unavoidable. Always move the seat as far back as possible even if the “AIRBAG OFF” indicator light is illuminated, because the front passenger airbag could inflate with considerable speed and force. Otherwise, the child may be killed or seriously injured.**
- **On vehicles with side airbags and curtain shield airbags, do not allow the child to lean his/her head or any part of his/her body against the door or the area of the seat, front or rear pillar or roof side rail from which the side airbags or curtain shield airbags deploy even if the child is seated in the child restraint system. It is dangerous if the side airbag and curtain shield airbag inflate, and the impact could cause death or serious injury to the child.**

- **Do not use the seat belt extender when installing a child restraint system on the front or rear passenger seat. If installing a child restraint system with the seat belt extender connected to the seat belt, the seat belt will not securely hold the child restraint system, which could cause death or serious injury to the child or other passengers in the event of collision.**
- **Make sure you have complied with all installation instructions provided by the child restraint manufacturer and that the system is properly secured. If it is not secured properly, it may cause death or serious injury to the child in the event of a sudden stop or accident.**

—Child restraint system

A child restraint system for a small child or baby must itself be properly restrained on the seat with the lap portion of the lap/shoulder belt. You must carefully consult the manufacturer's instructions which accompany the child restraint system.

To provide proper restraint, use a child restraint system following the manufacturer's instructions about the appropriate age and size of the child for the child restraint system.

Install the child restraint system correctly following the instructions provided by its manufacturer. General directions are also provided under the following illustrations.

The child restraint system should be installed on the rear seat. According to accident statistics, the child is safer when properly restrained in the rear seat than in the front seat.

When not using the child restraint system, keep it secured with the seat belt or place it somewhere other than the passenger compartment. This will prevent it from injuring passengers in the event of a sudden stop or accident.

—Types of child restraint system

Child restraint systems are classified into the following 3 types depending on the child's age and size.

(A) Infant seat

(B) Convertible seat

(C) Booster seat

Install the child restraint system following the instructions provided by its manufacturer.

Your vehicle has anchor brackets for securing the top strap of a child restraint system.

For instructions about how to use the anchor bracket, see "—Using a top strap" on page 89 in this Section.

The child restraint lower anchorages approved for your vehicle may also be used. See "—Installation with child restraint lower anchorages" on page 92 in this Section.

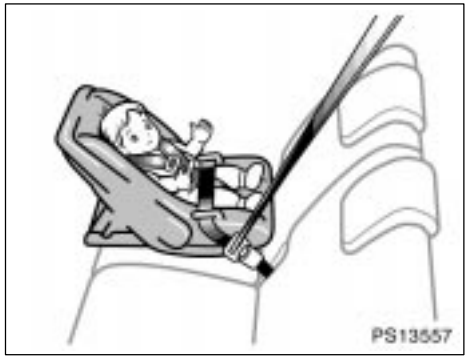

(A) Infant seat



(B) Convertible seat

—Installation with seat belt



(C) Booster seat

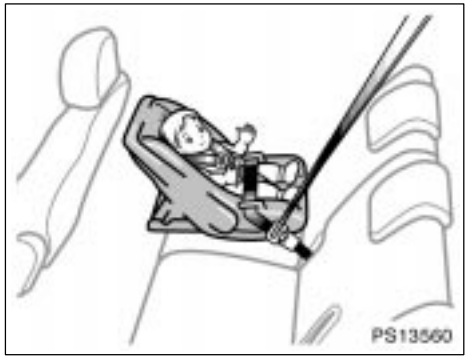

(A) INFANT SEAT INSTALLATION

An infant seat must be used in rear−facing position only.

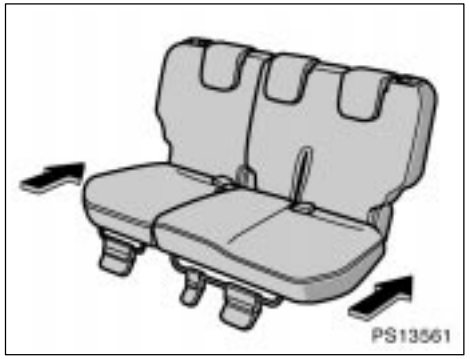

⚠ CAUTION

- **Split seat: When installing a rear−facing child restraint system in the rear seat, move the rear seat to the rear−most lock position to prevent the child restraint system from interfering with the front seat. Otherwise, the child restraint system may not be properly secured. In the event of an accident, this may cause death or serious injury.**



⚠ CAUTION

- **Never install a rear−facing child restraint system on the front passenger seat even if the “AIRBAG OFF” indicator light is illuminated. In the event of an accident, the force of the rapid inflation of the front passenger airbag can cause death or serious injury to the child if the rear−facing child restraint system is installed on the front passenger seat.**



- **Do not install a child restraint system on the rear seat if it interferes with the lock mechanism of the front seats. Otherwise, the child or front seat occupant(s) may be killed or seriously injured in case of sudden braking or a collision.**
- **If the driver’s seat position does not allow sufficient space for safe installation, install the child restraint system on the rear right seat.**

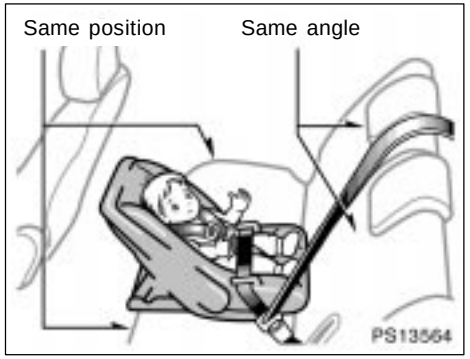

- **Split seat: When installing a child restraint system in the rear seat center position, adjust both seat cushions to the same position and align both seatbacks at the same angle. Otherwise, the child restraint system cannot be securely restrained and this may cause death or serious injuries in a collision.**

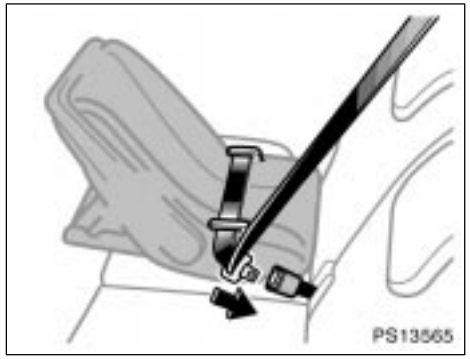

1. Run the lap and shoulder belt through or around the infant seat following the instructions provided by its manufacturer and insert the tab into the buckle taking care not to twist the belt. Keep the lap portion of the belt tight.

⚠ CAUTION

- **After inserting the tab, make sure the tab and buckle are locked and that the lap and shoulder portions of the belt are not twisted.**
- **Do not insert coins, clips, etc. in the buckle as this may prevent your child from properly latching the tab and buckle.**
- **If the seat belt does not function normally, it cannot protect your child from death or serious injury. Contact your Toyota dealer immediately. Do not install the child restraint system on the seat until the seat belt is fixed.**

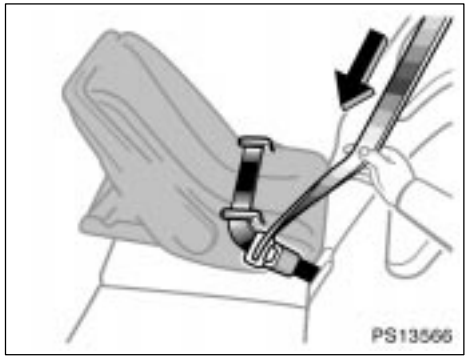

2. Fully extend the shoulder belt to put it in the lock mode. When the belt is then retracted even slightly, it cannot be extended.

To hold the infant seat securely, make sure the belt is in the lock mode before letting the belt retract.

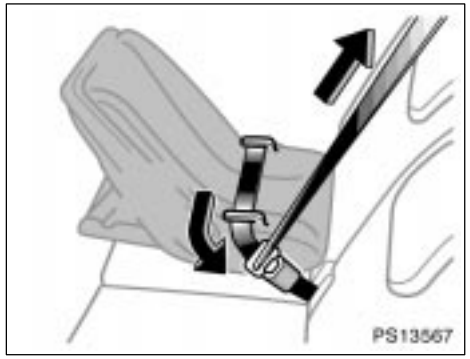

3. While pressing the infant seat firmly against the seat cushion and seatback, let the shoulder belt retract as far as it will go to hold the infant seat securely.

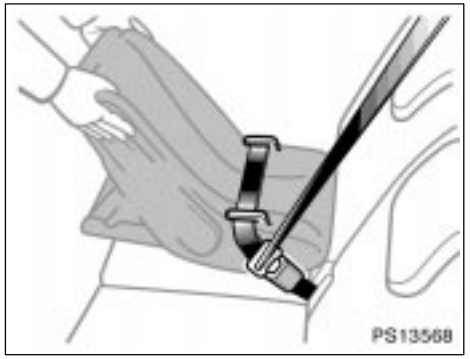

⚠ CAUTION

Push and pull the child restraint system in different directions to be sure it is secure. Follow all the installation instructions provided by its manufacturer.

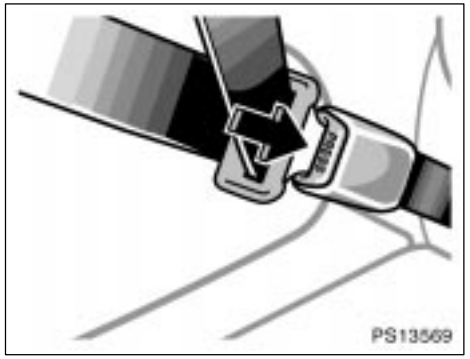

4. To remove the infant seat, press the buckle release button and allow the belt to retract completely. The belt will move freely again and be ready to work for an adult or older child passenger.



(B) CONVERTIBLE SEAT INSTALLATION

A convertible seat must be used in forward−facing or rear−facing position depending on the age and size of the child. When installing, follow the manufacturer's instructions about the applicable age and size of the child as well as directions for installing the child restraint system.

Install the child restraint system on the front passenger seat only when it is unavoidable. Your vehicle is equipped with a front passenger occupant classification system. In order to activate the occupant classification system correctly, install the forward−facing child restraint system on the front passenger seat in the following order:

1. Turn the ignition key to the "ON" position.
2. Move the front passenger seat to the rearward position.
3. If you must install the child restraint system on the front passenger seat, put the child restraint system putting your weight on the front passenger seat.
4. Insert the seat belt tab into the seat belt buckle.
5. Fully extend the shoulder belt to put it in the lock mode. When the belt is then retracted even slightly, it cannot be extended. To hold the seat securely, make sure the belt is in the lock mode before letting the belt retract.
6. While pressing the convertible seat firmly against the seat cushion and seatback, let the shoulder belt retract as far as it will go to hold the convertible seat securely.

⚠ CAUTION

Push and pull the child restraint system in different directions to be sure it is secure. Follow all the installation instructions provided by its manufacturer.

7. Put a child on the child restraint system and secure the child, complying with the instructions provided by the child restraint system manufacturer.

The “AIRBAG OFF” indicator light should be illuminated when the ignition key is in the “ON” position and the child is in the child restraint system after following these procedures. The “AIRBAG OFF” indicator light indicates the SRS front passenger airbag and side airbag on the passenger side will not deploy. If the “AIRBAG ON” indicator light is illuminated, do the following procedure:

1. Turn the ignition off.
2. Remove the child restraint system.
3. When reinstalling a child restraint system, make sure the seatback does not press the child restraint system into the seat cushion. If this occurs, adjust the seatback angle slightly.
4. Then make sure the head restraint is not pressing the child restraint system into the seat cushion. If this occurs, raise the head restraint.
5. Turn the ignition on again.

The “AIRBAG OFF” indicator light should be illuminated. If the “AIRBAG ON” indicator light is illuminated when the ignition key is turned to the “ON” position, then the SRS front passenger airbag and side airbag on the passenger side may deploy in an accident. Do not drive the vehicle in this condition. Remove the child restraint system and contact your Toyota dealer.

⚠ CAUTION

- **Never install a rear−facing child restraint system on the front passenger seat. A forward−facing child restraint system should only be installed on the front passenger seat when unavoidable. If you must install the child restraint system on the front passenger seat, put the seat in its most rearward position, and install the forward−facing child restraint system in the proper order. Otherwise, the front passenger occupant classification system cannot detect the presence of the child restraint system and the front passenger airbag and side airbag on the front passenger seat could deploy.**

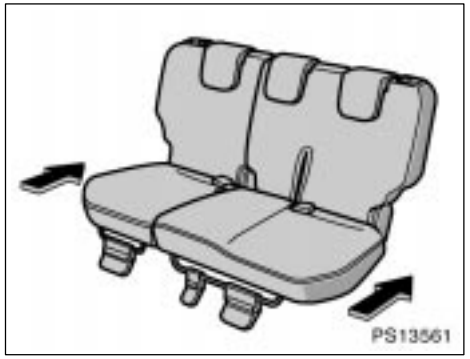

⚠ CAUTION

- **Split seat: When installing a rear−facing child restraint system in the rear seat, move the rear seat to the rear−most lock position to prevent the child restraint system from interfering with the front seat. Otherwise, the child restraint system may not be properly secured. In the event of an accident, this may cause death or serious injury.**



⚠ CAUTION

- **Never install a rear−facing child restraint system on the front passenger seat even if the “AIRBAG OFF” indicator light is illuminated. In the event of an accident, the force of the rapid inflation of the front passenger airbag can cause death or serious injury to the child if the rear−facing child restraint system is installed on the front passenger seat.**

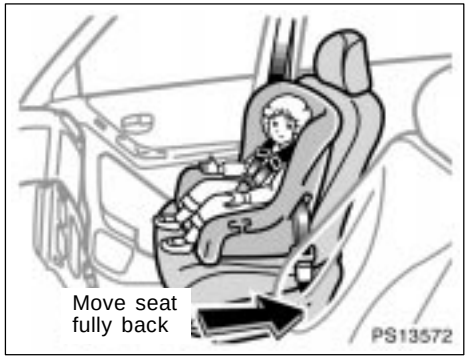

- **A forward−facing child restraint system should be allowed to be installed on the front passenger seat only when it is unavoidable. Always move the seat as far back as possible even if the “AIRBAG OFF” indicator light is illuminated, because the front passenger airbag could inflate with considerable speed and force. Otherwise, the child may be killed or seriously injured.**

- **On vehicles with side airbags and curtain shield airbags, do not allow the child to lean his/her head or any part of his/her body against the door or the area of the seat, front or rear pillar or roof side rail from which the side airbags or curtain shield airbags deploy even if the child is seated in the child restraint system. If is dangerous if the side airbag and curtain shield airbag inflate, and the impact could cause death or serious injury to the child.**

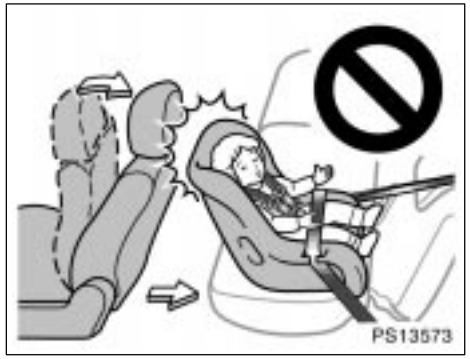

- **Do not install a child restraint system on the rear seat if it interferes with the lock mechanism of the front seats. Otherwise, the child or front seat occupant(s) may be killed or seriously injured in case of sudden braking or a collision.**
- **If the driver's seat position does not allow sufficient space for safe installation, install the child restraint system on the rear right seat.**

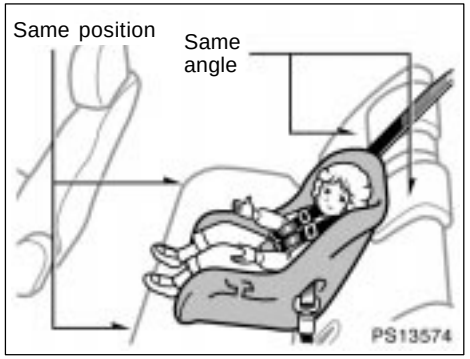

- **Split seat: When installing a child restraint system in the rear seat center position, adjust both seat cushions to the same position and align both seatbacks at the same angle. Otherwise, the child restraint system cannot be securely restrained and this may cause death or serious injuries in a collision.**

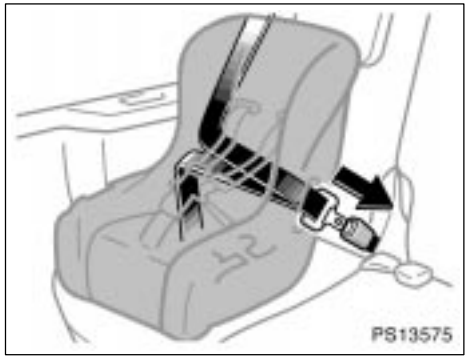

1. Run the lap and shoulder belt through or around the convertible seat following the instructions provided by its manufacturer and insert the tab into the buckle taking care not to twist the belt. Keep the lap portion of the belt tight.

⚠ CAUTION

- **After inserting the tab, make sure the tab and buckle are locked and that the lap and shoulder portions of the belt are not twisted.**
- **Do not insert coins, clips, etc. in the buckle as this may prevent your child from properly latching the tab and buckle.**
- **If the seat belt does not function normally, it cannot protect your child from death or serious injury. Contact your Toyota dealer immediately. Do not install the child restraint system on the seat until the seat belt is fixed.**



2. Fully extend the shoulder belt to put it in the lock mode. When the belt is then retracted even slightly, it cannot be extended.

To hold the convertible seat securely, make sure the belt is in the lock mode before letting the belt retract.

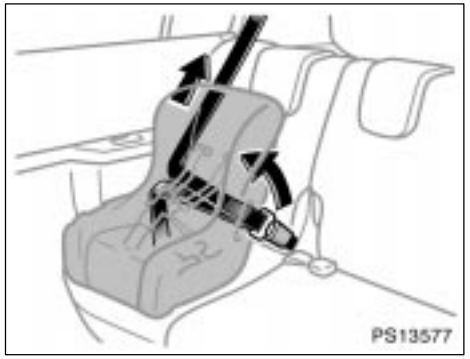

3. While pressing the convertible seat firmly against the seat cushion and seatback, let the shoulder belt retract as far as it will go to hold the convertible seat securely.

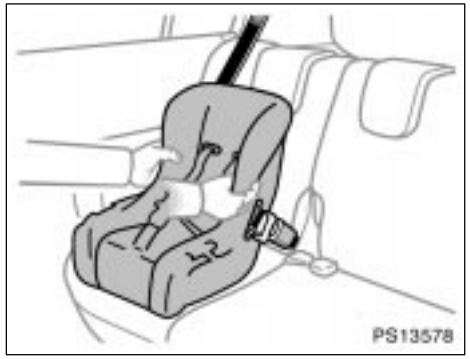

⚠ CAUTION

Push and pull the child restraint system in different directions to be sure it is secure. Follow all the installation instructions provided by its manufacturer.

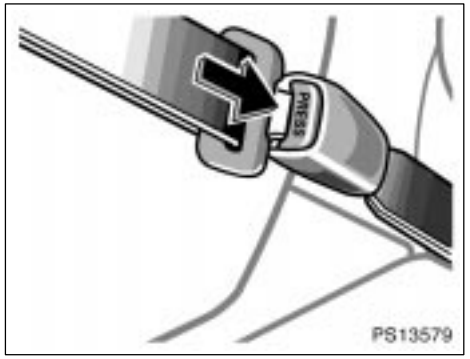

4. To remove the convertible seat, press the buckle release button and allow the belt to retract completely. The belt will move freely again and be ready to work for an adult or older child passenger.

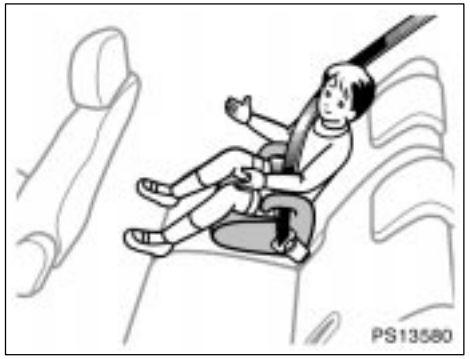

(C) BOOSTER SEAT INSTALLATION

A booster seat must be used in forward−facing position only.

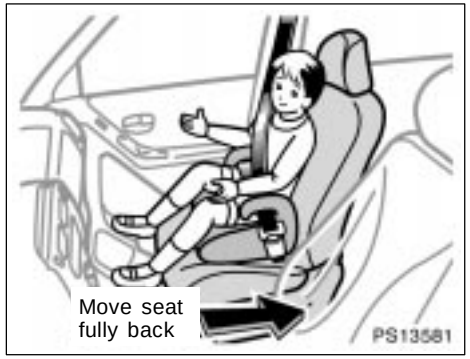

CAUTION

- **A forward−facing child restraint system should be allowed to be installed on the front passenger seat only when it is unavoidable. Always move the seat as far back as possible even if the "AIRBAG OFF" indicator light is illuminated, because the front passenger airbag could inflate with considerable speed and force. Otherwise, the child may be killed or seriously injured.**

- **On vehicles with side airbags and curtain shield airbags, do not allow the child to lean his/her head or any part of his/her body against the door or the area of the seat, front or rear pillar or roof side rail from which the side airbags or curtain shield airbags deploy even if the child is seated in the child restraint system. It is dangerous if the side airbag and curtain shield airbag inflate, and the impact could cause death or serious injury to the child.**

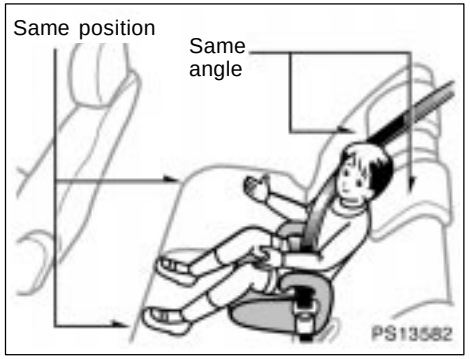

- **When installing a child restraint system in the rear seat center position, adjust both seat cushions to the same position and align both seatbacks at the same angle. Otherwise, the child restraint system cannot be securely restrained and this may cause death or serious injuries in a collision.**



1. Sit the child on a booster seat. Run the lap and shoulder belt through or around the booster seat and across the child following the instructions provided by its manufacturer and insert the tab into the buckle taking care not to twist the belt.

Make sure the shoulder belt is correctly across the child's shoulder and that the lap belt is positioned as low as possible on the child's hips. See "Seat belts" on page 42 in this Section for details.

⚠ CAUTION

- **Always make sure the shoulder belt is positioned across the center of child's shoulder. The belt should be kept away from child's neck, but not falling off child's shoulder. Otherwise, the child may be killed or seriously injured in case of sudden braking or a collision.**
- **Both high−positioned lap belts and loose−fitting belts could cause death or serious injuries due to sliding under the lap belt during a collision or other unintended event. Keep the lap belt positioned as low on a child's hips as possible.**
- **For child's safety, do not place the shoulder belt under child's arm.**
- **After inserting the tab, make sure the tab and buckle are locked and that the lap and shoulder portions of the belt are not twisted.**
- **Do not insert coins, clips, etc. in the buckle as this may prevent your child from properly latching the tab and buckle.**

- **If the seat belt does not function normally, it cannot protect your child from death or serious injury. Contact your Toyota dealer immediately. Do not install the child restraint system on the seat until the seat belt is fixed.**

—Using a top strap

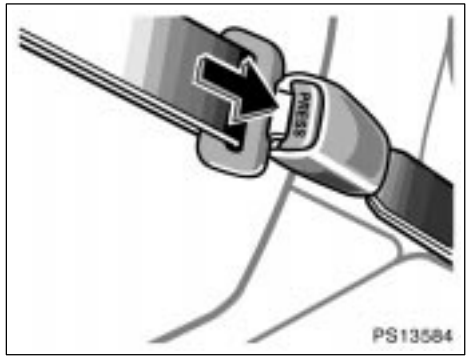

2. To remove the booster seat, press the buckle release button and allow the belt to retract.



Follow the procedure below for a child restraint system that requires the use of a top strap.

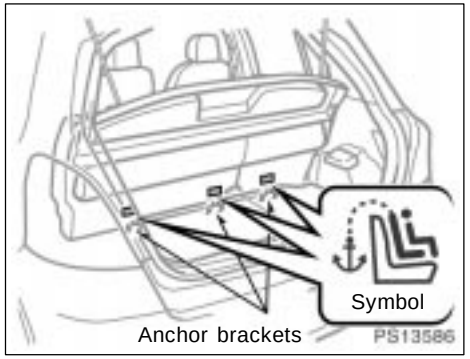

Use the anchor brackets behind the rear seatbacks to attach the top strap.

Anchor brackets are installed for each rear seating position.

This symbol indicates the locations of user ready anchor brackets.

TO USE THE ANCHOR BRACKET:

1. **Remove the deck board and luggage storage box. (See “Luggage storage box” on page 175 in Section 1−10.)**
2. **Remove the luggage cover. (See “Luggage cover” on page 175 in Section 1−10.)**

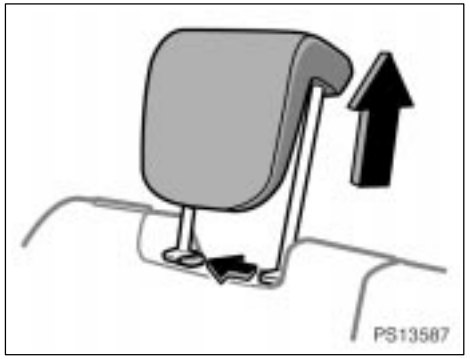

Split seat

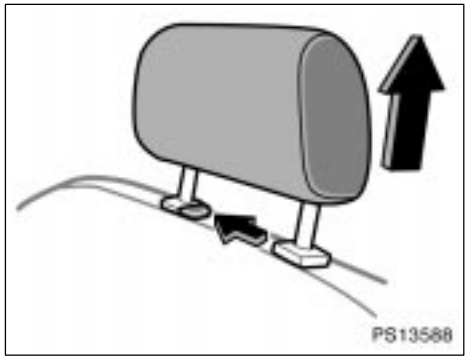

Non−split seat

3. **Remove the head restraint.**



4. Securely fasten the child restraint system with the seat belt.

Latch the hook onto the anchor bracket and tighten the top strap.

For instructions to install the child restraint system, see “Child restraint” on page 74 in this Section.

⚠ CAUTION

Make sure the top strap is securely latched, and check that the child restraint system is secure by pushing and pulling it in different directions. Follow all the installation instructions provided by its manufacturer.

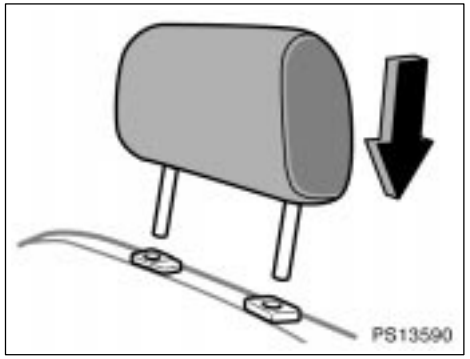

5. Non−split seat only—Replace the head restraint.

—Installation with child restraint lower anchorages

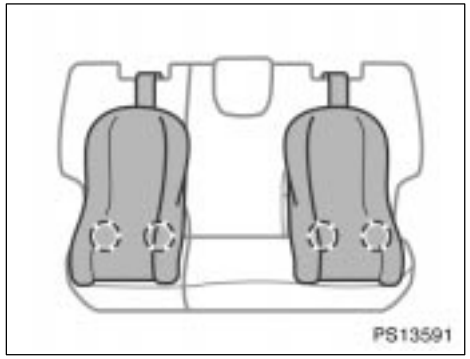

The lower anchorages for the child restraint system interfaced with the FMVSS225 or CMVSS210.2 specification are installed in the rear seat.

The anchorages are installed in the gap between the seat cushion and seatback of both outside rear seats.

Child restraint system interfaced with the FMVSS213 or CMVSS213 specification can be fixed with these anchorages. In this case, it is not necessary to fix the child restraint system with a seat belt on the vehicle.

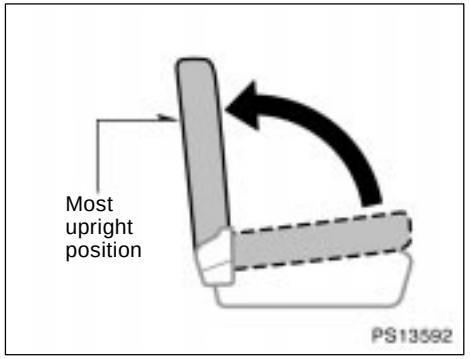

CHILD RESTRAINT SYSTEM INSTALLATION

1. **Fold down the seatback and back it to the most upright position until it locks into place.**

Make sure the seatback is locked securely.

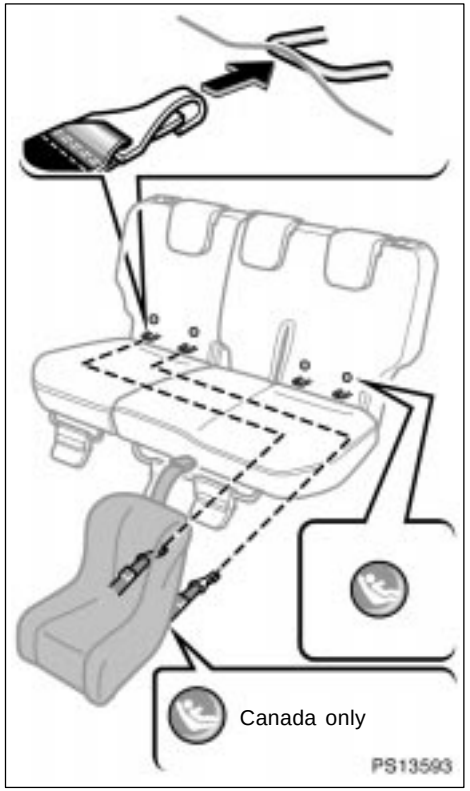

Type A

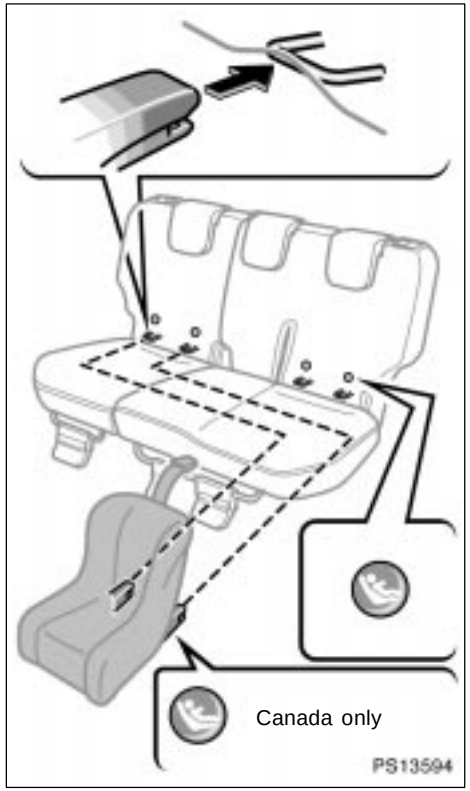

Type B

1. **Widen the gap between the seat cushion and seatback slightly and confirm the position of the lower anchorages below the button on the seatback.**
2. **Type A—Latch the hooks of lower straps onto the anchorages and tighten the lower straps.**

   Type B—Latch the buckles onto the anchorages.

For owners in Canada

The symbol on a child restraint system indicates the presence of a lower connector system.

If your child restraint system has a top strap, it should be anchored. (For the installation of the top strap, see "—Using a top strap" on page 89 in this Section.)

For installation details, refer to the instruction manual equipped with each product.

⚠ CAUTION

- **When using the lower anchorages for the child restraint system, be sure that there are no irregular objects around the anchorages or that the seat belt is not caught.**
- **Push and pull the child restraint system in different directions to be sure it is secure. Follow all the installation instructions provided by its manufacturer.**
- **Split seat—When using the lower anchorages for the child restraint system, ensure that the seat is moved to the rear−most position, with the seatback close to the child restraint system.**
- **After securing the child restraint system, never slide or recline the seat.**
- **Do not install a child restraint system on the rear seat if it interferes with the lock mechanism of the front seats. Otherwise, the child or front seat occupant(s) may be killed or seriously injured in case of sudden braking or a collision.**

SECTION 1–4

OPERATION OF INSTRUMENTS AND CONTROLS

Steering wheel and Mirrors

Tilt steering wheel 96
Outside rear view mirrors 96
Anti−glare inside rear view mirror 98
Sun visors 99
Vanity mirrors 100

Tilt steering wheel



To change the steering wheel angle, hold the steering wheel, push down the lock release lever, tilt the steering wheel to the desired angle and return the lever to its original position.

⚠ CAUTION

- **Do not adjust the steering wheel while the vehicle is moving. Doing so may cause the driver to mishandle the vehicle and an accident may occur resulting in death or serious injuries.**
- **After adjusting the steering wheel, try moving it up and down to make sure it is locked in position.**

Outside rear view mirrors—

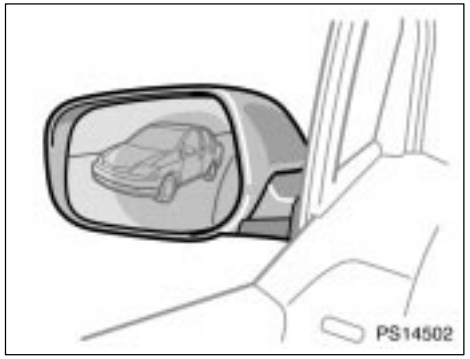

Adjust the mirror so that you can just see the side of your vehicle in the mirror.

Be careful when judging the size or distance of any object seen in the outside rear view mirror on the passenger's side because it is a convex mirror. Any object seen in a convex mirror will look smaller and farther away than when seen in a flat mirror.

—Power rear view mirror control

⚠ CAUTION

Do not adjust the mirror while the vehicle is moving. Doing so may cause the driver to mishandle the vehicle and an accident may occur resulting in death or serious injuries.

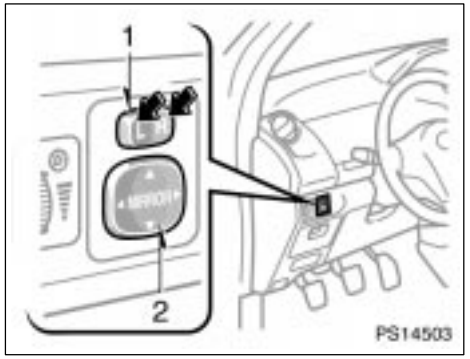

To adjust a mirror, use the switches.

1. Master switch—To select the mirror to be adjusted
   Push the switch to “L” (left) or “R” (right).
2. Control switch—To move the mirror
   Push the switch in the desired direction.

Mirrors can be adjusted when the key is in the “ACC” or “ON” position.

NOTICE

If ice should jam the mirror, do not operate the control or scrape the mirror face. Use a spray de−icer to free the mirror.

—Folding rear view mirrors

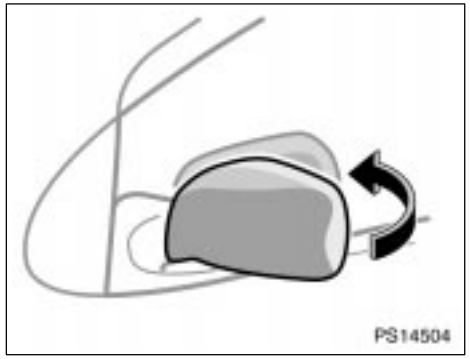

The rear view mirrors can be folded backward for parking in compact areas.

To fold the rear view mirror, push backward until you hear the click.

⚠ CAUTION

Do not drive with the mirrors folded backward. Both the driver and passenger side rear view mirrors must be extended and properly adjusted before driving.

NOTICE

Do not push backward more than the click. It may damage the mirror or vehicle.

Anti−glare inside rear view mirror

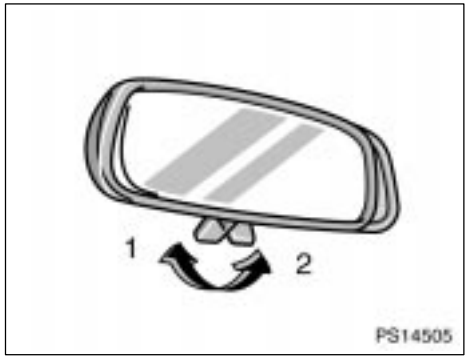

Adjust the mirror so you can just see the rear of your vehicle in the mirror.

To reduce glare from the headlights of the vehicle behind you during night driving, operate the lever on the lower edge of the mirror.

Daylight driving—Lever at position 1

The reflection in the mirror has greater clarity at this position.

Night driving—Lever at position 2

Remember that by reducing glare you also lose some rear view clarity.

Sun visors

⚠ CAUTION

Do not adjust the mirror while the vehicle is moving. Doing so may cause the driver to mishandle the vehicle and an accident may occur resulting in personal death or serious injuries.

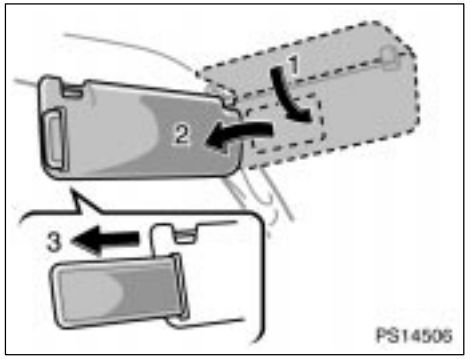

To block out glare, move the sun visor.

To block out glare from the front—Swing down the sun visor (position 1).

To block out glare from the side—Swing down the sun visor, remove it from the hook and swing it to the lateral side (position 2).

If glare comes from obliquely behind you, extend the plate at the end of the visor (position 3).

⚠ CAUTION

Do not extend the plate at the end of the sun visor when the visor is in the position 1. It can cover the anti−glare inside rear view mirror and obstruct the rear view.

Vanity mirrors

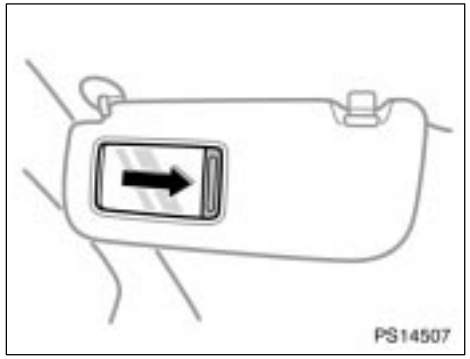

To use the vanity mirrors, swing down the sun visor and slide the cover.

SECTION 1–5

OPERATION OF INSTRUMENTS AND CONTROLS

Lights, Wipers and Defogger

Headlights and turn signals 102
Emergency flashers 103
Instrument panel light control 104
Front fog lights 104
Interior light 105
Personal lights 106
Windshield wipers and washer 106
Rear window wiper and washer 107
Rear window defogger 107

Headlights and turn signals

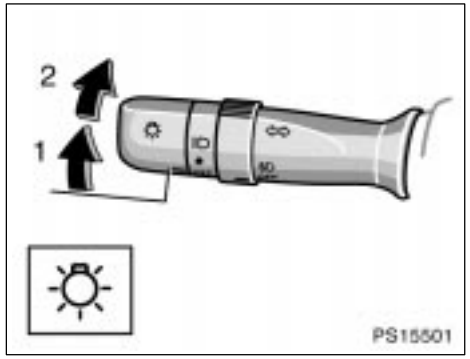

Except for Canada

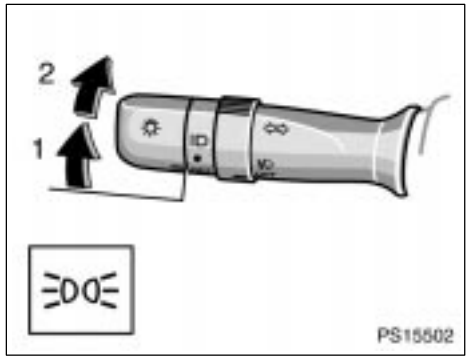

For Canada

HEADLIGHTS

To turn on the following lights: Twist the headlight/turn signal lever knob.

Position 1—Parking, tail, license plate, side marker and instrument panel lights

For Canada—The tail light indicator (green light) on the instrument panel will tell you that the tail lights are on.

Position 2—Headlights and all of the above

Except for Canada—The headlight low beam indicator light (green light) on the instrument panel will tell you that the low beams are on.

Light reminder buzzer

A buzzer will remind you to turn the lights off when the driver's door is opened if you remove the key with the headlight switch on.

NOTICE

To prevent the battery from being discharged, do not leave the lights on for a long period when the engine is not running.

Daytime running light system (on some models)

The daytime running light system can make it easier for others to see the front of your vehicle during the day. This system can be helpful in many different driving conditions, but they can be especially helpful in the short periods after dawn and before sunset.

This system will make your headlights come on at a reduced brightness when:

- The engine is running.
- The parking brake is released.
- The headlight/turn signal lever knob is in the "OFF" position.

To turn on the other exterior lights and instrument panel lights, twist the knob to position 1.

Twist the knob to position 2 to turn the headlights to full intensity for night driving.

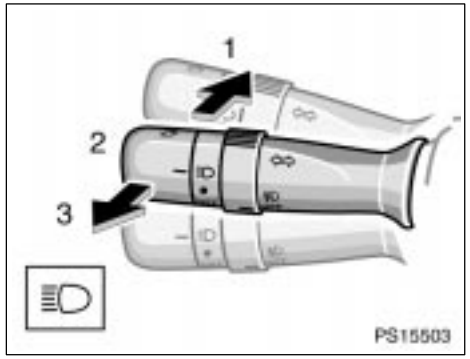

High−Low beams—For high beams, turn the headlights on and push the lever away from you (position 1). Pull the lever toward you (position 2) for low beams.

The headlight high beam indicator light (blue light) on the instrument panel will tell you that the high beams are on.

Flashing the high beam headlights (position 3)—Pull the lever all the way back. The high beam headlights turn off when you release the lever.

You can flash the high beam headlights with the knob turned to “OFF”.

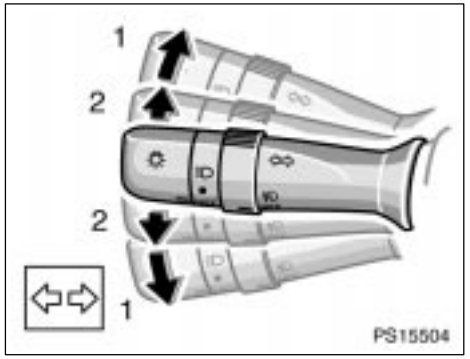

TURN SIGNALS

To signal a turn, push the headlight/turn signal lever up or down to position 1.

The key must be in the “ON” position.

The lever automatically returns after you make a turn, but you may have to return it by hand after you change lanes.

To signal a lane change, move the lever up or down to the pressure point (position 2) and hold it.

If the turn signal indicator lights (green lights) on the instrument panel flash faster than normal, a front or rear turn signal bulb is burned out. See “Replacing light bulbs” on page 288 in Section 7−3.

Emergency flashers

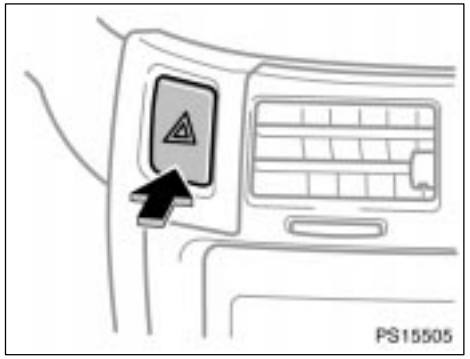

To turn on the emergency flashers, push the switch.

All the turn signal lights will flash. To turn them off, push the switch once again.

Turn on the emergency flashers to warn other drivers if your vehicle must be stopped where it might be a traffic hazard.

Always pull as far off the road as possible.

The turn signal light switch will not work when the emergency flashers are operating.

NOTICE

To prevent the battery from being discharged, do not leave the switch on longer than necessary when the engine is not running.

Instrument panel light control



To adjust the brightness of the instrument panel lights, turn the dial.

With the dial turned fully up, the intensity of the instrument panel lights will not be reduced even when the tail lights/headlights are turned on.

Front fog lights

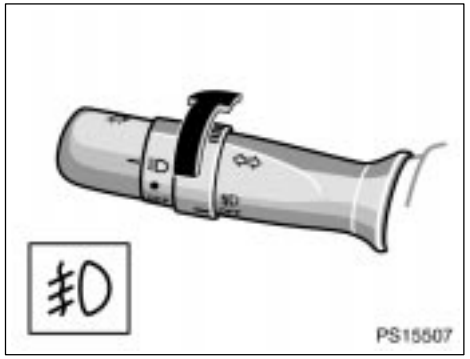

To turn on the front fog lights, twist the band of the headlight and turn signal switch lever. They will come on when the head lights are on low beam.

Interior light

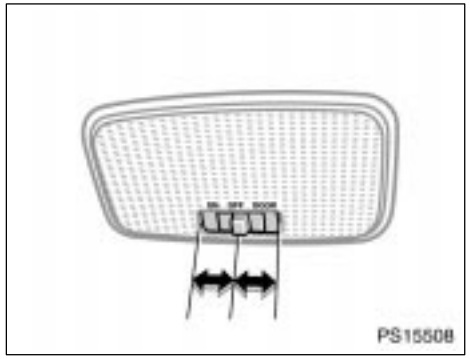

To turn on the interior light, slide the switch.

The interior light switch has the following positions:

“ON”—Keeps the light on all the time.

“OFF”—Turns the light off.

“DOOR”—Turns the light on when any side doors are opened. The light goes off when all the side doors are closed.

ILLUMINATED ENTRY SYSTEM

Door linked operation—When the switch is in the “DOOR” position and any of the side doors is opened, the light will come on. After all the side doors are closed, the light remains on for about 15 seconds before fading out.

Ignition switch linked operation—When the switch is in the “DOOR” position, and the ignition switch is turned to “LOCK”, the light will come on. The light remains on for about 15 seconds before fading out.

However, in the following cases, the light goes off immediately.

- All the side doors are closed when the ignition key is in the “ACC” or “ON” position.
- Vehicles with the power door lock system—All the side doors and back door are closed and locked.

Vehicles with the power door lock system—When the driver’s door is unlocked using either the key or the wireless remote control, the interior light will come on and remain on for about 15 seconds before fading out.

Vehicles with the power door lock system and vehicles sold in Puerto Rico—The following adjustments can be made in this system. For details, contact your Toyota dealer.

- Vehicles with the power door lock system—Cancelling the door key or the wireless remote control linked operation
- Cancelling the ignition switch linked operation
- Changing the duration of lighting

To prevent the battery being discharged, the light will automatically turn off when the key is removed and the side door is left opened with the switch at the “DOOR” position for 20 minutes or more.

Personal lights

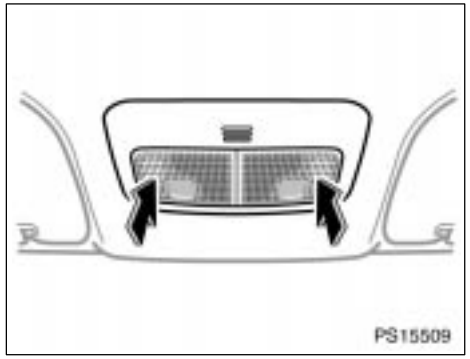

To turn on the personal light, push the lens. To turn the light off, push the lens once again.

Windshield wipers and washer

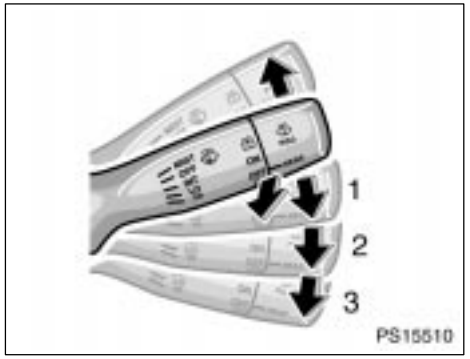

To turn on the windshield wipers, move the lever to the desired setting.

The key must be in the “ON” position.

Lever position	Speed setting
Position 1	Intermittent
Position 2	Slow
Position 3	Fast

For a single sweep of the windshield, push the lever up and release it.

To squirt washer fluid, pull the lever toward you.

If the windshield wipers are off, they will operate a couple of times after the washer squirts.

For instructions on adding washer fluid, see “Adding washer fluid” on page 288 in Section 7−3.

In freezing weather, warm the windshield with the defroster before using the washer. This will help prevent the washer fluid from freezing on your windshield, which can block your vision.

NOTICE

Do not operate the wipers if the windshield is dry. It may scratch the glass.

When waxing your vehicle, make sure that the washer nozzles do not become blocked. If a nozzle becomes blocked, contact your Toyota dealer to have the vehicle serviced.

NOTICE

If a nozzle becomes blocked, do not try to clear it with a pin or other object. The nozzle will be damaged.

Rear window wiper and washer

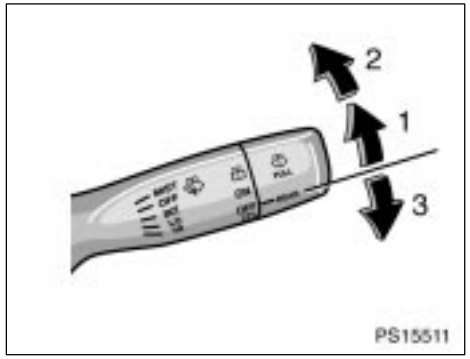

To turn on the rear window wiper, twist the lever knob upward. (Position 1)

The key must be in the “ON” position.

To squirt washer fluid on the rear window, twist the knob upward or downward as far as it will go (position 2 or 3). The knob automatically returns from these positions after you release it. The rear window wiper operates while the washer squirts.

For instructions on adding washer fluid, see “Adding washer fluid” on page 288 in Section 7−3.

NOTICE

Do not operate the rear wiper if the rear window is dry. It may scratch the glass.

Rear window defogger

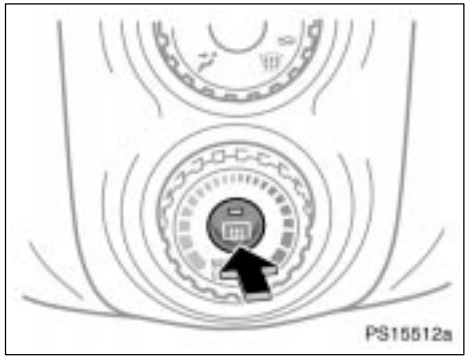

To defog or defrost the rear window, push the switch.

The key must be in the “ON” position.

The thin heater wires on the inside of the rear window will quickly clear the surface. An indicator light will illuminate to indicate the defogger is operating.

Push the switch once again to turn the defogger off.

Make sure you turn the defogger off when the window is clear. Leaving the defogger on for a long time could cause the battery to discharge, especially during stop−and−go driving. The defogger is not designed for drying rain water or for melting snow.

NOTICE
◆ *To prevent the battery from being discharged, turn the switch off when the engine is not running.* ◆ *When cleaning the inside of the rear window, be careful not to scratch or damage the heater wires or connectors.*

SECTION 1–6

OPERATION OF INSTRUMENTS AND CONTROLS

Gauges, Meters and Service reminder indicators

Fuel gauge 110
Engine coolant temperature indicator and warning light 111
Tachometer 112
Odometer and two trip meters 112
Service reminder indicators and warning buzzers 114

Fuel gauge

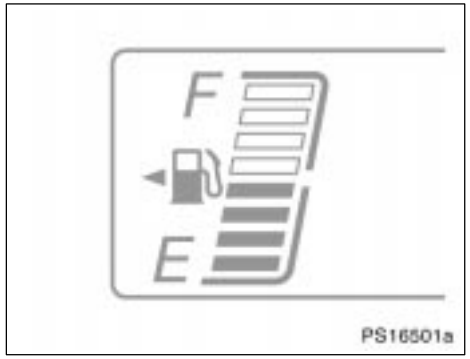

With tachometer

The gauge works when the ignition switch is on and indicates the approximate quantity of fuel remaining in the tank.

Nearly full—Indicator at “F”
Nearly empty—Indicator at “E”

It is a good idea to keep the tank over 1/4 full.

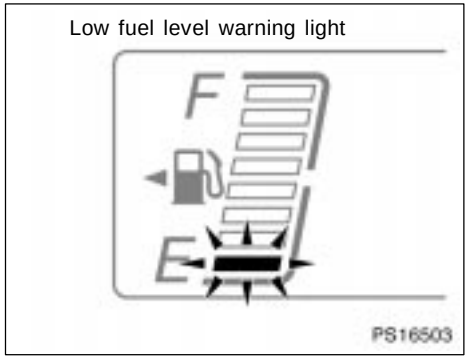

With tachometer

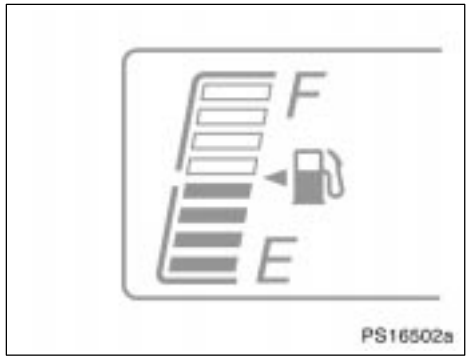

Without tachometer

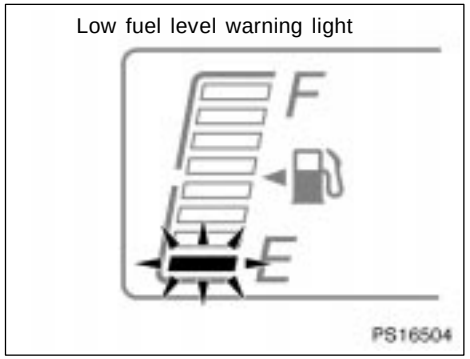

Without tachometer

If the low fuel level warning light flashes, fill the fuel tank as soon as possible. Further fuel reduction makes the light blink quicker.

If the fuel tank is completely empty, the malfunction indicator lamp comes on. Fill the fuel tank immediately.

The indicator lamp goes off after driving several times. If the indicator lamp does not go off, contact your Toyota dealer as soon as possible.

Engine coolant temperature indicator and warning light

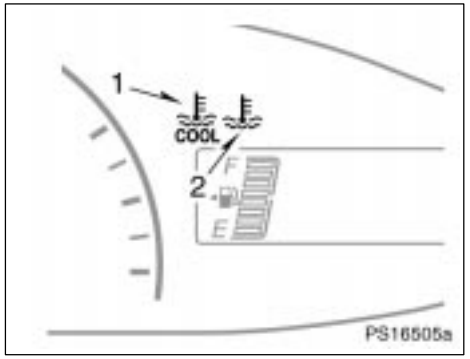

With tachometer

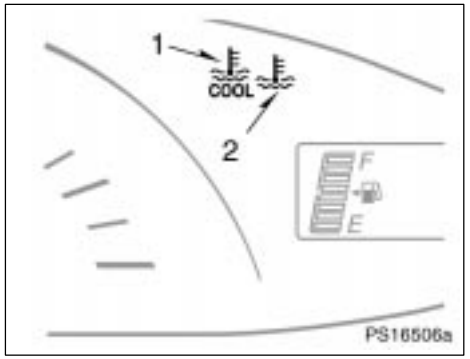

Without tachometer

1. Low engine coolant temperature indicator light
2. High engine coolant temperature warning light

The indicator and warning lights indicate the engine coolant temperature when the ignition switch is on. The engine operating temperature will vary with changes in weather and engine load.

The high engine coolant temperature warning light will come on when the ignition key is turned to the “ON” position. After a few seconds, the light will go off.

If your engine coolant temperature is cool with the ignition switch on, the low engine coolant temperature indicator light comes on. If it keeps lighting on with the engine fully warmed, contact your Toyota dealer as soon as possible to service the vehicle.

If the high engine coolant temperature warning light flashes, your engine is too hot. If your vehicle overheats, stop your vehicle and allow the engine to cool.

Your vehicle may overheat during severe operating conditions, such as:

- Driving up a long hill on a hot day.
- Reducing speed or stopping after high speed driving.
- Idling for a long period with the air conditioning on in stop−and−go traffic.
- Towing a trailer.

NOTICE

- ***Do not remove the thermostat in the engine cooling system as this may cause the engine to overheat. The thermostat is designed to control the flow of coolant to keep the temperature of the engine within the specified operating range.***
- ***Do not continue driving with an overheated engine. See "If your vehicle overheats" on page 227 in Section 4.***

Tachometer

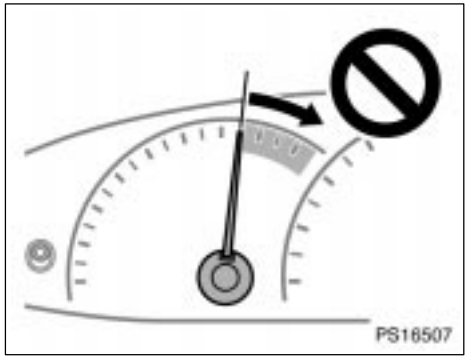

The tachometer indicates engine speed in thousands of rpm (revolutions per minute). Use it while driving to select correct shift points and to prevent engine lugging and over−revving.

Driving with the engine running too fast causes excessive engine wear and poor fuel economy. Remember, in most cases the slower the engine speed, the greater the fuel economy.

NOTICE

Do not let the indicator get segment into the red zone. This may cause severe engine damage.

Odometer and two trip meters

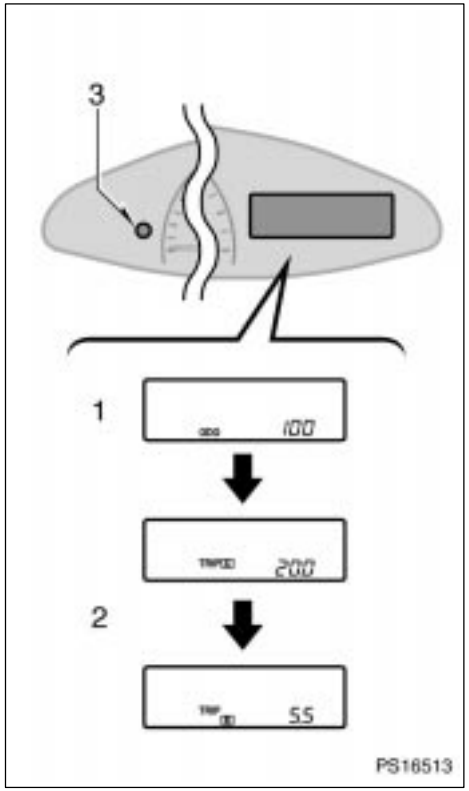

With tachometer

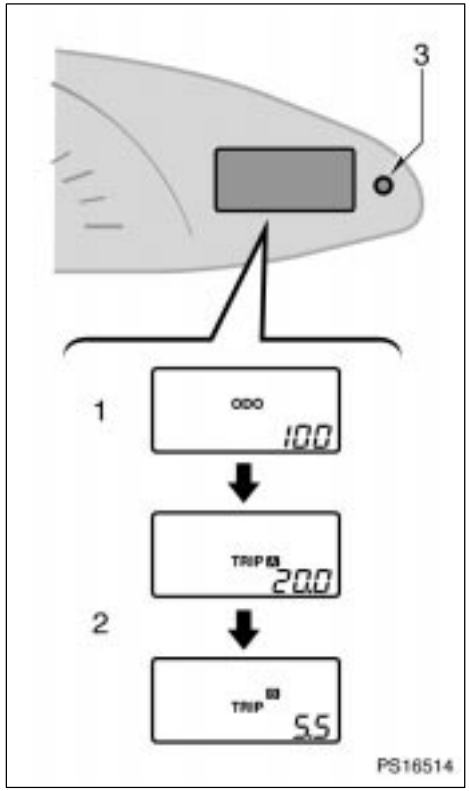

Without tachometer

This meter displays the odometer and two trip meters.

1. Odometer—Shows the total distance the vehicle has been driven.
2. Two trip meters—Shows two different distances independently driven since the last time each trip meter was set to zero.

   You can use one trip meter to calculate the fuel economy and the other to measure the distance on each trip. All trip meter data is cancelled if the electrical power source is disconnected.
3. Trip meter reset knob—It can reset the two trip meters to zero, and also change the meter display.

   To change the meter display, quickly push and release the knob. The meter display changes in the order from the odometer to trip meter A to trip meter B, then back to the odometer each time you push.

   To reset the trip meter A to zero, display the meter A reading, then push and hold the knob until the meter is set to zero. The same process can be applied for resetting the trip meter B.

Service reminder indicators and warning buzzers

If the indicator or buzzer comes on...		Do this.
(a)	BRAKE or 	If parking brake is off, stop immediately and contact Toyota dealer.
(b)	 (Indicator and buzzer)	Fasten driver's seat belt.
(c)	PASSENGER  (Indicator and buzzer)	Fasten front passenger's seat belt.
(d)		Stop immediately and contact Toyota dealer.
(e)	 CHECK or 	Take vehicle to Toyota dealer.
(f)	 or 	Fill up tank.

If the indicator or buzzer comes on...		Do this.
(g)		Stop and check.
(h)	ABS or 	Take vehicle to Toyota dealer. If brake system warning light is also on, stop immediately and contact Toyota dealer.
(i)		Close all side doors and back door.
(j)	P/S	Take vehicle to Toyota dealer.
(k)		Take vehicle to Toyota dealer immediately.
(l)		Add washer fluid.
(m)	MAINT REQD	Replace engine oil.

If the indicator or buzzer comes on...		Do this.
(n)		Stop and check.
(o)	Key reminder buzzer	Remove key.
(p)	Light reminder buzzer	Turn off lights.

(a) Brake System Warning Light

This light comes on in the following cases when the ignition key is in the “ON” position.

- **When the parking brake is applied...**

Vehicles with anti−lock brake system—

This light comes on for a few seconds when the ignition key is turned to the “ON” position even after the parking brake is released.

- **When the brake fluid level is low...**

CAUTION

It is dangerous to continue driving normally when the brake fluid level is low.

Have your vehicle checked at your Toyota dealer in the following cases:

- The light does not come on even if the parking brake is applied when the ignition key is in the “ON” position.

Vehicles with anti−lock brake system—

- The light does not come on even if the ignition key is turned on with the parking brake released.

A warning light turning on briefly during operation does not indicate a problem.

CAUTION

If either of the following conditions occurs, immediately stop your vehicle at a safe place and contact your Toyota dealer

- **The light does not turn off even after the parking brake is released while the engine is running.**

  In this case, the brakes may not work properly and your stopping distance will become longer. Depress the brake pedal firmly and bring the vehicle to an immediate stop.

Vehicles with anti−lock brake system—

- **The brake system warning light remains on together with the “ABS” warning light.**

  In this case, not only the anti−lock brake system will fail but also the vehicle will become extremely unstable during braking.

(b) Driver’s Seat Belt Reminder Light and Buzzer

The light and buzzer act as a reminder to buckle up the driver’s seat belt.

Once the ignition key is turned to “ON” or “START”, the reminder light flashes and buzzer sounds if the driver’s seat belt is not fastened. Unless the driver fastens the belt, the light keeps flashing and the buzzer stops after about 6 seconds.

If the vehicle speed rises above 20 km/h (12 mph) with the seat belt unfastened, the buzzer will sound for 10 seconds. Then, if the seat belt is still unfastened, the buzzer will sound in a different tone for 20 seconds. Even if the vehicle speed drops below 20 km/h (12 mph), the buzzer will continue to sound. To stop the buzzer, fasten the seat belt. If the buzzer still sounds, make sure the front passenger’s seat belt is fastened.

The buzzer can be disabled. For details, contact your Toyota dealer.

(c) Front Passenger’s Seat Belt Reminder Light and Buzzer

The light and buzzer act as a reminder to have the front passenger buckle up the seat belt.

Once the ignition key is turned to “ON” or “START”, the reminder light flashes if a passenger sits in the front passenger seat and does not fasten the seat belt.

If the vehicle speed rises above 20 km/h (12 mph) with the seat belt unfastened, the buzzer will sound for 10 seconds. Then, if the seat belt is still unfastened, the buzzer will sound in a different tone for 20 seconds. Even if the vehicle speed drops below 20 km/h (12 mph), the buzzer will continue to sound. To stop the buzzer, fasten the seat belt. If the buzzer still sounds, make sure the driver’s seat belt is fastened.

If luggage or other load is placed on the front passenger seat, depending on its weight, the reminder light may flash and buzzer to sound.

The buzzer can be disabled. For details, contact your Toyota dealer.

(d) Charging System Warning Light

This warning light comes on when the ignition key is turned to the “ON” position, and goes off when the engine is started.

When there are problems in the charging system while the engine is running, the warning light comes on.

NOTICE

When the charging system warning light comes on while the engine is running, malfunctions such as the engine drive belt being broken may have occurred. If the warning light comes on, immediately stop the vehicle in a safe place and contact your Toyota dealer.

(e) Malfunction Indicator Lamp

This lamp comes on when the ignition key is turned to the “ON” position and goes off after the engine starts. This means that the warning light system is operating properly.

If the lamp remains on, or the lamp comes on while driving, first check the followings.

- Empty fuel tank

  If the fuel tank is empty, refuel immediately.

- Loose fuel tank cap

  If the fuel tank cap is loose, securely tighten it.

These cases are temporary malfunctions. The malfunction indicator lamp will go off after taking several driving trips.

If the lamp does not go off even after several trips, contact your Toyota dealer as soon as possible.

If the fuel tank is not empty or the fuel tank cap is not loose...

- There is a problem somewhere in the engine, emission control system, electronic throttle control system, automatic transmission electrical system or warning light system itself.

Contact your Toyota dealer as soon as possible to service the vehicle.

If engine speed does not increase when the accelerator pedal is depressed, there may be a problem somewhere in the electronic throttle control system.

At this time, vibration may occur. However, if you depress the accelerator pedal more firmly and slowly, you can drive your vehicle at low speeds. Have your vehicle checked by your Toyota dealer as soon as possible.

Even if the abnormality of the electronic throttle control system is corrected during low speed driving, the system may not be recovered until the engine is stopped and the engine off.

CAUTION

Be especially careful to prevent erroneous pedal operation.

Emissions Inspection and Maintenance (I/M) programs

Your vehicle may not pass a state emission inspection if the malfunction indicator lamp remains on. Contact your Toyota dealer to check your vehicle's emission control system and OBD (On−Board Diagnostics) system before taking your vehicle for the inspection.

For details, see "Emissions Inspection and Maintenance (I/M) programs" on page 260 in Section 6.

(f) Low Fuel Level Warning Light

This light flashes when the fuel level in the tank becomes nearly empty. Fill up the tank as soon as possible.

On inclines or curves, due to the movement of fuel in the tank, the low fuel level warning light may flash earlier than usual.

(g) Low Engine Oil Pressure Warning Light

This light warns that the engine oil pressure is too low.

If it flickers or stays on while you are driving, pull off the road to a safe place and stop the engine immediately. Call a Toyota dealer or qualified repair shop for assistance.

The light may occasionally flicker when the engine is idling or it may come on briefly after a hard stop. There is no cause for concern if it then goes out when the engine is accelerated slightly.

The light may come on when the oil level is extremely low. It is not designed to indicate low oil level, and the oil level must be checked using the level dipstick.

NOTICE

Do not drive the vehicle with the warning light on—even for one block. It may ruin the engine.

(h) "ABS" Warning Light

The light comes on when the ignition key is turned to the "ON" position. If the anti−lock brake system works properly, the light turns off after a few seconds. Thereafter, if the system malfunctions, the light comes on again.

When the "ABS" warning light is on (and the brake system warning light is off), the anti−lock brake system does not operate, but the brake system still operates conventionally.

When the "ABS" warning light is on (and the brake system warning light is off), the anti−lock brake system does not operate so that the wheels could lock up during a sudden braking or braking on slippery road surfaces.

If either of the following conditions occurs, this indicates a malfunction somewhere in the parts monitored by the warning light system. Contact your Toyota dealer as soon as possible to service the vehicle.

- The light does not come on when the ignition key is turned to the "ON" position or remains on for more than 6 seconds or flashes.
- The light comes on while you are driving.

A warning light turning on briefly during operation does not indicate a problem.

CAUTION

If the “ABS” warning light remains on together with the brake system warning light, immediately stop your vehicle at a safe place and contact your Toyota dealer.

In this case, not only the anti−lock brake system will fail but also the vehicle will become extremely unstable during braking.

(i) Open Door Warning Light

This light remains on until all the side doors and back door are completely closed.

(j) Electric Power Steering System Warning Light

The light comes on when the ignition key is turned to the “ON” position. If the electric power steering system warning light works properly, the light turns off after a few seconds. If the system has malfunctions, the light comes on again.

If the following conditions occur, this indicates a malfunction somewhere in the parts monitored by the warning light system. Contact your Toyota dealer as soon as possible to service the vehicle.

- The light does not come on when the ignition key is turned to the “ON” position or remains on.
- The light stays on while you are driving.

The warning light turning on while racing the engine for a long time may not indicate malfunction. To turn off the light, restart the engine and start driving.

CAUTION

If the electric power steering system warning light comes on, take your vehicle to Toyota dealer as soon as possible. In this case, more effort is required for the steering wheel to turn than usual. Drive your vehicle while firmly gripping the steering wheel.

(k) SRS Warning Light

This light will come on when the ignition key is turned to the “ON” position. After about 6 seconds, the light will go off. This means the system of the airbags and front seat belt pretensioners are operating properly.

The warning light system monitors the airbag sensor assembly, front airbag sensors, side and curtain shield airbag sensors, curtain shield airbag sensors, driver’s seat position sensor, driver’s seat belt buckle switch, front passenger occupant classification system, “AIRBAG ON” indicator light, “AIRBAG OFF” indicator light, front passenger’s seat belt buckle switch, seat belt pretensioner assemblies, inflators, interconnecting wiring and power sources.

If either of the following conditions occurs, this indicates a malfunction somewhere in the parts monitored by the warning light system. Contact your Toyota dealer as soon as possible to service the vehicle.

- The light does not come on when the ignition key is turned to the “ON” position or remains on for more than 6 seconds or flashes.
- The light comes on or starts flashing while driving.

(l) Low Windshield Washer Fluid Level Warning Light

The light warns that the windshield washer fluid level is too low. Add washer fluid at your earliest opportunity. (For instructions, see “Adding washer fluid” on page 288 in Section 7−3.)

The light operates to warn that the engine is almost overheating.

(m) Engine Oil Replacement Reminder Light (Except for Canada)

This light acts as a reminder to replace the engine oil.

This light will come on when the ignition key is turned to “ON” and will go off after about a few seconds.

When you drive for about 7200 km (4500 miles) after the engine oil replacement, this light illuminates for about 3 seconds and then flashes for about 12 seconds with the ignition key turned to the “ON” position. If you continue driving without replacing the engine oil, and if the distance driven exceeds 8000 km (5000 miles), the light will come on. The light will remain on thereafter.

If the light is flashing, we recommend that you replace the engine oil at an early opportunity depending on the driving and road conditions. If the light comes on, replace it as soon as possible.

The system must be reset after the engine oil replacement. Reset the system by the following procedure:

1. Turn the ignition key to the “OFF” position with the trip A reading shown. (For details, see “Odometer and two trip meters” on page 112 in this Section.)
2. Turn the ignition key to the “ON” position while holding down the trip meter reset knob.

Hold down the knob for at least 5 seconds. The indicator light flashes and the bars displayed in the odometer disappear gradually. The odometer indicates “000000” and the light goes off.

If the system fails to reset, the light will continue flashing.

(n) High Engine Coolant Temperature Warning Light

The light operates to warn that the engine is almost overheating.

The high engine coolant temperature warning light will come on when the ignition key is turned to the “ON” position. After a few seconds, the light will go off.

If your engine coolant temperature is cool with the ignition switch on, the low engine coolant temperature indicator light comes on. If it keeps lighting on with the engine fully warmed, contact your Toyota dealer as soon as possible to service the vehicle.

If the high engine coolant temperature warning light flashes, your engine is too hot. If your vehicle overheats, stop your vehicle and allow the engine to cool.

Your vehicle may overheat during severe operating conditions, such as:

- Driving up a long hill on a hot day.
- Reducing speed or stopping after high speed driving.
- Idling for a long period with the air conditioning on in stop−and−go traffic.

NOTICE

- ***Do not remove the thermostat in the engine cooling system as this may cause the engine to overheat. The thermostat is designed to control the flow of coolant to keep the temperature of the engine within the specified operating range.***
- ***Do not continue driving with an overheated engine. See "If your vehicle overheats" on page 227 in Section 4.***

(o) Key Reminder Buzzer

This buzzer acts as a reminder to remove the key when you open the driver's door with the ignition key in the "ACC" or "LOCK" position.

(p) Light Reminder Buzzer

This buzzer will sound if the headlight switch is left on and the driver's door is opened with the key removed from the ignition switch.

CHECKING SERVICE REMINDER INDICATORS (except the low fuel level warning light and low windshield washer fluid level warning light)

1. Apply the parking brake.
2. Open one of the side doors or back door.
   The open door warning light should come on.
3. Close all the side doors and back door. The open door warning light should go off.
4. Turn the ignition key to "ON", but do not start the engine.

   All the service reminder indicators except the open door warning light should come on. The "ABS" warning light, engine oil replacement reminder light, high engine coolant temperature warning light and electric power steering system warning light goes off after a few seconds. The SRS warning light goes off after about 6 seconds.

If any service reminder indicator or warning buzzer does not function as described above, have it checked by your Toyota dealer as soon as possible.

SECTION 1–7

OPERATION OF INSTRUMENTS AND CONTROLS

Ignition switch, Transmission and Parking brake

Ignition switch 124
Automatic transmission 125
Manual transmission 128
Parking brake 129

Ignition switch

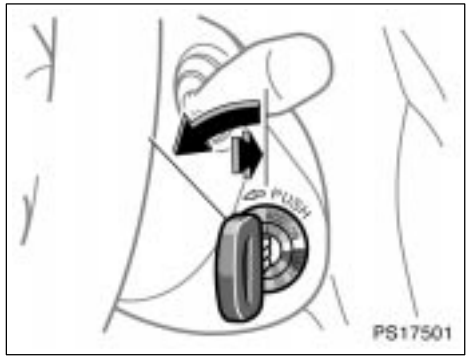

“START”—Starter motor on. The key will return to the “ON” position when released.

For starting tips, see Section 3.

“ON”—Engine on and all accessories on.

This is the normal driving position.

“ACC”—Accessories such as the radio operate, but the engine is off.

If you leave the key in the “ACC” or “LOCK” position and open the driver’s door, a buzzer will remind you to remove the key.

“LOCK”—Engine is off and the steering wheel is locked. The key can be removed only at this position.

You must push in the key to turn the key from “ACC” to the “LOCK” position. On vehicles with an automatic transmission, the selector lever must be put in the “P” position before pushing the key.

Vehicles with engine immobilizer system—Once you remove the key, the engine immobilizer system is automatically set. (See “Engine immobilizer system” on page 13 in Section 1−2.)

When starting the engine, the key may seem stuck at the “LOCK” position. To free it, first be sure the key is pushed all the way in, and then rock the steering wheel slightly while turning the key gently.

Approximately five hours after the engine is turned off, you may hear sound coming from underneath the luggage compartment for several minutes. This is normal operation and does not indicate a malfunction. (See “Leak detection pump” on page viii.)

It is not a malfunction if the needles on all meters move slightly when the key is turned to the “ACC”, “ON” or “START” position.

⚠ CAUTION

For manual transmission:

Never remove the key when the vehicle is moving, as this will lock the steering wheel and result in loss of steering control.

NOTICE

Do not leave the key in the “ON” position if the engine is not running. The battery will discharge and the ignition could be damaged.

Automatic transmission

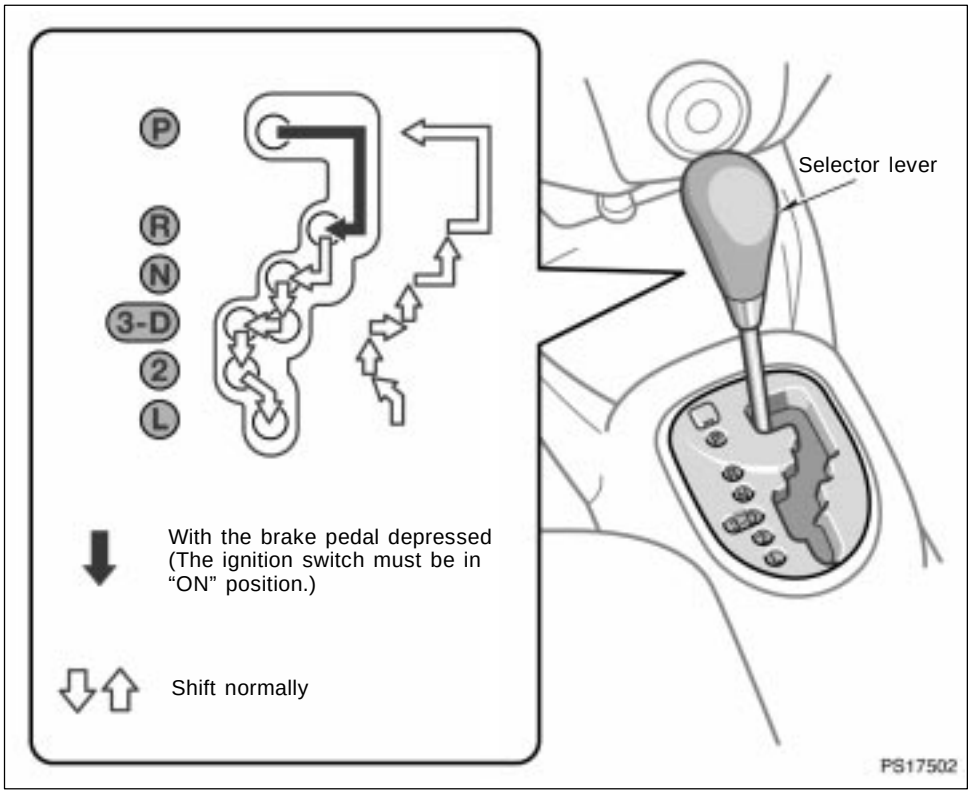

Your automatic transmission has a shift lock system to minimize the possibility of incorrect operation. This means you can only shift out of "P" position when the brake pedal is depressed (with the ignition switch in "ON" position).

(a) Selector lever

P: Parking, engine starting and key removal

R: Reverse

N: Neutral

D: Normal driving (shifting into overdrive possible)

3: Engine braking (shifting into overdrive not possible)

2: Stronger engine braking

L: Maximum engine braking

(b) Normal driving

1. Start the engine as instructed in “How to start the engine” in Section 3. The transmission must be in “P” or “N”.
2. With your foot holding down the brake pedal, shift the selector lever to “D”.

When the lever is in the “D” position, the automatic transmission system will select the most suitable gear for running conditions such as normal cruising, hill climbing, hard towing, etc.

Always use the “D” position for better fuel economy and quieter driving. If the engine coolant temperature is low, the transmission will not shift into overdrive gear even in the “D” position.

⚠ CAUTION

Never put your foot on the accelerator pedal while shifting.

3. Release the parking brake and brake pedal. Depress the accelerator pedal slowly for smooth starting.

(c) Using engine braking

To use engine braking, you can downshift the transmission as follows:

- Shift into the “3” position. The transmission will downshift to third gear and engine braking will be enabled.
- Shift into the “2” position. The transmission will downshift to second gear when the vehicle speed drops down to or lower than 86 km/h (53 mph), and stronger engine braking will be enabled.
- Shift into the “L” position. The transmission will downshift to first gear when the vehicle speed drops down to or lower than 43 km/h (26 mph), and maximum engine braking will be enabled.

⚠ CAUTION

Be careful when downshifting on a slippery surface. Abrupt shifting could cause the vehicle to skid or spin.

(d) Using “2” and “L” positions

The “2” and “L” positions are used for strong engine braking as described previously.

With the selector lever in “2” or “L”, you can start the vehicle in motion as with the lever in “D”.

With the selector lever in “2”, the vehicle will start in first gear and automatically shift to second gear.

With the selector lever in “L”, the transmission is engaged in first gear.

NOTICE

- ***Be careful not to over−rev the engine. Watch the tachometer to keep engine rpm from going into the red zone. The approximate maximum allowable speed for each position is given below for your reference:***

  "2" . . . . . 103 km/h (64 mph)
  "L" . . . . . 56 km/h (34 mph)

- ***Do not continue hill climbing or hard towing for a long time in the "2" or "L" position. This may cause severe automatic transmission damage from overheating. To prevent such damage, "D" or "3" position should be used in hill climbing or hard towing.***

(e) Backing up

1. Bring the vehicle to a complete stop.
2. With the brake pedal held down with your foot, shift the selector lever to the "R" position.

NOTICE

Never shift into reverse while the vehicle is moving.

(f) Parking

1. Bring the vehicle to a complete stop.
2. Pull the parking brake lever up fully to securely apply the parking brake.
3. With the brake pedal pressed down, shift the selector lever to the "P" position.

⚠ CAUTION

Never attempt to move the selector lever into "P" position under any circumstances while the vehicle is moving. Serious mechanical damage and loss of vehicle control may result.

(g) Good driving practice

- If the transmission repeatedly shifts up and down between third gear and overdrive gears when climbing a gentle slope, shift the selector lever to the "3" position. Be sure to shift the selector lever to the "D" position immediately afterward.
- When towing a trailer, in order to maintain engine braking efficiency, do not use "D" position. The selector lever must be in the "3" position.

⚠ CAUTION

Always keep your foot on the brake pedal while stopped with the engine running. This prevents the vehicle from creeping.

NOTICE

Always use the brake pedal or the parking brake to hold the vehicle on an upgrade. Do not attempt to hold the vehicle using the accelerator pedal, as this can cause the transmission to overheat.

(h) If you cannot move the selector lever out of "P" position

If you cannot shift the selector lever from the "P" position even though the brake pedal is depressed, use the shift lock override button. For instructions, see "If you cannot shift automatic transmission selector lever" on page 244 in Section 4.

Manual transmission

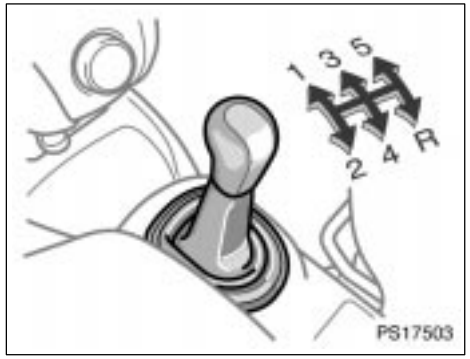

The shift pattern is conventional as shown above.

Press the clutch pedal down fully while shifting, and then release it slowly. Do not rest your foot on the pedal while driving, because it will cause clutch trouble. Do not use the clutch to hold the vehicle when stopped on an uphill grade—use the parking brake.

Recommended shifting speeds

The transmission is fully synchronized and upshifting or downshifting is easy.

For the best compromise between fuel economy and vehicle performance, you should upshift or downshift at the following speeds:

Low altitude
—1219 m (4000 ft.) or lower

gear	km/h (mph)
1 to 2 or 2 to 1	24 (15)
2 to 3 or 3 to 2	40 (25)
3 to 4 or 4 to 3	64 (40)
4 to 5 / 5 to 4	72/64 (45/40)

High altitude
—Higher than 1219 m (4000 ft.)
Upshifting

gear	km/h (mph)
1 to 2	24 (15)
2 to 3	64 (40)
3 to 4	75 (47)
4 to 5	87 (54)

Downshifting

gear	km/h (mph)
2 to 1	24 (15)
3 to 2	40 (25)
4 to 3	64 (40)
5 to 4	64 (40)

Downshift to the appropriate gear if acceleration is needed when you are cruising below the above downshifting speeds.

Upshifting too soon or downshifting too late will cause lugging, and possibly pinging. Regularly revving the engine to maximum speed in each gear will cause excessive engine wear and high fuel consumption.

Maximum allowable speeds

To get on a highway or to pass slower traffic, maximum acceleration may be necessary. Make sure you observe the following maximum allowable speeds in each gear:

gear	km/h (mph)
1	51 (31)
2	95 (59)
3	139 (86)

NOTICE

Do not downshift if you are going faster than the maximum allowable speed for the next lower gear.

Good driving practice

- If it is difficult to shift into reverse, put the transmission in neutral, release the clutch pedal momentarily, and then try again.
- When towing a trailer, in order to maintain engine braking efficiency, do not use fifth gear.

⚠ CAUTION

Be careful when downshifting on a slippery surface. Abrupt shifting could cause the vehicle to skid or spin.

NOTICE

- ***Do not use any gears other than first gear when starting off and moving forward. Doing so may damage the clutch.***
- ***Make sure the vehicle is completely stopped before shifting into reverse.***

Parking brake

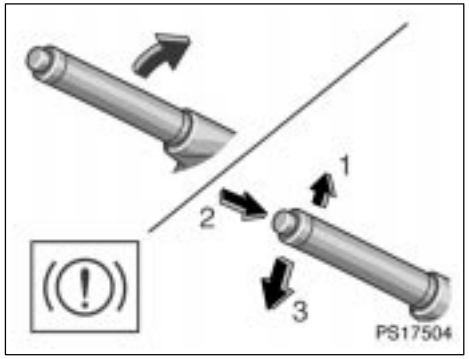

Type A

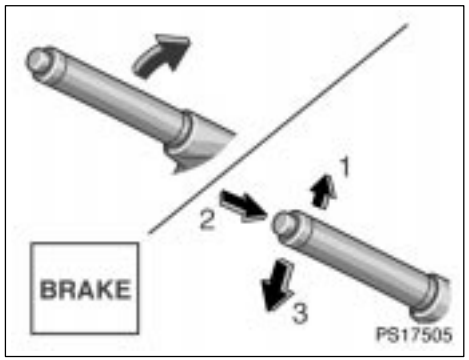

Type B

When parking, firmly apply the parking brake to avoid inadvertent creeping.

To set: Pull up the lever. For better holding power, first depress the brake pedal and hold it while setting the parking brake.

To release: Pull up the lever slightly (1), press the thumb button (2), and lower (3).

To remind you that the parking brake is set, the parking brake reminder light in the instrument panel remains on until you release the parking brake.

⚠ CAUTION

Before driving, be sure the parking brake is fully released and the parking brake reminder light is off.

SECTION 1–8

OPERATION OF INSTRUMENTS AND CONTROLS

Audio system

Reference 132
Using your audio system 132
Audio system operating hints 147

Reference

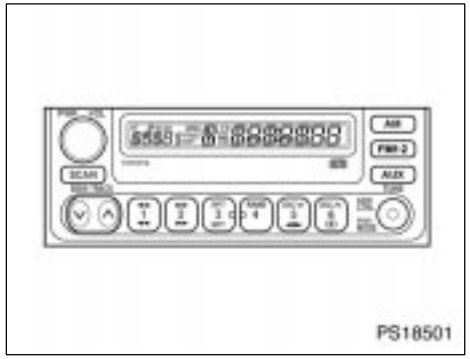

Type 1: AM·FM radio (with cassette and compact disc changer controller)

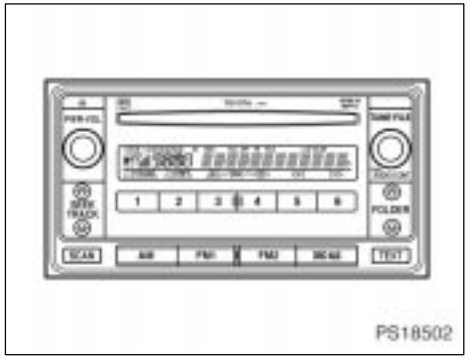

Type 2: AM·FM radio/compact disc player/ MP3/WMA player (with compact disc changer controller)

Using your audio system— —Some basics

This Section describes some of the basic features on Toyota audio systems. Some information may not pertain to your system.

Your audio system works when the ignition key is in the “ACC” or “ON” position.

TURNING THE SYSTEM ON AND OFF

Push “PWR VOL” or “PWR·VOL” to turn the audio system on and off.

Push “AM”, “FM1·2”, “FM1”, “FM2”, “DISC·AUX” or “AUX” to turn on that function without pushing “PWR VOL” or “PWR·VOL”. To turn on the compact disc player, a compact disc must be loaded in the player.

You can turn on the player by inserting a compact disc.

You can turn off the player by ejecting the compact disc. If the audio system was previously off, then the entire audio system will be turned off when you eject the compact disc. If another function was previously playing, it will come on again.

SWITCHING BETWEEN FUNCTIONS

Push “AM”, “FM1·2”, “FM1”, “FM2”, “DISC·AUX” or “AUX” if the system is already on but you want to switch from one function to another.

TONE AND BALANCE

For details about your system’s tone and balance controls, see the description of your own system.

Tone

How good an audio program sounds to you is largely determined by the mix of the treble and bass levels. In fact, different kinds of music and vocal programs usually sound better with different mixes of treble and bass.

Balance

A good balance of the left and right stereo channels and of the front and rear sound levels is also important.

Keep in mind that if you are listening to a stereo recording or broadcast, changing the right/left balance will increase the volume of one group of sounds while decreasing the volume of another.

YOUR RADIO ANTENNA

To remove the antenna, carefully turn it counterclockwise.

NOTICE

To prevent damage to the antenna, make sure it is retracted before driving your Toyota through an automatic car wash.

YOUR CASSETTE PLAYER

When you insert a cassette, the exposed tape should face to the right.

NOTICE

Never try to disassemble or oil any part of the cassette player do not insert anything other than cassette tapes into the slot.

YOUR COMPACT DISC PLAYER

When you insert a disc, gently push it in with the label side up. The player will play from track 1 through to the end of the disc. Then it will play from track 1 again.

NOTICE

Never try to disassemble or oil any part of the compact disc player. Do not insert anything other than compact discs into the slot.

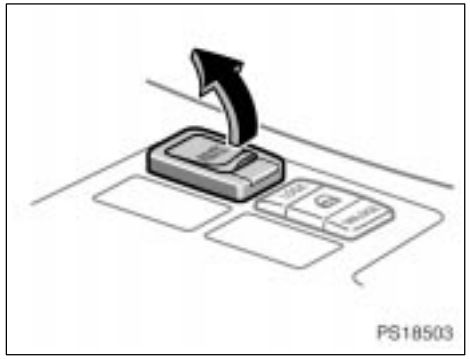

AUX adapter (type 2 only)

The AUX adapter is installed on the center console. To use the AUX adapter, open the lid as shown in the illustration.

By inserting a mini jack into the AUX adapter, you can listen to music from a portable audio device through the vehicle's speaker system.

—Controls and features

- **Type 1**

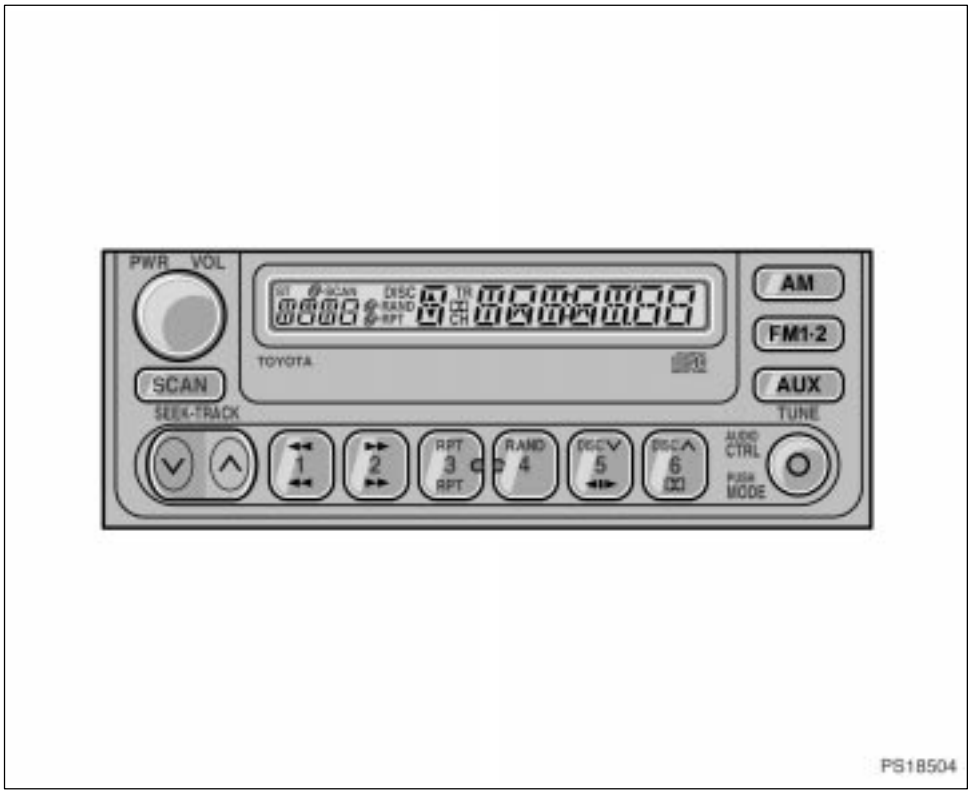

Details of specific buttons, controls, and features are described in the alphabetical list that follows.

1 2 3 4 5 6 (Preset buttons)

These buttons are used to preset and tune in radio stations.

To preset a station to a button: Tune in the desired station (see “TUNE” knob or “SEEK” button). Push and hold down the button until you hear a beep—this will set the station to the button. The button number will appear on the display.

To tune in to a preset station: Push the button for the station you want. The button number and station frequency will appear on the display.

These systems can store one AM and two FM stations for each button (The display will show “AM”, “FM1” or “FM2” when you push “AM” or “FM1·2”).

◀‖▶ (Program)

Push “◀‖▶” to select the other side of a cassette tape. The display indicates which side is currently selected (“▲” indicates top side, “▼” indicates bottom side).

Auto−reverse feature: After the cassette player reaches the end of a tape side, it automatically reverses and begins to play the other side. This is true whether the cassette was playing or fast forwarding.

◀◀/▶▶ (Reverse/Fast forward buttons)

Cassette Player

Push the fast forward button to fast forward a cassette tape. “FF” will appear on the display. Push the reverse button to rewind a tape. “REW” will appear on the display.

To stop the tape while it is fast forwarding, push the fast forward button or “TAPE”; to stop the tape while it is rewinding, push the reverse button or “TAPE”.

If a tape side rewinds completely, the cassette player will stop and then play that same side. If a tape fast forwards completely, the cassette player will play the other side of the tape, using the auto−reverse feature.

Compact Disc Player

If you want to fast forward or reverse through a compact disc track, push and hold in the fast forward or reverse button. When you release the button, the compact disc player will resume playing.

AM

Push “AM” to turn on the radio and select the AM band. “AM” will appear on the display.

If the audio system is off, you can turn on the radio by pushing “AM”. Also, push “AM” to switch from cassette or compact disc operation to radio operation.

CTRL / MODE (Audio control and mode adjustment)

Manual tone adjustment function—

This knob is used to adjust the tone manually.

For low−pitch tone adjustment, push “CTRL / MODE” repeatedly until “BAS” appears on the display. Then turn the knob to suit your preference.

The display will show the range from “BAS −5” to “BAS 5”.

For high−pitch tone adjustment, push “CTRL / MODE” repeatedly until “TRE” appears on the display. Then turn the knob to suit your preference.

The display will show the range from “TRE −5” to “TRE 5”.

Sound balance adjustment function—

This knob is also used to adjust the sound balance between the front and rear, and the right and left speakers.

For front/rear adjustment, push “CTRL / MODE” repeatedly until “FAd” appears on the display. Then turn the knob to adjust the front/rear balance.

The display will show the range from “FAd−F7” to “FAd−R7”.

For left/right adjustment, push “CTRL / MODE” repeatedly until “BAL” appears on the display. Then turn the knob to adjust the left/right balance.

The display will show the range from “BAL−L7” to “BAL−R7”.

AUX (Auxiliary button)

This button is used to operate each player when a cassette tape player, compact disc player or compact disc changer is equipped with this radio player.

With cassette tape player

Push “AUX” to switch from radio to cassette operation. If the audio system is off, you can turn on the cassette player by pushing “AUX”. In both cases, a cassette must already be loaded in the player.

With compact disc player or compact disc changer

Push “AUX” to switch from radio to compact disc operation. If the audio system is off, you can turn on the compact disc player by pushing “AUX”. In both cases, a disc must already be loaded in the player.

When the audio is set into compact disc operation, the display shows the track or, track and disc number currently being played. Each time you push “AUX”, the system changes to the changer.

If the player malfunctions, your audio system will display following error messages.

If “WAIT” appears on the display, it indicates that the inside of the player unit may be too hot due to the very high ambient temperature. Remove the disc or magazine from the player and allow the player to cool down.

If “Err 1” appears on the display, it indicates the disc is dirty, damaged, or it was inserted up−side down. Clean the disc or insert it correctly.

If “Err 2” appears on the display, it indicates no disc is loaded inside the magazine. Insert a disc.

If “Err 3” or “Err 4” appears on the display, it indicates there is a trouble inside the system. Eject the disc or magazine. Set the disc or magazine again.

If “OPEn” appears on the display, it indicates the compact disc changer lid is open. Close the compact disc changer lid.

If the malfunction is not rectified, take your vehicle to your Toyota dealer.

DISC ∨ ×

Compact disc changer only—

By using this button, you can select a disc you wish to listen to.

Push either side of the button until the number of the disc you want to listen to appears on the display.

Dolby® DD B NR*

If you are listening to a tape that was recorded with Dolby® B Noise Reduction, push the “DD” button. The “DD B” will appear on the display. Push the button again to turn off Dolby® B NR.

The Dolby NR mode reduces tape noise by about 10 dB. For best sound reproduction, play your tapes with this button on or off according to the mode used for recording the tape.

*: Dolby noise reduction manufactured under license from Dolby Laboratories Licensing Corporation. “DOLBY” and the double D symbol ⧈ are trademarks of Dolby Laboratories Licensing Corporation.

FM1·2

Push “FM1·2” to turn on the radio and select the FM band. “FM1” or “FM2” will appear on the display. This system allows you to set twelve FM stations, two for each button.

If the audio system is off, you can turn on the radio by pushing “FM1·2”. Also, push “FM1·2” to switch from cassette or compact disc operation to radio operation.

PWR/VOL (Power/Volume)

Push “PWR/VOL” to turn the audio system on and off. Turn “PWR/VOL” to adjust the volume.

RAND (Random)

There are two random features—you can either listen to the tracks on all the compact discs in the magazine in random order, or only listen to the tracks on a specific compact disc in random order.

Random playing for the tracks on a disc:
Quickly push and release “RAND”. “RAND” will appear on the display. The disc you are listening to will play in random order. If you hear a beep, you held the button too long, and the player will play all the tracks in the magazine in random order. To turn off the random feature, push “RAND” again.

Compact disc changer only—

Random playing for all the tracks in the magazine:
Push and hold “RAND” until you hear a beep. “ ·RAND” will appear on the display and the player will perform all the tracks on all the discs in the magazine in random order. To turn off the random feature, push “RAND” again.

RPT (Repeat)

Cassette Player

Push “RPT” while the track is playing. “RPT” will appear on the display. When the track ends, it will automatically be rewound and replayed. This process will be continued until you push the button again to turn off the repeat feature.

There must be at least 3 seconds of blank space between tracks in order for the repeat feature to work correctly.

Compact Disc Player

There are two repeat features—you can either replay a disc track or a whole compact disc.

Repeating a track:
Quickly push and release “RPT” while the track is playing. “RPT” will appear on the display. If you hear a beep, you held the button too long, and the player will repeat the whole disc. When the track ends, it will automatically be replayed. This process will be continued until you push the button again to turn off the repeat feature.

Compact disc changer only—

Repeating a disc:
Push and hold “RPT” until you hear a beep. “ ·RPT” will appear on the display. The player will repeat all the tracks on the disc you are listening to. When the disc ends, the player will automatically go back to the first track on the disc and replay. This process will be continued until you push the button again to turn off the repeat feature.

SCAN

Radio

You can either scan all the frequencies on a band or scan only the preset stations for that band.

To scan the preset stations:
Push and hold “SCAN” until you hear a beep. The radio will tune in the next preset station up the band, stay there for 5 seconds, and then move to the next preset station. To select a station, push “SCAN” again.

To scan all the frequencies:
Quickly push and release “SCAN”. If you hear a beep, you held the button too long, and the radio will scan the preset stations. The radio will find the next station up the station band, stay there for 5 seconds, and then scan again. To select a station, push “SCAN” again.

Compact disc player

There are two scan features—you can either scan the tracks on a specific disc or scan the first tracks of all the discs in the magazine.

Scanning the tracks on a disc:
Quickly push and release “SCAN”. “SCAN” will appear on the display and the player will scan all the tracks on the disc you are listening to. If you hear a beep, you held the button too long, and the player will scan the first track of all the discs in the magazine. To select a track, push “SCAN” again. If the player scanned all the tracks on the disc, it will stop scanning.

Compact disc changer only—

Scanning the first track of all the discs in the magazine:
Push “SCAN” until you hear a beep. “ ·SCAN” will appear on the display and the player will perform the first track of the next disc. To select a disc, push the “SCAN” again. If the player has scanned all the discs, it will stop scanning.

SEEK (Seeking)

Radio

In the seek mode, the radio finds and plays the next station up or down the station band.

To seek a station, quickly push and release the “×” or “∨” under the “SEEK”. Do this again to find another station.

Cassette Player

By using this button, you can skip up or down to a different track.

You can skip up to nine tracks at a time.

Push the up or down side of the button. “FF 1” or “REW 1” will appear on the display.

Next, push either side of the track button until the number on the display reaches the number of tracks you want to skip. If you push the button ten times, the skip feature will be turned off.

When counting the number of tracks you want to rewind, remember to count the current track as well. For example, if you want to rewind to a song that is two before the song you are listening to, push on the down side of the button until “REW 3” appears on the display.

If you have pushed the track button more than you wanted to, push the other side of the button. The track number will be reduced.

The track number you select is not valid if it is higher than the number of tracks remaining on the current cassette side.

- After the beginning of the tape is reached, the player will automatically start playing the same side.

- After the end of the tape is reached, the player will automatically reverse sides and start playing the other side.

There must be at least 3 seconds of blank space between tracks for the track button to work correctly. In addition, the feature may not work well with some spoken word, live, or classical recordings.

ST (Stereo reception) display

Your radio automatically changes to stereo reception when a stereo broadcast is received. “ST” appears on the display. If the signal becomes weak, the radio reduces the amount of channel separation to prevent the weak signal from creating noise. If the signal becomes extremely weak, the radio switches from stereo to mono reception.

TRACK (Track up/down button): Compact disc player

By using this button, you can skip up or down to a different track.

Push either side of the track button until the number of the track you want to listen to appears on the display. If you want to return to the beginning of the current track, push the down side of the button one time, quickly.

TUNE (Tuning)

Turn the knob clockwise to step up the frequency. Turn the knob counterclockwise to step down the frequency.

- **Type 2**



Details of specific buttons, controls and features are described in the alphabetical list that follows.

1 2 3 4 5 6 (Preset buttons)

These buttons are used to preset and tune in radio stations.

To preset a station to a button: Tune in the desired station. (See “TUNE” or “SEEK/TRACK”.) Push and hold down the button until you hear a beep—this will set the station to the button. The preset button number will appear on the display.

To recall a preset station: Push the button for the station you want. The button number and station frequency will appear on the display.

These systems can store one AM and two FM stations for each button. (The display will show “AM”, “FM1” or “FM2” when you push “AM”, “FM1” or “FM2” button.)

⏏ (Eject button)

Push the compact disc eject button to eject a compact disc.

◀◀/▶▶ (Reverse/Fast−forward button)

Push and hold “▶▶” (preset button 6) or “◀◀” (preset button 5) to fast forward or reverse within a compact disc. When you release the button, the compact disc player will resume playing.

AM

Push the “AM” button to turn on the radio and select the AM band. “AM” will appear on the display.

AUDIO CONT (Tone and sound balance adjustment function)

Each time you push the “AUDIO CONT” knob, the mode changes. To adjust the tone and balance, turn the knob.

BAS: Adjusts low−pitched tones. The display ranges from −5 to 5.

TRE: Adjusts high−pitched tones. The display ranges from −5 to 5.

FAD: Adjusts the sound balance between the front and rear speakers. The display ranges from F7 to R7.

BAL: Adjusts the sound balance between the right and left speakers. The display ranges from L7 to R7.

LIVE−ACS (LIVE Acoustic/Psychological acoustic technology)

The acoustic enhancement techonologies called FOCUS (Trademark) and TruBass (Trademark) are adopted under license with SRS corporation for all mode except for AM radio mode. By utilizing these technologies, low range can be enhanced without distorting the mid range. In addition, it can bring the sound stage upward so that the sound is audible from upper space even if the speakers are positioned around lower section.

FOCUS and TruBass technology is always contained in the sound quality of this player. FOCUS and TruBass technology is incorporated under license from SRS Labs, Inc.

DISC·AUX

DISC (Compact disc)

Push the “DISC·AUX” button to play a compact disc. Each time you push this button, the system changes between the compact disc player and the changer of separate unit if it is equipped.

When the audio system is set into compact disc operation, the display shows the track, or track and disc number currently being played.

Error messages

If the player malfunctions, your audio system will display following error messages.

“WAIT”: The compact disc player unit may be too hot. Allow the player to cool down.

“ERROR 1”: The disc may be dirty, damaged or inserted incorrectly (up−side down). Clean the disc and re−insert it.

“NO DISC”: The compact disc changer of separate unit is empty. Insert a disc.

“ERROR 3”: There is a problem inside the system. Eject the disc or magazine. Set the disc or magazine again.

“ERROR 4”: Over−current. Ask your Toyota dealer to inspect.

“CD OPEN”: The compact disc changer lid of separate unit is open. Close the compact disc changer lid.

“NO MUSIC”: The disc with no mp3/wma data has been inserted. Remove the disc from the player and insert a mp3/wma data disc.

If the malfunction still exists, take your vehicle to your Toyota dealer.

AUX

In order to listen to a portable music player, such as a compact disc or MD player, through the car stereo speakers, push the “DISC·AUX” button after it has been connected to the AUX jack on the center console.

∨ **DISC** ×

With compact disc changer only—

Use these buttons to select a disc you want to listen to.

Push “∨” (preset button 3) or “×” (preset button 4) until the number of the disc you want to listen appears on the display.

FOLDER (Folder up/down)

To skip up or down to a different folder: Push either side of the “FOLDER” several times until the number of the folder you want to listen to appears on the display.

To jump to the first file in the current folder:
Push and hold “∨” side of the button until you hear a beep.

FM1 FM2

Push the “FM1” or “FM2” button to turn on the radio and select the FM band. “FM1” or “FM2” will appear on the display. This system allows you to set twelve FM stations, two for each of the preset button.

PWR·VOL (Power and Volume)

Push “PWR·VOL” to turn the audio system on and off. Turn “PWR·VOL” to adjust the volume.

RAND (Random)

Compact Disc Player

There are two random features—you can either listen to the tracks on one compact disc in random order, or listen to the tracks on all the compact discs in the magazine in random order.

To play the tracks on one disc in random order:
Quickly push and release “RAND” (preset button 1). “RAND” will appear on the display and the player will perform the tracks on the disc you are listening to in random order. To turn off the random feature, push this button again.

With compact disc changer only—

To play all the tracks in the magazine in random order:
Push and hold “RAND” (preset button 1) until you hear a beep. “RAND” will appear on the display and the player will perform all the tracks on all the discs in the magazine in random order. To turn off the random feature, push this button again.

MP3/WMA Player

There are two random features—you can either listen to all the files on the compact disc in random order, or only listen to the files in a folder in random order.

To randomly play the files on a folder:
Quickly push and release “RAND” (preset button 1). “RAND” will appear on the display.

To randomly play all the files on the compact disc:
Push and hold “RAND” (preset button 1) until you hear a beep. “RAND” will appear on the display and the player will play all the files on the disc in random order. To turn off the random feature, push this button again.

RPT (Repeat)

Compact Disc Player

Push “RPT” (preset button 2) to repeat a track. “RPT” will appear on the display. When the track ends, it will automatically be replayed. This process will be continued until you push the button again to turn off the repeat feature.

MP3/WMA Player

Push and hold “RPT” (preset button 2) until you hear a beep. “RPT” will appear on the display. The player will repeat all the files in the folder you are listening to. When the final file in the folder ends, the player will automatically go back to the first file in the folder and replay. To turn off the repeat feature, push this button again.

SCAN

Radio

You can either scan all the frequencies on a band or scan only the preset stations for that band.

To scan the preset stations:
Push and hold the “SCAN” button until you hear a beep. The radio will tune in the next preset station up the band, stay there for 5 seconds, and then move to the next preset station. To stop scanning, push this button again.

To scan all the frequencies:
Quickly push and release the “SCAN” button. The radio will find the next station up the station band, stay there for 5 seconds, and then scan again to the next station. To stop scanning, push this button again.

Compact disc player

There are two scan features—you can either scan the tracks on a specific disc or scan the first tracks of all the discs in the magazine.

Scanning the tracks on a disc:
Quickly push and release the “SCAN” button. “SCAN” will appear on the display and the player will scan all the tracks on the disc you are listening to. To stop scanning, push this button again. If the player scanned all the tracks on the disc, it will stop scanning.

With compact disc changer only—

Scanning the first tracks of all the discs in the magazine:
Push the “SCAN” button until you hear a beep. “SCAN” will appear on the display and the player will scan the first track of the next disc. To stop scanning, push this button again. If the player has scanned all the discs, it will stop scanning.

MP3/WMA Player

There are two scan features—you can either scan the files in a folder or scan the first file of all the folders.

Scanning the files in a folder:
Quickly push and release “SCAN”. “SCAN” will appear on the display and the player will scan all the files in the folder you are listening to. To select a file, push “SCAN” again. If the player scanned all the files in the folder, it will stop scanning.

Scanning the first file of all the folders:
Push “SCAN” until you hear a beep. “SCAN” will appear on the display and the player will scan the first file of the next folder. To select a folder, push the “SCAN” again. If the player has scanned all the folders, it will stop scanning.

SEEK/TRACK (Seeking/Track up/down)

Radio

In the seek mode, the radio finds and plays the next station up or down the station band.

To seek the next station, quickly push and release "×" or "∨" side of the "SEEK/ TRACK" button. Do this again to find the station after that.

Compact disc player

Use this button to skip up or down to a different track.

Push "×" or "∨" side of the "SEEK/ TRACK" button until the number of the track you want to listen to appears on the display. If you want to return to the beginning of the current track, quickly push the down side of the button one time.

MP3/WMA Player

To file up or down to a different file:
Push either side of the "TRACK" several times until the file you want to listen to appears on the display. If you want to return to the beginning of the current file, push the "∨" side of the button one time, quickly.

To fast forward or reverse the disc:
If you want to fast forward or reverse the disc, push and hold it until you hear a beep. When you release the button, the player will resume playing.

ST (Stereo reception) display

Your radio automatically changes to stereo reception when a stereo broadcast is received. "ST" appears on the display. If the signal becomes weak, the radio reduces the amount of channel separation to prevent the weak signal from creating noise. If the signal becomes extremely weak, the radio switches from stereo to mono reception.

TEXT

Compact Disc Player

This button is used to change the display for the compact disc that contains text data.

To change the display, quickly push and release the "TEXT" while the compact disc is playing. The display changes in the order from the elapsed time to disc title to track title, then back to the elapsed time.

If this button is pushed while a compact disc that does not contain text data is playing, "NO TITLE" will appear on the display.

If the entire disc or track title does not appear on the display, push and hold it until you hear a beep. The rest of the title (up to 24 letters) will appear.

MP3/WMA Player

This button is used to change the display for the MP3/WMA file that contains text data.

To change the display, quickly push and release the “TEXT” while the MP3/WMA file is playing. The display changes in the order from the elapsed time to folder name to file name to album title (MP3 file only) to track title to artist name, then back to the elapsed time.

If this button is pushed while a MP3/WMA file that does not contain text data is playing, “NO TITLE” will appear on the display.

If the entire text data is not displayed, push and hold it until you hear a beep. The rest of the text data will appear.

TUNE·FILE (Tuning and File up/down)

Radio

Turn the knob clockwise to step up the frequency. Turn the knob counterclockwise to step down the frequency.

MP3/WMA Player

Turn the knob clockwise to file up. Turn the knob counterclockwise to file down.

Audio system operating hints

NOTICE

To ensure correct audio system operations:

- ***Be careful not to spill beverages over the audio system.***
- ***Do not put anything other than a Compact Disc into the slot.***
- ***The use of a cellular phone inside or near the vehicle may cause a noise from the speakers of the audio system which you are listening to. However, this does not indicate a malfunction.***

RADIO RECEPTION

Usually, a problem with radio reception does not mean there is a problem with your radio—it is just the normal result of conditions outside the vehicle.

For example, nearby buildings and terrain can interfere with FM reception. Power lines or telephone wires can interfere with AM signals. And of course, radio signals have a limited range, and the farther you are from a station, the weaker its signal will be. In addition, reception conditions change constantly as your vehicle moves.

Here are some common reception problems that probably do not indicate a problem with your radio:

FM

Fading and drifting stations—Generally, the effective range of FM is about 40 km (25 miles). Once outside this range, you may notice fading and drifting, which increase with the distance from the radio transmitter. They are often accompanied by distortion.

Multi−path—FM signals are reflective, making it possible for two signals to reach your antenna at the same time. If this happens, the signals will cancel each other out, causing a momentary flutter or loss of reception.

Static and fluttering—These occur when signals are blocked by buildings, trees, or other large objects. Increasing the bass level may reduce static and fluttering.

Station swapping—If the FM signal you are listening to is interrupted or weakened, and there is another strong station nearby on the FM band, your radio may tune in the second station until the original signal can be picked up again.

AM

Fading—AM broadcasts are reflected by the upper atmosphere—especially at night. These reflected signals can interfere with those received directly from the radio station, causing the radio station to sound alternately strong and weak.

Station interference—When a reflected signal and a signal received directly from a radio station are very nearly the same frequency, they can interfere with each other, making it difficult to hear the broadcast.

Static—AM is easily affected by external sources of electrical noise, such as high tension power lines, lightening, or electrical motors. This results in static.

CARING FOR YOUR CASSETTE PLAYER AND TAPES

For high performance from your cassette player and tapes:

Clean the tape head and other parts regularly.

- A dirty tape head or tape path can decrease sound quality and tangle your cassette tapes. The easiest way to clean them is by using a cleaning tape. (A wet type is recommended.)

Use high−quality cassettes.

- Low−quality cassette tapes can cause many problems, including poor sound, inconsistent playing speed, and constant auto−reversing. They can also get stuck or tangled in the cassette player.
- Do not use a cassette if it has been damaged or tangled or if its label is peeling off.
- Do not leave a cassette in the player if you are not listening to it, especially if it is hot outside.
- Store cassettes in their cases and out of direct sunlight.
- Avoid using cassettes with a total playing time longer than 100 minutes (50 minutes per side). The tape used in these cassettes is thin and could get stuck or tangled in the cassette player.

CARING FOR YOUR COMPACT DISC PLAYER AND DISCS

- Extremely high temperatures can keep your compact disc player from working. On hot days, use the air conditioning to cool the vehicle interior before you listen to a disc.
- Bumpy roads or other vibrations may make your compact disc player skip.
- If moisture gets into your compact disc player, you may not hear any sound even though your compact disc player appears to be working. Remove the disc from the player and wait until it dries.

⚠ CAUTION

Compact disc players use an invisible laser beam which could cause hazardous radiation exposure if directed outside the unit. Be sure to operate the player correctly.



- Use only compact discs marked as shown above. The following products may not be playable on your compact disc player.

  Copy−protected CD
  CD−R (CD−Recordable)
  CD−RW (CD−Re−writable)
  CD−ROM

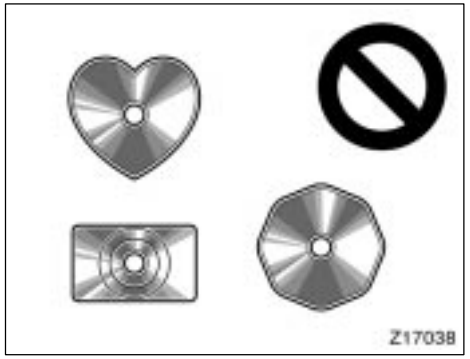

Special shaped discs

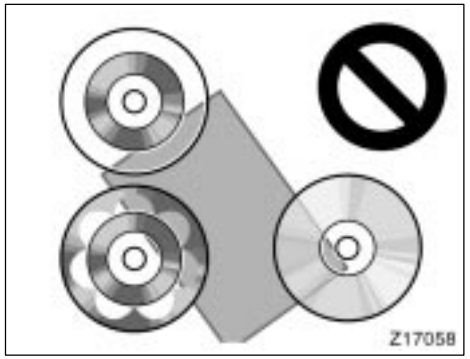

Transparent/translucent discs

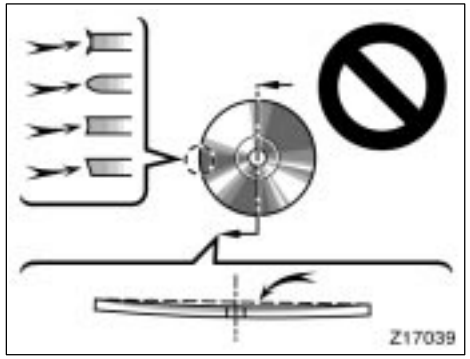

Low quality discs

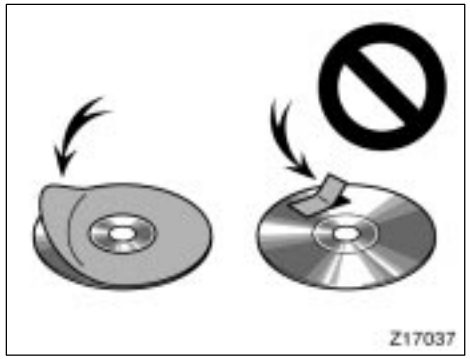

Labeled discs

NOTICE

Do not use special shaped, transparent/translucent, low quality or labeled discs such as those shown in the illustrations. The use of such discs may damage the player or changer, or it may be impossible to eject the discs.

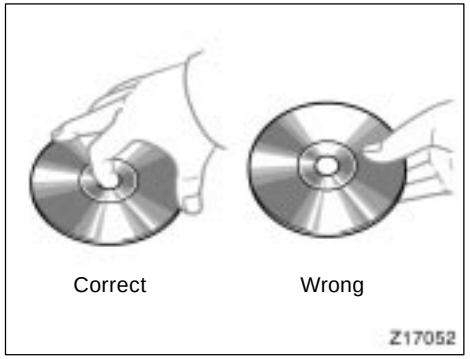

- Handle compact discs carefully, especially when you are inserting them. Hold them on the edge and do not bend them. Avoid getting fingerprints on them, particularly on the shiny side.
- Dirt, scratches, warping, pin holes, or other disc damage could cause the player to skip or to repeat a section of a track. (To see a pin hole, hold the disc up to the light.)
- Remove discs from the compact disc player when you are not listening to them. Store them in their plastic cases away from moisture, heat, and direct sunlight.

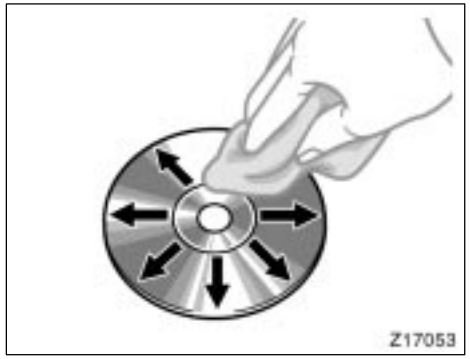

To clean a compact disc: Wipe it with a soft, lint−free cloth that has been dampened with water. Wipe in a straight line from the center to the edge of the disc (not in circles). Dry it with another soft, lint−free cloth. Do not use a conventional record cleaner or anti−static device.

MP3/WMA FILES

- MP3 is short for MPEG Audio Layer 3 and refers to an audio compression technology standard.
- WMA is short for Windows Media™ Audio. WMA is able to compress audio data to about 1/2 the level of MP3.
- The MP3/WMA player allows playback of MP3/WMA files on CD−ROM, CD−R and CD−RW discs.

  Disc recordings compatible with level 1 and level 2 of ISO 9660 and with the Romeo and Joliet file system can be played back.
- When naming a MP3/WMA file, add the corresponding filename extension (.mp3/.wma).
- The MP3/WMA player plays back files with the file name extension (.mp3/.wma) as an MP3/WMA file. To prevent noise and malfunctions, do not use this extension for files other than MP3/WMA files.
- It is possible to play back multi−session compatible recorded discs.
- When playing discs with MP3/WMA files and audio data (CD−DA) such as CD−EXTRA and MIXED−MODE CD, CD−DA only can be played.
- Files are compatible with the ID3 Tag Ver. 1.0, Ver. 1.1, Ver. 2.2 and Ver. 2.3 formats for display of album (disc title), track (track title) and artist (track artist).
- Files are compatible with the WMA Tag for display of album (disc title), track (track title) and artist (track artist).
- Only when MP3/WMA files of 32, 44.1 and 48 kHz frequencies are played back, the emphasis function is valid. (MP3 files: 16, 22.05, 24 kHz sampling frequencies can be played back.)

- The sound quality of MP3/WMA files generally becomes better with higher bit rates. This product can play recordings with bit rates as follows:
  MP3 files: 64 kbps to 320 kbps
  WMA files: 48 kbps to 320 kbps
  But in order to be able to enjoy a certain sound quality, it is recommended to use only discs recorded with a bit rate of at least 128 kbps.
- The MP3/WMA player does not play back MP3/WMA files from discs recorder using packet write data transfer (UDF format). Discs should be recorded using “pre−mastering” software rather than packet−write software.
- There is no m3u playlist compatibility.
- There is no compatibility with the MP3i (MP3 interactive) or mp3PRO format.
- The MP3/WMA player is compatible with VBR (Variable Bit Rate).
- When playing back files recorded as VBR (Variable Bit Rate) files, the play time will not be correctly displayed if fast−forward or reverse operations are used.
- It is not possible to check folders that do not include MP3/WMA files.
- MP3 files in up to 8 tiers of folders can be played back. However, there is a delay in the start of playback on discs with numerous tiers. For this reason we recommend creating discs with no more than 2 tiers.
- It is possible to play back up to 255 files on one disc.
- It is possible to play back up to 192 folders on one disc.

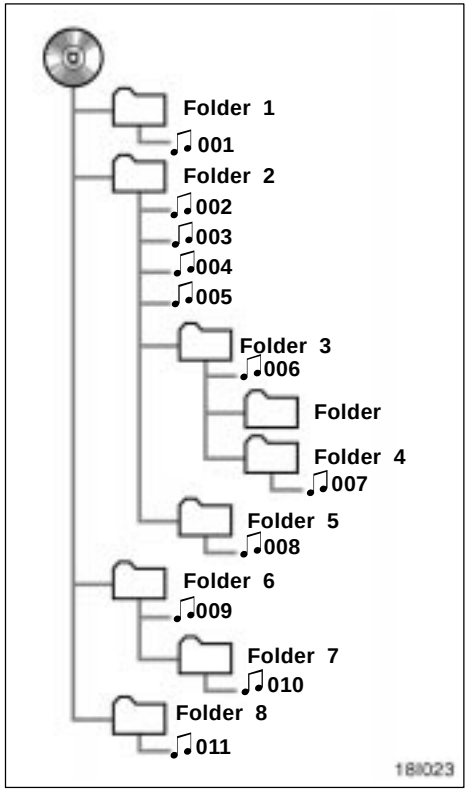

♫ : MP3/WMA file

- The turn of play of the compact disc having the structure shown on the left is as follows:

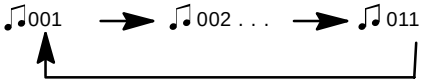

- The order changes depending on the PC and MP3/WMA encoding software you use.

CD−R and CD−RW discs

- CD−R/CD−RW discs that have not been subject to the “finalizing process” (a process that allows them to be played back on a conventional CD player) cannot be played back.
- It may not be possible to play back CD−R/CD−RW discs recorded on a music CD recorder or a personal computer because of disc characteristics, scratches or dirt on the disc, or dirt, condensation, etc. on the lens of this unit.
- Playback of discs recorded on a personal computer may not be possible depending on the application settings and the environment. Record with the correct format. (For details, contact the manufacturer of the applications.)
- Playback of CD−R/CD−RW discs may become impossible in case of direct exposure to sunlight, high temperatures, or the storage conditions in the vehicle.
- Titles and other text information recorded on a CD−R/CD−RW disc may not be displayed by the MP3/WMA player (in the case of audio data (CD−DA)).
- The MP3/WMA player conforms to the track skip function of the CD−R/CD−RW disc.
- If you insert a CD−RW disc into the MP3/WMA player, load time to playback will be longer than for a conventional CD or CD−R disc.
- Read the precautions accompanying the CD−R/CD−RW discs before use.
- Recordings on CD−R/CD−RW cannot be played back using the DDCD (Double Density CD) system.

TERMS

Packet write—

This is a general term for a method of writing on CD−R, etc. at the time required for a file, just as is done with files on floppy or hard discs.

Bit rate—

This expresses data volume per second, or bps units (bits per second). The higher the rate, the more information is available to reproduce the sound. Using the same encoding methods (such as MP3/WMA), the higher the rate, the better the sound.

Multi−session—

Multi−session is a recording method that allows additional data to be recorded later. When recording data on a CD−ROM, CD−R or CD−RW, etc., all data from beginning to end is treated as a single unit or session. Multi−session is a method of recording more than 2 sessions in one disc.

CD−DA—

CD−DA is an abbreviation of Compact Disc Digital Audio. It refers to the uncompressed format of regular CDs.

ID3/WMA Tag—

This is a method of embedding track−related information in a MP3/WMA file. This embedded information can include the track title, the artist's name, the album title, the music genre, the year of production, comments and other data. The contents can be freely edited using software with ID3/WMA tag editing functions. Although the tags are restricted to the number of characters, the information can be viewed when the track is played back.

ISO 9660 format—

This is the international standard for the format logic of CD−ROM folders and files. For the ISO 9660 format, there are regulations for the following two levels.

Level 1:

The file name is in 8.3 format (the name consists of up to 8 characters, half−byte English capital letters and half−byte numerals and the "−" sign, with a file extension of three characters.)

Level 2:

The file name can have up to 31 (MP3 files)/15 (WMA files) characters (including the separation mark "." and a file extension). Each folder contains less than 8 hierarchies.

Extended formats

Joliet:

File name can have up to 64 characters.

Romeo:

File names can have up to 128 characters.

m3u—

Playlists created using the "WINAMP" software have a playlist file extension (.m3u).

MP3—

MP3 is short for MPEG 1 & 2 Audio Layer 3. It is an audio compression standard set by a working group (MPEG) of the ISO (International Standards Organization). MP3 is able to compress audio data to about 1/10 the level of a conventional disc.

WMA—

WMA is short for Windows Media™ Audio. It is the audio file format developed by Microsoft Corporation. WMA is able to compress audio data to about 1/2 the level of MP3.

Windows Media™ and Windows® are registered trademarks of Microsoft Corporation in the United States and other countries.

SECTION 1–9

OPERATION OF INSTRUMENTS AND CONTROLS

Air conditioning system

Controls 158
Air flow selector settings 161
Operating tips 161
Instrument panel vents 163
Air conditioning filter 165

Controls

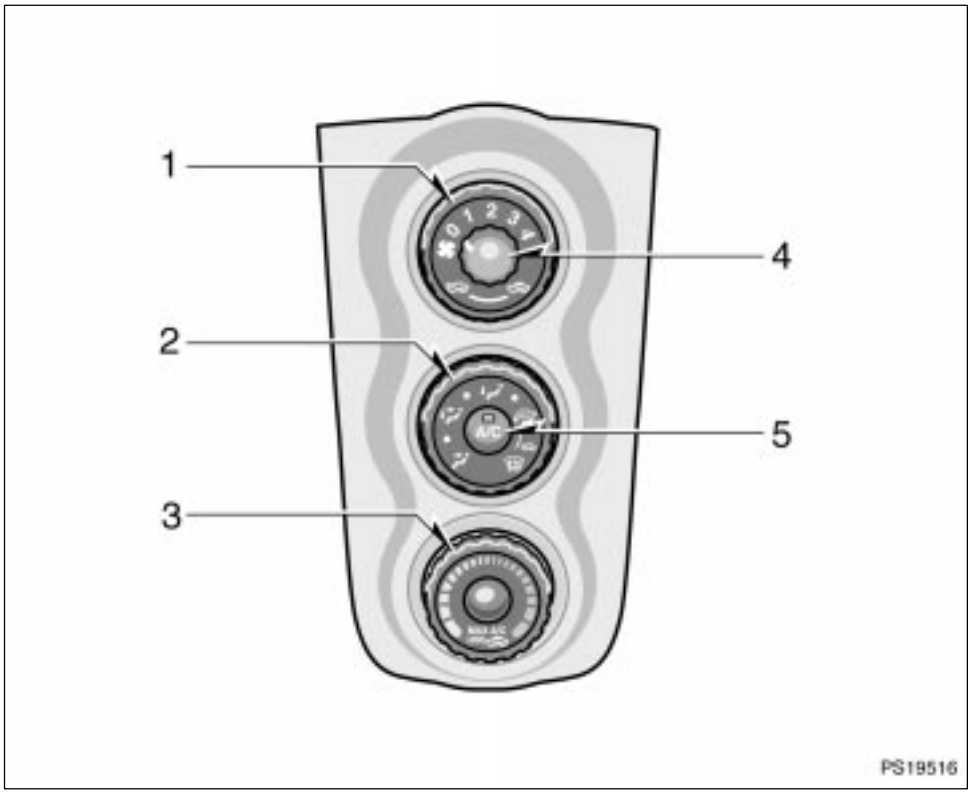

1. Air intake selector
2. Air flow selector
3. Temperature selector
4. Fan speed selector
5. “A/C” Button (on some models)

Fan speed selector

Turn the knob to adjust the fan speed—to the right to increase, to the left to decrease.

Temperature selector

Turn the knob to adjust the temperature—to the right to warm, to the left to cool.

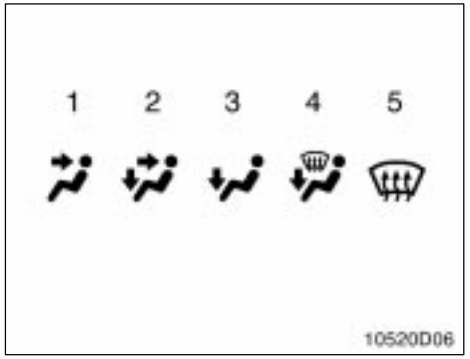

Air flow selector

Turn the knob to select the vents used for air flow.

1. **Panel—**Air flows mainly from the instrument panel vents.
2. **Bi−level—**Air flows from both the floor vents and the instrument panel vents.
3. **Floor—**Air flows mainly from the floor vents.
4. **Floor/Windshield—**Air flows mainly from the floor vents and windshield vents.

   Use with the air intake selector positioned in FRESH.
5. **Windshield—**Air flows mainly from the windshield vents.

   Turning the air flow selector to the windshield position turns on the defogging function with the purpose of clearing the front view.

   Use with the air intake selector positioned in FRESH.

Vehicles with “A/C” button—

Press the “A/C” button for dehumidified heating or cooling. This setting clears the front view more quickly.

For details about air flow selector settings, see “Air flow selector settings” described below.

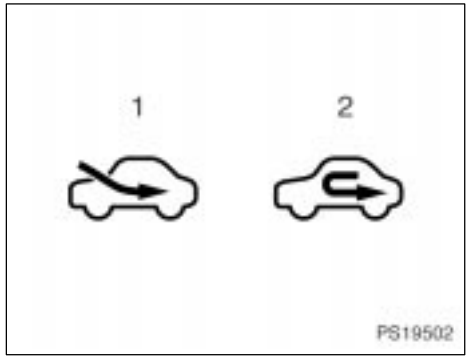

Air intake selector

Turn the knob to select the air source.

1. **Fresh—**Draws outside air into the system.
2. **Recirculate—**Recirculates the air inside the vehicle.

“A/C” button (on some models)

To turn on the air conditioning, press the “A/C” button. The “A/C” button indicator will come on. To turn the air conditioning off, press the button again.

Air flow selector settings

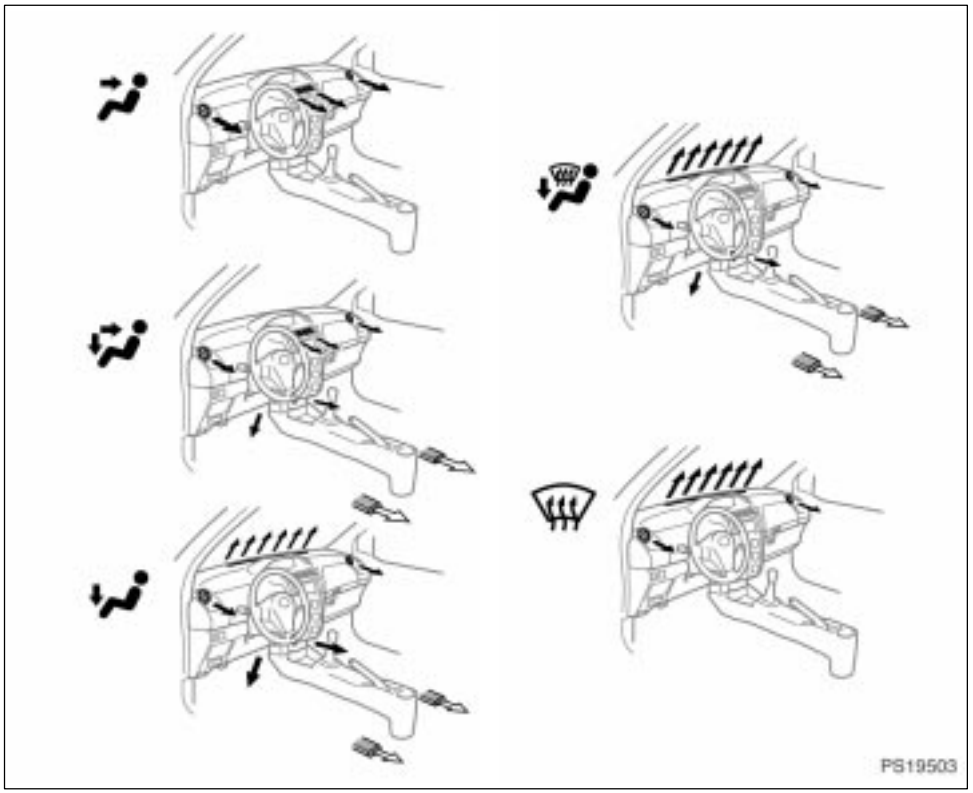

⇨: on some models

Operating tips

- To cool off your Toyota after it has been parked in the hot sun, drive with the windows open for a few minutes. This vents the hot air, allowing the air conditioning to cool the interior more quickly.
- Make sure the air intake grilles in front of the windshield are not blocked (by leaves or snow, for example).
- On humid days, do not blow cold air on the windshield. The windshield could fog up because of the difference in air temperature on the inside and outside of the windshield.
- Keep the area under the front seats clear to allow air to circulate throughout the vehicle.
- On cold days, set the fan speed to “high” for a minute to help clear the intake ducts of snow or moisture. This can reduce the amount of fogging on the windows.

- When driving on dusty roads, close all windows. If dust thrown up by the vehicle is still drawn into the vehicle after closing the windows, it is recommended that the air intake selector be set to FRESH and the fan speed selector to any setting except “0”.
- If following another vehicle on a dusty road, or driving in windy and dusty conditions, it is recommended that the air intake selector be temporarily set to RECIRCULATE, which will close off the outside passage and prevent outside air and dust from entering the vehicle interior.

Heating

For best results, set controls to:

Fan speed—Any setting except “0”
Temperature—Towards **WARM** (red zone)
Air intake—FRESH (outside air)
Air flow—FLOOR
Air conditioning—OFF

- For quick heating, select recirculated air for a few minutes. To keep the windows from fogging, select fresh after the vehicle interior has been warmed.
- Press the “A/C” button on for dehumidified heating.
- Choose floor/windshield air flow to heat the vehicle interior while defrosting or defogging the windshield.



Air conditioning

For best results, set controls to:

Fan speed—Any setting except “0”
Temperature—Towards **COLD** (blue zone)
Air intake—FRESH (outside air)
Air flow—PANEL
Air conditioning—ON

- For quick cooling, turn the temperature selector knob fully towards COLD and change the air intake selector mode RECIRCULATE.

Ventilation

For best results, set controls to:

Fan speed—Any setting except “0”
Temperature—Towards **COLD** (blue zone)
Air intake—FRESH (outside air)
Air flow—PANEL
Air conditioning—OFF

Defogging and defrosting

The inside of the windshield

For best results, set controls to:

Fan speed—Any setting except “0”
Temperature—Towards **WARM** (red zone) to heat; **COLD** (blue zone) to cool
Air intake—FRESH (outside air)
Air flow—WINDSHIELD

Turning the air flow selector to windshield position turns on the defogging function with the purpose of clearing the front view.

Vehicles with “A/C” button—

Press the “A/C” button for dehumidified heating or cooling. This setting clears the front view more quickly.

- On humid days, do not blow cold air on the windshield—the difference between the outside and inside temperatures could make the fogging worse.

The outside of the windshield

For best results, set controls to:

Fan speed—Any setting except “0”
Temperature—Towards **WARM** (red zone)
Air intake—FRESH (outside air)
Air flow—WINDSHIELD

Turning the air flow selector to windshield position turns on the defogging function with the purpose of clearing the front view.

Vehicles with “A/C” button—

Press the “A/C” button for dehumidified heating or cooling. This setting clears the front view more quickly.

- To heat the vehicle interior while defrosting the windshield, choose floor/windshield air flow.

Instrument panel vents

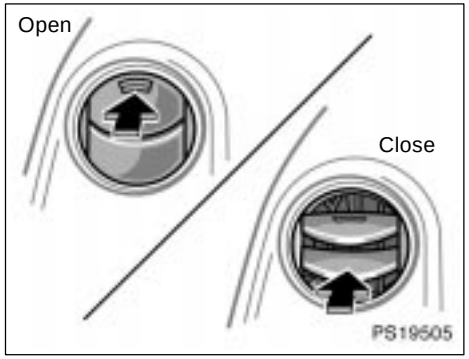

Side vents

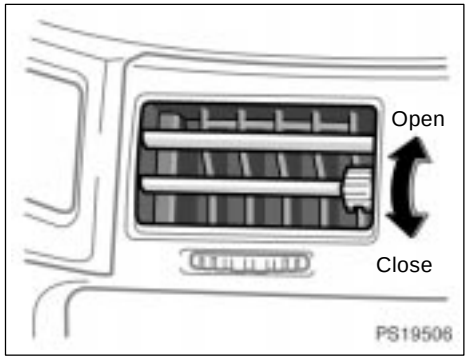

Center vents

If air flow control is not satisfactory, check the instrument panel vents. The instrument panel vents may be opened or closed as shown.

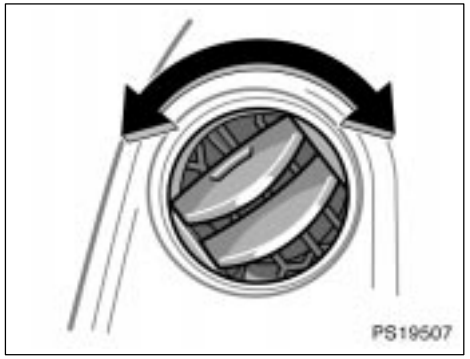

Side vents

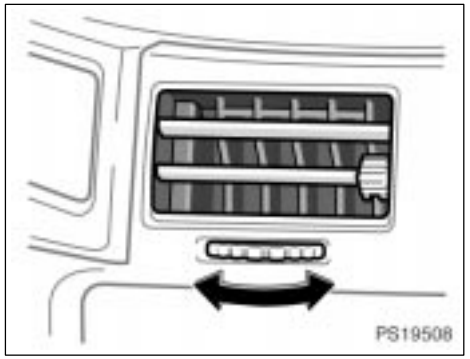

Center vents

You can change air flow direction by turning the instrument panel vents.

Air conditioning filter (on some models)—

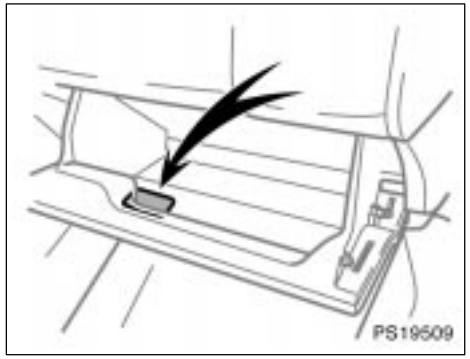

The air conditioning filter information label is placed inside of the glove box as shown and indicates that a filter has been installed.

The air conditioning filter prevents dust from entering the vehicle through the air conditioning vent.

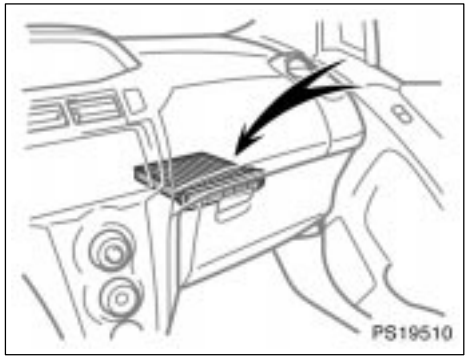

The air conditioning filter is behind the glove box.

—Checking and replacing the air conditioning filter

The air conditioning filter may clog after long use. The filter may need to be replaced if the air flow of the air conditioning and heater experiences extreme reductions in operating efficiency, or if the windows begin to fog up easily in FRESH mode.

To maintain the air conditioning efficiency, inspect and replace the air conditioning filter according to the maintenance schedule. In dusty areas or areas with heavy traffic flow, such as inner city or desert areas, early replacement may be required. (For scheduled maintenance information, please refer to the “Scheduled Maintenance Guide” or “Owner’s Manual Supplement.”)

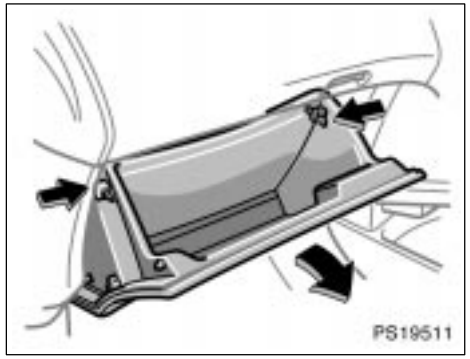

1. **Push in each side of the glove box to disconnect the claws.**

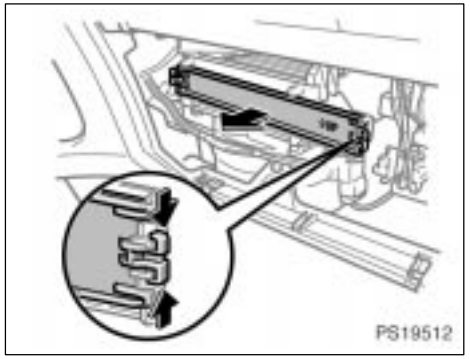

2. **Pinch the knobs located on each side and remove the filter cover.**

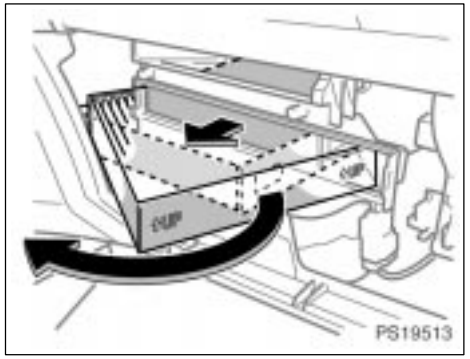

3. **Pull out the filter and rotate it as shown in the illustration to remove. Inspect the filter on the surface.**

If it is dirty, it should be replaced.

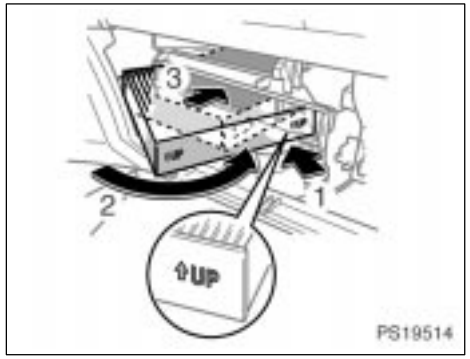

When inserting the filter in the filter outlet, keep the arrow pointing up and insert the filter as shown in the illustration above.

INFORMATION
The air filter should be installed properly in position. The use of air conditioning with the air filter removed may cause deteriorated dustproof performance and then affect air conditioning performance.

SECTION 1–10

OPERATION OF INSTRUMENTS AND CONTROLS

Other equipment

Clock 170
Power outlet 171
Glove boxes 171
Auxiliary boxes 172
Cup holders 173
Bottle holders 174
Luggage storage box 175
Luggage cover 175
Floor mat 176

Clock

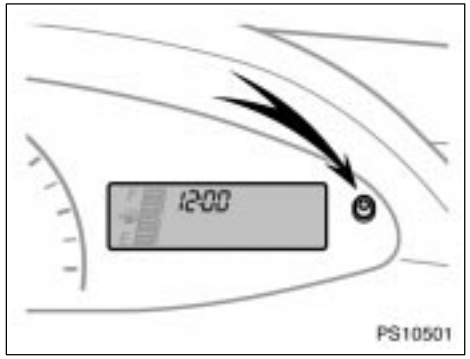

With tachometer

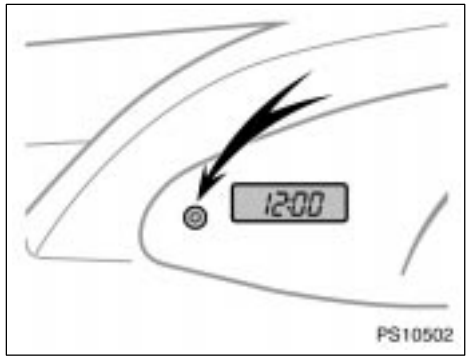

Without tachometer

The digital clock indicates the time.

To adjust the clock, put the key in the "ON" position.

With tachometer—

Pushing the reset knob flashes the indicator for the hour and you can adjust the hour.

Press the reset knob until the desired hour will appear.

After 5 or more seconds pass without operating, the indicator for the minute flashes. Then you can adjust the minute.

Press the reset knob until the desired minute will appear.

After 5 or more seconds passes without operating, the indicator will return to the normal display.

If the electrical power source has been disconnected from the clock, the time display will automatically be set to 1:00 (one o'clock).

Without tachometer—

Pushing the reset knob flashes the indicator for the minute and you can adjust the minute.

Press the reset knob until the desired minute will appear.

After 5 or more seconds pass without operating, the indicator for the hour flashes. Then you can adjust the hour.

Press the reset knob until the desired hour will appear.

After 5 or more seconds passes without operating, the indicator will return to the normal display.

If the electrical power source has been disconnected from the clock, the time display will automatically be set to 1:00 (one o'clock)

Power outlet

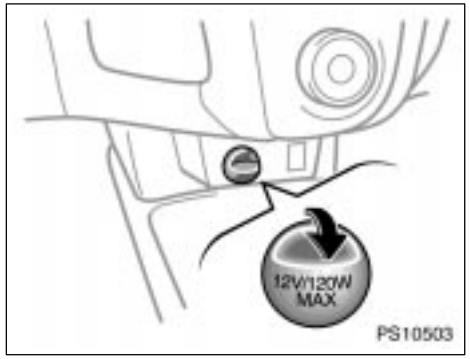

The power outlet is designed for power supply for car accessories. To use the power outlet, open as shown in the illustration.

The key must be in the “ACC” or “ON” position for the power outlet to be used.

NOTICE

- ***To prevent the fuse from being blown, do not use the electricity over the total vehicle capacity of 12V/120W.***
- ***To prevent the battery from being discharged, do not use the power outlet longer than necessary when the engine is not running.***

- ***Close the power outlet lid when the power outlet is not in use. Inserting anything other than an appropriate plug that fits the outlet, or allowing any liquid to get into the outlet may cause electrical failure or short circuits.***

Glove boxes

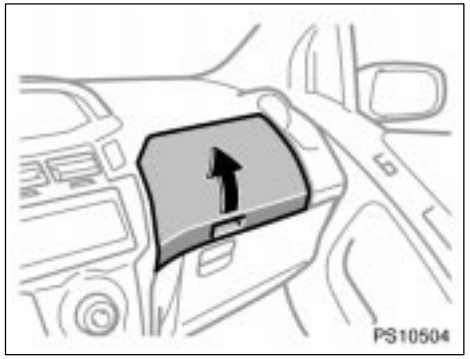

Upper glove box

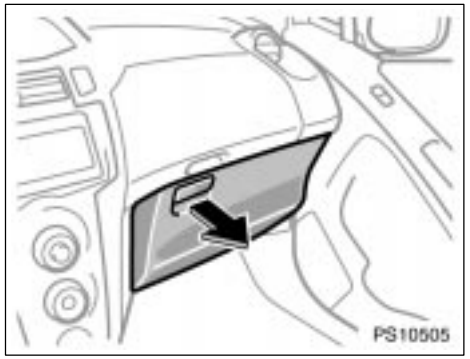

Lower glove box

To open the glove boxes, pull the lever.

⚠ CAUTION

To reduce the chance of injury in case of an accident or a sudden stop, always keep the glove box door closed while driving.

NOTICE

Upper glove box: During hot weather, the interior of the vehicle becomes very hot. Do not leave anything flammable or deformable such as a lighter, glasses, etc. inside.

Auxiliary boxes

To use the auxiliary boxes, open the lids as shown in the following illustrations.

⚠ CAUTION

To reduce the chance of injury in case of an accident or a sudden stop, always keep the auxiliary box closed while driving.

NOTICE

Type A: During hot weather, the interior of the vehicle becomes very hot. Do not leave anything flammable or deformable such as a lighter, glasses, etc. inside.

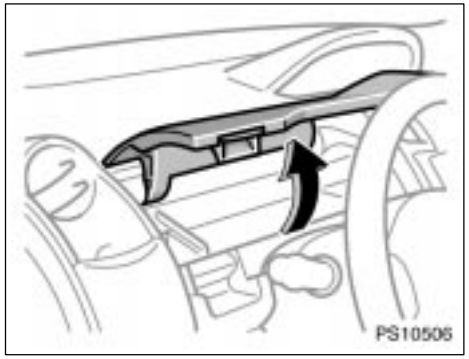

Type A

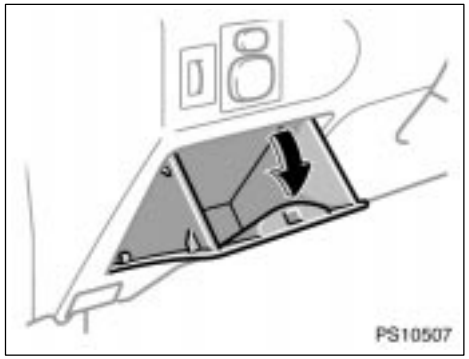

Type B

Cup holders

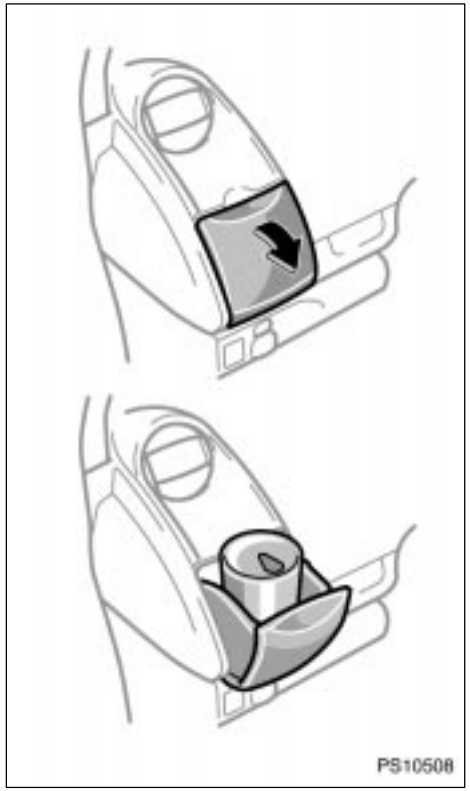

Front

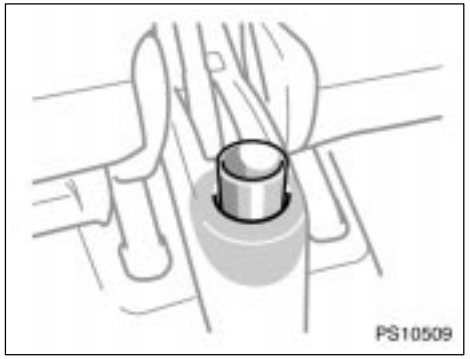

Rear

The cup holder is designed for holding cups or drink−cans securely.

Front cup holders—To use the cup holder, pull it out.

Keep the cup holder closed when it is not in use.

⚠ CAUTION

Do not place anything else other than cups or drink−cans in the cup holder, as such items may be thrown about and possibly injure people in the vehicle during sudden braking or in an accident.

Bottle holders

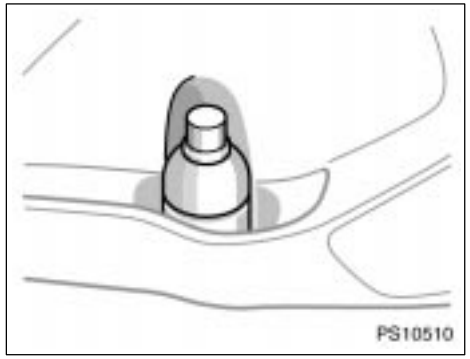

Front doors

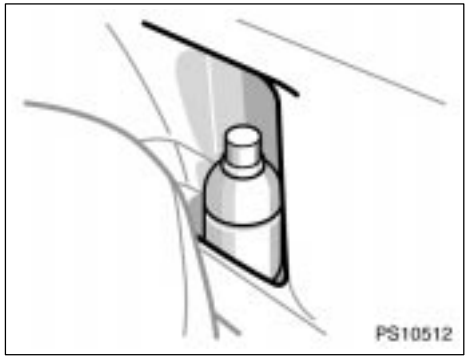

Rear side (3−door models only)

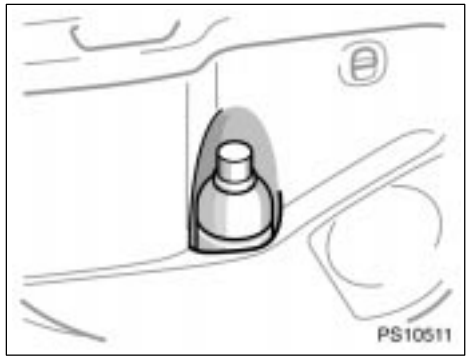

Rear doors (5−door models only)

The bottle holders are designed to hold bottles securely.

⚠ CAUTION

Do not attempt to use the holder for any other purpose for which it was intended. Inappropriately sized or shaped objects may be thrown about in the compartment and possibly injured people in the vehicle during a sudden braking or an accident.

NOTICE

Do not put a cup or open bottle in the bottle holder because the contents may spill when the door opens or closes.

Luggage storage box

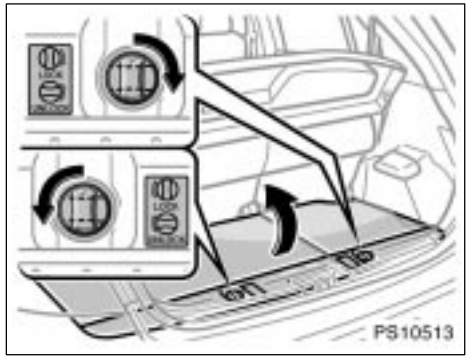

To open the luggage storage box, turn the knobs to the “UNLOCK” position and open the lid. To close the luggage storage box, lower the lid and turn the knobs to the “LOCK” position.

The luggage storage box is detachable.

⚠ CAUTION

To reduce the chance of injury in case of an accident or a sudden stop, always keep the luggage storage boxes closed and locked while driving.

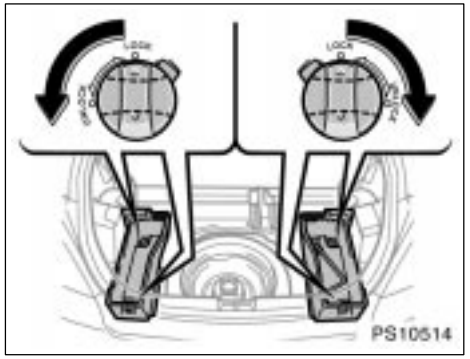

To remove the luggage storage box, turn the knobs to the “UNLOCK” position and remove it.

Luggage cover

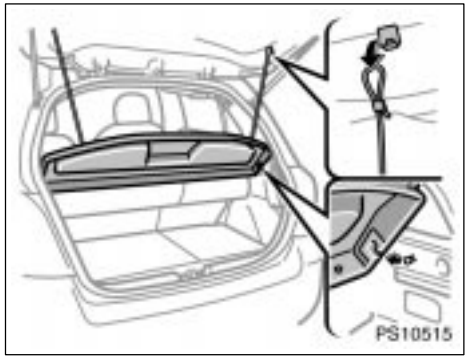

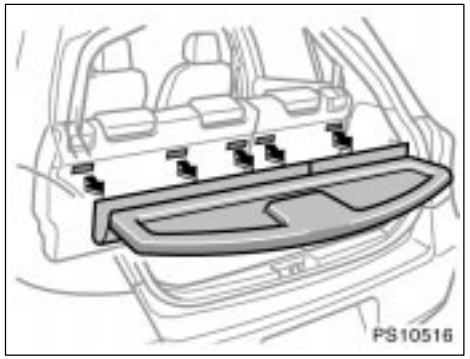

When you open the back door, the luggage cover tilts up for easy access to the luggage area.

For additional luggage space, unhook the cords, remove the luggage cover from the seatback and lift the cover out of the retainers.

Floor mat

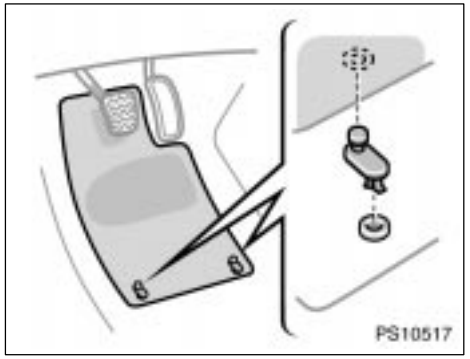



Use a floor mat of the correct size.

If the floor carpet and floor mat have two holes, then it is designed for use with a locking clip. Fix the floor mat with locking clip into the holes in the floor carpet.

⚠ CAUTION

Make sure the floor mat is properly placed on the floor carpet. If the floor mat slips and interferes with the movement of the pedals during driving, it may cause an accident.

SECTION 2

INFORMATION BEFORE DRIVING YOUR TOYOTA

Information before driving your Toyota

Break−in period 178
Fuel 178
Fuel pump shut off system 180
Operation in foreign countries 180
Three−way catalytic converter 180
Engine exhaust cautions 181
Facts about engine oil consumption 182
Iridium−tipped spark plugs 183
Brake system 184
Electric power steering system 187
Brake pad wear limit indicators 188
Your Toyota's identification 188
Theft prevention labels 189
Suspension and chassis 190
Tire information 191
Vehicle load limits 201
Cargo and luggage 202
Types of tires 204

Break−in period

Drive gently and avoid high speeds.

Your vehicle does not need an elaborate break−in. But following a few simple tips for the first 1600 km (1000 miles) can add to the future economy and long life of your vehicle:

- Avoid full throttle acceleration when starting and driving.
- Avoid racing the engine.
- Try to avoid hard stops during the first 300 km (200 miles).
- Do not drive slowly with the manual transmission in a high gear.
- Do not drive for a long time at any single speed, either fast or slow.
- Do not tow a trailer during the first 800 km (500 miles).

Fuel

FUEL TYPE

Your new vehicle must use only unleaded gasoline.

To help prevent gas station mix−ups, your Toyota has a smaller fuel tank opening. The special nozzle on pumps with unleaded fuel will fit it, but the larger standard nozzle on pumps with leaded gas will not.

At a minimum, the gasoline you use should meet specifications of ASTM D4814 in the U.S.A. and CGSB 3.5−M93 in Canada.

NOTICE

Do not use leaded gasoline. Use of leaded gasoline will cause the three−way catalytic converter to lose its effectiveness and the emission control system to function improperly. Also, this can increase maintenance costs.

OCTANE RATING

Select Octane Rating 87 (Research Octane Number 91) or higher.

Use of unleaded gasoline with an octane rating or research octane number lower than stated above will cause persistent heavy knocking. If it is severe, this will lead to engine damage.

If your engine knocks...

If you detect heavy knocking even when using the recommended fuel, or if you hear steady knocking while holding a steady speed on level roads, consult your Toyota dealer.

However, occasionally, you may notice light knocking for a short time while accelerating or driving up hills. This is normal and there is no need for concern.

GASOLINES CONTAINING DETERGENT ADDITIVES

Toyota recommends the use of gasoline that contain detergent additives to avoid build−up of engine deposits.

However, all gasoline sold in the U.S. contains detergent additives to keep clean and/or clean intake systems.

QUALITY GASOLINE

Automotive manufacturers in the U.S., Europe and Japan have developed a specification for quality fuel named World−Wide Fuel Charter (WWFC) that is expected to be applied world wide. The WWFC consists of four categories that depend on required emission levels. In the U.S., category 4 has been adopted. The WWFC improves air quality by providing for better emissions in vehicle fleets, and customer satisfaction through better vehicle performance.

CLEANER BURNING GASOLINE

Cleaner burning gasoline, including reformulated gasoline that contains oxygenates such as ethanol or MTBE is available in many areas.

Toyota recommends the use of cleaner burning gasoline and appropriately blended reformulated gasoline. These types of gasoline provide excellent vehicle performance, reduce vehicle emissions, and improve air quality.

OXGENATES IN GASOLINE

Toyota allows the use of oxygenate blended gasoline where the oxygenate content is up to 10% ethanol or 15% MTBE. If you use gasohol in your Toyota, be sure that it has an octane rating no lower than 87.

Toyota does not recommend the use of gasoline containing methanol.

GASOLINE CONTAINING MMT

Some gasoline contain an octane enhancing additive called MMT (Methylcyclopentadienyl Manganese Tricarbonyl).

Toyota does not recommend the use of gasoline that contains MMT. If fuel containing MMT is used, your emission control system may be adversely affected. The Malfunction Indicator Lamp on the instrument cluster may come on. If this happens, contact your Toyota dealer for service.

GASOLINE QUALITY

In a very few cases, you may experience drivability problems caused by the particular gasoline that you are using. If you continue to have unacceptable drivability, try changing gasoline brands. If this does not rectify your problem, then consult your Toyota dealer.

NOTICE

- ***Do not use gasohol other than stated above. It will cause fuel system damage or vehicle performance problems.***
- ***If driveability problems occur (poor hot starting, vaporizing, engine knock, etc.), discontinue the use.***
- ***Take care not to spill gasohol during refueling. Gasohol may cause paint damage.***

FUEL TANK CAPACITY

42 L (11.1 gal., 9.2 lmp. gal.)

Fuel pump shut off system

The fuel pump shut off system stops supplying fuel to the engine to minimize the risk of fuel leakage when the engine stalls or an airbag inflates upon collision. To restart the engine after the fuel pump shut off system activates, turn the ignition switch to “ACC” or “LOCK” once and start it.

⚠ CAUTION

Inspect the ground under the vehicle before restarting the engine. If you find that liquid has leaked onto the ground, it is the fuel system has been damaged and it is in need of repair. In this case, do not restart the engine.

Operation in foreign countries

If you plan to drive your Toyota in another country...

First, comply with the vehicle registration laws.

Second, confirm the availability of the correct fuel (unleaded and minimum octane number).

Three−way catalytic converter

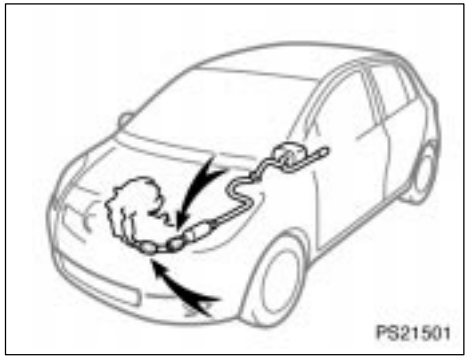

The three−way catalytic converter is an emission control device installed in the exhaust system.

The purpose is to reduce pollutants in the exhaust gas.

⚠ CAUTION

- **Keep people and combustible materials away from the exhaust pipe while the engine is running. The exhaust gas is very hot.**
- **Do not drive, idle or park your vehicle over anything that might burn easily such as grass, leaves, paper or rags.**

NOTICE

A large amount of unburned gases flowing into the three−way catalytic converter may cause it to overheat and create a fire hazard. To prevent this and other damage, observe the following precautions:

- *Use only unleaded gasoline.*
- *Do not drive with an extremely low fuel level; running out of fuel could cause the engine to misfire, creating an excessive load on the three−way catalytic converter.*
- *Do not allow the engine to run at idle speed for more than 20 minutes.*
- *Avoid racing the engine.*
- *Do not push−start or pull−start your vehicle.*
- *Do not turn off the ignition while the vehicle is moving.*

- *Keep your engine in good running order. Malfunctions in the engine electrical system, electronic ignition system/distributor ignition system or fuel system could cause an extremely high three−way catalytic converter temperature.*
- *If the engine becomes difficult to start or stalls frequently, take your vehicle in for a check−up as soon as possible. Remember, your Toyota dealer knows your vehicle and its three−way catalytic converter system best.*
- *To ensure that the three−way catalytic converter and the entire emission control system operate properly, your vehicle must receive the periodic inspections required by the Toyota Maintenance Schedule. For scheduled maintenance information, refer to the "Scheduled Maintenance Guide" or "Owner's Manual Supplement".*

Engine exhaust cautions

⚠ CAUTION

- **Avoid inhaling the engine exhaust. It contains carbon monoxide, which is a colorless and odorless gas. It can cause unconsciousness or even death.**
- **Make sure the exhaust system has no holes or loose connections. The system should be checked from time to time. If you hit something, or notice a change in the sound of the exhaust, have the system checked immediately.**
- **Do not run the engine in a garage or enclosed area except for the time needed to drive the vehicle in or out. The exhaust gases cannot escape, making this a particularly dangerous situation.**
- **Do not remain for a long time in a parked vehicle with the engine running. If it is unavoidable, however, do so only in an unconfined area and adjust the heating or cooling system to force outside air into the vehicle.**

- **Keep the back door closed while driving. An open or unsealed back door may cause exhaust gases to be drawn into the vehicle.**
- **To allow proper operation of your vehicle's ventilation system, keep the inlet grilles in front of the windshield clear of snow, leaves, or other obstructions.**
- **If you smell exhaust fumes in the vehicle, open the windows and close the back door to ensure plenty of fresh air enters the vehicle. If you can smell exhaust fumes even though there are no other vehicles in the surrounding area, have your vehicle checked by your Toyota dealer. Continued inhalation of exhaust fumes can lead to death by gas poisoning.**

Facts about engine oil consumption

FUNCTIONS OF ENGINE OIL

Engine oil has the primary functions of lubricating and cooling the inside of the engine, and plays a major role in maintaining the engine in proper working order.

ENGINE OIL CONSUMPTION

It is normal that an engine should consume some engine oil during normal engine operation. The causes of oil consumption in a normal engine are as follows.

- Oil is used to lubricate pistons, piston rings and cylinders. A thin film of oil is left on the cylinder wall when a piston moves downwards in the cylinder. High negative pressure generated when the vehicle is decelerating sucks some of this oil into the combustion chamber. This oil as well as some part of the oil film left on the cylinder wall is burned by the high temperature combustion gases during the combustion process.
- Oil is also used to lubricate the stems of the intake valves. Some of this oil is sucked into the combustion chamber together with the intake air and is burned along with the fuel. High temperature exhaust gases also burn the oil used to lubricate the exhaust valve stems.

The amount of engine oil consumed depends on the viscosity of the oil, the quality of the oil and the conditions the vehicle is driven under.

More oil is consumed by high−speed driving and frequent acceleration and deceleration.

A new engine consumes more oil, since its pistons, piston rings and cylinder walls have not become conditioned.

Oil consumption: Max. 1.0 L per 1000 km (1.1 qts./600 miles, 0.9 lmp.qts./600 miles)

When judging the amount of oil consumption, note that the oil may become diluted and make it difficult to judge the true level accurately.

As an example, if a vehicle is used for repeated short trips, and consumes a normal amount of oil, the dipstick may not show any drop in the oil level at all, even after 1000 km (600 miles) or more. This is because the oil is gradually becoming diluted with fuel or moisture, making it appear that the oil level has not changed.

The diluting ingredients evaporate out when the vehicle is then driven at high speeds, as on an express way, making it appear that oil is excessively consumed after driving at high speeds.

IMPORTANCE OF ENGINE OIL LEVEL CHECK

One of the most important points in proper vehicle maintenance is to keep the engine oil at the optimum level so that oil function will not be impaired. Therefore, it is essential that the oil level be checked regularly. Toyota recommends that the oil level be checked every time you refuel the vehicle.

NOTICE
Failure to check the oil level regularly could lead to serious engine trouble due to insufficient oil.

For detailed information on oil level check, see “Checking the engine oil level” on page 270 in Section 7−2.

Iridium−tipped spark plugs

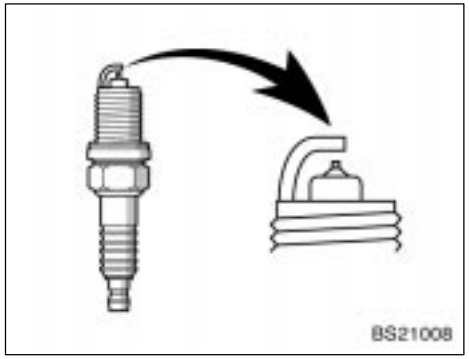

Your engine is fitted with iridium−tipped spark plugs.

NOTICE
Use only iridium−tipped spark plugs. Do not adjust gaps for engine performance or smooth driveability.

Brake system

The tandem master cylinder brake system is a hydraulic system with two separate sub−systems. If either sub−system should fail, the other will still work. However, the pedal will be harder to press, and your stopping distance will increase. Also, the brake system warning light may come on.

⚠ CAUTION

Do not drive your vehicle with only a single brake system. Have your brakes fixed immediately.

BRAKE BOOSTER

The brake booster uses engine vacuum to power−assist the brakes. If the engine should quit while you are driving, you can bring the vehicle to a stop with normal pedal pressure. There is enough reserved vacuum for one or two stops—but no more!

⚠ CAUTION

- **Do not pump the brake pedal if the engine stalls. Each push on the pedal uses up your reserved vacuum.**
- **Even if the power assist is completely lost, the brakes will still work. But you will have to push the pedal hard, much harder than normal. And your braking distance will increase.**

ANTI−LOCK BRAKE SYSTEM (with “ABS” warning light)

The anti−lock brake system is designed to help prevent lock−up of the wheels during a sudden braking or braking on slippery road surfaces. This assists in providing directional stability and steering performance of the vehicle under these circumstances.

Effective way to press the ABS brake pedal:
When the anti−lock brake system function is in action, you may feel the brake pedal pulsating and hear a noise. In this situation, to let the anti−lock brake system work for you, just hold the brake pedal down more firmly. Do not pump the brake in a panic stop. This will result in reduced braking performance.

The anti−lock brake system becomes operative after the vehicle has accelerated to a speed in excess of approximately 10 km/h (6 mph). It stops operating when the vehicle decelerates to a speed below approximately 5 km/h (3 mph).

Depressing the brake pedal on slippery road surfaces such as on a manhole cover, a steel plate at a construction site, joints in a bridge, etc. on a rainy day tends to activate the anti−lock brake system.

You may hear a click or motor sound in the engine compartment for a few seconds when the engine is started or just after the vehicle begins to move. This means that the anti−lock brake system is in the self−check mode, and does not indicate a malfunction.

When the anti−lock brake system is activated, the following conditions may occur. They do not indicate a malfunction of the system:

- You may hear the anti−lock brake system operating and feel the brake pedal pulsating and the vibrations of the vehicle body and steering wheel. You may also hear the motor sound in the engine compartment even after the vehicle is stopped.
- At the end of the anti−lock brake system activation, the brake pedal may move a little forward.

⚠ CAUTION

Do not overestimate the anti−lock brake system: Although the anti−lock brake system assists in providing vehicle control, it is still important to drive with all due care and maintain a moderate speed and safe distance from the vehicle in front of you, because there are limits to the vehicle stability and effectiveness of steering wheel operation even with the anti−lock brake system on.

If tire grip performance exceeds its capability, or if hydroplaning occurs during high speed driving in the rain, the anti−lock brake system does not provide vehicle control.

Anti−lock brake system is not designed to shorten the stopping distance: Always drive at a moderate speed and maintain a safe distance from the vehicle in front of you. Compared with vehicles without an anti−lock brake system, your vehicle may require a longer stopping distance in the following cases:

- **Driving on rough, gravel or snow−covered roads.**
- **Driving with tire chains installed.**
- **Driving over the steps such as the joints on the road.**
- **Driving on roads where the road surface is pitted or has other differences in surface height.**

Install all 4 tire of specified size at appropriate pressure: The anti−lock brake system detects vehicle speeds using the speed sensors for respective wheels' turning speeds. The use of tires other than specified may fail to detect the accurate turning speed resulting in a longer stopping distance.

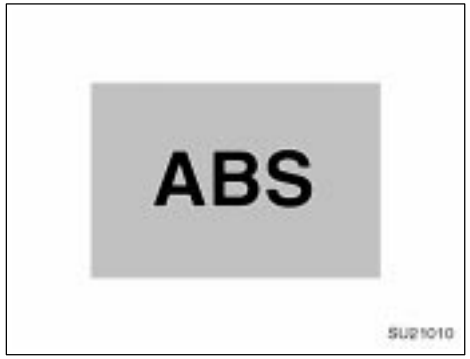

Type A

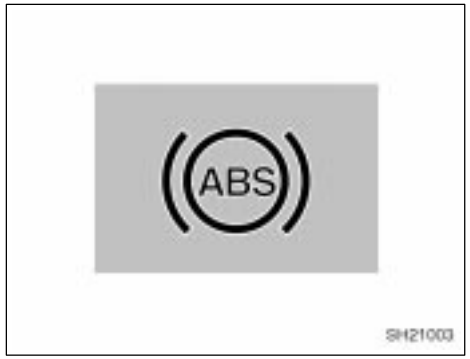

Type B

“ABS” warning light

This light comes on when the ignition key is turned to the “ON” position. If the anti−lock brake system works properly, the light turns off after a few seconds. Thereafter, if the system malfunctions, the light comes on again.

When the “ABS” warning light is on (and the brake system warning light is off), the anti−lock brake system does not operate, but the brake system still operates conventionally.

When the “ABS” warning light is on (and the brake system warning light is off), the anti−lock brake system does not operate so that the wheels could lock up during a sudden braking or braking on slippery road surfaces.

If either of the following conditions occurs, this indicates a malfunction somewhere in the components monitored by the warning light system. Contact your Toyota dealer as soon as possible to service the vehicle.

- The light does not come on when the ignition key is turned to the “ON” position, or remains on.
- The light comes on while you are driving.

A warning light turning on briefly during operation does not indicate a problem.

⚠ CAUTION

If the “ABS” warning light remains on together with the brake system warning light, immediately stop your vehicle at a safe place and contact your Toyota dealer.

In this case, not only the anti−lock brake system will fail but also the vehicle will become extremely unstable during braking.

Electric power steering system

The electric power steering system, using an electric motor, assists the turning of the steering wheel.

In the following cases, you may feel the steering becomes heavy. But it is not a malfunction.

- When maneuvering or turning frequently over a long time

  The power steering effect will be reduced to prevent the system from overheating. Avoid turning the steering wheel, or stop the vehicle and turn the ignition key to “ACC” or “LOCK”. The system will become cool in about 10 minutes.

NOTICE
Frequent maneuvering and turning over a long time may cause damage to the system in which the mechanism prevents overheating of the electric power steering system.

- When the battery is discharged

  Check the battery’s condition. If necessary, recharge or replace the battery. For details, see “Checking battery condition” on page 284 in Section 7−3.

In the following case, you may feel the steering becoming heavy. Then, after 5 minutes or more, the electric power steering system warning light comes on. But it is not a malfunction.

- When racing the engine for 30 seconds or more with the vehicle stopped

  The normal power steering effect will be obtained and the warning light will go off when you start driving.

INFORMATION
When the steering wheel is turned, a motor operating sound (whining sound) may be heard. This occurs when the power steering motor works and is not defective.

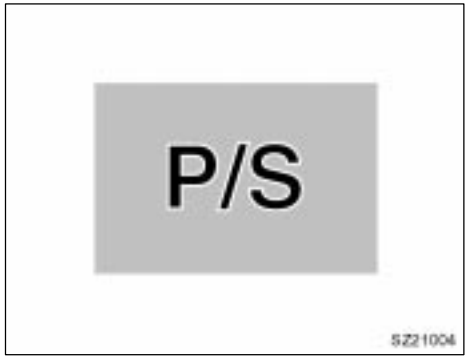

Electric power steering system warning light

The light comes on when the ignition key is turned to the “ON” position. If the electric power steering system warning light works properly, the light turns off after a few seconds. If the system has malfunctions, the light comes on again.

If the following conditions occur, this indicates a malfunction somewhere in the parts monitored by the warning light system. Contact your Toyota dealer as soon as possible to service the vehicle.

- The light does not come on when the ignition key is turned to the “ON” position or remains on.

- The light stays on while you are driving.

The warning light turning on while racing the engine for a long time may not indicate malfunction. To turn off the light, restart the engine and start driving.

⚠ CAUTION

If the electric power steering system warning light comes on, take your vehicle to Toyota dealer as soon as possible. In this case, more effort is required for the steering wheel to turn than usual. Grip the steering wheel firmly when driving.

Brake pad wear limit indicators

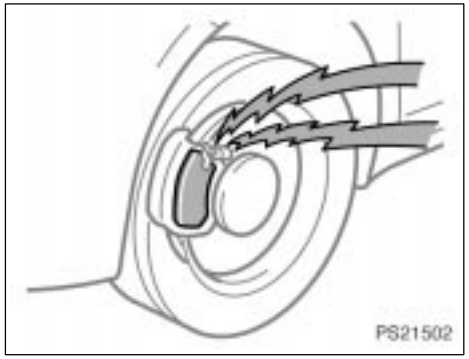

The brake pad wear limit indicators on your disc brakes give a warning noise when the brake pads are worn to where replacement is required.

If you hear a squealing or scraping noise while driving, have the brake pads checked and replaced by your Toyota dealer as soon as possible. Expensive rotor damage can result if the pads are not replaced when necessary.

Your Toyota's identification——Vehicle identification number

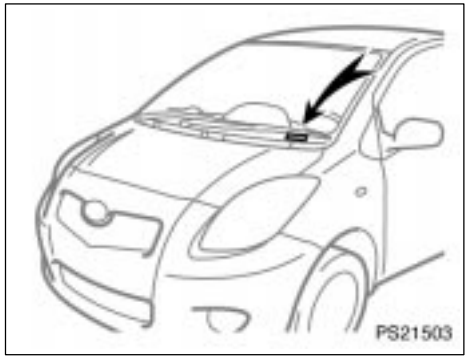

The vehicle identification number (VIN) is the legal identifier for your vehicle. This number is on the left top of the instrument panel, and can be seen through the windshield from outside.

This is the primary identification number for your Toyota. It is used in registering the ownership of your vehicle.

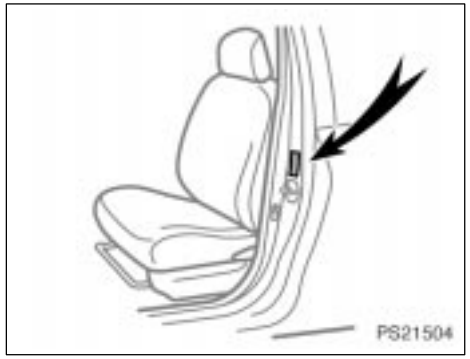

The vehicle identification number (VIN) is also on the Certification Label.

—Engine number

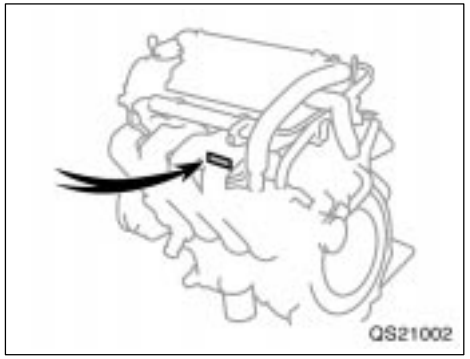

The engine number is stamped on the engine block as shown.

Theft prevention labels (except for Canada)

Your new vehicle carries theft prevention labels which are approximately 47 mm (1.85 in.) by 12 mm (0.47 in.).

The purpose of these labels is to reduce the incidence of vehicle thefts by facilitating the tracing and recovery of parts from stolen vehicles. The label is designed so that once it is applied to a surface, any attempt to remove it will result in destroying the integrity of the label. Transferring these labels intact from one part to another, will be impossible.

NOTICE

You should not attempt to remove the theft prevention labels as it may violate certain state or federal laws.

Suspension and chassis

⚠ CAUTION

Do not modify the suspension/chassis with lift kits, spacers, springs, etc. It can cause dangerous vehicle handling characteristics, resulting in loss of control.

Tire information—
—Tire symbols (Standard tire)

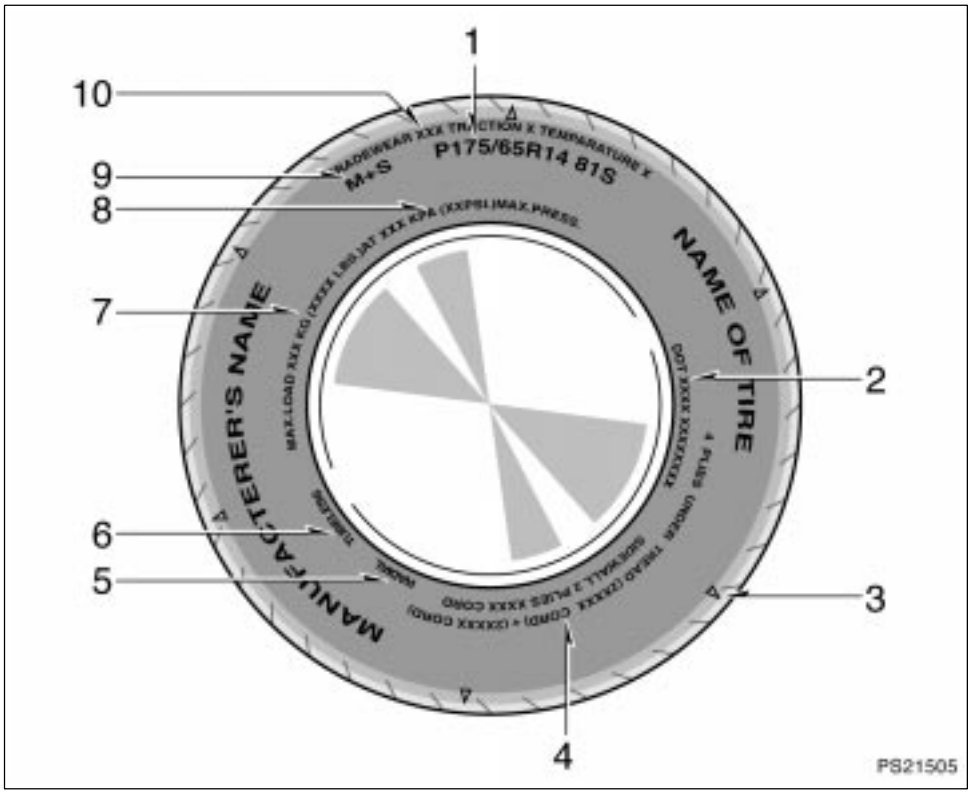

This illustration indicates typical tire symbols.

1. **Tire size—**For details, see “Tire size” on page 195.
2. **DOT and Tire Identification Number (TIN)—**For details, see “DOT and Tire Identification Number (TIN)” on page 194.
3. **Location of tread wear indicators—**For details, see “Checking and replacing tires” on page 276.
4. **Tire ply composition and materials—**Plies mean a layer of rubber−coated parallel cords. Cords mean the strands forming the plies in the tire.
5. **Radial tires or bias−ply tires—**A radial tire has “RADIAL” on the sidewall. A tire not marked with “RADIAL” is a bias−ply tire.

6. **“TUBELESS” or “TUBE TYPE”—**A tubeless tire does not have a tube inside the tire and air is directly filled in the tire. A tube type tire has a tube inside the tire and the tube maintains the air pressure.
7. **Load limit at maximum cold tire inflation pressure—**For details, see “Checking and replacing tires” on page 276.
8. **Maximum cold tire inflation pressure—**This means the pressure to which a tire may be inflated. For recommended cold tire inflation pressure, see “Tires” on page 299.
9. **Summer tire or all season tire—**An all season tire has “M+S” on the sidewall. The tire not marked with “M+S” is a summer tire. For details, see “Types of tires” on page 204.
10. **Uniform tire quality grading—**For details, see “Uniform tire quality grading” that follows.

—Tire symbols (Compact spare tire)

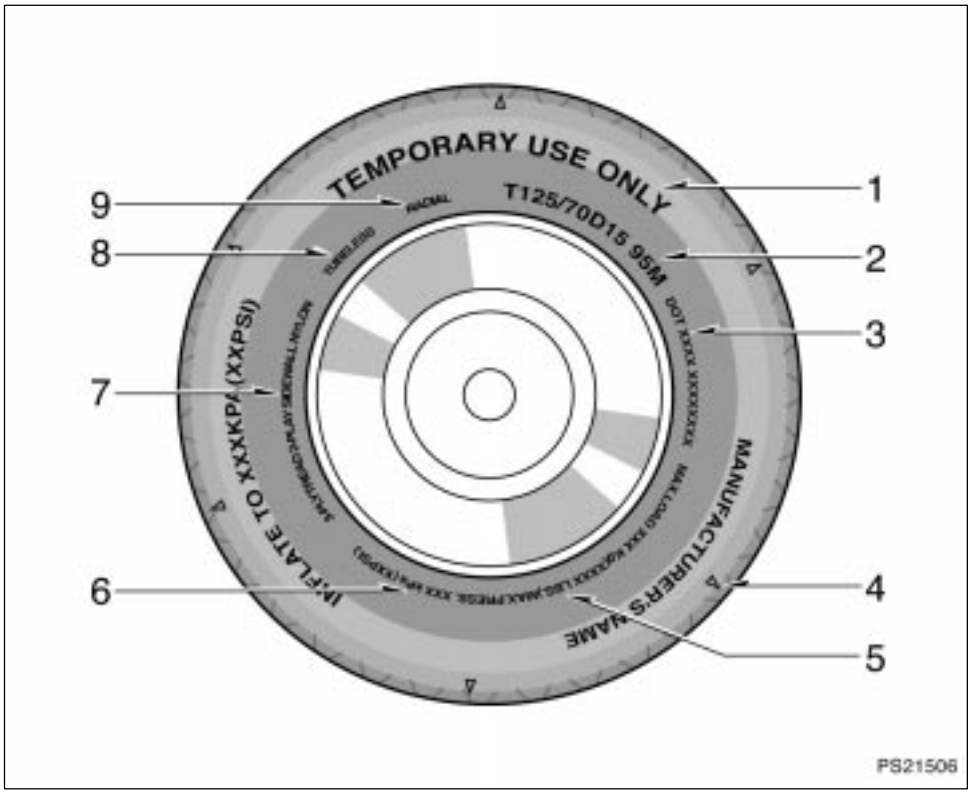

This illustration indicates typical tire symbols.

1. **"TEMPORARY USE ONLY"—**A compact spare tire is identified by the phrase "TEMPORARY USE ONLY" molded into its sidewall. This tire is designed for temporary emergency use only. For details, see "Compact spare tire" on page 229.
2. **Tire size—**For details, see "Tire size" on page 195.
3. **DOT and Tire Identification Number (TIN)—**For details, see "DOT and Tire Identification Number (TIN)" on page 194.
4. **Location of tread wear indicators—**For details, see "Checking and replacing tires" on page 276.
5. **Load limit at maximum cold tire inflation pressure—**For details, see "Checking and replacing tires" on page 276.

6. **Maximum cold tire inflation pressure—**This means the pressure to which a tire may be inflated. For recommended cold tire inflation pressure, see “Tires” on page 299.
7. **Tire ply composition and materials—**Plies mean a layer of rubber−coated parallel cords. Cords mean the strands forming the plies in the tire.
8. **“TUBELESS” or “TUBE TYPE”—**A tubeless tire does not have a tube inside the tire and air is directly filled in the tire. A tube type tire has a tube inside the tire and the tube maintains the air pressure.
9. **Radial tires or bias−ply tires—**A radial tire has “RADIAL” on the sidewall. A tire not marked with “RADIAL” is a bias−ply tire.

—DOT and Tire Identification Number (TIN)

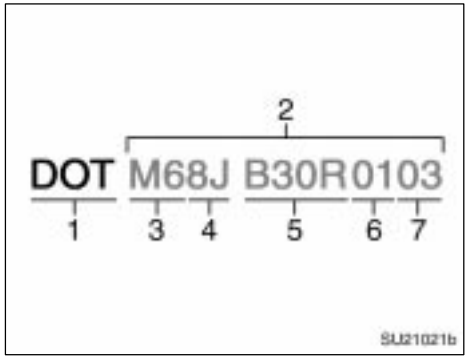

This illustration indicates typical DOT and Tire Identification Number (TIN).

1. “DOT” symbol
2. Tire Identification Number (TIN)
3. Tire manufacturer’s identification mark
4. Tire size code
5. Manufacturer’s optional tire type code (3 or 4 letters)
6. Manufacturing week
7. Manufacturing year

The “DOT” symbol certifies that the tire conforms to applicable Federal Motor Vehicle Safety Standards.

—Tire size

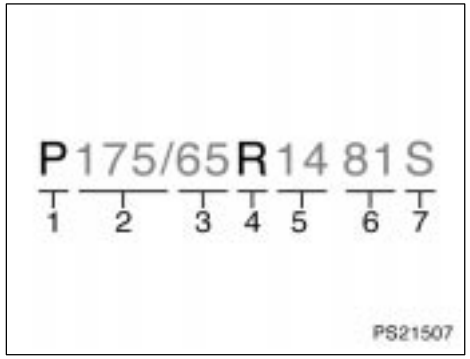

This illustration indicates typical tire size.

1. Tire use (P=Passenger car, T=Temporary use)
2. Section width (in millimeters)
3. Aspect ratio (tire height to section width)
4. Tire construction code (R=Radial, D=Diagonal)
5. Wheel diameter (in inches)
6. Load index (2 digits or 3 digits)
7. Speed symbol (alphabet with one letter)

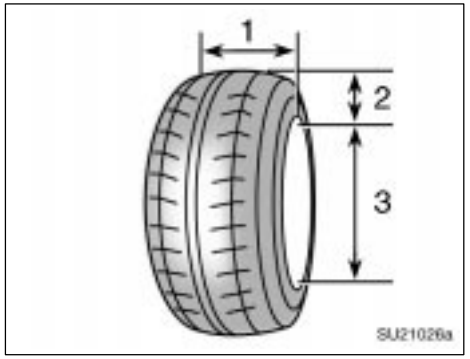

1. Section width
2. Tire height
3. Wheel diameter

—Name of each section of tire

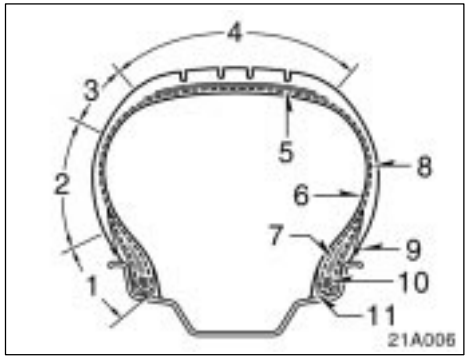

1. Bead
2. Sidewall
3. Shoulder
4. Tread
5. Belt
6. Inner liner
7. Reinforcing rubber
8. Carcass
9. Rim lines
10. Bead wires
11. Chafer

—Uniform tire quality grading

This information has been prepared in accordance with regulations issued by the National Highway Traffic Safety Administration of the U.S. Department of Transportation. It provides the purchasers and/or prospective purchasers of Toyota vehicles with information on uniform tire quality grading.

Your Toyota dealer will help answer any questions you may have as you read this information.

DOT quality grades—All passenger vehicle tires must conform to Federal Safety Requirements in addition to these grades. Quality grades can be found where applicable on the tire sidewall between tread shoulder and maximum section width. For example: Treadwear 200 Traction AA Temperature A.

Tread wear—The tread wear grade is a comparative rating based on the wear rate of the tire when tested under controlled conditions on a specified government test course. For example, a tire graded 150 would wear one and a half (1−1/2) times as well on the government course as a tire graded 100. The relative performance of tires depends upon the actual conditions of their use, however, and may depart significantly from the norm due to variations in driving habits, service practices and differences in road characteristics and climate.

Traction AA, A, B, C—The traction grades, from highest to lowest, are AA, A, B, and C, and they represent the tire's ability to stop on wet pavement as measured under controlled conditions on specified government test surfaces of asphalt and concrete. A tire marked C may have poor traction performance.

Warning: The traction grade assigned to this tire is based on braking (straight ahead) traction tests and does not include cornering (turning) traction.

Temperature A, B, C—The temperature grades are A (the highest), B, and C, representing the tire's resistance to the generation of heat and its ability to dissipate heat when tested under controlled conditions on a specified indoor laboratory test wheel. Sustained high temperature can cause the material of the tire to degenerate and reduce tire life, and excessive temperature can lead to sudden tire failure. The grade C corresponds to a level of performance which all passenger car tires must meet under the Federal Motor Vehicle Safety Standard No. 109. Grades B and A represent higher levels of performance on the laboratory test wheel than the minimum required by law.

Warning: The temperature grades for this tire are established for a tire that is properly inflated and not overloaded. Excessive speed, underinflation, or excessive loading, either separately or in combination, can cause heat buildup and possible tire failure.

—Glossary of tire terminology

Tire related term	Meaning
Cold tire inflation pressure	tire inflation pressure when the vehicle has been parked for at least 3 hours or more, or it has not been driven more than 1.5 km or 1 mile under that condition
Maximum inflation pressure	the maximum cold inflation pressure to which a tire may be inflated and it is shown on the sidewall of the tire
Recommended inflation pressure	cold tire inflation pressure recommended by a manufacturer
Accessory weight	the combined weight (in excess of those standard items which may be replaced) of automatic transmission, power steering, power brakes, power windows, power seats, radio, and heater, to the extent that these items are available as factory−installed equipment (whether installed or not)
Curb weight	the weight of a motor vehicle with standard equipment including the maximum capacity of fuel, oil, and coolant, and, if so equipped, air conditioning and additional weight optional engine
Maximum loaded vehicle weight	the sum of— (a) curb weight; (b) accessory weight; (c) vehicle capacity weight; and (d) production options weight
Normal occupant weight	68 kg (150 lb.) times the number of occupants specified in the second column of Table 1 that follows

Tire related term	Meaning
Production options weight	the combined weight of those installed regular production options weighing over 2.3 kg (5 lb.) in excess of those standard items which they replace, not previously considered in curb weight or accessory weight, including heavy duty brakes, ride levelers, roof rack, heavy duty battery, and special trim
Vehicle capacity weight (Total load capacity)	the rated cargo and luggage load plus 68 kg (150 lb.) times the vehicle's designated seating capacity
Intended outboard sidewall	(A) the sidewall that contains a whitewall, bears white lettering or bears manufacturer, brand, and/or model name molding that is higher or deeper than the same molding on the other sidewall of the tire, or (B) the outward facing sidewall of an asymmetrical tire that has a particular side that must always face outward when mounted on a vehicle
Occupant distribution	distribution of occupants in a vehicle as specified in the third column of Table 1 that follows
Rim	a metal support for a tire or a tire and tube assembly upon which the tire beads are seated
Rim diameter (Wheel diameter)	nominal diameter of the bead seat
Rim size designation	rim diameter and width
Rim type designation	the industry of manufacturer's designation for a rim by style or code
Rim width	nominal distance between rim flanges
Vehicle maximum load on the tire	the load on an individual tire that is determined by distributing to each axle its share of the maximum loaded vehicle weight and dividing by two

Tire related term	Meaning
Vehicle normal load on the tire	the load on an individual tire that is determined by distributing to each axle its share of the curb weight, accessory weight, and normal occupant weight (distributed in accordance with Table 1 that follows) and dividing by two
Weather side	the surface area of the rim not covered by the inflated tire

Table 1–Occupant loading and distribution for vehicle normal load for various designated seating capacities

Designated seating capacity, Number of occupants	Vehicle normal load, Number of occupants	Occupant distribution in a normally loaded vehicle
2 through 4	2	2 in front
5 through 10	3	2 in front, 1 in second seat

Vehicle load limits

Vehicle load limits include total load capacity, seating capacity, towing capacity and cargo capacity. Follow the load limits shown below. Total load capacity and seating capacity are also described on the tire and loading information label. For location of the tire and loading information label, see “Checking tire inflation pressure” on page 274.

Total load capacity:
383 kg (845 lb.)
Total load capacity means combined weight of occupants, cargo and luggage. Tongue load is included when trailer towing.

Seating capacity:
Total 5 (Front 2, Rear 3)
Seating capacity means the maximum number of occupants whose estimated average weight is 68 kg (150 lb.) per person. Depending on the weight of each person, the seating capacity given may exceed the total load capacity.

NOTICE

Even if the number of occupants are within the seating capacity, do not exceed the total load capacity.

Towing capacity (except for Canada):
Toyota does not recommend towing a trailer with your vehicle. Your vehicle is not designed for trailer towing.

Towing capacity (for Canada):
318 kg (700 lb.)
Towing capacity means the maximum gross trailer weight (trailer weight plus its cargo weight) that your vehicle is able to tow.

Cargo capacity

Cargo capacity may increase or decrease depending on the size (weight) and the number of occupants. For details, see “Capacity and distribution” that follows.

⚠ CAUTION

Do not apply the load more than each load limit. That may cause not only damage to the tires, but also deterioration to the steering ability and braking ability, which may cause an accident.

Cargo and luggage—
—Stowage precautions

When stowing cargo and luggage in the vehicle, observe the following:

- Put cargo and luggage in the luggage compartment when at all possible. Be sure all items are secured in place.
- Be careful to keep the vehicle balanced. Locating the weight as far forward as possible helps maintain the balance.
- For better fuel economy, do not carry unneeded weight.

⚠ CAUTION

- **To prevent cargo and luggage from sliding forward during braking, do not stack anything in the luggage compartment higher than the seatbacks. Keep cargo and luggage low, as close to the floor as possible.**

- **Never allow anyone to ride in the luggage compartment. It is not designed for passengers. They should ride in their seats with their seat belts properly fastened. Otherwise, they are much more likely to suffer serious bodily injury, in the event of sudden braking or a collision.**
- **Do not place anything on the luggage cover. Such items may be thrown about and possibly injure people in the vehicle during sudden braking or an accident. Secure all items in a safe place.**
- **Do not drive with objects left on top of the instrument panel. They may interfere with the driver's field of view. Or they may move during sharp vehicle acceleration or turning, and impair the driver's control of the vehicle. In an accident they may injure the vehicle occupants.**

NOTICE

Do not load the vehicle beyond the vehicle capacity weight given in Section 8.

—Capacity and distribution

Cargo capacity depends on the total weight of the occupants.

(Cargo capacity) = (Total load capacity) – (Total weight of occupants)

Steps for Determining Correct Load Limit—

(1) Locate the statement “The combined weight of occupants and cargo should never exceed XXX kg or XXX lbs.” on your vehicle’s placard.

(2) Determine the combined weight of the driver and passengers that will be riding in your vehicle.

(3) Subtract the combined weight of the driver and passengers from XXX kg or XXX lbs.

(4) The resulting figure equals the available amount of cargo and luggage load capacity. For example, if the “XXX” amount equals 1400 lbs. and there will be five 150 lb passengers in your vehicle, the amount of available cargo and luggage load capacity is 650 lbs. (1400–750 (5x150)=650 lbs.)

(5) Determine the combined weight of luggage and cargo being loaded on the vehicle. That weight may not safely exceed the available cargo and luggage load capacity calculated in Step 4.

(6) If your vehicle will be towing a trailer, load from your trailer will be transferred to your vehicle. Consult this manual to determine how this reduces the available cargo and luggage load capacity of your vehicle.

Except for Canada—Toyota does not recommend towing a trailer with your vehicle. Your vehicle is not designed for trailer towing.

For Canada—For details about trailer towing, see page 213.

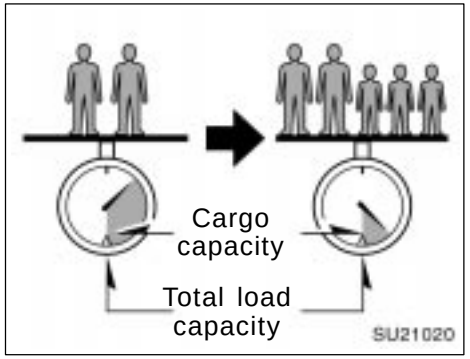

Example on Your Vehicle

In case that 2 people with the combined weight of 166 kg (366 lb.) are riding in your vehicle with the total load capacity of 383 kg (845 lb.), the available amount of cargo and luggage load capacity will be as follows:

383 kg – 166 kg = 217 kg.
(845 lb. – 366 lb. = 479 lb.)

From this condition, if 3 more passengers with the combined weight of 176 kg (388 lb.) get on, the available cargo and luggage load will be reduced as follows:

217 kg – 176 kg = 41 kg.
(479 lb. – 388 lb. = 91 lb.)

As shown in the above example, if the number of occupants increases, the cargo and luggage load equaling the combined weight of occupants who got on later must be reduced. In other words, if the increase in the number of occupants causes the excess of the total load capacity (combined weight of occupants plus cargo and luggage load), you have to reduce the cargo and luggage on your vehicle.

For details about total load capacity, see “Vehicle load limits” on page 201.

⚠ CAUTION

Even if the total load of occupant’s weight and the cargo load is less than the total load capacity, do not apply the load unevenly. That may cause not only damage to the tire but also deterioration to the steering ability due to unbalance of the vehicle, causing an accident.

Types of tires

Determine what kind of tires your vehicle is originally equipped with.

1. Summer tires

Summer tires are high−speed capability tires best suited to highway driving under dry conditions.

Since summer tires do not have the same traction performance as snow tires, summer tires are inadequate for driving on snow−covered or icy roads. For driving on snow−covered or icy roads, we recommend using snow tires. If installing snow tires, be sure to replace all four tires.

2. All season tires

All season tires are designed to provide better traction in snow and to be adequate for driving in most winter conditions, as well as for use all year round.

All season tires, however, do not have adequate traction performance compared with snow tires in heavy or loose snow. Also, all season tires fall short in acceleration and handling performance compared with summer tires in highway driving.

The details about how to distinguish summer tires from all season tires are described on page 191.

⚠ CAUTION

- **Do not mix summer and all season tires on your vehicle as this can cause dangerous handling characteristics, resulting in loss of control.**
- **Do not use tires other than the manufacturer's designated tires, and do not mix tires or wheels of the sizes different from the originally equipped tires and wheels as this can cause dangerous handling characteristics, resulting in loss of control.**

SECTION 3

STARTING AND DRIVING

Starting and driving

Before starting the engine 208
How to start the engine 208
Tips for driving in various conditions 209
Winter driving tips 210
Dinghy towing 211
Trailer towing 213
How to save fuel and make your vehicle last longer 218

Before starting the engine

1. Check the area around the vehicle before entering it.
2. Adjust seat position, seatback angle, head restraint height and steering wheel angle.
3. Adjust inside and outside rear view mirrors.
4. Lock all doors.
5. Fasten seat belts.

How to start the engine— —Cranking hold function

Once you turn the ignition key to “START” position and release it, the cranking hold function continues to crank the engine in “ON” position until it starts.

The function stops cranking the engine after about 20 seconds maximum if the engine has not started yet. When you crank the engine again, wait a few seconds and restart it.

If you hold the key in “START” position, the function will keep cranking.

(a) Before cranking

1. Apply the parking brake firmly.
2. Turn off unnecessary lights and accessories.
3. **Manual transmission:** Press the clutch pedal to the floor and shift the transmission into neutral. Hold the clutch pedal to the floor until the engine is started. A starter safety device will prevent the starter from operating if the clutch pedal is not fully depressed.

   Automatic transmission: Put the selector lever in “P”. If you need to restart the engine while the vehicle is moving, put the selector lever in “N”. A starter safety device will prevent the starter from operating if the selector lever is in any drive position.
4. **Automatic transmission only:** Depress the brake pedal and hold it to the floor until driving off.

(b) Starting the engine

Before starting the engine, be sure to follow the instructions in “(a) Before cranking”.

Normal starting procedure

The multiport fuel injection system/sequential multiport fuel injection system in your engine automatically controls the proper air−fuel mixture for starting. You can start a cold or hot engine as follows:

With your foot off the accelerator pedal, crank the engine by turning the key to “START”. Release it when the engine starts.

Engine should be warmed up by driving, not in idle. For warming up, drive with smoothly turning engine until engine coolant temperature is within normal range.

If the engine stalls...

Simply restart it, using the correct procedure given in normal starting.

If the engine will not start...

See “If your vehicle will not start” on page 222 in Section 4.

NOTICE

- ***Do not race a cold engine.***
- ***If the engine becomes difficult to start or stalls frequently, have the engine checked immediately.***

Tips for driving in various conditions

- Always slow down in gusty crosswinds. This will allow you much better control.
- Drive slowly onto curbs and, if possible, at a right angle. Avoid driving onto high, sharp−edged objects and other road hazards. Failure to do so can lead to severe tire damage such as a tire burst.

  Drive slowly when passing over bumps or travelling on a bumpy road. Otherwise, the impact could cause severe damage to the tires and/or wheels.
- When parking on a hill, turn the front wheels until they touch the curb so that the vehicle will not roll. Apply the parking brake, and place the transmission in “P” (automatic) or in first or reverse (manual). If necessary, block the wheels.

- Washing your vehicle or driving through deep water may get the brakes wet. To see whether they are wet, check that there is no traffic near you, and then press the pedal lightly. If you do not feel a normal braking force, the brakes are probably wet. To dry them, drive the vehicle cautiously while lightly pressing the brake pedal with the parking brake applied. If they still do not work safely, pull to the side of the road and call a Toyota dealer for assistance.

⚠ CAUTION

- **Before driving off, make sure that the parking brake is fully released and the parking brake reminder light is off.**
- **Do not leave your vehicle unattended while the engine is running.**
- **Do not rest your foot on the brake pedal while driving. It can cause dangerous overheating, needless wear, and poor fuel economy.**
- **To drive down a long or steep hill, reduce your speed and downshift. Remember, if you ride the brakes excessively, they may overheat and not work properly.**
- **Be careful when accelerating, upshifting, downshifting or braking on a slippery surface. Sudden acceleration or engine braking could cause the vehicle to skid or spin.**
- **Do not drive in excess of the speed limit. Even if the legal speed limit permits it, do not drive over 140 km/h (85 mph) unless your vehicle has high−speed capability tires. Driving over 140 km/h (85 mph) may result in tire failure, loss of control and possible injury. Be sure to consult a tire dealer to determine whether the tires on your vehicle are high−speed capability tires or not before driving at such speeds.**
- **Do not continue normal driving when the brakes are wet. If they are wet, your vehicle will require a longer stopping distance, and it may pull to one side when the brakes are applied. Also, the parking brake will not hold the vehicle securely.**

Winter driving tips

Make sure you have a proper freeze protection for engine coolant.

Only use “Toyota Super Long Life Coolant” or similar high quality ethylene glycol based non−silicate, non−amine, non−nitrite, and non−borate coolant with long−life hybrid organic acid technology. (Coolant with long−life hybrid organic acid technology is a combination of low phosphates and organic acids.)

See “Checking the engine coolant level” on page 272 in Section 7−2 for details of coolant type selection.

For the U.S.A.—“Toyota Super Long Life Coolant” is a mixture of 50% coolant and 50% deionized water. This coolant provides protection down to about −35°C (−31°F).

For Canada—“Toyota Super Long Life Coolant” is a mixture of 55% coolant and 45% deionized water. This coolant provides protection down to about −42°C (−44°F).

NOTICE

Do not use plain water alone.

Check the condition of the battery and cables.

Cold temperatures reduce the capacity of any battery, so it must be in top shape to provide enough power for winter starting. Section 7−3 tells you how to visually inspect the battery. Your Toyota dealer and most service stations will be pleased to check the level of charge.

Make sure the engine oil viscosity is suitable for the cold weather.

See Section 7−2 for recommended viscosity. Leaving a heavy summer oil in your vehicle during winter months may cause harder starting. If you are not sure about which oil to use, call your Toyota dealer—they will be pleased to help.

Keep the door locks from freezing.

Squirt lock de−icer or glycerine into the locks to keep them from freezing.

Use a washer fluid containing an antifreeze solution.

This product is available at your Toyota dealer and most auto parts stores. Follow the manufacturer's directions for how much to mix with water.

NOTICE

Do not use engine antifreeze or any other substitute because it may damage your vehicle's paint.

Do not use your parking brake when there is a possibility it could freeze.

When parking, put the transmission into "P" (automatic) or into first or reverse (manual) and block the rear wheels. Do not use the parking brake, or snow or water accumulated in and around the parking brake mechanism may freeze, making it hard to release.

Keep ice and snow from accumulating under the fenders.

Ice and snow built up under your fenders can make steering difficult. During bad winter driving, stop and check under the fenders occasionally.

Depending on where you are driving, we recommend you carry some emergency equipment.

Some of the things you might put in the vehicle are tire chains, window scraper, bag of sand or salt, flares, small shovel, jumper cables, etc.

Dinghy towing (with automatic transmission)

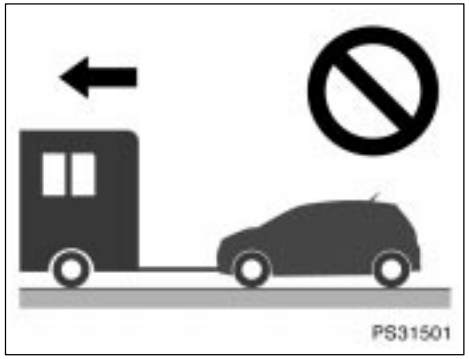

Your vehicle is not designed to be dinghy towed (with four wheels on the ground) behind a motorhome.

NOTICE

Do not tow your vehicle with four wheels on the ground. This may cause serious damage to your vehicle.

Dinghy towing (with manual transmission)

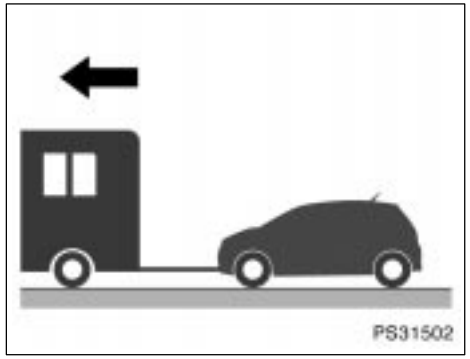

Your vehicle can be dinghy towed (with four wheels on the ground) from the front behind a motorhome.

⚠ CAUTION

Dinghy towing requires special equipment and accessories. Please refer to your service outlet of the motorhome manufacture for the recommended equipment.

NOTICE

Dinghy towing does not eliminate the possibility of damage to your vehicle.

DINGHY TOWING TIPS

Before dinghy towing, be sure to observe the following in order to reduce the damage to your vehicle.

1. Put the shift lever in neutral.
2. Turn the ignition switch to the "ACC" position. Make sure the audio is turned off and any item is not plugged into the power outlet.

NOTICE

To avoid the locking of the steering wheel, turn the ignition switch to the "ACC" position.

3. Release the parking brake.

After dinghy towing, let the engine idle for more than 3 minutes before driving the vehicle.

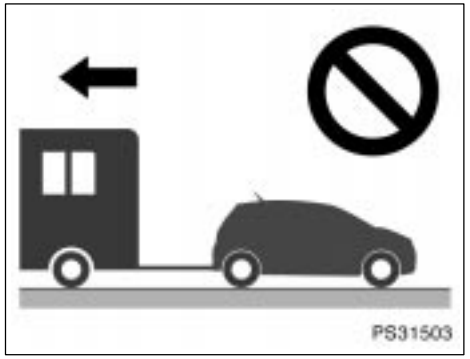

NOTICE

Do not tow your vehicle from the rear. This may cause serious damage to your vehicle.

Trailer towing (except for Canada)



Toyota does not recommend towing a trailer with your Toyota. Toyota also does not recommend the installation of a tow hitch or the use of a tow hitch carrier for a wheelchair, scooter, bicycle, etc. Your Toyota is not designed for trailer towing or for the use of tow hitch mounted carriers.

Trailer towing (for Canada)

Your vehicle is designed primarily as a passenger−carrying vehicle. Towing a trailer will have an adverse effect on handling, performance, braking, durability and driving economy (fuel consumption, etc.). Your safety and satisfaction depend on the proper use of correct equipment and cautious driving habits. For your safety and the safety of others, you must not overload your vehicle or trailer. Toyota warranties do not apply to damage or malfunction caused by towing a trailer for commercial purposes. Ask your local Toyota dealer for further details before towing.

WEIGHT LIMITS

Before towing, make sure the total trailer weight, gross vehicle weight, gross axle weight and trailer tongue load are all within the limits.

The total trailer weight and tongue load can be measured with platform scales found at a highway weighing station, building supply company, trucking company, junk yard, etc.

⚠ CAUTION

- **The total trailer weight (trailer weight plus its cargo load) must not exceed 318 kg (700 lb.). Exceeding this weight is dangerous.**
- **Trailer hitch assemblies have different weight capacities established by the hitch manufacturer. Even though the vehicle may be physically capable of towing a higher weight, the operator must determine the maximum weight rating of the particular hitch assembly and never exceed the maximum weight rating specified for the trailer−hitch. Exceeding the maximum weight rating set by the trailer hitch manufacturer can cause an accident resulting in serious personal injuries.**

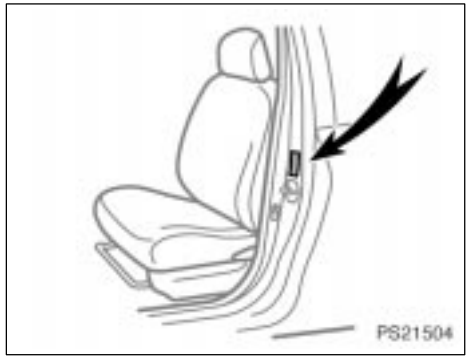

- **The gross vehicle weight must not exceed the Gross Vehicle Weight Rating (GVWR) indicated on the Certification Label. The gross vehicle weight is the sum of weights of the unloaded vehicle, driver, passengers, luggage, hitch and trailer tongue load. It also includes the weight of any special equipment installed on your vehicle.**
- **The load on either the front or rear axle resulting from distribution of the gross vehicle weight on both axles must not exceed the Gross Axle Weight Rating (GAWR) listed on the Certification Label.**

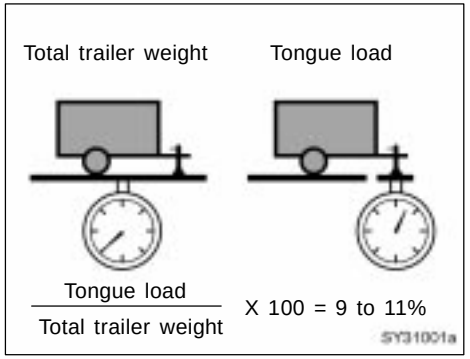

- **The trailer cargo load should be distributed so that the tongue load is 9 to 11% of the total trailer weight, not exceeding the maximum of 32 kg (70 lb.). Never load the trailer with more weight in the back than in the front. About 60% of the trailer load should be in the front half of the trailer and the remaining 40% in the rear.**

HITCHES

- Use only a hitch (Toyota genuine hitch or equivalent) which is recommended by the hitch manufacturer and conforms to the total trailer weight requirement.
- Follow the directions supplied by the hitch manufacturer. Lubricate the hitch ball with a light coat of grease.
- Toyota recommends removing the trailer hitch whenever you are not towing a trailer to reduce the possibility of additional damage caused by the hitch if your vehicle is struck from behind.

NOTICE

Do not use axle−mounted hitches as they can cause damage to the axle housing, wheel bearings, wheels or tires. Also, never install a hitch which may interfere with the normal function of an Energy Absorbing Bumper, if so equipped.

BRAKE AND SAFETY CHAINS

- **Toyota recommends trailers with brakes that conform to any applicable federal and state/provincial regulations.**
- **A safety chain must always be used between the towing vehicle and the trailer. Leave sufficient slack in the chain for turns. The chain should cross under the trailer tongue to prevent the tongue from dropping to the ground in case it becomes damaged or separated. For correct safety chain procedures, follow the hitch or trailer manufacturer's recommendation.**

⚠ CAUTION

- **Never tap into your vehicle's hydraulic system as it would lower its braking effectiveness.**
- **Never tow a trailer without using a safety chain securely attached to both the trailer and the vehicle. If damage occurs to the coupling unit or hitch ball, there is danger of the trailer wandering over into another lane.**

TIRES

- Ensure that your vehicle's tires are properly inflated. See page 274 in Section 7−2 and page 299 in Section 8 for instructions.
- The trailer tires should be inflated to the pressure recommended by the trailer manufacturer in respect to the total trailer weight.

TRAILER LIGHTS

- Trailer lights must comply with federal, state/provincial and local regulations. See your local recreational vehicle dealer or rental agency for the correct type of wiring and relays for your trailer. Check for correct operation of the turn signals and stop lights each time you hitch up. Direct splicing may damage your vehicle's electrical system and cause a malfunction of your lights.

BREAK−IN SCHEDULE

- Toyota recommends that you do not tow a trailer with a new vehicle or a vehicle with any new power train component (engine, transmission, differential, wheel bearing, etc.) for the first 800 km (500 miles) of driving.

MAINTENANCE

- If you tow a trailer, your vehicle will require more frequent maintenance due to the additional load. For this information, please refer to the scheduled maintenance information in the "Scheduled Maintenance Guide" or "Owner's Manual Supplement".
- Retighten all fixing bolts of the towing ball and bracket after approximately 1000 km (600 miles) of trailer driving.

PRE−TOWING SAFETY CHECK

- Check that your vehicle remains level when a loaded or unloaded trailer is hitched. Do not drive if the vehicle has an abnormal nose−up or nose−down condition, and check for improper tongue load, overload, worn suspension or other possible causes.
- Make sure the trailer cargo is securely loaded so that it can not shift.
- Check that your rear view mirrors conform to any applicable federal, state/provincial or local regulations. If not, install the rear view mirrors required for towing purpose.

TRAILER TOWING TIPS

When towing a trailer, your vehicle will handle differently than when not towing. The three main causes of vehicle−trailer accidents are driver error, excessive speed and improper trailer loading. Keep these in mind when towing:

- Before starting out, check operation of the lights and all vehicle−trailer connections. After driving a short distance, stop and recheck the lights and connections. Before actually towing a trailer, practice turning, stopping and backing with a trailer in an area away from traffic until you learn the feel.
- Backing with a trailer is difficult and requires practice. Grip the bottom of the steering wheel and move your hand to the left to move the trailer to the left. Move your hand to the right to move the trailer to the right. (This procedure is generally opposite to that when backing without a trailer.) Also, just turn the steering wheel a little at a time, avoiding sharp or prolonged turning. Have someone guide you when backing to reduce the risk of an accident.
- Because stopping distance may be increased, vehicle−to−vehicle distance should be increased when towing a trailer. For each 16 km/h (10 mph) of speed, allow at least one vehicle and trailer length between you and the vehicle ahead. Avoid sudden braking as you may skid, resulting in jackknifing and loss of control. This is especially true on wet or slippery surfaces.
- Avoid jerky starts or sudden acceleration. If your vehicle has a manual transmission, prevent excessive clutch slippage by keeping engine rpm low and not racing the engine. Always start out in first gear.
- Avoid jerky steering and sharp turns. The trailer could hit your vehicle in a tight turn. Slow down before making a turn to avoid the necessity of sudden braking.
- Remember that when making a turn, the trailer wheels will be closer than the vehicle wheels to the inside of the turn. Therefore, compensate for this by making a larger than normal turning radius with your vehicle.
- Crosswinds and rough roads will adversely affect handling of your vehicle and trailer, causing sway. Pay attention to the rear from time to time to prepare yourself for being passed by large trucks or buses, which may cause your vehicle and trailer to sway. If swaying happens, firmly grip the steering wheel and reduce speed immediately but gradually. Never increase speed. Steer straight ahead. If you make no extreme correction with the steering or brakes, the vehicle and trailer will stabilize.
- Be careful when passing other vehicles. Passing requires considerable distance. After passing a vehicle, do not forget the length of your trailer and be sure you have plenty of room before changing lanes.
- In order to maintain engine braking efficiency, do not use fifth gear (manual) or do not put the transmission in “D” (automatic).

- Because of the added load of the trailer, your vehicle's engine may overheat on hot days (at temperatures over 30°C [85°F]) when going up a long or steep grade with a trailer. If the engine coolant temperature gauge indicates overheating, immediately turn off the air conditioning (if in use), pull off the road and stop in a safe spot. Refer to "If your vehicle overheats" on page 227 in Section 4
- Always place wheel blocks under both the vehicle and trailer wheels when parking. Apply the parking brake firmly. Put the transmission in "P" (automatic) or in first or reverse (manual). Avoid parking on a slope with a trailer, but if it cannot be avoided, do so only after performing the following:

1. Apply the brakes and hold.
2. Have someone place wheel blocks under both the vehicle and trailer wheels.
3. When the wheel blocks are in place, release your brakes slowly until the blocks absorb the load.
4. Apply the parking brake firmly.
5. Shift into first or reverse (manual) or "P" (automatic) and turn off the engine.

When restarting out after parking on a slope:

1. With the transmission in "P" position (automatic) or the clutch pedal depressed (manual), start the engine. (With an automatic transmission, be sure to keep the brake pedal depressed.)
2. Shift into gear.
3. Release the parking brake (also foot brake on automatic transmission vehicles) and slowly pull or back away from the wheel blocks. Stop and apply your brakes.
4. Have someone retrieve the blocks.

⚠ CAUTION

- **Do not exceed 72 km/h (45 mph) or the posted towing speed limit, whichever is lower. Because instability (swaying) of a towing vehicle–trailer combination usually increases as the speed increases, exceeding 72 km/h (45 mph) may cause loss of control.**
- **Slow down and downshift before descending steep or long downhill grades. Do not make sudden downshifts.**
- **Avoid holding the brake pedal down too long or too frequently. This could cause the brakes to overheat and result in reduced braking efficiency.**

How to save fuel and make your vehicle last longer

Improving fuel economy is easy–just take it easy. It will help make your vehicle last longer, too. Here are some specific tips on how to save money on both fuel and repairs:

- **Keep your tires inflated at the correct pressure.** Underinflation causes tire wear and wastes fuel. See Section 7−2 for instructions.
- **Do not carry unneeded weight in your vehicle.** Excess weight puts a heavier load on the engine, causing greater fuel consumption.
- **Avoid lengthy warm−up idling.** Once the engine is running smoothly, begin driving—but gently. Remember, however, that on cold winter days this may take a little longer.
- **Put the selector lever into the "D" when engine braking is not required.**

  Driving with the selector lever in "3" will reduce the fuel economy (For details, see "Automatic transmission" on page 125 in Section 1−7.)
- **Accelerate slowly and smoothly.** Avoid jackrabbit starts. Get into high gear as quickly as possible.
- **Avoid long engine idling.** If you have a long wait and you are not in traffic, it is better to turn off the engine and start again later.
- **Avoid engine lugging or over−revving.** Use a gear position suitable for the road on which you are travelling.
- **Avoid continuous speeding up and slowing down.** Stop−and−go driving wastes fuel.
- **Avoid unnecessary stopping and braking.** Maintain a steady pace. Try to time the traffic signals so you only need to stop as little as possible or take advantage of through streets to avoid traffic lights. Keep a proper distance from other vehicles to avoid sudden braking. This will also reduce wear on your brakes.
- **Avoid heavy traffic or traffic jams whenever possible.**
- **Do not rest your foot on the clutch or brake pedal.** This causes needless wear, overheating and poor fuel economy.
- **Maintain a moderate speed on highways.** The faster you drive,the greater the fuel consumption. By reducing your speed, you will cut down on fuel consumption.
- **Keep the front wheels in proper alignment.** Avoid hitting the curb and slow down on rough roads. Improper alignment not only causes faster tire wear but also puts an extra load on the engine, which, in turn, wastes fuel.
- **Keep the bottom of your vehicle free from mud, etc.** This not only lessens weight but also helps prevent corrosion.
- **Keep your vehicle tuned−up and in top shape.** A dirty air cleaner, improper valve clearance, dirty plugs, dirty oil and grease,brakes not adjusted, etc. all lower engine performance and contribute to poor fuel economy. For longer life of all parts and lower operating costs, keep all maintenance work on schedule, and if you often drive under severe conditions, see that your vehicle receives more frequent maintenance. (For scheduled maintenance information, please refer to the "Scheduled Maintenance Guide" or "Owner's Manual Supplement".)

⚠ CAUTION

Never turn off the engine to coast down hills. Your power steering and brake booster will not function without the engine running. Also, the emission control system operates properly only when the engine is running.

SECTION 4

IN CASE OF AN EMERGENCY

In case of an emergency

If your vehicle will not start 222
If your engine stalls while driving 226
If you cannot increase engine speed 226
If your vehicle overheats 227
If you have a flat tire 228
If your vehicle becomes stuck 240
If your vehicle needs to be towed 240
If you cannot shift automatic transmission selector lever 244
If you lose your keys 245

If your vehicle will not start—
(a) Simple checks

Before making these checks, make sure you have followed the correct starting procedure given in “How to start the engine” in Section 3 and that you have sufficient fuel. If your vehicle is equipped with the engine immobilizer system, also check whether the other keys will start the engine. If they work, your key may be broken. Have the key checked at your Toyota dealer. If none of your keys work, there may be a malfunction in the immobilizer system. Call your Toyota dealer. (See “Keys (with engine immobilizer system)” on page 11 in Section 1−2.)

If the engine does not turn over or turns over too slowly—

1. Check that the battery terminals are tight and clean.
2. If the battery terminals are connected correctly, switch on the interior light.
3. If the light does not come on, is dim or goes out when the starter is cranked, the battery is discharged. You may try jump starting. See “(c) Jump starting” for further instructions.

If the light comes on and is normal, but the engine still will not start, it needs adjustment or repair. Call a Toyota dealer or qualified repair shop.

NOTICE

Do not pull− or push−start the vehicle. It may damage the vehicle or cause a collision when the engine starts. Also the three−way catalytic converter may overheat and become a fire hazard.

If the engine turns over at its normal speed but will not start—

1. Turn the ignition key to “ACC” or “LOCK” and try starting the engine again.
2. If the engine will not start, the engine may be flooded because of repeated cranking. See “(b) Starting a flooded engine” for further instructions.
3. If the engine still will not start, it needs adjustment or repair. Call a Toyota dealer or qualified repair shop.

(b) Starting a flooded engine

If the engine will not start, your engine may be flooded because of repeated cranking.

If this happens, turn the ignition key to “START” with the accelerator pedal fully depressed, and hold the key at this position for about 30 seconds. Then the cranking hold function stops cranking automatically, and you can try starting the engine with your foot off the accelerator pedal.

If the engine does not start, wait a few minutes and try again.

If the engine still will not start, it needs adjustment or repair. Call a Toyota dealer or qualified repair shop for assistance.

(c) Jump starting

To avoid serious personal injury and damage to your vehicle which might result from battery explosion, acid burns, electrical burns, or damaged electronic components, these instructions must be followed precisely.

If you are unsure about how to follow this procedure, we strongly recommend that you seek the help of a competent mechanic or towing service.

⚠ CAUTION

- **Batteries contain sulfuric acid which is poisonous and corrosive. Wear protective safety glasses when jump starting, and avoid spilling acid on your skin, clothing, or vehicle.**
- **If you should accidentally get acid on yourself or in your eyes, remove any contaminated clothing and flush the affected area with water immediately. Then get immediate medical attention. If possible, continue to apply water with a sponge or cloth while en route to the medical office.**
- **The gas normally produced by a battery will explode if a flame or spark is brought near. Use only standardized jumper cables and do not smoke or light a match while jump starting.**

NOTICE

The battery used for boosting must be 12 V. Do not jump start unless you are sure that the booster battery is correct.

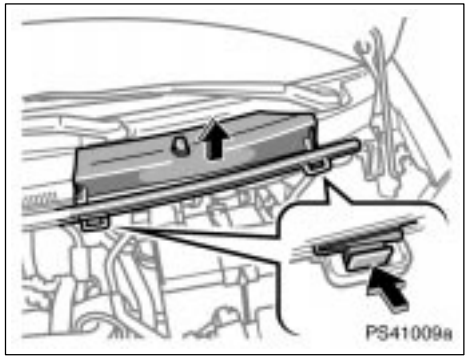

BEFORE JUMP STARTING

Remove the cover as shown in the illustration.

JUMP STARTING PROCEDURE

1. If the booster battery is installed in another vehicle, make sure the vehicles are not touching. Turn off all unnecessary lights and accessories.

   When boosting, use the battery of matching or higher quality. Any other battery may be difficult to jump start with.

   If jump starting is difficult, charge the battery for several minutes.

2. If required, remove all the vent plugs from the booster and discharged batteries. Lay a cloth over the open vents on the batteries. (This helps reduce the explosion hazard, personal injuries and burns.)

3. If the engine in the vehicle with the booster battery is not running, start it and let it run for a few minutes. During jump starting, run the engine at about 2000 rpm with the accelerator pedal lightly depressed.

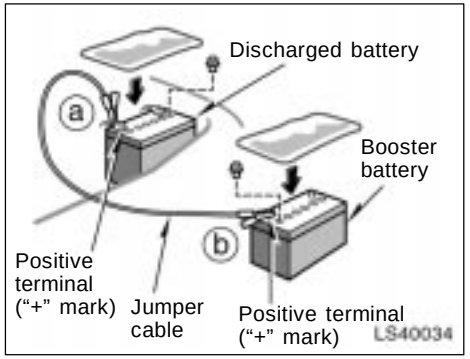

4. Make the cable connections in the order a, b, c, d.

   a. Connect the clamp of the positive (red) jumper cable to the positive (+) terminal on the discharged battery.

   b. Connect the clamp at the other end of the positive (red) jumper cable to the positive (+) terminal on the booster battery.

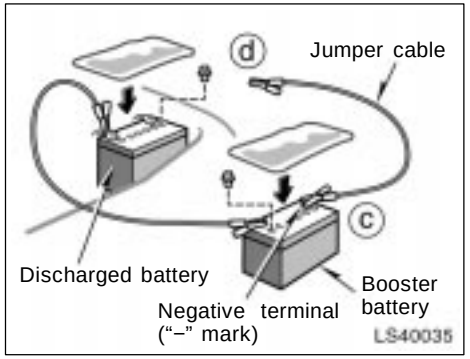

   c. Connect the clamp of the negative (black) jumper cable to the negative (−) terminal on the booster battery.

   d. Connect the clamp at the other end of the negative (black) jumper cable to a solid, stationary, unpainted, metallic point of the vehicle with the discharged battery.

   The recommended connecting point is shown in the following illustration:

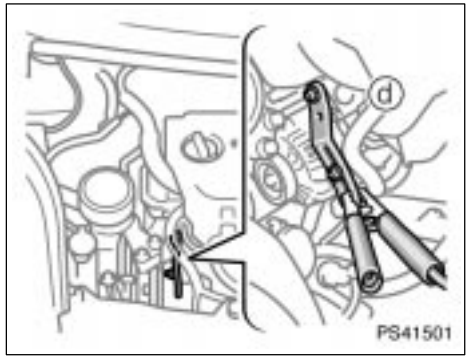

Connecting point

Do not connect the cable to or near any part that moves when the engine is cranked.

⚠ CAUTION

When making the connections, to avoid serious injury, do not lean over the battery or accidentally let the jumper cables or clamps touch anything except the correct battery terminals or the ground.

5. Charge the discharged battery with the jumper cables connected for approximately 5 minutes. At this time, run the engine in the vehicle with the booster battery at about 2000 rpm with the accelerator pedal lightly depressed.
6. Start your engine in the normal way. After starting, run it at about 2000 rpm for several minutes with the accelerator pedal lightly depressed.
7. Carefully disconnect the cables in the exact reverse order: the negative cable and then the positive cable.
8. Carefully dispose of the battery cover cloths—they may now contain sulfuric acid.
9. If removed, replace all the battery vent plugs.

If the cause of your battery discharging is not apparent (for example, lights left on), you should have it checked at your Toyota dealer.

If the first start attempt is not successful...

Check that the clamp on the jumper cables are tight. Recharge the discharged battery with the jumper cables connected for several minutes and restart your engine in the normal way.

If another attempt is not successful, the battery may be depleted. Have it checked at your Toyota dealer.

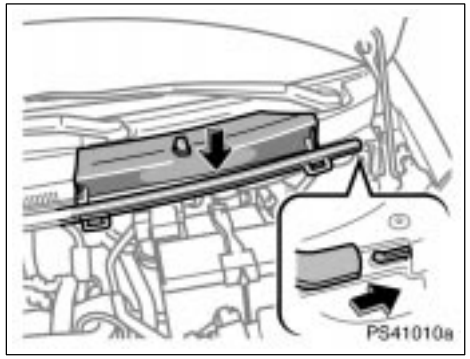

AFTER JUMP STARTING

Install the cover as shown in the illustration.

NOTICE

After installed the cover, make sure the cover is securely in its original position. If it is not secured, it may be damaged to your vehicle.

If your engine stalls while driving

If your engine stalls while driving...

1. Reduce your speed gradually, keeping a straight line. Move cautiously off the road to a safe place.
2. Turn on your emergency flashers.
3. Turn the ignition key to “ACC” or “LOCK”, and try starting the engine again.

If the engine will not start, see “If your vehicle will not start” in this Section.

⚠ CAUTION

If the engine is not running, the power assist for the brakes and steering will not work so steering and braking will be much harder than usual.

If you cannot increase engine speed

If engine speed does not increase when the accelerator pedal is depressed, there may be a problem somewhere in the electronic throttle control system.

At this time, vibration may occur. However, if you depress the accelerator pedal more firmly and slowly, you can drive your vehicle at low speeds. Have your vehicle checked by your Toyota dealer as soon as possible.

Even if the abnormality of the electronic throttle control system is corrected during low speed driving, the system may not be recovered until the engine is stopped and the ignition key is turned to “ACC” or “LOCK” position.

⚠ CAUTION

Be especially careful to prevent erroneous pedal operation.

If your vehicle overheats

If your engine coolant temperature gauge indicates overheating, if you experience a loss of power, or if you hear a loud knocking or pinging noise, the engine has probably overheated. You should follow this procedure...

1. Pull safely off the road, stop the vehicle and turn on your emergency flashers. Put the transmission in “P” (automatic) or neutral (manual) and apply the parking brake. Turn off the air conditioning if it is being used.
2. If coolant or steam is boiling out of the radiator or reservoir, stop the engine. Wait until the steam subsides before opening the hood. If there is no coolant boiling over or steam, leave the engine running and make sure the electric cooling fan is operating. If it is not, turn the ignition off.

⚠ CAUTION

To help avoid personal injury, keep the hood closed until there is no steam. Escaping steam or coolant is a sign of very high pressure.

3. Look for obvious coolant leaks from the radiator, hoses, and under the vehicle. However, note that water draining from the air conditioning is normal if it has been used.

⚠ CAUTION

When the engine is running, keep hands and clothing away from the moving fan and engine drive belts.

4. If the coolant is leaking, stop the engine immediately. Call a Toyota dealer for assistance.
5. If there are no obvious leaks, check the coolant reservoir. If it is dry, add coolant to the reservoir while the engine is running. Fill it about half full. For the coolant type see “Coolant type selection” on page 272 in Section 7−2.

⚠ CAUTION

Do not attempt to remove the radiator cap when the engine and radiator are hot. Serious injury could result from scalding hot fluid and steam blown out under pressure.

6. After the engine coolant temperature has cooled to normal, again check the coolant level in the reservoir. If necessary, bring it up to half full again. Serious coolant loss indicates a leak in the system. You should have it checked as soon as possible at your Toyota dealer.

If you have a flat tire—

1. Reduce your speed gradually, keeping a straight line. Move cautiously off the road to a safe place well away from the traffic. Avoid stopping on the center divider of a highway. Park on a level spot with firm ground.
2. Stop the engine and turn on your emergency flashers.
3. Firmly set the parking brake and put the transmission in “P” (automatic) or reverse (manual).
4. Have everyone get out of the vehicle on the side away from traffic.
5. Read the following instructions thoroughly.

⚠ CAUTION

When jacking, be sure to observe the following to reduce the possibility of personal injury:

- **Follow jacking instructions.**
- **Do not put any part of your body under the vehicle supported by the jack. Otherwise, personal injury may occur.**
- **Do not start or run the engine while your vehicle is supported by the jack.**
- **Stop the vehicle on a level firm ground, firmly set the parking brake and put the transmission in “P” (automatic) or reverse (manual). Block the wheel diagonally opposite to the one being changed if necessary.**

- **Make sure to set the jack properly in the jack point. Raising the vehicle with jack improperly positioned will damage the vehicle or may allow the vehicle to fall off the jack and cause personal injury.**
- **Never get under the vehicle when the vehicle is supported by the jack alone.**
- **Use the jack only for lifting your vehicle during wheel changing.**
- **Do not raise the vehicle with someone in the vehicle.**
- **When raising the vehicle, do not put an object on or under the jack.**
- **Raise the vehicle only high enough to remove and change the tire.**

NOTICE
Do not continue driving with a deflated tire. Driving even a short distance can damage a tire and wheel beyond repair.

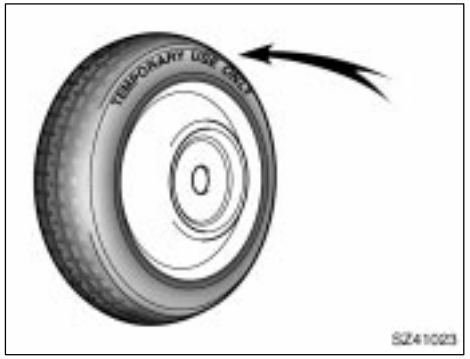

Compact spare tire

The compact spare tire is designed for temporary emergency use only.

The compact spare tire is identified by the distinctive wording “TEMPORARY USE ONLY” molded into the sidewall of the tire.

The compact spare tire saves space in your luggage compartment, and its lighter weight helps to improve fuel economy and permits easier installation in case of a flat tire.

The compact spare tire can be used many times, if necessary. It has tread life of up to 4800 km (3000 miles) depending on road conditions and your driving habits. When tread wear indicators appear on the tire, replace the tire.

See also the tire information in Section 7−2 for details on the tread wear indicators and other service information.

⚠ CAUTION

- **The compact spare tire was designed especially for your Toyota. Do not use it on any other vehicle.**
- **Do not use more than one compact spare tire at the same time.**
- **The pressure for the compact spare tire must be 420 kpa (4.2 kgf/cm^2 or bar, 60 psi).**
- **Do not exceed 80 km/h (50 mph) when driving with the compact spare tire.**
- **Replace the compact spare tire with the standard tire as soon as possible.**
- **Avoid sudden acceleration, sudden deceleration and sharp turns with the compact spare tire.**

NOTICE

Your ground clearance is reduced when the compact spare tire is installed so avoid driving over obstacles and drive slowly on rough, unpaved roads and speed bumps. Also, do not attempt to go through an automatic car wash as the vehicle may get caught, resulting in damage.

—Required tools and spare tire

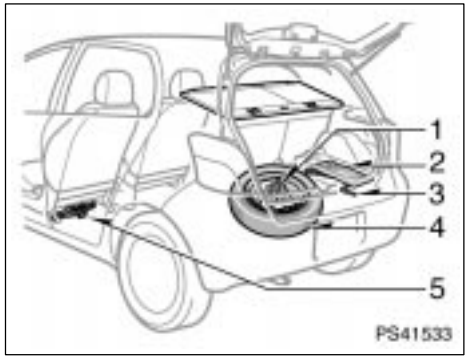

1. Get the required tools and spare tire.

1. Tie−down belt
2. Tool bag
3. Jack handle
4. Spare tire
5. Jack

Split seat only—Before removing the deck board, slide the rear seat fully forward.

To remove the deck board, see “Luggage storage box” on page 175 in Section 1−10.

You will find a wheel nut wrench in the tool bag.

To prepare yourself for an emergency, you should familiarize yourself with the use of the jack, each of the tools and their storage locations.

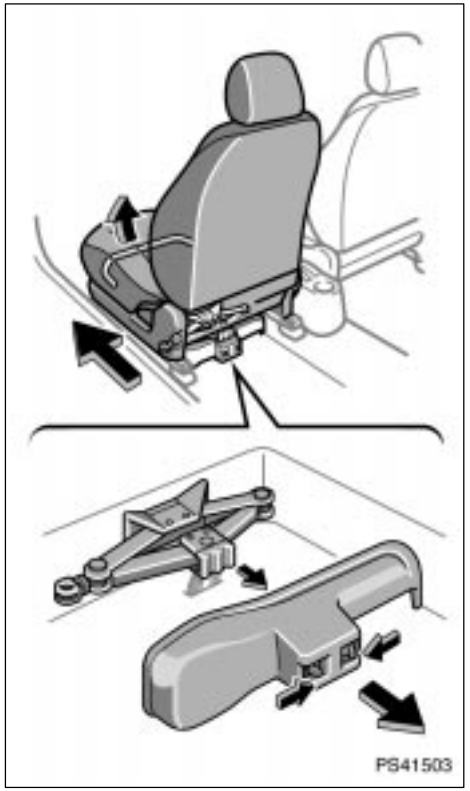

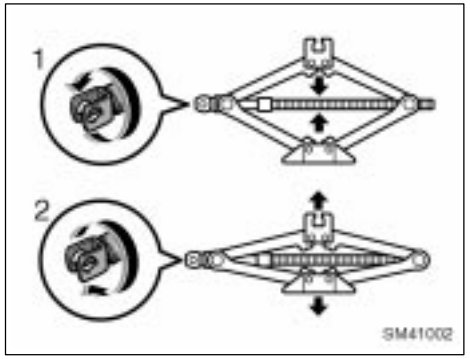

To remove the jack, move the driver seat to the front−most position and remove the cover.

To remove: Turn the joint in direction 1 by hand until the jack is free.

To store: Turn the joint in direction 2 by hand until the jack is firmly secured to prevent it flying forward during a collision or sudden braking.

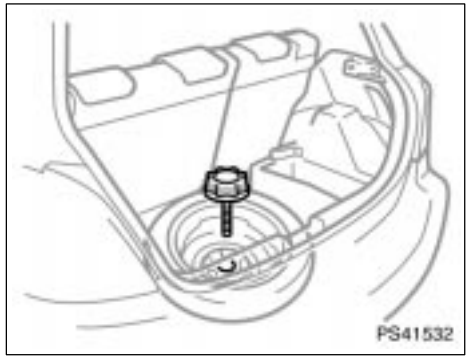

To remove the spare tire, loosen the bolt and remove it.

Then take the spare tire out of the vehicle.

When storing the spare tire, put it in place with the inner side of the wheel facing up. Then secure the tire by repeating the above removal steps in reverse order to prevent it from flying forward during a collision or sudden braking.

The compact tire storage area is designed only for a compact spare tire. Standard size tire cannot be stored in this storage area.

—Blocking the wheel

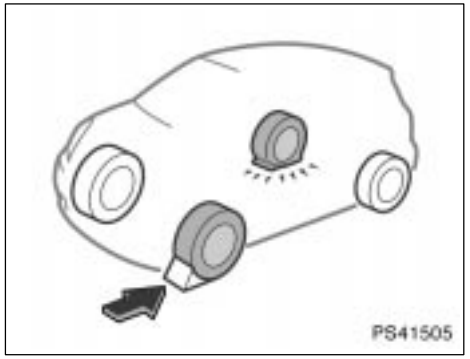

2. Block the wheel diagonally opposite the flat tire to keep the vehicle from rolling when it is jacked up.

When blocking the wheel, place a wheel block in front of one of the front wheels or behind one of the rear wheels.

—Removing wheel ornament (on some models)

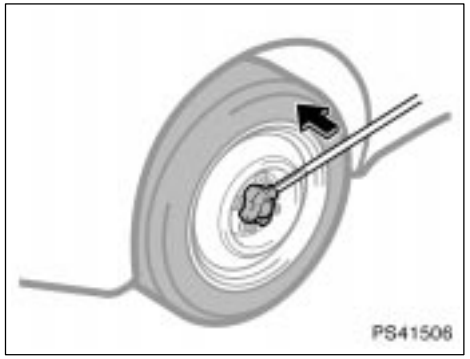

Steel wheels (type A)

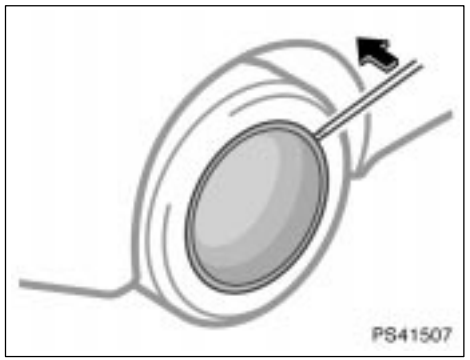

Steel wheels (type B)

3. Remove the wheel ornament.

Pry off the wheel ornament, using the beveled end of the wheel nut wrench as shown.

⚠ CAUTION

Do not try to pull off the ornament by hand. Take due care in handling the ornament to avoid unexpected personal injury.

—Loosening wheel nuts

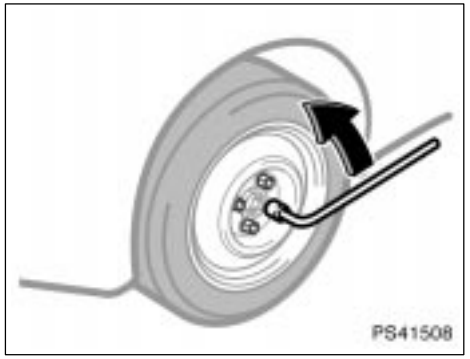

4. Loosen all the wheel nuts.

Always loosen the wheel nuts before raising the vehicle.

The nuts turn counterclockwise to loosen. To get maximum leverage, fit the wrench to the nut so that the handle is on the right side, as shown above. Grasp the wrench near the end of the handle and pull up on the handle. Be careful that the wrench does not slip off the nut.

Do not remove the nuts yet—just unscrew them about one−half turn.

⚠ CAUTION

Never use oil or grease on the bolts or nuts. The nuts may loosen and the wheels may fall off, which could cause a serious accident.

—Positioning the jack

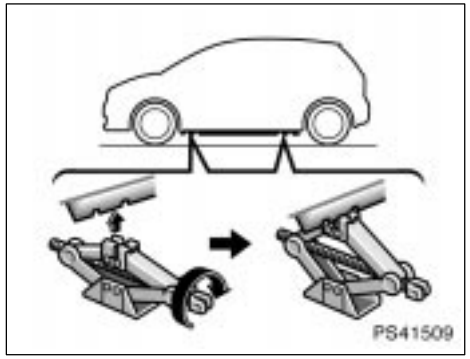

5. Position the jack at the correct jack point as shown.

Make sure the jack is positioned on a level and solid place.

—Raising your vehicle

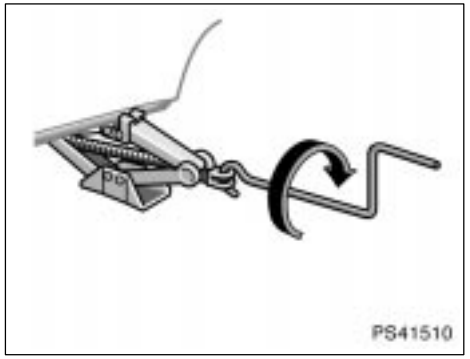

6. After making sure that no one is in the vehicle, raise it high enough so that the spare tire can be installed.

Remember you will need more ground clearance when putting on the spare tire than when removing the flat tire.

To raise the vehicle, insert the jack handle into the jack (it is a loose fit) and turn it clockwise. As the jack touches the vehicle and begins to lift, double−check that it is properly positioned.

⚠ CAUTION

Never get under the vehicle when the vehicle is supported by the jack alone.

—Changing wheels

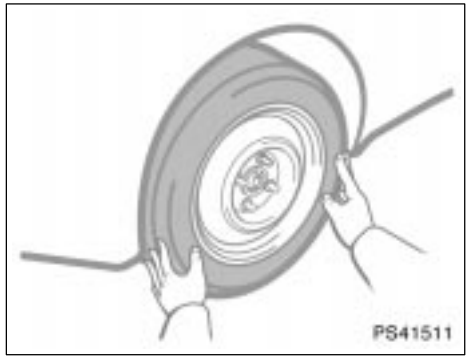

7. Remove the wheel nuts and change tires.

Lift the flat tire straight off and put it aside.

Roll the spare wheel into position and align the holes in the wheel with the bolts. Then lift up the wheel and get at least the top bolt started through its hole. Wiggle the tire and press it back over the other bolts.

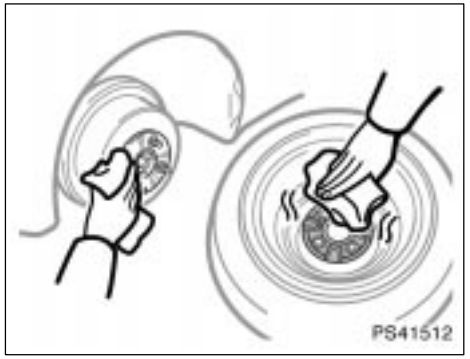

Before putting on wheels, remove any corrosion on the mounting surfaces with a wire brush or such. Installation of wheels without good metal−to−metal contact at the mounting surface can cause wheel nuts to loosen and eventually cause a wheel to come off while driving.

—Reinstalling wheel nuts

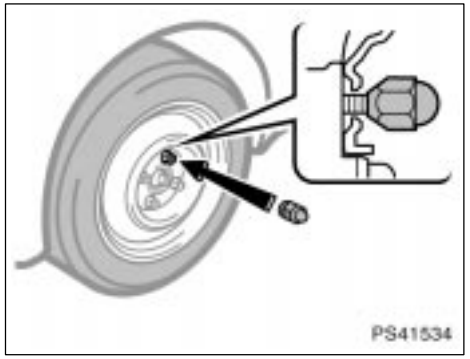

8. Reinstall all the wheel nuts finger tight.

Reinstall the wheel nuts (tapered end inward) and tighten them as much as you can by hand. Press back on the tire and see if you can tighten them more.

⚠ CAUTION

Never use oil or grease on the bolts or nuts. Doing so may lead to overtightening the nuts and damaging the bolts. The nuts may loosen and the wheels may fall off, which could cause a serious accident. If there is oil or grease on any bolt or nut, clean it.

—Lowering your vehicle

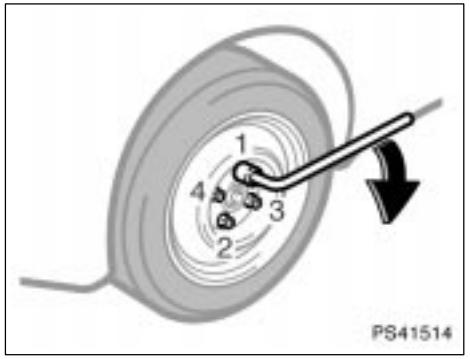

9. Lower the vehicle completely and tighten the wheel nuts.

Turn the jack handle counterclockwise to lower the vehicle.

Use only the wheel nut wrench to tighten the nuts. Do not use other tools or any additional leverage other than your hands, such as a hammer, pipe or your foot. Make sure the wrench is securely engaged over the nut.

Tighten each nut a little at a time in the order shown. Repeat the process until all the nuts are tight.

⚠ CAUTION

- **When lowering the vehicle, make sure all portions of your body and all other persons around will not be injured as the vehicle is lowered to the ground.**
- **Have the wheel nuts tightened with torque wrench to 103 N·m (10.5 kgf·m, 76 ft·lbf), as soon as possible after changing wheels. Otherwise, the nuts may loosen and the wheels may fall off, which could cause a serious accident.**
- **Do not attach a heavily damaged plastic wheel ornament. It may fly off the wheel and cause accidents while the vehicle is moving.**

—Stowing flat tire

10. Restow all the tools and jack securely. Then secure the flat tire with the tire tie−down belt in the luggage compartment as follows.

Before stowing flat tire, remove the luggage cover. (See “Luggage cover” on page 175 in Section 1−10.)

⚠ CAUTION

Before driving, make sure all the tools, jack and flat tire are securely in place in their storage location to reduce the possibility of personal injury during a collision or sudden braking.

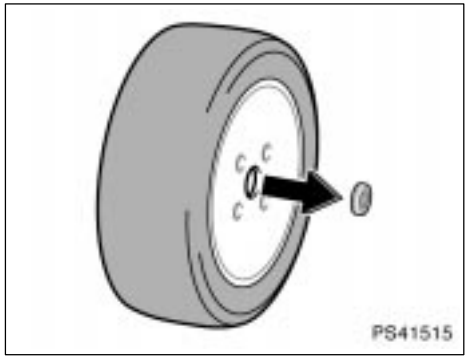

1. Aluminum wheels—Before stowing the flat tire, remove the center wheel ornament by pushing from the reverse side.

   Be careful not to lose the wheel ornament.

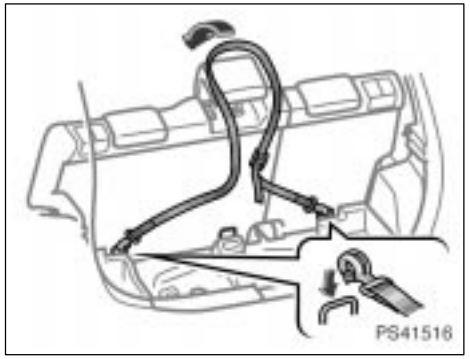

2. Hook each belt end to the corresponding anchor brackets. Then, put the center portion of the belt onto the rear center head restraint.
3. Return the deck board to the original position and then lock it. (See “Luggage storage box” on page 175 in Section 1−10.)

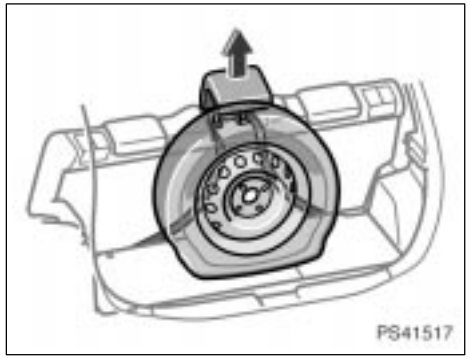

4. Lay the flat tire on the luggage floor so that the outer side of the tire wheel faces toward the rear of the vehicle. Detach the rear center head restraint from the seat and release the belt.

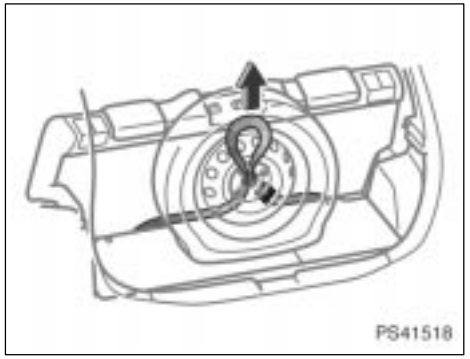

5. Pass the belt through the center hole of the flat tire wheel.

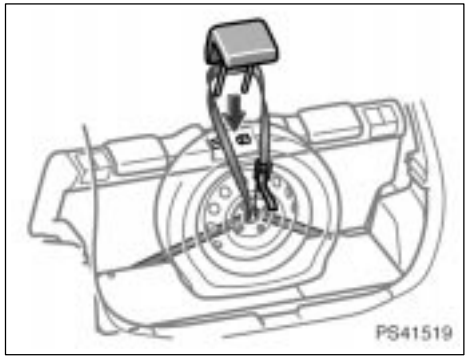

6. Put the center portion of the belt onto the rear center head restraint position and then return the rear center head restraint.

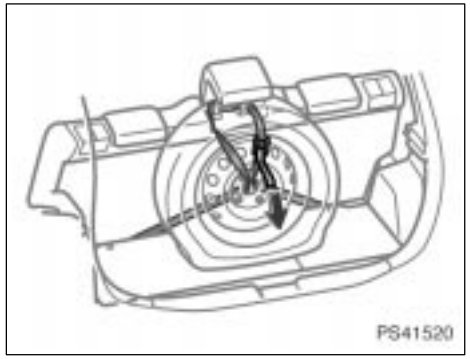

7. Hold the buckle and pull the belt to secure the tire.

After stowing the flat tire, check that the tire and belt are secured.

—After changing wheels

11. Check the air pressure of the replaced tire.

Adjust the air pressure to the specification designated on page 299 in Section 8. If the pressure is lower, drive slowly to the nearest service station and fill to the correct pressure.

Do not forget to reinstall the tire inflation valve cap as dirt and moisture could get into the valve core and possibly cause air leakage. If the cap is missing, have a new one put on as soon as possible.

As soon after changing wheels as possible, tighten the wheel nuts to the torque specified on page 299 in Section 8 with a torque wrench. And have a technician repair the flat tire.

⚠ CAUTION

Before driving, make sure all the tools, jack and flat tire are securely in place in their storage location to reduce the possibility of personal injury during a collision or sudden braking.

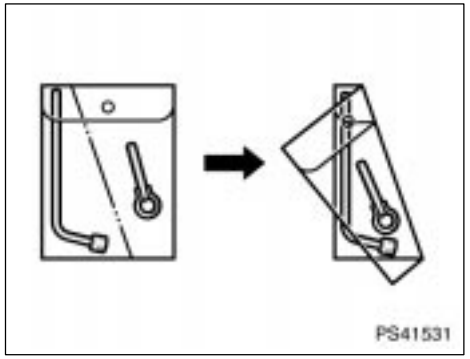

Position the tools as shown in the illustration. Fold the tool bag over and then restow it.

If your vehicle becomes stuck

If your vehicle becomes stuck in snow, mud, sand, etc., then you may attempt to rock the vehicle free by moving it forward and backward.

⚠ CAUTION

Do not attempt to rock the vehicle free by moving it forward and backward if people or objects are any where near the vehicle. During the rocking operation the vehicle may suddenly move forward or backward as it becomes unstuck, causing injury or damage to nearby people or objects.

NOTICE

If you rock your vehicle, observe the following precautions to prevent damage to the transmission and other parts.

- ***Do not depress the accelerator pedal while shifting the selector lever or before the transmission is completely shifted to forward or reverse gear.***
- ***Do not race the engine and avoid spinning the wheels.***
- ***If your vehicle remains stuck after rocking the vehicle several times, consider other ways such as towing.***

If your vehicle needs to be towed—

(a) Towing with wheel lift type truck—

—From front



—From rear



(b) Using flat bed truck



PS41522

If towing is necessary, we recommend you to have it done by your Toyota dealer or a commercial tow truck service. In consultation with them, have your vehicle towed using either (a) or (b).

Only when you cannot receive a towing service from a Toyota dealer or commercial tow truck service, tow your vehicle carefully in accordance with the instructions given in "—Emergency towing" in this Section.

Proper equipment will help ensure that your vehicle is not damaged while being towed. Commercial operators are generally aware of the state/provincial and local laws pertaining to towing.

Your vehicle can be damaged if it is towed incorrectly. Although most operators know the correct procedure, it is possible to make a mistake. To avoid damage to your vehicle, make sure the following few precautions are observed. If necessary, show this page to the tow truck driver.

TOWING PRECAUTIONS:

Use a safety chain system for all towing, and abide by the state/provincial and local laws. The wheels and axle on the ground must be in good condition. If they are damaged, use a towing dolly.

(a) Towing with wheel lift type truck

From front—Release the parking brake.

NOTICE

When lifting wheels, take care to ensure adequate ground clearance for towing at the opposite end of the raised vehicle. Otherwise, the bumper and/or underbody of the towed vehicle will be damaged during towing.

From rear—

- Manual transmission:

  We recommend using a towing dolly under the front wheels. If you do not use a towing dolly, place the ignition key in the "ACC" position and put the transmission in neutral.

NOTICE

Do not tow with the key removed or in the "LOCK" position when towing from the rear without a towing dolly. The steering lock mechanism is not strong enough to hold the front wheels straight.

- Automatic transmission:

  Use a towing dolly under the front wheels.

NOTICE

Never tow a vehicle with an automatic transmission from the rear with the front wheels on the ground, as this may cause serious damage to the transmission.

(b) Using flat bed truck

—Emergency towing

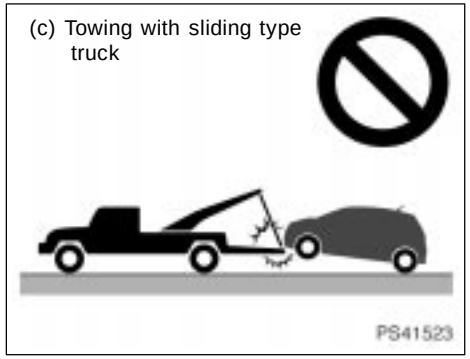

(c) Towing with sling type truck

NOTICE

Do not tow with sling type truck, either from the front or rear. This may cause body damage.

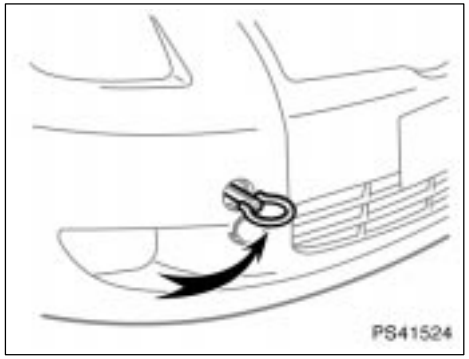

Front

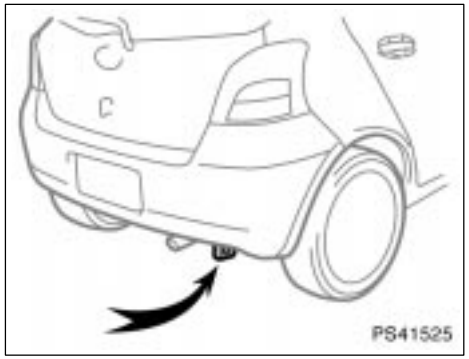

Rear

If towing is necessary, we recommend you to have it done by your Toyota dealer or a commercial tow truck service.

If a towing service is not available in an emergency, your vehicle may be temporarily towed by a cable or chain secured to either the emergency towing eyelet on the front of the vehicle or to the right emergency towing eyelet under the rear of the vehicle. Use extreme caution when towing vehicles.

Vehicles with an automatic transmission, use only the front towing eyelet when towing your vehicle.

To install the front towing eyelet, see "—Installing front towing eyelet" on page 243 in this Section.

NOTICE

- ***Only use specified towing eyelet; otherwise your vehicle may be damaged.***
- ***Vehicles with an automatic transmission, never tow a vehicle from the rear with four wheels on the ground. This may cause serious damage to the transmission.***

A driver must be in the vehicle to steer it and operate the brakes.

Towing in this manner may be done only on hard−surfaced roads for a short distance and at low speeds. Also, the wheels, axles, drive train, steering and brakes must all be in good condition.

⚠ CAUTION

Use extreme caution when towing vehicles. Avoid sudden starts or erratic driving maneuvers which would place excessive stress on the emergency towing eyelets and towing cable or chain. The eyelets and towing cable or chain may break and cause serious injury or damage.

NOTICE

- ***Use only a cable or chain specifically intended for use in towing vehicles. Securely fasten the cable or chain to the towing eyelet provided.***
- ***Do not use the left rear eyelet. It is not designed for towing.***

Before towing, release the parking brake and put the transmission in neutral (manual) or “N” (automatic). The key must be in “ACC” (engine off) or “ON” (engine running).

⚠ CAUTION

If the engine is not running, the power assist for the brakes and steering will not work so steering and braking will be much harder than usual.

—Installing front towing eyelet

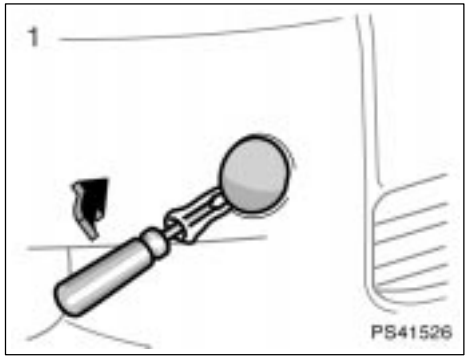

1. Remove the front towing eyelet cover on the front bumper, using a flathead screwdriver which is wrapped with a cloth.

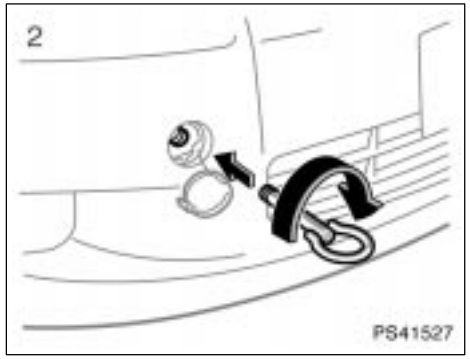

2. Use the towing eyelet in the tool bag. Secure the front towing eyelet to the hole on the front bumper by turning clockwise. (For the tool bag storage location, see "—Required tools and spare tire" on page 230.)

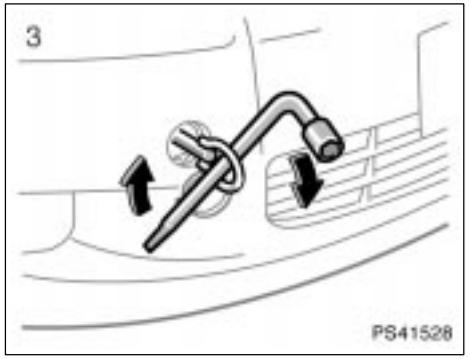

3. Tighten the front towing eyelet securely by a wheel nut wrench.

⚠ CAUTION

When installing the eyelet on the vehicle, be sure to tighten the front eyelet securely. If the eyelet is loose, it may come off when being towed and result in death or serious injury.

If you cannot shift automatic transmission selector lever

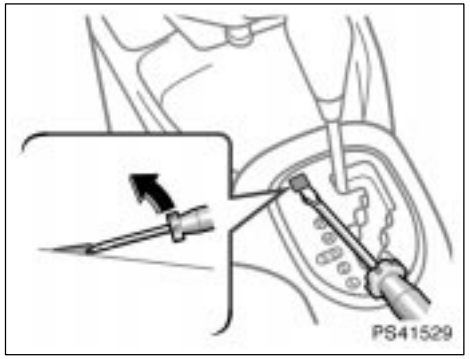

If you cannot shift the selector lever out of "P" position to other positions even though the brake pedal is depressed, use the shift lock override button as follows:

1. **Turn the ignition key to "LOCK" position. Make sure the parking brake is applied.**
2. **Pry up the cover with a flathead screwdriver or equivalent.**

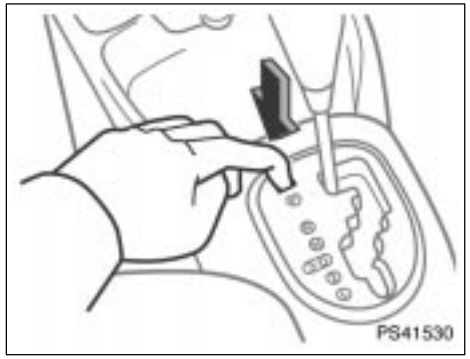

3. **Insert your finger into the hole to push down the shift lock override button. You can shift out of “P” position only while pushing the button.**
4. **Shift into “N” position.**
5. **Insert the cover.**
6. **Start the engine. For your safety, keep the brake pedal depressed.**

Be sure to have the system checked by your Toyota dealer as soon as possible.

If you lose your keys

You can purchase a new key at your Toyota dealer if you can give them the key number. If your vehicle is equipped with the engine immobilizer system, the dealer will also need your master key.

Vehicles with engine immobilizer system—Even if you lose only one key, contact your Toyota dealer to make a new key. If you lose all your master keys, you cannot make new keys; the whole engine immobilizer system must be replaced.

See the suggestion given in “Keys” on page 10 in Section 1−2.

You can use the wireless remote control system with the new key. Contact your Toyota dealer for detailed information.

If your keys are locked in the vehicle and you cannot get a duplicate, many Toyota dealers can still open the door for you, using their special tools. If you must break a window to get in, we suggest breaking the smallest side window because it is the least expensive to replace. Be extremely cautious to avoid cuts from the glass.

SECTION 5

CORROSION PREVENTION AND APPEARANCE CARE

Corrosion prevention and appearance care

Protecting your Toyota from corrosion 248
Washing and waxing your Toyota 249
Cleaning the interior 251

Protecting your Toyota from corrosion

Toyota, through its diligent research, design and use of the most advanced technology available, helps prevent corrosion and provides you with the finest quality vehicle construction. Now, it is up to you. Proper care of your Toyota can help ensure long−term corrosion prevention.

The most common causes of corrosion to your vehicle are:

- The accumulation of road salt, dirt and moisture in hard−to−reach areas under the vehicle.
- Chipping of paint, or undercoating caused by minor accidents or by stones and gravel.

Care is especially important if you live in particular areas or operate your vehicle under certain environmental conditions:

- Road salt or dust control chemicals will accelerate corrosion, as will the presence of salt in the air near the sea−coast or in areas of industrial pollution.
- High humidity accelerates corrosion especially when temperatures range just above the freezing point.
- Wetness or dampness to certain parts of your vehicle for an extended period of time, may cause corrosion even though other parts of the vehicle may be dry.
- High ambient temperatures can cause corrosion to those components of the vehicle which do not dry quickly due to lack of proper ventilation.

The above signifies the necessity to keep your vehicle, particularly the underside, as clean as possible and to repair any damage to paint or protective coatings as soon as possible.

To help prevent corrosion on your Toyota, follow these guidelines:

Wash your vehicle frequently. It is, of course, necessary to keep your vehicle clean by regular washing, but to prevent corrosion, the following points should be observed:

- If you drive on salted roads in the winter or if you live near the ocean, you should hose off the undercarriage at least once a month to minimize corrosion.
- High pressure water or steam is effective for cleaning the vehicle's underside and wheel housings. Pay particular attention to these areas as it is difficult to see all the mud and dirt. It will do more harm than good to simply wet the mud and debris without removing. The lower edge of doors, rocker panels and frame members have drain holes which should not be allowed to clog with dirt as trapped water in these areas can cause corrosion.
- Wash the underside of the vehicle thoroughly when winter is over.

See "Washing and waxing your Toyota" for more tips.

Check the condition of your vehicle's paint and trim. If you find any chips or scratches in the paint, touch them up immediately to prevent corrosion from starting. If the chips or scratches have gone through the bare metal, have a qualified body shop make the repair.

Check the interior of your vehicle. Water and dirt can accumulate under the floor mats and could cause corrosion. Occasionally check under the mats to make sure the area is dry. Be particularly careful when transporting chemicals, cleansers, fertilizers, salt, etc.; these should be transported in proper containers. If a spill or leak should occur, immediately clean and dry the area.

Use mud shields on your wheels. If you drive on salted or gravel roads, mud shields help protect your vehicle. Full−size shields, which come as near to the ground as possible, are the best. We recommend that the fittings and the area where the shields are installed be treated to resist corrosion. Your Toyota dealer will be happy to assist in supplying and installing the shields if they are recommended for your area.

Keep your vehicle in a well ventilated garage or a roofed place. Do not park your vehicle in a damp, poorly ventilated garage. If you wash your vehicle in the garage, or if you drive it covered with water or snow, your garage may be so damp as to cause corrosion. Even if your garage is heated, a wet vehicle can corrode if the ventilation is poor.

Washing and waxing your Toyota

Washing your Toyota

Keep your vehicle clean by regular washing.

The following cases may cause weakness to the paint or corrosion to the body and parts. Wash your vehicle as soon as possible.

- When driving in a coastal area
- When driving on a road sprinkled with antifreeze
- When exposed to coal tar, tree sap, bird droppings and carcass of an insect
- When driving in areas where there is a lot of smoke, soot, dust, iron dust or chemical substances
- When the vehicle becomes remarkably dirty with dust and mud

Hand−washing your Toyota

Work in the shade and wait until the vehicle body is not warm to the touch.

⚠ CAUTION

- **When cleaning under floor or chassis, be careful not to injure your hands.**
- **Exhaust gases cause the exhaust pipe to become quite hot. When washing the vehicle, be careful not to touch the pipe until it has cooled sufficiently, as touching a hot exhaust pipe can cause burns.**

NOTICE

When the front wiper arms need to be lifted away from the windshield to wash the vehicle, raise the arm on the driver side first. Conversely, when returning the wipers to their original positions, fold down the arm on the front passenger side first. Failure to perform the operations in the correct order results in damage.

1. Rinse off loose dirt with a hose. Remove any mud or road salt from the underside of the vehicle or the wheel wells.
2. Wash with a mild car−wash soap, mixed according to the manufacturer's instructions. Use a soft cotton mitt and keep it wet by dipping it frequently into the wash water. Do not rub hard—let the soap and water remove the dirt.

Fuel filler door: Do not apply water (high−pressure car wash, for example) at or near the fuel tank inlet with the fuel filler door opened. If the water enters the air vent, you may experience trouble with refueling or rough engine idling.

Plastic wheel ornaments: The plastic wheel ornaments are damaged easily by organic substances. If any organic substance splash an ornament, be sure to wash them off with water and check if the ornament is damaged.

Aluminum wheels: Use only a mild soap or neutral detergent.

Plastic bumpers: Wash carefully. Do not scrub with abrasive cleaners. The bumper faces are soft.

Exterior lights: Wash carefully. Do not use organic substances or scrub them with a hard brush. This may damage the surfaces of the lights.

Road tar: Remove with turpentine or cleaners that are marked safe for painted surfaces.

3. Rinse thoroughly—dried soap can cause streaking. In hot weather you may need to rinse each section right after you wash it.
4. To prevent water spots, dry the vehicle using a clean soft cotton towel. Do not rub or press hard—you might scratch the paint.

NOTICE

- ***Do not use organic substances (gasoline, kerosene, benzine or strong solvents), which may be toxic or cause damage.***
- ***Do not scrub any part of the vehicle with a hard brush, which may cause damage.***

Automatic car wash

Your vehicle may be washed in an automatic car wash, but remember that the paint can be scratched by some types of brushes, unfiltered washing water, or the washing process itself. Scratching reduces paint durability and gloss, especially on darker colors. The manager of the car wash should be able to advise you whether the process is safe for the paint on your vehicle.

NOTICE

To prevent damage to the antenna, make sure to remove it before driving your Toyota through an automatic car wash.

Waxing your Toyota

Polishing and waxing is recommended to maintain the original beauty of your Toyota's finish.

Apply wax once a month or if the vehicle surface does not repel water well.

1. Always wash and dry the vehicle before you begin waxing, even if you are using a combined cleaner and wax.
2. Use a good quality polish and wax. If the finish has become extremely weathered, use a car−cleaning polish, followed by a separate wax. Carefully follow the manufacturer's instructions and precautions. Be sure to polish and wax the chrome trim as well as the paint.

Windshield washer nozzles: Make sure that the nozzles do not become blocked when waxing. If a nozzle becomes blocked, contact your Toyota dealer to have the vehicle serviced.

NOTICE

If a nozzle becomes blocked, do not try to clear it with a pin or other object. The nozzle will be damaged.

Exterior lights: Do not apply wax on the surfaces of the lights. Wax may cause damage to the lenses. If you accidentally put wax on the light surfaces, wipe or wash it off.

3. Wax the vehicle again when water does not bead but remains on the surface in large patches.

NOTICE

Always remove the plastic bumpers if your vehicle is re−painted and placed in a high heat paint waxing booth. High temperatures could damage the bumpers.

Cleaning the interior

⚠ CAUTION

- **Vehicles with side airbags and curtain shield airbags:**

  Be careful not to splash water or spill liquid on the floor. This may prevent the side airbags and curtain shield airbags from activating correctly, resulting in serious injury.
- **Do not wash the vehicle floor with water, or allow water to get onto the floor when cleaning the vehicle interior or exterior. Water may get into audio components or other electrical components above or under the floor carpet (or mat) and cause a malfunction; and it may cause body corrosion.**

Vinyl interior

The vinyl upholstery may be easily cleaned with a mild soap or detergent and water.

First vacuum over the upholstery to remove loose dirt. Then, using a sponge or soft cloth, apply the soap solution to the vinyl. After allowing it to soak in for a few minutes to loosen the dirt, remove the dirt and wipe off the soap with a clean damp cloth. If all the dirt do not come off, repeat the procedure. Commercial foaming−type vinyl cleaners are also available which work well. Follow the manufacturer's instructions.

NOTICE

Do not use solvent, thinner, gasoline or window cleaner on the interior.

Carpets

Use a good foam−type shampoo to clean the carpets.

Begin by vacuuming thoroughly to remove as much dirt as possible. Several types of foam cleaners are available; some are in aerosol cans and others are powders or liquids which you mix with water to produce a foam. To shampoo the carpets, use a sponge or brush to apply the foam. Rub in overlapping circles.

Do not apply water—the best results are obtained by keeping the carpet as dry as possible. Read the shampoo instructions and follow them closely.

Seat belts

The seat belts may be cleaned with mild soap and water or with lukewarm water.

Use a cloth or sponge. As you are cleaning, check the belts for excessive wear, fraying, or cuts.

NOTICE

- ***Do not use dye or bleach on the belts—it may weaken them.***
- ***Do not use the belts until they become dry.***

Windows

The windows may be cleaned with any household window cleaner.

NOTICE

When cleaning the inside of the windows, be careful not to scratch or damage the heater wires or connectors.

Air conditioning control panel, car audio, instrument panel, console panel, and switches

Use a soft damp cloth for cleaning.

Soak a clean soft cloth in water or lukewarm water then lightly wipe off dirt.

NOTICE

- ***Do not use organic substances (solvents, kerosene, alcohol, gasoline, etc.) or alkaline or acidic solutions. These chemicals can cause discoloring, staining or peeling of the surface.***
- ***If you use cleaners or polishing agents, make sure their ingredients do not include the substances mentioned above.***
- ***If you use a liquid car freshener, do not spill the liquid onto the vehicle's interior surfaces. It may contain the ingredients mentioned above. Immediately clean any spill using the method mentioned above.***

Leather Interior

The leather upholstery may be cleaned with neutral detergent for wool.

Remove dirt using a soft cloth dampened with 5% solution of neutral detergent for wool. Then thoroughly wipe off all traces of detergent with a clean damp cloth.

After cleaning or whenever any part of the leather gets wet, dry with a soft clean cloth. Allow the leather to dry in a ventilated shaded area.

NOTICE

- ***If a stain should fail to come out with a neutral detergent, apply a cleaner that does not contain an organic solvent.***
- ***Never use organic substances such as benzine, alcohol or gasoline, or alkaline or acid solutions for cleaning the leather as these could cause discoloring.***
- ***Use of a nylon brush or synthetic fiber cloth, etc. may scratch the fine grained surface of the leather.***

- ***Mildew may develop on soiled leather upholstery. Be especially careful to avoid oil spots. Try to keep your upholstery always clean.***
- ***Long exposure to direct sunlight may cause the leather surface to harden and shrink. Keep your vehicle in a shaded area, especially in the summer.***
- ***The interior of your vehicle is apt to heat up on hot summer days, so avoid placing on the upholstery items made of vinyl or plastic or containing wax as these tend to stick to leather when warm.***
- ***Improper cleaning of the leather upholstery could result in discoloration or staining.***

If you have any questions about the cleaning of your Toyota, your local Toyota dealer will be pleased to answer them.

SECTION 6

VEHICLE MAINTENANCE AND CARE

Vehicle maintenance and care

Maintenance requirements 256
General maintenance 257
Does your vehicle need repairing? 259
Emissions Inspection and Maintenance (I/M) programs 260

For scheduled maintenance information, please refer to the “Scheduled Maintenance Guide” or “Owner’s Manual Supplement”.

Maintenance requirements

Your Toyota vehicle has been designed for fewer maintenance requirements with longer service intervals to save both your time and money. However, each regular maintenance, as well as day−to−day care, is more important than ever before to ensure smooth, trouble−free, safe, and economical drivings.

It is the owner's responsibility to make sure the specified maintenance, including general maintenance service, is performed. Note that both the new vehicle and emission control system warranties specify that proper maintenance and care must be performed. See "Owner's Warranty Information Booklet" or "Owner's Manual Supplement" for complete warranty information.

General maintenance

General maintenance items are those day−to−day care practices that are important to your vehicle for proper operation. It is the owner's responsibility to insure that the general maintenance items are performed regularly.

These checks or inspections can be done either by yourself or a qualified technician, or if you prefer, your Toyota dealer will be pleased to do them at a nominal cost.

Scheduled maintenance

The scheduled maintenance items listed in the "Scheduled Maintenance Guide" or "Owner's Manual Supplement" are those required to be serviced at regular intervals.

For details of your maintenance schedule, read the "Scheduled Maintenance Guide" or "Owner's Manual Supplement".

It is recommended that any replacement parts used for maintenance or for the repair of the emission control system be Toyota supplied.

The owner may elect to use non−Toyota supplied parts for replacement purposes without invalidating the emission control system warranty. However, use of replacement parts which are not of equivalent quality may impair the effectiveness of the emission control systems.

You may also elect to have maintenance, replacement, or repair of the emission control devices and system performed by any automotive repair establishment or individual without invalidating this warranty. See "Owner's Warranty Information Booklet" or "Owner's Manual Supplement" for complete warranty information.

Where to go for service?

Toyota technicians are well−trained specialists and are kept up to date with the latest service information through technical bulletins, service tips, and in−dealership training programs. They learn to work on Toyotas before they work on your vehicle, rather than while they are working on it.

You can be confident that your Toyota dealer's service department performs the best job to meet the maintenance requirements on your vehicle—reliably and economically.

Your copy of the repair order is proof that all required maintenance has been performed for warranty coverage. If any problems should arise with your vehicle while under warranty, your Toyota dealer will promptly take care of it. Again, be sure to keep a copy of the repair order for any service performed on your Toyota.

What about do−it−yourself maintenance?

Many of the maintenance items are easy to do yourself if you have a little mechanical ability and a few basic automotive tools. Simple instructions for how to perform them are presented in Section 7.

If you are a skilled do−it−yourself mechanic, the Toyota service manuals are recommended. Please be aware that do−it−yourself maintenance can affect your warranty coverage. See “Owner’s Warranty Information Booklet” or “Owner’s Manual Supplement” for the details.

General maintenance

Listed below are the general maintenance items that should be performed as frequently as specified. In addition to checking the items listed, if you notice any unusual noise, smell or vibration, you should investigate the cause or take your vehicle to your Toyota dealer or a qualified service shop immediately. It is recommended that any problem you notice be brought to the attention of your dealer or the qualified service shop for their advice.

⚠ CAUTION

Make these checks only with adequate ventilation if you run the engine.

IN THE ENGINE COMPARTMENT

Items listed below should be checked from time to time, e.g. each time when refueling.

Washer fluid
Make sure there is sufficient fluid in the tank. See Section 7−3 for additional information.

Engine coolant level
Make sure the coolant level is between the “FULL” and “LOW” lines on the see−through reservoir when the engine is cold. See Section 7−2 for additional information.

Radiator, condenser and hoses
Check that the front of the radiator and condenser are clean and not blocked with leaves, dirt or insects. See Section 7−2 for additional information.

Battery condition
Check the battery condition by the indicator color. See page 284 in Section 7−3 for additional information.

Brake fluid level
Make sure the brake fluid level is correct. See Section 7−2 for additional information.

Engine oil level
Check the level on the dipstick with the engine turned off and the vehicle parked on a level ground. See Section 7−2 for additional information.

Exhaust system
If you notice any change in the sound of the exhaust or smell exhaust fumes, have the cause located and corrected immediately. (See “Engine exhaust cautions” on page 181 in Section 2.)

INSIDE THE VEHICLE

Items listed below should be checked regularly, e.g. while performing periodic services, cleaning the vehicle, etc.

Lights
Make sure the headlights, stop lights, tail lights, turn signal lights, and other lights are all working. Check headlight aim.

Service reminder indicators and warning buzzers
Check that all service reminder indicators and warning buzzers function properly.

Steering wheel
Be alert for changes in steering condition, such as hard steering or strange noise.

Seats
Check that all front seat controls such as seat adjusters, seatback recliner, etc. operate smoothly and that all latches lock securely in any position. Check that the head restraint move up and down smoothly and that the locks hold securely in any latched position. For folding−down rear seatbacks, check that the latches lock securely.

Seat belts
Check that the seat belt system such as buckles, retractors and anchors operate properly and smoothly. Make sure the belt webbing is not cut, frayed, worn or damaged.

Accelerator pedal
Check the pedal for smooth operation and uneven pedal effort or catching.

Clutch pedal
Check the pedal for smooth operation.

Brake pedal
Check the pedal for smooth operation and that the pedal has the proper clearance. Check the brake booster function.

Brakes
In a safe place, check that the brakes do not pull to one side when applied.

Parking brake
Check that the lever has the proper travel and that, on a safe incline, your vehicle is held securely with only the parking brake applied.

Automatic transmission “Park” mechanism
Check the lock release button of the selector lever for proper and smooth operation. On a safe incline, check that your vehicle is held securely with the selector lever in “P” position and all brakes released.

OUTSIDE THE VEHICLE

Items listed below should be performed from time to time, unless otherwise specified.

Fluid leaks
Check underneath for leaking fuel, oil, water or other fluid after the vehicle has been parked for a while. If you smell fuel fumes or notice any leak, have the cause found and corrected immediately.

Doors and engine hood
Check that all doors and back door operate smoothly and all latches lock securely. Make sure the engine hood secondary latch secures the hood from opening when the primary latch is released.

Tire inflation pressure
Check the pressure with a gauge every two weeks, or at least once a month. See Section 7−2 for additional information.

Tire surface and wheel nuts
Check the tires carefully for cuts, damage or excessive wear. See Section 7−2 for additional information. When checking the tires, make sure no nuts are missing, and check the nuts for looseness. Tighten them if necessary.

Tire rotation
Rotate the tries according to the maintenance schedule. (For scheduled maintenance information, please refer to the “Scheduled Maintenance Guide” or “Owner’s Manual Supplement”.) See Section 7−2 for additional information.

Does your vehicle need repairing?

Be on the alert for changes in performance, sounds, and visual tip−offs that indicate service is needed. Some important clues are as follows:

- Engine missing, stumbling, or pinging
- Appreciable loss of power
- Strange engine noises
- A leak under the vehicle (however, water dripping from the air conditioning after use is normal.)
- Change in exhaust sound (This may indicate a dangerous carbon monoxide leak. Drive with the windows open and have the exhaust system checked immediately.)
- Flat−looking tire; excessive tire squeal when cornering; uneven tire wear
- Vehicle pulls to one side when driving straight on a level road
- Strange noises related to suspension movement
- Loss of brake effectiveness; spongy feeling brake or clutch pedal; pedal almost touches floor; vehicle pulls to one side when braking
- Engine coolant temperature continually higher than normal

If you notice any of these clues, take your vehicle to your Toyota dealer as soon as possible. It probably needs adjustment or repair.

⚠ CAUTION

Do not continue driving with the vehicle unchecked. It could result in serious vehicle damage and possibly personal injury.

Emissions Inspection and Maintenance (I/M) programs

Some states have vehicle emission inspection programs which include OBD (On−Board Diagnostics) checks.

The OBD system monitors the operation of the emission control system. When the OBD system determines that a problem exists somewhere in the emission control system, the malfunction indicator lamp comes on. In this case, your vehicle may not pass the I/M test and need to be repaired. Contact your Toyota dealer to service the vehicle.

Even if the malfunction indicator lamp does not come on, your vehicle may not pass the I/M test as readiness codes have not been set in the OBD system.

Readiness codes are automatically set during ordinary driving. However, when the battery is disconnected or run down, the codes are erased. Also, depending on your driving habits, the codes may not be completely set.

Also, if the malfunction indicator lamp had come on recently due to temporary malfunction such as a loose fuel tank cap, your vehicle may not pass the I/M test.

The malfunction indicator lamp will go off after taking several driving trips, but the error code in the OBD system will not be cleared unless about 40 trips or more are taken.

If your vehicle does not pass the I/M test even the malfunction indicator lamp does not come on, contact your Toyota dealer to prepare the vehicle for re−testing.

SECTION 7–1

DO–IT–YOURSELF MAINTENANCE

Introduction

Engine compartment overview 262
Fuse locations 263
Do–it–yourself service precautions 264
Parts and tools 266
Positioning the jack 267

Engine compartment overview

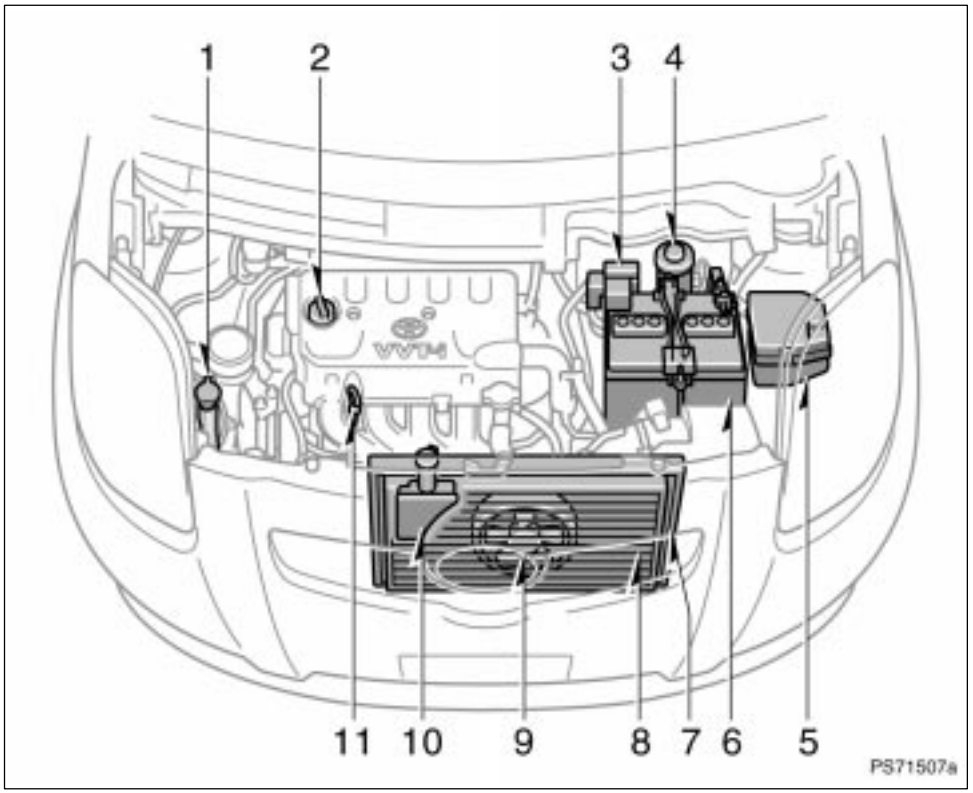

1. Windshield washer and rear window washer fluid tank
2. Engine oil filler cap
3. Fusible link block
4. Brake fluid reservoir
5. Fuse block
6. Battery
7. Radiator
8. Condenser
9. Electric cooling fan
10. Engine coolant reservoir
11. Engine oil level dipstick

Fuse locations

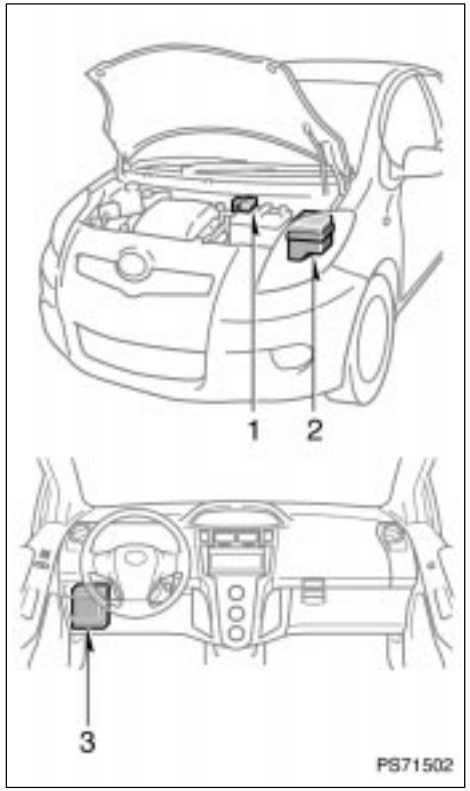

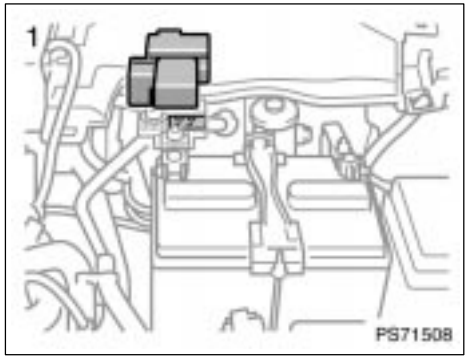

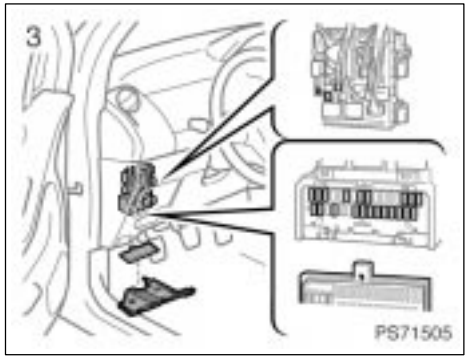

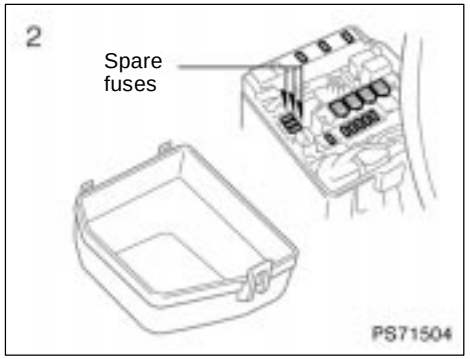

Do−it−yourself service precautions

If you perform maintenance by yourself, be sure to follow the correct procedure given in this Section.

You should be aware that improper or incomplete servicing may result in operating problems.

Performing do−it−yourself maintenance during the warranty period may affect your warranty coverage. Read the separate Toyota Warranty statement for details and suggestions.

This section gives instructions only for those items that are relatively easy for an owner to perform. As explained in Section 6, there are still a number of items that must be done by a qualified technician with special tools.

For information on tools and parts for do−it−yourself maintenance, see “Parts and tools”.

Utmost care should be taken when working on your vehicle to prevent accidental injury. Here are a few precautions that you should be especially careful to observe:

⚠ CAUTION

- **When the engine is running, keep hands, clothing, and tools away from the moving fan and engine drive belts. (Removing rings, watches, and ties is advisable.)**
- **Right after driving, the engine compartment—the engine, radiator, exhaust manifold and spark plug boots, etc.—will be hot. So be careful not to touch them. Oil, fluids and spark plugs may also be hot.**
- **If the engine is hot, do not remove the radiator cap or loosen the drain plugs to prevent burning yourself.**
- **Do not leave anything that may burn easily, such as paper or rags, in the engine compartment.**
- **Do not smoke, cause sparks or allow open flames around fuel or the battery. Their fumes are flammable.**
- **Be extremely cautious when working on the battery. It contains poisonous and corrosive sulfuric acid.**
- **Do not get under your vehicle with just the body jack supporting it. Always use automotive jack stands or other solid supports.**
- **Be sure that the ignition is off if you work near the electric cooling fans or radiator grille. With the ignition on, the electric cooling fans will automatically start to run if the engine coolant temperature is high and/or the air conditioning is on.**
- **Use eye protection whenever you work on or under your vehicle where you may be exposed to flying or falling material, fluid spray, etc.**
- **Used engine oil contains potentially harmful contaminants which may cause skin disorders such as inflammation or skin cancer, so care should be taken to avoid prolonged and repeated contact with it. To remove used engine oil from your skin, wash thoroughly with soap and water.**
- **Do not leave used oil within the reach of children.**

- **Dispose of used oil and filter only in a safe and acceptable manner. Do not dispose of used oil and filter in household trash, in sewers or onto the ground. Call your dealer or a service station for information concerning recycling or disposal.**
- **Take care when filling the brake and clutch fluid reservoirs because brake fluid can harm your eyes and damage painted surfaces. If fluid gets in your eyes, flush your eyes with clean water immediately. If you still feel uncomfortable with your eyes, go to the doctor.**

NOTICE

- ***Remember that battery and ignition cables carry high currents or voltages. Be careful of accidentally causing a short circuit.***
- ***Add only "Toyota Super Long Life Coolant" or similar high quality ethylene glycol based non−silicate, non−amine, non−nitrite, and non−borate coolant with long−life hybrid organic acid technology to fill the radiator. "Toyota Super Long Life Coolant" is a mixture of 50% coolant and 50% deionized water (for the U.S.A.) or 55% coolant and 45% deionized water (for Canada).***
- ***If you spill some of the coolant, be sure to wash it off with water to prevent it from damaging the parts or paint.***
- ***Do not allow dirt or anything else to fall through the spark plugholes.***
- ***Use only spark plugs of the specified type. Using other types will cause engine damage, loss of performance or radio noise.***
- ***Do not reuse iridium−tipped spark plugs by cleaning or regapping.***
- ***Do not overfill automatic transmission fluid, or the transmission could be damaged.***
- ***Do not drive with the air cleaner filter removed, or excessive engine wear could result. Also backfiring could cause a fire in the engine compartment.***
- ***Be careful not to scratch the glass surface with the wiper frame.***
- ***When closing the engine hood, check to see that you have not forgotten any tools, rags, etc.***

Parts and tools

Here is a list of parts and tools you will need to perform do−it−yourself maintenance. Remember all Toyota parts are designed in metric sizes, so your tools must be metric.

CHECKING THE ENGINE OIL LEVEL

Parts (if level is low):
- "Toyota Genuine Motor Oil" or equivalent
  See page 270 in Section 7−2 for details about engine oil selection.

Tools:
- Rag or paper towel
- Funnel (only for adding oil)

CHECKING THE ENGINE COOLANT LEVEL

Parts (if level is low):
- "Toyota Super Long Life Coolant" or similar high quality ethylene glycol based non−silicate, non−amine, non−nitrite, and non−borate coolant with long−life hybrid organic acid technology.

  "Toyota Super Long Life Coolant" is a mixture of 50% coolant and 50% deionized water (for the U.S.A.) or 55% coolant and 45% deionized water (for Canada).

Tools:
- Funnel (only for adding coolant)

CHECKING BRAKE FLUID

Parts (if level is low):
- SAE J1703 or FMVSS No.116 DOT 3 brake fluid

Tools:
- Rag or paper towel
- Funnel (only for adding fluid)

CHECKING BATTERY CONDITION

Tools:
- Warm water
- Baking soda
- Grease
- Conventional wrench (for terminal clamp bolts)

CHECKING AND REPLACING FUSES

Parts (if replacement is necessary):
- Fuse with same amperage rating as original

ADDING WASHER FLUID

Parts:
- Water
- Washer fluid containing antifreeze (for winter use)

Tools:
- Funnel

REPLACING LIGHT BULBS

Parts:
- Bulb with same number and wattage rating as original (See charts in "Replacing light bulbs" on page 288 in Section 7−3.)

Tools:
- Flathead screw driver

Positioning the jack

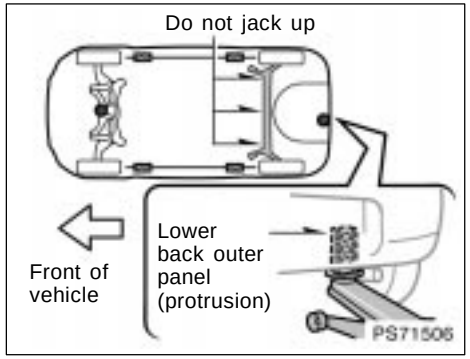

When jacking up your vehicle with the jack, position the jack correctly as shown in the illustration.

Jack position ..... 

Front—Front suspension member
Rear—Lower back outer panel

Support position for

Pantograph jack ..... 

⚠ CAUTION

When jacking, be sure to observe the following to reduce the possibility of personal injury:

- **Follow jacking instructions.**
- **Do not put any part of your body under the vehicle supported by a jack. Personal injury may occur.**
- **Do not start or run the engine while your vehicle is supported by the jack.**
- **Stop the vehicle on a level firm ground, firmly set the parking brake and put the transmission in "P" (automatic) or reverse (manual). Block the wheels on the opposite side of the jack up point if necessary.**
- **Make sure to set the jack properly in the jack point. Raising the vehicle with jack improperly positioned will damage the vehicle or may allow the vehicle to fall off the jack and cause personal injury.**
- **Never get under the vehicle when the vehicle is supported by the jack alone; use vehicle support stands.**
- **Do not raise the vehicle with someone in the vehicle.**
- **When raising the vehicle, do not place any objects on top of or underneath the jack.**

NOTICE

Make sure to place the jack correctly, or your vehicle may be damaged.

SECTION 7–2

DO–IT–YOURSELF MAINTENANCE

Engine and Chassis

Checking the engine oil level 270
Checking the engine coolant level 272
Checking the radiator and condenser 273
Checking brake fluid 273
Checking tire inflation pressure 274
Checking and replacing tires 276
Rotating tires 278
Installing snow tires and chains 279
Replacing wheels 280
Aluminum wheel precautions 281

Checking the engine oil level

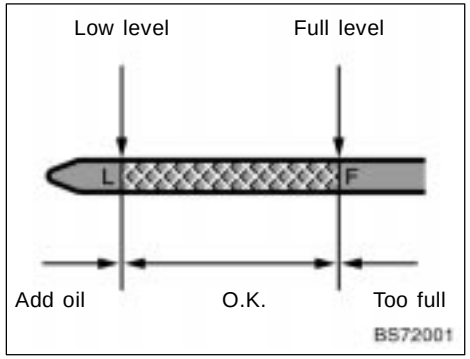

With the engine at operating temperature and turned off, check the oil level on the dipstick.

1. To get a correct reading, the vehicle should be on level ground. After turning off the engine, wait a few minutes for the oil to drain back into the bottom of the engine.
2. Pull the dipstick out, hold a rag under the end and wipe it clean.
3. Reinsert the dipstick—Push it in as far as it will go, or the reading will not be correct.
4. Pull the dipstick out and look at the oil level while holding a rag under the end.

⚠ CAUTION

Be careful not to touch the hot exhaust manifold.

NOTICE

Be careful not to drop engine oil on the vehicle components.

If the oil level is below or only slightly above the low level, add engine oil of the same type as already in the engine.

Remove the oil filler cap and add engine oil in small quantities at a time, checking the dipstick. We recommend that you use a funnel when adding oil.

The approximate quantity of oil needed to raise the level between low and full on the dipstick is indicated as follows:

1.5 L (1.6 qt., 1.3 Imp.qt.)

For the engine oil capacity, see “Service specifications” on page 297 in Section 8.

When the level reaches within the correct range, install the filler cap hand−tight.

NOTICE

- ***Be careful not to spill engine oil on the vehicle components.***
- ***Avoid overfilling, or the engine could be damaged.***
- ***Check the oil level on the dipstick once again after adding the oil.***

ENGINE OIL SELECTION

“Toyota Genuine Motor Oil” is used in your Toyota vehicle. Use Toyota approved “Toyota Genuine Motor Oil” or equivalent to satisfy the following grade and viscosity.

Oil grade:

ILSAC multigrade engine oil.

Recommended viscosity:

SAE 5W−30

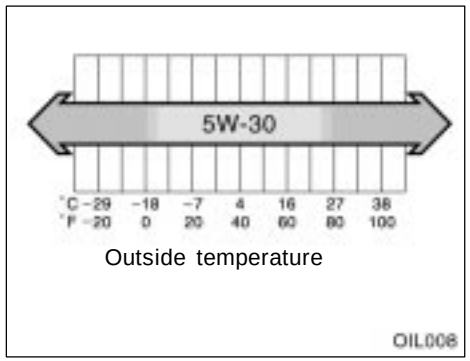

SAE 5W−30 is the best choice for good fuel economy, and good starting in cold weather.

If SAE 5W−30 oil is not available, SAE 10W−30 oil may be used. However, it should be replaced with SAE 5W−30 at the next oil change.



Oil identification mark

The ILSAC (International Lubricant Standardization and Approval Committee) Certification Mark is added to some oil containers to help you select the oil you should use.



To ensure excellent lubrication performance for your engine, “Toyota Genuine Motor Oil” is available, which has been specifically tested and approved for all Toyota engines.

Please contact your Toyota dealer for further details about “Toyota Genuine Motor Oil”.

Checking the engine coolant level

Look at the see−through coolant reservoir when the engine is cold. The coolant level is satisfactory if it is between the “FULL” and “LOW” lines on the reservoir. If the level is low, add the coolant. (For the coolant type, see “Coolant type selection” described below.)

The coolant level in the reservoir will vary with engine temperature. However, if the level is on or below the “LOW” line, add coolant. Bring the level up to the “FULL” line.

If the coolant level drops within a short time after replenishing, there may be a leak in the system. Visually check the radiator, hoses, engine coolant filler cap, radiator cap and drain cock and water pump.

If you can find no leak, have your Toyota dealer test the cap pressure and check for leaks in the cooling system.

⚠ CAUTION

To prevent burning yourself, do not remove the radiator cap when the engine is hot.

Coolant type selection

Use of improper coolants may damage your engine cooling system.

Only use “Toyota Super Long Life Coolant” or similar high quality ethylene glycol based non−silicate, non−amine, non−nitrite, and non−borate coolant with long−life hybrid organic acid technology. (Coolant with long−life hybrid organic acid technology is a combination of low phosphates and organic acids.)

For the U.S.A.—“Toyota Super Long Life Coolant” is a mixture of 50% coolant and 50% deionized water. This coolant provides protection down to about −35°C (−31°F).

For Canada—“Toyota Super Long Life Coolant” is a mixture of 55% coolant and 45% deionized water. This coolant provides protection down to about −42°C (−44°F).

NOTICE

Do not use plain water alone.



Toyota recommends “Toyota Super Long Life Coolant”, which has been tested to ensure that it will not cause corrosion nor result in malfunction of your engine coolant system with proper usage. “Toyota Super Long Life Coolant” is formulated with long−life hybrid organic acid technology and has been specifically designed to avoid engine cooling system malfunction on Toyota vehicles.

Please contact your Toyota dealer for further details.

Checking the radiator and condenser

If any of the above parts are extremely dirty or you are not sure of their condition, take your vehicle to a Toyota dealer.

⚠ CAUTION

To prevent burning yourself, be careful not to touch the radiator or condenser when the engine is hot.

NOTICE

To prevent damage to the radiator and condenser, do not perform the work by yourself.

Checking brake fluid

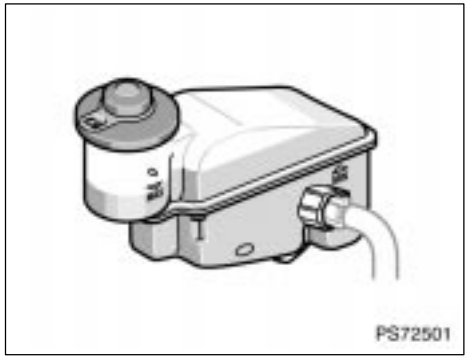

Before checking or adding the brake fluid, remove the cover. (See “(c) Jump starting” on page 223 in Section 4.)

To check the fluid level, simply look at the see−through reservoir. The level should be between the “MAX” and “MIN” lines on the reservoir.

It is normal for the brake fluid level to go down slightly as the brake pads wear. So be sure to keep the reservoir filled.

If the reservoir needs frequent refilling, it may indicate a serious mechanical problem.

If the level is low, add SAE J1703 or FMVSS No.116 DOT 3 brake fluid to the brake reservoir.

Remove and replace the reservoir cap by hand. Fill the brake fluid to the dotted line. This brings the fluid to the correct level when you put the cap back on.

Use only newly opened brake fluid. Once opened, brake fluid absorbs moisture from the air, and excess moisture can cause a dangerous loss of braking.

⚠ CAUTION

Take care when filling the reservoir because brake fluid can harm your hands or eyes. If fluid gets on your hands or in your eyes, flush the affected area with clean water immediately. If you still feel uncomfortable with your hands or eyes, go to the doctor.

NOTICE

If you spill some of the fluid, be sure to wipe it off to prevent it from damaging the parts or paintwork.

Checking tire inflation pressure

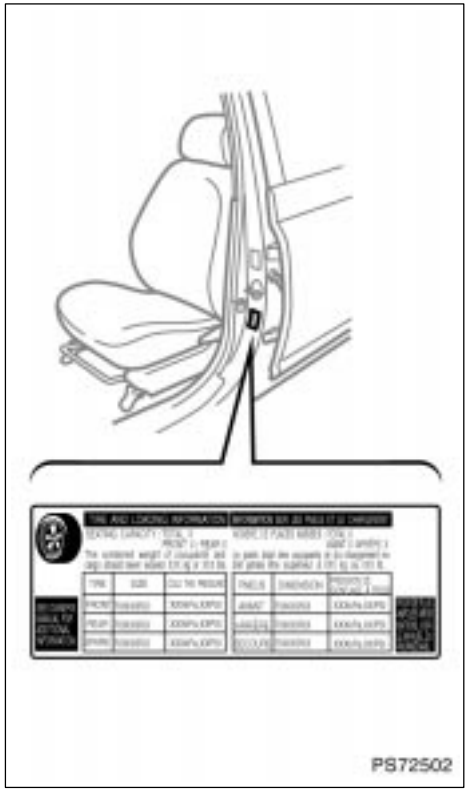

Keep your tire inflation pressures at the proper level.

The recommended cold tire inflation pressures, tire sizes and the combined weight of occupants and cargo (vehicle capacity weight) are described on page 296 and 299. They are also described on the tire and loading information label as shown.

You should check the tire inflation pressures every two weeks, or at least once a month. And do not forget the spare!

The following instructions for checking tire inflation pressure should be observed:

- **The pressure should be checked only when the tires are cold.** If your vehicle has been parked for at least 3 hours and has not been driven for more than 1.5 km or 1 mile since, you will get an accurate cold tire inflation pressure reading.

- **Always use a tire pressure gauge.** The appearance of a tire can be misleading. Besides, tire inflation pressures that are even just a few pounds off can degrade ride and handling.
- **Take special care when adding air to the compact spare tire.** The smaller tire size can gain pressure very quickly. Add compressed air in small quantities and check the pressure often until it reaches the specified pressure.
- **Do not bleed or reduce tire inflation pressure after driving.** It is normal for the tire inflation pressure to be higher after driving.
- **Never exceed the vehicle capacity weight.** Passenger and luggage weight should be located so that the vehicle is balanced.

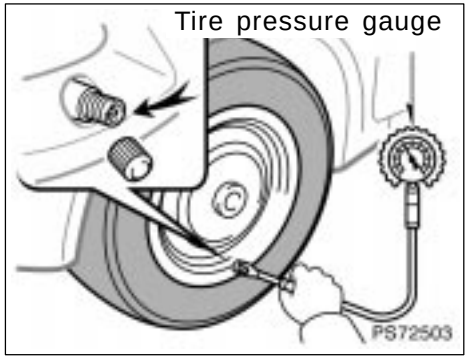

INSPECTION AND ADJUSTMENT PROCEDURE

1. Remove the tire valve cap.
2. Press the tip of the tire pressure gauge to the tire valve.
3. Read the pressure using the graduations of the gauge.
4. In case the tire inflation pressure is not within the prescribed range, insert the compressed air from the valve. In case of applying too much air, press the center of the valve and release the air to adjust.
5. After completing the tire inflation pressure measurement and adjustment, apply soapy water to the valve and check for leakage.
6. Install the tire valve cap.

If a gauge and air pump are not available, have your vehicle checked by your Toyota dealer.

⚠ CAUTION

Be sure to reinstall the tire valve caps. Without the valve caps, dirt or moisture could get into the valve core and cause air leakage. If the caps have been lost, have new ones put on as soon as possible.

Incorrect tire inflation pressure may waste fuel, reduce the comfort of driving, reduce tire life and make your vehicle less safe to drive.

If a tire frequently needs refilling, have it checked by your Toyota dealer.

⚠ CAUTION

Keep your tires properly inflated. Otherwise, the following conditions may occur and cause an accident resulting in death or serious injuries.

Low tire pressure (underinflation)—

- **Excessive wear**
- **Uneven wear**
- **Poor handling**
- **Possibility of blowouts from an overheated tire**
- **Poor sealing of the tire bead**
- **Wheel deformation and/or tire separation**
- **A greater possibility of tire damage from road hazards**

High tire pressure (overinflation)—

- **Poor handling**
- **Excessive wear**
- **Uneven wear**
- **A greater possibility of tire damage from road hazards**

Checking and replacing tires

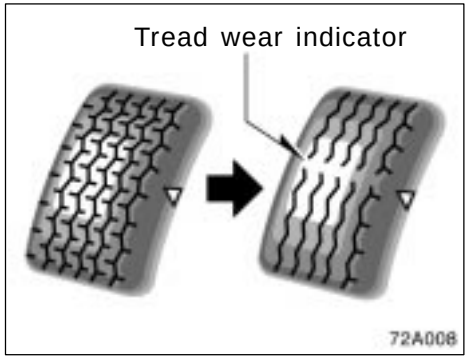

CHECKING YOUR TIRES

Check the tire's tread for tread wear indicators. If the indicators show, replace the tires. The location of tread wear indicators is shown by the "TWI" or "Δ" marks, etc., molded on the sidewall of each tire.

The tires on your Toyota have built−in tread wear indicators to help you know when the tires need replacement. When the tread depth wears to 1.6 mm (0.06 in.) or less, the indicators will appear. If you can see the indicators in two or more adjacent grooves, the tire should be replaced. The lower the tread, the higher the risk of skidding.

The effectiveness of snow tires is lost if the tread wears down below 4 mm (0.16 in.).

If you have tire damage such as cuts, splits, cracks deep enough to expose the fabric, or bulges indicating internal damage, the tire should be replaced.

If a tire often goes flat or cannot be properly repaired due to the size or location of a cut or other damage, it should be replaced. If you are not sure, consult with your Toyota dealer.

If air loss occurs while driving, do not continue driving. Driving even a short distance can damage a tire beyond repair.

Any tires which are over 6 years old must be checked by a qualified technician even if damage is not obvious.

Tires deteriorate with age even if they have never or seldom been used.

This applies also to the spare tire and tires stored for future use.

REPLACING YOUR TIRES

When replacing a tire, use a tire of the same size and construction, and the same or greater maximum load as the originally installed tires.

Using any other size or type of tire may seriously affect handling, ride, speedometer/odometer calibration, ground clearance, and clearance between the body and tires or snow chains.

Check that the maximum load of the replaced tire is greater than 1/2 of the Gross Axle Weight Ratings (GAWR) of either the front axle or the rear axle, whichever is greater. As for the maximum load of the tire, see the load limit at maximum cold tire inflation pressure mentioned on the sidewall of the tire, and as for the Gross Axle Weight Ratings (GAWR), see the Certification Label.

For details about the sidewall of the tire and the Certification Label, see pages 191 and 188.

⚠ CAUTION

Observe the following instructions. Otherwise, an accident may occur resulting in death or serious injuries.

- **Do not mix radial, bias belted, or bias−ply tires on your vehicle, as this may cause dangerous handling characteristics resulting in loss of control.**
- **Do not use tires other than the manufacturer's recommended size, as this may cause dangerous handling characteristics resulting in loss of control.**

Toyota recommends all four tires, or at least both of the front or rear tires be replaced at a time as a set.

See "If you have a flat tire" on page 228 in Section 4 for tire change procedure.

When a tire is replaced, the wheel should always be balanced.

An unbalanced wheel may affect vehicle handling and tire life. Wheels can get out of balance with regular use and should therefore be balanced occasionally.

When replacing a tubeless tire, the air valve should also be replaced with a new one.

Rotating tires

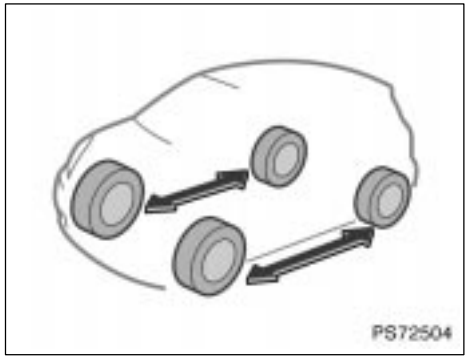

To equalize the wear and help extend tire life, Toyota recommends that you rotate your tires according to the maintenance schedule. (For scheduled maintenance information, please refer to the "Scheduled Maintenance Guide" or "Owner's Manual Supplement".). However, the most appropriate timing for tire rotation may vary according to your driving habits and road surface conditions.

See “If you have a flat tire” on page 228 in Section 4 for tire change procedure.

When rotating tires, check for uneven wear and damage. Abnormal wear is usually caused by incorrect tire pressure, improper wheel alignment, out−of−balance wheels, or severe braking.

⚠ CAUTION

Do not include a compact spare tire when rotating the tires. It is designed for temporary use only.

Installing snow tires and chains

WHEN TO USE SNOW TIRES OR CHAINS

Snow tires or chains are recommended when driving on snow or ice.

On wet or dry roads, conventional tires provide better traction than snow tires.

SNOW TIRE SELECTION

If you need snow tires, select tires of the same size, construction and load capacity as the originally installed tires.

Do not use tires other than those mentioned above. Do not install studded tires without first checking local regulations for possible restrictions.

⚠ CAUTION

Do not use snow tires other than the manufacturer’s recommended size, as this may cause dangerous handling characteristics resulting in loss of control. Otherwise, an accident may occur resulting in death or serious injuries.

SNOW TIRE INSTALLATION

Snow tires should be installed on all wheels.

Installing snow tires on the front wheels only can lead to an excessive difference in road grip capability between the front and rear tires which could cause loss of vehicle control.

When storing removed tires you should store them in a cool dry place.

Mark the direction of rotation and be sure to install them in the same direction when replacing.

⚠ CAUTION

- **Do not drive with the snow tires incorrectly inflated.**
- **Never drive over 120 km/h (75 mph) with any type of snow tires.**

TIRE CHAIN SELECTION

Use the tire chains of correct size and type.

Use SAE Class “S” type radial tire chains except radial cable chains or V−bar type chains.

Regulations regarding the use of tire chains vary according to location or type of road, so always check local regulations before installing chains.

CHAIN INSTALLATION

Install the chains on the front tires as tightly as possible. Do not use tire chains on the rear tires. Retighten chains after driving 0.5—1.0 km (1/4—1/2 mile).

When installing chains on your tires, carefully follow the instructions of the chain manufacturer.

If wheel covers are used, they will be scratched by the chain band, so remove the covers before putting on the chains.

⚠ CAUTION

- **Do not exceed 50 km/h (30 mph) or the chain manufacturer’s recommended speed limit, whichever is lower.**
- **Drive carefully avoiding bumps, holes, and sharp turns, which may cause the vehicle to bounce.**
- **Avoid sharp turns or locked−wheel braking, as use of chains may adversely affect vehicle handling.**
- **When driving with chains installed, be sure to drive carefully. Slow down before entering curves to avoid losing control of the vehicle. Otherwise an accident may occur.**

NOTICE

Do not attempt to use a tire chain on the compact spare tire, as it may result in damage to the vehicle as well as the tire.

Replacing wheels

WHEN TO REPLACE YOUR WHEELS

If you have wheel damage such as bending, cracks or heavy corrosion, the wheel should be replaced.

If you fail to replace a damaged wheel, the tire may slip off the wheel or they may cause loss of handling control.

WHEEL SELECTION

When replacing wheels, care should be taken to ensure that the wheels are replaced by ones with the same load capacity, diameter, rim width, and offset.

This must be observed on compact spare tires, too.

Correct replacement wheels are available at your Toyota dealer.

A wheel of a different size or type may adversely affect handling, wheel and bearing life, brake cooling, speedometer/odometer calibration, stopping ability, headlight aim, bumper height, vehicle ground clearance, and tire or snow chain clearance to the body and chassis.

Replacement with used wheels is not recommended as they may have been subjected to rough treatment or high mileage and could fail without warning. Also, bent wheels which have been straightened may have structural damage and therefore should not be used. Never use an inner tube in a leaking wheel which is designed for a tubeless tire.

⚠ CAUTION

Do not use wheels other than the manufacturer's recommended size, as this may cause dangerous handling characteristics resulting in loss of control. Otherwise, an accident may occur resulting in death or serious injuries.

Aluminum wheel precautions

- When installing aluminum wheels, check that the wheel nuts are tight after driving your vehicle the first 1600 km (1000 miles).
- If you have rotated, repaired, or changed your tires, check that the wheel nuts are still tight after driving 1600 km (1000 miles).
- When using tire chains, be careful not to damage the aluminum wheels.
- Use only Toyota wheel nuts and wrench designed for your aluminum wheels.
- When balancing your wheels, use only Toyota balance weights or equivalent and a plastic or rubber hammer.
- As with any wheel, periodically check your aluminum wheels for damage. If damaged, replace immediately.

SECTION 7–3

DO–IT–YOURSELF MAINTENANCE

Electrical components

Checking battery condition 284
Battery recharging precautions 285
Checking and replacing fuses 286
Adding washer fluid 288
Replacing light bulbs 288

Checking battery condition—
—Precautions

⚠ CAUTION

BATTERY PRECAUTIONS

The battery produces flammable and explosive hydrogen gas.

- **Do not cause a spark from the battery with tools.**
- **Do not smoke or light a match near the battery.**

The electrolyte contains poisonous and corrosive sulfuric acid.

- **Avoid contact with eyes, skin or clothes.**
- **Never ingest electrolyte.**
- **Wear protective safety glasses when working near the battery.**
- **Keep children away from the battery.**

EMERGENCY MEASURES

- **If electrolyte gets in your eyes, flush your eyes with clean water immediately and get immediate medical attention. If possible, continue to apply water with a sponge or cloth while en route to the medical office.**
- **If electrolyte gets on your skin, thoroughly wash the contact area. If you feel pain or burning, get medical attention immediately.**
- **If electrolyte gets on your clothes, there is a possibility of its soaking through to your skin, so immediately take off the exposed clothing and follow the procedure above, if necessary.**
- **If you accidentally swallow electrolyte, drink a large quantity of water or milk. Follow with milk of magnesia, beaten raw egg or vegetable oil. Then go immediately for emergency help.**

—Checking battery exterior

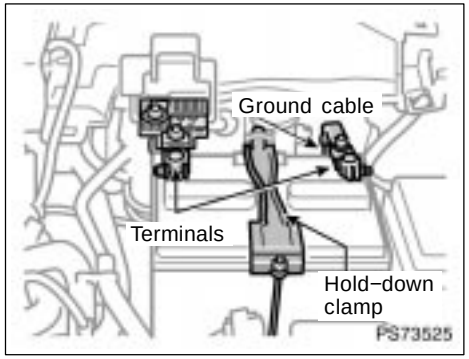

Before checking the battery, remove the cover. (See “(c) Jump starting” on page 223 in Section 4.)

Check the battery for corroded or loose terminal connections, cracks, or loose hold−down clamp.

a. If the battery is corroded, wash it off with a solution of warm water and baking soda. Coat the outside of the terminals with grease to prevent further corrosion.

b. If the terminal connections are loose, tighten the clamp nut—but do not overtighten.

c. Tighten the hold−down clamp only enough to keep the battery firmly in place. Overtightening may damage the battery case.

NOTICE

- ***Be sure the engine and all accessories are off before performing maintenance.***
- ***When checking the battery, remove the ground cable from the negative terminal (“−” mark) first and reinstall it last.***
- ***Be careful not to cause a short circuit with tools.***
- ***Take care no solution gets into the battery when washing it.***

—Checking battery condition

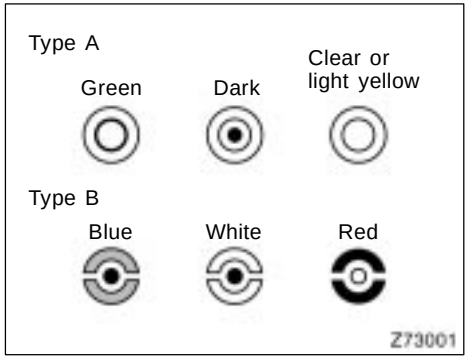

CHECKING BY THE INDICATOR

Check the battery condition by the indicator color.

Indicator color		Condition
Type A	Type B	
GREEN	BLUE	Good
DARK	WHITE	Charging necessary. Have battery checked by your Toyota dealer.
CLEAR or LIGHT YELLOW	RED	Have battery checked by your Toyota dealer.

Battery recharging precautions

During recharging, the battery is producing hydrogen gas.

Therefore, before recharging:

1. If recharging with the battery installed on the vehicle, be sure to disconnect the ground cable.
2. Be sure the power switch on the recharger is off when connecting the charger cables to the battery and when disconnecting them.

⚠ CAUTION

- **Always charge the battery in an unconfined area. Do not charge the battery in a garage or closed room where there is not sufficient ventilation.**
- **Only do a slow charge (5A or less). Charging at a quicker rate is dangerous. The battery may explode, causing personal injuries.**

Checking and replacing fuses

NOTICE
Never recharge the battery while the engine is running. Also, be sure all accessories are turned off.

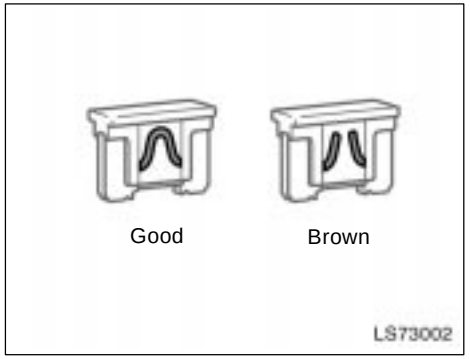

Type A

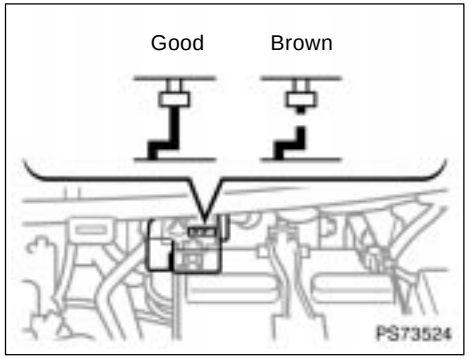

Type C

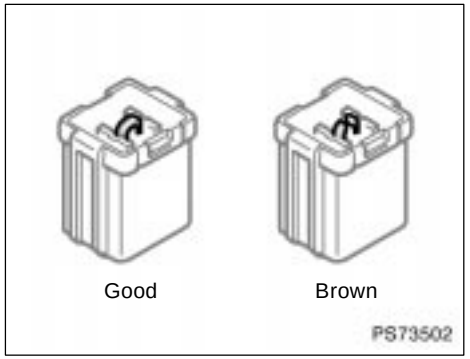

Type B

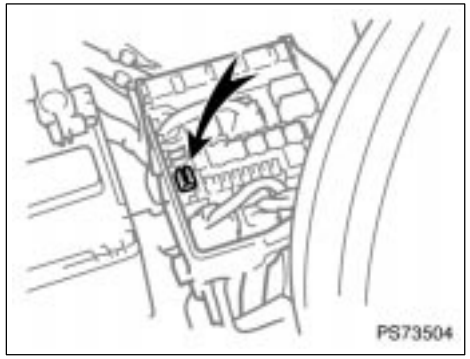

If the headlights or other electrical components do not work, check the fuses. If any of the fuses are blown, they must be replaced.

See “Fuse locations” on page 263 in Section 7−1 for locations of the fuses.

Turn the ignition switch and inoperative component off. Pull the suspected fuse straight out and check it.

Determine which fuse may be causing the problem. The lid of the fuse box shows the name of the circuit for each fuse. See Section 8 for the functions controlled by each circuit.

Type A fuses can be pulled out by the pull−out tool. The location of the pull−out tool is shown in the illustration.

If you are not sure whether the fuse has blown, try replacing the suspected fuse with one that you know is good.

If the fuse has blown, push a new fuse into the clip.

Only install a fuse with the amperage rating designated on the fuse box lid.

If you do not have a spare fuse, in an emergency you can pull out the “A/C” fuse, which may be dispensable for normal driving, and use it if its amperage rating is the same.

If you cannot use one of the same amperage, use one that is lower, but as close to the rating as possible. If the amperage is lower than that specified, the fuse might blow out again but this does not indicate anything wrong. Be sure to get the correct fuse as soon as possible and return the substitute to its original clip.

It is a good idea to purchase a set of spare fuses and keep them in your vehicle for emergencies.

If the new fuse immediately blows out, there is a problem with the electrical system. Have your Toyota dealer correct it as soon as possible.

⚠ CAUTION

Never use a fuse with a higher amperage rating, or any other object, in place of a fuse. This may cause extensive damage and possibly a fire.

Adding washer fluid

If any washer does not work or the low windshield washer fluid level warning light comes on, the washer tank may be empty. Add washer fluid.

You may use plain water as washer fluid. However, in cold areas where temperatures range below the freezing point, use washer fluid containing antifreeze. This product is available at your Toyota dealer and most auto parts stores. Follow the manufacturer's directions for how much to mix with water.

NOTICE

Do not use engine antifreeze or any other substitute because it may damage your vehicle's paint.

Replacing light bulbs—

The following illustrations show how to gain access to the bulbs. When replacing a bulb, make sure the ignition switch and light switch are off. Use bulbs with the wattage ratings given in the table.

The high mounted stoplight consists of a number of LEDs. If any of the LEDs burn out, take your vehicle to your Toyota dealer to have the light replaced.

⚠ CAUTION

- **To prevent burning yourself, do not replace the light bulbs while they are hot.**
- **Halogen bulbs have pressurized gas inside and require special handling. They can burst or shatter if scratched or dropped. Hold a bulb only by its plastic or metal case. Do not touch the glass part of a bulb with bare hands.**

NOTICE

Only use a bulb of the listed type.

The inside of the lens of exterior lights such as headlights may temporarily fog up when the lens becomes wet in the rain or in a car wash. This is not a problem because the fogging is caused by the temperature difference between the outside and inside of the lens, just like the windshield fogs up in the rain. However, if there is a large drop of water on the inside of the lens, or if there is water pooled inside the light, contact your Toyota dealer.

Light bulbs	Bulb No.	W	Type
Headlights	—	60/55	A
Parking lights	—	5	E
Front fog lights	—	55	B
Front side marker lights	—	5	E
Front turn signal lights	—	21	D
Side turn signal lights	—	5	F*
Rear turn signal lights	—	21	D
Tail/stop and rear side marker lights	—	21/5	E
Back−up lights	—	21	C
License plate lights	—	5	E
Interior light	—	8	G
Personal light	—	8	E
Luggage compartment light	—	5	G

*: Side turn signal lights should be replaced as an assembly.

A: HB2 halogen bulbs
B: H11 halogen bulbs
C: Single end bulbs
D: Single end bulbs (amber)
E: Wedge base bulbs
F: Wedge base bulbs (amber)
G: Double end bulbs

—Headlights

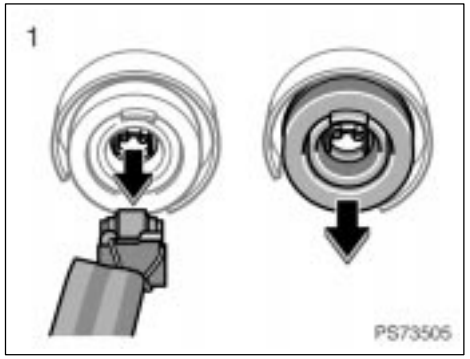

1. Open the hood. Unplug the connector. Remove the rubber cover.

If the connector is tight, wiggle it.

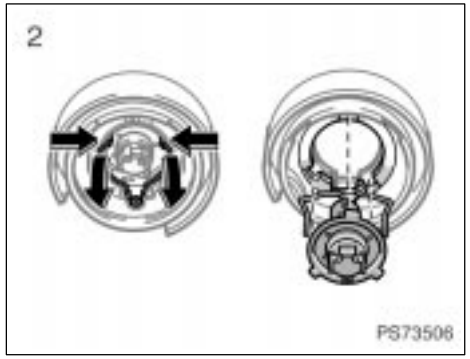

2. Release the bulb retaining spring and remove the bulb. Install a new bulb and the bulb retaining spring.

To install a bulb, align the tabs of the bulb with the cutouts of the mounting hole.

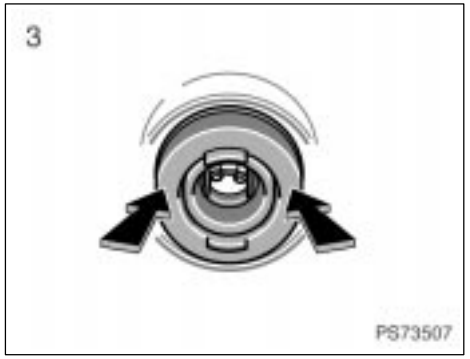

3. Install the rubber cover as shown and fit it securely on the boss. Plug in the connector.

Make sure the rubber cover fits securely on the connector and the headlight body.

Aiming is not necessary after replacing the bulb. When aiming adjustment is necessary, contact your Toyota dealer.

—Front fog, front side marker lights and LED type high mounted stoplight

If either the left or right front fog, front side marker lights or LED type high mounted stoplight burns out, contact your Toyota dealer.

NOTICE

Do not try to replace the front fog or front side marker lights by yourself. You may damage the vehicle.

—Parking lights

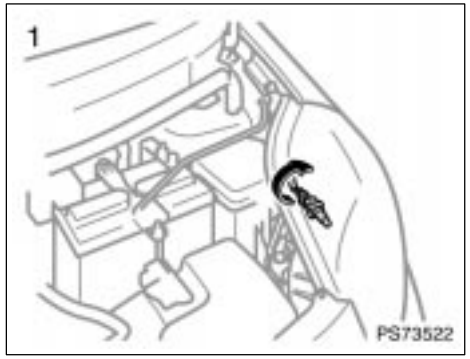

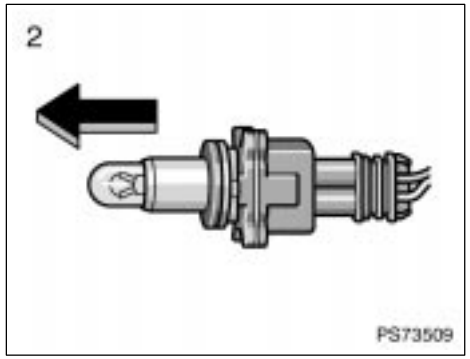

—Front turn signal lights

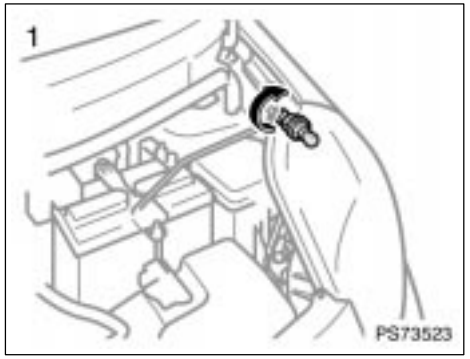

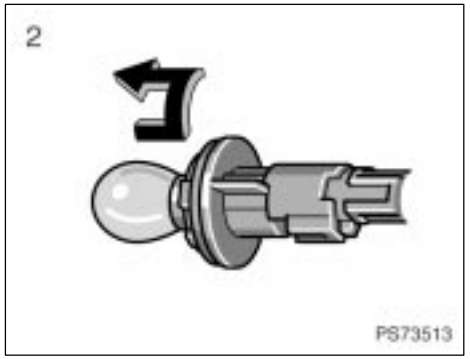

—Side turn signal lights

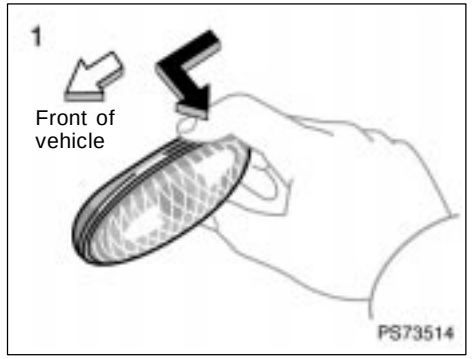

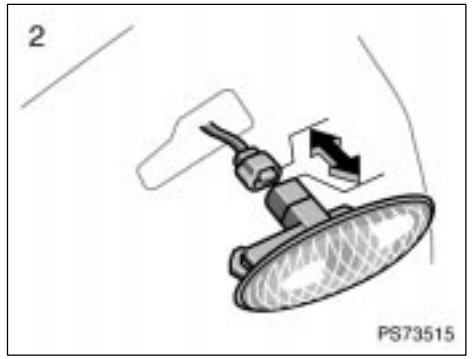

—Tail/stop and rear side marker, rear turn signal and back−up lights

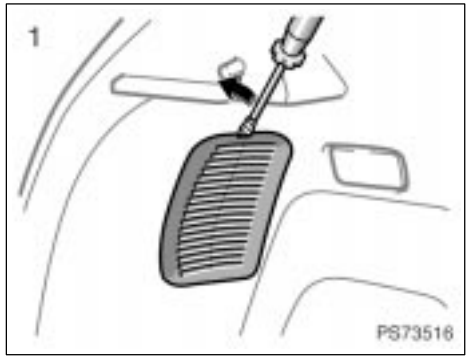

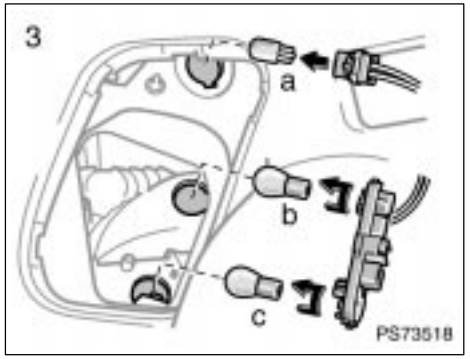

a: Tail/stop and rear side marker lights
b: Rear turn signal light
c: Back−up lights

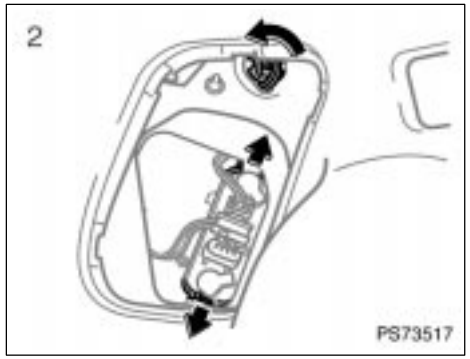

—License plate lights

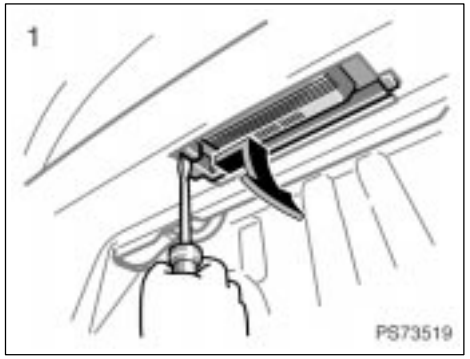

Use a flathead screwdriver.

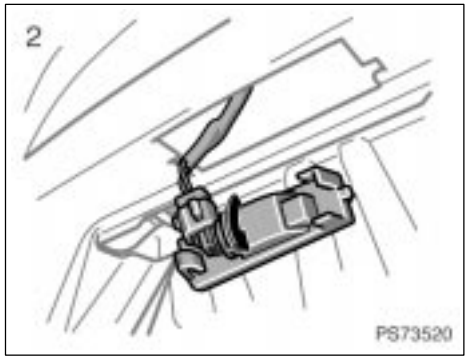

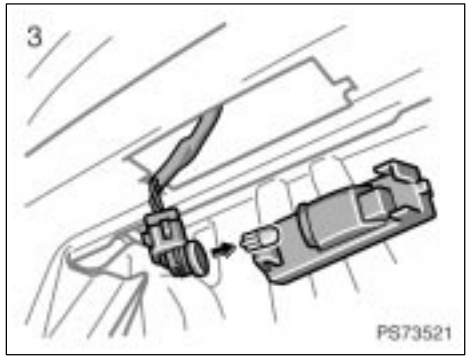
3
PS73521

SECTION 8

SPECIFICATIONS

Specifications

Dimensions and weights 296
Engine 296
Fuel 296
Service specifications 297
Tires 299
Fuses 300

Dimensions and weights

Overall length	mm (in.)	3825	(150.6)
Overall width	mm (in.)	1695	(66.7)
Overall height	mm (in.)	1530	(60.2)
Wheelbase	mm (in.)	2460	(96.9)
Front tread	mm (in.)	1480	(58.3)*1
		1470	(57.9)*2
Rear tread	mm (in.)	1470	(57.9)*1
		1460	(57.5)*2
Vehicle capacity weight (occupants + luggage)	kg (lb.)	383	(845)
Towing capacity*3 (trailer + cargo weight)	kg (lb.)	318	(700)

*1: With P175/65R14 81S tires
*2: With P185/60R15 84T tires
*3: For Canada only

Engine

Model:
1.5 L 4−cylinder (1NZ−FE)

Type:
4 cylinder in line, 4 cycle, gasoline

Bore and stroke, mm (in.):
75.0 × 84.7 (2.95 × 3.33)

Displacement, cm^3 (cu. in.):
1496 (91.3)

Fuel

Fuel type:
Unleaded gasoline, Octane Rating 87 (Research Octane Number 91) or higher

Fuel tank capacity, L (gal., Imp. gal.):
42 (11.1, 9.2)

Service specifications

ENGINE

Valve clearance (engine cold), mm (in.):

Intake	0.15—0.25 (0.006—0.010)
Exhaust	0.25—0.35 (0.010—0.014)

Spark plug type:

DENSO	SK16R11
NGK	IFR5A11

Spark plug gap, mm(in.):
1.1 (0.043)

Drive belt tension measured with Boroughs drive belt tension gauge No. BT−33−73F (used belt), lbf:

Generator belt	100±20

ENGINE LUBRICATION

Oil capacity (drain and refill), L (qt., Imp. qt.):

With filter	3.7 (3.9, 3.3)
Without filter	3.4 (3.6, 3.0)

“Toyota Genuine Motor Oil” is used in your Toyota vehicle. Use Toyota approved “Toyota Genuine Motor Oil” or equivalent to satisfy the following grade and viscosity.

Oil grade:

ILSAC multigrade engine oil

Please contact your Toyota dealer for further details.

Recommended oil viscosity:

SAE 5W−30

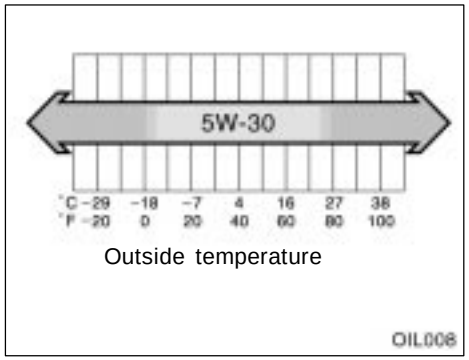

COOLING SYSTEM

Total capacity, L (qt., Imp. qt.):

Manual transmission	4.8 (5.1, 4.2)
Automatic transmission	4.7 (5.0, 4.1)

Coolant type:

“Toyota Super Long Life Coolant” is used in your Toyota vehicle at factory fill. In order to avoid technical problems, only use “Toyota Super Long Life Coolant” or similar high quality ethylene glycol based non−silicate, non−amine, non−nitrite, and non−borate coolant with long−life hybrid organic acid technology. (Coolant with long−life hybrid organic acid technology is a combination of low phosphates and organic acids.)

Do not use plain water alone.

Please contact your Toyota dealer for further details.

BATTERY

Open voltage* at 20•C (68•F):

12.6—12.8 V	Fully charged
12.2—12.4 V	Half charged
11.8—12.0 V	Discharged

*: Voltage that is checked 20 minutes after the key is removed with all the lights turned off

Charging rates: 5 A max.

CLUTCH

Pedal free play, mm (in.):
5—15 (0.2—0.6)

Fluid type:
SAE J1703 or FMVSS No. 116 DOT 3

MANUAL TRANSAXLE

Oil capacity, L (qt., Imp. qt.):
1.9 (2.0, 1.7)

Oil type:
Gear oil API GL−4 or GL−5

Recommended oil viscosity:
SAE 75W−90

AUTOMATIC TRANSAXLE

Fluid capacity (drain and refill), L (qt., Imp. qt.): 2.5 (2.6, 2.2)

Fluid type:
Toyota Genuine ATF Type WS

Change automatic transmission fluid only as necessary.

Generally, it is necessary to change automatic transmission fluid only if your vehicle is driven under one of the Special Operating Conditions listed in your "Scheduled Maintenance Guide" or "Owner's Manual Supplement". When changing the automatic transmission fluid, use only "Toyota Genuine ATF Type WS" (ATF JWS3324 or NWS9638) to aid in assuring maximum transaxle performance.

Notice: Using automatic transmission fluid other than "Toyota Genuine ATF Type WS" may cause deterioration in shift quality, locking up of your transmission accompanied by vibration, and ultimately damage the automatic transmission of your vehicle.

Please contact your Toyota dealer for further details.

BRAKES

Minimum pedal clearance when depressed with the pressure of 300 N (30 kgf, 66 lbf) with the engine running, mm (in.):

With anti−lock brake system	73 (2.9)
Without anti−lock brake system	70 (2.8)

Pedal free play, mm (in.):
1—6 (0.04—0.24)

Pad wear limit, mm (in.):
1.0 (0.04)

Lining wear limit, mm (in.):
1.0 (0.04)

Parking brake adjustment when pulled with the force of 200 N (20 kgf, 45 lbf):
6—9 clicks

Fluid type:
SAE J1703 or FMVSS No. 116 DOT 3

STEERING

Wheel free play:
Less than 30 mm (1.2 in.)

Tires

Tire size and cold tire inflation pressure:

Front and rear

kPa (kgf/cm^2 or bar, psi)

Tire size	Front	Rear	Wheel size
P175/65R14 81S	220 (2.2, 32)	220 (2.2, 32)	14 x 5J
P185/60R15 84T	220 (2.2, 32)	220 (2.2, 32)	15 x 5 1/2J

For sustained high speeds above 160 km/h (100 mph), in countries where such speeds are permitted by law, add 20 kPa (0.2 kgf/cm^2 or bar, 3 psi) to the front tires and rear tires, but never exceed the maximum cold tire inflation pressure molded on the tire sidewall.

Spare

Tire size	Tire inflation pressure kPa (kgf/cm^2 or bar, psi)	Wheel size
T125/70D15 95M	420 (4.2, 60)	15 x 4T

Wheel nut torque, N·m (kgf·m, ft·lbf):
103 (10.5, 76)

NOTE: For a complete information on tires (e.g. replacing tires or replacing wheels), see “Checking tire inflation pressure” through “Aluminum wheel precautions”, page 274 through 281 in Section 7−2.

Fuses

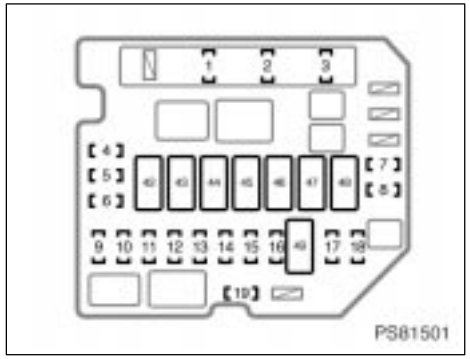

Engine compartment

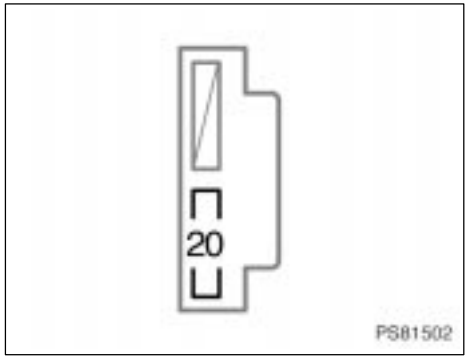

Instrument panel

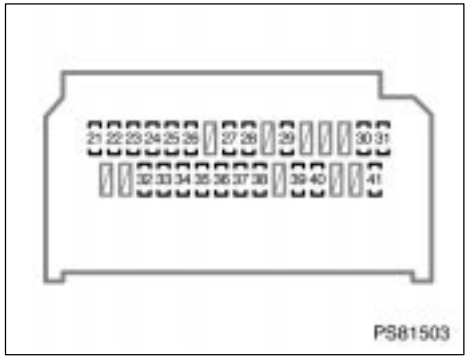

Instrument panel

Fuses (type A)

1. **AM2 15 A:** Starting system, multiport fuel injection system/sequential multiport fuel injection system
2. **HORN 10 A:** Horn
3. **EFI 20 A:** Multiport fuel injection system/sequential multiport fuel injection system
4. **SPARE 30 A:** Spare fuse
5. **SPARE 15 A:** Spare fuse
6. **SPARE 10 A:** Spare fuse
7. **FR DEF 20 A:** No circuit
8. **ABS2/VSC2 30 A:** Anti−lock brake system
9. **H−LP MAIN 30 A:** No circuit
10. **ST 30 A:** Starting system
11. **S−LOCK 20 A:** No circuit
12. **DOME 15 A:** Interior light, personal lights, theft deterrent system, audio system, wireless remote control system
13. **ECU−B 7.5 A:** Engine immobilizer system, daytime running light system, front passenger occupant classification system, power windows, door lock system, theft deterrent system, meter and gauge
14. **ALT−S 7.5 A:** Charging system
15. **ETCS 10 A:** Multiport fuel injection system/sequential multiport fuel injection system, electronic throttle control system
16. **HAZ 10 A:** Turn signal lights, emergency flashers
17. **H−LP RH/H−LP LO RH 10 A:** Right−hand headlight
18. **H−LP LH/H−LP LO LH 10 A:** Left−hand headlight
19. **EFI2 10 A:** Multiport fuel injection system/sequential multiport fuel injection system

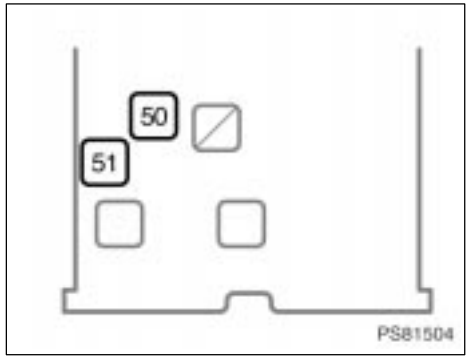

Instrument panel

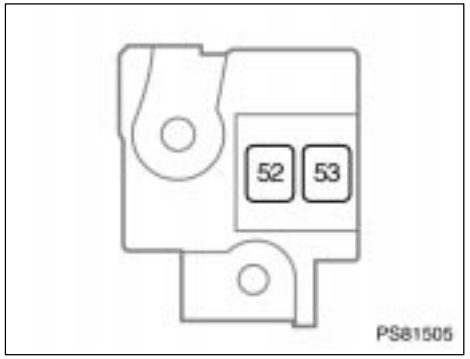

Engine compartment

20. **ACC2 7.5 A:** Shift lock system
21. **TAIL 10 A:** Side marker lights, parking lights, tail lights, license plate lights, multiport fuel injection system/sequential multiport fuel injection system
22. **PANEL1 7.5 A:** Illuminations, instrument panel light control, meter and gauge
23. **A/C 7.5 A:** Rear window defogger, air conditioning system
24. **D DOOR 20 A:** No circuit
25. **RL DOOR 20 A:** Rear passenger's power window (left side)
26. **RR DOOR 20 A:** Rear passenger's power window (right side)
27. **CIG 15 A:** Power outlet
28. **ACC 7.5 A:** Door lock system, outside rear view mirrors, audio system
29. **ID/UP/MIR HTR 10 A:** Multiport fuel injection system/sequential multiport fuel injection system
30. **IGN 7.5 A:** Multiport fuel injection system/sequential multiport fuel injection system, engine immobilizer system, SRS airbag system, front passenger occupant classification system
31. **MET 7.5 A:** Meter and gauge
32. **WIP 25 A:** Windshield wiper
33. **RR WIP 15 A:** Rear wiper
34. **WSH 15 A:** Windshield wiper and rear wiper
35. **ECU−IG 10 A:** Daytime running light system, anti−lock brake system, electric power steering system, power windows, door lock system, theft deterrent system, electric cooling fan
36. **GAUGE 10 A:** Charging system, turn signal lights, emergency flashers, buck−up lights, instrument panel light control, shift lock system, rear window defogger, air conditioning system, automatic transmission system
37. **OBD2 7.5 A:** On−board diagnosis system
38. **STOP 10 A:** Stop lights, high mounted stop light, multiport fuel injection system/sequential multiport fuel injection system, shift lock system, anti−lock brake system
39. **D/L 25 A:** Door lock system
40. **FR FOG 15 A:** Front fog lights
41. **AM1 25 A:** Multiport fuel injection system/sequential multiport fuel injection system

Fuses (type B)

42. **HTR SUB2 40 A:** Air conditioning system
43. **EPS 50 A:** Electric power steering system
44. **ABS1/VSC1 50 A:** Anti−lock brake system
45. **HTR 40 A:** Air conditioning system
46. **RDI 30 A:** Electric cooling fan
47. **HTR SUB1 30 A:** Air conditioning system
48. **H−LP CLN/PWR HTR 30 A:** No circuit
49. **AMT 50 A:** No circuit
50. **DEF 30 A:** Rear window defogger
51. **PWR 30 A:** Power windows

Fuses (type C)

52. **ALT 120 A:** Charging system, “HTR SUB2”, “EPS”, “ABS1/VSC1”, “HTR”, “ABS2/VSC2”, “HTR SUB1”, “RDI”, “DEF”, “FR FOG”, “OBD2”, “D/L”, “STOP” and “AM1” fuses
53. **MAIN 60 A:** “EFI”, “HORN”, “AM2”, “ALT−S”, “DOME”, “ST”, “ECU−B”, “ETCS”, “HAZ”, “H−LP LH/H−LP LO LH” and “H−LP RH/H−LP LO RH” fuses

SECTION 9

REPORTING SAFETY DEFECTS FOR U.S. OWNERS

Reporting safety defects for U.S.

Reporting safety defects for U.S. owners 304

Reporting safety defects for U.S. owners

If you believe that your vehicle has a defect which could cause a crash or could cause injury or death, you should immediately inform the National Highway Traffic Safety Administration (NHTSA) in addition to notifying Toyota Motor Sales, U.S.A., Inc.
(Toll−free: 1−800−331−4331).

If NHTSA receives similar complaints, it may open an investigation, and if it finds that a safety defect exists in a group of vehicles, it may order a recall and remedy campaign. However, NHTSA cannot become involved in individual problems between you, your dealer, or Toyota Motor Sales, U.S.A., Inc.

To contact NHTSA, you may either call the Auto Safety Hotline toll−free at 1−800−424−9393 (or 366−0123 in Washington,D.C. area) or write to: NHTSA, U.S.Department of Transportation, Washington,D.C. 20590. You can also obtain other information about motor vehicle safety from the Hotline.

Foreword

Welcome to the growing group of value−conscious people who drive Toyotas. We are proud of the advanced engineering and quality construction of each vehicle we build.

This Owner's Manual explains the operation of your new Toyota. Please read it thoroughly and have all the occupants follow the instructions carefully. Doing so will help you enjoy many years of safe and trouble−free motoring. For important information about this manual and your Toyota, read the following pages carefully.

When it comes to service, remember that your Toyota dealer knows your vehicle very well and is interested in your complete satisfaction. Your Toyota dealer will provide quality maintenance and any other assistance you may require.

If there is not a Toyota dealer near you, please call the following number:

U.S. OWNERS:
- When traveling in the U.S. mainland or Canada:
  Toyota Customer Experience Center **Toll−free:1−800−331−4331**
- Hawaii:
  Servco Automotive Customer Services **Toll−free:1−888−272−5515**

CANADIAN OWNERS:
- When traveling in Canada or the U.S. mainland:
  Toyota Canada Customer Interaction Centre **Toll−free:1−888−TOYOTA−8 or 1−888−869−6828**

Please leave this Owner's Manual in this vehicle at the time of resale. The next owner will need this information also.

All information and specifications in this manual are current at the time of printing. However, because of Toyota's policy of continual product improvement, we reserve the right to make changes at any time without notice.

Please note that this manual applies to all models and explains all equipment, including options. Therefore, you may find some explanations for equipment not installed on your vehicle.

Please access our websites for further information.
- The U.S. mainland **www.toyota.com**
- Hawaii **www.toyotahawaii.com**
- Canada **www.toyota.ca**

TOYOTA MOTOR CORPORATION

© 2006 TOYOTA MOTOR CORPORATION
All rights reserved. This material may not be reproduced or copied, in whole or in part, without the written permission of Toyota Motor Corporation.

Important information about this manual

Safety and vehicle damage warnings

Throughout this manual, you will see safety and vehicle damage warnings. You must follow these warnings carefully to avoid possible injury or damage.

The types of warnings, what they look like, and how they are used in this manual are explained as follows.

⚠ CAUTION

This is a warning against anything which may cause injury to people if the warning is ignored. You are informed about what you must or must not do in order to reduce the risk of injury to yourself and others.

NOTICE

This is a warning against anything which may cause damage to the vehicle or its equipment if the warning is ignored. You are informed about what you must or must not do in order to avoid or reduce the risk of damage to your vehicle and its equipment.

Safety symbol

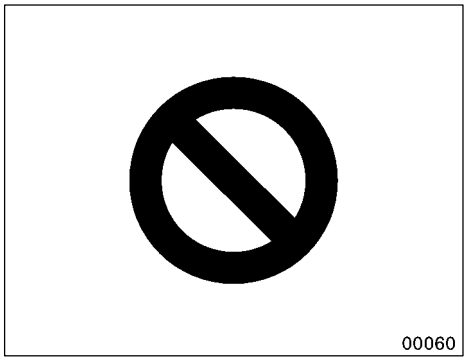

When you see the safety symbol shown above, it means: “Do not...”; “Do not do this”; or “Do not let this happen”.

Important information about your Toyota

Occupant restraint systems

Toyota encourages you and your family to take the time to read Section 1−3 of this Owner's Manual carefully. In terms of helping you understand how you can receive the maximum benefit of the occupant restraint systems this vehicle provides, Section 1−3 of this Owner's Manual is the most important section for you and your family to read.

Section 1−3 describes the function and operation concerning seats, seat belts, SRS airbags and child restraint systems of this vehicle and some potential hazards you should be aware of. These systems work together along with the overall structure of this vehicle in order to provide occupant restraint in the event of a crash. The effect of each system is enhanced when it is used properly and together with other systems. No single occupant restraint system can, by itself, provide you or your family with the equal level of restraint which these systems can provide when used together. That is why it is important for you and your family to understand the purpose and proper use of each of these systems and how they relate to each other.

The purpose of all occupant restraint systems is to help reduce the possibility of death or serious injury in the event of a collision. None of these systems, either individually or together, can ensure that there is no injury in the event of collision. However, the more you know about these systems and how to use them properly, the greater your chances become of surviving an accident without death or serious injury.

Seat belts provide the primary restraint to all occupants of the vehicle, and every occupant of the vehicle should wear seat belts properly at all times. Children should always be secured in child restraint systems that are appropriate for their age and size. SRS (Supplemental Restraint System) airbags are, as their names imply, designed to work with, and be supplemental to, seat belts and are not substitutes for them. SRS airbags can be very effective in reducing the risk of head and chest injuries by preventing contact of the head and chest with interior portions of the vehicle.

In order to be effective, the SRS airbags must deploy with tremendous speed. The rapid deployment of the SRS airbags makes the SRS airbags themselves potential sources of serious injury if an occupant is too close to an airbag, or if an object or some part of his or her body has been placed between the occupant and the airbag at the time of deployment. This is just one example of how the instructions in Section 1−3 of this Owner's Manual will help ensure proper use of the occupant restraint systems, and increase the safety they can provide to you and your family in the event of an accident.

Toyota recommends you to read the provisions in Section 1−3 carefully and refer to them as needed during your time of ownership of this vehicle.

Event data recorder

Your vehicle has computers that monitor and control certain aspects of your vehicle. These computers assist in driving and maintaining optimal vehicle performance. Besides storing data useful for troubleshooting, there is a system to record data in a crash or a near car crash event. This is called an Event Data Recorder (EDR).

The SRS airbag sensor assembly contains the EDR. In a crash or a near car crash event, this device may record some or all of the following information:

- Engine speed
- Whether the brake pedal was applied or not
- Vehicle speed
- To what extent the accelerator pedal was depressed
- Position of the transmission selector lever
- Whether the driver and front passenger wore the seat belts or not
- Driver's seat position
- Front passenger's occupant classification

- SRS airbag deployment data
- SRS airbag system diagnostic data

The information above is intended to be used for the purpose of improving vehicle safety performance. Unlike general data recorders, the EDR does not record sound data such as conversation between passengers.

Toyota will not disclose the data recorded in an EDR to a third party except when:

- An agreement from the vehicle's owner (or the leasing company for a leased vehicle) is obtained
- Officially requested by the police or other authorities
- Used as a defense for Toyota in a law suit
- Ordered by the court

However, if necessary Toyota will:

- Use the data for research on Toyota vehicle safety performance
- Disclose the data to a third party for research purposes without disclosing details of the vehicle owner, and only when it is deemed necessary
- Disclose summarized data cleared of vehicle identification information to a non−Toyota organization for research purposes

New vehicle warranty

Your new vehicle is covered by the following Toyota limited warranties:

- New vehicle warranty
- Emission control systems warranty
- Others

For further information, please refer to the "Owner's Warranty Information Booklet" or "Owner's Manual Supplement".

Your responsibility for maintenance

It is the owner's responsibility to make sure that the specified maintenance is performed. Section 6 gives details of these maintenance requirements. Also included in Section 6 is general maintenance. For scheduled maintenance information, please refer to the "Scheduled Maintenance Guide" or "Owner's Manual Supplement".

Important health and safety information about your Toyota

⚠CAUTION

- **WARNING: Engine exhaust, some of its constituents, and a wide variety of automobile components contain or emit chemicals known to the State of California to cause cancer and birth defects and other reproductive harm. In addition, oils, fuels and fluids contained in vehicles as well as waste produced by component wear contain or emit chemicals known to the State of California to cause cancer and birth defects or other reproductive harm.**
- **Battery posts, terminals and related accessories contain lead and lead compounds. Wash your hands after handling. Used engine oil contains chemicals that have caused cancer in laboratory animals. Always protect your skin by washing thoroughly with soap and water.**

Accessories, spare parts and modification of your Toyota

A wide variety of non−genuine spare parts and accessories for Toyota vehicles are currently available in the market. You should know that Toyota does not warrant these products and is not responsible for their performance, repair, or replacement, or for any damage they may cause to, or adverse effect they may have on, your Toyota vehicle.

This vehicle should not be modified with non−genuine Toyota products. Modification with non−genuine Toyota products could affect its performance, safety or durability, and may even violate governmental regulations. In addition, damage or performance problems resulting from the modification may not be covered under warranty.

Spark ignition system of your Toyota

The spark ignition system in your Toyota meets all requirements of the Canadian Interference−Causing Equipment Standard.

Installation of a mobile two−way radio system

As the installation of a mobile two−way radio system in your vehicle could affect electronic systems such as multiport fuel injection system/sequential multiport fuel injection system, electronic throttle control system, electronic engine control system, anti−lock brake system, SRS airbag system and seat belt pretensioner system, be sure to check with your Toyota dealer for precautionary measures or special instructions regarding installation.

Tires and loading on your Toyota

Underinflated or overinflated tire inflation pressure and the excess load may result in the deterioration of steering ability and braking ability, leading to an accident. Check the tire inflation pressure periodically and be sure to keep the load limits given in this Owner's Manual. For details about tire inflation pressure and load limits, see pages 274 and 201.

Scrapping of your Toyota

The SRS airbag and seat belt pretensioner devices in your Toyota contain explosive chemicals. If the vehicle is scrapped with the airbags and pretensioners left as they are, it may cause an accident such as a fire. Be sure to have the systems of the SRS airbag and seat belt pretensioner removed and disposed of by the qualified service shop or by your Toyota dealer before you dispose of your vehicle.

Leak detection pump

This pump performs fuel evaporation leakage check. This check is done approximately five hours after the engine is turned off. So you may hear sound coming from underneath the luggage compartment for several minutes. It does not indicate a malfunction.

¿U –2

Quick index

- If a service reminder indicator or warning buzzer comes on 114
- If your vehicle will not start 222
- If your engine stalls while driving 226
- If you cannot increase engine speed 226
- If your vehicle overheats 227
- If you have a flat tire 228
- If your vehicle needs to be towed 240
- Tips for driving during break-in period 178
- How to start the engine 208
- General maintenance 257
- Complete index ..... NO TAG

Gas station information

Fuel type:

UNLEADED gasoline, Octane Rating 87 (Research Octane Number 91) or higher

See page 178 for detailed information.

Fuel tank capacity:
42 L (11.1 gal., 9.2 Imp.gal.)

Engine oil:
ILSAC multigrade engine oil is recommended.

See page 271 for detailed information.

Tire information: See pages 274 through 281.

Tire inflation pressure: See page 299.

2007 YARIS HATCHBACK from Jan. '06 Prod. (OM52700U)

Publication No. OM52700U
Part No. 01999-52703
Printed in Japan 01−0601−00 I
¿¿¿ ¿¿¿¿¿¿(¿¿U)

You should know as much about the quality and importance of proper maintenance of your new vehicle as the people who built it.

The Toyota authorized Repair Manual tells you how to maintain your vehicle and enables you to correctly perform your own maintenance.



2007 YARIS HATCHBACK from Jan. '06 Prod. (OM52700U)

The best way to keep your new vehicle in top running order is to maintain it properly from the moment you drive it off the showroom floor.

The Toyota authorized Repair Manual is packed with literally everything you need to know to perform your own maintenance in virtually every area of your new vehicle.

Maintenance procedures for the engine, chassis, body, electrical system, and more, are clearly explained and illustrated.

Periodic maintenance and tune−up

Periodic maintenance and tune−up helps to prevent small problems from growing into larger ones later on. The repair manual outlines exactly what maintenance is required and clearly explains how to do the work yourself step−by−step.

Areas covered include such things as spark plug replacement, valve clearance adjustment and engine oil and filter replacement.

Where to obtain the Repair Manual

The repair manual for YARIS may be purchased from any Toyota dealer or the Material Distribution Center. To purchase the repair manual, please contact your Toyota dealer or call the Material Distribution Center toll−free at 1−800−622−2033.

WE REALLY CARE ABOUT YOU — PLEASE BUCKLE UP

Toyota has made a special effort to encourage use of seat belts.

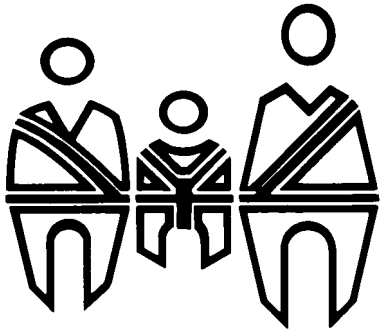

Toyota belts are:

- **Comfortable**
- **Easy to use**
- **Convenient**

We encourage you to use your belts every time you drive.

2007 YARIS HATCHBACK from Jan. '06 Prod. (OM52700U)

SECTION 1–1

OPERATION OF INSTRUMENTS AND CONTROLS

Overview of instruments and controls

Instrument panel overview 2
Instrument cluster overview 4
Indicator symbols on the instrument panel 6

Instrument panel overview

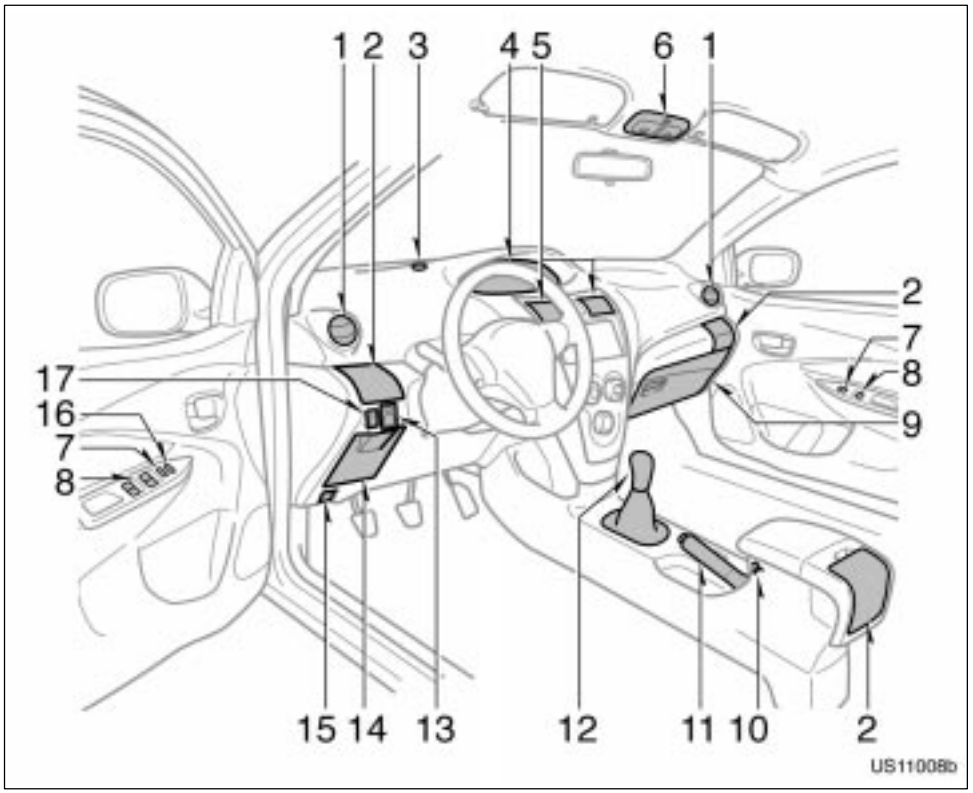

1. Side vents
2. Cup holders
3. Engine immobilizer/theft deterrent system indicator light
4. Instrument cluster
5. Center vents
6. Personal lights
7. Power door lock switches
8. Power window switches
9. Glove boxes
10. Cigarette lighter/Power outlet
11. Parking brake lever
12. Automatic transmission selector lever or manual transmission gear shift lever
13. Power rear view mirror control switches
14. Auxiliary boxes
15. Hood lock release lever
16. Window lock switch
17. Instrument panel light control knob

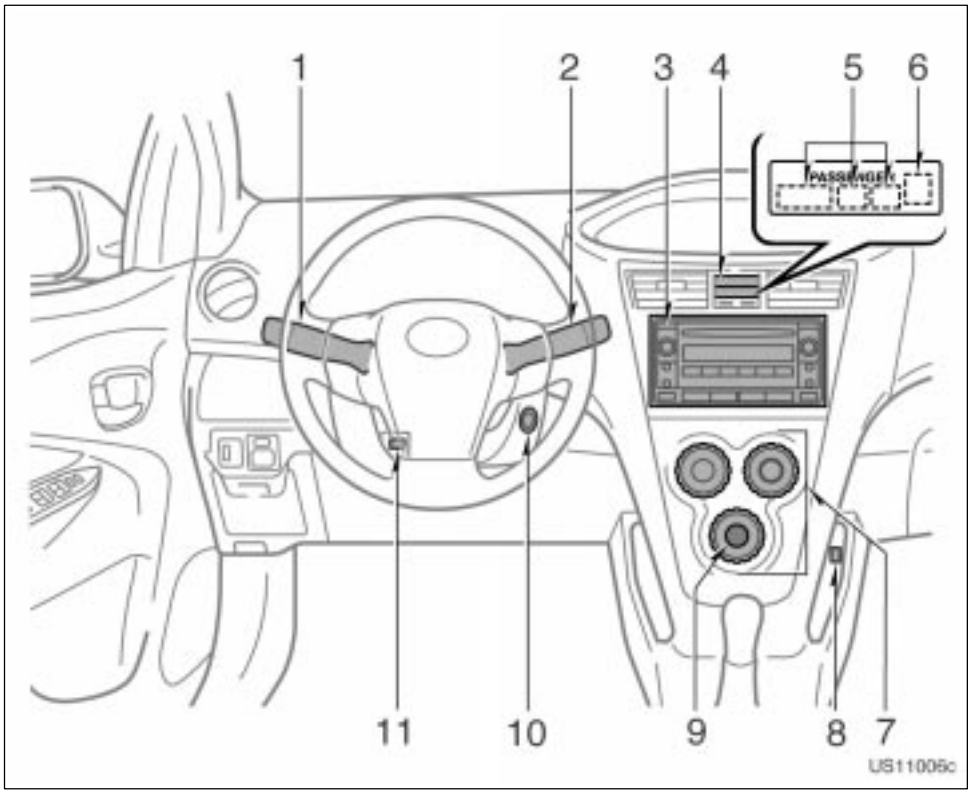

1. Headlight, turn signal and front fog light switches
2. Wiper and washer switches
3. Audio system
4. Emergency flasher switch
5. Front passenger airbag on−off indicator lights
6. Front passenger's seat belt reminder light
7. Air conditioning controls
8. AUX adapter
9. Rear window defogger switch
10. Ignition switch
11. Tilt steering lock release lever

Instrument cluster overview

- **With tachometer**

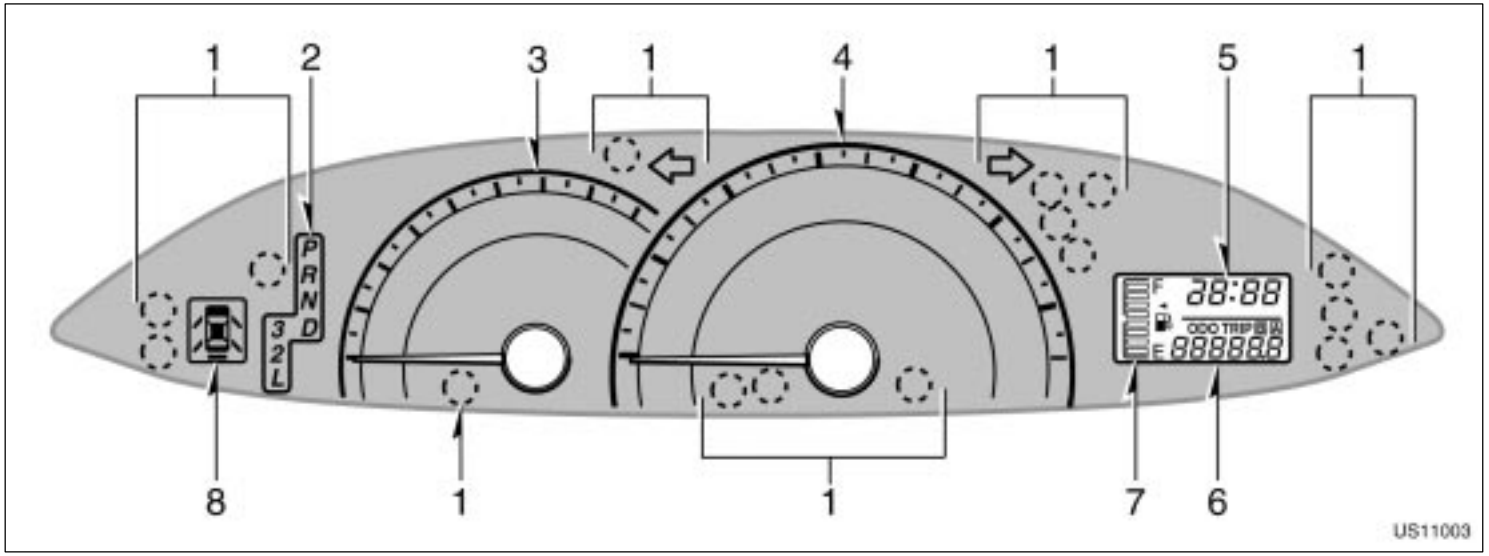

1. Service reminder indicators and indicator lights
2. Shift position indicator lights
3. Tachometer
4. Speedometer
5. Clock
6. Odometer and two trip meters
7. Fuel gauge
8. Door indicator light

● **Without tachometer**

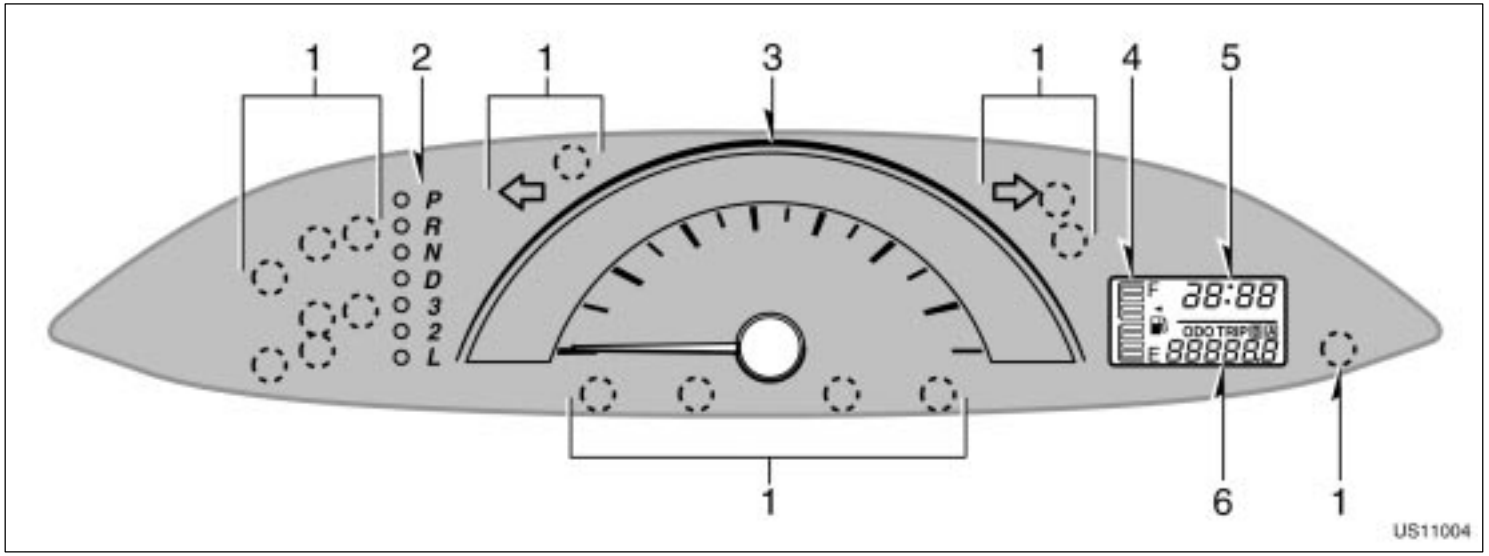

1. Service reminder indicators and indicator lights
2. Shift position indicator lights
3. Speedometer
4. Fuel gauge
5. Clock
6. Odometer and two trip meters

Indicator symbols on the instrument panel

BRAKE or 	Brake system warning light*1
	Driver's seat belt reminder light*1
PASSENGER	Front passenger's seat belt reminder light*1
	Charging system warning light*1
CHECK or 	Malfunction indicator lamp*1
	Low engine oil pressure warning light*1

ABS or	Anti-lock brake system warning light*1
	Open door warning light*1
	Door indicator light*1
	SRS warning light*1
P/S	Electric power steering system warning light*1
	Low fuel level warning light*1
	Low windshield washer fluid level warning light*1
CRUISE	Cruise control indicator light*3

MAINT REQD	Engine oil replacement reminder light*1
AIRBAG	“AIRBAG ON” indicator light
AIRBAG OFF	“AIRBAG OFF” indicator light
	Headlight low beam indicator light
	Taillight indicator light
	Turn signal indicator lights
	Headlight high beam indicator light
	Front fog light indicator light

	High engine coolant temperature warning light*1
	Low engine coolant temperature indicator light*2

*1: For details, see “Service reminder indicators and warning buzzers” on page 105 in Section 1−6.

*2: For details, see “Engine coolant temperature indicator and warning light” on page 102 in Section 1−6.

*3: If this light flashes, see “Cruise control” on page 122 in Section 1−7.

SECTION 1–2

OPERATION OF INSTRUMENTS AND CONTROLS

Keys and Doors

Keys 10
Engine immobilizer system 13
Wireless remote control 14
Side doors 19
Power windows 22
Trunk lid 24
Hood 26
Theft deterrent system 27
Fuel tank cap 29

Keys (without engine immobilizer system)

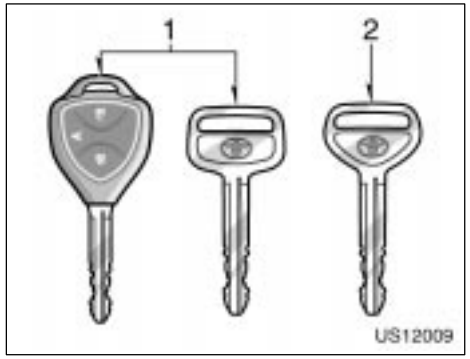

With wireless remote control

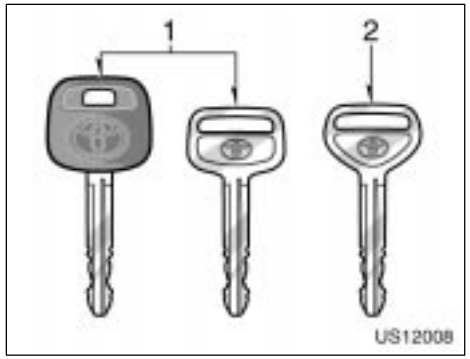

Without wireless remote control

Your vehicle is supplied with two kinds of key.

1. Master keys—These keys work in every lock.
2. Sub key—This key will not work in the trunk.

To protect items locked in the trunk when using valet parking, leave the sub key with the attendant.

Since the doors and trunk lid can be locked without a key, you should always carry a spare master key in case you accidentally lock your keys inside the vehicle.

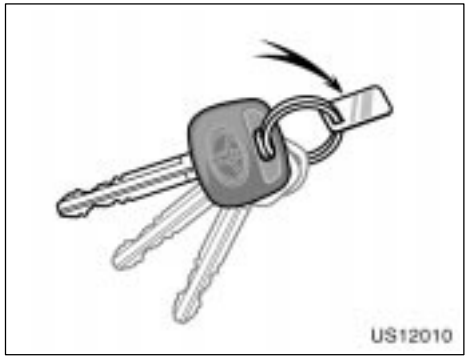

KEY NUMBER PLATE

Your key number is shown on the plate. Keep the plate in a safe place such as your wallet, not in the vehicle.

If you should lose your keys or if you need additional keys, duplicates can be made by a Toyota dealer using the key number.

We recommend writing down the key number and storing it in a safe place.

Keys (with engine immobilizer system)

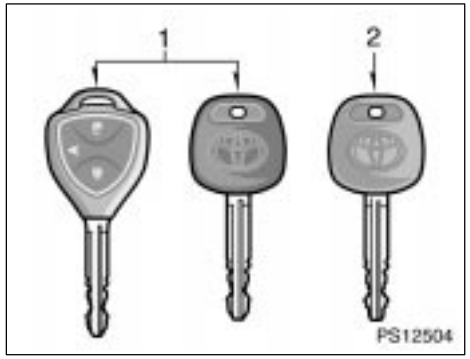

With wireless remote control

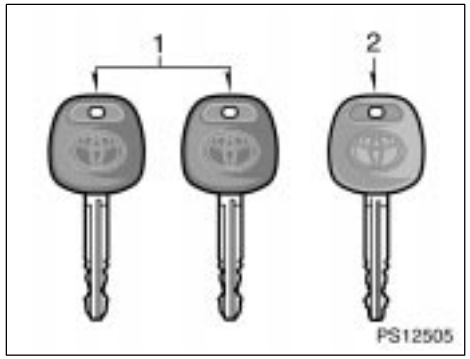

Without wireless remote control

Your vehicle is supplied with two kinds of keys.

1. Master keys (black)—These keys work in every lock. Your Toyota dealer will need one of them to make a new key with a built−in transponder chip.
2. Sub key (gray)—This key also works in every lock.

A transponder chip for engine immobilizer system has been placed in the head of the master and sub keys. These chips are needed to enable the system to function correctly, so be careful not to lose these keys. If you make your own duplicate key, you will not be able to cancel the system or start the engine.

Since the doors and trunk lid can be locked without a key, you should always carry a spare master key in case you accidentally lock your keys inside the vehicle.



NOTICE

When using a key containing a transponder chip, observe the following precautions:

- ***When starting the engine, do not use the key with a key ring resting on the key grip and do not press the key ring against the key grip. Otherwise the engine may not start, or may stop soon after it starts.***



- ***When starting the engine, do not use the key with other transponder keys around (including keys of other vehicles) and do not press other key plates against the key grip. Otherwise the engine may not start, or may stop soon after it starts. If this happens, remove the key once and then insert it again after removing other transponder keys (including keys of other vehicles) from the ring or while gripping or covering them with your hand to start the engine.***



- ***Do not bend the key grip.***
- ***Do not cover the key grip with any material that cuts off electromagnetic waves.***
- ***Do not knock the key hard against other objects.***
- ***Do not leave the key exposed to high temperatures for a long period, such as on the dashboard and hood under direct sunlight.***
- ***Do not put the key in water or wash it in an ultrasonic washer.***
- ***Do not use the key with electromagnetic materials.***



KEY NUMBER PLATE

Your key number is shown on the plate. Keep the plate in a safe place such as your wallet, not in the vehicle.

If you should lose your keys or if you need additional keys, duplicates can be made by a Toyota dealer using the key number.

We recommend writing down the key number and storing it in a safe place.

Engine immobilizer system

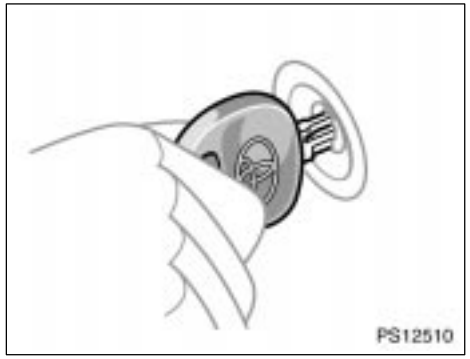

The engine immobilizer system is a theft prevention system. When you insert the key in the ignition switch, the transponder chip in the key's head transmits an electronic code to the vehicle. The engine will start only when the electronic code in the chip corresponds to the registered ID code for the vehicle.

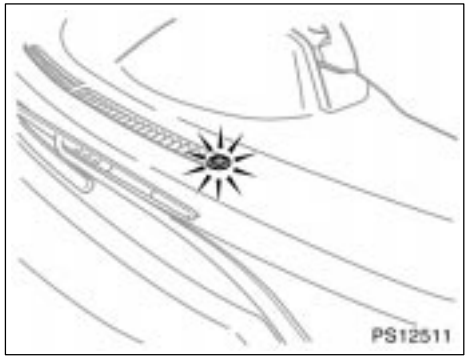

The system is automatically set when the key is removed from the ignition switch. The indicator light will start flashing to show the system is set.

If any of the following indicator conditions occurs, contact your Toyota dealer.

- The indicator light stays on.
- The indicator light does not start flashing when the key is removed from the ignition switch.
- The indicator light flashes inconsistently.

Inserting the registered key in the ignition switch automatically cancels the system, which enables the engine to start. The indicator light will go off.

For your Toyota dealer to make you a new key with a built−in transponder chip, your dealer will need your key number and master key. However, there is a limit to the number of additional keys your Toyota dealer can make for you.

If you make your own duplicate key, you will not be able to cancel the system or start the engine.

NOTICE

Do not modify, remove or disassemble the engine immobilizer system. If any unauthorized changes or modifications are made, proper operation of the system cannot be guaranteed.

For vehicles sold in U.S.A.

FCC ID: MOZRI−20BTY

This device complies with Part 15 of the FCC Rules. Operation is subject to the following two conditions:

(1) This device may not cause harmful interference, and (2) this device must accept any interference received, including interference that may cause undesired operation.

⚠ CAUTION

Changes or modifications not expressly approved by the party responsible for compliance could void the user's authority to operate the equipment.

For vehicles sold in Canada

This device complies with RSS−210 of Industry Canada. Operation is subject to the following two conditions:

(1) This device may not cause interference, and (2) this device must accept any interference, including interference that may cause undesired operation of the device.

Wireless remote control—

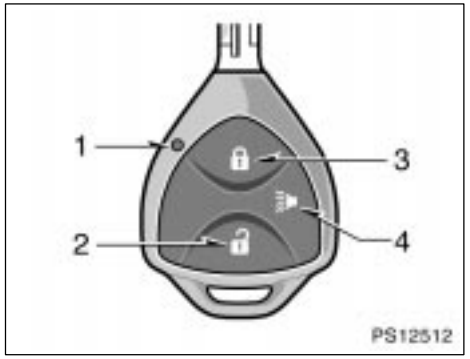

1. Indicator light
2. Unlock switch
3. Lock switch
4. Panic switch

The wireless remote control system is designed to lock or unlock all the doors from a distance within approximately 1 m (3 ft.) of the vehicle.

When you operate any switch, push it slowly and securely. At this time, the indicator light flashes once.

The wireless remote control key is an electronic component. Observe the following instructions in order not to cause damage to the key.

- Do not leave the key in places where the temperature becomes high such as on the dashboard.
- Do not disassemble it.
- Avoid knocking it hard against other objects or dropping it.
- Avoid putting it in water.

You can use up to 4 wireless remote control keys for the same vehicle. Contact your Toyota dealer for detailed information.

If the wireless remote control key does not actuate the doors or operate from a normal distance, or the indicator light on the key is dimmed or does not come on:

- Check for closeness to a radio transmitter such as a radio station or an airport which can interfere with normal operation of the key.
- The battery may have been consumed. Check the battery in the key. To replace the battery, see "—Replacing battery" on page 17.

If you lose your wireless remote control key, contact your Toyota dealer as soon as possible to avoid the possibility of theft, or an accident. (See "If you lose your keys" on page 234.)

For vehicles sold in U.S.A.

FCC ID: MOZB41TG

FCC ID: MOZB21RG

This device complies with Part 15 of the FCC Rules. Operation is subject to the following two conditions:

(1) This device may not cause harmful interference, and (2) this device must accept any interference received, including interference that may cause undesired operation.

⚠ CAUTION

Changes or modifications not expressly approved by the party responsible for compliance could void the user's authority to operate the equipment.

For vehicles sold in Canada

This device complies with RSS−210 of Industry Canada. Operation is subject to the following two conditions:

(1) This device may not cause interference, and (2) this device must accept any interference, including interference that may cause undesired operation of the device.

—Locking and unlocking doors

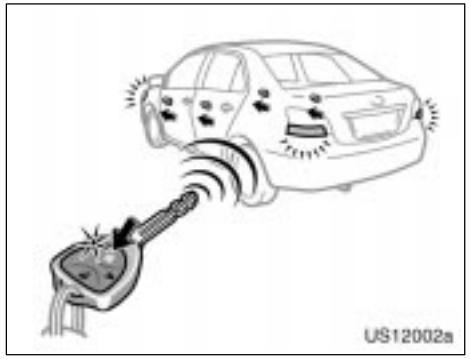

Locking operation

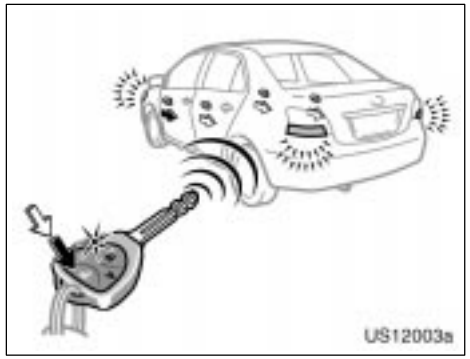

Unlocking operation

To lock and unlock all the doors, push the switches of the wireless remote control key slowly and securely.

To lock: Push the lock switch. All the doors are locked simultaneously. At this time, the turn signal lights will flash once.

Check to see that the doors are securely locked.

If any of the doors is not securely closed, or if the key is in the ignition switch, locking cannot be performed by the lock switch.

To unlock: Push the unlock switch once to unlock the driver's door alone. Pushing the switch twice within 3 seconds unlocks all the doors simultaneously. Each time the unlock switch is pushed, the turn signal lights will flash twice.

When the unlock switch is pressed, the interior light will come on and remain on for about 15 seconds before fading out. (For further information, see "Interior light" on page 97.)

You have 30 seconds to open a door after using the wireless remote unlock feature. If a door is not opened by then, all the doors will be automatically locked again.

If the lock or unlock switch is kept pressed in, the locking or unlocking operation is not repeated. Release the switch and then push it again.

—Activating panic mode



Pushing the panic switch for 1 second blows the horn intermittently and flashes the headlights, tail lights and emergency flashers and turns on the interior light.

The panic switch is used to deter vehicle theft when you witness anyone attempting to break into or damage your vehicle.

The panic mode will last for one minute. To stop the panic mode midway, do the following:

- Push any switch on the key.
- Turn the ignition key from the “LOCK” to “ON” position.

The panic mode does not work when the ignition key is in the “ON” position.

—Replacing battery

For replacement, use a CR2016 lithium battery or equivalent and a flathead screwdriver or equivalent.

⚠ CAUTION

Special care should be taken to prevent small children from swallowing the removed battery or components.

NOTICE

- ***When replacing the battery, be careful not to lose the components.***
- ***Replace only with the same or equivalent type recommended by a Toyota dealer.***
- ***Dispose of used batteries according to the local laws.***

Replace the battery by following these procedures:



1. Open the cover using a flathead screwdriver wrapped with plastic tape.

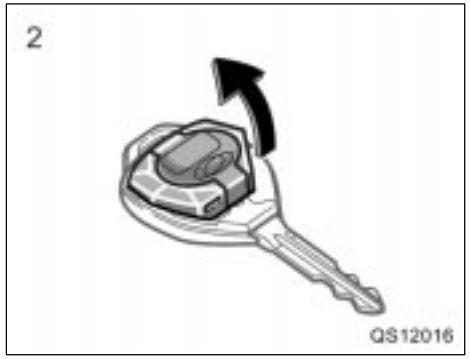

2. Remove the module from the key case.

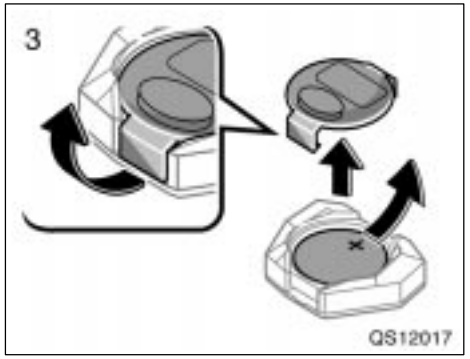

3. Remove the battery cover of the module.

NOTICE

Do not bend the terminals.

4. Remove the discharged battery and put in a new battery with positive (+) side up.

NOTICE

- ***Make sure the positive side and negative side of the battery are faced correctly.***
- ***Do not replace the battery with wet hands. Water may cause unexpected rust.***
- ***Do not touch or move any components inside the transmitter, or it may interfere with proper operation.***
- ***Be careful not to bend the electrode when inserting the battery and that dust or oils do not adhere to the case.***
- ***Close the cover securely.***

5. Install the battery cover of the module.
6. Install the module into the key case and secure the cover.

After replacing the battery, check that the key operates properly. If the key still does not operate properly, contact your Toyota dealer.

Side doors—

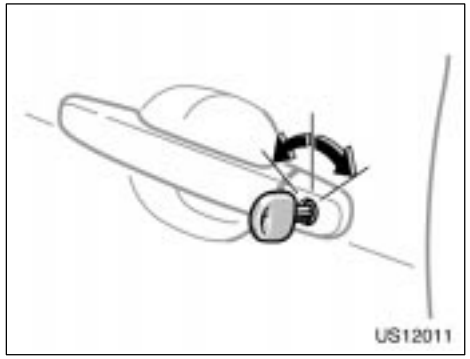

LOCKING AND UNLOCKING WITH KEY

Insert the key into the keyhole and turn it.

To lock: Turn the key forward.
To unlock: Turn the key backward.

Vehicles with the power door lock system—All the doors lock and unlock simultaneously with the driver's door. In the driver's door lock, turning the key once will unlock the driver's door and twice in succession will unlock all the doors simultaneously.

When the interior light switch is in the "DOOR" position and any of the doors is opened, the light will come on. After all the doors are closed, the light remains on for about 15 seconds before fading out. (For further information, see "Interior light" on page 97 in Section 1−5.)

Vehicles with the power door lock system—When the interior light switch is in the "DOOR" position, and the driver's door is unlocked using the key, the interior light will come on and remain on for about 15 seconds before fading out. (For further information, see "Interior light" on page 97 in Section 1−5.)

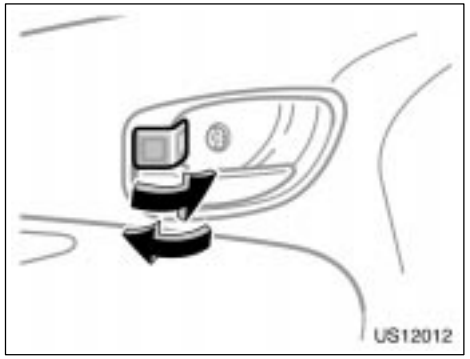

LOCKING AND UNLOCKING WITH INSIDE LOCK KNOB

Move the lock knob.

To lock: Push the knob forward.
To unlock: Pull the knob backward.

The front doors can be opened by pulling the inside handle even if the lock knobs are in the locked position.

⚠ CAUTION

Do not pull the inside handle of the front doors while driving. The doors will open and an accident may occur. Toyota strongly recommends that all children be placed in the rear seat of the vehicle.

Closing the door with the lock knob in the lock position will also lock the door. Be careful not to lock your keys in the vehicle.

Vehicles with the power door lock system—Doors cannot be locked when the driver's door is open and the key is in the ignition.

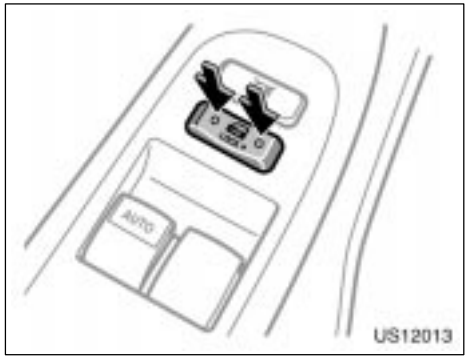

For driver's use

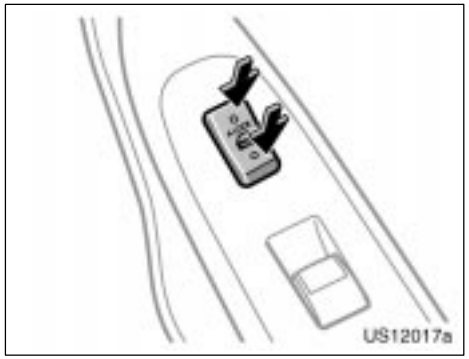

For front passenger's use

LOCKING AND UNLOCKING WITH POWER DOOR LOCK SWITCH

Push the switch.

For driver's use—

To lock: Push the switch down on the right side.
To unlock: Push the switch down on the left side.

For front passenger's use—

To lock: Push the switch down on the front side.

To unlock: Push the switch down on the rear side.

Operating the switch simultaneously locks or unlocks all the doors.

If you do any of the following, no door can be unlocked with the power door lock switch.

- Lock all the doors with the wireless remote control key.
- Set the driver's door inside lock knob in the lock position, and close the driver's door while holding up the outside door handle.
- Lock all the doors simultaneously with driver's door.

The power door lock switch can be reset in the following ways.

- Turn the ignition key to “ON”.
- Unlock all the doors simultaneously with the driver’s door.
- Unlock all the doors with the wireless remote control key.
- Unlock the driver’s door with the inside lock knob, and then unlock all the doors with the power door lock switch.

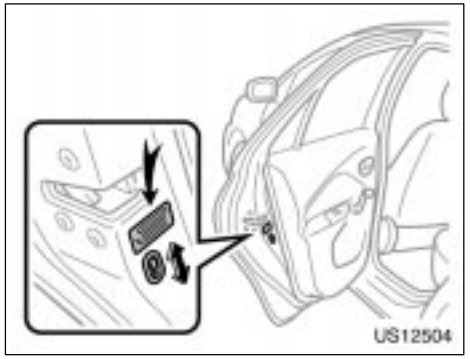

REAR DOOR CHILD−PROTECTORS

Move the lock lever to the “LOCK” position as shown on the label.

When the child−protector is locked, you cannot open the rear door by the inside door handle. We recommend using this feature whenever small children are in the vehicle.

⚠ CAUTION

Before driving, be sure that the doors are closed and locked, especially when small children are in the vehicle. Along with the proper use of seat belts, locking the doors helps prevent the driver and passengers from being thrown out from the vehicle in an accident. It also helps prevent the doors from being opened unintentionally.

Power windows

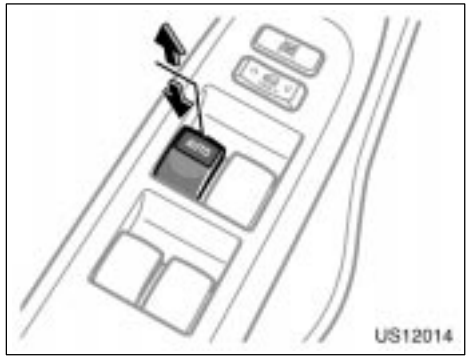

The windows can be operated with the switch on each side door.

The ignition key must be in the “ON” position.

Key off operation: The driver’s window works for about 45 seconds even after the ignition switch is turned off. They stop working when either of the front door is opened.

OPERATING THE DRIVER’S WINDOW

Use the switch on the driver’s door.

Normal operation: The window moves as long as you hold the switch.

To open: Lightly push down the switch.

To close: Pull up the switch.

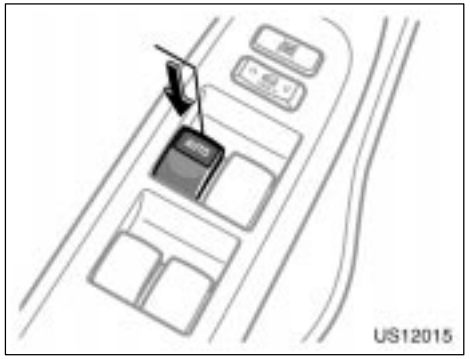

Automatic operation (to open only): Push the switch completely down and then release it. The window will fully open. To stop the window partway, lightly pull the switch up and then release it.

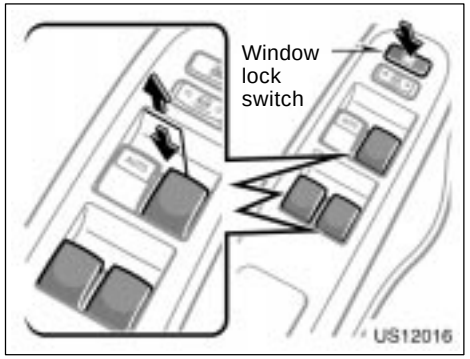

OPERATING THE PASSENGERS’ WINDOWS

Use the switches on the each passenger’s door or the switches on the driver’s door that control each passenger’s window.

The window moves as long as you hold the switch.

To open: Push down the switch.
To close: Pull up the switch.

If you push in the window lock switch on the driver’s door, the passenger’s windows cannot be operated.

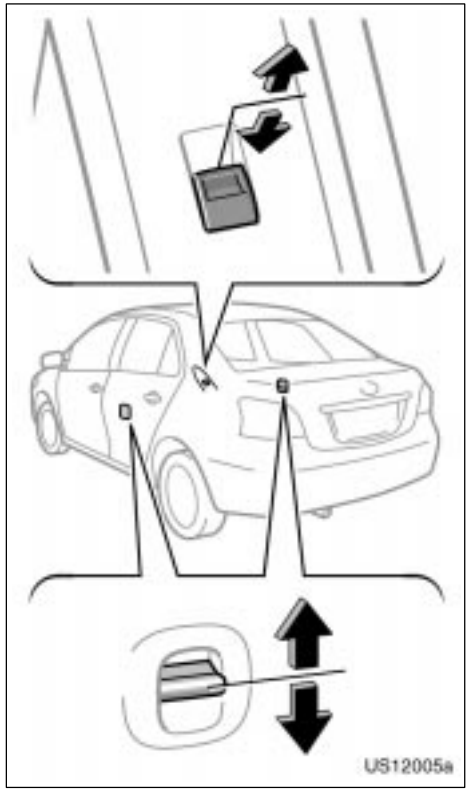

⚠ CAUTION

To avoid serious personal injury, you must do the following.

- **Before you close the power windows, always make sure there is nobody around the power windows. You must also make sure the heads, hands and other parts of the bodies of all occupants are kept completely inside the vehicle. If someone's neck, head or hands get caught in a closing window, it could result in death or serious injury. When anyone closes the power windows, make sure he or she operates the windows safely.**
- **When small children are in the vehicle, never let them use the power window switches without supervision. Use the window lock switch to prevent them from making unexpected use of the switches.**
- **Be sure to remove the ignition key or turn the ignition switch to the "LOCK" position when you leave your vehicle.**
- **Never leave anyone (particularly a small child) alone in your vehicle, especially with the ignition key still inserted. Otherwise, he/she could use the power window switches and get trapped in a window. Unattended person (particularly a small child) can be involved in a serious accident.**

Trunk lid—

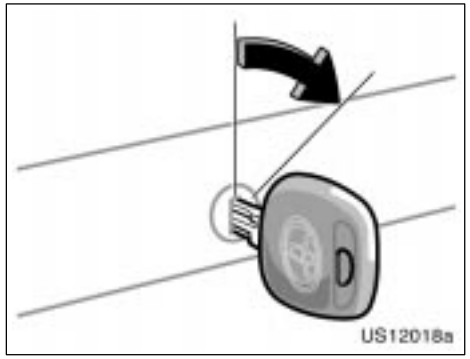

To open the trunk lid from the outside, insert the master key and turn it clockwise.

See “Cargo and luggage” on page 194 in Section 2 for precautions to observe when loading luggage.

To close the trunk lid, lower it and press down on it. After closing the trunk lid, try pulling it up to make sure it is securely closed.

⚠ CAUTION

- **Keep the trunk lid closed while driving. This not only keeps the luggage from being thrown out but also prevents exhaust gases from entering the vehicle.**
- **Always lock the trunk lid and all doors, and keep away the vehicle keys out of children’s reach.**
- **Never leave children unattended in the vehicle. Unsupervised children may lock themselves in the vehicle or trunk and suffer serious injuries or death.**

—Lock release lever



To open the trunk lid from the driver’s seat, pull up on the lock release lever.

—Internal trunk release strap

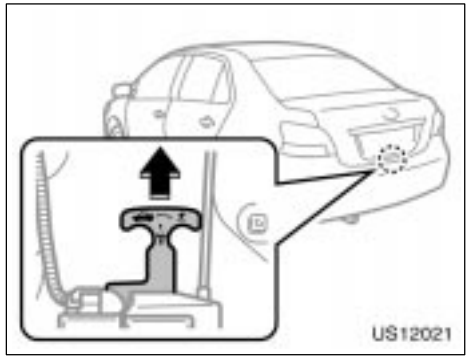

If a person is locked in the trunk, he/she can pull up the phosphorescent strap on the inside of trunk lid to open the trunk lid.

The phosphorescent (glow−in−the−dark) handle will continue to glow for a time after the trunk lid is closed. Exposing the strap to stronger light will cause it to glow longer.

—Luggage security system

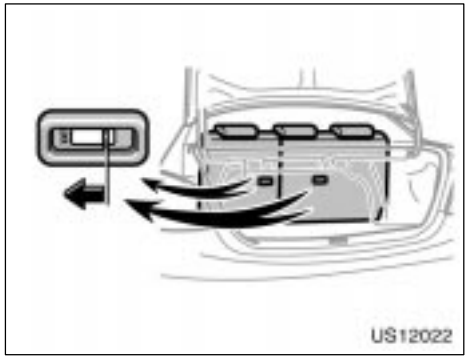

Split seat only

This system deactivates the lock release lever so that things locked in the trunk can be protected.

1. **Move the security lock levers to lock the rear seatbacks.**

After locking the rear seatbacks, try folding them down to make sure they are securely locked, otherwise someone could get into the trunk by folding down a rear seat.

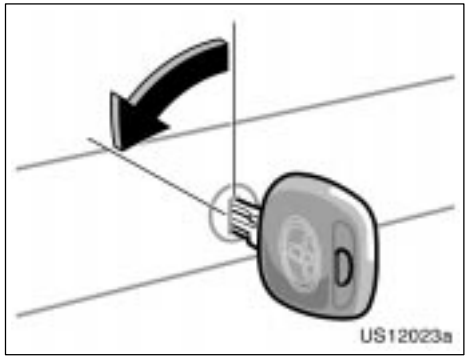

2. **After closing the trunk lid, insert the master key and turn it counterclockwise to deactivate the lock release lever.**

After closing the trunk lid, try pulling it up to make sure it is securely locked.

Hood

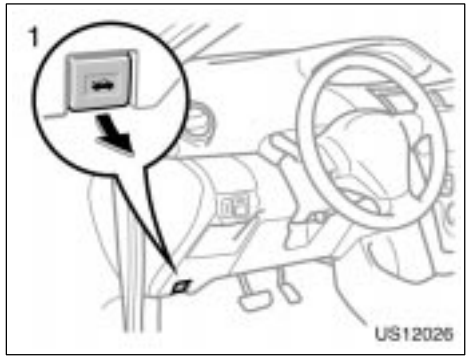

To open the hood:

1. Pull the hood lock release lever. The hood will spring up slightly.

⚠ CAUTION

Before driving, be sure that the hood is closed and securely locked. Otherwise, the hood may open unexpectedly while driving and an accident may occur.

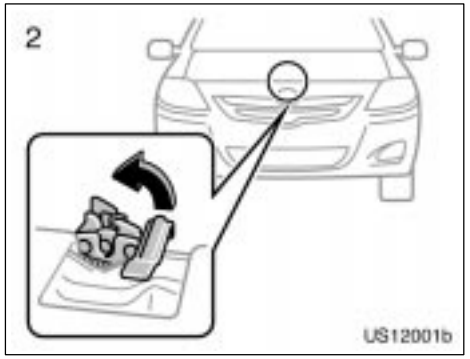

2. In front of the vehicle, pull up the auxiliary catch lever and lift the hood.

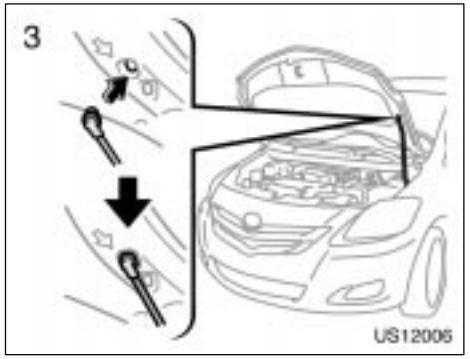

3. Hold the hood open by inserting the support rod into the slot.

To insert the support rod into the slot, move it straight up. If it is moved to the side or toward the inside of the vehicle, it may become detached.

Before closing the hood, check to see that you have not forgotten any tools, rags, etc. and return the support rod to its clip− this prevents rattles. Then lower the hood and make sure it locks into place. If necessary, press down gently on the front edge to lock it.

⚠ CAUTION

After inserting the support rod into the slot, make sure the rod supports the hood security from falling down on to your head or body.

NOTICE

Be sure to return the support rod to its clip before closing the hood. Closing the hood with the support rod up could cause the hood to bend.

Theft deterrent system (vehicles sold in Puerto Rico only)



To deter vehicle theft, the system is designed to sound an alarm if any of the doors, trunk or hood is forcibly unlocked or the battery terminal is disconnected and the reconnected when the vehicle is locked.

The alarm blows the horn intermittently and flashes the headlights, tail lights and turn signal lights, and turns on the interior light.

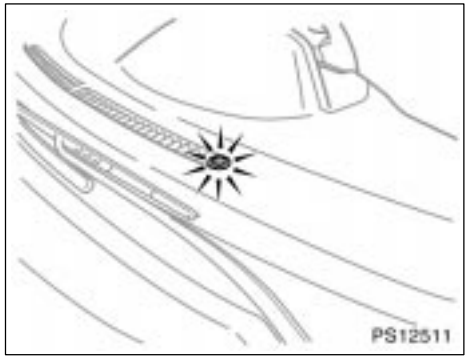

SETTING THE SYSTEM

1. Turn the ignition key to the “LOCK” position and remove it.
2. Have all passengers get out of the vehicle.
3. Close and lock all the doors, trunk and hood.

   Use the key to lock the last door. When the trunk is the last, turn the key to the unlock position and then turn to the door lock position.

The indicator light will remain on when all the doors and hood are closed and locked.

The system will automatically be set after 30 seconds. When the system is set, the indicator light will start flashing.

4. After making sure the indicator light starts flashing, you may leave the vehicle.

Never leave anyone in the vehicle when you set the system, because unlocking from the inside will activate the system.

WHEN THE SYSTEM IS SET

Activating the system

The system will sound the alarm if any of the doors is unlocked or trunk or hood is forcibly opened without the key.

The indicator light will come on when the system is activated.

After one minute, the alarm will automatically stop and the indicator light will starts flashing again.

Reactivating the alarm

Once set, the system automatically resets the alarm after the alarm stops.

The alarm will activate again under the same circumstances described in “Activating the system”.

Stopping the alarm

The alarm will be stopped by the following 3 ways:

- 2 seconds have elapsed since the engine was started.
- Unlock any of the doors or trunk with the key.
- Unlock all the doors with wireless remote control key.

If the battery becomes discharged due to the vehicle being unused for a long time, etc., when the battery is recharged or replaced, the system will give the alarm. If this happens, immediately unlock any of the doors or the trunk with the key or the wireless remote control transmitter, and the alarm will stop.

CANCELLING THE SYSTEM

The system will be cancelled by the above mentioned 3 ways.

If the tail lights come on for 2 seconds, the theft deterrent system has been alarmed. Check to see if there is any abnormality with your vehicle.

TESTING THE SYSTEM

1. Open all the windows.
2. Set the system as described above. The doors should be locked with the key. Be sure to wait until the indicator light goes off or starts flashing.
3. Unlock any door from the inside. The system should activate the alarm.
4. Stop the alarm as described above.
5. Repeat this operation for the other doors, trunk and hood.

If the system does not work properly, have it checked by your Toyota dealer.

Fuel tank cap

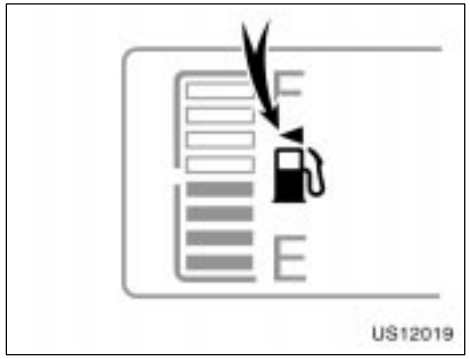

This indicates that the fuel filler door is on the left side of your vehicle.



1. To open the fuel filler door, pull the lever up.

When refueling, turn off the engine.

⚠ CAUTION

- **Do not smoke, cause sparks or allow open flames when refueling. The fumes are flammable.**
- **When opening the cap, do not remove the cap quickly. In hot weather, fuel under pressure could cause injury by spraying out of the filler neck if the cap is suddenly removed.**

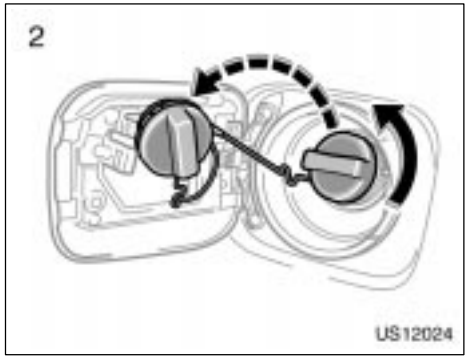

2. To remove the fuel tank cap, turn the cap slowly counterclockwise, then pause slightly before removing it. After removing the cap, hang it on the cap hanger.

It is not unusual to hear a slight swoosh when the cap is opened.

When installing the cap, turn it clockwise until one click is heard, in order to fully close it. The cap returns slightly when your hand is released from the cap after closure, however this does not cause any problems.

If the cap is not tightened securely, the malfunction indicator lamp comes on. Make sure the cap is tightened securely.

The indicator lamp goes off after driving several times. If the indicator lamp does not go off, contact your Toyota dealer as soon as possible.

⚠ CAUTION

- **Make sure the cap is installed securely to prevent fuel spillage in the event of an accident.**
- **Use only a genuine Toyota fuel tank cap for replacement. It is designed to regulate fuel tank pressure.**

SECTION 1–3

OPERATION OF INSTRUMENTS AND CONTROLS

Occupant restraint systems

Seats 32
Front seats 32
Rear seats 35
Fold−down rear seat 36
Armrest 37
Head restraints 38
Seat belts 38
SRS driver and front passenger airbags 49
SRS side airbags and curtain shield airbags 55
Front passenger occupant classification system 63
Child restraint 67

Seats

While the vehicle is being driven, all vehicle occupants should have the seatback upright, sit well back in the seat and properly wear the seat belts provided.

CAUTION

- **Do not drive the vehicle unless the occupants are properly seated. Do not allow any passengers to sit on top of a folded−down seatback, or in the luggage compartment or cargo area. Persons not properly seated and/or not properly restrained by seat belts can be severely injured in the event of emergency braking or a collision.**
- **During driving, do not allow any passengers to stand up or move around between seats. Otherwise, severe injuries can occur in the event of emergency braking or a collision.**

Front seats—
—Front seat precautions

Driver seat

CAUTION

The SRS driver airbag deploys with considerable force, and can cause death or serious injury especially if the driver is very close to the airbag. The National Highway Traffic Safety Administration (“NHTSA”) advises:

Since the risk zone for driver airbag is the first 50—75 mm (2—3 in.) of inflation, placing yourself 250 mm (10 in.) from your driver airbag provides you with a clear margin of safety. This distance is measured from the center of the steering wheel to your breastbone. If you sit less than 250 mm (10 in.) away now, you can change your driving position in several ways:

- **Move your seat to the rear as far as you can while still reaching the pedals comfortably.**
- **Slightly recline the back of the seat. Although vehicle designs vary, many drivers can achieve the 250 mm (10 in.) distance, even with the driver seat all the way forward, simply by reclining the back of the seat somewhat. If reclining the back of your seat makes it hard to see the road, raise yourself by using a firm, non−slippery cushion, or raise the seat if your vehicle has that feature.**
- **If your steering wheel is adjustable, tilt it downward. This points the airbag toward your chest instead of your head and neck.**

The seat should be adjusted as recommended by NHTSA above, while still maintaining control of the foot pedals, steering wheel, and your view of the instrument panel controls.

Front passenger seat

CAUTION

The SRS front passenger airbag also deploys with considerable force, and can cause death or serious injury especially if the front passenger is very close to the airbag. The front passenger seat should be as far from the airbag as possible with the seatback adjusted, so the front passenger sits upright.

Front seats (with SRS side airbags)

CAUTION

The SRS side airbags are installed in the driver and front passenger seats. Observe the following precautions.

- Do not lean against the front door when the vehicle is in use, since the side airbag inflates with considerable speed and force. Otherwise, you may be killed or seriously injured.
- Do not use seat accessories which cover the area where the side airbags inflate. Such accessories may prevent the side airbags from activating correctly, causing death or serious injury.
- Do not modify or replace the seats or upholstery of the seats with side airbags. Such change may prevent the side airbag system from activating correctly, disable the system or cause the side airbag system to inflate accidentally, resulting in death or serious injury.

—Seat adjustment precautions

CAUTION

- Do not adjust the seat while the vehicle is moving as the seat may unexpectedly move and cause the driver to lose control of the vehicle.
- Be careful that the seat does not hit a passenger or luggage.
- After adjusting the seat position, release the lever and try sliding the seat forward and backward to make sure it is locked in position.
- After adjusting the seatback, push your body back against the seat to make sure the seat is locked in position.
- Do not put objects under the seats. Otherwise, the objects may interfere with the seat−lock mechanism or unexpectedly push up the seat position adjusting lever and the seat may suddenly move, causing the driver to lose control of the vehicle.

—Adjusting front seats

- **While adjusting the seat, do not put your hands under the seat or near the moving parts. Otherwise, your hands or fingers may be caught and injured.**

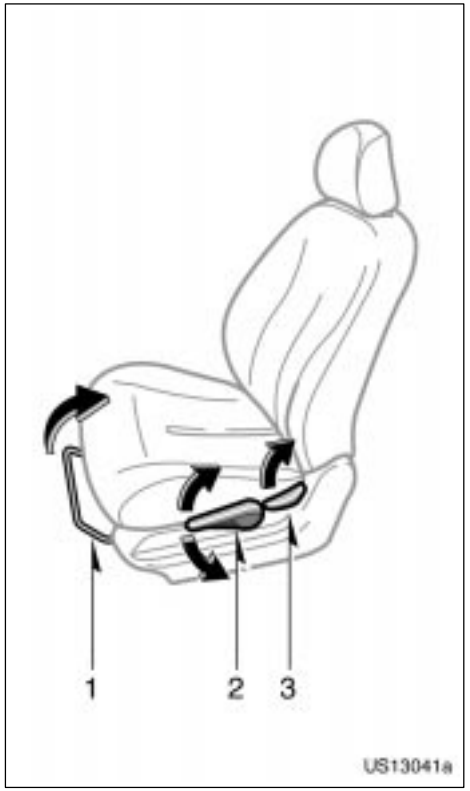

1. SEAT POSITION ADJUSTING LEVER

Hold the center of the lever and pull it up. Then slide the seat to the desired position with slight body pressure and release the lever.

2. SEAT HEIGHT ADJUSTING LEVER (driver's seat only)

Pull up or push down the lever.

3. SEATBACK ANGLE ADJUSTING LEVER

Lean forward and pull the lever up. Then lean back to the desired angle and release the lever.

Rear seats—
—Rear seat precautions

⚠ CAUTION

Avoid reclining the seatback any more than needed. The seat belts provide maximum protection in a frontal or rear collision when the driver and the front passenger are sitting up straight and well back in the seats. If you are reclined, the lap belt may slide past your hips and apply restraint forces directly to the abdomen or your neck may contact the shoulder belt. In the event of a frontal collision, the more the seat is reclined, the greater the risk of death or personal injury.

⚠ CAUTION

- **Do not adjust the seat while the vehicle is moving.**
- **Be careful that the seat does not hit a passenger or luggage.**
- **Be careful not to get your hands or feet pinched in the seat.**
- **After adjusting the seatback, push your body back against the seat to make sure the seat is locked in position.**
- **When returning the seatback to the upright position, observe the following precautions in order to prevent personal injury in a collision or sudden stop:**

  Make sure the seatback is securely locked by pushing forward and rearward on the top of the seatback. Failure to do so will prevent the seat belt from operating properly.

  Make sure the seat belts are not twisted or caught in the seatback and are arranged in their proper position and are ready to use.

Folding down the rear seatbacks will enlarge the luggage compartment. See "—Stowage precautions" on page 194 in Section 2 for precautions when loading luggage.

Fold−down rear seat

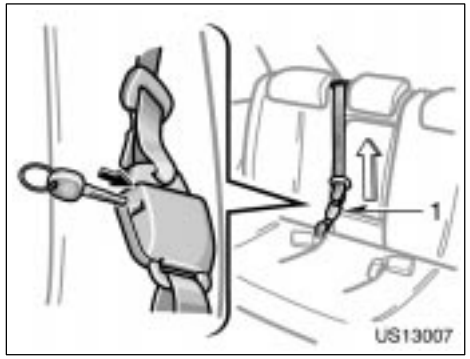

BEFORE FOLDING DOWN REAR SEATS

1. **Before folding down the seatback, disconnect the center seat belt to prevent damage.**

Insert the key into the hole on the buckle to release tab 1 (with hook end), and allow the belt to retract.

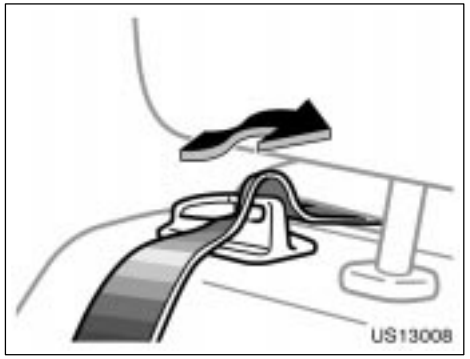

Remove the seat belt from the seat belt guide.

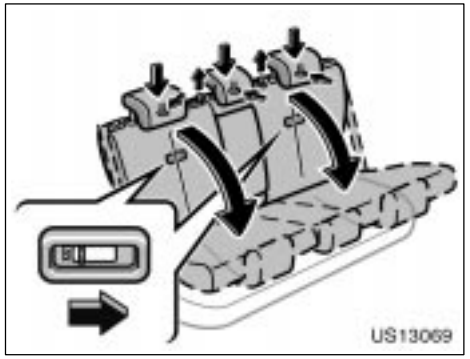

FOLDING REAR SEATS

After setting the seatback security lock lever to unlock position, pull the seatback angle adjusting lever up and fold the seatback down.

Each seatback can be folded separately.

⚠ CAUTION

When only rear left seat is folded down, rear seat alone can be used. Never sit on the center seat because the rear center seat belt cannot be fastened correctly when the rear left seat is folded down.

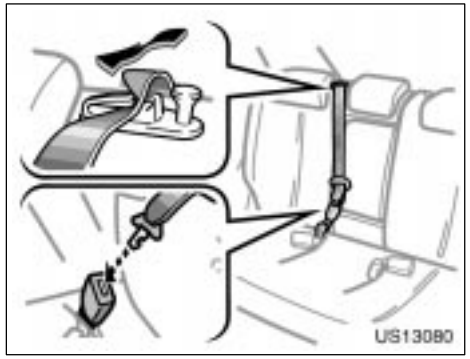

BEFORE RETURNING REAR SEAT

Make sure that the shoulder belt passes through the guide and the seat belt is in the position before folding down the seat as shown in the illustration when returning the seatback up.

⚠ CAUTION

When returning the seatback to the upright position, observe the following precautions in order to prevent personal injury in a collision or sudden stop:

- **Make sure the seatback is securely locked by pushing forward and rearward on the top of the seatback. Failure to do so will prevent the seat belt from operating properly.**
- **Make sure the seat belts are not twisted or caught in the seatback and are arranged in the proper position and are ready to use.**

Armrest

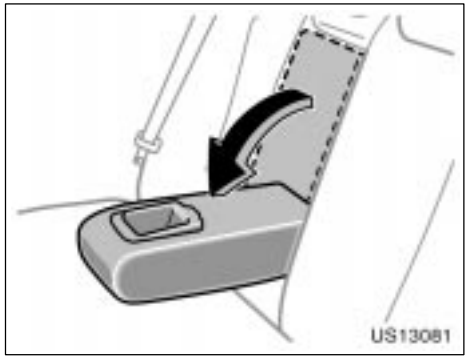

To use the armrest, pull the armrest out as shown in the illustration.

NOTICE

To prevent damage to the armrest, avoid putting heavy loads on it.

Head restraints

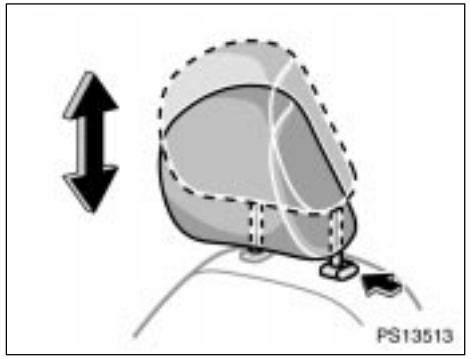

Front seat

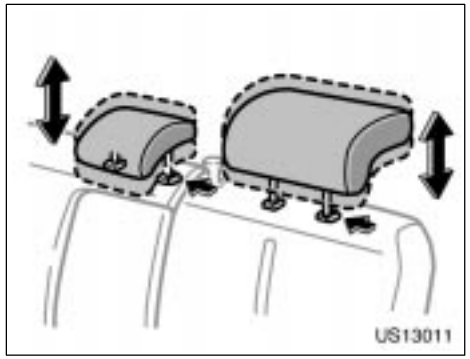

Rear seat

For your safety and comfort, adjust the head restraint before driving.

To raise: Pull it up.
To lower: Push it down while pressing the lock release button.

Rear center head restraint—When an occupant sits on the rear center seat, always pull up the rear center head restraint to the lock position.

The head restraint is most effective when it is close to your head. Therefore, using a cushion on the seatback is not recommended.

⚠ CAUTION

- **Adjust the center of the head restraint so that it is closest to the top of your ears.**
- **After adjusting the head restraint, make sure it is locked in position.**
- **Do not drive with the head restraints removed.**

Seat belts—
—Seat belt precautions

Toyota strongly urges that the driver and passengers in the vehicle be properly restrained at all times with the seat belts provided. Failure to do so could increase the chance of injury and/or the severity of injury in accidents.

The seat belts provided for your vehicle are designed for people of adult size, large enough to properly wear them.

Child. Use a child restraint system appropriate for the child until the child becomes large enough to properly wear the vehicle's seat belts. See "Child restraint" on page 67 for details.

If a child is too large for a child restraint system, the child should sit in the rear seat and must be restrained using the vehicle's seat belt. According to accident statistics, the child is safer when properly restrained in the rear seat than in the front seat.

If a child must sit in the front seat, the seat belts should be worn properly. If an accident occurs and the seat belts are not worn properly, the force of the rapid inflation of the airbag may cause death or serious injury to the child.

Do not allow any children to stand up or kneel on either rear or front seats. An unrestrained child could suffer serious injury or death during emergency braking or a collision. Also, do not let the child sit on your lap. Holding a child in your arms does not provide sufficient restraint.

Pregnant woman. Toyota recommends the use of a seat belt. Ask your doctor for specific recommendations. The lap belt should be worn securely and as low as possible over the hips and not on the waist.

Injured person. Toyota recommends the use of a seat belt. Depending on the injury, first check with your doctor for specific recommendations.

⚠ CAUTION

Persons should ride in their seats properly wearing their seat belts whenever the vehicle is moving. Otherwise, they are much more likely to suffer serious bodily injury or death in the event of sudden braking or a collision.

When using the seat belts, observe the following:

- **Use the belt for only one person at a time. Do not use a single belt for two or more people—even children.**
- **Avoid reclining the seatback any more than needed. The seat belts provide maximum protection in a frontal or rear collision when the driver and the front passenger are sitting up straight and well back in the seats. If you are reclined, the lap belt may slide past your hips and apply restraint forces directly to the abdomen or your neck may contact the shoulder belt. In the event of a frontal collision, the more the seat is reclined, the greater the risk of death or personal injury.**
- **Be careful not to damage the belt webbing or hardware. Take care that they do not get caught or pinched in the seat or doors.**
- **Inspect the belt system periodically. Check for cuts, fraying, and loose parts. Damaged parts should be replaced. Do not disassemble or modify the system.**
- **Keep the belts clean and dry. If they need cleaning, use a mild soap solution or lukewarm water. Never use bleach, dye, or abrasive cleaners, or allow them to come into contact with the belts—they may severely weaken the belts. (See “Cleaning the interior” on page 239 in Section 5.)**
- **Replace the belt assembly (including bolts) if it has been used in a severe impact. The entire assembly should be replaced even if damage is not obvious.**

—Fastening front and rear seat belts

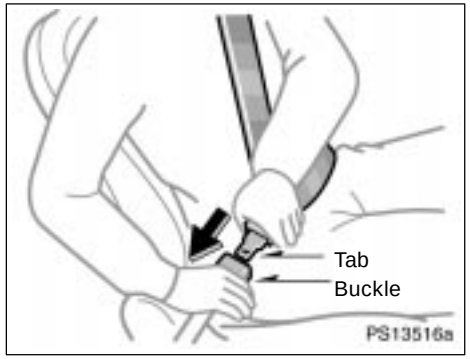

Adjust the seat as needed and sit up straight and well back in the seat. To fasten your belt, pull it out of the retractor and insert the tab into the buckle.

You will hear a click when the tab locks into the buckle.

The seat belt length automatically adjusts to your size and the seat position.

The retractor will lock the belt during a sudden stop or on impact. It also may lock if you lean forward too quickly. A slow, easy motion will allow the belt to extend, and you can move around freely.

When a passenger's shoulder belt is completely extended and is then retracted even slightly, the belt is locked in that position and cannot be extended. This feature is used to hold the child restraint system securely. (For details, see "Child restraint" on page 67 in this Section.) To free the belt again, fully retract the belt and then pull the belt out once more.

If the seat belt cannot be pulled out of the retractor, firmly pull the belt and release it. You will then be able to smoothly pull the belt out of the retractor.

⚠ CAUTION

- **After inserting the tab, make sure the tab and buckle are locked and that the belt is not twisted.**
- **Do not insert coins, clips, etc. in the buckle as this may prevent you from properly latching the tab and buckle.**
- **If the seat belt does not function normally, immediately contact your Toyota dealer. Do not use the seat until the seat belt is fixed, because it cannot protect an adult occupant or your child from death or serious injury.**

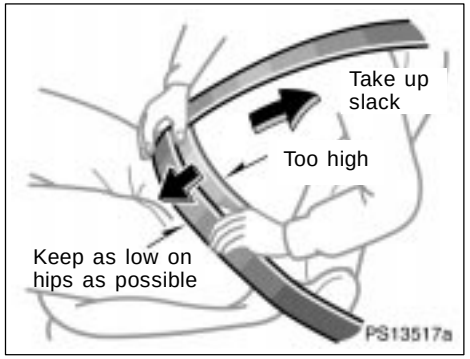

Adjust the position of the lap and shoulder belts.

Position the lap belt as low as possible on your hips—not on your waist, then adjust it to a snug fit by pulling the shoulder portion upward through the latch plate.

⚠ CAUTION

- **Both high−positioned lap belts and loose−fitting belts could cause serious injuries due to sliding under the lap belt during a collision or other unintended event. Keep the lap belt positioned as low on hips as possible.**
- **Do not place the shoulder belt under your arm.**

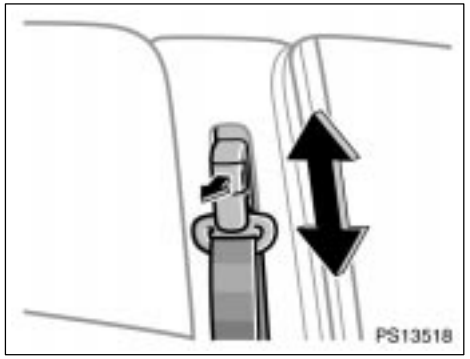

Seat belts with an adjustable shoulder anchor

Adjust the shoulder anchor position to your size.

To raise: Slide the anchor up.
To lower: Pull the lock release knob and slide the anchor down.

After adjustment make sure the anchor is locked in position.

⚠ CAUTION

Always make sure the shoulder belt is positioned across the center of your shoulder. The belt should be kept away from your neck, but not falling off your shoulder. Failure to do so could reduce the amount of protection in an accident and cause serious injures in a collision.

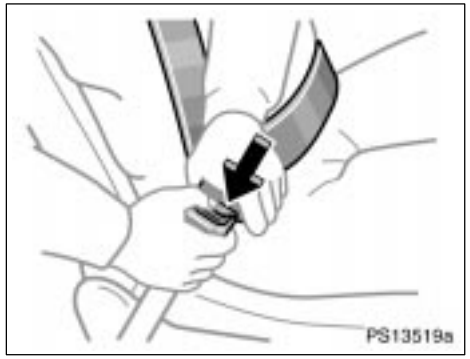

To release the belt, press the buckle release button and allow the belt to retract.

If the belt does not retract smoothly, pull it out and check for kinks or twists. Then make sure it remains untwisted as it retracts.

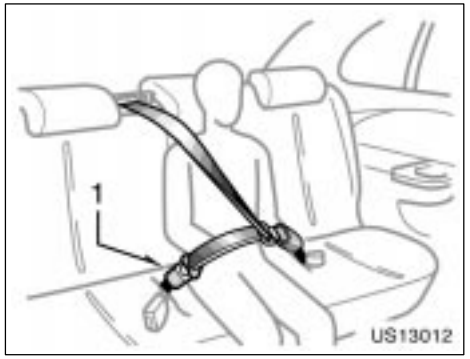

REAR CENTER SEAT BELT

The rear center seat belt is a 3−point type restraint with 2 buckles. Both seat belt buckles must be correctly located and securely latched for proper operation.

Make sure buckle 1 is securely latched for ready use of the center seat belt.

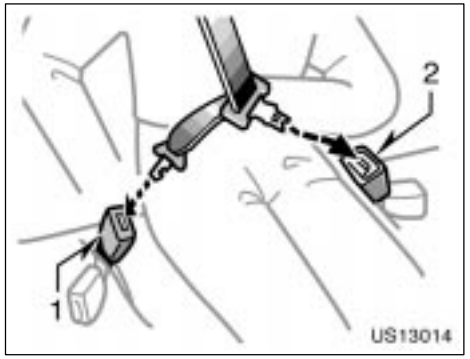

Two buckles and tabs for rear center seat belt

The two tabs have different shapes to prevent the belt from being buckled in the wrong place.

Buckle 1—Matches the tab with the hooked end
Buckle 2—Matches the tab with the concave end

⚠ CAUTION

Make sure the both buckles are correctly located and securely latched. Failure to properly match the buckle and tab may cause serious injury in case of an accident or a collision.

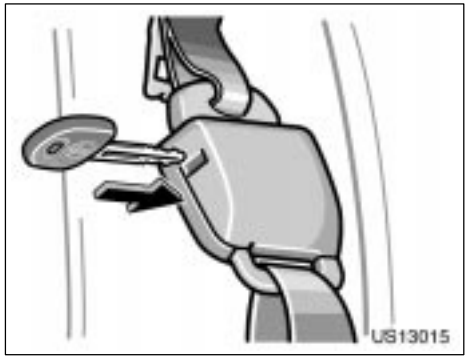

To release the hooked end tab, insert the key into the hole on buckle 1 and allow the belt to retract.

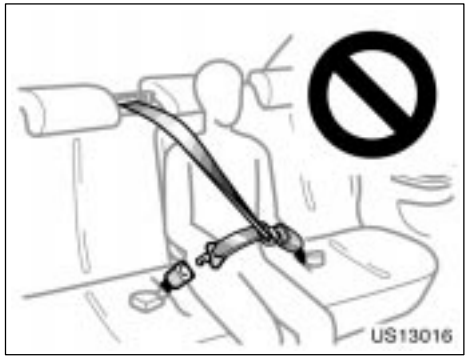

⚠ CAUTION

Do not use the rear center seat belt with either buckle released. Fastening only the shoulder belt or lap belt may cause serious personal injury in case of a sudden braking or a collision.

—Seat belt extender

If your seat belts cannot be fastened securely because they are not long enough, a personalized seat belt extender is available from your Toyota dealer free of charge.

Please contact your local Toyota dealer so that the dealer can order the proper required length for the extender. Bring the heaviest coat you expect to wear for proper measurement and selection of length. Additional ordering information is available at your Toyota dealer.

⚠ CAUTION

When using the seat belt extender, observe the following precautions. Failure to follow these instructions could reduce the effectiveness of the seat belt restraint system in case of an accident, increasing the chance of personal injury.

- **Remember that the extender provided for you may not be safe when used on a different vehicle, for another person, or at a different seating position than the one originally intended.**



- **If the seat belt extender has been connected to the driver's seat belt buckle without wearing the seat belt when using the extender in the driver's seat, the SRS driver's airbag system will judge that the driver wears the seat belt even if not wearing it. In this case, the driver's airbag may not activate correctly, causing death or serious injury in the event of collision. Be sure to wear the seat belt with the seat belt extender.**

- **Make sure the "AIRBAG ON" indicator light is illuminated when using the seat belt extender for the front passenger seat. If the "AIRBAG OFF" indicator light is illuminated, disconnect the extender tongue from the seat belt buckle, then reconnect the seat belt. Reconnect the seat belt extender after making sure the "AIRBAG ON" indicator light is illuminated. If you use the seat belt extender while the "AIRBAG OFF" indicator light is illuminated, the front passenger airbag and side airbag on the front passenger side may not activate correctly, causing death or serious injury in the event of collision.**
- **Be sure to wear the seat belt without the seat belt extender if you can fasten the seat belt without the extender.**

- **Do not use the seat belt extender when installing a child restraint system on the front or rear passenger seat. If installing a child restraint system with the seat belt extender connected to the seat belt, the seat belt will not securely hold the child restraint system, which could cause death or serious injury to the child or other passengers in the event of collision.**

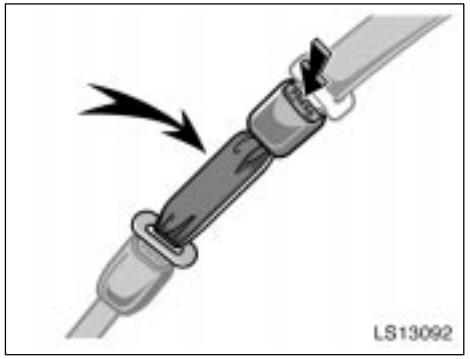

To connect the extender to the seat belt, insert the tab into the seat belt buckle so that the "PRESS" signs on the buckle release buttons of the extender and the seat belt are both facing outward as shown.

You will hear a click when the tab locks into the buckle.

When releasing the seat belt, press on the buckle release button on the extender, not on the seat belt. This helps prevent damage to the vehicle interior and extender itself.

As far as the seat belt extender on the front passenger side is concerned, do not fail to disconnect the extender from the seat belt after the above operation in order to activate the front passenger airbag correctly when getting into the vehicle next time.

When not in use, remove the extender and store in the vehicle for future use.

⚠ CAUTION

- **After inserting the tab, make sure the tab and buckle are locked and that the lap and shoulder portions of the belt and the seat belt extender are not twisted.**
- **Do not insert coins, clips, etc. in the buckle as this may prevent you from properly latching the tab and buckle.**
- **If the seat belt does not function normally, immediately contact your Toyota dealer. Do not use the seat until the seat belt is fixed, because it cannot protect an adult occupant or your child from death or serious injury.**

—Seat belt pretensioners

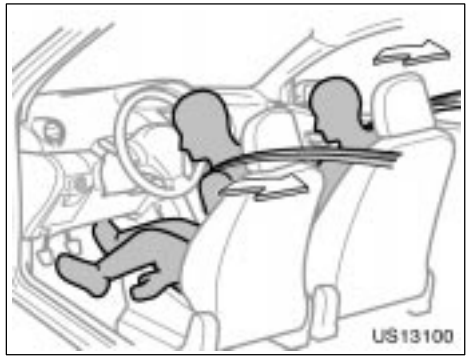

The driver and front passenger seat belt pretensioners are designed to be activated in response to a severe frontal impact.

When the sensor detects a severe frontal impact, the front seat belts are quickly drawn back by the retractors so that the belts snugly restrain the occupants.

The front passenger's seat belt pretensioner will not activate if no passenger is detected in the front passenger seat by the front passenger occupant classification system. However, the front passenger's seat belt pretensioner may activate if luggage is put on the seat, or the seat belt is buckled up regardless of the presence of an occupant in the seat. (As for the front passenger occupant classification system, see "Front passenger occupant classification system" on page 63 in this Section.)

The seat belt pretensioners and SRS airbags may not operate together in all collisions.

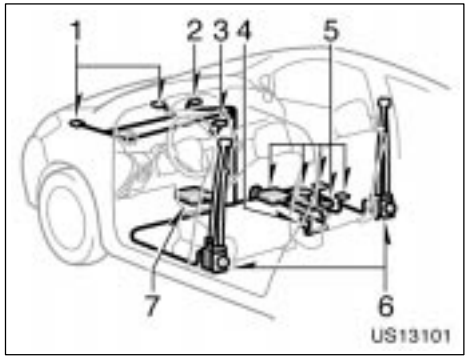

The seat belt pretensioner system consists mainly of the following components and their locations are shown in the illustration.

1. Front airbag sensors
2. SRS warning light
3. "AIRBAG ON" and "AIRBAG OFF" indicator lights
4. Front passenger's seat belt buckle switch
5. Front passenger occupant classification system (ECU and sensors)
6. Seat belt pretensioner assemblies
7. Airbag sensor assembly

The seat belt pretensioners are controlled by the airbag sensor assembly. The airbag sensor assembly consists of a safing sensor and airbag sensor.

When the seat belt pretensioners are activated, an operating noise may be heard and a small amount of non−toxic gas may be released. This does not indicate that a fire is occurring. This gas is normally harmless.

Once the seat belt pretensioners have been activated, the seat belt retractors remain locked.

⚠ CAUTION

Do not modify, remove, strike or open the seat belt pretensioner assemblies, airbag sensor or surrounding area or wiring. Failure to follow these instruction may prevent the seat belt pretensioners from activating correctly, cause sudden operation of the system or disable the system, which could result in death or serious injury. Consult your Toyota dealer about any repair and modification.

NOTICE

Do not perform any of the following changes without consulting your Toyota dealer. Such changes can interfere with proper operation of the seat belt pretensioners in some cases.

- ***Installation of electronic devices such as a mobile two−way radio, cassette tape player or compact disc player***
- ***Repairs on or near the front seat belt retractor assemblies***
- ***Modification of the suspension system***
- ***Modification of the front end structure***
- ***Attachment of a grille guard (bull bar, kangaroo bar, etc.), snowplow, winches or any other equipment to the front end***
- ***Repairs made on or near the front fenders, front end structure or console***



This indicator comes on when the ignition key is turned to the “ON” position. It goes off after about 6 seconds. This means the seat belt pretensioners are operating properly.

This warning light system monitors the airbag sensor assembly, front airbag sensors, side and curtain shield airbag sensors, curtain shield airbag sensors, driver's seat position sensor, driver's seat belt buckle switch, front passenger occupant classification system, "AIRBAG ON" indicator light, "AIRBAG OFF" indicator light, front passenger's seat belt buckle switch, seat belt pretensioner assemblies, inflators, interconnecting wiring and power sources. (For details, see "Service reminder indicators and warning buzzers" on page 105 in Section 1−6.)

If any of the following conditions occurs, this indicates a malfunction of the airbags or seat belt pretensioners. Contact your Toyota dealer as soon as possible.

- The light does not come on when the ignition key is turned to the "ON" position or remains on for more than 6 seconds or flashes.
- The light comes on or starts flashing while driving.
- If any seat belt does not retract or can not be pulled out due to a malfunction or activation of the relevant seat belt pretensioner.
- The seat belt pretensioner assembly or surrounding area has been damaged.

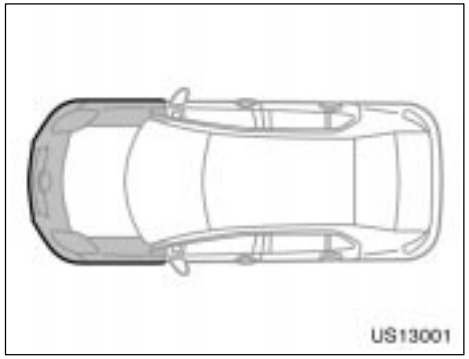

In the following cases, contact your Toyota dealer as soon as possible:

- The front part of the vehicle (shaded in the illustration) was involved in an accident that was not severe enough to cause the seat belt pretensioners to operate.
- Either seat belt pretensioner assembly or surrounding area is scratched, cracked, or otherwise damaged.

SRS driver and front passenger airbags

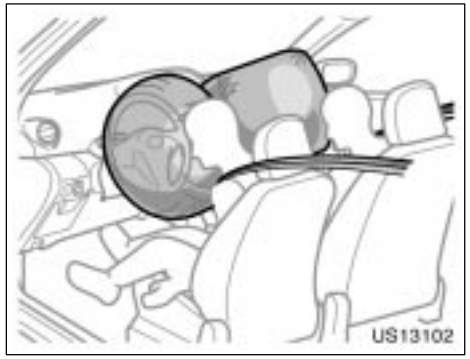

The SRS (Supplemental Restraint System) airbags are designed to provide further protection for the driver and front passenger in addition to the primary safety protection provided by the seat belts.

Your vehicle is equipped with “ADVANCED AIRBAGS” designed based on US motor vehicle safety standards (FMVSS208). The airbag system controls airbag deployment power for the driver and front passenger. The driver airbag system consists of the driver seat’s position sensor etc. The front passenger’s airbag system consists of the front passenger occupant classification sensor etc.

In response to a severe frontal impact, the SRS airbags work with the seat belts to help reduce injury by inflating. The SRS airbags help reduce injuries mainly to the driver’s or front passenger’s head or chest caused by hitting the vehicle interior.

The SRS front passenger airbag will not activate if there is no passenger sitting in the front passenger seat. However, the front passenger airbag may deploy if luggage is put in the seat, or the seat belt is buckled up, regardless of the presence of an occupant in the seat. (As for the front passenger occupant classification system, see “Front passenger occupant classification system” on page 63 in this Section.)

Always wear your seat belt properly.

⚠ CAUTION

- **The SRS front airbag system is designed only as a supplement to the primary protection of the driver and front passenger seat belt systems. The driver and front passenger can be killed or seriously injured by the inflating airbags if they do not wear the available seat belts properly. During sudden braking just before a collision, an unrestrained driver or front passenger can move forward into direct contact with or close proximity to the airbag which may then deploy during the collision. To ensure maximum protection in an accident, the driver and all passengers in the vehicle must wear their seat belts properly. Wearing a seat belt properly during an accident reduces the chances of death or serious injury or being thrown out of the vehicle. For instructions and precautions concerning the seat belt system, see “Seat belts” on page 38 in this Section.**

- **Improperly seated and/or restrained infants and children can be killed or seriously injured by the deploying airbags. An infant or child who is too small to use a seat belt should be properly secured using a child restraint system. Toyota strongly recommends that all infants and children be placed in the rear seat of the vehicle and properly restrained. The rear seat is the safest for infants and children. For instructions concerning the installation of a child restraint system, see "Child restraint" on page 67 in this Section.**

The SRS airbags are designed to deploy in severe (usually frontal) collisions where the magnitude and duration of the forward deceleration of the vehicle exceeds the designed threshold level.

The SRS airbags will deploy if the severity of the impact is above the designed threshold level, comparable to an approximate 25 km/h (15 mph) collision when the vehicle has the impact straight into a fixed barrier that does not move or deform.

However, this threshold velocity will be considerably higher if the vehicle strikes an object, such as a parked vehicle or sign pole, which can move or deform on impact, or if the vehicle is involved in an underride collision (e.g. a collision in which the front of the vehicle "underrides", or goes under, the bed of a truck, etc.).

It is possible that in some collisions where the forward deceleration of the vehicle is very close to the designed threshold level, the SRS airbags and the seat belt pretensioners may not activate together.

Always wear your seat belts properly.

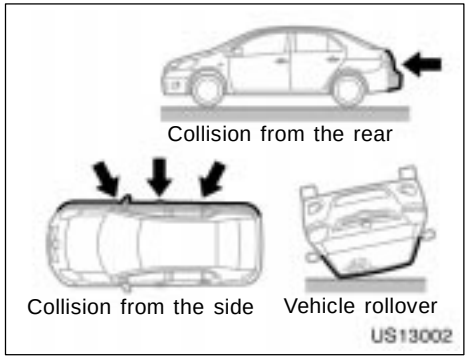

The SRS airbags are not generally designed to inflate if the vehicle is involved in a side or rear collision, if it rolls over, or if it is involved in a low–speed frontal collision. But, whenever a collision of any type causes sufficient forward deceleration of the vehicle, deployment of the SRS airbags may occur.

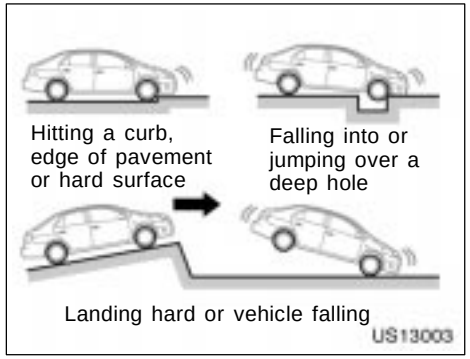

The SRS airbags may also deploy if a serious impact occurs to the underside of your vehicle. Some examples are shown in the illustration.

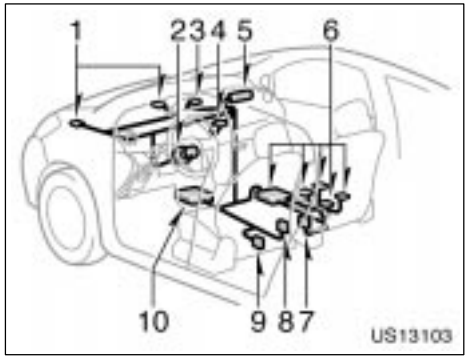

The SRS airbag system consists mainly of the following components, and their locations are shown in the illustration.

1. Front airbag sensors
2. Airbag module for driver (airbag and inflator)
3. SRS warning light
4. “AIRBAG ON” and “AIRBAG OFF” indicator lights
5. Airbag module for front passenger (airbag and inflator)
6. Front passenger occupant classification system (ECU and sensors)
7. Front passenger’s seat belt buckle switch
8. Driver’s seat belt buckle switch
9. Driver’s seat position sensor
10. Airbag sensor assembly

The airbag sensor assembly consists of a safing sensor and airbag sensor.

The front airbag sensors constantly monitor the forward deceleration of the vehicle. If an impact results in a forward deceleration beyond the designed threshold level, the system triggers the airbag inflators. At this time a chemical reaction in the inflators very quickly fills the airbags with non−toxic gas to help restrain the forward motion of the occupants. The airbags then quickly deflate, so that there is no obstruction of the driver’s vision should it be necessary to continue driving.

When the airbags inflate, they produce a loud noise and release some smoke and residue along with non−toxic gas. This does not indicate a fire. This smoke may remain inside the vehicle for some time, and may cause some minor irritation to the eyes, skin or breathing. Be sure to wash off any residue as soon as possible to prevent any potential skin irritation with soap and water. If you can safely exit from the vehicle, you should do so immediately.

Deployment of the airbags happens in a fraction of a second, so the airbags must inflate with considerable force. While the system is designed to reduce serious injuries, primarily to the head and chest, it may also cause other, less severe injuries to the face, chest, arms and hands. These are usually in the nature of minor burns or abrasions and swelling, but the force of a deploying airbag can cause more serious injuries, especially if an occupant's hands, arms, chest or head is in close proximity to the airbag module at the time of deployment. This is why it is important for the occupant to: avoid placing any object or part of the body between the occupant and the airbag module; sit straight and well back into the seat; wear the available seat belt properly; and sit as far as possible from the airbag module, while still maintaining control of the vehicle.

Parts of the airbag module (steering wheel hub, airbag cover and inflator) may be hot for several minutes after deployment, so do not touch! The airbags inflate only once. The windshield may be damaged by absorbing some of the force of the inflating airbag.

⚠ CAUTION

The driver or front passenger who is too close to the steering wheel or dashboard during airbag deployment can be killed or seriously injured. Toyota strongly recommends that:

- **The driver sit as far back as possible from the steering wheel while still maintaining control of the vehicle.**
- **The front passenger sit as far back as possible from the dashboard.**
- **All vehicle occupants be properly restrained using the available seat belts.**
- **If the seat belt extender has been connected to the driver's seat belt buckle without wearing the seat belt when using the extender in the driver's seat, the SRS driver's airbag system will judge that the driver wears the seat belt even if not wearing it. In this case, the driver's airbag may not activate correctly, causing death or serious injury in the event of collision. Be sure to wear the seat belt with the seat belt extender.**

For instructions and precautions concerning the seating position, see "—Front seat precautions" on page 32 in this Section.



- **Do not sit on the edge of the seat or lean against the dashboard when the vehicle is in use, since the front passenger airbag could inflate with considerable speed and force. Anyone who is up against, or very close to, an airbag when it inflates, can be killed or seriously injured. Sit up straight and well back in the seat, and always use your seat belt properly.**



- **Toyota strongly recommends that all infants and children be placed in the rear seat of the vehicle and be properly restrained.**
- **Do not hold a child on your lap or in your arms. Use a child restraint system in the rear seat. For instructions concerning the installation of a child restraint system, see “Child restraint” on page 67 in this Section.**

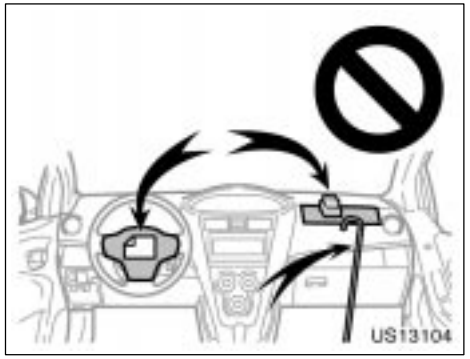

- **Do not put anything or any part of your body on or in front of the dashboard or steering wheel pad that houses the front airbag system. They might restrict inflation or cause death or serious injury as they are projected rearward by the force of deploying airbags. Likewise, the driver and front passenger should not hold objects in their arms or on their knees.**

- **Do not modify or remove any wiring. Do not modify, remove, strike or open any components such as the steering wheel pad, steering wheel, column cover, dashboard near the front passenger airbag, front passenger airbag cover, front passenger airbag or airbag sensor assembly. Doing so may prevent the front airbag system from activating correctly, cause sudden activation of the system or disable the system, which could result in death or serious injury.**

Failure to follow these instructions can result in death or serious injury. Consult your Toyota dealer about any repair and modification.

If you wish to modify your vehicle for a person with physical disability, consult your Toyota dealer. If may dangerously interfere with the SRS front airbags operation.

NOTICE

Do not perform any of the following changes without consulting your Toyota dealer. Such changes can interfere with proper operation of the SRS airbag system in some cases.

- ***Installation of electronic devices such as a mobile two−way radio, cassette tape player or compact disc player***
- ***Modification of the suspension system***
- ***Modification of the front end structure***
- ***Attachment of a grille guard (bull bar, kangaroo bar, etc.), snowplow, winches or any other equipment to the front end***
- ***Repairs made on or near the front fenders, front end structure, console, steering column, steering wheel or dashboard near the front passenger airbag***



This indicator comes on when the ignition key is turned to the “ON” position. It goes off after about 6 seconds. This means the SRS airbags are operating properly.

This warning light system monitors the airbag sensor assembly, front airbag sensors, side and curtain shield airbag sensors, curtain shield airbag sensors, driver's seat position sensor, driver's seat belt buckle switch, front passenger occupant classification system, "AIRBAG ON" indicator light, "AIRBAG OFF" indicator light, front passenger's seat belt buckle switch, seat belt pretensioner assemblies, inflators, interconnecting wiring and power sources. (For details, see "Service reminder indicators and warning buzzers" on page 105 in Section 1−6.)

If any of the following conditions occurs, this indicates a malfunction of the airbags or seat belt pretensioners. Contact your Toyota dealer as soon as possible.

- The light does not come on when the ignition key is turned to the "ON" position or remains on for more than 6 seconds or flashes.
- The light comes on or starts flashing while driving.

The SRS warning light and "AIRBAG OFF" indicator light will come on if there is a malfunction in the front passenger occupant classification system.

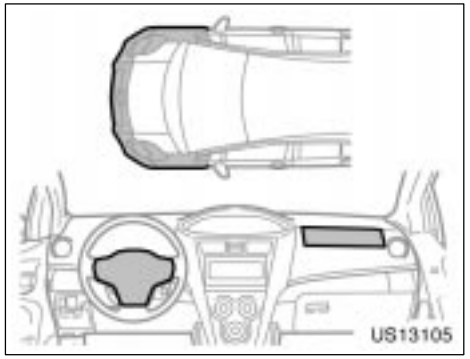

In the following cases, contact your Toyota dealer as soon as possible:

- The SRS airbags have been inflated.
- The front part of the vehicle (shaded in the illustration) was involved in an accident that was not severe enough to cause the SRS airbags to inflate.
- The pad part of the steering wheel or front passenger airbag cover (shaded in the illustration) is scratched, cracked, or otherwise damaged.

NOTICE

Do not disconnect the battery cables before contacting your Toyota dealer.

SRS side airbags and curtain shield airbags

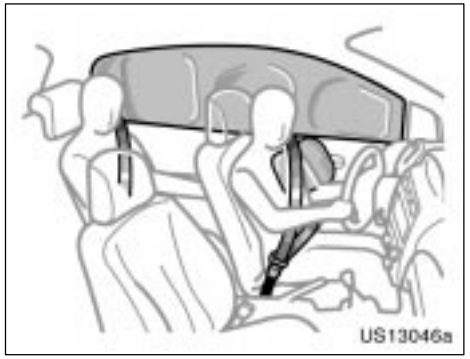

The SRS (Supplemental Restraint System) side airbags and curtain shield airbags are designed to provide further protection for the driver, front passenger and rear outside passengers in addition to the primary safety protection provided by the seat belts.

In response to a severe side impact, the SRS side airbags and curtain shield airbags work with the seat belts to help reduce injury by inflating. The SRS side airbags help reduce injuries mainly to the driver's or front passenger's chest and the SRS curtain shield airbags help reduce injuries mainly to the driver's front passenger's or rear outside passenger's head.

The SRS side airbag on the passenger seat will not activate if there is no passenger sitting in the front passenger seat. However, the side airbag on the passenger seat may deploy if luggage is put in the seat, or the seat belt is buckled up regardless of the presence of the occupant in the seat. (As for the front passenger occupant classification system, see "Front passenger occupant classification system" on page 63 in this Section.)

The SRS curtain shield airbag on the passenger side are activated even with no passenger in the front seat or rear outside seat.

The SRS curtain shield airbags may activate even when the side airbags are not activated.

Always wear your seat belt properly.

⚠ CAUTION

- **The SRS side airbag and curtain shield airbag system is designed only as a supplement to the primary protection of the driver, front passenger and rear outside passenger seat belt systems. To ensure maximum protection in an accident, the driver and all passengers in the vehicle must wear their seat belts properly. Wearing a seat belt properly during an accident reduces the chances of death or serious injury or being thrown out of the vehicle. For instructions and precautions concerning the seat belt system, see "Seat belts" on page 38 in this Section.**
- **Do not allow anyone to lean his/her head or any part of his/her body against the door or the area of the seat, front pillar, rear pillar or roof side rail from which the SRS side airbag and curtain shield airbag deploy even if he/she is a child seated in the child restraint system. It is dangerous if the SRS side airbag and curtain shield airbag inflate, and the impact of the deploying airbag could cause death or serious injury to the occupant.**
- **Improperly seated and/or restrained infants and children can be killed or seriously injured by the deploying airbags. An infant or child who is too small to use a seat belt should be properly secured using a child restraint system. Toyota strongly recommends that all infants and children be placed in the rear seats of the vehicle and properly restrained. The rear seats are the safest for infants and children. For instructions concerning the installation of a child restraint system, see "Child restraint" on page 67 in this Section.**

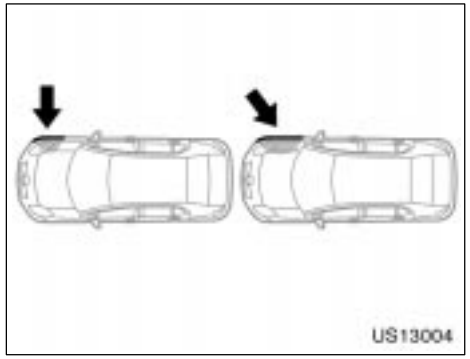

The SRS side airbag and curtain shield airbag system may not activate if the vehicle is subjected to a collision from the side at certain angles, or a collision to the side of the vehicle body other than the passenger compartment as shown in the illustration.

The SRS side airbags and curtain shield airbags are designed to inflate when the passenger compartment area suffers a severe impact from the side.

Always wear your seat belt properly.

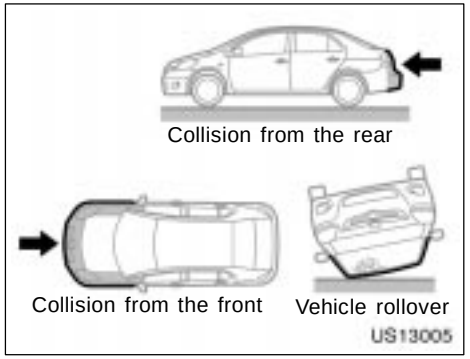

The SRS side airbags and curtain shield airbags are not generally designed to inflate if the vehicle is involved in a front or rear collision, if it rolls over, or if it is involved in a low−speed side collision.

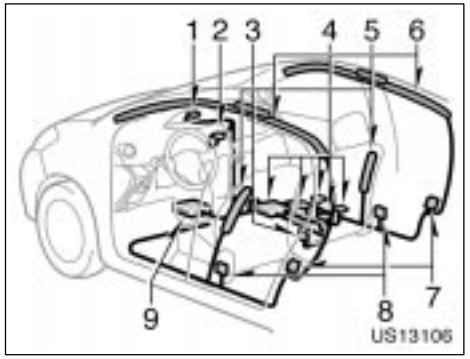

The SRS side airbag and curtain shield airbag system consists mainly of the following components, and their locations are shown in the illustration.

1. SRS warning light
2. “AIRBAG ON” and “AIRBAG OFF” indicator lights
3. Front passenger’s seat belt buckle switch
4. Front passenger occupant classification system (ECU and sensors)
5. Side airbag modules (airbag and inflator)
6. Curtain shield airbag modules (airbag and inflator)

7. Curtain shield airbag sensors
8. Side and curtain shield airbag sensors
9. Airbag sensor assembly

The SRS side airbag and curtain shield airbag system is controlled by the airbag sensor assembly. The airbag sensor assembly consists of a safing sensor and airbag sensor.

In a severe side impact, the side and curtain shield airbag sensor and/or the curtain shield airbag sensor trigger(s) the side airbag inflators and/or the curtain shield airbag inflators. At this time a chemical reaction in the inflators quickly fills the airbags with non−toxic gas to help restrain the lateral motion of the occupants.

When the airbags inflate, they produce a fairly loud noise and release some smoke and residue along with non−toxic gas. This does not indicate a fire. This smoke may remain inside the vehicle for some time, and may cause some minor irritation to the eyes, skin or breathing. Be sure to wash off any residue as soon as possible to prevent any potential skin irritation with soap and water. If you can safely exit from the vehicle, you should do so immediately.

Deployment of the airbags happen in a fraction of a second, so the airbags must inflate with considerable force. While the system is designed to reduce serious injuries, it may also cause minor burns or abrasions and swelling.

Front seats as well as parts of the front and rear pillars, and roof side rail may be hot for several minutes, but the airbags themselves will not be hot. The airbags are designed to inflate only once.

⚠ CAUTION

SRS side airbags and curtain shield airbags inflate with considerable force. To reduce the possibility of death or serious injury when they inflate, the driver, front passenger and rear outside passengers must:

- **Wear their seat belts properly.**
- **Remain properly seated with their backs upright and against the seats at all times.**



- **Do not allow anyone to lean against the door when the vehicle is in use, since the side airbag and curtain shield airbag could inflate with considerable speed and force. Otherwise, he/she may be killed or seriously injured. Special care should be taken especially when you have a small child in the vehicle.**
- **Sit up straight and well back in the seat, distributing your weight evenly in the seat. Do not apply excessive weight to the outer side of the seats with a side airbag, and to the front pillar, rear pillar and roof side rail with a curtain shield airbag.**



- Do not allow anyone to get his/her head closer to the area where the side airbag and curtain shield airbag inflate, since these airbags could inflate with considerable speed and force. Otherwise, he/she may be killed or seriously injured. Special care should be taken especially when you have a small child in the vehicle.



- Do not allow anyone to kneel on the passenger seat, facing the passenger's side door, since the side airbag and curtain shield airbag could inflate with considerable speed and force. Otherwise, he/she may be killed or seriously injured. Special care should be taken especially when you have a small child in the vehicle.

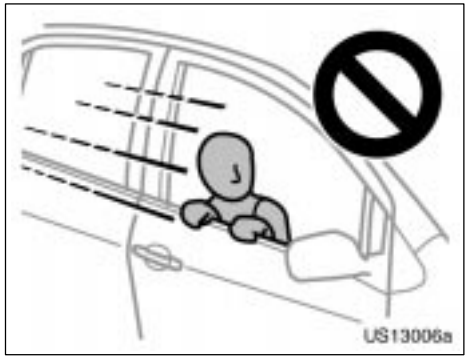

- Do not allow anyone to get his/her head or hands out of windows since the curtain shield airbags could inflate with considerable speed and force. Otherwise, he/she may be killed or seriously injured. Special care should be taken especially when you have a small child in the vehicle.

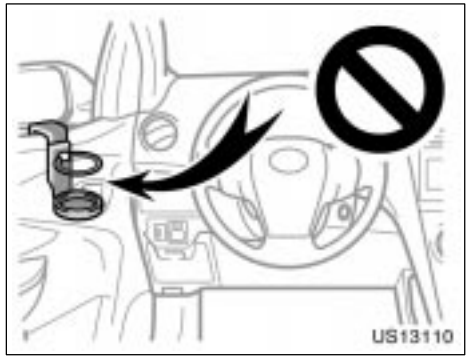

- Do not attach a cup holder or any other device or object on or around the door. When the side airbag inflates, the cup holder or any other device or object will be thrown with great force or the side airbag may not activate correctly, resulting in death or serious injury. Likewise, the driver and front passenger should not hold objects in their arms or on their knees.

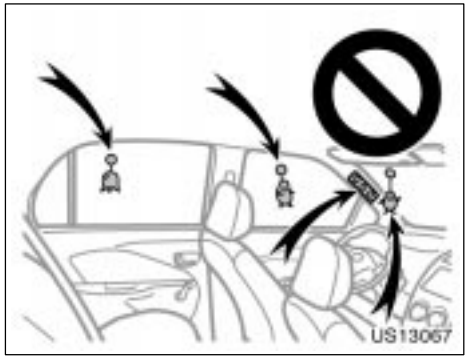

- Do not attach a microphone or any other device or object around the area where the curtain shield airbag activates such as on the windshield glass, side door glass, front and rear pillars, roof side rail and assist grips. When the curtain shield airbag inflates, the microphone or other device or object will be thrown away with great force or the curtain shield airbag may not activate correctly, resulting in death or serious injury.

- Do not hook a hanger, heavy or sharp pointed objects on the coat hook. If the curtain shield airbag inflates, those items will be thrown away with great force or the curtain shield airbag may not activate correctly, resulting in death or serious injury. When you hang clothes, hang them on the coat hook directly.
- Do not use seat accessories which cover the parts where the side airbags inflate. Such accessories may prevent the side airbags from activating correctly, causing death or serious injury.
- Do not modify or replace the seats or upholstery or the seats with side airbags. Such changes may prevent the side airbag system from activating correctly, disable the system or cause the side airbags to inflate accidentally, resulting in death or serious injury.

- **Do not disassemble or repair the front and rear pillars and roof side rail containing the curtain shield airbags. Such changes may disable the system or cause the curtain shield airbags to inflate accidentally, resulting in death or serious injury.**

Failure to follow these instructions can result in death or serious injury. Consult your Toyota dealer about any repair and modification.

If you wish to modify your vehicle for a person with physical disability, consult your Toyota dealer. It may dangerously interfere with the SRS front airbags operation.

NOTICE

Do not perform any of the following changes without consulting your Toyota dealer. Such changes can interfere with proper operation of the SRS side airbag and curtain shield airbag system in some cases.

- ***Installation of electronic devices such as a mobile two−way radio, cassette tape player or compact disc player***
- ***Modification of the suspension system***
- ***Modification of the side structure of the passenger compartment***
- ***Repairs made on or near the console or front seat***



This indicator comes on when the ignition key is turned to the “ON” position. It goes off after about 6 seconds. This means the SRS side airbags and curtain shield airbags are operating properly.

This warning light system monitors the airbag sensor assembly, front airbag sensors, side and curtain shield airbag sensors, curtain shield airbag sensors, driver's seat position sensor, driver's seat belt buckle switch, front passenger occupant classification system, "AIRBAG ON" indicator light, "AIRBAG OFF" indicator light, front passenger's seat belt buckle switch, seat belt pretensioner assemblies, inflators, interconnecting wiring and power sources. (For details, see "Service reminder indicators and warning buzzers" on page 105 in Section 1−6.)

If either of the following conditions occurs, this indicates a malfunction of the airbags or seat belt pretensioners. Contact your Toyota dealer as soon as possible.

- The light does not come on when the ignition key is turned to the "ON" position or remains on for more than 6 seconds or flashes.
- The light comes on or starts flashing while driving.

The SRS warning light and "AIRBAG OFF" indicator light will come on if there is a malfunction in the front passenger occupant classification system.

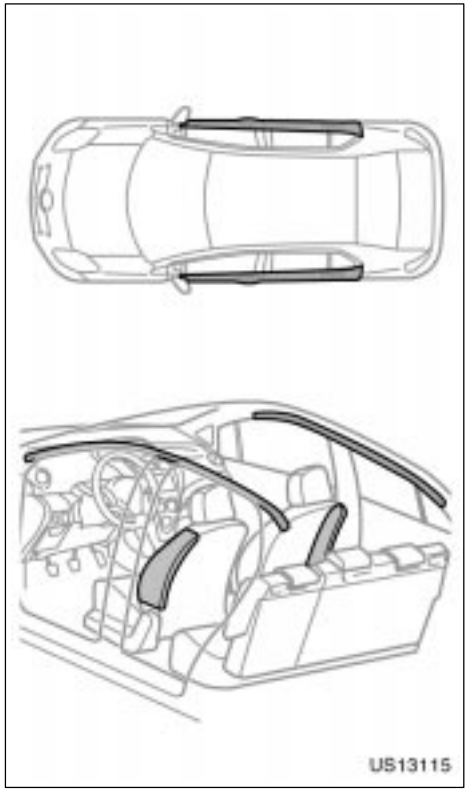

In the following cases, contact your Toyota dealer as soon as possible:

- Any of the SRS side airbags and curtain shield airbags have been inflated.
- The portion of the doors (shaded in the illustration) was involved in an accident that was not severe enough to cause the SRS side airbags and curtain shield airbags to inflate.
- The surface of the seats with the side airbag (shaded in the illustration) is scratched, cracked, or otherwise damaged.
- The portion of the front pillars, rear pillars or roof side rail garnishes (padding) containing the curtain shield airbags inside (shaded in the illustration) is scratched, cracked, or otherwise damaged.

NOTICE

Do not disconnect the battery cables before contacting your Toyota dealer.

Front passenger occupant classification system

Your vehicle is equipped with a front passenger occupant classification system. This system detects the conditions 1—4 (Shown in the table on page 65). Based on these conditions, the systems below are activated or deactivated:

- Front passenger airbag
- Side airbag on the front passenger seat
- Front passenger's seat belt pretensioner

The system monitors the weight and load on the front passenger seat, and the seat belt buckle switch to determine conditions 1—4.

In order to ensure the system detects the conditions correctly:

- Do not place a heavy load on the front passenger seat.
- Do not attach a commercial seatback table or other heavy item to the back of the front passenger seat.
- Do not apply pressure to the front passenger seat by resting hands or legs on the seatback.

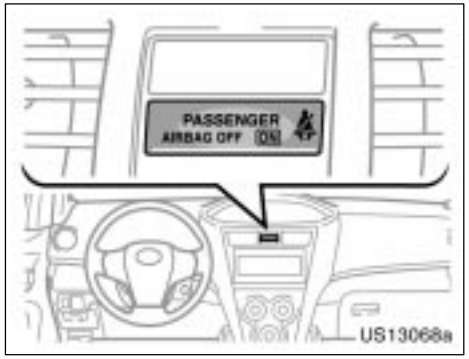

The "AIRBAG ON" and "AIRBAG OFF" indicator lights indicate the actuation of the front passenger airbag, side airbag on the front passenger seat and front passenger's seat belt pretensioner.

The "AIRBAG ON" and "AIRBAG OFF" indicator lights will be illuminated initially when the ignition key is turned to the "ON" position. After about 4 seconds, they will go off. After that, the front passenger occupant classification system operates and judges which indicator light be illuminated.

The "AIRBAG OFF" indicator light will be illuminated when the ignition switch is in the "ON" position with the condition 2 in the table shown below.

If the front passenger occupant classification system determines that person of adult size sits in the front passenger seat but the "AIRBAG OFF" indicator light is illuminated, one of the following is likely to have occurred:

- A rear passenger lifts the front passenger seat cushion with their legs.
- Objects are placed under the front passenger seat.
- The front passenger seatback is in contact with the rear seat.

To ensure the system correctly detects the presence or absence of a person of adult size sitting in the front passenger seat, make sure that none of the above occur.

Make sure that the “AIRBAG ON” indicator light is illuminated when a person of adult size is seated in the front passenger seat. If the “AIRBAG OFF” indicator light is illuminated, ask the passenger to sit up straight, well back in the seat, and with the seat belt worn correctly. If the “AIRBAG OFF” indicator light remains illuminated, either ask the passenger to move to the rear seat, or if that is not possible, move the front passenger seat fully rearward.

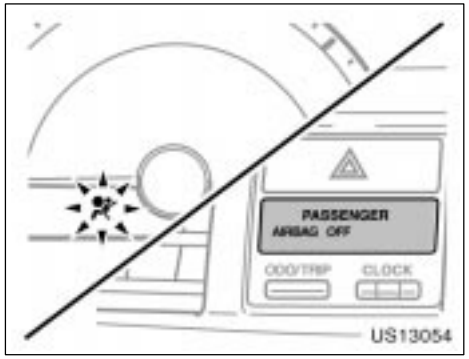

With tachometer

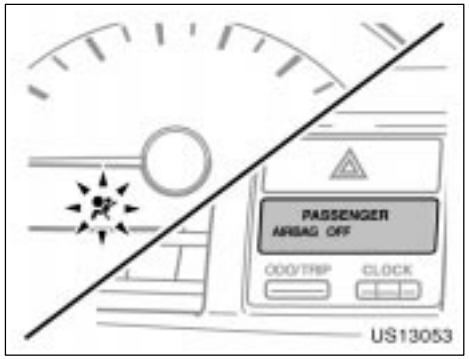

Without tachometer

The SRS warning light and “AIRBAG OFF” indicator light will come on if there is a malfunction in the front passenger occupant classification system. Contact your Toyota dealer as soon as possible.

Condition and operation in the front passenger classification system

<table>
<tr><td rowspan="2">Condition detected by the front passenger occupant classification system</td><td colspan="3">Indicator/warning light</td><td colspan="4">Devices</td></tr>
<tr><td>“AIRBAG ON” and “AIRBAG OFF” indicator lights</td><td>SRS warning light</td><td>Front passenger’s seat belt reminder light</td><td>Front passenger airbag</td><td>Side airbag on the front passenger seat</td><td>Curtain shield airbag in the front passenger side</td><td>Front passenger’s seat belt pretensioner</td></tr>
<tr><td>1. Adult*1</td><td>“AIRBAG ON”</td><td>Off</td><td>Flashing*4</td><td colspan="4">Activated</td></tr>
<tr><td>2. Child*2 or child restraint system*3</td><td>“AIRBAG OFF”</td><td>Off</td><td>Flashing*4</td><td colspan="2">Deactivated</td><td rowspan="3">Activated</td><td>Activated</td></tr>
<tr><td>3. Unoccupied</td><td>Not illuminated</td><td>Off</td><td>Off</td><td colspan="2">Deactivated</td><td>Deactivated</td></tr>
<tr><td>4. There is a malfunction in the system</td><td>“AIRBAG OFF”</td><td>On</td><td>Off</td><td colspan="2">Deactivated</td><td>Activated</td></tr>
</table>

*1: The system judges a person of adult size as an adult. When a smaller adult sits in the front passenger seat, the system may recognize him/her as a child depending on his/her physique and posture.

*2: When a larger child who has outgrown a child restraint system sits in the front passenger seat, the system may recognize him/her as an adult depending on his/her physique or posture.

*3: Never install a rear−facing child restraint system on the front passenger seat. A forward−facing child restraint system should only be installed on the front passenger seat when it is unavoidable. (See “Child restraint” on page 67 in this Section as for installing the child restraint system.)

*4: In the event that the front passenger does not wear a seat belt.

⚠ CAUTION

To avoid potential death or serious injury when the front passenger occupant classification system does not detect the conditions correctly, observe the following.

- **Do not recline the front passenger seat seatback so that it interferes with a rear seat as it may cause the "AIRBAG OFF" indicator light be illuminated. If the seatback interferes with the rear seat, return the seatback to a position where it does not interfere with the rear seat.**

  Keep the front passenger seatback as upright as possible when the vehicle is moving. Reclining the seatback excessively may lessen the effectiveness of the seat belt system.

- **Make sure the "AIRBAG ON" indicator light is illuminated when using the seat belt extender for the front passenger seat. If the "AIRBAG OFF" indicator light is illuminated, disconnect the extender tongue from the seat belt buckle, then reconnect the seat belt. Reconnect the seat belt extender after making sure the "AIRBAG ON" indicator light is illuminated. If you use the seat belt extender while the "AIRBAG OFF" indicator light is illuminated, the front passenger airbag and side airbag on the front passenger side may not activate correctly, which could cause death or serious injury in the event of collision.**

- **If an adult sits in the front passenger seat, the "AIRBAG ON" indicator light should be illuminated. If the "AIRBAG OFF" indicator light is illuminated, ask the passenger to sit up straight, well back in the seat, feet on the floor, and with the seat belt worn correctly. If the "AIRBAG OFF" indicator light still remains illuminated, either ask the passenger to move to the rear seat, or if that is not possible, move the front passenger seat fully rearward.**
- **Wear the seat belt properly.**
- **Make sure the front passenger's seat belt tab has not been left inserted into the buckle before someone sits in the front passenger seat.**
- **Do not place a heavy load on the front passenger seat.**
- **Do not apply pressure to the front passenger seat by resting hands or legs on the seatback.**

- **Do not let a rear passenger lift the front passenger seat with their feet or press on the seatback with their legs.**
- **Do not put objects under the front passenger seat.**
- **Do not attach a commercial seatback table or other heavy item to the back of the front passenger seat.**
- **Child restraint systems installed on the rear seat should not contact the front seatbacks.**
- **When it is unavoidable to install the forward−facing child restraint system on the front passenger seat, install the child restraint system on the front passenger seat in the proper order. (As for the installation order, see "—Installation with seat belt" on page 70 in this Section.)**
- **Do not modify or remove the front seats.**

- **Do not kick the front passenger seat or subject it to severe impact. Otherwise, the SRS warning light may come on to indicate a malfunction of the detection system. In this case, contact your Toyota dealer immediately.**

The "AIRBAG ON" indicator light may be illuminated (the front passenger airbag and side airbag on the front passenger seat may deploy) even if observing the above cautions, when a child sits in, or a forward−facing child restraint system is installed on the front passenger seat. Refer to all the cautions in this Section and "Child restraint" on page 67 in this Section.

Child restraint— —Child restraint precautions

Toyota strongly urges the use of appropriate child restraint systems for children.

The laws of all 50 states in the U.S.A. and Canada now require the use of a child restraint system.

Your vehicle conforms to SAE J1819.

If a child is too large for a child restraint system, the child should sit in the rear seat and must be restrained using the vehicle's seat belt. See "Seat belts" on page 38 in this Section for details.

⚠ CAUTION

- **For effective protection in automobile accidents and sudden stops, a child must be properly restrained, using a seat belt or child restraint system depending on the age and size of the child. Holding a child in your arms is not a substitute for a child restraint system. In an accident, the child can be crushed against the windshield, or between you and the vehicle's interior.**

- Toyota strongly urges use of a proper child restraint system which conforms to the size of the child, installed on the rear seat. According to accident statistics, the child is safer when properly restrained in the rear seat than in the front seat.
- Never install a rear−facing child restraint system on the front passenger seat even if the “AIRBAG OFF” indicator light is illuminated. In the event of an accident, the force of the rapid inflation of the front passenger airbag can cause death or serious injury to the child if the rear−facing child restraint system is installed on the front passenger seat.

- A forward−facing child restraint system should be allowed to be installed on the front passenger seat only when it is unavoidable. Always move the seat as far back as possible even if the “AIRBAG OFF” indicator light is illuminated, because the front passenger airbag could inflate with considerable speed and force. Otherwise, the child may be killed or seriously injured.
- On vehicles with side airbags and curtain shield airbags, do not allow the child to lean his/her head or any part of his/her body against the door or the area of the seat, front or rear pillar or roof side rail from which the side airbags or curtain shield airbags deploy even if the child is seated in the child restraint system. It is dangerous if the side airbag and curtain shield airbag inflate, and the impact could cause death or serious injury to the child.

- Do not use the seat belt extender when installing a child restraint system on the front or rear passenger seat. If installing a child restraint system with the seat belt extender connected to the seat belt, the seat belt will not securely hold the child restraint system, which could cause death or serious injury to the child or other passengers in the event of collision.
- Make sure you have complied with all installation instructions provided by the child restraint manufacturer and that the system is properly secured. If it is not secured properly, it may cause death or serious injury to the child in the event of a sudden stop or accident.

—Child restraint system

A child restraint system for a small child or baby must itself be properly restrained on the seat with the lap portion of the lap/shoulder belt. You must carefully consult the manufacturer's instructions which accompany the child restraint system.

To provide proper restraint, use a child restraint system following the manufacturer's instructions about the appropriate age and size of the child for the child restraint system.

Install the child restraint system correctly following the instructions provided by its manufacturer. General directions are also provided under the following illustrations.

The child restraint system should be installed on the rear seat. According to accident statistics, the child is safer when properly restrained in the rear seat than in the front seat.

When not using the child restraint system, keep it secured with the seat belt or place it somewhere other than the passenger compartment. This will prevent it from injuring passengers in the event of a sudden stop or accident.

—Types of child restraint system

Child restraint systems are classified into the following 3 types depending on the child's age and size.

(A) Infant seat

(B) Convertible seat

(C) Booster seat

Install the child restraint system following the instructions provided by its manufacturer.

Your vehicle has anchor brackets for securing the top strap of a child restraint system.

For instructions about how to use the anchor bracket, see "—Using a top strap" on page 82 in this Section.

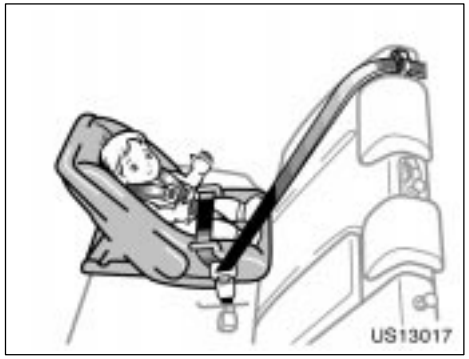

(A) Infant seat



(B) Convertible seat



(C) Booster seat

—Installation with seat belt

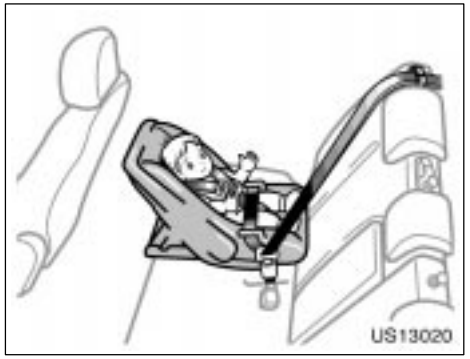

(A) INFANT SEAT INSTALLATION

An infant seat must be used in rear−facing position only.

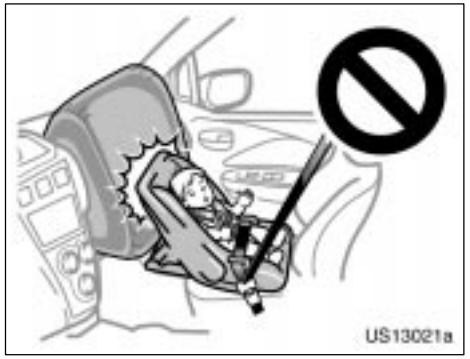

CAUTION

- Never install a rear−facing child restraint system on the front passenger seat even if the “AIRBAG OFF” indicator light is illuminated. In the event of an accident, the force of the rapid inflation of the front passenger airbag can cause death or serious injury to the child if the rear−facing child restraint system is installed on the front passenger seat.



- **Do not install a child restraint system on the rear seat if it interferes with the lock mechanism of the front seats. Otherwise, the child or front seat occupant(s) may be killed or seriously injured in case of sudden braking or a collision.**
- **If the driver's seat position does not allow sufficient space for safe installation, install the child restraint system on the rear right seat.**

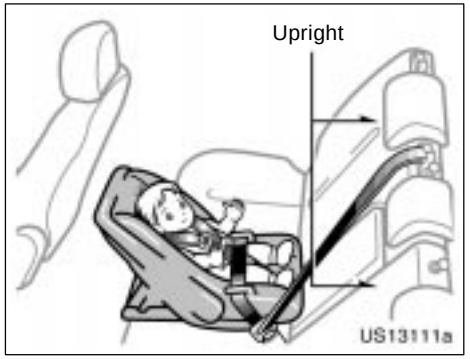

- **Split seat: When installing a child restraint system in the rear seat center position, return both the left and right seatbacks to the upright position. Otherwise, the child restraint system cannot be securely restrained and this may cause death or serious injuries in a collision.**

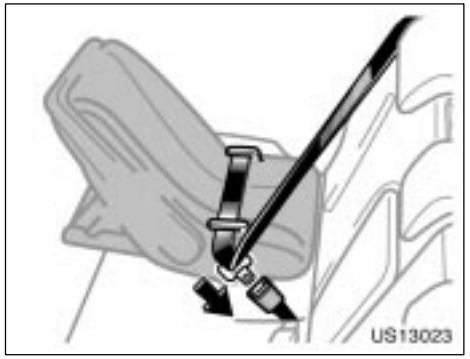

1. Run the lap and shoulder belt through or around the infant seat following the instructions provided by its manufacturer and insert the tab into the buckle taking care not to twist the belt. Keep the lap portion of the belt tight.

⚠ CAUTION

- **After inserting the tab, make sure the tab and buckle are locked and that the lap and shoulder portions of the belt are not twisted.**
- **Do not insert coins, clips, etc. in the buckle as this may prevent your child from properly latching the tab and buckle.**
- **If the seat belt does not function normally, it cannot protect your child from death or serious injury. Contact your Toyota dealer immediately. Do not install the child restraint system on the seat until the seat belt is fixed.**

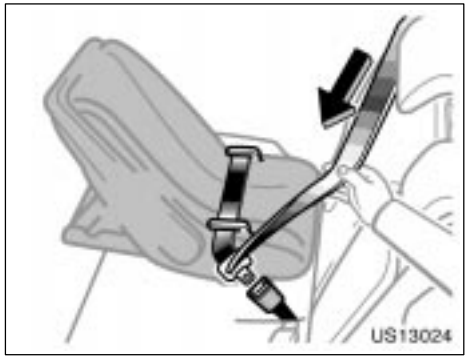

2. Fully extend the shoulder belt to put it in the lock mode. When the belt is then retracted even slightly, it cannot be extended.

To hold the infant seat securely, make sure the belt is in the lock mode before letting the belt retract.

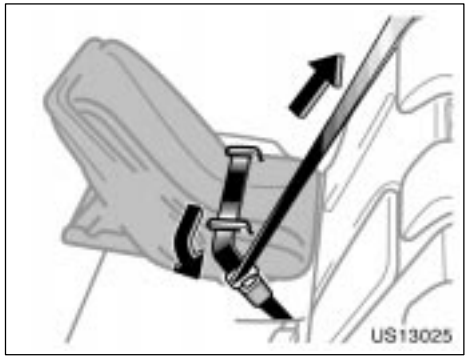

3. While pressing the infant seat firmly against the seat cushion and seatback, let the shoulder belt retract as far as it will go to hold the infant seat securely.

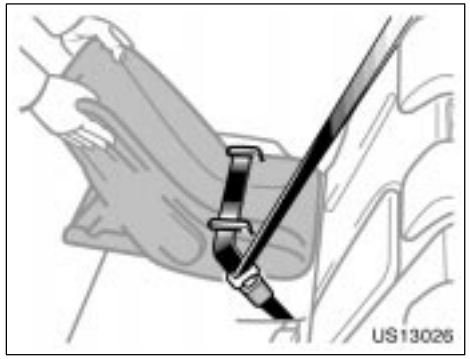

⚠ CAUTION

Push and pull the child restraint system in different directions to be sure it is secure. Follow all the installation instructions provided by its manufacturer.

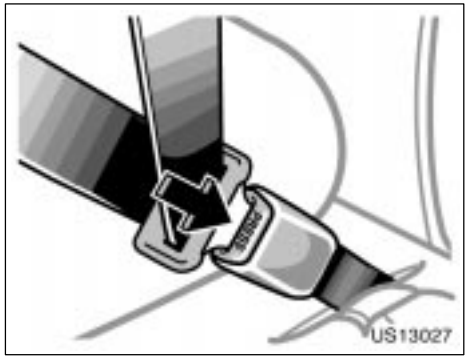

4. To remove the infant seat, press the buckle release button and allow the belt to retract completely. The belt will move freely again and be ready to work for an adult or older child passenger.



(B) CONVERTIBLE SEAT INSTALLATION

A convertible seat must be used in forward−facing or rear−facing position depending on the age and size of the child. Remove the head restraint before installing the convertible seat in a forward−facing position on the rear seat. When installing, follow the manufacturer's instructions about the applicable age and size of the child as well as directions for installing the child restraint system.

Install the child restraint system on the front passenger seat only when it is unavoidable. Your vehicle is equipped with a front passenger occupant classification system. In order to activate the occupant classification system correctly, install the forward−facing child restraint system on the front passenger seat in the following order:

1. Turn the ignition key to the “ON” position.
2. Move the front passenger seat to the rearward position.
3. If you must install the child restraint system on the front passenger seat, put the child restraint system putting your weight on the front passenger seat.
4. Insert the seat belt tab into the seat belt buckle.
5. Fully extend the shoulder belt to put it in the lock mode. When the belt is then retracted even slightly, it cannot be extended. To hold the seat securely, make sure the belt is in the lock mode before letting the belt retract.
6. While pressing the convertible seat firmly against the seat cushion and seatback, let the shoulder belt retract as far as it will go to hold the convertible seat securely.

⚠ CAUTION

Push and pull the child restraint system in different directions to be sure it is secure. Follow all the installation instructions provided by its manufacturer.

7. Put a child on the child restraint system and secure the child, complying with the instructions provided by the child restraint system manufacturer.

The “AIRBAG OFF” indicator light should be illuminated when the ignition key is in the “ON” position and the child is in the child restraint system after following these procedures. The “AIRBAG OFF” indicator light indicates the SRS front passenger airbag and side airbag on the passenger side will not deploy. If the “AIRBAG ON” indicator light is illuminated, do the following procedure:

1. Turn the ignition off.
2. Remove the child restraint system.
3. When reinstalling a child restraint system, make sure the seatback does not press the child restraint system into the seat cushion. If this occurs, adjust the seatback angle slightly.
4. Then make sure the head restraint is not pressing the child restraint system into the seat cushion. If this occurs, raise the head restraint.
5. Turn the ignition on again.

The “AIRBAG OFF” indicator light should be illuminated. If the “AIRBAG ON” indicator light is illuminated when the ignition key is turned to the “ON” position, then the SRS front passenger airbag and side airbag on the passenger side may deploy in an accident. Do not drive the vehicle in this condition. Remove the child restraint system and contact your Toyota dealer.

⚠ CAUTION

- **Never install a rear−facing child restraint system on the front passenger seat. A forward−facing child restraint system should only be installed on the front passenger seat when unavoidable. If you must install the child restraint system on the front passenger seat, put the seat in its most rearward position, and install the forward−facing child restraint system in the proper order. Otherwise, the front passenger occupant classification system cannot detect the presence of the child restraint system and the front passenger airbag and side airbag on the front passenger seat could deploy.**

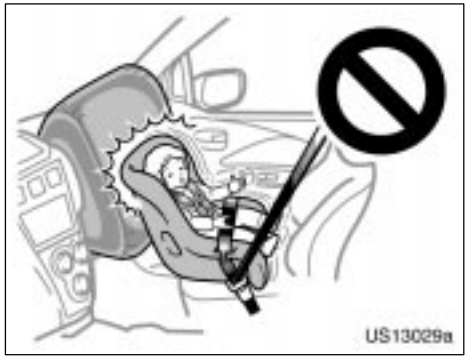

⚠ CAUTION

- **Never install a rear−facing child restraint system on the front passenger seat even if the “AIRBAG OFF” indicator light is illuminated. In the event of an accident, the force of the rapid inflation of the front passenger airbag can cause death or serious injury to the child if the rear−facing child restraint system is installed on the front passenger seat.**

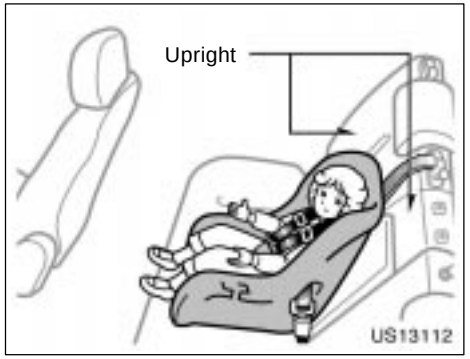

- **Split seat: When installing a child restraint system in the rear seat center position, return both the left and right seatbacks to the upright position. Otherwise, the child restraint system cannot be securely restrained and this may cause death or serious injuries in a collision.**

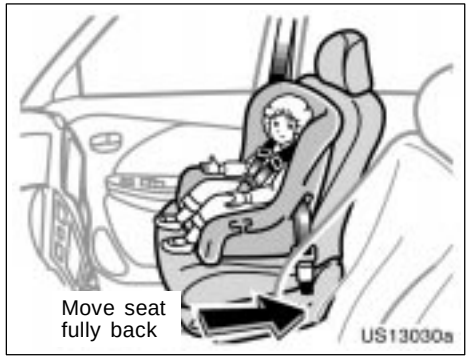

- **A forward−facing child restraint system should be allowed to be installed on the front passenger seat only when it is unavoidable. Always move the seat as far back as possible even if the "AIRBAG OFF" indicator light is illuminated, because the front passenger airbag could inflate with considerable speed and force. Otherwise, the child may be killed or seriously injured.**

- **On vehicles with side airbags and curtain shield airbags, do not allow the child to lean his/her head or any part of his/her body against the door or the area of the seat, front or rear pillar or roof side rail from which the side airbags or curtain shield airbags deploy even if the child is seated in the child restraint system. If is dangerous if the side airbag and curtain shield airbag inflate, and the impact could cause death or serious injury to the child.**



- **Do not install a child restraint system on the rear seat if it interferes with the lock mechanism of the front seats. Otherwise, the child or front seat occupant(s) may be killed or seriously injured in case of sudden braking or a collision.**
- **If the driver's seat position does not allow sufficient space for safe installation, install the child restraint system on the rear right seat.**

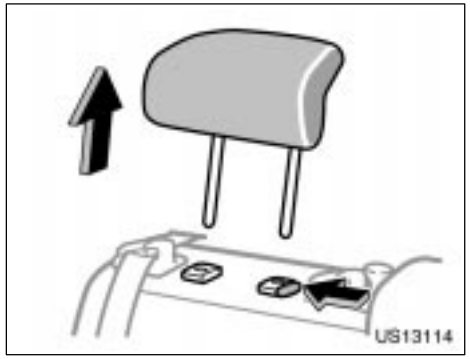

1. When the child restraint system is installed in a forward−facing position: Remove the head restraint.

⚠ CAUTION

- **Do not replace the head restraint when the child restraint system is installed. The head restraint may interfere with the child restraint system cannot be securely restrained. This may cause death or serious injuries in a collision.**
- **Do not leave the removed head restraint inside the cabin. It may hit a passenger when the brakes are applied, which could cause severe injuries or death.**

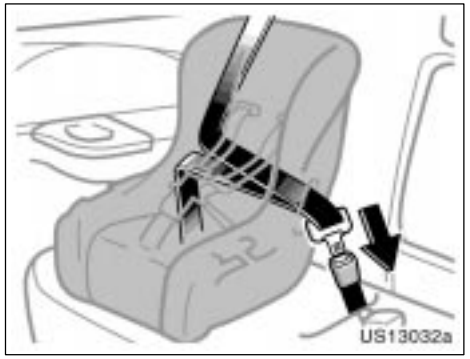

2. Run the lap and shoulder belt through or around the convertible seat following the instructions provided by its manufacturer and insert the tab into the buckle taking care not to twist the belt. Keep the lap portion of the belt tight.

⚠ CAUTION

- **After inserting the tab, make sure the tab and buckle are locked and that the lap and shoulder portions of the belt are not twisted.**
- **Do not insert coins, clips, etc. in the buckle as this may prevent your child from properly latching the tab and buckle.**
- **If the seat belt does not function normally, it cannot protect your child from death or serious injury. Contact your Toyota dealer immediately. Do not install the child restraint system on the seat until the seat belt is fixed.**

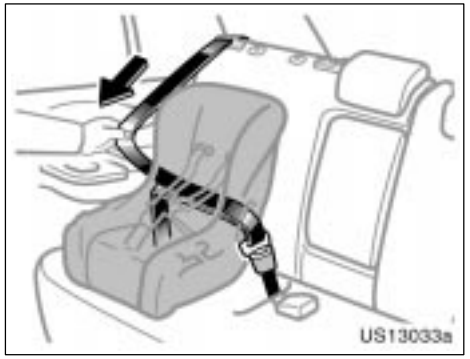

3. Fully extend the shoulder belt to put it in the lock mode. When the belt is then retracted even slightly, it cannot be extended.

To hold the convertible seat securely, make sure the belt is in the lock mode before letting the belt retract.



4. While pressing the convertible seat firmly against the seat cushion and seatback, let the shoulder belt retract as far as it will go to hold the convertible seat securely.



⚠ CAUTION

Push and pull the child restraint system in different directions to be sure it is secure. Follow all the installation instructions provided by its manufacturer.

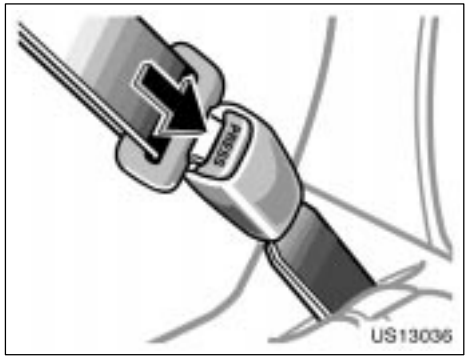

5. To remove the convertible seat, press the buckle release button and allow the belt to retract completely. The belt will move freely again and be ready to work for an adult or older child passenger. After returning the seat to its original position, be certain to replace the head restraint.

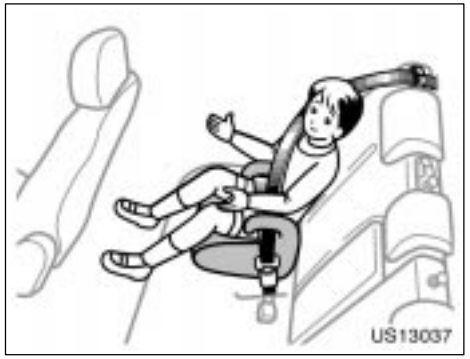

(C) BOOSTER SEAT INSTALLATION

A booster seat must be used in forward−facing position only.

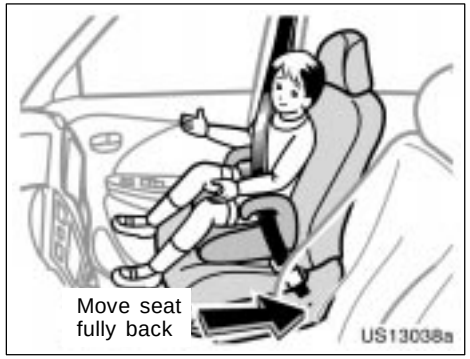

CAUTION

- **A forward−facing child restraint system should be allowed to be installed on the front passenger seat only when it is unavoidable. Always move the seat as far back as possible even if the "AIRBAG OFF" indicator light is illuminated, because the front passenger airbag could inflate with considerable speed and force. Otherwise, the child may be killed or seriously injured.**

- **On vehicles with side airbags and curtain shield airbags, do not allow the child to lean his/her head or any part of his/her body against the door or the area of the seat, front or rear pillar or roof side rail from which the side airbags or curtain shield airbags deploy even if the child is seated in the child restraint system. It is dangerous if the side airbag and curtain shield airbag inflate, and the impact could cause death or serious injury to the child.**

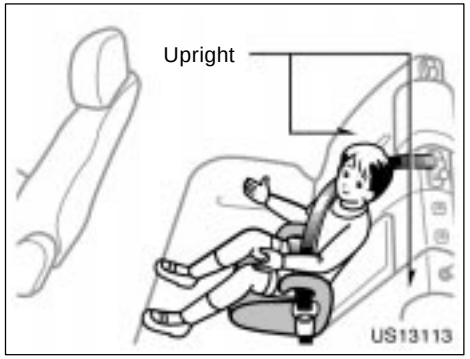

- **Split seat: When installing a child restraint system in the rear seat center position, return both the left and right seatbacks to the upright position. Otherwise, the child restraint system cannot be securely restrained and this may cause death or serious injuries in a collision.**



1. Sit the child on a booster seat. Run the lap and shoulder belt through or around the booster seat and across the child following the instructions provided by its manufacturer and insert the tab into the buckle taking care not to twist the belt.

Make sure the shoulder belt is correctly across the child's shoulder and that the lap belt is positioned as low as possible on the child's hips. See "Seat belts" on page 38 in this Section for details.

⚠ CAUTION

- **Always make sure the shoulder belt is positioned across the center of child's shoulder. The belt should be kept away from child's neck, but not falling off child's shoulder. Otherwise, the child may be killed or seriously injured in case of sudden braking or a collision.**
- **Both high−positioned lap belts and loose−fitting belts could cause death or serious injuries due to sliding under the lap belt during a collision or other unintended event. Keep the lap belt positioned as low on a child's hips as possible.**
- **For child's safety, do not place the shoulder belt under child's arm.**
- **After inserting the tab, make sure the tab and buckle are locked and that the lap and shoulder portions of the belt are not twisted.**
- **Do not insert coins, clips, etc. in the buckle as this may prevent your child from properly latching the tab and buckle.**

- **If the seat belt does not function normally, it cannot protect your child from death or serious injury. Contact your Toyota dealer immediately. Do not install the child restraint system on the seat until the seat belt is fixed.**

—Using a top strap

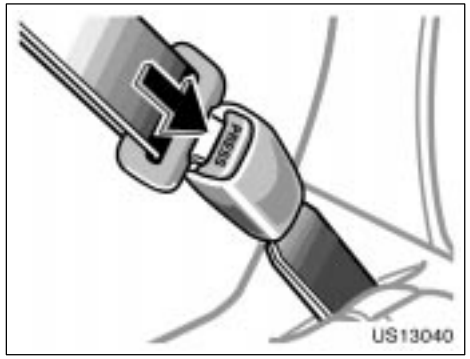

2. To remove the booster seat, press the buckle release button and allow the belt to retract.

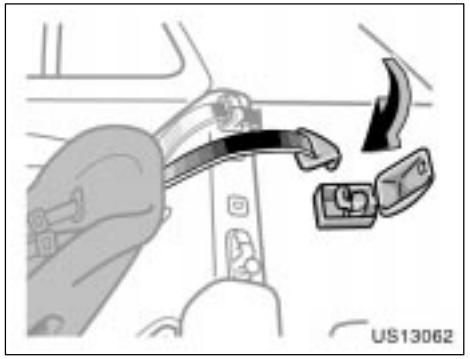

Follow the procedure below for a child restraint system that requires the use of a top strap.

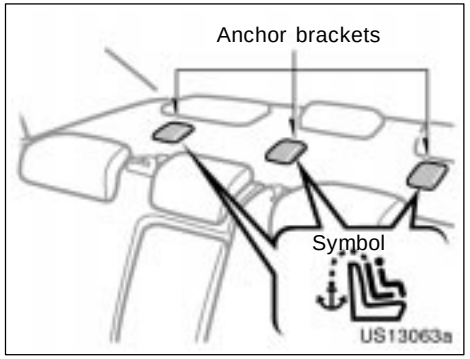

Use the anchor brackets on the luggage compartment to attach the top strap.

Anchor brackets are installed for each rear seating position.

This symbol indicates the locations of the anchor brackets.

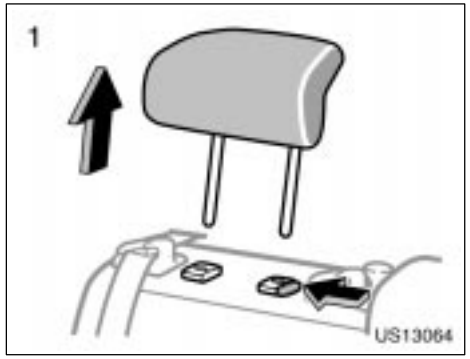

TO USE THE ANCHOR BRACKET:

1. Remove the head restraint.

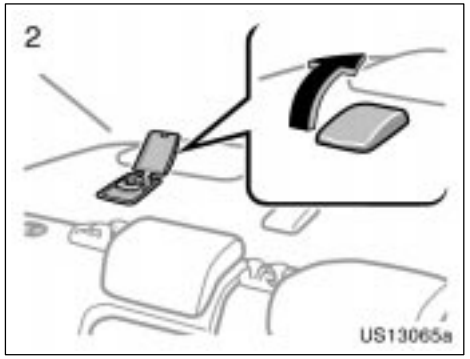

2. Open the lid of the anchor bracket.

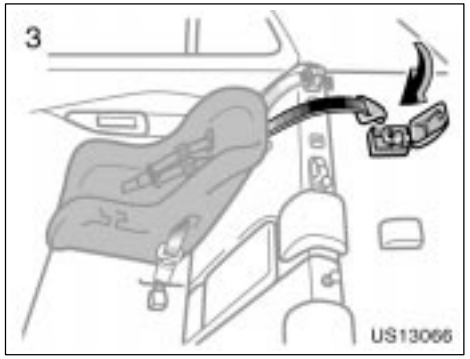

3. Securely fasten the child restraint system with the seat belt.

Latch the hook onto the anchor bracket and tighten the top strap.

For instructions to install the child restraint system, see “Child restraint” on page 67 in this Section.

After returning the seat to its original position, be certain to replace the head restraint.

CAUTION

- **Do not replace the head restraint when the child restraint system is installed. The head restraint may interfere with the top strap and the child restraint system can not be securely restrained. This may cause death or serious injuries in a collision.**
- **Make sure the top strap is securely latched, and check that the child restraint system is secure by pushing and pulling it in different directions. Follow all the installation instructions provided by its manufacturer.**

—Installation with child restraint lower anchorages

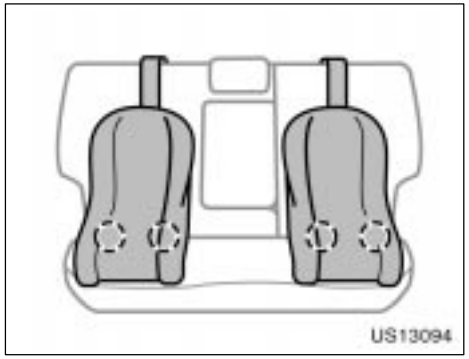

The lower anchorages for the child restraint system interfaced with the FMVSS225 or CMVSS210.2 specification are installed in the rear seat.

The anchorages are installed in the gap between the seat cushion and seatback of both outside rear seats.

Child restraint system interfaced with the FMVSS213 or CMVSS213 specification can be fixed with these anchorages. In this case, it is not necessary to fix the child restraint system with a seat belt on the vehicle.

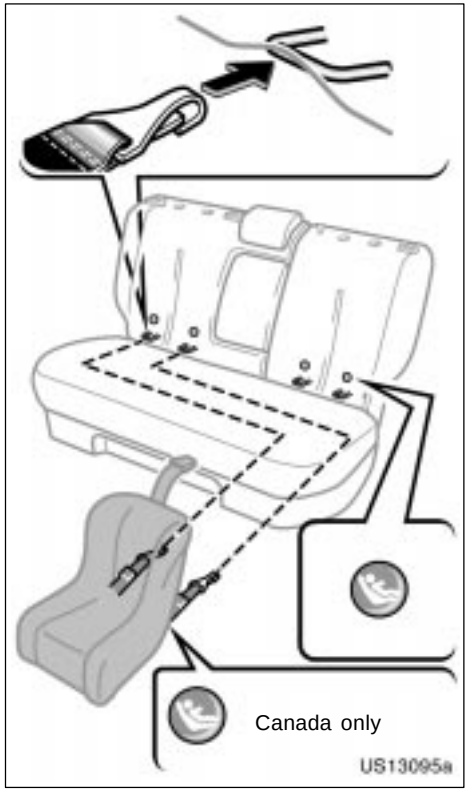

Type A

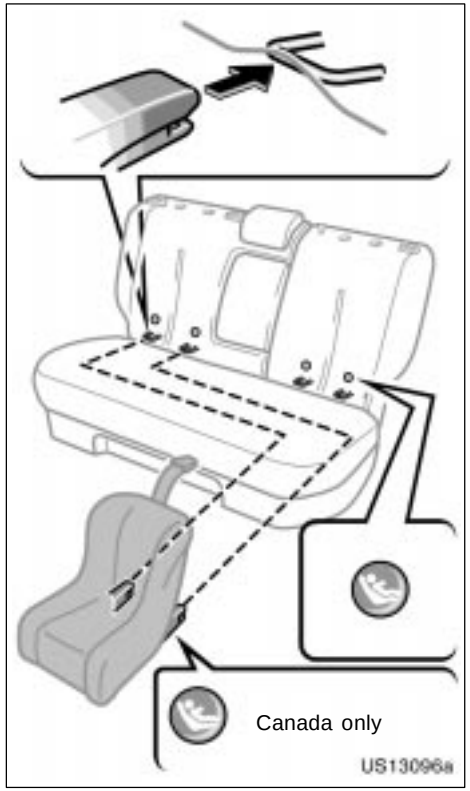

Type B

1. **Widen the gap between the seat cushion and seatback slightly and confirm the position of the lower anchorages below the button on the seatback.**
2. **Type A—Latch the hooks of lower straps onto the anchorages and tighten the lower straps.**

   Type B—Latch the buckles onto the anchorages.

For owners in Canada

The symbol on a child restraint system indicates the presence of a lower connector system.

If your child restraint system has a top strap, it should be anchored. (For the installation of the top strap, see "—Using a top strap" on page 82 in this Section.)

For installation details, refer to the instruction manual equipped with each product.

⚠ CAUTION

- **When using the lower anchorages for the child restraint system, be sure that there are no irregular objects around the anchorages or that the seat belt is not caught.**
- **Push and pull the child restraint system in different directions to be sure it is secure. Follow all the installation instructions provided by its manufacturer.**
- **After securing the child restraint system, never slide or recline the seat.**
- **Do not install a child restraint system on the rear seat if it interferes with the lock mechanism of the front seats. Otherwise, the child or front seat occupant(s) may be killed or seriously injured in case of sudden braking or a collision.**

SECTION 1–4

OPERATION OF INSTRUMENTS AND CONTROLS

Steering wheel and Mirrors

Tilt steering wheel 88
Outside rear view mirrors 88
Anti−glare inside rear view mirror 91
Vanity mirrors 91

Tilt steering wheel

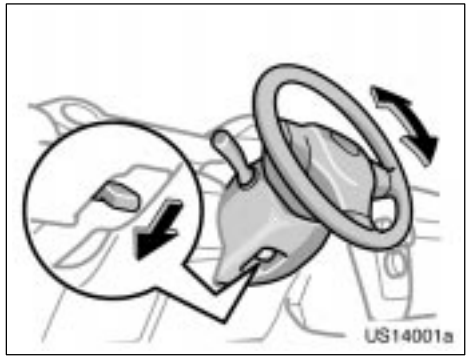

To change the steering wheel angle, hold the steering wheel, push down the lock release lever, tilt the steering wheel to the desired angle and return the lever to its original position.

⚠ CAUTION

- **Do not adjust the steering wheel while the vehicle is moving. Doing so may cause the driver to mishandle the vehicle and an accident may occur resulting in death or serious injuries.**
- **After adjusting the steering wheel, try moving it up and down to make sure it is locked in position.**

Outside rear view mirrors—

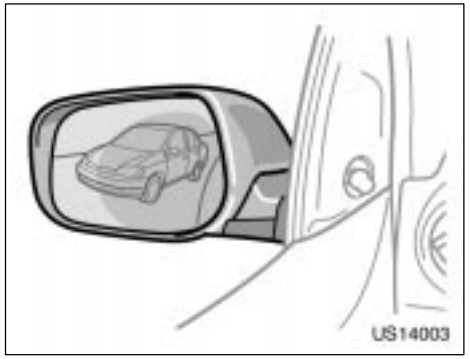

Adjust the mirror so that you can just see the side of your vehicle in the mirror.

Be careful when judging the size or distance of any object seen in the outside rear view mirror on the passenger's side because it is a convex mirror. Any object seen in a convex mirror will look smaller and farther away than when seen in a flat mirror.

—Power rear view mirror control

⚠ CAUTION

Do not adjust the mirror while the vehicle is moving. Doing so may cause the driver to mishandle the vehicle and an accident may occur resulting in death or serious injuries.

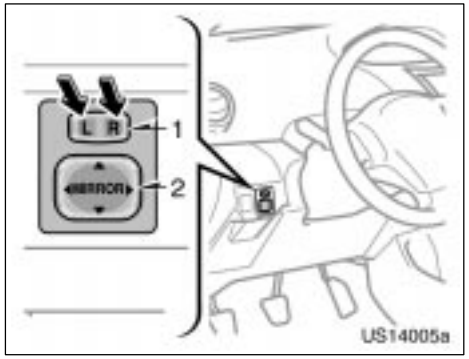

To adjust a mirror, use the switches.

1. Master switch—To select the mirror to be adjusted
   Push the switch to “L” (left) or “R” (right).
2. Control switch—To move the mirror
   Push the switch in the desired direction.

Mirrors can be adjusted when the key is in the “ACC” or “ON” position.

NOTICE

If ice should jam the mirror, do not operate the control or scrape the mirror face. Use a spray de−icer to free the mirror.

—Rear view mirror remote control

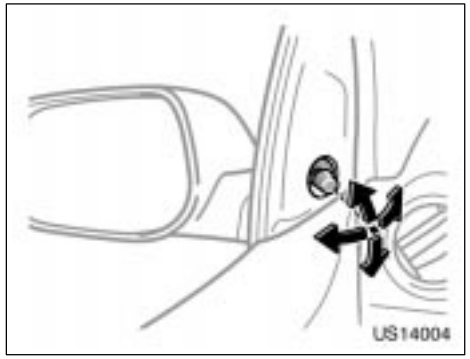

To adjust the rear view mirror, simply operate the control lever.

NOTICE

If ice should jam the mirror, do not operate the control or scrape the mirror face. Use a spray de−icer to free the mirror.

—Folding rear view mirrors

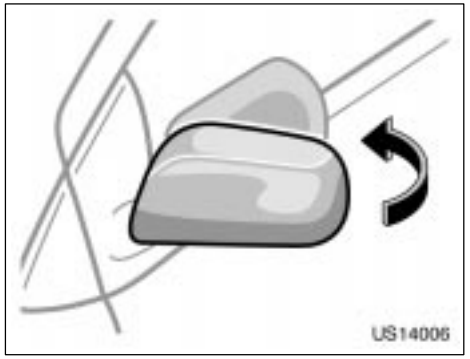

The rear view mirrors can be folded backward for parking in compact areas.

To fold the rear view mirror, push backward until you hear the click.

⚠ CAUTION

Do not drive with the mirrors folded backward. Both the driver and passenger side rear view mirrors must be extended and properly adjusted before driving.

NOTICE

Do not push backward more than the click. It may damage the mirror or vehicle.

Anti−glare inside rear view mirror

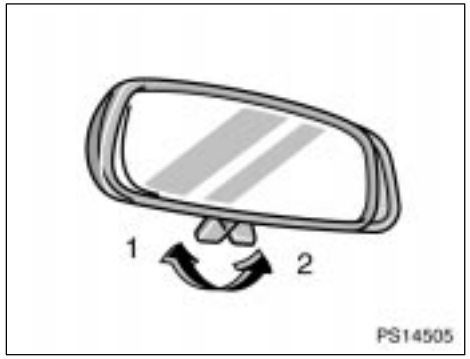

Adjust the mirror so you can just see the rear of your vehicle in the mirror.

To reduce glare from the headlights of the vehicle behind you during night driving, operate the lever on the lower edge of the mirror.

Daylight driving—Lever at position 1

The reflection in the mirror has greater clarity at this position.

Night driving—Lever at position 2

Remember that by reducing glare you also lose some rear view clarity.

⚠ CAUTION

Do not adjust the mirror while the vehicle is moving. Doing so may cause the driver to mishandle the vehicle and an accident may occur resulting in personal death or serious injuries.

Vanity mirrors

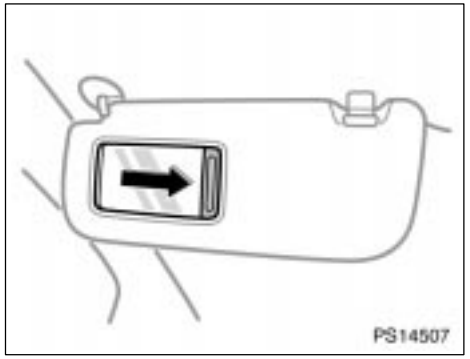

To use the vanity mirrors, swing down the sun visor and slide the cover.

SECTION 1–5

OPERATION OF INSTRUMENTS AND CONTROLS

Lights, Wipers and Defogger

Headlights and turn signals 94
Emergency flashers 95
Instrument panel light control 96
Front fog lights 96
Interior light 97
Personal lights 98
Windshield wipers and washer 98
Rear window defogger 99

Headlights and turn signals

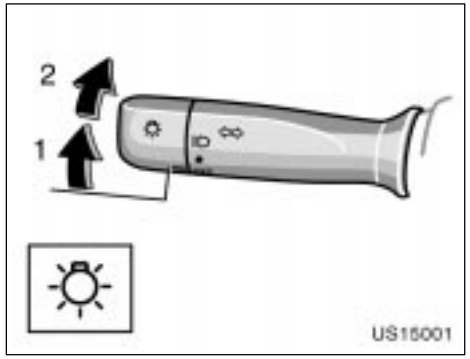

Except for Canada

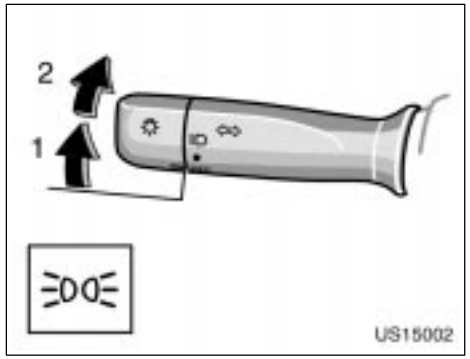

For Canada

HEADLIGHTS

To turn on the following lights: Twist the headlight/turn signal lever knob.

Position 1—Parking, tail, license plate, side marker and instrument panel lights

For Canada—The tail light indicator (green light) on the instrument panel will tell you that the tail lights are on.

Position 2—Headlights and all of the above

Except for Canada—The headlight low beam indicator light (green light) on the instrument panel will tell you that the low beams are on.

Light reminder buzzer

A buzzer will remind you to turn the lights off when the driver's door is opened if you remove the key with the headlight switch on.

NOTICE

To prevent the battery from being discharged, do not leave the lights on for a long period when the engine is not running.

Daytime running light system (Canada only)

The daytime running light system can make it easier for others to see the front of your vehicle during the day. This system can be helpful in many different driving conditions, but they can be especially helpful in the short periods after dawn and before sunset.

This system will make your headlights come on at a reduced brightness when:

- The engine is running.
- The parking brake is released.
- The headlight/turn signal lever knob is in the "OFF" position.

To turn on the other exterior lights and instrument panel lights, twist the knob to position 1.

Twist the knob to position 2 to turn the headlights to full intensity for night driving.

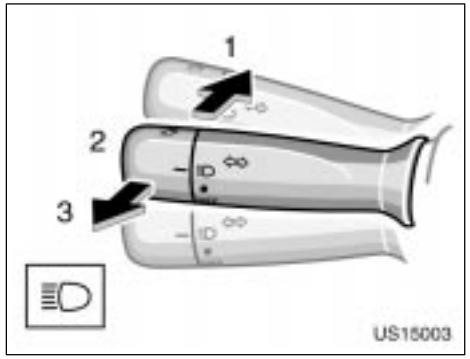

High−Low beams—For high beams, turn the headlights on and push the lever away from you (position 1). Pull the lever toward you (position 2) for low beams.

The headlight high beam indicator light (blue light) on the instrument panel will tell you that the high beams are on.

Flashing the high beam headlights (position 3)—Pull the lever all the way back. The high beam headlights turn off when you release the lever.

You can flash the high beam headlights with the knob turned to “OFF”.

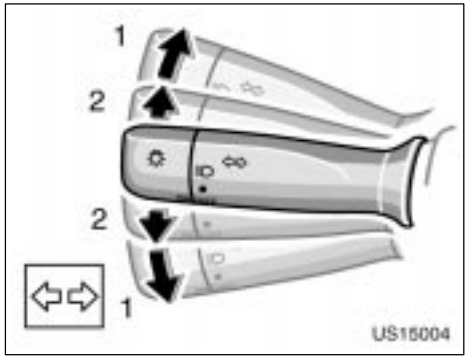

TURN SIGNALS

To signal a turn, push the headlight/turn signal lever up or down to position 1.

The key must be in the “ON” position.

The lever automatically returns after you make a turn, but you may have to return it by hand after you change lanes.

To signal a lane change, move the lever up or down to the pressure point (position 2) and hold it.

If the turn signal indicator lights (green lights) on the instrument panel flash faster than normal, a front or rear turn signal bulb is burned out. See “Replacing light bulbs” on page 276 in Section 7−3.

Emergency flashers

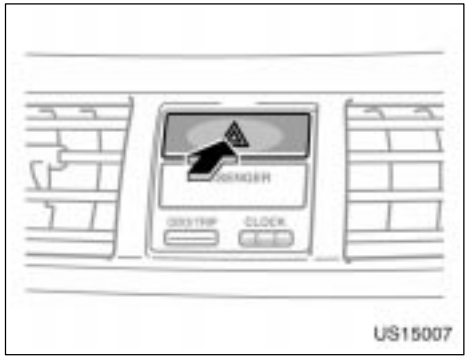

To turn on the emergency flashers, push the switch.

All the turn signal lights will flash. To turn them off, push the switch once again.

Turn on the emergency flashers to warn other drivers if your vehicle must be stopped where it might be a traffic hazard.

Always pull as far off the road as possible.

The turn signal light switch will not work when the emergency flashers are operating.

NOTICE

To prevent the battery from being discharged, do not leave the switch on longer than necessary when the engine is not running.

Instrument panel light control

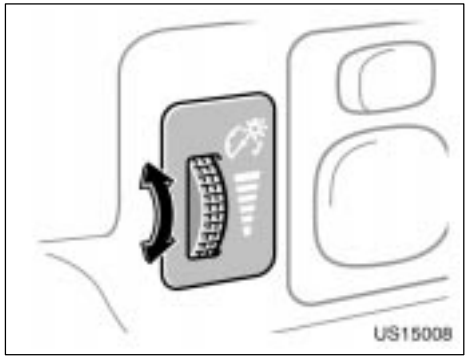

To adjust the brightness of the instrument panel lights, turn the dial.

With the dial turned fully up, the intensity of the instrument panel lights will not be reduced even when the tail lights/headlights are turned on.

Front fog lights

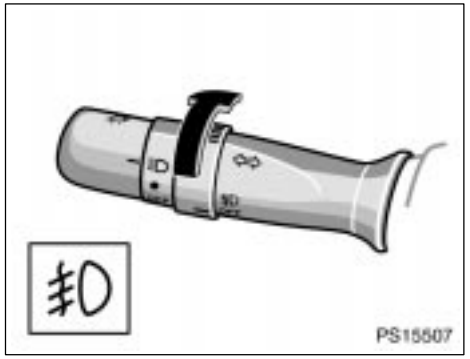

To turn on the front fog lights, twist the band of the headlight and turn signal switch lever. They will come on when the head lights are on low beam.

Interior light

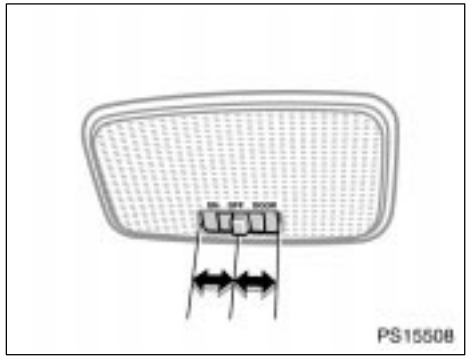

To turn on the interior light, slide the switch.

The interior light switch has the following positions:

“ON”—Keeps the light on all the time.

“OFF”—Turns the light off.

“DOOR”—Turns the light on when any side doors are opened. The light goes off when all the side doors are closed.

ILLUMINATED ENTRY SYSTEM

Door linked operation—When the switch is in the “DOOR” position and any of the side doors is opened, the light will come on. After all the side doors are closed, the light remains on for about 15 seconds before fading out.

Ignition switch linked operation—When the switch is in the “DOOR” position, and the ignition switch is turned to “LOCK”, the light will come on. The light remains on for about 15 seconds before fading out.

However, in the following cases, the light goes off immediately.

- All the doors are closed when the ignition key is in the “ACC” or “ON” position.
- Vehicles with the power door lock system—All the doors are closed and locked.

Vehicles with the power door lock system—When the driver’s door is unlocked using either the key or the wireless remote control, the interior light will come on and remain on for about 15 seconds before fading out.

Vehicles with the power door lock system and vehicles sold in Puerto Rico—The following adjustments can be made in this system. For details, contact your Toyota dealer.

- Vehicles with the power door lock system—Cancelling the door key or the wireless remote control linked operation
- Cancelling the ignition switch linked operation
- Changing the duration of lighting

To prevent the battery being discharged, the light will automatically turn off when the key is removed and the door is left opened with the switch at the “DOOR” position for 20 minutes or more.

Personal lights

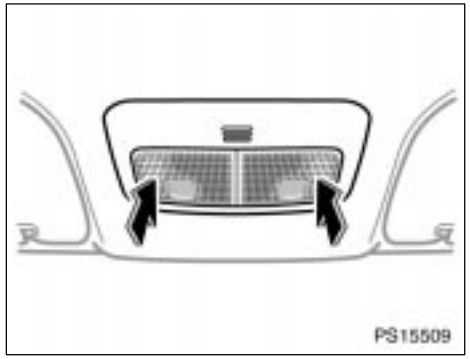

To turn on the personal light, push the lens. To turn the light off, push the lens once again.

Windshield wipers and washer



To turn on the windshield wipers, move the lever to the desired setting.

The key must be in the “ON” position.

Lever position	Speed setting
Position 1	Intermittent
Position 2	Slow
Position 3	Fast

For a single sweep of the windshield, push the lever up and release it.

To squirt washer fluid, pull the lever toward you.

If the windshield wipers are off, they will operate a couple of times after the washer squirts.

For instructions on adding washer fluid, see “Adding washer fluid” on page 276 in Section 7−3.

In freezing weather, warm the windshield with the defroster before using the washer. This will help prevent the washer fluid from freezing on your windshield, which can block your vision.

NOTICE

Do not operate the wipers if the windshield is dry. It may scratch the glass.

When waxing your vehicle, make sure that the washer nozzles do not become blocked. If a nozzle becomes blocked, contact your Toyota dealer to have the vehicle serviced.

NOTICE

If a nozzle becomes blocked, do not try to clear it with a pin or other object. The nozzle will be damaged.

Rear window defogger

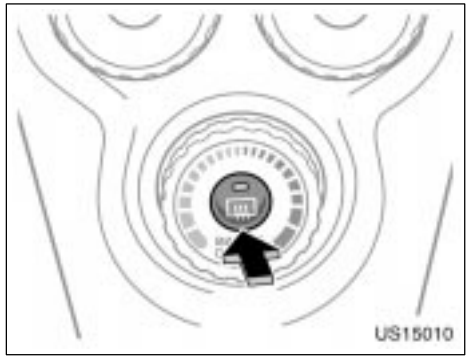

To defog or defrost the rear window, push the switch.

The key must be in the “ON” position.

The thin heater wires on the inside of the rear window will quickly clear the surface. An indicator light will illuminate to indicate the defogger is operating.

Push the switch once again to turn the defogger off.

Make sure you turn the defogger off when the window is clear. Leaving the defogger on for a long time could cause the battery to discharge, especially during stop−and−go driving. The defogger is not designed for drying rain water or for melting snow.

NOTICE

- ***To prevent the battery from being discharged, turn the switch off when the engine is not running.***
- ***When cleaning the inside of the rear window, be careful not to scratch or damage the heater wires or connectors.***

SECTION 1–6

OPERATION OF INSTRUMENTS AND CONTROLS

Gauges, Meters and Service reminder indicators

Fuel gauge 102
Engine coolant temperature indicator and warning light 102
Tachometer 103
Odometer and two trip meters 104
Service reminder indicators and warning buzzers 105

Fuel gauge

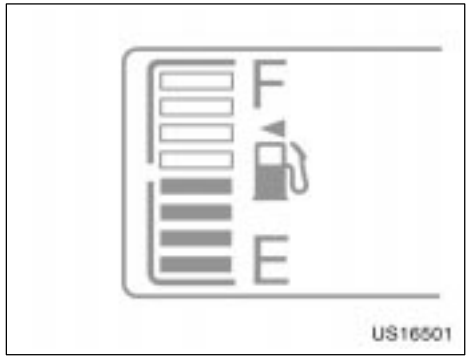

The gauge works when the ignition switch is on and indicates the approximate quantity of fuel remaining in the tank.

Nearly full—Indicator at “F”
Nearly empty—Indicator at “E”

It is a good idea to keep the tank over 1/4 full.

Low fuel level warning light

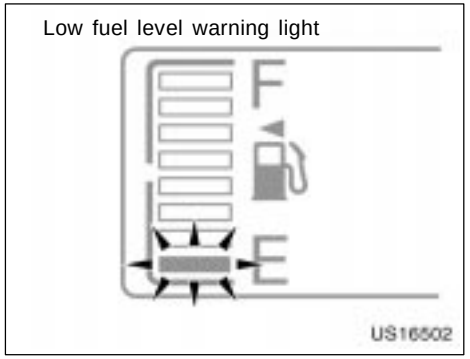

If the low fuel level warning light flashes, fill the fuel tank as soon as possible. Further fuel reduction makes the light blink quicker.

If the fuel tank is completely empty, the malfunction indicator lamp comes on. Fill the fuel tank immediately.

The indicator lamp goes off after driving several times. If the indicator lamp does not go off, contact your Toyota dealer as soon as possible.

Engine coolant temperature indicator and warning light

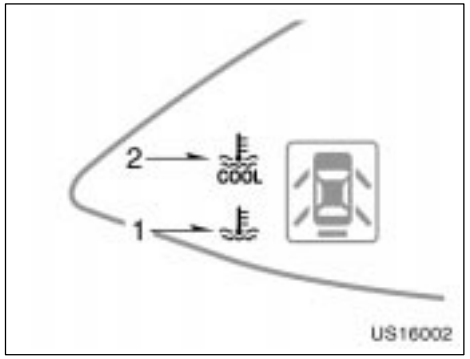

With tachometer

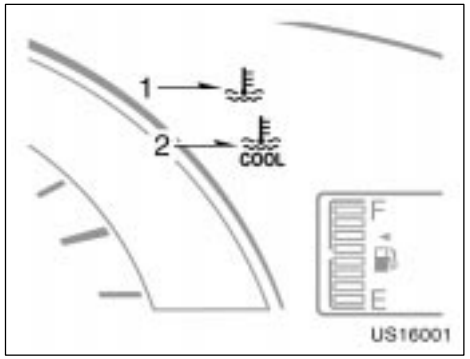

Without tachometer

1. High engine coolant temperature warning light
2. Low engine coolant temperature indicator light

The indicator and warning lights indicate the engine coolant temperature when the ignition switch is on. The engine operating temperature will vary with changes in weather and engine load.

The high engine coolant temperature warning light will come on when the ignition key is turned to the “ON” position. After a few seconds, the light will go off.

If your engine coolant temperature is cool with the ignition switch on, the low engine coolant temperature indicator light comes on. If it keeps lighting on with the engine fully warmed, contact your Toyota dealer as soon as possible to service the vehicle.

If the high engine coolant temperature warning light flashes, your engine is too hot. If your vehicle overheats, stop your vehicle and allow the engine to cool.

Your vehicle may overheat during severe operating conditions, such as:

- Driving up a long hill on a hot day.
- Reducing speed or stopping after high speed driving.
- Idling for a long period with the air conditioning on in stop−and−go traffic.
- Towing a trailer.

NOTICE

- ***Do not remove the thermostat in the engine cooling system as this may cause the engine to overheat. The thermostat is designed to control the flow of coolant to keep the temperature of the engine within the specified operating range.***
- ***Do not continue driving with an overheated engine. See “If your vehicle overheats” on page 218 in Section 4.***

Tachometer

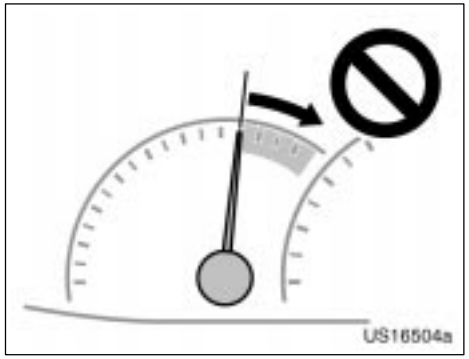

The tachometer indicates engine speed in thousands of rpm (revolutions per minute). Use it while driving to select correct shift points and to prevent engine lugging and over−revving.

Driving with the engine running too fast causes excessive engine wear and poor fuel economy. Remember, in most cases the slower the engine speed, the greater the fuel economy.

NOTICE

Do not let the indicator get segment into the red zone. This may cause severe engine damage.

Odometer and two trip meters

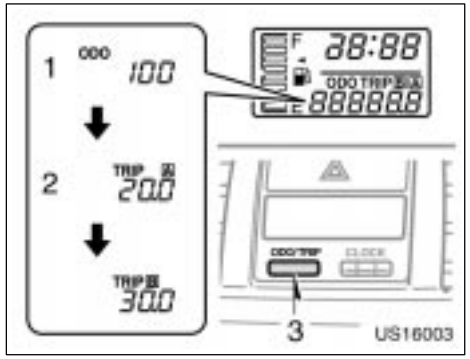

This meter displays the odometer and two trip meters.

1. Odometer—Shows the total distance the vehicle has been driven.
2. Two trip meters—Shows two different distances independently driven since the last time each trip meter was set to zero.

   You can use one trip meter to calculate the fuel economy and the other to measure the distance on each trip. All trip meter data is cancelled if the electrical power source is disconnected.
3. Trip meter reset knob—It can reset the two trip meters to zero, and also change the meter display.

   To change the meter display, quickly push and release the knob. The meter display changes in the order from the odometer to trip meter A to trip meter B, then back to the odometer each time you push.

   To reset the trip meter A to zero, display the meter A reading, then push and hold the knob until the meter is set to zero. The same process can be applied for resetting the trip meter B.

Service reminder indicators and warning buzzers

If the indicator or buzzer comes on...		Do this.
(a)	BRAKE or 	If parking brake is off, stop immediately and contact Toyota dealer.
(b)	 (Indicator and buzzer)	Fasten driver's seat belt.
(c)	PASSENGER  (Indicator and buzzer)	Fasten front passenger's seat belt.
(d)		Stop immediately and contact Toyota dealer.
(e)	 or 	Take vehicle to Toyota dealer.
(f)		Fill up tank.
(g)		Stop and check.

If the indicator or buzzer comes on...		Do this.
(h)	ABS or 	Take vehicle to Toyota dealer. If brake system warning light is also on, stop immediately and contact Toyota dealer.
(i)		Close all the doors and trunk.
(j)		Close all the doors and trunk.
(k)	P/S	Take vehicle to Toyota dealer.
(l)		Take vehicle to Toyota dealer immediately.
(m)		Add washer fluid.
(n)	MAINT REQD	Replace engine oil.

If the indicator or buzzer comes on...		Do this.
(o)		Stop and check.
(p)	Key reminder buzzer	Remove key.
(q)	Light reminder buzzer	Turn off lights.

(a) Brake System Warning Light

This light comes on in the following cases when the ignition key is in the “ON” position.

- **When the parking brake is applied...**

Vehicles with anti−lock brake system—

This light comes on for a few seconds when the ignition key is turned to the “ON” position even after the parking brake is released.

- **When the brake fluid level is low...**

CAUTION

It is dangerous to continue driving normally when the brake fluid level is low.

Have your vehicle checked at your Toyota dealer in the following cases:

- The light does not come on even if the parking brake is applied when the ignition key is in the “ON” position.

Vehicles with anti−lock brake system—

- The light does not come on even if the ignition key is turned on with the parking brake released.

A warning light turning on briefly during operation does not indicate a problem.

CAUTION

If either of the following conditions occurs, immediately stop your vehicle at a safe place and contact your Toyota dealer

- **The light does not turn off even after the parking brake is released while the engine is running.**

  In this case, the brakes may not work properly and your stopping distance will become longer. Depress the brake pedal firmly and bring the vehicle to an immediate stop.

Vehicles with anti−lock brake system—

- **The brake system warning light remains on together with the “ABS” warning light.**

  In this case, not only the anti−lock brake system will fail but also the vehicle will become extremely unstable during braking.

(b) Driver’s Seat Belt Reminder Light and Buzzer

The light and buzzer act as a reminder to buckle up the driver’s seat belt.

Once the ignition key is turned to “ON” or “START”, the reminder light flashes and buzzer sounds if the driver’s seat belt is not fastened. Unless the driver fastens the belt, the light keeps flashing and the buzzer stops after about 6 seconds.

If the vehicle speed rises above 20 km/h (12 mph) with the seat belt unfastened, the buzzer will sound for 10 seconds. Then, if the seat belt is still unfastened, the buzzer will sound in a different tone for 20 seconds. Even if the vehicle speed drops below 20 km/h (12 mph), the buzzer will continue to sound. To stop the buzzer, fasten the seat belt. If the buzzer still sounds, make sure the front passenger’s seat belt is fastened.

The buzzer can be disabled. For details, contact your Toyota dealer.

(c) Front Passenger’s Seat Belt Reminder Light and Buzzer

The light and buzzer act as a reminder to have the front passenger buckle up the seat belt.

Once the ignition key is turned to “ON” or “START”, the reminder light flashes if a passenger sits in the front passenger seat and does not fasten the seat belt.

If the vehicle speed rises above 20 km/h (12 mph) with the seat belt unfastened, the buzzer will sound for 10 seconds. Then, if the seat belt is still unfastened, the buzzer will sound in a different tone for 20 seconds. Even if the vehicle speed drops below 20 km/h (12 mph), the buzzer will continue to sound. To stop the buzzer, fasten the seat belt. If the buzzer still sounds, make sure the driver’s seat belt is fastened.

If luggage or other load is placed on the front passenger seat, depending on its weight, the reminder light may flash and buzzer to sound.

The buzzer can be disabled. For details, contact your Toyota dealer.

(d) Charging System Warning Light

This warning light comes on when the ignition key is turned to the “ON” position, and goes off when the engine is started.

When there are problems in the charging system while the engine is running, the warning light comes on.

NOTICE

When the charging system warning light comes on while the engine is running, malfunctions such as the engine drive belt being broken may have occurred. If the warning light comes on, immediately stop the vehicle in a safe place and contact your Toyota dealer.

(e) Malfunction Indicator Lamp

This lamp comes on when the ignition key is turned to the “ON” position and goes off after the engine starts. This means that the warning light system is operating properly.

If the lamp remains on, or the lamp comes on while driving, first check the followings.

- Empty fuel tank

  If the fuel tank is empty, refuel immediately.

- Loose fuel tank cap

  If the fuel tank cap is loose, securely tighten it.

These cases are temporary malfunctions. The malfunction indicator lamp will go off after taking several driving trips.

If the lamp does not go off even after several trips, contact your Toyota dealer as soon as possible.

If the fuel tank is not empty or the fuel tank cap is not loose...

- There is a problem somewhere in the engine, emission control system, electronic throttle control system, automatic transmission electrical system or warning light system itself.

Contact your Toyota dealer as soon as possible to service the vehicle.

If engine speed does not increase when the accelerator pedal is depressed, there may be a problem somewhere in the electronic throttle control system.

At this time, vibration may occur. However, if you depress the accelerator pedal more firmly and slowly, you can drive your vehicle at low speeds. Have your vehicle checked by your Toyota dealer as soon as possible.

Even if the abnormality of the electronic throttle control system is corrected during low speed driving, the system may not be recovered until the engine is stopped and the engine off.

CAUTION

Be especially careful to prevent erroneous pedal operation.

Emissions Inspection and Maintenance (I/M) programs

Your vehicle may not pass a state emission inspection if the malfunction indicator lamp remains on. Contact your Toyota dealer to check your vehicle's emission control system and OBD (On−Board Diagnostics) system before taking your vehicle for the inspection.

For details, see "Emissions Inspection and Maintenance (I/M) programs" on page 248 in Section 6.

(f) Low Fuel Level Warning Light

This light flashes when the fuel level in the tank becomes nearly empty. Fill up the tank as soon as possible.

On inclines or curves, due to the movement of fuel in the tank, the low fuel level warning light may flash earlier than usual.

(g) Low Engine Oil Pressure Warning Light

This light warns that the engine oil pressure is too low.

If it flickers or stays on while you are driving, pull off the road to a safe place and stop the engine immediately. Call a Toyota dealer or qualified repair shop for assistance.

The light may occasionally flicker when the engine is idling or it may come on briefly after a hard stop. There is no cause for concern if it then goes out when the engine is accelerated slightly.

The light may come on when the oil level is extremely low. It is not designed to indicate low oil level, and the oil level must be checked using the level dipstick.

NOTICE

Do not drive the vehicle with the warning light on—even for one block. It may ruin the engine.

(h) "ABS" Warning Light

The light comes on when the ignition key is turned to the "ON" position. If the anti−lock brake system works properly, the light turns off after a few seconds. Thereafter, if the system malfunctions, the light comes on again.

When the "ABS" warning light is on (and the brake system warning light is off), the anti−lock brake system does not operate, but the brake system still operates conventionally.

When the "ABS" warning light is on (and the brake system warning light is off), the anti−lock brake system does not operate so that the wheels could lock up during a sudden braking or braking on slippery road surfaces.

If either of the following conditions occurs, this indicates a malfunction somewhere in the parts monitored by the warning light system. Contact your Toyota dealer as soon as possible to service the vehicle.

- The light does not come on when the ignition key is turned to the "ON" position or remains on.
- The light comes on while you are driving.

A warning light turning on briefly during operation does not indicate a problem.

CAUTION

If the “ABS” warning light remains on together with the brake system warning light, immediately stop your vehicle at a safe place and contact your Toyota dealer.

In this case, not only the anti−lock brake system will fail but also the vehicle will become extremely unstable during braking.

(i) Open Door Warning Light (vehicles without tachometer)

This light remains on until all the side doors and trunk are completely closed.

(j) Door indicator light (vehicles with tachometer)

This light remains on until all the doors and trunk are completely closed.

The light consists of a base light (shape of the vehicle) and 5 separate lights. Each light indicates which door is open.

(k) Electric Power Steering System Warning Light

The light comes on when the ignition key is turned to the “ON” position. If the electric power steering system warning light works properly, the light turns off after a few seconds. If the system has malfunctions, the light comes on again.

If the following conditions occur, this indicates a malfunction somewhere in the parts monitored by the warning light system. Contact your Toyota dealer as soon as possible to service the vehicle.

- The light does not come on when the ignition key is turned to the “ON” position or remains on.
- The light stays on while you are driving.

The warning light turning on while racing the engine for a long time may not indicate malfunction. To turn off the light, restart the engine and start driving.

CAUTION

If the electric power steering system warning light comes on, take your vehicle to Toyota dealer as soon as possible. In this case, more effort is required for the steering wheel to turn than usual. Drive your vehicle while firmly gripping the steering wheel.

(l) SRS Warning Light

This light will come on when the ignition key is turned to the “ON” position. After about 6 seconds, the light will go off. This means the system of the airbags and front seat belt pretensioners are operating properly.

The warning light system monitors the airbag sensor assembly, front airbag sensors, side and curtain shield airbag sensors, curtain shield airbag sensors, driver’s seat position sensor, driver’s seat belt buckle switch, front passenger occupant classification system, “AIRBAG ON” indicator light, “AIRBAG OFF” indicator light, front passenger’s seat belt buckle switch, seat belt pretensioner assemblies, inflators, interconnecting wiring and power sources.

If either of the following conditions occurs, this indicates a malfunction somewhere in the parts monitored by the warning light system. Contact your Toyota dealer as soon as possible to service the vehicle.

- The light does not come on when the ignition key is turned to the “ON” position or remains on for more than 6 seconds or flashes.
- The light comes on or starts flashing while driving.

(m) Low Windshield Washer Fluid Level Warning Light

The light warns that the windshield washer fluid level is too low. Add washer fluid at your earliest opportunity. (For instructions, see “Adding washer fluid” on page 276 in Section 7−3.)

The light operates to warn that the engine is almost overheating.

(n) Engine Oil Replacement Reminder Light (Except for Canada)

This light acts as a reminder to replace the engine oil.

This light will come on when the ignition key is turned to “ON” and will go off after about a few seconds.

When you drive for about 7200 km (4500 miles) after the engine oil replacement, this light illuminates for about 3 seconds and then flashes for about 12 seconds with the ignition key turned to the “ON” position. If you continue driving without replacing the engine oil, and if the distance driven exceeds 8000 km (5000 miles), the light will come on. The light will remain on thereafter.

If the light is flashing, we recommend that you replace the engine oil at an early opportunity depending on the driving and road conditions. If the light comes on, replace it as soon as possible.

The system must be reset after the engine oil replacement. Reset the system by the following procedure:

1. Turn the ignition key to the “OFF” position with the trip A reading shown. (For details, see “Odometer and two trip meters” on page 104 in this Section.)
2. Turn the ignition key to the “ON” position while holding down the trip meter reset knob.

Hold down the knob for at least 5 seconds. The indicator light flashes and the bars displayed in the odometer disappear gradually. The odometer indicates “000000” and the light goes off.

If the system fails to reset, the light will continue flashing.

(o) High Engine Coolant Temperature Warning Light

The light operates to warn that the engine is almost overheating.

The high engine coolant temperature warning light will come on when the ignition key is turned to the “ON” position. After a few seconds, the light will go off.

If your engine coolant temperature is cool with the ignition switch on, the low engine coolant temperature indicator light comes on. If it keeps lighting on with the engine fully warmed, contact your Toyota dealer as soon as possible to service the vehicle.

If the high engine coolant temperature warning light flashes, your engine is too hot. If your vehicle overheats, stop your vehicle and allow the engine to cool.

Your vehicle may overheat during severe operating conditions, such as:

- Driving up a long hill on a hot day.
- Reducing speed or stopping after high speed driving.
- Idling for a long period with the air conditioning on in stop−and−go traffic.

NOTICE

- ***Do not remove the thermostat in the engine cooling system as this may cause the engine to overheat. The thermostat is designed to control the flow of coolant to keep the temperature of the engine within the specified operating range.***
- ***Do not continue driving with an overheated engine. See "If your vehicle overheats" on page 218 in Section 4.***

(p) Key Reminder Buzzer

This buzzer acts as a reminder to remove the key when you open the driver's door with the ignition key in the "ACC" or "LOCK" position.

(q) Light Reminder Buzzer

This buzzer will sound if the headlight switch is left on and the driver's door is opened with the key removed from the ignition switch.

CHECKING SERVICE REMINDER INDICATORS (except the low fuel level warning light and low windshield washer fluid level warning light)

1. Apply the parking brake.
2. Open one of the doors.
   The open door warning light should come on.
3. Close all the doors.
   The open door warning light should go off.
4. Turn the ignition key to "ON", but do not start the engine.

   All the service reminder indicators except the open door warning light should come on. The "ABS" warning light, engine oil replacement reminder light, high engine coolant temperature warning light and electric power steering system warning light goes off after a few seconds. The SRS warning light goes off after about 6 seconds.

If any service reminder indicator or warning buzzer does not function as described above, have it checked by your Toyota dealer as soon as possible.

SECTION 1–7

OPERATION OF INSTRUMENTS AND CONTROLS

Ignition switch, Transmission and Parking brake

Ignition switch 116
Automatic transmission 117
Manual transmission 120
Parking brake 121
Cruise control 122

Ignition switch

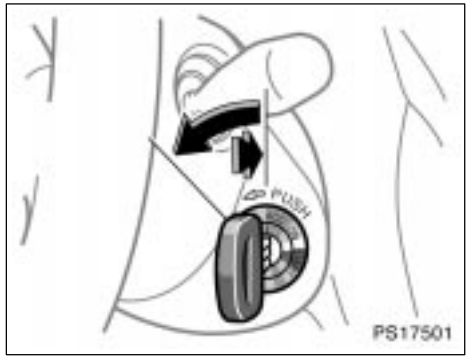

“START”—Starter motor on. The key will return to the “ON” position when released.

For starting tips, see Section 3.

“ON”—Engine on and all accessories on.

This is the normal driving position.

“ACC”—Accessories such as the radio operate, but the engine is off.

If you leave the key in the “ACC” or “LOCK” position and open the driver’s door, a buzzer will remind you to remove the key.

“LOCK”—Engine is off and the steering wheel is locked. The key can be removed only at this position.

You must push in the key to turn the key from “ACC” to the “LOCK” position. On vehicles with an automatic transmission, the selector lever must be put in the “P” position before pushing the key.

Vehicles with engine immobilizer system—Once you remove the key, the engine immobilizer system is automatically set. (See “Engine immobilizer system” on page 13 in Section 1−2.)

When starting the engine, the key may seem stuck at the “LOCK” position. To free it, first be sure the key is pushed all the way in, and then rock the steering wheel slightly while turning the key gently.

Approximately five hours after the engine is turned off, you may hear sound coming from underneath the luggage compartment for several minutes. This is normal operation and does not indicate a malfunction. (See “Leak detection pump” on page viii.)

It is not a malfunction if the needles on all meters move slightly when the key is turned to the “ACC”, “ON” or “START” position.

⚠ CAUTION

For manual transmission:

Never remove the key when the vehicle is moving, as this will lock the steering wheel and result in loss of steering control.

NOTICE

Do not leave the key in the “ON” position if the engine is not running. The battery will discharge and the ignition could be damaged.

Automatic transmission

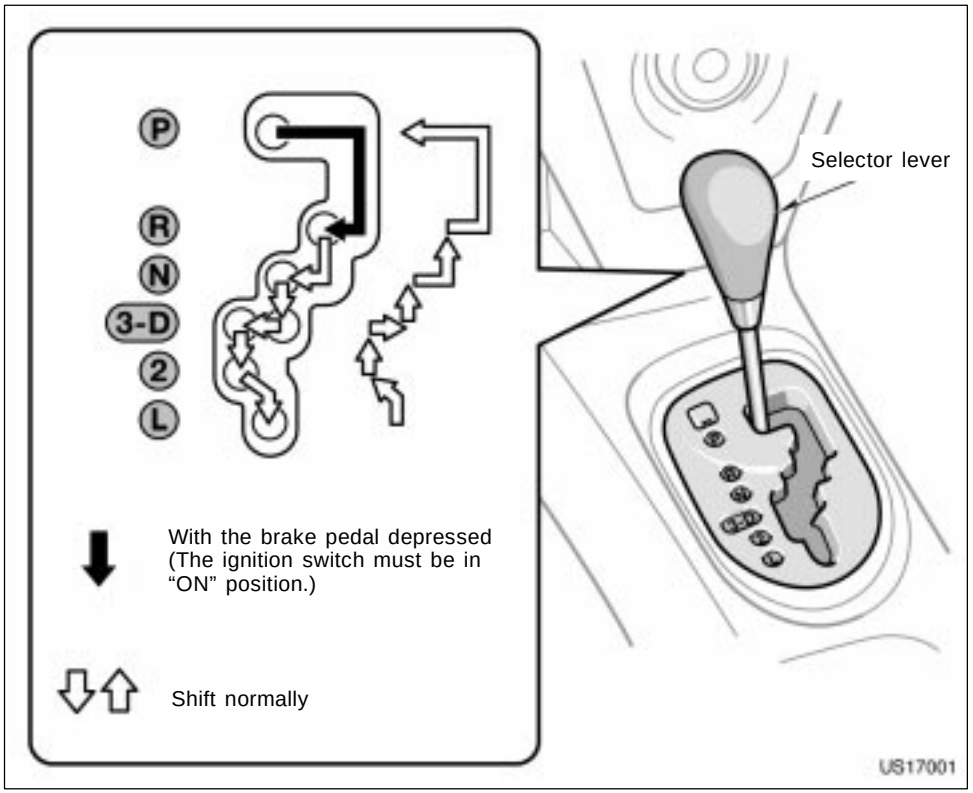

Your automatic transmission has a shift lock system to minimize the possibility of incorrect operation. This means you can only shift out of "P" position when the brake pedal is depressed (with the ignition switch in "ON" position).

(a) Selector lever

P: Parking, engine starting and key removal

R: Reverse

N: Neutral

D: Normal driving (shifting into overdrive possible)

3: Engine braking (shifting into overdrive not possible)

2: Stronger engine braking

L: Maximum engine braking

(b) Normal driving

1. Start the engine as instructed in “How to start the engine” in Section 3. The transmission must be in “P” or “N”.
2. With your foot holding down the brake pedal, shift the selector lever to “D”.

When the lever is in the “D” position, the automatic transmission system will select the most suitable gear for running conditions such as normal cruising, hill climbing, hard towing, etc.

Always use the “D” position for better fuel economy and quieter driving. If the engine coolant temperature is low, the transmission will not shift into overdrive gear even in the “D” position.

⚠ CAUTION

Never put your foot on the accelerator pedal while shifting.

3. Release the parking brake and brake pedal. Depress the accelerator pedal slowly for smooth starting.

(c) Using engine braking

To use engine braking, you can downshift the transmission as follows:

- Shift into the “3” position. The transmission will downshift to third gear and engine braking will be enabled.
- Shift into the “2” position. The transmission will downshift to second gear when the vehicle speed drops down to or lower than 86 km/h (53 mph), and stronger engine braking will be enabled.
- Shift into the “L” position. The transmission will downshift to first gear when the vehicle speed drops down to or lower than 43 km/h (26 mph), and maximum engine braking will be enabled.

⚠ CAUTION

Be careful when downshifting on a slippery surface. Abrupt shifting could cause the vehicle to skid or spin.

(d) Using “2” and “L” positions

The “2” and “L” positions are used for strong engine braking as described previously.

With the selector lever in “2” or “L”, you can start the vehicle in motion as with the lever in “D”.

With the selector lever in “2”, the vehicle will start in first gear and automatically shift to second gear.

With the selector lever in “L”, the transmission is engaged in first gear.

NOTICE

- ***Be careful not to over−rev the engine. Watch the tachometer to keep engine rpm from going into the red zone. The approximate maximum allowable speed for each position is given below for your reference:***

  "2" . . . . . 103 km/h (64 mph)
  "L" . . . . . 56 km/h (34 mph)

- ***Do not continue hill climbing or hard towing for a long time in the "2" or "L" position. This may cause severe automatic transmission damage from overheating. To prevent such damage, "D" or "3" position should be used in hill climbing or hard towing.***

(e) Backing up

1. Bring the vehicle to a complete stop.
2. With the brake pedal held down with your foot, shift the selector lever to the "R" position.

NOTICE

Never shift into reverse while the vehicle is moving.

(f) Parking

1. Bring the vehicle to a complete stop.
2. Pull the parking brake lever up fully to securely apply the parking brake.
3. With the brake pedal pressed down, shift the selector lever to the "P" position.

⚠ CAUTION

Never attempt to move the selector lever into "P" position under any circumstances while the vehicle is moving. Serious mechanical damage and loss of vehicle control may result.

(g) Good driving practice

- If the transmission repeatedly shifts up and down between third gear and overdrive gears when climbing a gentle slope, shift the selector lever to the "3" position. Be sure to shift the selector lever to the "D" position immediately afterward.
- When towing a trailer, in order to maintain engine braking efficiency, do not use "D" position. The selector lever must be in the "3" position.

⚠ CAUTION

Always keep your foot on the brake pedal while stopped with the engine running. This prevents the vehicle from creeping.

NOTICE

Always use the brake pedal or the parking brake to hold the vehicle on an upgrade. Do not attempt to hold the vehicle using the accelerator pedal, as this can cause the transmission to overheat.

(h) If you cannot move the selector lever out of "P" position

If you cannot shift the selector lever from the "P" position even though the brake pedal is depressed, use the shift lock override button. For instructions, see "If you cannot shift automatic transmission selector lever" on page 233 in Section 4.

Manual transmission

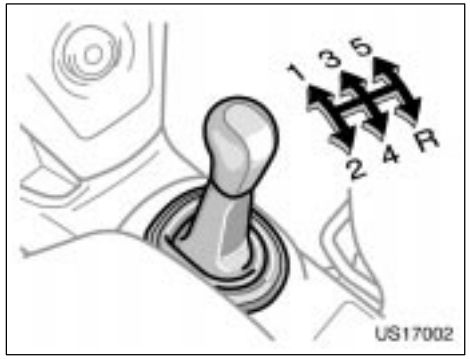

The shift pattern is conventional as shown above.

Press the clutch pedal down fully while shifting, and then release it slowly. Do not rest your foot on the pedal while driving, because it will cause clutch trouble. Do not use the clutch to hold the vehicle when stopped on an uphill grade—use the parking brake.

Recommended shifting speeds

The transmission is fully synchronized and upshifting or downshifting is easy.

For the best compromise between fuel economy and vehicle performance, you should upshift or downshift at the following speeds:

Low altitude
—1219 m (4000 ft.) or lower

gear	km/h (mph)
1 to 2 or 2 to 1	24 (15)
2 to 3 or 3 to 2	40 (25)
3 to 4 or 4 to 3	64 (40)
4 to 5 / 5 to 4	72/64 (45/40)

High altitude
—Higher than 1219 m (4000 ft.)
Upshifting

gear	km/h (mph)
1 to 2	24 (15)
2 to 3	64 (40)
3 to 4	75 (47)
4 to 5	87 (54)

Downshifting

gear	km/h (mph)
2 to 1	24 (15)
3 to 2	40 (25)
4 to 3	64 (40)
5 to 4	64 (40)

Downshift to the appropriate gear if acceleration is needed when you are cruising below the above downshifting speeds.

Upshifting too soon or downshifting too late will cause lugging, and possibly pinging. Regularly revving the engine to maximum speed in each gear will cause excessive engine wear and high fuel consumption.

Maximum allowable speeds

To get on a highway or to pass slower traffic, maximum acceleration may be necessary. Make sure you observe the following maximum allowable speeds in each gear:

gear	km/h (mph)
1	51 (31)
2	95 (59)
3	139 (86)

NOTICE

Do not downshift if you are going faster than the maximum allowable speed for the next lower gear.

Good driving practice

- If it is difficult to shift into reverse, put the transmission in neutral, release the clutch pedal momentarily, and then try again.
- When towing a trailer, in order to maintain engine braking efficiency, do not use fifth gear.

⚠ CAUTION

Be careful when downshifting on a slippery surface. Abrupt shifting could cause the vehicle to skid or spin.

NOTICE

- ***Do not use any gears other than first gear when starting off and moving forward. Doing so may damage the clutch.***
- ***Make sure the vehicle is completely stopped before shifting into reverse.***

Parking brake

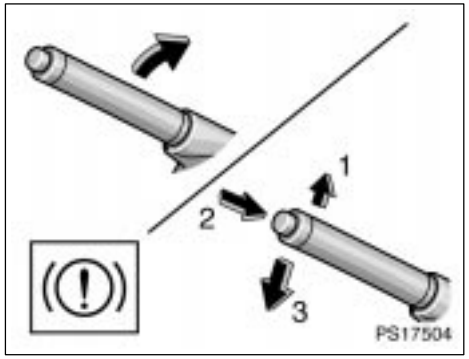

Type A

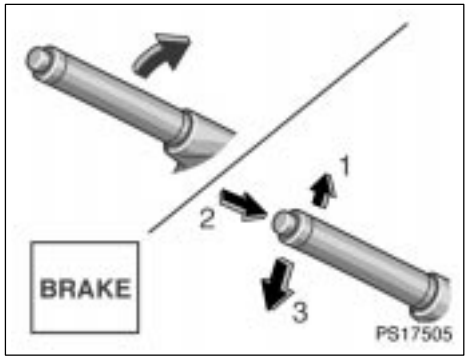

Type B

When parking, firmly apply the parking brake to avoid inadvertent creeping.

To set: Pull up the lever. For better holding power, first depress the brake pedal and hold it while setting the parking brake.

To release: Pull up the lever slightly (1), press the thumb button (2), and lower (3).

To remind you that the parking brake is set, the parking brake reminder light in the instrument panel remains on until you release the parking brake.

⚠ CAUTION

Before driving, be sure the parking brake is fully released and the parking brake reminder light is off.

Cruise control (on some models)

The cruise control is designed to maintain a set cruising speed without requiring the driver to operate the accelerator. Cruising speed can be set to any speed above 40 km/h (25 mph).

Within the limits of the engine's capabilities, cruising speed can be maintained up or down grades. However, changes in vehicle speed may occur on steeper grades.

⚠ CAUTION

- **To help maintain maximum control of your vehicle, do not use the cruise control when driving in heavy or varying traffic, or on slippery (rainy, icy or snow−covered) or winding roads.**
- **Avoid vehicle speed increases when driving downhill. If the vehicle speed is too fast in relation to the cruise control set speed, cancel the cruise control then downshift the transmission to use engine braking to slow down.**

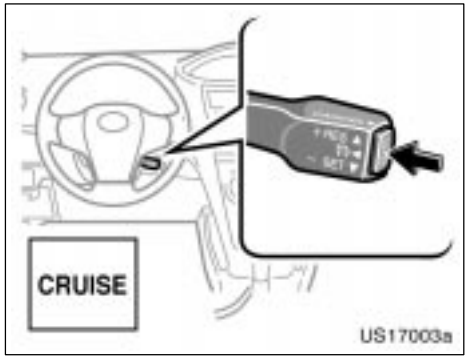

TURNING THE SYSTEM ON AND OFF

To turn the cruise control on, press the "ON−OFF" button. The "CRUISE" indicator light on the instrument panel will come on to indicate that the cruise control is operational. Pressing the "ON−OFF" button again turns the system off.

When the system is turned off, cruising speed must be reset when the cruise control is turned on again.

⚠ CAUTION

To avoid accidentally engaging the cruise control, turn the system off when it is not in use. Make sure the "CRUISE" indicator light is off.

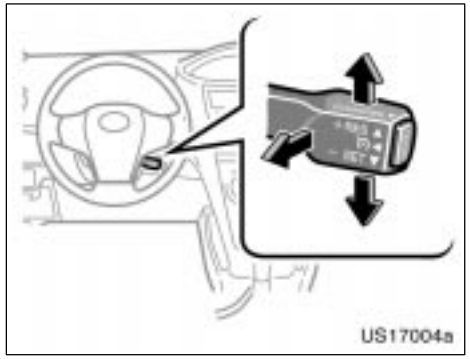

SETTING THE CRUISING SPEED

On vehicles with automatic transmission, the transmission must be in “D” before you set the cruising speed.

Bring your vehicle to the desired speed, push the lever down in the “− SET” direction and release it. This sets the vehicle at that speed. If the speed is not satisfactory, tap the lever up for a faster speed, or tap it down for a slower speed. Each tap changes the set speed by 1.6 km/h (1.0 mph). You can now take your foot off the accelerator pedal.

If you need acceleration—for example, when passing—depress the accelerator pedal enough for the vehicle to exceed the set speed. When you release it, the vehicle will return to the speed set prior to the acceleration.

⚠ CAUTION

For manual transmission:
While driving with the cruise control on, do not shift to neutral without depressing the clutch pedal, as this may cause engine racing or overrevving.

CANCELLING THE CRUISE CONTROL

The cruise control may be temporarily cancelled by the driver or by the system itself under certain circumstances. Temporary cancellation allows the set cruising speed to remain in memory.

The cruise control can be temporarily cancelled by doing the following:

- Pulling the lever in the “CANCEL” direction and releasing it
- Depressing the brake pedal
- Depressing the clutch pedal (manual transmission)

Under certain circumstances, the cruise control is temporarily cancelled:

- When vehicle speed falls below 40 km (25 mph)

When vehicle speed drops 16 km/h (10 mph) below the set speed, the cruise control is cancelled and the set speed is erased from memory.

The “CRUISE” indicator light remains on to indicate that the system is still in operation.

To turn the cruise control off, push the “ON−OFF” button. Make sure the “CRUISE” indicator light is off.

If the cruise control automatically cancels out other than for the above cases, have your vehicle checked by your Toyota dealer at the earliest opportunity.

RESUMING THE CRUISE CONTROL

If the cruise control is temporarily cancelled, the cruising speed can be resumed by pushing the lever up in the “+ RES” direction.

Vehicle speed must be above 40 km/h (25 mph).

RESETTING TO A FASTER SPEED

Push the lever up in the “+ RES” direction and hold it. Release the lever when the desired speed is attained. While the lever is held up, the vehicle will gradually gain speed.

However, a faster way to reset is to accelerate the vehicle and then push the lever down in the “− SET” direction.

RESETTING TO A SLOWER SPEED

Push the lever down in the “− SET” direction and hold it. Release the lever when the desired speed is attained. While the lever is held down, the vehicle speed will gradually decrease.

However, a faster way to reset is to depress the brake pedal and then push the lever down in the “− SET” direction.

On vehicles with automatic transmission, even if you turn off the overdrive switch, with the cruise control on, engine braking will not be applied because the cruise control is not cancelled. To decrease the vehicle speed, reset to a slower speed with the cruise control lever or depress the brake pedal. If you use the brake pedal, cruise control is cancelled.

CRUISE CONTROL FAILURE WARNING

If the “CRUISE” indicator light flashes when using the cruise control, press the “ON−OFF” button to turn the system off and then press it again to turn it on.

If any of the following conditions then occurs, there is some trouble in the cruise control system.

- The indicator light does not come on.
- The indicator light flashes again.
- The indicator light goes out after it comes on.

If this is the case, contact your Toyota dealer and have your vehicle inspected.

SECTION 1–8

OPERATION OF INSTRUMENTS AND CONTROLS

Audio system

Reference 126
Using your audio system 126
AUX adapter 141
Audio system operating hints 142

Reference

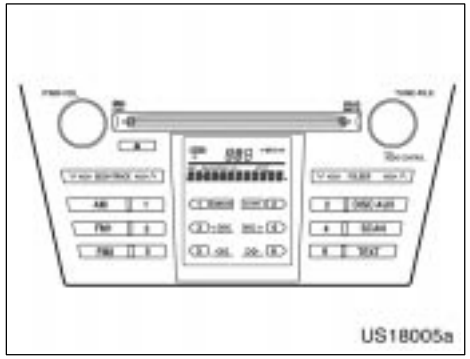

Type 1: AM·FM radio/compact disc player/ MP3/WMA player (with compact disc changer controller)

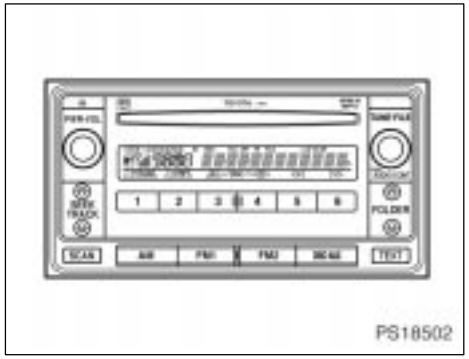

Type 2: AM·FM radio/compact disc player/ MP3/WMA player (with compact disc changer controller)

Using your audio system— —Some basics

This Section describes some of the basic features on Toyota audio systems. Some information may not pertain to your system.

Your audio system works when the ignition key is in the “ACC” or “ON” position.

TURNING THE SYSTEM ON AND OFF

Push “PWR·VOL” to turn the audio system on and off.

Push “AM”, “FM1”, “FM2” or “DISC·AUX” to turn on that function without pushing “PWR·VOL”. To turn on the compact disc player, a compact disc must be loaded in the player.

You can turn on the player by inserting a compact disc.

You can turn off the player by ejecting the compact disc. If the audio system was previously off, then the entire audio system will be turned off when you eject the compact disc. If another function was previously playing, it will come on again.

SWITCHING BETWEEN FUNCTIONS

Push “AM”, “FM1”, “FM2” or “DISC·AUX” if the system is already on but you want to switch from one function to another.

TONE AND BALANCE

For details about your system’s tone and balance controls, see the description of your own system.

SRS ®

Type 1 and 2 audio systems utilize SRS FOCUS® and SRS TruBass® audio enhancement technologies, under license from SRS Labs, Inc., in all mode except AM radio mode.

FOCUS, TruBass, SRS and symbol are trademarks of SRS Labs, Inc.
FOCUS and TruBass technologies are incorporated under license from SRS Labs, Inc.

Tone

How good an audio program sounds to you is largely determined by the mix of the treble and bass levels. In fact, different kinds of music and vocal programs usually sound better with different mixes of treble and bass.

Balance

A good balance of the left and right stereo channels and of the front and rear sound levels is also important.

Keep in mind that if you are listening to a stereo recording or broadcast, changing the right/left balance will increase the volume of one group of sounds while decreasing the volume of another.

YOUR RADIO ANTENNA

Your vehicle has an antenna printed on the inside of the rear window.

NOTICE

Putting a film (especially a conductive or metallic film) on the rear window will noticeably reduce the sensitivity of the radio.

YOUR COMPACT DISC PLAYER

When you insert a disc, gently push it in with the label side up. The player will play from track 1 through to the end of the disc. Then it will play from track 1 again.

NOTICE

Never try to disassemble or oil any part of the compact disc player. Do not insert anything other than compact discs into the slot.

—Controls and features

- **Type 1**

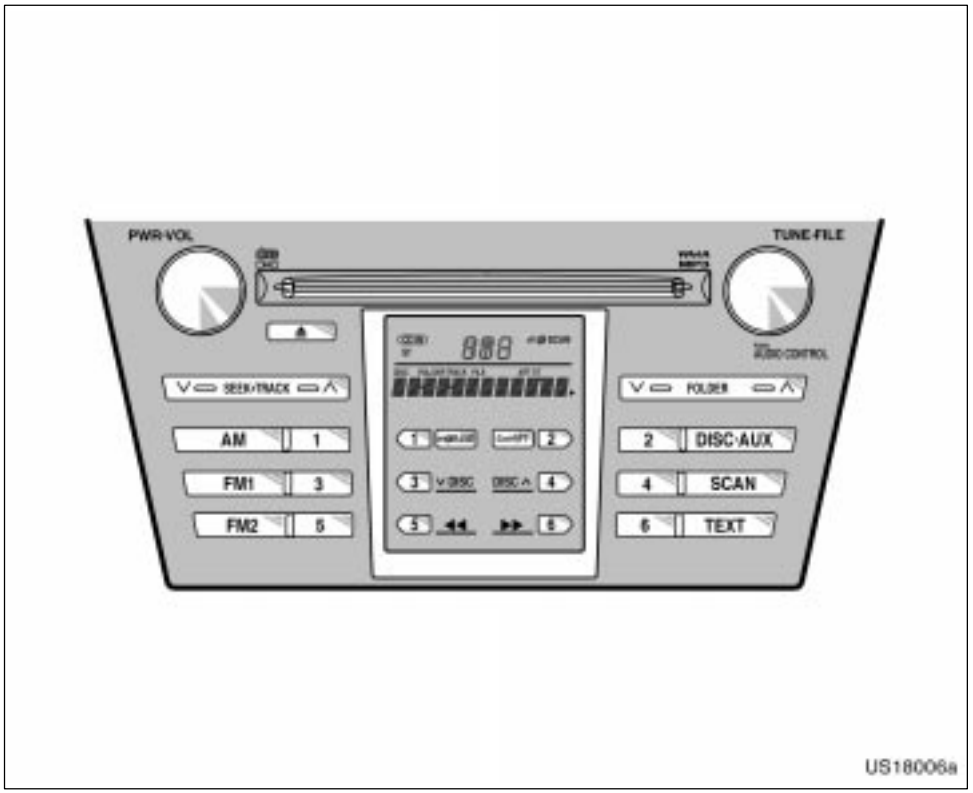

Details of specific buttons, controls, and features are described in the alphabetical list that follows.

1 2 3 4 5 6 (Preset buttons)

These buttons are used to preset and tune in radio stations.

To preset a station to a button: Tune in the desired station. (See “TUNE” or “SEEK/TRACK”.) Push and hold down the button until you hear a beep—this will set the station to the button. The preset button number will appear on the display.

To recall a preset station: Push the button for the station you want. The button number and station frequency will appear on the display.

These systems can store one AM and two FM stations for each button. (The display will show “AM”, “FM1” or “FM2” when you push “AM”, “FM1” or “FM2” button.)

⏏ (Eject button)

Push the compact disc eject button to eject a compact disc.

◀◀/▶▶ (Reverse/Fast−forward button)

Push and hold “▶▶” (preset button 6) or “◀◀” (preset button 5) to fast forward or reverse within a compact disc. When you release the button, the compact disc player will resume playing.

AM

Push the “AM” button to turn on the radio and select the AM band. “AM” will appear on the display.

AUDIO CONTROL (Tone and sound balance adjustment function)

Each time you push the “AUDIO CONTROL” knob, the mode changes. To adjust the tone and balance, turn the knob.

BAS: Adjusts low−pitched tones. The display ranges from −5 to 5.

TRE: Adjusts high−pitched tones. The display ranges from −5 to 5.

FAD: Adjusts the sound balance between the front and rear speakers. The display ranges from F7 to R7.

BAL: Adjusts the sound balance between the right and left speakers. The display ranges from L7 to R7.

LIVE−ACS (LIVE Acoustic/Psychological acoustic technology)

The acoustic enhancement technologies called FOCUS (Trademark) and TruBass (Trademark) are adopted under license with SRS corporation for all mode except for AM radio mode. By utilizing these technologies, low range can be enhanced without distorting the mid range. In addition, it can bring the sound stage upward so that the sound is audible from upper space even if the speakers are positioned around lower section.

FOCUS and TruBass technology is always contained in the sound quality of this player. FOCUS and TruBass technology is incorporated under license from SRS Labs, Inc.

DISC·AUX (Compact disc)

Push the “DISC·AUX” button to play a compact disc.

When the audio system is set to compact disc operation, the display shows the track, number currently being played.

Vehicles with AUX adapter—

To switch between CD and AUX (external device) modes, press the “DISC·AUX” button. The AUX mode is only available when AUX adapter is connected to the system. When the AUX adapter is in use, “AUX” will appear on the display.

Error messages

If the player malfunctions, your audio system will display following error messages.

“WAIT”: The compact disc player unit may be too hot. Allow the player to cool down.

“ERROR 1”: The disc may be dirty, damaged or inserted incorrectly (up−side down). Clean the disc and re−insert it.

“NO DISC”: The compact disc changer of separate unit is empty. Insert a disc.

“ERROR 3”: There is a problem inside the system. Eject the disc or magazine. Set the disc or magazine again.

“ERROR 4”: Over−current. Ask your Toyota dealer to inspect.

“CD OPEN”: The compact disc changer lid of separate unit is open. Close the compact disc changer lid.

“NO MUSIC”: The disc with no mp3/wma data has been inserted. Remove the disc from the player and insert a mp3/wma data disc.

If the malfunction still exists, take your vehicle to your Toyota dealer.

∨ **DISC** ×

With compact disc changer only—

Use these buttons to select a disc you want to listen to.

Push “∨” (preset button 3) or “×” (preset button 4) until the number of the disc you want to listen appears on the display.

FOLDER (Folder up/down)

To skip up or down to a different folder: Push either side of the “FOLDER” several times until the number of the folder you want to listen to appears on the display.

To jump to the first file in the current folder:
Push and hold “∨” side of the button until you hear a beep.

FM1 FM2

Push the “FM1” or “FM2” button to turn on the radio and select the FM band. “FM1” or “FM2” will appear on the display. This system allows you to set twelve FM stations, two for each of the preset button.

PWR·VOL (Power and Volume)

Push “PWR·VOL” to turn the audio system on and off. Turn “PWR·VOL” to adjust the volume.

RAND (Random)

Compact Disc Player

There are two random features—you can either listen to the tracks on one compact disc in random order, or listen to the tracks on all the compact discs in the magazine in random order.

To play the tracks on one disc in random order:
Quickly push and release “RAND” (preset button 1). “RAND” will appear on the display and the player will perform the tracks on the disc you are listening to in random order. To turn off the random feature, push this button again.

With compact disc changer only—

To play all the tracks in the magazine in random order:
Push and hold “RAND” (preset button 1) until you hear a beep. “RAND” will appear on the display and the player will perform all the tracks on all the discs in the magazine in random order. To turn off the random feature, push this button again.

MP3/WMA Player

There are two random features—you can either listen to all the files on the compact disc in random order, or only listen to the files in a folder in random order.

To randomly play the files on a folder:
Quickly push and release “RAND” (preset button 1). “RAND” will appear on the display.

To randomly play all the files on the compact disc:
Push and hold “RAND” (preset button 1) until you hear a beep. “RAND” will appear on the display and the player will play all the files on the disc in random order. To turn off the random feature, push this button again.

RPT (Repeat)

Compact Disc Player

Push “RPT” (preset button 2) to repeat a track. “RPT” will appear on the display. When the track ends, it will automatically be replayed. This process will be continued until you push the button again to turn off the repeat feature.

MP3/WMA Player

Push and hold “RPT” (preset button 2) until you hear a beep. “RPT” will appear on the display. The player will repeat all the files in the folder you are listening to. When the final file in the folder ends, the player will automatically go back to the first file in the folder and replay. To turn off the repeat feature, push this button again.

SCAN

Radio

You can either scan all the frequencies on a band or scan only the preset stations for that band.

To scan the preset stations:
Push and hold the “SCAN” button until you hear a beep. The radio will tune in the next preset station up the band, stay there for 5 seconds, and then move to the next preset station. To stop scanning, push this button again.

To scan all the frequencies:
Quickly push and release the “SCAN” button. The radio will find the next station up the station band, stay there for 5 seconds, and then scan again to the next station. To stop scanning, push this button again.

Compact disc player

There are two scan features—you can either scan the tracks on a specific disc or scan the first tracks of all the discs in the magazine.

Scanning the tracks on a disc:
Quickly push and release the “SCAN” button. “SCAN” will appear on the display and the player will scan all the tracks on the disc you are listening to. To stop scanning, push this button again. If the player scanned all the tracks on the disc, it will stop scanning.

With compact disc changer only—

Scanning the first tracks of all the discs in the magazine:
Push the “SCAN” button until you hear a beep. “SCAN” will appear on the display and the player will scan the first track of the next disc. To stop scanning, push this button again. If the player has scanned all the discs, it will stop scanning.

MP3/WMA Player

There are two scan features—you can either scan the files in a folder or scan the first file of all the folders.

Scanning the files in a folder:
Quickly push and release “SCAN”. “SCAN” will appear on the display and the player will scan all the files in the folder you are listening to. To select a file, push “SCAN” again. If the player scanned all the files in the folder, it will stop scanning.

Scanning the first file of all the folders:
Push “SCAN” until you hear a beep. “SCAN” will appear on the display and the player will scan the first file of the next folder. To select a folder, push the “SCAN” again. If the player has scanned all the folders, it will stop scanning.

SEEK/TRACK (Seeking/Track up/down)

Radio

In the seek mode, the radio finds and plays the next station up or down the station band.

To seek the next station, quickly push and release "∧" or "∨" side of the "SEEK/TRACK" button. Do this again to find the station after that.

Compact disc player

Use this button to skip up or down to a different track.

Push "∧" or "∨" side of the "SEEK/TRACK" button until the number of the track you want to listen to appears on the display. If you want to return to the beginning of the current track, quickly push the down side of the button one time.

MP3/WMA Player

To file up or down to a different file:
Push either side of the "TRACK" several times until the file you want to listen to appears on the display. If you want to return to the beginning of the current file, push the "∨" side of the button one time, quickly.

To fast forward or reverse the disc:
If you want to fast forward or reverse the disc, push and hold it until you hear a beep. When you release the button, the player will resume playing.

ST (Stereo reception) display

Your radio automatically changes to stereo reception when a stereo broadcast is received. "ST" appears on the display. If the signal becomes weak, the radio reduces the amount of channel separation to prevent the weak signal from creating noise. If the signal becomes extremely weak, the radio switches from stereo to mono reception.

TEXT

Compact Disc Player

This button is used to change the display for the compact disc that contains text data.

To change the display, quickly push and release the "TEXT" while the compact disc is playing. The display changes in the order from the elapsed time to disc title to track title, then back to the elapsed time.

If this button is pushed while a compact disc that does not contain text data is playing, "NO TITLE" will appear on the display.

If the entire disc or track title does not appear on the display, push and hold it until you hear a beep. The rest of the title (up to 24 letters) will appear.

MP3/WMA Player

This button is used to change the display for the MP3/WMA file that contains text data.

To change the display, quickly push and release the “TEXT” while the MP3/WMA file is playing. The display changes in the order from the elapsed time to folder name to file name to album title (MP3 file only) to track title to artist name, then back to the elapsed time.

If this button is pushed while a MP3/WMA file that does not contain text data is playing, “NO TITLE” will appear on the display.

If the entire text data is not displayed, push and hold it until you hear a beep. The rest of the text data will appear.

TUNE·FILE (Tuning and File up/down)

Radio

Turn the knob clockwise to step up the frequency. Turn the knob counterclockwise to step down the frequency.

MP3/WMA Player

Turn the knob clockwise to file up. Turn the knob counterclockwise to file down.

- **Type 2**



Details of specific buttons, controls and features are described in the alphabetical list that follows.

1 2 3 4 5 6 (Preset buttons)

These buttons are used to preset and tune in radio stations.

To preset a station to a button: Tune in the desired station. (See “TUNE” or “SEEK/TRACK”.) Push and hold down the button until you hear a beep—this will set the station to the button. The preset button number will appear on the display.

To recall a preset station: Push the button for the station you want. The button number and station frequency will appear on the display.

These systems can store one AM and two FM stations for each button. (The display will show “AM”, “FM1” or “FM2” when you push “AM”, “FM1” or “FM2” button.)

⏏ (Eject button)

Push the compact disc eject button to eject a compact disc.

◀◀/▶▶ (Reverse/Fast−forward button)

Push and hold “▶▶” (preset button 6) or “◀◀” (preset button 5) to fast forward or reverse within a compact disc. When you release the button, the compact disc player will resume playing.

AM

Push the “AM” button to turn on the radio and select the AM band. “AM” will appear on the display.

AUDIO CONT (Tone and sound balance adjustment function)

Each time you push the “AUDIO CONT” knob, the mode changes. To adjust the tone and balance, turn the knob.

BAS: Adjusts low−pitched tones. The display ranges from −5 to 5.

TRE: Adjusts high−pitched tones. The display ranges from −5 to 5.

FAD: Adjusts the sound balance between the front and rear speakers. The display ranges from F7 to R7.

BAL: Adjusts the sound balance between the right and left speakers. The display ranges from L7 to R7.

LIVE−ACS (LIVE Acoustic/Psychological acoustic technology)

The acoustic enhancement technologies called FOCUS (Trademark) and TruBass (Trademark) are adopted under license with SRS corporation for all mode except for AM radio mode. By utilizing these technologies, low range can be enhanced without distorting the mid range. In addition, it can bring the sound stage upward so that the sound is audible from upper space even if the speakers are positioned around lower section.

FOCUS and TruBass technology is always contained in the sound quality of this player. FOCUS and TruBass technology is incorporated under license from SRS Labs, Inc.

DISC·AUX (Compact disc)

Push the “DISC·AUX” button to play a compact disc.

When the audio system is set to compact disc operation, the display shows the track, number currently being played.

Vehicles with AUX adapter—

To switch between CD, DVD and AUX (external device) modes, press the “DISC·AUX” button. The AUX mode is only available when AUX adapter is connected to the system. When the AUX adapter is in use, “AUX” will appear on the display.

Error messages

If the player malfunctions, your audio system will display following error messages.

“WAIT”: The compact disc player unit may be too hot. Allow the player to cool down.

“ERROR 1”: The disc may be dirty, damaged or inserted incorrectly (up−side down). Clean the disc and re−insert it.

“NO DISC”: The compact disc changer of separate unit is empty. Insert a disc.

“ERROR 3”: There is a problem inside the system. Eject the disc or magazine. Set the disc or magazine again.

“ERROR 4”: Over−current. Ask your Toyota dealer to inspect.

“CD OPEN”: The compact disc changer lid of separate unit is open. Close the compact disc changer lid.

“NO MUSIC”: The disc with no mp3/wma data has been inserted. Remove the disc from the player and insert a mp3/wma data disc.

If the malfunction still exists, take your vehicle to your Toyota dealer.

∨ **DISC** ×

With compact disc changer only—

Use these buttons to select a disc you want to listen to.

Push “∨” (preset button 3) or “×” (preset button 4) until the number of the disc you want to listen appears on the display.

FOLDER (Folder up/down)

To skip up or down to a different folder: Push either side of the “FOLDER” several times until the number of the folder you want to listen to appears on the display.

To jump to the first file in the current folder:
Push and hold “∨” side of the button until you hear a beep.

FM1 FM2

Push the “FM1” or “FM2” button to turn on the radio and select the FM band. “FM1” or “FM2” will appear on the display. This system allows you to set twelve FM stations, two for each of the preset button.

PWR·VOL (Power and Volume)

Push “PWR·VOL” to turn the audio system on and off. Turn “PWR·VOL” to adjust the volume.

RAND (Random)

Compact Disc Player

There are two random features—you can either listen to the tracks on one compact disc in random order, or listen to the tracks on all the compact discs in the magazine in random order.

To play the tracks on one disc in random order:
Quickly push and release “RAND” (preset button 1). “RAND” will appear on the display and the player will perform the tracks on the disc you are listening to in random order. To turn off the random feature, push this button again.

With compact disc changer only—

To play all the tracks in the magazine in random order:
Push and hold “RAND” (preset button 1) until you hear a beep. “RAND” will appear on the display and the player will perform all the tracks on all the discs in the magazine in random order. To turn off the random feature, push this button again.

MP3/WMA Player

There are two random features—you can either listen to all the files on the compact disc in random order, or only listen to the files in a folder in random order.

To randomly play the files on a folder:
Quickly push and release “RAND” (preset button 1). “RAND” will appear on the display.

To randomly play all the files on the compact disc:
Push and hold “RAND” (preset button 1) until you hear a beep. “RAND” will appear on the display and the player will play all the files on the disc in random order. To turn off the random feature, push this button again.

RPT (Repeat)

Compact Disc Player

Push “RPT” (preset button 2) to repeat a track. “RPT” will appear on the display. When the track ends, it will automatically be replayed. This process will be continued until you push the button again to turn off the repeat feature.

MP3/WMA Player

Push and hold “RPT” (preset button 2) until you hear a beep. “RPT” will appear on the display. The player will repeat all the files in the folder you are listening to. When the final file in the folder ends, the player will automatically go back to the first file in the folder and replay. To turn off the repeat feature, push this button again.

SCAN

Radio

You can either scan all the frequencies on a band or scan only the preset stations for that band.

To scan the preset stations:
Push and hold the “SCAN” button until you hear a beep. The radio will tune in the next preset station up the band, stay there for 5 seconds, and then move to the next preset station. To stop scanning, push this button again.

To scan all the frequencies:
Quickly push and release the “SCAN” button. The radio will find the next station up the station band, stay there for 5 seconds, and then scan again to the next station. To stop scanning, push this button again.

Compact disc player

There are two scan features—you can either scan the tracks on a specific disc or scan the first tracks of all the discs in the magazine.

Scanning the tracks on a disc:
Quickly push and release the “SCAN” button. “SCAN” will appear on the display and the player will scan all the tracks on the disc you are listening to. To stop scanning, push this button again. If the player scanned all the tracks on the disc, it will stop scanning.

With compact disc changer only—

Scanning the first tracks of all the discs in the magazine:
Push the “SCAN” button until you hear a beep. “SCAN” will appear on the display and the player will scan the first track of the next disc. To stop scanning, push this button again. If the player has scanned all the discs, it will stop scanning.

MP3/WMA Player

There are two scan features—you can either scan the files in a folder or scan the first file of all the folders.

Scanning the files in a folder:
Quickly push and release “SCAN”. “SCAN” will appear on the display and the player will scan all the files in the folder you are listening to. To select a file, push “SCAN” again. If the player scanned all the files in the folder, it will stop scanning.

Scanning the first file of all the folders:
Push “SCAN” until you hear a beep. “SCAN” will appear on the display and the player will scan the first file of the next folder. To select a folder, push the “SCAN” again. If the player has scanned all the folders, it will stop scanning.

SEEK/TRACK (Seeking/Track up/down)

Radio

In the seek mode, the radio finds and plays the next station up or down the station band.

To seek the next station, quickly push and release "∧" or "∨" side of the "SEEK/ TRACK" button. Do this again to find the station after that.

Compact disc player

Use this button to skip up or down to a different track.

Push "∧" or "∨" side of the "SEEK/ TRACK" button until the number of the track you want to listen to appears on the display. If you want to return to the beginning of the current track, quickly push the down side of the button one time.

MP3/WMA Player

To file up or down to a different file:
Push either side of the "TRACK" several times until the file you want to listen to appears on the display. If you want to return to the beginning of the current file, push the "∨" side of the button one time, quickly.

To fast forward or reverse the disc:
If you want to fast forward or reverse the disc, push and hold it until you hear a beep. When you release the button, the player will resume playing.

ST (Stereo reception) display

Your radio automatically changes to stereo reception when a stereo broadcast is received. "ST" appears on the display. If the signal becomes weak, the radio reduces the amount of channel separation to prevent the weak signal from creating noise. If the signal becomes extremely weak, the radio switches from stereo to mono reception.

TEXT

Compact Disc Player

This button is used to change the display for the compact disc that contains text data.

To change the display, quickly push and release the "TEXT" while the compact disc is playing. The display changes in the order from the elapsed time to disc title to track title, then back to the elapsed time.

If this button is pushed while a compact disc that does not contain text data is playing, "NO TITLE" will appear on the display.

If the entire disc or track title does not appear on the display, push and hold it until you hear a beep. The rest of the title (up to 24 letters) will appear.

MP3/WMA Player

This button is used to change the display for the MP3/WMA file that contains text data.

To change the display, quickly push and release the “TEXT” while the MP3/WMA file is playing. The display changes in the order from the elapsed time to folder name to file name to album title (MP3 file only) to track title to artist name, then back to the elapsed time.

If this button is pushed while a MP3/WMA file that does not contain text data is playing, “NO TITLE” will appear on the display.

If the entire text data is not displayed, push and hold it until you hear a beep. The rest of the text data will appear.

TUNE·FILE (Tuning and File up/down)

Radio

Turn the knob clockwise to step up the frequency. Turn the knob counterclockwise to step down the frequency.

MP3/WMA Player

Turn the knob clockwise to file up. Turn the knob counterclockwise to file down.

AUX adapter

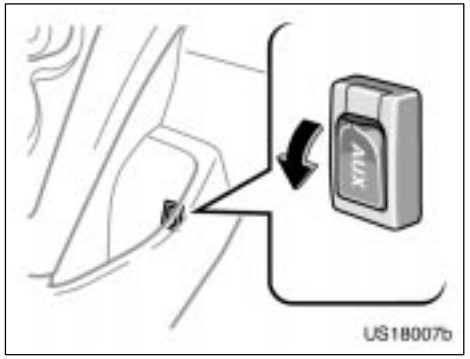

An AUX adapter is installed in the center pocket.

By inserting a mini plug into the AUX adapter, you can listen to music from a portable audio device through the vehicle’s speaker system.

To use the AUX adapter, switch to the AUX mode (external device mode) by pressing the “DISC·AUX” button. When the AUX adapter is in use, “AUX” will appear on the display. To adjust the volume, turn the “PWR·VOL” knob.

When using a portable audio device connected to the power outlet or cigarette lighter, noise may occur during playback. If this happens, use the power source of the portable audio device.

If you install an audio system other than a genuine audio system, you will not be able to use the AUX adapter.

Audio system operating hints

NOTICE

To ensure correct audio system operations:

- ***Be careful not to spill beverages over the audio system.***
- ***Do not put anything other than a Compact Disc into the slot.***
- ***The use of a cellular phone inside or near the vehicle may cause a noise from the speakers of the audio system which you are listening to. However, this does not indicate a malfunction.***

RADIO RECEPTION

Usually, a problem with radio reception does not mean there is a problem with your radio—it is just the normal result of conditions outside the vehicle.

For example, nearby buildings and terrain can interfere with FM reception. Power lines or telephone wires can interfere with AM signals. And of course, radio signals have a limited range, and the farther you are from a station, the weaker its signal will be. In addition, reception conditions change constantly as your vehicle moves.

Here are some common reception problems that probably do not indicate a problem with your radio:

FM

Fading and drifting stations—Generally, the effective range of FM is about 40 km (25 miles). Once outside this range, you may notice fading and drifting, which increase with the distance from the radio transmitter. They are often accompanied by distortion.

Multi−path—FM signals are reflective, making it possible for two signals to reach your antenna at the same time. If this happens, the signals will cancel each other out, causing a momentary flutter or loss of reception.

Static and fluttering—These occur when signals are blocked by buildings, trees, or other large objects. Increasing the bass level may reduce static and fluttering.

Station swapping—If the FM signal you are listening to is interrupted or weakened, and there is another strong station nearby on the FM band, your radio may tune in the second station until the original signal can be picked up again.

AM

Fading—AM broadcasts are reflected by the upper atmosphere—especially at night. These reflected signals can interfere with those received directly from the radio station, causing the radio station to sound alternately strong and weak.

Station interference—When a reflected signal and a signal received directly from a radio station are very nearly the same frequency, they can interfere with each other, making it difficult to hear the broadcast.

Static—AM is easily affected by external sources of electrical noise, such as high tension power lines, lightening, or electrical motors. This results in static.

CARING FOR YOUR COMPACT DISC PLAYER AND DISCS

- Extremely high temperatures can keep your compact disc player from working. On hot days, use the air conditioning to cool the vehicle interior before you listen to a disc.
- Bumpy roads or other vibrations may make your compact disc player skip.
- If moisture gets into your compact disc player, you may not hear any sound even though your compact disc player appears to be working. Remove the disc from the player and wait until it dries.

⚠ CAUTION

Compact disc players use an invisible laser beam which could cause hazardous radiation exposure if directed outside the unit. Be sure to operate the player correctly.



- Use only compact discs marked as shown above. The following products may not be playable on your compact disc player.

  Copy−protected CD
  CD−R (CD−Recordable)
  CD−RW (CD−Re−writable)
  CD−ROM

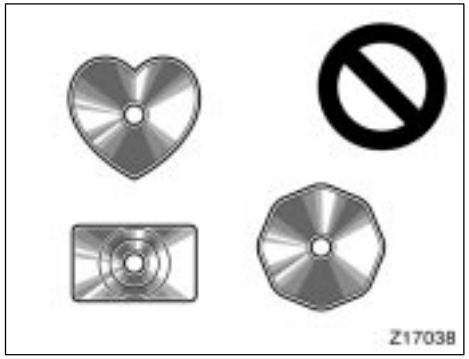

Special shaped discs

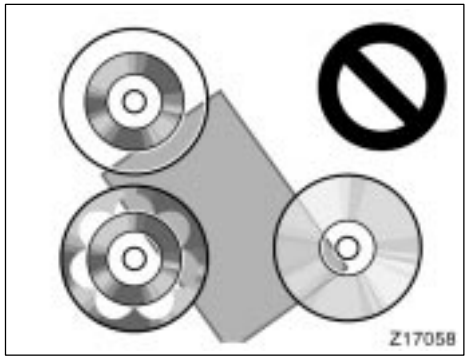

Transparent/translucent discs

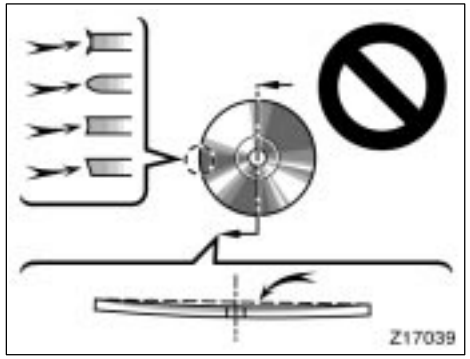

Low quality discs

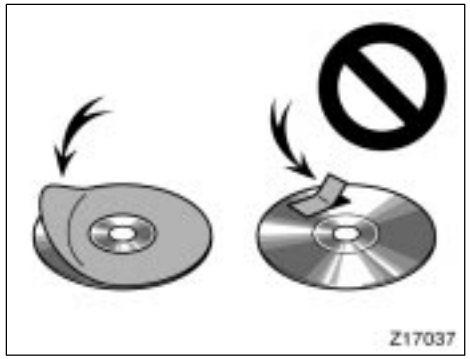

Labeled discs

NOTICE

Do not use special shaped, transparent/translucent, low quality or labeled discs such as those shown in the illustrations. The use of such discs may damage the player or changer, or it may be impossible to eject the discs.

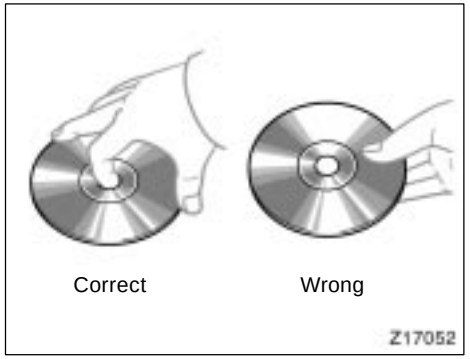

- Handle compact discs carefully, especially when you are inserting them. Hold them on the edge and do not bend them. Avoid getting fingerprints on them, particularly on the shiny side.
- Dirt, scratches, warping, pin holes, or other disc damage could cause the player to skip or to repeat a section of a track. (To see a pin hole, hold the disc up to the light.)
- Remove discs from the compact disc player when you are not listening to them. Store them in their plastic cases away from moisture, heat, and direct sunlight.

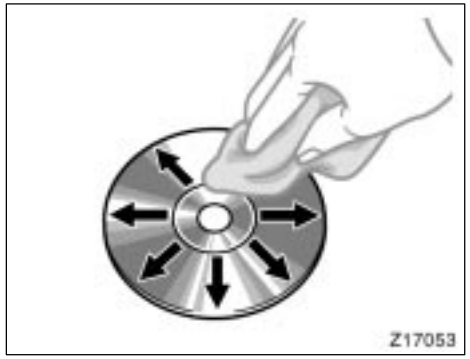

To clean a compact disc: Wipe it with a soft, lint−free cloth that has been dampened with water. Wipe in a straight line from the center to the edge of the disc (not in circles). Dry it with another soft, lint−free cloth. Do not use a conventional record cleaner or anti−static device.

MP3/WMA FILES

- MP3 is short for MPEG Audio Layer 3 and refers to an audio compression technology standard.
- WMA is short for Windows Media™ Audio. WMA is able to compress audio data to about 1/2 the level of MP3.
- The MP3/WMA player allows playback of MP3/WMA files on CD−ROM, CD−R and CD−RW discs.

  Disc recordings compatible with level 1 and level 2 of ISO 9660 and with the Romeo and Joliet file system can be played back.
- When naming a MP3/WMA file, and the corresponding filename extension (.mp3/.wma).
- The MP3/WMA player plays back files with the file name extension (.mp3/.wma) as an MP3/WMA file. To prevent noise and malfunctions, do not use this extension for files other than MP3/WMA files.
- It is possible to play back multi−session compatible recorded discs.
- When playing discs with MP3/WMA files and audio data (CD−DA) such as CD−EXTRA and MIXED−MODE CD, CD−DA only can be played.
- Files are compatible with the ID3 Tag Ver. 1.0, Ver. 1.1, Ver. 2.2 and Ver. 2.3 formats for display of album (disc title), track (track title) and artist (track artist).
- Files are compatible with the WMA Tag for display of album (disc title), track (track title) and artist (track artist).
- Only when MP3/WMA files of 32, 44.1 and 48 kHz frequencies are played back, the emphasis function is valid. (MP3 files: 16, 22.05, 24 kHz sampling frequencies can be played back.)
- The sound quality of MP3/WMA files generally becomes better with higher bit rates. This product can play recordings with bit rates as follows:
  MP3 files: 64 kbps to 320 kbps
  WMA files: 48 kbps to 320 kbps
  But in order to be able to enjoy a certain sound quality, it is recommended to use only discs recorded with a bit rate of at least 128 kbps.
- The MP3/WMA player does not play back MP3/WMA files from discs recorder using packet write data transfer (UDF format). Discs should be recorded using “pre−mastering” software rather than packet−write software.
- There is no m3u playlist compatibility.

- There is no compatibility with the MP3i (MP3 interactive) or mp3PRO format.
- The MP3/WMA player is compatible with VBR (Variable Bit Rate).
- When playing back files recorded as VBR (Variable Bit Rate) files, the play time will not be correctly displayed if fast−forward or reverse operations are used.
- It is not possible to check folders that do not include MP3/WMA files.
- MP3 files in up to 8 tiers of folders can be played back. However, there is a delay in the start of playback on discs with numerous tiers. For this reason we recommend creating discs with no more than 2 tiers.
- It is possible to play back up to 255 files on one disc.
- It is possible to play back up to 192 folders on one disc.

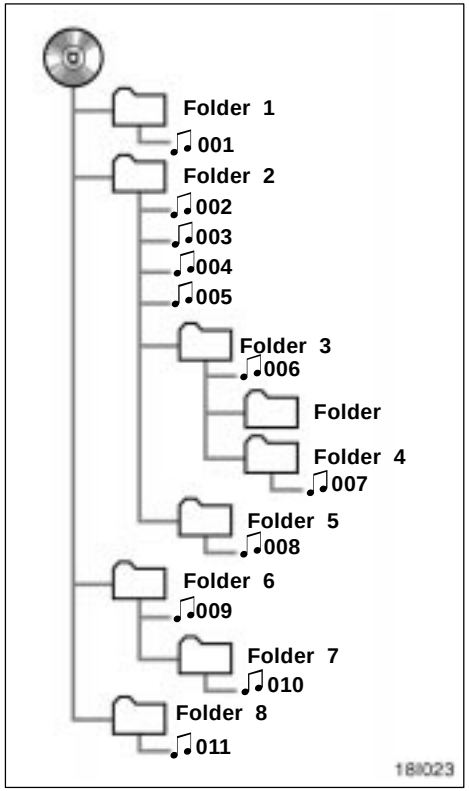

♫ : **MP3/WMA file**

- The turn of play of the compact disc having the structure shown on the left is as follows:

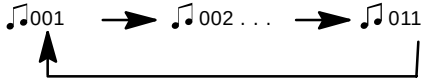

- The order changes depending on the PC and MP3/WMA encoding software you use.

CD−R and CD−RW discs

- CD−R/CD−RW discs that have not been subject to the “finalizing process” (a process that allows them to be played back on a conventional CD player) cannot be played back.
- It may not be possible to play back CD−R/CD−RW discs recorded on a music CD recorder or a personal computer because of disc characteristics, scratches or dirt on the disc, or dirt, condensation, etc. on the lens of this unit.
- Playback of discs recorded on a personal computer may not be possible depending on the application settings and the environment. Record with the correct format. (For details, contact the manufacturer of the applications.)
- Playback of CD−R/CD−RW discs may become impossible in case of direct exposure to sunlight, high temperatures, or the storage conditions in the vehicle.
- Titles and other text information recorded on a CD−R/CD−RW disc may not be displayed by the MP3/WMA player (in the case of audio data (CD−DA)).
- The MP3/WMA player conforms to the track skip function of the CD−R/CD−RW disc.
- If you insert a CD−RW disc into the MP3/WMA player, load time to playback will be longer than for a conventional CD or CD−R disc.
- Read the precautions accompanying the CD−R/CD−RW discs before use.
- Recordings on CD−R/CD−RW cannot be played back using the DDCD (Double Density CD) system.

TERMS

Packet write—

This is a general term for a method of writing on CD−R, etc. at the time required for a file, just as is done with files on floppy or hard discs.

Bit rate—

This expresses data volume per second, or bps units (bits per second). The higher the rate, the more information is available to reproduce the sound. Using the same encoding methods (such as MP3/WMA), the higher the rate, the better the sound.

Multi−session—

Multi−session is a recording method that allows additional data to be recorded later. When recording data on a CD−ROM, CD−R or CD−RW, etc., all data from beginning to end is treated as a single unit or session. Multi−session is a method of recording more than 2 sessions in one disc.

CD−DA—

CD−DA is an abbreviation of Compact Disc Digital Audio. It refers to the uncompressed format of regular CDs.

ID3/WMA Tag—

This is a method of embedding track−related information in a MP3/WMA file. This embedded information can include the track title, the artist's name, the album title, the music genre, the year of production, comments and other data. The contents can be freely edited using software with ID3/WMA tag editing functions. Although the tags are restricted to the number of characters, the information can be viewed when the track is played back.

ISO 9660 format—

This is the international standard for the format logic of CD−ROM folders and files. For the ISO 9660 format, there are regulations for the following two levels.

Level 1:

The file name is in 8.3 format (the name consists of up to 8 characters, half−byte English capital letters and half−byte numerals and the "−" sign, with a file extension of three characters.)

Level 2:

The file name can have up to 31 (MP3 files)/15 (WMA files) characters (including the separation mark "." and a file extension). Each folder contains less than 8 hierarchies.

Extended formats

Joliet:

File name can have up to 64 characters.

Romeo:

File names can have up to 128 characters.

m3u—

Playlists created using the "WINAMP" software have a playlist file extension (.m3u).

MP3—

MP3 is short for MPEG 1 & 2 Audio Layer 3. It is an audio compression standard set by a working group (MPEG) of the ISO (International Standards Organization). MP3 is able to compress audio data to about 1/10 the level of a conventional disc.

WMA—

WMA is short for Windows Media™ Audio. It is the audio file format developed by Microsoft Corporation. WMA is able to compress audio data to about 1/2 the level of MP3.

Windows Media™ and Windows® are registered trademarks of Microsoft Corporation in the United States and other countries.

SECTION 1-9

OPERATION OF INSTRUMENTS AND CONTROLS

Air conditioning system

Controls 150
Air flow selector settings 153
Operating tips 153
Instrument panel vents 155
Air conditioning filter 156

Controls

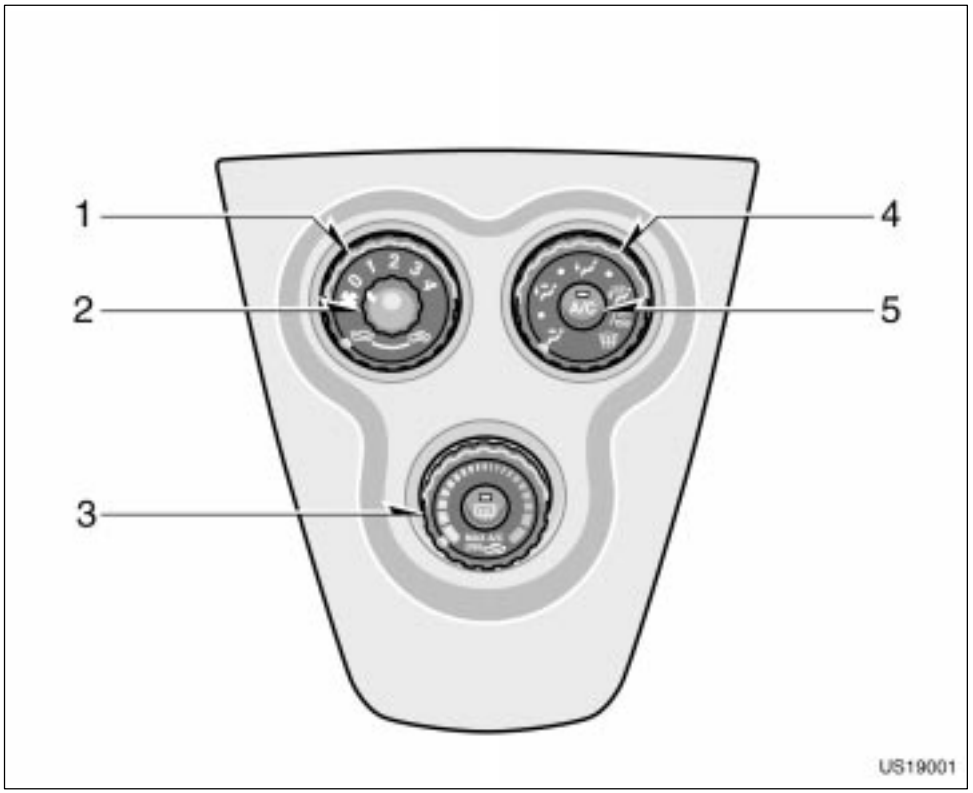

1. Air intake selector
2. Fan speed selector
3. Temperature selector
4. Air flow selector
5. “A/C” Button (on some models)

Fan speed selector

Turn the knob to adjust the fan speed—to the right to increase, to the left to decrease.

Temperature selector

Turn the knob to adjust the temperature—to the right to warm, to the left to cool.

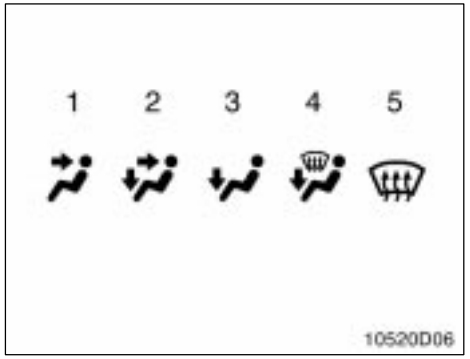

Air flow selector

Turn the knob to select the vents used for air flow.

1. **Panel—**Air flows mainly from the instrument panel vents.
2. **Bi−level—**Air flows from both the floor vents and the instrument panel vents.
3. **Floor—**Air flows mainly from the floor vents.
4. **Floor/Windshield—**Air flows mainly from the floor vents and windshield vents.

   Use with the air intake selector positioned in FRESH.
5. **Windshield—**Air flows mainly from the windshield vents.

   Turning the air flow selector to the windshield position turns on the defogging function with the purpose of clearing the front view.

   Use with the air intake selector positioned in FRESH.

Vehicles with “A/C” button—

Press the “A/C” button for dehumidified heating or cooling. This setting clears the front view more quickly.

For details about air flow selector settings, see “Air flow selector settings” described below.

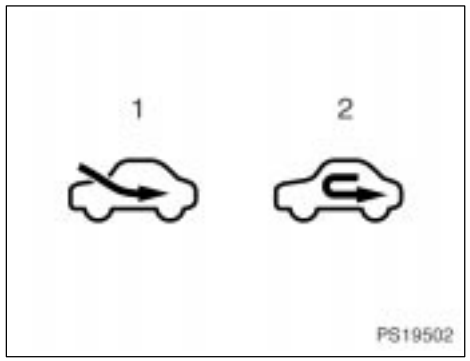

Air intake selector

Turn the knob to select the air source.

1. **Fresh—**Draws outside air into the system.
2. **Recirculate—**Recirculates the air inside the vehicle.

“A/C” button (on some models)

To turn on the air conditioning, press the “A/C” button. The “A/C” button indicator will come on. To turn the air conditioning off, press the button again.

Air flow selector settings

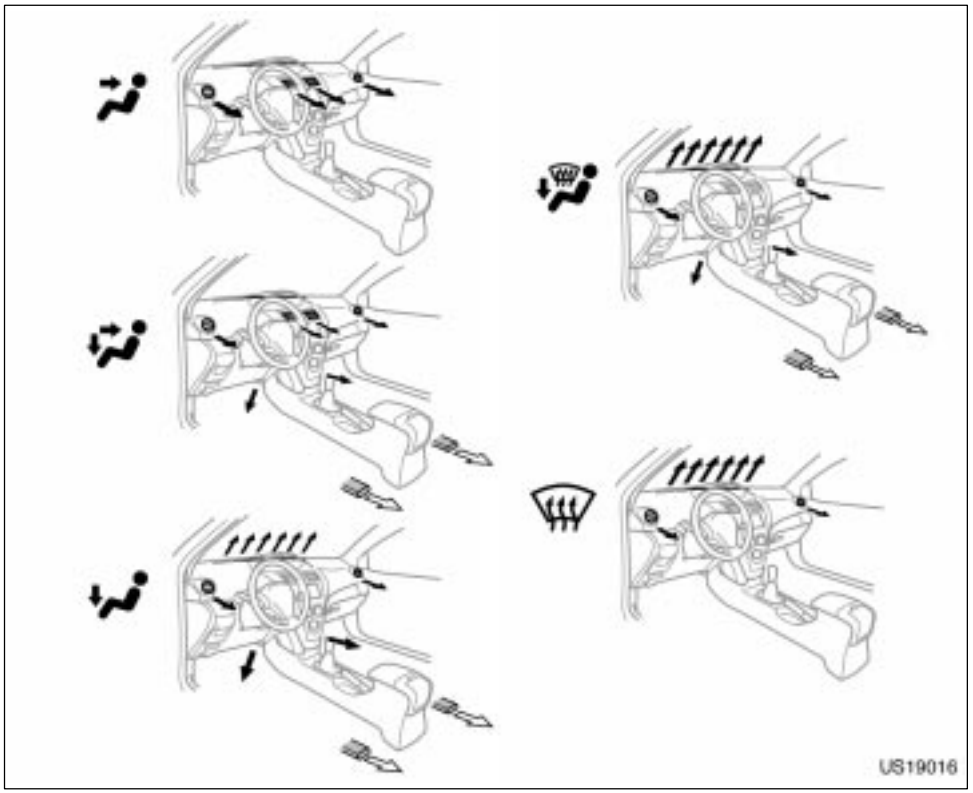

⇨: on some models

Operating tips

- To cool off your Toyota after it has been parked in the hot sun, drive with the windows open for a few minutes. This vents the hot air, allowing the air conditioning to cool the interior more quickly.
- Make sure the air intake grilles in front of the windshield are not blocked (by leaves or snow, for example).
- On humid days, do not blow cold air on the windshield. The windshield could fog up because of the difference in air temperature on the inside and outside of the windshield.
- Keep the area under the front seats clear to allow air to circulate throughout the vehicle.
- On cold days, set the fan speed to “high” for a minute to help clear the intake ducts of snow or moisture. This can reduce the amount of fogging on the windows.

- When driving on dusty roads, close all windows. If dust thrown up by the vehicle is still drawn into the vehicle after closing the windows, it is recommended that the air intake selector be set to FRESH and the fan speed selector to any setting except “0”.
- If following another vehicle on a dusty road, or driving in windy and dusty conditions, it is recommended that the air intake selector be temporarily set to RECIRCULATE, which will close off the outside passage and prevent outside air and dust from entering the vehicle interior.

Heating

For best results, set controls to:

Fan speed—Any setting except “0”
Temperature—Towards **WARM** (red zone)
Air intake—FRESH (outside air)
Air flow—FLOOR
Air conditioning—OFF

- For quick heating, select recirculated air for a few minutes. To keep the windows from fogging, select fresh after the vehicle interior has been warmed.
- Press the “A/C” button on for dehumidified heating.
- Choose floor/windshield air flow to heat the vehicle interior while defrosting or defogging the windshield.

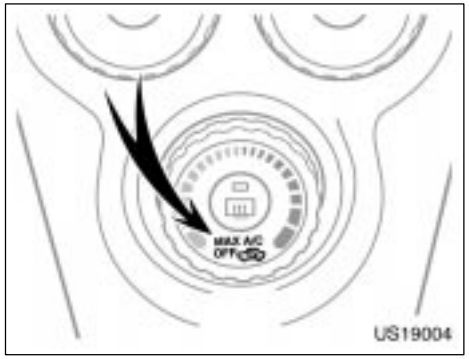

Air conditioning

For best results, set controls to:

Fan speed—Any setting except “0”
Temperature—Towards **COLD** (blue zone)
Air intake—FRESH (outside air)
Air flow—PANEL
Air conditioning—ON

- For quick cooling, turn the temperature selector knob fully towards COLD and change the air intake selector mode RECIRCULATE.

Ventilation

For best results, set controls to:

Fan speed—Any setting except “0”
Temperature—Towards **COLD** (blue zone)
Air intake—FRESH (outside air)
Air flow—PANEL
Air conditioning—OFF

Defogging and defrosting

The inside of the windshield

For best results, set controls to:

Fan speed—Any setting except “0”
Temperature—Towards **WARM** (red zone) to heat;
COLD (blue zone) to cool
Air intake—FRESH (outside air)
Air flow—WINDSHIELD

Turning the air flow selector to windshield position turns on the defogging function with the purpose of clearing the front view.

Vehicles with “A/C” button—

Press the “A/C” button for dehumidified heating or cooling. This setting clears the front view more quickly.

- On humid days, do not blow cold air on the windshield—the difference between the outside and inside temperatures could make the fogging worse.

The outside of the windshield

For best results, set controls to:

Fan speed—Any setting except “0”
Temperature—Towards **WARM** (red zone)
Air intake—FRESH (outside air)
Air flow—WINDSHIELD

Turning the air flow selector to windshield position turns on the defogging function with the purpose of clearing the front view.

Vehicles with “A/C” button—

Press the “A/C” button for dehumidified heating or cooling. This setting clears the front view more quickly.

- To heat the vehicle interior while defrosting the windshield, choose floor/windshield air flow.

Instrument panel vents

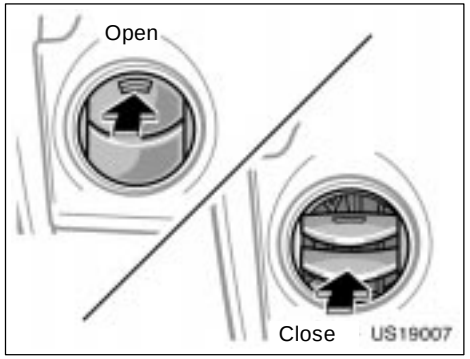

Side vents

If air flow control is not satisfactory, check the instrument panel vents. The instrument panel vents may be opened or closed as shown.

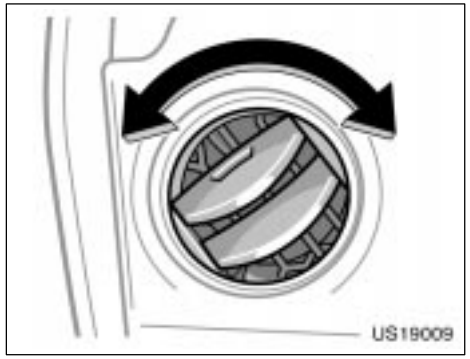

Side vents

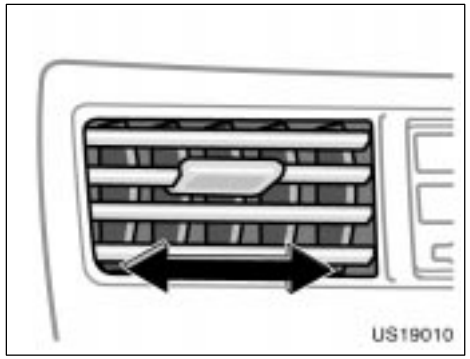

Center vents

You can change air flow direction by turning the instrument panel vents.

Air conditioning filter (on some models)—

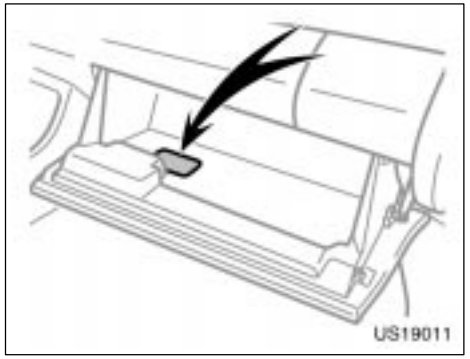

The air conditioning filter information label is placed inside of the glove box as shown and indicates that a filter has been installed.

The air conditioning filter prevents dust from entering the vehicle through the air conditioning vent.

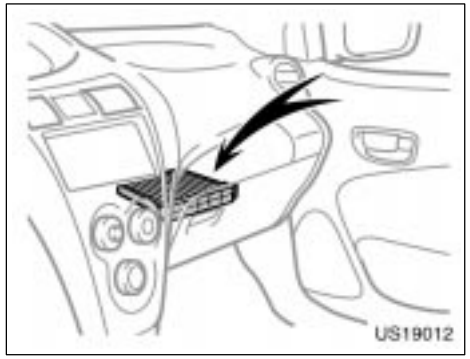

The air conditioning filter is behind the glove box.

—Checking and replacing the air conditioning filter

The air conditioning filter may clog after long use. The filter may need to be replaced if the air flow of the air conditioning and heater experiences extreme reductions in operating efficiency, or if the windows begin to fog up easily in FRESH mode.

To maintain the air conditioning efficiency, inspect and replace the air conditioning filter according to the maintenance schedule. In dusty areas or areas with heavy traffic flow, such as inner city or desert areas, early replacement may be required. (For scheduled maintenance information, please refer to the “Scheduled Maintenance Guide” or “Owner’s Manual Supplement.”)

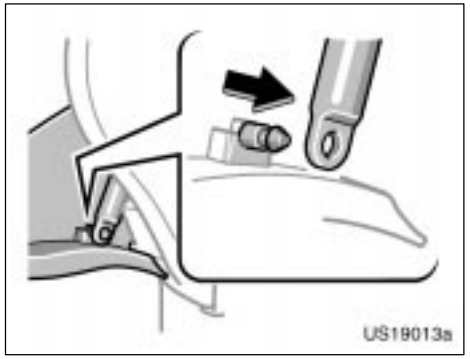

1. Open the glove box, and slide off the damper as shown.

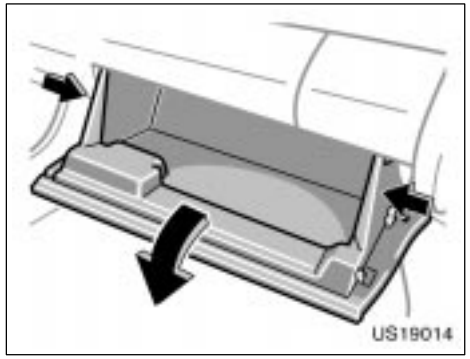

2. Push in each side of the glove box to disconnect the claws.

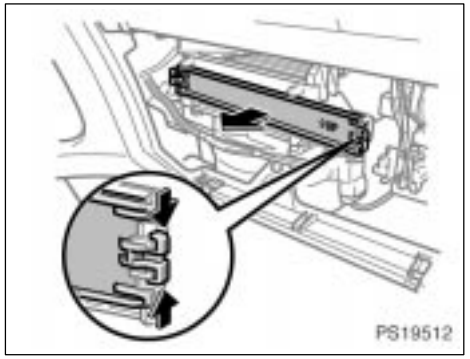

3. Pinch the knobs located on each side and remove the filter cover.

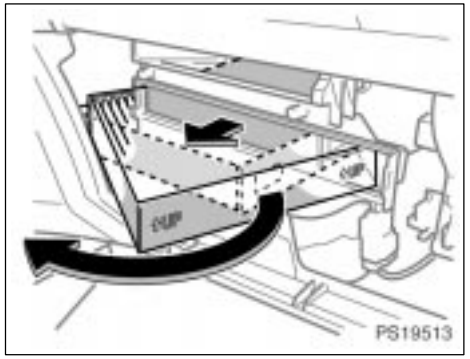

4. Pull out the filter and rotate it as shown in the illustration to remove. Inspect the filter on the surface.

If it is dirty, it should be replaced.

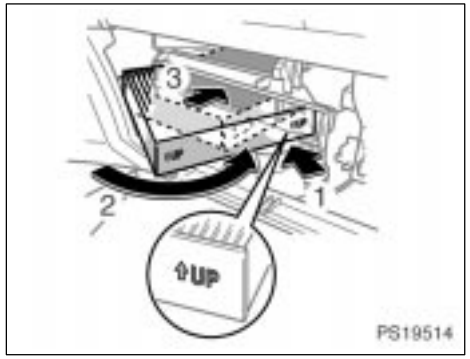

When inserting the filter in the filter outlet, keep the arrow pointing up and insert the filter as shown in the illustration above.

INFORMATION
The air filter should be installed properly in position. The use of air conditioning with the air filter removed may cause deteriorated dustproof performance and then affect air conditioning performance.

SECTION 1–10

OPERATION OF INSTRUMENTS AND CONTROLS

Other equipment

Clock 162
Cigarette lighter and portable ashtray 162
Power outlet 163
Glove box 164
Auxiliary box 164
Rear console box 165
Cup holders 165
Bottle holders 166
Luggage storage box 167
Floor mat 167

Clock

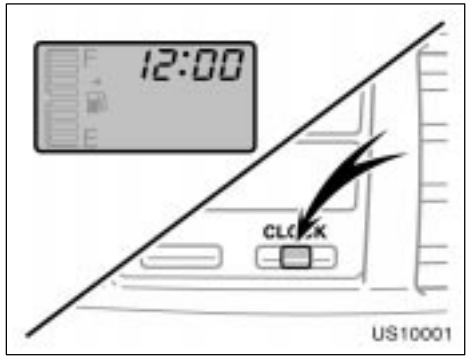

The digital clock indicates the time.

To adjust the clock, put the key in the “ON” position.

Pushing the reset knob flashes the indicator for the hour and you can adjust the hour.

Press the reset knob until the desired hour will appear.

After 5 or more seconds pass without operating, the indicator for the minute flashes. Then you can adjust the minute.

Press the reset knob until the desired minute will appear.

After 5 or more seconds passes without operating, the indicator will return to the normal display.

If the electrical power source has been disconnected from the clock, the time display will automatically be set to 1:00 (one o’clock).

Cigarette lighter and portable ashtray

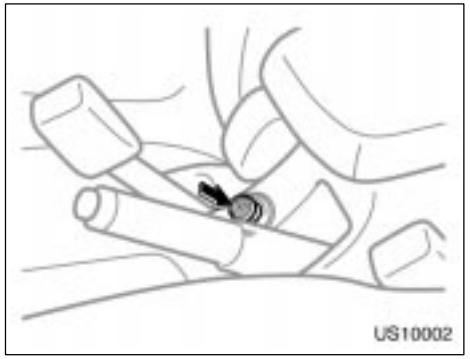

CIGARETTE LIGHTER

To use the cigarette lighter, press it in. After it finishes heating up, it automatically pops out ready for use.

If the engine is not running, the ignition key must be in the “ACC” or “ON” to use the lighter.

Do not hold the cigarette lighter pressed in.

Use a Toyota genuine cigarette lighter or equivalent for replacement.

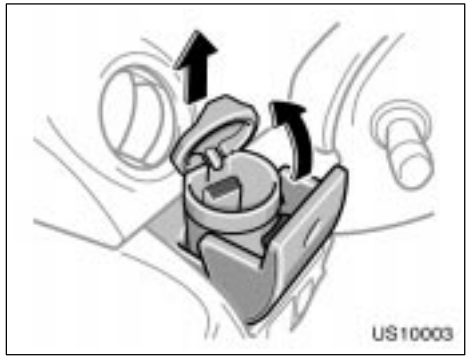

PORTABLE ASHTRAY

The ashtray can be removed and used outside the vehicle. To use the ashtray, open the lid.

When finished with your cigarette, thoroughly extinguish it in the ashtray to prevent other cigarette butts from catching fire. After using the ashtray, close the lid completely.

To remove the ashtray, pull it out from the front cup holder.

⚠ CAUTION

To reduce the chance of injury in case of an accident or sudden stop while driving, always completely close the ashtray after use.

Power outlet

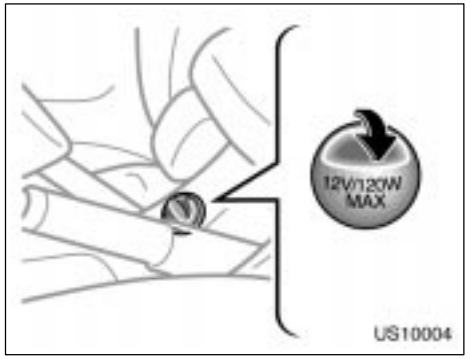

The power outlet is designed for power supply for car accessories. To use the power outlet, open as shown in the illustration.

The key must be in the “ACC” or “ON” position for the power outlet to be used.

NOTICE

- *To prevent the fuse from being blown, do not use the electricity over the total vehicle capacity of 12V/120W.*
- *To prevent the battery from being discharged, do not use the power outlet longer than necessary when the engine is not running.*
- *Close the power outlet lid when the power outlet is not in use. Inserting anything other than an appropriate plug that fits the outlet, or allowing any liquid to get into the outlet may cause electrical failure or short circuits.*

Glove box

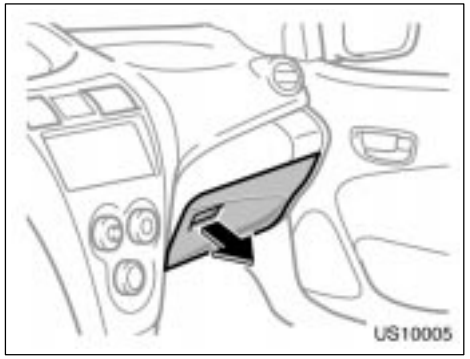

To open the glove box, pull the lever.

⚠ CAUTION

To reduce the chance of injury in case of an accident or a sudden stop, always keep the glove box door closed while driving.

Auxiliary box

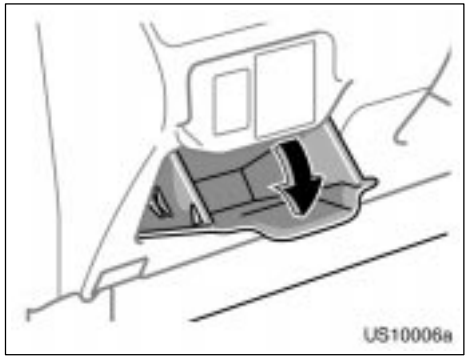

To use the auxiliary box, open the lid as shown in the illustration.

⚠ CAUTION

- To reduce the chance of injury in case of an accident or a sudden stop, always keep the auxiliary box closed while driving.
- Do not use the auxiliary box as an ashtray.

Rear console box

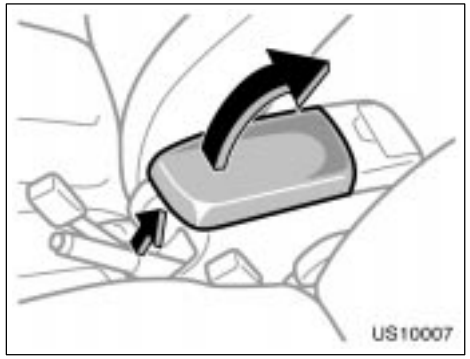

To access the rear console box, pull up the lock release lever while raising the rear console box lid.

⚠ CAUTION

To reduce the chance of injury in case of an accident or a sudden stop, always keep the console box closed while driving.

Cup holders

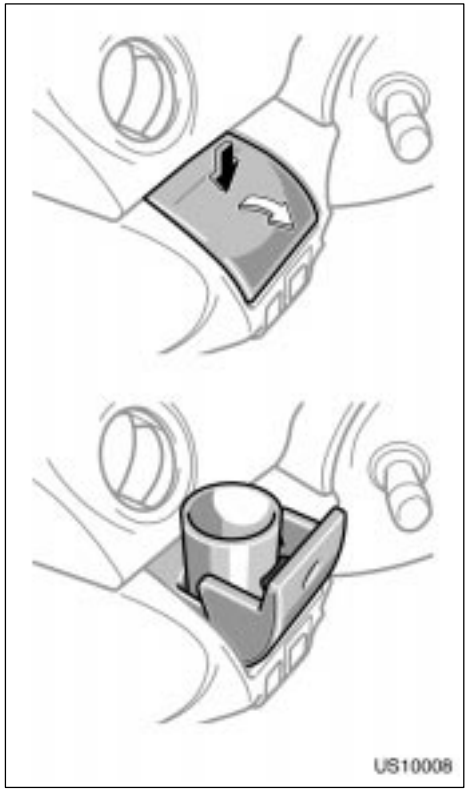

Front

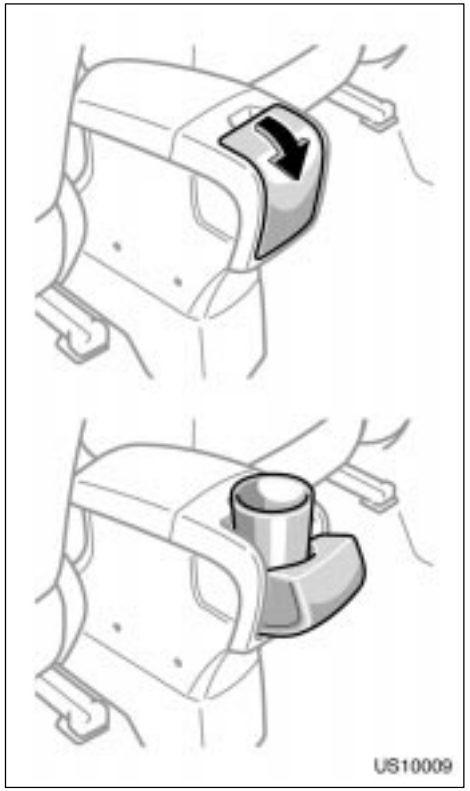

Rear (type A)

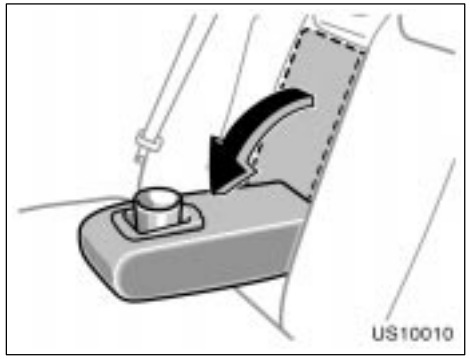

Rear (type B)

The cup holders are designed for holding cups or drink−cans securely.

To use the cup holder:

Front—Push on the cup holder.

Do not place any items other than cups or drink−cans, such as coins, in the cup holder. If any foreign items enter the gap of the cup holder, contact your Toyota dealer.

Rear (type A)—Pull it out.

Rear (type B)—Pull down the armrest.

⚠ CAUTION

- **Do not place anything else other than cups or drink−cans in the cup holders, as such items may be thrown about in the compartment and possibly injure people in the vehicle during sudden braking or in an accident.**
- **To reduce the chance of injury in case of an accident or a sudden stop while driving, keep the cup holder closed when it is not in use.**
- **Rear (type B)—Do not lift the armrest upright when the cup holder is in use.**

Bottle holders

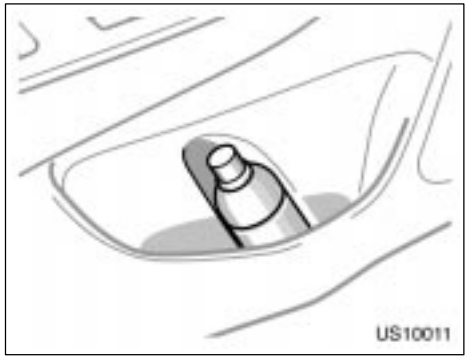

The bottle holders are designed to hold bottles securely.

⚠ CAUTION

Do not attempt to use the holder for any other purpose for which it was intended. Inappropriately sized or shaped objects may be thrown about in the compartment and possibly injured people in the vehicle during a sudden braking or an accident.

NOTICE

Do not put a cup or open bottle in the bottle holder because the contents may spill when the door opens or closes.

Luggage storage box

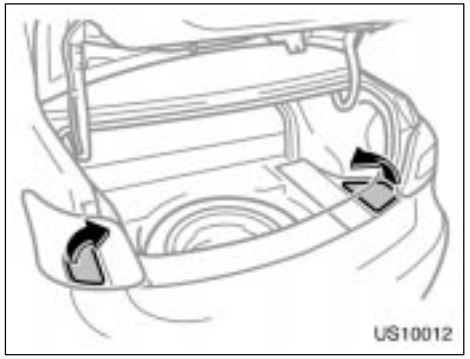

To use the luggage storage box, open it as shown above.

⚠ CAUTION

To reduce the chance of injury in case of an accident or a sudden stop, always keep the luggage storage boxes closed while driving.

Floor mat

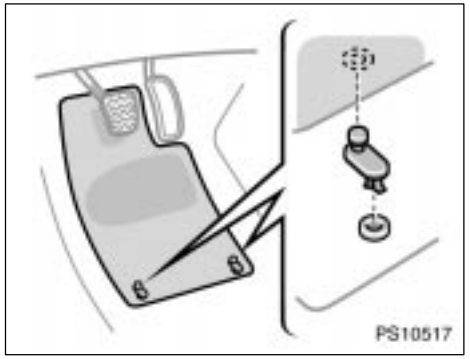

Use a floor mat of the correct size.

If the vehicle carpet and floor mat have two holes, then they are designed for use with two locking clips. Attach the floor mat to the vehicle carpet using the clips. Lock the clips into the holes in the vehicle carpet.



⚠ CAUTION

Make sure the floor mat is properly placed on the vehicle carpet. If the floor mat slips and interferes with the movement of the pedals during driving, it may cause an accident.

SECTION 2

INFORMATION BEFORE DRIVING YOUR TOYOTA

Information before driving your Toyota

Break−in period 170
Fuel 170
Fuel pump shut off system 172
Operation in foreign countries 172
Three−way catalytic converter 172
Engine exhaust cautions 173
Facts about engine oil consumption 174
Iridium−tipped spark plugs 175
Brake system 176
Electric power steering system 179
Brake pad wear limit indicators 180
Your Toyota's identification 180
Theft prevention labels 181
Suspension and chassis 182
Tire information 183
Vehicle load limits 193
Cargo and luggage 194
Types of tires 196

Break−in period

Drive gently and avoid high speeds.

Your vehicle does not need an elaborate break−in. But following a few simple tips for the first 1600 km (1000 miles) can add to the future economy and long life of your vehicle:

- Avoid full throttle acceleration when starting and driving.
- Avoid racing the engine.
- Try to avoid hard stops during the first 300 km (200 miles).
- Do not drive slowly with the manual transmission in a high gear.
- Do not drive for a long time at any single speed, either fast or slow.
- Do not tow a trailer during the first 800 km (500 miles).

Fuel

FUEL TYPE

Your new vehicle must use only unleaded gasoline.

To help prevent gas station mix−ups, your Toyota has a smaller fuel tank opening. The special nozzle on pumps with unleaded fuel will fit it, but the larger standard nozzle on pumps with leaded gas will not.

At a minimum, the gasoline you use should meet specifications of ASTM D4814 in the U.S.A. and CGSB 3.5−M93 in Canada.

NOTICE

Do not use leaded gasoline. Use of leaded gasoline will cause the three−way catalytic converter to lose its effectiveness and the emission control system to function improperly. Also, this can increase maintenance costs.

OCTANE RATING

Select Octane Rating 87 (Research Octane Number 91) or higher.

Use of unleaded gasoline with an octane rating or research octane number lower than stated above will cause persistent heavy knocking. If it is severe, this will lead to engine damage.

If your engine knocks...

If you detect heavy knocking even when using the recommended fuel, or if you hear steady knocking while holding a steady speed on level roads, consult your Toyota dealer.

However, occasionally, you may notice light knocking for a short time while accelerating or driving up hills. This is normal and there is no need for concern.

GASOLINES CONTAINING DETERGENT ADDITIVES

Toyota recommends the use of gasoline that contain detergent additives to avoid build−up of engine deposits.

However, all gasoline sold in the U.S. contains detergent additives to keep clean and/or clean intake systems.

QUALITY GASOLINE

Automotive manufacturers in the U.S., Europe and Japan have developed a specification for quality fuel named World−Wide Fuel Charter (WWFC) that is expected to be applied world wide. The WWFC consists of four categories that depend on required emission levels. In the U.S., category 4 has been adopted. The WWFC improves air quality by providing for better emissions in vehicle fleets, and customer satisfaction through better vehicle performance.

CLEANER BURNING GASOLINE

Cleaner burning gasoline, including reformulated gasoline that contains oxygenates such as ethanol or MTBE is available in many areas.

Toyota recommends the use of cleaner burning gasoline and appropriately blended reformulated gasoline. These types of gasoline provide excellent vehicle performance, reduce vehicle emissions, and improve air quality.

OXYGENATES IN GASOLINE

Toyota allows the use of oxygenate blended gasoline where the oxygenate content is up to 10% ethanol or 15% MTBE. If you use gasohol in your Toyota, be sure that it has an octane rating no lower than 87.

Toyota does not recommend the use of gasoline containing methanol.

GASOLINE CONTAINING MMT

Some gasoline contain an octane enhancing additive called MMT (Methylcyclopentadienyl Manganese Tricarbonyl).

Toyota does not recommend the use of gasoline that contains MMT. If fuel containing MMT is used, your emission control system may be adversely affected. The Malfunction Indicator Lamp on the instrument cluster may come on. If this happens, contact your Toyota dealer for service.

GASOLINE QUALITY

In a very few cases, you may experience drivability problems caused by the particular gasoline that you are using. If you continue to have unacceptable drivability, try changing gasoline brands. If this does not rectify your problem, then consult your Toyota dealer.

NOTICE

- ***Do not use gasohol other than stated above. It will cause fuel system damage or vehicle performance problems.***
- ***If drivability problems occur (poor hot starting, vaporizing, engine knock, etc.), discontinue the use.***
- ***Take care not to spill gasohol during refueling. Gasohol may cause paint damage.***

FUEL TANK CAPACITY

42 L (11.1 gal., 9.2 lmp. gal.)

Fuel pump shut off system

The fuel pump shut off system stops supplying fuel to the engine to minimize the risk of fuel leakage when the engine stalls or an airbag inflates upon collision. To restart the engine after the fuel pump shut off system activates, turn the ignition switch to “ACC” or “LOCK” once and start it.

⚠ CAUTION

Inspect the ground under the vehicle before restarting the engine. If you find that liquid has leaked onto the ground, it is the fuel system has been damaged and it is in need of repair. In this case, do not restart the engine.

Operation in foreign countries

If you plan to drive your Toyota in another country...

First, comply with the vehicle registration laws.

Second, confirm the availability of the correct fuel (unleaded and minimum octane number).

Three−way catalytic converter

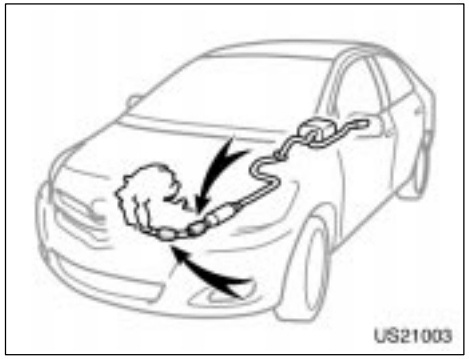

The three−way catalytic converter is an emission control device installed in the exhaust system.

The purpose is to reduce pollutants in the exhaust gas.

⚠ CAUTION

- **Keep people and combustible materials away from the exhaust pipe while the engine is running. The exhaust gas is very hot.**
- **Do not drive, idle or park your vehicle over anything that might burn easily such as grass, leaves, paper or rags.**

NOTICE

A large amount of unburned gases flowing into the three−way catalytic converter may cause it to overheat and create a fire hazard. To prevent this and other damage, observe the following precautions:

- *Use only unleaded gasoline.*
- *Do not drive with an extremely low fuel level; running out of fuel could cause the engine to misfire, creating an excessive load on the three−way catalytic converter.*
- *Do not allow the engine to run at idle speed for more than 20 minutes.*
- *Avoid racing the engine.*
- *Do not push−start or pull−start your vehicle.*
- *Do not turn off the ignition while the vehicle is moving.*

- *Keep your engine in good running order. Malfunctions in the engine electrical system, electronic ignition system/distributor ignition system or fuel system could cause an extremely high three−way catalytic converter temperature.*
- *If the engine becomes difficult to start or stalls frequently, take your vehicle in for a check−up as soon as possible. Remember, your Toyota dealer knows your vehicle and its three−way catalytic converter system best.*
- *To ensure that the three−way catalytic converter and the entire emission control system operate properly, your vehicle must receive the periodic inspections required by the Toyota Maintenance Schedule. For scheduled maintenance information, refer to the "Scheduled Maintenance Guide" or "Owner's Manual Supplement".*

Engine exhaust cautions

⚠ CAUTION

- **Avoid inhaling the engine exhaust. It contains carbon monoxide, which is a colorless and odorless gas. It can cause unconsciousness or even death.**
- **Make sure the exhaust system has no holes or loose connections. The system should be checked from time to time. If you hit something, or notice a change in the sound of the exhaust, have the system checked immediately.**
- **Do not run the engine in a garage or enclosed area except for the time needed to drive the vehicle in or out. The exhaust gases cannot escape, making this a particularly dangerous situation.**
- **Do not remain for a long time in a parked vehicle with the engine running. If it is unavoidable, however, do so only in an unconfined area and adjust the heating or cooling system to force outside air into the vehicle.**

- **Keep the trunk lid closed while driving. An open or unsealed trunk lid may cause exhaust gases to be drawn into the vehicle.**
- **To allow proper operation of your vehicle's ventilation system, keep the inlet grilles in front of the windshield clear of snow, leaves, or other obstructions.**
- **If you smell exhaust fumes in the vehicle, open the windows and close the trunk lid to ensure plenty of fresh air enters the vehicle. If you can smell exhaust fumes even though there are no other vehicles in the surrounding area, have your vehicle checked by your Toyota dealer. Continued inhalation of exhaust fumes can lead to death by gas poisoning.**

Facts about engine oil consumption

FUNCTIONS OF ENGINE OIL

Engine oil has the primary functions of lubricating and cooling the inside of the engine, and plays a major role in maintaining the engine in proper working order.

ENGINE OIL CONSUMPTION

It is normal that an engine should consume some engine oil during normal engine operation. The causes of oil consumption in a normal engine are as follows.

- Oil is used to lubricate pistons, piston rings and cylinders. A thin film of oil is left on the cylinder wall when a piston moves downwards in the cylinder. High negative pressure generated when the vehicle is decelerating sucks some of this oil into the combustion chamber. This oil as well as some part of the oil film left on the cylinder wall is burned by the high temperature combustion gases during the combustion process.
- Oil is also used to lubricate the stems of the intake valves. Some of this oil is sucked into the combustion chamber together with the intake air and is burned along with the fuel. High temperature exhaust gases also burn the oil used to lubricate the exhaust valve stems.

The amount of engine oil consumed depends on the viscosity of the oil, the quality of the oil and the conditions the vehicle is driven under.

More oil is consumed by high−speed driving and frequent acceleration and deceleration.

A new engine consumes more oil, since its pistons, piston rings and cylinder walls have not become conditioned.

Oil consumption: Max. 1.0 L per 1000 km (1.1 qts./600 miles, 0.9 lmp.qts./600 miles)

When judging the amount of oil consumption, note that the oil may become diluted and make it difficult to judge the true level accurately.

As an example, if a vehicle is used for repeated short trips, and consumes a normal amount of oil, the dipstick may not show any drop in the oil level at all, even after 1000 km (600 miles) or more. This is because the oil is gradually becoming diluted with fuel or moisture, making it appear that the oil level has not changed.

The diluting ingredients evaporate out when the vehicle is then driven at high speeds, as on an express way, making it appear that oil is excessively consumed after driving at high speeds.

IMPORTANCE OF ENGINE OIL LEVEL CHECK

One of the most important points in proper vehicle maintenance is to keep the engine oil at the optimum level so that oil function will not be impaired. Therefore, it is essential that the oil level be checked regularly. Toyota recommends that the oil level be checked every time you refuel the vehicle.

NOTICE
Failure to check the oil level regularly could lead to serious engine trouble due to insufficient oil.

For detailed information on oil level check, see “Checking the engine oil level” on page 258 in Section 7−2.

Iridium−tipped spark plugs

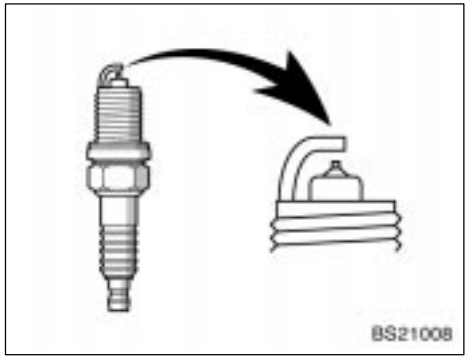

Your engine is fitted with iridium−tipped spark plugs.

NOTICE
Use only iridium−tipped spark plugs. Do not adjust gaps for engine performance or smooth drivability.

Brake system

The tandem master cylinder brake system is a hydraulic system with two separate sub−systems. If either sub−system should fail, the other will still work. However, the pedal will be harder to press, and your stopping distance will increase. Also, the brake system warning light may come on.

⚠ CAUTION

Do not drive your vehicle with only a single brake system. Have your brakes fixed immediately.

BRAKE BOOSTER

The brake booster uses engine vacuum to power−assist the brakes. If the engine should quit while you are driving, you can bring the vehicle to a stop with normal pedal pressure. There is enough reserved vacuum for one or two stops—but no more!

⚠ CAUTION

- **Do not pump the brake pedal if the engine stalls. Each push on the pedal uses up your reserved vacuum.**
- **Even if the power assist is completely lost, the brakes will still work. But you will have to push the pedal hard, much harder than normal. And your braking distance will increase.**

ANTI−LOCK BRAKE SYSTEM (with “ABS” warning light)

The anti−lock brake system is designed to help prevent lock−up of the wheels during a sudden braking or braking on slippery road surfaces. This assists in providing directional stability and steering performance of the vehicle under these circumstances.

Effective way to press the ABS brake pedal:
When the anti−lock brake system function is in action, you may feel the brake pedal pulsating and hear a noise. In this situation, to let the anti−lock brake system work for you, just hold the brake pedal down more firmly. Do not pump the brake in a panic stop. This will result in reduced braking performance.

The anti−lock brake system becomes operative after the vehicle has accelerated to a speed in excess of approximately 10 km/h (6 mph). It stops operating when the vehicle decelerates to a speed below approximately 5 km/h (3 mph).

Depressing the brake pedal on slippery road surfaces such as on a manhole cover, a steel plate at a construction site, joints in a bridge, etc. on a rainy day tends to activate the anti−lock brake system.

You may hear a click or motor sound in the engine compartment for a few seconds when the engine is started or just after the vehicle begins to move. This means that the anti−lock brake system is in the self−check mode, and does not indicate a malfunction.

When the anti−lock brake system is activated, the following conditions may occur. They do not indicate a malfunction of the system:

- You may hear the anti−lock brake system operating and feel the brake pedal pulsating and the vibrations of the vehicle body and steering wheel. You may also hear the motor sound in the engine compartment even after the vehicle is stopped.
- At the end of the anti−lock brake system activation, the brake pedal may move a little forward.

⚠ CAUTION

Do not overestimate the anti−lock brake system: Although the anti−lock brake system assists in providing vehicle control, it is still important to drive with all due care and maintain a moderate speed and safe distance from the vehicle in front of you, because there are limits to the vehicle stability and effectiveness of steering wheel operation even with the anti−lock brake system on.

If tire grip performance exceeds its capability, or if hydroplaning occurs during high speed driving in the rain, the anti−lock brake system does not provide vehicle control.

Anti−lock brake system is not designed to shorten the stopping distance: Always drive at a moderate speed and maintain a safe distance from the vehicle in front of you. Compared with vehicles without an anti−lock brake system, your vehicle may require a longer stopping distance in the following cases:

- **Driving on rough, gravel or snow−covered roads.**
- **Driving with tire chains installed.**
- **Driving over the steps such as the joints on the road.**
- **Driving on roads where the road surface is pitted or has other differences in surface height.**

Install all 4 tire of specified size at appropriate pressure: The anti−lock brake system detects vehicle speeds using the speed sensors for respective wheels' turning speeds. The use of tires other than specified may fail to detect the accurate turning speed resulting in a longer stopping distance.

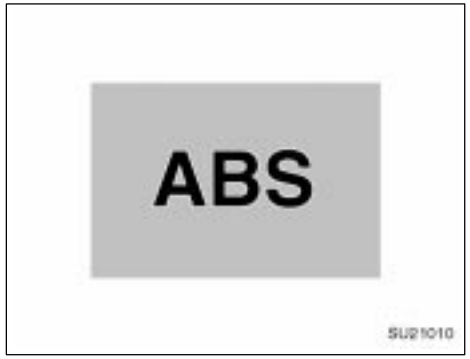

Type A

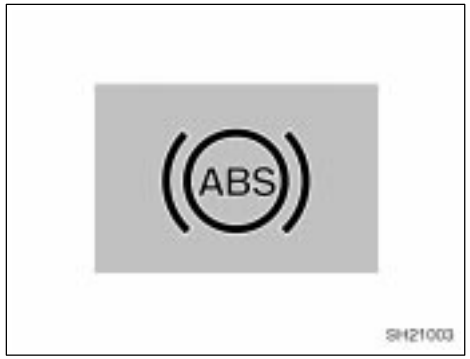

Type B

“ABS” warning light

This light comes on when the ignition key is turned to the “ON” position. If the anti−lock brake system works properly, the light turns off after a few seconds. Thereafter, if the system malfunctions, the light comes on again.

When the “ABS” warning light is on (and the brake system warning light is off), the anti−lock brake system does not operate, but the brake system still operates conventionally.

When the “ABS” warning light is on (and the brake system warning light is off), the anti−lock brake system does not operate so that the wheels could lock up during a sudden braking or braking on slippery road surfaces.

If either of the following conditions occurs, this indicates a malfunction somewhere in the components monitored by the warning light system. Contact your Toyota dealer as soon as possible to service the vehicle.

- The light does not come on when the ignition key is turned to the “ON” position, or remains on.
- The light comes on while you are driving.

A warning light turning on briefly during operation does not indicate a problem.

⚠ CAUTION

If the “ABS” warning light remains on together with the brake system warning light, immediately stop your vehicle at a safe place and contact your Toyota dealer.

In this case, not only the anti−lock brake system will fail but also the vehicle will become extremely unstable during braking.

Electric power steering system

The electric power steering system, using an electric motor, assists the turning of the steering wheel.

In the following cases, you may feel the steering becomes heavy. But it is not a malfunction.

- When maneuvering or turning frequently over a long time

  The power steering effect will be reduced to prevent the system from overheating. Avoid turning the steering wheel, or stop the vehicle and turn the ignition key to “ACC” or “LOCK”. The system will become cool in about 10 minutes.

NOTICE
Frequent maneuvering and turning over a long time may cause damage to the system in which the mechanism prevents overheating of the electric power steering system.

- When the battery is discharged

  Check the battery’s condition. If necessary, recharge or replace the battery. For details, see “Checking battery condition” on page 272 in Section 7−3.

In the following case, you may feel the steering becoming heavy. Then, after 5 minutes or more, the electric power steering system warning light comes on. But it is not a malfunction.

- When racing the engine for 30 seconds or more with the vehicle stopped

  The normal power steering effect will be obtained and the warning light will go off when you start driving.

INFORMATION
When the steering wheel is turned, a motor operating sound (whining sound) may be heard. This occurs when the power steering motor works and is not defective.

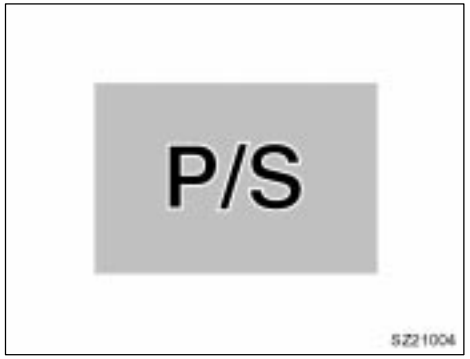

Electric power steering system warning light

The light comes on when the ignition key is turned to the “ON” position. If the electric power steering system warning light works properly, the light turns off after a few seconds. If the system has malfunctions, the light comes on again.

If the following conditions occur, this indicates a malfunction somewhere in the parts monitored by the warning light system. Contact your Toyota dealer as soon as possible to service the vehicle.

- The light does not come on when the ignition key is turned to the “ON” position or remains on.

- The light stays on while you are driving.

The warning light turning on while racing the engine for a long time may not indicate malfunction. To turn off the light, restart the engine and start driving.

⚠ CAUTION

If the electric power steering system warning light comes on, take your vehicle to Toyota dealer as soon as possible. In this case, more effort is required for the steering wheel to turn than usual. Grip the steering wheel firmly when driving.

Brake pad wear limit indicators

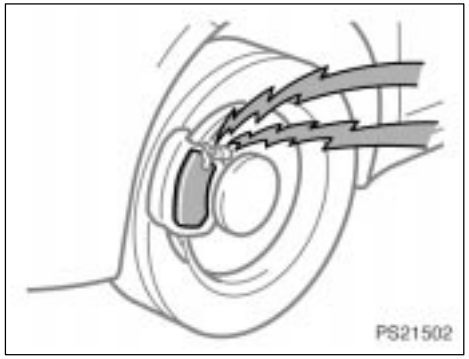

The brake pad wear limit indicators on your disc brakes give a warning noise when the brake pads are worn to where replacement is required.

If you hear a squealing or scraping noise while driving, have the brake pads checked and replaced by your Toyota dealer as soon as possible. Expensive rotor damage can result if the pads are not replaced when necessary.

Your Toyota's identification——Vehicle identification number

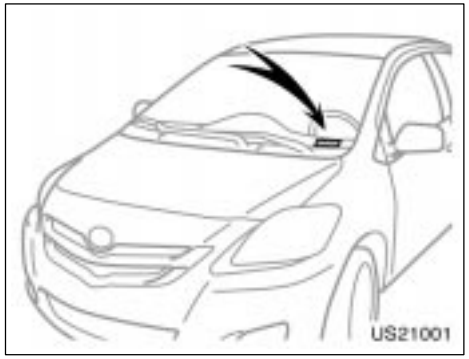

The vehicle identification number (VIN) is the legal identifier for your vehicle. This number is on the left top of the instrument panel, and can be seen through the windshield from outside.

This is the primary identification number for your Toyota. It is used in registering the ownership of your vehicle.



The vehicle identification number (VIN) is also on the Certification Label.

—Engine number

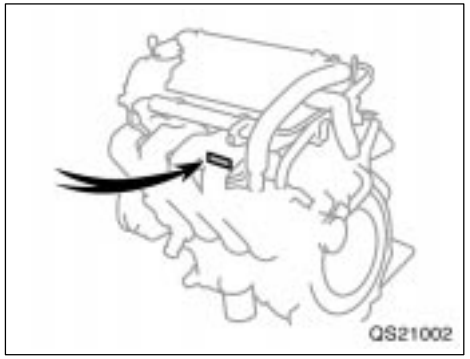

The engine number is stamped on the engine block as shown.

Theft prevention labels (except for Canada)

Your new vehicle carries theft prevention labels which are approximately 47 mm (1.85 in.) by 12 mm (0.47 in.).

The purpose of these labels is to reduce the incidence of vehicle thefts by facilitating the tracing and recovery of parts from stolen vehicles. The label is designed so that once it is applied to a surface, any attempt to remove it will result in destroying the integrity of the label. Transferring these labels intact from one part to another, will be impossible.

NOTICE
You should not attempt to remove the theft prevention labels as it may violate certain state or federal laws.

Suspension and chassis

⚠ CAUTION

Do not modify the suspension/chassis with lift kits, spacers, springs, etc. It can cause dangerous vehicle handling characteristics, resulting in loss of control.

Tire information—
—Tire symbols (Standard tire)

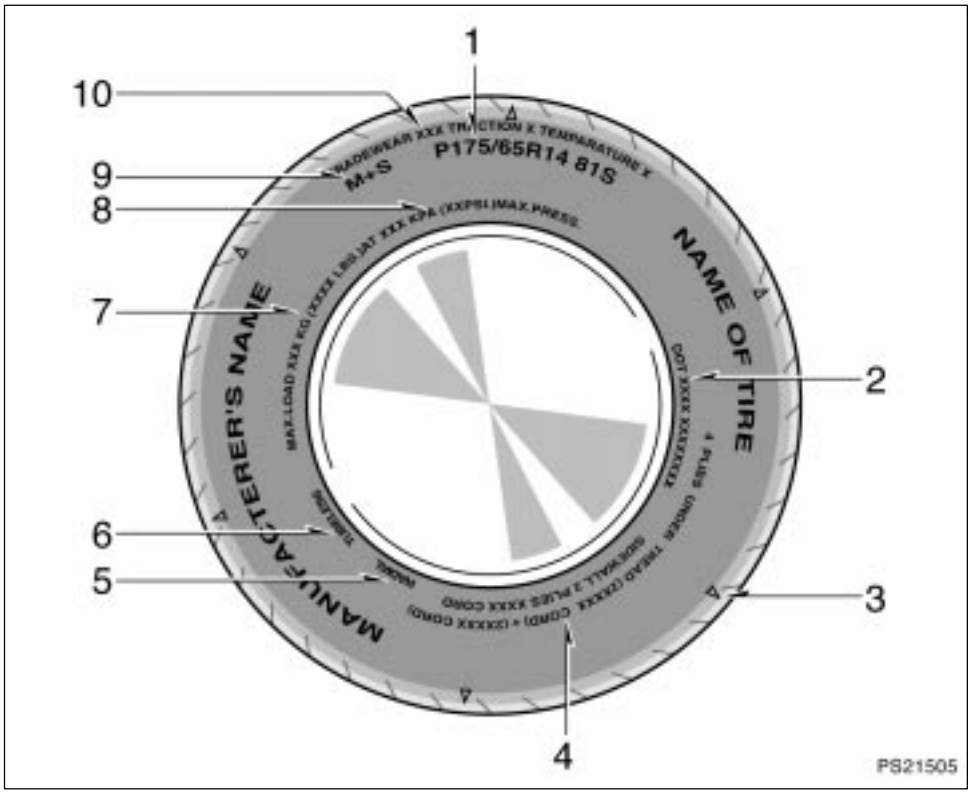

This illustration indicates typical tire symbols.

1. **Tire size—**For details, see “Tire size” on page 187.
2. **DOT and Tire Identification Number (TIN)—**For details, see “DOT and Tire Identification Number (TIN)” on page 186.
3. **Location of tread wear indicators—**For details, see “Checking and replacing tires” on page 264.
4. **Tire ply composition and materials—**Plies mean a layer of rubber−coated parallel cords. Cords mean the strands forming the plies in the tire.
5. **Radial tires or bias−ply tires—**A radial tire has “RADIAL” on the sidewall. A tire not marked with “RADIAL” is a bias−ply tire.

6. **“TUBELESS” or “TUBE TYPE”—**A tubeless tire does not have a tube inside the tire and air is directly filled in the tire. A tube type tire has a tube inside the tire and the tube maintains the air pressure.
7. **Load limit at maximum cold tire inflation pressure—**For details, see “Checking and replacing tires” on page 264.
8. **Maximum cold tire inflation pressure—**This means the pressure to which a tire may be inflated. For recommended cold tire inflation pressure, see “Tires” on page 285.
9. **Summer tire or all season tire—**An all season tire has “M+S” on the sidewall. The tire not marked with “M+S” is a summer tire. For details, see “Types of tires” on page 196.
10. **Uniform tire quality grading—**For details, see “Uniform tire quality grading” that follows.

—Tire symbols (Compact spare tire)

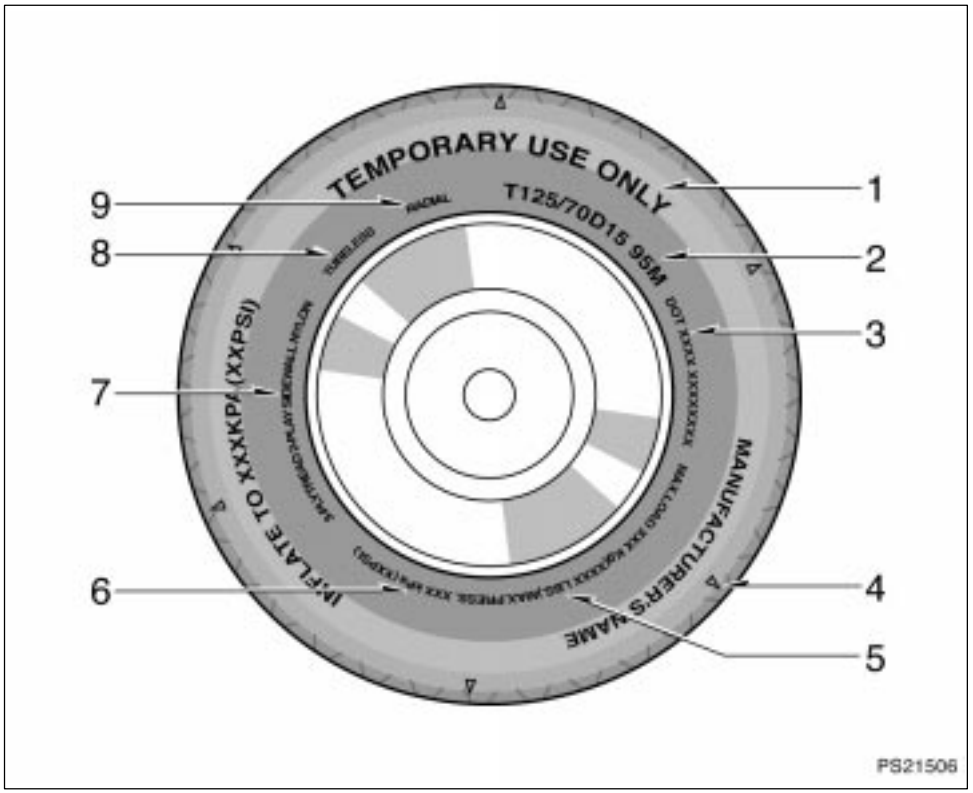

This illustration indicates typical tire symbols.

1. **"TEMPORARY USE ONLY"—**A compact spare tire is identified by the phrase "TEMPORARY USE ONLY" molded into its sidewall. This tire is designed for temporary emergency use only. For details, see "Compact spare tire" on page 220.
2. **Tire size—**For details, see "Tire size" on page 187.
3. **DOT and Tire Identification Number (TIN)—**For details, see "DOT and Tire Identification Number (TIN)" on page 186.
4. **Location of tread wear indicators—**For details, see "Checking and replacing tires" on page 264.
5. **Load limit at maximum cold tire inflation pressure—**For details, see "Checking and replacing tires" on page 264.

6. **Maximum cold tire inflation pressure—**This means the pressure to which a tire may be inflated. For recommended cold tire inflation pressure, see “Tires” on page 285.
7. **Tire ply composition and materials—**Plies mean a layer of rubber−coated parallel cords. Cords mean the strands forming the plies in the tire.
8. **“TUBELESS” or “TUBE TYPE”—**A tubeless tire does not have a tube inside the tire and air is directly filled in the tire. A tube type tire has a tube inside the tire and the tube maintains the air pressure.
9. **Radial tires or bias−ply tires—**A radial tire has “RADIAL” on the sidewall. A tire not marked with “RADIAL” is a bias−ply tire.

—DOT and Tire Identification Number (TIN)

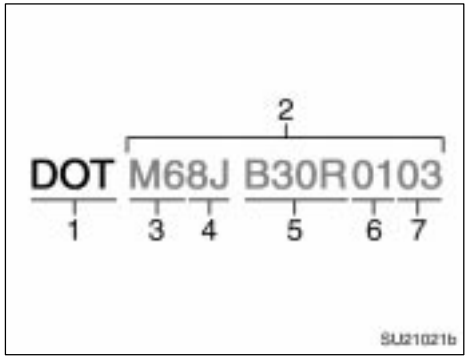

This illustration indicates typical DOT and Tire Identification Number (TIN).

1. “DOT” symbol
2. Tire Identification Number (TIN)
3. Tire manufacturer’s identification mark
4. Tire size code
5. Manufacturer’s optional tire type code (3 or 4 letters)
6. Manufacturing week
7. Manufacturing year

The “DOT” symbol certifies that the tire conforms to applicable Federal Motor Vehicle Safety Standards.

—Tire size

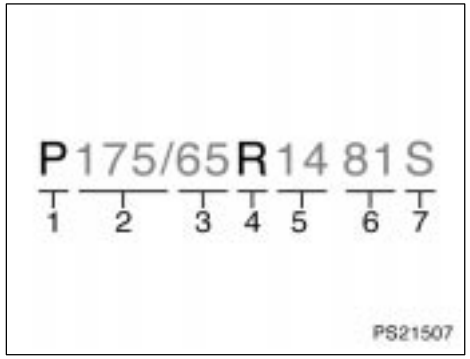

This illustration indicates typical tire size.

1. Tire use (P=Passenger car, T=Temporary use)
2. Section width (in millimeters)
3. Aspect ratio (tire height to section width)
4. Tire construction code (R=Radial, D=Diagonal)
5. Wheel diameter (in inches)
6. Load index (2 digits or 3 digits)
7. Speed symbol (alphabet with one letter)

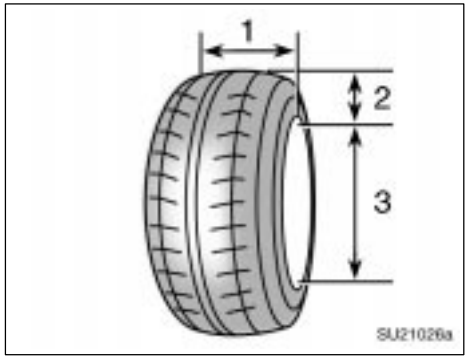

1. Section width
2. Tire height
3. Wheel diameter

—Name of each section of tire

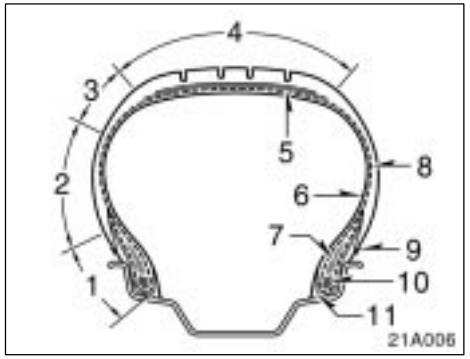

1. Bead
2. Sidewall
3. Shoulder
4. Tread
5. Belt
6. Inner liner
7. Reinforcing rubber
8. Carcass
9. Rim lines
10. Bead wires
11. Chafer

—Uniform tire quality grading

This information has been prepared in accordance with regulations issued by the National Highway Traffic Safety Administration of the U.S. Department of Transportation. It provides the purchasers and/or prospective purchasers of Toyota vehicles with information on uniform tire quality grading.

Your Toyota dealer will help answer any questions you may have as you read this information.

DOT quality grades—All passenger vehicle tires must conform to Federal Safety Requirements in addition to these grades. Quality grades can be found where applicable on the tire sidewall between tread shoulder and maximum section width. For example: Treadwear 200 Traction AA Temperature A.

Tread wear—The tread wear grade is a comparative rating based on the wear rate of the tire when tested under controlled conditions on a specified government test course. For example, a tire graded 150 would wear one and a half (1−1/2) times as well on the government course as a tire graded 100. The relative performance of tires depends upon the actual conditions of their use, however, and may depart significantly from the norm due to variations in driving habits, service practices and differences in road characteristics and climate.

Traction AA, A, B, C—The traction grades, from highest to lowest, are AA, A, B, and C, and they represent the tire's ability to stop on wet pavement as measured under controlled conditions on specified government test surfaces of asphalt and concrete. A tire marked C may have poor traction performance.

Warning: The traction grade assigned to this tire is based on braking (straight ahead) traction tests and does not include cornering (turning) traction.

Temperature A, B, C—The temperature grades are A (the highest), B, and C, representing the tire's resistance to the generation of heat and its ability to dissipate heat when tested under controlled conditions on a specified indoor laboratory test wheel. Sustained high temperature can cause the material of the tire to degenerate and reduce tire life, and excessive temperature can lead to sudden tire failure. The grade C corresponds to a level of performance which all passenger car tires must meet under the Federal Motor Vehicle Safety Standard No. 109. Grades B and A represent higher levels of performance on the laboratory test wheel than the minimum required by law.

Warning: The temperature grades for this tire are established for a tire that is properly inflated and not overloaded. Excessive speed, underinflation, or excessive loading, either separately or in combination, can cause heat buildup and possible tire failure.

—Glossary of tire terminology

Tire related term	Meaning
Cold tire inflation pressure	tire inflation pressure when the vehicle has been parked for at least 3 hours or more, or it has not been driven more than 1.5 km or 1 mile under that condition
Maximum inflation pressure	the maximum cold inflation pressure to which a tire may be inflated and it is shown on the sidewall of the tire
Recommended inflation pressure	cold tire inflation pressure recommended by a manufacturer
Accessory weight	the combined weight (in excess of those standard items which may be replaced) of automatic transmission, power steering, power brakes, power windows, power seats, radio, and heater, to the extent that these items are available as factory−installed equipment (whether installed or not)
Curb weight	the weight of a motor vehicle with standard equipment including the maximum capacity of fuel, oil, and coolant, and, if so equipped, air conditioning and additional weight optional engine
Maximum loaded vehicle weight	the sum of— (a) curb weight; (b) accessory weight; (c) vehicle capacity weight; and (d) production options weight
Normal occupant weight	68 kg (150 lb.) times the number of occupants specified in the second column of Table 1 that follows

Tire related term	Meaning
Production options weight	the combined weight of those installed regular production options weighing over 2.3 kg (5 lb.) in excess of those standard items which they replace, not previously considered in curb weight or accessory weight, including heavy duty brakes, ride levelers, roof rack, heavy duty battery, and special trim
Vehicle capacity weight (Total load capacity)	the rated cargo and luggage load plus 68 kg (150 lb.) times the vehicle's designated seating capacity
Intended outboard sidewall	(A) the sidewall that contains a whitewall, bears white lettering or bears manufacturer, brand, and/or model name molding that is higher or deeper than the same molding on the other sidewall of the tire, or (B) the outward facing sidewall of an asymmetrical tire that has a particular side that must always face outward when mounted on a vehicle
Occupant distribution	distribution of occupants in a vehicle as specified in the third column of Table 1 that follows
Rim	a metal support for a tire or a tire and tube assembly upon which the tire beads are seated
Rim diameter (Wheel diameter)	nominal diameter of the bead seat
Rim size designation	rim diameter and width
Rim type designation	the industry of manufacturer's designation for a rim by style or code
Rim width	nominal distance between rim flanges
Vehicle maximum load on the tire	the load on an individual tire that is determined by distributing to each axle its share of the maximum loaded vehicle weight and dividing by two

Tire related term	Meaning
Vehicle normal load on the tire	the load on an individual tire that is determined by distributing to each axle its share of the curb weight, accessory weight, and normal occupant weight (distributed in accordance with Table 1 that follows) and dividing by two
Weather side	the surface area of the rim not covered by the inflated tire

Table 1–Occupant loading and distribution for vehicle normal load for various designated seating capacities

Designated seating capacity, Number of occupants	Vehicle normal load, Number of occupants	Occupant distribution in a normally loaded vehicle
2 through 4	2	2 in front
5 through 10	3	2 in front, 1 in second seat

Vehicle load limits

Vehicle load limits include total load capacity, seating capacity, towing capacity and cargo capacity. Follow the load limits shown below. Total load capacity and seating capacity are also described on the tire and loading information label. For location of the tire and loading information label, see “Checking tire inflation pressure” on page 262.

Total load capacity:

383 kg (845 lb.)

Total load capacity means combined weight of occupants, cargo and luggage. Tongue load is included when trailer towing.

Seating capacity:

Total 5 (Front 2, Rear 3)

Seating capacity means the maximum number of occupants whose estimated average weight is 68 kg (150 lb.) per person. Depending on the weight of each person, the seating capacity given may exceed the total load capacity.

NOTICE

Even if the number of occupants are within the seating capacity, do not exceed the total load capacity.

Towing capacity (except for Canada):

Toyota does not recommend towing a trailer with your vehicle. Your vehicle is not designed for trailer towing.

Towing capacity (for Canada):

318 kg (700 lb.)

Towing capacity means the maximum gross trailer weight (trailer weight plus its cargo weight) that your vehicle is able to tow.

Cargo capacity

Cargo capacity may increase or decrease depending on the size (weight) and the number of occupants. For details, see “Capacity and distribution” that follows.

⚠ CAUTION

Do not apply the load more than each load limit. That may cause not only damage to the tires, but also deterioration to the steering ability and braking ability, which may cause an accident.

Cargo and luggage—
—Stowage precautions

When stowing cargo and luggage in the vehicle, observe the following:

- Put cargo and luggage in the luggage compartment when at all possible. Be sure all items are secured in place.
- Be careful to keep the vehicle balanced. Locating the weight as far forward as possible helps maintain the balance.
- For better fuel economy, do not carry unneeded weight.

⚠ CAUTION

- **To prevent cargo and luggage from sliding forward during braking, do not stack anything in the luggage compartment higher than the seatbacks. Keep cargo and luggage low, as close to the floor as possible.**

- **Never allow anyone to ride in the luggage compartment. It is not designed for passengers. They should ride in their seats with their seat belts properly fastened. Otherwise, they are much more likely to suffer serious bodily injury, in the event of sudden braking or a collision.**
- **Do not place anything on the luggage cover. Such items may be thrown about and possibly injure people in the vehicle during sudden braking or an accident. Secure all items in a safe place.**
- **Do not drive with objects left on top of the instrument panel. They may interfere with the driver's field of view. Or they may move during sharp vehicle acceleration or turning, and impair the driver's control of the vehicle. In an accident they may injure the vehicle occupants.**

NOTICE

Do not load the vehicle beyond the vehicle capacity weight given in Section 8.

—Capacity and distribution

Cargo capacity depends on the total weight of the occupants.

(Cargo capacity) = (Total load capacity) – (Total weight of occupants)

Steps for Determining Correct Load Limit—

(1) Locate the statement “The combined weight of occupants and cargo should never exceed XXX kg or XXX lbs.” on your vehicle’s placard.

(2) Determine the combined weight of the driver and passengers that will be riding in your vehicle.

(3) Subtract the combined weight of the driver and passengers from XXX kg or XXX lbs.

(4) The resulting figure equals the available amount of cargo and luggage load capacity. For example, if the “XXX” amount equals 1400 lbs. and there will be five 150 lb passengers in your vehicle, the amount of available cargo and luggage load capacity is 650 lbs. (1400–750 (5x150)=650 lbs.)

(5) Determine the combined weight of luggage and cargo being loaded on the vehicle. That weight may not safely exceed the available cargo and luggage load capacity calculated in Step 4.

(6) If your vehicle will be towing a trailer, load from your trailer will be transferred to your vehicle. Consult this manual to determine how this reduces the available cargo and luggage load capacity of your vehicle.

Except for Canada—Toyota does not recommend towing a trailer with your vehicle. Your vehicle is not designed for trailer towing.

For Canada—For details about trailer towing, see page 205.

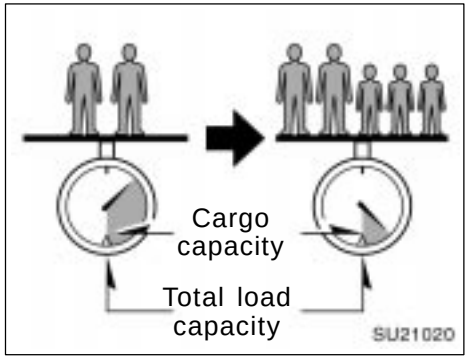

Example on Your Vehicle

In case that 2 people with the combined weight of 166 kg (366 lb.) are riding in your vehicle with the total load capacity of 383 kg (845 lb.), the available amount of cargo and luggage load capacity will be as follows:

383 kg – 166 kg = 217 kg.
(845 lb. – 366 lb. = 479 lb.)

From this condition, if 3 more passengers with the combined weight of 176 kg (388 lb.) get on, the available cargo and luggage load will be reduced as follows:

217 kg – 176 kg = 41 kg.
(479 lb. – 388 lb. = 91 lb.)

As shown in the above example, if the number of occupants increases, the cargo and luggage load equaling the combined weight of occupants who got on later must be reduced. In other words, if the increase in the number of occupants causes the excess of the total load capacity (combined weight of occupants plus cargo and luggage load), you have to reduce the cargo and luggage on your vehicle.

For details about total load capacity, see “Vehicle load limits” on page 193.

⚠ CAUTION

Even if the total load of occupant’s weight and the cargo load is less than the total load capacity, do not apply the load unevenly. That may cause not only damage to the tire but also deterioration to the steering ability due to unbalance of the vehicle, causing an accident.

Types of tires

Determine what kind of tires your vehicle is originally equipped with.

1. Summer tires

Summer tires are high−speed capability tires best suited to highway driving under dry conditions.

Since summer tires do not have the same traction performance as snow tires, summer tires are inadequate for driving on snow−covered or icy roads. For driving on snow−covered or icy roads, we recommend using snow tires. If installing snow tires, be sure to replace all four tires.

2. All season tires

All season tires are designed to provide better traction in snow and to be adequate for driving in most winter conditions, as well as for use all year round.

All season tires, however, do not have adequate traction performance compared with snow tires in heavy or loose snow. Also, all season tires fall short in acceleration and handling performance compared with summer tires in highway driving.

The details about how to distinguish summer tires from all season tires are described on page 183.

⚠ CAUTION

- **Do not mix summer and all season tires on your vehicle as this can cause dangerous handling characteristics, resulting in loss of control.**
- **Do not use tires other than the manufacturer's designated tires, and do not mix tires or wheels of the sizes different from the originally equipped tires and wheels as this can cause dangerous handling characteristics, resulting in loss of control.**

SECTION 3

STARTING AND DRIVING

Starting and driving

Before starting the engine 200
How to start the engine 200
Tips for driving in various conditions 201
Winter driving tips 202
Dinghy towing 203
Trailer towing 205
How to save fuel and make your vehicle last longer 210

Before starting the engine

1. Check the area around the vehicle before entering it.
2. Adjust seat position, seatback angle, head restraint height and steering wheel angle.
3. Adjust inside and outside rear view mirrors.
4. Lock all doors.
5. Fasten seat belts.

How to start the engine— —Cranking hold function

Once you turn the ignition key to “START” position and release it, the cranking hold function continues to crank the engine in “ON” position until it starts.

The function stops cranking the engine after about 20 seconds maximum if the engine has not started yet. When you crank the engine again, wait a few seconds and restart it.

If you hold the key in “START” position, the function will keep cranking.

(a) Before cranking

1. Apply the parking brake firmly.
2. Turn off unnecessary lights and accessories.
3. **Manual transmission:** Press the clutch pedal to the floor and shift the transmission into neutral. Hold the clutch pedal to the floor until the engine is started. A starter safety device will prevent the starter from operating if the clutch pedal is not fully depressed.

   Automatic transmission: Put the selector lever in “P”. If you need to restart the engine while the vehicle is moving, put the selector lever in “N”. A starter safety device will prevent the starter from operating if the selector lever is in any drive position.
4. **Automatic transmission only:** Depress the brake pedal and hold it to the floor until driving off.

(b) Starting the engine

Before starting the engine, be sure to follow the instructions in “(a) Before cranking”.

Normal starting procedure

The multiport fuel injection system/sequential multiport fuel injection system in your engine automatically controls the proper air−fuel mixture for starting. You can start a cold or hot engine as follows:

With your foot off the accelerator pedal, turn the ignition key to “START” position, then release it.

Engine should be warmed up by driving, not in idle. For warming up, drive with smoothly turning engine until engine coolant temperature is within normal range.

If the engine stalls...

Simply restart it, using the correct procedure given in normal starting.

If the engine will not start...

See “If your vehicle will not start” on page 214 in Section 4.

NOTICE

- ***Do not crank for more than 30 seconds at a time. This may overheat the starter and wiring systems.***
- ***Do not race a cold engine.***
- ***If the engine becomes difficult to start or stalls frequently, have the engine checked immediately.***

Tips for driving in various conditions

- Always slow down in gusty crosswinds. This will allow you much better control.
- Drive slowly onto curbs and, if possible, at a right angle. Avoid driving onto high, sharp−edged objects and other road hazards. Failure to do so can lead to severe tire damage such as a tire burst.

  Drive slowly when passing over bumps or travelling on a bumpy road. Otherwise, the impact could cause severe damage to the tires and/or wheels.
- When parking on a hill, turn the front wheels until they touch the curb so that the vehicle will not roll. Apply the parking brake, and place the transmission in “P” (automatic) or in first or reverse (manual). If necessary, block the wheels.

- Washing your vehicle or driving through deep water may get the brakes wet. To see whether they are wet, check that there is no traffic near you, and then press the pedal lightly. If you do not feel a normal braking force, the brakes are probably wet. To dry them, drive the vehicle cautiously while lightly pressing the brake pedal with the parking brake applied. If they still do not work safely, pull to the side of the road and call a Toyota dealer for assistance.

⚠ CAUTION

- **Before driving off, make sure that the parking brake is fully released and the parking brake reminder light is off.**
- **Do not leave your vehicle unattended while the engine is running.**
- **Do not rest your foot on the brake pedal while driving. It can cause dangerous overheating, needless wear, and poor fuel economy.**
- **To drive down a long or steep hill, reduce your speed and downshift. Remember, if you ride the brakes excessively, they may overheat and not work properly.**

- **Be careful when accelerating, upshifting, downshifting or braking on a slippery surface. Sudden acceleration or engine braking could cause the vehicle to skid or spin.**
- **Do not drive in excess of the speed limit. Even if the legal speed limit permits it, do not drive over 140 km/h (85 mph) unless your vehicle has high−speed capability tires. Driving over 140 km/h (85 mph) may result in tire failure, loss of control and possible injury. Be sure to consult a tire dealer to determine whether the tires on your vehicle are high−speed capability tires or not before driving at such speeds.**
- **Do not continue normal driving when the brakes are wet. If they are wet, your vehicle will require a longer stopping distance, and it may pull to one side when the brakes are applied. Also, the parking brake will not hold the vehicle securely.**

Winter driving tips

Make sure you have a proper freeze protection for engine coolant.

Only use “Toyota Super Long Life Coolant” or similar high quality ethylene glycol based non−silicate, non−amine, non−nitrite, and non−borate coolant with long−life hybrid organic acid technology. (Coolant with long−life hybrid organic acid technology is a combination of low phosphates and organic acids.)

See “Checking the engine coolant level” on page 260 in Section 7−2 for details of coolant type selection.

For the U.S.A.—“Toyota Super Long Life Coolant” is a mixture of 50% coolant and 50% deionized water. This coolant provides protection down to about −35°C (−31°F).

For Canada—“Toyota Super Long Life Coolant” is a mixture of 55% coolant and 45% deionized water. This coolant provides protection down to about −42°C (−44°F).

NOTICE

Do not use plain water alone.

Check the condition of the battery and cables.

Cold temperatures reduce the capacity of any battery, so it must be in top shape to provide enough power for winter starting. Section 7−3 tells you how to visually inspect the battery. Your Toyota dealer and most service stations will be pleased to check the level of charge.

Make sure the engine oil viscosity is suitable for the cold weather.

See Section 7−2 for recommended viscosity. Leaving a heavy summer oil in your vehicle during winter months may cause harder starting. If you are not sure about which oil to use, call your Toyota dealer—they will be pleased to help.

Keep the door locks from freezing.

Squirt lock de−icer or glycerine into the locks to keep them from freezing.

Use a washer fluid containing an antifreeze solution.

This product is available at your Toyota dealer and most auto parts stores. Follow the manufacturer's directions for how much to mix with water.

NOTICE

Do not use engine antifreeze or any other substitute because it may damage your vehicle's paint.

Do not use your parking brake when there is a possibility it could freeze.

When parking, put the transmission into "P" (automatic) or into first or reverse (manual) and block the rear wheels. Do not use the parking brake, or snow or water accumulated in and around the parking brake mechanism may freeze, making it hard to release.

Keep ice and snow from accumulating under the fenders.

Ice and snow built up under your fenders can make steering difficult. During bad winter driving, stop and check under the fenders occasionally.

Depending on where you are driving, we recommend you carry some emergency equipment.

Some of the things you might put in the vehicle are tire chains, window scraper, bag of sand or salt, flares, small shovel, jumper cables, etc.

Dinghy towing (with automatic transmission)

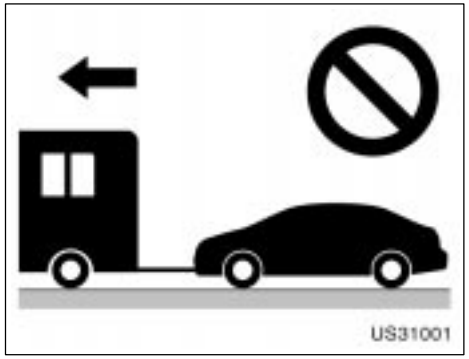

Your vehicle is not designed to be dinghy towed (with four wheels on the ground) behind a motorhome.

NOTICE

Do not tow your vehicle with four wheels on the ground. This may cause serious damage to your vehicle.

Dinghy towing (with manual transmission)

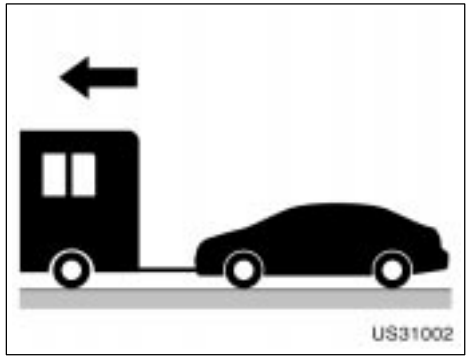

Your vehicle can be dinghy towed (with four wheels on the ground) from the front behind a motorhome.

⚠ CAUTION

Dinghy towing requires special equipment and accessories. Please refer to your service outlet of the motorhome manufacture for the recommended equipment.

NOTICE

Dinghy towing does not eliminate the possibility of damage to your vehicle.

DINGHY TOWING TIPS

Before dinghy towing, be sure to observe the following in order to reduce the damage to your vehicle.

1. Put the shift lever in neutral.
2. Turn the ignition switch to the “ACC” position. Make sure the audio is turned off and any item is not plugged into the power outlet.

NOTICE

To avoid the locking of the steering wheel, turn the ignition switch to the “ACC” position.

3. Release the parking brake.

After dinghy towing, let the engine idle for more than 3 minutes before driving the vehicle.

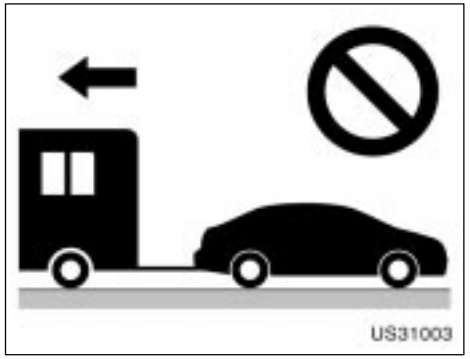

NOTICE

Do not tow your vehicle from the rear. This may cause serious damage to your vehicle.

Trailer towing (except for Canada)

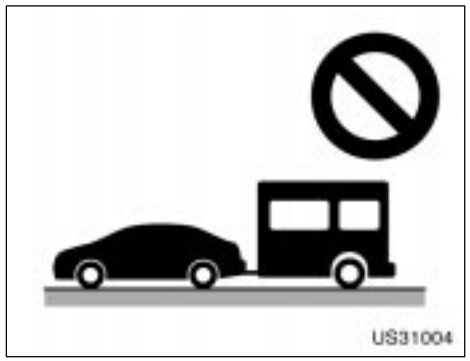

Toyota does not recommend towing a trailer with your Toyota. Toyota also does not recommend the installation of a tow hitch or the use of a tow hitch carrrier for a wheelchair, scooter, bicycle, etc. Your Toyota is not designed for trailer towing or for the use of tow hitch mounted carriers.

Trailer towing (for Canada)

Your vehicle is designed primarily as a passenger−carrying vehicle. Towing a trailer will have an adverse effect on handling, performance, braking, durability and driving economy (fuel consumption, etc.). Your safety and satisfaction depend on the proper use of correct equipment and cautious driving habits. For your safety and the safety of others, you must not overload your vehicle or trailer. Toyota warranties do not apply to damage or malfunction caused by towing a trailer for commercial purposes. Ask your local Toyota dealer for further details before towing.

NOTICE

When towing a tailer, be sure to consult your Toyota dealer for further information on additional requirements such as a towing kit, etc.

WEIGHT LIMITS

Before towing, make sure the total trailer weight, gross vehicle weight, gross axle weight and trailer tongue load are all within the limits.

The total trailer weight and tongue load can be measured with platform scales found at a highway weighing station, building supply company, trucking company, junk yard, etc.

⚠ CAUTION

- **The total trailer weight (trailer weight plus its cargo load) must not exceed 318 kg (700 lb.). Exceeding this weight is dangerous.**
- **Trailer hitch assemblies have different weight capacities established by the hitch manufacturer. Even though the vehicle may be physically capable of towing a higher weight, the operator must determine the maximum weight rating of the particular hitch assembly and never exceed the maximum weight rating specified for the trailer−hitch. Exceeding the maximum weight rating set by the trailer hitch manufacturer can cause an accident resulting in serious personal injuries.**



- **The gross vehicle weight must not exceed the Gross Vehicle Weight Rating (GVWR) indicated on the Certification Label. The gross vehicle weight is the sum of weights of the unloaded vehicle, driver, passengers, luggage, hitch and trailer tongue load. It also includes the weight of any special equipment installed on your vehicle.**

- **The load on either the front or rear axle resulting from distribution of the gross vehicle weight on both axles must not exceed the Gross Axle Weight Rating (GAWR) listed on the Certification Label.**

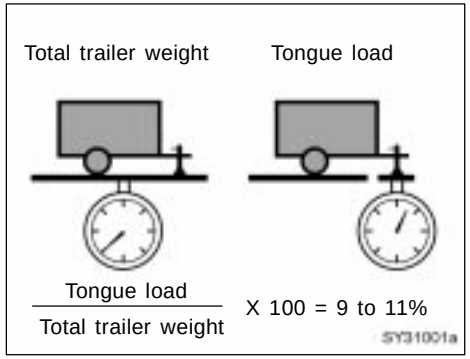

- **The trailer cargo load should be distributed so that the tongue load is 9 to 11% of the total trailer weight, not exceeding the maximum of 32 kg (70 lb.). Never load the trailer with more weight in the back than in the front. About 60% of the trailer load should be in the front half of the trailer and the remaining 40% in the rear.**

HITCHES

- Use only a hitch (Toyota genuine hitch or equivalent) which is recommended by the hitch manufacturer and conforms to the total trailer weight requirement.
- Follow the directions supplied by the hitch manufacturer. Lubricate the hitch ball with a light coat of grease.
- Toyota recommends removing the trailer hitch whenever you are not towing a trailer to reduce the possibility of additional damage caused by the hitch if your vehicle is struck from behind.

NOTICE

Do not use axle−mounted hitches as they can cause damage to the axle housing, wheel bearings, wheels or tires. Also, never install a hitch which may interfere with the normal function of an Energy Absorbing Bumper, if so equipped.

BRAKE AND SAFETY CHAINS

- **Toyota recommends trailers with brakes that conform to any applicable federal and state/provincial regulations.**
- **A safety chain must always be used between the towing vehicle and the trailer. Leave sufficient slack in the chain for turns. The chain should cross under the trailer tongue to prevent the tongue from dropping to the ground in case it becomes damaged or separated. For correct safety chain procedures, follow the hitch or trailer manufacturer's recommendation.**

⚠ CAUTION

- **Never tap into your vehicle's hydraulic system as it would lower its braking effectiveness.**
- **Never tow a trailer without using a safety chain securely attached to both the trailer and the vehicle. If damage occurs to the coupling unit or hitch ball, there is danger of the trailer wandering over into another lane.**

TIRES

- Ensure that your vehicle's tires are properly inflated. See page 262 in Section 7−2 and page 285 in Section 8 for instructions.
- The trailer tires should be inflated to the pressure recommended by the trailer manufacturer in respect to the total trailer weight.

TRAILER LIGHTS

- Trailer lights must comply with federal, state/provincial and local regulations. See your local recreational vehicle dealer or rental agency for the correct type of wiring and relays for your trailer. Check for correct operation of the turn signals and stop lights each time you hitch up. Direct splicing may damage your vehicle's electrical system and cause a malfunction of your lights.

BREAK−IN SCHEDULE

- Toyota recommends that you do not tow a trailer with a new vehicle or a vehicle with any new power train component (engine, transmission, differential, wheel bearing, etc.) for the first 800 km (500 miles) of driving.

MAINTENANCE

- If you tow a trailer, your vehicle will require more frequent maintenance due to the additional load. For this information, please refer to the scheduled maintenance information in the "Scheduled Maintenance Guide" or "Owner's Manual Supplement".
- Retighten all fixing bolts of the towing ball and bracket after approximately 1000 km (600 miles) of trailer driving.

PRE−TOWING SAFETY CHECK

- Check that your vehicle remains level when a loaded or unloaded trailer is hitched. Do not drive if the vehicle has an abnormal nose−up or nose−down condition, and check for improper tongue load, overload, worn suspension or other possible causes.
- Make sure the trailer cargo is securely loaded so that it can not shift.
- Check that your rear view mirrors conform to any applicable federal, state/provincial or local regulations. If not, install the rear view mirrors required for towing purpose.

TRAILER TOWING TIPS

When towing a trailer, your vehicle will handle differently than when not towing. The three main causes of vehicle−trailer accidents are driver error, excessive speed and improper trailer loading. Keep these in mind when towing:

- Before starting out, check operation of the lights and all vehicle−trailer connections. After driving a short distance, stop and recheck the lights and connections. Before actually towing a trailer, practice turning, stopping and backing with a trailer in an area away from traffic until you learn the feel.
- Backing with a trailer is difficult and requires practice. Grip the bottom of the steering wheel and move your hand to the left to move the trailer to the left. Move your hand to the right to move the trailer to the right. (This procedure is generally opposite to that when backing without a trailer.) Also, just turn the steering wheel a little at a time, avoiding sharp or prolonged turning. Have someone guide you when backing to reduce the risk of an accident.

- Because stopping distance may be increased, vehicle−to−vehicle distance should be increased when towing a trailer. For each 16 km/h (10 mph) of speed, allow at least one vehicle and trailer length between you and the vehicle ahead. Avoid sudden braking as you may skid, resulting in jackknifing and loss of control. This is especially true on wet or slippery surfaces.
- Avoid jerky starts or sudden acceleration. If your vehicle has a manual transmission, prevent excessive clutch slippage by keeping engine rpm low and not racing the engine. Always start out in first gear.
- Avoid jerky steering and sharp turns. The trailer could hit your vehicle in a tight turn. Slow down before making a turn to avoid the necessity of sudden braking.
- Remember that when making a turn, the trailer wheels will be closer than the vehicle wheels to the inside of the turn. Therefore, compensate for this by making a larger than normal turning radius with your vehicle.
- Crosswinds and rough roads will adversely affect handling of your vehicle and trailer, causing sway. Pay attention to the rear from time to time to prepare yourself for being passed by large trucks or buses, which may cause your vehicle and trailer to sway. If swaying happens, firmly grip the steering wheel and reduce speed immediately but gradually. Never increase speed. Steer straight ahead. If you make no extreme correction with the steering or brakes, the vehicle and trailer will stabilize.
- Be careful when passing other vehicles. Passing requires considerable distance. After passing a vehicle, do not forget the length of your trailer and be sure you have plenty of room before changing lanes.
- In order to maintain engine braking efficiency, do not use fifth gear (manual) or do not put the transmission in “D” (automatic).
- Because of the added load of the trailer, your vehicle’s engine may overheat on hot days (at temperatures over 30°C [85°F]) when going up a long or steep grade with a trailer. If the engine coolant temperature gauge indicates overheating, immediately turn off the air conditioning (if in use), pull off the road and stop in a safe spot. Refer to “If your vehicle overheats” on page 218 in Section 4
- Always place wheel blocks under both the vehicle and trailer wheels when parking. Apply the parking brake firmly. Put the transmission in “P” (automatic) or in first or reverse (manual). Avoid parking on a slope with a trailer, but if it cannot be avoided, do so only after performing the following:

1. Apply the brakes and hold.
2. Have someone place wheel blocks under both the vehicle and trailer wheels.
3. When the wheel blocks are in place, release your brakes slowly until the blocks absorb the load.
4. Apply the parking brake firmly.
5. Shift into first or reverse (manual) or “P” (automatic) and turn off the engine.

When restarting out after parking on a slope:

1. With the transmission in “P” position (automatic) or the clutch pedal depressed (manual), start the engine. (With an automatic transmission, be sure to keep the brake pedal depressed.)
2. Shift into gear.
3. Release the parking brake (also foot brake on automatic transmission vehicles) and slowly pull or back away from the wheel blocks. Stop and apply your brakes.
4. Have someone retrieve the blocks.

⚠ CAUTION

- **Do not exceed 72 km/h (45 mph) or the posted towing speed limit, whichever is lower. Because instability (swaying) of a towing vehicle–trailer combination usually increases as the speed increases, exceeding 72 km/h (45 mph) may cause loss of control.**
- **Slow down and downshift before descending steep or long downhill grades. Do not make sudden downshifts.**
- **Avoid holding the brake pedal down too long or too frequently. This could cause the brakes to overheat and result in reduced braking efficiency.**

How to save fuel and make your vehicle last longer

Improving fuel economy is easy–just take it easy. It will help make your vehicle last longer, too. Here are some specific tips on how to save money on both fuel and repairs:

- **Keep your tires inflated at the correct pressure.** Underinflation causes tire wear and wastes fuel. See Section 7−2 for instructions.
- **Do not carry unneeded weight in your vehicle.** Excess weight puts a heavier load on the engine, causing greater fuel consumption.
- **Avoid lengthy warm−up idling.** Once the engine is running smoothly, begin driving—but gently. Remember, however, that on cold winter days this may take a little longer.
- **Put the selector lever into the “D” when engine braking is not required.**

  Driving with the selector lever in “3” will reduce the fuel economy (For details, see “Automatic transmission” on page 117 in Section 1−7.)
- **Accelerate slowly and smoothly.** Avoid jackrabbit starts. Get into high gear as quickly as possible.

- **Avoid long engine idling.** If you have a long wait and you are not in traffic, it is better to turn off the engine and start again later.
- **Avoid engine lugging or over−revving.** Use a gear position suitable for the road on which you are travelling.
- **Avoid continuous speeding up and slowing down.** Stop−and−go driving wastes fuel.
- **Avoid unnecessary stopping and braking.** Maintain a steady pace. Try to time the traffic signals so you only need to stop as little as possible or take advantage of through streets to avoid traffic lights. Keep a proper distance from other vehicles to avoid sudden braking. This will also reduce wear on your brakes.
- **Avoid heavy traffic or traffic jams whenever possible.**
- **Do not rest your foot on the clutch or brake pedal.** This causes needless wear, overheating and poor fuel economy.
- **Maintain a moderate speed on highways.** The faster you drive,the greater the fuel consumption. By reducing your speed, you will cut down on fuel consumption.
- **Keep the front wheels in proper alignment.** Avoid hitting the curb and slow down on rough roads. Improper alignment not only causes faster tire wear but also puts an extra load on the engine, which, in turn, wastes fuel.
- **Keep the bottom of your vehicle free from mud, etc.** This not only lessens weight but also helps prevent corrosion.
- **Keep your vehicle tuned−up and in top shape.** A dirty air cleaner, improper valve clearance, dirty plugs, dirty oil and grease,brakes not adjusted, etc. all lower engine performance and contribute to poor fuel economy. For longer life of all parts and lower operating costs, keep all maintenance work on schedule, and if you often drive under severe conditions, see that your vehicle receives more frequent maintenance. (For scheduled maintenance information, please refer to the “Scheduled Maintenance Guide” or “Owner’s Manual Supplement”.)

⚠ CAUTION

Never turn off the engine to coast down hills. Your power steering and brake booster will not function without the engine running. Also, the emission control system operates properly only when the engine is running.

SECTION 4

IN CASE OF AN EMERGENCY

In case of an emergency

If your vehicle will not start 214
If your engine stalls while driving 217
If you cannot increase engine speed 218
If your vehicle overheats 218
If you have a flat tire 219
If your vehicle becomes stuck 229
If your vehicle needs to be towed 229
If you cannot shift automatic transmission selector lever 233
If you lose your keys 234

If your vehicle will not start—
(a) Simple checks

Before making these checks, make sure you have followed the correct starting procedure given in “How to start the engine” in Section 3 and that you have sufficient fuel. If your vehicle is equipped with the engine immobilizer system, also check whether the other keys will start the engine. If they work, your key may be broken. Have the key checked at your Toyota dealer. If none of your keys work, there may be a malfunction in the immobilizer system. Call your Toyota dealer. (See “Keys (with engine immobilizer system)” on page 11 in Section 1−2.)

If the engine does not turn over or turns over too slowly—

1. Check that the battery terminals are tight and clean.
2. If the battery terminals are connected correctly, switch on the interior light.
3. If the light does not come on, is dim or goes out when the starter is cranked, the battery is discharged. You may try jump starting. See “(c) Jump starting” for further instructions.

If the light comes on and is normal, but the engine still will not start, it needs adjustment or repair. Call a Toyota dealer or qualified repair shop.

NOTICE

Do not pull− or push−start the vehicle. It may damage the vehicle or cause a collision when the engine starts. Also the three−way catalytic converter may overheat and become a fire hazard.

If the engine turns over at its normal speed but will not start—

1. Turn the ignition key to “ACC” or “LOCK” and try starting the engine again.
2. If the engine will not start, the engine may be flooded because of repeated cranking. See “(b) Starting a flooded engine” for further instructions.
3. If the engine still will not start, it needs adjustment or repair. Call a Toyota dealer or qualified repair shop.

(b) Starting a flooded engine

If the engine will not start, your engine may be flooded because of repeated cranking.

If this happens, turn the ignition key to “START” with the accelerator pedal fully depressed, and hold the key at this position for about 20 seconds. Then the cranking hold function stops cranking automatically, and you can try starting the engine with your foot off the accelerator pedal.

If the engine does not start, wait a few minutes and try again.

If the engine still will not start, it needs adjustment or repair. Call a Toyota dealer or qualified repair shop for assistance.

NOTICE

Do not crank for more than 30 seconds at a time. This may overheat the starter and wiring systems.

(c) Jump starting

To avoid serious personal injury and damage to your vehicle which might result from battery explosion, acid burns, electrical burns, or damaged electronic components, these instructions must be followed precisely.

If you are unsure about how to follow this procedure, we strongly recommend that you seek the help of a competent mechanic or towing service.

⚠ CAUTION

- **Batteries contain sulfuric acid which is poisonous and corrosive. Wear protective safety glasses when jump starting, and avoid spilling acid on your skin, clothing, or vehicle.**
- **If you should accidentally get acid on yourself or in your eyes, remove any contaminated clothing and flush the affected area with water immediately. Then get immediate medical attention. If possible, continue to apply water with a sponge or cloth while en route to the medical office.**
- **The gas normally produced by a battery will explode if a flame or spark is brought near. Use only standardized jumper cables and do not smoke or light a match while jump starting.**

NOTICE

The battery used for boosting must be 12 V. Do not jump start unless you are sure that the booster battery is correct.

JUMP STARTING PROCEDURE

1. If the booster battery is installed in another vehicle, make sure the vehicles are not touching. Turn off all unnecessary lights and accessories.

   When boosting, use the battery of matching or higher quality. Any other battery may be difficult to jump start with.

   If jump starting is difficult, charge the battery for several minutes.
2. If required, remove all the vent plugs from the booster and discharged batteries. Lay a cloth over the open vents on the batteries. (This helps reduce the explosion hazard, personal injuries and burns.)
3. If the engine in the vehicle with the booster battery is not running, start it and let it run for a few minutes. During jump starting, run the engine at about 2000 rpm with the accelerator pedal lightly depressed.

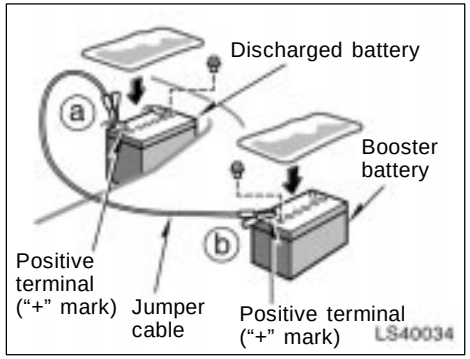

4. Make the cable connections in the order a, b, c, d.

   a. Connect the clamp of the positive (red) jumper cable to the positive (+) terminal on the discharged battery.

   b. Connect the clamp at the other end of the positive (red) jumper cable to the positive (+) terminal on the booster battery.

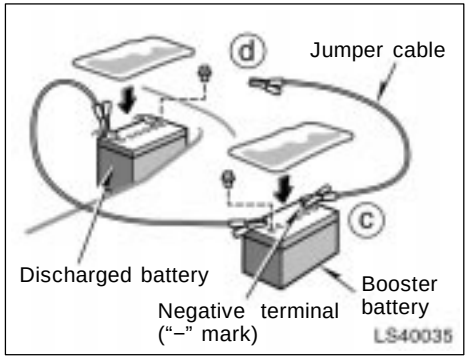

   c. Connect the clamp of the negative (black) jumper cable to the negative (−) terminal on the booster battery.

   d. Connect the clamp at the other end of the negative (black) jumper cable to a solid, stationary, unpainted, metallic point of the vehicle with the discharged battery.

   The recommended connecting point is shown in the following illustration:

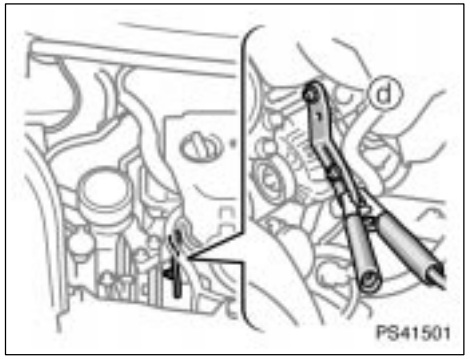

Connecting point

Do not connect the cable to or near any part that moves when the engine is cranked.

⚠ CAUTION

When making the connections, to avoid serious injury, do not lean over the battery or accidentally let the jumper cables or clamps touch anything except the correct battery terminals or the ground.

5. Charge the discharged battery with the jumper cables connected for approximately 5 minutes. At this time, run the engine in the vehicle with the booster battery at about 2000 rpm with the accelerator pedal lightly depressed.
6. Start your engine in the normal way. After starting, run it at about 2000 rpm for several minutes with the accelerator pedal lightly depressed.
7. Carefully disconnect the cables in the exact reverse order: the negative cable and then the positive cable.
8. Carefully dispose of the battery cover cloths—they may now contain sulfuric acid.
9. If removed, replace all the battery vent plugs.

If the cause of your battery discharging is not apparent (for example, lights left on), you should have it checked at your Toyota dealer.

If the first start attempt is not successful...

Check that the clamp on the jumper cables are tight. Recharge the discharged battery with the jumper cables connected for several minutes and restart your engine in the normal way.

If another attempt is not successful, the battery may be depleted. Have it checked at your Toyota dealer.

If your engine stalls while driving

If your engine stalls while driving...

1. Reduce your speed gradually, keeping a straight line. Move cautiously off the road to a safe place.
2. Turn on your emergency flashers.
3. Turn the ignition key to “ACC” or “LOCK”, and try starting the engine again.

If the engine will not start, see “If your vehicle will not start” in this Section.

⚠ CAUTION

If the engine is not running, the power assist for the brakes and steering will not work so steering and braking will be much harder than usual.

If you cannot increase engine speed

If engine speed does not increase when the accelerator pedal is depressed, there may be a problem somewhere in the electronic throttle control system.

At this time, vibration may occur. However, if you depress the accelerator pedal more firmly and slowly, you can drive your vehicle at low speeds. Have your vehicle checked by your Toyota dealer as soon as possible.

Even if the abnormality of the electronic throttle control system is corrected during low speed driving, the system may not be recovered until the engine is stopped and the ignition key is turned to “ACC” or “LOCK” position.

⚠ CAUTION

Be especially careful to prevent erroneous pedal operation.

If your vehicle overheats

If your engine coolant temperature gauge indicates overheating, if you experience a loss of power, or if you hear a loud knocking or pinging noise, the engine has probably overheated. You should follow this procedure...

1. Pull safely off the road, stop the vehicle and turn on your emergency flashers. Put the transmission in “P” (automatic) or neutral (manual) and apply the parking brake. Turn off the air conditioning if it is being used.
2. If coolant or steam is boiling out of the radiator or reservoir, stop the engine. Wait until the steam subsides before opening the hood. If there is no coolant boiling over or steam, leave the engine running and make sure the electric cooling fan is operating. If it is not, turn the ignition off.

⚠ CAUTION

To help avoid personal injury, keep the hood closed until there is no steam. Escaping steam or coolant is a sign of very high pressure.

3. Look for obvious coolant leaks from the radiator, hoses, and under the vehicle. However, note that water draining from the air conditioning is normal if it has been used.

⚠ CAUTION

When the engine is running, keep hands and clothing away from the moving fan and engine drive belts.

4. If the coolant is leaking, stop the engine immediately. Call a Toyota dealer for assistance.
5. If there are no obvious leaks, check the coolant reservoir. If it is dry, add coolant to the reservoir while the engine is running. Fill it about half full. For the coolant type see “Coolant type selection” on page 260 in Section 7−2.

⚠ CAUTION

Do not attempt to remove the radiator cap when the engine and radiator are hot. Serious injury could result from scalding hot fluid and steam blown out under pressure.

6. After the engine coolant temperature has cooled to normal, again check the coolant level in the reservoir. If necessary, bring it up to half full again. Serious coolant loss indicates a leak in the system. You should have it checked as soon as possible at your Toyota dealer.

If you have a flat tire—

1. Reduce your speed gradually, keeping a straight line. Move cautiously off the road to a safe place well away from the traffic. Avoid stopping on the center divider of a highway. Park on a level spot with firm ground.
2. Stop the engine and turn on your emergency flashers.
3. Firmly set the parking brake and put the transmission in “P” (automatic) or reverse (manual).
4. Have everyone get out of the vehicle on the side away from traffic.
5. Read the following instructions thoroughly.

⚠ CAUTION

When jacking, be sure to observe the following to reduce the possibility of death or serious injury:

- **Follow jacking instructions.**
- **Do not put any part of your body under the vehicle supported by the jack. Otherwise, personal injury may occur.**
- **Do not start or run the engine while your vehicle is supported by the jack.**
- **Stop the vehicle on a level firm ground, firmly set the parking brake and put the transmission in “P” (automatic) or reverse (manual). Block the wheel diagonally opposite to the one being changed if necessary.**

- **Make sure to set the jack properly in the jack point. Raising the vehicle with jack improperly positioned will damage the vehicle or may allow the vehicle to fall off the jack and cause personal injury.**
- **Never get under the vehicle when the vehicle is supported by the jack alone.**
- **Use the jack only for lifting your vehicle during wheel changing.**
- **Do not raise the vehicle with someone in the vehicle.**
- **When raising the vehicle, do not put an object on or under the jack.**
- **Raise the vehicle only high enough to remove and change the tire.**

NOTICE

Do not continue driving with a deflated tire. Driving even a short distance can damage a tire and wheel beyond repair.

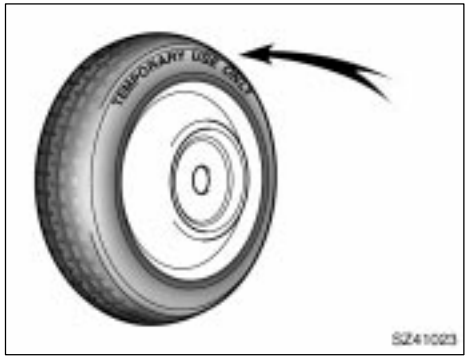

Compact spare tire

The compact spare tire is designed for temporary emergency use only.

The compact spare tire is identified by the distinctive wording “TEMPORARY USE ONLY” molded into the sidewall of the tire.

The compact spare tire saves space in your luggage compartment, and its lighter weight helps to improve fuel economy and permits easier installation in case of a flat tire.

To keep the compact spare tire noticeable, do not hide the wheel by a wheel cover or such.

The compact spare tire can be used many times, if necessary. It has tread life of up to 4800 km (3000 miles) depending on road conditions and your driving habits. When tread wear indicators appear on the tire, replace the tire.

See also the tire information in Section 7−2 for details on the tread wear indicators and other service information.

⚠ CAUTION

- **The compact spare tire was designed especially for your Toyota. Do not use it on any other vehicle.**
- **Do not use more than one compact spare tire at the same time.**
- **The pressure for the compact spare tire must be 420 kpa (4.2 kgf/cm^2 or bar, 60 psi).**
- **Do not exceed 80 km/h (50 mph) when driving with the compact spare tire.**
- **Replace the compact spare tire with the standard tire as soon as possible.**
- **Avoid sudden acceleration, sudden deceleration and sharp turns with the compact spare tire.**

NOTICE

Your ground clearance is reduced when the compact spare tire is installed so avoid driving over obstacles and drive slowly on rough, unpaved roads and speed bumps. Also, do not attempt to go through an automatic car wash as the vehicle may get caught, resulting in damage.

—Required tools and spare tire

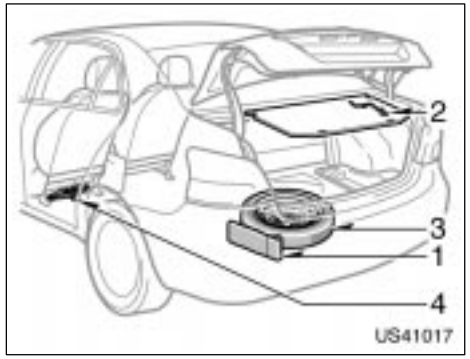

1. Get the required tools and spare tire.

1. Tool bag
2. Jack handle
3. Spare tire
4. Jack

You will find a wheel nut wrench in the tool bag.

To prepare yourself for an emergency, you should familiarize yourself with the use of the jack, each of the tools and their storage locations.

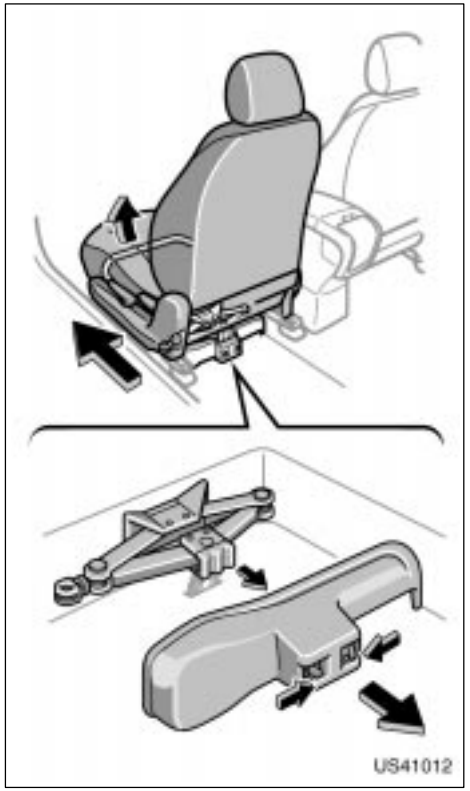

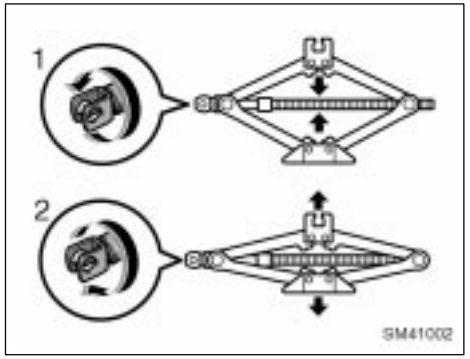

To remove the jack, move the driver seat to the front−most position and remove the cover.

To remove: Turn the joint in direction 1 by hand until the jack is free.

To store: Turn the joint in direction 2 by hand until the jack is firmly secured to prevent it flying forward during a collision or sudden braking.

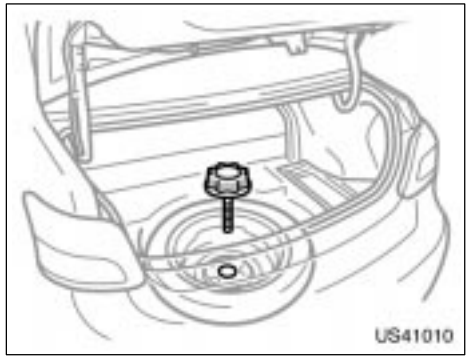

To remove the spare tire, loosen the bolt and remove it.

Then take the spare tire out of the vehicle.

When storing the spare tire, put it in place with the inner side of the wheel facing up. Then secure the tire by repeating the above removal steps in reverse order to prevent it from flying forward during a collision or sudden braking.

—Blocking the wheel

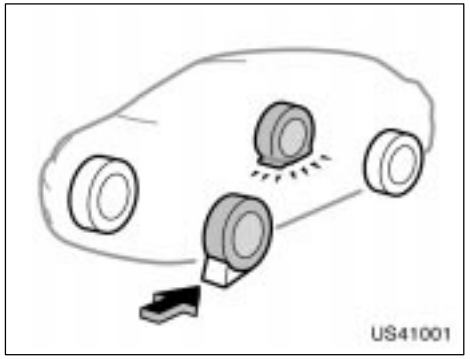

2. Block the wheel diagonally opposite the flat tire to keep the vehicle from rolling when it is jacked up.

When blocking the wheel, place a wheel block in front of one of the front wheels or behind one of the rear wheels.

—Removing wheel ornament (on some models)

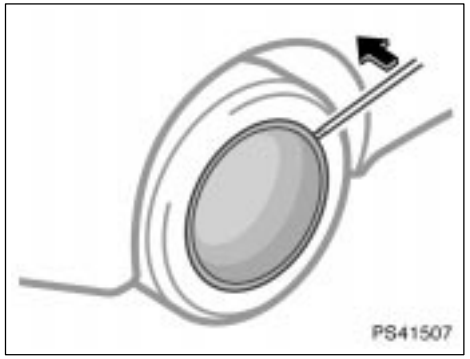

Steel wheels

3. Remove the wheel ornament.

Pry off the wheel ornament, using the beveled end of the wheel nut wrench as shown.

⚠ CAUTION

Do not try to pull off the ornament by hand. Take due care in handling the ornament to avoid unexpected personal injury.

—Loosening wheel nuts

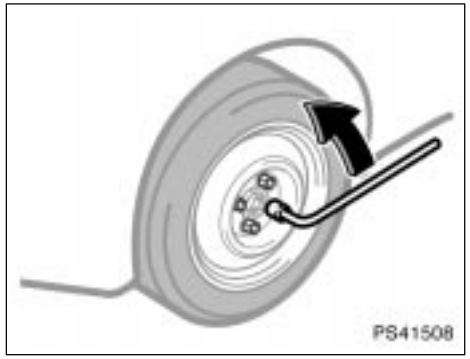

4. Loosen all the wheel nuts.

Always loosen the wheel nuts before raising the vehicle.

The nuts turn counterclockwise to loosen. To get maximum leverage, fit the wrench to the nut so that the handle is on the right side, as shown above. Grasp the wrench near the end of the handle and pull up on the handle. Be careful that the wrench does not slip off the nut.

Do not remove the nuts yet—just unscrew them about one−half turn.

⚠ CAUTION

Never use oil or grease on the bolts or nuts. The nuts may loosen and the wheels may fall off, which could cause a serious accident.

—Positioning the jack

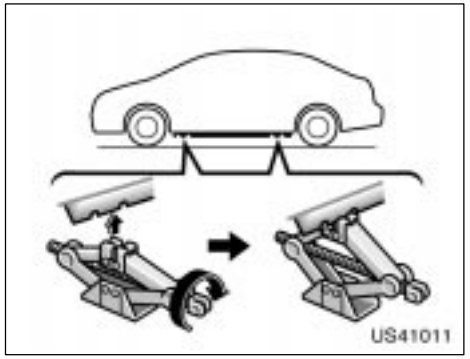

5. Position the jack at the correct jack point as shown.

Make sure the jack is positioned on a level and solid place.

—Raising your vehicle

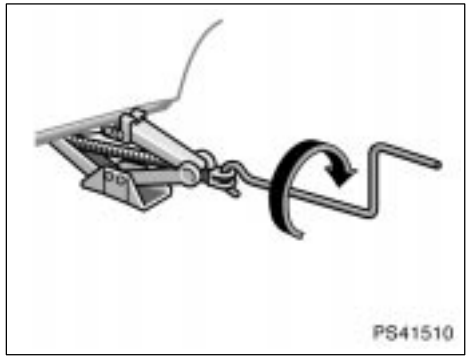

6. After making sure that no one is in the vehicle, raise it high enough so that the spare tire can be installed.

Remember you will need more ground clearance when putting on the spare tire than when removing the flat tire.

To raise the vehicle, insert the jack handle into the jack (it is a loose fit) and turn it clockwise. As the jack touches the vehicle and begins to lift, double−check that it is properly positioned.

⚠ CAUTION

Never get under the vehicle when the vehicle is supported by the jack alone.

—Changing wheels

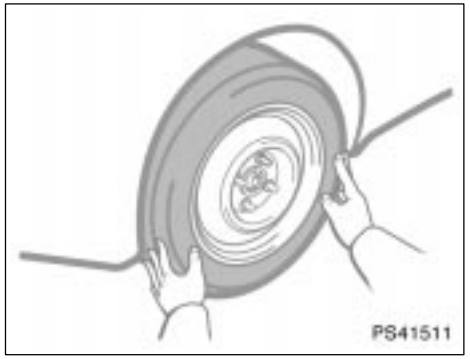

7. Remove the wheel nuts and change tires.

Lift the flat tire straight off and put it aside.

Roll the spare wheel into position and align the holes in the wheel with the bolts. Then lift up the wheel and get at least the top bolt started through its hole. Wiggle the tire and press it back over the other bolts.

—Reinstalling wheel nuts

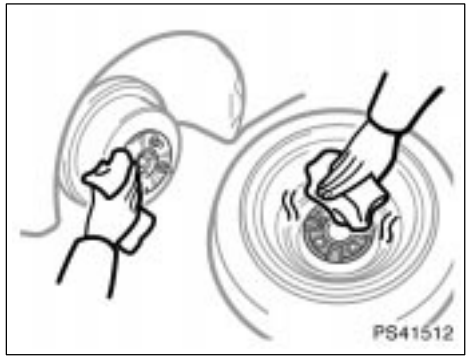

Before putting on wheels, remove any corrosion on the mounting surfaces with a wire brush or such. Installation of wheels without good metal−to−metal contact at the mounting surface can cause wheel nuts to loosen and eventually cause a wheel to come off while driving.

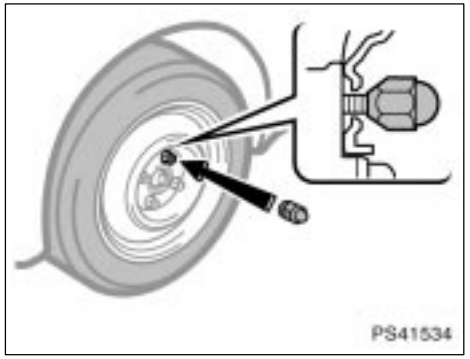

8. Reinstall all the wheel nuts finger tight.

Reinstall the wheel nuts (tapered end inward) and tighten them as much as you can by hand. Press back on the tire and see if you can tighten them more.

⚠ CAUTION

Never use oil or grease on the bolts or nuts. Doing so may lead to overtightening the nuts and damaging the bolts. The nuts may loosen and the wheels may fall off, which could cause a serious accident. If there is oil or grease on any bolt or nut, clean it.

—Lowering your vehicle

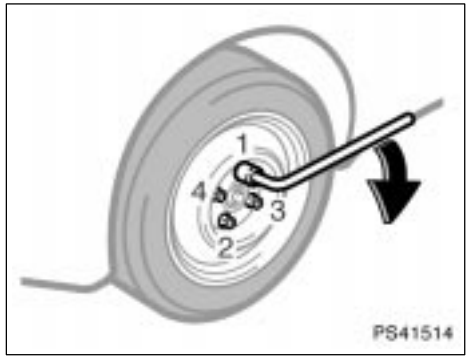

9. Lower the vehicle completely and tighten the wheel nuts.

Turn the jack handle counterclockwise to lower the vehicle.

Use only the wheel nut wrench to tighten the nuts. Do not use other tools or any additional leverage other than your hands, such as a hammer, pipe or your foot. Make sure the wrench is securely engaged over the nut.

Tighten each nut a little at a time in the order shown. Repeat the process until all the nuts are tight.

⚠ CAUTION

- **When lowering the vehicle, make sure all portions of your body and all other persons around will not be injured as the vehicle is lowered to the ground.**
- **Have the wheel nuts tightened with torque wrench to 103 N·m (10.5 kgf·m, 76 ft·lbf), as soon as possible after changing wheels. Otherwise, the nuts may loosen and the wheels may fall off, which could cause a serious accident.**
- **Do not attach a heavily damaged plastic wheel ornament. It may fly off the wheel and cause accidents while the vehicle is moving.**

—After changing wheels

10. Check the air pressure of the replaced tire.

Adjust the air pressure to the specification designated on page 285 in Section 8. If the pressure is lower, drive slowly to the nearest service station and fill to the correct pressure.

Do not forget to reinstall the tire inflation valve cap as dirt and moisture could get into the valve core and possibly cause air leakage. If the cap is missing, have a new one put on as soon as possible.

11. Restow all the tools, jack and flat tire securely.

As soon after changing wheels as possible, tighten the wheel nuts to the torque specified on page 285 in Section 8 with a torque wrench. And have a technician repair the flat tire.

⚠ CAUTION

Before driving, make sure all the tools, jack and flat tire are securely in place in their storage location to reduce the possibility of personal injury during a collision or sudden braking.

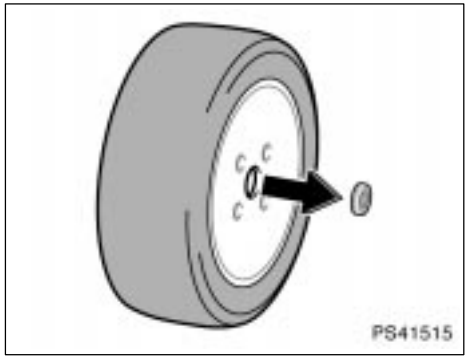

Aluminum wheels—Before stowing the flat tire, remove the center wheel ornament by pushing from the reverse side.

Be careful not to lose the wheel ornament.

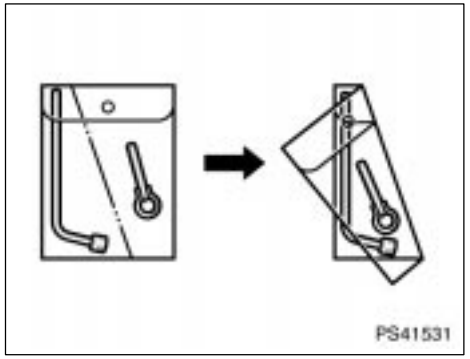

Position the tools as shown in the illustration. Fold the tool bag over and then restow it.

If your vehicle becomes stuck

If your vehicle becomes stuck in snow, mud, sand, etc., then you may attempt to rock the vehicle free by moving it forward and backward.

⚠ CAUTION

Do not attempt to rock the vehicle free by moving it forward and backward if people or objects are any where near the vehicle. During the rocking operation the vehicle may suddenly move forward or backward as it becomes unstuck, causing injury or damage to nearby people or objects.

NOTICE

If you rock your vehicle, observe the following precautions to prevent damage to the transmission and other parts.

- ***Do not depress the accelerator pedal while shifting the selector lever or before the transmission is completely shifted to forward or reverse gear.***
- ***Do not race the engine and avoid spinning the wheels.***
- ***If your vehicle remains stuck after rocking the vehicle several times, consider other ways such as towing.***

If your vehicle needs to be towed—

(a) Towing with wheel lift type truck—

—From front



—From rear



(b) Using flat bed truck



US41002

If towing is necessary, we recommend you to have it done by your Toyota dealer or a commercial tow truck service. In consultation with them, have your vehicle towed using either (a) or (b).

Only when you cannot receive a towing service from a Toyota dealer or commercial tow truck service, tow your vehicle carefully in accordance with the instructions given in "—Emergency towing" in this Section.

Proper equipment will help ensure that your vehicle is not damaged while being towed. Commercial operators are generally aware of the state/provincial and local laws pertaining to towing.

Your vehicle can be damaged if it is towed incorrectly. Although most operators know the correct procedure, it is possible to make a mistake. To avoid damage to your vehicle, make sure the following few precautions are observed. If necessary, show this page to the tow truck driver.

TOWING PRECAUTIONS:

Use a safety chain system for all towing, and abide by the state/provincial and local laws. The wheels and axle on the ground must be in good condition. If they are damaged, use a towing dolly.

(a) Towing with wheel lift type truck

From front—Release the parking brake.

NOTICE

When lifting wheels, take care to ensure adequate ground clearance for towing at the opposite end of the raised vehicle. Otherwise, the bumper and/or underbody of the towed vehicle will be damaged during towing.

From rear—

- Manual transmission:

  We recommend using a towing dolly under the front wheels. If you do not use a towing dolly, place the ignition key in the "ACC" position and put the transmission in neutral.

NOTICE

Do not tow with the key removed or in the "LOCK" position when towing from the rear without a towing dolly. The steering lock mechanism is not strong enough to hold the front wheels straight.

- Automatic transmission:

  Use a towing dolly under the front wheels.

NOTICE

Never tow a vehicle with an automatic transmission from the rear with the front wheels on the ground, as this may cause serious damage to the transmission.

(b) Using flat bed truck

—Emergency towing

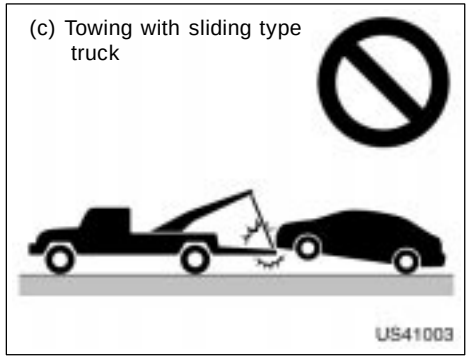

(c) Towing with sling type truck

NOTICE

Do not tow with sling type truck, either from the front or rear. This may cause body damage.

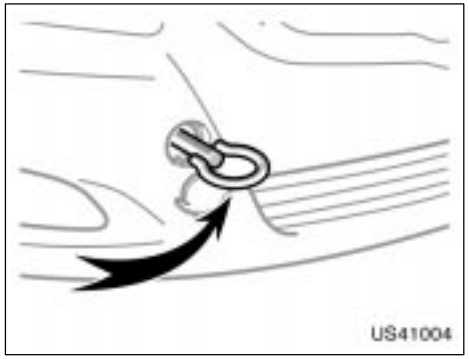

Front

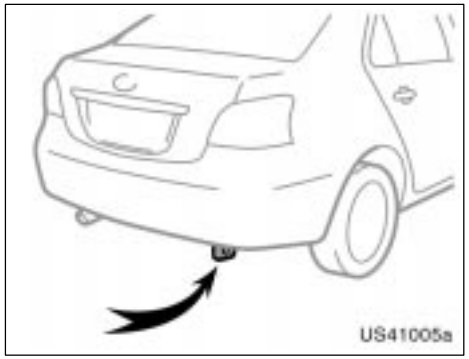

Rear

If towing is necessary, we recommend you to have it done by your Toyota dealer or a commercial tow truck service.

If a towing service is not available in an emergency, your vehicle may be temporarily towed by a cable or chain secured to either the emergency towing eyelet on the front of the vehicle or to the right emergency towing eyelet under the rear of the vehicle. Use extreme caution when towing vehicles.

Vehicles with an automatic transmission, use only the front towing eyelet when towing your vehicle.

To install the front towing eyelet, see "—Installing front towing eyelet" on page 232 in this Section.

NOTICE

- ***Only use specified towing eyelet; otherwise your vehicle may be damaged.***
- ***Vehicles with an automatic transmission, never tow a vehicle from the rear with four wheels on the ground. This may cause serious damage to the transmission.***

A driver must be in the vehicle to steer it and operate the brakes.

Towing in this manner may be done only on hard−surfaced roads for a short distance and at low speeds. Also, the wheels, axles, drive train, steering and brakes must all be in good condition.

⚠ CAUTION

Use extreme caution when towing vehicles. Avoid sudden starts or erratic driving maneuvers which would place excessive stress on the emergency towing eyelets and towing cable or chain. The eyelets and towing cable or chain may break and cause serious injury or damage.

NOTICE

- ***Use only a cable or chain specifically intended for use in towing vehicles. Securely fasten the cable or chain to the towing eyelet provided.***
- ***Do not use the left rear eyelet. It is not designed for towing.***

Before towing, release the parking brake and put the transmission in neutral (manual) or “N” (automatic). The key must be in “ACC” (engine off) or “ON” (engine running).

⚠ CAUTION

If the engine is not running, the power assist for the brakes and steering will not work so steering and braking will be much harder than usual.

—Installing front towing eyelet

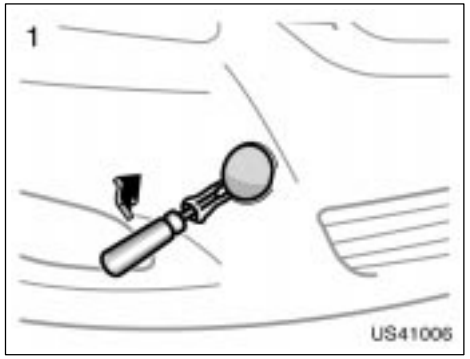

1. Remove the front towing eyelet cover on the front bumper, using a flathead screwdriver which is wrapped with a cloth.



2. Use the towing eyelet in the tool bag. Secure the front towing eyelet to the hole on the front bumper by turning clockwise. (For the tool bag storage location, see "—Required tools and spare tire" on page 222.)

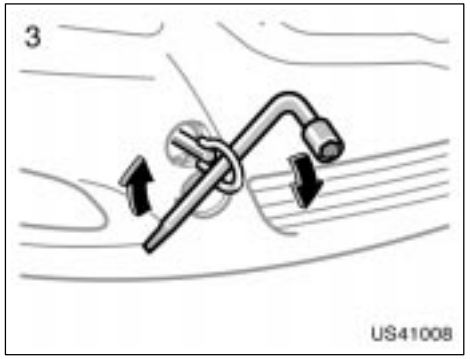

3. Tighten the front towing eyelet securely by a wheel nut wrench.

⚠ CAUTION

When installing the eyelet on the vehicle, be sure to tighten the front eyelet securely. If the eyelet is loose, it may come off when being towed and result in death or serious injury.

If you cannot shift automatic transmission selector lever

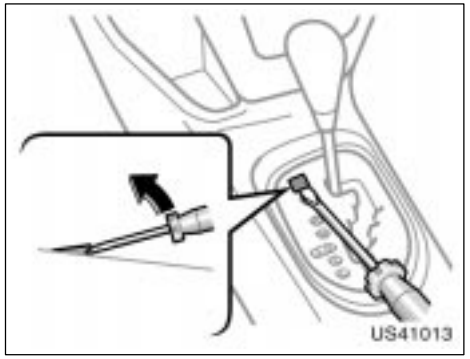

If you cannot shift the selector lever out of "P" position to other positions even though the brake pedal is depressed, use the shift lock override button as follows:

1. **Turn the ignition key to "ACC" or "LOCK" position. Make sure the parking brake is applied.**
2. **Pry up the cover with a flathead screwdriver or equivalent.**

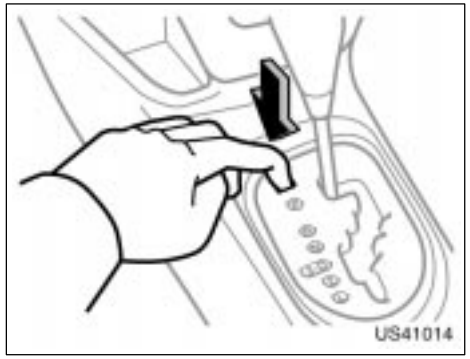

3. **Insert your finger into the hole to push down the shift lock override button. You can shift out of “P” position only while pushing the button.**
4. **Shift into “N” position.**
5. **Insert the cover.**
6. **Start the engine. For your safety, keep the brake pedal depressed.**

Be sure to have the system checked by your Toyota dealer as soon as possible.

If you lose your keys

You can purchase a new key at your Toyota dealer if you can give them the key number. If your vehicle is equipped with the engine immobilizer system, the dealer will also need your master key.

Vehicles with engine immobilizer system—Even if you lose only one key, contact your Toyota dealer to make a new key. If you lose all your master keys, you cannot make new keys; the whole engine immobilizer system must be replaced.

See the suggestion given in “Keys” on page 10 in Section 1−2.

You can use the wireless remote control system with the new key. Contact your Toyota dealer for detailed information.

If your keys are locked in the vehicle and you cannot get a duplicate, many Toyota dealers can still open the door for you, using their special tools. If you must break a window to get in, we suggest breaking the smallest side window because it is the least expensive to replace. Be extremely cautious to avoid cuts from the glass.

SECTION 5

CORROSION PREVENTION AND APPEARANCE CARE

Corrosion prevention and appearance care

Protecting your Toyota from corrosion 236
Washing and waxing your Toyota 237
Cleaning the interior 239

Protecting your Toyota from corrosion

Toyota, through its diligent research, design and use of the most advanced technology available, helps prevent corrosion and provides you with the finest quality vehicle construction. Now, it is up to you. Proper care of your Toyota can help ensure long−term corrosion prevention.

The most common causes of corrosion to your vehicle are:

- The accumulation of road salt, dirt and moisture in hard−to−reach areas under the vehicle.
- Chipping of paint, or undercoating caused by minor accidents or by stones and gravel.

Care is especially important if you live in particular areas or operate your vehicle under certain environmental conditions:

- Road salt or dust control chemicals will accelerate corrosion, as will the presence of salt in the air near the sea−coast or in areas of industrial pollution.
- High humidity accelerates corrosion especially when temperatures range just above the freezing point.
- Wetness or dampness to certain parts of your vehicle for an extended period of time, may cause corrosion even though other parts of the vehicle may be dry.
- High ambient temperatures can cause corrosion to those components of the vehicle which do not dry quickly due to lack of proper ventilation.

The above signifies the necessity to keep your vehicle, particularly the underside, as clean as possible and to repair any damage to paint or protective coatings as soon as possible.

To help prevent corrosion on your Toyota, follow these guidelines:

Wash your vehicle frequently. It is, of course, necessary to keep your vehicle clean by regular washing, but to prevent corrosion, the following points should be observed:

- If you drive on salted roads in the winter or if you live near the ocean, you should hose off the undercarriage at least once a month to minimize corrosion.
- High pressure water or steam is effective for cleaning the vehicle's underside and wheel housings. Pay particular attention to these areas as it is difficult to see all the mud and dirt. It will do more harm than good to simply wet the mud and debris without removing. The lower edge of doors, rocker panels and frame members have drain holes which should not be allowed to clog with dirt as trapped water in these areas can cause corrosion.
- Wash the underside of the vehicle thoroughly when winter is over.

See "Washing and waxing your Toyota" for more tips.

Check the condition of your vehicle's paint and trim. If you find any chips or scratches in the paint, touch them up immediately to prevent corrosion from starting. If the chips or scratches have gone through the bare metal, have a qualified body shop make the repair.

Check the interior of your vehicle. Water and dirt can accumulate under the floor mats and could cause corrosion. Occasionally check under the mats to make sure the area is dry. Be particularly careful when transporting chemicals, cleansers, fertilizers, salt, etc.; these should be transported in proper containers. If a spill or leak should occur, immediately clean and dry the area.

Use mud shields on your wheels. If you drive on salted or gravel roads, mud shields help protect your vehicle. Full−size shields, which come as near to the ground as possible, are the best. We recommend that the fittings and the area where the shields are installed be treated to resist corrosion. Your Toyota dealer will be happy to assist in supplying and installing the shields if they are recommended for your area.

Keep your vehicle in a well ventilated garage or a roofed place. Do not park your vehicle in a damp, poorly ventilated garage. If you wash your vehicle in the garage, or if you drive it covered with water or snow, your garage may be so damp as to cause corrosion. Even if your garage is heated, a wet vehicle can corrode if the ventilation is poor.

Washing and waxing your Toyota

Washing your Toyota

Keep your vehicle clean by regular washing.

The following cases may cause weakness to the paint or corrosion to the body and parts. Wash your vehicle as soon as possible.

- When driving in a coastal area
- When driving on a road sprinkled with antifreeze
- When exposed to coal tar, tree sap, bird droppings and carcass of an insect
- When driving in areas where there is a lot of smoke, soot, dust, iron dust or chemical substances
- When the vehicle becomes remarkably dirty with dust and mud

Hand−washing your Toyota

Work in the shade and wait until the vehicle body is not warm to the touch.

⚠ CAUTION

- **When cleaning under floor or chassis, be careful not to injure your hands.**
- **Exhaust gases cause the exhaust pipe to become quite hot. When washing the vehicle, be careful not to touch the pipe until it has cooled sufficiently, as touching a hot exhaust pipe can cause burns.**

NOTICE

When the front wiper arms need to be lifted away from the windshield to wash the vehicle, raise the arm on the driver side first. Conversely, when returning the wipers to their original positions, fold down the arm on the front passenger side first. Failure to perform the operations in the correct order results in damage.

1. Rinse off loose dirt with a hose. Remove any mud or road salt from the underside of the vehicle or the wheel wells.
2. Wash with a mild car−wash soap, mixed according to the manufacturer's instructions. Use a soft cotton mitt and keep it wet by dipping it frequently into the wash water. Do not rub hard—let the soap and water remove the dirt.

Fuel filler door: Do not apply water (high−pressure car wash, for example) at or near the fuel tank inlet with the fuel filler door opened. If the water enters the air vent, you may experience trouble with refueling or rough engine idling.

Plastic wheel ornaments: The plastic wheel ornaments are damaged easily by organic substances. If any organic substance splash an ornament, be sure to wash them off with water and check if the ornament is damaged.

Aluminum wheels: Use only a mild soap or neutral detergent.

Plastic bumpers: Wash carefully. Do not scrub with abrasive cleaners. The bumper faces are soft.

Exterior lights: Wash carefully. Do not use organic substances or scrub them with a hard brush. This may damage the surfaces of the lights.

Road tar: Remove with turpentine or cleaners that are marked safe for painted surfaces.

3. Rinse thoroughly—dried soap can cause streaking. In hot weather you may need to rinse each section right after you wash it.
4. To prevent water spots, dry the vehicle using a clean soft cotton towel. Do not rub or press hard—you might scratch the paint.

NOTICE

- ***Do not use organic substances (gasoline, kerosene, benzine or strong solvents), which may be toxic or cause damage.***
- ***Do not scrub any part of the vehicle with a hard brush, which may cause damage.***

Automatic car wash

Your vehicle may be washed in an automatic car wash, but remember that the paint can be scratched by some types of brushes, unfiltered washing water, or the washing process itself. Scratching reduces paint durability and gloss, especially on darker colors. The manager of the car wash should be able to advise you whether the process is safe for the paint on your vehicle.

NOTICE

To prevent damage to the antenna, make sure to remove it before driving your Toyota through an automatic car wash.

Waxing your Toyota

Polishing and waxing is recommended to maintain the original beauty of your Toyota's finish.

Apply wax once a month or if the vehicle surface does not repel water well.

1. Always wash and dry the vehicle before you begin waxing, even if you are using a combined cleaner and wax.
2. Use a good quality polish and wax. If the finish has become extremely weathered, use a car−cleaning polish, followed by a separate wax. Carefully follow the manufacturer's instructions and precautions. Be sure to polish and wax the chrome trim as well as the paint.

Windshield washer nozzles: Make sure that the nozzles do not become blocked when waxing. If a nozzle becomes blocked, contact your Toyota dealer to have the vehicle serviced.

NOTICE

If a nozzle becomes blocked, do not try to clear it with a pin or other object. The nozzle will be damaged.

Exterior lights: Do not apply wax on the surfaces of the lights. Wax may cause damage to the lenses. If you accidentally put wax on the light surfaces, wipe or wash it off.

3. Wax the vehicle again when water does not bead but remains on the surface in large patches.

NOTICE

Always remove the plastic bumpers if your vehicle is re−painted and placed in a high heat paint waxing booth. High temperatures could damage the bumpers.

Cleaning the interior

⚠ CAUTION

- **Vehicles with side airbags and curtain shield airbags:**

  Be careful not to splash water or spill liquid on the floor. This may prevent the side airbags and curtain shield airbags from activating correctly, resulting in serious injury.
- **Do not wash the vehicle floor with water, or allow water to get onto the floor when cleaning the vehicle interior or exterior. Water may get into audio components or other electrical components above or under the floor carpet (or mat) and cause a malfunction; and it may cause body corrosion.**

Vinyl interior

The vinyl upholstery may be easily cleaned with a mild soap or detergent and water.

First vacuum over the upholstery to remove loose dirt. Then, using a sponge or soft cloth, apply the soap solution to the vinyl. After allowing it to soak in for a few minutes to loosen the dirt, remove the dirt and wipe off the soap with a clean damp cloth. If all the dirt do not come off, repeat the procedure. Commercial foaming−type vinyl cleaners are also available which work well. Follow the manufacturer's instructions.

NOTICE

Do not use solvent, thinner, gasoline or window cleaner on the interior.

Carpets

Use a good foam−type shampoo to clean the carpets.

Begin by vacuuming thoroughly to remove as much dirt as possible. Several types of foam cleaners are available; some are in aerosol cans and others are powders or liquids which you mix with water to produce a foam. To shampoo the carpets, use a sponge or brush to apply the foam. Rub in overlapping circles.

Do not apply water—the best results are obtained by keeping the carpet as dry as possible. Read the shampoo instructions and follow them closely.

Seat belts

The seat belts may be cleaned with mild soap and water or with lukewarm water.

Use a cloth or sponge. As you are cleaning, check the belts for excessive wear, fraying, or cuts.

NOTICE

- ***Do not use dye or bleach on the belts—it may weaken them.***
- ***Do not use the belts until they become dry.***

Windows

The windows may be cleaned with any household window cleaner.

NOTICE

When cleaning the inside of the windows, be careful not to scratch or damage the heater wires or connectors.

Air conditioning control panel, car audio, instrument panel, console panel, and switches

Use a soft damp cloth for cleaning.

Soak a clean soft cloth in water or lukewarm water then lightly wipe off dirt.

NOTICE

- ***Do not use organic substances (solvents, kerosene, alcohol, gasoline, etc.) or alkaline or acidic solutions. These chemicals can cause discoloring, staining or peeling of the surface.***
- ***If you use cleaners or polishing agents, make sure their ingredients do not include the substances mentioned above.***
- ***If you use a liquid car freshener, do not spill the liquid onto the vehicle's interior surfaces. It may contain the ingredients mentioned above. Immediately clean any spill using the method mentioned above.***

Leather Interior

The leather upholstery may be cleaned with neutral detergent for wool.

Remove dirt using a soft cloth dampened with 5% solution of neutral detergent for wool. Then thoroughly wipe off all traces of detergent with a clean damp cloth.

After cleaning or whenever any part of the leather gets wet, dry with a soft clean cloth. Allow the leather to dry in a ventilated shaded area.

NOTICE

- ***If a stain should fail to come out with a neutral detergent, apply a cleaner that does not contain an organic solvent.***
- ***Never use organic substances such as benzine, alcohol or gasoline, or alkaline or acid solutions for cleaning the leather as these could cause discoloring.***
- ***Use of a nylon brush or synthetic fiber cloth, etc. may scratch the fine grained surface of the leather.***

- ***Mildew may develop on soiled leather upholstery. Be especially careful to avoid oil spots. Try to keep your upholstery always clean.***
- ***Long exposure to direct sunlight may cause the leather surface to harden and shrink. Keep your vehicle in a shaded area, especially in the summer.***
- ***The interior of your vehicle is apt to heat up on hot summer days, so avoid placing on the upholstery items made of vinyl or plastic or containing wax as these tend to stick to leather when warm.***
- ***Improper cleaning of the leather upholstery could result in discoloration or staining.***

If you have any questions about the cleaning of your Toyota, your local Toyota dealer will be pleased to answer them.

SECTION 6

VEHICLE MAINTENANCE AND CARE

Vehicle maintenance and care

Maintenance requirements 244
General maintenance 245
Does your vehicle need repairing? 247
Emissions Inspection and Maintenance (I/M) programs 248

For scheduled maintenance information, please refer to the “Scheduled Maintenance Guide” or “Owner’s Manual Supplement”.

Maintenance requirements

Your Toyota vehicle has been designed for fewer maintenance requirements with longer service intervals to save both your time and money. However, each regular maintenance, as well as day−to−day care, is more important than ever before to ensure smooth, trouble−free, safe, and economical drivings.

It is the owner's responsibility to make sure the specified maintenance, including general maintenance service, is performed. Note that both the new vehicle and emission control system warranties specify that proper maintenance and care must be performed. See "Owner's Warranty Information Booklet" or "Owner's Manual Supplement" for complete warranty information.

General maintenance

General maintenance items are those day−to−day care practices that are important to your vehicle for proper operation. It is the owner's responsibility to insure that the general maintenance items are performed regularly.

These checks or inspections can be done either by yourself or a qualified technician, or if you prefer, your Toyota dealer will be pleased to do them at a nominal cost.

Scheduled maintenance

The scheduled maintenance items listed in the "Scheduled Maintenance Guide" or "Owner's Manual Supplement" are those required to be serviced at regular intervals.

For details of your maintenance schedule, read the "Scheduled Maintenance Guide" or "Owner's Manual Supplement".

It is recommended that any replacement parts used for maintenance or for the repair of the emission control system be Toyota supplied.

The owner may elect to use non−Toyota supplied parts for replacement purposes without invalidating the emission control system warranty. However, use of replacement parts which are not of equivalent quality may impair the effectiveness of the emission control systems.

You may also elect to have maintenance, replacement, or repair of the emission control devices and system performed by any automotive repair establishment or individual without invalidating this warranty. See "Owner's Warranty Information Booklet" or "Owner's Manual Supplement" for complete warranty information.

Where to go for service?

Toyota technicians are well−trained specialists and are kept up to date with the latest service information through technical bulletins, service tips, and in−dealership training programs. They learn to work on Toyotas before they work on your vehicle, rather than while they are working on it.

You can be confident that your Toyota dealer's service department performs the best job to meet the maintenance requirements on your vehicle—reliably and economically.

Your copy of the repair order is proof that all required maintenance has been performed for warranty coverage. If any problems should arise with your vehicle while under warranty, your Toyota dealer will promptly take care of it. Again, be sure to keep a copy of the repair order for any service performed on your Toyota.

What about do−it−yourself maintenance?

Many of the maintenance items are easy to do yourself if you have a little mechanical ability and a few basic automotive tools. Simple instructions for how to perform them are presented in Section 7.

If you are a skilled do−it−yourself mechanic, the Toyota service manuals are recommended. Please be aware that do−it−yourself maintenance can affect your warranty coverage. See “Owner’s Warranty Information Booklet” or “Owner’s Manual Supplement” for the details.

General maintenance

Listed below are the general maintenance items that should be performed as frequently as specified. In addition to checking the items listed, if you notice any unusual noise, smell or vibration, you should investigate the cause or take your vehicle to your Toyota dealer or a qualified service shop immediately. It is recommended that any problem you notice be brought to the attention of your dealer or the qualified service shop for their advice.

⚠ CAUTION

Make these checks only with adequate ventilation if you run the engine.

IN THE ENGINE COMPARTMENT

Items listed below should be checked from time to time, e.g. each time when refueling.

Washer fluid
Make sure there is sufficient fluid in the tank. See Section 7−3 for additional information.

Engine coolant level
Make sure the coolant level is between the “FULL” and “LOW” lines on the see−through reservoir when the engine is cold. See Section 7−2 for additional information.

Radiator, condenser and hoses
Check that the front of the radiator and condenser are clean and not blocked with leaves, dirt or insects. See Section 7−2 for additional information.

Battery condition
Check the battery condition by the indicator color. See page 272 in Section 7−3 for additional information.

Brake fluid level
Make sure the brake fluid level is correct. See Section 7−2 for additional information.

Engine oil level
Check the level on the dipstick with the engine turned off and the vehicle parked on a level ground. See Section 7−2 for additional information.

Exhaust system
If you notice any change in the sound of the exhaust or smell exhaust fumes, have the cause located and corrected immediately. (See “Engine exhaust cautions” on page 173 in Section 2.)

INSIDE THE VEHICLE

Items listed below should be checked regularly, e.g. while performing periodic services, cleaning the vehicle, etc.

Lights
Make sure the headlights, stop lights, tail lights, turn signal lights, and other lights are all working. Check headlight aim.

Service reminder indicators and warning buzzers
Check that all service reminder indicators and warning buzzers function properly.

Steering wheel
Be alert for changes in steering condition, such as hard steering or strange noise.

Seats
Check that all front seat controls such as seat adjusters, seatback recliner, etc. operate smoothly and that all latches lock securely in any position. Check that the head restraint move up and down smoothly and that the locks hold securely in any latched position. For folding−down rear seatbacks, check that the latches lock securely.

Seat belts
Check that the seat belt system such as buckles, retractors and anchors operate properly and smoothly. Make sure the belt webbing is not cut, frayed, worn or damaged.

Accelerator pedal
Check the pedal for smooth operation and uneven pedal effort or catching.

Clutch pedal
Check the pedal for smooth operation.

Brake pedal
Check the pedal for smooth operation and that the pedal has the proper clearance. Check the brake booster function.

Brakes
In a safe place, check that the brakes do not pull to one side when applied.

Parking brake
Check that the lever has the proper travel and that, on a safe incline, your vehicle is held securely with only the parking brake applied.

Automatic transmission “Park” mechanism
Check the lock release button of the selector lever for proper and smooth operation. On a safe incline, check that your vehicle is held securely with the selector lever in “P” position and all brakes released.

OUTSIDE THE VEHICLE

Items listed below should be performed from time to time, unless otherwise specified.

Fluid leaks
Check underneath for leaking fuel, oil, water or other fluid after the vehicle has been parked for a while. If you smell fuel fumes or notice any leak, have the cause found and corrected immediately.

Doors and engine hood
Check that all doors including trunk lid operate smoothly and all latches lock securely. Make sure the engine hood secondary latch secures the hood from opening when the primary latch is released.

Tire inflation pressure
Check the pressure with a gauge every two weeks, or at least once a month. See Section 7−2 for additional information.

Tire surface and wheel nuts
Check the tires carefully for cuts, damage or excessive wear. See Section 7−2 for additional information. When checking the tires, make sure no nuts are missing, and check the nuts for looseness. Tighten them if necessary.

Tire rotation
Rotate the tries according to the maintenance schedule. (For scheduled maintenance information, please refer to the “Scheduled Maintenance Guide” or “Owner’s Manual Supplement”.) See Section 7−2 for additional information.

Does your vehicle need repairing?

Be on the alert for changes in performance, sounds, and visual tip−offs that indicate service is needed. Some important clues are as follows:

- Engine missing, stumbling, or pinging
- Appreciable loss of power
- Strange engine noises
- A leak under the vehicle (however, water dripping from the air conditioning after use is normal.)
- Change in exhaust sound (This may indicate a dangerous carbon monoxide leak. Drive with the windows open and have the exhaust system checked immediately.)
- Flat−looking tire; excessive tire squeal when cornering; uneven tire wear
- Vehicle pulls to one side when driving straight on a level road
- Strange noises related to suspension movement
- Loss of brake effectiveness; spongy feeling brake or clutch pedal; pedal almost touches floor; vehicle pulls to one side when braking
- Engine coolant temperature continually higher than normal

If you notice any of these clues, take your vehicle to your Toyota dealer as soon as possible. It probably needs adjustment or repair.

⚠ CAUTION

Do not continue driving with the vehicle unchecked. It could result in serious vehicle damage and possibly personal injury.

Emissions Inspection and Maintenance (I/M) programs

Some states have vehicle emission inspection programs which include OBD (On−Board Diagnostics) checks.

The OBD system monitors the operation of the emission control system. When the OBD system determines that a problem exists somewhere in the emission control system, the malfunction indicator lamp comes on. In this case, your vehicle may not pass the I/M test and need to be repaired. Contact your Toyota dealer to service the vehicle.

Even if the malfunction indicator lamp does not come on, your vehicle may not pass the I/M test as readiness codes have not been set in the OBD system.

Readiness codes are automatically set during ordinary driving. However, when the battery is disconnected or run down, the codes are erased. Also, depending on your driving habits, the codes may not be completely set.

Also, if the malfunction indicator lamp had come on recently due to temporary malfunction such as a loose fuel tank cap, your vehicle may not pass the I/M test.

The malfunction indicator lamp will go off after taking several driving trips, but the error code in the OBD system will not be cleared unless about 40 trips or more are taken.

If your vehicle does not pass the I/M test even the malfunction indicator lamp does not come on, contact your Toyota dealer to prepare the vehicle for re−testing.

SECTION 7–1

DO–IT–YOURSELF MAINTENANCE

Introduction

Engine compartment overview 250
Fuse locations 251
Do–it–yourself service precautions 252
Parts and tools 254
Positioning the jack 255

Engine compartment overview

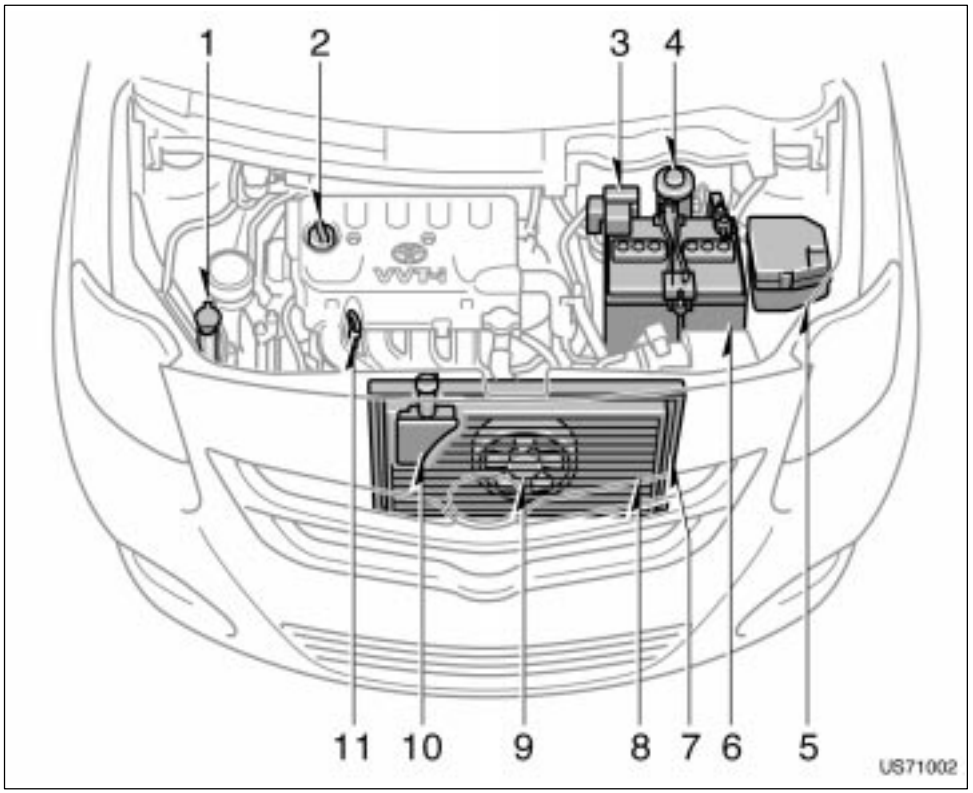

1. Windshield washer fluid tank
2. Engine oil filler cap
3. Fusible link block
4. Brake fluid reservoir
5. Fuse block
6. Battery
7. Radiator
8. Condenser
9. Electric cooling fan
10. Engine coolant reservoir
11. Engine oil level dipstick

Fuse locations

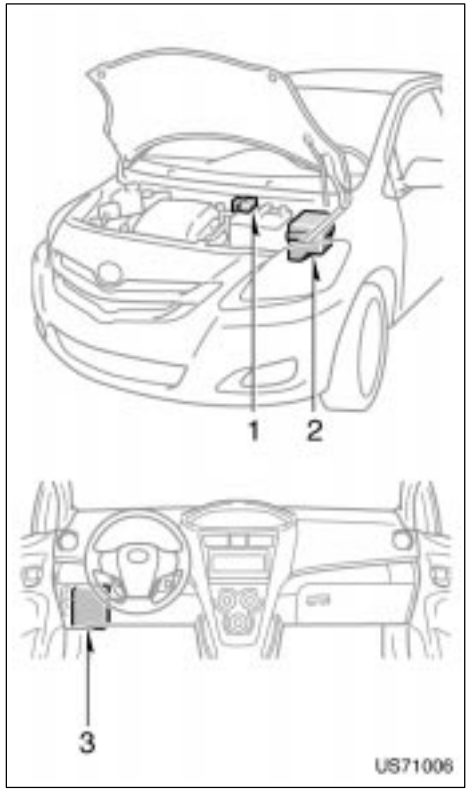

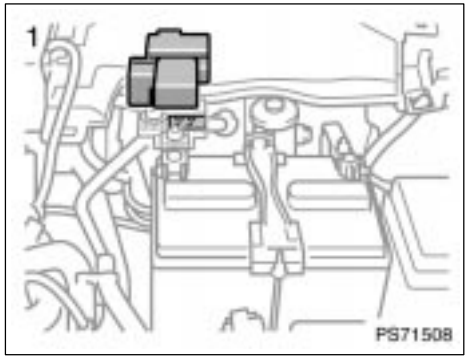

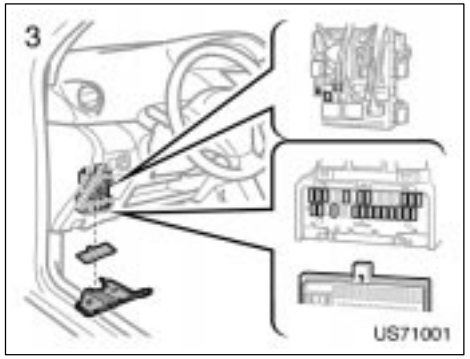

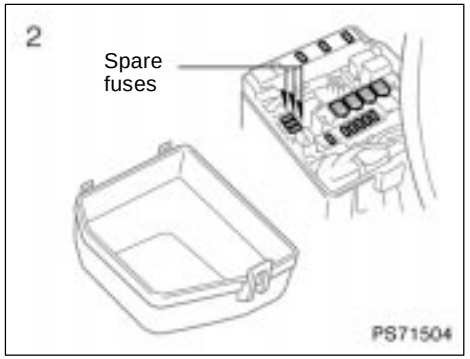

Do−it−yourself service precautions

If you perform maintenance by yourself, be sure to follow the correct procedure given in this Section.

You should be aware that improper or incomplete servicing may result in operating problems.

Performing do−it−yourself maintenance during the warranty period may affect your warranty coverage. Read the separate Toyota Warranty statement for details and suggestions.

This section gives instructions only for those items that are relatively easy for an owner to perform. As explained in Section 6, there are still a number of items that must be done by a qualified technician with special tools.

For information on tools and parts for do−it−yourself maintenance, see “Parts and tools”.

Utmost care should be taken when working on your vehicle to prevent accidental injury. Here are a few precautions that you should be especially careful to observe:

⚠ CAUTION

- **When the engine is running, keep hands, clothing, and tools away from the moving fan and engine drive belts. (Removing rings, watches, and ties is advisable.)**
- **Right after driving, the engine compartment—the engine, radiator, exhaust manifold and spark plug boots, etc.—will be hot. So be careful not to touch them. Oil, fluids and spark plugs may also be hot.**
- **If the engine is hot, do not remove the radiator cap or loosen the drain plugs to prevent burning yourself.**
- **Do not leave anything that may burn easily, such as paper or rags, in the engine compartment.**
- **Do not smoke, cause sparks or allow open flames around fuel or the battery. Their fumes are flammable.**
- **Be extremely cautious when working on the battery. It contains poisonous and corrosive sulfuric acid.**
- **Do not get under your vehicle with just the body jack supporting it. Always use automotive jack stands or other solid supports.**
- **Be sure that the ignition is off if you work near the electric cooling fans or radiator grille. With the ignition on, the electric cooling fans will automatically start to run if the engine coolant temperature is high and/or the air conditioning is on.**
- **Use eye protection whenever you work on or under your vehicle where you may be exposed to flying or falling material, fluid spray, etc.**
- **Used engine oil contains potentially harmful contaminants which may cause skin disorders such as inflammation or skin cancer, so care should be taken to avoid prolonged and repeated contact with it. To remove used engine oil from your skin, wash thoroughly with soap and water.**
- **Do not leave used oil within the reach of children.**

- **Dispose of used oil and filter only in a safe and acceptable manner. Do not dispose of used oil and filter in household trash, in sewers or onto the ground. Call your dealer or a service station for information concerning recycling or disposal.**
- **Take care when filling the brake and clutch fluid reservoirs because brake fluid can harm your eyes and damage painted surfaces. If fluid gets in your eyes, flush your eyes with clean water immediately. If you still feel uncomfortable with your eyes, go to the doctor.**

NOTICE

- ***Remember that battery and ignition cables carry high currents or voltages. Be careful of accidentally causing a short circuit.***
- ***Add only "Toyota Super Long Life Coolant" or similar high quality ethylene glycol based non−silicate, non−amine, non−nitrite, and non−borate coolant with long−life hybrid organic acid technology to fill the radiator. "Toyota Super Long Life Coolant" is a mixture of 50% coolant and 50% deionized water (for the U.S.A.) or 55% coolant and 45% deionized water (for Canada).***
- ***If you spill some of the coolant, be sure to wash it off with water to prevent it from damaging the parts or paint.***
- ***Do not allow dirt or anything else to fall through the spark plugholes.***
- ***Use only spark plugs of the specified type. Using other types will cause engine damage, loss of performance or radio noise.***
- ***Do not reuse iridium−tipped spark plugs by cleaning or regapping.***
- ***Do not overfill automatic transmission fluid, or the transmission could be damaged.***
- ***Do not drive with the air cleaner filter removed, or excessive engine wear could result. Also backfiring could cause a fire in the engine compartment.***
- ***Be careful not to scratch the glass surface with the wiper frame.***
- ***When closing the engine hood, check to see that you have not forgotten any tools, rags, etc.***

Parts and tools

Here is a list of parts and tools you will need to perform do−it−yourself maintenance. Remember all Toyota parts are designed in metric sizes, so your tools must be metric.

CHECKING THE ENGINE OIL LEVEL

Parts (if level is low):
- "Toyota Genuine Motor Oil" or equivalent
  See page 258 in Section 7−2 for details about engine oil selection.

Tools:
- Rag or paper towel
- Funnel (only for adding oil)

CHECKING THE ENGINE COOLANT LEVEL

Parts (if level is low):
- "Toyota Super Long Life Coolant" or similar high quality ethylene glycol based non−silicate, non−amine, non−nitrite, and non−borate coolant with long−life hybrid organic acid technology.

  "Toyota Super Long Life Coolant" is a mixture of 50% coolant and 50% deionized water (for the U.S.A.) or 55% coolant and 45% deionized water (for Canada).

Tools:
- Funnel (only for adding coolant)

CHECKING BRAKE FLUID

Parts (if level is low):
- SAE J1703 or FMVSS No.116 DOT 3 brake fluid

Tools:
- Rag or paper towel
- Funnel (only for adding fluid)

CHECKING BATTERY CONDITION

Tools:
- Warm water
- Baking soda
- Grease
- Conventional wrench (for terminal clamp bolts)

CHECKING AND REPLACING FUSES

Parts (if replacement is necessary):
- Fuse with same amperage rating as original

ADDING WASHER FLUID

Parts:
- Water
- Washer fluid containing antifreeze (for winter use)

Tools:
- Funnel

REPLACING LIGHT BULBS

Parts:
- Bulb with same number and wattage rating as original (See charts in "Replacing light bulbs" on page 276 in Section 7−3.)

Tools:
- Flathead screw driver

Positioning the jack

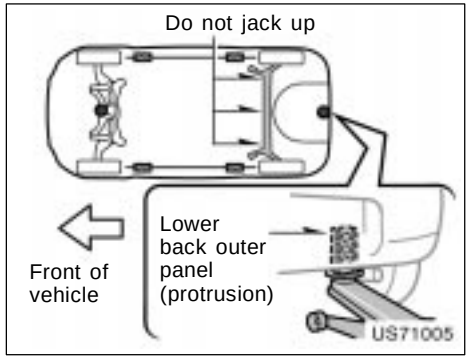

When jacking up your vehicle with the jack, position the jack correctly as shown in the illustration.

Jack position ..... ●

Front—Front suspension member
Rear—Lower back outer panel

Support position for

Pantograph jack ..... ▨

⚠ CAUTION

When jacking, be sure to observe the following to reduce the possibility of death or serious injury:

- **Follow jacking instructions.**
- **Do not put any part of your body under the vehicle supported by a jack. Otherwise, personal injury may occur.**
- **Do not start or run the engine while your vehicle is supported by the jack.**
- **Stop the vehicle on a level firm ground, firmly set the parking brake and put the transmission in "P" (automatic) or reverse (manual). Block the wheels on the opposite side of the jack up point if necessary.**
- **Make sure to set the jack properly in the jack point. Raising the vehicle with jack improperly positioned will damage the vehicle or may allow the vehicle to fall off the jack and cause personal injury.**
- **Never get under the vehicle when the vehicle is supported by the jack alone; use vehicle support stands.**
- **Do not raise the vehicle with someone in the vehicle.**
- **When raising the vehicle, do not place any objects on top of or underneath the jack.**

NOTICE

Make sure to place the jack correctly, or your vehicle may be damaged.

SECTION 7–2

DO–IT–YOURSELF MAINTENANCE

Engine and Chassis

Checking the engine oil level 258
Checking the engine coolant level 260
Checking the radiator and condenser 261
Checking brake fluid 261
Checking tire inflation pressure 262
Checking and replacing tires 264
Rotating tires 266
Installing snow tires and chains 267
Replacing wheels 268
Aluminum wheel precautions 269

Checking the engine oil level

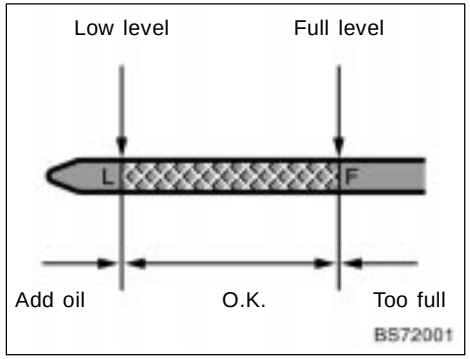

With the engine at operating temperature and turned off, check the oil level on the dipstick.

1. To get a correct reading, the vehicle should be on level ground. After turning off the engine, wait a few minutes for the oil to drain back into the bottom of the engine.
2. Pull the dipstick out, hold a rag under the end and wipe it clean.
3. Reinsert the dipstick—Push it in as far as it will go, or the reading will not be correct.
4. Pull the dipstick out and look at the oil level while holding a rag under the end.

⚠ CAUTION

Be careful not to touch the hot exhaust manifold.

NOTICE

Be careful not to drop engine oil on the vehicle components.

If the oil level is below or only slightly above the low level, add engine oil of the same type as already in the engine.

Remove the oil filler cap and add engine oil in small quantities at a time, checking the dipstick. We recommend that you use a funnel when adding oil.

The approximate quantity of oil needed to raise the level between low and full on the dipstick is indicated as follows:

1.5 L (1.6 qt., 1.3 Imp.qt.)

For the engine oil capacity, see “Service specifications” on page 283 in Section 8.

When the level reaches within the correct range, install the filler cap hand−tight.

NOTICE

- ***Be careful not to spill engine oil on the vehicle components.***
- ***Avoid overfilling, or the engine could be damaged.***
- ***Check the oil level on the dipstick once again after adding the oil.***

ENGINE OIL SELECTION

“Toyota Genuine Motor Oil” is used in your Toyota vehicle. Use Toyota approved “Toyota Genuine Motor Oil” or equivalent to satisfy the following grade and viscosity.

Oil grade:

ILSAC multigrade engine oil.

Recommended viscosity:

SAE 5W−30

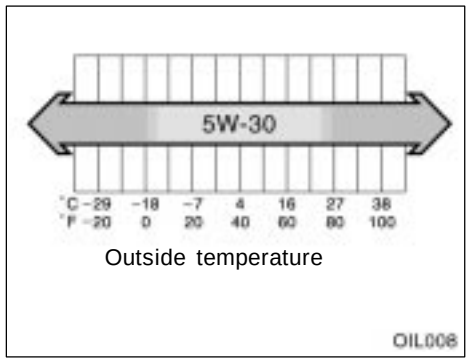

SAE 5W−30 is the best choice for good fuel economy, and good starting in cold weather.

If SAE 5W−30 oil is not available, SAE 10W−30 oil may be used. However, it should be replaced with SAE 5W−30 at the next oil change.



Oil identification mark

The ILSAC (International Lubricant Standardization and Approval Committee) Certification Mark is added to some oil containers to help you select the oil you should use.



To ensure excellent lubrication performance for your engine, “Toyota Genuine Motor Oil” is available, which has been specifically tested and approved for all Toyota engines.

Please contact your Toyota dealer for further details about “Toyota Genuine Motor Oil”.

Checking the engine coolant level

Look at the see−through coolant reservoir when the engine is cold. The coolant level is satisfactory if it is between the “FULL” and “LOW” lines on the reservoir. If the level is low, add the coolant. (For the coolant type, see “Coolant type selection” described below.)

The coolant level in the reservoir will vary with engine temperature. However, if the level is on or below the “LOW” line, add coolant. Bring the level up to the “FULL” line.

If the coolant level drops within a short time after replenishing, there may be a leak in the system. Visually check the radiator, hoses, engine coolant filler cap, radiator cap and drain cock and water pump.

If you can find no leak, have your Toyota dealer test the cap pressure and check for leaks in the cooling system.

⚠ CAUTION

To prevent burning yourself, do not remove the radiator cap when the engine is hot.

Coolant type selection

Use of improper coolants may damage your engine cooling system.

Only use “Toyota Super Long Life Coolant” or similar high quality ethylene glycol based non−silicate, non−amine, non−nitrite, and non−borate coolant with long−life hybrid organic acid technology. (Coolant with long−life hybrid organic acid technology is a combination of low phosphates and organic acids.)

For the U.S.A.—“Toyota Super Long Life Coolant” is a mixture of 50% coolant and 50% deionized water. This coolant provides protection down to about −35°C (−31°F).

For Canada—“Toyota Super Long Life Coolant” is a mixture of 55% coolant and 45% deionized water. This coolant provides protection down to about −42°C (−44°F).

NOTICE

Do not use plain water alone.



Toyota recommends “Toyota Super Long Life Coolant”, which has been tested to ensure that it will not cause corrosion nor result in malfunction of your engine coolant system with proper usage. “Toyota Super Long Life Coolant” is formulated with long−life hybrid organic acid technology and has been specifically designed to avoid engine cooling system malfunction on Toyota vehicles.

Please contact your Toyota dealer for further details.

Checking the radiator and condenser

If any of the above parts are extremely dirty or you are not sure of their condition, take your vehicle to a Toyota dealer.

⚠ CAUTION

To prevent burning yourself, be careful not to touch the radiator or condenser when the engine is hot.

NOTICE

To prevent damage to the radiator and condenser, do not perform the work by yourself.

Checking brake fluid

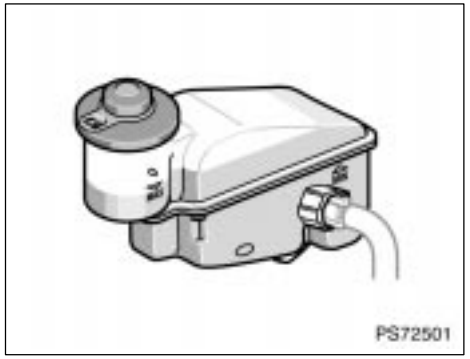

Before checking or adding the brake fluid, remove the cover. (See “(c) Jump starting” on page 215 in Section 4.)

To check the fluid level, simply look at the see−through reservoir. The level should be between the “MAX” and “MIN” lines on the reservoir.

It is normal for the brake fluid level to go down slightly as the brake pads wear. So be sure to keep the reservoir filled.

If the reservoir needs frequent refilling, it may indicate a serious mechanical problem.

If the level is low, add SAE J1703 or FMVSS No.116 DOT 3 brake fluid to the brake reservoir.

Remove and replace the reservoir cap by hand. Fill the brake fluid to the dotted line. This brings the fluid to the correct level when you put the cap back on.

Use only newly opened brake fluid. Once opened, brake fluid absorbs moisture from the air, and excess moisture can cause a dangerous loss of braking.

⚠ CAUTION

Take care when filling the reservoir because brake fluid can harm your hands or eyes. If fluid gets on your hands or in your eyes, flush the affected area with clean water immediately. If you still feel uncomfortable with your hands or eyes, go to the doctor.

NOTICE

If you spill some of the fluid, be sure to wipe it off to prevent it from damaging the parts or paintwork.

Checking tire inflation pressure

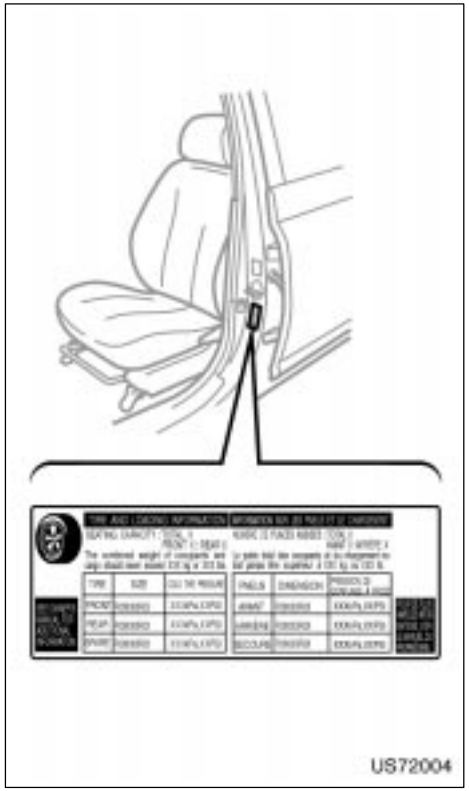

Keep your tire inflation pressures at the proper level.

The recommended cold tire inflation pressures, tire sizes and the combined weight of occupants and cargo (vehicle capacity weight) are described on page 282 and 285. They are also described on the tire and loading information label as shown.

You should check the tire inflation pressures every two weeks, or at least once a month. And do not forget the spare!

The following instructions for checking tire inflation pressure should be observed:

- **The pressure should be checked only when the tires are cold.** If your vehicle has been parked for at least 3 hours and has not been driven for more than 1.5 km or 1 mile since, you will get an accurate cold tire inflation pressure reading.

- **Always use a tire pressure gauge.** The appearance of a tire can be misleading. Besides, tire inflation pressures that are even just a few pounds off can degrade ride and handling.
- **Take special care when adding air to the compact spare tire.** The smaller tire size can gain pressure very quickly. Add compressed air in small quantities and check the pressure often until it reaches the specified pressure.
- **Do not bleed or reduce tire inflation pressure after driving.** It is normal for the tire inflation pressure to be higher after driving.
- **Never exceed the vehicle capacity weight.** Passenger and luggage weight should be located so that the vehicle is balanced.

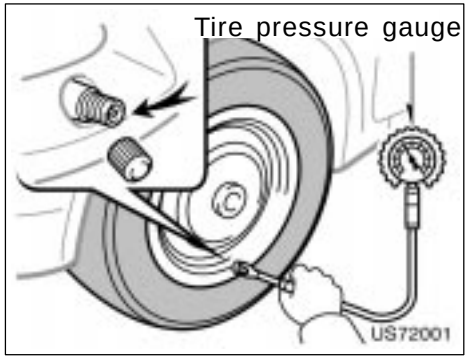

INSPECTION AND ADJUSTMENT PROCEDURE

1. Remove the tire valve cap.
2. Press the tip of the tire pressure gauge to the tire valve.
3. Read the pressure using the graduations of the gauge.
4. In case the tire inflation pressure is not within the prescribed range, insert the compressed air from the valve. In case of applying too much air, press the center of the valve and release the air to adjust.
5. After completing the tire inflation pressure measurement and adjustment, apply soapy water to the valve and check for leakage.
6. Install the tire valve cap.

If a gauge and air pump are not available, have your vehicle checked by your Toyota dealer.

⚠ CAUTION

Be sure to reinstall the tire valve caps. Without the valve caps, dirt or moisture could get into the valve core and cause air leakage. If the caps have been lost, have new ones put on as soon as possible.

Incorrect tire inflation pressure may waste fuel, reduce the comfort of driving, reduce tire life and make your vehicle less safe to drive.

If a tire frequently needs refilling, have it checked by your Toyota dealer.

⚠ CAUTION

Keep your tires properly inflated. Otherwise, the following conditions may occur and cause an accident resulting in death or serious injuries.

Low tire pressure (underinflation)—

- **Excessive wear**
- **Uneven wear**
- **Poor handling**
- **Possibility of blowouts from an overheated tire**
- **Poor sealing of the tire bead**
- **Wheel deformation and/or tire separation**
- **A greater possibility of tire damage from road hazards**

High tire pressure (overinflation)—

- **Poor handling**
- **Excessive wear**
- **Uneven wear**
- **A greater possibility of tire damage from road hazards**

Checking and replacing tires

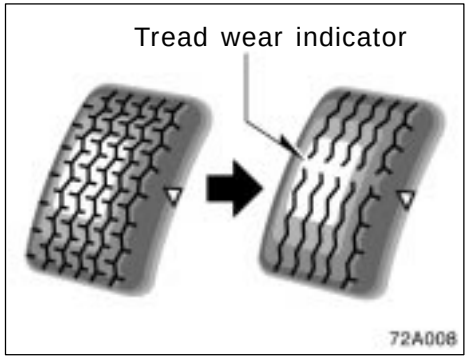

CHECKING YOUR TIRES

Check the tire's tread for tread wear indicators. If the indicators show, replace the tires. The location of tread wear indicators is shown by the "TWI" or "Δ" marks, etc., molded on the sidewall of each tire.

The tires on your Toyota have built−in tread wear indicators to help you know when the tires need replacement. When the tread depth wears to 1.6 mm (0.06 in.) or less, the indicators will appear. If you can see the indicators in two or more adjacent grooves, the tire should be replaced. The lower the tread, the higher the risk of skidding.

The effectiveness of snow tires is lost if the tread wears down below 4 mm (0.16 in.).

If you have tire damage such as cuts, splits, cracks deep enough to expose the fabric, or bulges indicating internal damage, the tire should be replaced.

If a tire often goes flat or cannot be properly repaired due to the size or location of a cut or other damage, it should be replaced. If you are not sure, consult with your Toyota dealer.

If air loss occurs while driving, do not continue driving. Driving even a short distance can damage a tire beyond repair.

Any tires which are over 6 years old must be checked by a qualified technician even if damage is not obvious.

Tires deteriorate with age even if they have never or seldom been used.

This applies also to the spare tire and tires stored for future use.

REPLACING YOUR TIRES

When replacing a tire, use a tire of the same size and construction, and the same or greater maximum load as the originally installed tires.

Using any other size or type of tire may seriously affect handling, ride, speedometer/odometer calibration, ground clearance, and clearance between the body and tires or snow chains.

Check that the maximum load of the replaced tire is greater than 1/2 of the Gross Axle Weight Ratings (GAWR) of either the front axle or the rear axle, whichever is greater. As for the maximum load of the tire, see the load limit at maximum cold tire inflation pressure mentioned on the sidewall of the tire, and as for the Gross Axle Weight Ratings (GAWR), see the Certification Label.

For details about the sidewall of the tire and the Certification Label, see pages 183 and 180.

⚠ CAUTION

Observe the following instructions. Otherwise, an accident may occur resulting in death or serious injuries.

- **Do not mix radial, bias belted, or bias−ply tires on your vehicle, as this may cause dangerous handling characteristics resulting in loss of control.**
- **Do not use tires other than the manufacturer's recommended size, as this may cause dangerous handling characteristics resulting in loss of control.**

Toyota recommends all four tires, or at least both of the front or rear tires be replaced at a time as a set.

See "If you have a flat tire" on page 219 in Section 4 for tire change procedure.

When a tire is replaced, the wheel should always be balanced.

An unbalanced wheel may affect vehicle handling and tire life. Wheels can get out of balance with regular use and should therefore be balanced occasionally.

When replacing a tubeless tire, the air valve should also be replaced with a new one.

Rotating tires

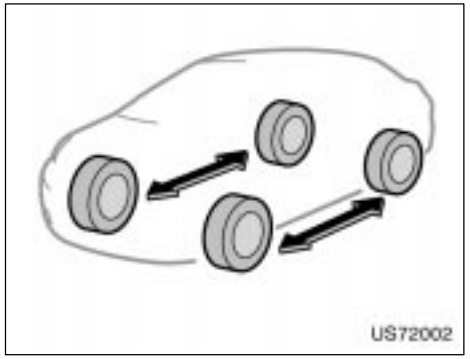

To equalize the wear and help extend tire life, Toyota recommends that you rotate your tires according to the maintenance schedule. (For scheduled maintenance information, please refer to the "Scheduled Maintenance Guide" or "Owner's Manual Supplement".). However, the most appropriate timing for tire rotation may vary according to your driving habits and road surface conditions.

See “If you have a flat tire” on page 219 in Section 4 for tire change procedure.

When rotating tires, check for uneven wear and damage. Abnormal wear is usually caused by incorrect tire pressure, improper wheel alignment, out−of−balance wheels, or severe braking.

⚠ CAUTION

Do not include a compact spare tire when rotating the tires. It is designed for temporary use only.

Installing snow tires and chains

WHEN TO USE SNOW TIRES OR CHAINS

Snow tires or chains are recommended when driving on snow or ice.

On wet or dry roads, conventional tires provide better traction than snow tires.

SNOW TIRE SELECTION

If you need snow tires, select tires of the same size, construction and load capacity as the originally installed tires.

Do not use tires other than those mentioned above. Do not install studded tires without first checking local regulations for possible restrictions.

⚠ CAUTION

Do not use snow tires other than the manufacturer’s recommended size, as this may cause dangerous handling characteristics resulting in loss of control. Otherwise, an accident may occur resulting in death or serious injuries.

SNOW TIRE INSTALLATION

Snow tires should be installed on all wheels.

Installing snow tires on the front wheels only can lead to an excessive difference in road grip capability between the front and rear tires which could cause loss of vehicle control.

When storing removed tires you should store them in a cool dry place.

Mark the direction of rotation and be sure to install them in the same direction when replacing.

⚠ CAUTION

- **Do not drive with the snow tires incorrectly inflated.**
- **Never drive over 120 km/h (75 mph) with any type of snow tires.**

TIRE CHAIN SELECTION

Use the tire chains of correct size and type.

Use SAE Class “S” type radial tire chains except radial cable chains or V−bar type chains.

Regulations regarding the use of tire chains vary according to location or type of road, so always check local regulations before installing chains.

CHAIN INSTALLATION

Install the chains on the front tires as tightly as possible. Do not use tire chains on the rear tires. Retighten chains after driving 0.5—1.0 km (1/4—1/2 mile).

When installing chains on your tires, carefully follow the instructions of the chain manufacturer.

If wheel covers are used, they will be scratched by the chain band, so remove the covers before putting on the chains.

⚠ CAUTION

- **Do not exceed 50 km/h (30 mph) or the chain manufacturer’s recommended speed limit, whichever is lower.**
- **Drive carefully avoiding bumps, holes, and sharp turns, which may cause the vehicle to bounce.**
- **Avoid sharp turns or locked−wheel braking, as use of chains may adversely affect vehicle handling.**
- **When driving with chains installed, be sure to drive carefully. Slow down before entering curves to avoid losing control of the vehicle. Otherwise an accident may occur.**

NOTICE

Do not attempt to use a tire chain on the compact spare tire, as it may result in damage to the vehicle as well as the tire.

Replacing wheels

WHEN TO REPLACE YOUR WHEELS

If you have wheel damage such as bending, cracks or heavy corrosion, the wheel should be replaced.

If you fail to replace a damaged wheel, the tire may slip off the wheel or they may cause loss of handling control.

WHEEL SELECTION

When replacing wheels, care should be taken to ensure that the wheels are replaced by ones with the same load capacity, diameter, rim width, and offset.

This must be observed on compact spare tires, too.

Correct replacement wheels are available at your Toyota dealer.

A wheel of a different size or type may adversely affect handling, wheel and bearing life, brake cooling, speedometer/odometer calibration, stopping ability, headlight aim, bumper height, vehicle ground clearance, and tire or snow chain clearance to the body and chassis.

Replacement with used wheels is not recommended as they may have been subjected to rough treatment or high mileage and could fail without warning. Also, bent wheels which have been straightened may have structural damage and therefore should not be used. Never use an inner tube in a leaking wheel which is designed for a tubeless tire.

⚠ CAUTION

Do not use wheels other than the manufacturer's recommended size, as this may cause dangerous handling characteristics resulting in loss of control. Otherwise, an accident may occur resulting in death or serious injuries.

Aluminum wheel precautions

- When installing aluminum wheels, check that the wheel nuts are tight after driving your vehicle the first 1600 km (1000 miles).
- If you have rotated, repaired, or changed your tires, check that the wheel nuts are still tight after driving 1600 km (1000 miles).
- When using tire chains, be careful not to damage the aluminum wheels.
- Use only Toyota wheel nuts and wrench designed for your aluminum wheels.
- When balancing your wheels, use only Toyota balance weights or equivalent and a plastic or rubber hammer.
- As with any wheel, periodically check your aluminum wheels for damage. If damaged, replace immediately.

SECTION 7–3

DO–IT–YOURSELF MAINTENANCE

Electrical components

Checking battery condition 272
Battery recharging precautions 273
Checking and replacing fuses 274
Adding washer fluid 276
Replacing light bulbs 276

Checking battery condition—
—Precautions

⚠ CAUTION

BATTERY PRECAUTIONS

The battery produces flammable and explosive hydrogen gas.

- **Do not cause a spark from the battery with tools.**
- **Do not smoke or light a match near the battery.**

The electrolyte contains poisonous and corrosive sulfuric acid.

- **Avoid contact with eyes, skin or clothes.**
- **Never ingest electrolyte.**
- **Wear protective safety glasses when working near the battery.**
- **Keep children away from the battery.**

EMERGENCY MEASURES

- **If electrolyte gets in your eyes, flush your eyes with clean water immediately and get immediate medical attention. If possible, continue to apply water with a sponge or cloth while en route to the medical office.**
- **If electrolyte gets on your skin, thoroughly wash the contact area. If you feel pain or burning, get medical attention immediately.**
- **If electrolyte gets on your clothes, there is a possibility of its soaking through to your skin, so immediately take off the exposed clothing and follow the procedure above, if necessary.**
- **If you accidentally swallow electrolyte, drink a large quantity of water or milk. Follow with milk of magnesia, beaten raw egg or vegetable oil. Then go immediately for emergency help.**

—Checking battery exterior

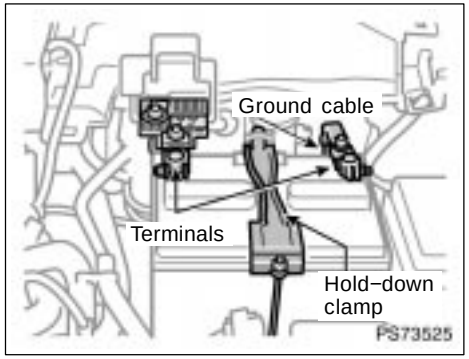

Before checking the battery, remove the cover. (See “(c) Jump starting” on page 215 in Section 4.)

Check the battery for corroded or loose terminal connections, cracks, or loose hold−down clamp.

a. If the battery is corroded, wash it off with a solution of warm water and baking soda. Coat the outside of the terminals with grease to prevent further corrosion.

b. If the terminal connections are loose, tighten the clamp nut—but do not overtighten.

c. Tighten the hold−down clamp only enough to keep the battery firmly in place. Overtightening may damage the battery case.

NOTICE

- ***Be sure the engine and all accessories are off before performing maintenance.***
- ***When checking the battery, remove the ground cable from the negative terminal (“−” mark) first and reinstall it last.***
- ***Be careful not to cause a short circuit with tools.***
- ***Take care no solution gets into the battery when washing it.***

—Checking battery condition

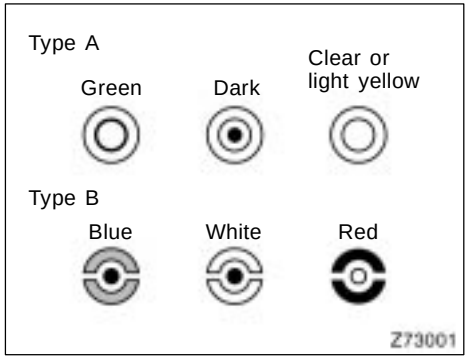

CHECKING BY THE INDICATOR

Check the battery condition by the indicator color.

Indicator color		Condition
Type A	Type B	
GREEN	BLUE	Good
DARK	WHITE	Charging necessary. Have battery checked by your Toyota dealer.
CLEAR or LIGHT YELLOW	RED	Have battery checked by your Toyota dealer.

Battery recharging precautions

During recharging, the battery is producing hydrogen gas.

Therefore, before recharging:

1. If recharging with the battery installed on the vehicle, be sure to disconnect the ground cable.
2. Be sure the power switch on the recharger is off when connecting the charger cables to the battery and when disconnecting them.

⚠ CAUTION

- **Always charge the battery in an unconfined area. Do not charge the battery in a garage or closed room where there is not sufficient ventilation.**
- **Only do a slow charge (5A or less). Charging at a quicker rate is dangerous. The battery may explode, causing personal injuries.**

Checking and replacing fuses

NOTICE
Never recharge the battery while the engine is running. Also, be sure all accessories are turned off.

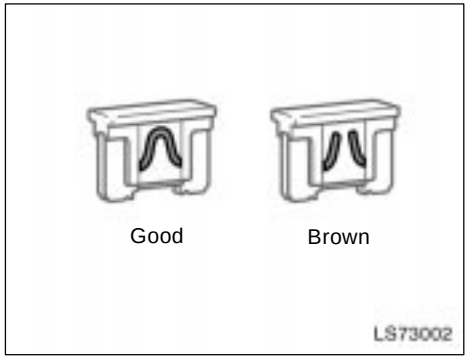

Type A

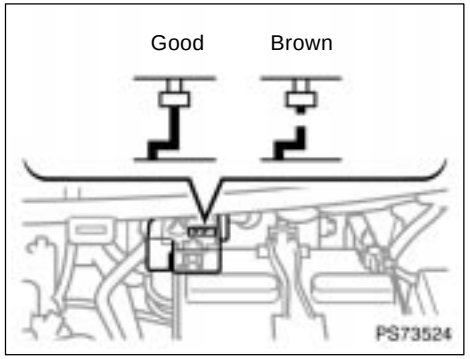

Type C

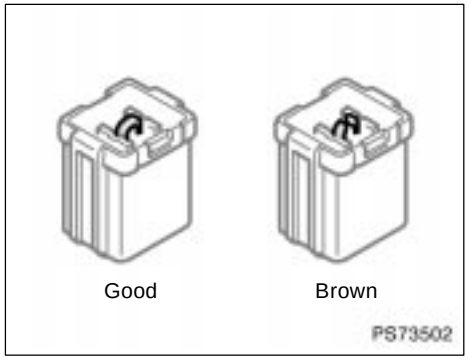

Type B

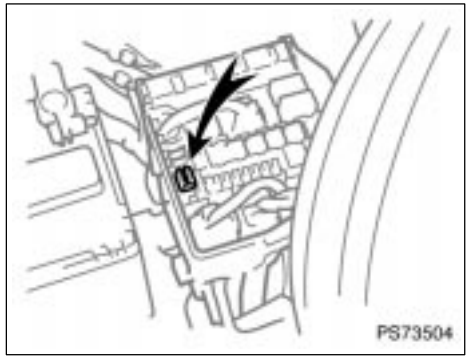

If the headlights or other electrical components do not work, check the fuses. If any of the fuses are blown, they must be replaced.

See “Fuse locations” on page 251 in Section 7−1 for locations of the fuses.

Turn the ignition switch and inoperative component off. Pull the suspected fuse straight out and check it.

Determine which fuse may be causing the problem. The lid of the fuse box shows the name of the circuit for each fuse. See Section 8 for the functions controlled by each circuit.

Type A fuses can be pulled out by the pull−out tool. The location of the pull−out tool is shown in the illustration.

If you are not sure whether the fuse has blown, try replacing the suspected fuse with one that you know is good.

If the fuse has blown, push a new fuse into the clip.

Only install a fuse with the amperage rating designated on the fuse box lid.

If you do not have a spare fuse, in an emergency you can pull out the “A/C” fuse, which may be dispensable for normal driving, and use it if its amperage rating is the same.

If you cannot use one of the same amperage, use one that is lower, but as close to the rating as possible. If the amperage is lower than that specified, the fuse might blow out again but this does not indicate anything wrong. Be sure to get the correct fuse as soon as possible and return the substitute to its original clip.

It is a good idea to purchase a set of spare fuses and keep them in your vehicle for emergencies.

If the new fuse immediately blows out, there is a problem with the electrical system. Have your Toyota dealer correct it as soon as possible.

⚠ CAUTION

Never use a fuse with a higher amperage rating, or any other object, in place of a fuse. This may cause extensive damage and possibly a fire.

Adding washer fluid

If any washer does not work or the low windshield washer fluid level warning light comes on, the washer tank may be empty. Add washer fluid.

You may use plain water as washer fluid. However, in cold areas where temperatures range below the freezing point, use washer fluid containing antifreeze. This product is available at your Toyota dealer and most auto parts stores. Follow the manufacturer's directions for how much to mix with water.

NOTICE

Do not use engine antifreeze or any other substitute because it may damage your vehicle's paint.

Replacing light bulbs—

The following illustrations show how to gain access to the bulbs. When replacing a bulb, make sure the ignition switch and light switch are off. Use bulbs with the wattage ratings given in the table.

Vehicles with rear spoiler—
The high mounted stoplight consists of a number of LEDs. If any of the LEDs burn out, take your vehicle to your Toyota dealer to have the light replaced.

⚠ CAUTION

- **To prevent burning yourself, do not replace the light bulbs while they are hot.**
- **Halogen bulbs have pressurized gas inside and require special handling. They can burst or shatter if scratched or dropped. Hold a bulb only by its plastic or metal case. Do not touch the glass part of a bulb with bare hands.**

NOTICE

Only use a bulb of the listed type.

The inside of the lens of exterior lights such as headlights may temporarily fog up when the lens becomes wet in the rain or in a car wash. This is not a problem because the fogging is caused by the temperature difference between the outside and inside of the lens, just like the windshield fogs up in the rain. However, if there is a large drop of water on the inside of the lens, or if there is water pooled inside the light, contact your Toyota dealer.

Light bulbs	Bulb No.	W	Type
Headlights	—	60/55	A
Front fog lights	—	55	B
Front side marker light	—	5	C
Front turn signal/parking lights	—	21/5	C
Rear turn signal lights	—	21	D
Stop/tail and rear side marker lights	—	21/5	C
Back−up lights	—	18	C
License plate lights	—	5	C
Interior light	—	8	E
Personal light	—	8	E
Luggage room light	—	3.8	E
High mounted stop light	—	18	C

A: HB2 halogen bulbs
B: H11 halogen bulbs
C: Wedge base bulbs
D: Wedge base bulbs (amber)
E: Double end bulbs

—Headlights

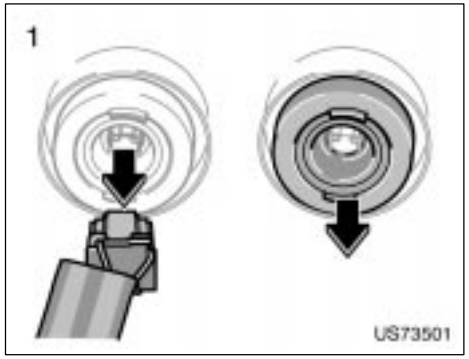

1. Open the hood. Unplug the connector. Remove the rubber cover.

If the connector is tight, wiggle it.

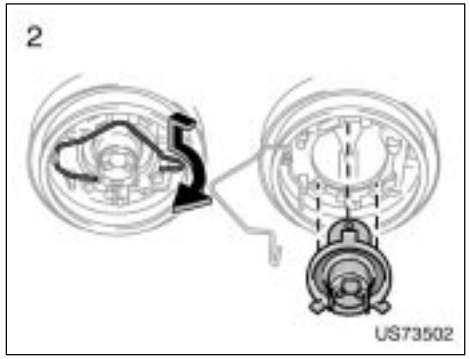

2. Release the bulb retaining spring and remove the bulb. Install a new bulb and the bulb retaining spring.

To install a bulb, align the tabs of the bulb with the cutouts of the mounting hole.

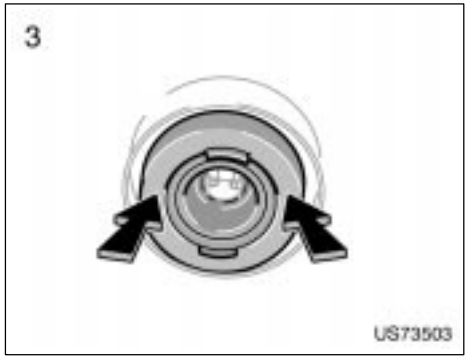

3. Install the rubber cover as shown and fit it securely on the boss. Plug in the connector.

Make sure the rubber cover fits securely on the connector and the headlight body.

Aiming is not necessary after replacing the bulb. When aiming adjustment is necessary, contact your Toyota dealer.

—Front fog, front turn signal/ parking, front side marker lights and LED type high mounted stoplight

If either the left or right front fog, front turn signal/parking, front side marker lights or LED type high mounted stoplight burns out, contact your Toyota dealer.

NOTICE

Do not try to replace any of the light bulbs mentioned above by yourself. You may damage the vehicle.

—Stop/tail and rear side marker, rear turn signal and back−up lights

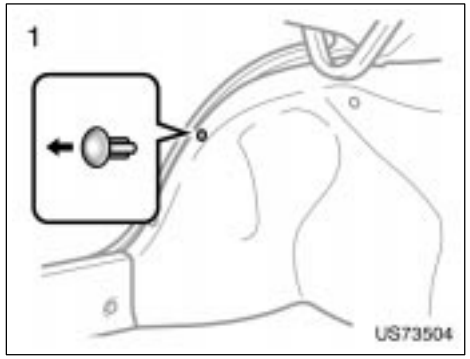

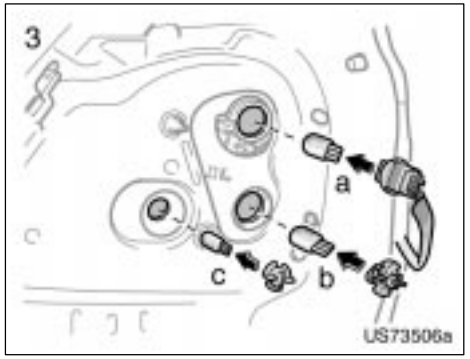

a: Stop/tail and rear side marker lights
b: Rear turn signal light
c: Back−up lights

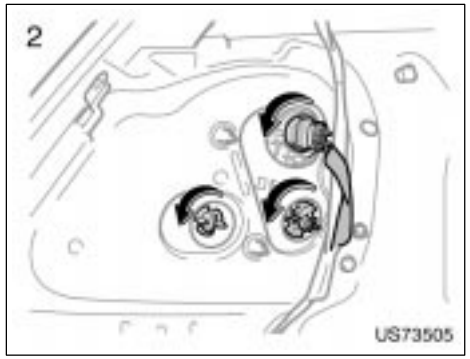

—License plate lights

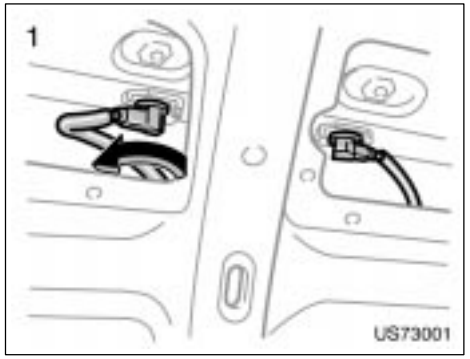

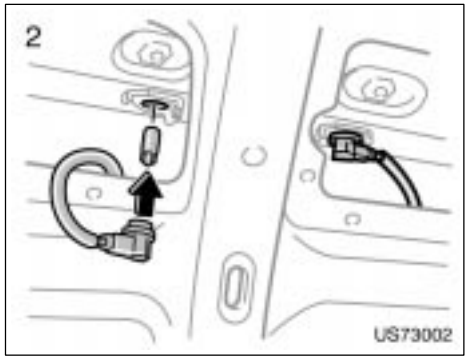

—High mounted stoplight

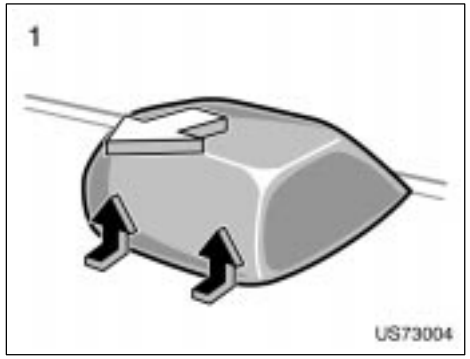

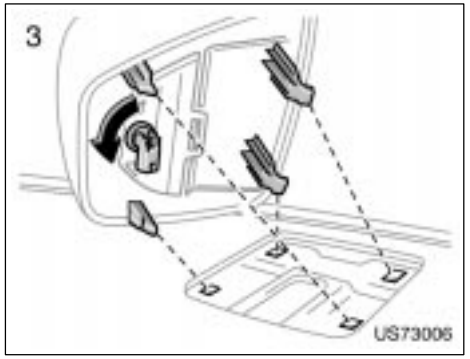

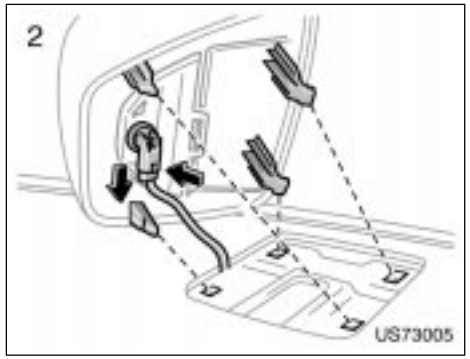

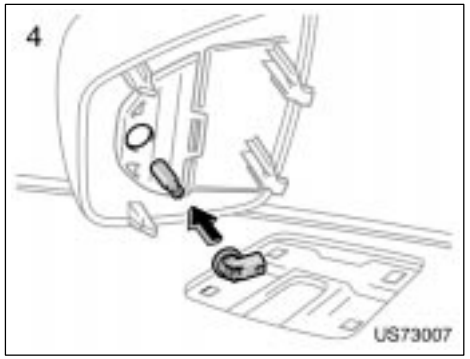

SECTION 8

SPECIFICATIONS

Specifications

Dimensions and weights 282
Engine 282
Fuel 282
Service specifications 283
Tires 285
Fuses 286

Dimensions and weights

Overall length	mm (in.)	4300	(169.3)
Overall width	mm (in.)	1690	(66.5)
Overall height	mm (in.)	1460	(57.5)
Wheelbase	mm (in.)	2550	(100.4)
Front tread	mm (in.)	1480	(58.3)*1
		1470	(57.9)*2
Rear tread	mm (in.)	1470	(57.9)*1
		1460	(57.5)*2
Vehicle capacity weight (occupants + luggage)	kg (lb.)	383	(845)
Towing capacity*3 (trailer + cargo weight)	kg (lb.)	318	(700)

*1: With P175/65R14 81S tires
*2: With P185/60R15 84T tires
*3: For Canada only

Engine

Model:
1.5 L 4−cylinder (1NZ−FE)

Type:
4 cylinder in line, 4 cycle, gasoline

Bore and stroke, mm (in.):
75.0 × 84.7 (2.95 × 3.33)

Displacement, cm^3 (cu. in.):
1496 (91.3)

Fuel

Fuel type:
Unleaded gasoline, Octane Rating 87 (Research Octane Number 91) or higher

Fuel tank capacity, L (gal., Imp. gal.):
42 (11.1, 9.2)

Service specifications

ENGINE

Valve clearance (engine cold), mm (in.):

Intake	0.15—0.25 (0.006—0.010)
Exhaust	0.25—0.35 (0.010—0.014)

Spark plug type:

DENSO	SK16R11
NGK	IFR5A11

Spark plug gap, mm(in.):
1.1 (0.043)

Drive belt tension measured with Boroughs drive belt tension gauge No. BT−33−73F (used belt), lbf:

Generator belt	100±20

ENGINE LUBRICATION

Oil capacity (drain and refill), L (qt., Imp. qt.):

With filter	3.7 (3.9, 3.3)
Without filter	3.4 (3.6, 3.0)

“Toyota Genuine Motor Oil” is used in your Toyota vehicle. Use Toyota approved “Toyota Genuine Motor Oil” or equivalent to satisfy the following grade and viscosity.

Oil grade:

ILSAC multigrade engine oil

Please contact your Toyota dealer for further details.

Recommended oil viscosity:

SAE 5W−30

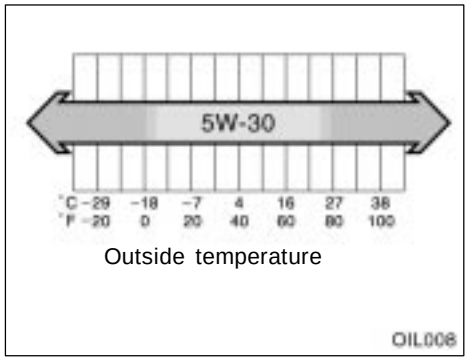

COOLING SYSTEM

Total capacity, L (qt., Imp. qt.):

Manual transmission	4.8 (5.1, 4.2)
Automatic transmission	4.7 (5.0, 4.1)

Coolant type:

“Toyota Super Long Life Coolant” is used in your Toyota vehicle at factory fill. In order to avoid technical problems, only use “Toyota Super Long Life Coolant” or similar high quality ethylene glycol based non−silicate, non−amine, non−nitrite, and non−borate coolant with long−life hybrid organic acid technology. (Coolant with long−life hybrid organic acid technology is a combination of low phosphates and organic acids.)

Do not use plain water alone.

Please contact your Toyota dealer for further details.

BATTERY

Open voltage* at 20•C (68•F):

12.6—12.8 V	Fully charged
12.2—12.4 V	Half charged
11.8—12.0 V	Discharged

*: Voltage that is checked 20 minutes after the key is removed with all the lights turned off

Charging rates: 5 A max.

CLUTCH

Pedal free play, mm (in.):
5—15 (0.2—0.6)

Fluid type:
SAE J1703 or FMVSS No. 116 DOT 3

MANUAL TRANSAXLE

Oil capacity, L (qt., Imp. qt.):
1.9 (2.0, 1.7)

Oil type:
Gear oil API GL−4 or GL−5

Recommended oil viscosity:
SAE 75W−90

AUTOMATIC TRANSAXLE

Fluid capacity (drain and refill), L (qt., Imp. qt.): 2.5 (2.6, 2.2)

Fluid type:
Toyota Genuine ATF Type WS

Change automatic transmission fluid only as necessary.

Generally, it is necessary to change automatic transmission fluid only if your vehicle is driven under one of the Special Operating Conditions listed in your “Scheduled Maintenance Guide” or “Owner’s Manual Supplement”. When changing the automatic transmission fluid, use only “Toyota Genuine ATF Type WS” (ATF JWS3324 or NWS9638) to aid in assuring maximum transaxle performance.

Notice: Using automatic transmission fluid other than “Toyota Genuine ATF Type WS” may cause deterioration in shift quality, locking up of your transmission accompanied by vibration, and ultimately damage the automatic transmission of your vehicle.

Please contact your Toyota dealer for further details.

BRAKES

Minimum pedal clearance when depressed with the pressure of 300 N (30 kgf, 66 lbf) with the engine running, mm (in.):

With anti−lock brake system	73 (2.9)
Without anti−lock brake system	70 (2.8)

Pedal free play, mm (in.):
1—6 (0.04—0.24)

Pad wear limit, mm (in.):
1.0 (0.04)

Lining wear limit, mm (in.):
1.0 (0.04)

Parking brake adjustment when pulled with the force of 196 N (20 kgf, 44 lbf):
6—9 clicks

Fluid type:
SAE J1703 or FMVSS No. 116 DOT 3

STEERING

Wheel free play:
Less than 30 mm (1.2 in.)

Tires

Tire size and cold tire inflation pressure:

Front and rear

kPa (kgf/cm^2 or bar, psi)

Tire size	Front	Rear	Wheel size
P175/65R14 81S	220 (2.2, 32)	220 (2.2, 32)	14 x 5J
P185/60R15 84T	220 (2.2, 32)	220 (2.2, 32)	15 x 5 1/2J

For sustained high speeds above 160 km/h (100 mph), in countries where such speeds are permitted by law, add 20 kPa (0.2 kgf/cm^2 or bar, 3 psi) to the front tires and rear tires, but never exceed the maximum cold tire inflation pressure molded on the tire sidewall.

Spare

Tire size	Tire inflation pressure kPa (kgf/cm^2 or bar, psi)	Wheel size
T125/70D15 95M	420 (4.2, 60)	15 x 4T

Wheel nut torque, N·m (kgf·m, ft·lbf):
103 (10.5, 76)

NOTE: For a complete information on tires (e.g. replacing tires or replacing wheels), see “Checking tire inflation pressure” through “Aluminum wheel precautions”, page 262 through 269 in Section 7−2.

Fuses

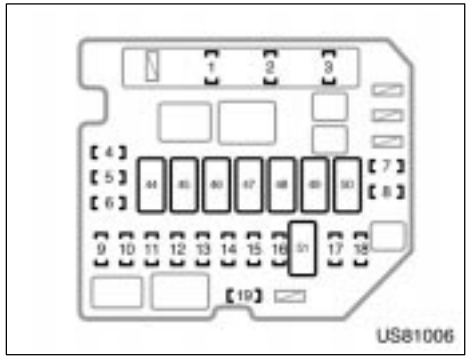

Engine compartment

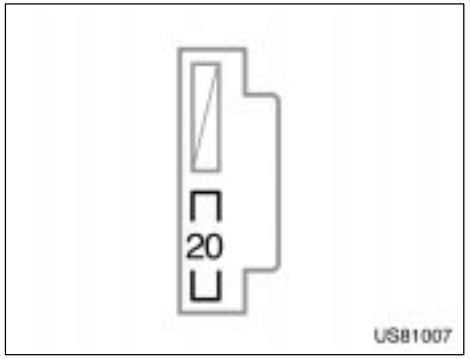

Instrument panel

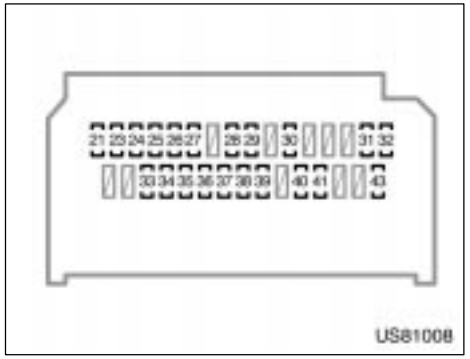

Instrument panel (type A)

Fuses (type A)

1. **AM2 15 A:** Starting system, multiport fuel injection system/sequential multiport fuel injection system
2. **HORN 10 A:** Horn
3. **EFI 20 A:** Multiport fuel injection system/sequential multiport fuel injection system
4. **SPARE 30 A:** Spare fuse
5. **SPARE 15 A:** Spare fuse
6. **SPARE 10 A:** Spare fuse
7. **FR DEF 20 A:** No circuit
8. **ABS2/VSC2 30 A:** Anti−lock brake system
9. **H−LP MAIN 30 A:** “H−LP LH/H−LP LO LH” fuse
10. **ST 30 A:** Starting system
11. **S−LOCK 20 A:** No circuit
12. **DOME 15 A:** Interior light, personal lights, theft deterrent system, audio system, wireless remote control system
13. **ECU−B 7.5 A:** Engine immobilizer system, daytime running light system, front passenger occupant classification system, power windows, door lock system, theft deterrent system, meter and gauge
14. **ALT−S 7.5 A:** Charging system
15. **ETCS 10 A:** Multiport fuel injection system/sequential multiport fuel injection system, electronic throttle control system
16. **HAZ 10 A:** Turn signal lights, emergency flashers

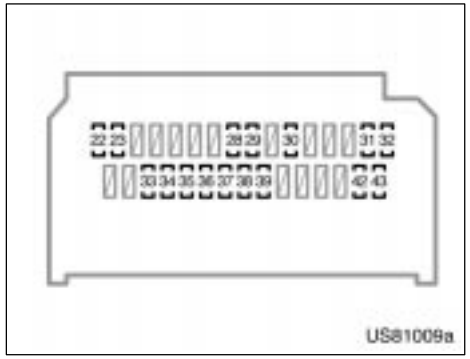

Instrument panel (type B)

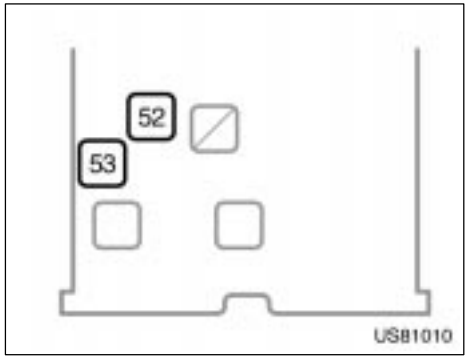

Instrument panel

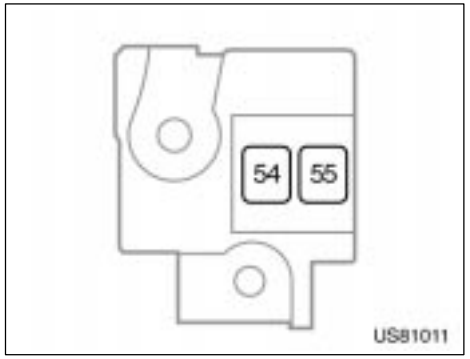

Engine compartment

17. **H−LP RH/H−LP LO RH 10 A:** Right−hand headlight
18. **H−LP LH/H−LP LO LH 10 A:** Left−hand headlight
19. **EFI2 10 A:** Multiport fuel injection system/sequential multiport fuel injection system
20. **ACC2 7.5 A:** Shift lock system
21. **TAIL 10 A:** Side marker lights, parking lights, tail lights, license plate lights, multiport fuel injection system/sequential multiport fuel injection system
22. **PANEL2 7.5 A:** Side marker lights, parking lights, tail lights, license plate lights
23. **PANEL1 7.5 A:** Illuminations, instrument panel light control, meter and gauge
24. **A/C 7.5 A:** Rear window defogger, air conditioning system
25. **D DOOR 20 A:** Power windows
26. **RL DOOR 20 A:** Rear passenger's power window (left side)
27. **RR DOOR 20 A:** Rear passenger's power window (right side)
28. **CIG 15 A:** Power outlet
29. **ACC 7.5 A:** Door lock system, outside rear view mirrors, audio system
30. **ID/UP/MIR HTR 10 A:** Multiport fuel injection system/sequential multiport fuel injection system
31. **IGN 7.5 A:** Multiport fuel injection system/sequential multiport fuel injection system, engine immobilizer system, SRS airbag system, front passenger occupant classification system
32. **MET 7.5 A:** Meter and gauge
33. **WIP 25 A:** Windshield wiper and washer

34. **RR WIP 15 A:** No circuit
35. **WSH 15 A:** Windshield wiper and washer
36. **ECU−IG 10 A:** Daytime running light system, anti−lock brake system, electric power steering system, power windows, door lock system, theft deterrent system, electric cooling fan, meter and gauge
37. **GAUGE 10 A:** Charging system, turn signal lights, emergency flashers, buck−up lights, instrument panel light control, shift lock system, rear window defogger, air conditioning system, automatic transmission system
38. **OBD2 7.5 A:** On−board diagnosis system
39. **STOP 10 A:** Stop lights, high mounted stop light, multiport fuel injection system/sequential multiport fuel injection system, shift lock system, anti−lock brake system
40. **D/L 25 A:** Door lock system
41. **FR FOG 15 A:** Front fog lights
42. **TAIL 10 A:** Side marker lights, parking lights, tail lights, license plate lights, multiport fuel injection system/sequential multiport fuel injection system
43. **AM1 25 A:** Multiport fuel injection system/sequential multiport fuel injection system

Fuses (type B)

44. **HTR SUB2 40 A:** Air conditioning system
45. **EPS 50 A:** Electric power steering system
46. **ABS1/VSC1 50 A:** Anti−lock brake system
47. **HTR 40 A:** Air conditioning system
48. **RDI 30 A:** Electric cooling fan
49. **HTR SUB1 30 A:** Air conditioning system
50. **H−LP CLN/PWR HTR 30 A:** No circuit
51. **AMT 50 A:** No circuit
52. **DEF 30 A:** Rear window defogger
53. **PWR 30 A:** Power windows

Fuses (type C)

54. **ALT 120 A:** Charging system, “HTR SUB2”, “EPS”, “ABS1/VSC1”, “HTR”, “ABS2/VSC2”, “HTR SUB1”, “RDI”, “DEF”, “FR FOG”, “OBD2”, “D/L”, “POWER”, “RR DOOR”, “RL DOOR”, “STOP” and “AM1” fuses
55. **MAIN 60 A:** “EFI”, “HORN”, “AM2”, “ALT−S”, “DOME”, “ST”, “ECU−B”, “ETCS”, “HAZ”, “H−LP LH/H−LP LO LH” and “H−LP RH/H−LP LO RH” fuses

SECTION 9

REPORTING SAFETY DEFECTS FOR U.S. OWNERS

Reporting safety defects for U.S. owners

Reporting safety defects for U.S. owners 290

Reporting safety defects for U.S. owners

If you believe that your vehicle has a defect which could cause a crash or could cause injury or death, you should immediately inform the National Highway Traffic Safety Administration (NHTSA) in addition to notifying Toyota Motor Sales, U.S.A., Inc.
(Toll−free: 1−800−331−4331).

If NHTSA receives similar complaints, it may open an investigation, and if it finds that a safety defect exists in a group of vehicles, it may order a recall and remedy campaign. However, NHTSA cannot become involved in individual problems between you, your dealer, or Toyota Motor Sales, U.S.A., Inc.

To contact NHTSA, you may either call the Auto Safety Hotline toll−free at 1−800−424−9393 (or 366−0123 in Washington,D.C. area) or write to: NHTSA, U.S.Department of Transportation, Washington,D.C. 20590. You can also obtain other information about motor vehicle safety from the Hotline.

Foreword

Welcome to the growing group of value−conscious people who drive Toyotas. We are proud of the advanced engineering and quality construction of each vehicle we build.

This Owner's Manual explains the operation of your new Toyota. Please read it thoroughly and have all the occupants follow the instructions carefully. Doing so will help you enjoy many years of safe and trouble−free motoring. For important information about this manual and your Toyota, read the following pages carefully.

When it comes to service, remember that your Toyota dealer knows your vehicle very well and is interested in your complete satisfaction. Your Toyota dealer will provide quality maintenance and any other assistance you may require.

If there is not a Toyota dealer near you, please call the following number:

U.S. OWNERS:
- When traveling in the U.S. mainland or Canada:
  Toyota Customer Experience Center **Toll−free:1−800−331−4331**
- Hawaii:
  Servco Automotive Customer Services **Toll−free:1−888−272−5515**

CANADIAN OWNERS:
- When traveling in Canada or the U.S. mainland:
  Toyota Canada Customer Interaction Centre **Toll−free:1−888−TOYOTA−8 or 1−888−869−6828**

Please leave this Owner's Manual in this vehicle at the time of resale. The next owner will need this information also.

All information and specifications in this manual are current at the time of printing. However, because of Toyota's policy of continual product improvement, we reserve the right to make changes at any time without notice.

Please note that this manual applies to all models and explains all equipment, including options. Therefore, you may find some explanations for equipment not installed on your vehicle.

Please access our websites for further information.
- The U.S. mainland **www.toyota.com**
- Hawaii **www.toyotahawaii.com**
- Canada **www.toyota.ca**

TOYOTA MOTOR CORPORATION

© 2006 TOYOTA MOTOR CORPORATION
All rights reserved. This material may not be reproduced or copied, in whole or in part, without the written permission of Toyota Motor Corporation.

Important information about this manual

Safety and vehicle damage warnings

Throughout this manual, you will see safety and vehicle damage warnings. You must follow these warnings carefully to avoid possible injury or damage.

The types of warnings, what they look like, and how they are used in this manual are explained as follows.

⚠ CAUTION

This is a warning against anything which may cause injury to people if the warning is ignored. You are informed about what you must or must not do in order to reduce the risk of injury to yourself and others.

NOTICE

This is a warning against anything which may cause damage to the vehicle or its equipment if the warning is ignored. You are informed about what you must or must not do in order to avoid or reduce the risk of damage to your vehicle and its equipment.

Safety symbol

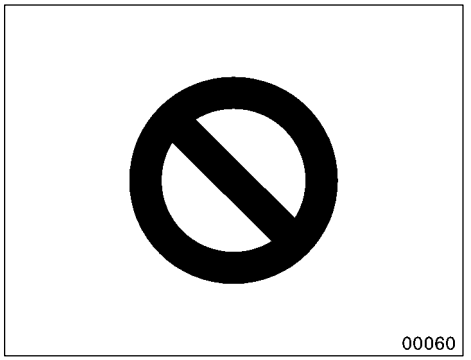

When you see the safety symbol shown above, it means: “Do not...”; “Do not do this”; or “Do not let this happen”.

Important information about your Toyota

Occupant restraint systems

Toyota encourages you and your family to take the time to read Section 1−3 of this Owner's Manual carefully. In terms of helping you understand how you can receive the maximum benefit of the occupant restraint systems this vehicle provides, Section 1−3 of this Owner's Manual is the most important section for you and your family to read.

Section 1−3 describes the function and operation concerning seats, seat belts, SRS airbags and child restraint systems of this vehicle and some potential hazards you should be aware of. These systems work together along with the overall structure of this vehicle in order to provide occupant restraint in the event of a crash. The effect of each system is enhanced when it is used properly and together with other systems. No single occupant restraint system can, by itself, provide you or your family with the equal level of restraint which these systems can provide when used together. That is why it is important for you and your family to understand the purpose and proper use of each of these systems and how they relate to each other.

The purpose of all occupant restraint systems is to help reduce the possibility of death or serious injury in the event of a collision. None of these systems, either individually or together, can ensure that there is no injury in the event of collision. However, the more you know about these systems and how to use them properly, the greater your chances become of surviving an accident without death or serious injury.

Seat belts provide the primary restraint to all occupants of the vehicle, and every occupant of the vehicle should wear seat belts properly at all times. Children should always be secured in child restraint systems that are appropriate for their age and size. SRS (Supplemental Restraint System) airbags are, as their names imply, designed to work with, and be supplemental to, seat belts and are not substitutes for them. SRS airbags can be very effective in reducing the risk of head and chest injuries by preventing contact of the head and chest with interior portions of the vehicle.

In order to be effective, the SRS airbags must deploy with tremendous speed. The rapid deployment of the SRS airbags makes the SRS airbags themselves potential sources of serious injury if an occupant is too close to an airbag, or if an object or some part of his or her body has been placed between the occupant and the airbag at the time of deployment. This is just one example of how the instructions in Section 1−3 of this Owner's Manual will help ensure proper use of the occupant restraint systems, and increase the safety they can provide to you and your family in the event of an accident.

Toyota recommends you to read the provisions in Section 1−3 carefully and refer to them as needed during your time of ownership of this vehicle.

Event data recorder

Your vehicle has computers that monitor and control certain aspects of your vehicle. These computers assist in driving and maintaining optimal vehicle performance. Besides storing data useful for troubleshooting, there is a system to record data in a crash or a near car crash event. This is called an Event Data Recorder (EDR).

The SRS airbag sensor assembly contains the EDR. In a crash or a near car crash event, this device may record some or all of the following information:

- Engine speed
- Whether the brake pedal was applied or not
- Vehicle speed
- To what extent the accelerator pedal was depressed
- Position of the transmission selector lever
- Whether the driver and front passenger wore the seat belts or not
- Driver's seat position
- Front passenger's occupant classification

- SRS airbag deployment data
- SRS airbag system diagnostic data

The information above is intended to be used for the purpose of improving vehicle safety performance. Unlike general data recorders, the EDR does not record sound data such as conversation between passengers.

Toyota will not disclose the data recorded in an EDR to a third party except when:

- An agreement from the vehicle's owner (or the leasing company for a leased vehicle) is obtained
- Officially requested by the police or other authorities
- Used as a defense for Toyota in a law suit
- Ordered by the court

However, if necessary Toyota will:

- Use the data for research on Toyota vehicle safety performance
- Disclose the data to a third party for research purposes without disclosing details of the vehicle owner, and only when it is deemed necessary
- Disclose summarized data cleared of vehicle identification information to a non−Toyota organization for research purposes

New vehicle warranty

Your new vehicle is covered by the following Toyota limited warranties:

- New vehicle warranty
- Emission control systems warranty
- Others

For further information, please refer to the "Owner's Warranty Information Booklet" or "Owner's Manual Supplement".

Your responsibility for maintenance

It is the owner's responsibility to make sure that the specified maintenance is performed. Section 6 gives details of these maintenance requirements. Also included in Section 6 is general maintenance. For scheduled maintenance information, please refer to the "Scheduled Maintenance Guide" or "Owner's Manual Supplement".

Important health and safety information about your Toyota

⚠CAUTION

- **WARNING: Engine exhaust, some of its constituents, and a wide variety of automobile components contain or emit chemicals known to the State of California to cause cancer and birth defects and other reproductive harm. In addition, oils, fuels and fluids contained in vehicles as well as waste produced by component wear contain or emit chemicals known to the State of California to cause cancer and birth defects or other reproductive harm.**
- **Battery posts, terminals and related accessories contain lead and lead compounds. Wash your hands after handling. Used engine oil contains chemicals that have caused cancer in laboratory animals. Always protect your skin by washing thoroughly with soap and water.**

Accessories, spare parts and modification of your Toyota

A wide variety of non−genuine spare parts and accessories for Toyota vehicles are currently available in the market. You should know that Toyota does not warrant these products and is not responsible for their performance, repair, or replacement, or for any damage they may cause to, or adverse effect they may have on, your Toyota vehicle.

This vehicle should not be modified with non−genuine Toyota products. Modification with non−genuine Toyota products could affect its performance, safety or durability, and may even violate governmental regulations. In addition, damage or performance problems resulting from the modification may not be covered under warranty.

Spark ignition system of your Toyota

The spark ignition system in your Toyota meets all requirements of the Canadian Interference−Causing Equipment Standard.

Installation of a mobile two−way radio system

As the installation of a mobile two−way radio system in your vehicle could affect electronic systems such as multiport fuel injection system/sequential multiport fuel injection system, electronic throttle control system, electronic engine control system, anti−lock brake system, SRS airbag system and seat belt pretensioner system, be sure to check with your Toyota dealer for precautionary measures or special instructions regarding installation.

Tires and loading on your Toyota

Underinflated or overinflated tire inflation pressure and the excess load may result in the deterioration of steering ability and braking ability, leading to an accident. Check the tire inflation pressure periodically and be sure to keep the load limits given in this Owner's Manual. For details about tire inflation pressure and load limits, see pages 262 and 193.

Scrapping of your Toyota

The SRS airbag and seat belt pretensioner devices in your Toyota contain explosive chemicals. If the vehicle is scrapped with the airbags and pretensioners left as they are, it may cause an accident such as a fire. Be sure to have the systems of the SRS airbag and seat belt pretensioner removed and disposed of by the qualified service shop or by your Toyota dealer before you dispose of your vehicle.

Leak detection pump

This pump performs fuel evaporation leakage check. This check is done approximately five hours after the engine is turned off. So you may hear sound coming from underneath the luggage compartment for several minutes. It does not indicate a malfunction.

¿U –1

Quick index

- If a service reminder indicator or warning buzzer comes on 105
- If your vehicle will not start 214
- If your engine stalls while driving 217
- If you cannot increase engine speed 218
- If your vehicle overheats 218
- If you have a flat tire 219
- If your vehicle needs to be towed 229
- Tips for driving during break-in period 170
- How to start the engine 200
- General maintenance 245
- Complete index ..... NO TAG

Gas station information

Fuel type:

UNLEADED gasoline, Octane Rating 87 (Research Octane Number 91) or higher

See page 170 for detailed information.

Fuel tank capacity:
42 L (11.1 gal., 9.2 Imp.gal.)

Engine oil:
ILSAC multigrade engine oil is recommended.

See page 259 for detailed information.

Tire information: See pages 262 through 269.

Tire inflation pressure: See page 285.

Publication No. OM52646U
Part No. 01999-52646
Printed in Japan 01−0601−00 C
¿¿¿¿¿¿¿(¿¿U)

You should know as much about the quality and importance of proper maintenance of your new vehicle as the people who built it.

The Toyota authorized Repair Manual tells you how to maintain your vehicle and enables you to correctly perform your own maintenance.



2007 YARIS S/D from Jan. '06 Prod. (OM52646U)

The best way to keep your new vehicle in top running order is to maintain it properly from the moment you drive it off the showroom floor.

The Toyota authorized Repair Manual is packed with literally everything you need to know to perform your own maintenance in virtually every area of your new vehicle.

Maintenance procedures for the engine, chassis, body, electrical system, and more, are clearly explained and illustrated.

Periodic maintenance and tune−up

Periodic maintenance and tune−up helps to prevent small problems from growing into larger ones later on. The repair manual outlines exactly what maintenance is required and clearly explains how to do the work yourself step−by−step.

Areas covered include such things as spark plug replacement, valve clearance adjustment and engine oil and filter replacement.

Where to obtain the Repair Manual

The repair manual for YARIS may be purchased from any Toyota dealer or the Material Distribution Center. To purchase the repair manual, please contact your Toyota dealer or call the Material Distribution Center toll−free at 1−800−622−2033.

WE REALLY CARE ABOUT YOU — PLEASE BUCKLE UP

Toyota has made a special effort to encourage use of seat belts.

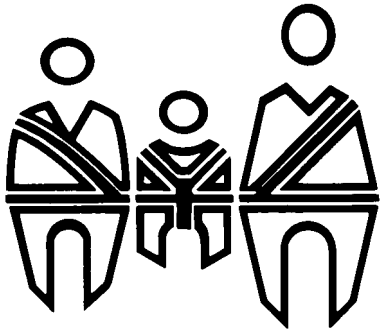

Toyota belts are:

- **Comfortable**
- **Easy to use**
- **Convenient**

We encourage you to use your belts every time you drive.

2007 YARIS S/D from Jan. '06 Prod. (OM52646U)